1991-1994 Acura NSX Body Repair Manual

INTRODUCTION

How to Use This Manual

This manual covers the repairs of 91–94 Acura NSX automobiles which have been involved in accidents, and it describes the work related to the replacement of damaged body parts.
Please read through these instructions and familiarize yourself with them before actually using this manual.
NOTE: Refer to the 91–94 Acura NSX Service Manuals for specifications, wire harness locations, safety stand support points, etc.

Special Information

⚠ WARNING

Indicates a strong possibility of severe personal injury or death if instructions are not followed.

⚠ CAUTION

Indicates a possibility of personal injury or equipment damage if instructions are not followed.

NOTE: Gives helpful information.

⚠ CAUTION

CAUTION: Detailed descriptions of standard workshop procedures, safety principles and service operations are not included. Please note that this manual does contain warnings and cautions against some specific service methods which could cause PERSONAL INJURY, or could damage a vehicle or make it unsafe. Please understand that these warnings cannot cover all conceivable ways in which service, whether or not recommended by Honda, might be done or of the possible hazardous consequences of each conceivable way, nor could Honda investigate all such ways. Anyone using service procedures or tools, whether or not recommended by Honda, must satisfy himself thoroughly that neither personal safety or vehicle safety will be jeopardized.

All information contained in this manual is based on the latest product information available at the time of printing. We reserve the right to make changes at any time without notice. No part of this publication may be reproduced, stored in retrieval system, or transmitted, in any form by any means, electronic, mechanical, photocopying, recording, or otherwise, without the prior written permission of the publisher. This includes text, figures and tables.

HONDA MOTOR CO., LTD.
Service Publication Office

Service/Safety Precautions

Body Repair

1 Preparation of Work

2 Aluminum Alloy Repair

3 General Information

4 Replacement

5 Cross Section of Body and Sealants/ Adhesive Caulking

6 Body Demsional Drawings

7 Rust-preventive Treatments

Paint Repair

8 Body Paint Repair

9 Resin Parts Paint Repair

cardiagn.com

Preparation of Work

Description 1-2
Checkpoints 1-3
Correction of Damaged Area 1-4
Measurement (Excluding Small Damage) 1-6
Positioning Jig (Recommended) 1-7

cardiagn.com

Aluminum Alloy Repair

Safety Precautions 2-2
Welding Methods 2-3
Welders 2-5
Filler Metals 2-6
Examples Repair Tools 2-7
MIG Welding Conditions 2-10
Plug Welding Procedures 2-13
Butt Welding Procedures 2-19
Fillet Welding Procedures 2-25
Weld Area Finishing 2-28
Crack inspection 2-29
When a Crack is detected 2-30
Body, Frame Area Shaping 2-31
Skin Panel Area Shaping 2-33
List of ”Dos” and ”Don’ts” 2-38

cardiagn.com

General Information

Features 3-2
Composition 3-3
Fasteners Aluminum Bodies 3-4

cardiagn.com

Replacement

Construction 4-2
Front Fender 4-3
Front Bulkhead 4-5
Dashboard Upper 4-10
Front Side Frame 4-14
Side Panel 4-21
Roof Panel 4-27
Side Sill 4-31
Front Floor 4-38
Front Assembly 4-42
Rear Fender 4-48
Rear Panel 4-50
Rear Floor 4-53
Rear Floor Cross Member 4-57
Rear Side Frame 4-60
Trunk Front Panel 4-69
Rear Bulkhead Center 4-73
Rear Assembly 4-77

cardiagn.com

Cross Section of Body and Sealants/ Adhesive Caulking

Hood, Dashboard Upper and Front fender 5-2
Dashboard Upper, Front Side Frame
and Front Wheelhouse 5-3
Outside Panel, Roof panel and Door 5-4
Front Floor (forward), Dashboard Lower,
Front Side Frame and Side Sill 5-5
Side Sill, Front Floor (rearward) and
Rear Bulkhead Center 5-6
Engine Compartment, Trunk Compartment,
Rear Wheelhouse and Rear Fender 5-7
Rear Bulkhead Center, Rear Side Frame,
Trunk Front Panel, Rear Floor and Trunk Lid 5-8
Caulking
Front Compartment 5-9
Passenger Compartment 5-10
Engine and Trunk Compartments 5-11

cardiagn.com

Body Dimensional Drawings

Upper Body Measuring Dimensions
- Front Compartment 6-2
- Rear Compartment 6-3

Under Body Measuring Dimensions
- Front Compartment 6-4
- Rear Compartment 6-5

Opening Repair Chart
- Doors/Windshield Opening 6-6
- Rear Window/Rear Hatch/Trunk Lid Opening 6-7

Frame Repair Chart 6-8

cardiagn.com

Rust-preventive Treatments

General 7-2
Diagram 7-3
Area to be Covered by Anti-rust Agents 7-4
Undercoating Diagram 7-10

cardiagn.com

Body Paint Repair

Color Chart Painting Specification 8-2
4C S 4B (4-Coat S 4-Bake) Paint
General 8-3
Color Matching 8-4
Paint Refinishing 8-5
Refinishing Processes 8-6
Refinishing Procedures 8-7
Soft Chipping Guard Primer Coat
General 8-11
Coating Diagram 8-12
Repair Materials and Tools (Example) 8-13
Coating Procedures 8-14

cardiagn.com

Resin Parts Paint Repair (Exterior)

Type and Materials of Exterior Resin Parts 9-2
Front and Rear Bumpers (Polybutylene terephthalate)
General 9-3
Mass Production Coating Table 9-4
Repair Materials and Tools (Example) 9-5
Paint Mixing Application 9-6
Repair Procedures 9-7
Refinishing Procedures 9-8
Front and Rear Skirts (Polypropylene)
General 9-13
Repair Materials and Tools (Example) 9-13
Refinishing Processes 9-15
Repair Procedures 9-16
Refinishing Procedures 9-17
Headlight Lid, Side Sill Panel and Fuel Lid (Polyamide/Polyphenylene ether)
General 9-22
Repair Materials (Example) 9-22
Repair Procedures 9-23
Refinishing Procedures 9-24
Door Mirror Housing (Acrylonitrile butadiene styrene)
General 9-26
Repair Materials (Example) 9-26
Repair procedures 9-27
Refinishing Procedures 9-27
Glossary 9-29

cardiagn.com

Fillet Welding Procedures

Fillet welding is used on body parts which have different thickness and which need to be strong comparatively. It is important to have a thorough grasp of what follows.

1. Adherence
   The aluminum alloy plates where the fillet welding is to be performed must fit together firmly, otherwise, the weld will be defective.

2. Cleaning and sanding
   Use a wax and grease remover to clean away any dirt, oil or grease prior to welding. If the aluminum alloy surface is coated with a paint film, use a disc sander with a #80 sanding disc to remove the paint.

   NOTE: Use a stainless steel wire brush to burnish the bare surface of the aluminum alloy immediately before welding.

Sanding range:

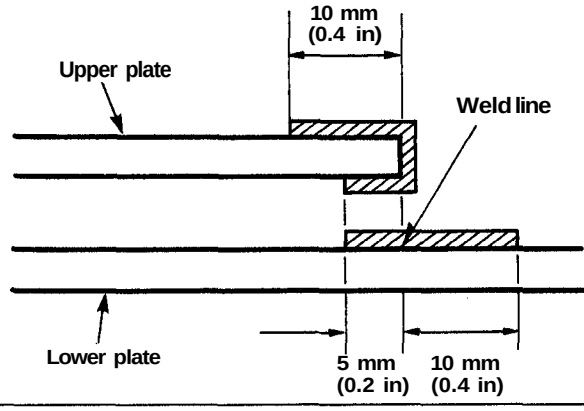

Sand the top and bottom surfaces of the upper plate and the adhesion surface of the lower plate.

Range of oxide film removal by sanding:

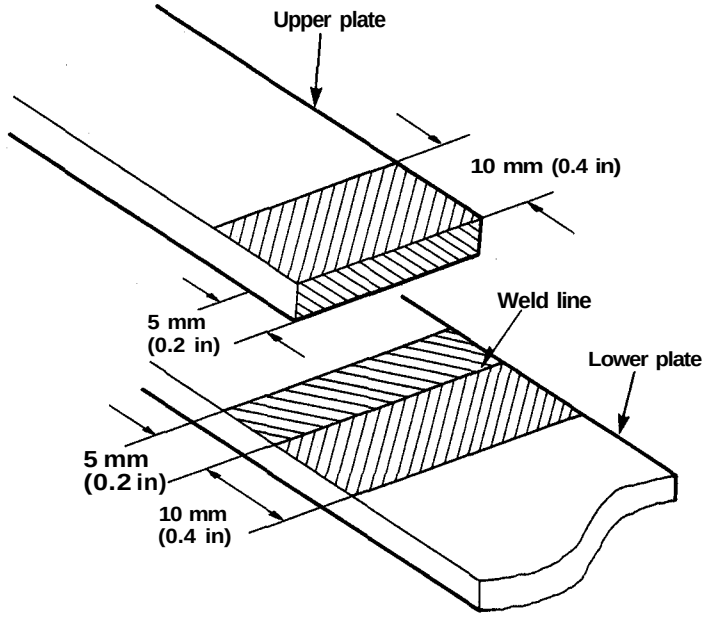

Sand to a width of about 10 mm (0.4 in) on both the upper and lower plates on the outside of the weld line, and to a width of about 5 mm (0.2 in) from the weld line for the inside surface which will be overlapped. Also sand the end of the upper plate.

(cont'd)

cardiagn.com

Aluminum Alloy Repair

Fillet Welding Procedures (cont'd)

3. Welding

During actual welding, penetration will occur quickly for the top plate since the end of the plate is being welded. For the bottom plate, however, welding starts at the center of the plate, which is hard to melt. Proceed with the current slightly higher than for butt welding and closely observe bottom plate penetration.

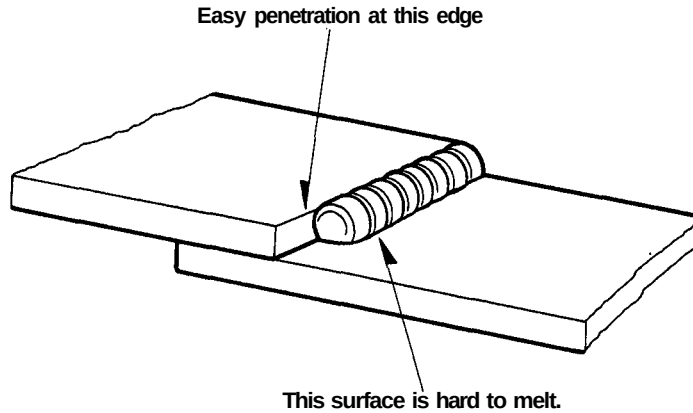

Although in the case of butt welding the gun is positioned perpendicular to the base metal, in fillet welding it is used at an angle with the base metal surface which depends on the plate thickness. The operator should carefully observe the melting of the base metal and proceed. Special attention must be paid when the thicknesses of the top and bottom plates differ.

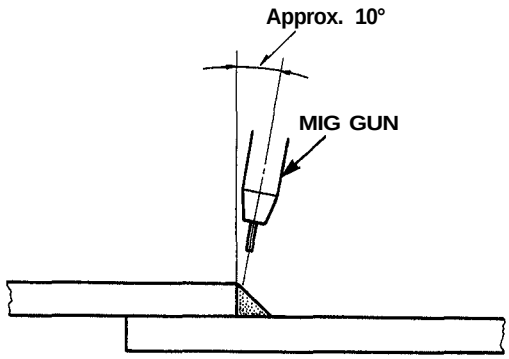

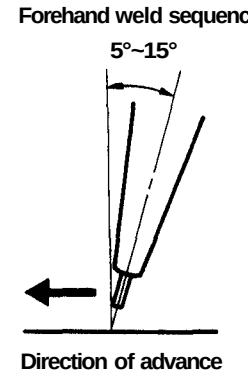

The ideal size of the bead in a cross-sectional view of fillet welding is identical to or slightly larger than the plate thickness, If the thickness of the plates differ, proceed to weld in alignment with the thin plate so as to minimize both the strain induced by welding the base metal and any changes in organization which may occur.

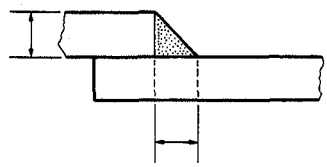

NOTE: Welding should be intermittent.

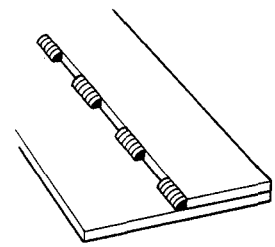

cardiagn.com

Fillet weld zone defects:

The table below shows frequent fillet weld zone defects and their causes.

Defect	Appearance	Maincauses
Excessive melting of upper plate	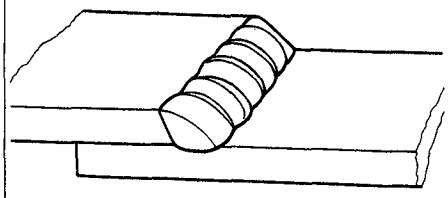	Poor gun angle. Poor gun position. Excessively high welding current.
Incomplete penetration	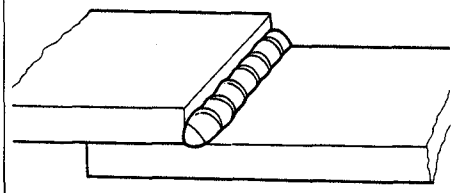	Insufficient welding current.
Poor adhesion position	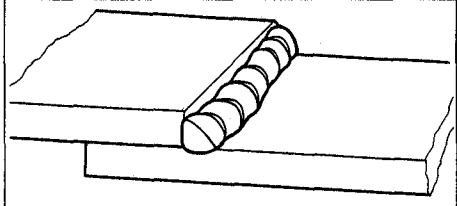	Faulty gun feed position.
Unaligned beads	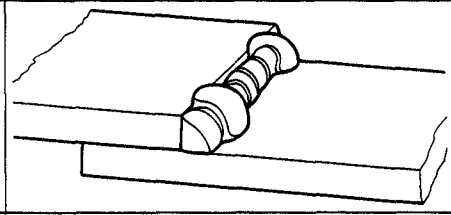	Improper gun feed speed. Poor gun height.
Incomplete penetration of lower plate.	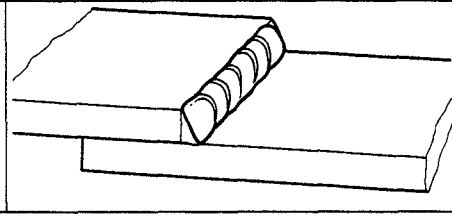	Faulty gun feed position. Insufficient welding current.

cardiagn.com

Aluminum Alloy Repair

Weld Area Finishing

NOTE: Inspect for cracks before finishing the weld zones of aluminum alloys (see page 2-29).

When sanding weld zones

Use a disc grinder (A36P grindstone) for roughing and a disc sander for finishing (#80).

-1)Roughing

Use the disc grinder (A36P) for weld reinforcements, always leaving a finishing allowance.

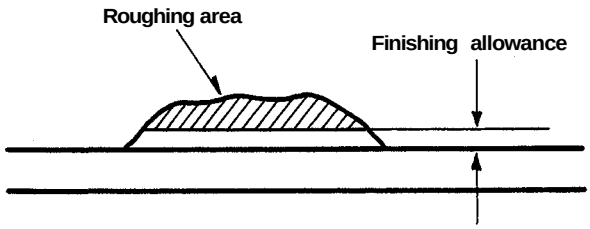

-2) Finishing Cut Operation

Use the disc sander (#80 disc) to finish the area of the finishing allowance and give the weld zone a smooth finish.

NOTE:

- Roughing applies only to weld reinforcements. Care should be taken to leave the surface of the aluminum alloy untouched.
- Take care not to remove too much material in the roughing process since this can cause a loss of strength.
- Take care not to press the sanding tool too forcefully against the surface.
- Replace the disc of the sanding tool with a fresh disc if the surface becomes clogged with aluminum alloy fragments.
- Weld zones that are hidden from view do not need to be finished.

cardiagn.com

Crack Inspection

An inspection for cracks must be conducted after the weld zones of the aluminum alloy have been welded and after buckling in aluminum alloy body frames has been straightened out.

A color contrast penetrant examination method is used for crack inspection.

- The penetrant method utilizes the capillary phenomenon of liquids. The test itself uses a liquid with a powerful penetration capability to check out the location of minute defects which are not visible to the naked eye.
- The color contrast penetrant method is a type of penetrant test which uses a penetrant solution containing coloring. A penetrant solution which contrasts strongly with the color of the developing solution is used to enable the lighter locations to be observed.

Method of application

Items used: penetrant solution, developing solution, washer

1. Wash the inspection surface with the washer.
2. Apply penetrant solution to the surface and allow the solution ample time to soak down inside the cracks.
3. Wash off any excess penetrant solution remaining on the surface.
4. Spread the developing solution and cracks will be clearly indicated.

NOTE:
- During these operations, be sure to follow the instructions for use given by the manufacturer of the color contrast penetration agent.
- Be careful of ventilation.

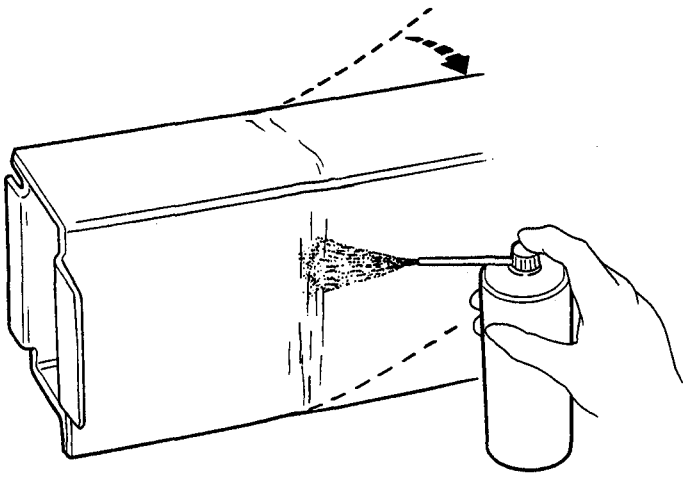

cardiagn.com

Aluminum Alloy Repair

When a Crack is detected

1. Weld zones

If a crack is detected in a weld, scrape off an area twice as long *as* the crack and reweld.

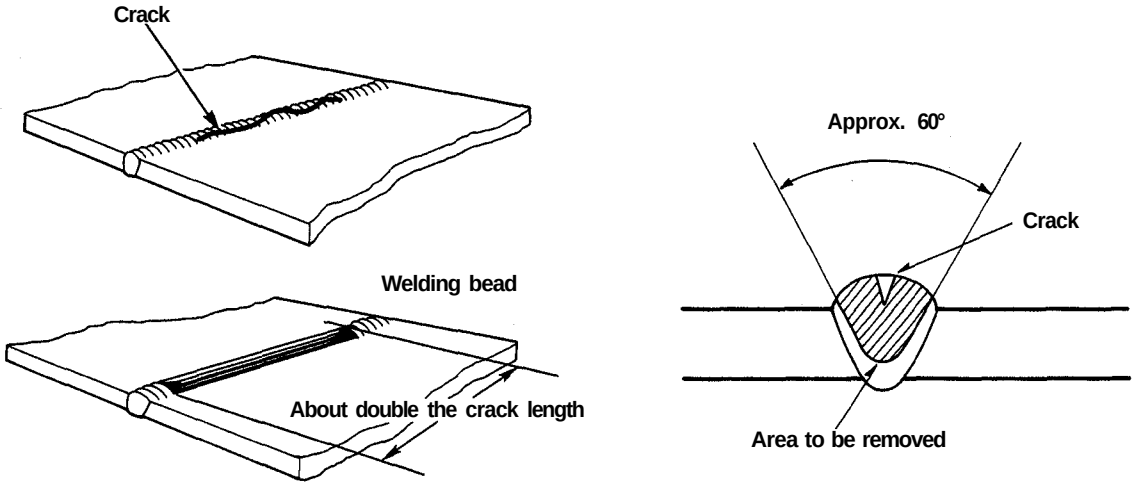

2. Shaping

CAUTION: If a crack is formed when the sheet metal is being straightened, replace the part, do not correct by welding.

NOTE: If, upon completion of the work, there are still very minute cracks which cannot be detected except with a color contrast penetrant, drill holes at both ends of the crack, and proceed with the welding.

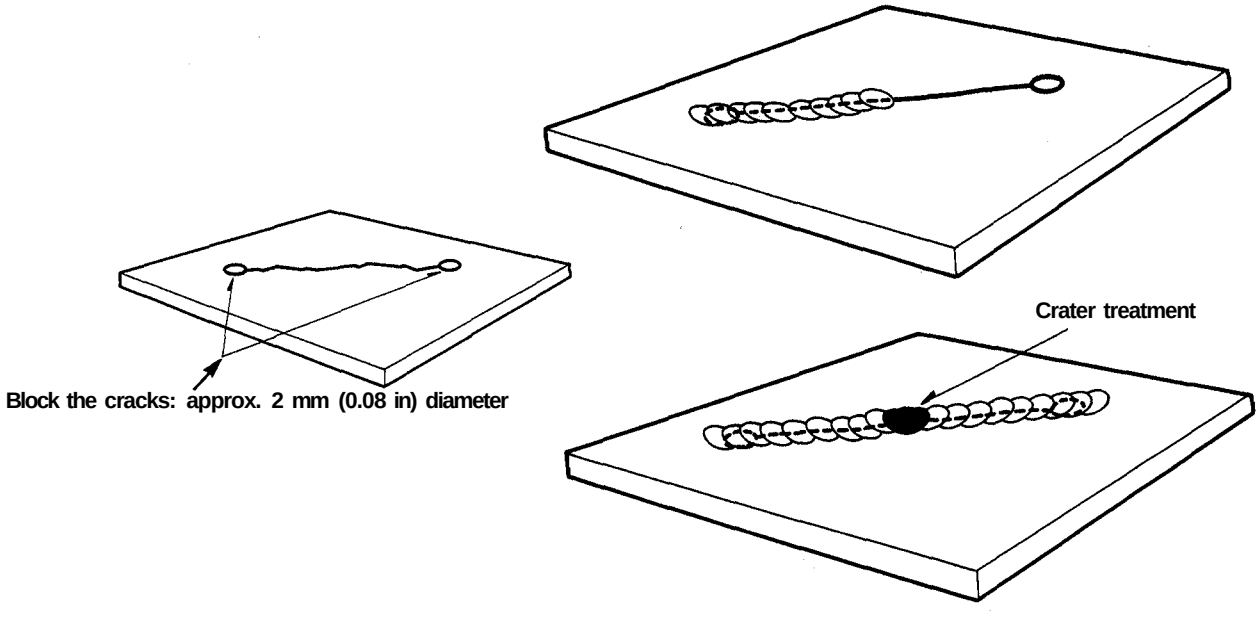

cardiagn.com

Body, Frame Area Shaping

Body and frame areas made of aluminum alloys use plates which are between 1.5 and 2 times as thick as steel plates.
When deformations must be straightened out, aluminum alloys feel harder or stiffer to the touch than conventional steel plate.
In order to avoid inducing changes in the quality of steel plate, the use of a torch to heat up sheet plates is avoided whenever possible. In the case of aluminum alloys, however, work hardening occurs in buckled areas which makes it easy for cracks to form.
Do not use a frame straightener for straightening work without applying heat with an acetylene torch. At temperatures above 392°F (200°C) elongation characteristics are improved and work is facilitated.

Heating temperature control method

Since the melting point of aluminum alloys is approximately 1184°F (640°C) and since there is hardly any change in color even when the temperature rises, there is a tendency to apply too much heat.

To check the degree of heating and keep it within limits, use thermopaint which changes color 230°F (110°C).

Apply the thermopaint in a strip about 10 mm (0.4 in) wide at a point approx. 25 mm (1.0 in) from the outer circumference to be exposed to the torch flame. Stop heating when the color clearly changes in the surrounding area where the thermopaint was applied. The temperature of the heated at this time will be less than 752°F (400°C).

The time required for heating depends greatly on how the aluminum alloy is exposed to the torch flame and on the area covered by the heating.

As shown in the figure below, the upper temperature limit can be controlled and overheating prevented by applying thermopaint in places 25 mm (1.0 in) away from the area to be heated.

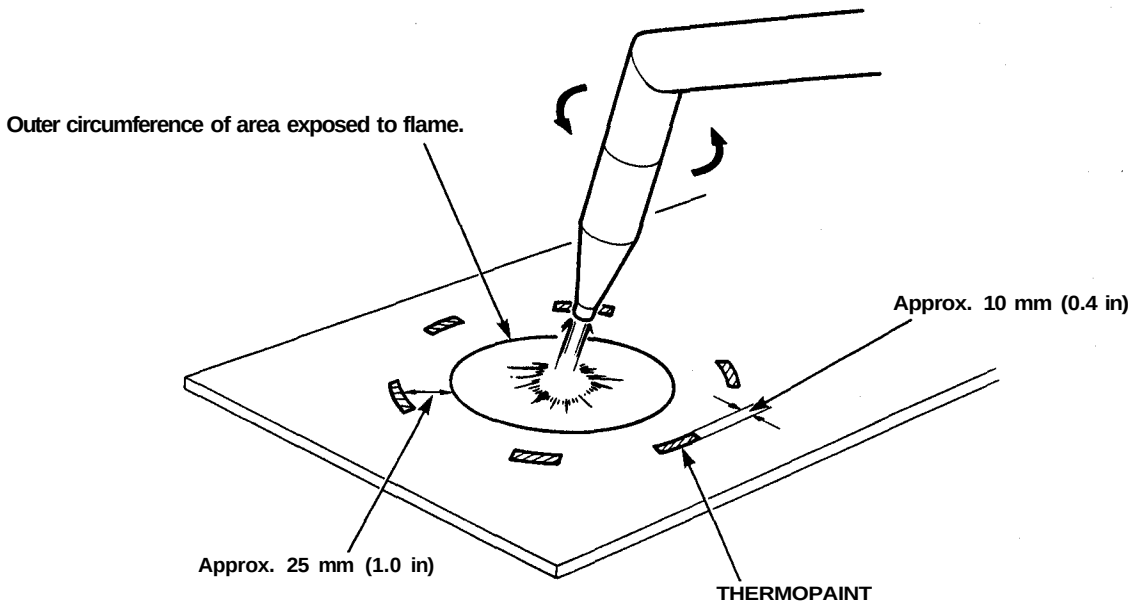

(cont'd)

cardiagn.com

Preparation of Work

Description

- Most monocoque bodies are composed as a single unit by welding together pressed parts made of steel plates which come in a variety of different shapes and sizes. Each part is responsible for displaying a certain strength and durability in order that it may play its role in meeting the functions of the body as a whole.

- The NSX has an all aluminum monocoque body made of the aluminum alloy. Generally speaking, the collision damage of the aluminum alloy body is not very different from that of the steel plate body.

Damage to the exterior of the body can be inspected visually, but where there has been an external impact, it is necessary to inspect the extent of the damage. In some cases, the deformation has spread beyond the actual areas which were in the collision and so this has to be inspected closely.

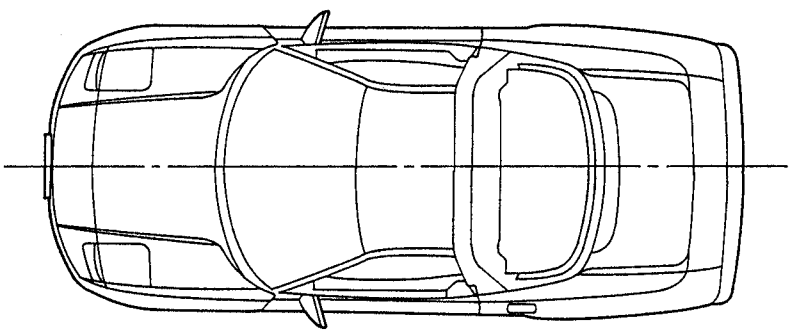

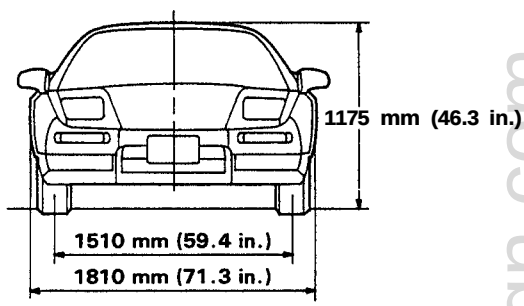

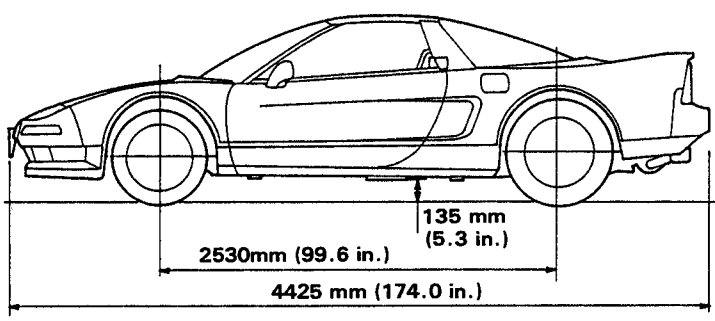

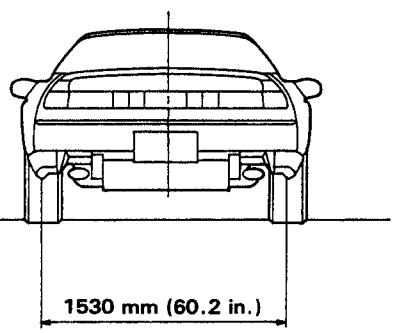

Front wheel alignment:

Camber		-0° 20' ± 30'
Caster		+ 8° 00' ± 45'
Toe		Out 3.5 ± 1 mm (0.14 ± 0.04 in)
Wheel turning angle	In	33°06' ± 2°
	Out	26°34'

Rear wheel alignment:

Camber	-1°30'±30'
Toe	In 4.0±1 mm (0.16±0.04 in)

cardiagn.com

Checkpoints

- **Accurate Inspection of Damaged Parts (Visual)**

Seat Belts

Always replace the seat belt if:

1. The belt material is cut, punctured, burned or in any way damaged.
2. The buckle or retractor does not work properly.
3. They were being worn at the time of a collision (also check for damage at the seat belt anchor points).
4. Their condition is questionable.

Front Section:

1. Is there any bending, splitting, denting or other damage to the suspension and its related parts?
2. Is there any deformation of the front bulkhead or radiator core? Have any of the connected sections come apart?
3. Are there any creases or distortion in the front wheelhouse or side frame? Have any of the connected sections come apart?
4. Is there any bending or twisting of the whole front area?
5. Is there any deformation like creases, bulges, or dents in the front pillar, dashboard, floor, etc.?
6. Is there any vertical twisting or misaligned clearance in the door?
7. Is the windshield seal broken?
8. Is there any deformation in the top part of the center pillar?
9. Is there any damage inside the automobile (is there any twisting of the dashboard, or anything irregular with the clearances or sheet-mounting parts) ?
10. Is there any damage to the steering wheel ? Is there any deformation in the column and the column-mounted parts ?

Rear Section:

1. Is there any twisting, bulging or denting of the rear floor and rear bolsters? Have any of the connected sections come apart?
2. Is there any irregular bulging or denting in the rear fender?
3. Is there any distortion in the rear inner panel? Is there any bending and denting in the vicinity of the rear pillar?
4. Is there any distortion or creasing in the rear wheelhouse and arch sections? Have any of the connected sections come apart?
5. Is there anything irregular in the rear glass seal clearance?
6. Is there any twisting or misalignment of the clearance of the trunk lid opening section?
7. Is there any bending, splitting, denting or other damage to the suspension and its related parts?
8. Is there any deformation oh the rear floor cross member, trunk front panel and damper base? Have any of the connected sections come apart?
9. Is there any oil or water leakage and damage to the engine, transmission or brakes?
10. Is there any irregular noise in the gear changing operation, engine and transmission rotation?
11. Are there any traces of contact between the engine block and the center cross member?
12. Is there any damage to brake or fuel lines, or wire harnesses?

cardiagn.com

Preparation of Work

Correction of the Damaged Area

Set the frame corrector on the car body.
The side sill is flangeless to allow reshaping by pulling it out.
Use the horizontal pinch welds for anchoring the car.

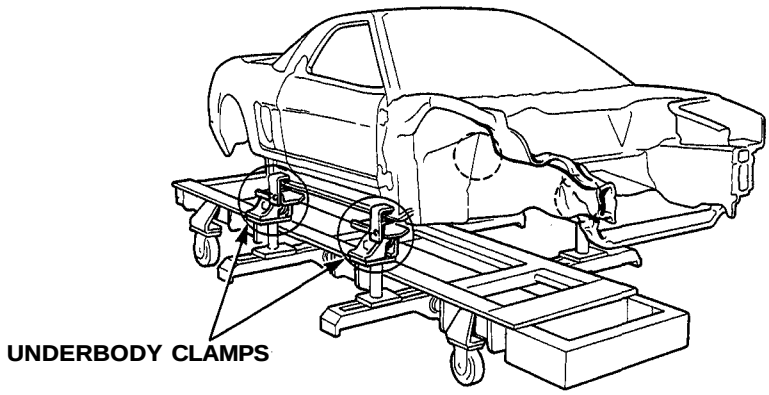

Underbody Clamp Specifications:

UNDERBODY CLAMP (Recommended)	Clamp Number	Frame correctors
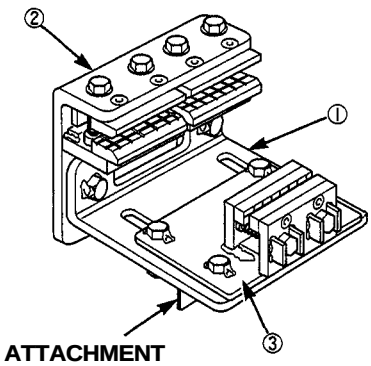	AT-68 ① Clamp body ② Side clamp ③ Under clamp	
Standard type: 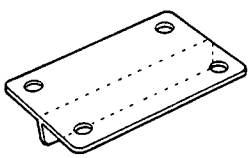	AT-68-AL	● Dataliner ● Celette ● Car-o-liner ● Flex-o-liner ● etc.
C - type: 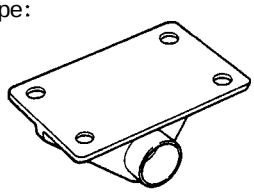	AT-68-C Inside diameter 65 mm (2.6 in)	● Korek ● Auto pole ● etc.
U - type: 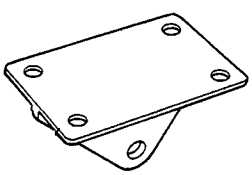	AT-68-U Inside diameter 20 mm (0.8 in)	● U-Base ● Pro-Tec ● etc.

cardiagn.com

1. Apply load to the damage section and pull it out until the section is almost restored to the original shape.

2. Check that the parts of the body they cover have been more or less restored to their original shapes.

NOTE: As work-hardening occurs to the buckled section of the aluminum alloy, it can crack easily. Heat up the damaged section with an acetylene welder and pull it out to reshape 1184°F (640°C) is the melting point of the aluminum alloy. Take care not to overheat it. Watch the heating temperature using a thermopaint, or heat crayon (see page 2-31).

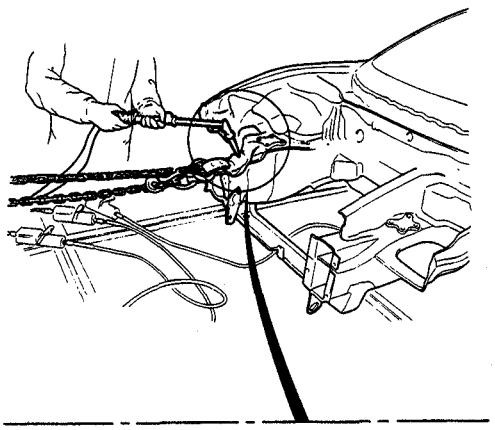

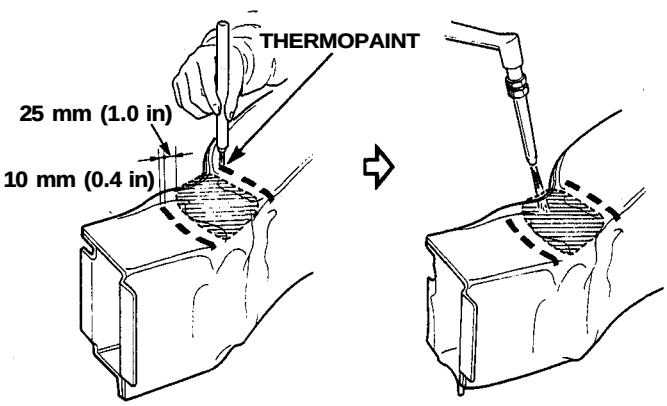

3. Check the original position using the body dimensional drawings (see section 6) and the positioning jigs (see page 1-7).

4. Remove the parts that require replacement.

5. Decide whether to cut the weld joint parts and replace partially, or whether to replace all the parts.
NOTE: Welded parts that can be partially cut and replaced are restricted to those listed in this manual (see section 4).

6. Cut off and separate the damaged parts.
NOTE: When cutting the parts off, take special care that you do not damage adjacent parts on the automobile.

7. Mold the related parts.

8. Check the reshaped parts for cracks (see page 2-29).

9. Set and tack weld the replacement parts.
NOTE: Temporarily mount the related parts and check the clearance and level differences.

10. Weld the replacement parts.
Welding methods (see section 2).
NOTE: Use of the positioning jig is recommended.

11. Check the welding sections for cracks (see page 2-29).

NOTE: The paint film, which is designed to prevent corrosion caused by moisture, is destroyed around the edges of the locations that have been repaired by welding.
Therefore, in such places and especially in those areas that are not visible, apply another coat of the paint; refer to the anti-corrosion painting manual. This operation is designed to maintain durability and quality (see section 7).

carpiagn.com

Preparation of Work

Measurement (Excluding Small Damage)

Whenever possible, make judgements and conclusions based on measurement. Measure the wheel alignment (see page 1-2) to prevent any future trouble like unsymmetrical wear of the tires or catching of the steering wheel.

If there are any deviations, use a tram tracking gauge and measure parts of the body.

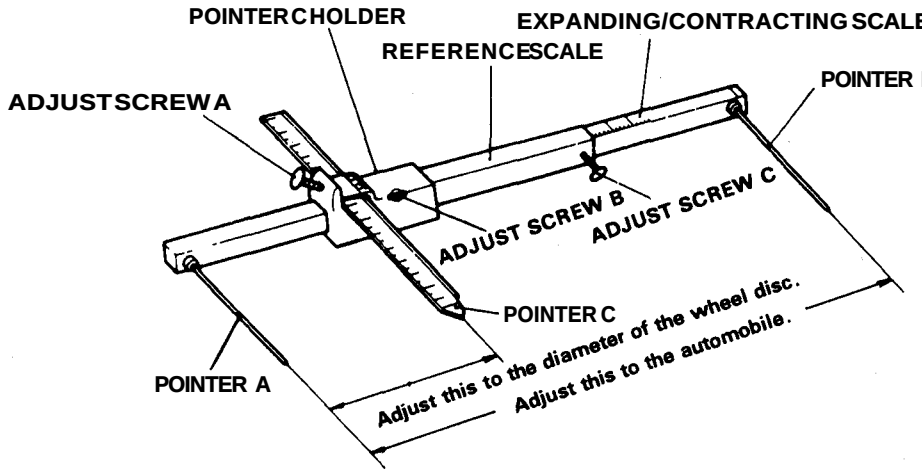

If there is any twisting to the body, measure using a frame centering gauge.

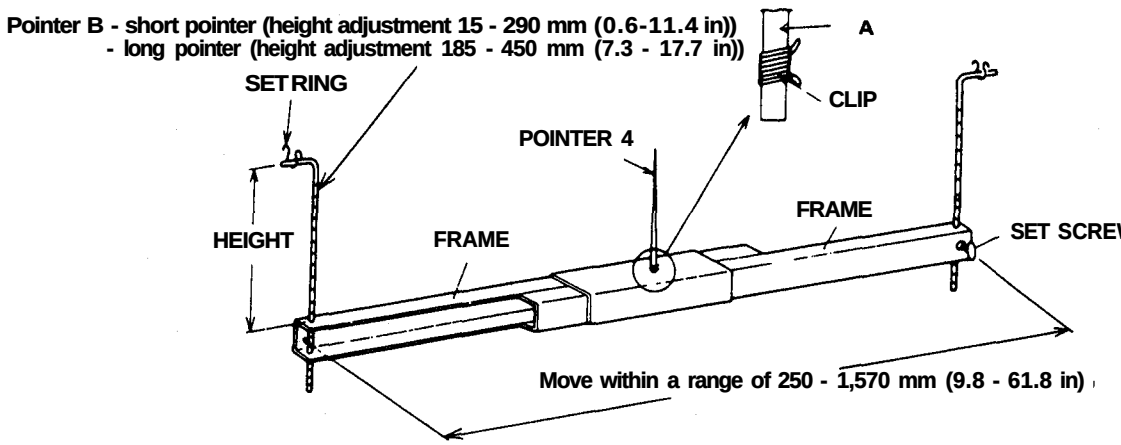

When measuring body dimensions, use a universal tram gauge.

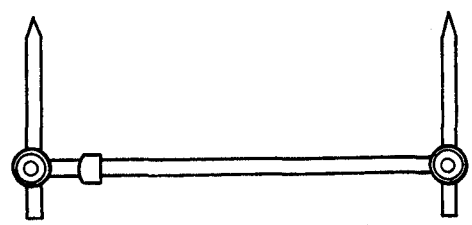

cardiagn.com

Positioning Jig (Recommended)

No.	Jig Number	Description	Page Reference
①	HJ-16-01	Front under frame positioning jig	4-14
②	HJ-16-02	Rear under frame positioning jig	4-53, 57, 60

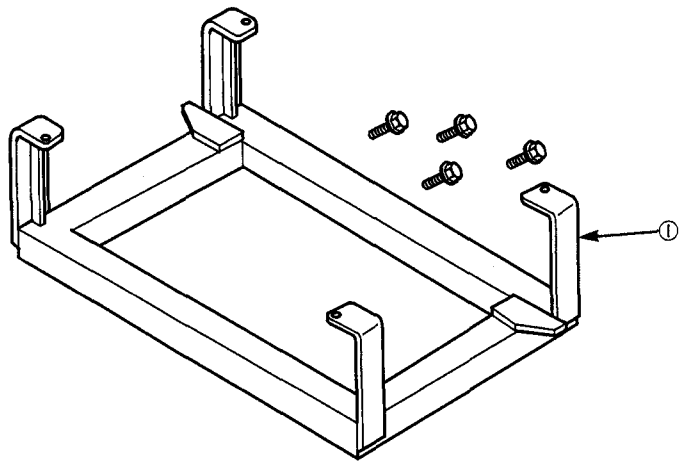

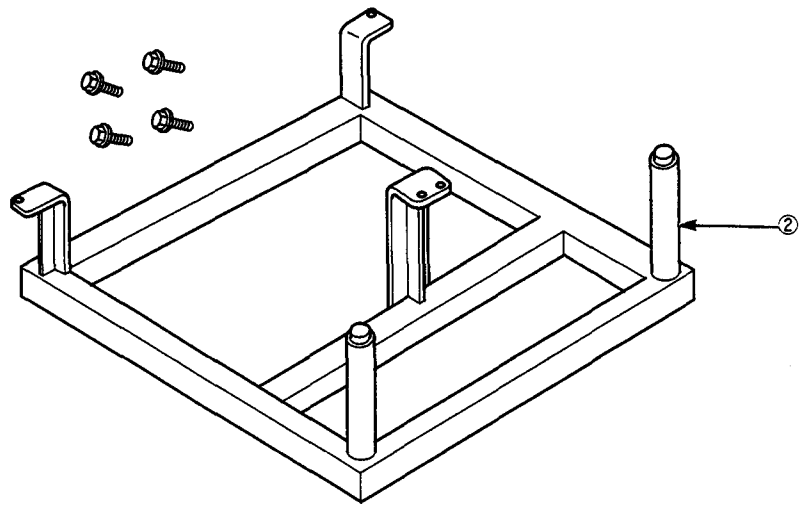

cardiagn.com

Aluminum Alloy Repair

Safety Precautions

Precautions for Ensuring Safety:

1. Although aluminum is non-toxic, it is lightweight, so fine particles of metal given off by sanding operations tend to float in the air. It is therefore vital that operators protect their lungs and eyes from this dust.

2. Small pieces of aluminum alloy are spattered by MIG welding can be projected over considerable distances. It is therefore important to provide protection not only for the welders operators themselves, but also for the surrounding areas.

3. The sparks generated from the arc during inert gas are welding are very bright and may hurt the eyes if viewed directly. A protective shield for the eyes must therefore be worn at all times when welding.

Use of protective gear to ensure safety:

Work overalls with long sleeves, a cap, and safety shoes must be worn at all times. Depending on the job to be done, protective goggles, gloves, ear plugs, and a dust-proof mask should also be worn (see page 2-7).

CAUTION:

- **When aluminum alloys are heated, they melt without changing color.**

  Melting temperature

  Aluminum alloys: Approx. 1184°F (640°C) (depends on alloy)
  Steel plate: Approx. 2732°F (1500°C)

- **Aluminum alloys can be repaired in virtually the same way as steel sheets, but it is important to have a good grasp of their properties and be thoroughly familiar with their limitations.**

- **Aluminum alloys tend to overheat during sanding. When they overheat, the metal tends to flake and clog the filing surface of the sanding tool. If a tool with a clogged surface is used, it will leave scratches and marks on the base metal.**

cardiagn.com

Welding Methods

1. MIG (metal inert gas arc) welding

This type of welding uses consumable electrodes, with electrode wire serving as the electrode. Inert gas is passed through the torch and welding takes place when an arc is formed between the electrode wire and the base metal. The electrode wire is supplied automatically.

Although it is dependent on the proficiency of the welder himself, the minimum thickness of weldable aluminum alloy sheets has been 1.6 mm (0.06 in). In most cases the sheets used have been over 3 mm (0.1 in) thick. More recently, welders have been developed for handling sheets with a thickness of 1 mm (0.04 in) or less.

2. TIG (tungsten inert gas arc) welding

This type of welding uses non-consumable electrodes, with tungsten rods serving as the electrodes. Inert gas is passed through the torch, an arc is formed between the electrode and the base metal, and welding takes place when the heat from the arc melts the base metal and hand-held welding rod. The minimum thickness of aluminum alloy sheets which can be welded is about 0.6 mm (0.02 in), although this method is not suited to heat-treated alloys because there are many thermal effects.

3. Carbon dioxide gas arc welding (metal active gas arc welding)

In place of the high-cost inert gas, carbon dioxide gas or carbon dioxide gas mixed with argon gas is employed as the shielding gas in the metal active gas arc welders often used today in body shops. Carbon dioxide gas is not an inert gas in the full sense of the term so these welders are known by the acronym of "MAG" (metal active gas), rather than "MIG."

4. Gas (oxygen, acetylene) welding

Welding or brazing work must not be undertaken using these gases.
Since it is hard to concentrate the heat at the welding point, the thermal effects extend to the surrounding area and the strength of the aluminum alloy is reduced. Neither must gas welding be used for brazing since joint strength is too low.

NOTE: Gas welders are used for heating work when aluminum alloys are shaped. (It is necessary to control the upper limit temperature.)

5. Spot welding

Aluminum alloys cannot be welded using the conventional spot welders which are used in body shops.

The capabilities of spot welders for steel plate are not sufficient for aluminum alloys which have high thermal conductivity. No matter how long the welding current is allowed to run, the heat escapes to the surrounding areas and the base metal does not melt, making welding impossible. It requires a very high current of several tens of thousands of amperes and high pressure to spot-weld an aluminum alloy.

(cont'd)

cardiagn.com

Aluminum Alloy Repair

Welding Methods (cont'd)

Comparison of spot welding for aluminum alloys and steel plate (one example)

Material	Thickness	Current (A)
Steel sheeting	1.2 mm (0.05 in)	Approx. 9300
Aluminum alloy	1.2 mm (0.05 in)	Approx. 26,000

NOTE:

- Welding conditions may induce changes in the spot welding current given in the comparison above.
- See page 2-10 for the re-bonding procedure applied when spot-welds on an aluminum alloy body are repaired. MIG welding is used.
- A person proficient at carbon dioxide gas arc welding who has an adequate understanding of the properties of aluminum alloys will be able to master the technique after practicing for a short while. Practice is important for increasing one's competence.

CAUTION:

- **Aluminum alloys melt without changing color when heated.**
- **It is difficult to judge the melting point when an alloy is heated.**
- **Aluminum alloys have a coefficient of thermal expansion which is approximately double that of steel plate and a coefficient of contraction during solidification which is approximately 1.5 times higher. They are therefore subject to strain more easily and welding cracks (bead cracks and crater cracks) develop.**
- **Cleaning the welding location greatly affects results.**
  Although the oxide film is destroyed by the cleaning action, it is important for all dirt to be removed, along with any oil and grease, prior to the welding.
- **Tools used for welding aluminum alloys must be kept completely separate from those used for steel plate.**
- **Use a stainless steel wire brush.**
- **Use sanding tools which have been reserved especially for use only with aluminum alloys. If the same tools are used for steel plate as well, iron deposits will remain on the surface of the aluminum alloy and contaminate welds.)**
- **Inert gas arc welding is a gas-shielded method and is therefore unfit for working in areas exposed to wind or breezes. It is important that the flow of the inert gas is not disturbed.**

cardiagn.com

Welders

Performance of Welders:

1. Output current: Approx. 200 A at maximum output
2. Electrode wire diameter: Approx. 0.8~1.2 mm (0.031 ~0.05 in)
   (A5356WY)
3. Shielding Gas: 100% Argon

- It is an added convenience if the welder can be set to seam, stitch and spot modes.
- A welder which can be used for both aluminum alloy MIG welding and steel plate carbon dioxide gas arc welding simply by changing some parts is economical and efficient.

NOTE: Follow the manufacturers' instruction.

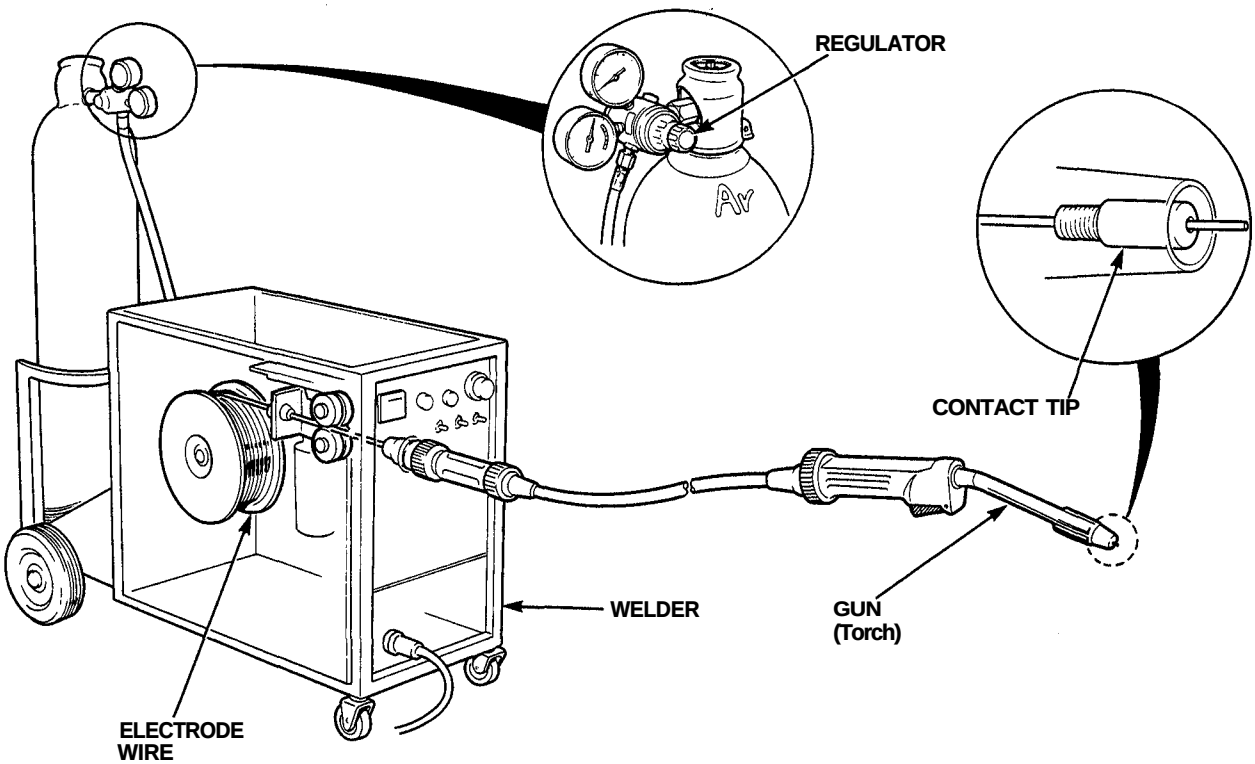

Conditions:

Material thickness unit: mm (in)	Electrode wire diameter unit: mm (in)	Electrode wire speed (A)	Welding voltage (V)	Volume 100% argon (L/min)
1.6 (0.06)	0.8 (0.031)	50~70	10.0~11.0	15.0
2.0 (0.08)	0.9~1.0 (0.035~0.04)	60~110	12.0~15.0	15.0
2.5 (0.1)	0.9~1.2 (0.035~0.05)	80~120	13.0~16.0	17.0
3.0 (0.12)	0.9~1.2 (0.035~0.05)	100~140	15.0~18.0	20.0
5.0 (0.2)	0.9~1.2 (0.035~0.05)	120~170	17.0~20.0	20.0

cardiagn.com

Aluminum Alloy Repair

Filler Metals

When "filler metal" is mentioned in this text, it refers to welding rods for TIG welding and to electrode wire for MIG welding.

The selection of the filler metal affects the following items relating to the state of the welded joints:

a) Flaws in joints (bead cracks)

b) Strength of joints

c) Toughness of joints (tenacity)

d) Resistance of joints to corrosion

[A5356WY] is the filler metal best suited to aluminum alloys in the 5000 and 6000 series which are used for HONDA aluminum alloy bodies.

Filler metal storage

Proper storage of filler metals is important for best welding results.

NOTE:

- Store filler metals where they will not become dirty or scratched and where they will be free from contact with oils and greases.
- Use clean gloves when handling filler metals. Seal them in airtight vinyl bags, and store at a constant temperature in a location where they will be dry at all times. Before sealing the electrode wire, make sure that it is wound properly on its spool.
- Take steps to ensure that the seal cover is not opened until actual use.

cardiagn.com

Examples of Repair Tools

Item	Work	Tools, equipment used
Protective equipment	Operator protection	**1. Protective goggles** **2. Cap** **3. Earplug** **4. Shield for eyes** **5. Overalls with long sleeves** **6. Dust-proof mask** **7. Protective apron** **8. Welding gloves** **9. Foot protectors** **10. Safety shoes** **11. Work gloves** **12. Spattering guard** 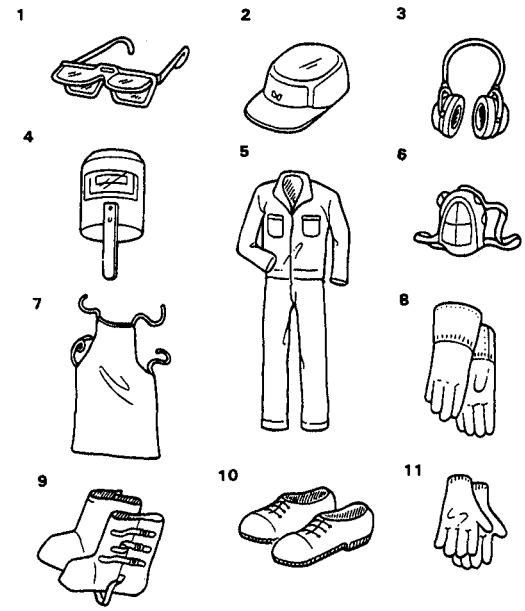
	Vehicle body protection	**Heat-resistant protective cover** 12 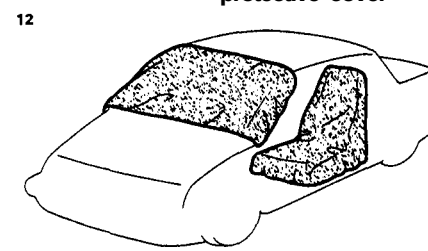
Processing tools	Edge preparation	**DISC GRINDER, DISC SANDER.** **Air:** 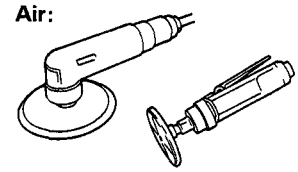 **BELT SANDER** 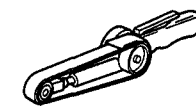 **Electric:** 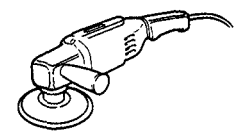 **SANDPAPER, FILES** 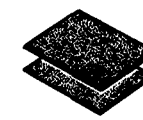

(cont'd)

cardiagn.com

Aluminum Alloy Repair

Examples of Repair Tools (cont'd)

Item	Work	Tools, equipment used
Processing tools	Plug hole drilling	**DRILLING BLADE, DRILL, SPOT CUTTER** **ROTARY CUTTER** **PUNCH**
Sanding tools	Cleaning	**STAINLESS STEEL WIRE BRUSH** **SANDPAPER** **DISC SANDER** **BELT SANDER**
	Finishing	Disc grinder. Disc sander. Belt sander. Sandpaper.
Fixing tools	Base metal fixing	**VISE-GRIPS** **SCREW CLAMP** **SQUILL VISES**
Shaping tools	Skin panel shaping	**HAMMERS** **DOLLIES/CHISELS**

NOTE: Use a stainless steel wire brush and sanding tools reserved especially for aluminum alloys. Do not use the same tools for steel sheet.

cardiagn.com

Grain size for sanding/processing tools and jobs performed.

Tool	Disc paper grain size	Job
Disc grinder	A36P (grindstone for grinder)	• Roughing of weld reinforcement areas. • Roughing of V-shaped edge preparation.
Disc sander	#80~#120 (sanding disc)	• Roughing of paint film. • Sanding of aluminum alloy surface (oxide film) • Finishing of weld reinforcement areas. • Finishing of V-shaped edge preparation.
Belt sander	#80 or above	• Sanding of narrow areas.
Stainless steel wire brush		• Sanding of aluminum alloy surface (oxide film)

NOTE:

- Use a low-speed disc grinder or disc sander.
- If a low-speed air-powered disc grinder is not available, attach an air control valve to reduce grinder speed.
- A double-action sander may also be used.

Cleaning-oxide film removal:

Clean the welding locations throughly (both front and back surfaces).

- Use a wax and grease remover to clean off any dirt, oil or grease.
- Use a disc sander and stainless steel wire brush to remove paint and oxide films. Use a #80 sanding disc.

NOTE: Do not allow the sanding disc of the disc sander to become clogged. If the disc sander is pressed excessively hard, it will overheat due to friction and the aluminum alloy will tend to peel off, clogging the disc. The alloy surface will be scraped and scored if a clogged disc is used.

cardiagn.com

Aluminum Alloy Repair

MIG Welding Conditions

MIG welding can be performed under virtually the same conditions as for the carbon dioxide gas arc welding of steel plate mentioned previously. The differences are outlined below.

The factors which affect deposition at the welding location and serve as the welding conditions for carbon dioxide gas arc welding of steel plates are:

- Welding current.
- Welding voltage (automatically adjusted for HTP MAXI MIG),
- Electrode wire speed,
- Distance between contact tip and base metal,
- Gun angle.
- Gun feed speed.
- Volume of shielding gas.

NOTE: Distance between contact tip and base metal: 8~15 mm (0.3~0.6 in).

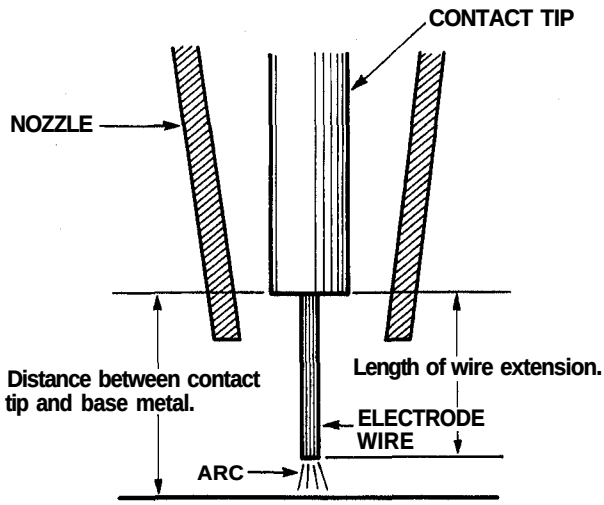

Arc generation

As with steel-plate welding, an arc is generated and welding starts once the torch switch is thrown.

- Welding startup is impaired if the electrode wire extends too far out or if the end is spherical. In such cases, cut off the end of the wire with a pair of wire cutters.

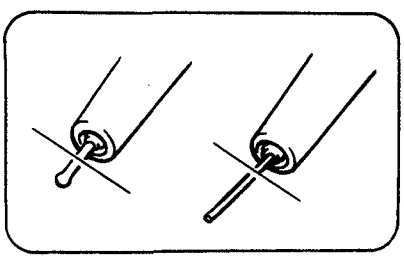

CAUTION:

- **The torch switch must not be thrown with the electrode wire in contact with the base metal.**
- **When cutting the end of the electrode wire, point the torch downward and cut near ground level to protect the eyes from the cut end.**

cardiagn.com

Sound of arc when welding under proper conditions:

- With aluminum alloy MIG welding, there is a quiet and continuous humming sound similar to that heard during carbon dioxide gas arc welding.
- A small amount of soot is formed along the bead during MIG welding. This is caused by magnesium contained in the electrode wires.

1. Differences in welding conditions

When comparing the welding of aluminum alloys and steel plate using the same welder, the thickness range of plates which can be welded is less for aluminum alloys. In other words, the welder setting conditions must be adjusted more finely for welding aluminum alloys.

-1. Welding current, electrode wire speed
Under the same welding current conditions, the electrode wire for aluminum alloys needs to be fed faster than that for steel plates.

-2. Distance between contact tip and base metal
As for steel plate welding, the distance ranges from 8~15 mm (0.3~0.6 in). The gas shielding effect is enhanced by positioning the gun closer to the surface.

-3. Gun angle
The gun is held perpendicular to the welding surface. It is tilted at a 5~15° angle in the direction of the welding advance. Compared with steel plate welding, the gun angle is slightly more vertical.

-4. Direction of gun advance
Either a straight sequence or back-step can be used when for welding steel sheets. With aluminum alloys, however, only the forehand welding method is used.

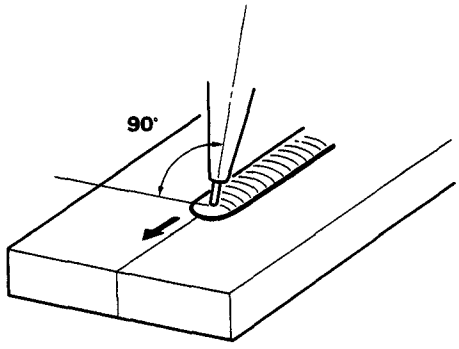

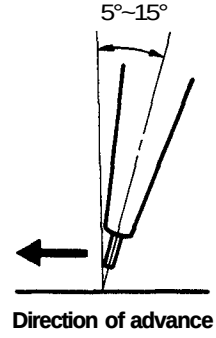

-5. Gun travel speed
Welding of aluminum alloys progresses at a much faster rate than for steel plate. The speed increases as the welding progresses.

-6. Volume of shielding gas
About 50% more gas is required than for steel sheet welding.

(cont'd)

cardiagn.com

Aluminum Alloy Repair

MIG Welding Conditions (cont'd)

2. Nozzle and contact tip

Compared with the carbon dioxide arc welding of steel plates, spattering adheres more readily at the end of the nozzle and the contact tip.

- Adhesion of spattering can be reduced by using an anti-spatter compound. This makes it easier to remove spatter as well.
- The nozzle and contact tip are subjected to greater wear than with steel plate welding.

3. Electrode wire setting

Since the cable inner liner is made of teflon, be sure not to mark or scratch it.

- Use sandpaper to smooth the edge of the end of the electrode wire before feeding it through by hand.

4. Adjustment of electrode wire drive roller tension

Tension is adjusted to a setting less than that for steel plate welding. When the electrode wire is held lightly at the contact tip area and the torch switch is on, the wire is set so that it will slip in the drive roller area. If the tension is set too high, the aluminum alloy electrode wire will be twisted. If it is set too low, the wire speed will not be constant.

NOTE:

- The tools used for aluminum alloy welding should be kept completely separate from those used for steel plate.
- Use a stainless steel wire brush.
- Use sanding tools which have been reserved especially for use with aluminum alloys, (If the same tools are used for steel plate as well, iron deposits will remain on the surface of the aluminum alloy contaminating the welding locations.)
- Proper storage of electrode wire is important for best welding results.
- Store electrode wires where they will not become dirty or scratched and where they will be free from contact with oils and greases.
- When electrode wire is being used, ensure that it is wound properly on its spool. Use clean gloves to seal wire in airtight vinyl bags and store at a constant temperature in a location where it will be dry at all times.
- Take steps to ensure that the covers sealing electrode wire containers are not opened until actual use.

cardiagn.com

Plug Welding Procedures

When removing or replacing plates bonded by spot welding, drill through the spot weld nugget and remove. The combinations shown in the figures below apply when plates are to be welded together. Drill the hole when the plates have been removed or drill the prepared hole, and proceed with plug welding.

1. Plate combinations and prepared holes
   Diameter of drill (spot cutter) when removing plates: 10 mm (3/8")
   Drill the hole in the new part. Drill diameter: 8~10 mm (5/16~3/8")

Unit: mm (in)

Two stacked plates:

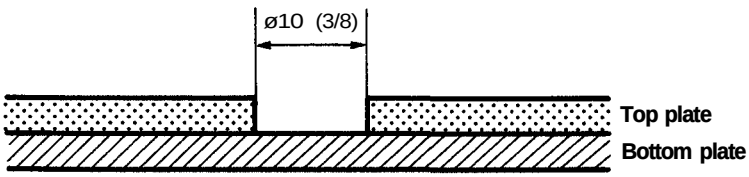

Hole drilled in one plate only.

Two stacked plates:

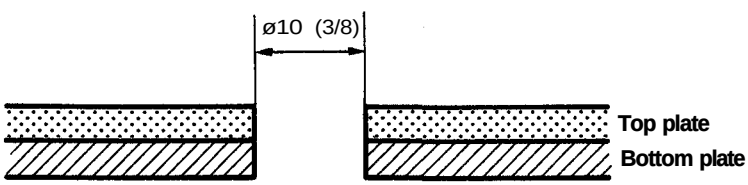

Hole drilled through both plates.

Three stacked plates:

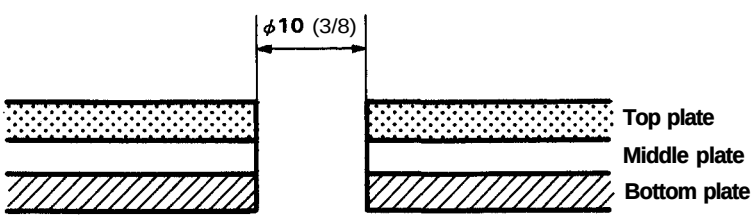

Hole drilled through all three plates.

2. Adherence
   Where the plug welding is to be performed, the aluminum alloy plates must adhere together firmly, otherwise the welding will be defective.

(cont'd)

cardiagn.com

Aluminum Alloy Repair

Plug Welding Procedures (cont'd)

3. Cleaning and sanding
   - Use a wax and grease remover to clean off any dirt, oil or grease prior to welding.
   - If the aluminum alloy surface is coated with a paint film, use a disc sander and #80 sanding disc to remove the paint.
   - Use a stainless steel wire brush to burnish the bare surface of the aluminum alloy immediately before the welding.

   NOTE: Use a stainless steel wire brush to burnish the bare surface of the aluminum alloy immediately before welding.

Cleaning range

Unit: mm (in)

When drilling a single-layer hole in two stacked plates:

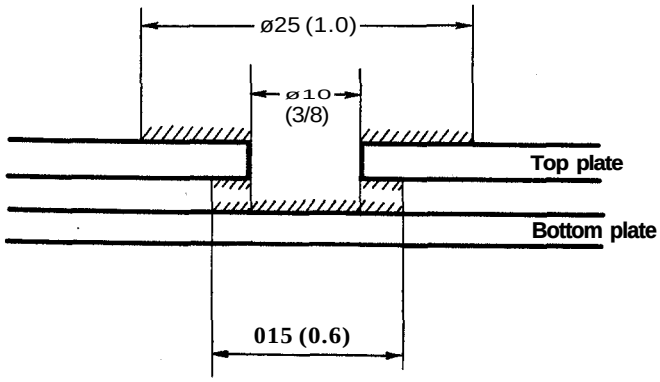

Sand the top and bottom surfaces of the top plate and the welding surface of the bottom plate.

Remove oxide film by sanding.

Prepared hole.

Oxide film removal by sanding

1. Top surface of top plate. 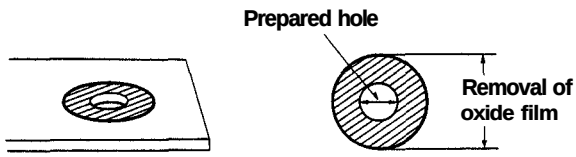	25 mm (1.0 in) diameter area on top surface of top plate centering on plug hole.
2. Bottom surface of top plate. 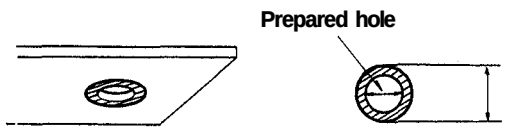 3. Welding surface of bottom plate. 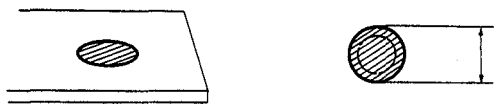	15 mm (0.6 in) diameter area on bottom surface of top plate and welding surface of bottom plate centering on plug hole.

cardiagn.com

When a hole is to be made through two stacked plates:

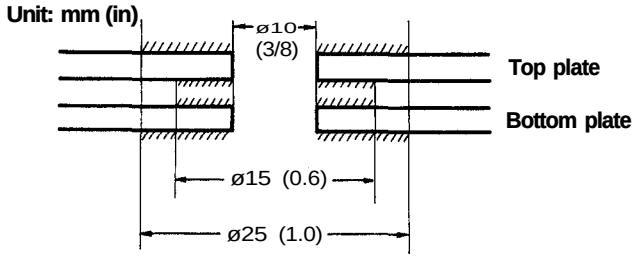

Sand the top and bottom surfaces of both the top and bottom plates.

Range of oxide film removal by sanding.

1. Top surface of top plate/bottom surface of bottom plate. 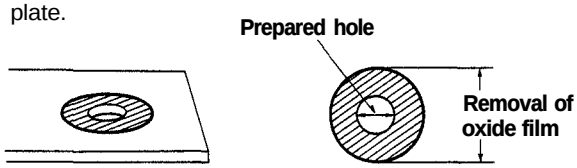	25 mm (1.0 in) diameter area on top surface of top plate and bottom surface of bottom plate centering on plug hole.
2. Bottom surface of top plate/top surface of bottom plate. 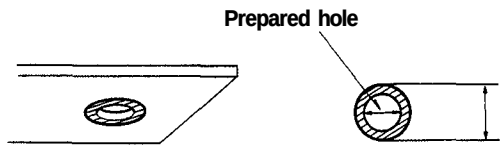	15 mm (0.6 in) diameter area on bottom surface of top plate and top surface of bottom plate centering on plug hole.

When a hole is to be made through three stacked plates:

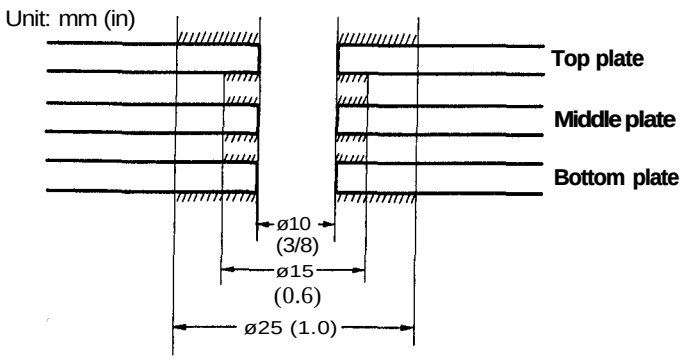

Sand both surfaces of the top, middle and bottom plates as shown (/////) to remove oxide film.

Range of oxide film removal by sanding.

1. Outer surfaces of top and bottom plates. 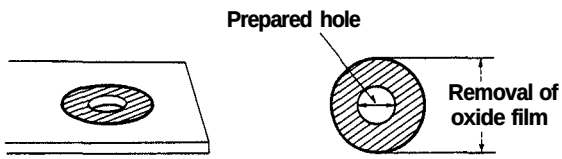	25 mm (1.0 in) diameter area on outer surfaces of top and bottom plates centering on plug hole.
2. Inner surfaces of top and bottom plates, both surface of middle plate. 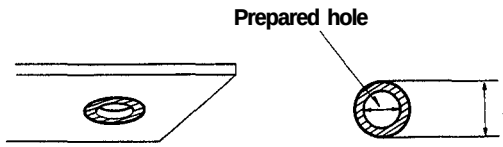	15 mm (0.6 in) diameter area on inner surfaces of top and bottom plates and on both surfaces of middle plate centering on plug hole.

(cont'd)

cardiagn.com

Aluminum Alloy Repair

Plug Welding Procedures (cont'd)

4. Welding
   Prepared hole diameter: 10 mm (0.4 in)

Plug welding starts from the outside of all weld zones (outside start).

As shown in the figure, outside start welding commences at a position approximately 15 mm (0.6 in) from the weld zone.

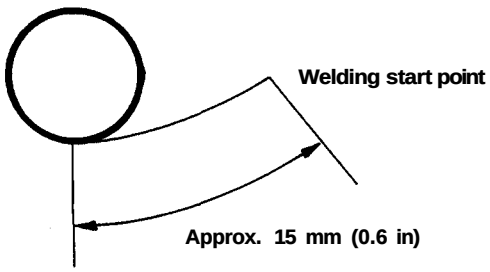

Advantages of outside start

- Penetration is enhanced by the preheating effect accompanying the outside start.
- The initial penetration area is clearly visible is the light given off by the arc and working efficiency is improved.
- Outside start provides preheating to safeguard the aluminum alloy from inadequate initial penetration.

NOTE: Maintain a stable posture so that the torch does not move around but is held firmly and so that the weld zone is clearly visible.

cardiagn.com

Welding	Procedure
When drilling a single-layer hole in two stacked plates: Proceed with welding while aiming at the edge of the hole where the top and bottom plates meet. 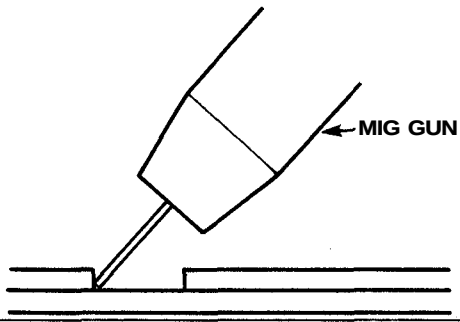 	● Proceed with welding while closely observing the melting condition of the weld zone. ● Until the operator is experienced in welding, take care not to increase the distance between the torch contact tip and base metal. 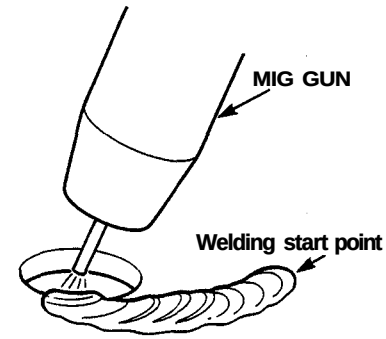
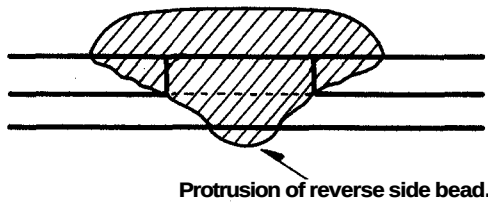 NOTE: Melting of 1/3 to 2/3 of the bottom plate is the adequate for the weld.	● Ensure adequate penetration as far as the bottom plate. The reverse side bead on the bottom plate may protrude in the process. Keep the protrusion to a minimum.
With a hole through two stacked plates: Proceed with welding while aiming at the joint where the top and bottom plates meet. 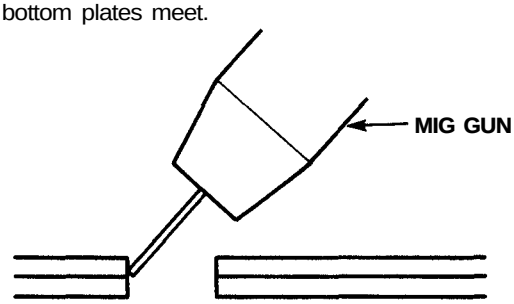 With a hole through three stacked plates: Proceed with welding while aiming at the joint where the middle and bottom plates meet. 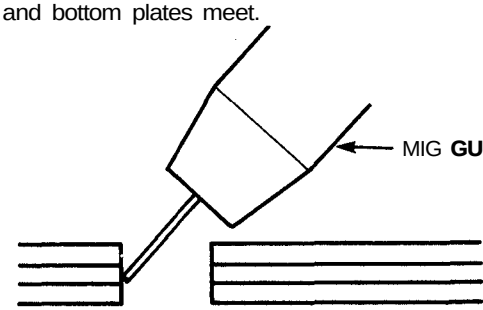 	(1) First, proceed from the top. ● The plug hole is filled after welding to a distance equivalent to about one and half times the entire circumference. 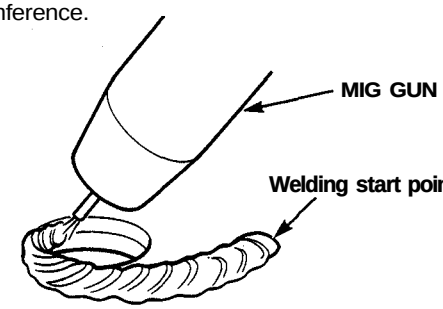 ● The plug hole is filled after welding to a distance equivalent to about twice the entire circumference.

(cont'd)

cardiagn.com

Aluminum Alloy Repair

Plug Welding Procedures (cont'd)

Grinding	Procedure
Protrusion of reverse side bead. Hole through two stacked plates: 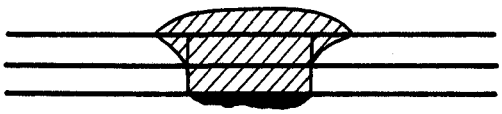	(2) Use a disc grinder or disc sander to grind down the area where the bead on the reverse side protrudes until it is flush with the surface of the bottom plate.
Hole through three stacked plates: 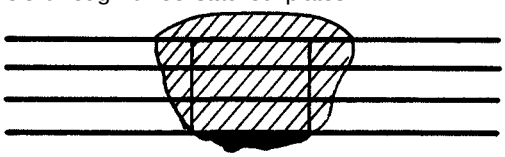	(3) Use a stainless steel wire brush to burnish the surface where the bead is ground down.
Welding	
View from bottom plate 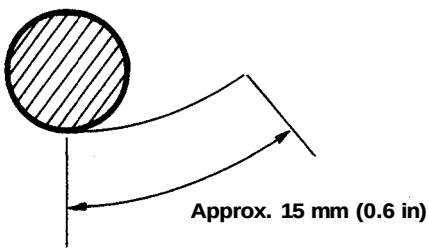	(4) Use an outside start to weld the bottom plate where the bead is ground down.
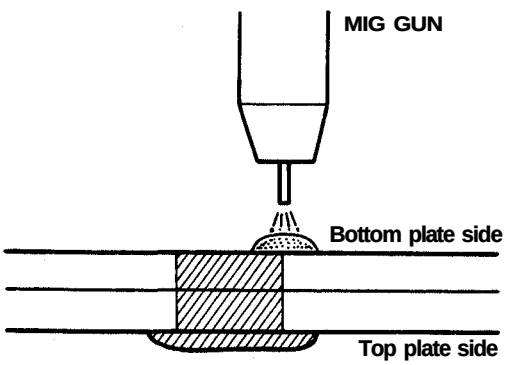	(5) When welding the bottom surface, position the torch perpendicularly and weld around the edge of the plug hole.

cardiagn.com

Butt Welding Procedures

Reduce the clearance as shown in the figure below for butt welding thin plates or sheets. If the clearance is too wide, welding should be performed in the stitch mode.

1. Edge preparation

With plates less than 3 mm (0.12 in) thick: 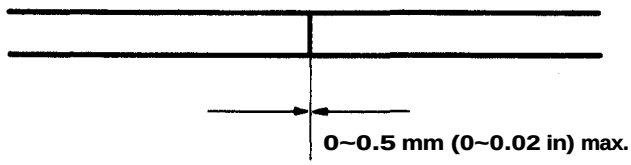 	Weld with a square edge without special preparation. ● Use a smooth-cut file to bring the the edge preparation surface to a smooth finish.
With plates more than 3 mm (0.12 in) thick: 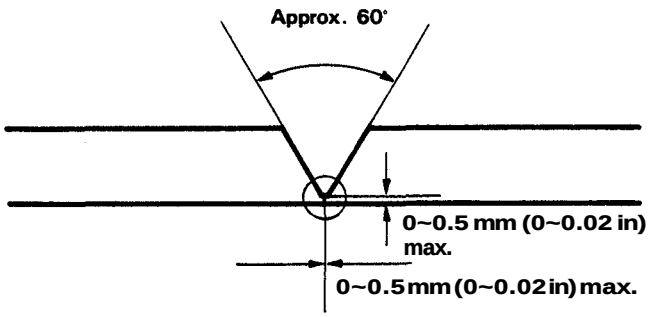 ● Reverse side beads often occur because of edge preparation in the above figure.	Proceed with V-shaped edge preparation. ● Edge preparation is required for butt welding thick plates, as shown. ● Use a disc grinder and file (rough-cut or vixen file) for edge preparation. ● Use a disc sander with #80 sanding disc and a file (smooth-cut) to finish the prepared area.

2. Cleaning and sanding

Use a wax and grease remover to clean off any dirt, oil or grease prior to welding.

If the aluminum alloy surface is coated with a paint film, use disc sander and #80 sanding disc to remove the paint.

NOTE: Use a stainless steel wire brush to brush the bare surface of the aluminum alloy. Do this on both the top and bottom surfaces.

Sanding range

For square edge preparation: 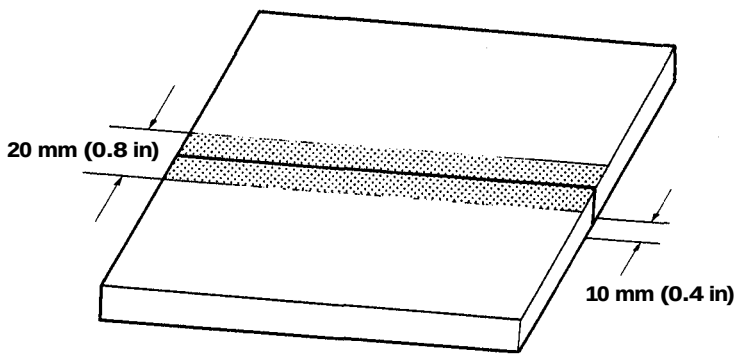 	Sand the top to a width of approx. 20 mm (0.8 in) and the bottom to a width of approx. 10 mm (0.4 in).

(cont'd)

cardiagn.com

Aluminum Alloy Repair

Butt Welding Procedures (cont'd)

Sanding range

For V-shaped edge preparation: 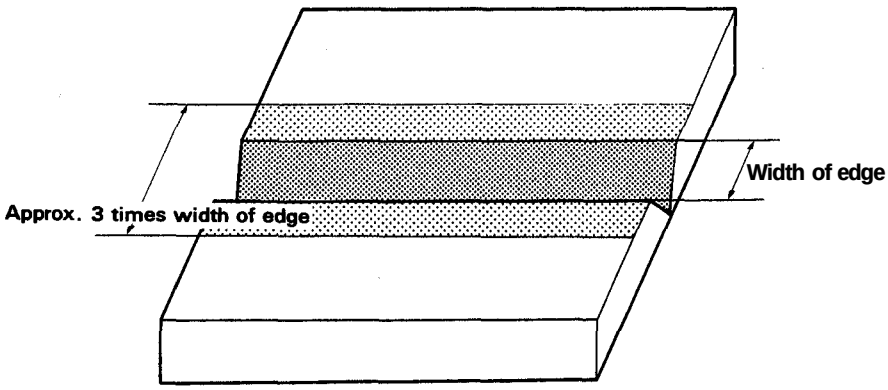	Sand the top to a width approximately 3 times the width of the edge and the bottom to a width approximately equivalent to the edge. NOTE: Also sand the edge preparation area.

3. Tack Welding

Prior to finish welding, carry out tack welding to prevent strain and enhance joint precision. Weld the plates at several points with short beads.

NOTE: Use a stainless steel wire brush to clean the tack weld zones prior to finish welding.

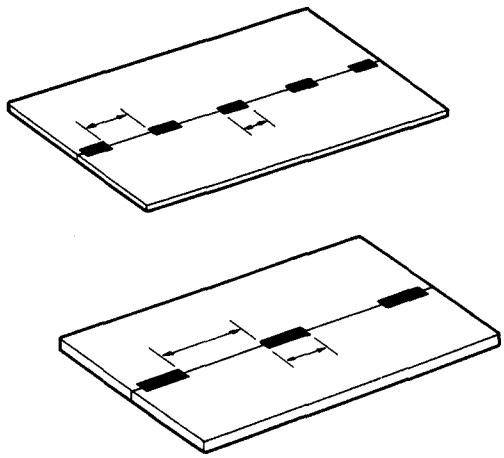

- The thinner the sheet or plate, the shorter the tack welding pitch and bead.
- Avoid tack welding the ends and corners of the base metal.
- Since the beads left by tack welding are not ground down afterward, this process should be carried out with the same precision as finish welding.

cardiagn.com

4. Main welding

Maintain a stable posture so that the gun does not move around but is held firmly. The weld zone is clearly visible. Maintain the proper distance between the gun contact tip and the base metal, and maintain the proper gun angle. Adjust the gun feed speed while observing penetration.

NOTE:

- Aluminum alloys are welded at a higher gun feed speed than steel plate.
- Use the forehand welding sequence for the gun advance direction in order to minimize the formation of black soot.
- Until the operator is experienced in welding, take care not to increase the distance between the torch contact tip and the base metal.
- When welding multiple layers of a thick material, brush the surface of the welded area thoroughly using a stainless steel wire brush after each pass.

5. Greater treatment

Craters may form when the welding bead is completed. They should be filled properly to avoid defects.

There are two ways of treating craters. Either stop the gun and fill the crater without switching off the arc suddenly when the welding bead is completed, or alternatively, switch the arc and then back on again to fill the crater.

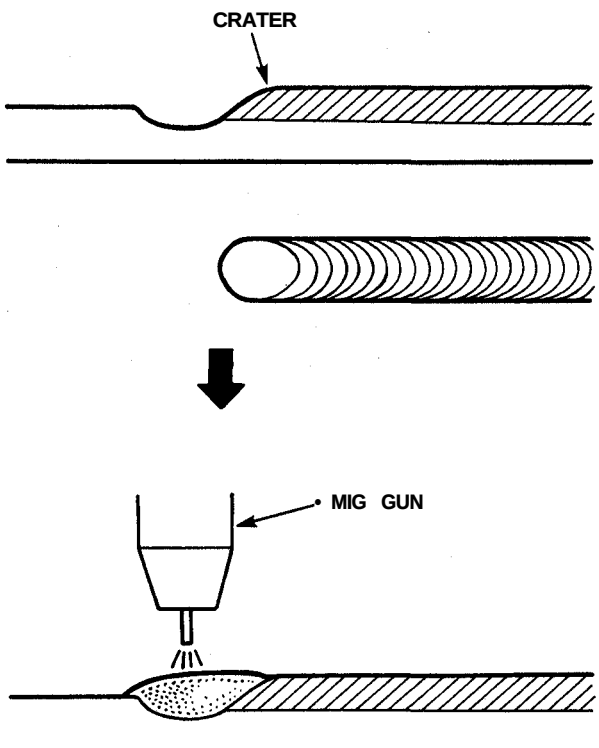

(cont'd)

cardiagn.com

Aluminum Alloy Repair

Butt welding Procedures (cont'd)

6. How to weld without inducing strain

Tremendous strain results if the base metal is overheated during MIG welding.

- When many welding joints have been created, proceed to weld from a location with a minimal degree of freedom. Normally, welding proceeds from the center of the area or center of the joints to the outside.
- In direct proportion to the thickness of the plates, do not conduct lengthy welding operations at one time. Instead, divide the job up into shorter operations, as shown in the figure below.

Preventing strain by sequencing welding work:

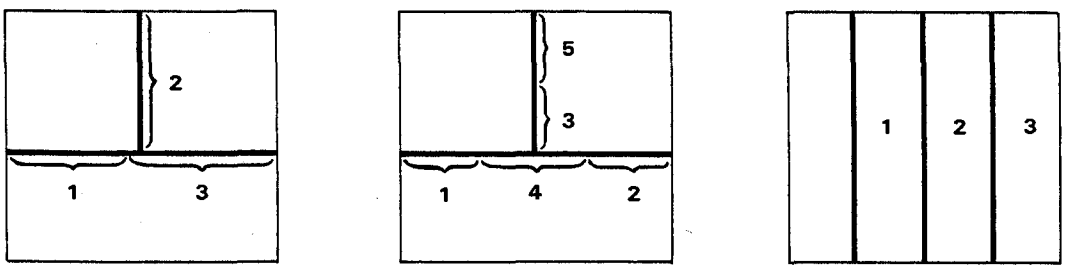

Preventing strain by sequencing bead:

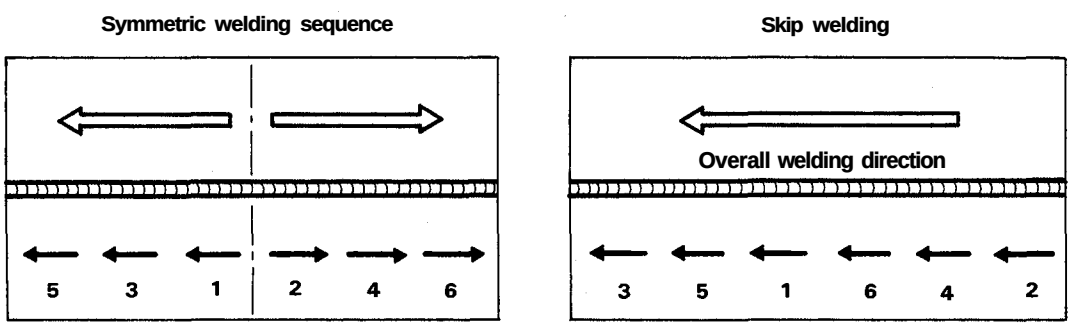

Welding procedure

- When an operator is experienced, the strain can be reduced by increasing the gun feed speed at higher power settings (current). This method reduces the amount of heat transmitted to the base metal.
- In the case of thin plates where there is a danger of melt-down, do not weld continuously without stopping but weld short sections at a time. If the welder is provided with a stitch mode, set to this mode and perform stitch welding.

cardiagn.com

Butt weld zone defects:

The table below shows possible weld zone defects and their causes. Care must be taken to ensure that none of these defects occur. If a defect does develop, pinpoint the causes and consider the appropriate countermeasure, change the work method, and proceed in a way which will produce stable welding results.

Defect	Appearance	Main causes
Bead crack	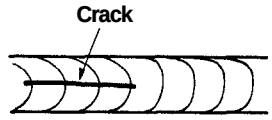	Excessively high welding current. Unsuitable filler metal, (welding wire).
Crater crack	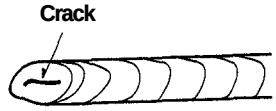	Unsuitable crater treatment.
Undercut	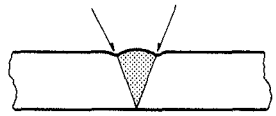	Poor gun aim. Excessively high welding current. Excessively high welding speed.
Overlap	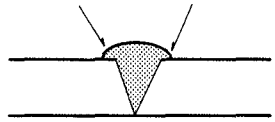	Insufficient welding current. Excessively low welding speed.
Incomplete penetration		Unsuitable edge preparation. Insufficient welding current. Excessively high welding speed.
Blowhole, pit	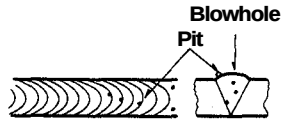	Dirt on base metal (inadequate cleaning). Use steel wire brush. Improper shielding (insufficient shielding gas, strong wind). Moisture on plate surface. Dirt on electrode wire.

(cont'd)

carlabgh.com

Aluminum Alloy Repair

Butt welding Procedures (cont'd)

Defect	Appearance	Main causes
Unaligned beads		Welding wire speed not constant. Gun travel speed not constant.
Melt-down	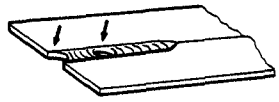	Excessively high welding current. Unsuitable edge preparation (too wide).
Formation of soot	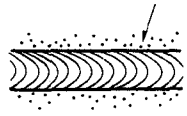	Poor gun angle. Improper gun advance (forehand weld sequence). Improper shielding (insufficient shielding gas, strong wind). Dirt on base metal.

cardiagn.com

Aluminum Alloy Repair

Body, Frame Area Shaping (cont'd)

NOTE:

- Thermopaint (temperature indicator which changes color at 230°F (110°C) must be used for temperature control to ensure that the aluminum alloy does not overheat.
- When heating an alloy, move the torch flame continually so that it does not focus on one particular spot.

CAUTION:

- **When heated, aluminum alloys melt without changing color.**
- **Since the side sills of aluminum alloy bodies are susceptible to bending and torsional stress, an extruded heat-treated material (6000 series) is used. If a side sill is damaged, it must be replaced.**

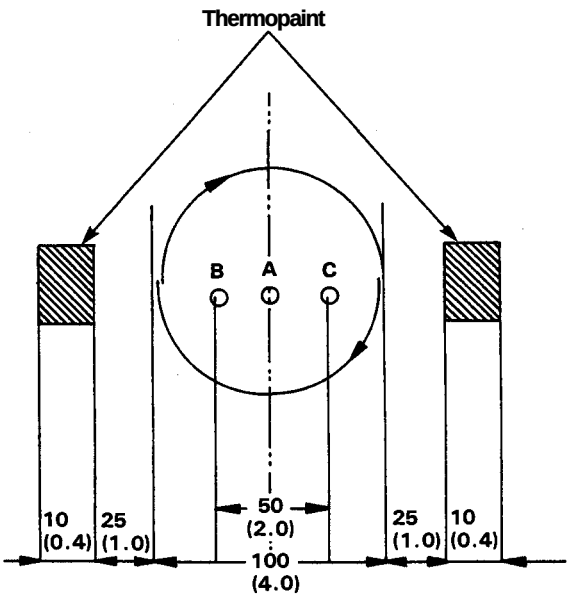

Unit: mm (in)

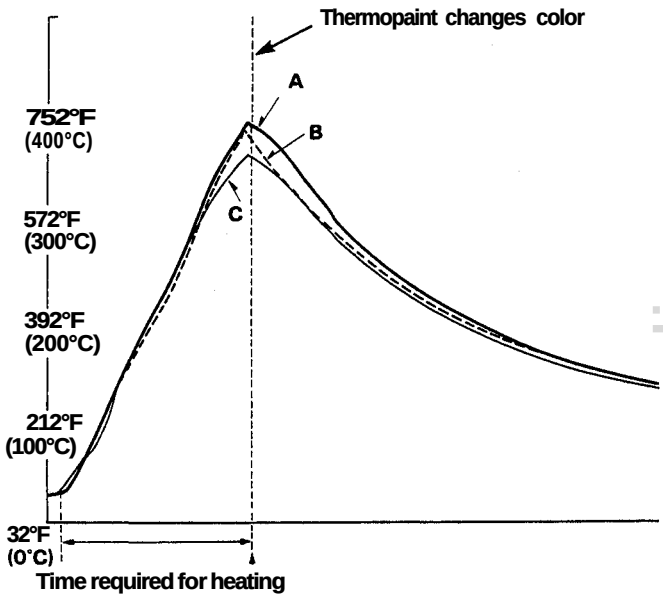

cardiagn.com

Skin Panel Area Shaping

1. Repairs using hammers and dollies

Hammering methods using hammers and dollies are basically the same as for steel plate.
The hammers and dollies shown below are used for aluminum alloys which have a relatively high elongation.

HAMMERS **DOLLIES**

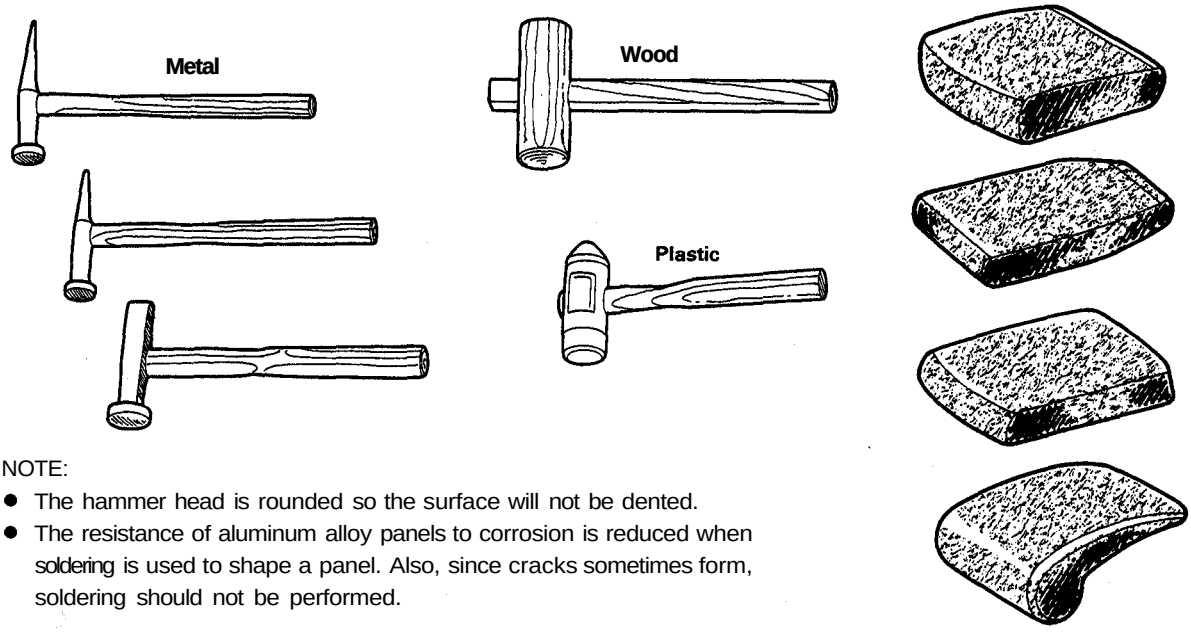

NOTE:
- The hammer head is rounded so the surface will not be dented.
- The resistance of aluminum alloy panels to corrosion is reduced when soldering is used to shape a panel. Also, since cracks sometimes form, soldering should not be performed.

There are two ways of using a dolly when hammering:

"Hammer off dolly" where the hammer and dolly are positioned askew, and "hammer on dolly" where the panel is sandwiched between the hammer and the dolly, and the hammer is used above the dolly.

Hammer off dolly:

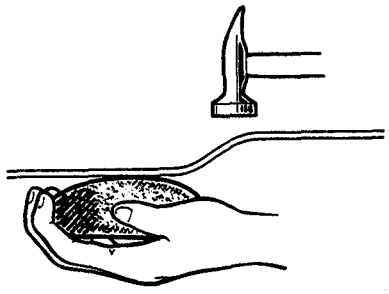

Hammer on dolly:

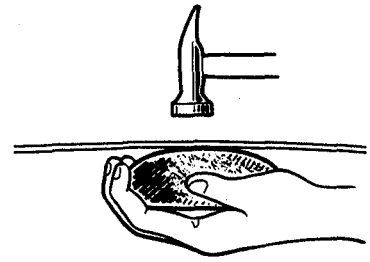

- The "hammer off dolly" method with its minimal elongation and work-hardening is frequently used for aluminum alloys. It is used to hammer down surfaces.

  NOTE: Be careful that the surface does not fall below the contour.

- Aluminum alloys react quickly to hammering with the "hammer on dolly" method, and elongation results. When this method is used, the surface must be tapped very lightly.

- The contact surfaces of the hammer and dolly must be kept clean and polished at all times so that the base metal is not marked or scratched.

(cont'd)

cardiagn.com

Aluminum Alloy Repair

Skin Panel Area Shaping (cont'd)

Hammering

To shape a deformed panel, use a hammer and dolly to smooth out unevenness. As shown in the figures below, a first even out a large indentation close to the original shape.

Use this method to straighten sharp curves from inside. After the shape has been restored to line C Fig. 1, use the hammer carefully to prevent panel elongation, then continue as shown in Fig. 2,3 and 4.

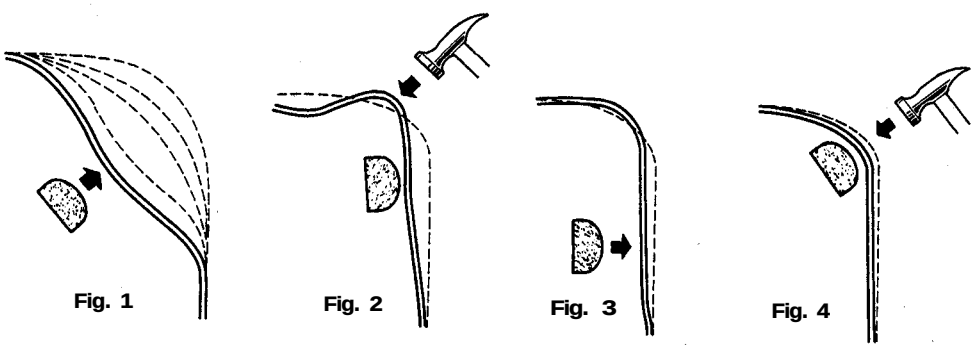

Drawing

As with steel plates, a gas torch can be used to apply heat, then draw the surface area to correct panel warp.
Aluminum alloy does not change color when heated, so it is important for the temperature to be controlled by applying thermo-paint so that the panel does not melt.

NOTE: The kind of drawing hammer (serrated face) used for hammer finishing of steel plate should not be used for aluminum alloy since it can cause cracking.

cardiagn.com

2. Paint film removal and cleaning

Use an #80 to #120 sanding disc to remove the paint film. Hold the disc plate lightly against the surface to avoid inducing strain. Proceed with feather-edging over a wide area bordering on the old paint film.

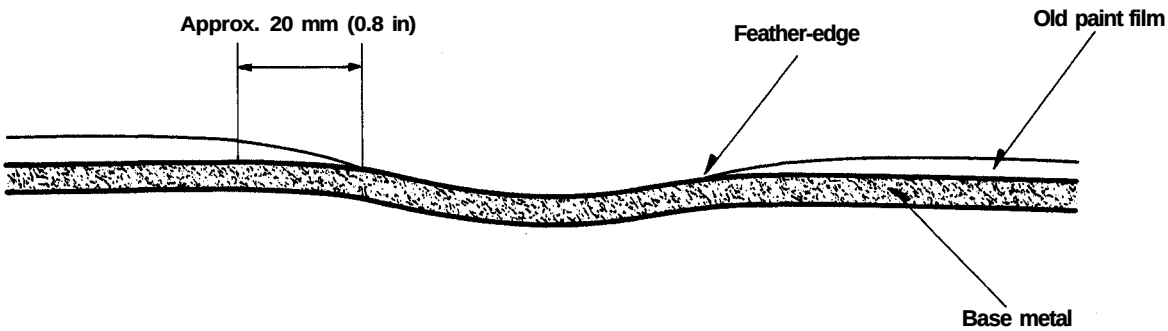

-1. Grind down the old paint film using a #80 sandpaper pad over a wider area than the putty area.

-2. When using #120 sandpaper to smooth the sanding marks from the #80 paper, leave an edge measuring between 20 ~30 mm (0.8~1.2 in) and proceed with feather-edging.

-3. Use compressed air to blow away any dust, dirt or moisture on the putty surface. Remove any oil or grease with a wax and grease remover.

- If it is raining or if the humidity is high, warm up the base metal using an infrared lamp or heater to remove the moisture.
- Similarly, warming up the base metal in cold weather (to about 68°F (20°C) also improves putty adhesion and speeds up the drying process.

(cont'd)

cardiagn.com

Aluminum Alloy Repair

Skin Panel Area Shaping (cont'd)

3. Finishing with putty

Unlike steel plate, putty cannot be applied directly to the bare surface of aluminum alloys. Apply an epoxy primer first, then add the putty. Putty is a material reduces the amount of work time involved in panel repair. With its excellent restorative properties and workability, using of putty is better than repairing a panel by hammering it or applying heat.

-1. Puttying

The basic instructions for applying putty are: clean the surface of the panel to be repaired, do not allow air to enter the putty, do not apply a thick layer at one time, and apply the putty to conform to the panel shape.

Air blowing

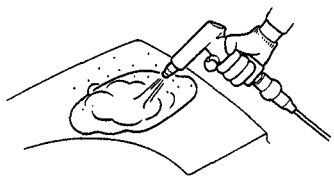

Grease removal

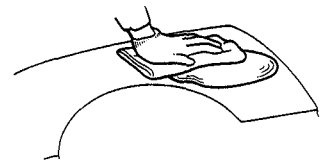

Drying

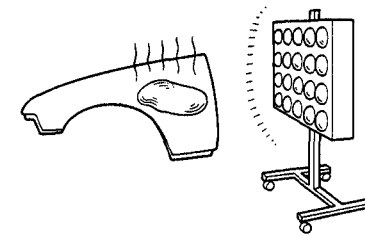

Main points in applying putty

- For flat surfaces, use a harder spatula; for gently curving surfaces, use a softer spatula; for sharply curving surfaces, use a flexible spatula made of rubber.

NOTE: Apply the puny from bottom to top, taking care not to reduce the height of the center area.

Plastic **Wood**

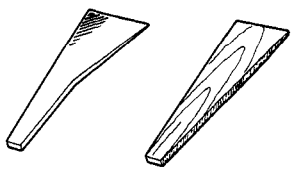

Rubber

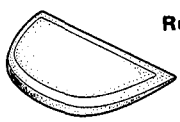

How to use a spatula on curved areas:

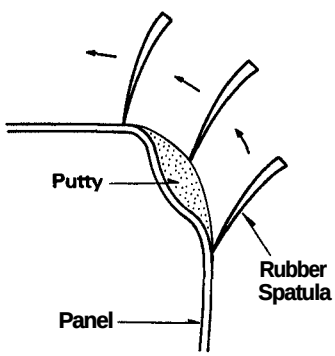

How to use a spatula:

Good | No Good

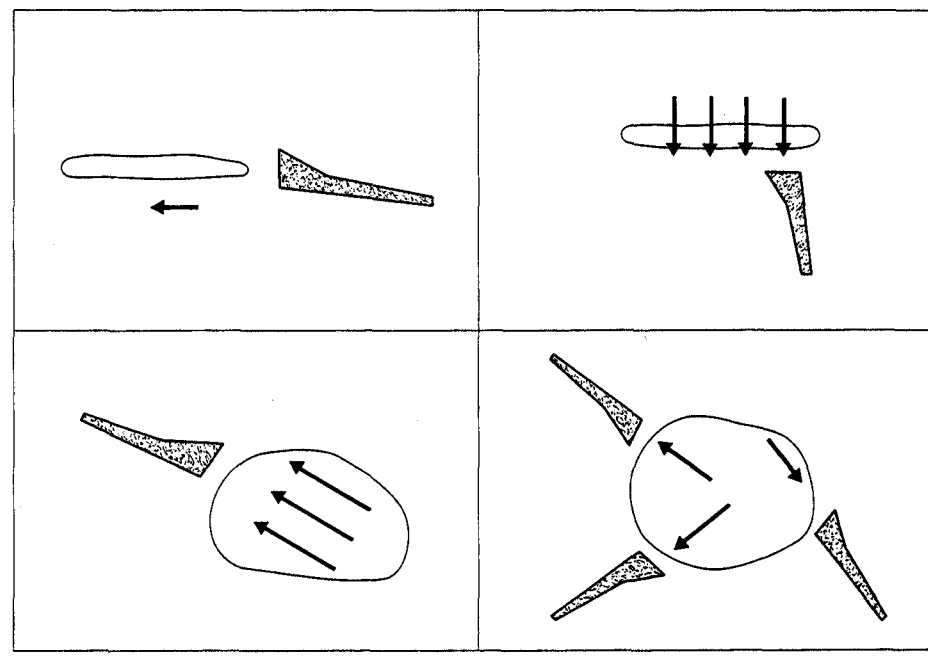

cardiagn.com

-2. Putty sanding

There are three stages in putty sanding: roughing, leveling and border line flattening.

- Sand the putty in all directions.
- Always use an orbital sander or double-action sander.
- Operate a power-driven file by hand for finishing.

Sander motion:

SHORTORBITALSANDER

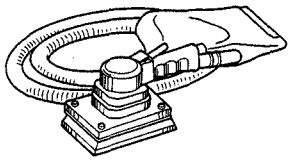

Movement of single-action sandpaper area:

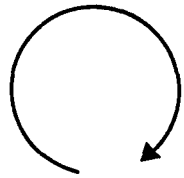

LONG ORBITAL SANDER

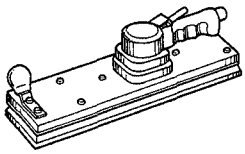

DOUBLE-ACTION SANDER

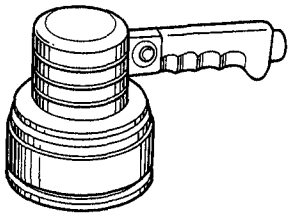

Movement of double-action sandpaper area:

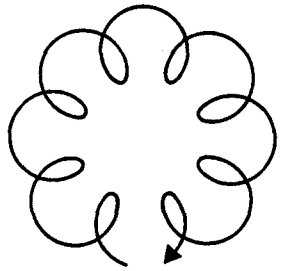

HAND FILE

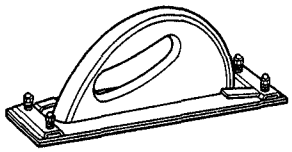

Sanding a flat surface:
Move in all directions over the surface of the putty.

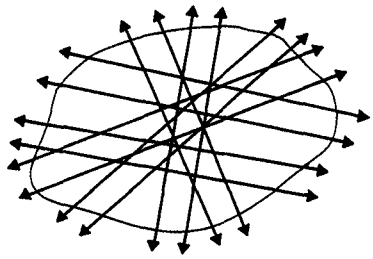

Sanding a gently curved surface:
Move the sander diagonally in a specific direction only.

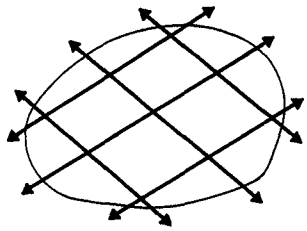

Sanding a sharply curved surface:
Move the sander smoothly to roll over the high-point of the curved surface.

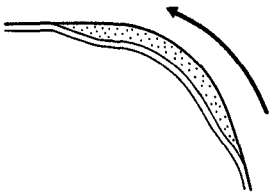

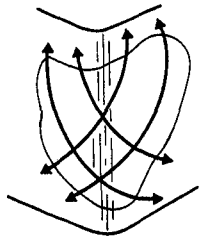

cardiagn.com

Aluminum Alloy Repair

List of "Dos" and "Don'ts"

1. Sanding work

1) Don't use the same sanding tools or sandpaper for both aluminum alloy sheets and steel plates.

2) Do operate the sanding tool at a low speed; don't operate continuously as this heats the surface of the metal.

3) Don't use clogged sanding tools or sandpaper.

4) Do use a stainless steel wire brush; don't use an iron wire brush.

2. Welding work

1) Don't forget to clean and sand the weld zones.

2) Do check welding conditions using a test piece prior to welding: don't start welding body areas with out preparation.

3) Don't use electrode wire other than A5356WY.

4) Don't use shielding gas other than 100% argon gas.

5) Do keep electrode wire in airtight containers and store in a dry, constant -temperature location; don't use wire that has been left around for a long time.

6) Don't use acetylene or oxygen gas welding or brazing.

3. Sheet metal work

1) In structural areas that have been damaged or buckled, do replace any parts with cracks; don't repair cracked parts after frame straightening.

2) Do repair buckled areas by heating them in controlled temperature, don't try to extend them when cold.

3) Don't clamp anything directly without protection.

4) Don't use a serrated face hammer.

5) Don't perform soldering (leading) shaping.

6) Don't forget to apply an epoxy primer before puttying.

4. Assembly work

1) Do use only the designated nuts and bolts; don't use any part which has not been coated with [DACRO] or [DACRO + TORQUER]

5. Inspection

1) Don't forget to check for cracks after frame straightening and after welding.

cardiagn.com

General Information

Features

- Mid-engine car with ground-hugging, full-forward canopy design.
- The lower body is AH-PO for greater resistance to corrosion and collision damage.
- Outer panels, (except the roof) are constructed of individual panels to allow more convenient and economical repairs.
- In considerations of rigidity, surface smoothness and simultaneous body painting, the trunk lid spoiler is made of UP-G.

① Straight-line front side-frame for excellent absorption of front impact energy.

② Extruded-molded side sills with high strength and rigidity.

③ Lower part of center pillar is designed as flare-type and united solidly to main frame, thus greatly improving rigidity.

④ All main-frame parts are joined smoothly, providing high impact strength and improving high body rigidity.

⑤ Large cross-section rear frame to protect fuel tank in event of rear impact.

⑥ Rear fenders are detachable to make minor collision repairs easier.

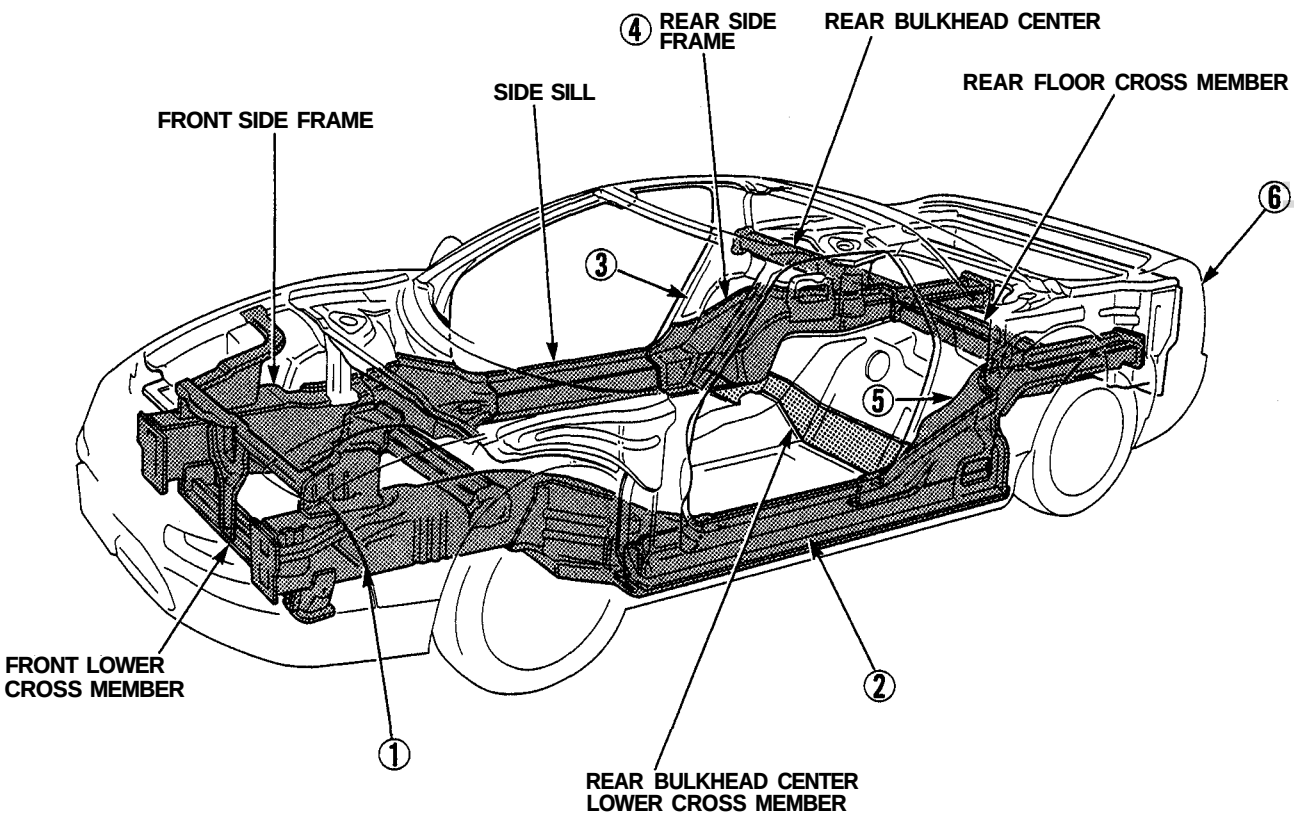

cardiagn.com

Composition

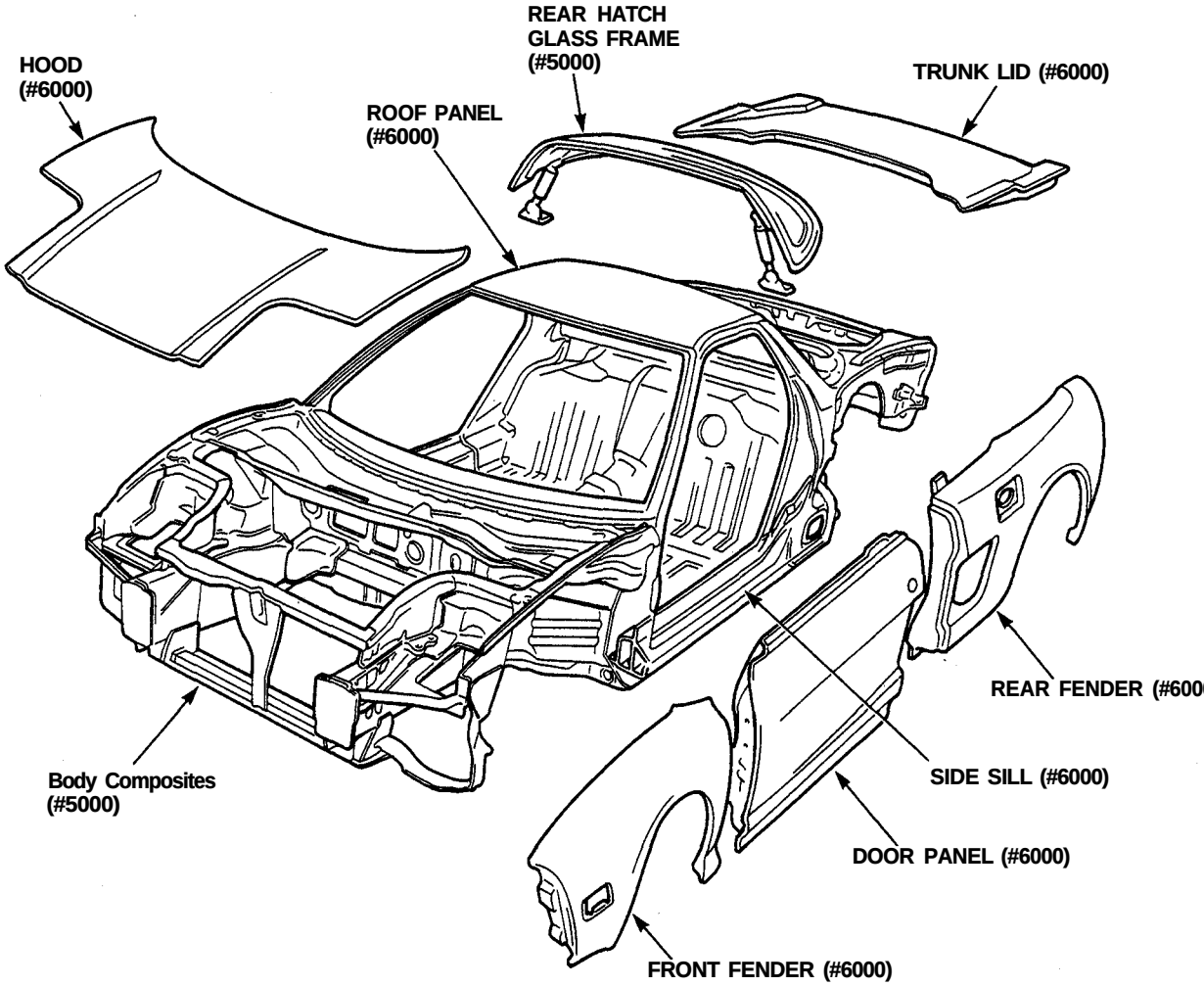

Types of aluminum alloys for pressings:

Alloy	Part	Material properties
Non-heat-treated alloys #5000, Aluminum-Magnesium (AI-Mg)	Body composites (HA5182P-0)	Good corrosion resistance, Weldability and malleability.
Heat-treated #6000, Aluminum-Magnesium-Silicone	Exterior surface skin (HAZ6083P-T4) Roof panel (HAZ6083P-T4) Side sills (HACF60-T5)	Excellent malleability and corrosion resistance (HAZ6083-T4) is particularly resistant to corrosion.

cardiagn.com

General Information

Fasteners Aluminum Bodies.

The NSX is built mostly out of aluminum alloys. Be sure to observe the following points:

1. Special bolts and nuts are used in body and suspension areas. Never use any kind other than these special bolts and nuts. If other bolts or nuts are used, electrolysis may accelerate corrosion around tightening points, resulting in loosening of the joints. These special bolts and nuts can be identified by the gray plating on the heads or green coating on the threads.

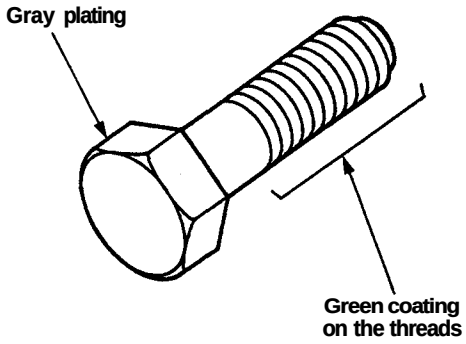

Gray plating: "Dacro" type
Gray plating + Green coating on the threads: "Torquer" type

2. Aluminum alloy parts are softer than conventional steel parts, so tightening torques must be strictly observed. A torque wrench must always be used on fasteners with designated torque values. Tightening by "feel" may result in •loosening of threads or damage to parts from excessive tightening.

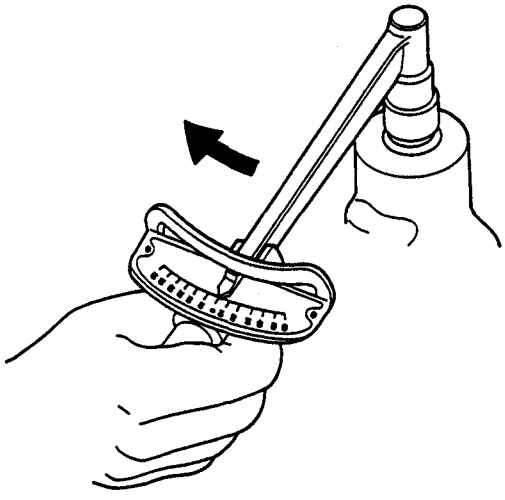

3. Clean all thread ridges thoroughly before tightening, If tightening is performed when foreign materials are present on the threads, the threads themselves may be damaged, resulting in faulty connections.

cardiagn.com

Construction

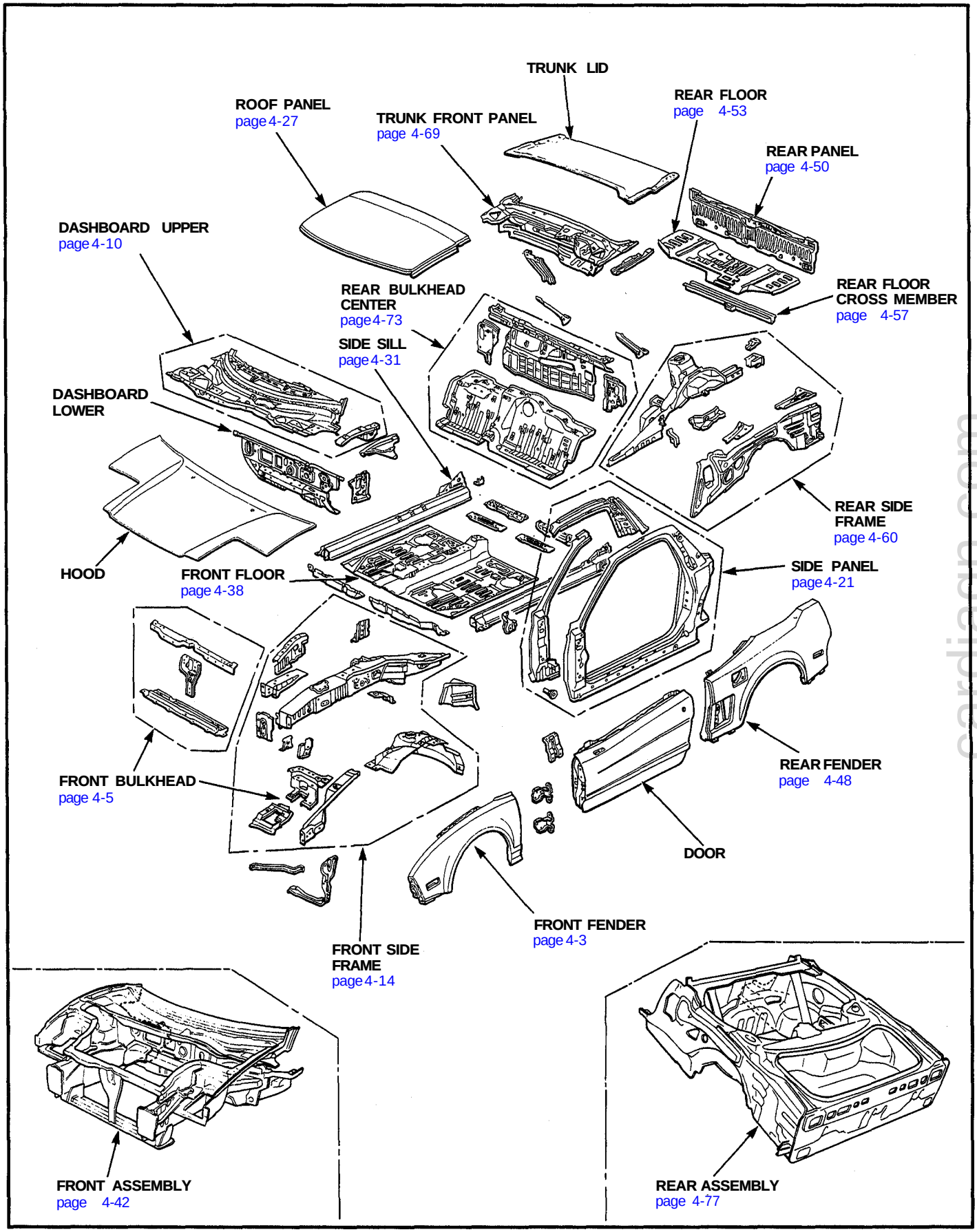

cardiagn.com

Front Fender

Replacement

NOTE: Take particular care of clearance and level difference with the hood, door panels and front bumper.

1. Remove the related parts.
   - Front bumper assembly
   - Front side turn signal light assembly
   - Side sill panel

2. Mask parts with tape.
   Stick masking tape on neighboring lower windshield and door to protect painted surfaces from damage.

3. Remove the inner fender.

4. Remove the front fender mounting bolts.

   NOTE:
   - Use the DACRO coated or DACRO & TORQUER-coated genuine Honda bolts and screws (see page 3-4).
   - Do not used any bolts which DACRO-coating has come off, as it results in corrosion.

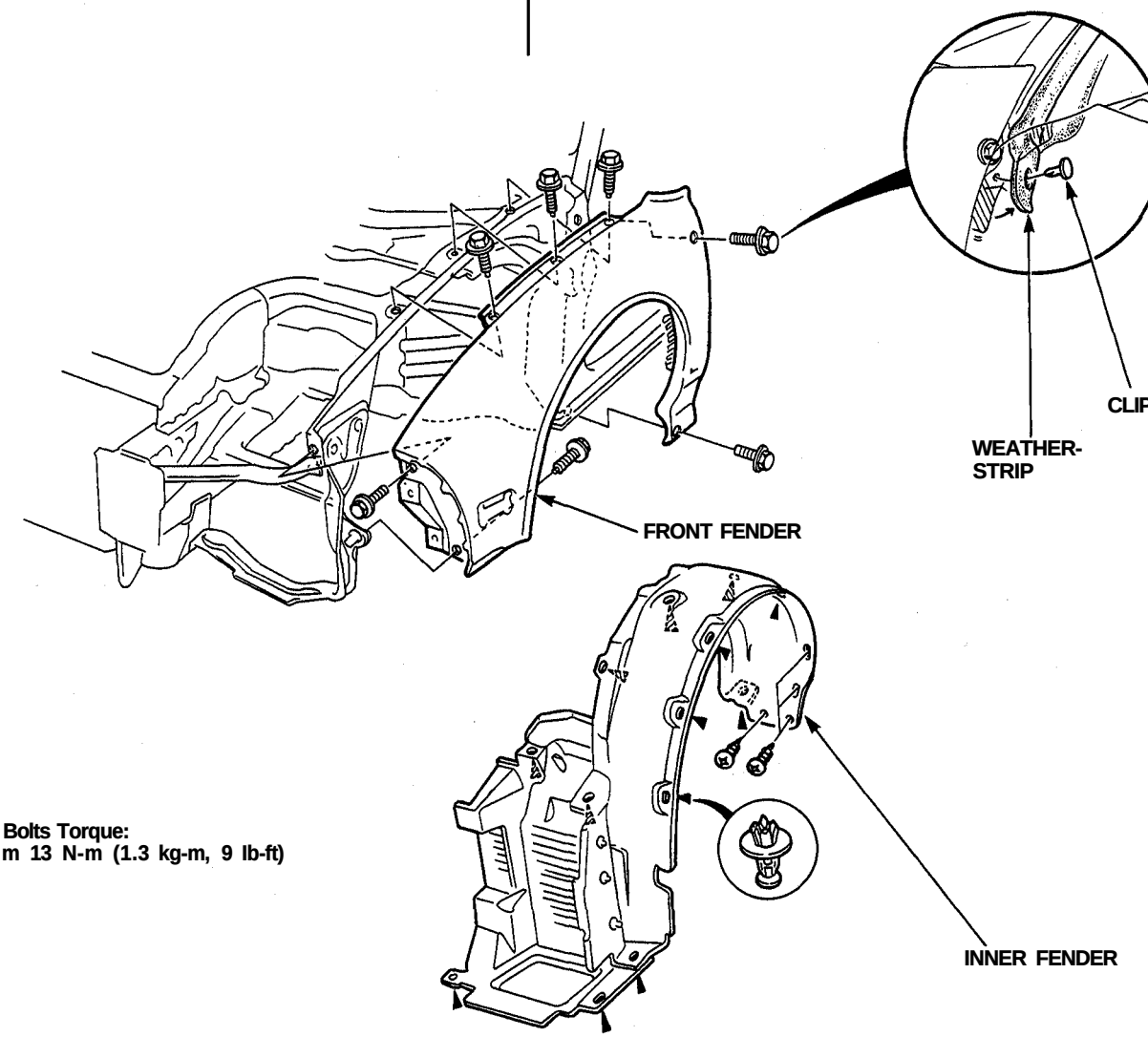

Mounting Bolts Torque:
☆6 x 1.0mm 13 N-m (1.3 kg-m, 9 lb-ft)

☆ : CORROSION RESISTANT BOLT

(cont'd)

cardiagn.com

Front Fender

Replacement (cont'd)

5. Apply paint on the back of the new fender.
   See Paint Repair section

⚠WARNING

- **Ventilate when spraying paint. Most paint contains substances that are harmful if inhaled or swallowed. Read the paint label before opening paint container.**
- **Avoid contact with skin. Wear an approved respirator, gloves, eye protection and appropriate clothing when painting.**
- **Paint is flammable. Store in a safe place, and keep it away from sparks, flames or cigarettes.**

NOTE: Apply paint to lower section of front pillar also.

6. Set the front fender.
   Fasten to the front wheelhouse at two spots with bolts. Close the hood and check the front and rear clearances, door clearance and level differences.

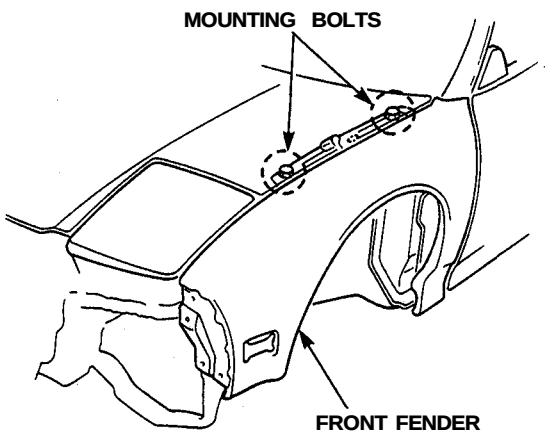

7. Tighten fully.
   - After checking the mounting position, tighten all bolts fully.
   - Apply the spot sealer to the mounting bolt positions.

   NOTE: Judge proper amount of new sealer according to thickness of old sealer on removed part.

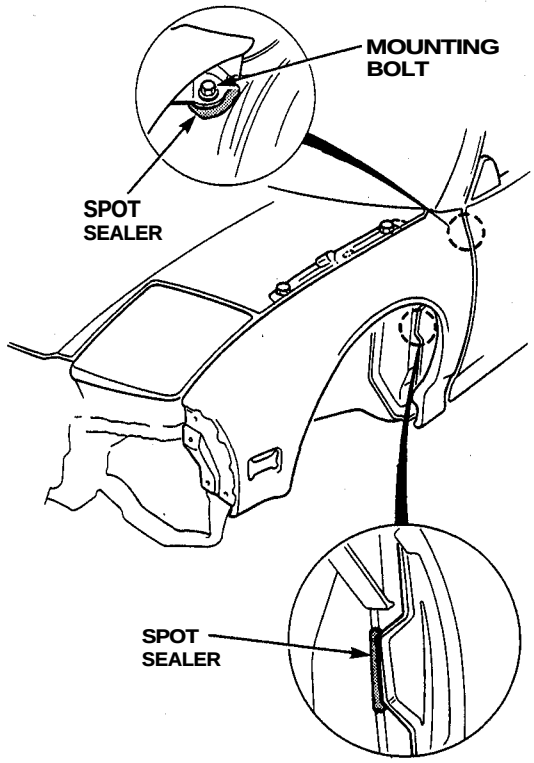

8. Apply the undercoat (see section 7).
   Apply an undercoat to the inside of the front fender and upper face of the front wheelhouse.

9. Apply the paint
   See Paint Repair section.

⚠WARNING

- **Ventilate when spraying paint. Most paint contains substances that are harmful if inhaled or swallowed. Read the paint label before opening paint container.**
- **Avoid contact with skin. Wear an approved respirator, gloves, eye protection and appropriate clothing when painting.**
- **Paint is flammable. Store in a safe place, and keep it away from sparks, flames or cigarettes.**

10. Install the related parts.
    Install in the reverse order in which they were removed.

11. Check and make adjustments.
    - Check wiring connections.
    - Check for blown bulbs or fuse.

cardiagn.com

Front Bulkhead

Description

The front bulkhead is joined to the front wheelhouse and front side frame. It forms the base for the headlights and other parts and maintains the rigidity of the front section of the body. Pay particular attention to twists and parallelism and check mounting of related parts when welding.

Mass Production Body Welding Diagram

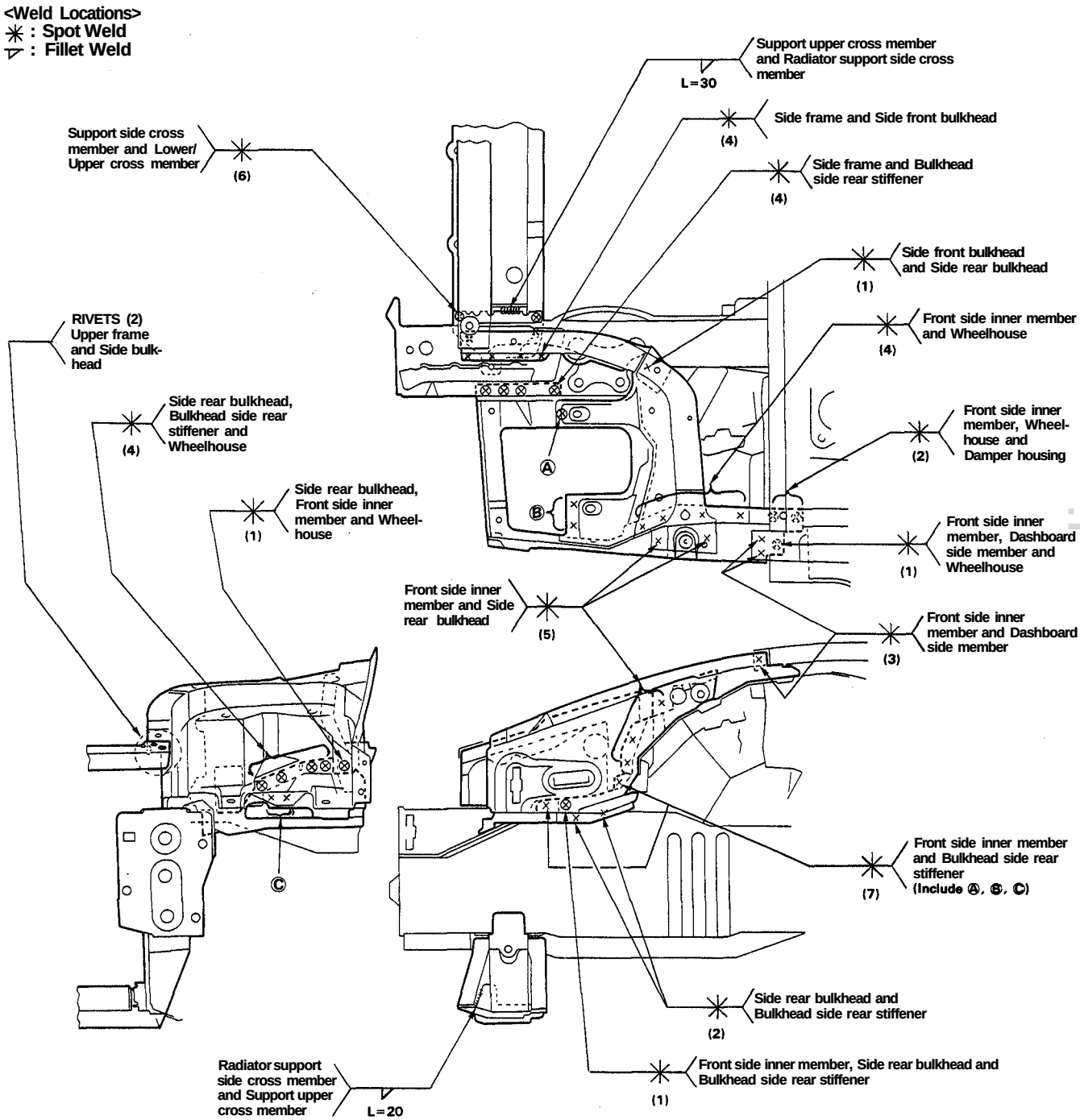

cardiagn.com

Front Bulkhead

Replacement

1. Remove the related parts.
   - Front bumper assembly
   - Hood
   - Right and left headlight assemblies
   - Right and left front fenders
   - Radiator
   - Hood latch

2. Remove the bulkhead center stay, condenser and bumper stay brackets.

☆: CORROSION RESISTANT BOLT

Mounting Bolts Torque:
☆6×1.0 mm 13 N·m (1.3 kg-m, 9 lb-ft)

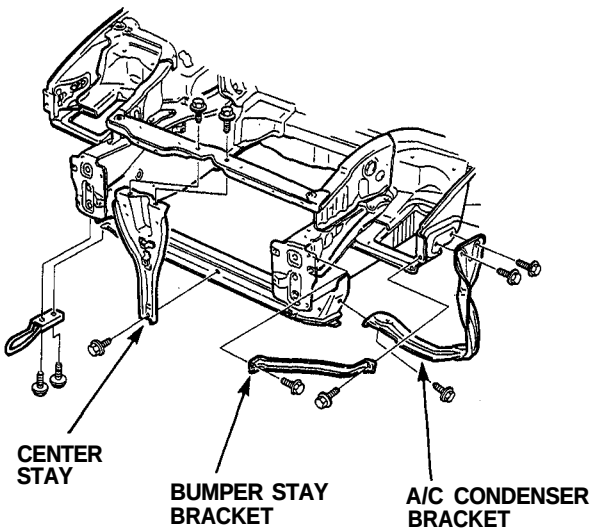

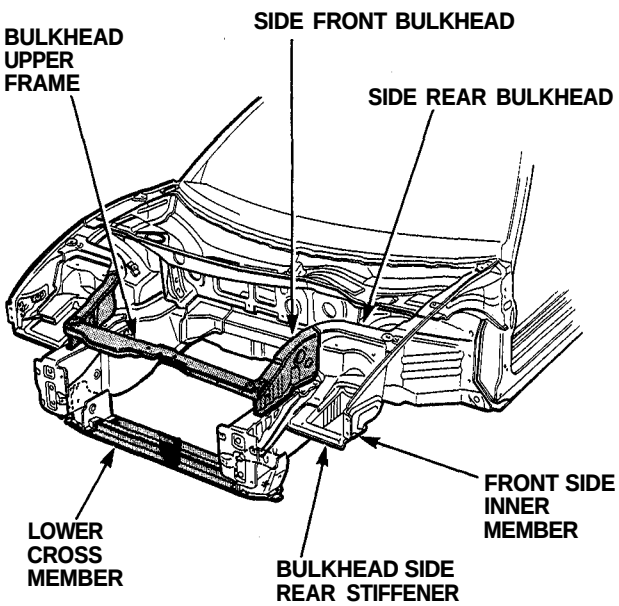

3. Pull out and straighten the damaged area.
   - Check the damage to the front wheelhouse and front side frame before removing the front bulkhead. Use the frame straightener to roughly pull out and repair the damaged bulkhead before removing the bulkhead.
   - When the buckled section is large, heat up the damaged section with an acetylene welder and pull it out.
   - The aluminum alloy does not change much in color. Use the thermo paint which color changes at 230°F (110°C) to check for the heating limit.
     Pull out the damaged section when the color of the paint changes (see page 2-31).

NOTE: Check the fit of the door, taking care not to pull the damaged area out more than necessary.

   - Use the Honda underbody clamps and attach the car to the frame straightener at the clamping points securely.
     Before fixing with the corrector, be sure to set a piece of aluminum plate at each clamp point to protect the car.
   - After pulling, check the damper housing and side frame position using body dimensional drawing.

4. Keep the body, level.
   - Jack up the body, and place safety stands at the four designated places of the side sills.

NOTE: Refer to the NSX Service Manual for safety stand location points.

5. Drill the rivets of the bulkhead upper frame with a 5 mm (3/16") drill, then remove the bulkhead upper frame.

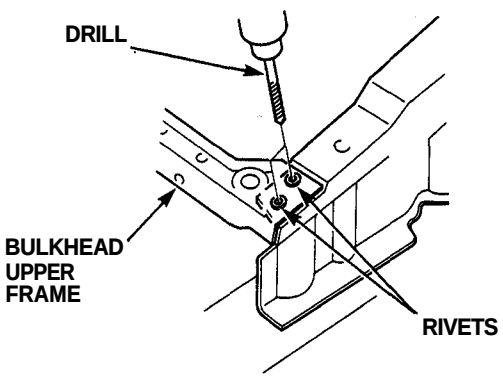

cardiagn.com

6. Remove the side front bulkhead and front side inner member.
   - Strike a center punch around the spot weld imprints.
   - Drill the spot welds of the side bulkhead using a ø10 (3/8") spot cutter.

   NOTE: When drilling holes be careful not to drill down to the wheelhouse and front side frame themselves.

   - Cut off the side bulkhead with an air chisel, leaving the welding flanges intact.

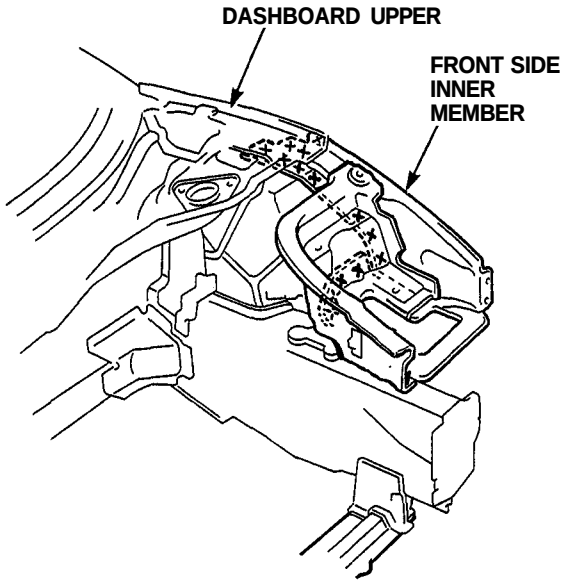

   - Grind the fillet welds of the lower cross member-and-side frame joint using a rotary cutter.

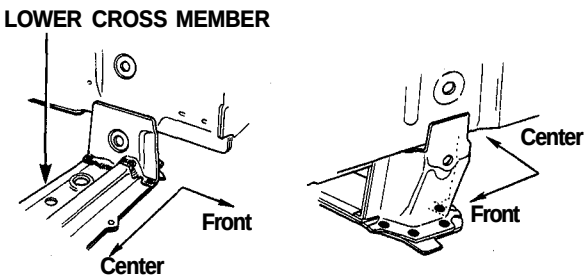

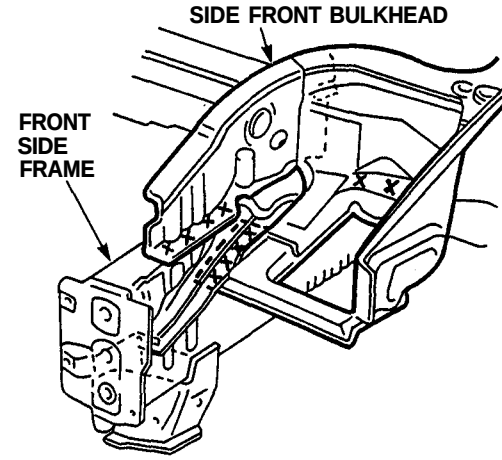

   - When reusing the side front bulkhead, fill drilled holes by MIG welding.
   - Level the weld beads with a belt sander.

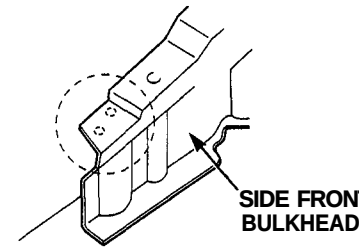

   - Level and finish the burrs from the pried off spot welds with a disc sander.

⚠WARNING **To prevent eye injury, wear goggles or safety glass whenever sanding, cutting or grinding.**

7. Mold the related parts.
   - Use a hammer and dolly to mold the damaged areas of the front wheelhouse and side frame.
   - Even out the welding flanges with a hammer and dolly.

   NOTE: Check the reshaped parts for cracks (see page 2-29).

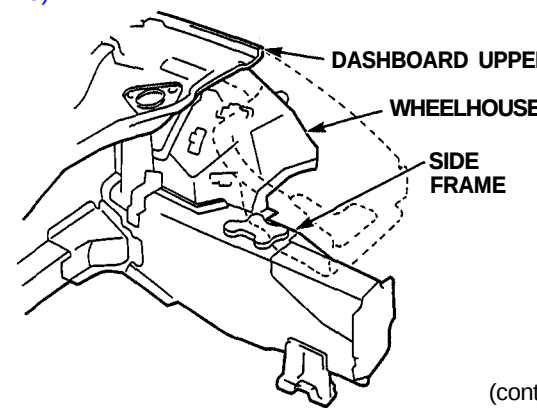

(cont'd)

cardiagn.com

Front Bulkhead

Replacement

8. Set the new side front bulkhead, lower cross member and bulkhead upper frame.
   - Drill the ø8~ø10 (5/16"~3/8") plug weld holes in the welding flange of the new side bulkhead.
   - Grind both sides of the welding section of the bulkhead with a sander to remove the undercoat from it. Grind and expose the aluminum alloy base.
   - Before setting the bulkhead, clean the welding section with a shop towel soaked with wax and grease remover.
   - Remove the paint film with a disc sander, etc.

⚠WARNING **To prevent eye injury, wear goggles or safety glasses whenever sanding, cutting or grinding.**

   - Clean the aluminum alloy base with a stainless steel wire brush just before welding.
   - Use the grind stone, paper, and wire brush or aluminum plate only.
   - Clamp both the right and left sides with the vise-grips and pliers as shown.

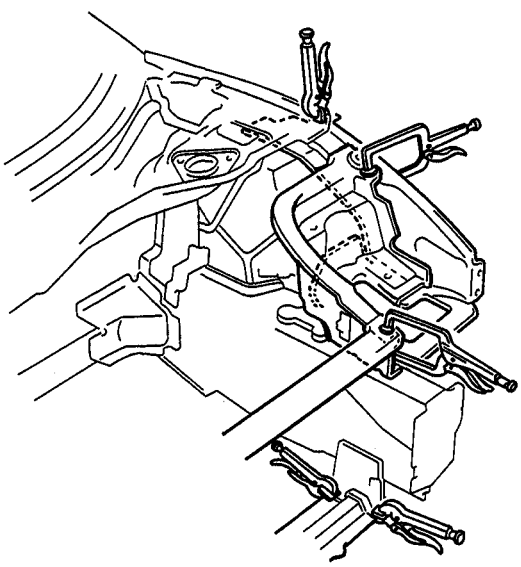

9. Check the bulkhead position using the body dimensional drawings (see section 6).
   Measure the front compartment diagonally with a tracking gauge or convex tool as shown to check it for twisting or bending.

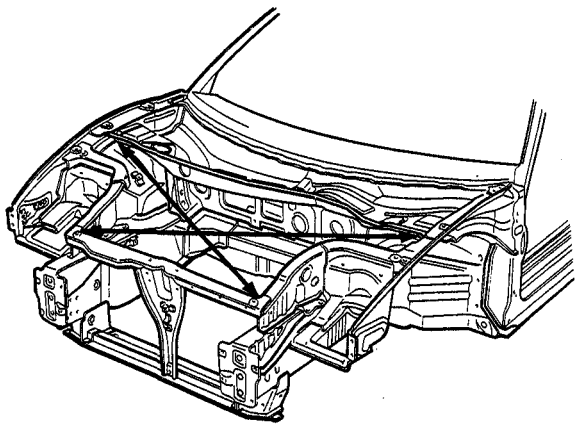

10. Drill 5 mm (3/16") holes through the bulkhead upper frame and side front bulkhead.

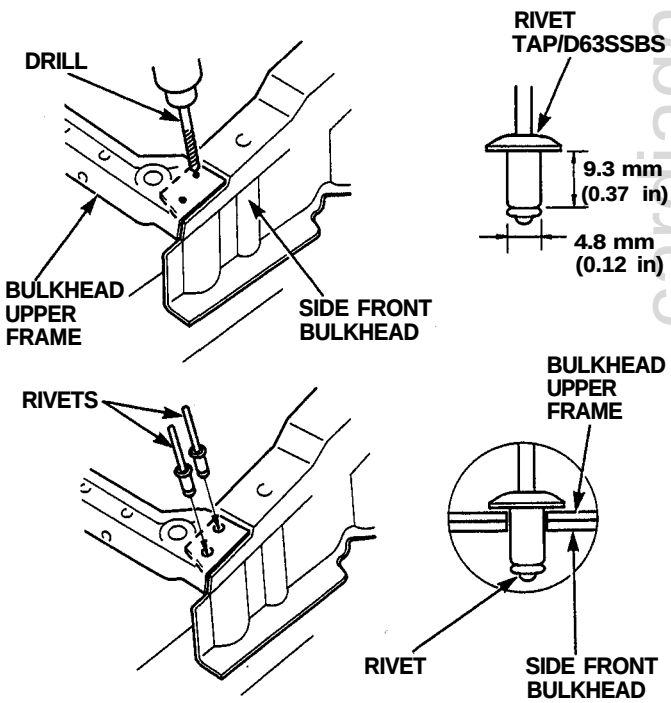

   - Remove the bulkhead upper frame and sand the drill holes at bottom surface of it.
   - Install the bulkhead upper frame.
   - Make sure the bulkhead upper frame and side front bulkhead are contacted securely.
   - Set the rivets.

carmagn.com

11. For temporary welding, plug weld the clamped sections.

⚠WARNING **To prevent eye injury and burns when welding, wear an approved welding helmet, gloves and safety shoes.**

NOTE: Make sure that the right and left bulkheads are in line with each other.

12. Temporarily assemble the hood, headlight and front fender, then check the clearances and level differences.

13. Perform the main welding.

⚠WARNING **To prevent eye injury and burns when welding, wear an approved welding helmet, gloves and safety shoes.**

- Perform a trial welding first following the welder manufacturer's instructions.
- Before welding, remove the oxide film from the welding face using a stainless steel wire brush.

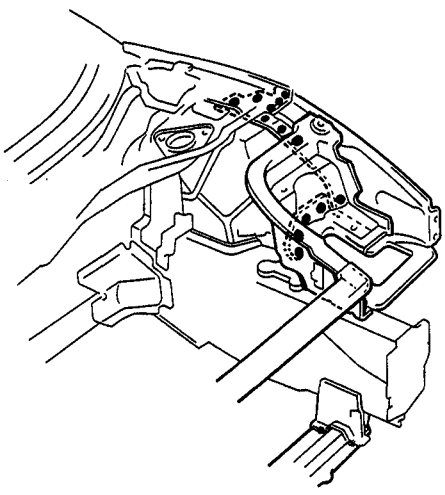

- Fasten the bulkhead upper frame and side front bulkhead with a rivets.

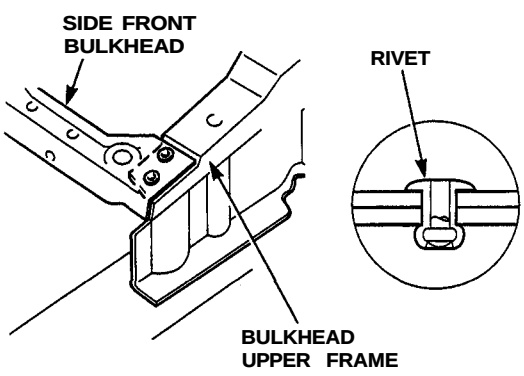

- Check the welding section for cracks (see page 2-29).

14. Finish the welds.
- Roughly grind the welds with a disc grinder. Be sure to leave the finishing allowance this time.
- Finish grind the finishing allowance with a disc sander until it is smooth.

⚠WARNING **To prevent eye injury, wear goggles or safety glasses whenever sanding or grinding.**

- Smooth the flanged section of the front bulkhead with a hammer and dolly, and attach it closely to the front wheelhouse and front side frame.
- Take care not to grind the aluminum alloy base while roughly grinding the welds.
- Take care not to grind excessively.
- Do not press on the sanding tools excessively. If the disc face is clogged with the aluminum alloy particles, replace with a new disc.

15. Attach the front fender.

16. Lower the body.
NOTE: Tighten the wheel nuts to the specified torque.
Torque: 110 N-m (11 kg-m, 80 lb-ft)

17. Apply the paint.
See Paint Repair section.

⚠WARNING

- **Ventilate when spraying paint. Most paint contains substances that are harmful if inhaled or swallowed. Read the paint label before opening paint container.**
- **Avoid contact with skin. Wear an approved respirator, gloves, eye protection and appropriate clothing when painting.**
- **Paint is flammable. Store in a safe place, and keep it away from sparks, flames or cigarettes.**

18. Install the related parts.

19. Inspect, check, and make adjustments.
- Adjust the headlight aim. Check that the electrical components light up and operate properly.
- Replenish radiator liquids and inspect for leaks.

cardiagn.com

Dashboard Upper

Description

The dashboard upper is the critical part where the windshield and steering parts are installed. Position the dashboard upper properly and secure it by MIG welding.

Mass Production Body Welding Diagram

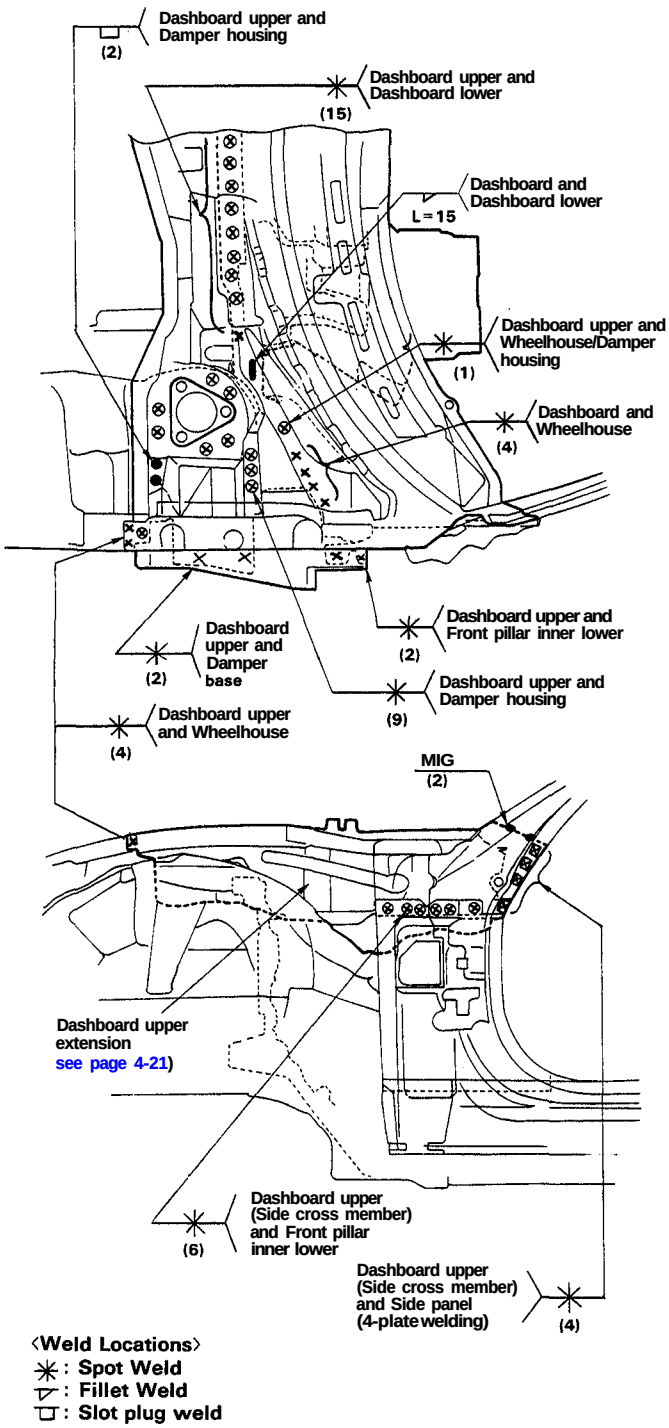

Replacement

1. Remove the related parts.
   - Wiper arm and wiper motor
   - Windshield
   - R/L front fenders
   - Front pillar trim panel
   - Door opening trim
   - Hood
   - Parts related to steering
   - Dashboard, etc.

2. Pull out and straighten the damaged area.
   - The collision damage may extend to the front pillar and roof panel. Check for the damaged sections carefully and pull them out to reshape.
   - Before pulling out the damaged sections, it might be necessary to heat the sections with an acetylene torch (see page 2-31).

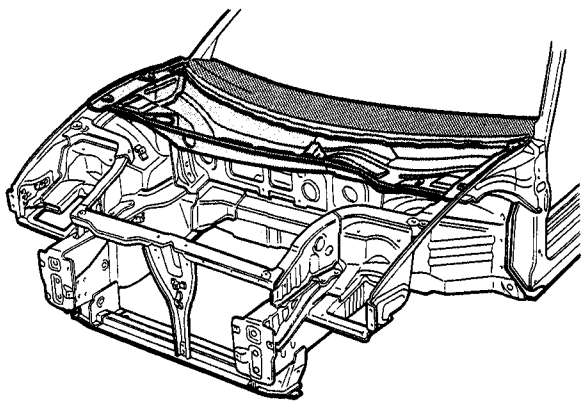

3. Remove the dashboard upper extension.
   - Strike a punch in the center of the spot welds.
   - Drill the spot welds using a ø10 (3/8") spot cutter.
   - Grind the MIG fillet welds using a rotary cutter.
   - Remove the dashboard upper extension using a chisel.

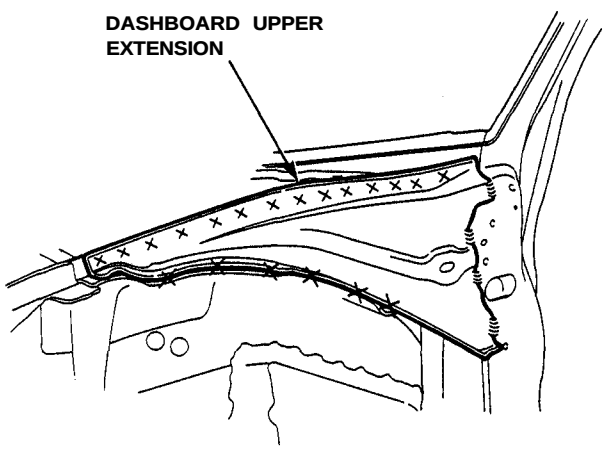

cardiagn.com

4. Remove the dashboard upper.
   - Drill a punch in the center of the spot welds to the dashboard lower, front wheelhouse, and front pillar.
   - Drill the spot welds using a ø 10 (3/8") spot cutter.
   - Grind the MIG fillet welds using a rotary cutter.
   - Remove the remaining welding flanges using a chisel.
   - Remove the burrs from the drilled flanges using a disc sander.

⚠WARNING To prevent eye injury, wear goggles or safety glasses whenever sanding, cutting or grinding.

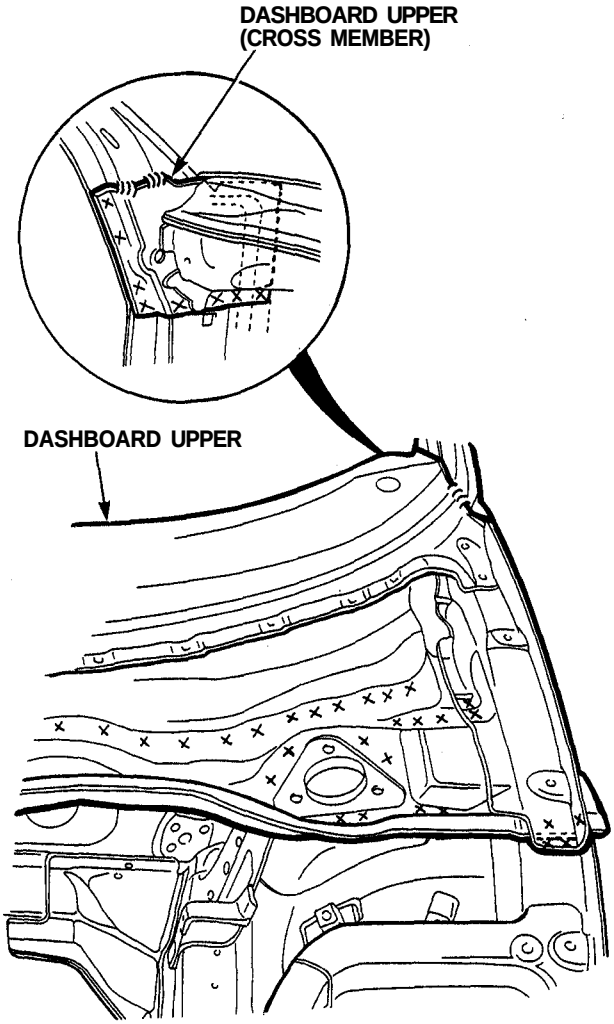

5. Mold the related parts.
   - Reshape the welding flange of the dashboard lower with a hammer and dolly.

NOTE: Check the reshaped parts for cracks (see page 2-29).

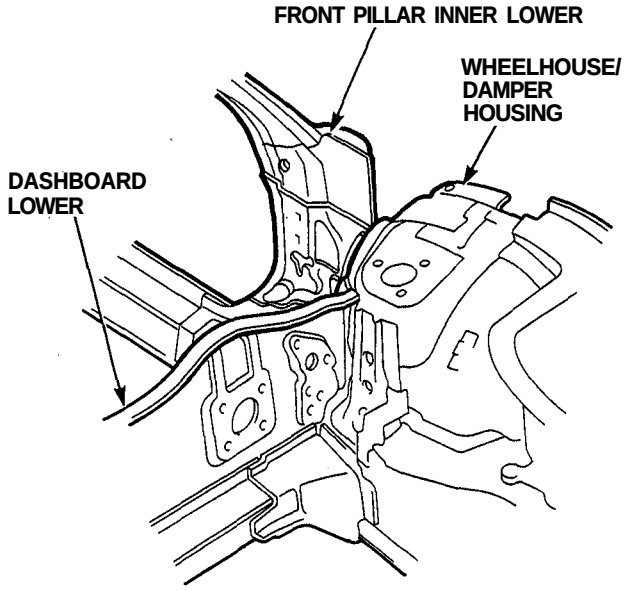

6. Set the new dashboard upper.
   - Drill the ø8~ø10 (5/16"~3/8") holes for plug welding in the welding flange of the new dashboard upper.
   - Remove the undercoat from the both sides of the welding section and expose the aluminum alloy base using a disc sander.

⚠WARNING To prevent eye injury wear goggles or safety glass whenever sanding, cutting or grinding.

   - Remove the paint film from the welding section of the body, and clean oil contaminations with a shop towel soaked with wax and grease remover.
   - Before setting the new dashboard upper remove the oxide film from the welding section of the replacement part and body using a stainless steel wire brush.

(cont'd)

cardiagn.com

Dashboard Upper

Replacement (cont'd)

- Set the dashboard upper and clamp it with the vise-grips and pliers.
- Install the windshield and check for proper installation and alignment.

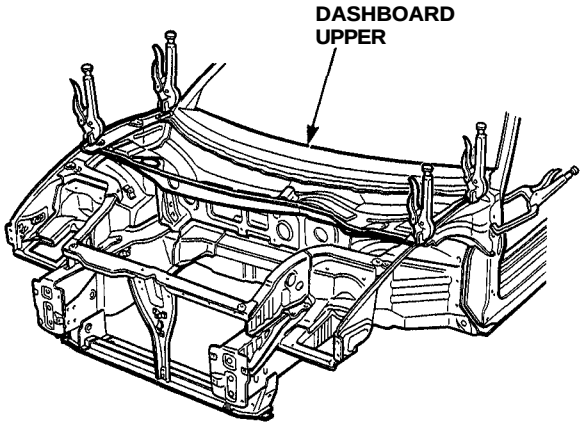

7. Tack weld the dashboard upper.
   Plug weld the clamped sections.

⚠WARNING To prevent eye injury and burns when welding, wear an approved welding helmet, gloves and safety shoes.

8. Remove the vise-grips and pliers and install the front fender, windshield and hood. Check for difference in level and clearance.

9. Perform the main welding.

⚠WARNING To prevent eye injury and burns when welding, wear an approved welding helmet, gloves and safety shoes.

- Before welding, perform the trial welding following the welder manufacturer's instructions.
- Remove the oxide film from the welding sections using a stainless steel wire brush.
- The applicable welding methods are MIG welding, plug welding, and fillet welding.
- Check the welding sections for cracks (see page 2-29).

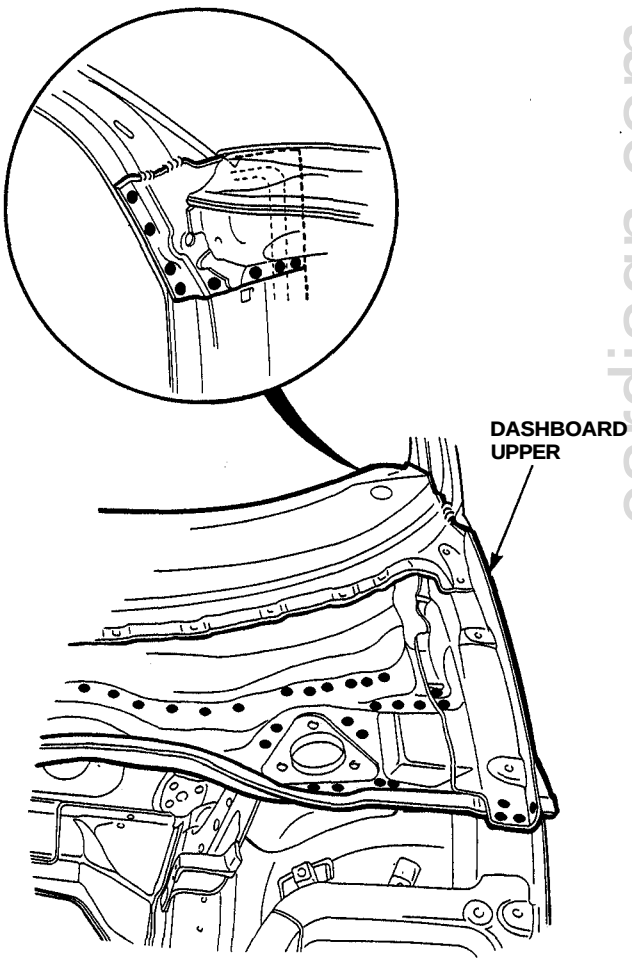

cardiagn.com

- Weld the dashboard upper extension.

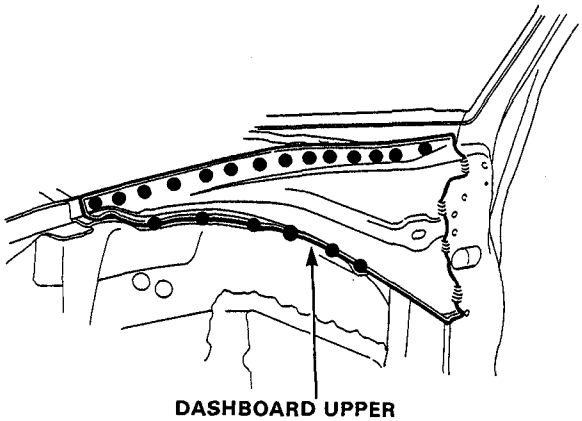

10. Finish the welding section.
    - Roughly grind the welds with a disc grinder. Be sure to leave the finishing allowance this time.
    - Finish grind the finishing allowance with a disc sander until it is smooth.

⚠WARNING **To prevent eye injury, wear goggles or safety glasses whenever sanding, cutting or grinding.**

- Smooth the mating surface with the front windshield with a hammer and dolly.
- Take care not to grind the aluminum alloy base while roughly grinding the welds.
- Take care not to grind excessively.
- Do not press on the sanding tools excessively. If the disc face is clogged with the aluminum alloy particles, replace with a new disc.

11. Apply the sealer (see section 5).
    Apply sealer to the upper dashboard, pillars, etc.

12. Apply the paint.
    See Paint Repair section.

⚠WARNING
- **Ventilate when spraying paint. Most paint contains substances that are harmful if inhaled or swallowed. Read the paint label before opening paint container.**
- **Avoid contact with skin. Wear an approved respirator, gloves, eye protection and appropriate clothing when painting.**
- **Paint is flammable. Store in a safe place, and keep it away from sparks, flames or cigarettes.**

13. Apply anti-rust agent to the inside of the dashboard upper (see section 7).

14. Install the related parts.
    - Install in the reverse order of removal.
    - Check the front fender and hood for difference in level and clearance.

15. Inspect and clean.
    - Check the windshield for water leaks.
    - After installing the dashboard, check the lights, gauges, etc. for proper operation.
    - Clean the interior.

cardiagn.com

Front Side Frame

Description

The front side frame is critical for the rigidity of the front compartment and front wheel alignment, as it is integrated with the front wheelhouse. During installation, position the front side frame by using the positioning jig (page 1-7) or to the dimension shown in the body dimensional drawings. Welding must be performed by using the aluminum alloy MIG welder.
Perform the trial welding first following the welder manufacturer's instructions, then weld properly.
NOTE: Do not section frame rails except at manufacturers seams.

Mass Production Body Welding Diagram

NOTE: Replace the front side frame and wheelhouse as an assembly.

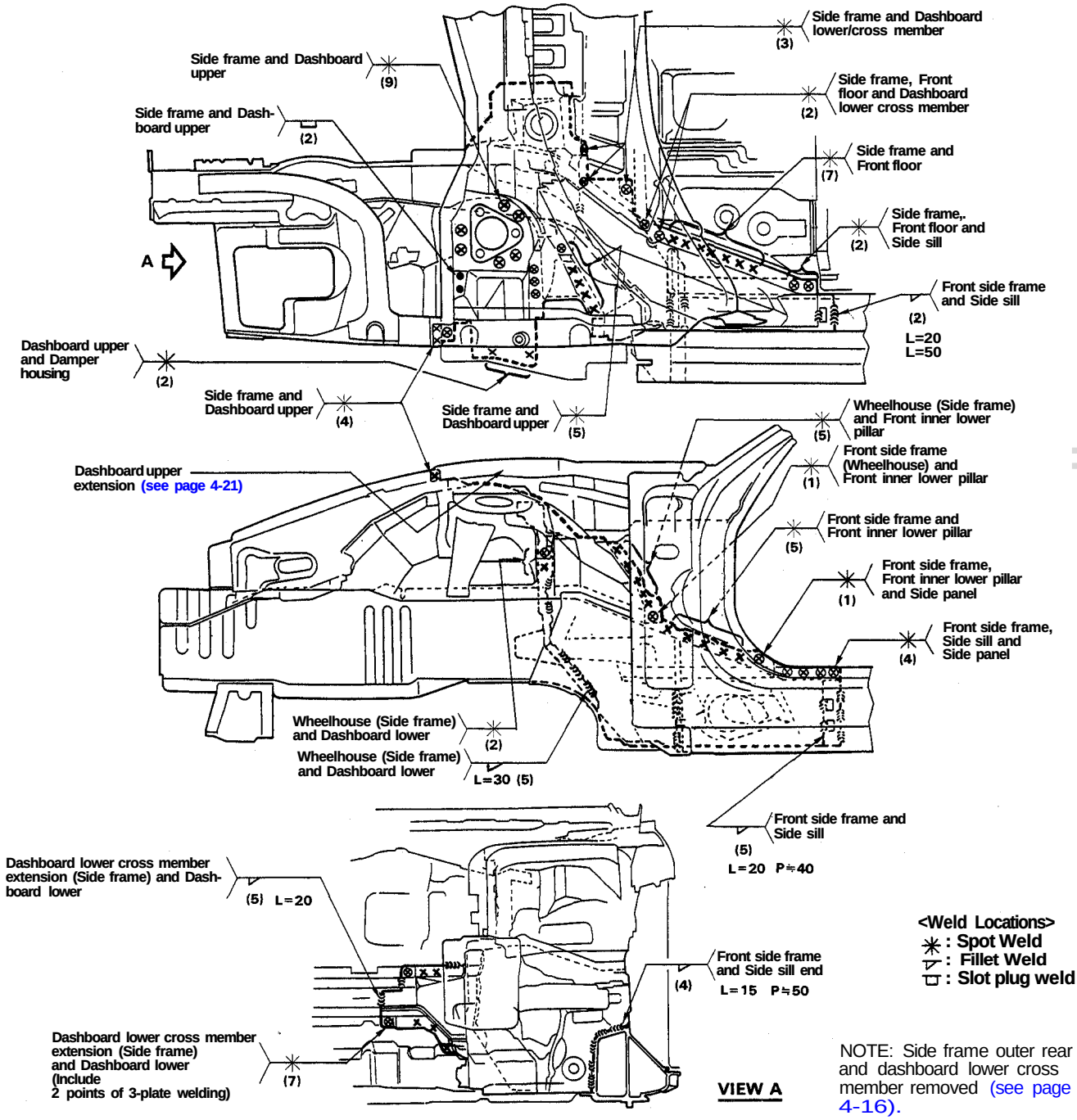

NOTE: Side frame outer rear and dashboard lower cross member removed (see page 4-16).

carpiagen.com

Replacement

1. Remove the related parts.
   - Front suspension related parts
   - Brake hoses and pipes
   - Front compartment electrical components
   - Fittings in passenger compartment, etc.

   NOTE: With the front bulkhead upper frame and lower cross member removed:

2. Pull out and straighten the damaged area.
   - Attach the car to the frame straightener by tightening the underbody clamps located at the jack-up points on the bottom of the side sill and the side sill side flanges.

   NOTE: Refer to the NSX Service Manual for safety stand location points.

   - To protect the car body from damage, place a piece of aluminum plate on each clamping section and tighten the clamps.
   - Before cutting off the damaged sections, pull them out so that they are restored to the original shape.
   - Cutting off front side frame before roughly pulling out the damage makes repair of the related front floor, dashboard lower, and other related parts difficult.

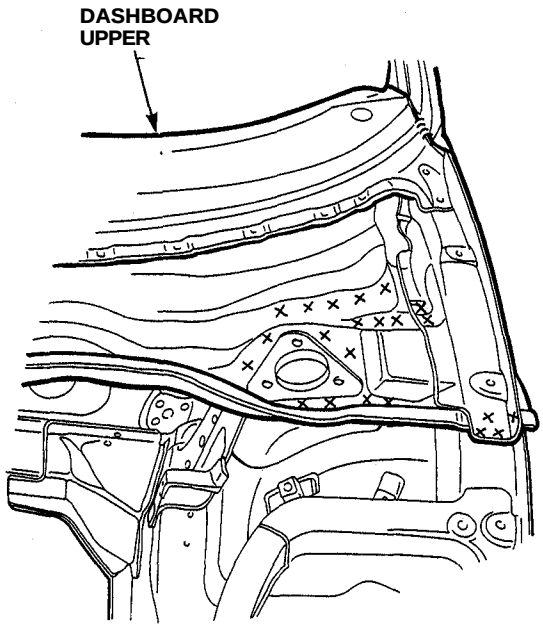

   - It might be necessary to heat the damaged sections with an acetylene torch before pulling the them out (see page 2-31).

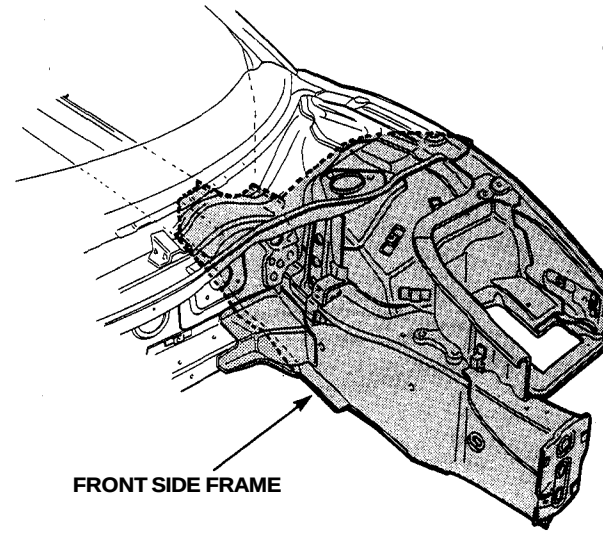

   - After pulling, check the damper housing and side frame positions using the body dimensional drawings (see section 6) and positioning jig.

3. Peel off the undercoat.
   Heat the undercoat at the weld areas of the lower dashboard, front floor and side sill with a gas torch and peel off with a metal spatula.

   CAUTION: Be careful not to burn the fittings inside the passenger compartment when heating.

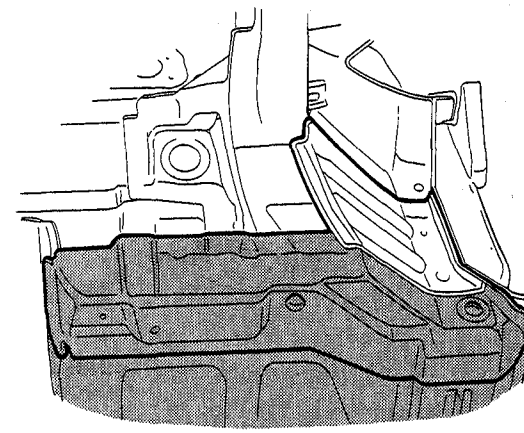

(cont'd)

cardiagn.com

Front Side Frame

Replacement (cont'd)

4. Remove the dashboard upper extension.
   - Strike a punch in the center of the spot welds to the wheel house.
   - Drill the spot welds of the dashboard upper extension using a ø10 (3/8") spot cutter.
   - Grind the MIG weld (fillet weld) to the front pillar using a rotary cutter.

⚠WARNING To prevent eye injury, wear goggles or safety glasses whenever sanding, cutting or grinding.

5. Remove the side frame outer rear and dashboard lower cross member.
   - Grind the fillet welds of the front side frame outer rear with a rotary cutter.
   - Drill the spot welds of the dashboard lower cross member using a spot cutter.
   - Remove the side frame outer rear and lower cross member using a chisel.

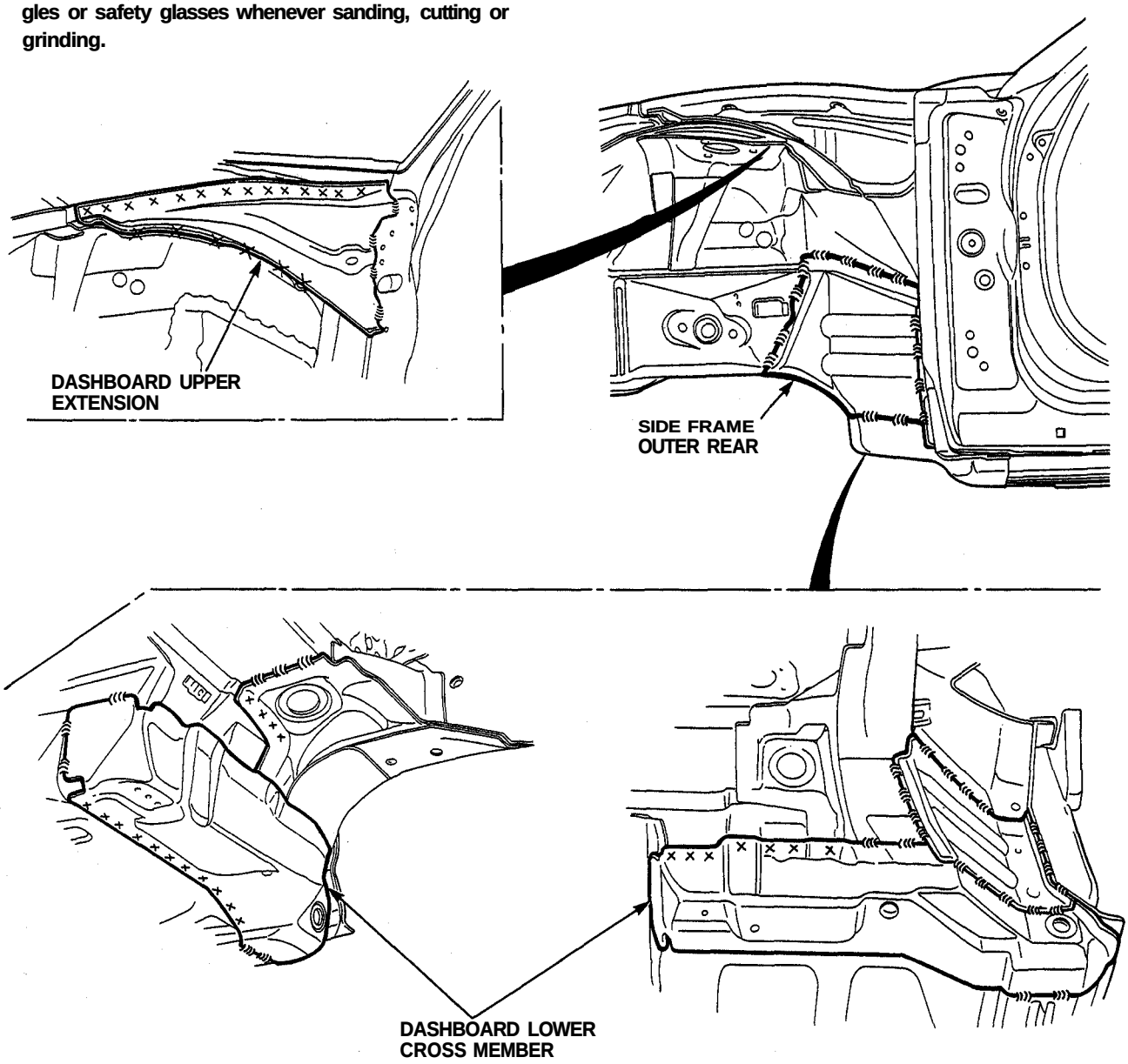

cardiagn.com

6. Remove the front side frame.
   - Strike a center punch around the spot weld imprints with the dashboard upper, dashboard lower and front floor.
   - Drill the MIG welds (plug welding) using a ø15 (5/8") spot cutter (hole saw type).
   - Drill the spot welds using a ø 10 (3/8") spot cutter.
   - Grind the fillet welds of the side frame-and-side sill joint using a rotary cutter as shown.
   - Peel off the welding flange using the chisel.
   - Remove the burrs from the drilled sections with a disc grinder or disc sander.

WARNING **To prevent eye injury, wear goggles or safety glasses whenever sanding, cutting or grinding.**

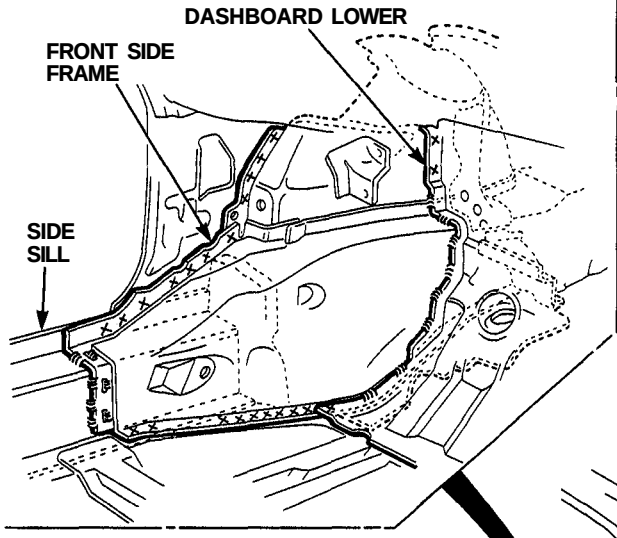

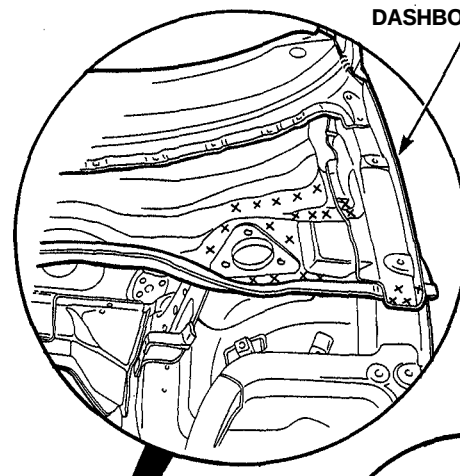

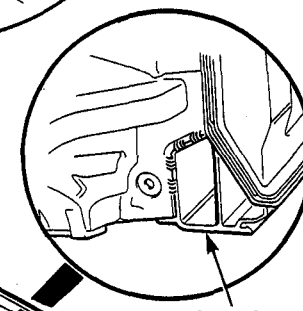

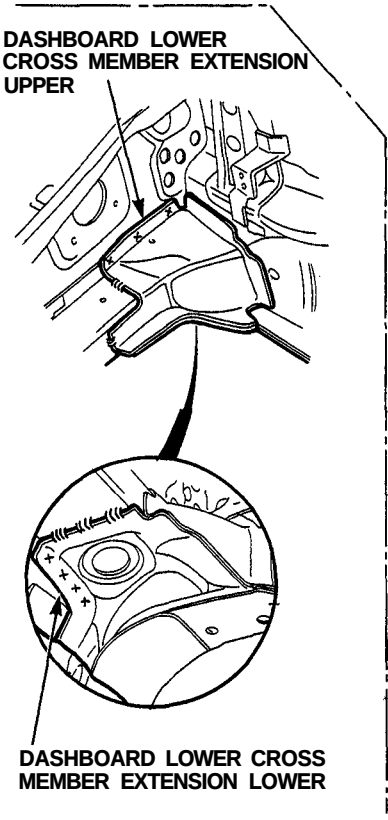

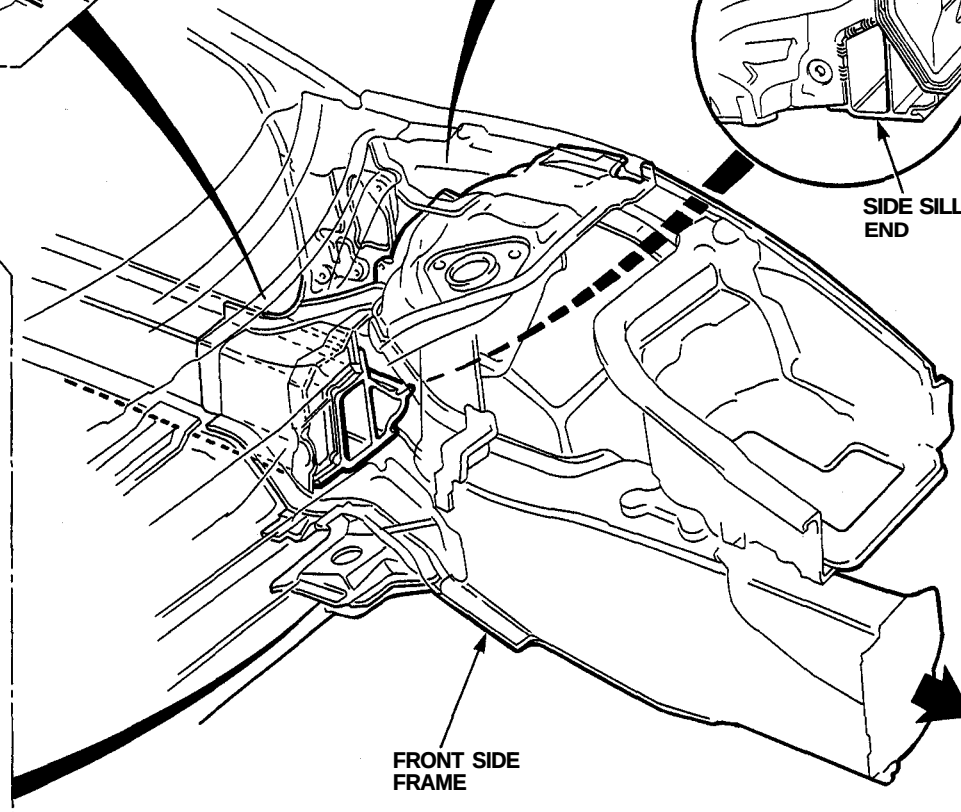

(cont'd)

cardiagn.com

Front Side Frame

Replacement (cont'd)

7. Mold the related parts.
   Reshape the dashboard lower-and-front floor joint using a hammer and dolly.

   NOTE: Check the reshaped parts for cracks (see page 2-29).

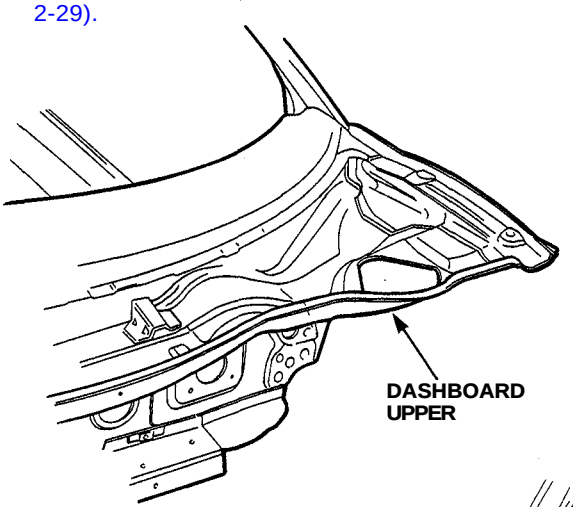

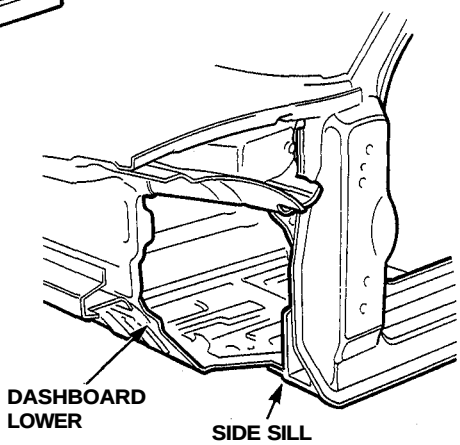

8. Set the new front side frame.
   - Drill the ø10 (3/8") plug weld holes in the welding flange of the new front side frame.
   - Remove the undercoat from the both sides of the welding section and expose the aluminum alloy base using a disc sander.

   WARNING **To prevent eye injury, wear goggles or safety glasses whenever sanding, cutting or grinding.**

   - Remove the paint film from the welding section of the body and clean off any oil contaminations using a shop towel soaked with wax and grease remover.
   - Just before setting the front side frame, remove the oxide film from the welding surface of the replacement part and body using a stainless steel wire brush.
   - Tighten the front side frame against the front floor and side sill using the vise-grips, pliers, etc.
   - Place a jack under the front side frame end and support it, and measure the positions for temporary attachment.
   - Clamp the bulkhead upper frame and lower cross member
   - Measure the front compartment diagonally and check the front side frame and damper base positions using the body dimensional drawings.

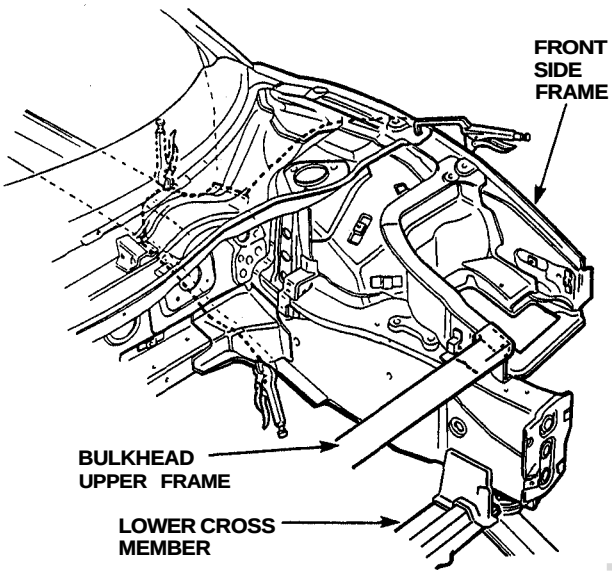

NOTE: Use of positioning jig as shown is recommended (see page 1-7).

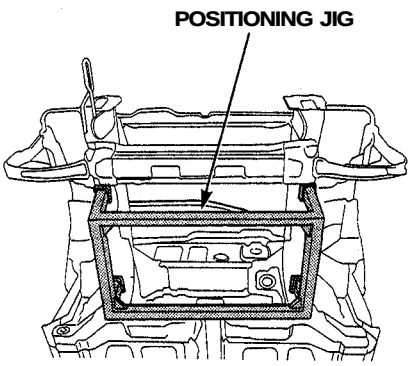

9. Tack weld the front side frame, the bulkhead upper frame and lower cross member.

   WARNING **To prevent eye injury and burns when welding, wear an approved welding helmet, gloves and safety shoes.**

10. Measure the dimension, temporarily install the hood and fender, and check for difference in level and clearance.

cardiagn.com

11. Perform the main welding.
    - Weld as much as possible with the jig still mounted.

⚠WARNING **To prevent eye injury and burns when welding, wear an approved welding helmet, gloves and safety shoes.**

- Before welding, perform the trial welding following the welder manufacturer's instructions.
- Clean the welding section with a stainless steel wire brush before welding.
- The applicable welding methods in this step shall be the MIG welding, plug welding, and fillet welding.
- Check the welding section for cracks (see page 2-29).

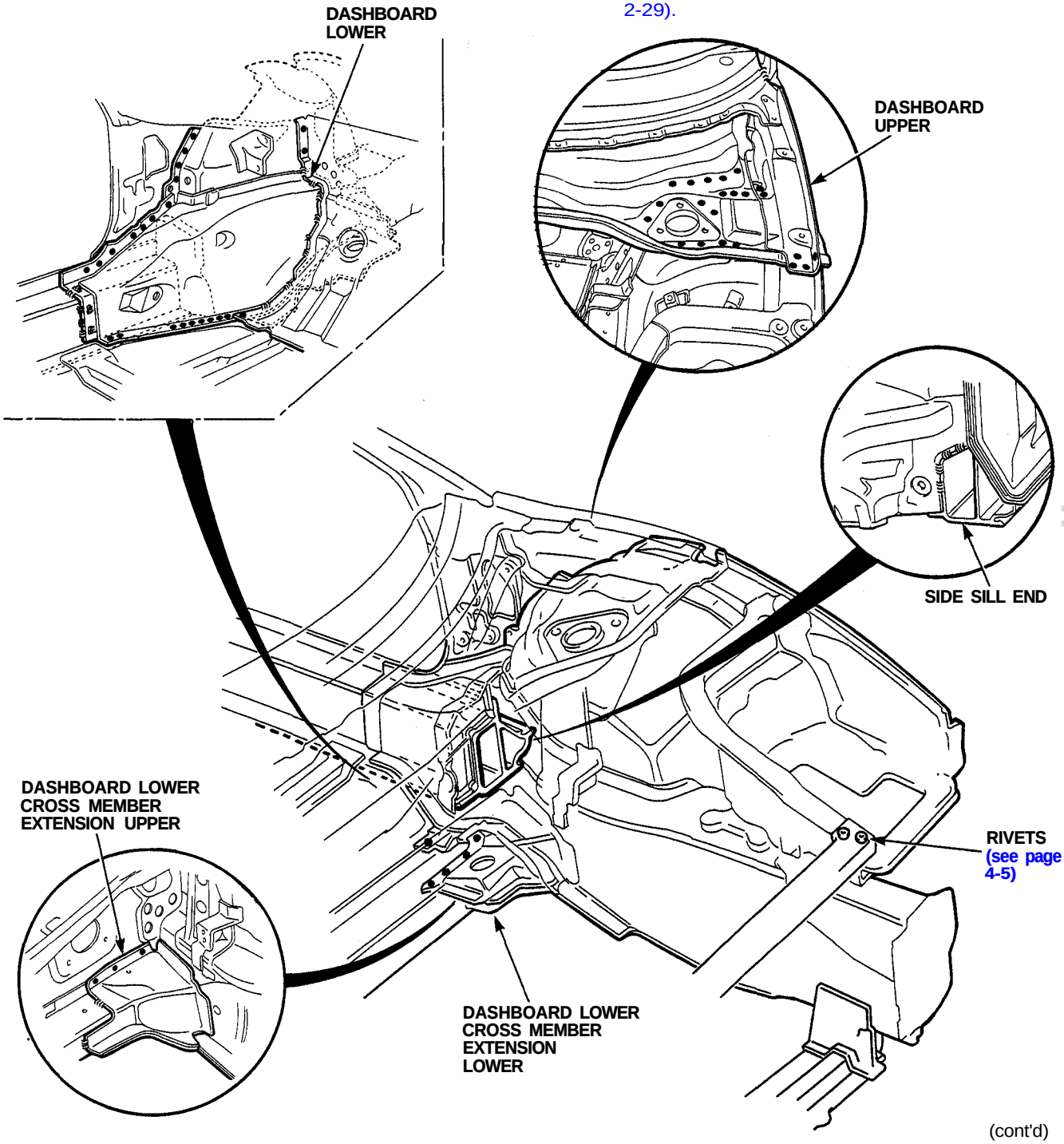

(cont'd)

cardiagn.com

Front Side Frame

Replacement (cont'd)

12. Install and weld the related parts.

⚠WARNING To prevent eye injury and burns when welding, wear an approved welding helmet, gloves and safety shoes.

- Drill the ø10 (3/8") holes in the dashboard lower cross member and plug weld.
- Set the side frame outer rear, clean the welding section with a stainless steel wire brush, and fillet weld.

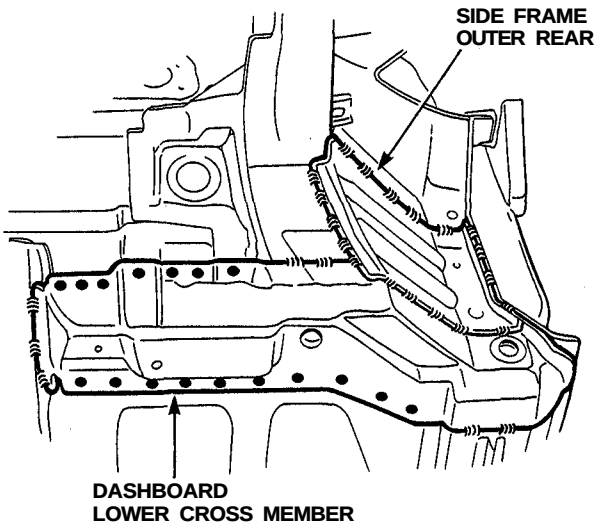

- Plug weld the dashboard upper extension and wheelhouse by drilling the ø10 (3/8") holes, and the fillet weld the front pillar.

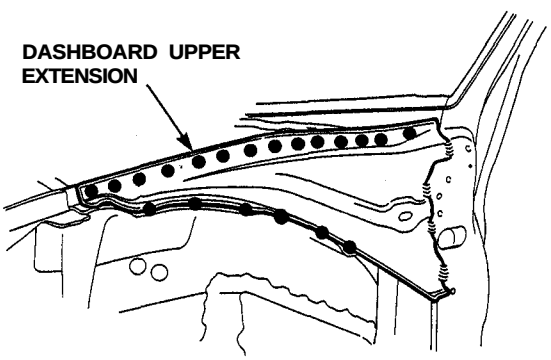

- Check the welding sections for cracks (see page 2-29).

13. Apply the sealer (see section 5).
    Apply sealer to the mating surfaces of the dashboard lower, etc.

14. Apply the paint.
    See Paint Repair section.

⚠WARNING

- **Ventilate when spraying paint. Most paint contains substances that are harmful if inhaled or swallowed. Read the paint label before opening paint container.**
- **Avoid contact with skin. Wear an approved respirator, gloves, eye protection and appropriate clothing when painting.**
- **Paint is flammable. Store in a safe place, and keep it away from sparks, flames or cigarettes.**

15. Apply the undercoat (see section 7).
    Undercoat the front floor, etc. and apply anti-rust agent to the inside of the welding section of the front side sill, front pillar, etc.

16. Install the related parts.
    Install in the reverse order in which they were removed.

17. Inspect, check and make adjustment.
    - Measure the front wheel alignment.
    - Inspect the brake system.
    - Adjust the headlight aim.

cardiagn.com

Side Panel

Description

The side panel is critical for proper installation of the roof, windshield, rear hatch hinge, and door hinge. It is connected to the side sill and constitutes the cabin side. Positioning of the windshield and rear hatch is affected by how they are connected to the side panel. Temporarily install the side panel, front fender, and rear hatch, and check for difference in level and clearance.

Mass Production Body Welding Diagram

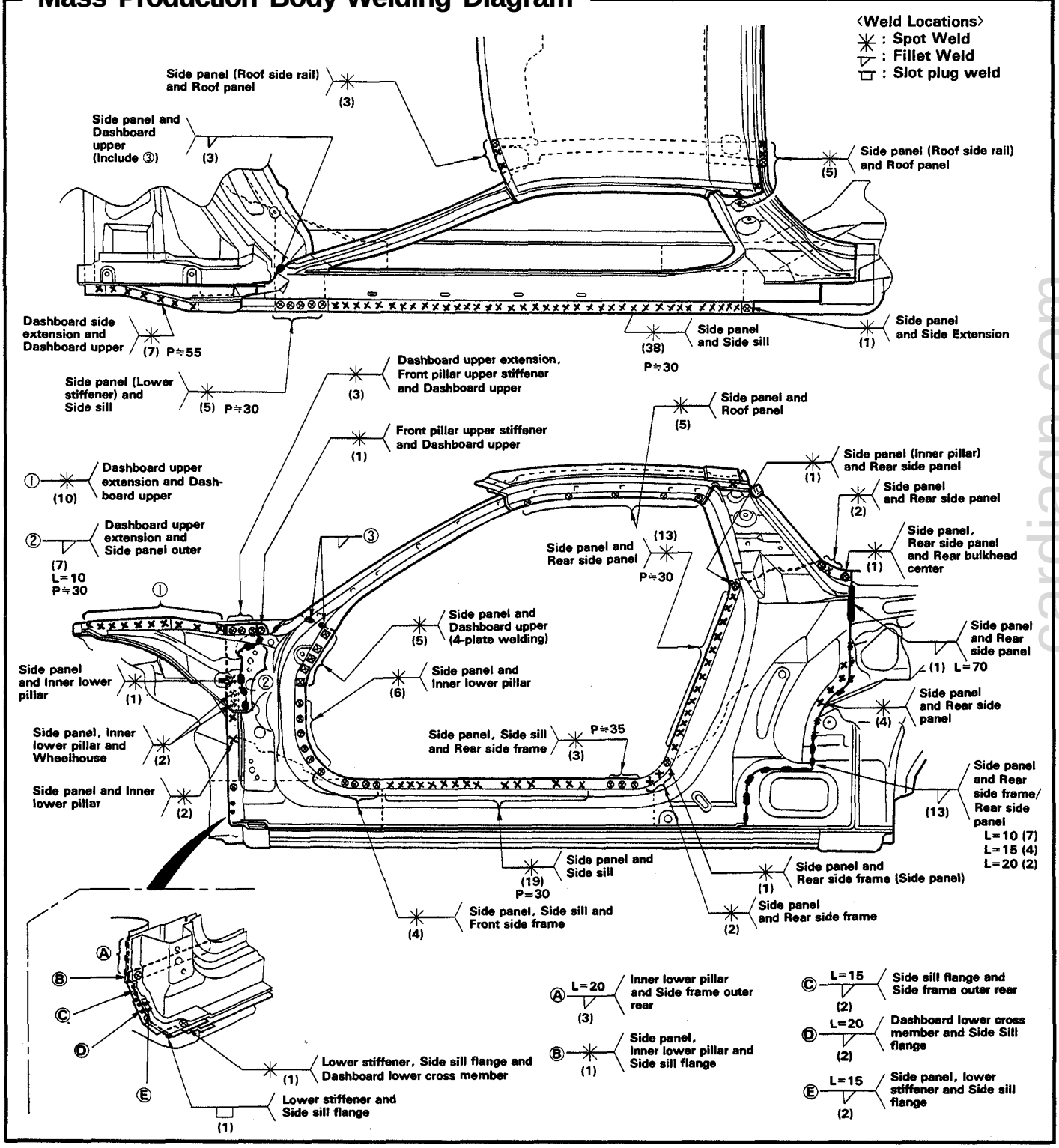

cardiagn.com

Side Panel

Replacement

1. Remove the related parts:
   - Door
   - Door opening trim
   - Carpet
   - Door switch
   - Seat belt
   - Side sill panel
   - Windshield
   - Rear hatch assembly
   - Rear window
   - Headliner
   - Front fender
   - Rear fender
   - Dashboard

2. Pull out and straighten the damaged area.
   NOTE: Make sure that the right and left pillars are parallel the windshield surface.
   - Check the door and rear hatch for proper opening and closing.
   - Attach the car to the frame straightener by tightening the underbody clamps located at the jack-up points on the bottom of the side sill and the side sill side flanger.

   NOTE: Refer to the NSX Service Manual for safety sand location points.

   - To protect the car body from damage, place a piece of aluminum plate on each clamping section and tighten the clamps.
   - Before removing the side panel, pull out the damaged sections so that they are restored to the original shape.
   - Before pulling out the damaged sections, it might be necessary to heat them with an acetylene torch (see page 2-31).

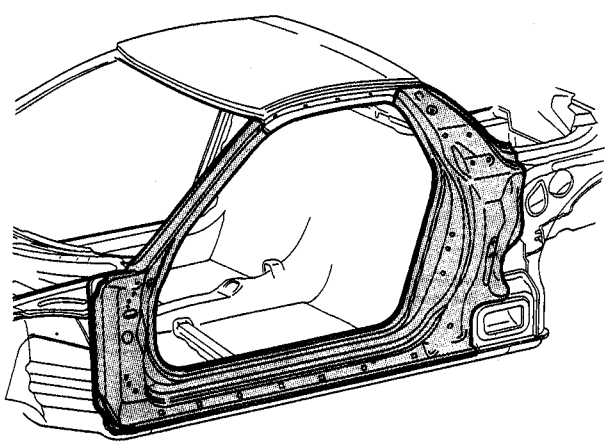

   - After pulling, check the door, windshield and rear window opening using the body dimensional drawings (see section 6).

3. Remove the dashboard upper extension .

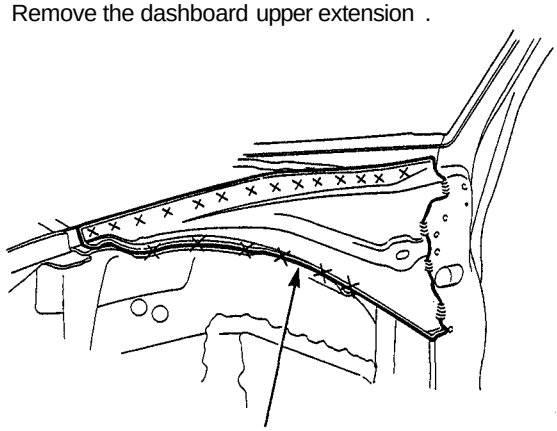

4. Remove the side panel.
   - Strike a punch in the center of the spot welds to the roof side rail, front roof rail, and rear roof rail.

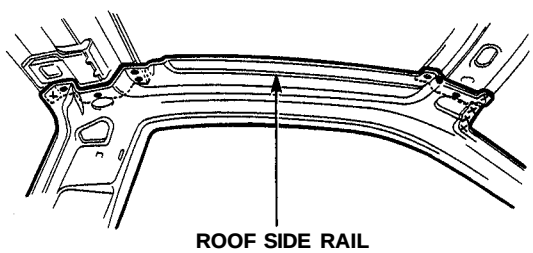

   - Strike a punch in the center of the spot welds to the roof panel.

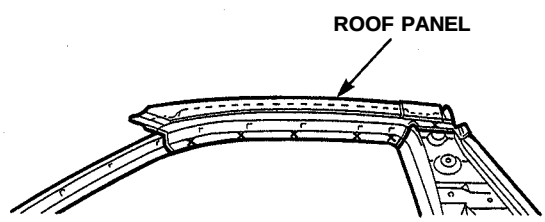

cardiagn.com

- Strike a punch in the center of the spot welds to the front pillar, side sill, and rear pillar.
- Drill the spot welds using a ø10 (3/8") spot cutter.
- Grind the MIG welding section using a rotary cutter.
- Remove the remaining welding flanges using a chisel.
- Remove the burrs from the drilled section using a disc sander.

⚠WARNING **To prevent eye injury, wear goggles or safety glasses whenever sanding, cutting or grinding.**

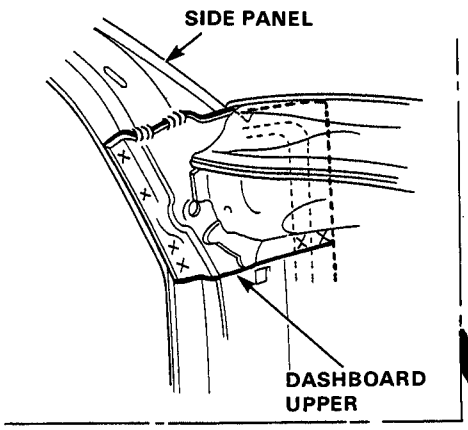

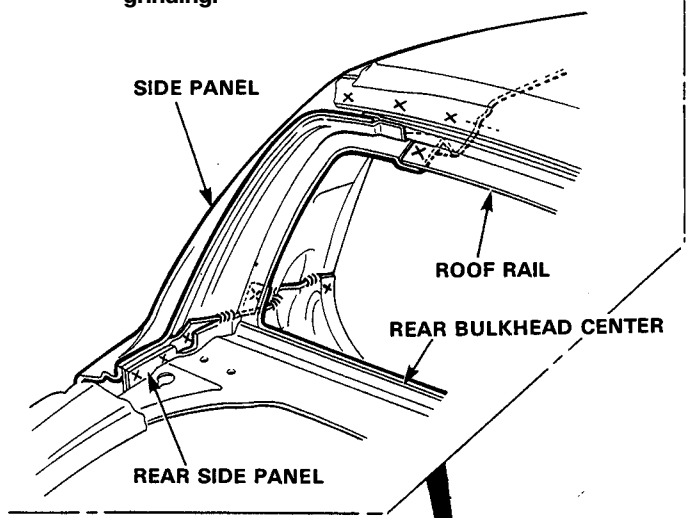

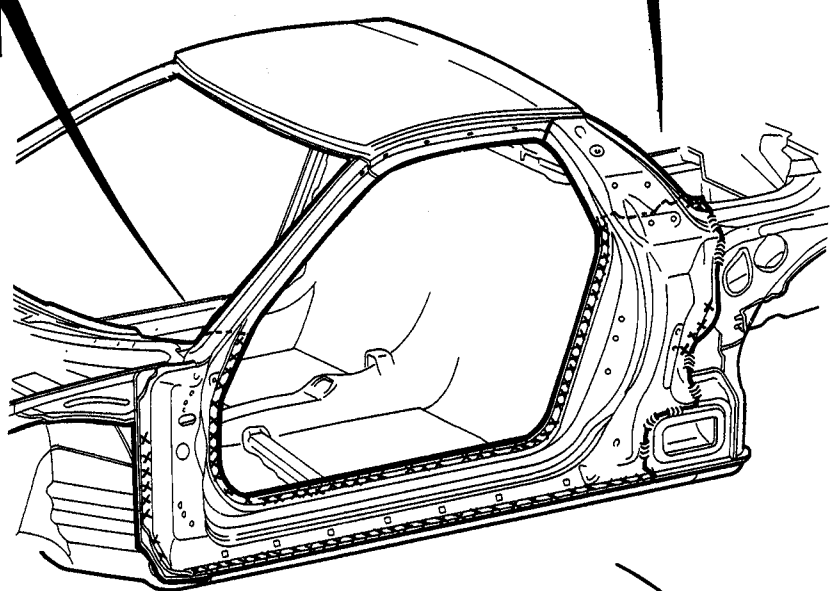

5. Mold the related parts.
   Smooth the welding flanges of the roof panel and welding section of the rear side panel with a hammer and dolly.

   NOTE: Check the reshaped parts for cracks (see page 2-29).

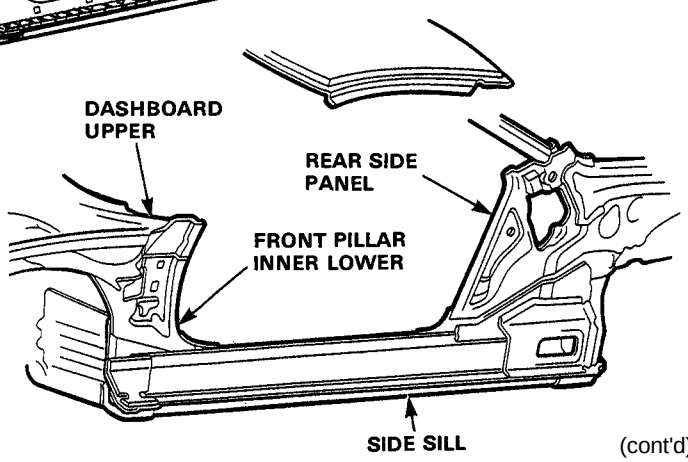

(cont'd)

cardiagn.com

Side Panel

Replacement (cont'd)

6. Set the new side panel.
   - Drill the ø8 (5/16") plug weld holes in the welding flange of the new side panel.

   NOTE: When performing MIG welding on section ®, make fewer holes than the number of spots originally welded.

   - Remove the undercoat from the both sides of the welding section and expose the aluminum alloy base using a disc sander.

   ⚠WARNING To prevent eye injury, wear goggles or safety glasses whenever sanding, cutting or grinding.

   - Remove the paint film from the welding section of the body and clean oil contaminations with a shop towel soaked with wax and grease remover.
   - Before setting the new side panel, remove the oxide film from the welding section of the replacement part and body using a stainless steel wire brush.
   - Install the side panel and clamp it with the vise-grips, pliers, etc.

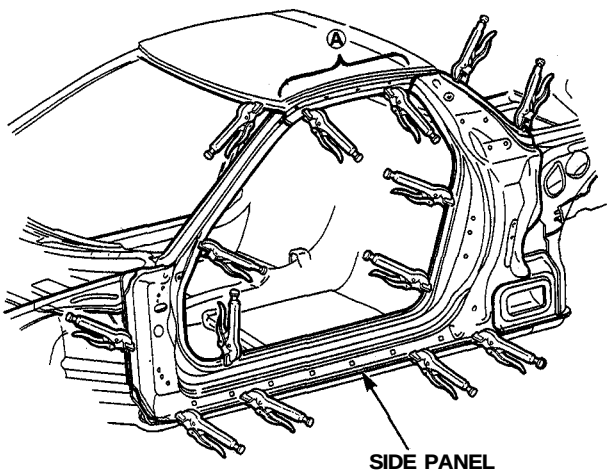

   - Check the body dimensions.

7. Tack weld the side panel.

   ⚠WARNING To prevent eye injury and bums when welding, wear an approved welding helmet, gloves and safety shoes.

   Plug weld the clamped sections to temporarily install the side panel.

8. Remove the vise-grips and pliers and install the windshield, front fender, door, rear window, and rear fender. Check for difference in level and clearance.

   NOTE: Check for flushness of the front fender, door, and rear fender. Check for smooth body line of the car.

9. Perform main welding.

   ⚠WARNING To prevent eye injury and burns when welding, wear an approved welding helmet, gloves and safety shoes.

   - Before welding, perform the trial welding following the welder manufacturer's instructions.
   - Remove the oxide film from the welding section using a stainless steel wire brush.
   - Weld the roof side rail.

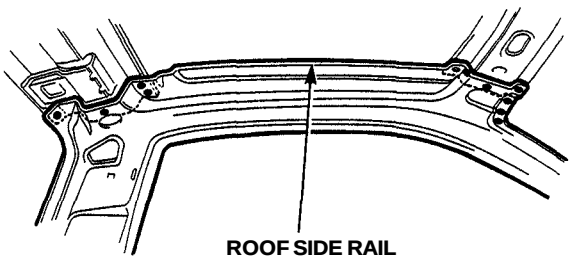

   - Weld the dashboard upper.

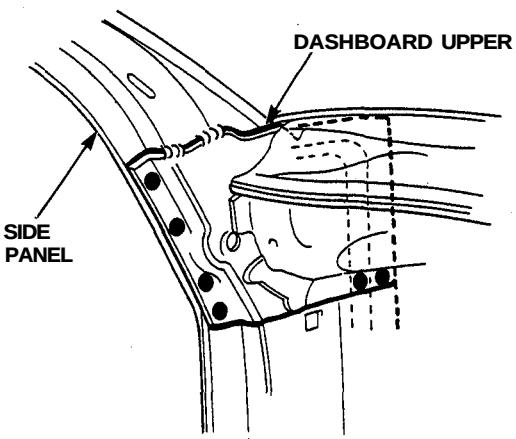

cardiagn.com

- The applicable welding methods are MIG welding, plug welding, and fillet welding.
- Check the welding sections for cracks (see page 2-29).
- Weld the rear side panel.

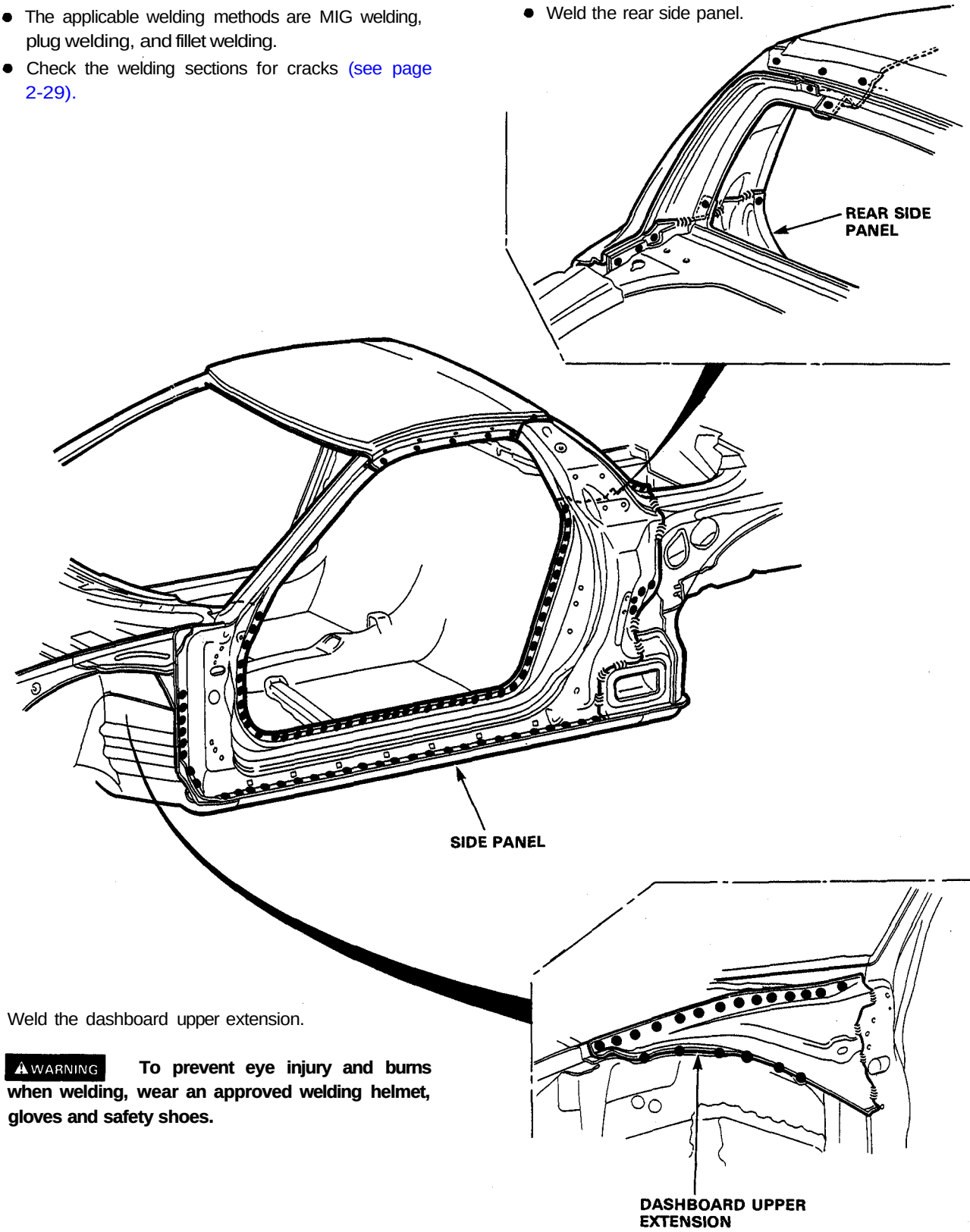

10. Weld the dashboard upper extension.

WARNING **To prevent eye injury and burns when welding, wear an approved welding helmet, gloves and safety shoes.**

(cont'd)

cardiagn.com

Side Panel

Replacement (cont'd)

11. Finish the welding areas.
    - Roughly grind the welds with a disc grinder. Be sure to leave the finishing allowance this time.
    - Finish grind the finishing allowance with a disc sander until it is smooth.

⚠WARNING **To prevent eye injury, wear goggles or safety glasses whenever sanding, cutting or grinding.**

- Smooth the flanged section of the door opening with a hammer and dolly.

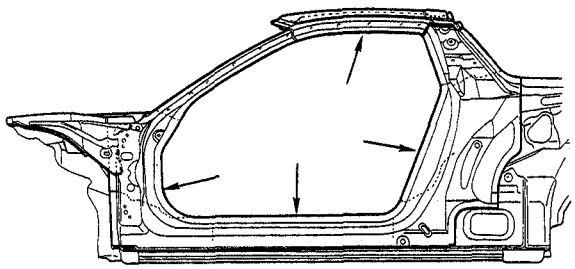

- Take care not to grind the aluminum alloy base while roughly grinding the welds.
- Take care not to grind excessively.
- Do not press on the sanding tools excessively. If the disc face is clogged with the aluminum alloy particles, replace with a new disc.

12. Apply the sealer (see section 5).

13. Apply the paint.
    See Paint Repair section.

⚠WARNING
- **Ventilate when spraying paint. Most paint contains substances that are harmful if inhaled or swallowed. Read the paint label before opening paint container.**
- **Avoid contact with skin. Wear an approved respirator, gloves, eye protection and appropriate clothing when painting.**
- **Paint is flammable. Store in a safe place, and keep it away from sparks, flames or cigarettes.**

14. Apply anti-rust agent to the inside of the outer panel (see section 7).

15. Install the related parts.
    - Install in the reverse order of removal.
    - Check the door for proper installation and difference in level from the fenders.

16. Clean and check
    - After installing the dashboard, check the lights, gauges, etc. for proper operation.
    - Clean the passenger compartment and check for water leaks from the roof.

cardiagn.com

Roof Panel

Description

Deformation of the roof panel is highly noticeable in terms of the vehicle's outer appearance.
Before replacing the roof rail, make sure that the body is horizontal. Before welding the roof panel, adjust the roof rail flanges so that they contact the roof panel.

Mass Production Body welding Diagram

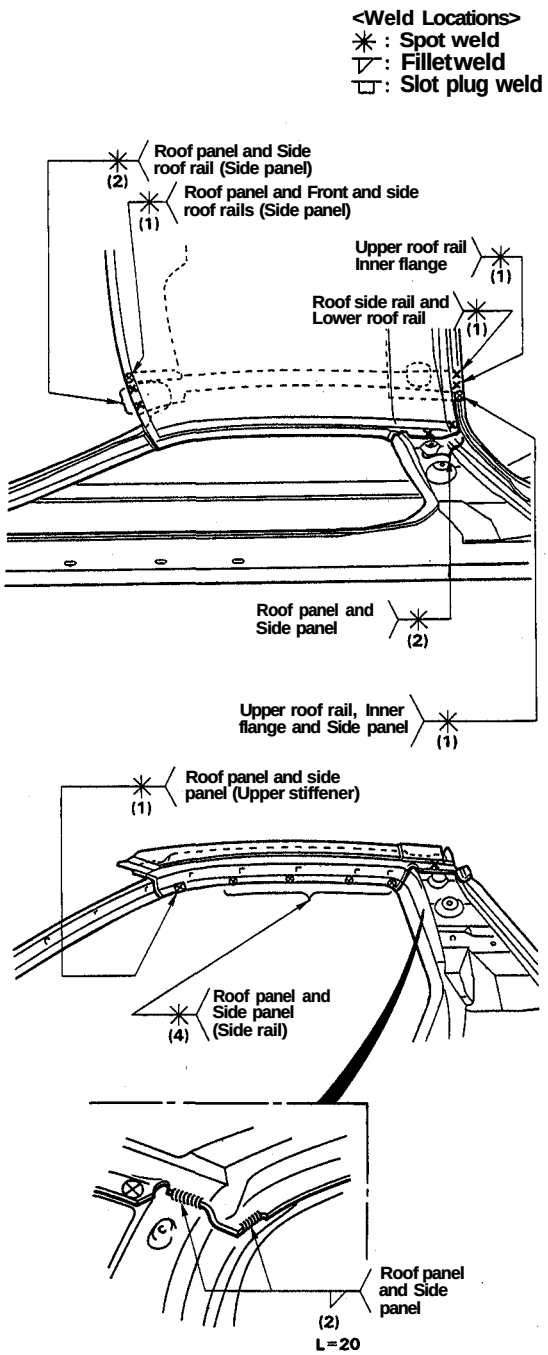

Replacement

1. Remove the related parts.
   - Windshield
   - Rear hatch
   - Rear window
   - Sunvisors
   - Ceiling light
   - Headliner

2. Pull out and straighten the damaged area.
   - Pull out the damaged area with the frame straightener before, removing the roof panel.
   - Attach the car to the frame straightener by tightening the underbody clamps located at the jack-up points on the bottom of the side sill and the side sill side flanges.
   - To protect the car body from damage, place a piece of aluminum plate on each clamping section and tighten the clamps.
   - Before pulling out the damaged section, it might be necessary to heat the section with an acetylene torch (see page 2-31).

   NOTE: Make sure that the right and left pillars are parallel with the windshield surface. Check the door and rear hatch for proper opening and closing.

   - After pulling, check the front and center pillar position using the body dimensional drawings (see section 6).

3. Keep the body level.
   Jack up the body at the front and back and place safety stands at the four designated places of the side sills.

   NOTE: Refer to the NSX Service Manual for safety stand location points.

(cont'd)

cardiagn.com

Roof Panel

Replacement (cont'd)

4. Cut off the roof panel.
   - Strike a punch in the center of the spot welds in the roof panel flange.
   - Drill the spot welds using a ø10 (3/8") spot cutter.
   - Grind the MIG fillet welds using a rotary cutter.
   - Remove the welding flange using a chisel.

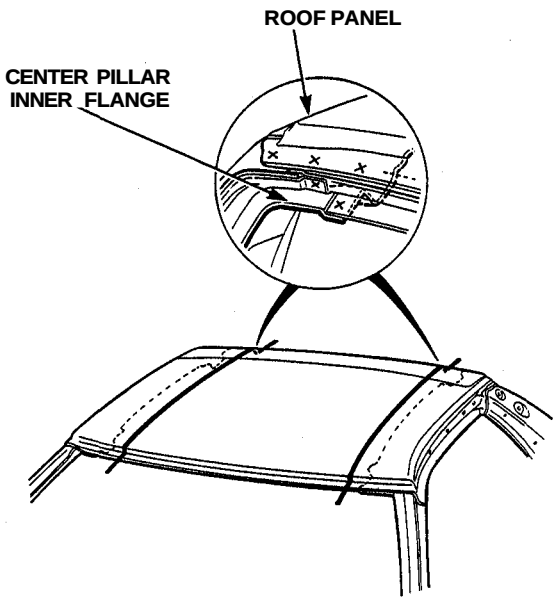

- MIG weld positions (Roof side rail inside).

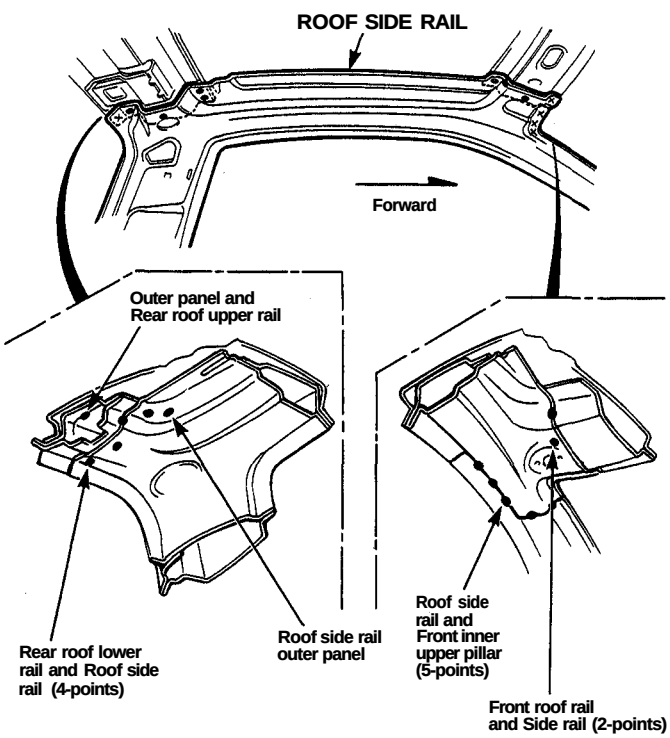

- Cross section of roof rail.

5. Mold the related parts.
   Smooth the welding flange of the roof side rail with a hammer and dolly so that there is no clearance to the welding flange of the roof panel.

   NOTE: Check the reshaped parts for cracks (see page 2-29).

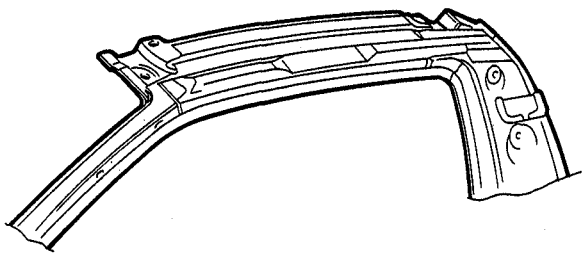

6. Apply paint to the underside of the new roof panel.
   See Paint Repair section.

⚠WARNING

- **Ventilate when spraying paint. Most paint contains substances that are harmful if inhaled or swallowed. Read the paint label before opening paint container.**
- **Avoid contact with skin. Wear an approved respirator, gloves, eye protection and appropriate clothing when painting.**
- **Paint is flammable. Store in a safe place, and keep it away from sparks, flames or cigarettes.**

7. Set the new roof panel.
   - Drill the ø8 (5/16") plug weld holes in the welding flange of the new roof panel.
   - Remove the undercoat from the both sides of the welding section and expose the aluminum alloy base using a disc sander.

⚠WARNING **To prevent eye injury, wear goggles or safety glasses whenever sanding, cutting or grinding.**

- Remove the paint film from the welding section of the body and clean oil contaminations with a shop towel soaked with wax and grease remover.
- Before setting the new roof panel, remove the oxide film from the welding section of the replacement part and body using a stainless steel wire brush.

cardiagn.com

- Install the new roof panel and clamp it with the vise-grips and pliers.
- Check the welding flange for close fitting. Check the roof panel for distortion and proper installation, and check over the body dimensions.

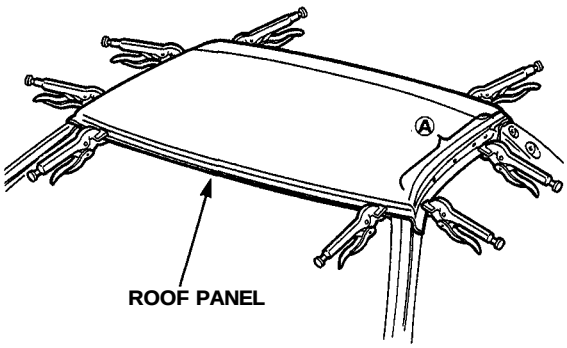

NOTE: When performing MIG welding on section ®, make fewer holes than the number of sports originally welded.

8. Tack weld the roof panel.

⚠WARNING To prevent eye injury and burns when welding, wear an approved welding helmet, gloves and safety shoes.

- MIG/plug weld the clamped sections to temporarily install the roof panel.
- Set the windshield and rear window, and check the roof panel for proper installation.
- Install the rear hatch, then adjust the level difference and fit.

9. Perform the main welding.

⚠WARNING To prevent eye injury and burns when welding, wear an approved welding helmet, gloves and safety shoes.

- Before welding, perform the trial welding following the welder manufacturer's instructions.

- Remove the oxide film from the welding sections using a stainless steel wire brush.
- The applicable welding methods are MIG welding, plug welding, and fillet welding.
- Check the welding sections for cracks (see page 2-29).

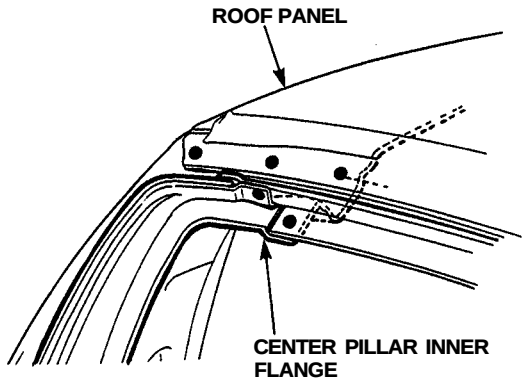

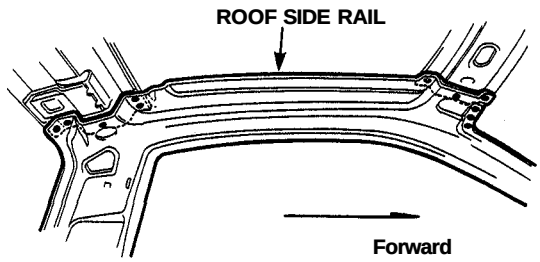

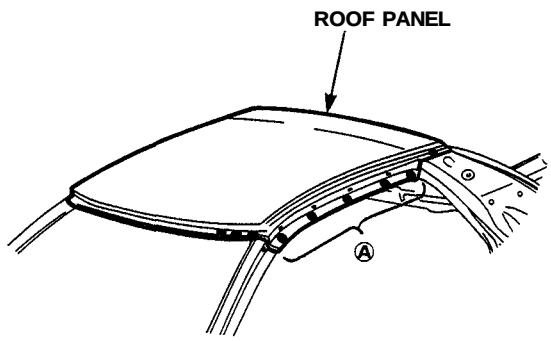

(cont'd)

cardiagn.com

Roof Panel

Replacement (cont'd)

10. Finish the welding area.
    - Roughly grind the welds using a disc grinder. Be sure to leave the finishing allowance this time.
    - Finish grind the finishing allowance with a disc sander until it is smooth.

    ⚠WARNING **To prevent eye injury, wear goggles or safety glasses whenever sanding, cutting or grinding.**

    - Smooth the windshield and roof side flanges with a hammer and dolly.
    - Take care not to grind the aluminum alloy base while roughly grinding the welds.
    - Take care not to grind excessively.
    - Do not press on the sanding tools excessively. If the disc face is clogged with the aluminum alloy particles, replace with a new disc.

11. Apply the sealer (see section 5).

12. Apply the paint.
    See Paint Repair section.

    ⚠WARNING
    - **Ventilate when spraying paint. Most paint contains substances that are harmful if inhaled or swallowed. Read the paint label before opening paint container.**
    - **Avoid contact with skin. Wear an approved respirator, gloves, eye protection and appropriate clothing when painting.**
    - **Paint is flammable. Store in a safe place, and keep it away from sparks, flames or cigarettes.**

13. Apply anti-rust agent to the inside of the roof side rail.

14. Install the related parts.
    Install in the reverse order of removal.

15. Check and clean.
    - Check the windshield and rear window for water leaks.
    - Check the ceiling light for lighting.
    - Clean the passenger compartment thoroughly.

cardiagn.com

Side Sill

Description

The side sill is critical for the rigidity of the body base and proper door installation. During replacement, refer to the body dimensional drawings and determine the position to set the side sill properly. Weld securely following the welder manufacturer's instructions.

Mass Production Body Welding Diagram

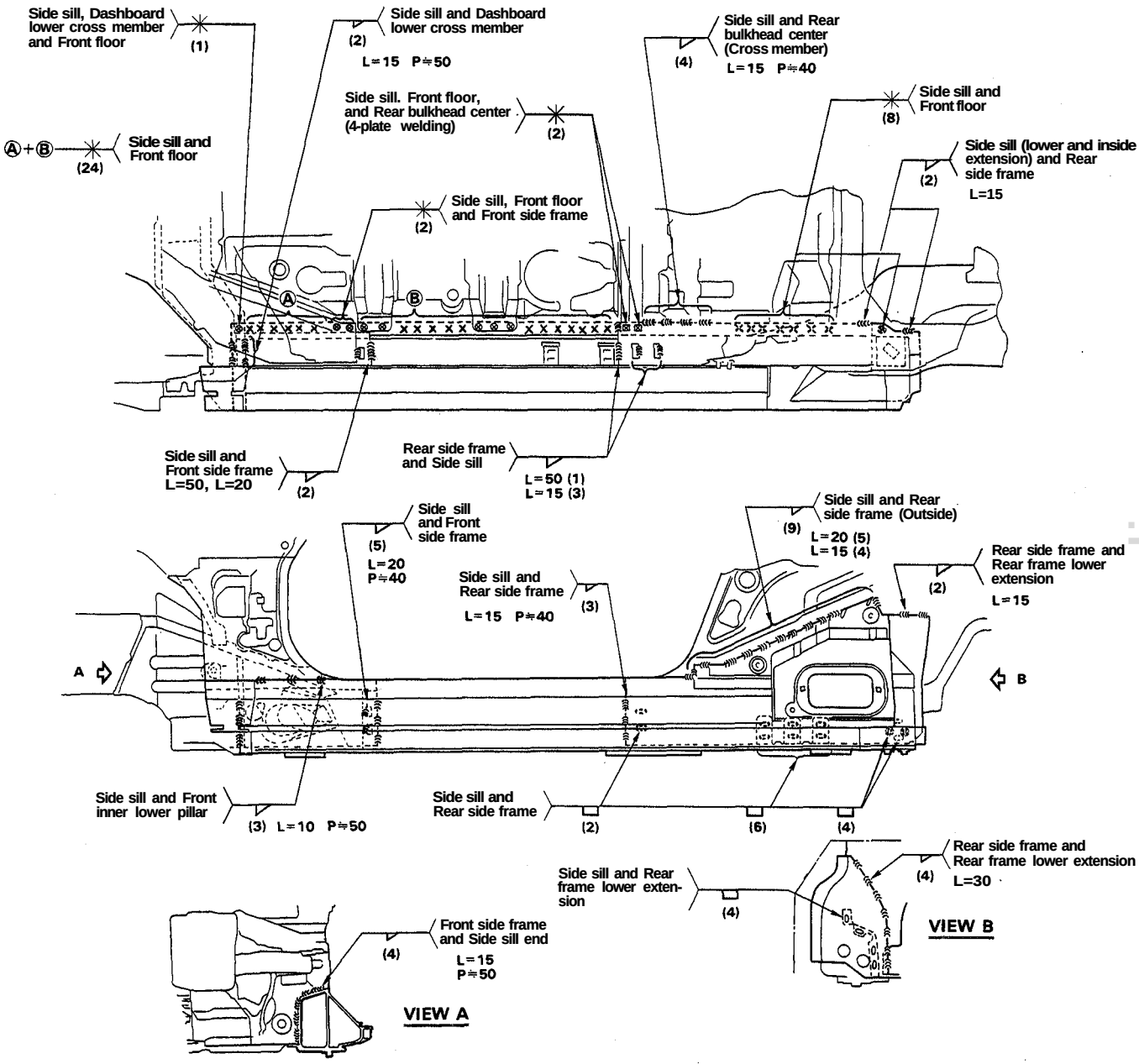

NOTE: Side panel removed (see page 4-21).

<Weld Locations>
✳ : Spot Weld
▽ : Fillet Weld
⊔ : Slot plug weld

cardiagn.com

Side Sill

Replacement

1. Remove the related parts.
   - Front and rear fenders
   - Door
   - Side sill panel
   - Rear pillar panel
   - Door opening trim
   - Carpet
   - Driver's & passenger's seats
   - Seat belt
   - Fuel tank, fuel fill pipe (left side only)

WARNING **Do not smoke while working near the fuel system. Keep open flame away from the fuel system. If necessary, remove the fuel tank and/or lines before welding nearby. Drain fuel into an approved container.**

2. Pull out and straighten the damaged area.
   - Attach the car to the frame straightener by tightening the underbody clamps located at the jack-up points on the bottom of the side sill and the side sill side flanges.
   - To protect the car body from damage, place a piece of aluminum plate on each clamping section and tighten the clamps.
   - The collision damage may extend to the front floor, front pillar, etc. Check for the damaged sections carefully and pull them out with the frame straightener to reshape.
   - Before pulling out the damaged sections, it might be necessary to heat the sections with an acetylene torch (see page 2-31).

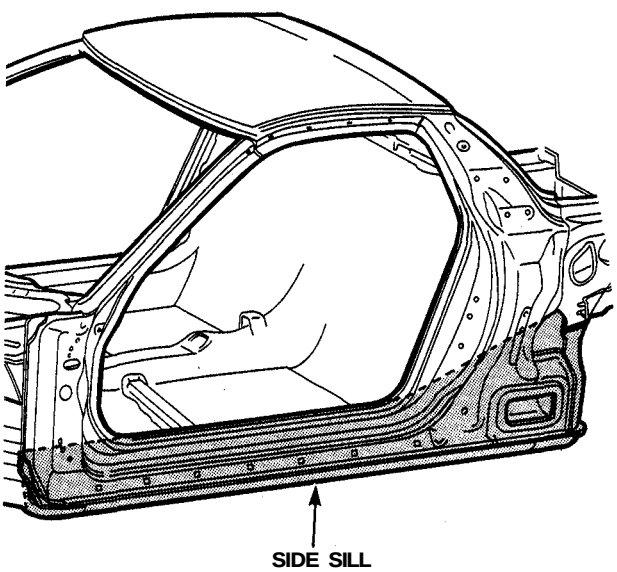

3. Peel off the undercoat.
   Heat the undercoat at the weld areas of the front floor, side frame outer rear and dashboard lower cross member with a gas torch and peel off a metal spatula.

   CAUTION: Be careful not to bum the fittings inside the passenger compartment when heating.

4. Remove the side frame outer rear and dashboard lower cross member.

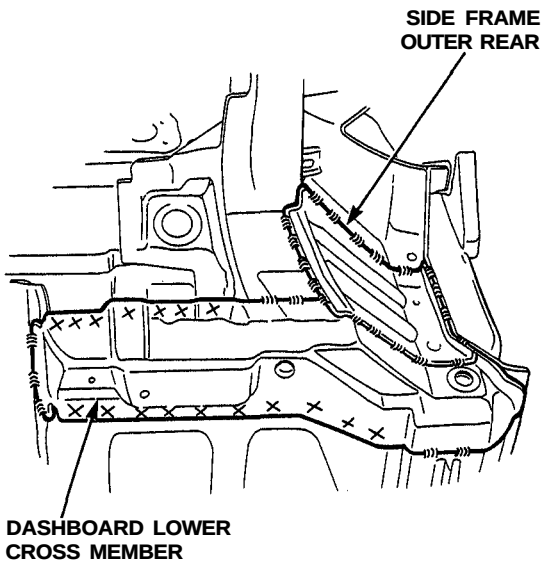

5. Drill the rear frame lower extension and remove it.

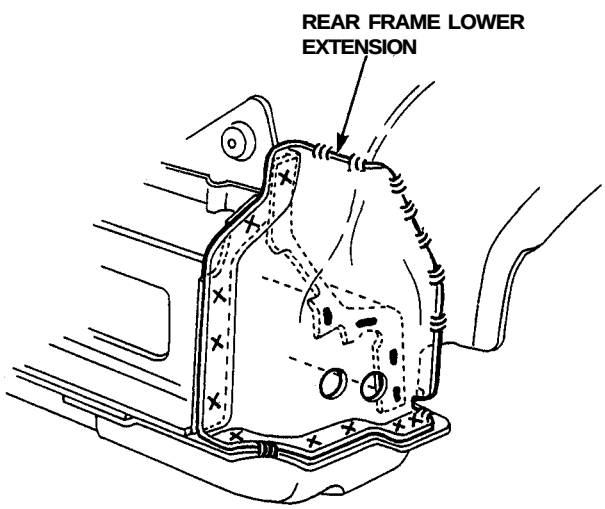

cardiagn.com

6. Remove the side sill.
   - Strike a punch in the center of the spot welds in side panel and drill the spot welds using a ø8 (5/16") spot cutter.
   - Cut the side panel as shown and remove them.

   NOTE: Be careful not to cut the inner section.

- Strike a punch in the center of the spot welds in the side sill, front floor, front pillar, and center pillar.
- Drill the spot welds using a ø10 (3/8") spot cutter.
- Grind the fillet weld of the side sill/front and rear side frames joint using a rotary cutter.

⚠ WARNING **To prevent eye injury, wear goggles or safety glasses whenever sanding, cutting or grinding.**

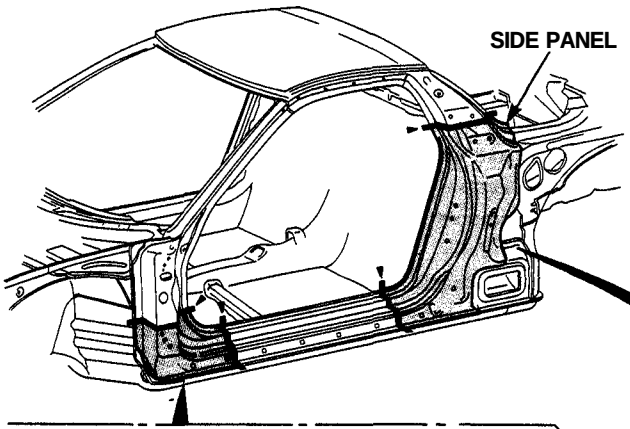

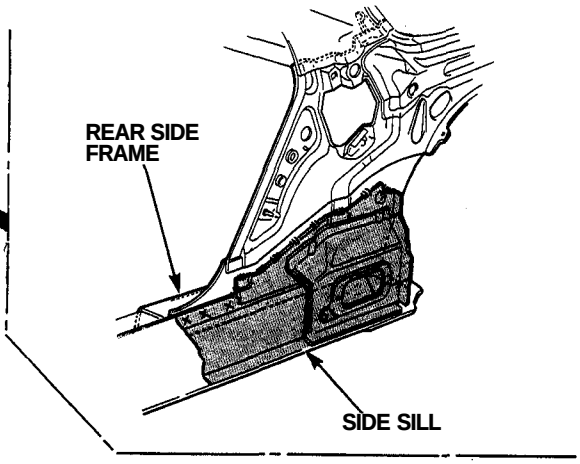

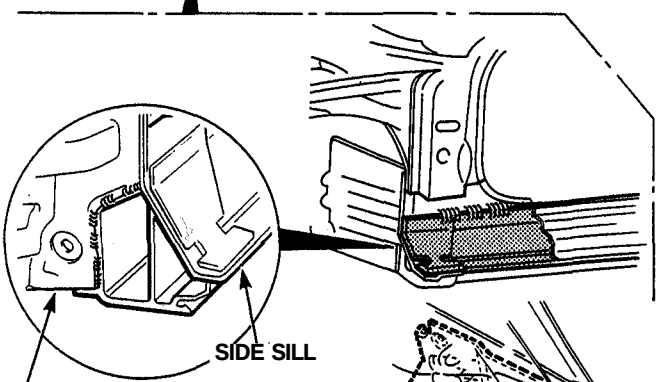

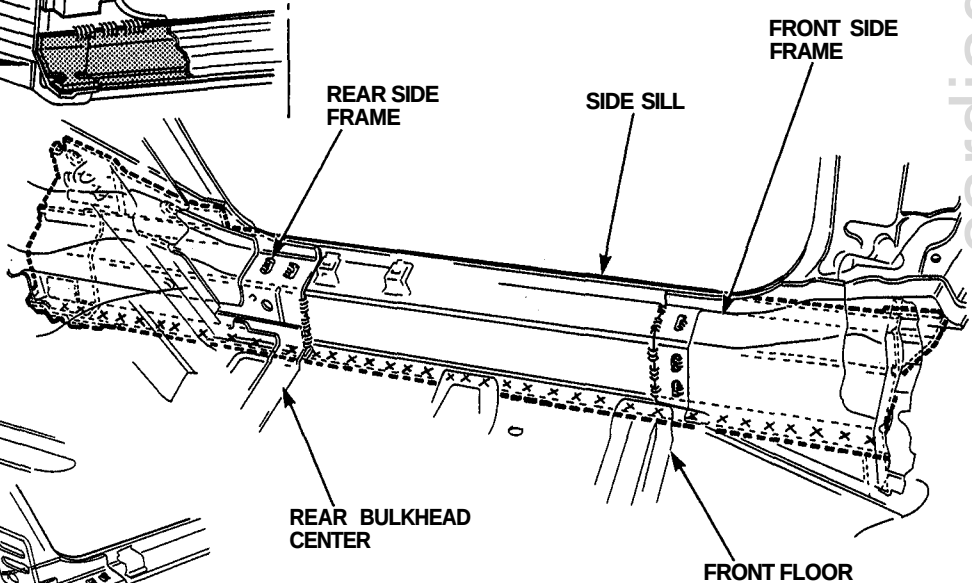

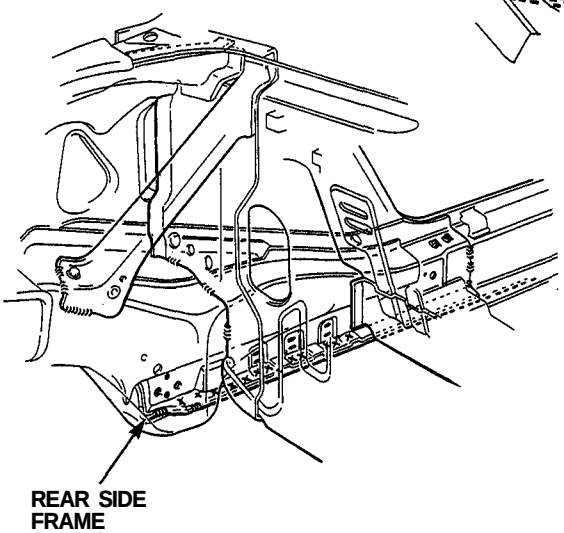

- Drill the MIG welds (plug welding) using a ø15 (5/8") spot cutter (hole saw type)

(cont'd)

cardiagn.com

Side Sill

Replacement (cont'd)

7. Mold the related parts.
   - Remove the welding flanges using a chisel.
   - Correct the front floor and inner pillar using a hammer and dolly.
   - Remove the burrs from the spot welds and MIG welds using a disc sander.

⚠WARNING To prevent eye injury, wear goggles or safety glasses whenever sanding, cutting or grinding.

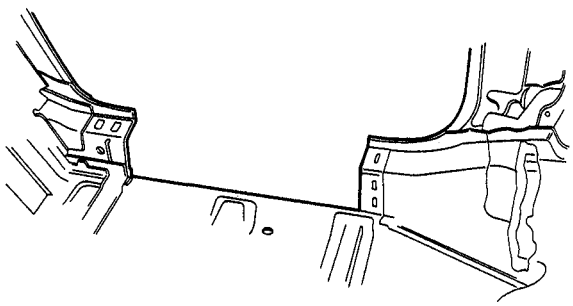

NOTE: Check the reshaped parts for cracks (see page 2-29).

8. Set the new side sill.
   - Remove the undercoat from the welding sections of the side sill and expose the aluminum alloy base using a disc sander.

⚠WARNING To prevent eye injury, wear goggles or safety glasses whenever sanding, cutting or grinding.

   - Remove the undercoat and paint film from the welding section of the body and clean oil contaminations with shop towel soaked with wax and grease remover.
   - Before setting the side sill, remove the oxide film from the welding section of the replacement part and body using a stainless steel wire brush.

NOTE: Keep the body level.

   - Clamp the new side sill in place with screw clamps.

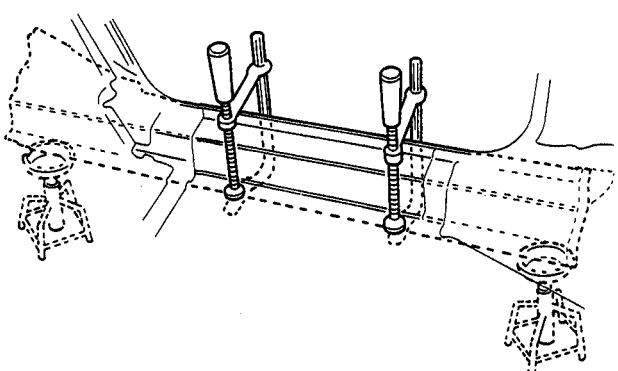

9. Tack weld the side sill at the clamp positions.

⚠WARNING To prevent eye injury and burns when welding, wear an approved welding helmet, gloves and safety shoes.

NOTE: Check the front and rear side frames positions using the body dimensional drawings (see section 6).

10. Set the new side panel
    - Align the new part with the top cut section, then cut it with a handsaw.
    - Clamp the side panel in place with vise-grips.
    - Temporarily mount the front fender, door, and rear fender.

NOTE: Check for flushness of the front fender, door, and the rear fender and check the car for a smooth body line.

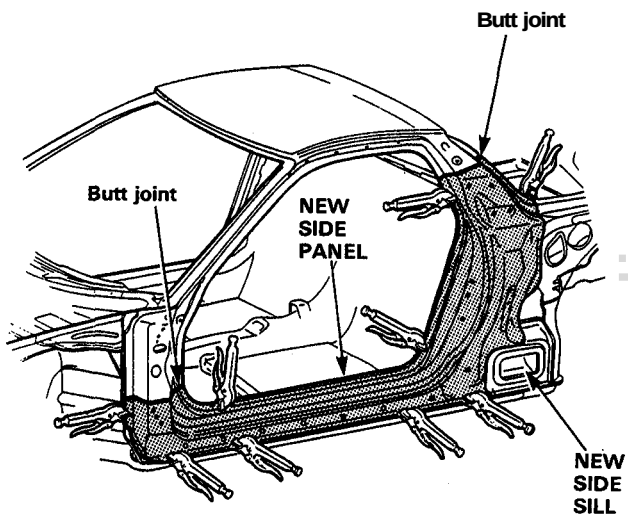

   - Remove the new side panel.

cardiagn.com

11. Perform the main welding.

⚠WARNING To prevent eye injury and burns when welding, wear an approved welding helmet, gloves and safely shoes.

- Before welding, perform the trial welding following the welder manufacturer's instructions.
- Remove the oxide film from the welding sections using a stainless steel wire brush.
- The applicable welding methods are the MIG welding, plug welding, or fillet welding.
- Check the welding sections for cracks (see page 2-29).

- Weld the floor.

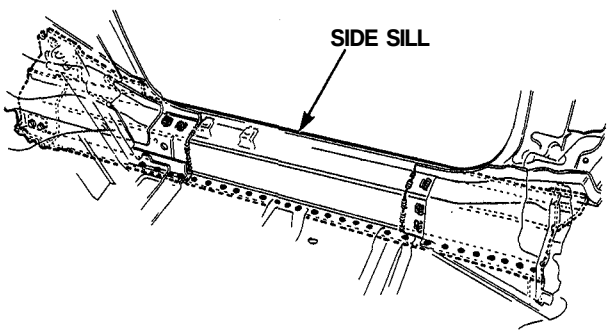

- Weld the side sill rear.

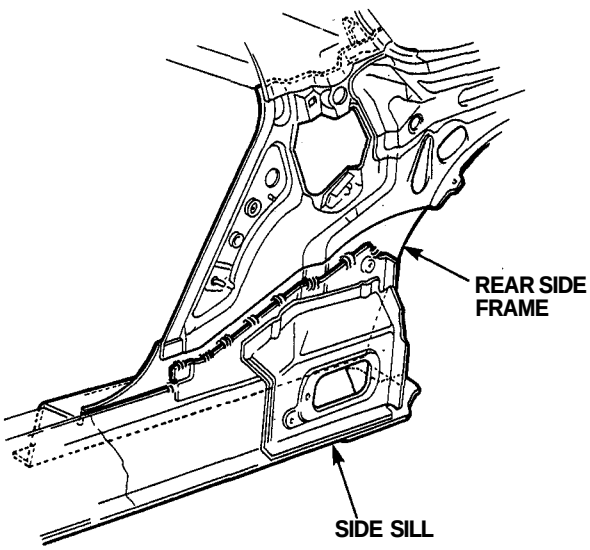

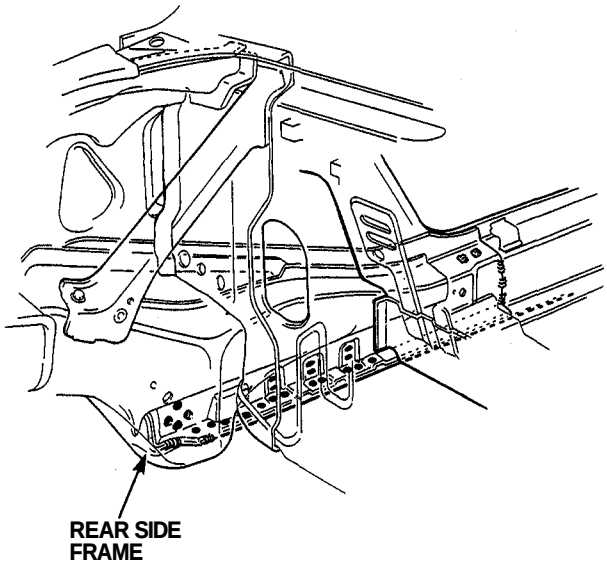

- Weld the side sill front.

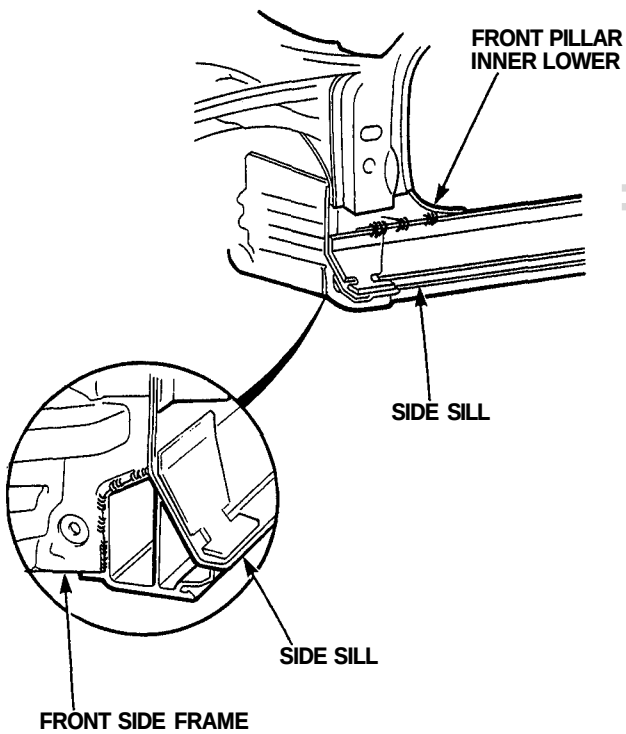

(cont'd)

cardiagn.com

Side Sill

Replacement (cont'd)

12. Weld the new side panel (see page 4-21).

⚠WARNING **To prevent eye injury and burns when welding, wear an approved welding helmet, gloves and safety shoes.**

- Drill the ø8 (5/16") plug weld holes in the welding flange of the new side panel.
- Remove the undercoat from the welding sections of the side panel and expose the aluminum alloy base using a disc sander.
- Before welding, remove the oxide film from the welding section using a stainless steel wire brush.
- MIG/plug weld the side sill of the outer panel and butt weld at the top of the outer panel.
- Attach a tab to the butt welding section as shown and weld.
- Preheating effect can be obtained by attaching a tab to the butt welding section.

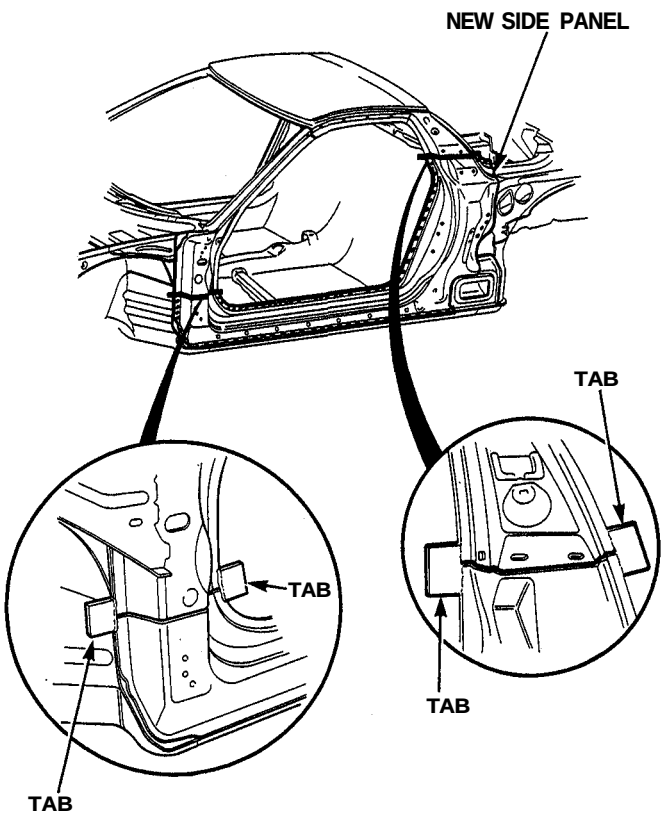

13. Weld the related parts.
- Weld the dashboard lower and side frame outer rear cross member by MIG welding, plug welding, or fillet welding.
- Weld the rear side frame lower extension.

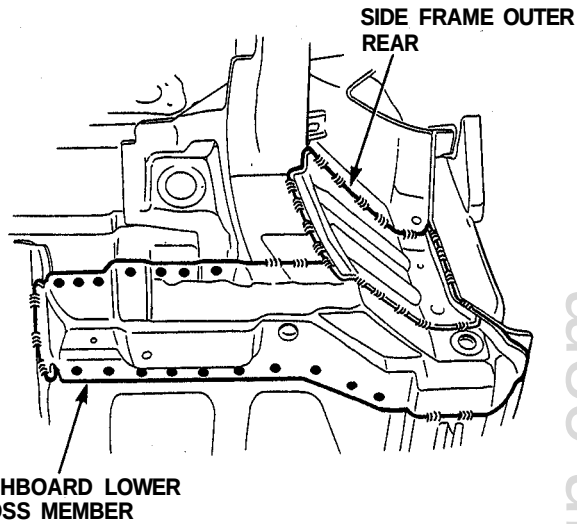

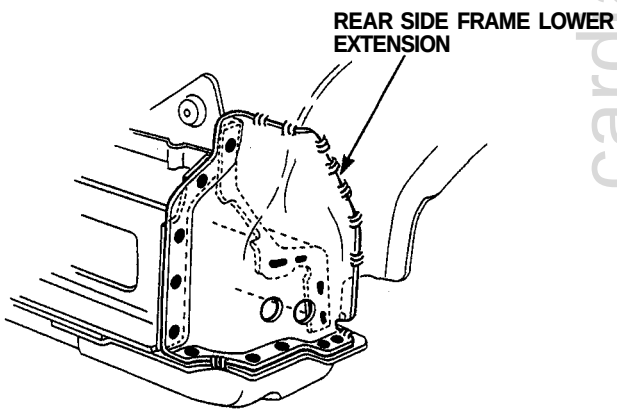

cardiagn.com

14. Finish the welding area.
    - Roughly grind the welds with a disc grinder. Be sure to leave the finishing allowance this time.
    - Finish grind the finishing allowance with a disc sander until it is smooth.

⚠WARNING **To prevent eye injury, wear goggles or safety glasses whenever sanding, cutting or grinding.**

- Finish the butt weld by removing the tab.
- Take care not to grind the aluminum alloy base while roughly grinding the welds.
- Take care not to grind excessively.
- Do not press on the sanding tools excessively. If the disc face is clogged with the aluminum alloy particles, replace with a new disc.
- Finish the butt welded door opening of the outer panel with a disc sander and putty.

15. Apply the sealer (see section 5).
    Apply sealer to the side sill, front floor, dashboard lower, and side panel.

16. Apply the paint.
    See Paint Repair section.

⚠WARNING
- **Ventilate when spraying paint. Most paint contains substances that are harmful if inhaled or swallowed. Read the paint label before opening paint container.**
- **Avoid contact with skin. Wear an approved respirator, gloves, eye protection and appropriate clothing when painting.**
- **Paint is flammable. Store in a safe place, and keep it away from sparks, flames or cigarettes.**

17. Apply the undercoat (see section 7).
    Undercoat the front floor, etc. and apply anti-rust agent to the inside of the welding section of the front side sill, front and center pillars, etc.

18. Install the related parts.
    - Install in the reverse order of removal.
    - Adjust the door striker and check the door lock operation.

19. Check and clean.
    - Check the electrical parts for proper operation.
    - Clean the passenger compartment.

cardiagn.com

Front Floor

Description

The front floor is the critical part which connects the right and left and front and rear of the cabin and where the driver and assistant ride. During replacement, weld securely following the welder manufacturer's instructions.

Mass Production Body Welding Diagram

<Weld Locations>
✳ : Spot Weld
▽ : Fillet Weld
⊡ : Slot plug weld

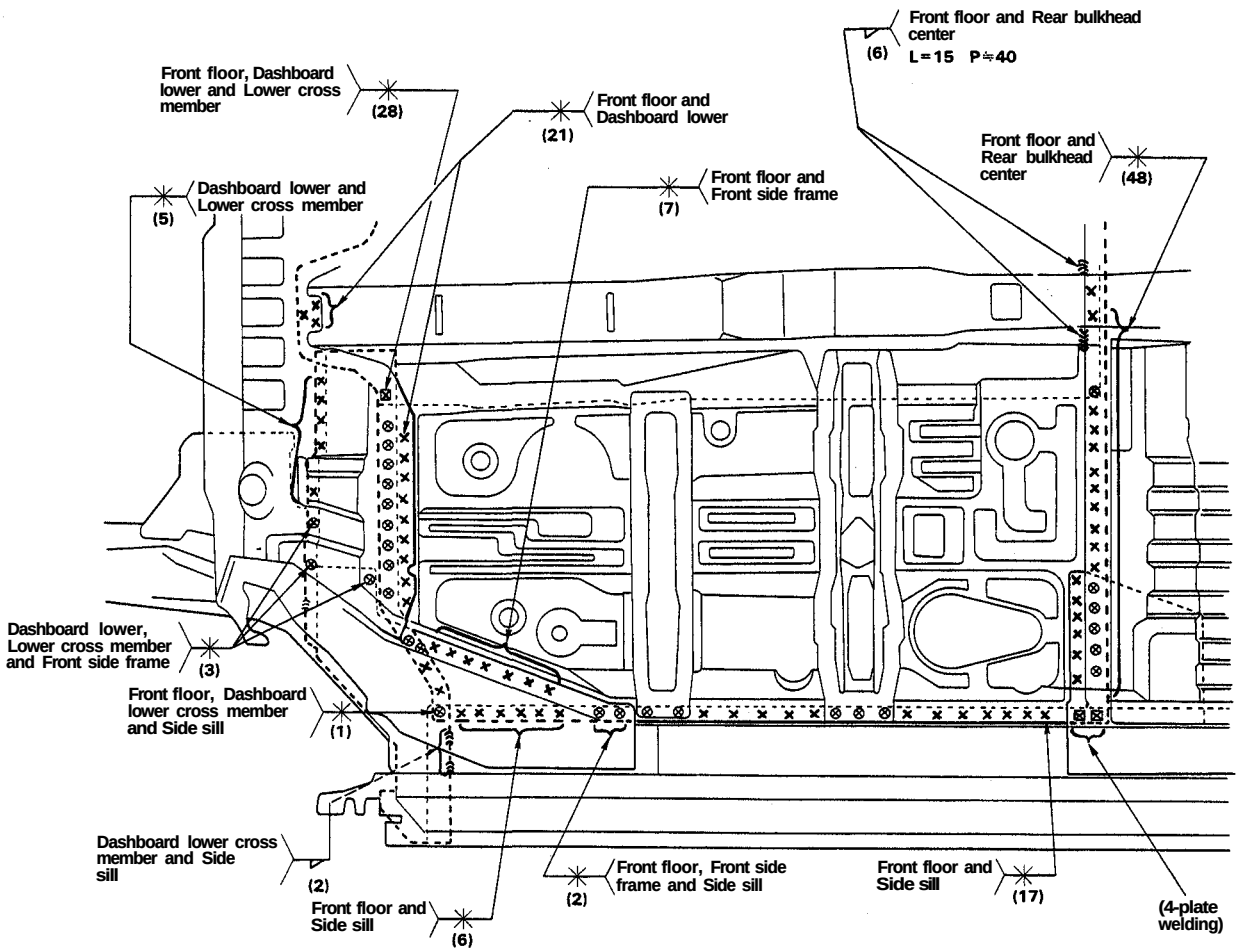

cardiagn.com

Replacement

1. Remove the related parts.
   - Driver's and passenger's seat
   - Carpet
   - Hand brake assembly

   NOTE: With a side sill removed (one side).

⚠WARNING Do not smoke while working near the fuel system. Keep open flame away from the fuel system. If necessary, remove the fuel tank and/or lines before welding nearby. Drain fuel into an approved container.

2. Remove the front floor.
   - Strike a punch in the center of the spot welds to the dashboard lower and rear bulkhead center.
   - Drill the spot welds using a ø10 (3/8") spot cutter.
   - Grind the MIG/fillet welds using a rotary cutter.

⚠WARNING To prevent injury, wear goggles or safety glasses whenever sanding, cutting or grinding.

   - Remove the spot welds and fillet welds using a chisel.
   - Do not drill through the side sill.
   - Smooth the welding sections of the dashboard lower and rear bulkhead with a hammer and dolly.

   NOTE: Check the reshape parts for cracks (see page 2-29).

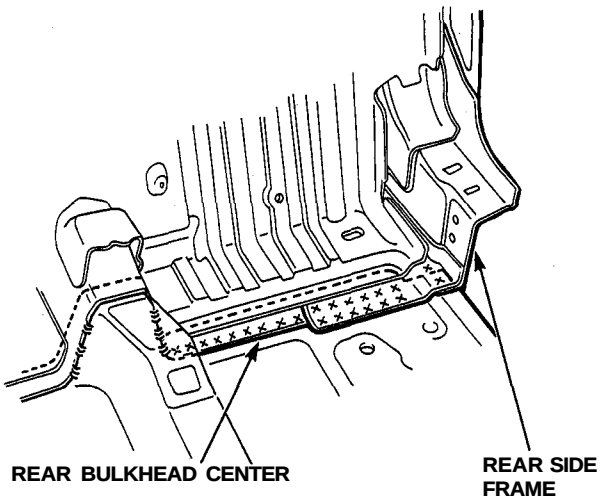

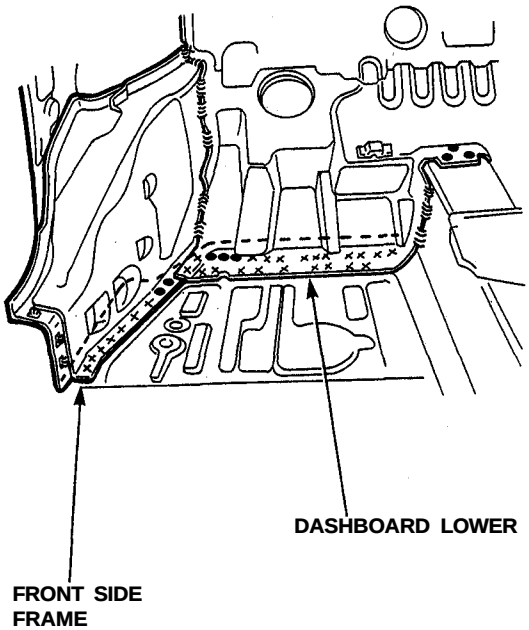

3. Set the new front floor.
   - Drill the ø8 (5/16") plug weld holes in the welding flange of the new front floor.
   - Remove the undercoat from the welding section of the front floor and expose the aluminum alloy base using a disc sander.

⚠WARNING To prevent injury, wear goggles or safety glasses whenever sanding, cutting or grinding.

   - Hear the undercoat at the bottom of the body using a gas torch, and remove it thoroughly with a knife.
   - Remove the paint film from the welding section of the body using a disc sander and clean oil contaminations with a shop towel soaked with a wax and grease remover.
   - Before setting the new front floor, clean the welding sections of the front floor and body using a stainless steel wire brush.

(cont'd)

cardiagn.com

Front Floor

Replacement (cont'd)

- Clamp the front floor, side sill, dashboard lower, and rear bulkhead center with screw clamps.
- Weld the clamped sections for temporary installation.

WARNING **To prevent eye injury and burns when welding, wear an approved welding helmet, gloves and safety shoes.**

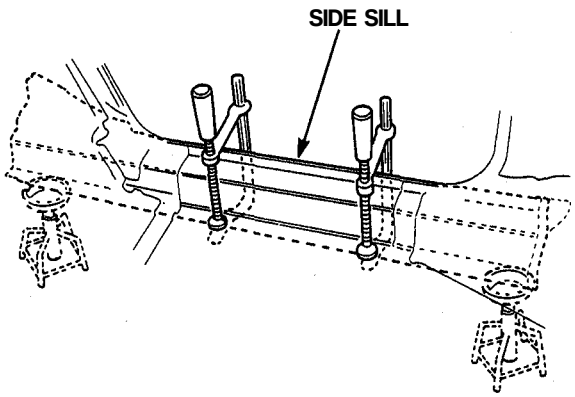

4. Perform the main welding.

WARNING **To prevent eye injury and burns when welding, wear an approved welding helmet, gloves and safety shoes.**

- Before welding, perform the trial welding following the welder manufacturer's instructions.
- Remove the oxide film from the welding sections using a stainless steel wire brush.
- The applicable welding methods are MIG/plug welding or fillet welding.
- Check the welding sections for cracks (see page 2-29).

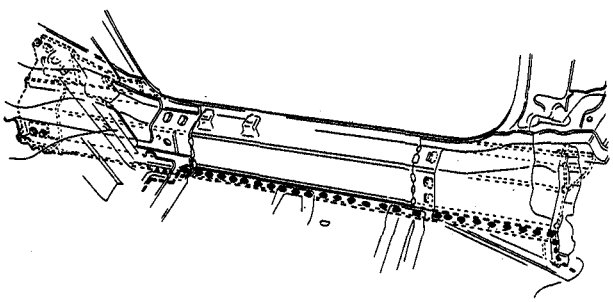

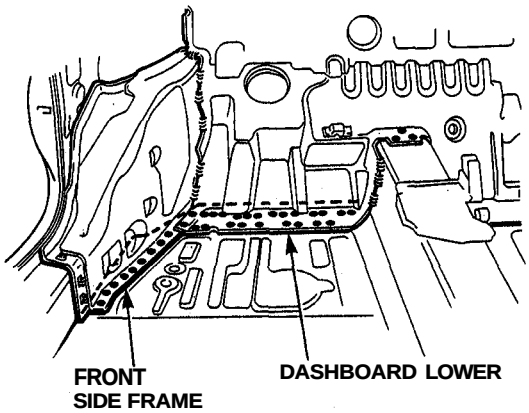

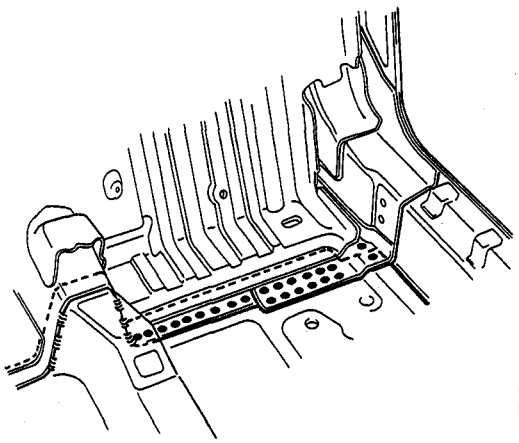

5. Finish the welding area.
   - Roughly grind the welds using a disc grinder. Be sure to leave the finishing allowance this time.
   - Finish grind the finishing allowance with a disc sander until it is smooth.

WARNING **To prevent eye injury, wear goggles or safety glasses whenever sanding, cutting or grinding.**

- Take care not to grind the aluminum alloy base while roughly grinding the welds.
- Take care not to grind excessively.
- Do not press on the sanding tools excessively. If the disc face is clogged with the aluminum alloy particles, replace with a new disc.

cardiagn.com

6. Apply the sealer (see section 7).
   Apply sealer to the mating surface with the front floor.

7. Apply the paint.
   See Paint Repair section.

   WARNING
   - **Ventilate when spraying paint. Most paint contains substances that are harmful if inhaled or swallowed. Read the paint label before opening paint container.**
   - **Avoid contact with skin. Wear an approved respirator, gloves, eye protection and appropriate clothing when painting.**
   - **Paint is flammable. Store in a safe place, and keep it away from sparks, flames or cigarettes.**

8. Apply the undercoat (see section 5).
   Undercoat the front floor, etc. and apply anti-rust agent to the inside of the welding section of the front side sill, side frame and dashboard lower.

9. Install the related parts .

10. Check and clean.
    - Check the seats for movement.
    - Perform the brake test.
    - Clean the passenger compartment.

cardiagn.com

Front Assembly

Description

The front assembly is critical for the rigidity of the front compartment and front wheel alignment, as it is integrated with the front wheelhouse. During installation, the dimension shown in the body dimensional drawings. Welding must be performed by using the aluminum alloy MIG welder. Perform the trial welding first following the welder manufacturer's instructions, then weld properly.

NOTE: Do not section frame rails except at manufacturers seams.

Mass Production Body Welding Diagram

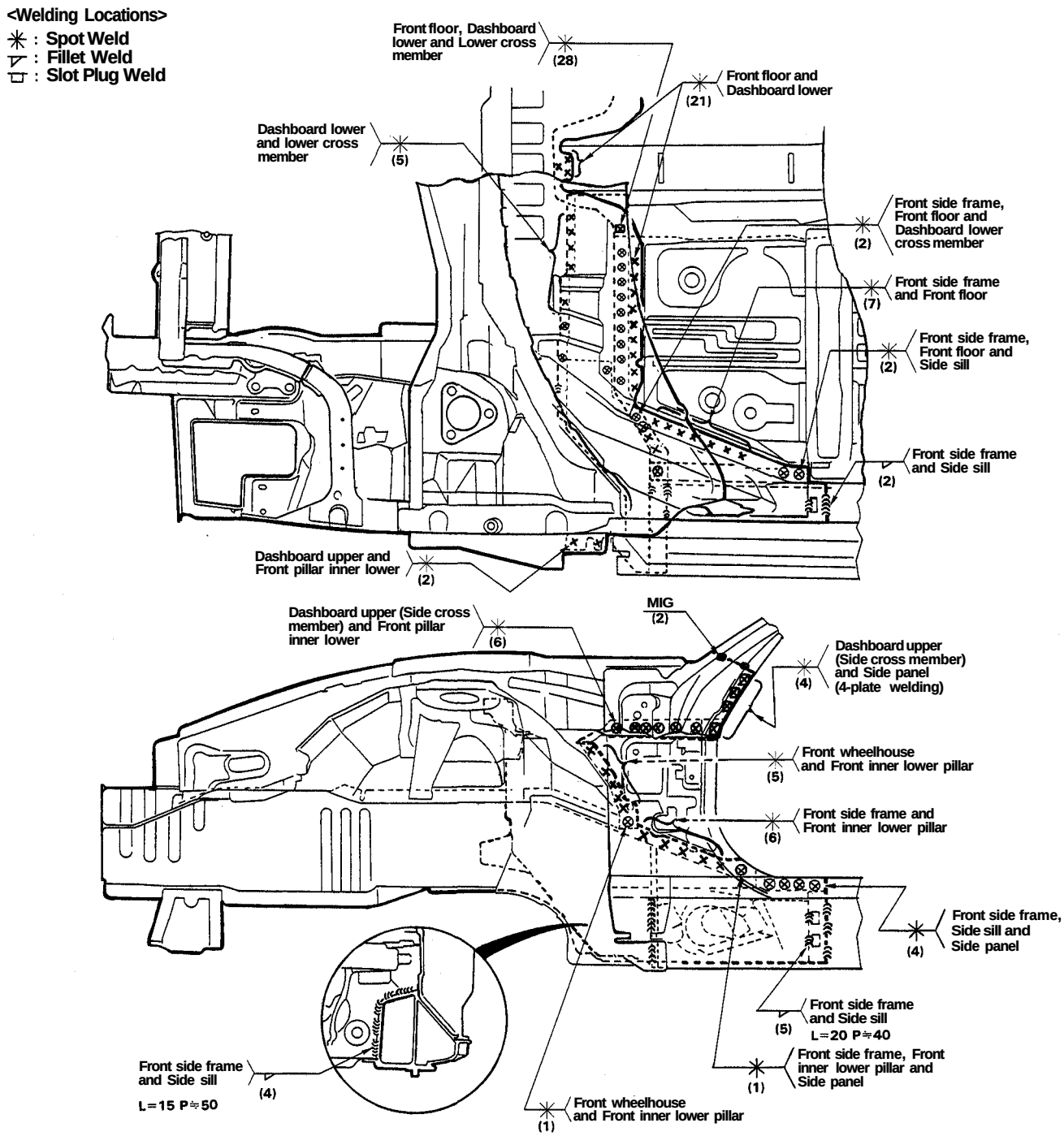

cardiagn.com

Replacement

1. Remove the related parts.
   - Front suspension related parts
   - Brake hoses and pipes
   - Front compartment electrical components
   - Fittings in passenger compartment, etc.
   - Windshield
   - Steering column
   - Windshield

2. Pull out and straighten the damaged area.
   - Attach the car to the frame straightener by tightening the underbody clamps located at the jack-up points on the bottom of the side sill and the side sill side flanges.

   NOTE: Refer to the NSX Service Manual for safety stand location points.

   - To protect the car body from damage, place a piece of aluminum plate on each clamping section and tighten the clamps.
   - Before cutting off the damaged sections, pull them out so that they are restored to the original shape.
   - Cutting off front assembly before roughly pulling out the damage makes repair of the related front floor, front pillar, and other related parts difficult.

   - It might be necessary to heat the damaged sections with an acetylene torch before pulling the them out (see page 2-31).

   NOTE: Pull out until the pillar is lined up with the surface of the windshield.

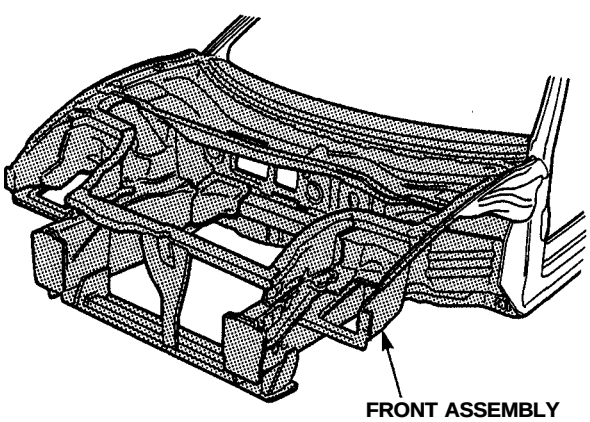

   - After pulling, check the damper housing and the side frame positions using the body dimensional drawings (see section 6).

3. Peel off the undercoat.
   Heat the undercoat at the weld areas of the lower dashboard, front floor and side sill with a gas torch and peel off with a metal spatula.

   CAUTION: Be careful not to burn the fittings inside the passenger compartment when heating.

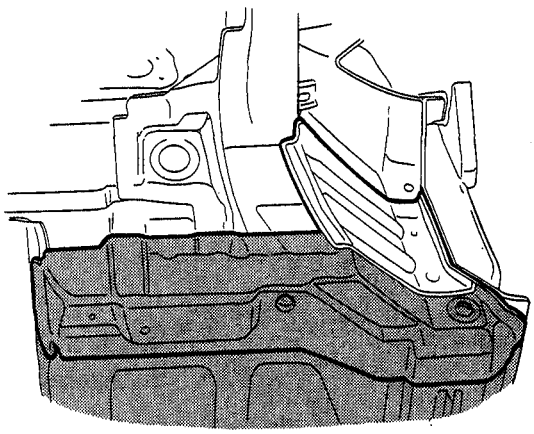

4. Remove the dashboard upper extension on each side.

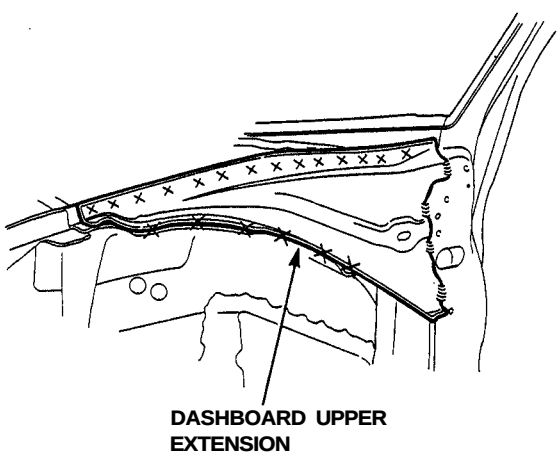

(cont'd)

cardiagn.com

Front Assembly

Replacement (cont'd)

5. Remove the side frame outer rear and dashboard lower cross member on each side.

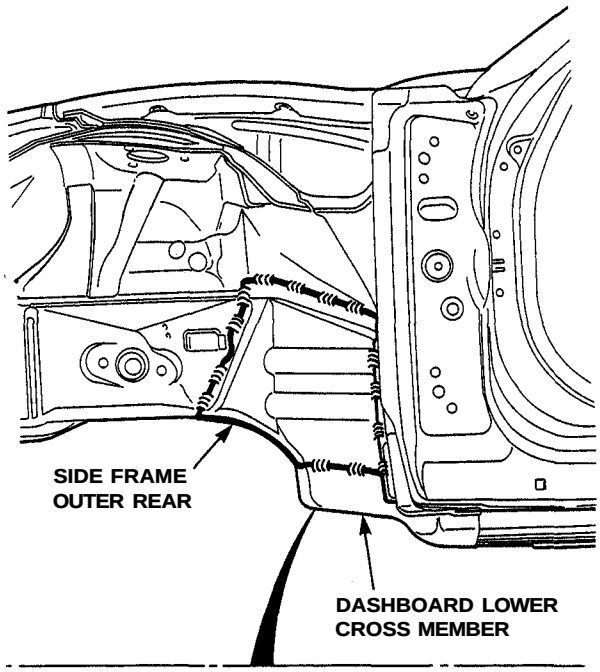

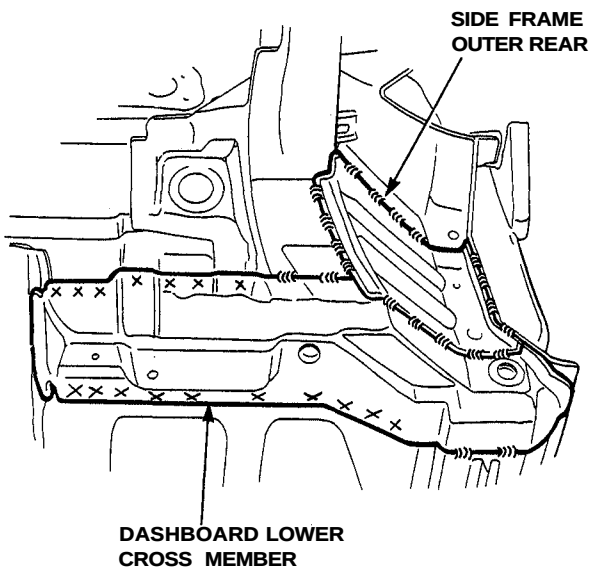

6. Remove the dashboard upper (side cross member) on each side.

7. Remove the wheelhouse and side frame on each side.

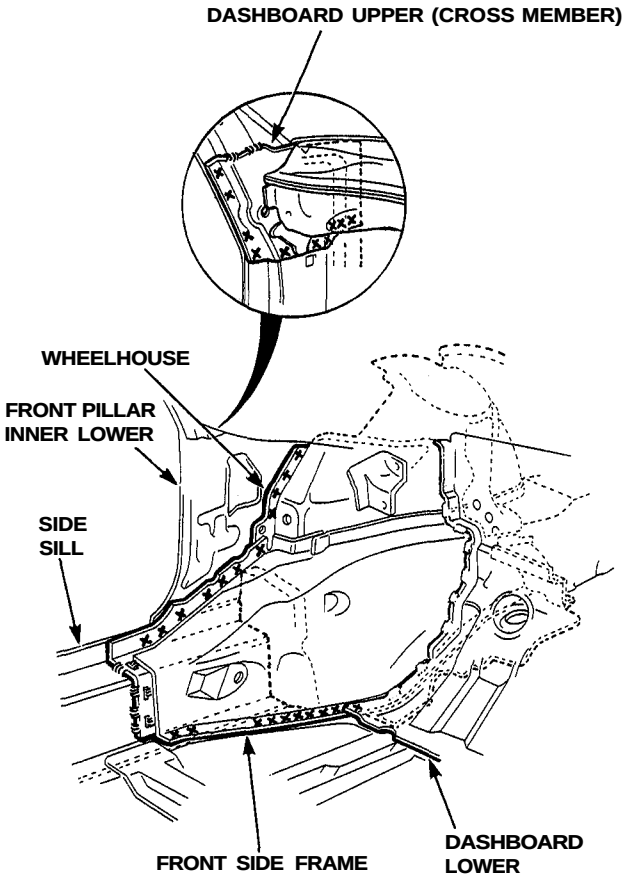

8. Remove the dashboard lower.

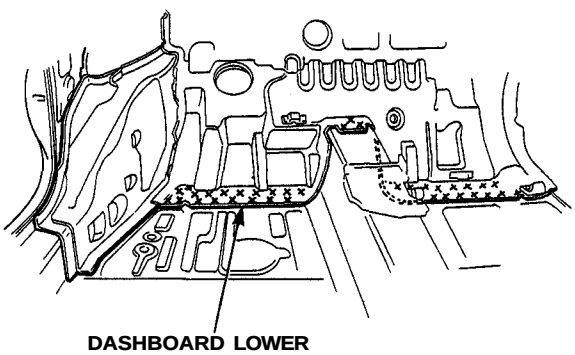

cardiagn.com

9. Remove the front assembly.
   - Grind the fillet welds of the side frame-and-side sill joint using a rotary cutter as shown.
   - Peel off the welding flange using the chisel.
   - Remove the burrs from the drilled sections with a disc grinder or disc sander.

WARNING **To prevent eye injury, wear goggles or safety glasses whenever sanding, cutting or grinding.**

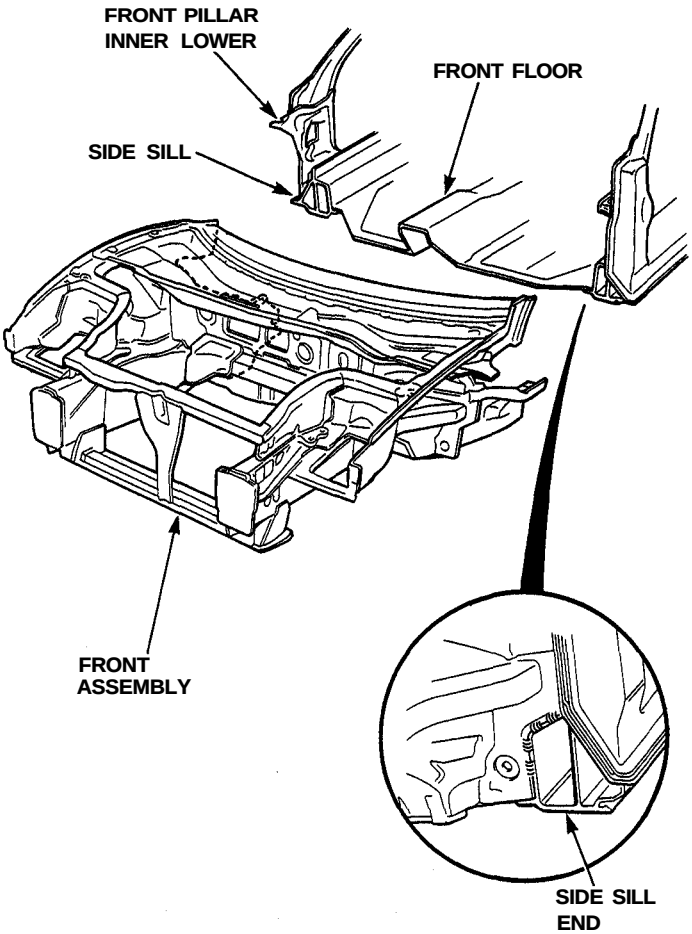

10. Mold the related parts.
    Reshape the front pillar-and-front floor joint using a hammer and dolly.

    NOTE: Check the reshaped parts for cracks (see page 2-29).

    - Keep the body level.

11. Set the new front assembly.
    - Drill the ø8~ø10 (5/16"~3/8") holes for spot welding in the welding flange.
    - Remove the undercoat from the both sides of the welding section and expose the aluminum alloy base using a disc sander.

WARNING **To prevent eye injury, wear goggles or safety glasses whenever sanding, cutting or grinding.**

- Remove the paint film from the welding section of the body and clean off any oil contaminations using a shop towel soaked with wax and grease remover.
- Just before setting the front assembly, remove the oxide film from the welding surface of the replacement part and body using a stainless steel wire brush.

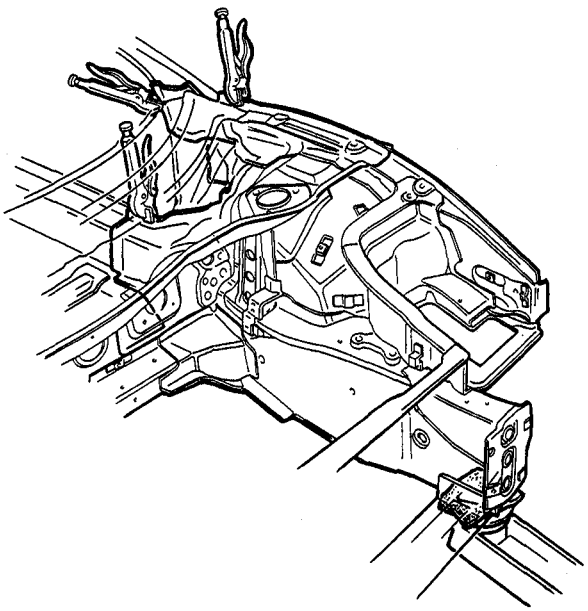

- Tighten the front assembly against the front pillar and side sill using the vise-grips, pliers, etc.
- Place a jack under the front side frame end on each side and support it, and measure the positions for temporary attachment.
- Check over the body dimensions.

(cont'd)

cardiagn.com

Front Assembly

Replacement (cont'd)

12. MIG weld the several points in the clamped sections and temporarily fix the front assembly.

⚠WARNING To prevent eye injury and burns when welding, wear an approved welding helmet, gloves and safety shoes.

- Measure the dimension, temporarily install the hood and fender, and check for difference in level and clearance.
- Install the windshield and check for proper installation and alignment.

13. Perform the main welding.

⚠WARNING To prevent eye injury and burns when welding, wear an approved welding helmet, gloves and safety shoes.

- Before welding, perform the trial welding following the welder manufacturer's instructions.
- Clean the welding section with a stainless steel wire brush before welding.
- The applicable welding methods in this step shall be the MIG welding, plug welding, and fillet welding.
- Check the welding section for cracks (see page 2-29).
- Weld the side frame and side sill on each side.

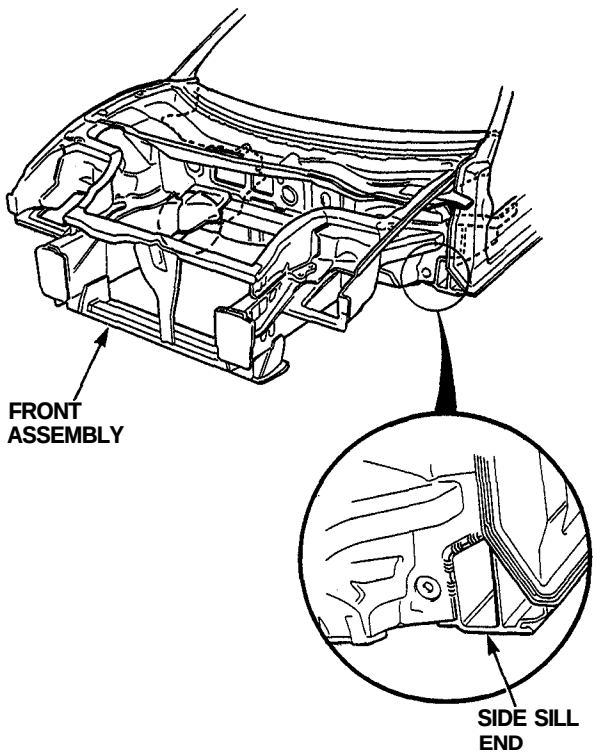

- Weld the dashboard upper (cross member) on each side.
- Weld the side frame and wheelhouse on each side.

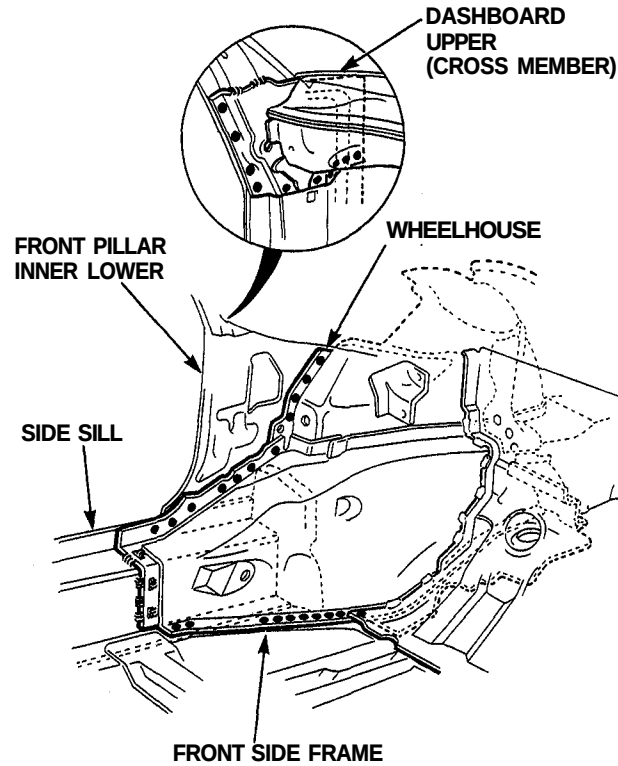

- Weld the dashboard lower.

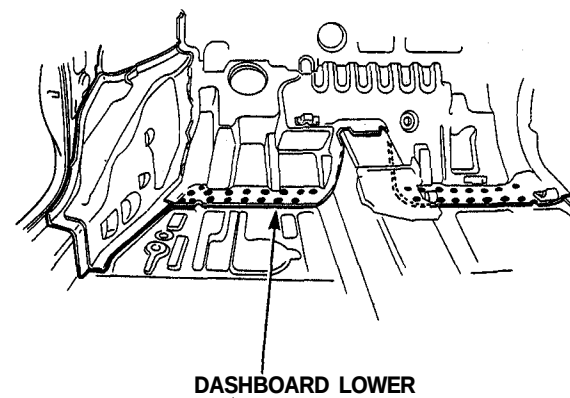

cardiagn.com

14. Install and weld the related parts on each side.

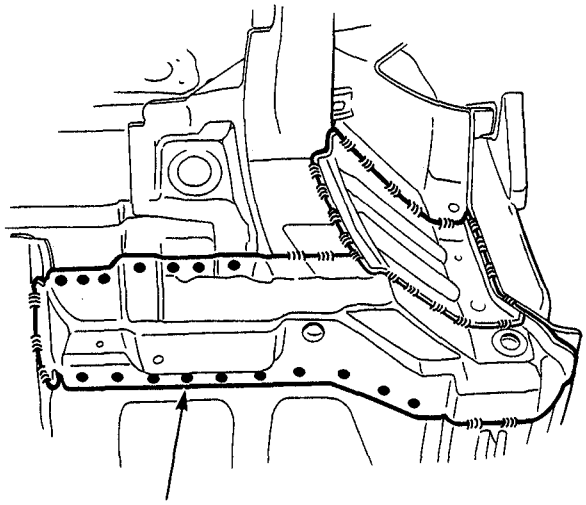

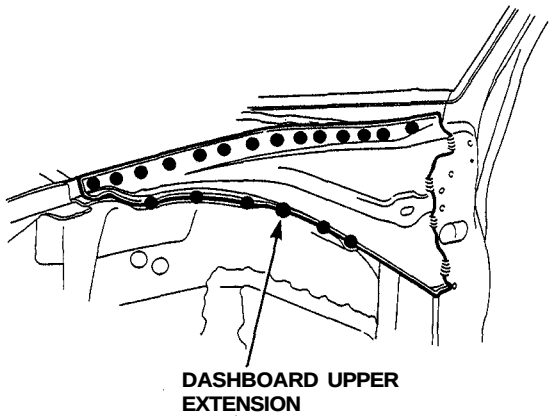

- Check the welding sections for cracks (see page 2-29).

15. Apply the sealer (see section 5).
Apply sealer to the mating surfaces of the dashboard lower, etc.

16. Apply the paint.
See Paint Repair section.

⚠WARNING

- **Ventilate when spraying paint. Most paint contains substances that are harmful if inhaled or swallowed. Read the paint label before opening paint container.**
- **Avoid contact with skin. Wear an approved respirator, gloves, eye protection and appropriate clothing when painting.**
- **Paint is flammable. Store in a safe place, and keep it away from sparks, flames or cigarettes.**

17. Apply the undercoat (see section 7).
Undercoat the front floor, etc. and apply anti-rust agent to the inside of the welding section of the front side sill, front pillar, etc.

18. Install the related parts.
Install in the reverse order in which they were removed.

19. Inspect, check and make adjustment.
- Measure the front wheel alignment.
- Inspect the brake system.
- Adjust the headlight aim.

carpiagram.com

Rear Fender

Replacement

NOTE: After installing the rear fender, check the clearance and difference in level between the rear fender and door panel, rear hatch, trunk lid, rear bumper, and rear combination light.

1. Remove the related parts.
   - Inner fender
   - Side sill panel
   - Air intake duct
   - Side air scoop
   - Fuel cap adapter and fuel lid latch
   - Rear bumper
   - Rear pillar panel

   NOTE: Refer to the NSX Service Manual body and fuel sections.

2. Mask parts with tape.
   Apply the masking tape to the parts of the side panel, rear hatch, and trunk lid, that are adjacent to the rear fender to protect the painted surfaces from damage.

3. Remove the mounting bolts from the rear fender.
   NOTE:
   - Use the DACRO coated or DACRO & TORQUER-coated genuine Honda bolts and screws (see page 3-4).
   - Do not used any bolts that have lost the DACRO coating, as it results in corrosion.

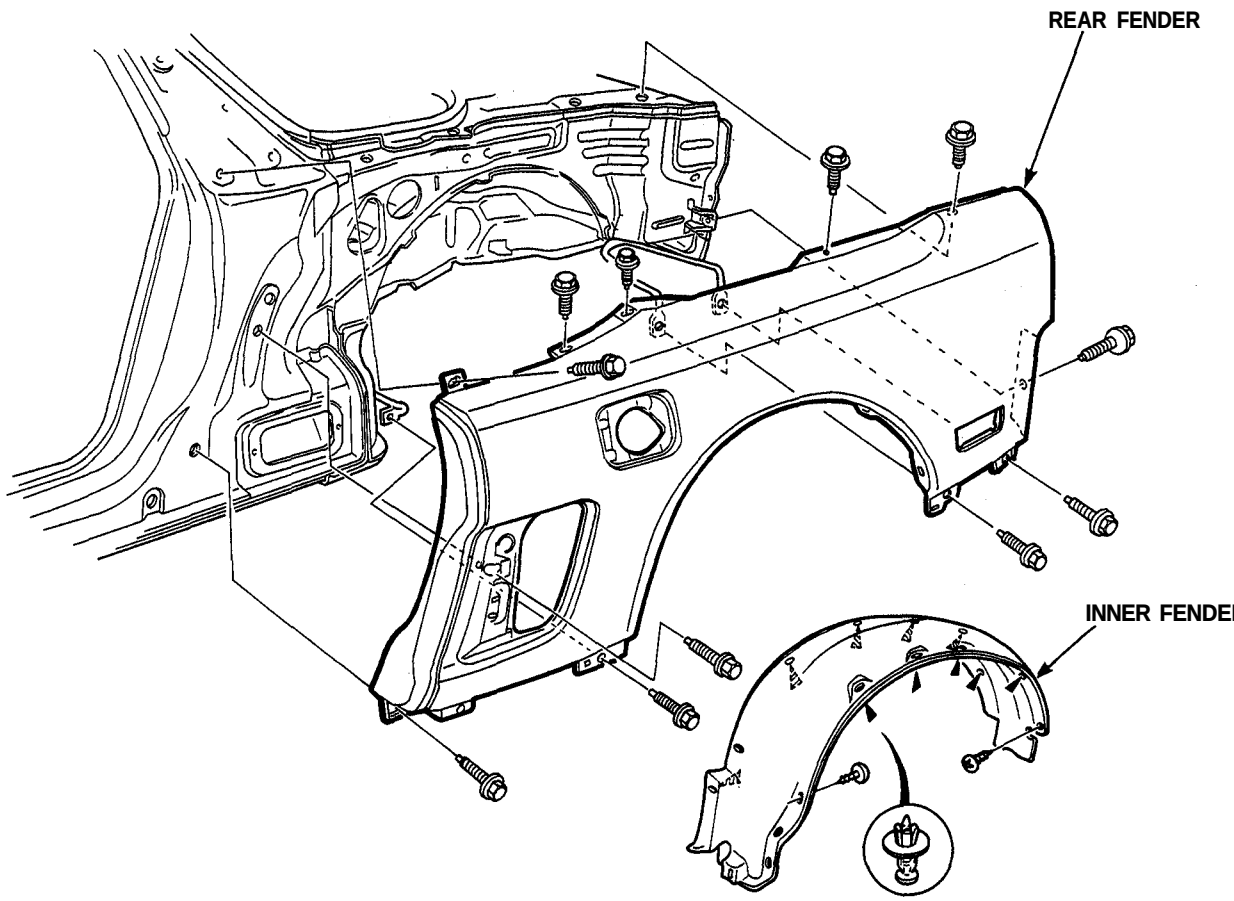

Mounting Bolts Torque:
☆ 6X1.0mm 13N-m (1.3kg-m, 9lb-ft)

☆ : CORROSION RESISTANT BOLT

cardiagn.com

4. Paint the reverse side of the new rear fender.
   See Paint Repair section.

   ⚠WARNING
   - **Ventilate when spraying paint. Most paint contains substances that are harmful if inhaled or swallowed. Read the paint label before opening paint container.**
   - **Avoid contact with skin. Wear an approved respirator, gloves, eye protection and appropriate clothing when painting.**
   - **Paint is flammable. Store in a safe place, and keep it away from sparks, flames or cigarettes.**

5. Set the rear fender.
   Partially tighten the center pillar and wheelhouse bolts and check for differences in level and clearance between the rear fender and door panel, rear hatch, and trunk lid.

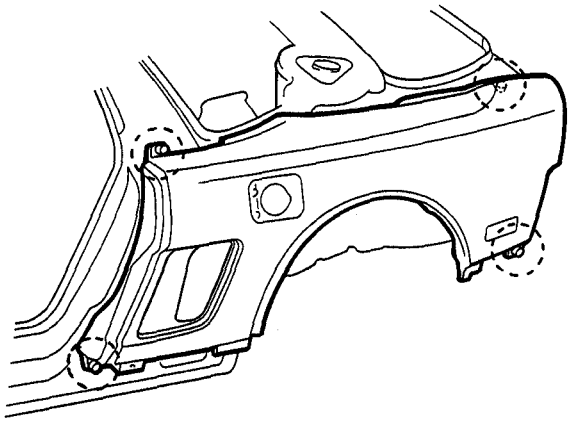

6. Tighten fully.
   - Be sure that the rear fender is set properly and tighten the bolts securely.
   - Apply the spot sealer to the mounting bolt positions.

7. Apply the undercoat (see section 7).
   Undercoat inside the rear fender and top of the rear wheelhouse.

8. Apply the paint.
   See Paint Repair section.

   ⚠WARNING
   - **Ventilate when spraying paint. Most paint contains substances that are harmful if inhaled or swallowed. Read the paint label before opening paint container.**
   - **Avoid contact with skin. Wear an approved respirator, gloves, eye protection and appropriate clothing when painting.**
   - **Paint is flammable. Store in a safe place, and keep it away from sparks, flames or cigarettes.**

10. Install the related parts.
    Install in the reverse order of removal.

11. Check and make adjustments.
    Check the electrical wiring for connection and lights and gauges for proper operation.

cardiagn.com

Rear Panel

Description

The rear panel is joined to the rear side outer panel and rear floor, and maintains the rigidity of both sides of the rear body. It must be welded carefully.

Mass Production Body welding Diagram

<Welding Locations>
✳ : Spot Weld
▽ : Fillet Weld
⊔ : Slot Plug Weld

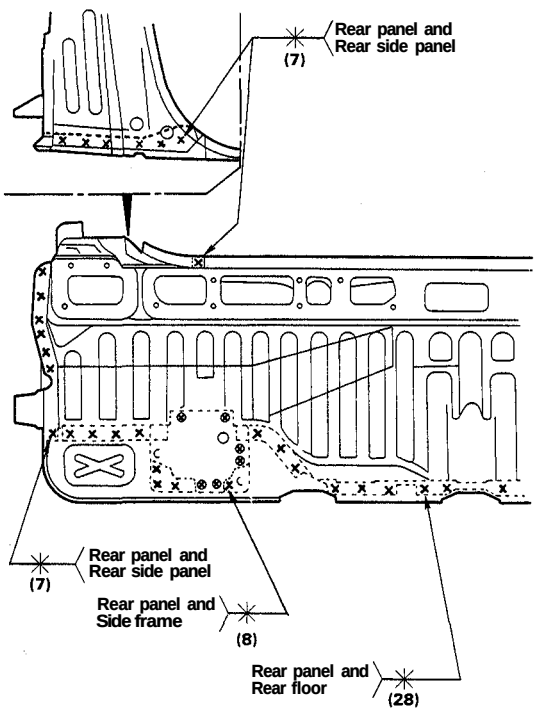

Replacement

1. Remove the related parts.
   - Rear bumper
   - Trunk lid lock and its attachments
   - Other related parts
   - Taillight and rear panel garnish
   - Rear fender

2. Pull out and straighten damaged area.
   - Pull out the related rear side inner panel, rear floor, rear side frame and other damaged parts with the frame straightener.
   - Attach the car to the frame straightener by tightening the underbody clamps located at the jack-up points on the bottom of the side sill and the side sill side flanges.
   - To protect the car body from damage, place a piece of aluminum plate on each clamping section and tighten the clamp.
   - Before pulling out the damaged section, it might be necessary to heat the section with an acetylene torch (see page 2-31).

3. Keep the body level.
   Jack up the body at the front and back and place safety stands at the four designated places of the side sills.

   NOTE: Refer to the NSX Service Manual for safety stand location points.

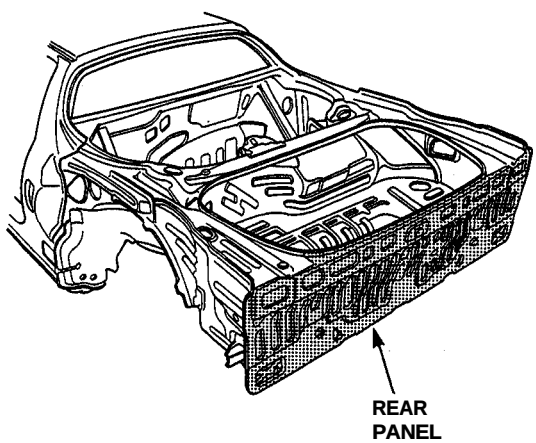

cardiagn.com

4. Cut and pry off the rear panel.
   - Strike a punch in the center of the spot welds to the rear inside panel and rear floor.
   - Drill the spot welds using a ø10 (3/8") spot cutter.
   - Grind the MIG/fillet weld using a rotary cutter.
   - Take care not to drill to the rear floor.
   - Remove the welding flanges using a chisel.
   - Smooth the damaged sections on the rearfloor, etc. with a hammer and dolly.
   - It might be necessary to replace the trunk side gutter this time.

⚠WARNING **To prevent eye injury, wear goggles or safety glasses whenever sanding, cutting or grinding.**

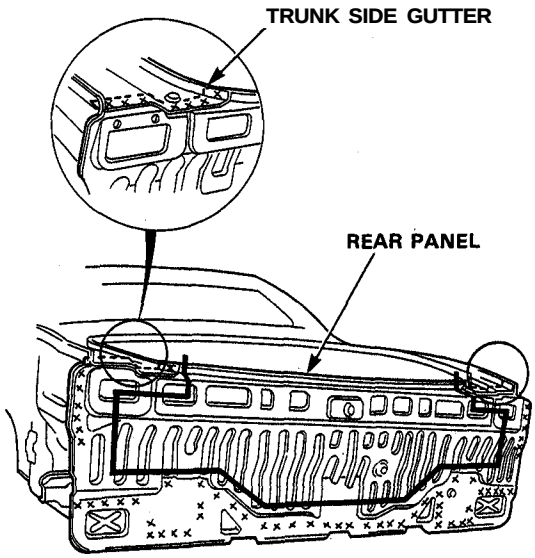

5. Mold the related parts.
   Smooth the welding flange of the rear side panel, rear floor and rear side frame end.

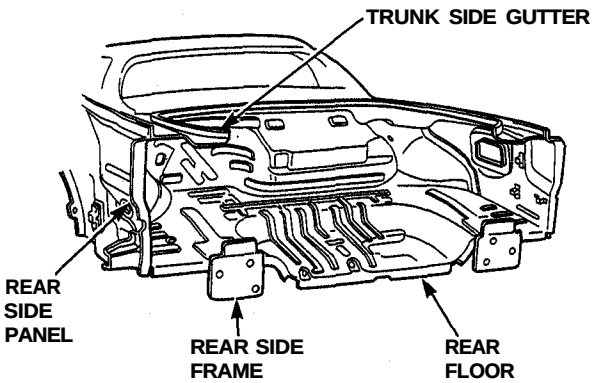

NOTE: Check the reshaped parts for cracks (see page 2-29).

6. Set the new rear panel.
   - Paint the inside of the panel with the body color. See Paint Repair section.

⚠WARNING
- **Ventilate when spraying paint. Most paint contains substances that are harmful if inhaled or swallowed. Read the paint label before opening paint container.**
- **Avoid contact with skin. Wear an approved respirator, gloves, eye protection and appropriate clothing when painting.**
- **Paint is flammable. Store in a safe place, and keep it away from sparks, flames or cigarettes.**

- Drill the ø8~ø10 (5/16"~3/8") holes for plug welding in the welding flange of the replacement panel.
- Remove the undercoat from the welding section of the panel and expose the aluminum alloy base using a disc sander.

⚠WARNING **To prevent eye injury, wear goggles or safety glasses whenever sanding, cutting or grinding.**

- Remove the paint film from the welding section of the body and clean oil contamination with a shop towel soaked with wax and grease remover.
- Before setting the new panel, remove the oxide film from the welding section of the replacement part and body using a stainless steel wire brush.
- Install the new rear panel and clamp it with the vise-grips.

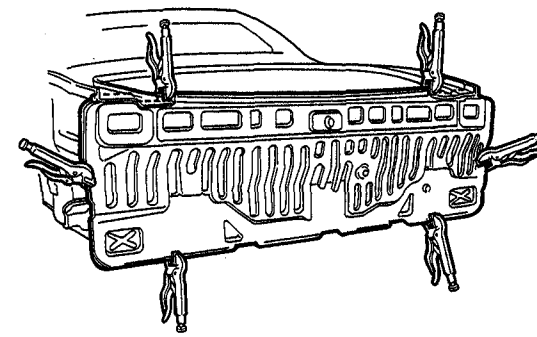

- Check the rear panel position using the body dimensional drawings (see section 6).

(cont'd)

cardiagn.com

Rear Panel

Replacement (cont'd)

7. Tack weld the rear panel.

WARNING **To prevent eye injury and burns when welding, wear an approved welding helmet, gloves and safety shoes.**

- Open and close the trunk lid to check for proper installation.
- Position the rear panel in its correct position with the rear bumper and rear fenders installed.

8. Perform the main welding.

WARNING **To prevent eye injury and burns when welding, wear an approved welding helmet, gloves and safety shoes.**

- Before welding, perform the trial welding following the welder manufacturer's instructions.
- Remove the oxide film from the welding sections using a stainless steel wire brush.
- The applicable welding methods are MIG welding, plug welding, and fillet welding.
- Check the welding sections for cracks (see page 2-29).

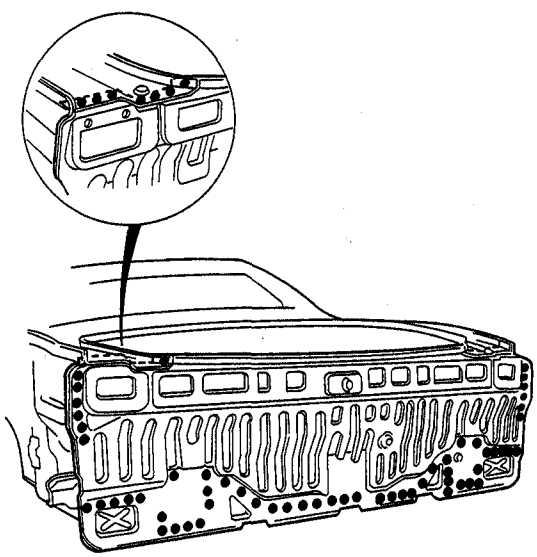

9. Finish the welding area.
   - Roughly grind the welds with a disc grinder. Be sure to leave the finishing allowance this time.
   - Finish grind the finishing allowance with a disc sander until it is smooth.

WARNING **To prevent eye injury, wear goggles or safety glasses whenever sanding, cutting or grinding.**

- Take care not to grind the aluminum alloy base while roughly grinding the welds.
- Take care not to grind excessively.
- Do not press on the sanding tools excessively. If the disc face is clogged with the aluminum alloy particles, replace with a new disc.

10. Apply the sealer (see section 5).
    - Apply sealer to the rear side outer joint and around the taillight areas of the rear panel.
    - Apply sealer to the rear panel and rear floor joint.

11. Apply the paint.
    See Paint Repair section.

WARNING

- **Ventilate when spraying paint. Most paint contains substances that are harmful if inhaled or swallowed. Read the paint label before opening paint container.**
- **Avoid contact with skin. Wear an approved respirator, gloves, eye protection and appropriate clothing when painting.**
- **Paint is flammable. Store in a safe place, and keep it away from sparks, flames or cigarettes.**

12. Apply anti-rust agent (see section 7).

13. Install the related parts.
    Install in the reverse order in which they were removed.

14. Inspect, check, and clean.
    - Adjust the clearance with the trunk lid, then adjust the level differences and fit. Check foration.
    - Test for leaks in the trunk compartment.
    - Clean the trunk floor.

cardiagn.com

Rear Floor

Description

The rear floor is the base of the rear body and it is critical for the rigidity of the rear body. During replacement, refer to the body dimensional drawings and determine the position to set the rear floor properly. Be sure that the rear floor is not bent or deformed. Weld securely following the welder manufacturer's instructions to maintain the rigidity of the body.

Mass Production Body welding Diagram

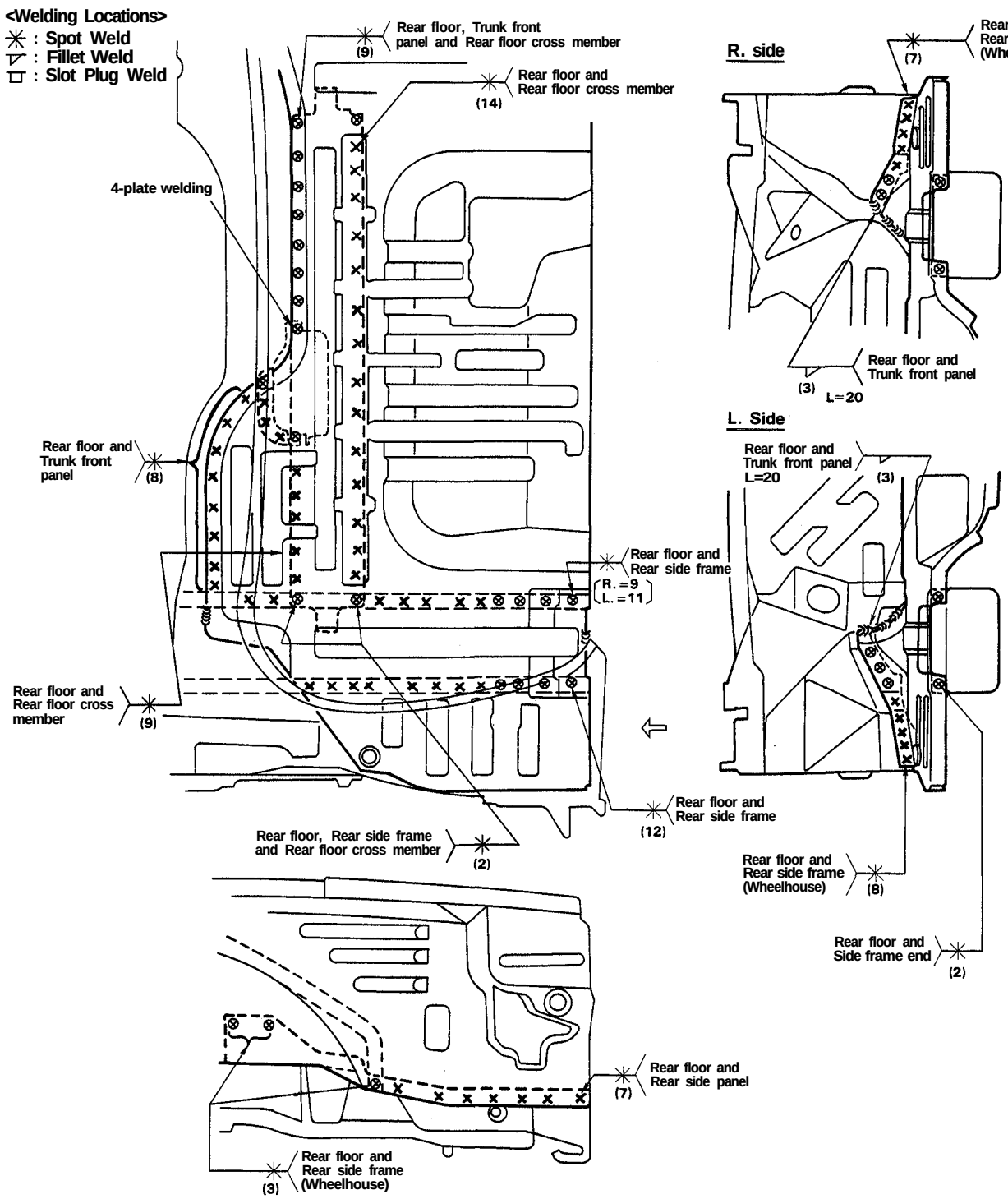

cardiagn.com

Rear Floor

Replacement

1. Remove the related parts.
   - Trim garnish, etc. in the trunk compartment
   - Rear suspension assembly, R/L, rear dampers, rear lower arm, rear radius rod
   - Exhaust silencer
   - Wire harness
   - Others

2. Pull out and straighten the damaged area.
   - Attach the car to the frame straightener by tightening the underbody clamps located at the jack-up points on the bottom of the side sill and the side sill side flanges.
   - To protect the car body from damage, place a piece of aluminum plate on each clamping section and tighten the clamps.
   - The collision damage may extend to the rear frame, rear cross member, and rear wheelhouse. Check for the damaged sections carefully and pull them out with the frame straightener to reshape.
   - Before pulling out the damaged sections, it might be necessary to heat the sections with an acetylene torch (see page 2-31).
   - Therefore, pull out the damaged area with the frame straightener and measure. Refer to body dimensional drawings (see section 6).

   NOTE: Use of a positioning jig is recommended (see page 1-7).

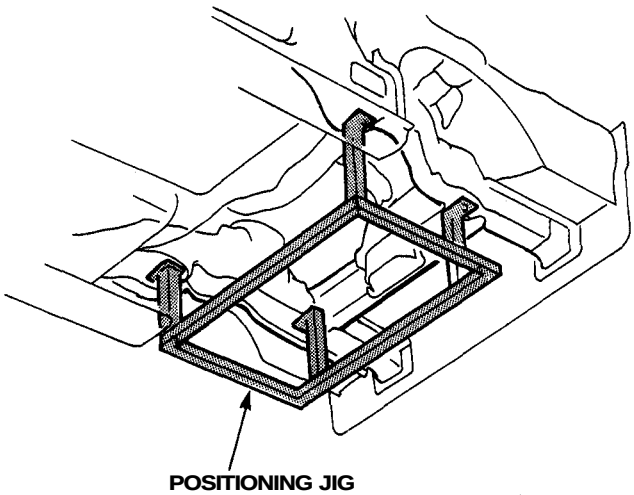

3. Peel off the undercoat.
   Heat the undercoat at the weld areas of the lower rear floor with a gas torch and peel off the undercoat with a metal spatula.

4. Remove the rear panel (see page 4-50).

5. Cut and pry off the rear floor panel.
   - Strike a punch in the center of the spot welds to the rear side frame, rear side panel, and trunk front panel.
   - Drill the spot welds using a (ø10 (3/8") spot cutter.
   - Take care not to drill to the rear side frame.
   - Drill through the rear side panel as it is used for the welding hole.

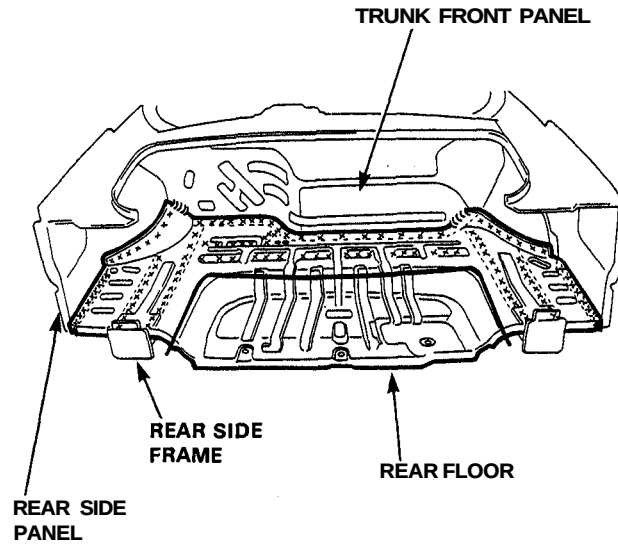

   - Remove the welding flange using a chisel.
   - Correct the damage on the rear side frame, etc.
   - Remove the burrs from the spot weld or MIG weld using a sander.

⚠WARNING **To prevent eye injury, wear goggles or safety glasses whenever sanding, cutting or grinding.**

cardiagn.com

6. Mold the related parts.
   Smooth the welding flange of the rear side frame, rear side panel and trunk front panel.

   NOTE:
   - If necessary, remove the frame end flanges.
   - Check the reshaped parts for cracks (see page 2-29).

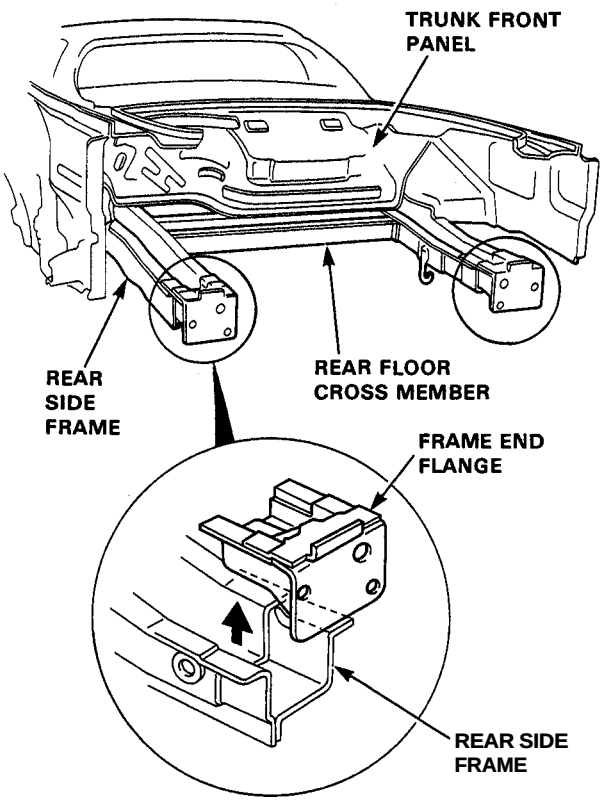

7. Keep the body level.
   Jack up the front and back of the body and place, safety stands at the four designated places of the side sills.

   NOTE: Refer to the NSX Service Manual for safety stand location points.

8. Set the new rear floor and the frame end flange.
   - Drill the ø8~ø10 (5/16"~3/8") holes for plug welding in the welding surfaces of the rear floor.
   - Remove the undercoat from the welding section of the rear floor and expose the aluminum alloy base using a disc sander.

   WARNING **To prevent eye injury, wear goggles or safety glasses whenever sanding, cutting or grinding.**

   - Remove the paint film from the welding section of the body and clean oil contamination with a shop towel soaked with wax and grease remover.
   - Before setting the rear floor, remove the oxide film from the welding sections of the replacement panel and body using a stainless steel wire brush.
   - Set the rear floor and check it is parallel to the ground at the right and left of the rear frames.

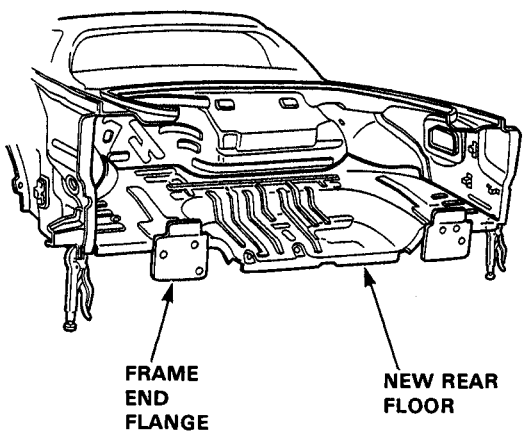

9. Check the position of the rear frames and rear floor using the body dimensional drawings and the positioning jig.

(cont'd)

cardiagn.com

Rear Floor

Replacement (cont'd)

10. Perform the main welding.

⚠WARNING To prevent eye injury and burns when welding, wear an approved welding helmet, gloves and safety shoes.

- Before welding, perform the trial welding following the welder manufacturer's instructions.
- Remove the oxide film from the welding section using a stainless steel wire brush.
- The applicable welding methods are MIG welding, plug welding, and fillet welding.
- Check the welding sections for cracks (see page 2-29).

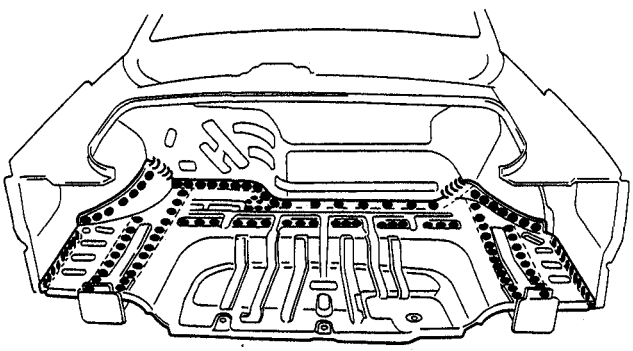

11. Finish the welded area.
    - Roughly grind the welds with a disc grinder. Be sure to leave the finishing allowance this time.
    - Finish grind the finishing allowance with a disc sander until it is smooth.

⚠WARNING To prevent injury, wear goggles or safety glasses whenever sanding, cutting or grinding.

- Take care not to grind the aluminum alloy base while roughly grinding the welds.
- Take care not to grind excessively.
- Do not press on the sanding tools excessively. If the disc face is clogged with the aluminum alloy particles, replace with a new disc.

12. Apply the sealer (see section 5).
    Apply sealer to the mating surfaces of the rear floor and rear panel, rear wheelhouse and rear inner panel to seal up the clearance.

13. Apply the paint.
    See Paint Repair section.

⚠WARNING

- **Ventilate when spraying paint. Most paint contains substances that are harmful if inhaled or swallowed. Read the paint label before opening paint container.**
- **Avoid contact with skin. Wear an approved respirator, gloves, eye protection and appropriate clothing when painting.**
- **Paint is flammable. Store in a safe place, and keep it away from sparks, flames or cigarettes.**

14. Apply anti-rust agent to the inside of the rear side frame and floor cross member (see section 7).

15. Install the related parts.
    Install in the reverse order in which they were removed.

16. Inspect and clean.
    - Measure the rear wheel alignment.
    - Clean the inside of the trunk compartment.
    - Test for leaks in the trunk compartment.

carpiagn.com

Rear Floor Cross Member

Description

The rear floor cross member is critical for rear wheel alignment.
During replacement, check the position of the rear trailing arm bracket and rear damper base and position the rear floor cross member properly. Weld securely following the welder manufacturer's instructions to maintain the rigidity. Use of the positioning jig is recommended.

Mass Production Body welding Diagram

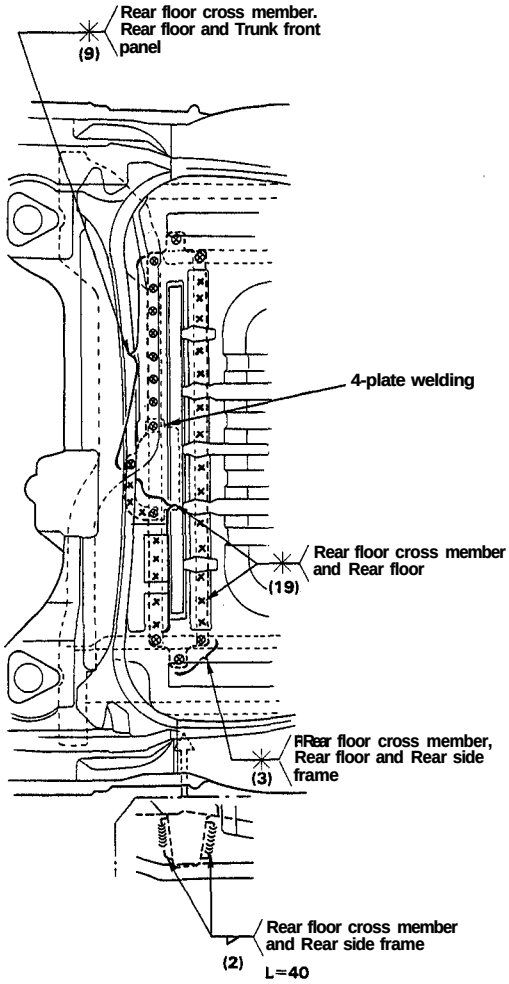

<Welding Locations>
✳ : Spot Weld
▽ : Fillet Weld
⊔ : Slot Plug Weld

Replacement

1. See Rear Floor Replacement for removal of related parts and rough pulling out and straightening.

2. Remove the rear floor cross member.

⚠WARNING To prevent eye injury, wear goggles or safety glasses whenever sanding, cutting or grinding.

- Strike a punch in the center of the spot welds from the trunk compartment.
- Drill the spot welds using a ø10 (3/8") spot cutter.
- Remove the MIG and fillet welds of the rear side frame using a rotary cutter.
- Remove the flanges using a chisel.
- Correct the welding sections of the rear floor using a hammer and dolly.
- Drilled holes in the rear floor are used for the MIG/ plug welding.

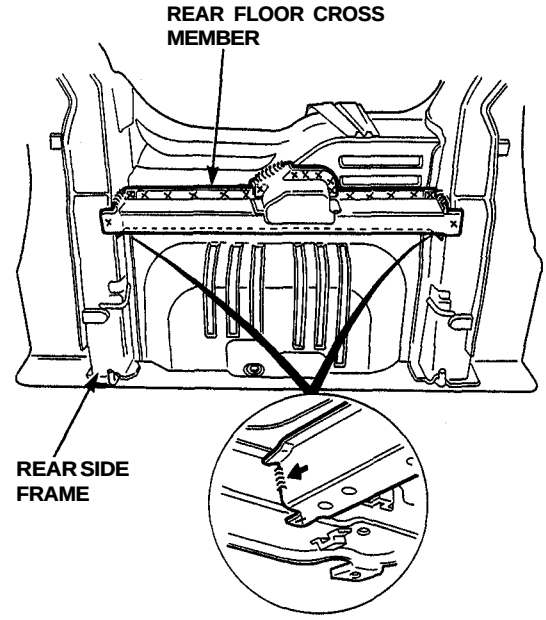

3. Peel off the undercoat.
Heat the undercoat at the weld areas of the rear floor and rear side frame with a gas torch and peel off with a metal spatula.

CAUTION: Be careful not to burn the fittings inside engine compartment when heating.

(cont'd)

cardiagn.com

Rear Floor Cross Member

Replacement (cont'd)

4. Set the new rear floor cross member.
   - If there are no welding holes in the body, drill the ø10 (3/8") welding holes in the rear floor cross member.
   - Remove the undercoat from the welding flanges of the rear floor cross member and expose the aluminum alloy base using a disc sander.

⚠WARNING To prevent eye injury, wear goggles or safety glasses whenever sanding, cutting or grinding.

   - Remove the undercoat from the welding section of the body using a disc sander and clean oil contamination with a shop towel soaked with wax and grease remover.
   - Before setting the rear floor cross member, remove the oxide film from the welding sections of the rear floor cross member and body using a stainless steel wire brush.
   - Set the new rear floor cross member in the original position properly and place a jack under the rear floor cross member for support.

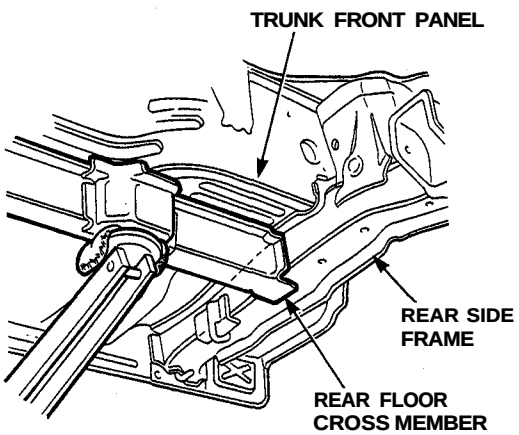

   - Refer to the body dimensional drawings for proper positioning of the rear floor cross member.
   - Temporarily weld the mating surfaces with the rear side frame.

NOTE: Use of a positioning jig is recommended (see page 1-7).

⚠WARNING To prevent eye injury and burns when welding, wear an approved welding helmet, gloves and safety shoes.

5. Perform the main welding.

⚠WARNING To prevent eye injury and burns when welding, wear an approved welding helmet, gloves and safety shoes.

   - Before welding, perform the trial welding following the welder manufacturer's instructions.
   - Remove the oxide film from the welding sections using a stainless steel wire brush.
   - MIG/plug weld the rear floor cross member from the trunk compartment.
   - MIG/plug weld and fillet weld the mating surfaces with the rear side frame.
   - Check the welding sections for cracks (see page 2-29).

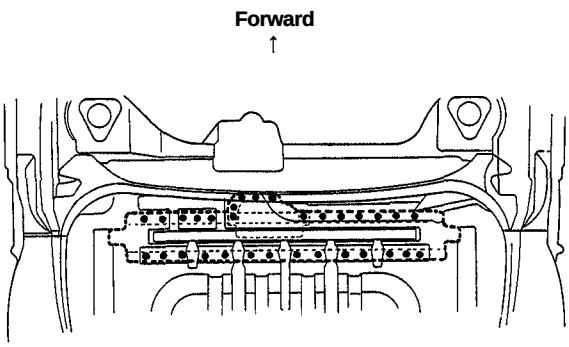

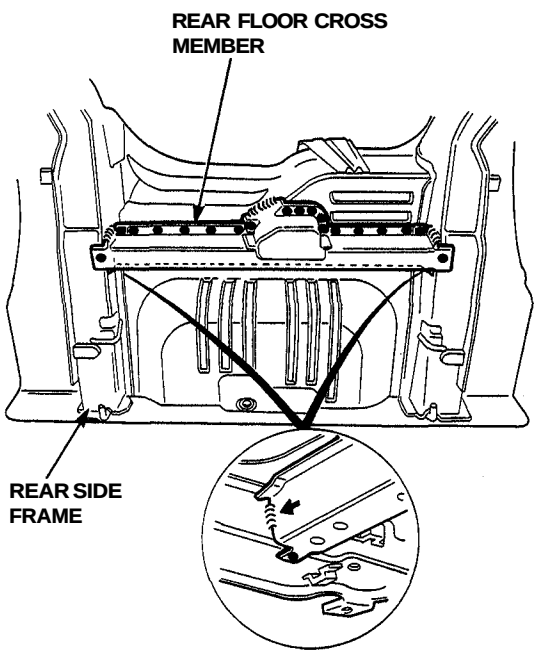

cardiagn.com

6. Finish the welding area.
   - Roughly grind the welds in the trunk compartment with a disc grinder. Be sure to leave the finishing allowance this time.
   - Finish grind the finishing allowance with a disc sander until it is smooth.
   - Take care not to grind the aluminum alloy base while roughly grinding the welds.
   - Take care not to grind excessively.
   - Do not press on the sanding tools excessively. If the disc face if clogged with the aluminum alloy particles, replace with a new disc.

7. Apply the sealer (see section 5).

8. Apply the paint.
   See Paint Repair section.

   ⚠ WARNING
   - **Ventilate when spraying paint. Most paint contains substances that are harmful if inhaled or swallowed. Read the paint label before opening paint container.**
   - **Avoid contact with skin. Wear an approved respirator, gloves, eye protection and appropriate clothing when painting.**
   - **Paint is flammable. Store in a safe place, and keep it away from sparks, flames or cigarettes.**

9. Apply the anti-rust agent (see section 7).

10. Install the related parts.
    Install in the reverse order of removal.

11. Check and clean.
    - Check the rear wheel alignment.
    - Clean the trunk compartment.

cardiagn.com

Rear Side Frame

Description

The rear side frame is critical for the rigidity of the rear body and for the installation of the rear wheel suspension, and engine. During replacement, be sure to position the rear side frame by using the positioning jig (page 1-7) or to the dimensions shown in the body dimensional drawings.

Mass Production Body Welding Diagram

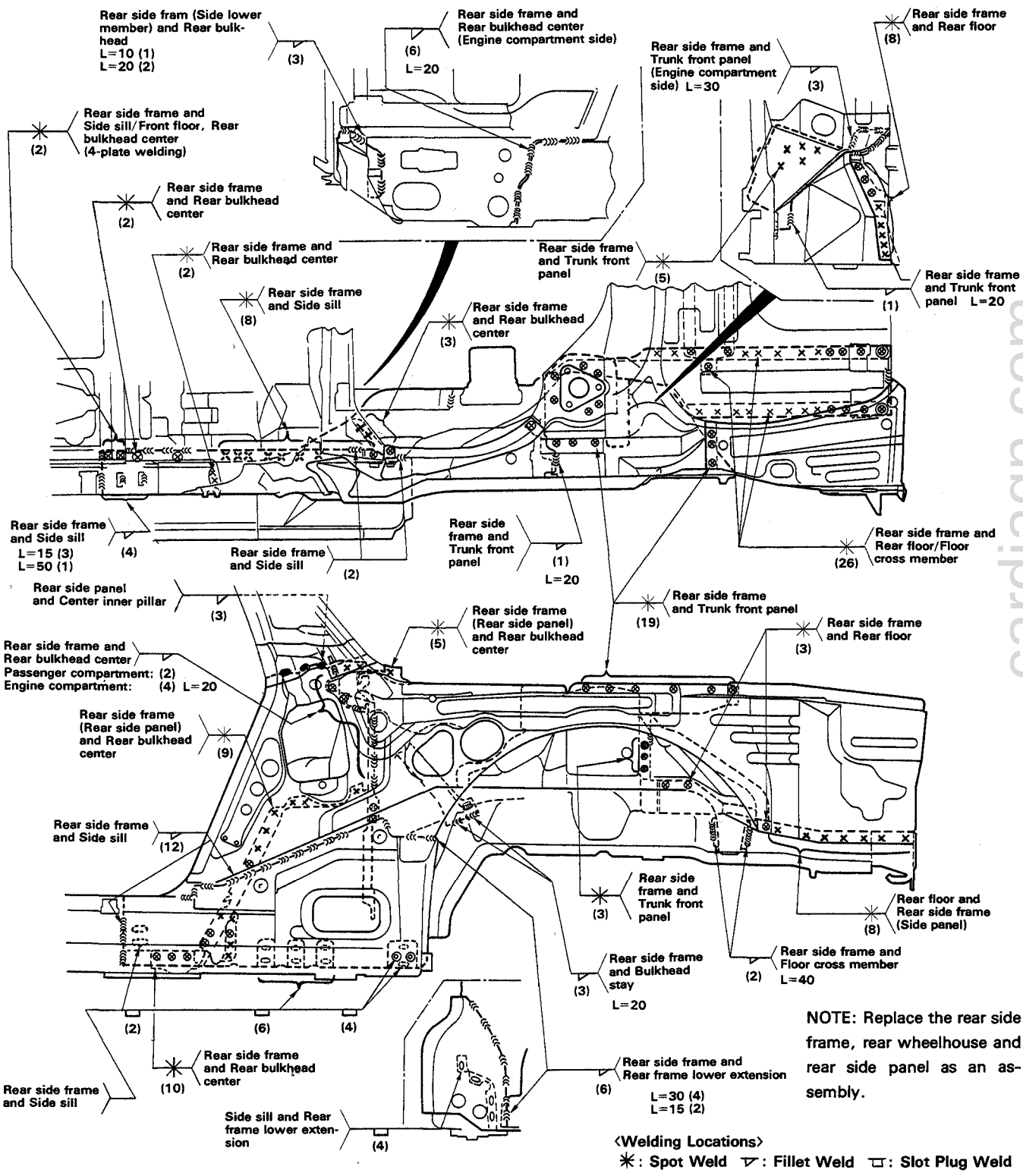

NOTE: Replace the rear side frame, rear wheelhouse and rear side panel as an assembly.

<Welding Locations>
✳: Spot Weld ▽: Fillet Weld ⊔: Slot Plug Weld

cardiagn.com

Replacement

1. Remove the related parts.
   - Engine assembly
   - Fuel tank assembly

WARNING **Do not smoke while working near the fuel system. Keep open flame away from the fuel system. If necessary, remove the fuel tank and/or lines before welding nearby. Drain fuel into an approved container.**

   - Rear suspension and the related parts
   - Brake hose and pipes
   - Garnish, etc. in trunk compartment
   - Rear fender
   - Others

NOTE: With the rear panel and rear floor removed:

2. Pull out and straighten the damaged area.
   - Attach the car to the frame straightener by tightening the underbody clamps located at the jack-up points on the bottom of the side sill and the side sill side flanges.
   - To protect the car body from damage, place a piece of aluminum plate on each clamping section and tighten the clamps.
   - The collision damage may extend to the rear floor, rear inner panel, etc. Check for the damaged sections carefully and pull them out with the frame straightener to reshape.
   - Before pulling out the damaged sections, it might be necessary to heat the sections with an acetylene torch (see page 2-31).

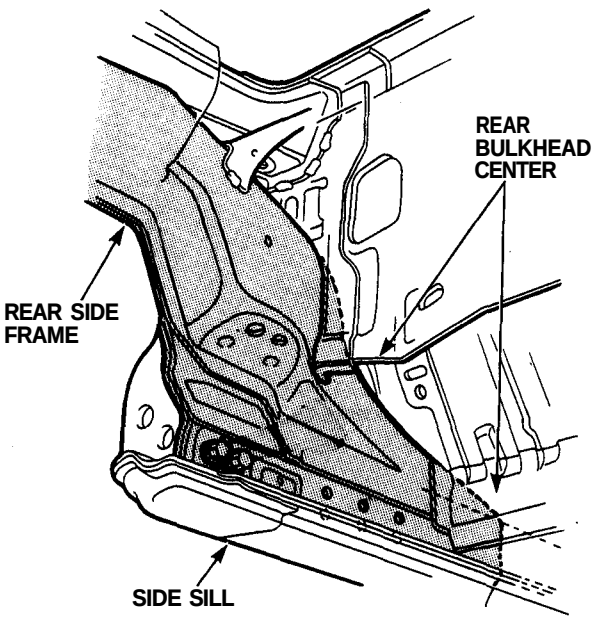

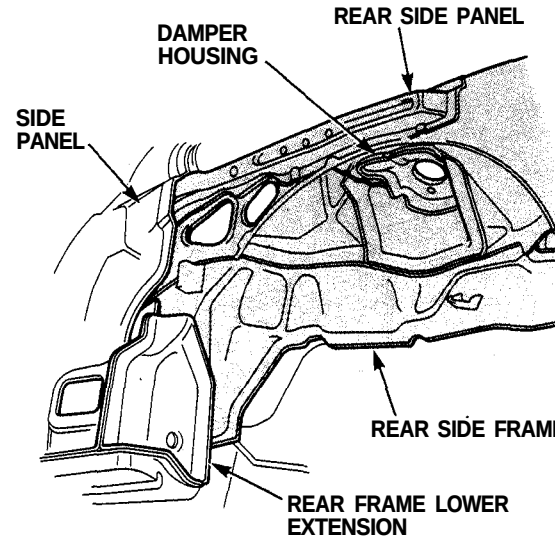

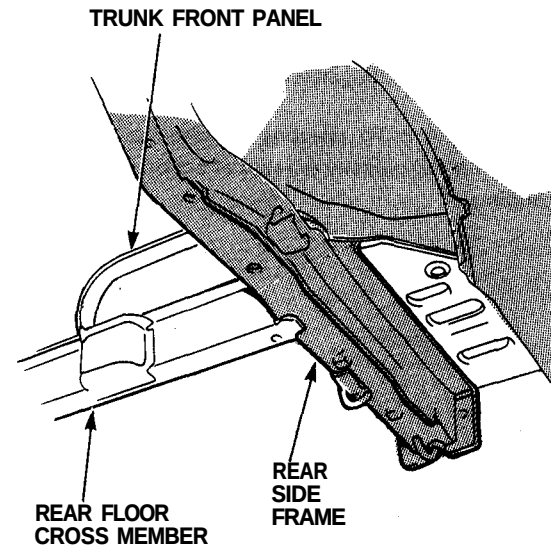

- After pulling, check the damper base and side frame positions using the body dimensional drawings (see section 6) and positioning jig (see page 1-7).

3. Peel off the undercoat.
   Heat the undercoat at the weld area of the front floor with a gas torch and peel off a metal spatula.

CAUTION: Be careful not to burn the fittings inside the passenger compartment when heating.

(cont'd)

cardiagn.com

Trunk Front Panel

Description

The frame number of the car is stamped on the trunk front panel and is registered with local authorities. If the trunk front panel must be replaced because of damage, check with local authorities before replacement.

Mass Production Body Welding Diagram

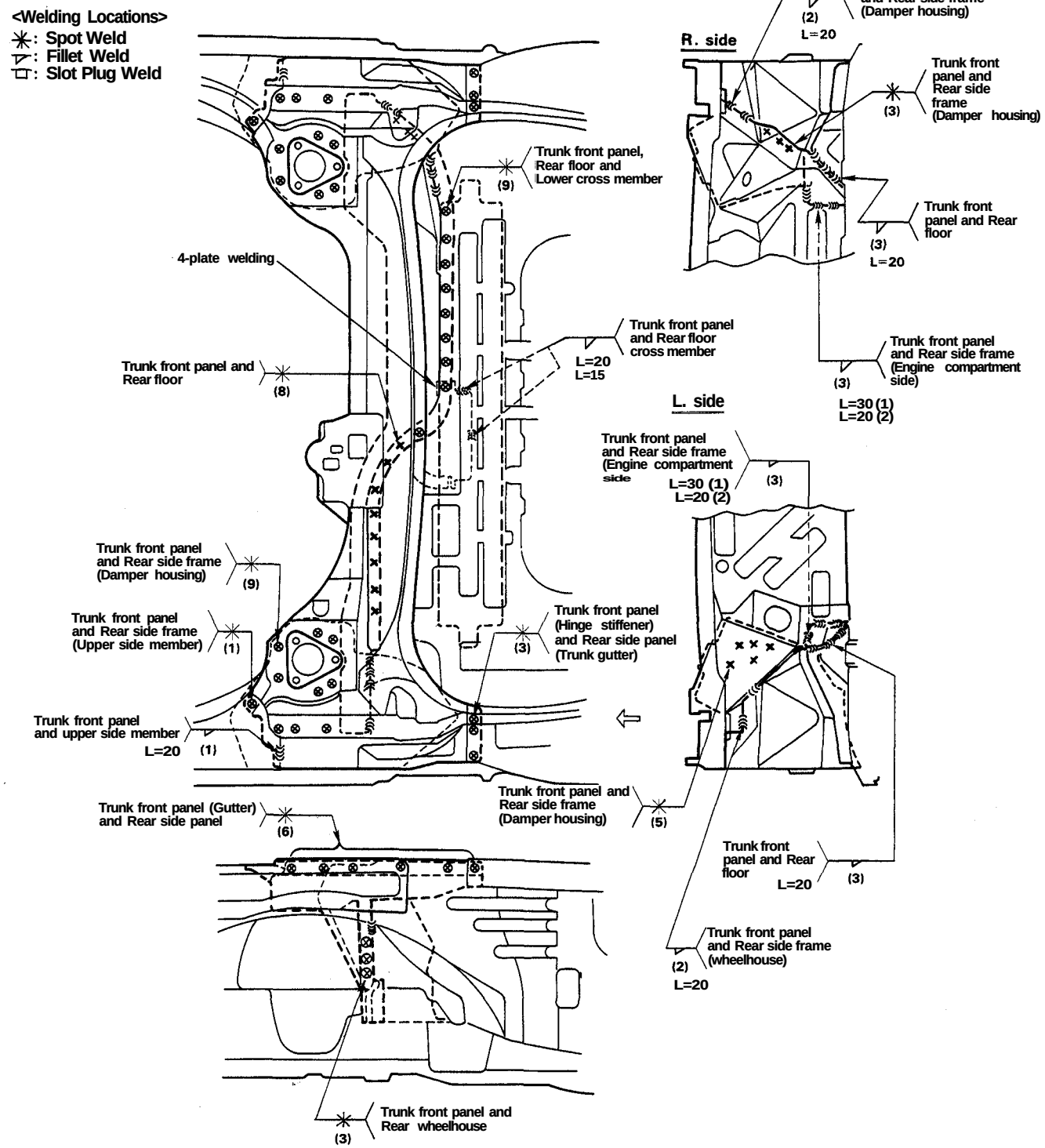

cardiagn.com

Trunk Front Panel

Replacement

1. Remove the related parts.
   - Rear suspension assembly
   - Engine assembly
   - Trunk lid
   - Harnesses
   - Others

   NOTE: With the rear panel and rear floor removed:

2. Remove the trunk side gutter and trunk front panel.
   - Strike a punch in the center of the spot welds in the trunk front panel, rear damper base, rear floor, wheel house upper member, and trunk side gutter.
   - Drill the spot welds using a ø10 (3/8") spot cutter.
   - Grind the MIG/fillet welds using a rotary cutter.

   WARNING To prevent eye injury, wear goggles or safety glasses whenever sanding, cutting or grinding.

   - Remove the welding flanges using a chisel.
   - Remove the burrs from spot welds and MIG welds using a disc grinder.
   - Smooth the welding section of the body with a hammer and dolly.

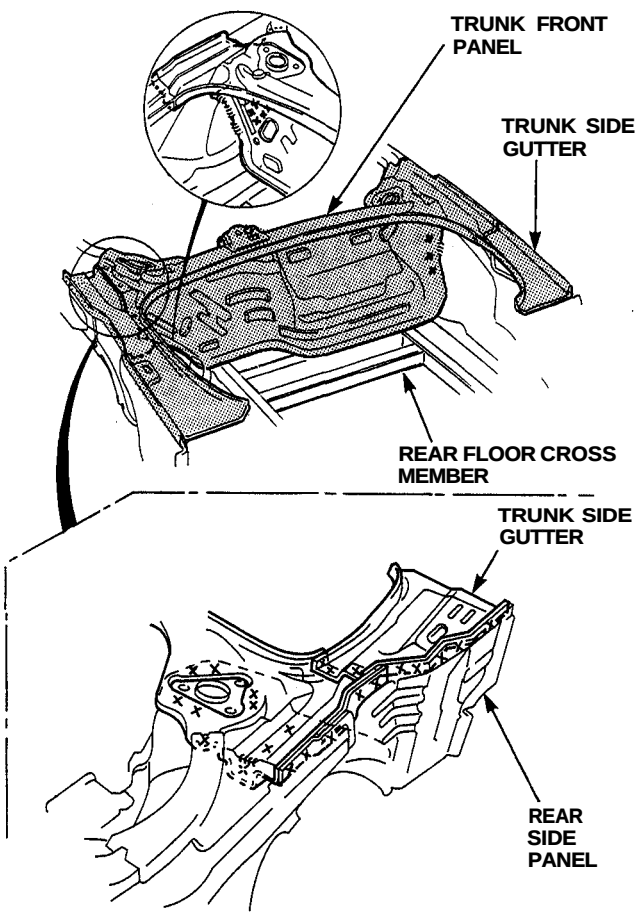

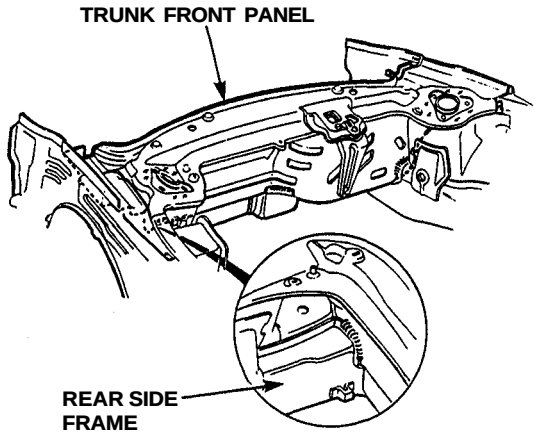

3. Mold the related parts.
   Smooth the welding flange of the rear side panel, rear side frame and rear floor cross member.
   NOTE: Check the reshaped parts for cracks (see page 2-29).

4. Set the new trunk front panel and trunk side gutter.
   - Drill the ø8~10 (5/16"~3/8") plug weld holes in the welding flange of the new trunk front panel.
   - Remove the undercoat from the welding flanges of the trunk front panel and trunk side gutter, and expose the aluminum alloy base using a disc sander.

   WARNING To prevent eye injury, wear goggles or safety glasses whenever sanding, cutting or grinding.

   - Remove the paint film from the welding section of the body using a disc sander and clean oil contamination with a shop towel soaked with wax and grease remover.
   - Before setting the trunk front panel and trunk side gutter, remove the oxide film from the welding section of the trunk front panel and trunk side gutter, and body using a stainless steel wire brush.

cardiagn.com

- Clamp the trunk front panel and trunk side gutter in place with vise-grips.
- Check that the rear side frame is parallel at the right and left.

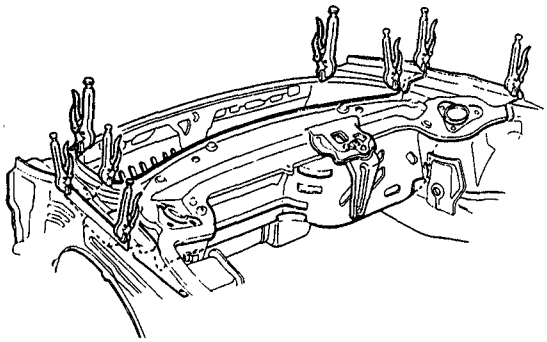

- Set the rear floor and rear panel (see pages 4-50, 53).
- Check the trunk front panel position using the body dimensional drawings (see section 6).

5. Tack weld the trunk front panel and trunk side gutter.

WARNING To prevent eye injury and burns when welding, wear an approved welding helmet, gloves and safety shoes.

- Open and close the rear hatch and trunk lid to check for proper installation.

6. Perform the main welding

WARNING To prevent eye injury and burns when welding, wear an approved welding helmet, gloves and safety shoes.

- Before welding, perform the trial welding following the welder manufacturer's instructions.
- Remove the oxide film from the welding sections using a stainless steel wire brush.
- The applicable welding methods are MIG/plug welding and fillet welding.
- Check the welding sections for cracks (see page 2-29).

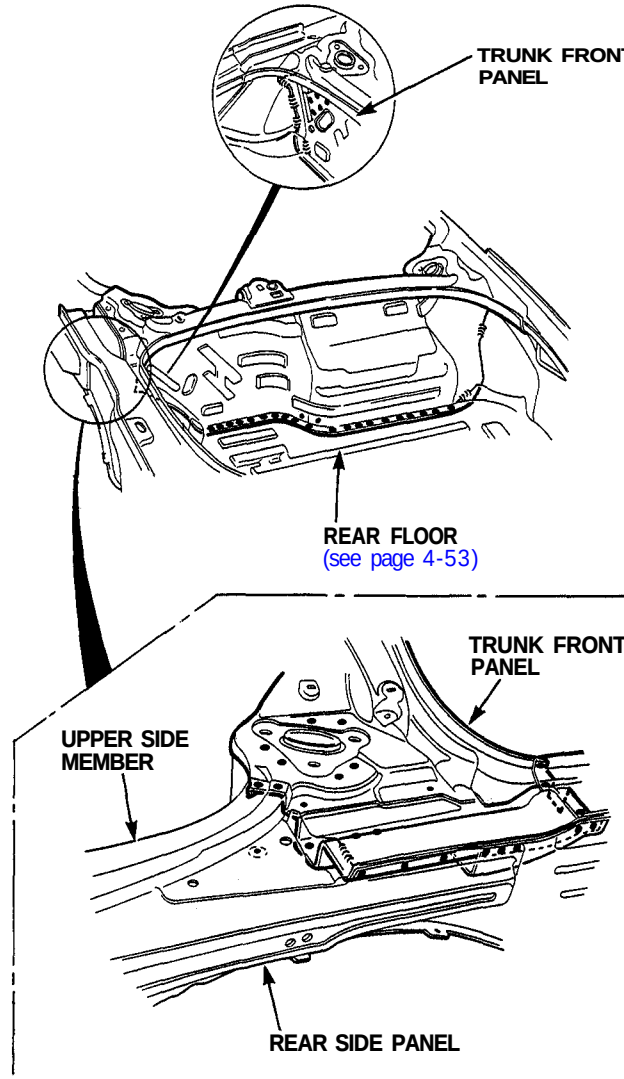

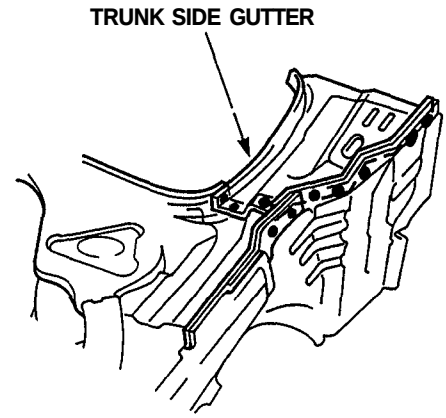

(cont'd)

cardiagn.com

Trunk Front Panel

Replacement (cont'd)

7. Finish the welding area.
   - Roughly grind the welds with a disc grinder. Be sure to leave the finishing allowance this time.
   - Finish grind the finishing allowance with a disc sander until it is smooth.

   ⚠WARNING To prevent eye injury, wear goggles or safety glasses whenever sanding, cutting or griding.

   - Smooth the trunk lid opening using a hammer and dolly.
   - Take care not to grind the aluminum alloy base while roughly grinding the welds.
   - Take care not to grind excessively.
   - Do not press on the sanding tools excessively. If the disc face is clogged with the aluminum alloy particles, replace with a new disc.

8. Apply the sealer (see section 5).

9. Apply the paint.
   See Paint Repair section.

   ⚠WARNING
   - **Ventilate when spraying paint. Most paint contains substances that are harmful if inhaled or swallowed. Read the paint label before opening paint container.**
   - **Avoid contact with skin. Wear an approved respirator, gloves, eye protection and appropriate clothing when painting.**
   - **Paint is flammable. Store in a safe place, and keep it away from sparks, flames or cigarettes.**

10. Apply anti-rust agent (see section 7).

11. Install the rear fender and trunk lid.
    Install the rear fender and trunk lid and check for clearance and differences in level.

12. Install the related parts.
    Install in the reverse order of removal.

13. Check and clean.
    - Check the rear wheel alignment.
    - Start the engine and check its condition.

cardiagn.com

Rear Bulkhead Center

Description

The rear bulkhead center is the critical part which connects the right and left body center and where the fuel tank is mounted. Take extreme care to position the rear bulkhead center properly. Weld securely following the welder manufacturer's instructions to maintain the rigidity.

Mass Production Body Welding Diagram

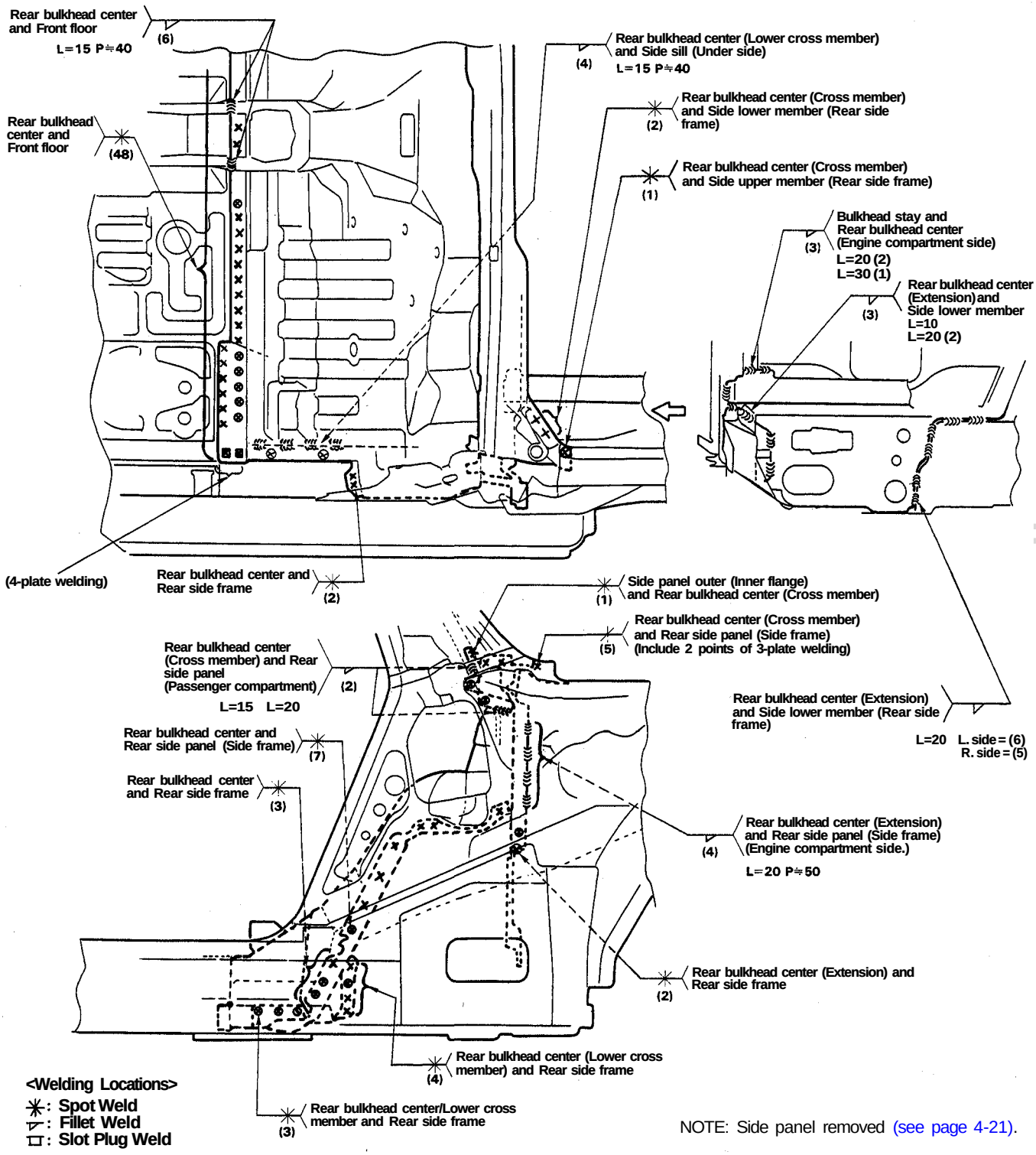

NOTE: Side panel removed (see page 4-21).

cardiagn.com

Rear Bulkhead Center

Replacement

1. Remove the related parts.
   - Driver's and passenger's seats
   - Fuel tank assembly

⚠WARNING Do not smoke while working near the fuel system. Keep open flame away from the fuel system. If necessary, remove the fuel tank and/or lines before welding nearby. Drain fuel into an approved container.

   - Brake hose and pipes
   - Side garnish
   - Seat belt
   - Engine assembly
   - Electricals, and others
   - Rear window

2. Pull out and straighten the damaged area.
   NOTE: Make sure that the right and left center pillars are parallel to the rear window surface.
   - The collision damage may extend to the rear bulkhead center may as well as the side panel outer and side sill. Check for the damaged sections carefully and pull them out with the frame straightener to reshape.
   - Attach the car to the frame straightener by tightening the underbody clamps located at the jack-up points on the bottom of the side and sill and the side sill side flanges.
   - To protect the car body from damage, place a piece of aluminum plate on each clamping section and tighten the clamps.
   - Before pulling out the damaged sections, it might be necessary to heat the sections with an acetylene torch (see page 2-31).

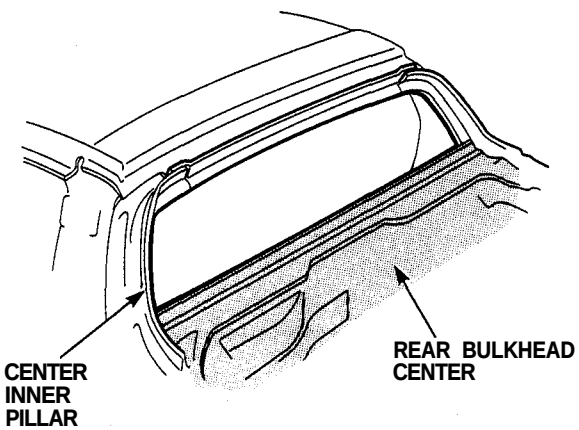

   - After pulling, check the rear window rear side frame and rear side panel positions using the body dimensional drawings (see section 6).

3. Remove the rear bulkhead center.
   - Strike a punch in the center of the spot welds to the front floor, side sill, and rear frame.
   - Drill the spot welds using a ø10 (3/8") spot cutter.

   NOTE: Take care not to drill through the front floor and inner side panel.

   - Grind the MIG/fillet welds using a rotary cutter.

⚠WARNING To prevent eye injury, wear goggles or safety glasses whenever sanding, cutting or grinding.

   - Remove the spot welds and fillet welds using a chisel.

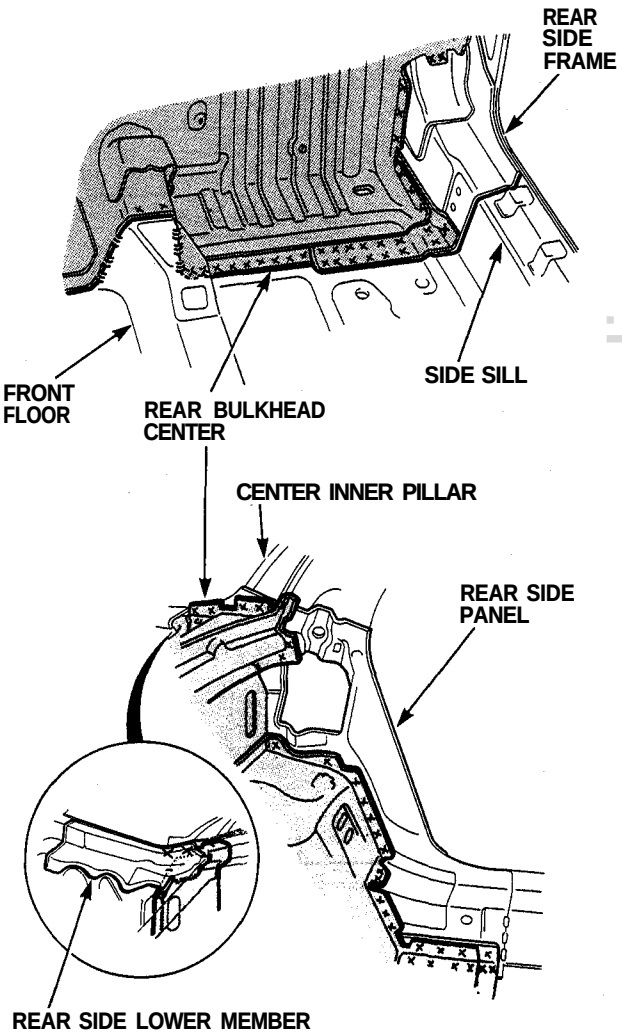

cardiagn.com

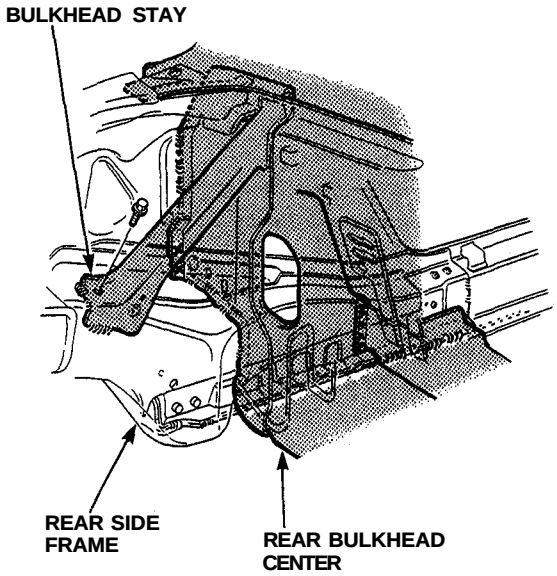

4. Mold the related parts.
   Correct the damaged section of the front floor and inner side panel with a hammer and dolly.
   NOTE: Check the reshaped parts for cracks (see page 2-29).

5. Set the new rear bulkhead center.
   - Drill the ø8~ø10 (5/16"~3/8") holes for MIG welding in the flanges mating with the front floor.
   - Remove the undercoat from the welding section of the rear bulkhead center and expose the aluminum alloy base using a disc sander.

⚠WARNING To prevent eye injury, wear goggles or safety glasses whenever sanding, cutting or grinding.

   - Remove the paint film from the welding section of the body using a disc sander and clean oil contaminations with a shop towel soaked with wax and grease remover.
   - Remove the undercoat thoroughly from the underside of the front floor.
   - Before setting the rear bulkhead center, clean the welding sections of the rear bulkhead center and body using a stainless steel wire brush.
   - Clamp the front floor and inner panel with the vise-grips and pliers.

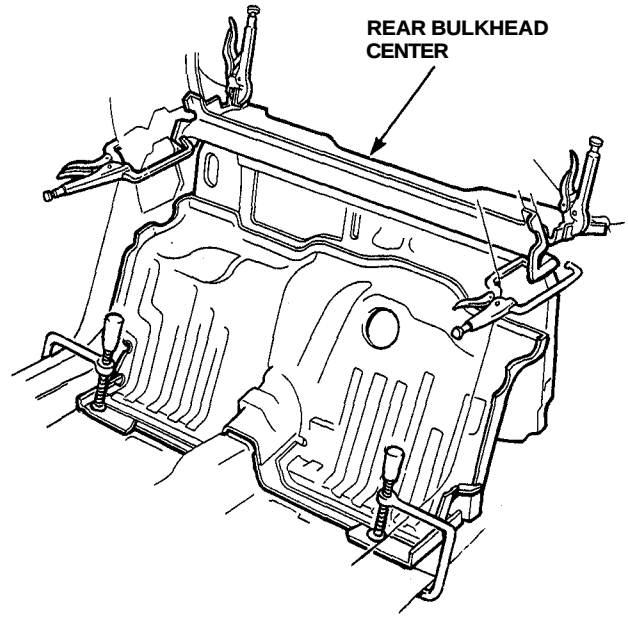

   - Check the rear bulkhead center position using the body dimensional drawings.

6. Weld the clamped sections for temporary installation.

⚠WARNING To prevent eye injury and burns when welding, wear approved welding helmet, gloves and safety shoes.

   Set the rear window and rear hatch, check for proper rear bulkhead installation.

7. Perform the main welding.

⚠WARNING To prevent eye injury and burns when welding, wear an approved welding helmet, gloves and safety shoes.

   - Before welding, perform the trial welding following the welder manufacturer's instructions.
   - Remove the oxide film from the welding sections using a stainless steel wire brush before welding.
   - The applicable welding methods are MIG/plug welding or fillet welding.

(cont'd)

cardiagn.com

Rear Bulkhead Center

Replacement (cont'd)

- Check the welding sections for cracks (see page 2-29).

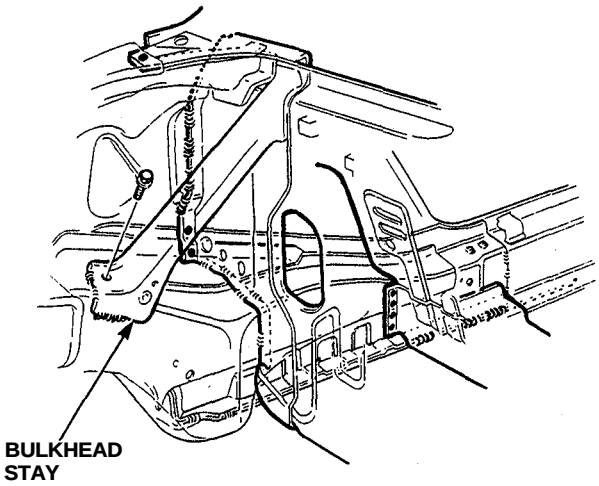

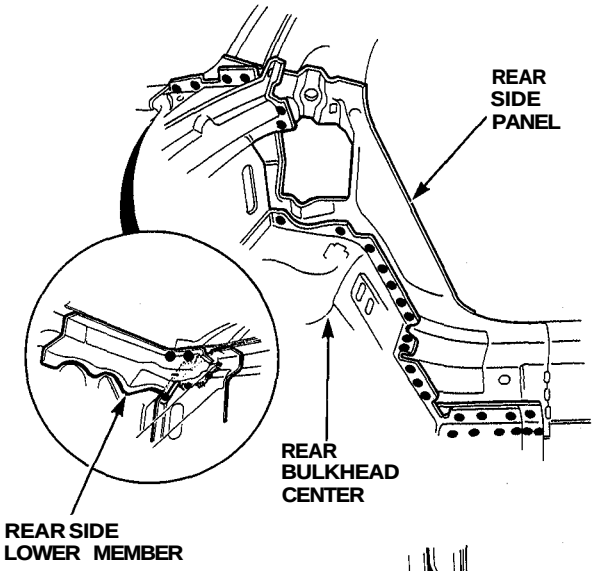

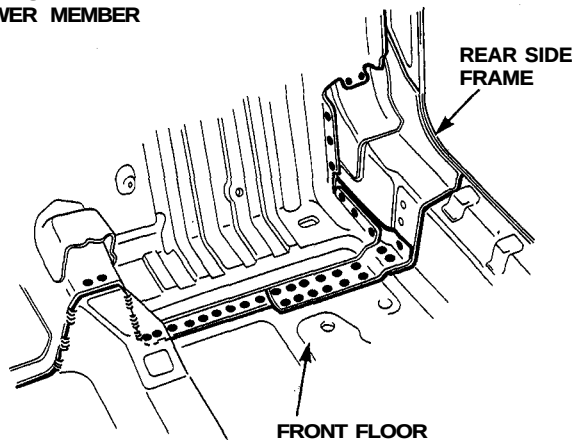

8. Finish the welding area.
   - Roughly grind the welds with a disc grinder. Be sure to leave the finishing allowance this time.
   - Finish grind the finishing allowance with a disc sander until it is smooth.

⚠WARNING To prevent eye injury, wear goggles or safety glasses whenever sanding, cutting or grinding.

   - Take care not to grind the aluminum alloy base while roughly grinding the welds.
   - Take care not to grind excessively.
   - Do not press on the sanding tools excessively. If the disc face is clogged with the aluminum alloy particles, replace with a new disc.

9. Apply the sealer (see section 5).
   Apply sealer to the mating surfaces with the front floor and side inner panel.

10. Apply the paint.
    See Paint Repair section.

⚠WARNING

- **Ventilate when spraying paint. Most paint contains substances that are harmful if inhaled or swallowed. Read the paint label before opening paint container.**
- **Avoid contact with skin. Wear an approved respirator, gloves, eye protection and appropriate clothing when painting.**
- **Paint is flammable.Store in a safe place, and keep it away from sparks, flames or cigarettes.**

11. Apply anti-rust agent (see section 7).

12. Install the related parts.
    Install in the reverse order of removal.

13. Check and clean.
    Start the engine and check its condition.

cardiagn.com

Rear Assembly

Description

The rear assembly is critical for the rigidity of the rear body and for the installation of the rear wheel, suspension, and engine. During installation, the dimension shown in the body dimensional drawings (see section 6). Welding must be performed by using the aluminum alloy MIG welder. Perform the trial welding first following the welder manufacturer's instructions, then weld properly.

NOTE: The frame number of the car is stamped on the trunk front panel and is registered with local authorities. If the rear assembly must be replaced because of damage, check with local authorities before replacement.

Mass Production Body Welding Diagram

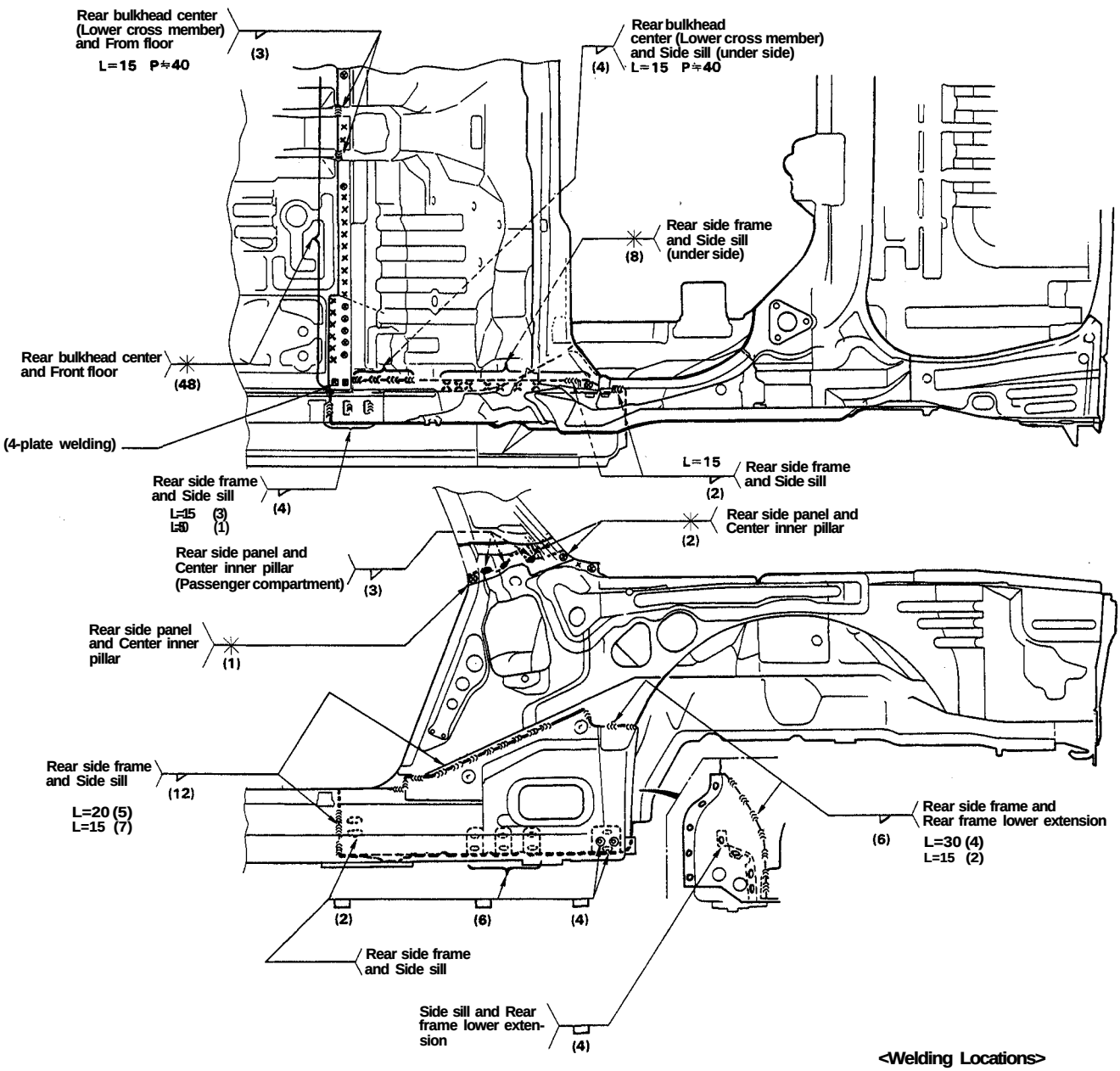

NOTE: Side panel removed (see page 4-21).

cardiagn.com

5. Cut out the bottom of the side panel, and remove it on each side.

   Strike a punch in the center of the spot welds of the side panel and drill the spot welds using a ø8 (5/16") spot cutter.

⚠WARNING **To prevent eye injury, wear goggles or safety glasses whenever sanding, cutting or grinding.**

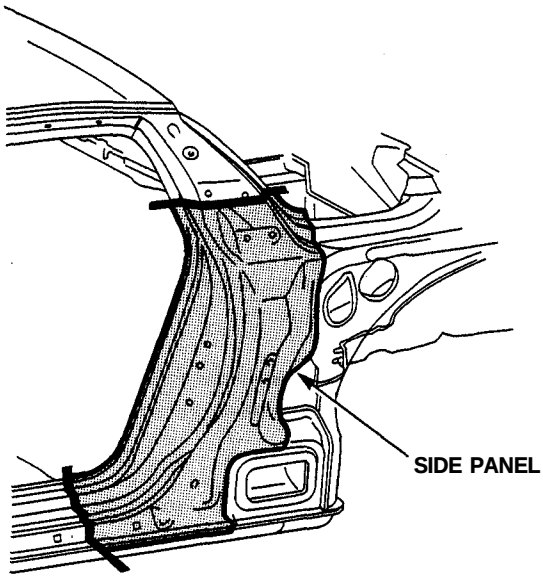

NOTE: Be careful not to cut the inner section.

6. Remove the rear side panel and rear bulkhead center on each side.

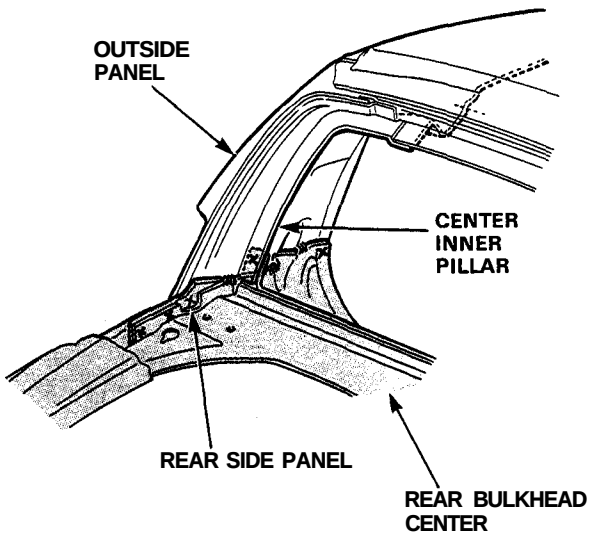

7. Remove the rear side frame on each side.

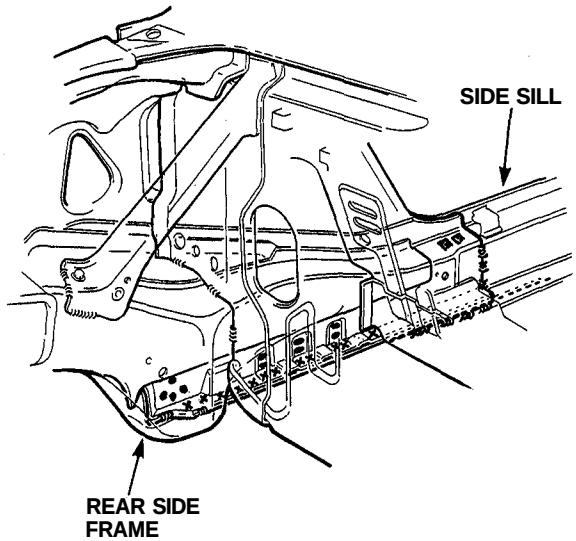

8. Remove the rear bulkhead center.

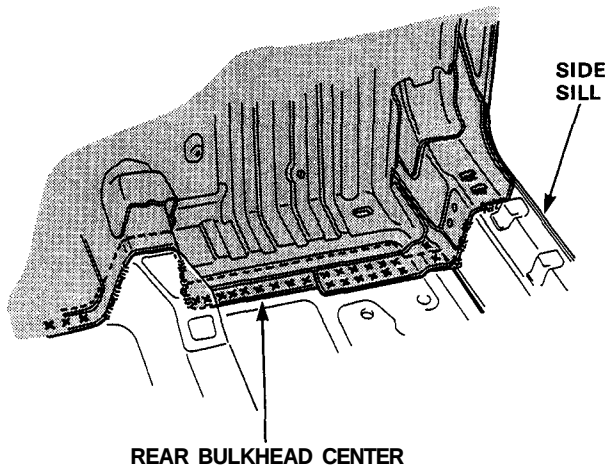

(cont'd)

cardiagn.com

Rear Assembly

Replacement (cont'd)

9. Remove the rear assembly.
   - Remove the MIG/plug welds and fillet weld in the joint section of the rear side frame and side sill using a ø15 (5/8") spot cutter (hole saw type) and rotary cutter on each side.

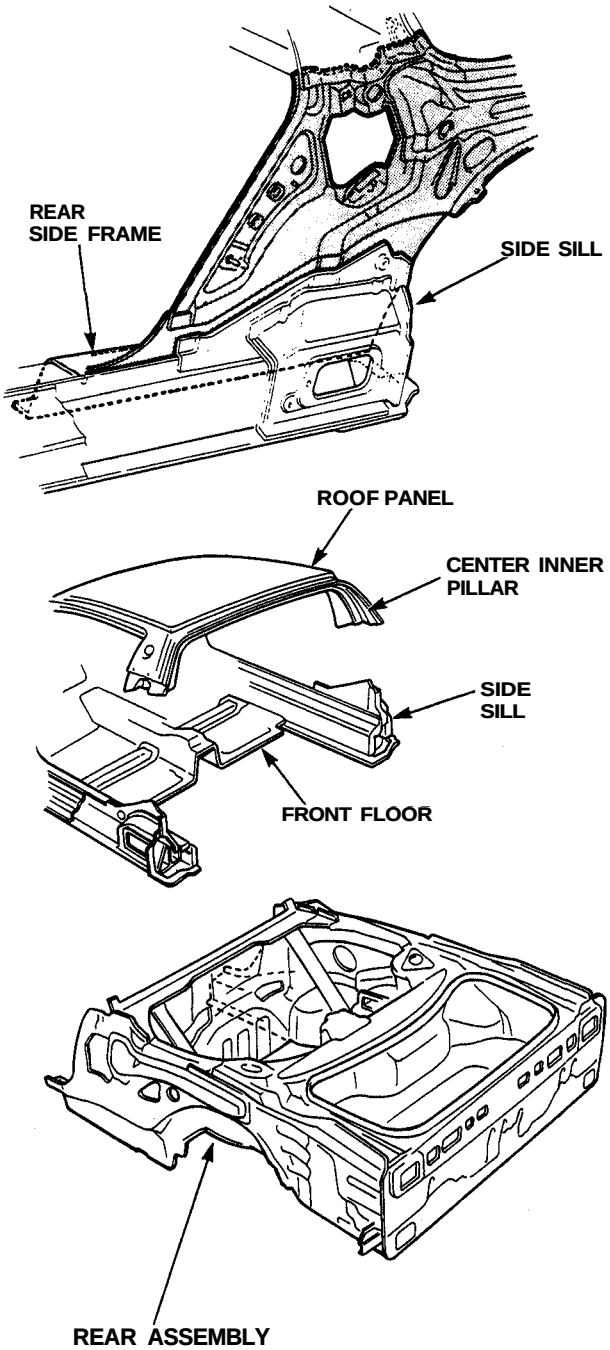

10. Mold the related parts.
    - Correct the side sill and front floor using a hammer and dolly.
    - Remove the burrs from the spot welds and MIG weld using a disc sander.

⚠WARNING To prevent eye injury, wear goggles or safety glasses whenever sanding, cutting or grinding.

NOTE: Check the reshape parts for cracks (see page 2-29).
- Keep the body level.

11. Set the new rear assembly.
    - Drill the ø8~ø10 (5/16"~3/8") holes for spot welding in the welding flange.
    - Remove the undercoat from the welding section of the rear assembly, and expose the aluminum alloy base using a disc sander.

⚠WARNING To prevent eye injury, wear goggles or safety glasses whenever sanding, cutting or grinding.

- Remove the paint film from the welding section of the body and clean oil contaminations with a shop towel soaked with wax and grease remover.
- Before setting the rear assembly, remove the oxide film from the welding sections of the rear assembly and body using a stainless steel wire brush.
- Tighten the rear assembly against the side sill and center inner pillar flange using the vise-grips, pliers etc.
- Place a jack under the rear side frame on each side and support it, and measure the positions for temporarily attachment.
- Checked over the body dimensions.

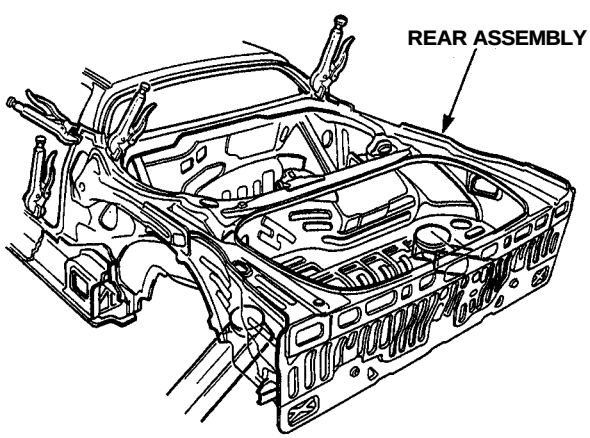

cardiagn.com

12. Temporarily install and weld the rear assembly, rear window and check for clearance and difference in level.

⚠WARNING To prevent eye injury and burns when welding, wear an approved welding helmet, gloves and safety shoes.

13. Set the new side panel.
    - Align the new part with the top cut section, the cut it with handsaw.
    - Clamp the side panel in place with vise-grips.
    - Temporarily install the rear fender, rear hatch and trunk lid, and check for clearance and difference in level.

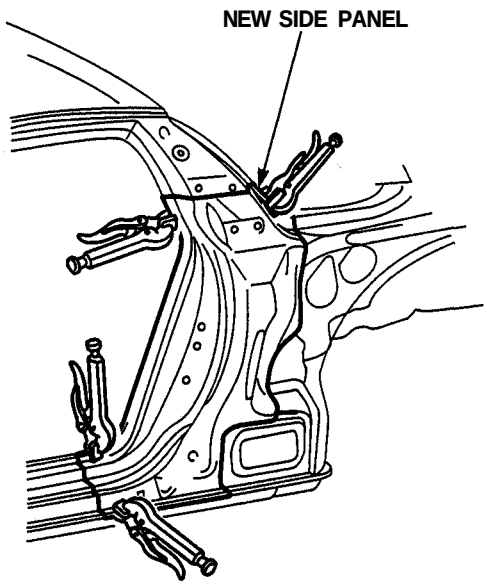

- Remove the new side panel.

14. Perform the main welding

⚠WARNING To prevent eye injury and burns when welding, wear an approved welding helmet, gloves and safety shoes.

- Before welding, perform the trial welding following the welder manufacturer's instructions.
- Remove the oxide film from the welding section using a stainless steel wire brush.
- The applicable welding methods are MIG welding, plug welding, and fillet welding.
- Check the welding sections for cracks (see page 2-29).
- Weld the rear side frame on each side.

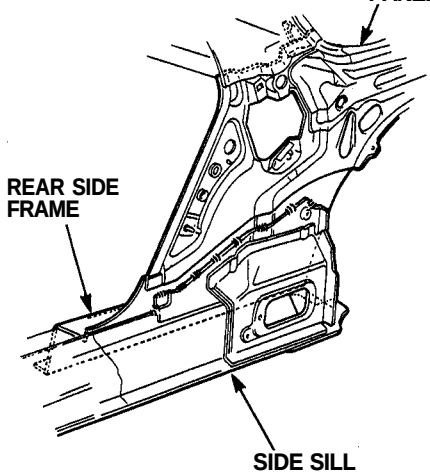

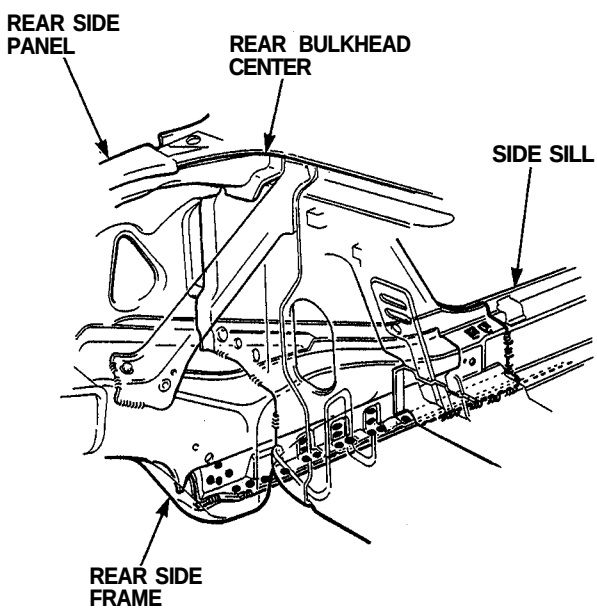

(cont'd)

cardiagn.com

Rear Assembly

Replacement (cont'd)

- Weld the rear side panel and rear bulkhead cross member on each side.

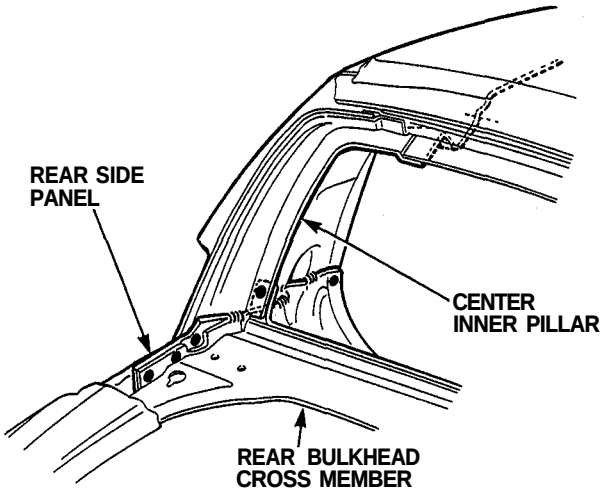

- Weld the rear bulkhead.

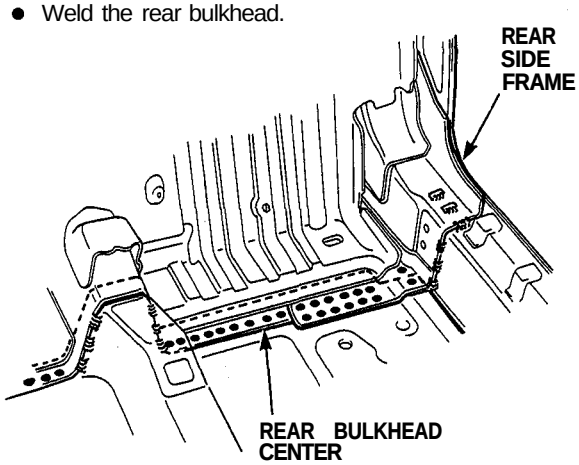

- Weld the rear frame lower extension on each side.

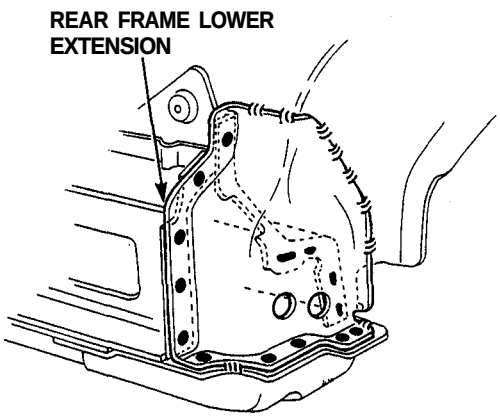

15. Weld the new side panel.

To prevent eye injury and burns when welding, wear an approved welding helmet, gloves and safety shoes.

- Before welding, remove the oxide film from the welding sections using a stainless steel wire brush.
- The applicable welding methods are MIG welding, plug welding, and fillet welding.
- Attach a tab to the butt welding section as shown and weld.
- Preheating effect can be obtained by attaching a tab to the butt welding section.

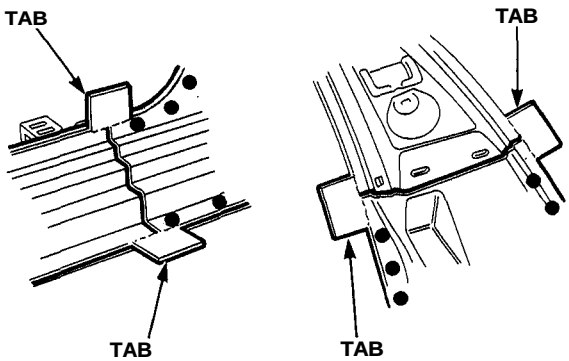

16. Finish the welding area.
- Roughly grind the welds with a disc grinder. Be sure to leave the finishing allowance this time.
- Finish grind the finishing allowance with a disc sander until it is smooth.

WARNING **To prevent eye injury, wear goggles or safety glasses whenever sanding, cutting or grinding.**

- Finish the butt weld by removing the tab.
- Take care not to grind the aluminum alloy base while roughly grinding the Welds.
- Take care not to grind excessively.
- Do not press on the sanding tools excessively. If the disc face is clogged with the aluminum alloy particles, replace with a new disc.
- Finish the butt welded door opening of the outer panel with a disc sander and putty.

cardiagn.com

17. Apply the sealer (see section 5)
    Apply sealer to each mating surface.

18. Apply the paint.
    See Paint Repair section.

⚠WARNING

- **Ventilate when spraying paint. Most paint contains substances that are harmful if inhaled or swallowed. Read the paint label before opening paint container.**
- **Avoid contact with skin. Wear an approved respirator, gloves, eye protection and appropriate clothing when painting.**
- **Paint is flammable. Store in a safe place, and keep it away from sparks, flames or cigarettes.**

19. Apply the undercoat (see section 7)
    Undercoat the front floor, etc, and apply anti-rust agent to inside of the welding section of the rear side frame, side sill and center pillars, etc.

20. Install the related parts.
    - Install in the reverse order of removal.
    - Adjust the rear hatch and door strikers, and check the lock operation.

21. Check and clean
    - Check the lights, etc. for proper operation.
    - Clean the passenger compartment.

cardiagn.com

Cross Section of Body and Sealants/Adhesive Caulking

NOTE: Seal the following areas to prevent air leaks, water leaks, and rust.

▶ : Sealing locations

Spot Sealer: 3M #08892 (Internal)
: 3M #08893 (External)

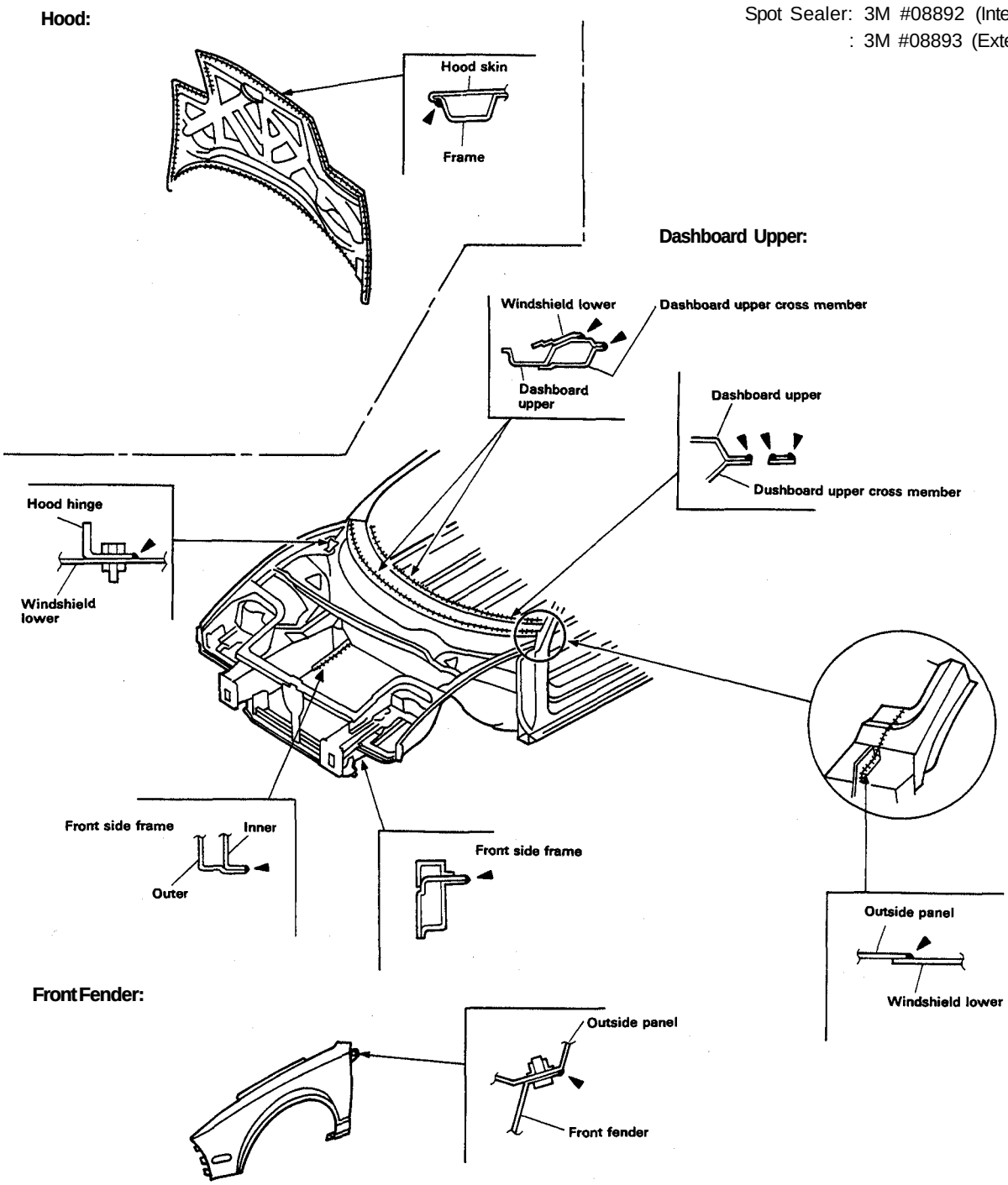

cardiagn.com

Dashboard Upper and Front Side Frame:

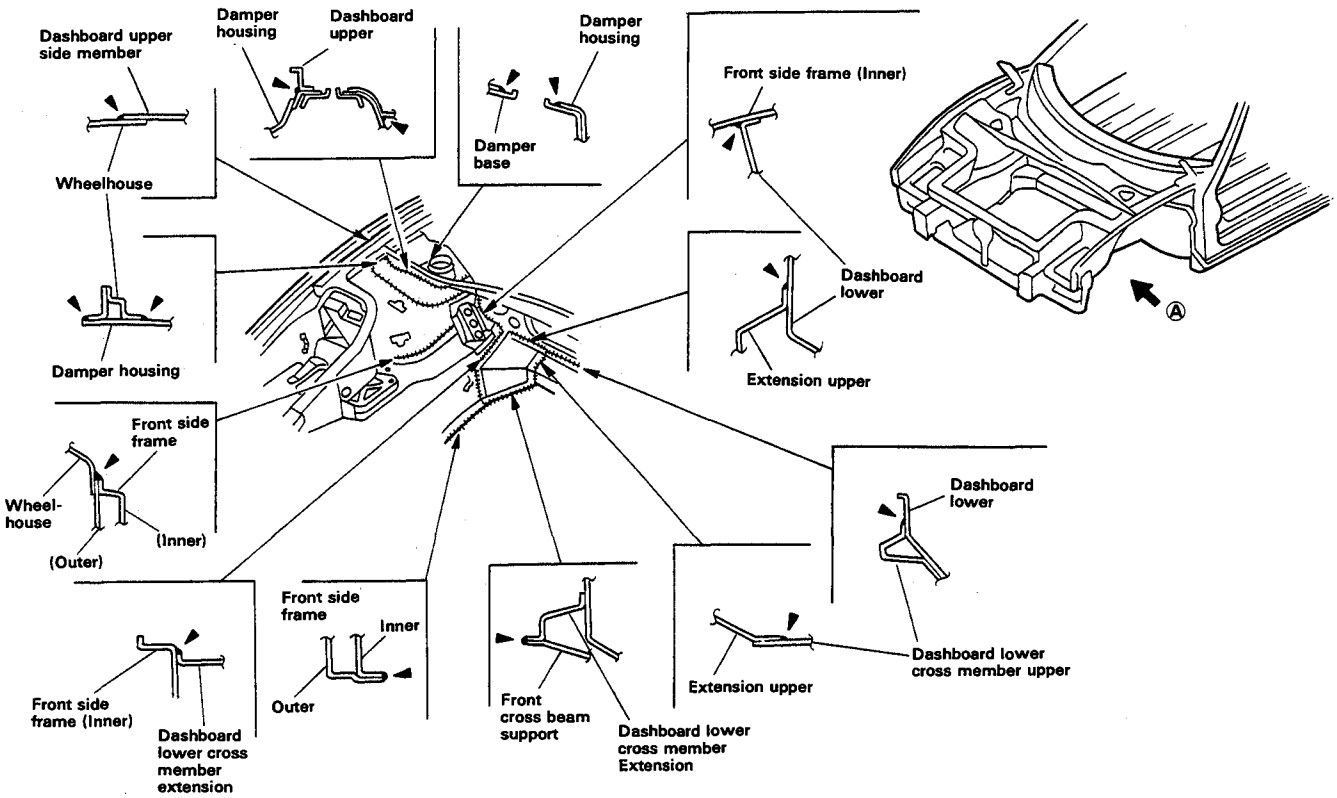

Front Wheelhouse:

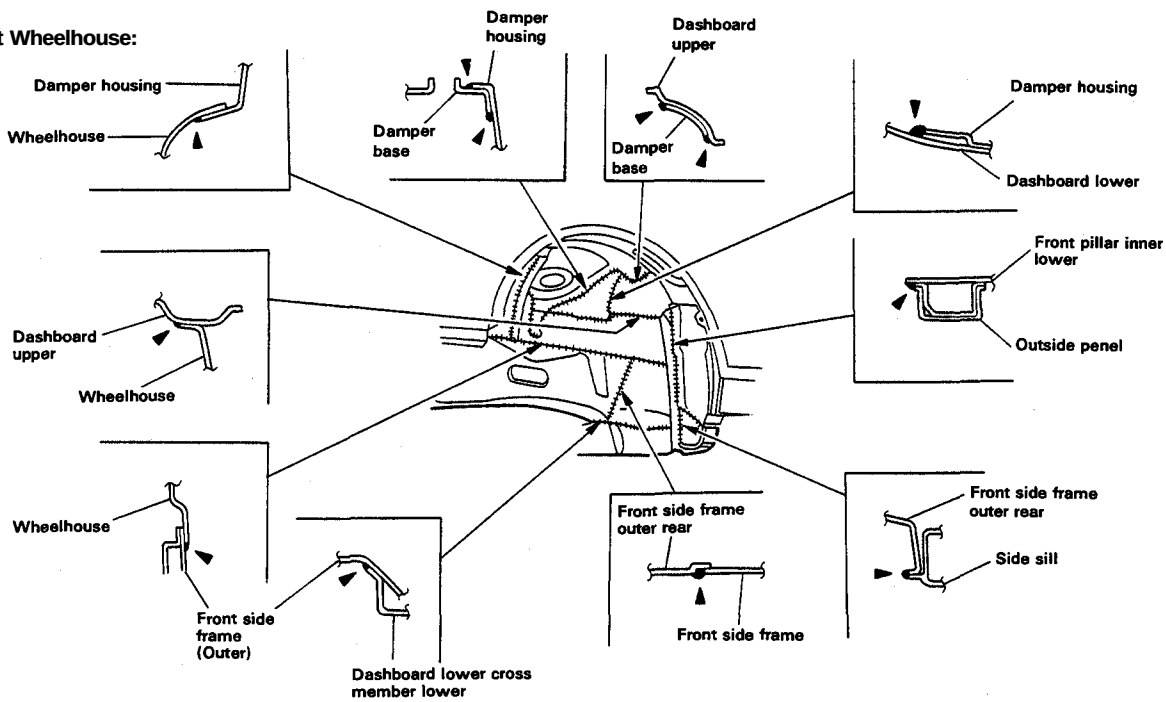

VIEW Ⓐ

(cont'd)

cardiagn.com

Cross Section of Body and Sealants/Adhesive Caulking

Outside panel and Roof Panel:

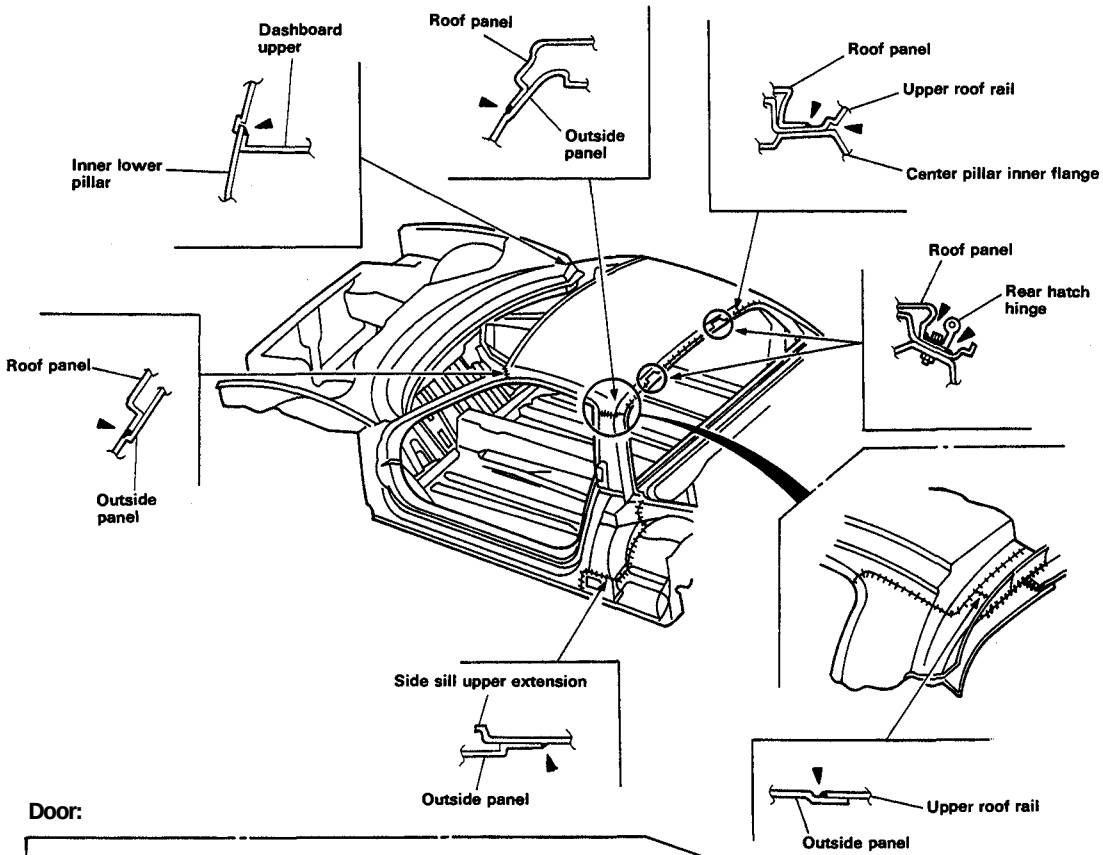

Door:

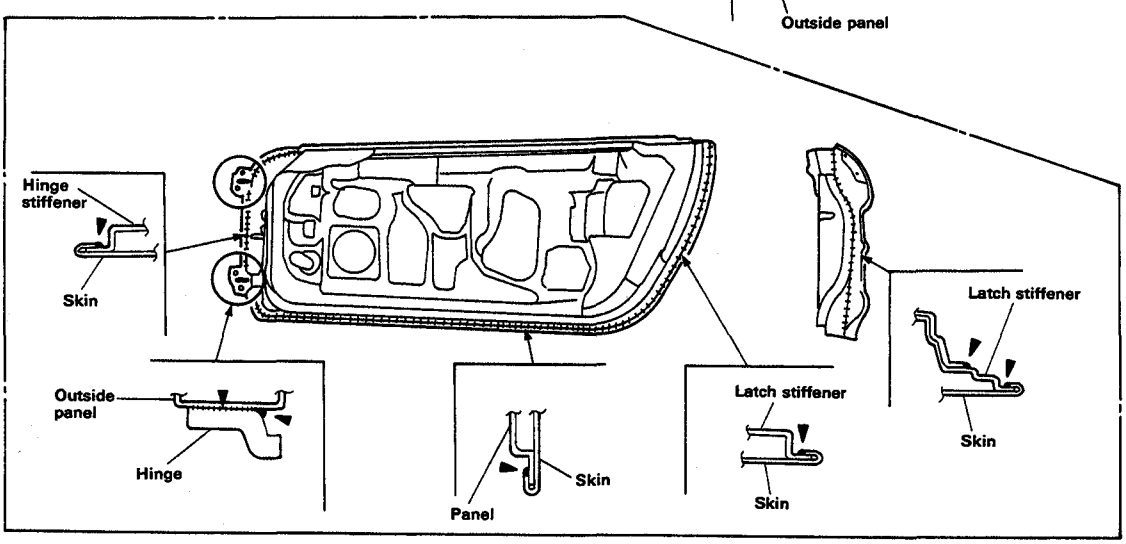

cardiagn.com

Front Floor (forward), Dashboard Lower, Front Side Frame and Side sill.

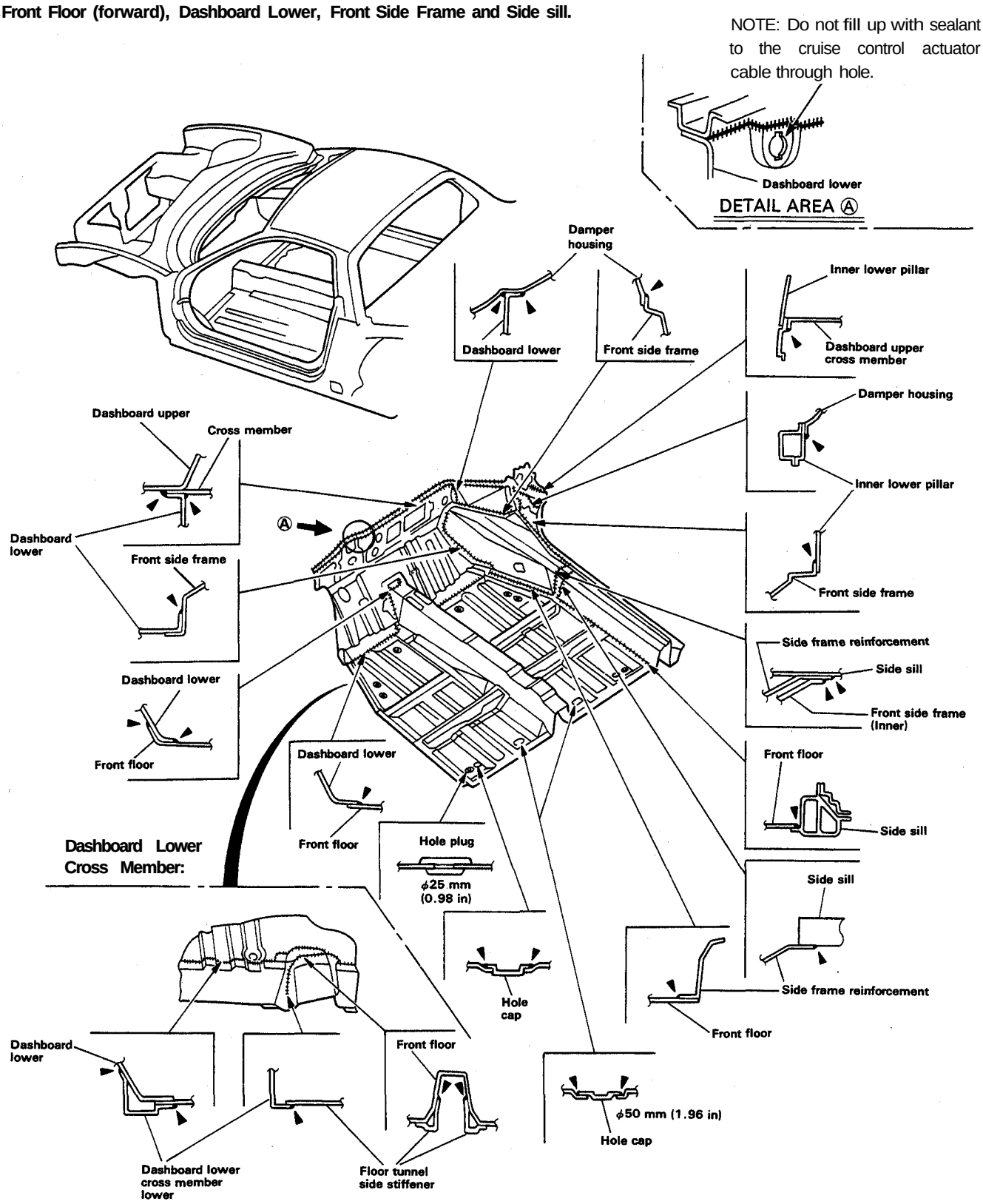

(cont'd)

cardiagn.com

Cross Section of Body and Sealants/Adhesive Caulking

Side Sill, Front Floor (rearward) and Rear Bulkhead Center:

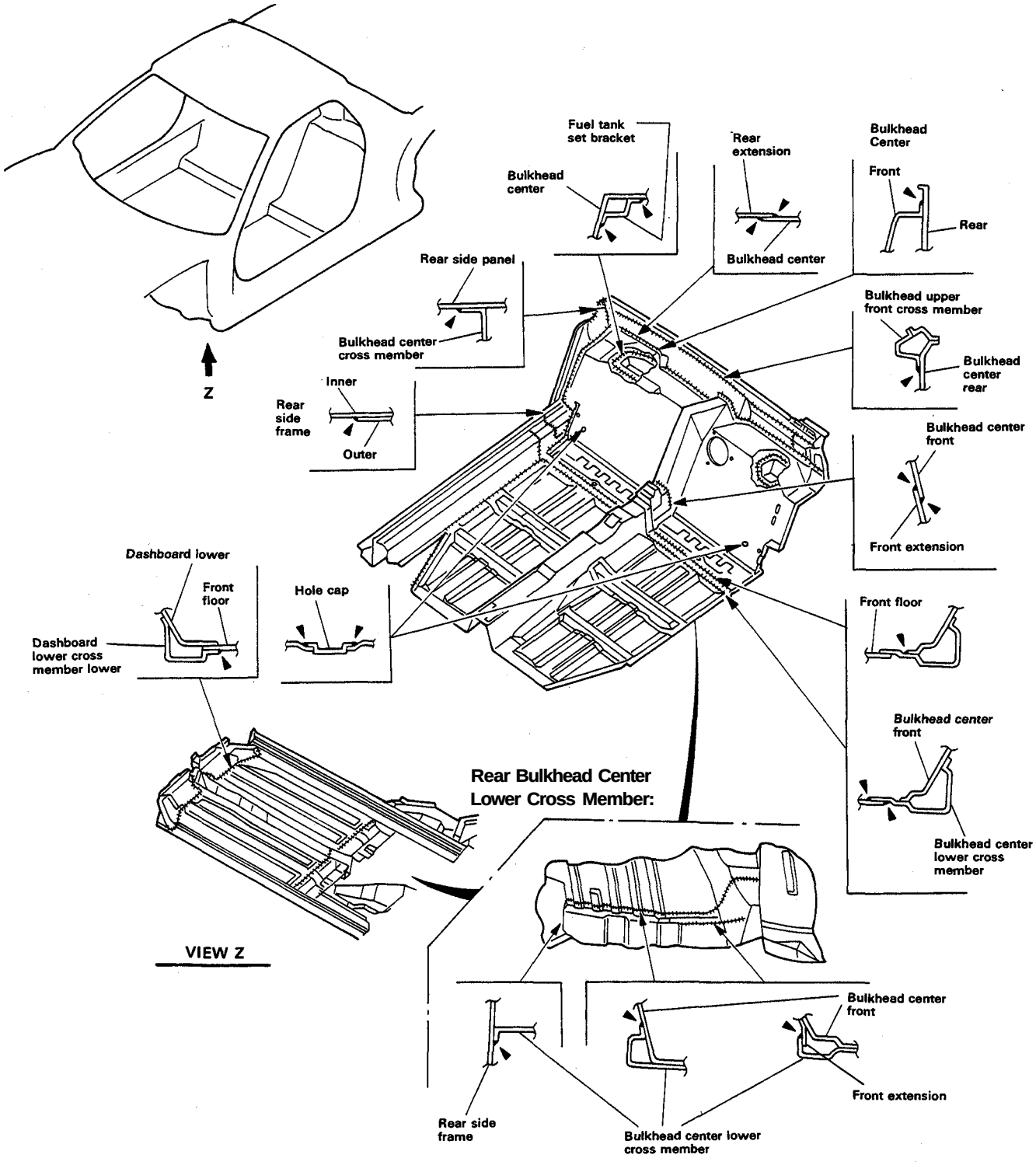

cardiagn.com

Engine Compartment and Trunk Compartment:

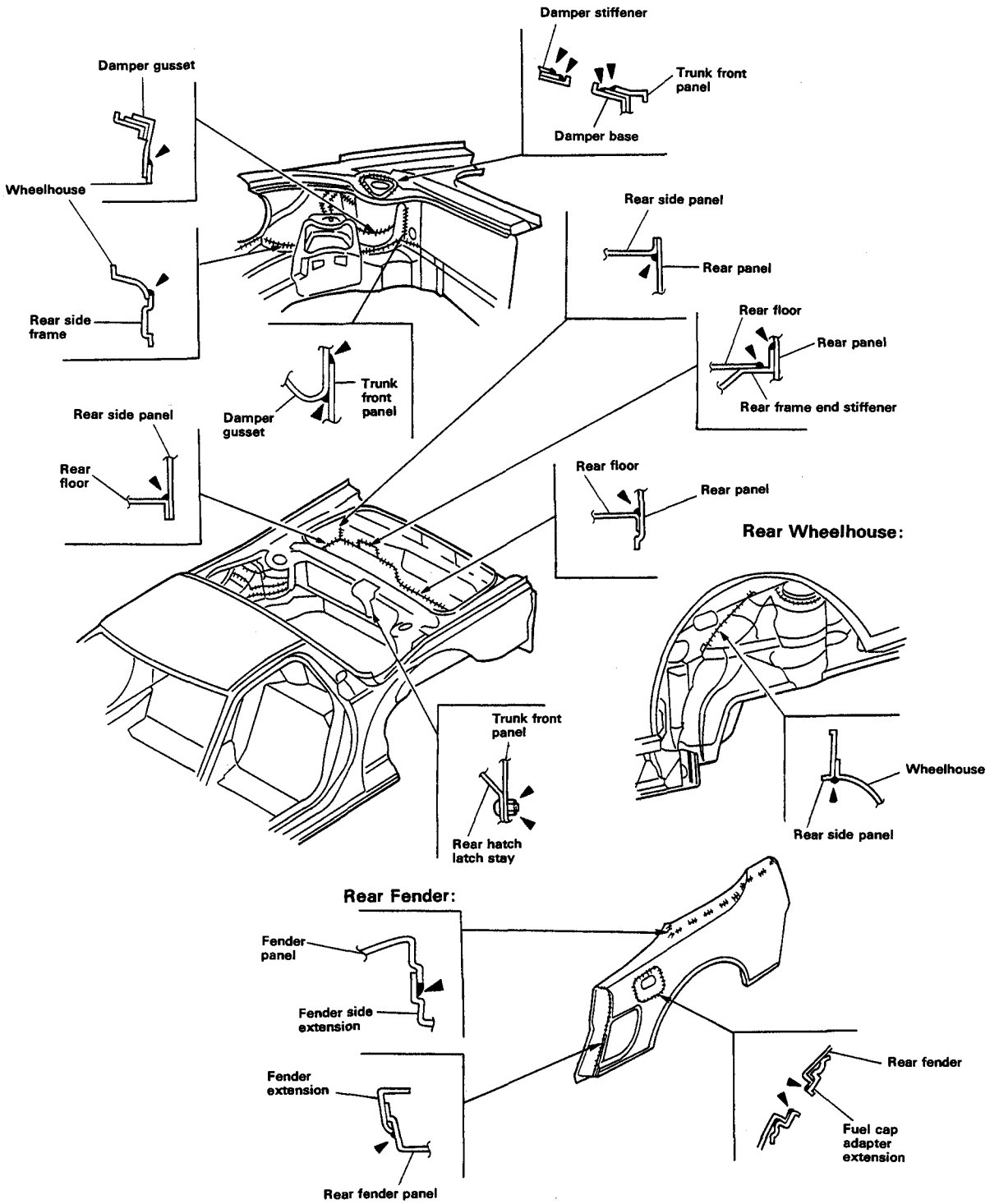

(cont'd)

cardiagn.com

Cross Section of Body and Sealants/Adhesive Caulking

Rear Bulkhead Center and Rear Side Frame:

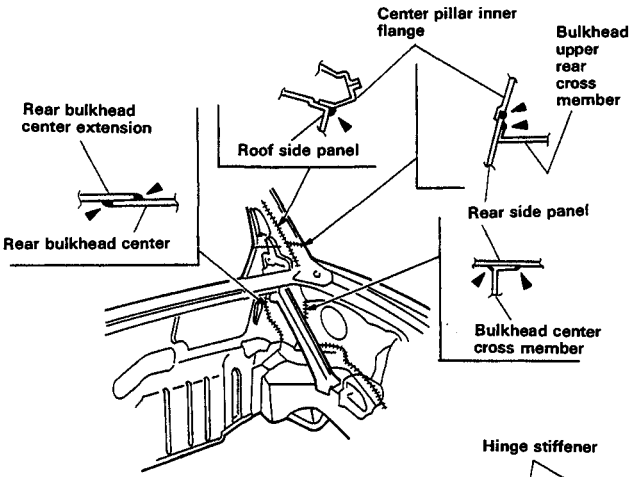

Trunk Lid:

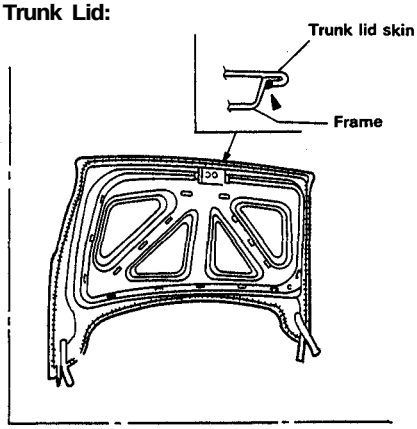

Trunk Front Panel and Rear Floor:

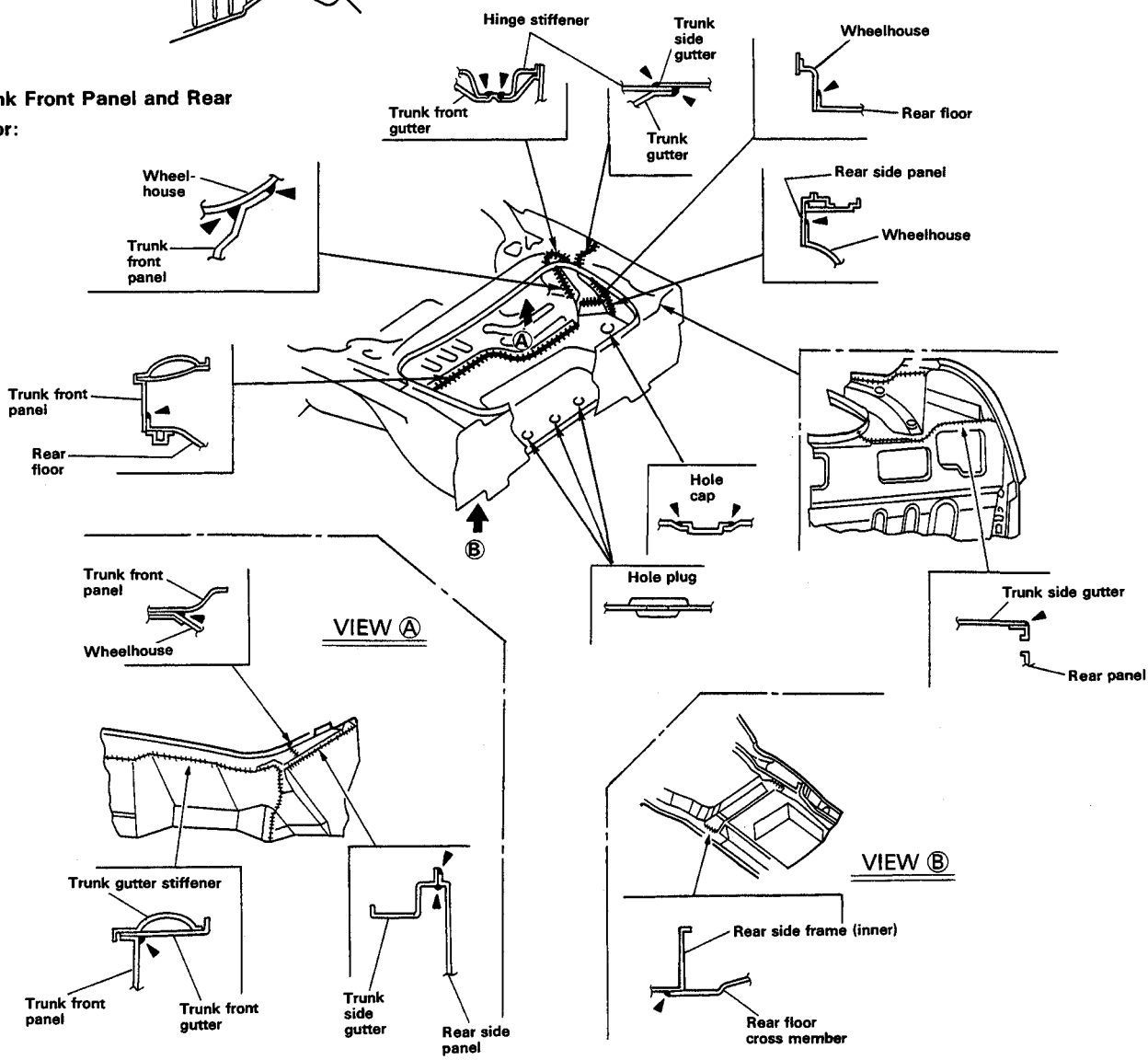

cardiagn.com

<Front Compartment>

NOTE: Caulk the following areas to prevent air leaks, water leaks, and rust.

Sealears and Caulking	
Class 1 (Spot sealer)	3M#08892 (Internal)
↑	3M#08893 (External)
Class 2 (Mastic sealer)	3M#08654
Class 3 (Caulking)	3M#08648

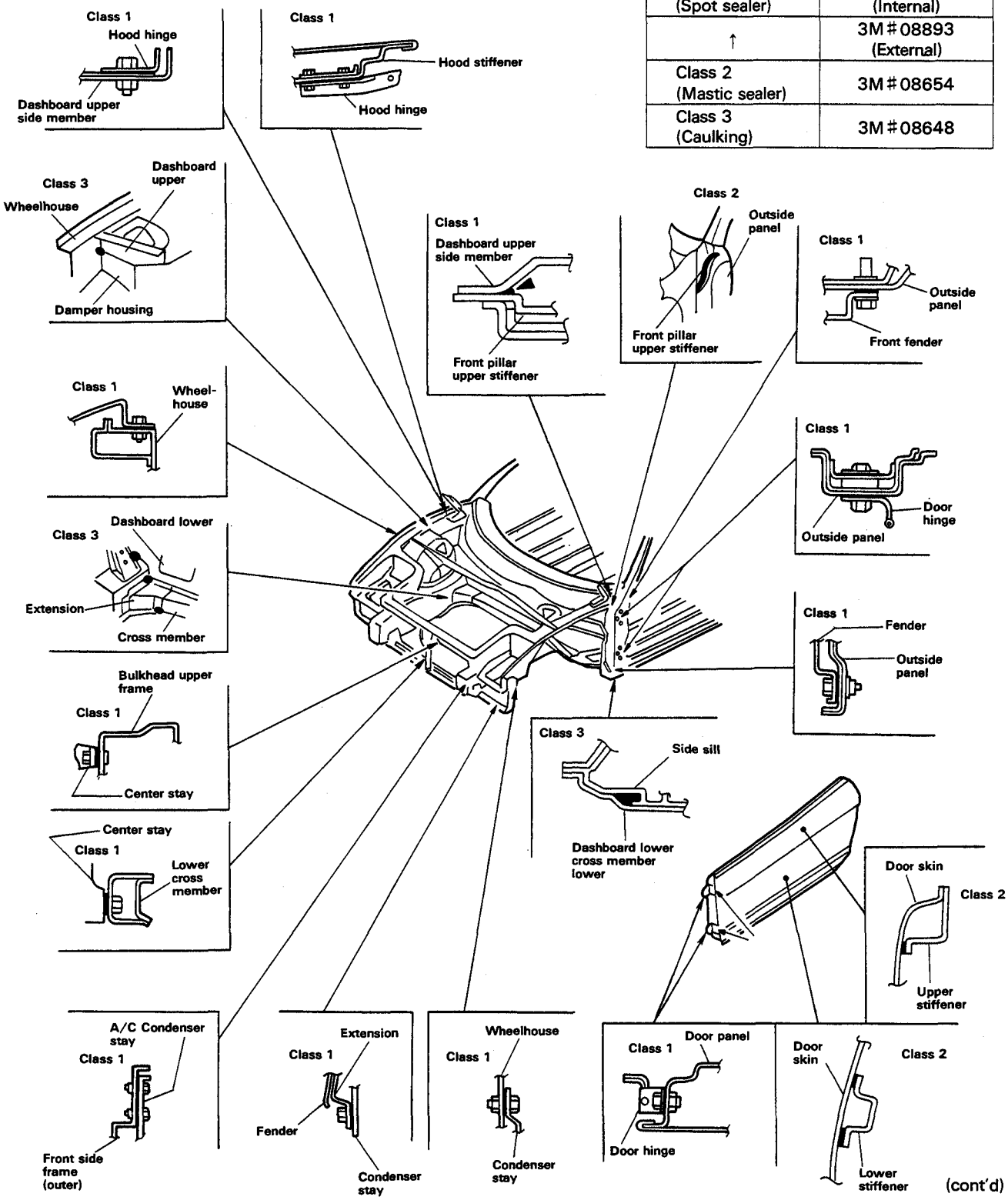

(cont'd)

cardiagn.com

Cross Section of Body and Sealants/Adhesive Caulking

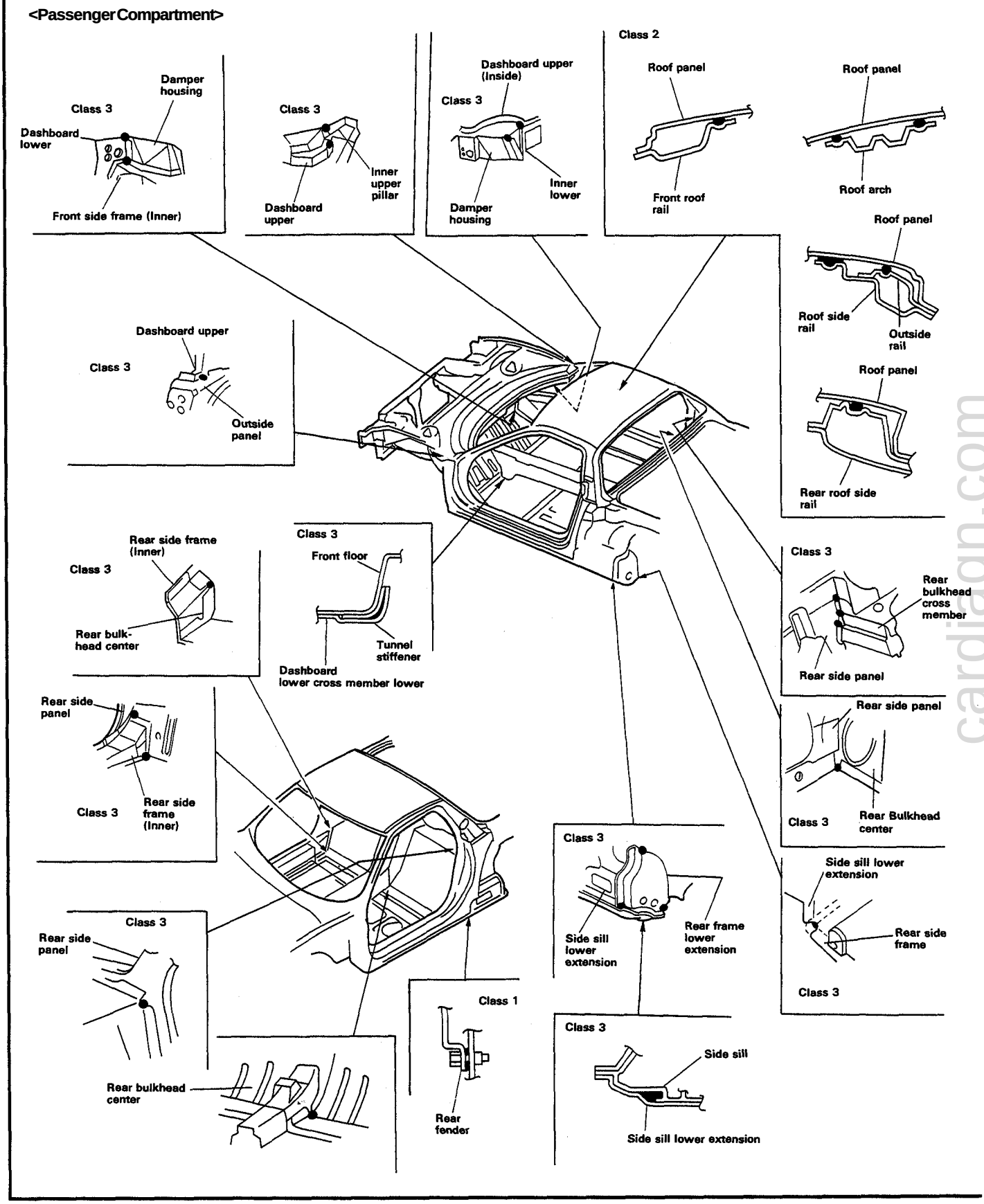

cardiagn.com

<Engine and Trunk Compartments>

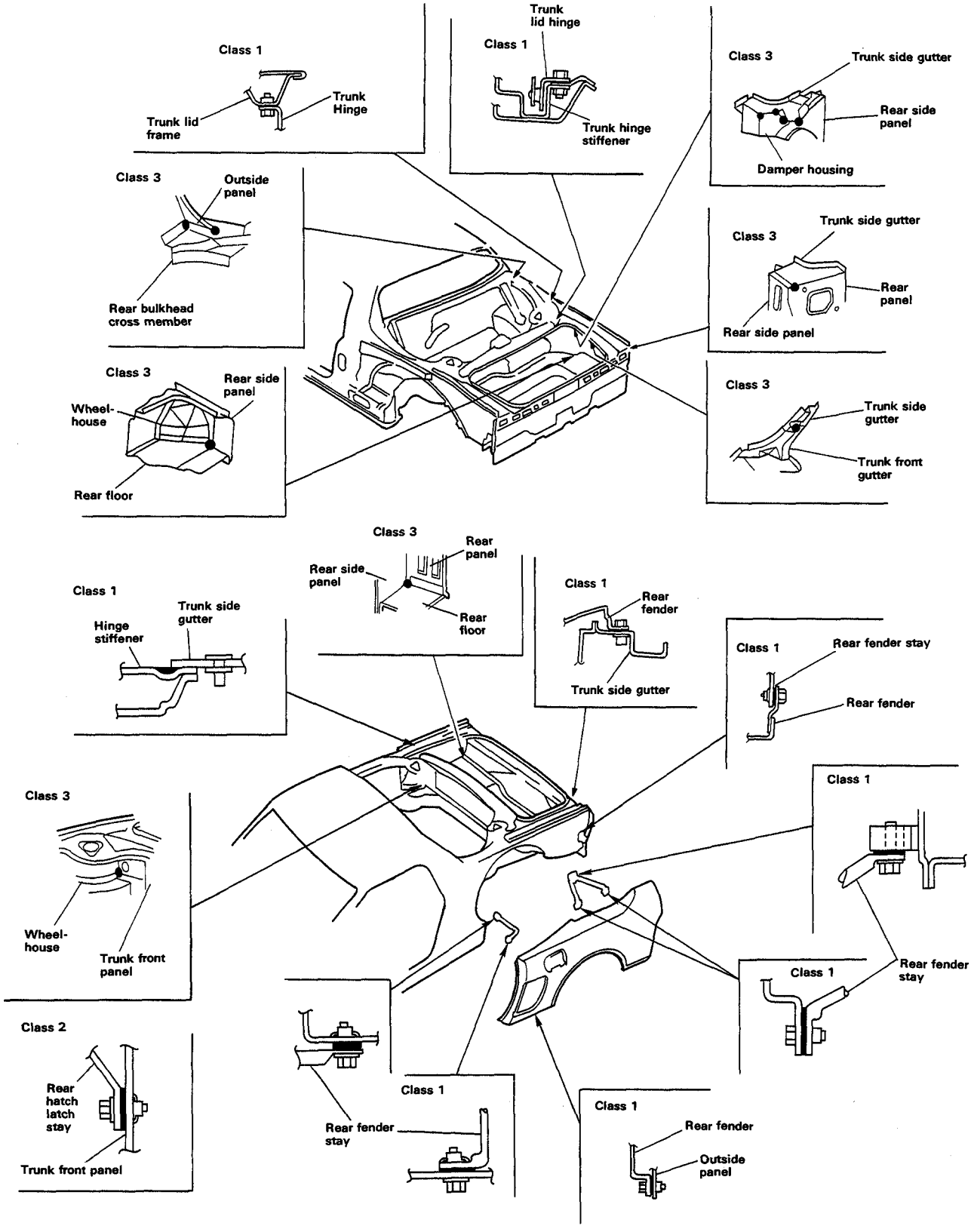

cardiagn.com

Body Dimensional Drawings

Upper Body Measuring Dimensions

<Front Compartment>

Unit: mm (in)

NOTE: Measuring dimensions show the distance between the forward or upper edge of positioning bosses and/or holes shown in the detail sketches.

Measuring point (Black dots)

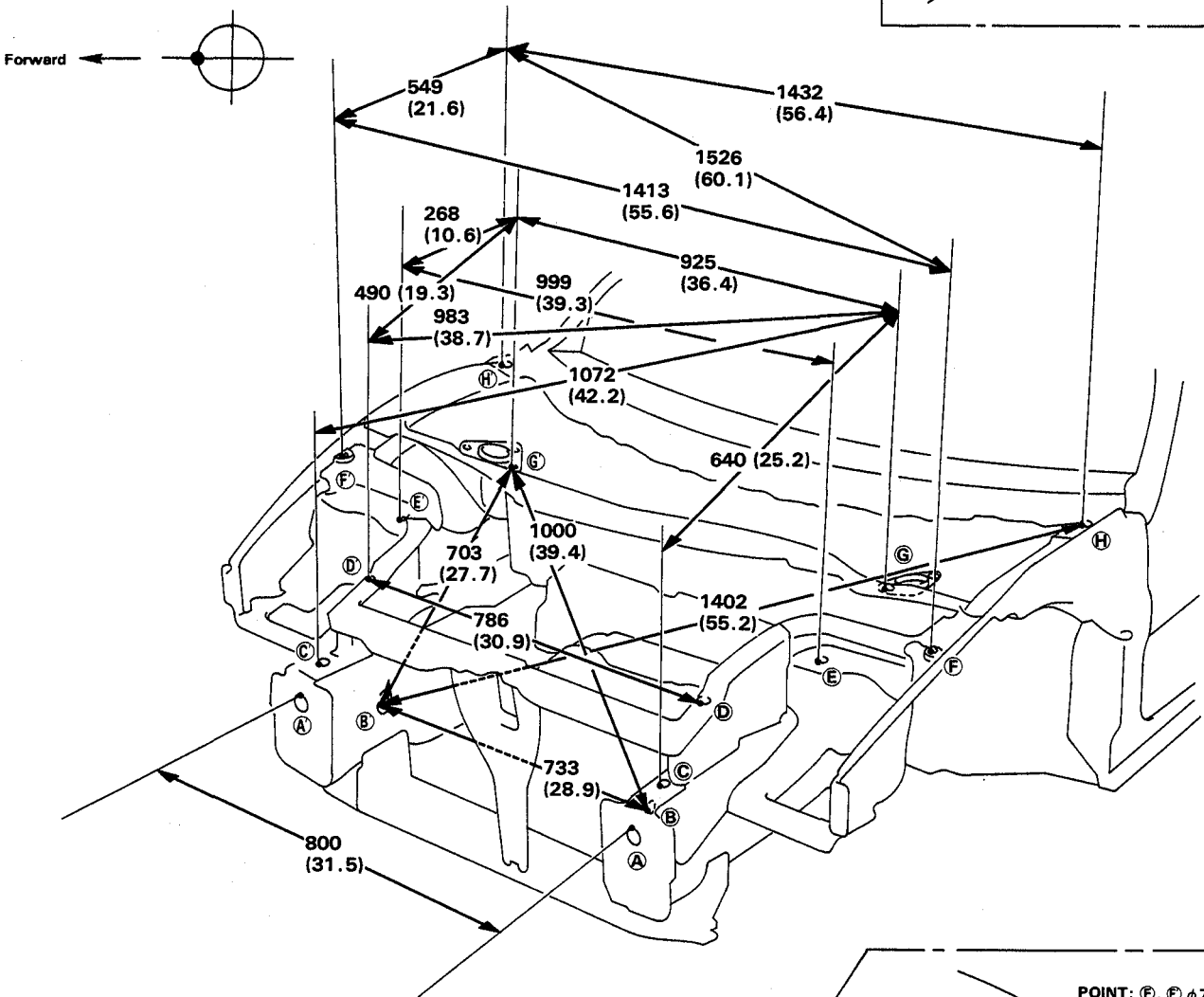

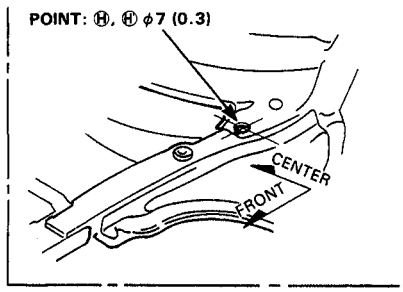

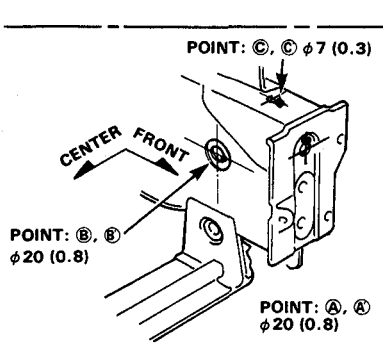

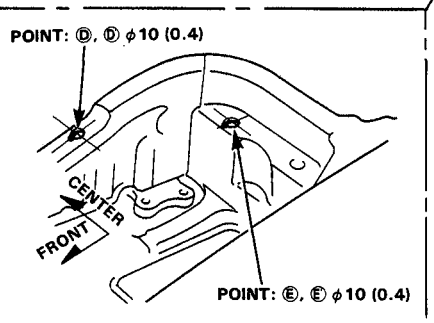

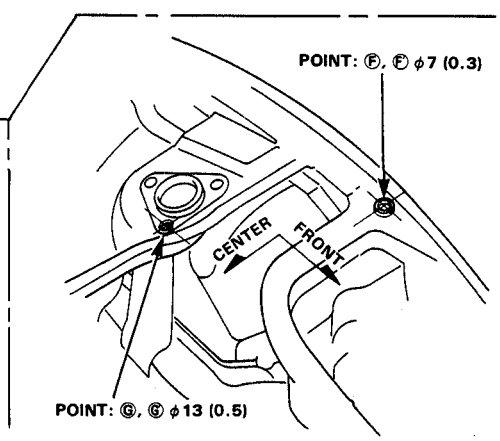

cardiagn.com

<Rear Compartment>

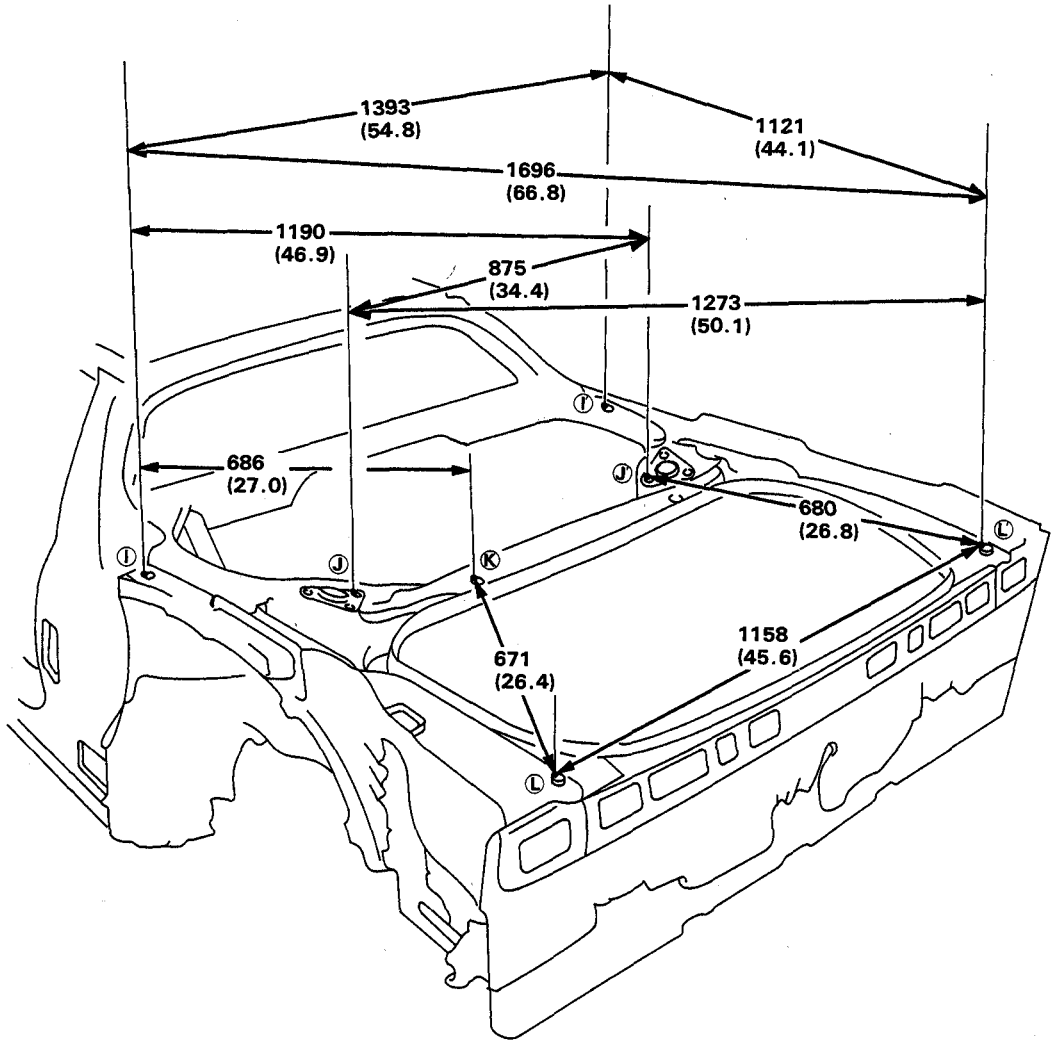

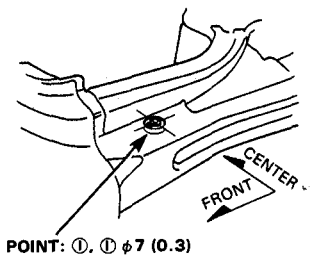

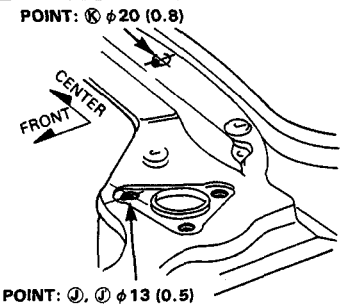

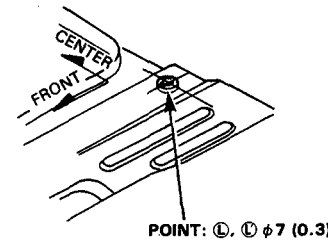

cardiagn.com

Body Dimensional Drawings

Upper Body Measuring Dimensions

<Front Compartment>

Unit: mm (in)

NOTE: Measuring dimensions show the distance between the forward or upper edge of positioning bosses and/or holes shown in the detail sketches.

Measuring point (Black dots)

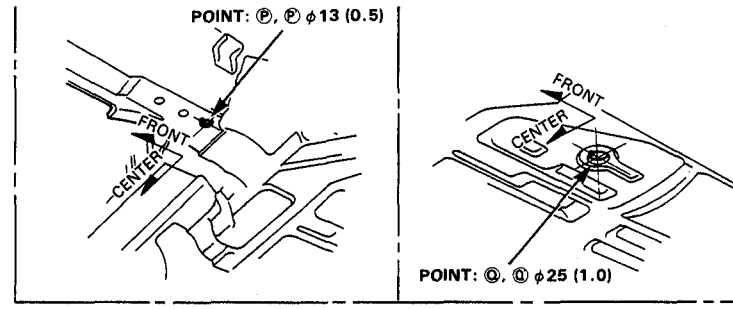

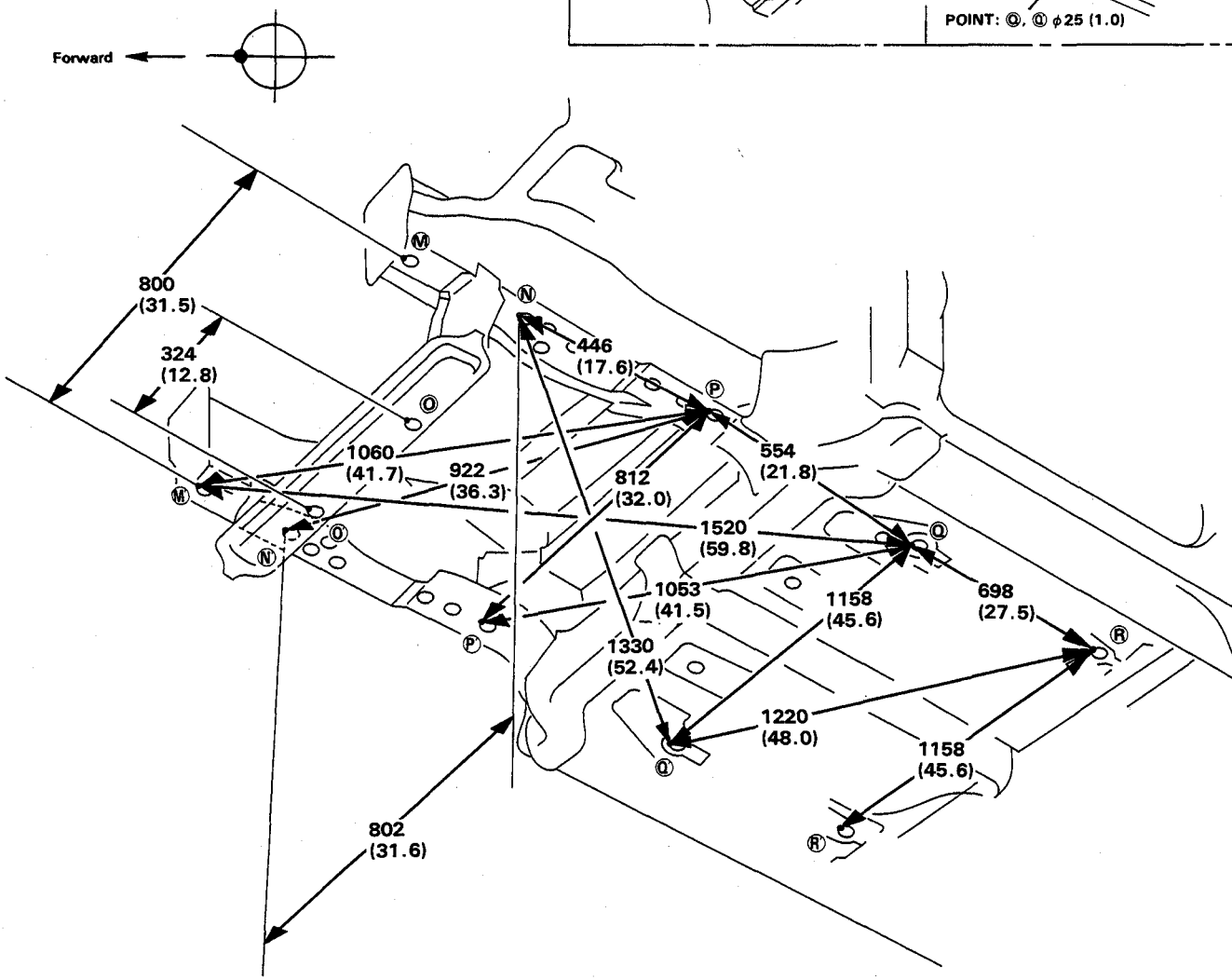

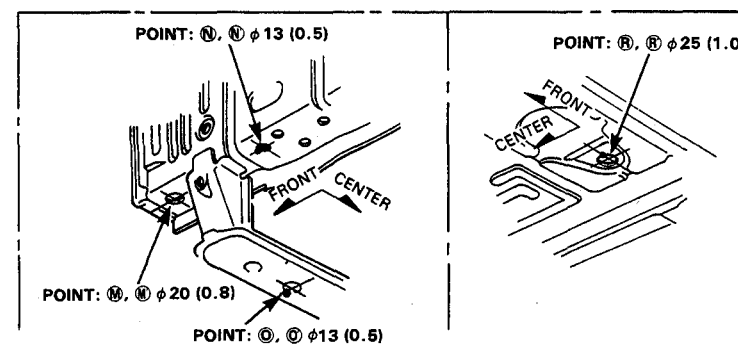

- Wheel alignment (see page 1-2).

cardiagn.com

<Rear Compartment>

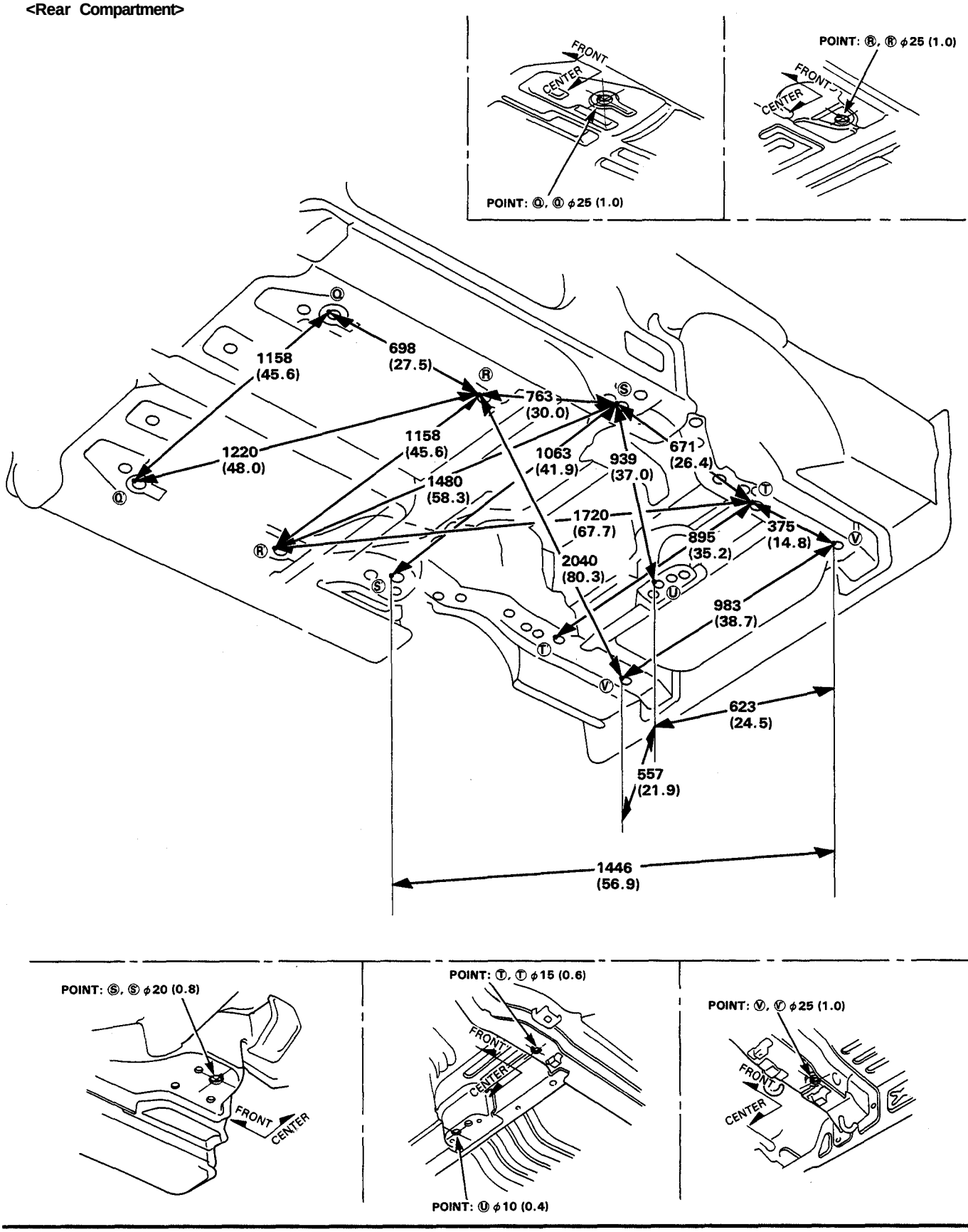

cardiagn.com

Body Dimensional Drawings

Opening Repair Chart

Unit: mm (in)

<Doors/Windshield Opening>

Ⓑ
At the lower edge of the second trim panel installation slot on the front pillar inner.

NOTE:
- This sketch shows the measuring points of body.
- The dimensions of above list shows the design value of distance between the black dots shown in detail sketches.

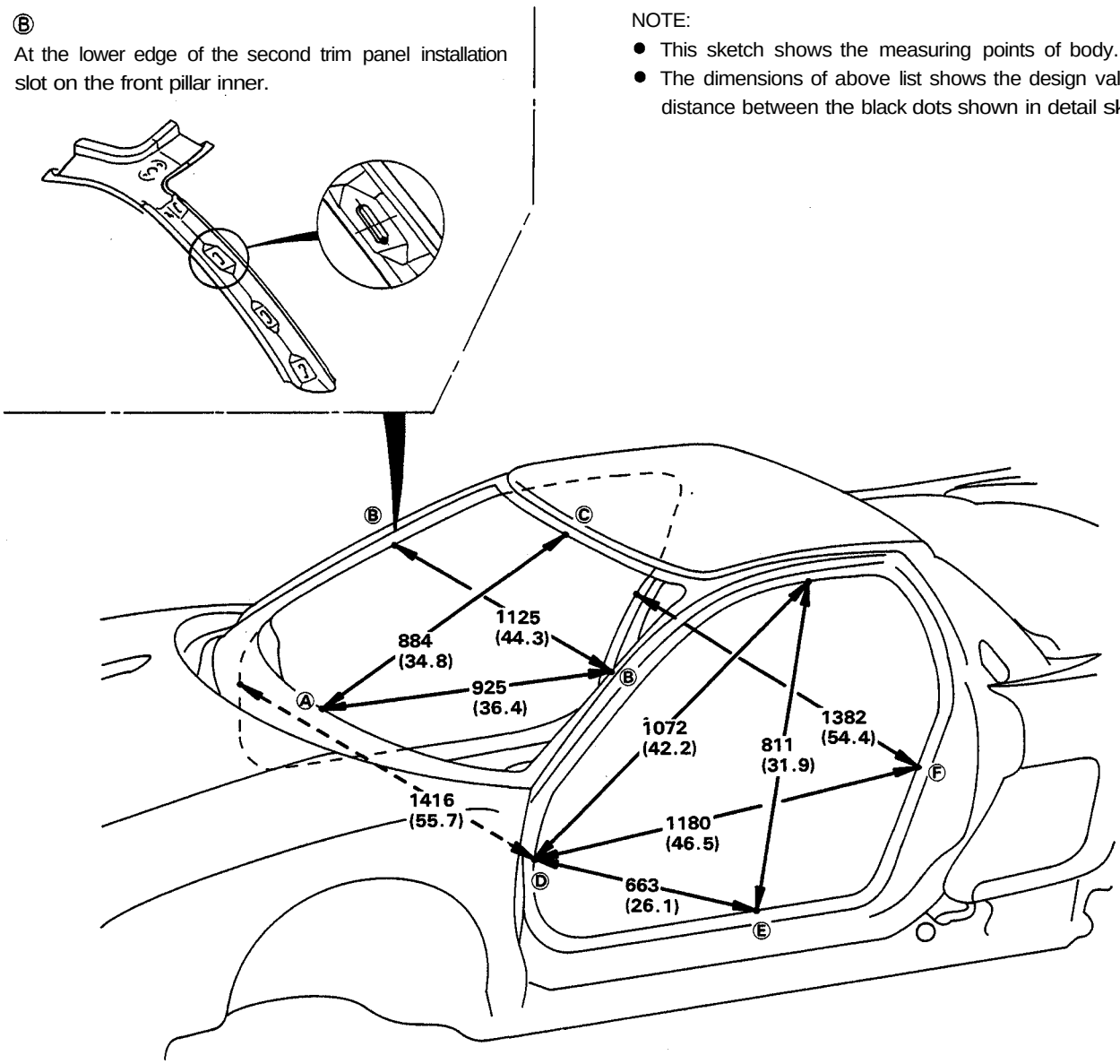

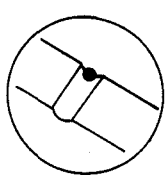

Ⓐ
Windshield lower depression bead

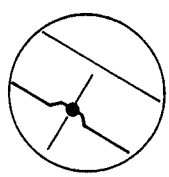

Ⓒ
Windshield opening flange notch

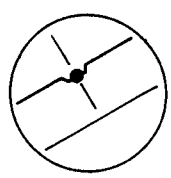

Ⓓ, Ⓔ, Ⓕ,
Door opening area flange notch

cardiagn.com

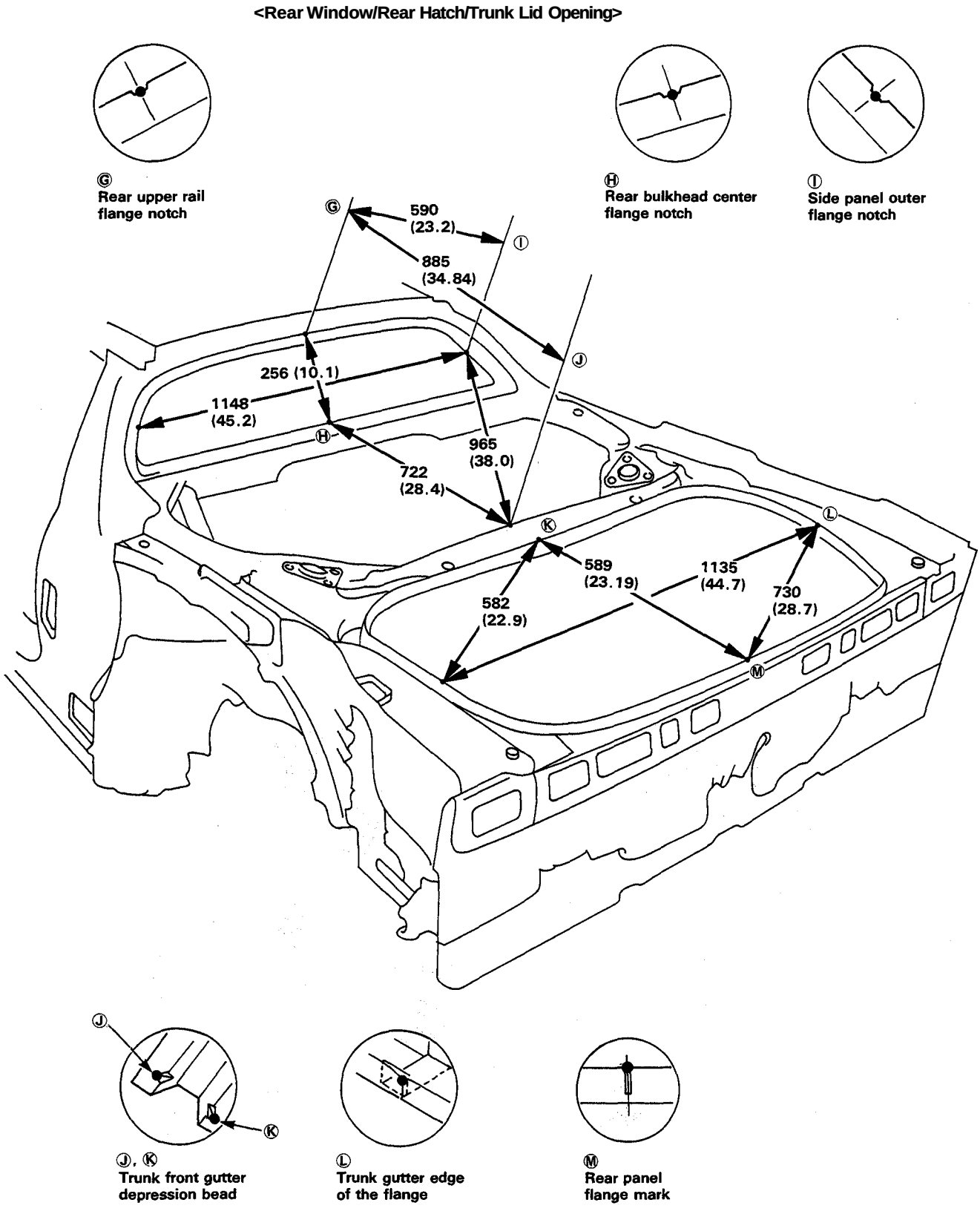

cardiagn.com

Body Dimensional Drawings

Frame Repair Chart

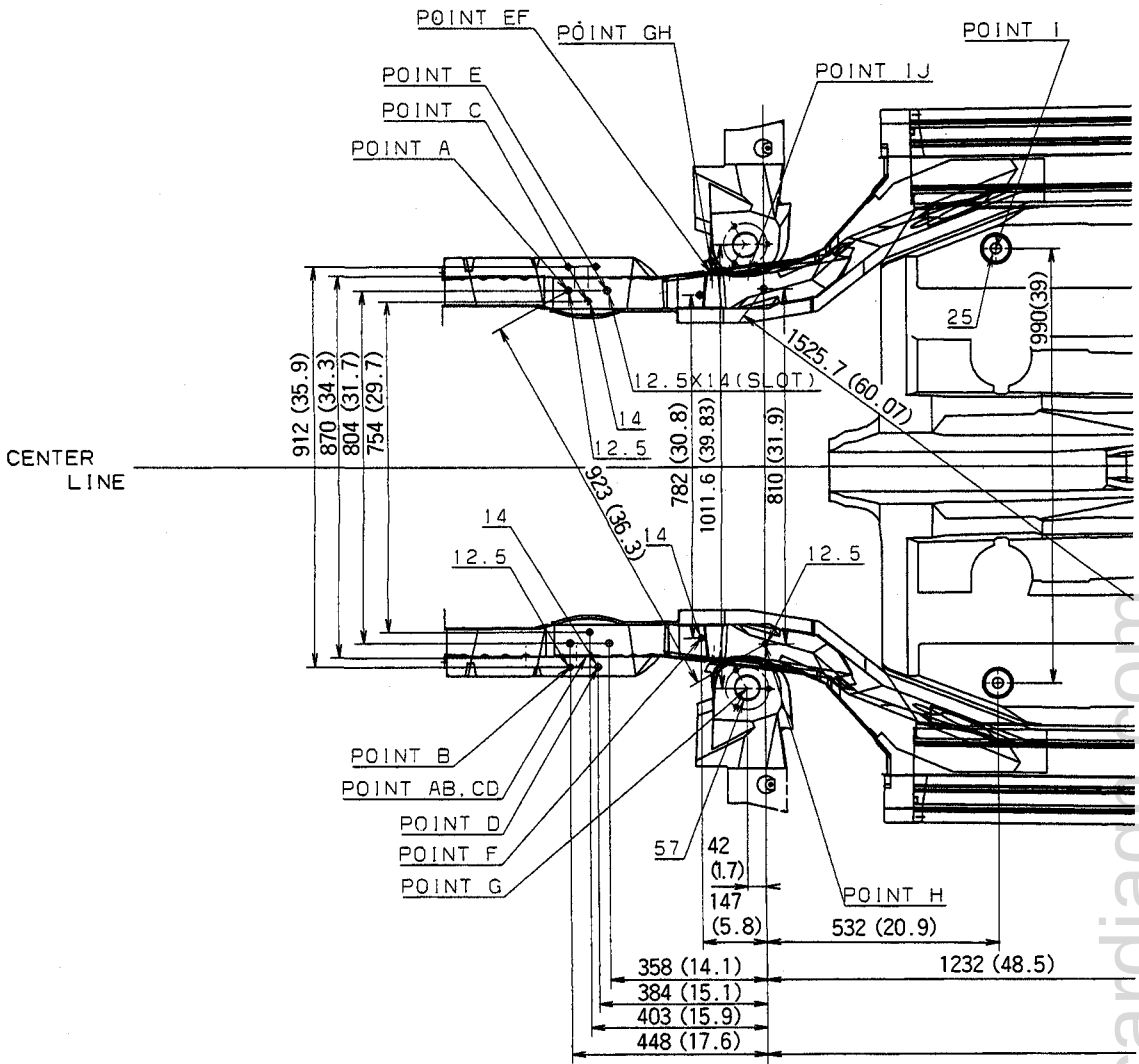

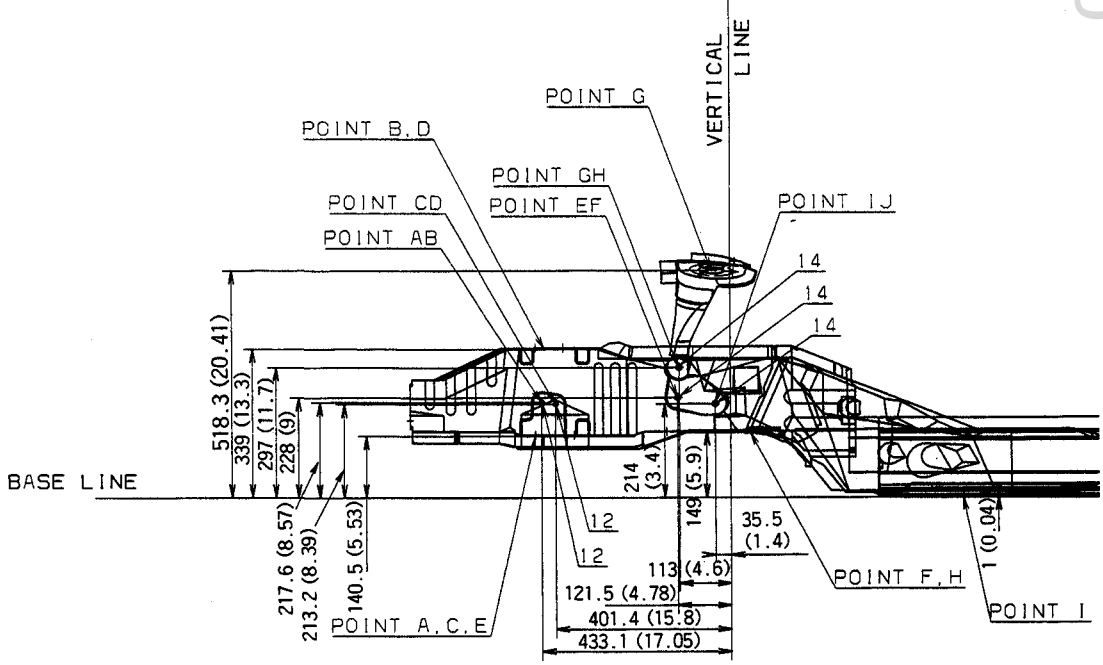

cardiagn.com

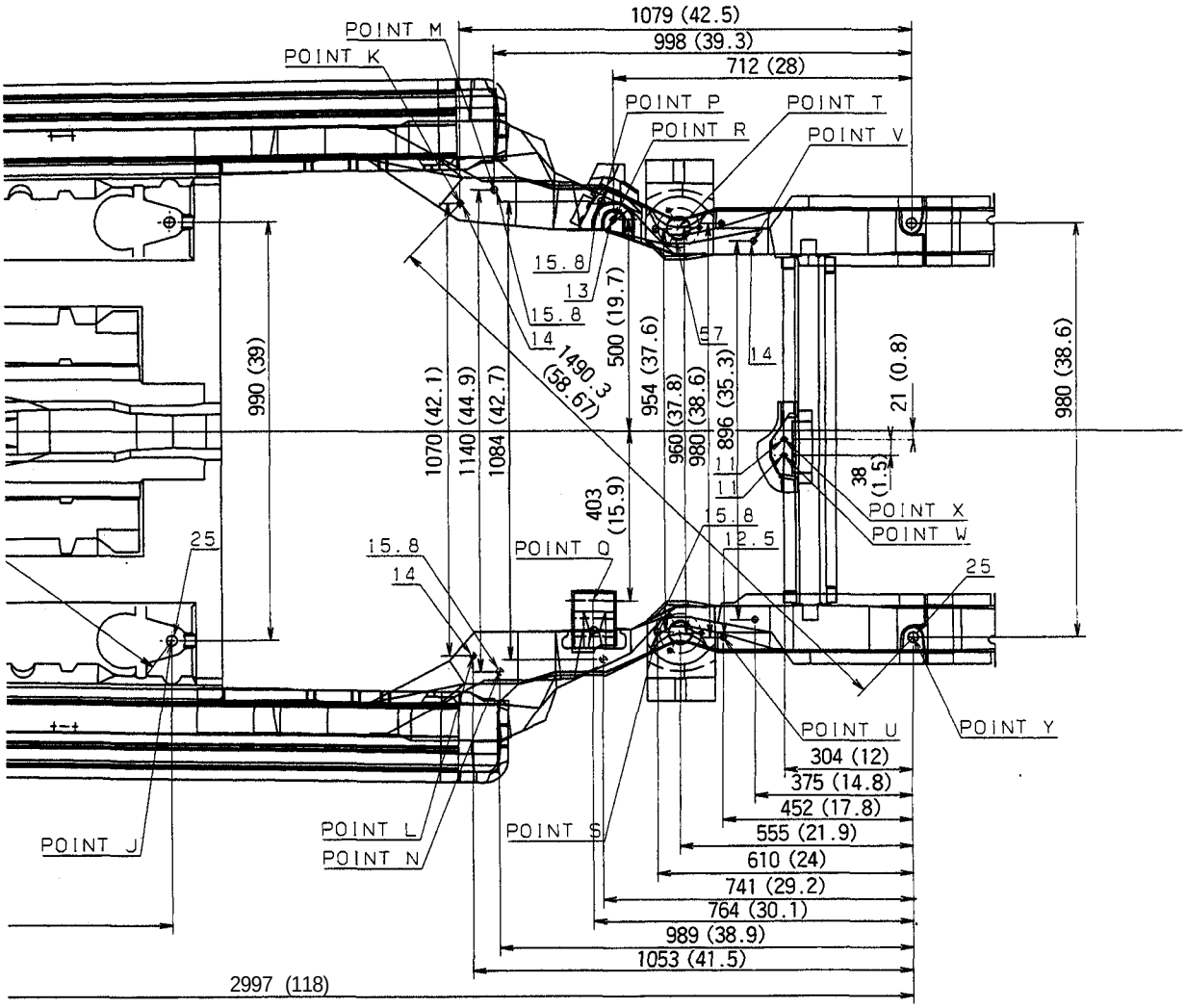

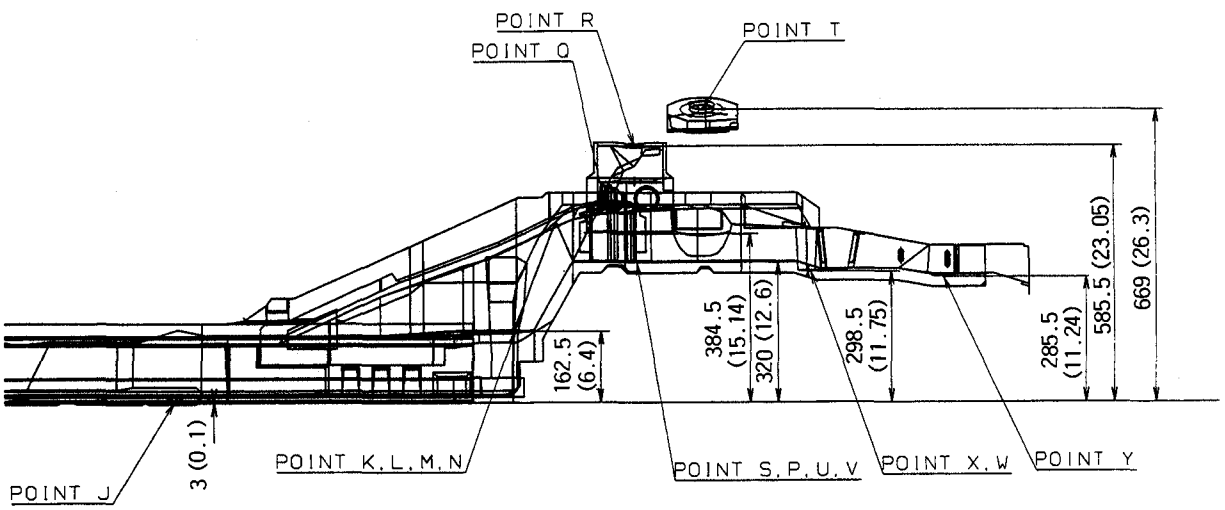

cardiagn.com

Rust-preventive Treatments

General

Corrosion starts immediately after the aluminum alloy base contacts with the atmosphere. The condition is aggravated by sea wind, road salt, rain, snow and industrial fallout. There are many ways to protect automobiles against corrosion. Primers, primer surfacers and paints are applied by electrodeposition or spray to protect the car body.

Anti- rust Agents and Spray Guns

Use the following anti-rust agents or equivalents when making a body repair.

⚠WARNING ANTI-RUST agents contain substances that are harmful if you breathe or swallow them, or get them on your skin. Wear coveralls, gloves, eye protection, and an approved respirator while such agents.

Anti-rust agents:

RUSTOP DEOX#100 WAXOYL	U.S.A.MARKET AUTO ARMOR 1031 (made by E.C. P.)	To be applied to welded joints inside body panels
NOX-RUST 409-20S SOLTON 1000S	AUTOR ARMOR OUTSIDE COATING (made by E.C. P.)	To be applied to under floor and wheelhouse

Spray guns:

Use the correct gun for the agent being used.

- Use of a pressure type spray gun is recommended when work involves a considerable number of cars.

For RUSTOP	DEOX#100	For WAXOYL	For NOXRUST 409-20S/ SOLTON 1000S
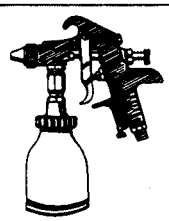 Flexible nozzle 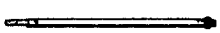 Open nozzle 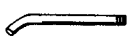	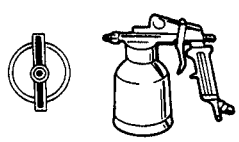 L-type nozzle 360° nozzle 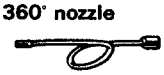	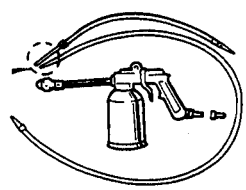 L-type nozzle 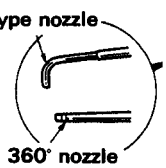 360° nozzle	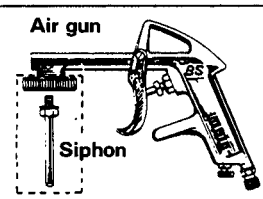 Air gun Siphon V-type nozzle Open nozzle 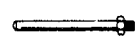
Protectors: Wear gloves, mask and suitable eye protection.		● Use light oil and a rag to clean up spilled anti-rust agents.	

Precautions:

1. Before applying an anti-rust agent, thoroughly clean the areas to be coated with a steam cleaner, etc., and let dry.

   NOTE: Waxoyl may be applied to wet surface.

2. Spray an anti-rust agent sufficiently until the excess amount oozes out when filling, the doors, side sills, etc.
   Wipe the excess agent with a clean rag dampened with light oil.
3. Do not spray an anti-rust agent to the brake hoses, brake wheel cylinders, brake drums, exhaust muffler and its related parts, emission control devices in the engine compartment, ball joint covers, plastic fuel strainer, etc.
   Wipe up spilled agent at once.
4. Heat an anti-rust agent to room temperature 97.7°F (36.5°C) by submerging the container in hot water when outside temperature is below 50°F (10°C).
5. Ventilate when spraying an anti-rust agent since it contains a small amount of organic solvent. Keep sparks, flames and cigarettes away. Clean the spray gun after spraying with anti-rust agent.

CAUTION: Any remaining agent will harden in the passages of the spray gun, making it unserviceable.

cardiagn.com

Diagram

NOTE:
- Apply the designated thickness over surfaces including gaps and edges.
- Avoid spraying agents on following parts:
  Window glass, lights, exhaust parts, tires, bumper, lower skirts.
- Wipe up spilled agents at once from rubber and plastic parts.

Anti-rust Agents:
- Use RUSTOP, DEOX #100, WAXOYL or equivalents for protecting inner surfaces.
- Use NOX-RUST 409-20S, SOLTON 1000S or equivalents for protecting outer surfaces.

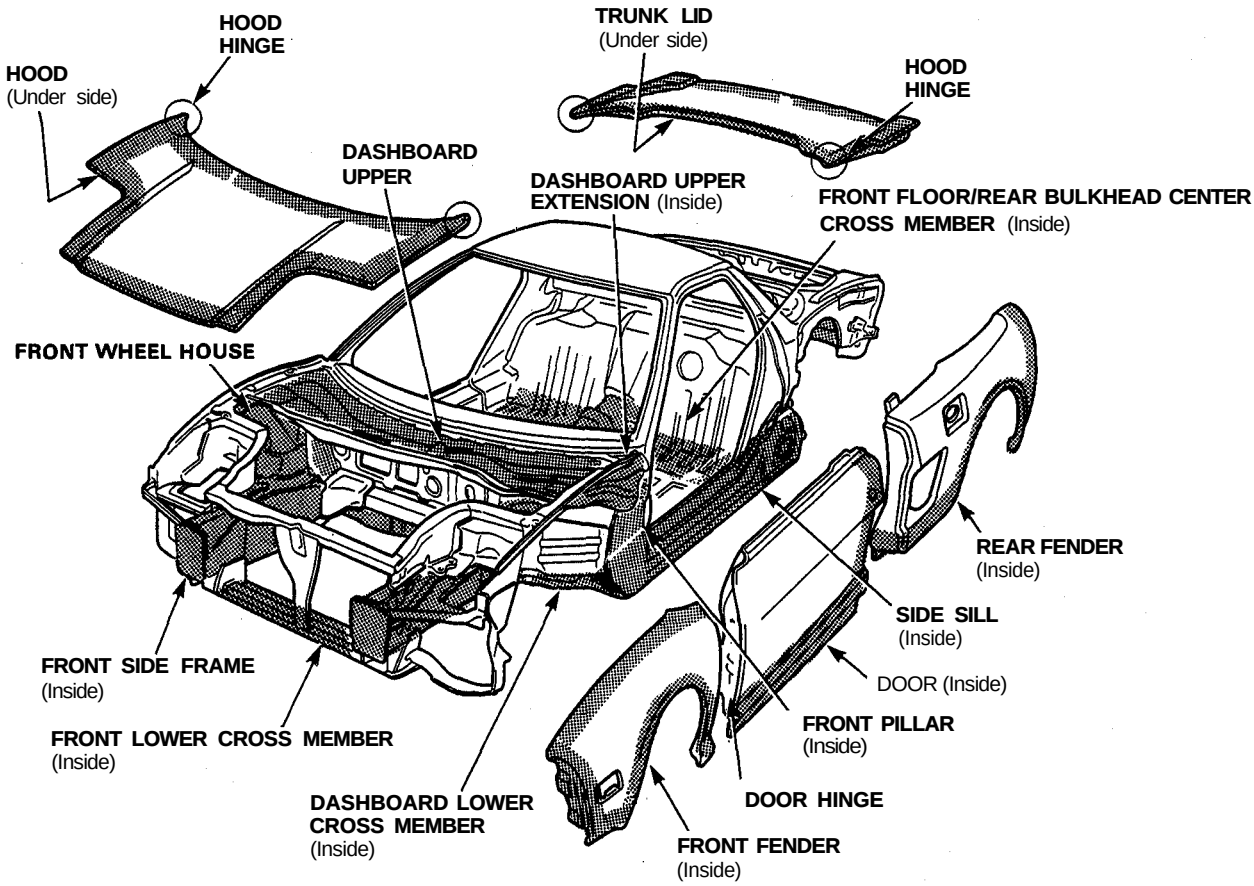

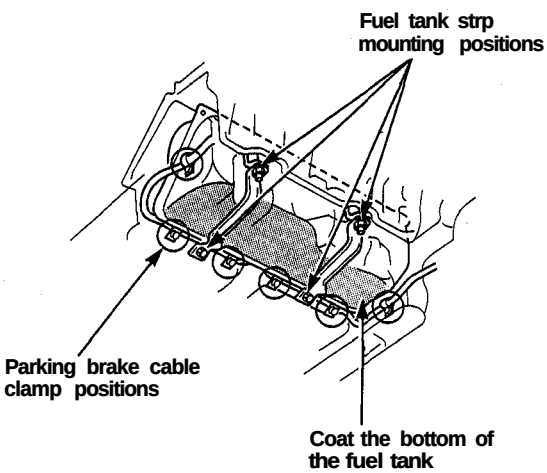

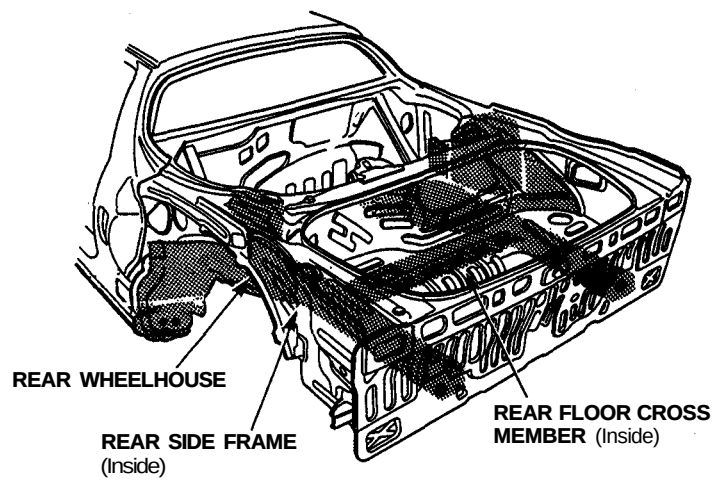

cardiagn.com

Rust-preventive Treatments

Areas to be Covered by Anti-rust Agents

Rust-preventive Treatments:

Nozzle	Type
A	360°
B	L-type
C	Straight nozzle (undercoat gun)

Hood, Underside

- Coat the entire panel and seams all the way around. Spray sufficient anti-rust agent to the front area and each corner.
- Apply anti-rust agent or grease to the hood hinges.
- Also coat the bulkhead upper frame with anti-rust agent.

Nozzles used: A and B

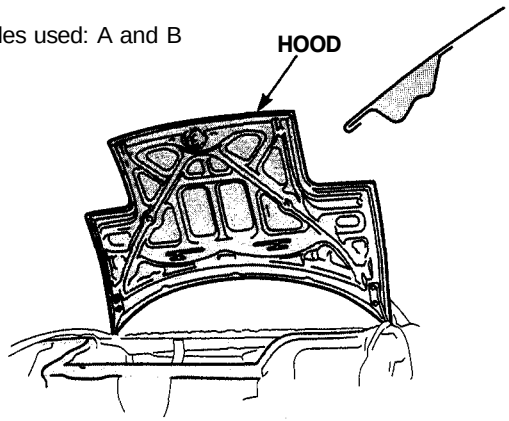

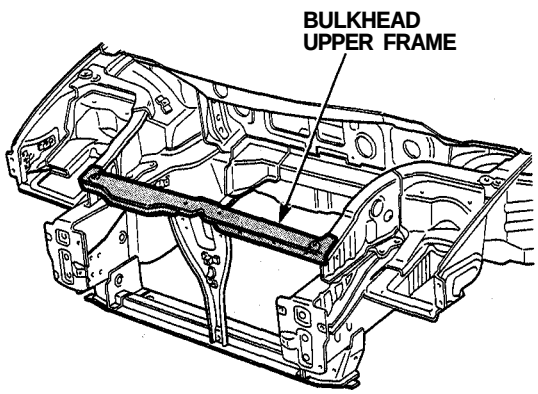

Dashboard Upper/Windshield Lower

- Coat the windshield lower and dashboard upper water drain with anti-rust agent at front, right and left.
- When spraying anti-rust agent over the rear of the dashboard upper (windshield side), use care so that the anti-rust agent *is* sprayed to the partition.

NOTE: To insert the nozzle the dashboard upper, remove the air scoop grille for easier, more thorough spraying.

Nozzles used: A and B

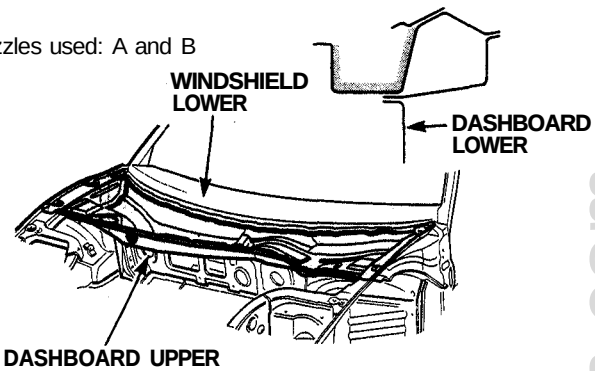

Front Bulkhead Area

With the hood opened, coat the joints of the bulkhead, wheelhouse and side frame and around the back of the headlight assembly.

Nozzle used: B

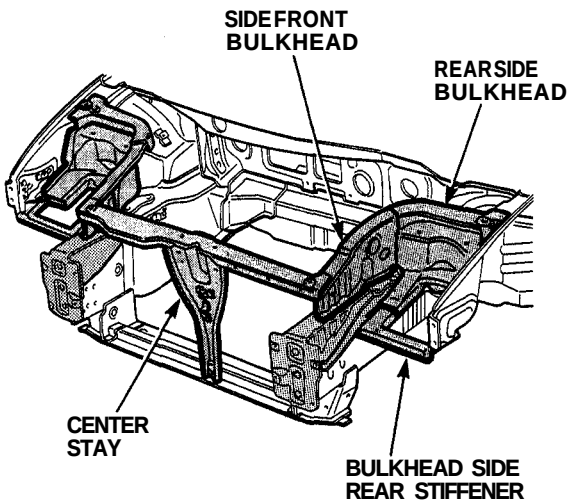

cardiagn.com

Front Fender, Underside

- Apply anti-rust agent to the end of the fender, wheelhouse, and side sill installation.

NOTE:

- Apply enough agent to the front door side, wheel arch end.
- If the fender is to be removed, care must be taken to avoid damaging its paint finish. It is advisable to apply agent to the entire surface of the back of the fender.
- Also apply agent to the front fender filing pillar.

Nozzles used: B and C

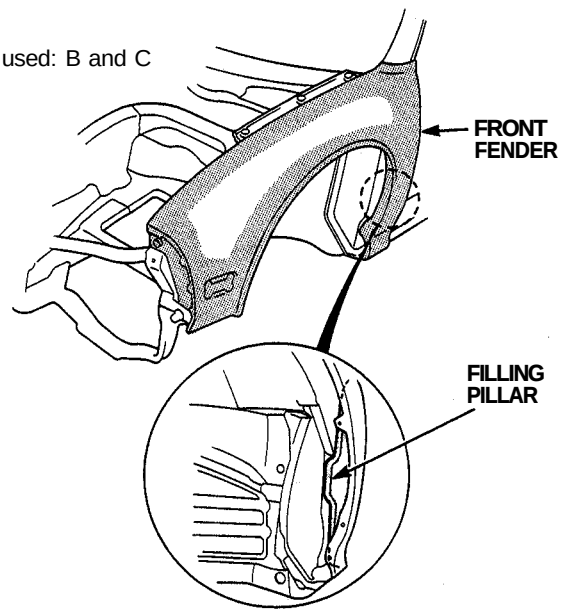

Dashboard Upper Side Extension, Inside

- Remove the front fender and grommets.
- Remove the air scoop grille in the dashboard upper and coat the inside of the side extension with anti-rust agent.

Nozzles used: A and B

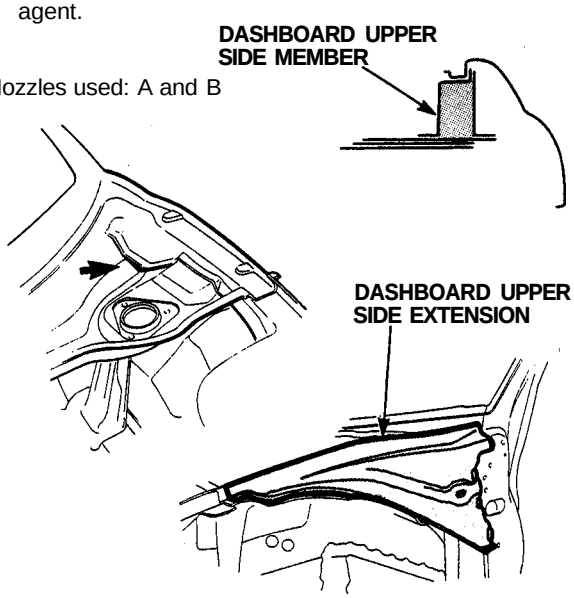

Outside Panel (Front Pillar), Inside

- Remove the door harness grommet and insert the nozzle with its facing down.

NOTE: Make sure that the nozzle is not interfering with the door hinge bracket. Spray agent sufficiently.

- Coat the door checker bracket,

Nozzle used: A

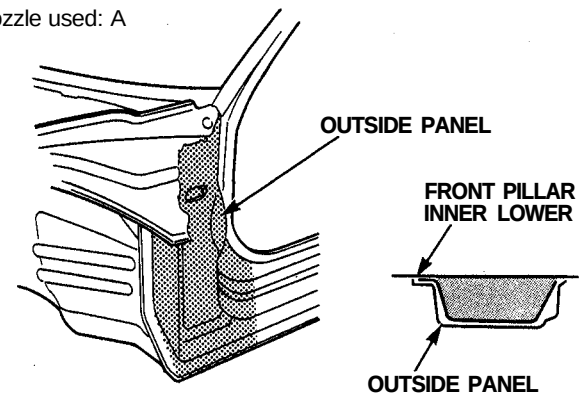

Doors, Inside

- Apply agent to the joint between the door stiffener and door skin through the water drain hole at the bottom of the door.
- Remove the weatherstrip, then spray the agent through the hole.

NOTE: When a suction type spray gun is used, remove the door trim panel.

Nozzles used: A and B

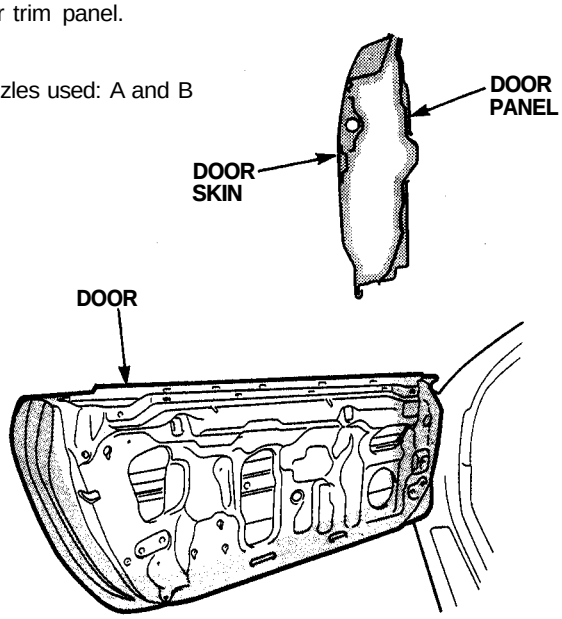

(cont'd)

cardiagn.com

Rust-preventive Treatments

Area to be Covered by Anti-rust Agents (cont'd)

Outside Panel (Rear Pillar), Inside

- Remove the seat belt retractor and spray agent through the hole.
- Remove the door lock striker and spray agent through the hole.

NOTE: For move thorough application, it is recommended to remove the rear fender.

Nozzle used: A

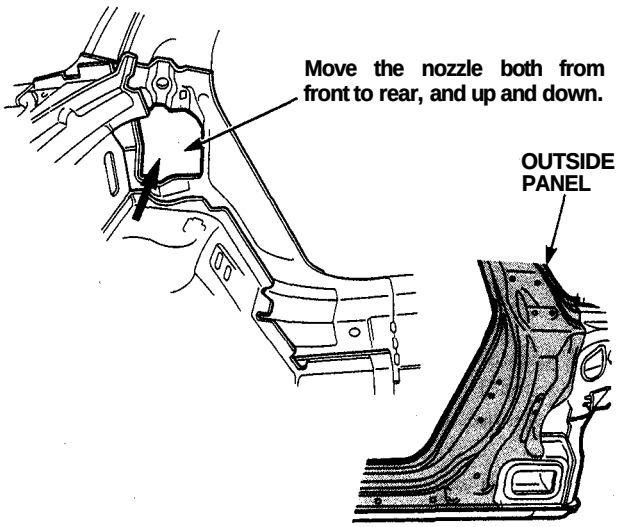

Rear Fender, Inside

- Apply anti-rust agent to the end of rear fender, wheelhouse, and side sill installation.

Nozzle used: B

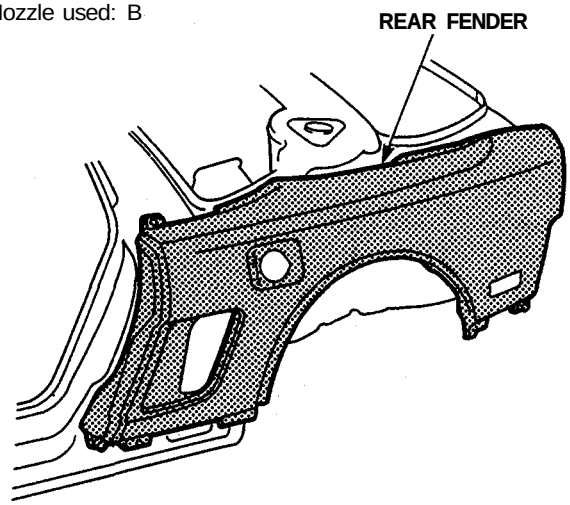

Rear Wheelhouse Upper Extension, Inside

- Remove the rear fender and grommets and coat the inside of the upper extension with anti-rust agent.

Nozzle used: B

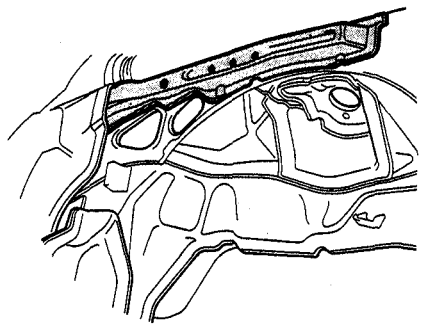

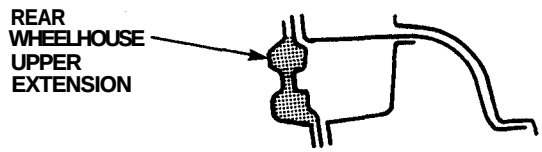

Trunk Lid, Underside

- Coat the trunk lid skin and frame seams all the way around.
- On the trunk lid, apply the agent to the inside of the reinforcement frame.

Nozzles used: A and B

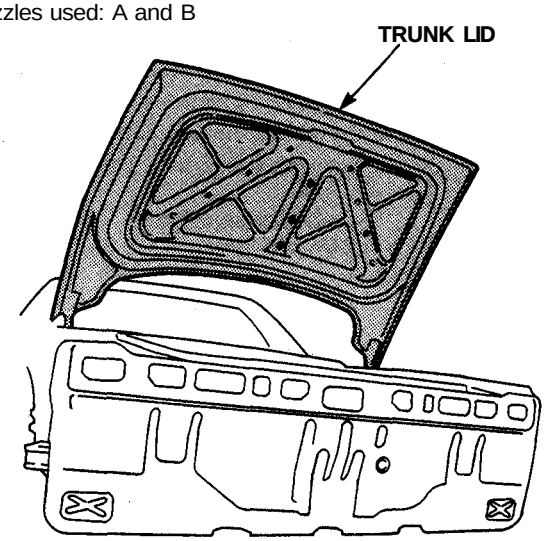

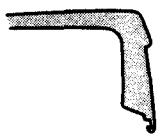

cardiagn.com

Rear Panel, Inside and Outside/Rear Floor End

- Apply the agent to the gap between the rear panel and rear floor.
- Apply the agent to the inside of the rear panel upper and center frame.

Nozzle used: B

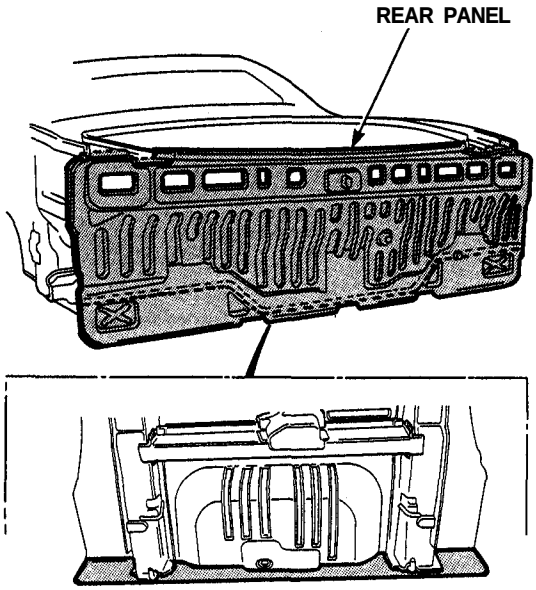

- Undercoat may be used to those areas of the rear panel where they are concealed from view when parts are installed.

Front Lower Cross Member, Inside

- Coat the inside of the front lower cross member.
- Coat the frame member brackets on both sides.

Nozzles used: A and B

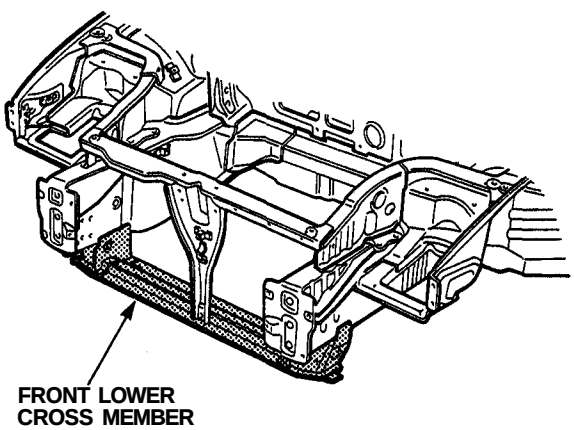

Front Side Frame, Inside

Remove the grommets from inside the front compartment and coat the inside of the front side frame.

Nozzles used: A and B

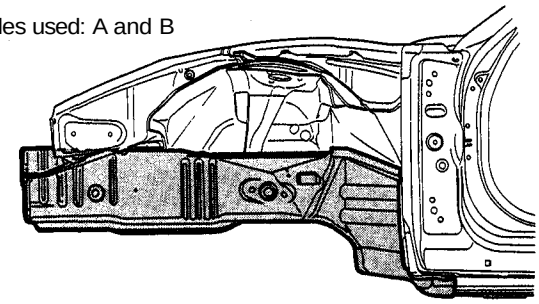

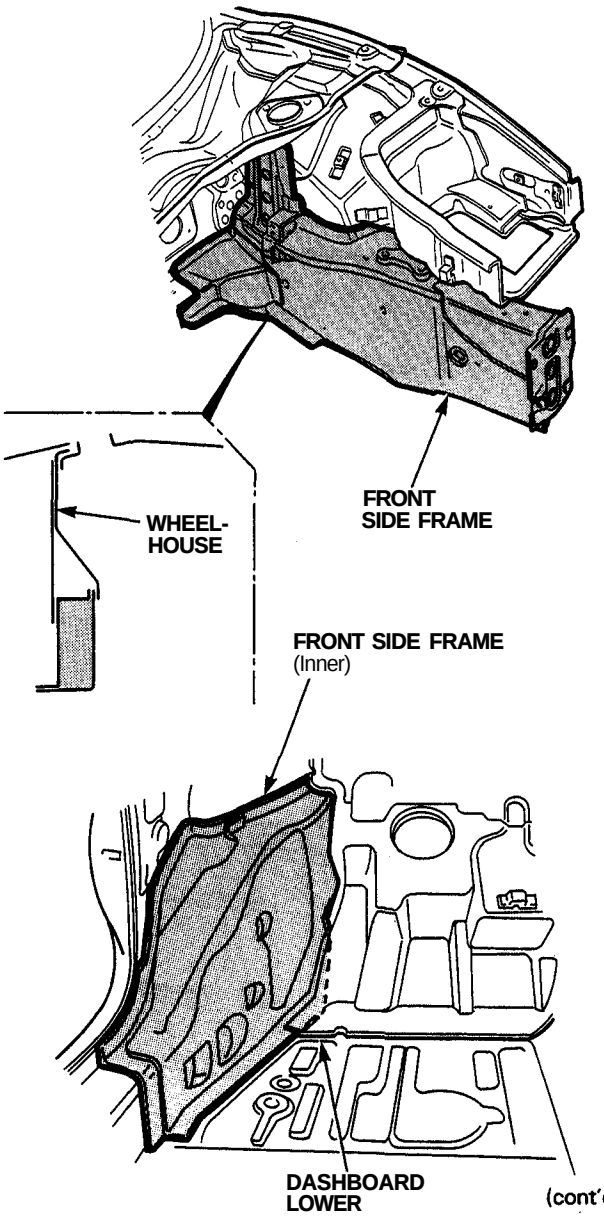

(cont'd)

cardiagn.com

Rust-preventive Treatments

Area to be Covered by Anti-rust Agents (cont'd)

Front Wheelhouse

- Spray agent on the wheelhouse, front fender stay, upper member and damper bracket as shown.
- Undercoat the wheelhouse where anti-rust agent or undercoat has not yet been applied.

NOTE:

- Coat the wheelhouse upper member, particularly the upper face.
- Undercoat the inner fender mounting area of the wheelhouse and upper face of the inner fender.

Nozzles used: A and C

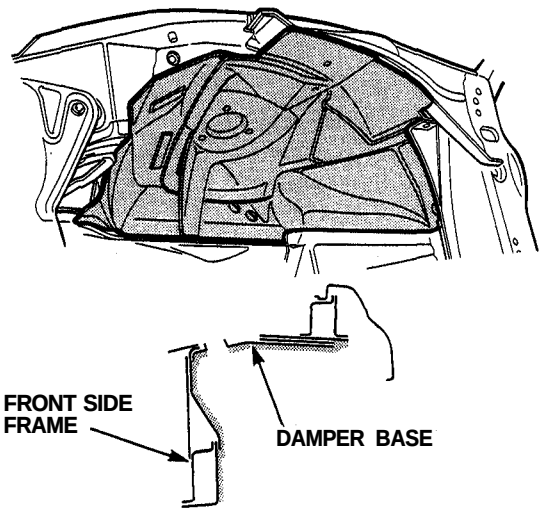

Rear Wheelhouse

- Coat the gaps between the inner and outer wheelhouses, including the damper base.
- Apply agent to the edge of the rear side frame, side sill and rear floor.
- Undercoat the wheelhouse where undercoat or anti-rust agent has not yet been applied.

Nozzles used: B and C

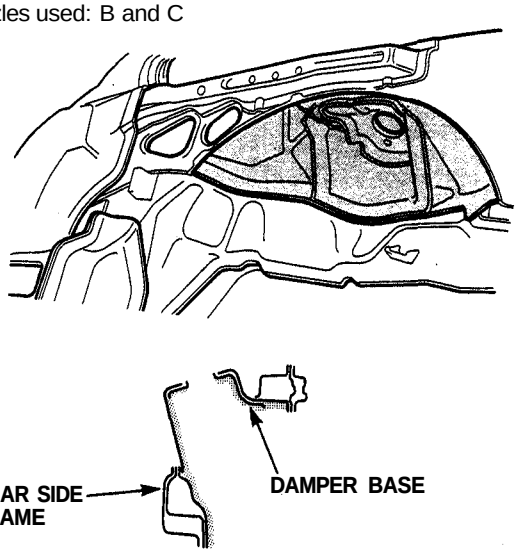

Side Sill, Inside

- Remove the front and rear grommets to spray agent. Insert the nozzle through the holes fully.
- Move the nozzle right and left, and up and down while pulling it back out of the grommet hole.

NOTE: Spray agent until it drips from the drain hole.

Nozzle used: A

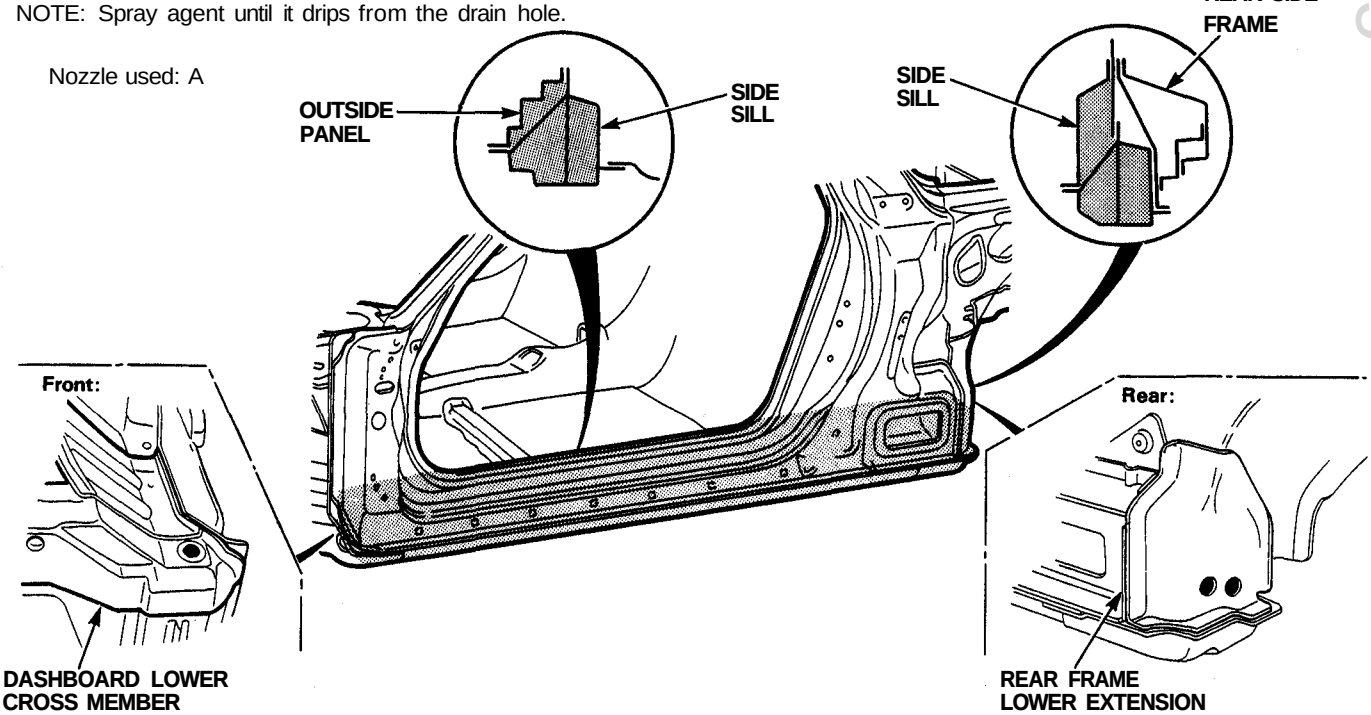

cardiagn.com

Rear Side Frame/Rear Floor Cross Member, Inside

- Remove the grommets from inside the engine compartment and coat the inside of the rear side frame.
- Coat the side frame and engine mount bracket.

Nozzle used: A

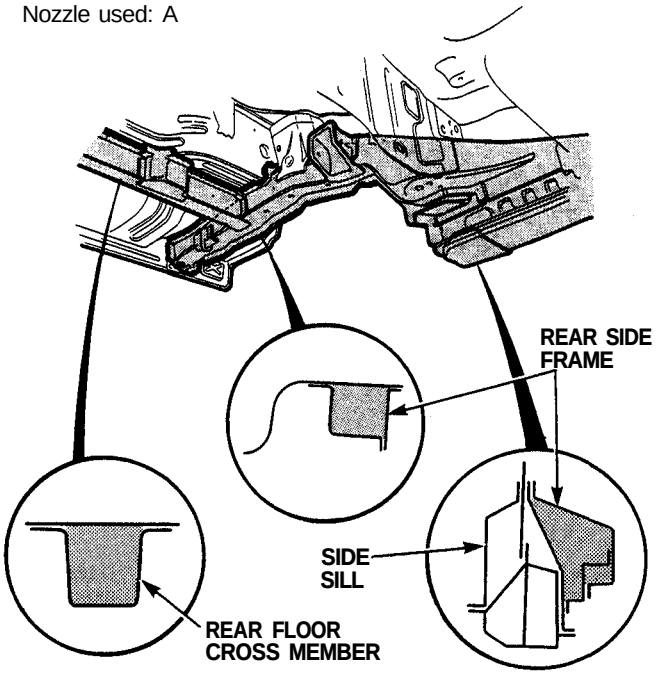

Under Floor Member, Inside

- To spray agent to the inside of the under floor member, insert the nozzle in the holes in the members.
- Also coat the under floors, side sill, and front and rear wheelhouses at the ends.

Nozzle used: A

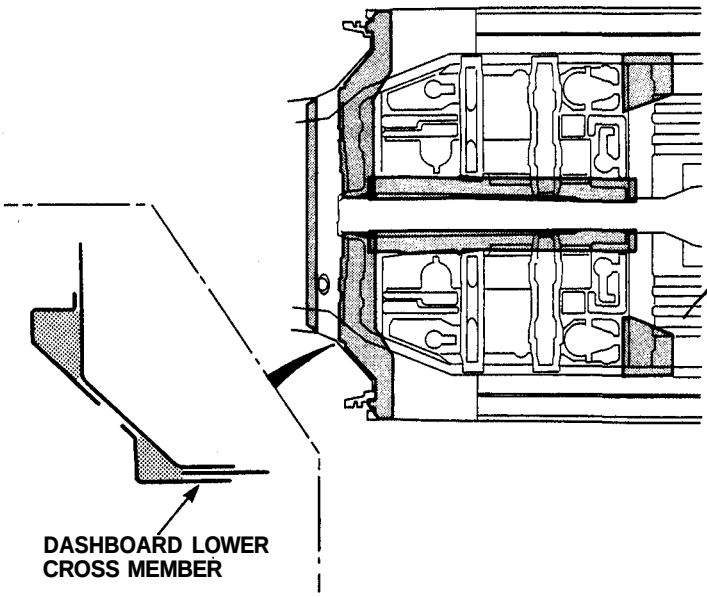

Suspension

NOTE:Do not apply anti-rust agent to the rubber bush.

Front:

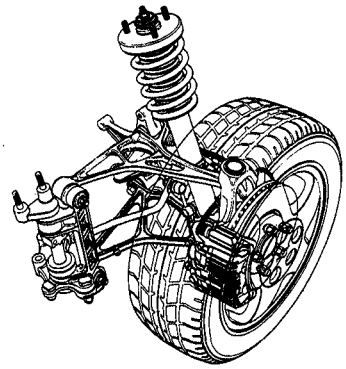

Rear:

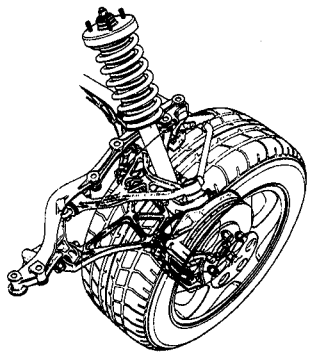

Under Floor

- Undercoat the under floor where undercoat or anti-rust agent has not yet been applied (see page 7-10).
- Coat the bottom of the fuel tank.

NOTE: Apply undercoat to all the surfaces of under floor for cars already put into service.

Nozzle: C

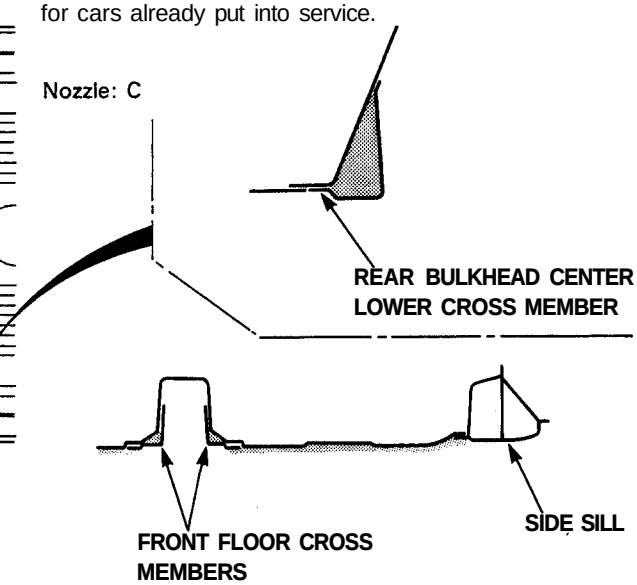

cardiagn.com

Rust-preventive Treatments

Undercoating Diagram

1.	Front floor	Entire (Except floor tunnel)
2.	Dashboard lower cross member	Lower section and entire of the wheelhouse.
3.	Front wheelhouse	Entire wheelhouse
4.	Rear wheelhouse	Entire wheelhouse
5.	Rear floor	From side edge of the rear side frame to the rear side panel edge.
6.	Rear panel	Rear edge of the rear side frame and bottom of the rear floor.

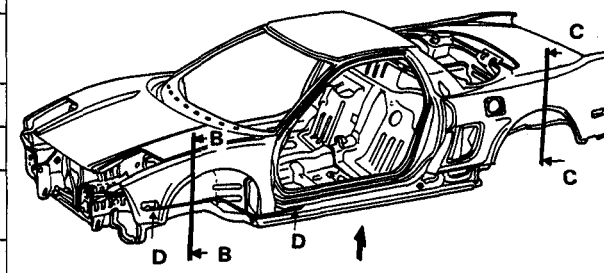

VIEW Z

NOTE:
- Coating thickness: 0.5 mm (0.02 in) MIN.
- indicates PVC coating areas.
- Follow the above instructions for paint repair or refinishing.

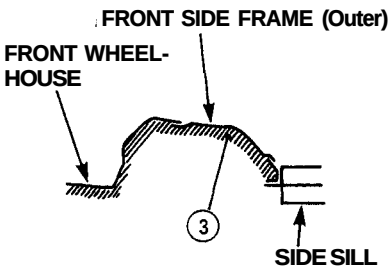

SECTION DD

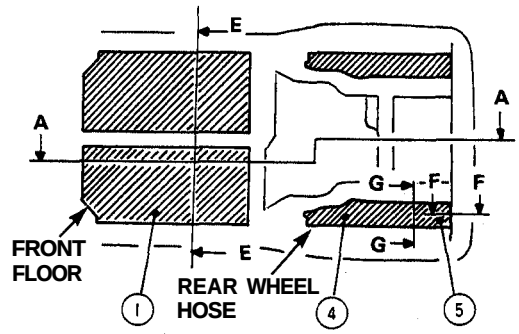

VIEW Z

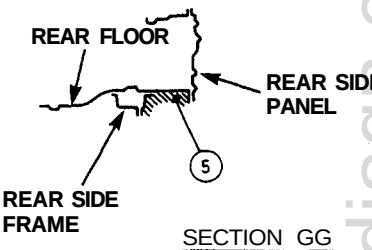

SECTION GG

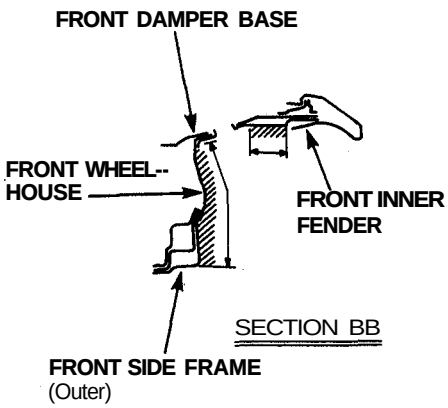

SECTION BB

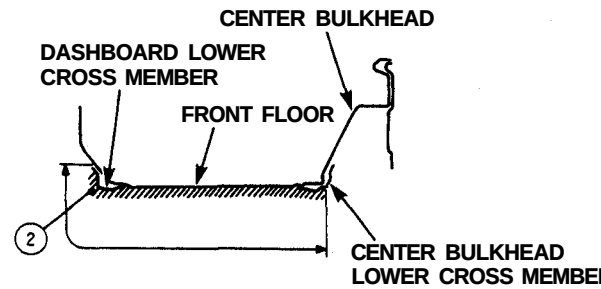

SECTION AA

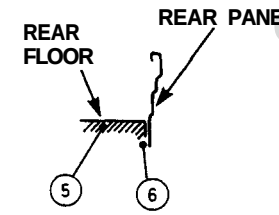

SECTION FF

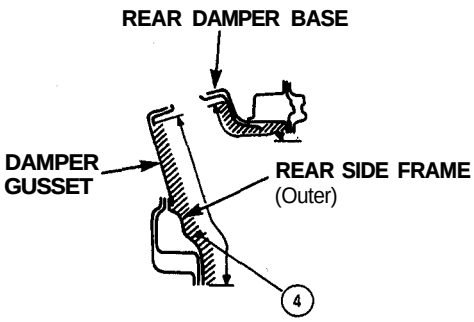

SECTION CC

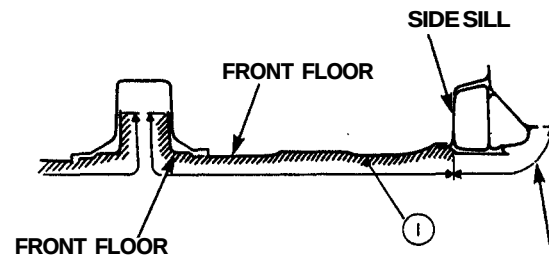

SECTION EE

NOTE: Not be undercoated

cardiagn.com

Color Chart Painting Specifications

Honda code		NH-547	NH-552M	R-77	NH-565	G-70P
Color name		Berlina Black	Sebring Silver Metallic	Formula Red	Grand Prix White	Chariot Green Pearl
Body color	USA	○	○	○	○	○
	Canada	o	o	o	o	○

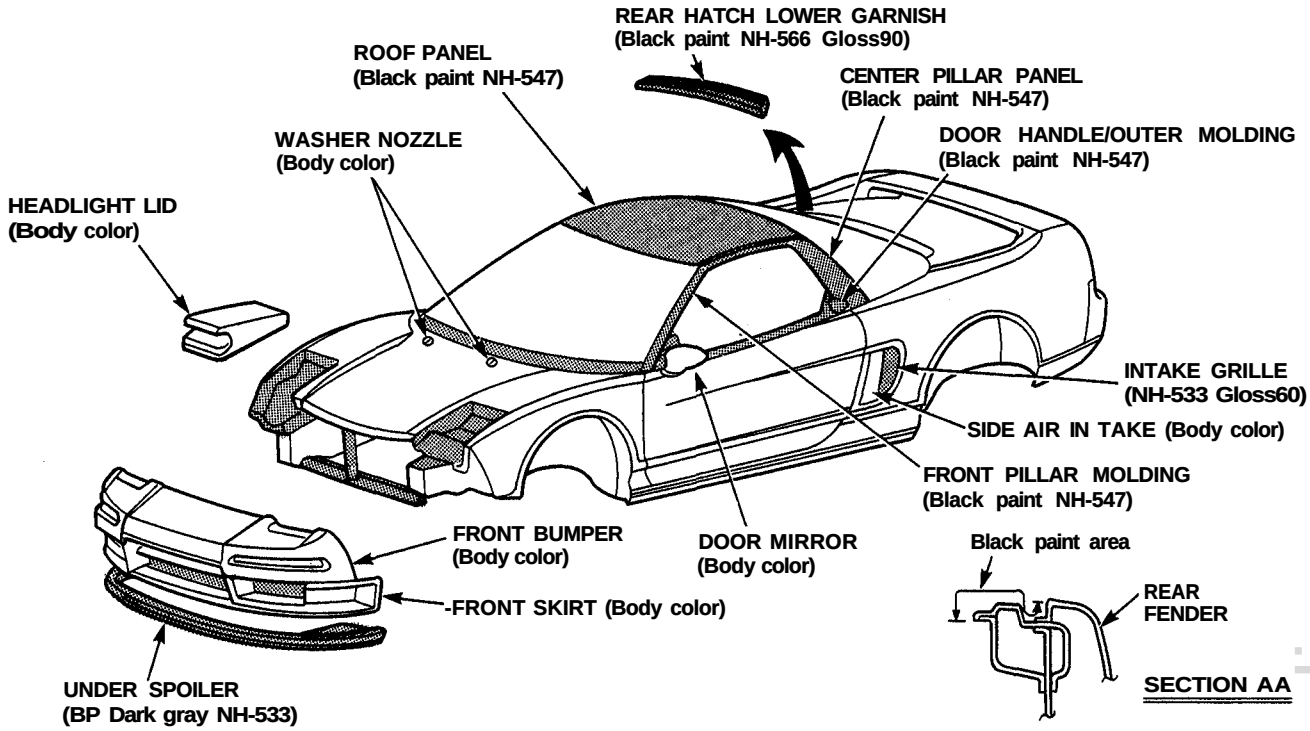

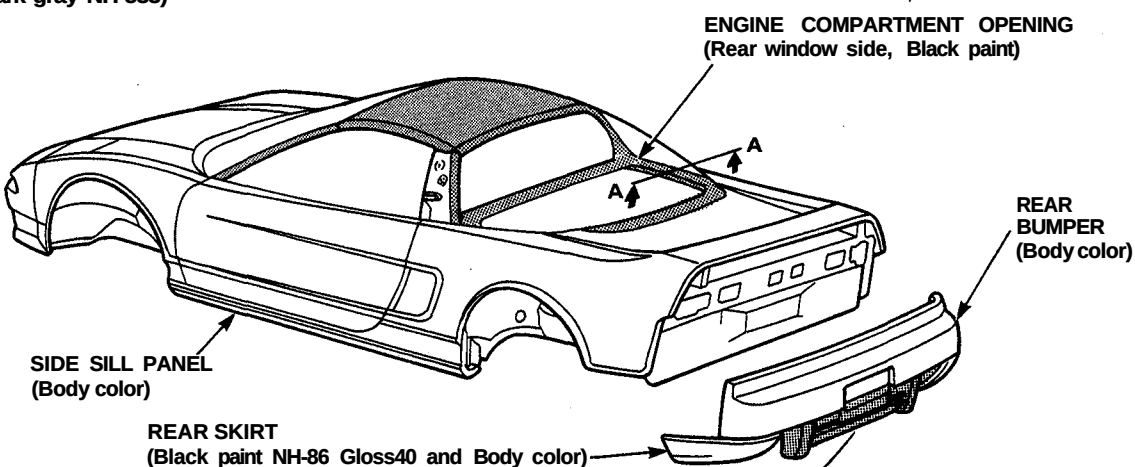

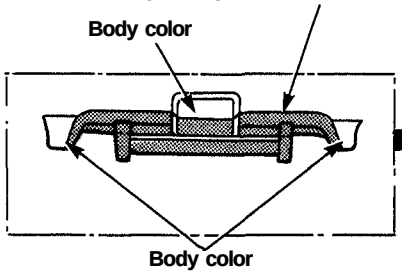

NOTE:

- In case of NH-547 there is no need to paint black.
- Apply NH-86 black (Gloss 40) to visible surface of shadowed area after installing equipment (except G-70P).

cardiagn.com

4C•4B (4-Coat•4-Bake) Paint

General

4C•4B paint finish gives the NSX a deep gloss and stunning finish. This manual provides information on paint defect repair and refinishing. Throughout, the objective has been to explain in a simple yet comprehensive manner the basic items you should know about paint repairs. Select the correct material for the defect and repaint or refinish in the correct manner as described in this manual.

⚠ WARNING

- **Most paints contain substances that are harmful if inhaled or swallowed. Read the paint label before opening the container. Spray paint only in a well ventilated area.**
- **Cover spilled paint with sand, or wipe it up at once.**
- **Wear an approved respirator, gloves, eye protection and appropriate clothing when painting. Avoid contact with skin.**
- **If paint gets in your mouth or on your skin, rinse or wash thoroughly with water. If paint gets in your eyes, flush with water and get prompt medical attention.**
- **Paint is flammable. Store it in a safe place, and keep it away from sparks, flames or cigarettes.**

Basic Rules in Repairing a 4C•4B paint finish

To repair paint damage, always use the 2-part acrylic urethane paints designated; polish and bake each of the four coats, as in production, to maintain the original film thickness, and to assure the same quality as the original finish.

Outline of Factory Painting Process:

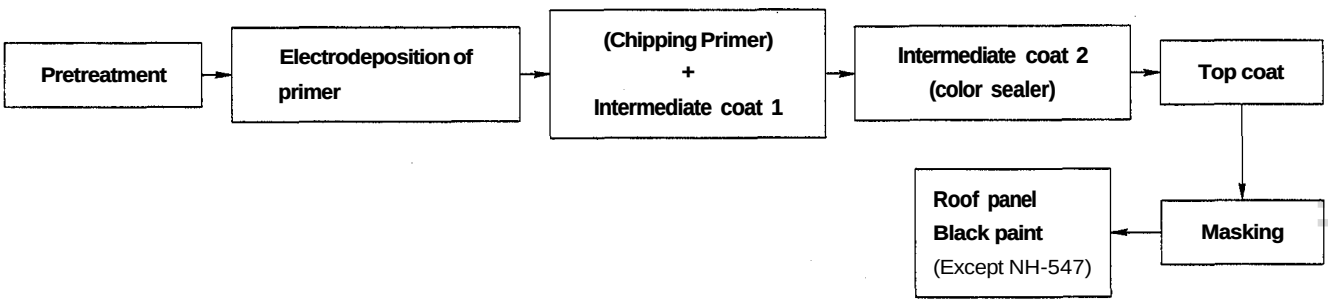

Features in Each Work Process

1. **Pretreatment and Electrodeposition**
   In the pretreatment process, the entire body is degreased, cleaned, and coated with zinc phosphate by dipping after being. After the body has been cleaned with pure water, it is placed in an electrolytic bath of soluble primer (Cationic Electrodeposition). This will produces a thorough corrosion inhibiting coating on the inner surfaces and corners of the body, pillars, sills or panel joints. Chipping primer is then applied to the most susceptible area (see page 8-11).
2. **Intermediate coat 1**
   The intermediate coat 1 is applied to the prepared surface in for further protection against damages.
3. **Intermediate coat 2**
   The intermediate coat is matched to the color of the top coat.
4. **Top coat**
   Water base enamel paint and either polyester or acrylic resin paint is used in the top coat for higher solidity, smoothness, brightness, and weather resistance.

Sectional View of Paint Coats:

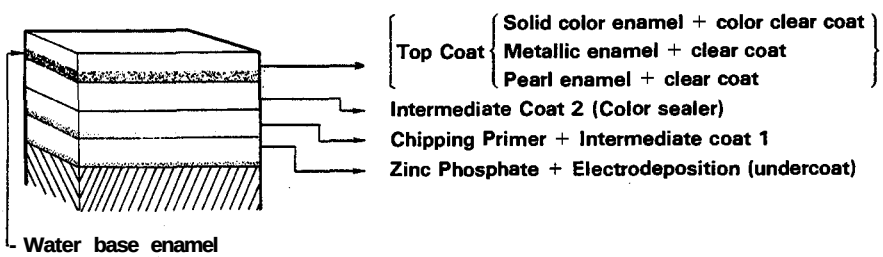

cardiagn.com

4C•4B (4-Coat•4-Bake) Paint

Color Matching

The intermediate coat will determine the color and quality of the paint finish (smoothness, gloss, brightness and thickness). Be sure to follow mixing instructions explicitly and measure the paint accurately.

Combination Table:

Top Coat	Intermediate Coat 2		Intermediate Coat 1	
	Color 1 (N9.0)	Color 2 (N3.0)	Color 1 (N8.0)	Color 2 (N4.5)
NH-547 Berlina Black		○		○
R-77 Formula Red	Exclusive color (Red color base)			○
NH-552M Sebring Silver Metallic	○		○	
NH-565 Grand Prix White	○		○	
G-70P Chariot Green Pearl	Exclusive color (Black color base)			○
For Mass Production	Polyester or Urethane Paints N9.0: White N3.0: Dark Gray		Polyester or Urethane Paints N8.0: White N4.5: Dark Gray	
For Repair	1. Enamel paint for top coat is used as intermediate coat 2 (Acrylic urethane paint) 2. Exclusive color: Use the same hue as the exclusive color. (Acrylic urethane paint)		Present epoxy two-part primer surfacer (gray) may be used.	

cardiagn.com

Paint Refinishing

Paint damage can appear in any form. Before making a repair, check the damaged area carefully, and determine the procedure best suited to the type of damage. The following relates paint refinishing methods to various types of paint damage of damage or defects.

Defects and Refinishing Processes

⚠WARNING

- **Ventilate when spraying paint. Most paint contains substances that are harmful if inhaled or swallowed. Read the paint label before opening paint container.**
- **Avoid contact with skin. Wear an approved respirator, gloves, eye protection and appropriate clothing when painting.**
- **Paint is flammable. Store in a safe place, and keep it away from sparks, flames or cigarettes.**

A. Damage or defects that have gone through to the aluminum alloy base surface

Oxidation or deformation:

Steps:

① Featheredging
② Preparation of the aluminum alloy base
③ Apply of chemical coating to metal surface Metal conditioner, aluminum alloy treatment.
④ Apply undercoat (primer surfacer)
⑤ Apply intermediate coat 1 (surfacer and primer surfacer)
⑥ Apply intermediate coat 2 (color matched to top enamel paint)
⑦ Apply of top coat (body color paint)
Solid color: Color enamel + color clear coat
Metallic color: Metallic enamel + clear coat
Pearl color: Pearl enamel + clear coat

B. Damage or defects up to undercoat or intermediate coat 1

External damage or blisters:

(1) Perform Steps ④ through ⑦ under Item A.

C. Damage defects up to intermediate coat 2

External damage:

(1) Perform Steps ⑥through ⑦ under Item A.

D. Damage or defects which have not gone through to intermediate coats (only in top coat)

Shallow scratches or score marks:

(1) If damage has gone through to the metallic paint and pearl paint, spray metallic enamel and pearl enamel, then apply top coat wet on wet.
(2) If damage has not reached the metallic and pearl paints and remained in the clear top coat, polish the damaged surface or spray clear top coat alone.

NOTE: Try to repair by polishing as much as possible if the damage has not reached metallic and pearl paints.

E. Replacement of Parts

-1 Welded parts

Front side frame, etc.

(1) Perform Step ① through ⑦ if the damaged area is covered with filler or welded with reinforcement plate.
(2) Perform Step ⑥ through ⑦ for undercoats except those on joints (Intermediate coat 1 for replacement parts).
(3) On back of parts, apply paint to where undercoats are burned by heat of welding. Follow this with a rust preventive treatment (see section 7).

-2 Single Parts

Painting of outer and inner hood, door, trunk lid etc.

- Painting of inside of the front fender and rear fender.

(1) Perform Step ⑤ through ⑦ of Item A.
(2) Perform Steps ⑥ and ⑦ of Item A.
- Spray metallic and pear! enamel paints to door and other parts.

(3) Only enamel top coat paint may be used.
- Solid color enamel
- Metallic enamel
- Pearl enamel

(4) After spraying enamel paint, perform rust preventive treatment (apply inner or outer rust preventive agent).

cardiagn.com

4C•4B (4-Coat•4-Bake) Paint

Refinishing Processes

NOTE: (▨ : Indicates steps which may be required according to the degree of damage)

Refinishing Processing \ Damage	To aluminum alloy base	To under/ intermediate, coats	To intermediate coat 2	To top coat	Replacement Parts	
					Welded part	Single part
1. Featheredging (polishing damaged surface)						
2. Preparation of aluminum alloy base						
3. Air blowing/Degreasing						
4. Treatment of aluminum alloy base						
5. Filling/drying/Polishing						
6. Air blowing/Degreasing						
7. Masking (part)						
8. Undercoating/Drying						
9. Polishing undercoat						
10. Air blowing/Degreasing						
11. Masking						
12. Spraying intermediate coat 1/Drying						
13. Polishing intermediate coat 1						
14. Air blowing/Degreasing						
15. Masking (reinforcement)						
16. Spraying intermediate coat 2/Drying						
17. Polishing intermediate coat 2/Top coat						
18. Air blowing/Degreasing						
19. Masking						
20. Spraying top coat/Drying (Black painting of roof panel)						
21. Polishing/Buffing						

carpaint.com

Refinishing Procedures

1. Featheredging (polishing damaged areas)

-1. Damage to aluminum alloy base

- Sand the damaged area flat and smooth with a double action sander and #60 or #80 disc paper.
- Sand the boundary between the metal surface and undercoat with a double action sander and #180 or #280 disc paper. Try to sand a larger area than the damage.

NOTE:
- Make sure there is not height difference between the metal surface and undercoat.
- If double action sander is not available, use a rubber block and wrap sandpaper around it to sand the surface.

⚠WARNING To prevent eye injury, wear goggles or safety glasses whenever sanding, cutting or grinding.

-2. Damage to Undercoat
Intermediate coat 1
Intermediate coat 2
Top coat
Paint coat on replacement parts

Sand the damaged surface flat and smooth with a double action sander and #280 or #320 paper.

NOTE:
- If double action sander is not available, use a rubber pad and wet or dry sand the surface with #280, #320, #400 or #600 sandpaper.
- After sanding, check that the surface is flat and smooth.
- Perform the operations in Item 1-1 above for the areas where parts are welded to the body.

2. Preparation of aluminum alloy base surface

Remove all corrosion from the damaged area using #180 or #280 paper.

3. Air Blowing/Degreasing

Air blow the sanded area, then degrease with a wax and grease remover (for USA usage-DuPont 38125 Enamel Reducer).

4. Treatment of aluminum alloy base

- Brush or spray a solution of chrome phosphate or washer primer to the exposed aluminum alloy base.
- Use the following materials to treat the aluminum alloy base:
  - KAR washer primer (Kansai Paint) (for usage-DuPont)
  - 110 active primer Agent (Nippon Paint)
  - G113 treatment (Isam Paint) (for USA usage-DuPont)

NOTE:
- Follow the manufacturer's instructions.
- Treat the aluminum alloy base surface, as much as possible, to provide a better bonding surface for the subsequent paint.

5. Application of Filler
Drying
Sanding

- Small cracks or pinholes in the aluminum alloy base should be repaired with a filler and sanded flat and smooth.

NOTE:
- Mix the filler to the hardener in the correct ratio.
- Follow the filler manufacturer's instructions.

⚠WARNING Body parts being dried with an industrial dryer can dusrial dryer can get hot enough to cause injury. Do not touch parts being dried.

- Allow the filler to air dry for about 5-6 minutes, then force dry with an infrared lamp.

NOTE: Keep a 40-50 cm (16~20 in) from the filler while drying.

- Stop drying the filler if a white mark appears when the surface is scratched with your nail. Wet or dry sand the surface flat and smooth with a #280 or # 320 paper.

(cont'd)

carpiagn.com

Refinishing Procedures (cont'd)

6. Air Blowing/Degreasing

Air blow the surface to be repaired, then degrease with a wax and grease remover (for USA usage-DuPont 38125 Enamel Reducer).

NOTE: Also clean and degrease the surfaces where masking tape will be attached.

7. Masking

Mask the areas surrounding the damage to prevent overspray from the primer surfacer.

NOTE: Use masking tape and paper to cover the undamaged areas.

8. Application of Undercoating (Primer Surfacer)/ Drying

⚠WARNING

- **Ventilate when spraying paint. Most paint contains substances that are harmful if inhaled or swallowed. Read the paint label before opening paint container.**
- **Avoid contact with skin. Wear an approved respirator, gloves, eye protection and appropriate clothing when painting.**
- **Paint is flammable. Store in a safe place, and keep it away from sparks, flames or cigarettes.**

- Spray the primer surfacer over the filler and surface (use epoxy or urethane 2-part primer surfacer). Spray : 2-3 coats.

- Use the following materials:
  - 615S Primer Surfacer (DuPont)
  - Primer Surfacer EP (Akzo)
  - NPS735 Urethane Primer Surfacer (R-M)

- Let the primer surfacer air dry for 5-10 minutes, then force dry with a infrared lamp.

NOTE: Keep the dryer 40-50 cm (16~20 in) from the surface.

9. Application of Polishing Undercoate

- Remove the masking paper and tape.
- Check that the undercoat is dried thoroughly, then dry or wet sand the surface with a #280 or #320 paper.

NOTE:
- Use a rubber block and sand flat and smooth.
- Sand the entire surface to be refinished.

10. Air Blowing/Degreasing

⚠WARNING

- **Do not use high air pressure: use only an approved, 210 kPa (2.1 kg/cm^2, 30 psi) air nozzle.**
- **Wear goggles or safety glasses to prevent eye injury.**

Air blow all the surfaces, then degrease with a wax and grease remover (for USA usage-DuPont 38125 Enamel Reducer).

NOTE: Also degrease the surfaces where masking tape will be attached.

11. Masking

Mask the undamaged areas surrounding the damage to prevent overspraying of primer surfacer (intermediate coat).

NOTE: Use masking tape and paper to mask the body. A vinyl cover may also be used to effectively mask the body.

cardiagn.com

12. Application of Intermediate Coat 1 (Primer surfacer is used for this purpose) spraying/drying

⚠WARNING

- **Ventilate when spraying paint. Most paint contains substances that are harmful if inhaled or swallowed. Read the paint label before opening paint container.**
- **Avoid contact with skin. Wear an approved respirator, gloves, eye protection and appropriate clothing when painting.**
- **Paint is flammable. Store in a safe place, and keep it away from sparks, flames or cigarettes.**

- Spray either 2-part epoxy or urethane primer surfacer to polished primed surface as intermediate coat.
- Let the paint coat air dry for 5-10 minutes, then force dry with an infrared lamp.

NOTE: Keep the dryer 40-50 cm (16-20 in) from the surface.

For replacement parts:
Spray intermediate coat 2 on over the surface.

NOTE:
- For the back faces, you may start with Step 16 "Application of Intermediate Coat 2."
- Top coat enamel is used for this purpose

13. Polishing of Intermediate Coat 1

Check that the undercoat is dried thoroughly, then dry or wet sand the surface with a #400 or #600 paper.

NOTE: Use a rubber block and sand flat and smooth, covering entire surface.

14. Air Blowing/Degreasing

⚠WARNING

- **Do not use high air pressure; use only an approved, 210kPa (2.1 kg/cm^2, 30 psi) air nozzle.**
- **Wear goggles or safety glasses to prevent eye injury.**

Air blow all the surface, then degrease with a wax and grease remover (for USA usage-DuPont 38125 Enamel Reducer).

15. Masking

Check the masking paper (Step 11) for tears or fouling, and repair or reinforce as necessary.

16. Application of Intermediate Coat 2 (same color as enamel) top coat spraying/drying

⚠WARNING

- **Ventilate when spraying paint. Most paint contains substances that are harmful if inhaled or swallowed. Read the paint label before opening paint container.**
- **Avoid contact with skin. Wear an approved respirator, gloves, eye protection and appropriate clothing when painting.**
- **Paint is flammable. Store in a safe place, and keep it away from sparks, flames or cigarettes.**

- Use the same color paint as the top coat, and spray it over the surface until the intermediate coat (primer surfacer) is fully covered.
- Spray the paint slightly thicker than normal to allow for loss during subsequent polishing.
  - Super ponacle II (R-M)
  - Super Centari (Du Pont)
  - Auto cryl (Akzo)

17. Polishing of Intermediate Coat 2

- Check that the paint coat has been dried thoroughly, then dry or wet sand the surface with a #600, #800, or #1000 paper.

NOTE: Use a rubber block and sand flat and smooth, being careful not to expose the intermediate coat 1.

Polishing of Top Coat (if damaged):

- Use the same technique described above.

⚠WARNING

- **Do not use high air pressure; use only an approved, 210kPa (2.1 kg/cm^2, 30 psi) air nozzle.**
- **Wear goggles or safety glasses to prevent eye injury.**

(cont'd)

cardiagn.com

4C•4B (4-Coat•4-Bake) Paint

Refinishing Procedures (cont'd)

18. Air Blowing/Degreasing

- Air blow the entire surface, the degrease with wax and grease remover (for USA usage-DuPont 38125 Enamel Reducer).
- For shading or spot painting, polish the area with a polishing compound. Sand with a #2000 paper to give a better bonding surface for the subsequent paint.

19. Masking

- Remove all existing masking papers, then mask with new papers.
- Use a heat resistant type masking tape (SCOTCH TAPE) where tape is attached directly to the body.
- Use brown paper or masking roll paper to cover.

NOTE:
- Mask the area surrounding the damage sufficiently to prevent overspray. It is also a good practice to use a vinyl cover to protect other areas.
- Protect resin parts with aluminum foil under the brown paper or masking paper to prevent damage to due to heat during baking.

20. Application of Top Coat Spraying/drying

NOTE: Black painting of roof panel.
- Prior to putting the car in the painting booth, thoroughly clean the interior and spray water over the floor. Be careful about air-blow dust and dirt.

⚠WARNING
- **Do not use high air pressure; use only an approved, 210kPa (2.1 kg/cm^2, 30 psi) air nozzle.**
- **Wear goggles or safety glasses to prevent eye injury.**

- Air dry and degrease the surface before spraying the paint. Also clean the surface with a tack cloth.

⚠WARNING
- **Ventilate when spraying paint. Most paint contains substances that are harmful if inhaled or swallowed. Read the paint label before opening paint container.**
- **Avoid contact with skin. Wear an approved respirator, gloves, eye protection and appropriate clothing when painting.**
- **Paint is flammable. Store in a safe place, and keep it away from sparks, flames or cigarettes.**

- Spray color matched top coat over the prepared surface. Apply 2-3 coats in two directions until the intermediate coat 2 is fully covered.

NOTE: For application of the top coat, refer to Step 16 "Application of Intermediate Coat 2."
Solid color: Color enamel + color clear coat
Metallic color: Metallic enamel + clear coat
Pearl color: Pearl enamel + clear coat

⚠WARNING **Body parts being dried with an industrial dryer can get hot enough to burn. Do no touch parts being dried.**

- After spraying, allow the paint to settle for about 10 minutes, then force dry with an infrared lamp.

NOTE: Follow the paint manufacturer's instructions.

21. Polishing/buffing

- Let the paint dry gradually, then polish the surface carefully using a polishing compound and sponge buff.
- To remove lint or dirt, wet sand the surface with #2000 paper or finer first, then polish with compound.

NOTE: Polish all roughness caused by sanding thoroughly. To do this, first polish with very fine compound, then with ultra fine compound.

- After polishing, remove the masking paper and tape and wash the entire vehicle thoroughly.

cardiagn.com

Soft Chipping Guard Primer Coat

General

The removal of paint and Undercoating by stones and gravel immediately exposes metal to the atmosphere, causing it to rust. The thickness of this rust increases if the process continues unchecked. The soft chipping guard primer protects against damage due to the impact of flying objects. The purpose of this guide is to provide information you will find useful when repairing damage to the protective coating. Refer to the Soft Chipping Guard Primer Undercoating Diagram.

Type	Composition	Physical properties	Drying time
Polyester resin	Polyester resin, Pigment, Additive, Solvent } 100%	Color Gray Viscosity 26sec/68°F (20°C) at painting Non volatile 40~45% at painting	302~320°F (150~160°C) x 30 minutes

The soft chipping guard primer is applied over the E.D. (Electrostatically Deposited) primer. It is followed by guide coating and top coating.

The soft chipping guard primer produces a smooth surface when dry. It should be sprayed so the thickness of the protective film is 20 microns.

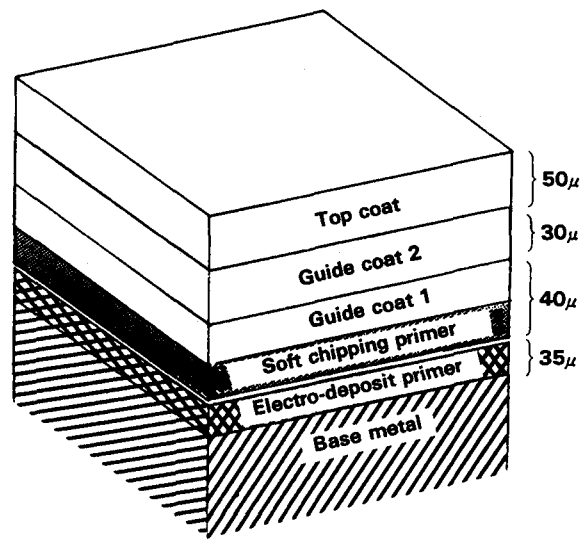

cardiagn.com

Soft Chipping Guard Primer Coat

Coating Diagram

①	Front of the hood	150 mm (6.0 in) from the front edge	Class 2 Thin coat
②	Rear of the hood	150 mm (6.0 in) from the rear edge	↑
③	Front of the roof panel	150 mm from the front edge	↑
④	Front of the front fender	From forward edge of wheelarch to the center	↑
⑤	Rear of the front fender	Upper rear of the front fender	↑
⑥	Front of the doors	100 mm (4.0 in) from the front edge	↑
⑦	Front of the rear fender	From forward edge of wheelarch to the center	↑
⑧	Lower rear of the rear fender	From the rear tip of the rear wheelarch to the rear edge of the rear fender. (BR-4 line to BR-5 line)	↑

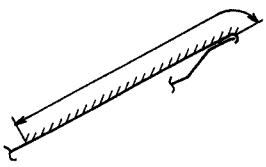

SECTION BB

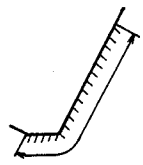

SECTION EE

SECTION FF

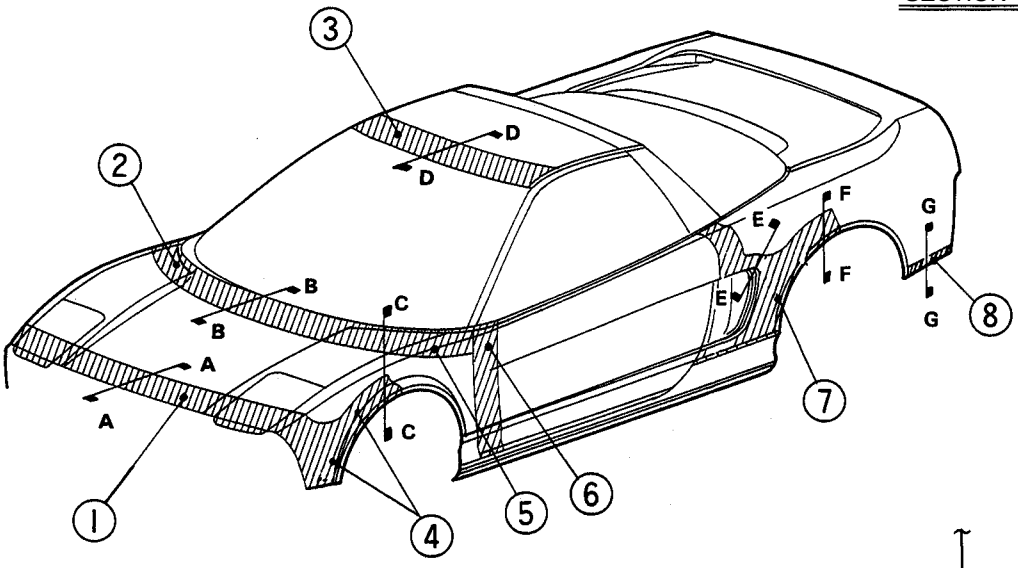

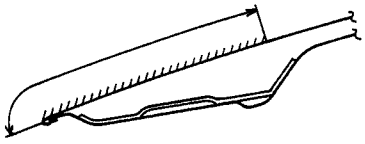

SECTION AA

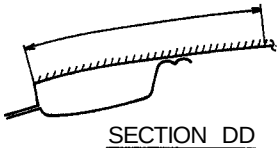

SECTION DD

SECTION CC

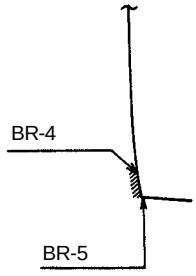

SECTION GG

NOTE:

- The diagram shows the areas to which soft chipping primer is to be applied.
- Make sure to coat the flange on front and rear wheel arches.

cardiagn.com

Types of Soft Chipping Guard Primer (Reference)

Type	Application	Composition	Physical property	Drying time
Dual liquid synthetic resin	Room temperature Baked at 176°F (80° C) for 40 minutes	Pigment: 12% Calcic pigment: 37% Epoxy poliole resin: 15% Additive, Solvent 36% 100%	Color: Gray Viscosity: 68°F (20°) Non volatile: 65% mini. Specific gravity: 68°F (20°C), 1.378	Room temperature: 68°F (20°C), 3 days Baked: 176°F (80°C), 40 minutes (to harden thoroughly)
Dual liquid Acrylic / Urethane } resin	Room temperature Baked at 176°F (80° C) for 30 minutes.	Pigment: 40% Acrylic resin: 37% Additive, Solvent 23% 100%	Color: Gray Viscosity: 68°F (20°) 4-6 Poiseuille Non volatile: 65% mini. Specific gravity: 68°F (20°C), 1.35	Room temperature: 68°F (20°C), a day Baked: 176°F (80°C), 30 minutes (to harden thoroughly)

Repair Materials and Tools (Example)

Gun and brushes:
- Spray gun
  NOTE: Any gun having a tip of more than 1.0 mm (0.04 in) in diameter may be used for spraying the primer.
- Viscosity measure
  Iwata-type (IMS) cup, Ford cup
- Beaker
  1-2 liter in (1.05-2.10 U.S.qt) in capacity
- Stirring stick

Materials:
- Use primers equivalent to the ones shown in Types of Chipping Guard Primer (Reference).
- Make sure to keep the thickness of the coat at 20 micros.

Masking:
- Masking tape, paper, vinyl sheet and plate (veneer and steel).
- Masking plates are not necessary when spraying in a booth.

Tools:
- Air or double action sander
- Sandpaper (#240-#400)

Protectors:
- Wear an approved respirator or dust mask, gloves, safety goggles and other protective clothing.
- Rags.

Thinner and cleaner:
- Use the thinner specified for the primer.
- Any commercially available lacquer thinner may be used to clean the gun.

⚠ WARNING

- **Most paints contain substances that are harmful if inhaled or swallowed. Read the paint label before opening the container.**
- **Spray paint only in a well ventilated area.**
- **Cover spilled paint with sand, or wipe it up at once.**
- **Wear an approved respirator, gloves, eye protection and appropriate clothing when painting. Avoid contact with skin.**
- **If paint gets in your mouth or on your skin, rinse or wash thoroughly with water. If paint gets in your eyes, flush with water and get prompt medical attention.**
- **Paint is flammable. Store it in a safe place, and keep it away from sparks, flames or cigarettes.**

cardiagn.com

Soft Chipping Guard Primer Coat

Coating Procedures

NOTE: This section covers the application of the soft chipping guard primer to the replacement part.

1. Sanding the replacement part

⚠WARNING Wear goggles or safety glasses to prevent eye injury.

Sand the area to be painted with #240-#400 sandpaper.

NOTE:
- Do not oversand the edges or corners of the part.
- Do not expose bare metal.

2. Air blowing/Degreasing

⚠WARNING
- **Do not use high air pressure; use only an approved, 210kPa (2.1 kg/cm^2, 30 psi) air nozzle.**
- **Wear goggles or safety glasses to prevent eye injury.**
- **Paint thinner is flammable. Store it in a safe place, and keep it away from sparks, flames or cigarettes.**

Clean the surface with compressed air and wax and grease remover.

3. Masking
- Place masking tape or paper around the surface to be painted.
- Cover as wide an area as possible with tape or paper to keep primer from spreading.

4. Spraying chipping guard primer
- Stir the primer thoroughly.
- Put the primer in a beaker and weigh the needed amount of primer to be used.
- Mix the hardener into the primer, following the manufacturer's instructions.

NOTE: Measure the primer and hardener so they are in correct ratio.

Item	Primer : Hardener
*High Primer Surfacer 2C	10 : 1
*Auto Primer Surfacer Mighty	5 : 1

- Add the specified thinner to the mixture of hardener and primer to attain the proper viscosity for spraying.
  2C 68°F (20°C) 18 sec ± 1
- These substances are not available in the U.S.A. Honda recommends using DuPont's 123 Vinyl Coating, or Sherwin-Williams' Vinyl Gravel Guard. Follow the manufacturer's instructions for application.
- Once mixed with the hardener and thinner, the primer must be used within the times shown below.

Temp.		41°F (5°C)	50°F (10°C)	68°F (20°C)
Time	High Primer Surfacer 2C	30H	24H	8H
	Auto Primer Surfacer Mighty	4H	3.5H	3H

⚠WARNING
- **Most paints contain substances that are harmful if inhaled or swallowed. Read the paint label before opening the container. Spray paint only in a well ventilated area.**
- **Cover spilled paint with sand, or wipe it up at once.**
- **Wear an approved respirator, gloves, eye protection and appropriate clothing when painting. Avoid contact with skin.**
- **If paint gets in your mouth or on your skin, rinse or wash thoroughly with water. If paint gets in your eyes, flush with water and get prompt medical attention.**
- **Paint is flammable. Store it in a safe place, and keep it away from sparks, flames or cigarettes.**

cardiagn.com

- Fill the gun's paint cup with the primer. Use a strainer when pouring the primer into the cup.

- Primer should never be applied to a dirty or greasy surface. Before spraying, blow dust and dirt off the surface and clean with wax and grease remover.

(Method of spraying)

- Do not try to cover the surface with one heavy coat. Apply several thin coats.

NOTE:
- Spray coat 4-5 coats to get 20 microns of thickness, as one coat deposits 5-7 microns.
- Spray the primer at 250-300 kPa (2.5-3.0 kg/cm^2, 35.6-42.7 psi) pressure. Spraying with improper air pressure will cause imperfections.
- Open the gun 3-4 turns.
- Wipe up unwanted primer immediately with thinner.

5. Cleaning spray gun

- After spraying, be sure to clean the spray gun thoroughly with thinner or solvent.

- The gun will be permanently clogged if the primer is allowed to dry.

6. Drying

- After spraying the chipping guard primer, air-dry for 7-10 minutes to evaporate the thinner in the primer. Then dry it with infrared lamps at 176°F (80°C) for 30-40 minutes.

NOTE: Insufficient baking may cause pinholes if the primer coat is too thick.

- The temperature lamps and drying time recommendations should be followed closely.

7. Intermediate and Top coating

- Sand the chipping guard primer film with #280-#400 sandpaper.

- Follow the intermediate/top coating procedures (see page 8-3).

Temperature		41°F (5°C)	68°F (20°C)	86°F (30°C)	140°F (60°C)	176°F (80°C)
Time	Before sanding	8-13H 6-10H	3.5-5H 4-5H	2-3H 2-4H	30 Min. 15-20 Min.	20 Min. 10-15 Min.
Minimum time	Before painting	8H 10-18H	4H 6-8H	3H 4-8H	30 Min. 20-40 Min.	20 Min. 15-30 Min.

NOTE: The upper line of time shows specifications for High Primer Surfacer 2C, and the lower line Auto Primer Surfacer Mighty.

cardiagn.com

Types and Materials of Exterior Resin Parts

NOTE: A standard symbol is stamped on the side under of each resin part to shown the type of material used.

Example:

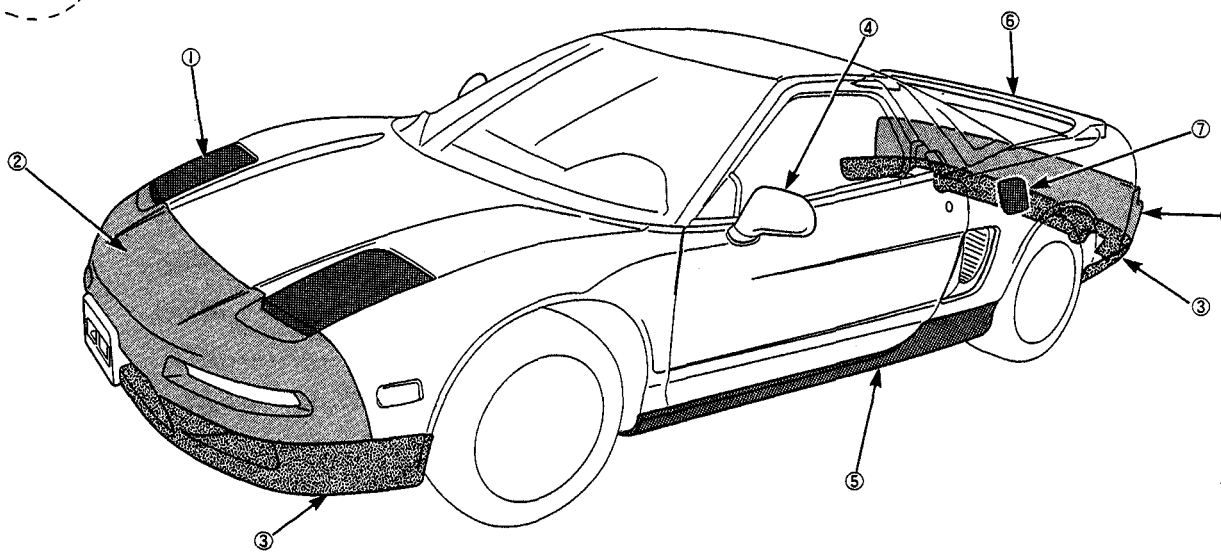

No.	Part Name	Material	Repair procedures
①	Headlight Lid	PA6/PPE-M (Polyamide/Polyphenyen ether)	see page 9-22
②	Front and Rear Bumpers	PBT-P (Polybutylene terephthalate)	see page 9-3
③	Front and Rear Skirts	PP (Polypropylene)	see page 9-13
④	Door Mirror Housing	ABS (Acrylonitrile butadiene styrene)	see page 9-26
⑤	Side Sill Panel	PA6/PPE-M (Polyamide/Polyphenylene ether)	see page 9-22
⑥	Trunk Lid Spoiler	UP-G (Polyster unsaturated thermoset)	see page 9-22
⑦	Fuel Lid	PA6/PPE-M (Polyamide/Polyphenylene ether)	see page 9-22

cardiagn.com

Front and Rear Bumpers

General

The front and rear bumpers are made of Polybutylene terephthalate and can be repaired if the damage or deformation is minor. This manual offers the standard practice for repairing the bumpers, which are similar to those of other resins such as polypropylene (PP) and urethane. When repair is necessary, be sure to follow the instructions described in this manual. Use of paints other than those specified in this manual, such as acrylic lacquers, may damage the bumpers.

Front:

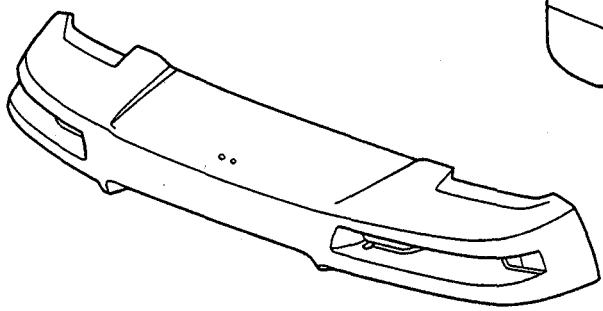

Rear:

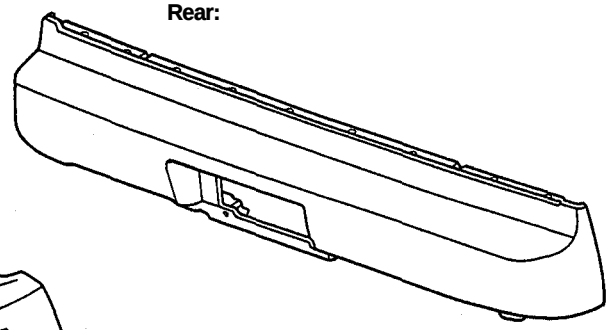

Sectional View of Paint Coats

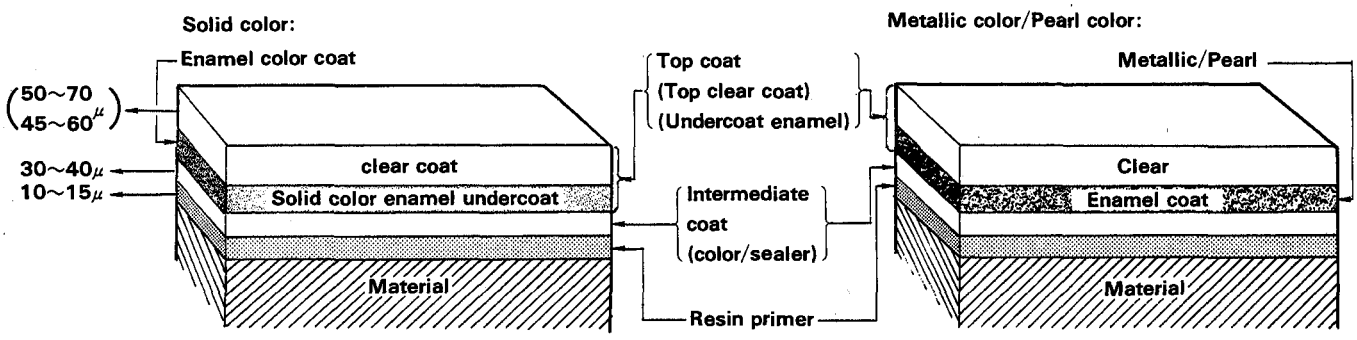

cardiagn.com

Front and Rear Bumpers

Mass Production Coating Table (Reference)

Paint name	Type	Make	Main Component	Hardener	Solvent (Thinner)	Mixing Ratio A	Mixing Ratio B	Mixing Ratio C	Application
Resin Primer	Polyester Urethane	N.B.C	RB-245	R-230 (Special)	T-868 (Special)	100	3	150	Baked: 176°F (80°C) X30 min.
Intermediate coat (Color sealer)	Acrylic polyester	↑	Soflex KP-30	KP-30 (Special)	KP-30 (Special)	100	19.4	19	↑
Top coat Metallic enamel	Urethane	↑	Soflex WT-330 X-2	–	–	100	–	–	Spraying enamel base ⇩ Baked: 176°F (80°C) X10 min. ⇩ Spraying top coat clear ⇩ Baked: 248°F (120°C) X30 min.
Top coat (Metallic) Top clear coat	↑	↑	Soflex 500HX-2	500HX-2 (Special)	500HX-2 (Special)	100	15	15	
Top coat Undercoat enamel	↑	↑	Soflex WT-300 X-2	–	–	100	–	–	
Top coat (Solid) Top clear coat	↑	↑	Soflex 500HX-2	500HX-2 (Special)	500HX-2 (Special)	100	15	15	

NOTE: Mixing ratio
A: Main component
B: Hardener
C: Thinner

For top coats to be applied to solid and metallic enamel base, use the same paints specified for the aluminum body (water soluble enamel) having the following properties:

- Ability to harden at high temperature 248°F (120°C)
- To be flexible enough at low temperature -77°F (-25°C) and free of harmful effects on resin base
- Resistance to abrasion or wear

Processes:

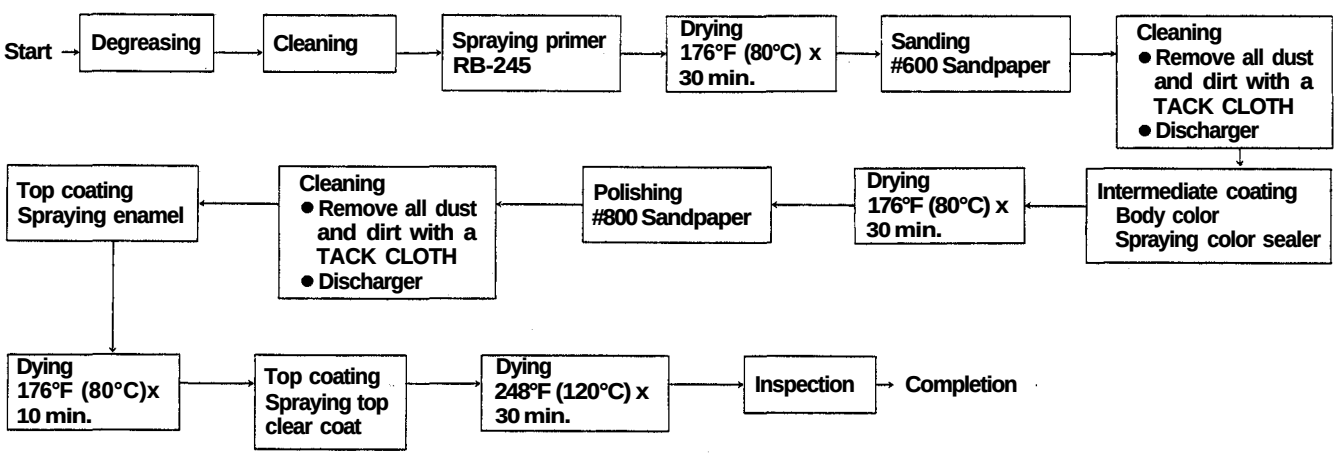

cardiagn.com

Repair Materials and Tools (Example)

Vise-grips and clamps
- To hold parts being serviced.

Sander:
Removal of paint caking and filler sanding.
- Air sander, Double action sander
- Pad (Rubber and wooden)
- Sandpapers (#60,80,180,280,400,600 and 800)

Adhesive, cement and filler:
To even out irregular surface
- Epoxy resin body filler
  (BOND QUICK MENDER 3M8016)

Protectors:
- Respirator and dust mask
- Rubber gloves, safety goggles

Masking tape: 19 mm (3/4")

Others:
- Rag or shop towel, Cutter,

Paints: (Reference)

The paints used for repair should be flexible enough at low temperature -77°F (-25°C) yet not harm the resin base to which they are applied. They should also offer reasonable resistance to abrasion and wear.

NOTE:
- Do not use acrylic lacquer paints (air-dryed type).
- Be sure to use the paints listed below or equivalent.

1. Guide coat (Primer and Primer surfacer)

- UPS-300 flex primer + N0308 flex hardener (R-M)
- Plastoflex primer, Autocryl filler + Elast-o-Actif (Akzo)
- 1020R primer surfacer + 805R flexible additive (DuPont)

2. Intermediate coat
Use top coat (Solid, metallic or pearl) enamel base.

3. Top coat

- Super ponacle + N0308 flex hardener (R-M)
- Autocryl, Auto base + Elast-o-Actif Auto clear/ Autoclear MS + Elast-o-Actif (Akzo)
- Super Centari + 805R softener + AK210 hardener (DuPont)

cardiagn.com

Front and Rear Bumpers

Paint Mixing Application

1. Primer or primer surfacer provides good support for the filler and surfacer, and is applied to the surface of the bumper face. Use a spray gun only to apply the primer or primer surfacer.

NOTE:
- Mix the paint, hardener and thinner in the correct ratio.
- Follow the paint manufacturer's instructions.

⚠WARNING
- **Most paints contain substances that are harmful if inhaled or swallowed. Read the paint label before opening the container. Spray paint only in a well ventilated area.**
- **Cover spilled paint with sand, or wipe it up at once.**
- **Wear an approved respirator, gloves, eye protection and appropriate clothing when painting. Avoid contact with skin.**
- **If paint gets in your mouth or on your skin, rinse or wash thoroughly with water. If paint gets in your eyes, flush with water and get prompt medical attention.**
- **Paint is flammable. Store it in a safe place, and keep it away from sparks, flames or cigarettes.**

2. Designated color of top coat
The paint is either 2-or 3-liquid type. Mix the pigment, additive and hardener in the correct ratio.

- Top coats for solid and metallic enamel base, and top coat clear.
- Mix the additive into the pigment in the correct ratio.
- Mix the hardener into the mixture of additive and pigment (3-liquid type).

NOTE:
- Follow the paint manufacturer's instructions.
- Excessive additive will retard hardening.
- After mixing, dilute with the specified thinner to attain viscosity for spraying.

Mixing of pigment, additive, hardener and thinner:

Paint name	Mixing ratio (Reference)				
	Enamel undercoat	Top clear coat	Additive	Hardener	Thinner
Super centari (Du Pont)	100	100	10	55	20-30%
Super ponacle (R-M)	100	100	–	50 33 50	
Auto cryl, Auto base (Akzo)	100	100	AB*10 AC*30	50	AB*: 100% AC*: 30%

NOTE: Follow the manufacturer's instruction.
AB*: Auto base
AC*: Auto cryl

cardiagn.com

Repair Procedures

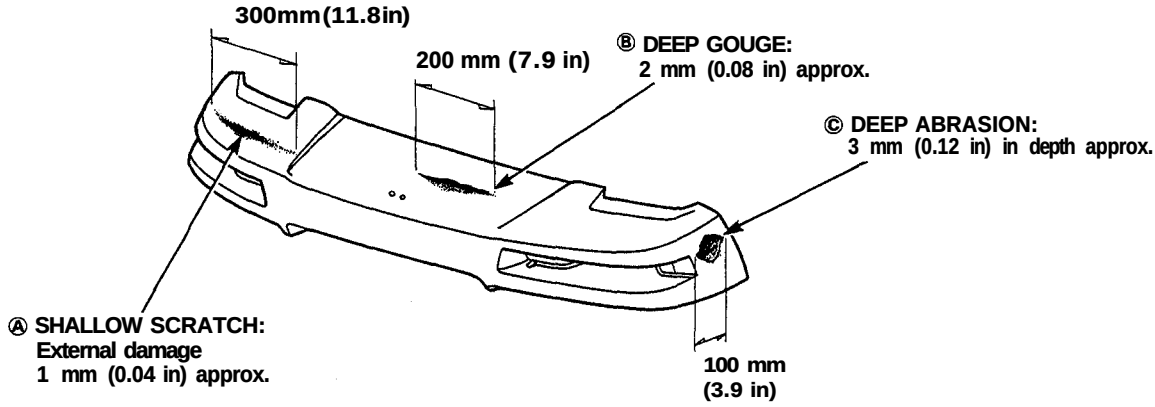

Work steps \ Damage	Ⓐ To base material	Ⓐ External damage	Ⓑ Ⓒ	Repaint/ Replacement part
1. Sanding				
2. Degreasing/Cleaning (Damaged areas)				
3. Applying filler				
4. Drying filler				
5. Sanding filler				
6. Degreasing/Cleaning				
7. Spraying primer/primer surfacer				
8. Drying primer				
9. Applying spot putty				
10. Drying/Sanding				
11. Intermediate coating				
12. Drying/Sanding				
13. Masking				
14. Surface discharging				
15. Top coating				
16. Drying top coat				
17. Polishing/Buffing				

NOTE: (▨) Indicates steps which may be required according to the degree of damage.

cardiagn.com

Front and Rear Bumpers

Refinishing Procedures

1. Sanding damaged area

NOTE: Use a rubber block and sandpaper paper until surface is flat and smooth.
Sand evenly.

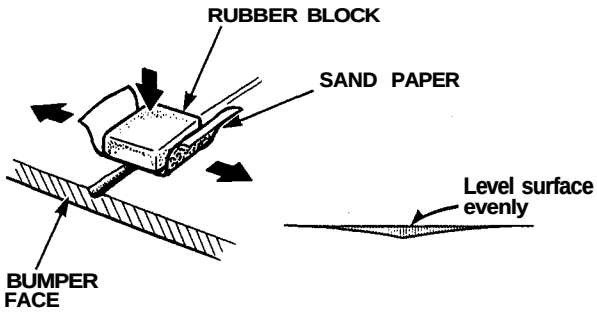

Shallow scratch (External damage):
Wet sand the damaged section with #600 - #1200 sandpaper.
Damage to base material:
Wet sand the damaged section with #600 sandpaper.
Deep scratches, when applying filler:
- Level and finish burrs and other irregularities with #180 sandpaper.
- Wet sand the damaged section with #280 sandpaper.

Repaint or paint replacement part
Wet sand the top coat or intermediate coat (gray) surface flat and smooth with #600 - #800 sandpaper.

2. Degreasing/Cleaning

⚠WARNING
- **Do not use high air pressure; use only an approved, 210kPa (2.1 kg/cm^2, 30 psi) air nozzle.**
- **Wear goggles or safety glasses to prevent eye injury.**

- Wipe off all lint and other foreign particles from the surface with a tack cloth.

NOTE: Be sure to use a tack cloth to clean the surface as dust and dirt are electrostatically drawn to the surface.

3. Applying filler

- Degrease surfaces thoroughly with wax and grease remover.
- Thoroughly mix the filler and hardener.

NOTE:
- Mix the filler and hardener in the proper ratio.
- Follow the filler manufacturer's instructions.

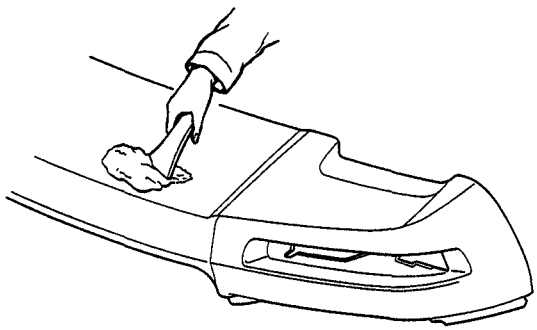

4. Drying filler

Air dry to 5 minutes, then heat to 140°F (60°C) for 10-20 minutes with a dryer.

⚠WARNING Body parts being dried with an industrial dryer can get hot enough to burn. Do not touch parts being dried.

NOTE: Use care when heating to prevent deformation.

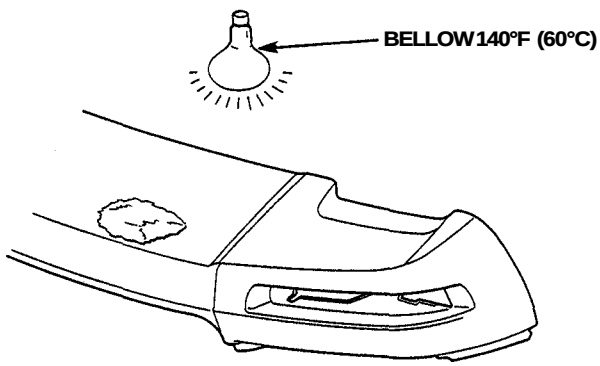

cardiagn.com

5. Sanding filler

- Sand with double action sander and #180 or #240 sandpaper until the surface is flat and smooth.

⚠WARNING To prevent eye injury, wear goggles or safety glasses whenever sanding, cutting or grinding.

- Use a rubber or wooden block back plate when the surface is to be wet or dry sanded by hand,with #280 sandpaper.
- Wet sand with #400-#600 to where primer and primer surfacer are to be applied.

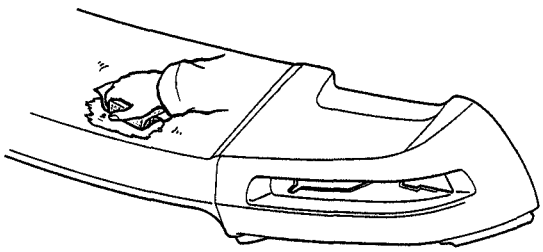

6. Degreasing/Cleaning

- Clean with wax and grease remover and blow with compressed air.

⚠WARNING

- **Do not use high air pressure; use only an approved, 210kPa (2.1 kg/cm^2, 30 psi) air nozzle.**
- **Wear goggles or safely glasses to prevent eye injury.**

- Wipe off all lint and other foreign particles from the surface with a tack cloth.

NOTE: Be sure to use a tack cloth to clean the surface as dust and dirt are electrostatically drawn to the surface.

7. Spraying primer and primer surfacer

⚠WARNING

- **Ventilate when spraying paint. Most paint contains substances that are harmful if inhaled or swallowed. Read the paint label before opening paint container.**
- **Avoid contact with skin. Wear an approved respirator, gloves, eye protection and appropriate clothing when painting.**
- **Paint is flammable. Store in safe place, and keep it away from sparks, flames or cigarettes.**

- Pour the necessary amount of primer or primer surfacer into a beaker.
- Add hardener and thinner to the primer or primer surfacer in the correct ratio.

NOTE:

- Before pouring, stir contents thoroughly.
- Follow the primer/primer surfacer manufacturer's instructions.

- Fill the cup with primer/primer surfacer adjust nozzle and pressure, and test spray pattern.

⚠WARNING

- **Do not use high air pressure; use only an approved, 210kPa (2.1 kg/cm^2, 30 psi) air nozzle.**
- **Wear goggles or safety glasses to prevent eye injury.**

- Spray primer or primer surfacer as required.

NOTE: Avoid heavy application of primer/primer surfacer at one time. Allow each coat to flash-off before applying another coat.

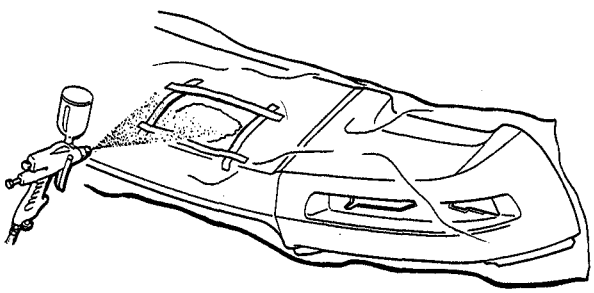

(cont'd)

cardiagn.com

Front and Rear Bumpers

Refinishing Procedures (cont'd)

8. Drying primer

⚠WARNING
- **Body parts being dried with an industrial dryer can get hot enough to burn.**
- **Do not touch parts being dried.**

Air dry for 5-10 minutes, then force dry with a infrared dryer.

NOTE:
- Use constant care when force drying to prevent deformation.
- Follow the paint manufacturer's instructions.

- After drying, wet sand the surface with #600 sandpaper and air blow.

⚠WARNING
- **Do not use high air pressure; use only an approved, 210kPa (2.1 kg/cm^2, 30 psi) air nozzle.**
- **Wear goggles or safety glasses to prevent eye injury.**

9. Applying the spot filler

Check the surface and apply spot filler to cavities or flaws in the surface.

NOTE:
- Apply spot filler evenly.
- Follow the paint manufacturer's instructions.

10. Drying and sanding spot filler

- Air dry for 5 minutes, then heat to 140°F (60°C) for 20-30 minutes with a dryer.

⚠WARNING
- **Body parts being dried with an industrial dryer can get not enough to burn.**
- **Do not touch parts being dried.**

NOTE: Use care when heating to prevent deformation.

- After drying, wet sand the surface with #600 sandpaper.
- Wet sand with #400 - #600 to where intermediate coating area.
- Clean, air blow, and degrease thoroughly.

11. Intermediate coat

- Use top coat enamel base.

⚠WARNING
- **Ventilate when spraying paint. Most paint contains substances that are harmful if inhaled or swallowed. Read the paint label before opening paint container.**
- **Avoid contact with skin. Wear an approved respirator, gloves, eye protection and appropriate clothing when painting.**
- **Paint is flammable. Store in a safe place, and keep it away from sparks, flames or cigarettes.**

- Pour the necessary amount of top coat enamel into a beaker.
- Add additive and hardener to the paint and mix.

NOTE: Follow the paint manufacturer's instructions.

- Adjust viscosity with thinner, then pour into cup after filtering.
- Adjust delivery and pressure, and test spray.
- Clean the surface with tack cloth and air blow.
- Spray until the primer or primer surfacer is completely covered.

NOTE:
- Avoid heavy application of paint at one time.
- Allow each coat to flash-off before applying another coat.

12. Drying and sanding

⚠WARNING
- **Body parts being dried with an industrial dryer can get hot enough to burn.**
- **Do not touch parts being dried.**

- Air dry for 10-15 minutes before force drying.

NOTE:
- Follow the paint manufacturer's instructions.
- Use constant care while force drying to prevent deformation.

cardiagn.com

- After drying, wet sand the top coating area with #600 - #800 sandpaper.

NOTE: Use a rubber block and sand flat and smooth.

- Clean and air blow

13. Masking

Mask the surface around the repair to keep over spray off.

NOTE:
- Mask as much of the surface as possible.
- Use masking paper which is free of fiber dust. Use of polyethylene sheet is recommended.

14. Surface discharging

NOTE: Wear safety goggles, rubber gloves and face mask. Follow the manufacturer's instructions.

- By alkaline degreasing agent/surface active agent.

-1. Degrease with alkaline degreasing agent and rinse well with water.
Degreasing agent: LIDOLIN 24 (Nippon Paint) or equivalent.

-2. Treat with surface active agent and rinse well with cold or hot water.
Surface active agent: LIDOSOLE 501 (Nippon Paint) or equivalent.

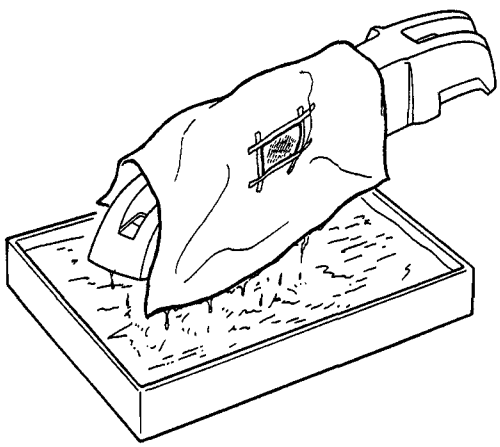

- By surface discharger
Use a surface discharger to negatively ionize the surface to be painted.

Discharger: ES Gas + Power Unit (Nippon Lansburge)
Surface discharger (National)

SURFACE DISCHARGER

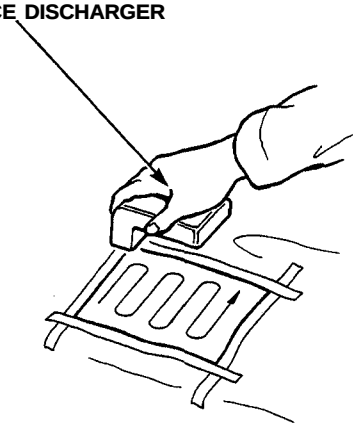

15. Top coating

⚠WARNING

- **Ventilate when spraying paint. Most paint contains substances that are harmful if inhaled or swallowed. Read the paint label before opening paint container.**
- **Avoid contact with skin. Wear an approved respirator, gloves, eye protection and appropriate clothing when painting.**
- **Paint is flammable. Store in a safe place, and keep it away from sparks, flames or cigarettes.**
- **Do not use high air pressure; use only an approved, 210kPa (2.1 kg/cm^2, 30 psi) air nozzle.**
- **Wear goggles or safety glasses to prevent eye injury.**

- Pour paint into a beaker.
- Add additive and hardener to the paint and mix.

NOTE: Follow the paint manufacturer's instructions.

- Adjust viscosity with thinner, then pour into cup after filtering.
- Adjust delivery and pressure, and test spray pattern.

(cont'd)

cardiagn.com

Front and Rear Bumpers

- Refinishing Procedures (cont'd)

- Clean the surface with tack cloth and air blow.
- Spray until the intermediate coat is completely covered.

NOTE:
- Avoid heavy application of paint at one time.
- Allow each coat to flash-off before applying another coat.

- With solid color or metallic enamel, allow final coat to flash-off (5-20 minutes) before applying clear coat.

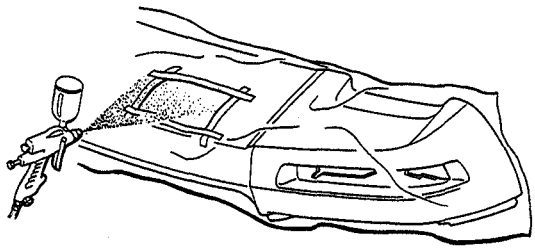

16. Drying

⚠ WARNING
- **Body parts being dried with an industrial dryer can get hot enough to burn.**
- **Do not touch parts being dried.**

Air dry for 10-15 minutes before force drying.

NOTE:
- Follow the paint manufacturer's instructions.
- Use constant care while force drying to prevent deformation.

17. Polishing and buffing

If dirt, sanding dust, lint or pigment adheres to the surface or becomes embedded, the surface should be treated as follows:
- Lightly sand off with #2000 sandpaper and polish with soapy water.

NOTE: Use a rubber or wooden block and sand the surface evenly. Clean dirt and duet off thoroughly.

- Wipe the surface clean and air blow.
- Polish with a sponge buff using very fine compound. Move the polisher up and down and right and left using light pressure.

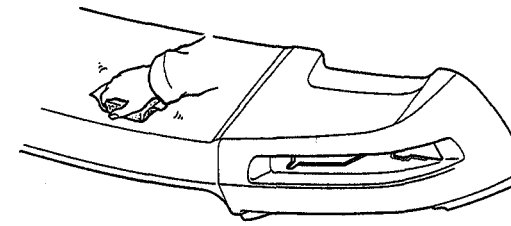

NOTE: To prevent off-color or fading, observe the following:
- Do not use air polishers. Use an electric polisher at 1,500 rpm.
- Use a sponge buff to polish the surface. Woolen buffs may cause the surface to become heated and scratches may result.
- Use very fine compound which is soluble in water.

- Polish until sanding marks disappear.
- Polish again with very fine compound.

NOTE:
- Do not use excessive force to hold the polisher against the surface.
- Do not overheat the surface.

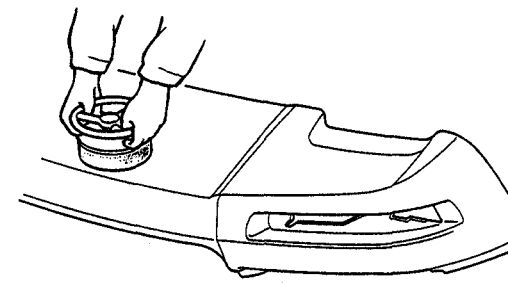

- Apply wax (hard).

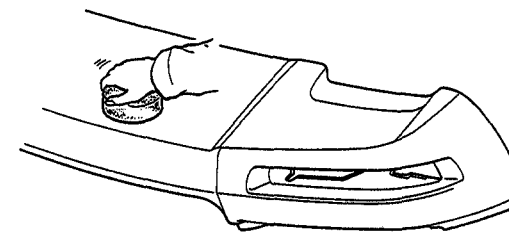

cardiagn.com

Front and Rear Skirts

General

The front and rear skirts are made of polypropylene (PP) resin. They can be repaired if the damage or deformation is minor in nature. This section covers PP repair. Repairing PP is different from other resins such as ABS and urethane.

Front:

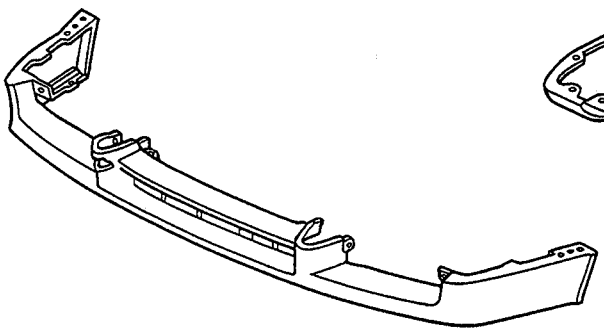

Rear:

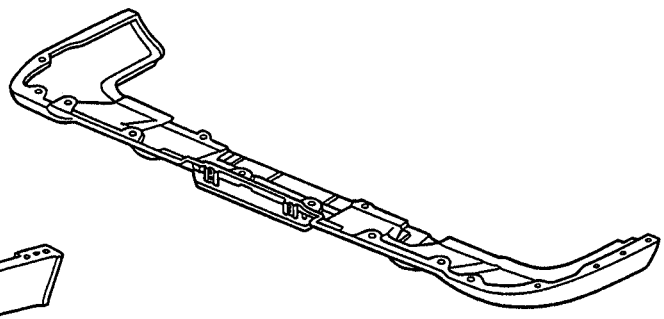

Repair Materials and Tools (Example)

The following materials and tools are required to resin skirts

Adhesive and Filler:

- Bumper primer (clear type)
- Bond quick mender
- High art mat black
- High art thinner
- High art hardener

Primer surfacer:

- Dual-liquid type bumper primer surfacer (gray) Reference (Isam Paint)
- Pigment: (1kg) (35.3 oz)
- Hardener: (100g) (3.5 oz)
- Thinner: (0.9 liter) (31.7 Imp. oz)

NOTE: Follow the manufacturer's recommendations.

Tools:

- Putty knife
- Base (putty)
- Sandpaper
- Cutter
- Brush
- Masking tape
- Masking paper

1. Bumper Primer (Clear): Premixed type

The primer provides a good support for the filler and primer surfacer. It is applied to the surface of the skirt.

Drying time:

Natural	68°F (20°C)	20 minutes
Baked	140°F (60°C)	10 minutes

2. PUTTY BOND QUICK MENDER

After the PP primer has dried thoroughly, apply the PUTTY BOND QUICK MENDER.

- 1. Mix one part of the mender (A) and one part of the hardener (B) and stir thoroughly.

NOTE: Do not mix the mender and hardener in excess of 20g (0.7oz) at a time.

(cont'd)

cardiagn.com

Front and Rear Skirts

Materials and Tools (cont'd)

-2. Hardening starts immediately after mixing. Practical hardness will be obtained within 60 minutes. The surface will be tacky within 5 minutes and nearly hardened after 15 minutes. It takes 12 hours for the surface to harden thoroughly 68°F (20°C).

-3. Sanding can be done after:

3 hours	68°F (20°C) -natural drying
30 minutes	140°F (60°C) -baked

3. Primer Surfacer

NOTE: Use a dual-liquid type bumper primer surfacer (gray).

- The primer surface is used to protect the PP resin surface and to fill cavities or flaws in the intermediate and top coats.
- Mix 10 parts of primer surfacer and 1 part of hardener. Add the specific thinner (30-60%) to the mixture of the hardener and primer to attain the proper viscosity for spraying.

4. Intermediate and Top Paint Coats (Body color and black paint)

NOTE:
- The paints are the dual liquid type based on the color chart.
- Measure the pigment and hardener as described so they are in correct ratio.

Front:

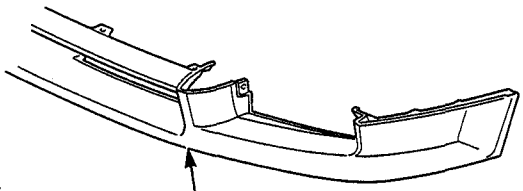

Rear:

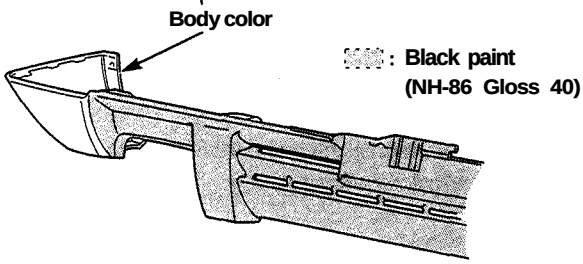

- Use the acrylic urethane paint prepared according to the mixing chart as the intermediate coat.

Mixing Ratio:
Mix 5 parts of body color pigment to 1 part of additive. Mix 4 parts of the mixture of the pigment and additive with 1 part of the hardener.

NOTE:
- Dilute the mixture with 40-50% of the specified thinner (Highart Thinner).
- Be sure to mix the correct amount of the additive.
- Use a spray gun to apply the paint. Do not use a brush.

WARNING
- **Ventilate when spraying paint. Most paint contains substances that are harmful if inhaled or swallowed. Read the paint label before opening the paint container.**
- **Avoid contact with skin. Wear an approved respirator, gloves, eye protection and appropriate clothing when painting.**
- **Paint is flammable. Store it in a safe place, and keep it away from sparks, flames or cigarettes.**

Drying time:

Natural	68°F (20°C)
Surface only	20 minutes
Almost hardened	4 hours
Thoroughly hardened	96 hours

NOTE: The HIGH ART MAT BLACK SURFACER is a dual liquid type. If mixed, it will harden in a matter of hours.

cardiagn.com

Refinishing Processes

Type of Damage

A. Scratch Repaint	B. Hole Deep abrasion	C. Deep groove Deformation
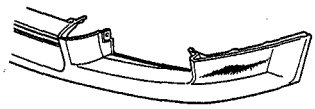	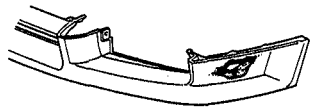	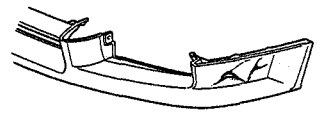
● Perform Steps ①, ④ ⑤ through ⑦	● Perform steps ① through ⑦	

Repair

① Wet sand the surface with a #240 and #400 sandpaper.	② Spray bumper primer (clear type) or dual-liquid bumper primer surfacer (damaged areas).	③ Apply filler and sand
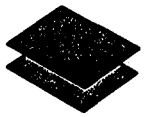	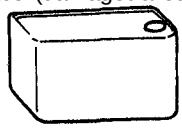	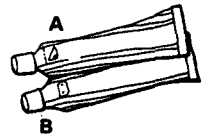 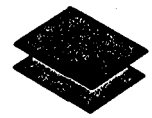

④ Degrease, and Air blow

⑤ Spray dual-liquid bumper primer surfacer and dry

Primer Surfacer

Hardener

Sandpaper 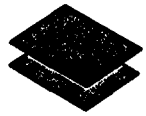

#600

● Wet sand the surface with a #600 sandpaper

Replacement (New part)

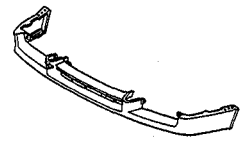

⑥ Mask and intermediate coat

- Air blow and degrease the sanded surface.
- Spray paint and dry.

NOTE: Use the paint for top coat enamel.

⑦ Top coat { Solid color / Metallic color / Pearl color }

cardiagn.com

Front and Rear Skirts

Repair Procedures

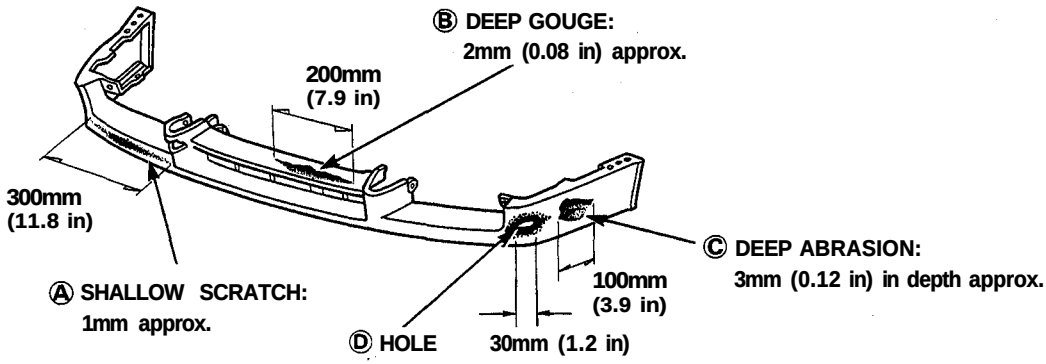

NOTE: (⬚): Indicates steps which may be required according to the degree of damage.

Work Steps \ Damage	Ⓐ	Ⓑ	Ⓒ Ⓓ	Repaint	Replacement
1. Sanding	↑	↑	↑		
2. Degreasing/Cleaning (damaged areas)					
3. Spraying primer or primer					
4. Drying surfacer					
5. Applying filler	⬚				
6. Drying filler					
7. Sanding filler					
8. Degreasing/Cleaning (filled area)					
9. Spraying primer surfacer					
10. Polishing (Air blowing/ Degreasing)					
11. Intermediate coating					↑
12. Degreasing/Cleaning					
13. Masking				Sanding top coat	
14. Top coating					
15. Drying top coat				↑	
16. Polishing/Buffing	↓	↓	↓		

NOTE: Intermediate coating is recommended bright colors.

cardiagn.com

Refinishing Procedures

1. Sanding damaged areas

Shallow scratch:
- Level and finish damaged areas with #240-#400 sandpaper.
- Polish the leveled area with #400 sandpaper.

NOTE:
- Use a flexible block to sand the surface evenly.
- Do not remove too much material.

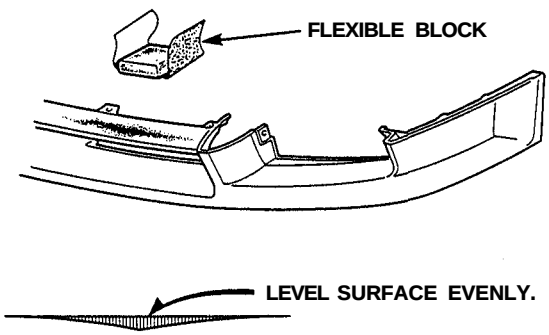

Deep groove/tear:
- Level and finish burrs and other irregularities with #240 sandpaper. Keep the surface as even as possible.

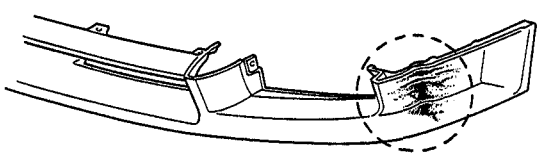

2. Degreasing/Cleaning

⚠WARNING
- **Do not use high air pressure; use only an approved, 210 kPa (2.1 kg/cm^2, 30 psi) air nozzle.**
- **Wear goggles or safety glasses to prevent eye injury.**

- Clean with wax and grease "remover and dry with compressed air.
- Wipe off all lint and other foreign particles from the surface with a tack cloth.

NOTE: Be sure to use a tack cloth. Dust and dirt are electrostatically drawn to the surface.

3. Applying bumper primer (clear type).

- Stir thoroughly before applying the primer. Use a spray gun or brush depending on working conditions.

⚠WARNING
- **Ventilate when spraying, paint. Most paint contains substances that are harmful if inhaled or swallowed. Read the paint label before opening the paint container.**
- **Avoid contact with skin. Wear an approved respirator, gloves, eye protection and appropriate clothing when painting.**
- **Paint is flammable. Store it in a safe place, and keep it away from sparks, flames or cigarettes.**

- Cover as wide an area as possible, except for shallow grooves (2-3 coats).

NOTE:
- Do not dilute the primer with thinner.
- Warm the primer if the outside temperature is below 50°F (10°C).
- Apply the primer to the back of the skirt if the damage is a tear or hole.

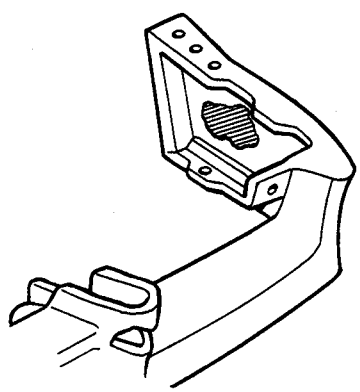

4. Drying bumper primer.

⚠WARNING **Body parts being dried with an industrial dryer can get hot enough to cause injury. Do not touch parts being dried.**

- Dry the primer thoroughly with an infrared dryer or other dryer suitable for the purpose.

(cont'd)

cardiagn.com

Front and Rear Skirts

Refinishing Procedures (cont'd)

- If the damage or groove is shallow, heat the entire surface evenly. Apply heat locally if the skirt is gouged or torn open.

Drying time:

Dryer	10 minutes 140°F (60°C)
Natural	20 minutes 68°F (20°C)

NOTE:
- Use a dryer whenever possible.
- Do not allow temperature to exceed 158°F (70°C) or the skirt will deform.

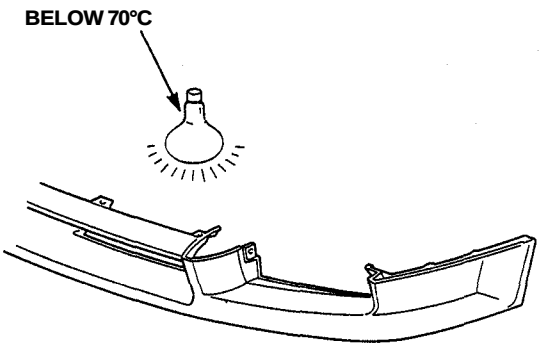

5. Apply filler (BOND QUICK MENDER.)

Mix the mender (A) into the hardener (B) in the ratio of I to I, and stir until they are thoroughly mixed.

-1. Apply the mixture over the damaged area with a putty knife using light pressure.

-2. Even out the surface to match the contour of the skirt.

-3. If there is a hole, cover it with a masking tape from the back, and apply the filler over the outside surface.
After the filler has been dried, remove the tape and apply filler to the side that was taped.

NOTE: Apply filler so it extends over more than the damaged area.

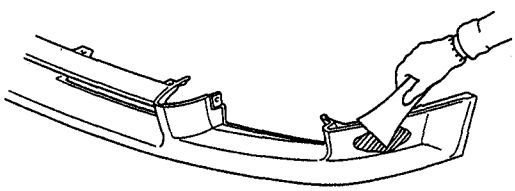

6. Drying filler

Drying time:

Almost hardened	5 minutes
Initial hardness	15 minutes
Practical hardness	60 minutes
Sanding 68°F (20°C) 140°F (60°C)	After 3 hours After 30 minutes

7. Sanding filler

⚠ WARNING To prevent eye injury, wear goggles or safety glasses whenever sanding, cutting or grinding.

Wet sand first with #240 sandpaper then with #400 sandpaper.

NOTE: Sand the surface evenly, particularly at the area where the PP resin and mender meet.

8. Degreasing/Cleaning

- Blow off the sanded surface, then clean with wax and grease remover.

⚠ WARNING
- **Do not use high air pressure; use only an approved, 210 kPa (2.1 kg/cm^2, 30 psi) air nozzle.**
- **Wear goggles or safety glasses to prevent eye injury.**

- Remove all dust and dirt with a tack cloth.

cardiagn.com

9. Spraying dual-liquid bumper primer surfacer (gray)

NOTE: Use the urethane bumper primer.

⚠WARNING

- **Ventilate when spraying paint. Most paint contains substances that are harmful if inhaled or swallowed. Read the paint label before opening the paint container.**
- **Avoid contact with skin. Wear an approved respirator, gloves, eye protection and appropriate clothing when painting.**
- **Paint is flammable. Store it in a safe place, and keep it away from sparks, flames or cigarettes.**

Spray the primer surfacer over a wider area than the filler and the exposed surfaces of bumper primer.
NOTE: Spray 2-3 coats to get 20-25 microns of thickness.

Mixing Ratio: (Reference)

Urethane bumper primer	10
Hardener	1
Thinner	30-60%

10. Drying and polishing

Force dry the primer surfacer with infrared lamps or other industrial dryer.

⚠WARNING Body parts being dried with an industrial dryer can get hot enough to cause injury. Do not touch parts being dried.

Drying temperature:

Force drying	140°F (60°C) 20 minutes
Natural drying	68°F (20°C) 2 hours min

NOTE:
- Use a dryer whenever possible.
- Do not allow the temperature to exceed 158°F (70°C).

-1. After force drying, wet sand the primer surface with #600 sandpaper.

NOTE: Use #600 or finer sandpaper as any paper coarser than this might scratch the surface.

⚠WARNING

- **Do not use high air pressure; use only an approved, 210 kPa (2.1 kg/cm^2, 30 psi) air nozzle.**
- **Wear goggles or safety glasses to prevent eye injury.**

-2. Air blow the surface to be repaired, then degrease with a wax and grease remover.

-3. Also clean and degrease where masking tape will be attached.

11. Intermediate coating

NOTE: Intermediate coating is recommended for bright colors.

- Use the top coat enamel.

⚠WARNING

- **Ventilate when spraying paint. Most paint contains substances that are harmful if inhaled or swallowed. Read the paint label before opening the paint container.**
- **Avoid contact with skin. Wear an approved respirator, gloves, eye protection and appropriate clothing when painting.**
- **Paint is flammable. Store it in a safe place, and keep it away from sparks, flames or cigarettes.**

- Mix the additive into the solid enamel color, metallic enamel or pearl enamel color in the ratio of 1 to 5 (by weight).
- Mix the hardener into the mixture of pigment and additive described above in the ratio of 1 to 4 (by weight).

NOTE: Keep the correct ratio, especially of the additive. Excessive additive takes longer to dry.

- Adjust to the proper viscosity for spray by adding the thinner specified for the primer into the mixture of primer additive and hardener.
  Viscosity: 68°F (20°C) 11-13 sec.

(cont'd)

cardiagn.com

Front and Rear Skirts

Refinishing Procedures (cont'd)

NOTE: It is not necessary to apply the clear coat.

- Spray 2-3 coats of the top coat enamel to get 15-20 microns of thickness. The primer surfacer (gray) should not show through the top coat.

NOTE:
- Apply the top coat enamel to the repaired surface.
- Apply the top coat enamel to the entire surface of the primer surfacer when replacement is necessary.

12. Degreasing and Cleaning

Air dry the entire surface, then clean with a wax and grease remover (for USA usage-Dupont 38125 Enamel Reducer).

NOTE: For shading or spot painting, polish the area with a polishing compound. Also sand with a #1500 paper to make a better bonding surface for the paint.

13. Masking

- Remove all existing masking paper, then mask with new paper.
- Use a heat resistant type masking tape (SCOTCH TAPE) where tape is attached directly to the skirt.
- Use brown paper or masking roll paper to cover.

NOTE:
- Mask the area completely to prevent overspray.
- Protect resin parts with aluminum foil under the brown paper or masking paper to prevent damage due to heat during baking.

14. Top Coating

- Air dry and degrease the surface before spraying the paint. Also clean the surface with a tack cloth.

⚠ WARNING

- **Ventilate when spraying paint. Most paint contains substances that are harmful if inhaled or swallowed. Read the paint label before opening the paint container.**
- **Avoid contact with skin. Wear an approved respirator, gloves, eye protection and appropriate clothing when painting.**
- **Paint is flammable. Store it in a safe place, and keep it away from sparks, flames or cigarettes.**

- Remove dust and dirt from the surface to be coated with compressed air, then use a tack cloth.
- Use a strainer when filling the cup with paint.

- Spray the paint evenly over the surface so the replacement part is completely covered.

- For application of the top coating refer to step 11 "Intermediate coating."

NOTE: Do not try to cover the surface with one heavy coat. Apply several thin coats.

- With solid color (2-coat type), metallic color and pearl color enamels, allow final coat to flash-off (5-20 minutes) before applying clear coat.

- Mix the additive into the clear in the ratio of 1 to 5. Adding the hardener and adjusting viscosity should be done the same way as described on the previous page.
  Viscosity: 68°F (20°C) 13-15 sec.

Mixing Ratio (weight)

Metallic enamel/Clear solid enamel	Additive	Hardener
5 :	1=4 :	1

cardiagn.com

15. Drying top coat

⚠WARNING Body parts being dried with an industrial dryer can get hot enough to cause injury. Do not touch parts being dried.

- Before force drying, let it air dry for 5-10 minutes.
- Force dry the sprayed surface under the infrared lamps for 60-90 minutes.
- Keep the drying temperature between 140°F (60°C) and 158°F (70°C).

NOTE: Take care not to let the heat deform the part during the drying process.

16. Polishing and Buffing

- Let the paint dry gradually, then polish the surface carefully using a polishing compound and sponge buff.
- To remove lint or dirt, wet sand the surface with #2000 or finer paper first, then polish with compound.

NOTE: Polish all roughness caused by sanding thoroughly. To do this, first polish with very fine compound, then with ultra fine compound.

- After polishing, remove the masking paper and tape and wash the entire vehicle thoroughly.

cardiagn.com

Headlight Lid, Side Sill Panel and Fuel Lid

General

The nylon-resin parts can be repaired when it is lightly damaged or deformed. The repair procedure slightly differs from that of the PP, ABS resin and urethane resin parts.

NOTE:
- Nylon-resin is a polymer of nylon and PPE alloy which has excellent heat resistance properties and flexibility.
- Heat-resisting temperature: 284°F (140°C).

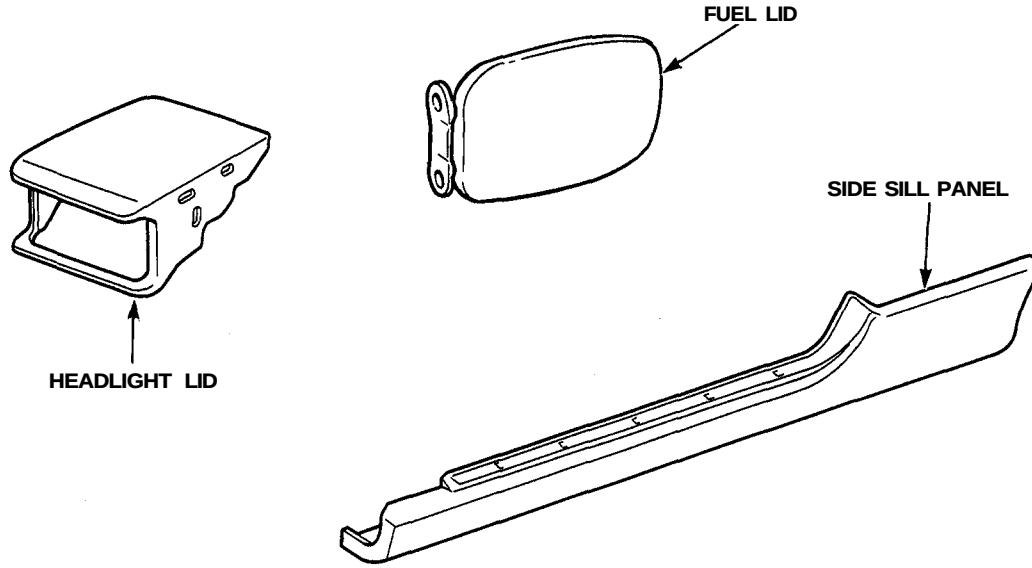

NOTE: The following repair procedures also apply to the trunk lid spoiler.

Repair Materials (Example)

The following materials are required to repair of the nylon-resin parts. Use the specified material or a commercially available equivalent.

Adhesive and filler:
Epoxy
- Kemit TE2301 bond quick mender

Filler
- Body filler 873 (R-M)
- 3M 5900 Flexible Parts Repair Material (Akzo)

Primer:
Use when the resin material is exposed.
- Prast flex (Akzo)
- 800R Flexible filler (DuPont)

Primer surfacer:
Some primer surfacers can be applied to the basis material directly, depending on the manufacturer's.
NOTE: Coat with PP bumper primer when the resin material is exposed.
- 1220R H,S-filler primer (DuPont)
- Auto cryl filler (Akzo)
- NPS735 urethane primer surfacer (R-M)

Top coat:
- Super ponacle Ⅱ (R-M)
- Super Centari: (DuPont)
- Auto cryl (Akzo)

Repair materials and paints:
Use the repair materials listed in the "Example of repair materials" as instructed in the manufacturer's instruction manual.
NOTE: Be sure to refer to the manual(s) and use the repair material(s) properly.

cardiagn.com

Repair Procedures

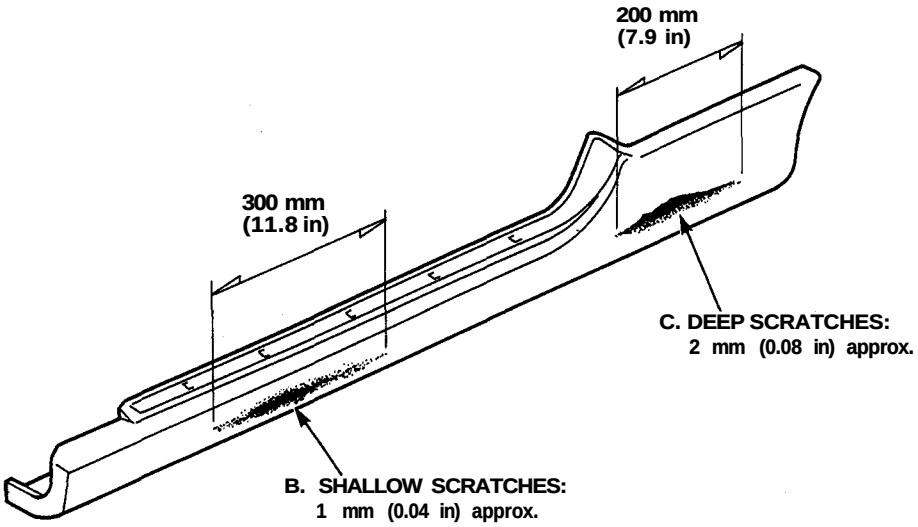

A. Replacement part:

(1) Apply intermediate coat (gray)
Sand both sides of the part (#400, #600).

(2) Dry primer surfacer, then sand (#400, #600).

(3) Apply top coating

-1. Metallic enamel + color clear coat.

-2. Solid color enamel + clear coat.

-3. Pearl enamel + clear coat.

NOTE: Also applicable to "Shallow scratches", "Deep scratches" and "When filling".

B. Shallow scratches:
Not down to the base material:

(1) Sand top coat (#400, #600).

(2) Apply top coating.

NOTE: Coat with primer surfacer when the base material is exposed.

C. Deep scratches, When filling:

(1) Sand the damaged section (#180, #240).

(2) Spray with primer and dry.
NOTE: When the base material is exposed.

(3) Coat with primer surfacer.

(4) Dry primer surfacer, then sand (#240, #400).

(5) Apply polyester resin filler.

(6) Dry polyester resin filler, then sand (#240, #320).

(7) Coat with primer surfacer.

(8) Dry primer surfacer, then sand (#400, #600).

(9) Apply top coating.

cardiagn.com

Headlight Lid, Side Sill Panel and Fuel Lid

Refinishing Procedures

1. Base material reconditioning (sanding)

-1. Replacement part

Lightly sand both sides of the part.

-2. Slight scores or scratches

Use a flexible sanding block and wet sand the damaged section with #400, #600.

NOTE: Sand level to remove damage.

-3. Deep scratches, When filling

Use a flexible sanding block and wet sand the damaged section with #180, #280.

NOTE: Perform the featheredging on the material surface and coat surface (primer, intermediate coat, and top coat) thoroughly and properly.

2. Degreasing, and cleaning

Clean the repair area with wax and grease remover, then blow with air dry.

⚠WARNING

- **Do not use high air pressure; use only an approved, 210kPa (2.1 kg/cm^2, 30 psi) air nozzle.**
- **Wear goggles or safety glasses to prevent eye injury.**

NOTE: Wipe dust off the surface with a tack cloth.

3. Primer application

- Apply to the deep scratches and areas to be filled. This procedure might not be required by some manufacturer's, products.
- Spray wider than the damaged section (i.e. area to be filled) two or three times.

NOTE: Follow the manufacturer's specification.

4. Coating with primer surfacer and drying

NOTE: Some manufacturers might require puttying before performing this step.

Spray the primer surfacer wider than the filled area and the exposed base material.
The spray guideline should be 20-23 microns.

⚠WARNING

- **Ventilate when spraying paint. Most paint contains substances that are harmful if inhaled or swallowed. Read the paint label before opening paint container.**
- **Avoid contact with skin. Wear an approved respirator, gloves, eye protection and appropriate clothing when painting.**
- **Paint is flammable. Store in a safe place, and keep it away from sparks, flames or cigarettes.**

NOTE: Follow the manufacturer's instructions.

- After coating with the primer surfacer, let the primer surfacer dry naturally for 5 to 10 minutes then dry the paint film of the primer surfacer with an infrared dryer.
- While drying the primer surface with the dryer,be sure to keep the dryer 40-50 cm (16-20.in) away from the paint film.

⚠WARNING **Body parts being dried with an industrial dryer can get hot enough to burn. Do not touch parts being dried.**

5. Filling drying and sanding

- The exposed base material could be directly filled, depending on the manufacturer's specification.
- Be sure that the primer surfacer is dried completely.
- Lightly dry sand the primer surfacer paint film with the #240 paper.

cardiagn.com

- Apply the filler in several thin coats.

NOTE: Mix and apply the filler according to the manufacturer's instructions.

- Dry the filler with an infrared dryer for 5 or 6 minutes.
- While drying the filler with the dryer, be sure to keep the dryer 40-50 cm (16-20 in) away from the surface.
- Scratch the filled surface with your nail. If the surface is white when scratched, dry sand and wet sand with the #280, #320 paper. Be sure to sand level.

6. Cleaning with compressed air, and degreasing

Blow the entire area that is to be coated with primer surfacer with compressed air, then clean with wax and grease remover.

⚠WARNING

- **Do not use high air pressure; use only an approved, 210kPa (2.1 kg/cm^2, 30 psi) air nozzle.**
- **Wear goggles of safety glasses to prevent eye injury.**

NOTE: Also wipe the masking area to help the masking tape adhere securely.

7. Masking

- Mask the area that should not be sprayed with the primer surfacer.
- Use the masking tape and paper to mask.

8. Coating with primer surfacer and drying

- Spray the two primer surfacer over the filled area.
- The spray guideline should be 20-25 microns..

NOTE: Follow the primer surfacer manufacturer's instructions.

- After coating with the primer surfacer, let the primer surfacer dry naturally for 5 to 10 minutes, then dry with an infrared dryer.

⚠WARNING **Body parts being dried with an industrial dryer can get hot enough to burn. Do not touch parts being dried.**

- While drying with the dryer, be sure to keep the dryer 40-50 cm (16-20 in) away from the paint film.

9. Sanding, and cleaning

Lightly wet-sand the whole area to be painted with # 600 sandpaper. Blow off with compressed air, then clean with wax and grease remover.

10. Top coating

- Remove dust with a tack cloth before top coating.
- Spray the top coat paint.
  Spray until the primer surfacer is covered. The spray guideline should be 30-35 microns.

⚠WARNING

- **Ventilate when spraying paint. Most paint contains substances that are harmful if inhaled or swallowed. Read the paint label before opening paint container.**
- **Avoid contact with skin. Wear an approved respirator, gloves, eye protection and appropriate clothing when painting.**
- **Paint is flammable. Store in a safe place, and keep it away from sparks, flames or cigarettes.**
- **Do not use high air pressure; use only an approved, 210kPa (2.1 kg/cm^2, 30 psi) air nozzle.**
- **Wear goggles or safety glasses to prevent eye injury.**

NOTE: For the recommended top coat paint, refer to the "4. Top coat" of "Example of repair materials".

Solid: Color enamel + color clear coat
Metallic: Metallic enamel + clear coat
Pearl: Pearl enamel + clear coat

11. Drying

After top coating about 10 minutes,then dry with an infrared dryer.

NOTE: Follow the paint manufacturer's specification to dry properly.

cardiagn.com

Door Mirror

General

The door mirror housing are made of ABS resin.
They can be repaired if the damage or deformation is minor in nature. This section covers ABS repair. Repairing ABS is different from other resins such as PP and urethane.

NOTE: The ABS resin is the copolymer resin consisting of the three monomers of acrylonitrile, butadiene, and styrene.

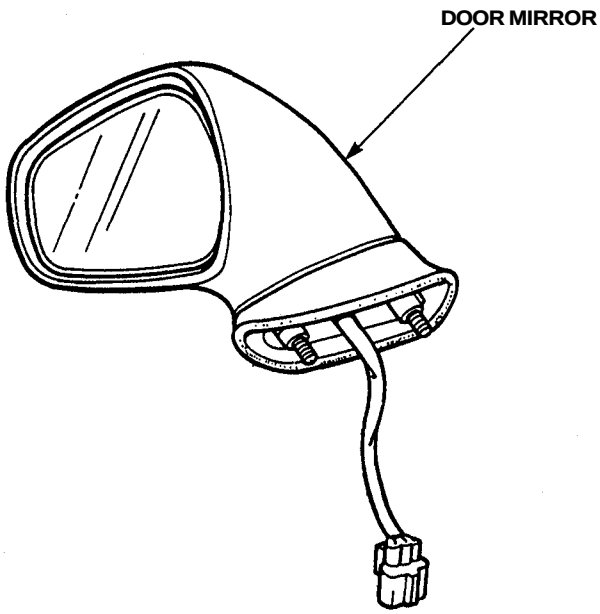

cardiagn.com

Repair Materials (Example)

Adhesive and filler: Epoxy

- Kemit TE2301 bond quick mender

Filler:

- RM Stop zinc (R-M)
- 3M 5900 Repair Material (Akzo)

NOTE: Follow the manufacturer's specification.

Top coat:

- Super ponacle Ⅱ, Solo de Diamont, Diamont (R-M)
- Autocryl Auto base (Akzo)
- Super Centari (DuPont)

Primer/Primer surfacer:
Use when the resin material is exposed.

- RM fast filler + RM flex primer (R-M)
- Plasto flex primer Ⅱ coat (Akzo)
- 1220RH-S filler primer (DuPont)

Repair Procedures

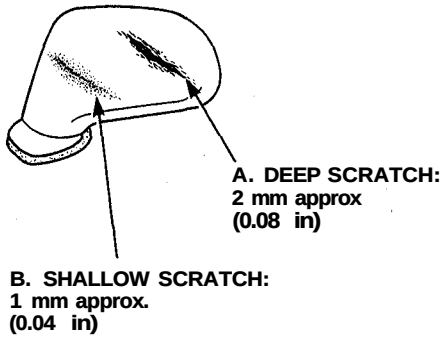

A. Deep scratches, when filling:

(1) Sand the damage section. (#120~#240)
(2) Apply the filler and dry.
(3) Sand the filler (#240~#400)
(4) Coat with the primer/primer surfacer and dry.
(5) Sand the primer surfacer. (#600~#800).
(6) Top coating.

B. Shallow scratches:

(1) Coat with the primer/primer surfacer.
(2) Sand the primer surfacer. (#600~#800).
(3) Top coating.

C. Repaint:

(1) Sand the primer surfacer. (#600~#800)
(2) Top coating.

Refinishing Procedures

1. Base material reconditioning (sanding)

-1. Repaint and replacement part lightly sand the part with #400, #600 or #800.

-2. Slight scores or scratches
Use a flexible sanding block and wet sand the damaged section with #400, #600.
NOTE: Sand level to remove damage.

-3. Deep scratches, when filling.
Use a flexible sanding block and wet sand the damaged section with #240, #400.

2. Degreasing and cleaning

Clean the repaired area with wax and grease remover, then blow with air dry.

⚠ WARNING

- **Do not use high air pressure; use only an approved, 210 kPa (2.1 kg/cm^2, 30 psi) air nozzle.**
- **Wear goggles or safety glasses to prevent eye injury.**

NOTE: Wipe dust off surface with a tack cloth.

3. Filling, drying and sanding

Apply the filler in several thin coats.
NOTE: Mix and apply the filler according to the manufacturer's instructions.

-1. Dry the filler with an infrared dryer for 5 or 6 minutes
Be sure to keep the dryer 40-50 cm (16-20 in) away from the surface.

-2. Scratch the filled surface with your nail. If the surface is white when scratched, dry sand and wet sand with the #240-#400 paper. Be sure to sand level.

4. Cleaning with compressed air, and degreasing

Blow the entire area to be coated with compressed air, then clean with wax and grease remover.

⚠ WARNING

- **Do not use high air pressure; use only an approved, 210 kPa (2.1 kg/cm^2, 30 psi) air nozzle.**
- **Wear goggles or safety glasses to prevent eye injury.**

NOTE: Clean the whole surface to the help the masking tape adhere securely.

(cont'd)

cardiagn.com

Door Mirror

Refinishing Procedures (cont'd)

5. Masking

Use the masking tape and paper to mask the area that should not be sprayed.

6. Coat with primer/primer surfacer, drying and sanding.

- Spray the primer surfacer over the filled area.

WARNING

- **Ventilate when spraying paint. Most paint contains substances that are harmful if inhaled or swallowed. Read the paint label before opening the paint container.**
- **Avoid contact with skin. Wear an approved respirator, gloves, eye protection and appropriate clothing when painting.**
- **Paint is flammable. Store it in a safe place, and keep it away from sparks, flames or cigarettes.**
- **Do not use high air pressure; use only an approved, 210 kPa (2.1 kg/cm^2, 30 psi) air nozzle**
- **Wear goggles or safety glasses to prevent eye injury.**

- The coating thickness should be 20-25 microns.

NOTE: Follow the primer/primer surfacer manufacturer's instructions.

-1. Drying

- Let the primer surfacer dry naturally for 5 to 10 minutes, then dry with a infrared dryer.

WARNING **Body parts being dried with an industrial dryer can get hot enough to cause injury. Do not touch parts being dried.**

- Be sure to keep the dryer 40-50 cm (16-20 in) away from the paint film.

-2. Sanding

Lightly dry sand the whole area to be painted with #600, #800 sandpaper.

7. Blow off with compressed air, then clean with wax and grease remover.

WARNING

- **Do not use high air pressure; use only an approved, 210 kPa (2.1 kg/cm^2, 30 psi) air nozzle.**
- **Wear goggles or safety glasses to prevent eye injury.**

NOTE: Clean the whole surface to help the masking tape adhere securely.

8. Top coating

- Remove dust with a tack cloth before spraying.
- Spray the top coating. Spray until the primer surfacer is covered.
- The coating thickness should be 30-35 microns.

WARNING

- **Ventilate when spraying paint. Most paint contains substances that are harmful if inhaled or swallowed. Read the paint label before opening the paint container.**
- **Avoid contact with skin. Wear an approved respirator, gloves, eye protection and appropriate clothing when painting.**
- **Paint is flammable. Store it in a safe place, and keep it away from sparks, flames or cigarettes.**
- **Do not use high air pressure; use only an approved, 210 kPa (2.1 kg/cm^2, 30 psi) air nozzle.**
- **Wear goggles or safety glasses to prevent eye injury.**

NOTE: For the recommended top coat paint, refer to "Example of repair materials".

Solid color: Color enamel + color clear coat
Metallic : Metallic enamel + clear coat
Pearl : Pearl enamel + clear coat

9. Drying

After top coating for about 10 minutes, then dry with an infrared dryer.

NOTE: Follow the paint manufacturer's specification to dry properly.

cardiagn.com

Glossary

All paint	Painting of complete surface.
Air blow	Using compressed air to blow away dust and debris.
Block paint	Painting a section only, such as a door.
Clear paint (clear coat)	Clear paint without dye (pigment).
Double coat	Application of two paint coats.
Dry coat	Paint which left the spray gun and dried partially before it reached the surface, thereby making the painted surface rough. Dry coating is caused by too little paint being fed, too high an air pressure, too much distance between the painted surface and the gun, or moving the gun too fast.
Dry film	Paint which has dried completely.
Dust coat	Paint is applied thinner than a dry coat. Painted surface becomes rough.
ED painting	Electrostatic discharge painting.
Enamel	Finishing paint pigmented with dye.
Featheredging	Smoothing off the edges of painted surfaces.
Flash off	Evaporation of the paint solvent. (Flash off time is the period between paint coat applications.)
Ford cup	A type of viscosity meter .
Gun stroke	Movement of the paint gun.
Hardener	Hardening agent of two-liquid type paint or fillers. Polycyanates and oxides are used for hardeners.
Heat-hardening acrylic resin paint	Composed of acrylic resin and meramine resin, and hardened (forms a paint film) by 1aking.

cardiagn.com

Glossary

Lacquer	A type of paint that uses cellulose nitrate or other chemicals, and which dries by evaporation of its solvent agent.
Meramine resin	Used as component for aminoalkyd resin paint and heat-hardening acrylic resin paint.
Metallic-base paint	Paint with aluminum powder for metallic tone.
Mist coat	Painting for fade-in sections. A small amount of paint may be dissolved with slow-evaporating thinner, or thinner alone may be applied with low pressure. 150-200kPa (1.5-2. 0 kgf/cm^2, 21.3-28.4psi)
Mixing scale	Color mixing device.
Overlap	Blending of spray patterns.
Overspray	Spraying other than the area that needs painting.
Paddle	A tool to mix paint.
Paint dust	Dust of paint formed by spraying.
Paper dispenser	A paper posting device (masker) that combines tape and paper.
Scrapes	Traces of scratches.
Scuffing	Particles on the painted surface are lightly polished with fine emery paper (#600 or over).
Set (setting)	Evaporation time of solvent in the paint, before drying the layer forcefully or by baking. (May be considered the same as flash-off time.)
Single coat-	Application of paint in single layer.
Spot paint	Painting of small section, such as for touch-up.
Undercoat	Undercoat paint (such as primer and surfacer). May be applied to lower section of car for noise prevention and rustproofing.

cardiagn.com

Wet coat	Paint is applied with an excess of solvent, thereby producing a painted surface that's smooth, glossy, and has a wet look.
Wet film	Paint which has not dried completely.
Wet on wet	Application of the next coat of paint before the preceding layer has dried completely.
Wool bonnet	Wool grinder for compound polishing.

cardiagn.com

Service Precautions

Supplemental Restraint System (SRS)

The NSX Supplemental Restraint System (SRS) includes a airbag a driver's side airbag, located in the steering wheel hub, a passenger's airbag, located in the dashboard above the glove box, and seat belt pretensioners, located in the seat belt retractors.

NOTE: The following precautions should be observed when performing sheet metal work, paint work and repair work around the locations of the SRS parts.

① SRS dash sensors are located under the dashboard. Avoid strong impact with a hammer or other tools when repairing the front side frame and the lower part of the dashboard. Do not apply heat to these areas with a torch, etc.

② SRS harnesses are located under the lower part of the dashboard below the dashboard panel. (SRS harnesses are covered with a yellow corrugated tube.) Care should be taken not to damage the harness when repairing this area.

③ Do not apply heat of more than 212°F (100°C) when drying painted surfaces anywhere around the locations of SRS parts.

④ If strong impact or high temperature needs to be applied to the areas around the locations of SRS parts, remove the part before performing repair work.

⑤ If any of the SRS related parts are damaged or deformed, be sure to replace them.

NOTE: Refer to the Service Manual (Supplemental Restraint System) for removal and replacement of SRS related parts.

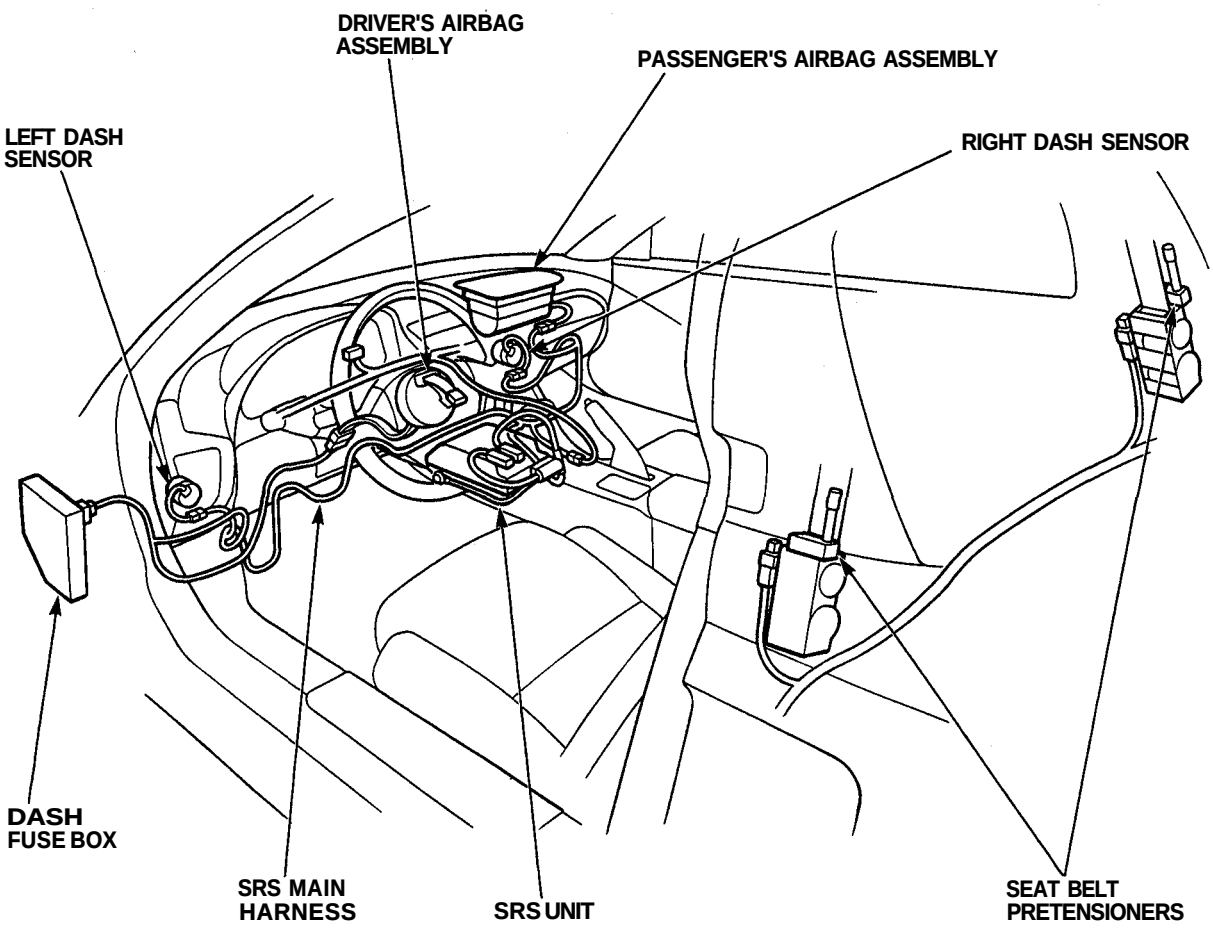

cardiagn.com