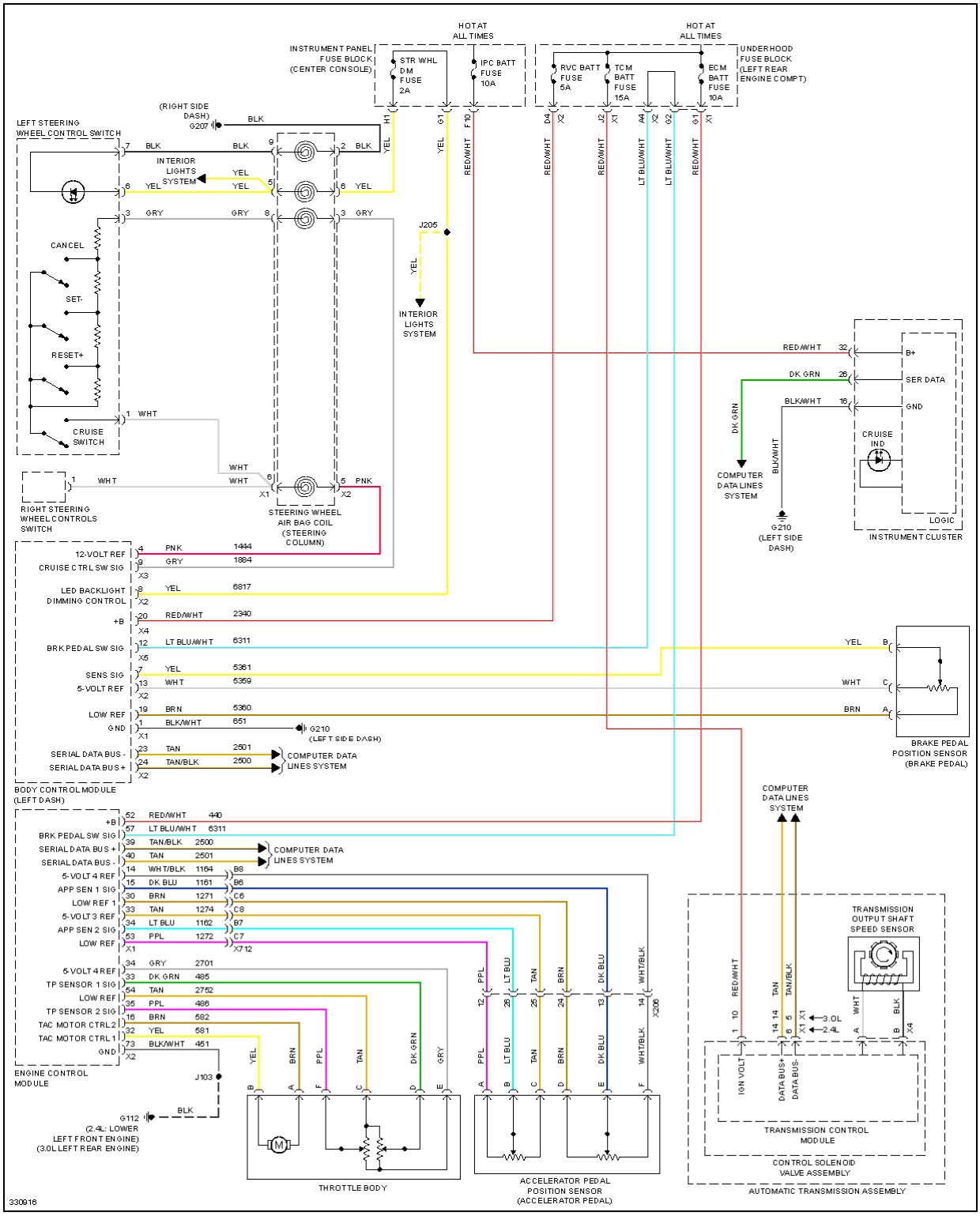

Fig. 16: Cruise Control Circuit

cardiagn.com

DEFOGGERS

cardiagn.com