2013 Chevrolet Express Owner Manual

In Brief 1-1
Instrument Panel 1-2
Initial Drive Information 1-4
Vehicle Features 1-14
Performance and Maintenance 1-18

Keys, Doors, and Windows 2-1
Keys and Locks 2-1
Doors 2-9
Vehicle Security 2-11
Exterior Mirrors 2-13
Interior Mirrors 2-15
Windows 2-15

Seats and Restraints 3-1
Head Restraints 3-2
Front Seats 3-2
Rear Seats 3-4
Safety Belts 3-8
Airbag System 3-16
Child Restraints 3-33

Storage 4-1
Storage Compartments 4-1

Instruments and Controls 5-1
Controls 5-2
Warning Lights, Gauges, and Indicators 5-8
Information Displays 5-24
Vehicle Messages 5-29
Vehicle Personalization 5-38

Lighting 6-1
Exterior Lighting 6-1
Interior Lighting 6-5
Lighting Features 6-6

Infotainment System 7-1
Introduction 7-1
Radio 7-7
Audio Players 7-12
Phone 7-21

Climate Controls 8-1
Climate Control Systems 8-1
Air Vents 8-7

Driving and Operating 9-1
Driving Information 9-2
Starting and Operating 9-14
Engine Exhaust 9-21
Automatic Transmission 9-22
Drive Systems 9-30
Brakes 9-30
Ride Control Systems 9-32
Cruise Control 9-34
Object Detection Systems 9-37
Fuel 9-42
Towing 9-47
Conversions and Add-Ons ... 9-57

2013 Chevrolet Express Owner Manual

Vehicle Care 10-1
General Information 10-2
Vehicle Checks 10-4
Headlamp Aiming 10-32
Bulb Replacement 10-32
Electrical System 10-38
Wheels and Tires 10-44
Jump Starting 10-78
Towing 10-81
Appearance Care 10-84

Service and Maintenance ... 11-1
General Information 11-1
Maintenance Schedule 11-3
Special Application Services 11-8
Additional Maintenance and Care 11-8
Recommended Fluids 11-12
Maintenance Records 11-15

Technical Data 12-1
Vehicle Identification 12-1
Vehicle Data 12-2

Customer Information 13-1
Customer Information 13-2
Reporting Safety Defects 13-17
Vehicle Data Recording and Privacy 13-19

OnStar 14-1
OnStar Overview 14-1
OnStar Services 14-2
OnStar Additional Information 14-5

Index i-1

The names, logos, emblems, slogans, vehicle model names, and vehicle body designs appearing in this manual including, but not limited to, GM, the GM logo, CHEVROLET, the CHEVROLET Emblem, and EXPRESS are trademarks and/or service marks of General Motors LLC, its subsidiaries, affiliates, or licensors.

This manual describes features that may or may not be on your specific vehicle either because they are options that you did not purchase or due to changes subsequent to the printing of this owner manual.

Please refer to the purchase documentation relating to your specific vehicle to confirm each of the features found on your vehicle. For vehicles first sold in Canada, substitute the name “General Motors of Canada Limited” for Chevrolet Motor Division wherever it appears in this manual.

If the vehicle has the Duramax® Diesel engine, see the Duramax diesel supplement for additional and specific information on this engine.

Keep this manual in the vehicle for quick reference.

Canadian Vehicle Owners

Propriétaires Canadiens

A French language copy of this manual can be obtained from your dealer or from:

On peut obtenir un exemplaire de ce guide en français auprès du concessionnaire ou à l'adresse suivante:

Helm, Incorporated
Attention: Customer Service
47911 Halyard Drive
Plymouth, MI 48170

Using this Manual

To quickly locate information about the vehicle, use the Index in the back of the manual. It is an alphabetical list of what is in the manual and the page number where it can be found.

Litho in U.S.A.
Part No. 20987872 A First Printing

©2012 General Motors LLC. All Rights Reserved.

Danger, Warnings, and Cautions

Warning messages found on vehicle labels and in this manual describe hazards and what to do to avoid or reduce them.

Danger indicates a hazard with a high level of risk which will result in serious injury or death.

Warning or **Caution** indicates a hazard that could result in injury or death.

⚠ WARNING
These mean there is something that could hurt you or other people.

Notice: **This means there is something that could result in property or vehicle damage. This would not be covered by the vehicle's warranty.**

A circle with a slash through it is a safety symbol which means “Do Not,” “Do not do this,” or “Do not let this happen.”

Symbols

The vehicle has components and labels that use symbols instead of text. Symbols are shown along with the text describing the operation or information relating to a specific component, control, message, gauge, or indicator.

: This symbol is shown when you need to see the owner manual for additional instructions or information.

: This symbol is shown when you need to see a service manual for additional instructions or information.

Vehicle Symbol Chart

Here are some additional symbols that may be found on the vehicle and what they mean. For more information on the symbol, refer to the Index.

: Airbag Readiness Light

: Air Conditioning

: Antilock Brake System (ABS)

: Audio Steering Wheel Controls or OnStar®

: Brake System Warning Light

: Charging System

: Cruise Control

: Engine Coolant Temperature

: Exterior Lamps

: Fuel Gauge

: Fuses

: Headlamp High/Low-Beam Changer

: Top Tether Anchors for Child Restraints

: Malfunction Indicator Lamp

: Oil Pressure

: Power

: Remote Vehicle Start

: Safety Belt Reminders

: Tire Pressure Monitor

: Tow/Haul Mode

: Traction Control/StabiliTrak®

: Windshield Washer Fluid

✍ NOTES

In Brief

Instrument Panel

Instrument Panel 1-2

Initial Drive Information

Initial Drive Information 1-4
Remote Keyless Entry (RKE) System 1-4
Remote Vehicle Start 1-4
Door Locks 1-5
Windows 1-6
Seat Adjustment 1-6
Safety Belts 1-8
Airbag On-Off Switch 1-8
Passenger Sensing System . . . 1-8
Mirror Adjustment 1-9
Steering Wheel Adjustment 1-10
Interior Lighting 1-10
Exterior Lighting 1-11
Windshield Wiper/Washer 1-12
Climate Controls 1-12
Transmission 1-13

Vehicle Features

Radio(s) 1-14
Satellite Radio 1-15
Portable Audio Devices 1-15
Bluetooth® 1-16
Steering Wheel Controls 1-16
Cruise Control 1-17
Navigation System 1-17
Rear Vision Camera (RVC) 1-17
Ultrasonic Parking Assist 1-17
Power Outlets 1-18

Performance and Maintenance

StabiliTrak® System 1-18
Tire Pressure Monitor 1-19
Engine Oil Life System 1-19
Fuel E85 (85% Ethanol) 1-19
Driving for Better Fuel Economy 1-20
Roadside Assistance Program 1-20
OnStar® 1-20

Instrument Panel

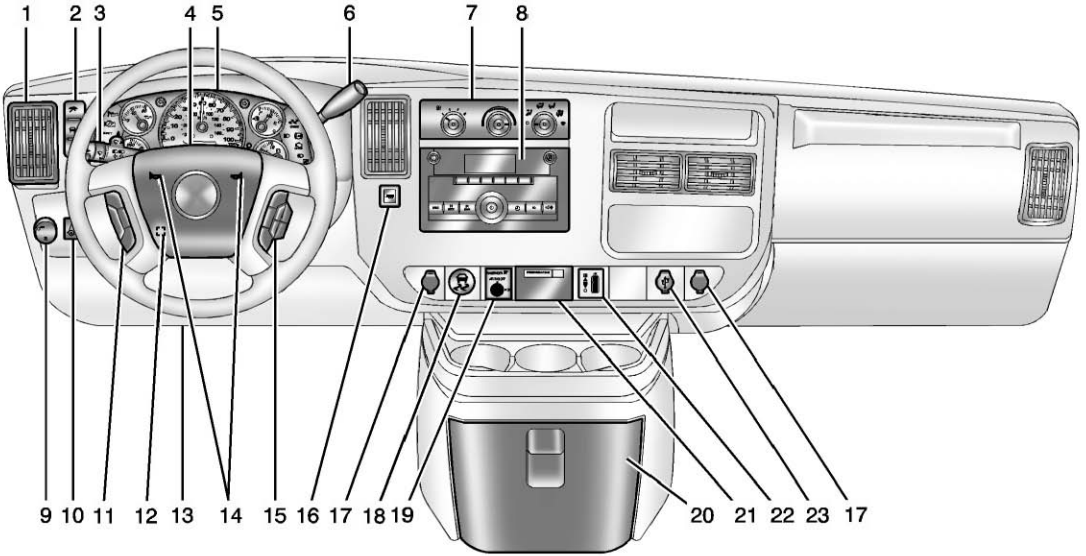

1. *Air Vents on page 8-7*.
2. Driver Information Center (DIC) Buttons. See *Driver Information Center (DIC) on page 5-24*.
3. Turn and Lane-Change Lever. See *Turn and Lane-Change Signals on page 6-4*.

   Windshield Wiper/Washer on page 5-3.
4. *Hazard Warning Flashers on page 6-4* (Out of View).
5. *Instrument Cluster on page 5-9*.
6. Shift Lever. See *Starting the Engine on page 9-16*.

   Manual Mode on page 9-28 (If Equipped).
7. *Climate Control Systems on page 8-1*.
8. *Infotainment on page 7-1*.
9. *Exterior Lamp Controls on page 6-1*.
10. *Instrument Panel Illumination Control on page 6-5*.

    Dome Lamp Override. See *Dome Lamps on page 6-5*.
11. *Cruise Control on page 9-34* (If Equipped).

    Fast Idle System (If Equipped). See the Duramax diesel supplement.
12. *Steering Wheel Adjustment on page 5-2* (If Equipped).
13. Data Link Connector (DLC) (Out of View). See *Malfunction Indicator Lamp on page 5-17*.
14. *Horn on page 5-3*.
15. *Steering Wheel Controls on page 5-2* (If Equipped).
16. Tow/Haul Mode Button. See “Tow/Haul Mode” under *Towing Equipment on page 9-54*.
17. *Power Outlets on page 5-7*.
18. *StabiliTrak® System on page 9-32* (If Equipped).
19. Passenger Airbag On-Off Switch (If Equipped). See *Airbag On-Off Switch on page 3-23*.
20. *Front Storage on page 4-1* (If Equipped).
21. *Passenger Airbag Status Indicator on page 5-16* (If Equipped).

    OnStar® System Button (If Equipped). See *OnStar Overview on page 14-1*.
22. *Rear Heating System on page 8-4* (If Equipped).
23. USB Port (If Equipped). See *Auxiliary Devices on page 7-17*.

Initial Drive Information

This section provides a brief overview about some of the important features that may or may not be on your specific vehicle.

For more detailed information, refer to each of the features which can be found later in this owner manual.

Remote Keyless Entry (RKE) System

If equipped, the RKE transmitter is used to remotely lock and unlock the doors from up to 60 m (195 ft) away from the vehicle.

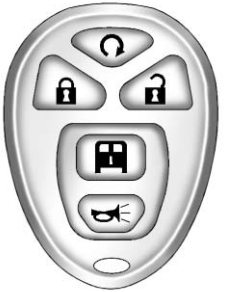

RKE Transmitter with Remote Start Shown

: Press to lock all doors.

Lock and unlock feedback can be personalized. See *Vehicle Personalization on page 5-38*.

: Press to unlock the driver door. Press again within five seconds to unlock all remaining doors.

: Press to unlock only the cargo doors.

: Press and release to locate the vehicle. Press and hold for more than two seconds to sound the panic alarm. Press again to cancel the panic alarm.

See *Keys on page 2-1* and *Remote Keyless Entry (RKE) System Operation on page 2-2*.

Remote Vehicle Start

With this feature the engine can be started from outside of the vehicle.

Starting the Vehicle

1. Aim the RKE transmitter at the vehicle.
2. Press and release .
3. Immediately after completing Step 2, press and hold for four seconds or until the turn signal lamps flash.

When the vehicle starts, the parking lamps will turn on and remain on as long as the engine is running. The doors will be locked and the climate control system may come on.

The engine will continue to run for 10 minutes. Repeat the steps for a 10-minute time extension. Remote start can be extended only once.

Canceling a Remote Start

To cancel a remote start, do one of the following:

- Aim the RKE transmitter at the vehicle and press and hold ⟲ until the parking lamps turn off.
- Turn on the hazard warning flashers.
- Turn the vehicle on and then back off.

See *Remote Vehicle Start on page 2-4*.

Door Locks

Manual Door Locks

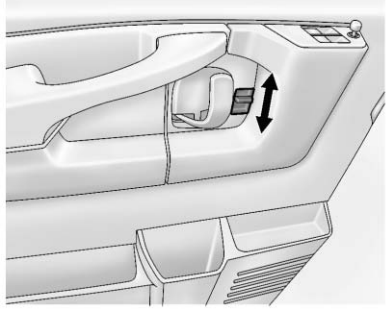

Lock and unlock the door from the outside using the key or the Remote Keyless Entry (RKE) transmitter, if available. From the inside, slide the manual lever on the door up or down.

See *Door Locks on page 2-6*.

Power Door Locks

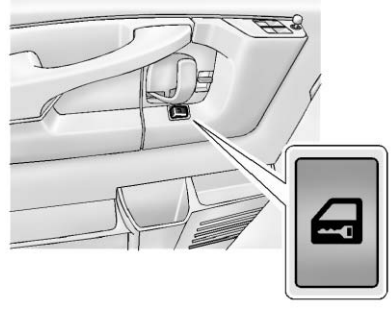

On vehicles with power door locks, the switches are located on the doors.

🚗: Press to lock and unlock the doors.

See *Power Door Locks on page 2-7*.

Windows

Manual Windows

Operate the manual windows by turning the hand crank on each door to raise or lower the side door windows.

See *Manual Windows on page 2-15*.

Power Windows

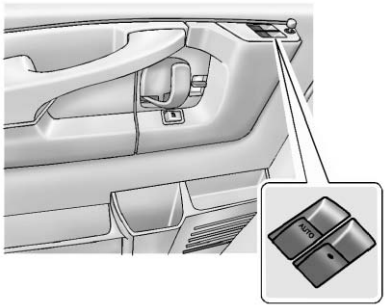

If the vehicle has power windows, the controls are on the front doors. The driver door also has a control to operate the front passenger window.

Press or pull up on the switch to lower or raise the window.

Express-Down

The driver window switch also has an express-down feature that allows the window to be lowered without holding the switch. Press fully and release the window switch marked AUTO to activate the express-down mode. This mode can be canceled at any time by pulling up on the switch. To open the window part way, lightly tap the switch until the window is at the desired position.

See *Power Windows on page 2-15*.

Seat Adjustment

Manual Seats

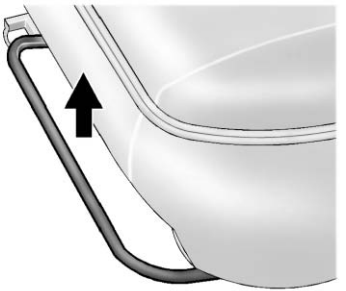

To adjust a manual seat:

1. Lift the bar to unlock the seat.
2. Slide the seat to the desired position and release the bar.
3. Try to move the seat back and forth to be sure the seat is locked in place.

See *Seat Adjustment on page 3-2*.

Power Seats

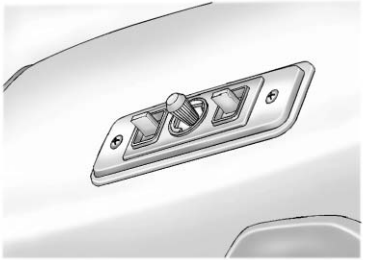

To adjust a power seat, if available, use the controls on the front of the seat:

- Adjust the seat by moving the center knob up, down, right, or left.
- Raise and lower the front or rear of the seat cushion by moving the right or left lever up or down.

See *Power Seat Adjustment on page 3-3*.

Reclining Seatbacks

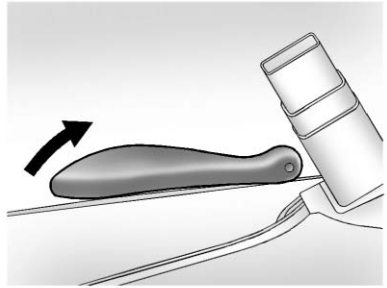

To recline the seatback:

1. Lift the lever on the inboard side of the seat.
2. Move the seatback to the desired position, and then release the lever to lock the seatback in place.
3. Push and pull on the seatback to make sure it is locked.

To return the seatback to the upright position:

1. Lift the lever fully without applying pressure to the seatback, and the seatback will return to the upright position.
2. Push and pull on the seatback to make sure it is locked.

See *Reclining Seatbacks on page 3-3*.

Safety Belts

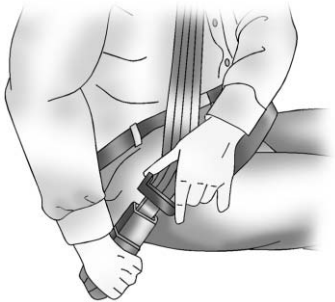

Refer to the following sections for important information on how to use safety belts properly.

- *Safety Belts on page 3-8*.
- *How to Wear Safety Belts Properly on page 3-9*.
- *Lap-Shoulder Belt on page 3-10*.
- *Lower Anchors and Tethers for Children (LATCH System) on page 3-41*.

Airbag On-Off Switch

If the instrument panel has one of the switches pictured in the following illustrations, the vehicle has an airbag on-off switch that you can use to manually turn on or off the right front passenger airbag.

United States

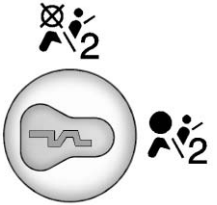

Canada and Mexico

To operate the airbag on-off switch, use the vehicle key.

See *Airbag On-Off Switch on page 3-23* for important information.

Passenger Sensing System

The passenger sensing system, if equipped, will turn off the right front passenger frontal airbag under certain conditions. The driver airbag and roof-rail airbags, if equipped, are not affected by this.

If the vehicle has a passenger sensing system, the passenger airbag status indicator will be visible on the instrument panel when the vehicle is started.

United States

Canada and Mexico

See *Passenger Sensing System on page 3-26* for important information.

Mirror Adjustment

Exterior Mirrors

Vehicles with outside manual mirrors can be adjusted by moving the mirror up and down or left to right so you can see a little of the side of the vehicle, and have a clear view of objects behind you.

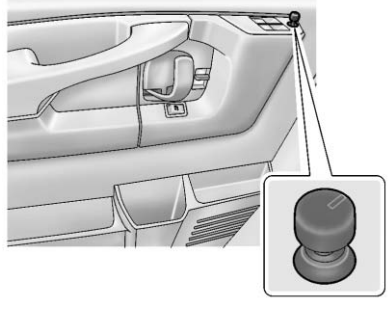

Select each mirror by turning the knob clockwise for the passenger side mirror or counterclockwise for the driver side mirror. Adjust the mirror angle by moving the knob in the desired direction.

Keep the selector switch in the center position when not adjusting either outside mirror.

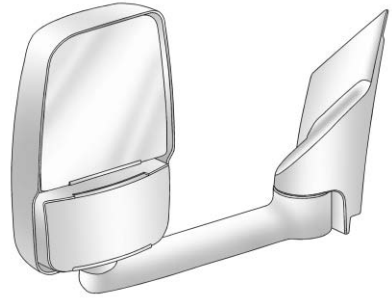

Vehicles with towing mirrors can be adjusted manually for a clear view of the objects behind you.

Manually fold the mirrors inward to prevent damage when going through an automatic car wash. To fold, pull the mirror toward the vehicle. Push the mirror outward, to return it to the original position.

Interior Mirror

To adjust the inside rearview mirror, hold the rearview mirror in the center and move it to view the area behind the vehicle.

For vehicles with a manual rearview mirror, push the tab forward for daytime use and pull it for nighttime use to avoid glare from the headlamps from behind.

See *Manual Rearview Mirror on page 2-15*.

Steering Wheel Adjustment

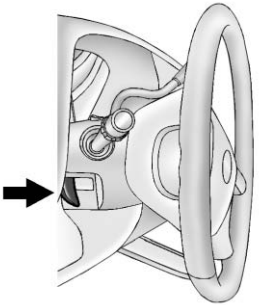

For vehicles with a tilt steering wheel, the lever is located on the left side of the steering column.

To adjust the steering wheel:

1. Pull the lever to move the steering wheel up or down into a comfortable position.
2. Release the lever to lock the steering wheel in place.

See *Steering Wheel Adjustment on page 5-2*.

Interior Lighting

Dome Lamps

The dome lamps come on when any door is opened. They turn off after all the doors are closed.

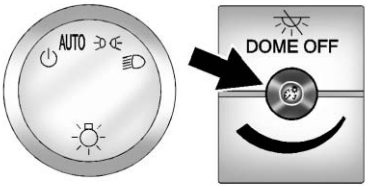

The instrument panel brightness knob extends when is pressed. To manually turn on the dome lamps, press then turn the knob clockwise to the farthest position. In this position, the dome lamps remain on whether a door is opened or closed.

DOME OFF: This button is located above the instrument panel brightness knob.

Press the button in and the dome lamps remain off when a door is opened. Press the button again so that the dome lamps come on when a door is opened.

Reading Lamps

For vehicles with reading lamps, press the button located next to each lamp to turn it on or off.

The vehicle may also have reading lamps in other locations. The lamps cannot be adjusted.

For more information on interior lighting, see:

- *Instrument Panel Illumination Control on page 6-5*.
- *Entry/Exit Lighting on page 6-6*.

Exterior Lighting

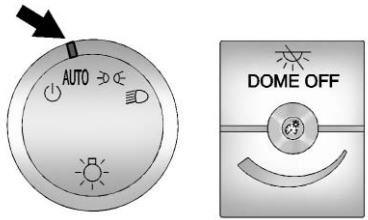

The exterior lamps control is located on the instrument panel to the left of the steering wheel.

: Briefly turn the control to this position to turn the automatic headlamps and Daytime Running Lamps (DRL) off or back on.

For vehicles first sold in Canada, the off position only works for vehicles that are shifted into the P (Park) position.

AUTO: Automatically turns on the headlamps, parking lamps, taillamps, instrument panel lights, and license plate lamps.

: Turns on the parking lamps, taillamps, instrument panel lights, and license plate lamps.

: Turns on the headlamps, parking lamps, taillamps, instrument panel lights, and license plate lamps.

For more information, see:

- *Exterior Lamp Controls on page 6-1*.
- *Exterior Lamps Off Reminder on page 6-2*.
- *Daytime Running Lamps (DRL) on page 6-2*.
- *Automatic Headlamp System on page 6-3*.

Windshield Wiper/Washer

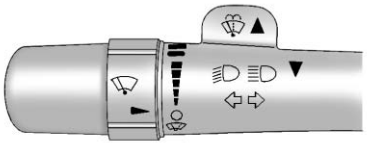

The lever is located on the left side of the steering column.

: Use for a single wiping cycle.

: Use to adjust the delay time between wipes. Turn the band up or down for more frequent wipes or less frequent wipes.

: Slow wipes.

: Fast wipes.

: Use to turn the wipers off.

: Push the paddle on top of the multifunction lever to spray washer fluid on the windshield.

See *Windshield Wiper/Washer on page 5-3*.

Climate Controls

The vehicle's heating, cooling, and ventilation can be controlled with these systems.

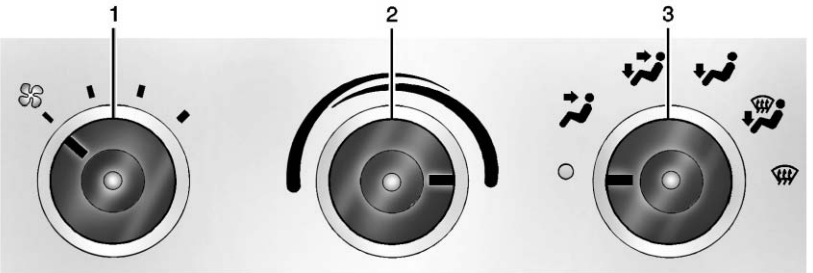

Vehicles without Air Conditioning

1. Fan Control
2. Temperature Control
3. Air Delivery Mode Control

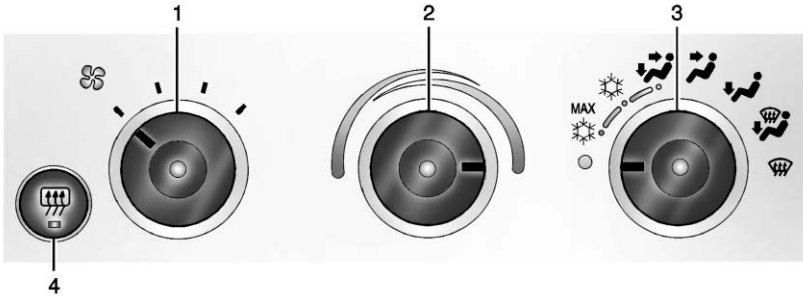

Vehicles with Air Conditioning

1. Fan Control
2. Temperature Control
3. Air Delivery Mode Control
4. Rear Window Defogger

See *Climate Control Systems on page 8-1*. See *Rear Heating System on page 8-4* (If Equipped) or *Rear Climate Control System on page 8-5* (If Equipped).

Transmission

Range Selection Mode

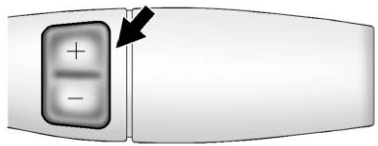

The vehicle may have a Range Selection Mode. The Range Selection Mode helps control the vehicle's transmission and vehicle speed while driving downhill or towing a trailer by letting you select a desired range of gears.

To use this feature:

1. Move the shift lever to M (Manual Mode).
2. Press the +/− buttons on the shift lever, to select the desired range of gears for current driving conditions.

When M (Manual Mode) is selected, a number displays in the DIC next to the M indicating the current gear.

Grade Braking is not available when Range Selection Mode is active. See *Tow/Haul Mode on page 9-29*.

While using Range Selection Mode, Cruise Control and the Tow/Haul Mode can be used. See *Manual Mode on page 9-28*.

Vehicle Features

Radio(s)

Radio with CD (MP3)

⏻ **:** Press to turn the system on and off. Turn to increase or decrease the volume.

BAND: Press to choose between FM1, FM2, AM, and SiriusXM®.

♫ **:** Select radio stations.

⏮ **SEEK or** ⏭ **SEEK:** Seek or scan stations.

i : Press to switch the display between the radio station frequency and the time. While the ignition is off, press this button to display the time. Press to display additional text information related to the current FM-RDS station or MP3 song. A choice of additional information such as Channel, Song, Artist, and CAT (category) can display. Continue pressing to highlight the desired tab, or press the softkey located under any one of the tabs and the information about that tab displays.

For more information about these and other radio features, see *Infotainment on page 7-1*.

Storing a Favorite Station

Depending on which radio the vehicle has, radio stations are stored as either favorites or presets.

For vehicles with a FAV button, a maximum of 36 stations can be stored as favorites using the six softkeys below the radio station frequency tabs and by using the radio FAV button. Press FAV to go through up to six pages of favorites, each having six favorite stations available per page. Each page of favorites can contain any combination of AM and FM stations.

If the radio does not have a FAV button, up to 18 stations (six FM1, six FM2, and six AM), can be programmed on the six numbered buttons.

For more information on storing a favorite station, see *Operation on page 7-5*.

Setting the Clock

To set the time and date for the Radio with CD (MP3):

1. Press ◷ and the HR, MIN, MM, DD, and YYYY (hour, minute, month, day, and year) display.
2. Press the softkey located below any one of the tabs that you want to change.
3. Increase or decrease the time or date, depending on the radio, by pressing the ⏮ SEEK or ⏭ SEEK buttons, ◁◁ REV or ▷▷ FWD buttons, or by turning ♫ clockwise or counterclockwise.

For detailed instructions on setting the clock for your specific audio system, see *Clock on page 5-6*.

Satellite Radio

SiriusXM® is a satellite radio service based in the 48 contiguous United States and 10 Canadian provinces. SiriusXM satellite radio has a wide variety of programming and commercial-free music, coast to coast, and in digital-quality sound.

A fee is required to receive the SiriusXM service.

For more information, refer to:

- www.siriusxm.com or call 1-866-635-2349 (U.S.)
- www.xmradio.ca or call 1-877-209-0079 (Canada)

See *Satellite Radio on page 7-9*.

Portable Audio Devices

This vehicle may have an auxiliary input on the radio faceplate and a USB port on the instrument panel. External devices such as an iPod®, laptop computer, MP3 player, CD changer, or USB storage device can be connected to the auxiliary port using a 3.5 mm (1/8 in) input cable or the USB port depending on the audio system.

See "Using the Auxiliary Input Jack" and "Using the USB Port" in *Auxiliary Devices on page 7-17*.

Bluetooth®

For vehicles with a Bluetooth system, it allows users with a Bluetooth-enabled cell phone to make and receive hands-free calls using the vehicle's audio system and controls.

The Bluetooth-enabled cell phone must be paired with the Bluetooth system before it can be used in the vehicle. Not all phones will support all functions. For more information, see www.gm.com/bluetooth and *Bluetooth on page 7-21*.

Steering Wheel Controls

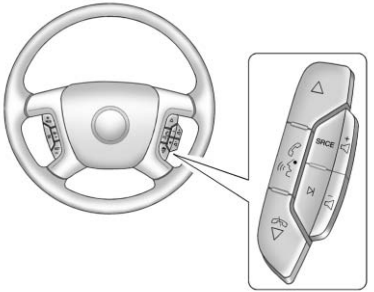

For vehicles with audio steering wheel controls, some audio controls can be adjusted at the steering wheel.

△ **:** Press to go to the next favorite radio station, track on a CD, or folder on an iPod® or USB device.

/ ▽ **:** Press to go to the previous favorite radio station, track on a CD, or folder on an iPod® or USB device. Also press to reject an incoming call, or end a current call.

/ **:** Press to silence the vehicle speakers only. Press again to turn the sound on. Press and hold longer than two seconds to interact with OnStar® or Bluetooth systems, if equipped.

+ **:** Press to increase volume.

– **:** Press to decrease volume.

SRCE: Press to switch between the radio and CD, and for equipped vehicles, the front auxiliary.

: Press to seek the next radio station, the next track while sourced to the CD, or to select tracks and folders on an iPod® or USB device.

For more information, see *Steering Wheel Controls on page 5-2*.

Cruise Control

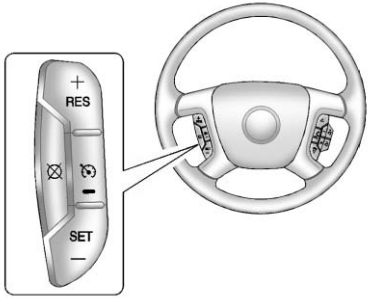

For vehicles with cruise control, use the following buttons:

: Turns the system on or off.

+RES: Press briefly to make the vehicle resume to a previously set speed, or press and hold to accelerate.

SET−: Press to set the speed and activate cruise control or press and hold to decelerate.

: Press to disengage cruise control without erasing the set speed from memory.

See *Cruise Control on page 9-34*.

Navigation System

If the vehicle has a navigation system, there is a separate navigation manual that includes information on the radio, audio players, and navigation system.

The navigation system provides detailed maps of most major freeways and roads. After a destination has been set, the system provides turn-by-turn instructions for reaching the destination. In addition, the system can help locate a variety of points of interest (POIs), such as banks, airports, restaurants, and more.

See the navigation manual for more information.

Rear Vision Camera (RVC)

If available, the RVC displays a view of the area behind the vehicle when the vehicle is shifted into R (Reverse). The display will appear on either the inside rearview mirror or navigation screen, if equipped.

To clean the camera lens, located above the license plate, rinse it with water and wipe it with a soft cloth.

See *Rear Vision Camera (RVC) on page 9-38*.

Ultrasonic Parking Assist

If available, this system uses sensors on the rear bumper to assist with parking and avoiding objects while in R (Reverse). It operates at speeds less than 8 km/h (5 mph). URPA uses audible beeps to provide distance and system information.

Keep the sensors on the vehicle's rear bumper clean to ensure proper operation.

See *Ultrasonic Parking Assist on page 9-37*.

Power Outlets

The accessory power outlets can be used to plug in electrical equipment, such as a cell phone or an MP3 player.

The vehicle may have two accessory power outlets on the instrument panel.

Remove the cover to access and replace when not in use.

See *Power Outlets on page 5-7*.

Performance and Maintenance

StabiliTrak® System

The vehicle may have a traction control system that limits wheel spin and the StabiliTrak system that assists with directional control of the vehicle in difficult driving conditions. Both systems turn on automatically every time the vehicle is started.

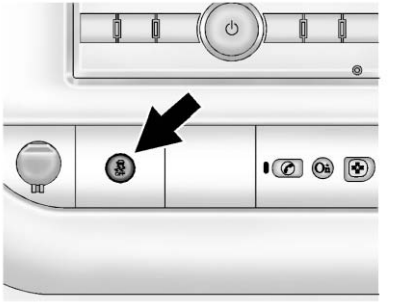

- To turn off traction control, press and release the StabiliTrak button OFF. The appropriate DIC message will display. See *Ride Control System Messages on page 5-34*.
- To turn off both traction control and StabiliTrak, press and hold the StabiliTrak button OFF until the StabiliTrak Off light OFF illuminates and the appropriate DIC messages display. See *Ride Control System Messages on page 5-34*.

- Press and release the StabiliTrak button again to turn on both systems.

For more information, see *StabiliTrak® System on page 9-32*.

Tire Pressure Monitor

This vehicle may have a Tire Pressure Monitor System (TPMS).

The low tire pressure warning light alerts to a significant loss in pressure of one of the vehicle's tires. If the warning light comes on, stop as soon as possible and inflate the tires to the recommended pressure shown on the Tire and Loading Information label. See *Vehicle Load Limits on page 9-10*.

The warning light will remain on until the tire pressure is corrected.

The low tire pressure warning light may come on in cool weather when the vehicle is first started, and then turn off as the vehicle is driven. This may be an early indicator that the tire pressures are getting low and the tires need to be inflated to the proper pressure.

The TPMS does not replace normal monthly tire maintenance. Maintain the correct tire pressures.

See *Tire Pressure Monitor System on page 10-54*.

Engine Oil Life System

The engine oil life system calculates engine oil life based on vehicle use and displays a DIC message when it is necessary to change the engine oil and filter. The oil life system should be reset to 100% only following an oil change.

Resetting the Oil Life System

1. Turn the ignition to ON/RUN, with the engine off.
2. Fully press and release the accelerator pedal three times within five seconds.
3. Turn the key to LOCK/OFF.

See *Engine Oil Life System on page 10-9*.

Fuel E85 (85% Ethanol)

Vehicles that have a yellow fuel cap can use either unleaded gasoline or ethanol fuel containing up to 85% ethanol (E85). See *Fuel E85 (85% Ethanol) on page 9-44*. For all other vehicles, use only the unleaded gasoline described under *Recommended Fuel on page 9-42*.

Driving for Better Fuel Economy

Driving habits can affect fuel mileage. Here are some driving tips to get the best fuel economy possible.

- Avoid fast starts and accelerate smoothly.
- Brake gradually and avoid abrupt stops.
- Avoid idling the engine for long periods of time.
- When road and weather conditions are appropriate, use cruise control.
- Always follow posted speed limits or drive more slowly when conditions require.
- Keep vehicle tires properly inflated.
- Combine several trips into a single trip.
- Replace the vehicle's tires with the same TPC Spec number molded into the tire's sidewall near the size.
- Follow recommended scheduled maintenance.

Roadside Assistance Program

U.S.: 1-800-243-8872

TTY Users (U.S. Only): 1-888-889-2438

Canada: 1-800-268-6800

Mexico: 01-800-466-0800

As the owner of a new Chevrolet, you are automatically enrolled in the Roadside Assistance program.

See *Roadside Assistance Program (Mexico) on page 13-7* or *Roadside Assistance Program (U.S. and Canada) on page 13-11*.

Roadside Assistance and OnStar (U.S. and Canada)

If the vehicle has an active OnStar subscription, contact OnStar and the vehicle's current GPS location will be sent to an OnStar advisor to assess the situation, contact Roadside Assistance, and relay the exact location to send help.

OnStar®

If equipped, this vehicle has a comprehensive, in-vehicle system that can connect to a live Advisor for Emergency, Security, Navigation, Connection, and Diagnostic Services. See *OnStar Overview on page 14-1*.

Keys, Doors, and Windows

Keys and Locks
Keys 2-1
Remote Keyless Entry (RKE) System 2-2
Remote Keyless Entry (RKE) System Operation 2-2
Remote Vehicle Start 2-4
Door Locks 2-6
Power Door Locks 2-7
Cargo Door Relocking 2-7
Delayed Locking 2-7
Automatic Door Locks 2-8
Lockout Protection 2-8
Safety Locks 2-8

Doors
Side Door (60/40 Swing-Out) 2-9
Sliding Door 2-10
Rear Doors 2-10

Vehicle Security
Vehicle Security 2-11
Immobilizer 2-11
Immobilizer Operation 2-11

Exterior Mirrors
Convex Mirrors 2-13
Manual Mirrors 2-13
Trailer-Tow Mirrors 2-14
Power Mirrors 2-14
Heated Mirrors 2-14

Interior Mirrors
Manual Rearview Mirror 2-15

Windows
Windows 2-15
Manual Windows 2-15
Power Windows 2-15
Swing-Out Windows 2-16
Enhanced Technology Glass 2-17
Sun Visors 2-18

Keys and Locks

Keys

⚠ WARNING

Leaving children in a vehicle with the ignition key is dangerous and children or others could be seriously injured or killed. They could operate the power windows or other controls or make the vehicle move. The windows will function with the keys in the ignition, and children or others could be caught in the path of a closing window. Do not leave children in a vehicle with the ignition key.

The key is used for the ignition and all door locks.

The key has a bar-coded key tag that the dealer or qualified locksmith can use to make new keys. Store this information in a safe place, not in the vehicle.

See your dealer if a replacement key or additional key is needed.

If the vehicle has an ignition and it becomes difficult to turn the key, inspect the key blade for debris. Periodically clean with a brush or pick.

With an active OnStar subscription, an OnStar Advisor may remotely unlock the vehicle. See *OnStar Overview on page 14-1*.

Remote Keyless Entry (RKE) System

See *Radio Frequency Statement on page 13-20* for information regarding Part 15 of the Federal Communications Commission (FCC) rules and Industry Canada Standards RSS-GEN/210/220/310.

If there is a decrease in the RKE operating range:

- Check the distance. The transmitter may be too far from the vehicle.
- Check the location. Other vehicles or objects may be blocking the signal.
- Check the transmitter's battery. See “Battery Replacement” later in this section.
- If the transmitter is still not working correctly, see your dealer or a qualified technician for service.

Remote Keyless Entry (RKE) System Operation

If equipped, the Remote Keyless Entry (RKE) transmitter functions work up to 60 m (195 ft) away from the vehicle.

There are other conditions which can affect the performance of the transmitter. See *Remote Keyless Entry (RKE) System on page 2-2*.

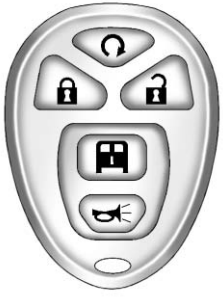

RKE Transmitter with Remote Start Shown

(Lock): Press once to lock all doors. If enabled through the Driver Information Center (DIC), the parking lamps flash once to indicate locking has occurred.

The horn may chirp when is pressed again within five seconds. See *Vehicle Personalization on page 5-38* for additional information.

(Unlock): Press to unlock the driver door. If is pressed again within five seconds, all remaining doors unlock.

The interior lamps come on and stay on for 20 seconds or until the ignition is turned on. If enabled through the DIC, the parking lamps flash twice to indicate unlocking has occurred. See *Vehicle Personalization on page 5-38* for additional information.

(Cargo Door): Press to unlock only the cargo doors.

(Remote Vehicle Start): For vehicles with this feature, press and then press and hold within five seconds to start the engine from outside the vehicle using the RKE transmitter. See *Remote Vehicle Start on page 2-4* for additional information.

(Vehicle Locator/Panic Alarm): Press and release to locate the vehicle. The turn signal lamps flash and the horn sounds three times.

Press and hold for more than two seconds to activate the panic alarm. The turn signal lamps flash and the horn sounds repeatedly for 30 seconds. The alarm turns off when the ignition is moved to ON/RUN or is pressed again. The ignition must be in LOCK/OFF for the panic alarm to work.

Programming Transmitters to the Vehicle

Only RKE transmitters programmed to the vehicle will work. If a transmitter is lost or stolen, a replacement can be purchased and programmed through your dealer. When the replacement transmitter is programmed to the vehicle, all remaining transmitters must also be

programmed. Any lost or stolen transmitters no longer work once the new transmitter is programmed. Each vehicle can have up to four transmitters programmed to it.

Battery Replacement

Replace the battery if the REPLACE BATTERY IN REMOTE KEY message displays in the DIC. See “REPLACE BATTERY IN REMOTE KEY” under *Key and Lock Messages on page 5-33* for additional information.

Notice: **When replacing the battery, do not touch any of the circuitry on the transmitter. Static from your body could damage the transmitter.**

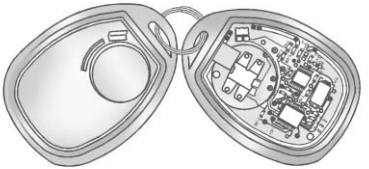

To replace the battery:

1. Separate the transmitter with a flat, thin object, such as a flat head screwdriver.
   - Carefully insert the tool into the notch located along the parting line of the transmitter. Do not insert the tool too far. Stop as soon as resistance is felt.
   - Twist the tool until the transmitter is separated.
2. Remove the old battery. Do not use a metal object.
3. Insert the new battery, positive side facing down. Replace with a CR2032 or equivalent battery.
4. Snap the transmitter back together.

Remote Vehicle Start

This vehicle may have a remote start feature. This feature allows you to start the engine from outside the vehicle. It may also start the vehicle's heating or air conditioning systems. See *Climate Control Systems on page 8-1* for additional information.

Laws in some local communities may restrict the use of remote starters. For example, some laws may require a person using remote start to have the vehicle in view when doing so. Check local regulations for any requirements on remote starting of vehicles.

Do not use the remote start feature if the vehicle is low on fuel. The vehicle may run out of fuel.

The RKE transmitter range may be less while the vehicle is running.

There are other conditions which can affect the performance of the transmitter, see *Remote Keyless Entry (RKE) System on page 2-2* for additional information.

(Remote Vehicle Start): This button will be on the RKE transmitter if you have remote start.

To start the engine using the remote start feature:

1. Aim the RKE transmitter at the vehicle.
2. Press and release on the transmitter.
3. Immediately press and hold until the turn signal lamps flash. If you cannot see the vehicle's lamps, press and hold for four seconds.

   When the engine starts, the parking lamps will turn on and remain on while the engine is running. The doors will be locked. The airbag readiness light will be on during a remote start. It should turn off when the ignition is turned to ON/RUN. See *Airbag Readiness Light on page 5-14* for more information.

   The engine will continue to run for 10 minutes. Repeat the steps for a 10-minute time extension. Remote start can be extended only once.

After entering the vehicle during a remote start, insert and turn the key to ON/RUN to drive the vehicle.

The maximum number of remote starts between ignition cycles with the key is two.

If the remote start procedure is used again before the first 10 minute time frame has ended, the first 10 minutes will immediately expire and the second 10 minute time frame will start.

After the engine has been remote started two times, the ignition switch must be turned to ON/RUN and then back to LOCK/OFF using the key before the remote start procedure can be used again.

To cancel a remote start do any of the following:

- Aim the RKE transmitter at the vehicle and press until the parking lamps turn off.
- Turn on the hazard warning flashers.
- Turn the ignition on and then back off.

The remote vehicle start feature will not operate if:

- The key is in the ignition.
- The hood is open.
- The hazard warning flashers are on.
- There is an emission control system malfunction. See *Malfunction Indicator Lamp on page 5-17*.
- The engine coolant temperature is too high.
- The oil pressure is low.
- Two remote vehicle starts have already been provided.

Door Locks

⚠ WARNING

Unlocked doors can be dangerous.

- Passengers, especially children, can easily open the doors and fall out of a moving vehicle. When a door is locked, the handle will not open it. The chance of being thrown out of the vehicle in a crash is increased if the doors are not locked. So, all passengers should wear safety belts properly and the doors should be locked whenever the vehicle is driven.

(Continued)

WARNING (CONTINUED)

- Young children who get into unlocked vehicles may be unable to get out. A child can be overcome by extreme heat and can suffer permanent injuries or even death from heat stroke. Always lock the vehicle whenever leaving it.
- Outsiders can easily enter through an unlocked door when you slow down or stop the vehicle. Locking the doors can help prevent this from happening.

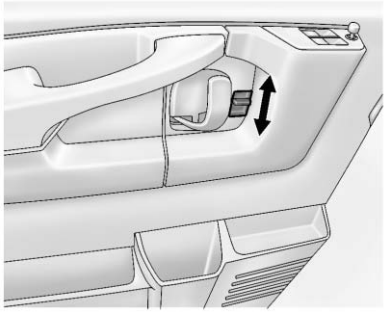

To lock the door from the inside, slide the manual lever on the door down. To unlock the door, slide the manual lever up.

From the outside, use the key.

If the vehicle is equipped with keyless entry. See *Remote Keyless Entry (RKE) System Operation on page 2-2*.

Power Door Locks

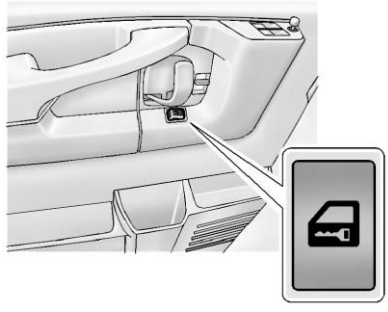

On vehicles with power door locks, the switches are located on the front doors.

: Press to lock and unlock the doors.

When a door is locked, the inside door handle will not work.

Cargo Door Relocking

If the cargo door is open when the lock button is pressed on the door or the RKE transmitter, all doors will lock except the cargo door. The cargo door will lock when it is closed or when the delayed locking feature functions.

Delayed Locking

When locking the doors with the power lock switch and a door open, the doors will lock five seconds after the last door is closed. You will hear three chimes to signal that the delayed locking feature is in use.

Pressing twice or on the RKE transmitter twice will override the delayed locking feature and immediately lock all the doors.

This feature will not operate if the key is in the ignition.

This feature can be programmed using the Driver Information Center (DIC). See “Delay Door Lock” in *Vehicle Personalization on page 5-38*.

Automatic Door Locks

The vehicle may have an automatic lock/unlock feature. This feature can be programmed using the Driver Information Center (DIC). See *Vehicle Personalization on page 5-38*.

Lockout Protection

This feature protects you from locking the key in the vehicle when the key is in the ignition and a door is open.

If the power lock switch is pressed when either the driver, passenger, or rear door is open, all the doors will lock and then the driver door will unlock. This feature does not include the side cargo door.

If the vehicle has an ambulance package, this feature is disabled.

Safety Locks

Security locks are located on the front portion of the 60/40 side swing-out door or the side sliding door.

60/40 Swing-Out Side Door — Driver Side Shown, Passenger Side Similar

For the 60/40 side swing-out door, move the button to the right for the driver side door or to the left for the passenger side door to engage the security feature.

Move the button to the left for the driver side door or to the right for the passenger side door to return the door locks to normal operation.

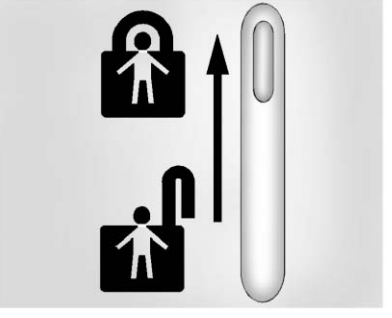

Side Sliding Door

For the side sliding door, move the button up to engage the security feature. Move the button down to return the door locks to normal operation.

Doors

Side Door (60/40 Swing-Out)

To open the front portion of a 60/40 door from the outside, pull out on the handle and open the door.

To open the front portion of a 60/40 door from the inside, pull the handle toward you and push the door open.

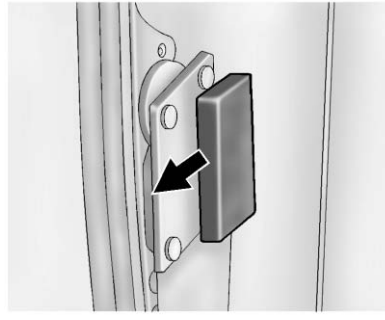

To open the rear portion of a 60/40 door from the outside, pull the handle on the side of the rear door and pull the door toward you.

To close the 60/40 side doors, close the rear door first. Then close the front door. Check to make sure that both doors are completely closed.

The swing-out doors have a check strap assembly in the door frame to keep the door from opening beyond 90 degrees.

To open the door beyond 90 degrees, close the door partially, pull the check strap toward you and

then open the door. When the door is closed, the check strap will automatically re-engage.

Sliding Door

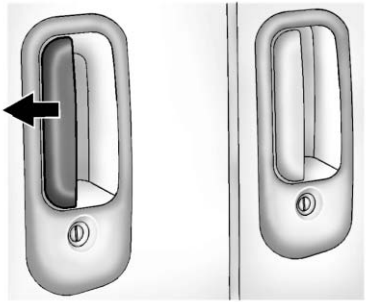

To open the sliding side door from the outside, pull the handle toward the rear of the vehicle and slide the door open.

To close the sliding side door from the outside, use the handle to slide the door toward the front of the vehicle.

When the door is closed, it will be flush with the side of the body.

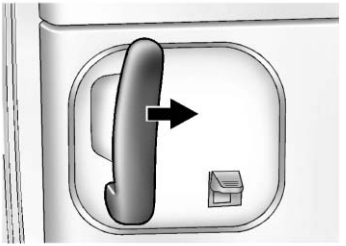

To open the sliding side door from the inside, pull the handle toward the rear of the vehicle. Then, slide the door toward the rear of the vehicle.

To close the sliding side door from the inside, grasp the handle and slide the door toward the front of the vehicle.

Make sure the door is completely closed before driving away.

Rear Doors

⚠ WARNING

Unlocked doors can be dangerous.

- Passengers, especially children, can easily open the doors and fall out of a moving vehicle. When a door is locked, the handle will not open it. The chance of being thrown out of the vehicle in a crash is increased if the doors are not locked. So, all passengers should wear safety belts properly and the doors should be locked whenever the vehicle is driven.
- Young children who get into unlocked vehicles may be unable to get out. A child can be overcome by extreme heat and can suffer permanent

(Continued)

WARNING (CONTINUED)

injuries or even death from heat stroke. Always lock the vehicle whenever leaving it.

- Outsiders can easily enter through an unlocked door when you slow down or stop the vehicle. Locking the doors can help prevent this from happening.

To open the rear doors from the outside, pull the handle toward you to open the passenger side rear door first.

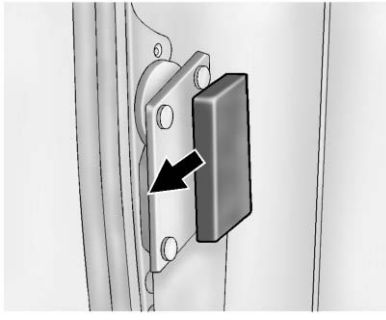

To open the driver side rear door, pull the latch release at the inside edge of the door.

To close the rear doors, close the driver side rear door first. Then close the passenger side rear door. Check to make sure both doors are completely closed.

Vehicle Security

This vehicle has theft-deterrent features; however, they do not make the vehicle impossible to steal.

Immobilizer

See *Radio Frequency Statement on page 13-20* for information regarding Part 15 of the Federal Communications Commission (FCC) rules and Industry Canada Standards RSS-GEN/210/220/310.

Immobilizer Operation

This vehicle is equipped with the PASS-Key® III+ (Personalized Automotive Security System) theft-deterrent system.
PASS-Key III+ is a passive theft deterrent system.

The system is automatically armed when the key is removed from the ignition.

You do not have to manually arm or disarm the system.

The security light will come on if there is a problem with arming or disarming the theft-deterrent system.

When the PASS-Key III+ system senses that someone is using the wrong key, it shuts down the vehicle's starter and fuel systems. The starter will not work and fuel will stop being delivered to the engine. Anyone using a trial-and-error method to start the vehicle will be discouraged because of the high number of electrical key codes.

If the engine does not start and the security message comes on, the key may have a damaged transponder. Turn the ignition off and try again.

If the engine still does not start, and the key appears to be undamaged, try another ignition key. If the engine still does not start with the other key, the vehicle needs service. If the vehicle does start, the first key may be faulty. See your dealer or a locksmith who can service the PASS-Key III+ to have a new key made.

It is possible for the PASS-Key III+ decoder to learn the transponder value of a new or replacement key. Up to 10 keys may be programmed for the vehicle. This procedure is for learning additional keys only. If all the currently programmed keys are lost or do not operate, you must see your dealer or a locksmith who can service PASS-Key III+ to have keys made and programmed to the system.

See your dealer or a locksmith who can service PASS-Key III+ to get a new key blank that is cut exactly as the ignition key that operates the system.

To program the new key:

1. Verify the new key has ⊕ stamped on it.
2. Insert the original, already programmed key into the ignition lock cylinder and start the engine. If the engine will not start, see your dealer for service.
3. After the engine has started, turn the key to LOCK/OFF and remove the key.
4. Insert the key to be programmed and turn it to ON/RUN within 10 seconds of removing the previous key.

   The security message will turn off once the key has been programmed. It may not be apparent that the security message went on due to how quickly the key is programmed.

5. Repeat Steps 1–4 if additional keys are to be programmed.

If you lose or damage a PASS-Key III+ key, see your dealer or a locksmith who can service PASS-Key III+ to have a new key made.

Do not leave the key or device that disarms or deactivates the theft-deterrent system in the vehicle.

Exterior Mirrors

Convex Mirrors

⚠ WARNING

A convex mirror can make things, like other vehicles, look farther away than they really are. If you cut too sharply into the right lane, you could hit a vehicle on the right. Check the inside mirror or glance over your shoulder before changing lanes.

The passenger side mirror is convex shaped. A convex mirror's surface is curved so more can be seen from the driver seat.

Manual Mirrors

Adjust the mirrors by pressing the mirror up and down and left and right.

The mirrors can be manually folded in or out.

On the lower portion of each mirror is an auxiliary convex mirror. A convex mirror's surface is curved so you can see more from the driver seat. The auxiliary convex mirrors can be adjusted manually by pressing the mirror.

Trailer-Tow Mirrors

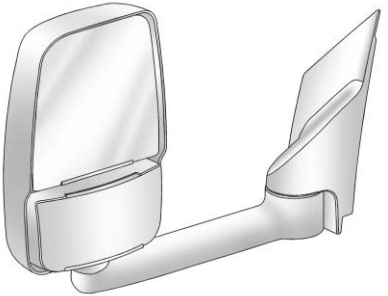

Vehicles with towing mirrors can be adjusted manually for a clear view of the objects behind you.

On the lower portion of each mirror there is an auxiliary convex mirror that can be adjusted manually to provide an extended field of view.

The mirrors can be manually folded in or out.

Power Mirrors

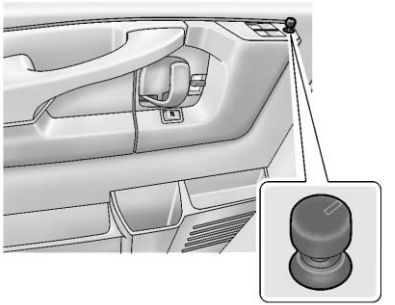

Select each mirror by turning the knob clockwise for the passenger side mirror or counterclockwise for the driver side mirror. The center position is neutral.

Then, adjust the mirror angle by moving the knob in the desired direction. The auxiliary convex mirrors can only be adjusted manually.

Heated Mirrors

For vehicles with heated mirrors:

(Rear Defogger): Press to heat the mirrors.

An indicator light in the button lights when the outside heated mirrors are activated.

See “Rear Window Defogger” under *Climate Control Systems on page 8-1* for more information.

Interior Mirrors

Manual Rearview Mirror

To adjust the inside rearview mirror, hold the rearview mirror in the center and move it to view the area behind the vehicle.

For vehicles with a manual rearview mirror, push the tab forward for daytime use and pull it for nighttime use to avoid glare from the headlamps from behind.

Cargo vans without rear door glass may not have an inside rearview mirror.

The vehicle may have a Rear Vision Camera (RVC). See *Rear Vision Camera (RVC) on page 9-38*.

Windows

⚠ WARNING

Never leave a child, a helpless adult, or a pet alone in a vehicle, especially with the windows closed in warm or hot weather. They can be overcome by the extreme heat and suffer permanent injuries or even death from heat stroke.

Manual Windows

Operate the manual windows by turning the hand crank on each door to raise or lower the side door windows.

Power Windows

⚠ WARNING

Children could be seriously injured or killed if caught in the path of a closing window. Never leave keys in a vehicle with children. See *Keys on page 2-1*.

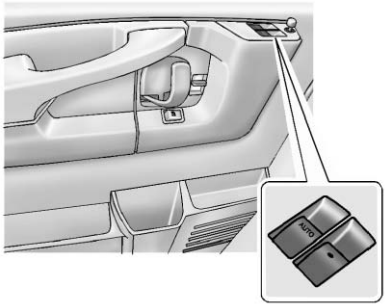

If the vehicle has power windows, the controls are on each of the front doors.

The driver door has a switch for the passenger window also. The power windows will work when the ignition has been turned to ON/RUN or ACC/ACCESSORY, or when Retained Accessory Power (RAP) is active. See *Retained Accessory Power (RAP) on page 9-19*.

Press the switch to lower the window.

Pull up on the front edge of the switch to raise the window.

Express-Down

The driver window switch also has an express-down feature that allows the window to be lowered without holding the switch. Press fully and release the window switch marked AUTO to activate the express-down mode. This mode can be canceled at any time by pulling up on the switch. To open the window part way, lightly tap the switch until the window is at the desired position.

Swing-Out Windows

Side Swing-Out Window

To open the side door swing-out window, pull up on the latch at the edge of the window. Swing the window out and push down on the latch to lock the window into place.

To close the window, pull the latch toward you and push down on the latch to lock it.

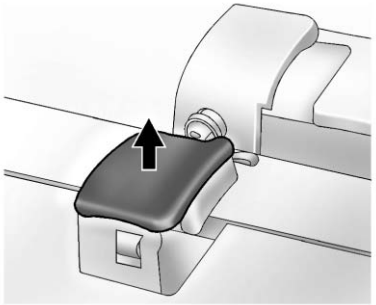

Rear Swing-Out Windows

The vehicle also has rear swing-out windows. The rear swing-out windows work the same way as the side swing-out window, but the latch is located at the bottom edge of the window.

Enhanced Technology Glass

The vehicle may be equipped with Enhanced Technology Glass (ETG). ETG is part of the overall occupant protection system on passenger vans. ETG may help to keep passengers sitting next to these fixed windows from being ejected through the glass in some, but not in all crashes. Even with this glass, safety belts must still be worn at all times. For passenger vans, use only ETG glass approved for the vehicle for replacement when damaged.

The following table shows laminated glass location, based on vehicle model and options.

Vehicle Configuration	ETG Locations
Eight-Seat Passenger Vans	Sliding door forward window
12- and 15-Seat Passenger Vans	Sliding door forward window and rear-most side windows
Long Wheelbase Cargo Vans	Rear-most side windows

Sun Visors

To block out glare, swing down the sun visors. You can also swing them to the side.

Visor Vanity Mirror

The vehicle may have visor vanity mirrors, with or without lamps. Lift the mirror cover to turn the lamps on, if equipped.

Seats and Restraints

Head Restraints
Head Restraints 3-2

Front Seats
Seat Adjustment 3-2
Power Seat Adjustment 3-3
Reclining Seatbacks 3-3

Rear Seats
Rear Seats 3-4

Safety Belts
Safety Belts 3-8
How to Wear Safety Belts Properly 3-9
Lap-Shoulder Belt 3-10
Safety Belt Use During Pregnancy 3-14
Safety Belt Extender 3-15
Safety System Check 3-15
Safety Belt Care 3-15
Replacing Safety Belt System Parts after a Crash 3-15

Airbag System
Airbag System 3-16
Where Are the Airbags? 3-18
When Should an Airbag Inflate? 3-20
What Makes an Airbag Inflate? 3-21
How Does an Airbag Restrain? 3-21
What Will You See after an Airbag Inflates? 3-22
Airbag On-Off Switch 3-23
Passenger Sensing System 3-26
Servicing the Airbag-Equipped Vehicle 3-31
Adding Equipment to the Airbag-Equipped Vehicle . . . 3-31
Airbag System Check 3-32
Replacing Airbag System Parts after a Crash 3-33

Child Restraints
Older Children 3-33
Infants and Young Children 3-35
Child Restraint Systems 3-38
Where to Put the Restraint . . . 3-39
Lower Anchors and Tethers for Children (LATCH System) 3-41
Replacing LATCH System Parts After a Crash 3-47
Securing Child Restraints (Rear Seat) 3-48
Securing Child Restraints (Front Seat-Passenger Sensing System) 3-50
Securing Child Restraints (Front Seat-Airbag On/Off Switch) 3-53

Head Restraints

On vehicles with factory installed seats, the front seats have built-in head restraints that are not adjustable in the outboard seating positions.

Front Seats

Seat Adjustment

⚠ WARNING

You can lose control of the vehicle if you try to adjust a driver seat while the vehicle is moving. Adjust the driver seat only when the vehicle is not moving.

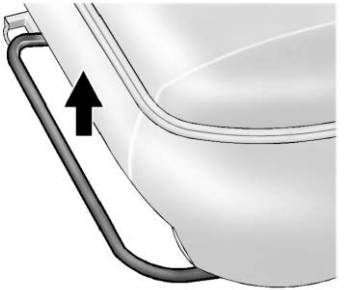

To adjust the seat:

1. Lift the bar under the front edge of the seat cushion to unlock the seat.
2. Slide the seat to the desired position and release the bar.
3. Try to move the seat back and forth to be sure the seat is locked in place.

Power Seat Adjustment

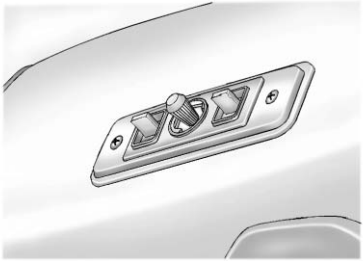

To adjust a power seat, if available, use the controls on the front of the seat:

- Move the center knob to the right or left to move the seat forward or rearward.
- Move the center knob up or down to raise or lower the seat.
- Move the right or left lever up or down to raise or lower the front or rear of the seat cushion.

Reclining Seatbacks

⚠ WARNING

If either seatback is not locked, it could move forward in a sudden stop or crash. That could cause injury to the person sitting there. Always push and pull on the seatbacks to be sure they are locked.

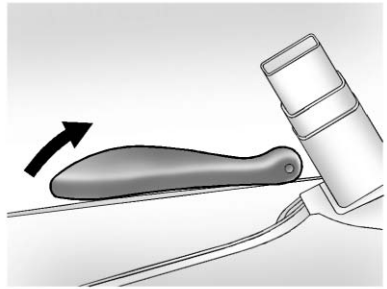

To recline the seatback:

1. Lift the lever on the inboard side of the seat.
2. Move the seatback to the desired position, and then release the lever to lock the seatback in place.
3. Push and pull on the seatback to make sure it is locked.

To return the seatback to the upright position:

1. Lift the lever fully without applying pressure to the seatback, and the seatback will return to the upright position.
2. Push and pull on the seatback to make sure it is locked.

⚠ WARNING

Sitting in a reclined position when the vehicle is in motion can be dangerous. Even when buckled up, the safety belts cannot do their job.

The shoulder belt will not be against your body. Instead, it will be in front of you. In a crash, you could go into it, receiving neck or other injuries.

The lap belt could go up over your abdomen. The belt forces would be there, not at your pelvic bones. This could cause serious internal injuries.

For proper protection when the vehicle is in motion, have the seatback upright. Then sit well back in the seat and wear the safety belt properly.

Do not have a seatback reclined if the vehicle is moving.

Rear Seats

Removing the Rear Seat

Disconnect the mini-latch plates for the lap-shoulder belts on the bench seat to be removed.

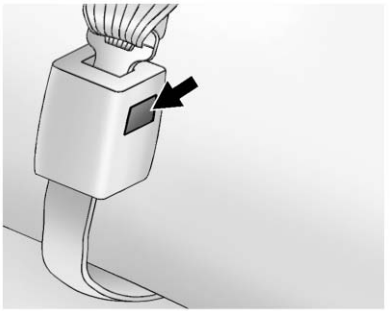

1. To do this, press the tip of a key into the release hole of the safety belt buckle while pulling up on the safety belt.

2. Locate the pins.

   On a three-passenger seat there are two pins on the inboard sides of the rear seats.

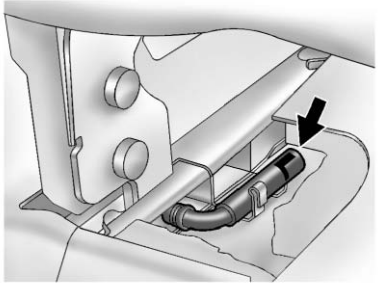

Three-Passenger Seat Shown

The left side pin has a gray cap with a black “L” marked on it.

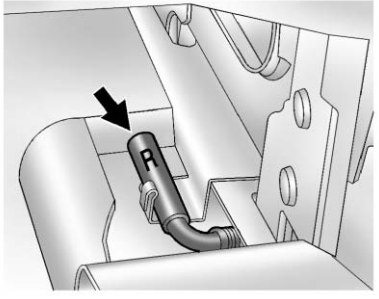

Three-Passenger Seat Shown

The right side pin has a black cap with a white “R” marked on it.

On a four-passenger seat, each half of the seat has a set of pins. The left side has a set marked “L,” and the right side has a set marked “R”.

If the vehicle has floor mats, the pins are under a flap that has been cut into the mat.

3. Pull the pin handle up to disengage the pin from the retaining clip, and then pull the pin out.
4. Repeat this procedure for the other pins.
5. Pull the seat rearward about 5 cm (2 in), and then lift the seat from the floor rails.
6. Remove the seat from the vehicle.

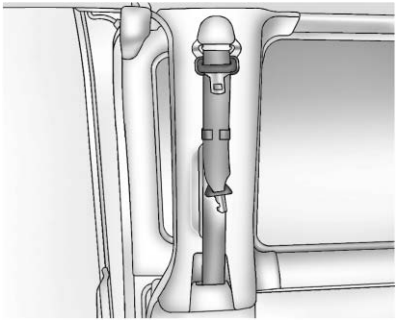

7. For the second- and third-row seats, stow the safety belt latch by attaching the clip on the safety belt latch to the trim just inside the side door.

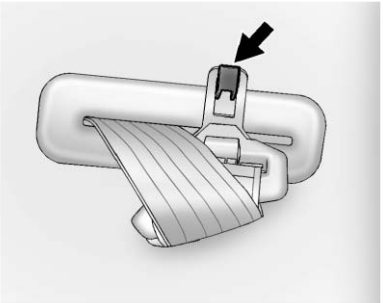

For the last row of seats, stow the safety belt latch plate on the clip at the window trim. Roll the mini-latch into the safety belt webbing and then hook the safety belt latch plate on the clip.

Reinstalling the Rear Seats

⚠ WARNING

A seat that is not locked into place properly can move around in a collision or sudden stop. People in the vehicle could be injured. Be sure to lock the seat into place properly when installing it.

⚠ WARNING

A safety belt that is improperly routed, not properly attached, or twisted will not provide the protection needed in a crash. The person wearing the belt could be seriously injured. After raising the rear seatback, always check to be sure that the safety belts are properly routed and attached, and are not twisted.

1. Position the seat into the open slots in both rails. Push the seat forward in the rail, hooking both seat bases onto the pins inside of the rails.
2. Locate the hole in the rail to install the locking pins at the rear of the seat base. If the vehicle has floor mats, pull the flap that has been cut into the mat.
3. Insert the locking pins into the seat base and push the seat to line up the pins with the base.

   On a three-passenger seat, the pin with the black cap marked “R” must be installed on the right side and the pin with the gray cap marked “L” on the left side.

   On a four-passenger seat, the pins marked “R” must be installed on the half of the seat on the right side. The pins marked “L” must be installed on the half of the seat on the left side.

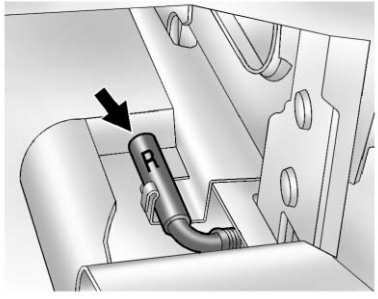

Three-Passenger Seat Shown

4. Push the pin(s) marked “R” down until they are in the retaining clip.

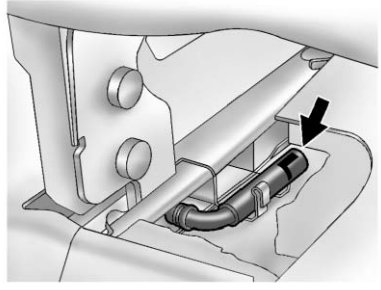

Three-Passenger Seat Shown

5. Push the pin(s) marked “L” down until they are in the retaining clip.

6. If the vehicle has a floor mat, put the flap back to its original position.
7. Repeat this procedure for the other seat base.
8. Connect the mini-latch plates for the lap-shoulder belts by inserting the latch plates into the mini-buckles attached at the outboard positions of the bench seat. Do not twist the belts.
9. Check that all locking pins are locked into place before operating the vehicle.

Safety Belts

This section of the manual describes how to use safety belts properly. It also describes some things not to do with safety belts.

⚠ WARNING

Do not let anyone ride where a safety belt cannot be worn properly. In a crash, if you or your passenger(s) are not wearing safety belts, injuries can be much worse than if you are wearing safety belts. You can be seriously injured or killed by hitting things inside the vehicle harder or by being ejected from the vehicle. In addition, anyone who is not buckled up can strike other passengers in the vehicle.

(Continued)

WARNING (CONTINUED)

It is extremely dangerous to ride in a cargo area, inside or outside of a vehicle. In a collision, passengers riding in these areas are more likely to be seriously injured or killed. Do not allow passengers to ride in any area of the vehicle that is not equipped with seats and safety belts.

Always wear a safety belt, and check that all passenger(s) are restrained properly too.

This vehicle has indicators as a reminder to buckle the safety belts. See *Safety Belt Reminders on page 5-14*.

Why Safety Belts Work

When riding in a vehicle, you travel as fast as the vehicle does. If the vehicle stops suddenly, you keep going until something stops you. It could be the windshield, the instrument panel, or the safety belts!

When you wear a safety belt, you and the vehicle slow down together. There is more time to stop because you stop over a longer distance and, when worn properly, your strongest bones take the forces from the

safety belts. That is why wearing safety belts makes such good sense.

Questions and Answers About Safety Belts

Q: Will I be trapped in the vehicle after a crash if I am wearing a safety belt?

A: You *could* be — whether you are wearing a safety belt or not. Your chance of being conscious during and after a crash, so you *can* unbuckle and get out, is *much* greater if you are belted.

Q: If my vehicle has airbags, why should I have to wear safety belts?

A: Airbags are supplemental systems only; so they work *with* safety belts — not instead of them. Whether or not an airbag is provided, all occupants still have to buckle up to get the most protection.

Also, in nearly all states and in all Canadian provinces, the law requires wearing safety belts.

How to Wear Safety Belts Properly

This section is only for people of adult size.

There are special things to know about safety belts and children. And there are different rules for smaller children and infants. If a child will be riding in the vehicle, see *Older Children on page 3-33* or *Infants and Young Children on page 3-35*. Follow those rules for everyone's protection.

It is very important for all occupants to buckle up. Statistics show that unbelted people are hurt more often in crashes than those who are wearing safety belts.

There are important things to know about wearing a safety belt properly.

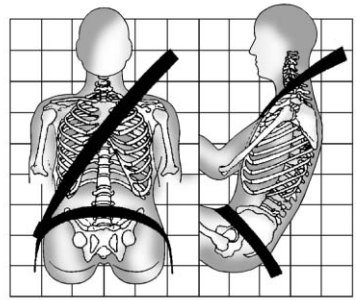

- Sit up straight and always keep your feet on the floor in front of you.
- Always use the correct buckle for your seating position.
- Wear the lap part of the belt low and snug on the hips, just touching the thighs. In a crash, this applies force to the strong pelvic bones and you would be less likely to slide under the lap belt. If you slid under it, the belt

would apply force on your abdomen. This could cause serious or even fatal injuries.

- Wear the shoulder belt over the shoulder and across the chest. These parts of the body are best able to take belt restraining forces. The shoulder belt locks if there is a sudden stop or crash.

⚠ WARNING

You can be seriously injured, or even killed, by not wearing your safety belt properly.

- Never allow the lap or shoulder belt to become loose or twisted.
- Never wear the shoulder belt under both arms or behind your back.
- Never route the lap or shoulder belt over an armrest.

Lap-Shoulder Belt

All seating positions in the vehicle have a lap-shoulder belt. If you are using a rear seating position with a detachable safety belt and the safety belt is not attached, see “Reinstalling the Rear Seats” under *Rear Seats on page 3-4* for instructions on reconnecting the safety belt to the mini-buckle.

The following instructions explain how to wear a lap-shoulder belt properly.

1. Adjust the seat, if the seat is adjustable, so you can sit up straight. To see how, see “Seats” in the Index.
2. Pick up the latch plate and pull the belt across you. Do not let it get twisted.

   The lap-shoulder belt may lock if you pull the belt across you very quickly. If this happens, let the belt go back slightly to unlock it. Then pull the belt across you more slowly.

   If the shoulder portion of a passenger belt is pulled out all the way, the child restraint locking feature may be engaged. If this happens, let the belt go back all the way and start again.

3. Push the latch plate into the buckle until it clicks.

Pull up on the latch plate to make sure it is secure. If the belt is not long enough, see *Safety Belt Extender on page 3-15*.

Position the release button on the buckle so that the safety belt could be quickly unbuckled if necessary.

4. If equipped with a shoulder belt height adjuster, move it to the height that is right for you. See “Safety Belt Height Adjuster” later in this section for instructions on use and important safety information.

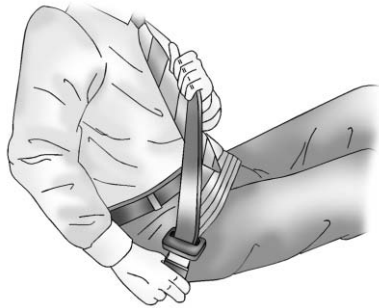

5. To make the lap part tight, pull up on the shoulder belt.

   It may be necessary to pull stitching on the safety belt through the latch plate to fully tighten the lap belt on smaller occupants.

To unlatch the belt, push the button on the buckle. The belt should return to its stowed position. Slide the latch plate up the safety belt webbing when the safety belt is not in use. The latch plate should rest on the stitching on the safety belt, near the guide loop on the side wall.

Before a door is closed, be sure the safety belt is out of the way. If a door is slammed against a safety belt, damage can occur to both the safety belt and the vehicle.

Safety Belt Height Adjuster

The vehicle has a safety belt height adjuster for the driver and right front passenger positions.

Adjust the height so the shoulder portion of the belt is on the shoulder and not falling off of it. The belt should be close to, but not contacting, the neck. Improper shoulder belt height adjustment could reduce the effectiveness of the safety belt in a crash. See *How to Wear Safety Belts Properly on page 3-9*.

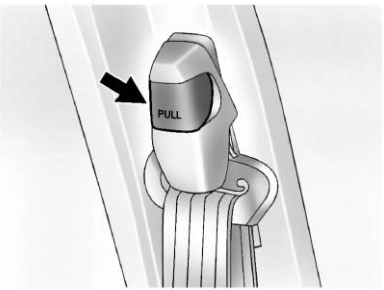

To move it down, pull on the center adjuster control labeled PULL. You can move the height adjuster up just by pushing up on the shoulder belt guide.

After the adjuster is set to the desired position, try to move it down without pushing in to make sure it has locked into position.

Safety Belt Pretensioners

If the GVWR (Gross Vehicle Weight Rating) of the vehicle is below 3 855 kg (8,500 lb) then the vehicle has safety belt pretensioners for the front outboard occupants. See *Vehicle Load Limits on page 9-10* to locate the certification label which contains the GVWR.

Although the safety belt pretensioners cannot be seen, they are part of the safety belt assembly. They can help tighten the safety belts during the early stages of a moderate to severe frontal, near frontal, or rear crash if the threshold conditions for pretensioner activation are met. And, if the vehicle has side impact airbags, safety belt pretensioners can help tighten the safety belts in a side crash or a rollover event.

Pretensioners work only once. If the pretensioners are activated in a crash, the pretensioners and possibly other parts of the safety belt system will need to be replaced. See *Replacing Safety Belt System Parts after a Crash on page 3-15*.

Rear Safety Belt Comfort Guides

This vehicle may have rear shoulder belt comfort guides. If not, they are available through your dealer. The guides may provide added safety belt comfort for older children who have outgrown booster seats and for some adults. When installed and properly adjusted, the comfort guide positions the shoulder belt away from the neck and head.

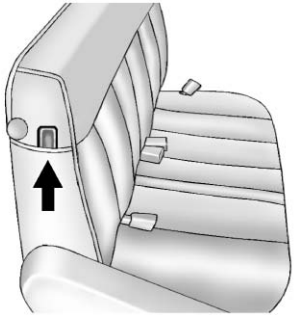

Here is how to install a comfort guide to the safety belt:

1. Locate the guide in a pocket on the side of the seatback.

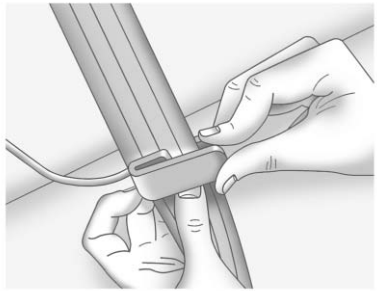

2. Place the guide over the belt, and insert the two edges of the belt into the slots of the guide.

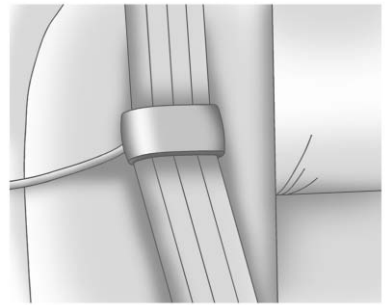

3. Be sure that the belt is not twisted and it lies flat. The elastic cord must be under the belt and the guide on top.

⚠ WARNING

A safety belt that is not properly worn may not provide the protection needed in a crash. The person wearing the belt could be seriously injured. The shoulder belt should go over the shoulder and across the chest. These parts of the body are best able to take belt restraining forces.

4. Buckle, position, and release the safety belt as described previously in this section. Make sure the shoulder portion of the belt is on the shoulder and not falling off of it. The belt should be close to, but not contacting, the neck.

To remove and store the comfort guide, squeeze the belt edges together so that the safety belt can be removed from the guide. Slide the guide into its storage pocket on the side of the seatback.

Safety Belt Use During Pregnancy

Safety belts work for everyone, including pregnant women. Like all occupants, they are more likely to be seriously injured if they do not wear safety belts.

A pregnant woman should wear a lap-shoulder belt, and the lap portion should be worn as low as possible, below the rounding, throughout the pregnancy.

The best way to protect the fetus is to protect the mother. When a safety belt is worn properly, it is more likely that the fetus will not be hurt in a crash. For pregnant women, as for anyone, the key to making safety belts effective is wearing them properly.

Safety Belt Extender

If the vehicle's safety belt will fasten around you, you should use it.

But if a safety belt is not long enough, your dealer will order you an extender. When you go in to order it, take the heaviest coat you will wear, so the extender will be long enough for you. To help avoid personal injury, do not let someone else use it, and use it only for the seat it is made to fit. The extender has been designed for adults. Never use it for securing child seats. To wear it, attach it to the regular safety belt. For more information, see the instruction sheet that comes with the extender.

Safety System Check

Now and then, check that the safety belt reminder light, safety belts, buckles, latch plates, retractors, and anchorages are all working properly.

Look for any other loose or damaged safety belt system parts that might keep a safety belt system from doing its job. See your dealer to have it repaired. Torn or frayed safety belts may not protect you in a crash. They can rip apart under impact forces. If a belt is torn or frayed, get a new one right away.

Make sure the safety belt reminder light is working. See *Safety Belt Reminders on page 5-14*.

Keep safety belts clean and dry. See *Safety Belt Care on page 3-15*.

Safety Belt Care

Keep belts clean and dry.

⚠ WARNING

Do not bleach or dye safety belts. It may severely weaken them. In a crash, they might not be able to provide adequate protection. Clean safety belts only with mild soap and lukewarm water.

Replacing Safety Belt System Parts after a Crash

⚠ WARNING

A crash can damage the safety belt system in the vehicle. A damaged safety belt system may not properly protect the person using it, resulting in serious injury or even death in a crash. To help make sure the safety belt systems are working properly after a crash, have them inspected and any necessary replacements made as soon as possible.

After a minor crash, replacement of safety belts may not be necessary. But the safety belt assemblies that were used during any crash may have been stressed or damaged.

See your dealer to have the safety belt assemblies inspected or replaced.

New parts and repairs may be necessary even if the safety belt system was not being used at the time of the crash.

Have the safety belt pretensioners checked if the vehicle has been in a crash, or if the airbag readiness light stays on after you start the vehicle or while you are driving. See *Airbag Readiness Light on page 5-14*.

Airbag System

The vehicle has the following airbag:

- A frontal airbag for the driver.

The vehicle may have the following airbags:

- A frontal airbag for the right front passenger.
- A roof-rail airbag for the driver (cargo van).
- A roof-rail airbag for the right front passenger position (cargo or passenger van equipped with a sliding door).

  If you have a passenger van with a right front passenger roof-rail airbag and a sliding door, you will also have a separate roof-rail airbag for the passenger seated directly behind the right front passenger and the third row outboard passenger position.
- A roof-rail airbag for the driver, the passenger seated directly behind the driver, and the third row outboard passenger position (passenger van equipped with a sliding or hinged door).
- A roof-rail airbag for the right front passenger, the passenger seated directly behind the right front passenger, and the third row outboard passenger position (passenger van equipped with a hinged door).

All of the airbags in the vehicle will have the word AIRBAG embossed in the trim or on an attached label near the deployment opening.

For frontal airbags, the word AIRBAG will appear on the middle part of the steering wheel for the driver and on the instrument panel for the right front passenger.

With roof-rail airbags, the word AIRBAG will appear along the headliner or trim.

Here are the most important things to know about the airbag system:

⚠ WARNING

You can be severely injured or killed in a crash if you are not wearing your safety belt — even if you have airbags. Airbags are designed to work with safety belts, but do not replace them. Also, airbags are not designed to deploy in every crash. In some crashes safety belts are your only restraint. See *When Should an Airbag Inflate? on page 3-20*.

Wearing your safety belt during a crash helps reduce your chance of hitting things inside the vehicle or being ejected from it. Airbags are “supplemental restraints” to the safety belts. Everyone in your vehicle should wear a safety belt properly — whether or not there is an airbag for that person.

⚠ WARNING

Airbags inflate with great force, faster than the blink of an eye. Anyone who is up against, or very close to, any airbag when it inflates can be seriously injured or killed. Do not sit unnecessarily close to the airbag, as you would be if you were sitting on the edge of your seat or leaning forward. Safety belts help keep you in position before and during a crash. Always wear your safety belt, even with airbags. The driver should sit as far back as possible while still maintaining control of the vehicle.

Occupants should not lean on or sleep against the door or side windows in seating positions with roof-rail airbags.

⚠ WARNING

Children who are up against, or very close to, any airbag when it inflates can be seriously injured or killed. Airbags plus lap-shoulder belts offer protection for adults and older children, but not for young children and infants. Neither the vehicle safety belt system nor its airbag system is designed for them. Young children and infants need the protection that a child restraint system can provide. Always secure children properly in the vehicle. To read how, see *Older Children on page 3-33* or *Infants and Young Children on page 3-35*.

There is an airbag readiness light on the instrument panel, which shows the airbag symbol.

The system checks the airbag electrical system for malfunctions. The light tells you if there is an electrical problem. See *Airbag Readiness Light on page 5-14* for more information.

Where Are the Airbags?

The driver frontal airbag is in the middle of the steering wheel.

If the vehicle has one, the right front passenger airbag is in the instrument panel on the passenger side.

Driver Side Shown, Passenger Side Similar

If the vehicle is a cargo or passenger van with a sliding door and it has a roof-rail airbag for the driver and right front passenger position, the roof-rail airbags are in the ceiling above the side window.

Driver Side Shown, Passenger Side Similar

If the vehicle has roof-rail airbags for the driver, right front passenger, passengers behind the driver and right front passenger, and the third row outboard passengers, the roof-rail airbags are in the ceiling above the side windows. On the driver side of the vehicle, there is one single roof-rail airbag for either vehicles with a hinged door or a sliding door.

For passenger vans with a sliding door, on the passenger side of the vehicle, you will have a separate roof-rail airbag for the passenger seated directly behind the right front passenger and the third row outboard passenger position.

⚠ WARNING

If something is between an occupant and an airbag, the airbag might not inflate properly or it might force the object into that person causing severe injury or even death. The path of an inflating airbag must be kept clear. Do not put anything between an occupant and an airbag, and do not attach or put anything on the steering wheel hub or on or near any other airbag covering.

Never secure anything to the roof of a vehicle with roof-rail airbags by routing a rope or tie down

(Continued)

WARNING (CONTINUED)

through any door or window opening. If you do, the path of an inflating roof-rail airbag will be blocked.

When Should an Airbag Inflate?

Frontal airbags are designed to inflate in moderate to severe frontal or near-frontal crashes to help reduce the potential for severe injuries mainly to the driver or right front passenger head and chest. However, they are only designed to inflate if the impact exceeds a predetermined deployment threshold. Deployment thresholds are used to predict how severe a crash is likely to be in time for the airbags to inflate and help restrain the occupants.

Whether the frontal airbags will or should deploy is not based on how fast the vehicle is traveling. It depends largely on what you hit, the direction of the impact, and how quickly the vehicle slows down.

Frontal airbags may inflate at different crash speeds. For example:

- If the vehicle hits a stationary object, the airbags could inflate at a different crash speed than if the vehicle hits a moving object.
- If the vehicle hits an object that deforms, the airbags could inflate at a different crash speed than if the vehicle hits an object that does not deform.
- If the vehicle hits a narrow object (like a pole), the airbags could inflate at a different crash speed than if the vehicle hits a wide object (like a wall).
- If the vehicle goes into an object at an angle, the airbags could inflate at a different crash speed than if the vehicle goes straight into the object.

Thresholds can also vary with specific vehicle design.

Frontal airbags are not intended to inflate during vehicle rollovers, rear impacts, or in many side impacts.

Single Stage vs. Dual Stage Airbags

Depending on the weight of the vehicle, you will have either “Single Stage Airbags” or “Dual Stage Airbags.” Vehicles that have a passenger sensing system also have dual stage airbags. See *Passenger Airbag Status Indicator on page 5-16* or *Passenger Sensing System on page 3-26*.

If the GVWR (Gross Vehicle Weight Rating) of the vehicle is 3 855 kg (8,500 lb) or above, the vehicle may have single stage airbags. If the GVWR is below 3 855 kg (8,500 lb) then the vehicle may have dual stage airbags. You can find the GVWR on the certification label on the rear edge of the driver door. See *Vehicle Load Limits on page 9-10* for more information.

Dual-stage airbags adjust the restraint according to crash severity. The vehicle has electronic frontal sensors, which help the sensing system distinguish between a moderate frontal impact and a more severe frontal impact. For moderate frontal impacts, dual-stage airbags inflate at a level less than full deployment. For more severe frontal impacts, full deployment occurs.

The vehicle may or may not have roof-rail airbags. See *Airbag System on page 3-16*. Roof-rail airbags are intended to inflate in moderate to severe side crashes. In addition, these roof-rail airbags are intended to inflate during a rollover. Roof-rail airbags will inflate if the crash severity is above the system's designed threshold level. The threshold level can vary with specific vehicle design.

Roof-rail airbags are not intended to inflate in frontal impacts, near-frontal impacts, or rear impacts. All roof-rail airbags will deploy when either side of the vehicle is struck.

In any particular crash, no one can say whether an airbag should have inflated simply because of the damage to a vehicle or because of what the repair costs were.
For frontal airbags, inflation is determined by what the vehicle hits, the angle of the impact, and how quickly the vehicle slows down.
For roof-rail airbags, deployment is determined by the location and severity of the side impact.

In a rollover event, roof-rail airbag deployment is determined by the direction of the roll.

What Makes an Airbag Inflate?

In a deployment event, the sensing system sends an electrical signal triggering a release of gas from the inflator. Gas from the inflator fills the airbag causing the bag to break out of the cover and deploy. The inflator, the airbag, and related hardware are all part of the airbag module.

Frontal airbag modules are located inside the steering wheel and instrument panel. For vehicles with roof-rail airbags, there are airbag modules in the ceiling of the vehicle, near the side windows for the first, second, and third rows (if equipped). See *Where Are the Airbags? on page 3-18* for more information.

How Does an Airbag Restrain?

In moderate to severe frontal or near frontal collisions, even belted occupants can contact the steering wheel or the instrument panel. In moderate to severe side collisions, even belted occupants can contact the inside of the vehicle.

Airbags supplement the protection provided by safety belts. Frontal airbags distribute the force of the impact more evenly over the occupant's upper body, stopping the occupant more gradually. Roof-rail

airbags distribute the force of the impact more evenly over the occupant's upper body.

Rollover capable roof-rail airbags are designed to help contain the head and chest of occupants in the outboard seating positions in the first, second, and third rows, if equipped. The rollover capable roof-rail airbags are designed to help reduce the risk of full or partial ejection in rollover events, although no system can prevent all such ejections.

But airbags would not help in many types of collisions, primarily because the occupant's motion is not toward those airbags. See *When Should an Airbag Inflate? on page 3-20* for more information.

Airbags should never be regarded as anything more than a supplement to safety belts.

What Will You See after an Airbag Inflates?

After the frontal airbags inflate, they quickly deflate, so quickly that some people may not even realize an airbag inflated. Roof-rail airbags may still be at least partially inflated for some time after they deploy. Some components of the airbag module may be hot for several minutes. For location of the airbag modules, see *What Makes an Airbag Inflate? on page 3-21*.

The parts of the airbag that come into contact with you may be warm, but not too hot to touch. There may be some smoke and dust coming from the vents in the deflated airbags. Airbag inflation does not prevent the driver from seeing out of the windshield or being able to steer the vehicle, nor does it prevent people from leaving the vehicle.

⚠ WARNING

When an airbag inflates, there may be dust in the air. This dust could cause breathing problems for people with a history of asthma or other breathing trouble. To avoid this, everyone in the vehicle should get out as soon as it is safe to do so. If you have breathing problems but cannot get out of the vehicle after an airbag inflates, then get fresh air by opening a window or a door. If you experience breathing problems following an airbag deployment, you should seek medical attention.

The vehicle has a feature that may automatically unlock the doors (if equipped with power door locks), turn on the interior lamps and hazard warning flashers, and shut off the fuel system after the airbags inflate. You can lock the doors, and

turn off the interior lamps and the hazard warning flashers by using the controls for those features.

⚠ WARNING

A crash severe enough to inflate the airbags may have also damaged important functions in the vehicle, such as the fuel system, brake and steering systems, etc. Even if the vehicle appears to be drivable after a moderate crash, there may be concealed damage that could make it difficult to safely operate the vehicle.

Use caution if you should attempt to restart the engine after a crash has occurred.

In many crashes severe enough to inflate the airbag, windshields are broken by vehicle deformation. Additional windshield breakage may also occur from the right front passenger airbag.

- Airbags are designed to inflate only once. After an airbag inflates, you will need some new parts for the airbag system. If you do not get them, the airbag system will not be there to help protect you in another crash. A new system will include airbag modules and possibly other parts. The service manual for the vehicle covers the need to replace other parts.
- The vehicle has a crash sensing and diagnostic module which records information after a crash. See *Vehicle Data Recording on page 13-19*.
- Let only qualified technicians work on the airbag systems. Improper service can mean that an airbag system will not work properly. See your dealer for service.

Airbag On-Off Switch

If the instrument panel has one of the switches pictured in the following illustrations, the vehicle has an airbag on-off switch that you can use to manually turn on or off the right front passenger airbag.

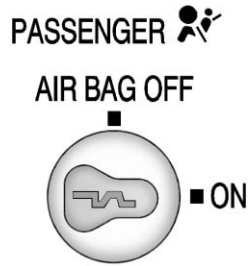

United States

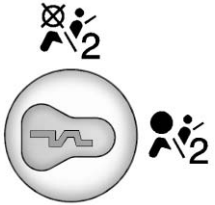

Canada and Mexico

If the vehicle does not have an airbag on-off switch, it may have a passenger sensing system. See *Passenger Sensing System on page 3-26*.

This switch should only be turned to the off position if the person in the right front passenger position is a member of a passenger risk group identified by the national government as follows:

Infant. An infant (less than 1 year old) must ride in the front seat because:

- *My vehicle has no rear seat;*
- *My vehicle has a rear seat too small to accommodate a rear-facing infant seat; or*
- *The infant has a medical condition which, according to the infant's physician, makes it necessary for the infant to ride in the front seat so that the driver can constantly monitor the child's condition.*

Child age 1 to 12. A child age 1 to 12 must ride in the front seat because:

- *My vehicle has no rear seat;*
- *Although children ages 1 to 12 ride in the rear seat(s) whenever possible, children ages 1 to 12 sometimes must ride in the front because no space is available in the rear seat(s) of my vehicle; or*
- *The child has a medical condition which, according to the child's physician, makes it necessary for the child to ride in the front seat so that the driver can constantly monitor the child's condition.*

Medical Condition. A passenger has a medical condition which, according to his or her physician:

- *Causes the passenger airbag to pose a special risk for the passenger; and*
- *Makes the potential harm from the passenger airbag in a crash greater than the potential harm from turning off the airbag and allowing the passenger, even if belted, to hit the instrument panel or windshield in a crash.*

⚠ WARNING

If the right front passenger airbag is turned off for a person who is not in a risk group identified by the national government, that person will not have the extra protection of an airbag. In a crash, the airbag will not be able

(Continued)

WARNING (CONTINUED)

to inflate and help protect the person sitting there. Do not turn off the passenger airbag unless the person sitting there is in a risk group.

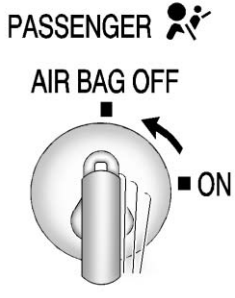

United States

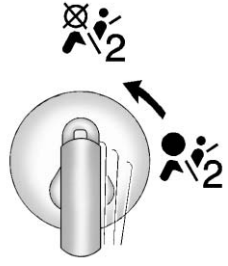

Canada and Mexico

To turn off the right front passenger frontal airbag, insert the ignition key into the switch, push in, and move the switch to the off position.

The airbag off light will come on to let you know the right front passenger airbag is off. The airbag off light will stay on to remind you that the airbag is off. See *Airbag On-Off Light on page 5-15*. The right front passenger airbag will remain off until you turn it back on again.

⚠ WARNING

If the airbag readiness light ever comes on and stays on, it means that something may be wrong with the airbag system. For example, the right front passenger airbag could inflate even though the airbag on-off switch is turned off.

To help avoid injury to yourself or others, have the vehicle serviced right away. See *Airbag Readiness Light on page 5-14* for more information, including important safety information.

United States

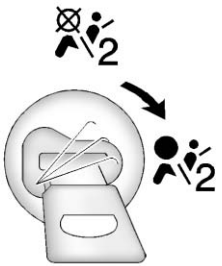

Canada and Mexico

To turn the right front passenger airbag on again, insert the ignition key into the switch, push in, and move the switch to the on position.

The right front passenger frontal airbag is now enabled, and may inflate. See *Airbag On-Off Light on page 5-15* for more information.

Passenger Sensing System

If the instrument panel has one of the indicators pictured in the following illustrations, the vehicle has a passenger sensing system unless there is an airbag off switch located on the instrument panel. If there is an airbag off switch, the vehicle does not have a passenger sensing system. See *Airbag On-Off Switch on page 3-23* for more information.

United States

Canada and Mexico

The passenger airbag status indicator will be visible on the instrument panel when the vehicle is started.

The words ON and OFF, or the symbol for on and off, will be visible during the system check. If you are using remote start, if equipped, to start the vehicle from a distance, you may not see the system check. When the system check is complete, either the word ON or the word OFF, or the symbol for on or the symbol for off, will be visible. See *Passenger Airbag Status Indicator on page 5-16*.

The passenger sensing system will turn off the right front passenger frontal airbag under certain conditions. The driver airbag and roof-rail airbags, if equipped, are not part of the passenger sensing system.

The passenger sensing system works with sensors that are part of the right front passenger seat. The sensors are designed to detect the presence of a properly seated occupant and determine if the right front passenger frontal airbag should be enabled (may inflate) or not.

According to accident statistics, Children are safer when properly secured in a rear seat in the correct child restraint for their weight and size.

We recommend that children be secured in a rear seat, including: an infant or a child riding in a rear-facing child restraint; a child riding in a forward-facing child seat; an older child riding in a booster seat; and children, who are large enough, using safety belts.

A label on the sun visor says, “Never put a rear-facing child seat in the front.” This is because the risk to the rear-facing child is so great, if the airbag deploys.

⚠ WARNING

A child in a rear-facing child restraint can be seriously injured or killed if the right front passenger airbag inflates. This is because the back of the rear-facing child restraint would be very close to the inflating airbag. A child in a forward-facing child restraint can be seriously injured or killed if the right front passenger airbag inflates and the passenger seat is in a forward position.

(Continued)

WARNING (CONTINUED)

Even if the passenger sensing system has turned off the right front passenger frontal airbag, no system is fail-safe. No one can guarantee that an airbag will not deploy under some unusual circumstance, even though the airbag is turned off.

Secure rear-facing child restraints in a rear seat, even if the airbag is off. If you secure a forward-facing child restraint in the right front seat, always move the front passenger seat as far back as it will go. It is better to secure the child restraint in a rear seat.

If the vehicle does not have a rear seat that will accommodate a rear-facing child restraint, a rear-facing child restraint should not be installed in the vehicle, even if the airbag is off.

The passenger sensing system is designed to turn off the right front passenger frontal airbag if:

- The right front passenger seat is unoccupied.
- The system determines that an infant is present in a rear-facing infant seat.
- The system determines that a small child is present in a child restraint.
- The system determines that a small child is present in a booster seat.
- A right front passenger takes his/her weight off of the seat for a period of time.
- The right front passenger seat is occupied by a smaller person, such as a child who has outgrown child restraints.
- Or, if there is a critical problem with the airbag system or the passenger sensing system.

When the passenger sensing system has turned off the right front passenger frontal airbag, the off indicator will light and stay lit to remind you that the airbag is off. See *Passenger Airbag Status Indicator on page 5-16*.

The passenger sensing system is designed to turn on (may inflate) the right front passenger frontal airbag anytime the system senses that a person of adult size is sitting properly in the right front passenger seat.

When the passenger sensing system has allowed the airbag to be enabled, the on indicator will light and stay lit to remind you that the airbag is active.

For some children who have outgrown child restraints and for very small adults, the passenger sensing system may or may not turn off the right front passenger frontal airbag, depending upon the person's seating posture and body build. Everyone in the vehicle who

has outgrown child restraints should wear a safety belt properly — whether or not there is an airbag for that person.

⚠ WARNING

If the airbag readiness light ever comes on and stays on, it means that something may be wrong with the airbag system. To help avoid injury to yourself or others, have the vehicle serviced right away. See *Airbag Readiness Light on page 5-14* for more information, including important safety information.

If the On Indicator is Lit for a Child Restraint

If a child restraint has been installed and the on indicator is lit:

1. Turn the vehicle off.
2. Remove the child restraint from the vehicle.
3. Remove any additional items from the seat such as blankets, cushions, seat covers, seat heaters, or seat massagers.
4. Reinstall the child restraint following the directions provided by the child restraint manufacturer and refer to *Securing Child Restraints (Front Seat-Airbag On/Off Switch) on page 3-53* or *Securing Child Restraints (Front Seat-Passenger Sensing System) on page 3-50* or *Securing Child Restraints (Rear Seat) on page 3-48*.
5. If, after reinstalling the child restraint and restarting the vehicle, the on indicator is still lit, turn the vehicle off. Then slightly recline the vehicle seatback and adjust the seat cushion, if adjustable, to make sure that the vehicle seatback is not pushing the child restraint into the seat cushion.
6. Restart the vehicle.

   If the on indicator is still lit, secure the child in the child restraint in a rear seat position in the vehicle, and check with your dealer.

   If no rear seat is available, do not install a child restraint in this vehicle.

If the Off Indicator is Lit for an Adult-Size Occupant

If a person of adult-size is sitting in the right front passenger seat, but the off indicator is lit, it could be because that person is not sitting properly in the seat. If this happens, use the following steps to allow the system to detect that person and enable the right front passenger frontal airbag:

1. Turn the vehicle off.
2. Remove any additional material from the seat, such as blankets, cushions, seat covers, seat heaters, or seat massagers.
3. Place the seatback in the fully upright position.
4. Have the person sit upright in the seat, centered on the seat cushion, with legs comfortably extended.
5. Restart the vehicle and have the person remain in this position for two to three minutes after the on indicator is lit.

This allows the system to detect that person and then enable the right front passenger frontal airbag.

Additional Factors Affecting System Operation

Safety belts help keep the passenger in position on the seat during vehicle maneuvers and braking, which helps the passenger sensing system maintain the passenger airbag status. See “Safety Belts” and “Child Restraints” in the Index for additional information about the importance of proper restraint use.

A thick layer of additional material, such as a blanket or cushion, or aftermarket equipment such as seat covers, seat heaters, and seat massagers can affect how well the passenger sensing system operates. We recommend that you not use seat covers or other aftermarket equipment except when approved by GM for your specific vehicle. See *Adding Equipment to the Airbag-Equipped Vehicle on page 3-31* for more information about modifications that can affect how the system operates.

The on indicator may be lit if an object, such as a briefcase, handbag, grocery bag, laptop or other electronic device, is put on an unoccupied seat. If this is not desired remove the object from the seat.

⚠ WARNING

Stowing of articles under the passenger seat or between the passenger seat cushion and seatback may interfere with the proper operation of the passenger sensing system.

Servicing the Airbag-Equipped Vehicle

Airbags affect how the vehicle should be serviced. There are parts of the airbag system in several places around the vehicle. Your dealer and the service manual have information about servicing the vehicle and the airbag system. To purchase a service manual, see *Service Publications Ordering Information on page 13-16*.

⚠ WARNING

For up to 10 seconds after the vehicle is turned off and the battery is disconnected, an airbag can still inflate during improper service. You can be injured if you are close to an airbag when it inflates. Avoid yellow connectors. They are probably part of the airbag system. Be sure to follow proper service procedures, and make sure the person performing work for you is qualified to do so.

Adding Equipment to the Airbag-Equipped Vehicle

Q: Is there anything I might add to or change about the vehicle that could keep the airbags from working properly?

A: Yes. If you add things that change the vehicle's frame, bumper system, height, front end or side sheet metal, they may keep the airbag system from working properly. Changing or moving any parts of the front seats, safety belts, the airbag sensing and diagnostic module, steering wheel, instrument panel, roof-rail airbag modules, ceiling headliner or pillar garnish trim, front sensors, rollover sensor module, or airbag wiring can affect the operation of the airbag system.

In addition, the vehicle may have a passenger sensing system for the right front passenger position, which includes sensors that are part of the passenger seat. The passenger sensing system may not operate properly if the original seat trim is replaced with non-GM covers, upholstery or trim, or with GM covers, upholstery or trim designed for a different vehicle. Any object, such as an aftermarket seat heater or a comfort enhancing pad or device, installed under or on top

of the seat fabric, could also interfere with the operation of the passenger sensing system. This could either prevent proper deployment of the passenger airbag(s) or prevent the passenger sensing system from properly turning off the passenger airbag(s). See *Passenger Sensing System on page 3-26*.

If you have any questions about this, you should contact Customer Assistance before you modify the vehicle. The phone numbers and addresses for Customer Assistance are in Step Two of the Customer Satisfaction Procedure in this manual. See *Customer Satisfaction Procedure (Mexico) on page 13-2* or *Customer Satisfaction Procedure (U.S. and Canada) on page 13-3*.

If the vehicle has rollover roof-rail airbags, see *Different Size Tires and Wheels on page 10-62* for additional important information.

Q: Because I have a disability, I have to get my vehicle modified. How can I find out whether this will affect my airbag system?

A: If you have questions, call Customer Assistance. The phone numbers and addresses for Customer Assistance are in Step Two of the Customer Satisfaction Procedure in this manual. See *Customer Satisfaction Procedure (Mexico) on page 13-2* or *Customer Satisfaction Procedure (U.S. and Canada) on page 13-3*.

In addition, your dealer and the service manual have information about the location of the airbag sensors, sensing and diagnostic module and airbag wiring.

Airbag System Check

The airbag system does not need regularly scheduled maintenance or replacement. Make sure the airbag readiness light is working. See *Airbag Readiness Light on page 5-14*.

Notice: **If an airbag covering is damaged, opened, or broken, the airbag may not work properly. Do not open or break the airbag coverings. If there are any opened or broken airbag covers, have the airbag covering and/or airbag module replaced. For the location of the airbags, see *Where Are the Airbags? on page 3-18*. See your dealer for service.**

Replacing Airbag System Parts after a Crash

⚠ WARNING

A crash can damage the airbag systems in the vehicle.
A damaged airbag system may not work properly and may not protect you and your passenger(s) in a crash, resulting in serious injury or even death. To help make sure the airbag systems are working properly after a crash, have them inspected and any necessary replacements made as soon as possible.

If an airbag inflates, you will need to replace airbag system parts. See your dealer for service.

If the airbag readiness light stays on after the vehicle is started or comes on when you are driving, the airbag system may not work properly. Have the vehicle serviced right away. See *Airbag Readiness Light on page 5-14*.

Child Restraints

Older Children

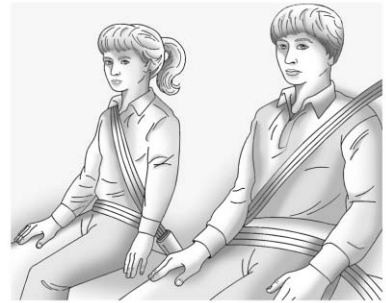

Older children who have outgrown booster seats should wear the vehicle safety belts.

The manufacturer instructions that come with the booster seat state the weight and height limitations for that booster. Use a booster seat with a lap-shoulder belt until the child passes the fit test below:

- Sit all the way back on the seat. Do the knees bend at the seat edge? If yes, continue. If no, return to the booster seat.
- Buckle the lap-shoulder belt. Does the shoulder belt rest on the shoulder? If yes, continue. If no, try using the rear safety belt comfort guide. See “Rear Safety Belt Comfort Guides” under *Lap-Shoulder Belt on page 3-10*. If the shoulder belt still does not rest on the shoulder, then return to the booster seat.
- Does the lap belt fit low and snug on the hips, touching the thighs? If yes, continue. If no, return to the booster seat.
- Can proper safety belt fit be maintained for the length of the trip? If yes, continue. If no, return to the booster seat.

Q: What is the proper way to wear safety belts?

A: An older child should wear a lap-shoulder belt and get the additional restraint a shoulder belt can provide. The shoulder belt should not cross the face or neck. The lap belt should fit snugly below the hips, just touching the top of the thighs. This applies belt force to the child's pelvic bones in a crash. It should never be worn over the abdomen, which could cause severe or even fatal internal injuries in a crash.

Also see “Rear Safety Belt Comfort Guides” under *Lap-Shoulder Belt on page 3-10*.

According to accident statistics, children and infants are safer when properly restrained in a child restraint system or infant restraint system secured in a rear seating position.

In a crash, children who are not buckled up can strike other people who are buckled up, or can be thrown out of the vehicle. Older children need to use safety belts properly.

⚠ WARNING

Never allow more than one child to wear the same safety belt. The safety belt cannot properly spread the impact forces. In a crash, they can be crushed together and seriously injured. A safety belt must be used by only one person at a time.

⚠ WARNING

Never allow a child to wear the safety belt with the shoulder belt behind their back. A child can be seriously injured by not wearing the lap-shoulder belt properly. In a crash, the child would not be restrained by the shoulder belt. The child could move too far forward increasing the chance of head and neck injury. The child might also slide under the lap

(Continued)

WARNING (CONTINUED)

belt. The belt force would then be applied right on the abdomen. That could cause serious or fatal injuries. The shoulder belt should go over the shoulder and across the chest.

Infants and Young Children

Everyone in a vehicle needs protection! This includes infants and all other children. Neither the distance traveled nor the age and size of the traveler changes the need, for everyone, to use safety restraints. In fact, the law in every state in the United States and in every Canadian province says children up to some age must be restrained while in a vehicle.

⚠ WARNING

Children can be seriously injured or strangled if a shoulder belt is wrapped around their neck and the safety belt continues to tighten. Never leave children unattended in a vehicle and never allow children to play with the safety belts.

Airbags plus lap-shoulder belts offer protection for adults and older children, but not for young children and infants. Neither the vehicle's safety belt system nor its airbag system is designed for them. Every time infants and young children ride in vehicles, they should have the protection provided by appropriate child restraints.

Children who are not restrained properly can strike other people, or can be thrown out of the vehicle.

⚠ WARNING

Never hold an infant or a child while riding in a vehicle. Due to crash forces, an infant or a child will become so heavy it is not possible to hold it during a crash. For example, in a crash at only 40 km/h (25 mph), a 5.5 kg (12 lb) infant will suddenly become a 110 kg (240 lb) force on a person's

(Continued)

WARNING (CONTINUED)

arms. An infant should be secured in an appropriate restraint.

⚠ WARNING

Children who are up against, or very close to, any airbag when it inflates can be seriously injured or killed. Never put a rear-facing

(Continued)

WARNING (CONTINUED)

child restraint in the right front seat. Secure a rear-facing child restraint in a rear seat. It is also better to secure a forward-facing child restraint in a rear seat. If you must secure a forward-facing child restraint in the right front seat, always move the front passenger seat as far back as it will go.

Q: What are the different types of add-on child restraints?

A: Add-on child restraints, which are purchased by the vehicle owner, are available in four basic types. Selection of a particular restraint should take into consideration not only the child's weight, height, and age but also whether or not the restraint will be compatible with the motor vehicle in which it will be used.

For most basic types of child restraints, there are many different models available. When purchasing a child restraint, be sure it is designed to be used in a motor vehicle. If it is, the restraint will have a label saying that it meets federal motor vehicle safety standards.

The restraint manufacturer instructions that come with the restraint state the weight and height limitations for a particular child restraint. In addition, there are many kinds of restraints available for children with special needs.

⚠ WARNING

To reduce the risk of neck and head injury during a crash, infants need complete support. In a crash, if an infant is in a rear-facing child restraint, the crash forces can be distributed across the strongest part of an infant's body, the back and shoulders. Infants should always be secured in rear-facing child restraints.

⚠ WARNING

A young child's hip bones are still so small that the vehicle's regular safety belt may not remain low on the hip bones, as it should. Instead, it may settle up around the child's abdomen. In a crash, the belt would apply force on a body area that is unprotected by any bony structure. This alone could cause serious or fatal injuries. To reduce the risk of serious or fatal injuries during a crash, young children should always be secured in appropriate child restraints.

Child Restraint Systems

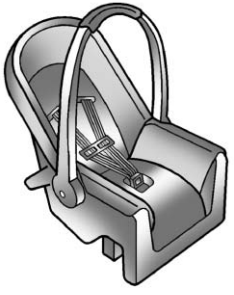

Rear-Facing Infant Seat

A rear-facing infant seat provides restraint with the seating surface against the back of the infant.

The harness system holds the infant in place and, in a crash, acts to keep the infant positioned in the restraint.

Forward-Facing Child Seat

A forward-facing child seat provides restraint for the child's body with the harness.

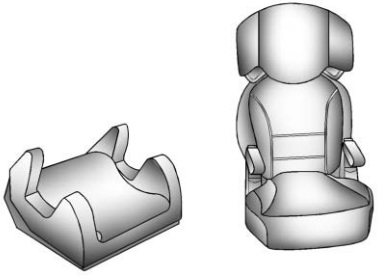

Booster Seats

A booster seat is a child restraint designed to improve the fit of the vehicle's safety belt system.
A booster seat can also help a child to see out the window.

Securing an Add-On Child Restraint in the Vehicle

⚠ WARNING

A child can be seriously injured or killed in a crash if the child restraint is not properly secured in the vehicle. Secure the child restraint properly in the vehicle using the vehicle safety belt or LATCH system, following the instructions that came with that child restraint and the instructions in this manual.

To help reduce the chance of injury, the child restraint must be secured in the vehicle. Child restraint systems must be secured in vehicle seats by lap belts or the lap belt portion of a lap-shoulder belt, or by the LATCH system. See *Lower Anchors and Tethers for Children (LATCH System) on page 3-41*.

Children can be endangered in a crash if the child restraint is not properly secured in the vehicle.

When securing an add-on child restraint, refer to the instructions that come with the restraint which may be on the restraint itself or in a booklet, or both, and to this manual. The child restraint instructions are important, so if they are not available, obtain a replacement copy from the manufacturer.

Keep in mind that an unsecured child restraint can move around in a collision or sudden stop and injure people in the vehicle. Be sure to properly secure any child restraint in the vehicle — even when no child is in it.

In some areas of the United States and Canada, Certified Child Passenger Safety Technicians (CPSTs) are available to inspect and demonstrate how to correctly use and install child restraints. In the U.S., refer to the National Highway Traffic Safety Administration (NHTSA) website to locate the nearest child safety seat inspection station. For CPST availability in Canada, check with Transport Canada or the Provincial Ministry of Transportation office.

Securing the Child Within the Child Restraint

⚠ WARNING

A child can be seriously injured or killed in a crash if the child is not properly secured in the child restraint. Secure the child properly following the instructions that came with that child restraint.

Where to Put the Restraint

According to accident statistics, children and infants are safer when properly restrained in a child restraint system or infant restraint system secured in a rear seating position.

We recommend that children and child restraints be secured in a rear seat, including: an infant or a child riding in a rear-facing child restraint; a child riding in a forward-facing child seat; an older child riding in a booster seat; and children, who are large enough, using safety belts.

If a child restraint is secured in the right front passenger seat, and there is a switch on the instrument panel to manually turn off the right front passenger airbag. See *Airbag On-Off Switch on page 3-23* and *Securing Child Restraints (Front Seat-Airbag On/Off Switch) on page 3-53* or *Securing Child Restraints (Front Seat-Passenger Sensing System) on page 3-50* or *Securing Child Restraints (Rear Seat) on page 3-48* for more information, including important safety information.

A label on the sun visor says, “Never put a rear-facing child seat in the front.” This is because the risk to the rear-facing child is so great, if the airbag deploys.

⚠ WARNING

A child in a rear-facing child restraint can be seriously injured or killed if the right front passenger airbag inflates. This is because the back of the rear-facing child restraint would be very close to the inflating airbag. A child in a forward-facing child restraint can be seriously injured or killed if the right front passenger airbag inflates and the passenger seat is in a forward position.

Even if the passenger sensing system or airbag switch has turned off the right front passenger frontal airbag, no system is fail-safe. No one can guarantee that an airbag will not deploy under some unusual circumstance, even though it is turned off.

(Continued)

WARNING (CONTINUED)

Secure rear-facing child restraints in a rear seat, even if the airbag is off. If you secure a forward-facing child restraint in the right front seat, always move the front passenger seat as far back as it will go. It is better to secure the child restraint in a rear seat.

When securing a child restraint in a rear seating position, study the instructions that came with the child restraint to make sure it is compatible with this vehicle.

Child restraints and booster seats vary considerably in size, and some may fit in certain seating positions better than others. Always make sure the child restraint is properly secured.

Depending on where you place the child restraint and the size of the child restraint, you may not be able

to access adjacent safety belt assemblies or LATCH anchors for additional passengers or child restraints. Adjacent seating positions should not be used if the child restraint prevents access to or interferes with the routing of the safety belt.

If the vehicle does not have a rear seat that will accommodate a rear-facing child restraint, a rear-facing child restraint should not be installed in the vehicle, even if the airbag is off.

Wherever a child restraint is installed, be sure to secure the child restraint properly.

Keep in mind that an unsecured child restraint can move around in a collision or sudden stop and injure people in the vehicle. Be sure to properly secure any child restraint in the vehicle — even when no child is in it.

Lower Anchors and Tethers for Children (LATCH System)

The LATCH system secures a child restraint during driving or in a crash. LATCH attachments on the child restraint are used to attach the child restraint to the anchors in the vehicle. This system is designed to make installation of a child restraint easier.

Make sure that a LATCH-compatible child restraint is properly installed using the anchors, or use the vehicle's safety belts to secure the restraint, following the instructions that came with that restraint, and also the instructions in this manual.

When installing a child restraint with a top tether, you must also use either the lower anchors or the safety belts to properly secure the child restraint. A child restraint must never be installed using only the top tether strap and anchor.

In order to use the LATCH system in your vehicle, you need a child restraint that has LATCH attachments. The child restraint manufacturer will provide you with instructions on how to use the child restraint and its attachments. The following explains how to attach a child restraint with these attachments in your vehicle.

Not all vehicle seating positions or child restraints have lower anchors and attachments or top tether anchors and attachments.

Lower Anchors

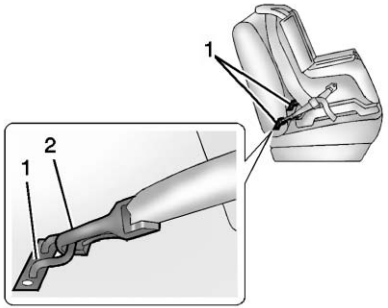

Lower anchors (1) are metal bars built into the vehicle. There are two lower anchors for each LATCH seating position that will accommodate a child restraint with lower attachments (2).

Top Tether Anchor

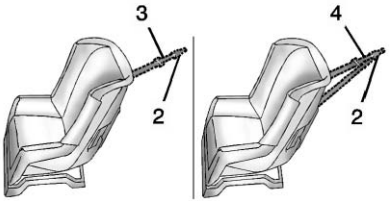

A top tether (3, 4) anchors the top of the child restraint to the vehicle.
A top tether anchor is built into the vehicle. The top tether attachment (2) on the child restraint connects to the top tether anchor in the vehicle in order to reduce the forward movement and rotation of the child restraint during driving or in a crash.

The child restraint may have a single tether (3) or a dual tether (4). Either will have a single attachment (2) to secure the top tether to the anchor.

Some child restraints that have a top tether are designed for use with or without the top tether being attached. Others require the top tether always to be attached.
In Canada, the law requires that forward-facing child restraints have a top tether, and that the tether be attached. Be sure to read and follow the instructions for your child restraint.

Lower Anchor and Top Tether Anchor Locations

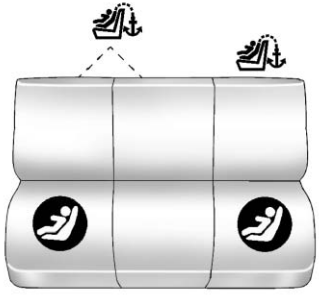

Second, Third, and Fourth Row with Three-Passenger Seat

(Top Tether Anchor): Seating positions with top tether anchors.

(Lower Anchor): Seating positions with two lower anchors.

See the information following for installing a child restraint with a top tether in the second, third, and fourth row center positions.

Do not install three child restraints in the same row at the same time and never install two top tethers using the same top tether anchor.

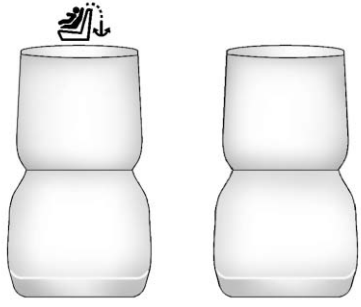

Front Passenger Position

(Top Tether Anchor): Seating positions with top tether anchors.

The second, third, and fourth row with three-passenger seats have exposed metal lower anchors located in the crease between the seatback and the seat cushion.

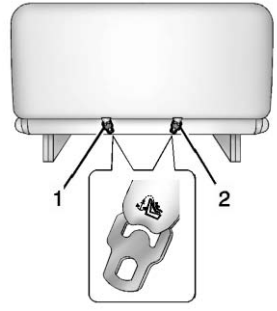

Second, Third, and Fourth Row with Three-Passenger Seat — Passenger Van

There are two top tether anchors in the second-, third-, and fourth-row three-passenger seats. To install a child restraint in the rear driver-side seating positions, use anchor point (1). To install a child restraint in the rear passenger-side seating positions, use anchor point (2).

To install a child restraint in the rear center seating positions, use anchor point (2). Never install two top tethers using the same top tether anchor.

If the vehicle is equipped with a four-passenger fourth- or fifth-row seat, it does not have upper or lower anchors. If a child restraint is placed in the four-passenger fourth or fifth-row seat, it must be secured using the vehicle safety belts. See “Rear Seat Position” under *Securing Child Restraints (Front Seat-Airbag On/Off Switch) on page 3-53* or *Securing Child Restraints (Front Seat-Passenger Sensing System) on page 3-50* or *Securing Child Restraints (Rear Seat) on page 3-48*.

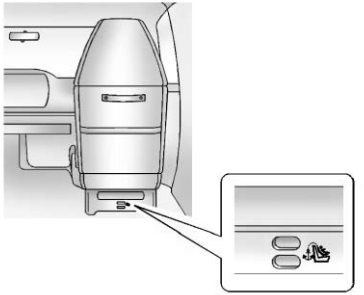

Front Passenger Position

There is a top tether anchor for the front passenger position with a front passenger seat. The anchor is located at the rear of the seat cushion on the right front passenger seat.

Do not secure a child restraint in a position without a top tether anchor if a national or local law requires that the top tether be attached, or if the instructions that come with the child restraint say that the top tether must be attached.

According to accident statistics, children and infants are safer when properly restrained in a child restraint system or infant restraint system secured in a rear seating position. See *Where to Put the Restraint on page 3-39* for additional information.

Securing a Child Restraint Designed for the LATCH System

⚠ WARNING

If a LATCH-type child restraint is not attached to anchors, the child restraint will not be able to protect the child correctly. In a crash, the child could be seriously injured or killed. Install a LATCH-type child restraint properly using the anchors, or use the vehicle safety belts to secure the restraint, following the instructions that came with the child restraint and the instructions in this manual.

⚠ WARNING

Do not attach more than one child restraint to a single anchor. Attaching more than one child restraint to a single anchor could cause the anchor or attachment to come loose or even break during a crash. A child or others could be injured. To reduce the risk of serious or fatal injuries during a crash, attach only one child restraint per anchor.

⚠ WARNING

Children can be seriously injured or strangled if a shoulder belt is wrapped around their neck and the safety belt continues to tighten. Buckle any unused safety belts behind the child restraint so children cannot reach them. Pull the shoulder belt all the way out

(Continued)

WARNING (CONTINUED)

of the retractor to set the lock, if the vehicle has one, after the child restraint has been installed.

Notice: **Do not let the LATCH attachments rub against the vehicle's safety belts. This may damage these parts. If necessary, move buckled safety belts to avoid rubbing the LATCH attachments.**

Do not fold the empty rear seat with a safety belt buckled. This could damage the safety belt or the seat. Unbuckle and return the safety belt to its stowed position, before folding the seat.

If you need to secure more than one child restraint in the rear seat, see *Where to Put the Restraint on page 3-39*.

This system is designed to make the installation of child restraints easier. When using lower anchors, do not use the vehicle's safety belts. Instead, use the vehicle's anchors and child restraint attachments to secure the restraints. Some restraints also use another vehicle anchor to secure a top tether.

1. Attach and tighten the lower attachments to the lower anchors. If the child restraint does not have lower attachments or the desired seating position does not have lower anchors, secure the child restraint with the top tether and the safety belts. Refer to your child restraint manufacturer instructions and the instructions in this manual.
   1.1. Find the lower anchors for the desired seating position.
   1.2. Put the child restraint on the seat.
   1.3. Attach and tighten the lower attachments on the child restraint to the lower anchors.

2. If the child restraint manufacturer recommends that the top tether be attached, attach and tighten the top tether to the top tether anchor, if equipped. Refer to the child restraint instructions and the following steps:

   2.1. Find the top tether anchor.

   2.2. For the second, third, and fourth row with three-passenger seats only, in the rear driver-side seating positions, use anchor point (1). For the rear passenger-side seating positions, use anchor point (2). For the center seating positions, use anchor point (2). Never install two top tethers using the same top tether anchor.

   2.3. Route and tighten the top tether according to your child restraint instructions and the following instructions:

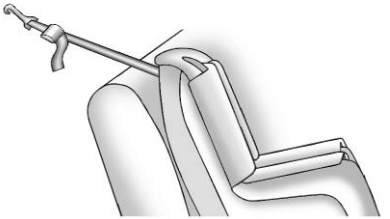

If the position you are using does not have a headrest or head restraint and you are using a single tether, route the tether over the seatback.

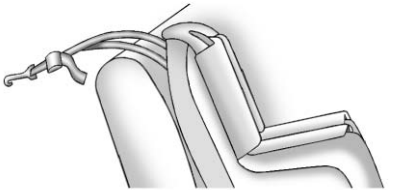

If the position you are using does not have a headrest or head restraint and you are using a dual tether, route the tether over the seatback.

If the position you are using has an integrated headrest or head restraint and you are using a dual tether, route the tether around the headrest or head restraint.

If the position you are using has an integrated headrest or head restraint and you are using a single tether, route the tether over the headrest or head restraint.

3. Before placing a child in the child restraint, make sure it is securely held in place. To check, grasp the child restraint at the LATCH path and attempt to move it side to side and back and forth. There should be no more than 2.5 cm (1 in) of movement for proper installation.

Replacing LATCH System Parts After a Crash

⚠ WARNING

A crash can damage the LATCH system in the vehicle. A damaged LATCH system may not properly secure the child restraint, resulting in serious injury or even death in a crash. To help make sure the LATCH system is working properly after a crash, see your dealer to have the system inspected and any necessary replacements made as soon as possible.

If the vehicle has the LATCH system and it was being used during a crash, new LATCH system parts may be needed.

New parts and repairs may be necessary even if the LATCH system was not being used at the time of the crash.

Securing Child Restraints (Rear Seat)

When securing a child restraint in a rear seating position, study the instructions that came with the child restraint to make sure it is compatible with this vehicle.

If the child restraint has the LATCH system, see *Lower Anchors and Tethers for Children (LATCH System) on page 3-41* for how and where to install the child restraint using LATCH. If a child restraint is secured in the vehicle using a safety belt and it uses a top tether, see *Lower Anchors and Tethers for Children (LATCH System) on page 3-41* for top tether anchor locations.

Do not secure a child seat in a position without a top tether anchor if a national or local law requires that the top tether be anchored, or if the instructions that come with the child restraint say that the top strap must be anchored.

In Canada, the law requires that forward-facing child restraints have a top tether, and that the tether be attached.

If the child restraint does not have the LATCH system, you will be using the safety belt to secure the child restraint in this position. Be sure to follow the instructions that came with the child restraint. Secure the child in the child restraint when and as the instructions say.

If more than one child restraint needs to be installed in the rear seat, be sure to read *Where to Put the Restraint on page 3-39*.

1. Put the child restraint on the seat.
2. Pick up the latch plate, and run the lap and shoulder portions of the vehicle safety belt through or around the restraint. The child restraint instructions will show you how.

3. Push the latch plate into the buckle until it clicks.

   Position the release button on the buckle so that the safety belt could be quickly unbuckled if necessary.

4. Pull the shoulder belt all the way out of the retractor to set the lock. When the retractor lock is set, the belt can be tightened but not pulled out of the retractor.

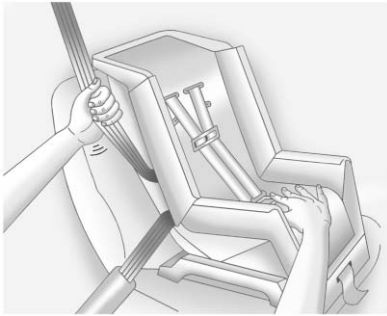

5. To tighten the belt, push down on the child restraint, pull the shoulder portion of the belt to tighten the lap portion of the belt, and feed the shoulder belt back into the retractor. When installing a forward-facing child restraint, it may be helpful to use your knee to push down on the child restraint as you tighten the belt.

   Try to pull the belt out of the retractor to make sure the retractor is locked. If the retractor is not locked, repeat Steps 4 and 5.

6. If the child restraint has a top tether, follow the child restraint manufacturer's instructions regarding the use of the top tether. See *Lower Anchors and Tethers for Children (LATCH System) on page 3-41* for more information.

7. Before placing a child in the child restraint, make sure it is securely held in place. To check, grasp the child restraint at the safety belt path and attempt to move it side to side and back and forth. When the child restraint is properly installed, there should be no more than 2.5 cm (1 in) of movement.

To remove the child restraint, unbuckle the vehicle safety belt and let it return to the stowed position. If the top tether is attached to a top tether anchor, disconnect it.

Securing Child Restraints (Front Seat-Passenger Sensing System)

This vehicle has airbags. A rear seat is a safer place to secure a forward-facing child restraint. See *Where to Put the Restraint on page 3-39*.

On vehicles with a passenger sensing system, the system is designed to turn off the right front passenger frontal airbag under certain conditions. See *Passenger Sensing System on page 3-26* and *Passenger Airbag Status Indicator on page 5-16* for more information, including important safety information.

A label on the sun visor says, “Never put a rear-facing child seat in the front.” This is because the risk to the rear-facing child is so great, if the airbag deploys.

⚠ WARNING

A child in a rear-facing child restraint can be seriously injured or killed if the right front passenger airbag inflates. This is because the back of the rear-facing child restraint would be very close to the inflating airbag. A child in a forward-facing child restraint can be seriously injured or killed if the right front passenger airbag inflates and the passenger seat is in a forward position.

Even if the passenger sensing system has turned off the right front passenger frontal airbag, no system is fail-safe. No one can guarantee that an airbag will not deploy under some unusual circumstance, even though it is turned off.

(Continued)

WARNING (CONTINUED)

Secure rear-facing child restraints in a rear seat, even if the airbag is off. If you secure a forward-facing child restraint in the right front seat, always move the front passenger seat as far back as it will go. It is better to secure the child restraint in a rear seat.

See *Passenger Sensing System on page 3-26* for additional information.

If the vehicle does not have a rear seat that will accommodate a rear-facing child restraint, a rear-facing child restraint should not be installed in the vehicle, even if the airbag is off.

If the child restraint has the LATCH system, see *Lower Anchors and Tethers for Children (LATCH System) on page 3-41* for how and where to install the child restraint using LATCH. If a child restraint is secured using a safety belt and it uses a top tether, see *Lower Anchors and Tethers for Children (LATCH System) on page 3-41* for top tether anchor locations.

Do not secure a child seat in a position without a top tether anchor if a national or local law requires that the top tether be anchored, or if the instructions that come with the child restraint say that the top strap must be anchored.

In Canada, the law requires that forward-facing child restraints have a top tether, and that the tether be attached.

You will be using the lap-shoulder belt to secure the child restraint in this position. Follow the instructions that came with the child restraint.

1. Move the seat as far back as it will go before securing the forward-facing child restraint.

   When the passenger sensing system has turned off the right front passenger frontal airbag, the off indicator on the passenger airbag status indicator should light and stay lit when the vehicle is started. See *Passenger Airbag Status Indicator on page 5-16*.

2. Put the child restraint on the seat.

3. Pick up the latch plate, and run the lap and shoulder portions of the vehicle's safety belt through or around the restraint. The child restraint instructions will show you how.

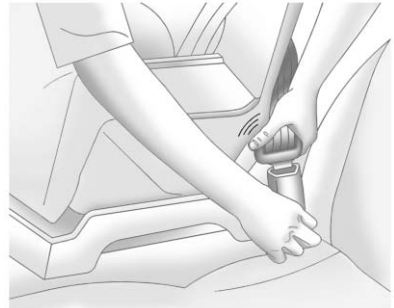

4. Push the latch plate into the buckle until it clicks.

   Position the release button on the buckle so that the safety belt could be quickly unbuckled if necessary.

5. Pull the shoulder belt all the way out of the retractor to set the lock. When the retractor lock is set, the belt can be tightened but not pulled out of the retractor.

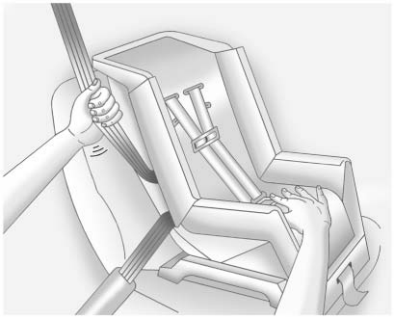

6. To tighten the belt, push down on the child restraint, pull the shoulder portion of the belt to tighten the lap portion of the belt, and feed the shoulder belt back into the retractor. When installing a forward-facing child restraint, it may be helpful to use your knee to push down on the child restraint as you tighten the belt.

   Try to pull the belt out of the retractor to make sure the retractor is locked. If the retractor is not locked, repeat Steps 5 and 6.

7. If the vehicle does not have a rear seat and the child restraint has a top tether, follow the child restraint manufacturer's instructions regarding the use of the top tether. See *Lower Anchors and Tethers for Children (LATCH System) on page 3-41* for more information.

8. Before placing a child in the child restraint, make sure it is securely held in place. To check, grasp the child restraint at the safety belt path and attempt to move it side to side and back and forth. When the child restraint is properly installed, there should be no more than 2.5 cm (1 in) of movement.

If the airbag is off, the off indicator in the passenger airbag status indicator will come on and stay on when the vehicle is started.

If the child restraint has been installed and the on indicator is lit, see “If the On Indicator is Lit for a

Child Restraint" under *Passenger Sensing System on page 3-26* for more information.

To remove the child restraint, unbuckle the vehicle safety belt and let it return to the stowed position.

If the top tether is attached to a top tether anchor, disconnect it.

Securing Child Restraints (Front Seat-Airbag On/Off Switch)

This vehicle has airbags. A rear seat is a safer place to secure a forward-facing child restraint. See *Where to Put the Restraint on page 3-39*.

On vehicles with an airbag on/off switch, you can use this feature to turn off the right front passenger frontal airbag. The switch is located on the instrument panel. See *Airbag On-Off Switch on page 3-23* for more information, including important safety information.

A label on the sun visor says, "Never put a rear-facing child seat in the front." This is because the risk to the rear-facing child is so great, if the airbag deploys.

⚠ WARNING

A child in a rear-facing child restraint can be seriously injured or killed if the right front passenger airbag inflates. This is because the back of the rear-facing child restraint would be very close to the inflating airbag. A child in a forward-facing child restraint can be seriously injured or killed if the right front passenger airbag inflates and the passenger seat is in a forward position.

Even if the airbag switch has turned off the right front passenger frontal airbag, no system is fail-safe. No one can guarantee that an airbag will not

(Continued)

WARNING (CONTINUED)

deploy under some unusual circumstance, even though it is turned off.

Secure rear-facing child restraints in a rear seat, even if the airbag is off. If you secure a forward-facing child restraint in the right front seat, always move the front passenger seat as far back as it will go. It is better to secure the child restraint in a rear seat.

⚠ WARNING

If the airbag readiness light ever comes on and stays on, it means that something may be wrong with the airbag system. For example, the right front

(Continued)

WARNING (CONTINUED)

passenger airbag could inflate even though the airbag on-off switch is turned off.

To help avoid injury to yourself or others, have the vehicle serviced right away. See *Airbag Readiness Light on page 5-14* for more information, including important safety information.

If the vehicle does not have a rear seat that will accommodate a rear-facing child restraint, a rear-facing child restraint should not be installed in the vehicle, even if the airbag is off.

If the child restraint has the LATCH system, see *Lower Anchors and Tethers for Children (LATCH System) on page 3-41* for how and where to install the child restraint using LATCH. If a child restraint is secured using a safety belt and it uses a top tether, see *Lower Anchors and Tethers for Children (LATCH System) on page 3-41* for top tether anchor locations.

Do not secure a child seat in a position without a top tether anchor if a national or local law requires that the top tether be anchored, or if the instructions that come with the child restraint say that the top strap must be anchored.

In Canada, the law requires that forward-facing child restraints have a top tether, and that the tether be attached.

You will be using the lap-shoulder belt to secure the child restraint in this position. Follow the instructions that came with the child restraint.

1. Move the seat as far back as it will go before securing the forward-facing child restraint.

   If you have no other choice but to install a rear-facing child restraint in this seat, make sure the airbag is off once the child restraint has been installed.

   When the airbag off switch has turned off the right front passenger frontal airbag, the off indicator in the airbag off light should light and stay lit when the vehicle is started. See *Airbag On-Off Light on page 5-15*.

2. Put the child restraint on the seat.

3. Pick up the latch plate, and run the lap and shoulder portions of the vehicle safety belt through or around the restraint. The child restraint instructions will show you how.

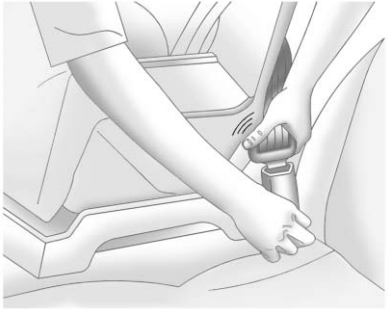

4. Push the latch plate into the buckle until it clicks.

   Position the release button on the buckle so that the safety belt could be quickly unbuckled if necessary.

5. Pull the shoulder belt all the way out of the retractor to set the lock. When the retractor lock is set, the belt can be tightened but not pulled out of the retractor.

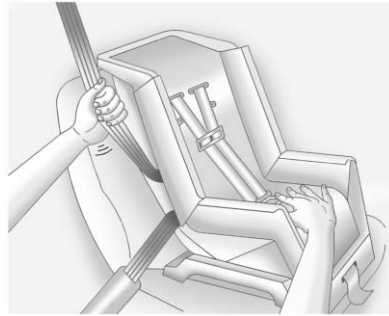

6. To tighten the belt, push down on the child restraint, pull the shoulder portion of the belt to tighten the lap portion of the belt, and feed the shoulder belt back into the retractor. When installing a forward-facing child restraint, it may be helpful to use your knee to push down on the child restraint as you tighten the belt.

   Try to pull the belt out of the retractor to make sure the retractor is locked. If the retractor is not locked, repeat Steps 5 and 6.

7. If the vehicle does not have a rear seat and the child restraint has a top tether, follow the child restraint manufacturer's instructions regarding the use of the top tether. See *Lower Anchors and Tethers for Children (LATCH System) on page 3-41* for more information.
8. Before placing a child in the child restraint, make sure it is securely held in place. To check, grasp the child restraint at the safety belt path and attempt to move it side to side and back and forth. When the child restraint is properly installed, there should be no more than 2.5 cm (1 in) of movement.

To remove the child restraint, unbuckle the vehicle safety belt and let it return to the stowed position.

If the top tether is attached to a top tether anchor, disconnect it.

If you turned the airbag off with the switch, turn on the right front passenger airbag when you remove the child restraint from the vehicle unless the person who will be sitting there is a member of a passenger airbag risk group. See *Airbag On-Off Switch on page 3-23* for more information, including important safety information.

Storage

Storage Compartments
Front Storage 4-1

Storage Compartments

Front Storage

This vehicle may have a front storage compartment. It is located at the center of the instrument panel extension, by the floor. To open the compartment, pull up on the latch. The compartment will open automatically.

Storage compartments may also be included on the inside of each front door.

✍ NOTES

Instruments and Controls

Controls

Steering Wheel Adjustment . . . 5-2
Steering Wheel Controls 5-2
Horn 5-3
Windshield Wiper/Washer 5-3
Compass 5-4
Clock 5-6
Power Outlets 5-7
Cigarette Lighter 5-7
Ashtrays 5-8

Warning Lights, Gauges, and Indicators

Warning Lights, Gauges, and Indicators 5-8
Instrument Cluster 5-9
Speedometer 5-10
Odometer 5-10
Trip Odometer 5-10
Fuel Gauge 5-10
Engine Oil Pressure Gauge 5-11
Engine Coolant Temperature Gauge 5-12
Voltmeter Gauge 5-13
Safety Belt Reminders 5-14
Airbag Readiness Light 5-14
Airbag On-Off Light 5-15
Passenger Airbag Status Indicator 5-16
Charging System Light 5-17
Malfunction Indicator Lamp 5-17
Brake System Warning Light 5-20
Antilock Brake System (ABS) Warning Light 5-21
Tow/Haul Mode Light 5-21
StabiliTrak® OFF Light 5-21
Traction Control System (TCS)/StabiliTrak® Light 5-22
Tire Pressure Light 5-22
Engine Oil Pressure Light 5-23
Low Fuel Warning Light 5-23
Security Light 5-23
High-Beam On Light 5-24
Cruise Control Light 5-24

Information Displays

Driver Information Center (DIC) 5-24

Vehicle Messages

Vehicle Messages 5-29
Battery Voltage and Charging Messages 5-30
Brake System Messages 5-30
Compass Messages 5-30
Door Ajar Messages 5-30
Engine Cooling System Messages 5-31
Engine Oil Messages 5-32
Engine Power Messages 5-32
Fuel System Messages 5-33
Key and Lock Messages 5-33
Lamp Messages 5-33
Object Detection System Messages 5-33
Ride Control System Messages 5-34
Airbag System Messages 5-35
Security Messages 5-35
Service Vehicle Messages . . . 5-36
Tire Messages 5-36
Transmission Messages 5-37
Vehicle Reminder Messages 5-38

Vehicle Personalization

Vehicle Personalization 5-38

Controls

Steering Wheel Adjustment

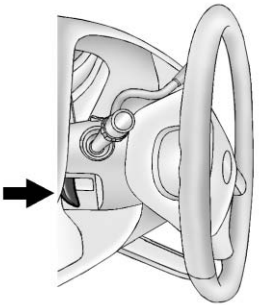

For vehicles with a tilt steering wheel, the lever is located on the left side of the steering column.

To adjust the steering wheel:

1. Pull the lever to move the steering wheel up or down into a comfortable position.
2. Release the lever to lock the steering wheel in place.

Do not adjust the steering wheel while driving.

Steering Wheel Controls

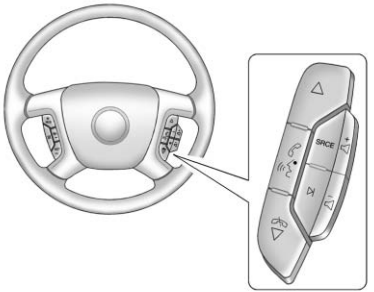

If available, some audio controls can be adjusted at the steering wheel.

See *Cruise Control on page 9-34* for more information on other steering wheel control.

△ **(Next):** Press to go to the next favorite radio station, track on a CD, or folder on an iPod® or USB device.

/ ▽ **(Previous/End):** Press to go to the previous favorite radio station, track on a CD, or folder on an iPod® or USB device. Also press to reject an incoming call, or end a current call.

Radio

To select preset or favorite radio stations:

Press and release △ or / ▽ to go to the next or previous radio station stored as a preset or favorite.

CD

To select tracks on a CD:

Press and release △ or / ▽ to go to the next or previous track.

Selecting Tracks on an iPod or USB Device

1. Press and hold △ or / ▽ while listening to a song until the contents of the current folder display on the radio display.

2. Press and release △ or ⊸ / ▽ to scroll up or down the list, then press and hold △ , or press ⊳| to play the highlighted track.

Navigating Folders on an iPod or USB Device

1. Press and hold △ or ⊸ / ▽ while listening to a song until the contents of the current folder display on the radio display.
2. Press and hold ⊸ / ▽ to go back to the previous folder list.
3. Press and release △ or ⊸ / ▽ to scroll up or down the list.
   - To select a folder, press and hold △ , or press ⊳| when the folder is highlighted.
   - To go back further in the folder list, press and hold ⊸ / ▽.

/ (Push to Talk): Press to silence the vehicle speakers only. Press again to turn the sound on.

For vehicles with Bluetooth or OnStar® systems, press and hold for longer than two seconds to interact with those systems. See *Bluetooth on page 7-21* and *OnStar Overview on page 14-1* for more information.

SRCE (Source/Voice Recognition): Press to switch between the radio and CD, and for equipped vehicles, the front auxiliary.

⊳| (Seek): Press to go to the next radio station while in AM, FM, or SiriusXM®.

For vehicles with a CD Player or USB port:

Press ⊳| to go to the next track or chapter while sourced to the CD.

Press ⊳| to select a track or a folder when navigating folders on an iPod or USB device.

While listening to a CD, press and hold ⊳| to quickly move forward through the tracks. Release to stop on the desired track.

+ ◁ : Press to increase volume.

– ◁ : Press to decrease volume.

Horn

Press the horn symbol in the middle of the steering wheel to sound the horn.

Windshield Wiper/Washer

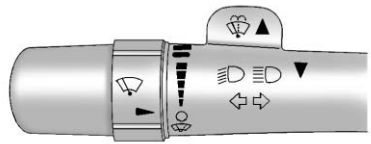

The windshield wiper control is located on the multifunction lever on the left side of the steering wheel.

Turn the band with ⊸ on it to select the wiper speed.

(Mist): Use for a single wipe. Hold the band on , then release. For several wipes, hold the band on longer.

(Adjustable Interval Wipes): Use to adjust the delay time between wipes. Turn the band up for more frequent wipes or down for less frequent wipes.

(Low Speed): Slow wipes.

(High Speed): Fast wipes.

(Off): Use to turn the wipers off.

When driving during the day and the wipers are activated, the head lamps automatically turn on after completing eight wipe cycles.

Clear ice and snow from the wiper blades before using them. If frozen to the windshield, carefully loosen or thaw them. Damaged blades should be replaced.

Windshield Washer

The windshield wiper paddle is located on top of the multifunction lever.

(Washer Fluid): Push the paddle to spray washer fluid on the windshield. The wipers will clear the window and then either stop or return to the preset speed.

⚠ WARNING

In freezing weather, do not use the washer until the windshield is warmed. Otherwise the washer fluid can form ice on the windshield, blocking your vision.

Compass

This vehicle may have a compass in the Driver Information Center (DIC).

Compass Zone

Your dealer will set the correct zone for your location.

Under certain circumstances, such as during a long distance cross-country trip or moving to a new state or province, it will be necessary to compensate for compass variance by resetting the zone through the DIC if the zone is not set correctly.

Compass variance is the difference between the earth's magnetic north and true geographic north. If the compass is not set to the zone where you live, the compass may give false readings. The compass must be set to the variance zone in which the vehicle is traveling.

To adjust for compass variance, use the following procedure:

Compass Variance (Zone) Procedure

1. Do not set the compass zone when the vehicle is moving. Only set it when the vehicle is in P (Park).

   Press until PRESS ✓ TO CHANGE COMPASS ZONE displays.

2. Find the vehicle's current location and variance zone number on the map.

   Zones 1 through 15 are available.

3. Press ✓ to scroll through and select the appropriate variance zone.

4. Press until the vehicle heading, for example, N for North, is displayed in the DIC.

5. If calibration is necessary, calibrate the compass. See “Compass Calibration Procedure” following.

Compass Calibration

The compass can be manually calibrated. Only calibrate the compass in a magnetically clean and safe location, such as an open parking lot, where driving the vehicle in circles is not a danger.

It is suggested to calibrate away from tall buildings, utility wires, manhole covers, or other industrial structures, if possible.

If CAL should ever appear in the DIC display, the compass should be calibrated.

If the DIC display does not show a heading, for example, N for North, or the heading does not change after making turns, there may be a strong magnetic field interfering with the compass. Such interference may be caused by a magnetic CB or cell phone antenna mount, a magnetic emergency light, magnetic note pad holder, or any other magnetic item. Turn off the vehicle, move the magnetic item, then turn on the vehicle and calibrate the compass.

To calibrate the compass, use the following procedure:

Compass Calibration Procedure

1. Before calibrating the compass, make sure the compass zone is set to the variance zone in which the vehicle is located. See “Compass Variance (Zone) Procedure” earlier in this section.

   Do not operate any switches such as window, climate controls, seats, etc. during the calibration procedure.

2. Press until PRESS ✓ TO CALIBRATE COMPASS displays.

3. Press ✓ to start the compass calibration.

4. The DIC will display CALIBRATING: DRIVE IN CIRCLES. Drive the vehicle in tight circles at less than 8 km/h (5 mph) to complete the calibration. The DIC will display CALIBRATION COMPLETE for a few seconds when the calibration is complete. The DIC display will then return to PRESS ✓ TO CALIBRATE COMPASS.

Clock

The clock can be set with either the radio turned on or off.

AM/FM Radio

To set the time:

1. Press until the hour begins flashing on the display. Press this button a second time and the minutes begin flashing on display.

   Press a third time and the 12HR or 24HR time format begins flashing.

2. While either the hour or the minutes are flashing, turn the knob, on the upper right side of the radio, clockwise or counterclockwise to increase or decrease the time. While the 12HR or 24HR time format is flashing, turn the knob clockwise or counterclockwise to select the default time settings.

3. Press again until the clock display stops flashing to set the currently displayed time; otherwise, the flashing stops after five seconds and the current time displayed is automatically set.

Radio with a CD Player

To set the time and date:

1. Press and the HR, MIN, MM, DD, YYYY (hour, minute, month, day, and year) displays.

2. Press the softkey under any one of the tabs to be changed. Every time the softkey is pressed again, the time or the date if selected, increases by one.

Another way to increase the time or date, is to press ⏭ SEEK or ▷▷ FWD (forward).

3. To decrease, press ⏮ SEEK or ◁◁ REV. Turn the ♫ knob, on the upper right side of the radio, to adjust the selected setting.

Changing the Time and Date Default Settings

To change the time or date default settings:

1. Press ◷ and then the softkey under the forward arrow that is currently displayed on the radio screen until the time 12H (hour) and 24H (hour), and the date MM/DD (month and day) and DD/MM (day and month) are displayed.
2. Press the softkey under the desired option.
3. Press ◷ again to apply the selected default, or let the screen time out.

Power Outlets

The accessory power outlets can be used to plug in electrical equipment, such as a cell phone or an MP3 player.

The vehicle may have two accessory power outlets on the instrument panel.

Remove the cover to access and replace when not in use.

Certain power accessory plugs may not be compatible to the accessory power outlet and could overload vehicle or adapter fuses. If a problem is experienced, see your dealer.

⚠ WARNING

Power is always supplied to the outlets. Do not leave electrical equipment plugged in when the vehicle is not in use because the vehicle could catch fire and cause injury or death.

Notice: **Leaving electrical equipment plugged in for an extended period of time while the vehicle is off will drain the battery. Always unplug electrical equipment when not in use and do not plug in equipment that exceeds the maximum 20 ampere rating.**

When adding electrical equipment, be sure to follow the proper installation instructions included with the equipment. See *Add-On Electrical Equipment on page 9-57*.

Notice: **Hanging heavy equipment from the power outlet can cause damage not covered by the vehicle warranty. The power outlets are designed for accessory power plugs only, such as cell phone charge cords.**

Cigarette Lighter

To use the cigarette lighter, if the vehicle has one, push it in all the way, and let go. When it is ready for use, it will pop back out by itself.

Do not use the lighter to plug in accessory devices. Use the power outlets provided.

Notice: **Holding a cigarette lighter in while it is heating does not let the lighter back away from the heating element when it is hot. Damage from overheating can occur to the lighter or heating element, or a fuse could be blown. Do not hold a cigarette lighter in while it is heating.**

Ashtrays

The vehicle may have a removable ashtray. The ashtray can be placed into the front floor console cupholder. Open cover to use.

Notice: **If papers, pins, or other flammable items are put in the ashtray, hot cigarettes or other smoking materials could ignite them and possibly damage the vehicle. Never put flammable items in the ashtray.**

Warning Lights, Gauges, and Indicators

Warning lights and gauges can signal that something is wrong before it becomes serious enough to cause an expensive repair or replacement. Paying attention to the warning lights and gauges could prevent injury.

Warning lights come on when there could be a problem with a vehicle function. Some warning lights come on briefly when the engine is started to indicate they are working.

Gauges can indicate when there could be a problem with a vehicle function. Often gauges and warning lights work together to indicate a problem with the vehicle.

When one of the warning lights comes on and stays on while driving, or when one of the gauges shows there may be a problem, check the section that explains what to do. Follow this manual's advice. Waiting to do repairs can be costly and even dangerous.

Instrument Cluster

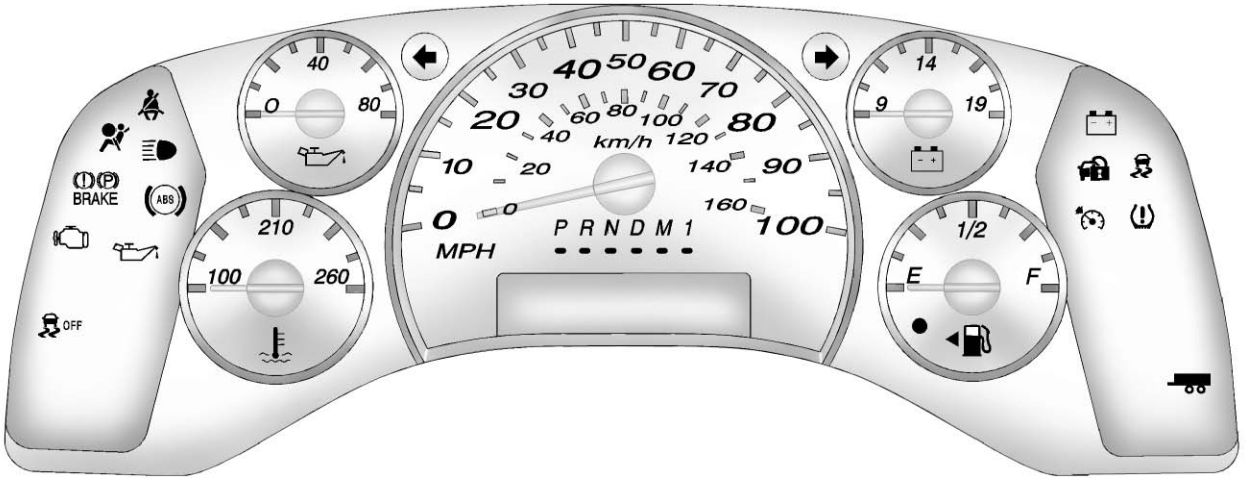

English 4-Speed Version Shown, 6-Speed and Metric Similar

If the vehicle has a diesel engine, see the Duramax diesel supplement for more information.

Speedometer

The speedometer shows the vehicle's speed in either kilometers per hour (km/h) or miles per hour (mph).

Odometer

The odometer shows how far the vehicle has been driven, in either kilometers or miles.

This vehicle has a tamper-resistant odometer. The digital odometer will read 999,999 if it is turned back.

If the vehicle needs a new odometer installed, it must be set to the mileage total of the old odometer. If that is not possible, then it must be set at zero and a label must be put on the driver door to show the old mileage reading when the new odometer was installed.

Trip Odometer

The trip odometer can show how far the vehicle has been driven since the trip odometer was last set to zero.

Press the on the Driver Information Center (DIC) switch to display the trip odometer and the regular odometer information.

See *Driver Information Center (DIC) on page 5-24* for more information on resetting the trip odometer.

To display the odometer reading with the ignition off, press the on the Driver Information Center (DIC) switch.

Fuel Gauge

Metric

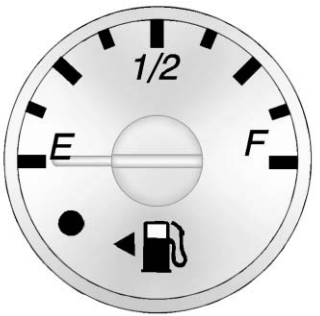

English

The fuel gauge, when the ignition is on, indicates how much fuel is left in the vehicle fuel tank.

An arrow on the fuel gauge indicates the side of the vehicle the fuel door is on.

The gauge first indicates empty before the vehicle is out of fuel, and the fuel tank should be refueled soon.

Listed are four situations customers might experience with the fuel gauge. None of these indicate a problem with the fuel gauge:

- At the gas station, the fuel pump shuts off before the gauge reads full.
- It takes a little more or less fuel to fill up than the fuel gauge indicated. For example, the gauge may have indicated the tank was half full, but it actually took a little more or less than half the tank's capacity to fill the tank.
- The gauge moves a little while turning a corner or speeding up.
- The gauge does not go back to empty when the ignition is turned off.

If the vehicle has a diesel engine, see the Duramax diesel supplement for more information.

Engine Oil Pressure Gauge

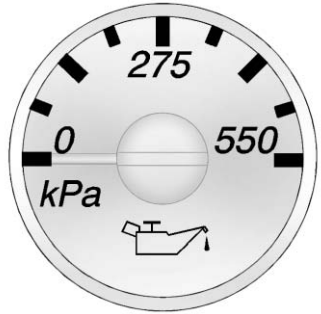

Metric

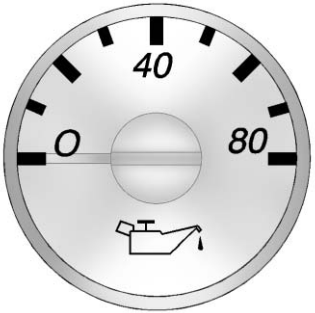

English

The oil pressure gauge shows the engine oil pressure in psi (pounds per square inch) or kPa (kilopascals) when the engine is running.

Oil pressure may vary with engine speed, outside temperature and oil viscosity, but readings above the low pressure zone indicate the normal operating range.

A reading in the low pressure zone may be caused by a dangerously low oil level or other problem causing low oil pressure.

Notice: **Lack of proper engine oil maintenance can damage the engine. Driving with the engine oil low can also damage the engine. The repairs would not be covered by the vehicle warranty. Check the oil level as soon as possible. Add oil if required, but if the oil level is within the operating range and the oil pressure is still low, have the vehicle serviced. Always follow the maintenance schedule for changing engine oil.**

Engine Coolant Temperature Gauge

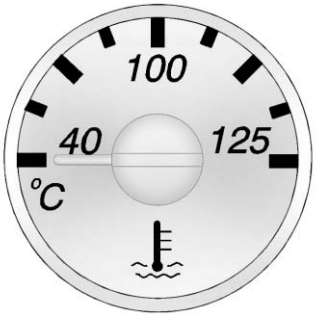

Metric

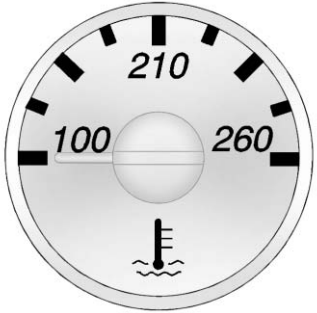

English

This gauge shows the engine coolant temperature.

It also provides an indicator of how hard the vehicle is working. During a majority of the operation, the gauge will read 100°C (210°F) or less. If the vehicle is pulling a load or going up hills, it is normal for the temperature to fluctuate and approach the 122°C (250°F) mark. If the gauge reaches the 125°C (260°F) mark, it indicates that the cooling system is working beyond its capacity.

See *Engine Overheating on page 10-21*.

Voltmeter Gauge

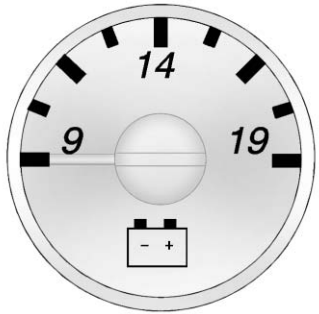

When the engine is not running, but the ignition is on, this gauge shows the battery's state of charge in DC volts.

When the engine is running, the gauge shows the condition of the charging system. Readings between the low and high warning zones indicate the normal operating range.

Readings in the low warning zone may occur when a large number of electrical accessories are operating in the vehicle and the engine is left at an idle for an extended period. This condition is normal since the charging system is not able to provide full power at engine idle. As engine speeds are increased, this condition should correct itself as higher engine speeds allow the charging system to create maximum power.

The vehicle can be only driven for a short time with the reading in either warning zone. If it must be driven, turn off all unnecessary accessories.

Readings in either warning zone indicate a possible problem in the electrical system. Have the vehicle serviced as soon as possible.

Safety Belt Reminders

Driver Safety Belt Reminder Light

There is a driver safety belt reminder light on the instrument cluster.

When the vehicle is started this light flashes and a chime may come on to remind the driver to fasten their safety belt. Then the light stays on solid until the belt is buckled. This cycle may continue several times if the driver remains or becomes unbuckled while the vehicle is moving.

If the driver safety belt is buckled, neither the light nor the chime comes on.

Passenger Safety Belt Reminder Light

There may be a passenger safety belt reminder light near the passenger airbag status indicator. See *Passenger Sensing System on page 3-26*.

For vehicles equipped with the passenger safety belt warning light, when the vehicle is started this light flashes and a chime may come on to remind passengers to fasten their safety belt. Then the light stays on solid until the belt is buckled. This cycle continues several times if the passenger remains or becomes unbuckled while the vehicle is moving.

If the passenger safety belt is buckled, neither the chime nor the light comes on.

The front passenger safety belt warning light and chime may turn on if an object is put on the seat such as a briefcase, handbag, grocery bag, laptop, or other electronic device. To turn off the warning light and/or chime, remove the object from the seat or buckle the safety belt.

Airbag Readiness Light

This light shows if there is an electrical problem with the airbag system. The system check includes the airbag sensor(s), passenger sensing system (if equipped), the pretensioners (if equipped), the airbag modules, the wiring, and the crash sensing and diagnostic module. For more information on the airbag system, see *Airbag System on page 3-16*.

The airbag readiness light comes on for several seconds when the vehicle is started. If the light does not come on then, have it fixed immediately.

⚠ WARNING

If the airbag readiness light stays on after the vehicle is started or comes on while driving, it means the airbag system might not be working properly. The airbags in the vehicle might not inflate in a crash, or they could even inflate without a crash. To help avoid injury, have the vehicle serviced right away.

If there is a problem with the airbag system, a Driver Information Center (DIC) message may also come on. See *Airbag System Messages on page 5-35*.

Airbag On-Off Light

When the right front passenger airbag is manually turned off using the airbag on-off switch on the instrument panel, if equipped, the indicator light OFF or the off symbol will come on and stay on as a reminder that the airbag has been turned off. This light will go off when the airbag has been turned on. See *Airbag On-Off Switch on page 3-23* for more information, including important safety information.

United States

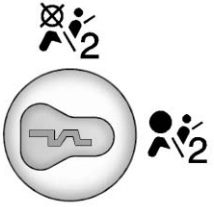

Canada and Mexico

⚠ WARNING

If the right front passenger airbag is turned off for a person who is not in a risk group identified by the national government, that person will not have the extra protection of an airbag. In a crash, the airbag will not be able to inflate and help protect the person sitting there.

Do not turn off the passenger airbag unless the person sitting there is in a risk group identified by the national government. See *Airbag On-Off Switch on page 3-23* for more on this, including important safety information.

⚠ WARNING

If the airbag readiness light ever comes on and stays on, it means that something may be wrong with the airbag system. For example, the right front passenger airbag could inflate even though the airbag on-off switch is turned off.

To help avoid injury to yourself or others, have the vehicle serviced right away. See *Airbag Readiness Light on page 5-14* for more information, including important safety information.

If the word ON or the on symbol is lit, it means that the right front passenger frontal airbag is enabled, and may inflate. See *Airbag On-Off Switch on page 3-23* for more information, including important safety information.

Passenger Airbag Status Indicator

If the vehicle has a passenger sensing system, the instrument panel will have a passenger airbag status indicator. See *Passenger Sensing System on page 3-26* for important safety information.

United States

Canada and Mexico

When the vehicle is started, the passenger airbag status indicator will light ON and OFF, or the symbol for on and off, for several seconds

as a system check. If you are using remote start, if equipped, to start the vehicle from a distance, you may not see the system check. Then, after several more seconds, the status indicator will light either ON or OFF, or either the on or off symbol to let you know the status of the right front passenger frontal airbag.

If the word ON or the on symbol is lit on the passenger airbag status indicator, it means that the right front passenger frontal airbag is enabled, and may inflate.

If the word OFF or the off symbol is lit on the airbag status indicator, it means that the passenger sensing system has turned off the right front passenger frontal airbag.

If, after several seconds, both status indicator lights remain on, or if there are no lights at all, there may be a problem with the lights or the passenger sensing system. See your dealer for service.

⚠ WARNING

If the airbag readiness light ever comes on and stays on, it means that something may be wrong with the airbag system. To help avoid injury to yourself or others, have the vehicle serviced right away. See *Airbag Readiness Light on page 5-14* for more information, including important safety information.

Charging System Light

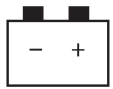

This light comes on briefly when the ignition key is turned to START, but the engine is not running, as a check to show it is working.

If it does not, have the vehicle serviced by your dealer.

The light should go out once the engine starts. If it stays on, or comes on while driving, there could be a problem with the charging system. A charging system message in the Driver Information Center (DIC) can also appear. See *Battery Voltage and Charging Messages on page 5-30* for more information. This light could indicate that there are problems with a generator drive belt, or that there is an electrical problem. Have it checked right away. If the vehicle must be driven a short distance with the light on, turn off accessories, such as the radio and air conditioner.

Malfunction Indicator Lamp

A computer system called OBD II (On-Board Diagnostics-Second Generation) monitors the operation of the vehicle to ensure emissions

are at acceptable levels, helping to maintain a clean environment. The malfunction indicator lamp comes on when the vehicle is placed in ON/RUN, as a check to show it is working. If it does not, have the vehicle serviced by your dealer. See *Ignition Positions on page 9-15*.

If the malfunction indicator lamp comes on while the engine is running, this indicates that the OBD II system has detected a problem and diagnosis and service might be required.

Malfunctions often are indicated by the system before any problem is apparent. Being aware of the light can prevent more serious damage to the vehicle. This system also assists the service technician in correctly diagnosing any malfunction.

Notice: **If the vehicle is continually driven with this light on, the emission controls might not work as well, the vehicle fuel economy might not be as good, and the engine might not run as smoothly. This could lead to costly repairs that might not be covered by the vehicle warranty.**

Notice: **Modifications made to the engine, transmission, exhaust, intake, or fuel system of the vehicle or the replacement of the original tires with other than those of the same Tire Performance Criteria (TPC) can affect the vehicle's emission controls and can cause this light to come on. Modifications to these systems could lead to costly repairs not covered by the vehicle warranty. This could also result in a failure to pass a required Emission Inspection/ Maintenance test. See *Accessories and Modifications on page 10-3*.**

This light comes on during a malfunction in one of two ways:

Light Flashing: A misfire condition has been detected. A misfire increases vehicle emissions and could damage the emission control system on the vehicle. Diagnosis and service might be required.

To prevent more serious damage to the vehicle:

- Reduce vehicle speed.
- Avoid hard accelerations.
- Avoid steep uphill grades.
- If towing a trailer, reduce the amount of cargo being hauled as soon as it is possible.

If the light continues to flash, find a safe place to stop and park the vehicle. Turn the vehicle off, wait at least 10 seconds, and restart the engine. If the light is still flashing,

follow the previous steps and see your dealer for service as soon as possible.

Light On Steady: An emission control system malfunction has been detected on the vehicle. Diagnosis and service might be required.

The following may correct an emission control system malfunction:

- Check that the fuel cap is fully installed. See *Filling the Tank on page 9-45*. The diagnostic system can determine if the fuel cap has been left off or improperly installed. A loose or missing fuel cap allows fuel to evaporate into the atmosphere. A few driving trips with the cap properly installed should turn the light off.
- Check that good quality fuel is used. Poor fuel quality causes the engine not to run as efficiently as designed and may cause stalling after start-up, stalling when the vehicle is changed into gear, misfiring, hesitation on acceleration, or stumbling on acceleration. These conditions might go away once the engine is warmed up.

If one or more of these conditions occurs, change the fuel brand used. It may require at least one full tank of the proper fuel to turn the light off.

See *Recommended Fuel on page 9-42*.

If none of the above have made the light turn off, your dealer can check the vehicle. The dealer has the proper test equipment and diagnostic tools to fix any mechanical or electrical problems that might have developed.

Emissions Inspection and Maintenance Programs

Depending on where you live, your vehicle may be required to participate in an emission control system inspection and maintenance program. For the inspection, the emission system test equipment will likely connect to the vehicle's Data Link Connector (DLC).

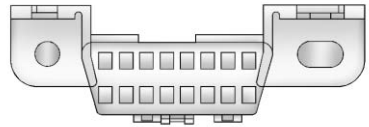

The DLC is under the instrument panel to the left of the steering wheel. See your dealer if assistance is needed.

The vehicle may not pass inspection if:

- The malfunction indicator lamp is on with the engine running, or if the light does not come on when the ignition is turned to ON/RUN while the engine is off. See your dealer for assistance in verifying proper operation of the malfunction indicator lamp.
- The OBD II (On-Board Diagnostics) system determines that critical emission control

systems have not been completely diagnosed. The vehicle would be considered not ready for inspection. This can happen if the 12-volt battery has recently been replaced or run down. The diagnostic system is designed to evaluate critical emission control systems during normal driving. This can take several days of routine driving. If this has been done and the vehicle still does not pass the inspection for lack of OBD II system readiness, your dealer can prepare the vehicle for inspection.

Brake System Warning Light

The vehicle brake system consists of two hydraulic circuits. If one circuit is not working, the remaining circuit can still work to stop the vehicle. For normal braking performance, both circuits need to be working.

If the warning light comes on, there could be a brake problem. Have the brake system inspected right away.

Metric

English

This light should come on briefly when ignition key is turned to ON/RUN. If it does not come on, have it fixed so it will be ready to warn if there is a problem.

When the ignition is on, the brake system warning light also comes on when the parking brake is set. See *Parking Brake on page 9-31* for more information. The light stays on if the parking brake does not fully release. If it stays on after the parking brake is fully released, it means the vehicle has a brake problem.

If the light comes on while driving, pull off the road and stop carefully. The pedal might be harder to push, or the pedal might go closer to the floor. It could take longer to stop. If the light is still on, have the vehicle towed for service. See *Towing the Vehicle on page 10-81*.

⚠ WARNING

The brake system might not be working properly if the brake system warning light is on. Driving with the brake system warning light on can lead to a crash. If the light is still on after the vehicle has been pulled off the road and carefully stopped, have the vehicle towed for service.

Antilock Brake System (ABS) Warning Light

For vehicles with the Antilock Brake System (ABS), this light comes on briefly when the engine is started.

If it does not, have the vehicle serviced by your dealer. If the system is working normally the indicator light then goes off.

If the ABS light stays on, turn the ignition off. If the light comes on while driving, stop as soon as it is safely possible and turn the ignition off. Then start the engine again to reset the system. If the ABS light stays on, or comes on again while driving, the vehicle needs service.

If the regular brake system warning light is not on, the vehicle still has brakes, but not antilock brakes.
If the regular brake system warning light is also on, the vehicle does not have antilock brakes and there is a problem with the regular brakes.
See *Brake System Warning Light on page 5-20*.

Tow/Haul Mode Light

For vehicles with the Tow/Haul Mode feature, this light comes on when the Tow/Haul Mode has been activated.

For more information, see *Tow/Haul Mode on page 9-29*.

StabiliTrak® OFF Light

This light comes on briefly while starting the engine.

If it does not, have the vehicle serviced by your dealer. If the system is working normally, the indicator light then goes off.

Press and release the Traction Control System (TCS)/StabiliTrak button to turn off TCS, and a message displays in the DIC.

Press and briefly hold the TCS/StabiliTrak button to turn off the StabiliTrak system; the StabiliTrak Off light comes on and a message appears in the Driver Information Center (DIC).

If the StabiliTrak/TCS system is off, the system does not assist in controlling the vehicle. Turn on the StabiliTrak/TCS system and the indicator light turns off.

See *StabiliTrak® System on page 9-32*, and *Ride Control System Messages on page 5-34* for more information.

Traction Control System (TCS)/StabiliTrak® Light

The Traction Control System (TCS)/ StabiliTrak light comes on briefly when the engine is started.

If the light does not come on or stays on, have the vehicle serviced by your dealer. If the system is working normally, the indicator light turns off.

If the light comes on and stays on while driving, and a message displays in the Driver Information Center (DIC), have the vehicle serviced by your dealer. See *Ride Control System Messages on page 5-34* for more information.

If the light flashes while driving, this means that the StabiliTrak or the TCS is assisting in controlling the vehicle. See *StabiliTrak® System on page 9-32* for more information.

Four chimes sound if the light turns on.

Tire Pressure Light

For vehicles with the Tire Pressure Monitor System (TPMS), this light comes on briefly when the engine is started. It provides information about tire pressures and the TPMS.

When the Light Is On Steady

This indicates that one or more of the tires are significantly underinflated.

A Driver Information Center (DIC) tire pressure message may also display. See *Tire Messages on page 5-36*. Stop as soon as possible, and inflate the tires to the pressure value shown on the Tire and Loading Information label. See *Tire Pressure on page 10-53*.

When the Light Flashes First and Then Is On Steady

If the light flashes for about a minute and then stays on, there may be a problem with the TPMS. If the problem is not corrected, the light will come on at every ignition cycle. See *Tire Pressure Monitor Operation on page 10-55*.

Engine Oil Pressure Light

Notice: **Lack of proper engine oil maintenance can damage the engine. Driving with the engine oil low can also damage the engine. The repairs would not be covered by the vehicle warranty. Check the oil level as soon as possible. Add oil if required, but if the oil level is within the operating range and the oil pressure is still low, have the vehicle serviced. Always follow the maintenance schedule for changing engine oil.**

This light comes on briefly while starting the engine. If it does not, have the vehicle serviced by your dealer. If the system is working normally, the indicator light then goes off.

If the light comes on and stays on, it means that oil is not flowing through the engine properly. The vehicle could be low on oil and it might have some other system problem.

Low Fuel Warning Light

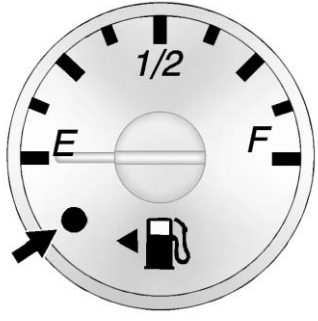

English Shown, Metric Similar

This light comes on for a few seconds when the ignition is turned on as a check to indicate it is working. If it does not come on, have it fixed.

The low fuel warning light comes on and a chime sounds when the vehicle is low on fuel. The light turns off when fuel is added to the fuel tank.

See *Driver Information Center (DIC) on page 5-24*.

Security Light

The immobilizer light should come on briefly as the engine is started. If it does not come on, have the vehicle serviced by your dealer. If the system is working normally, the indicator light turns off.

If the light stays on and the engine does not start, there could be a problem with the theft-deterrent system. See *Immobilizer Operation on page 2-11*.

High-Beam On Light

This light comes on when the high-beam headlamps are in use.

See *Headlamp High/Low-Beam Changer on page 6-2*.

Cruise Control Light

The cruise control light comes on whenever the cruise control is set.

The light goes out when the cruise control is turned off. See *Cruise Control on page 9-34* for more information.

Information Displays

Driver Information Center (DIC)

This vehicle has a DIC.

All messages will appear in the DIC display at the bottom of the instrument cluster. The DIC buttons are on the instrument panel, next to the instrument cluster.

The DIC comes on when the ignition is on. After a short delay, the DIC will display the information that was last displayed before the engine was turned off.

The DIC displays trip, fuel, and vehicle system information, and warning messages if a system problem is detected.

If the vehicle has these features, the DIC also displays the compass direction and the outside air temperature when viewing the trip and fuel information. The compass direction appears on the top right corner of the DIC display. The outside air temperature automatically appears in the bottom right corner of the DIC display.
If there is a problem with the system that controls the temperature display, the numbers will be replaced with dashes. If this occurs, have the vehicle serviced by your dealer.

If the vehicle has a diesel engine, see the Duramax diesel supplement.

DIC Operation and Displays

The DIC has different displays which can be accessed by pressing the DIC buttons on the instrument panel, next to the instrument cluster.

DIC Buttons

The buttons are the trip/fuel, vehicle information, customization, and set/reset buttons. The button functions are detailed in the following pages.

(Trip/Fuel): Press this button to display the odometer, trip odometers, fuel range, average economy, fuel used, timer, average speed, and digital tachometer.

(Vehicle Information): Press this button to display the oil life, units, tire pressure readings for vehicles with the Tire Pressure Monitor System (TPMS), engine hours, Tire Pressure Monitor System (TPMS) programming for vehicles with the TPMS and without a Remote Keyless Entry (RKE) transmitter, and compass zone and compass calibration on vehicles with this feature.

(Customization): Press this button to customize the feature settings on the vehicle. See *Vehicle Personalization on page 5-38* for more information.

✓ **(Set/Reset):** Press this button to set or reset certain functions and to turn off or acknowledge messages on the DIC.

Trip/Fuel Menu Items

(Trip/Fuel): Press this button to scroll through the following menu items:

Odometer

Press until XX km (mi) displays. This display shows the distance the vehicle has been driven in either kilometers (km) or miles (mi).

Trip Odometers

Press until A or B displays. This display shows the current distance traveled in either kilometers (km) or miles (mi) since the last reset for each trip odometer. Both trip odometers can be used at the same time.

Each trip odometer can be reset to zero separately by pressing ✓ while the desired trip odometer is displayed.

The trip odometer has a feature called the retro-active reset. This can be used to set the trip odometer to the number of kilometers (miles) driven since the ignition was last turned on. This can be used if the trip odometer is not reset at the beginning of the trip.

To use the retro-active reset feature, press and hold ✓ for at least four seconds. The trip odometer will display the number of kilometers (km) or miles (mi) driven since the ignition was last turned on and the vehicle was moving. Once the vehicle begins moving, the trip odometer will accumulate mileage. For example, if the vehicle was driven 8 km (5 miles) before it is started again, and then the retro-active reset feature is activated, the display will show 8 km (5 miles). As the vehicle begins moving, the display will then increase to 8.1 km (5.1 miles), 8.2 km (5.2 miles), etc.

If the retro-active reset feature is activated after the vehicle is started, but before it begins moving, the display will show the number of kilometers (km) or miles (mi) that were driven during the last ignition cycle.

Fuel Range

Press until FUEL RANGE displays. This display shows the approximate number of remaining kilometers (km) or miles (mi) the vehicle can be driven without refueling. The display will show LOW if the fuel level is low.

The fuel range estimate is based on an average of the fuel economy over recent driving history and the amount of fuel remaining in the fuel tank. This estimate will change if driving conditions change. For example, if driving in traffic and making frequent stops, this display may read one number, but if the vehicle is driven on a freeway, the number may change even though the same amount of fuel is in the

fuel tank. This is because different driving conditions produce different fuel economies. Generally, freeway driving produces better fuel economy than city driving.

If the vehicle is low on fuel, the FUEL LEVEL LOW message will be displayed. See “FUEL LEVEL LOW” under *Fuel System Messages on page 5-33* for more information.

Average Economy

Press until AVG ECONOMY displays. This display shows the approximate average liters per 100 kilometers (L/100 km) or miles per gallon (mpg). This number is calculated based on the number of L/100 km (mpg) recorded since the last time this menu item was reset. To reset AVG ECONOMY, press and hold ✓. The display will return to zero.

Fuel Used

Press until FUEL USED displays. This display shows the number of liters (L) or gallons (gal) of fuel used since the last reset of this menu item. To reset the fuel used information, press and hold ✓ while FUEL USED is displayed.

Timer

Press until TIMER displays. This display can be used as a timer.

To start the timer, press ✓ while TIMER is displayed. The display will show the amount of time that has passed since the timer was last reset, not including time the ignition is off. Time will continue to be counted as long as the ignition is on, even if another display is being shown on the DIC. The timer will record up to 99 hours, 59 minutes and 59 seconds (99:59:59) after which the display will return to zero.

To stop the timer, press ✓ briefly while TIMER is displayed.

To reset the timer to zero, press and hold ✓ while TIMER is displayed.

Average Speed

Press until AVERAGE SPEED displays. This display shows the average speed of the vehicle in kilometers per hour (km/h) or miles per hour (mph). This average is calculated based on the various vehicle speeds recorded since the last reset of this value. To reset the value, press and hold ✓. The display will return to zero.

Digital Tachometer

Press until Tachometer ##00 RPM displays. This display shows the engine speed in revolutions per minute (RPM).

Blank Display

This display shows no information.

Vehicle Information Menu Items

(Vehicle Information): Press this button to scroll through the following menu items:

Oil Life

Press until OIL LIFE REMAINING displays. This display shows an estimate of the oil's remaining useful life. If you see 99% OIL LIFE REMAINING on the display, that means 99% of the current oil life remains. The engine oil life system will alert you to change the oil on a schedule consistent with your driving conditions.

When the remaining oil life is low, the CHANGE ENGINE OIL SOON message will appear on the display. See “CHANGE ENGINE OIL SOON” under *Engine Oil Messages on page 5-32*. You should change the oil as soon as possible. See *Engine Oil on page 10-7*. In addition to the engine oil life system monitoring the oil life, additional maintenance is recommended in the Maintenance Schedule in this manual. See *Maintenance Schedule on page 11-3* for more information.

Remember, you must reset the OIL LIFE yourself after each oil change. It will not reset itself. Also, be careful not to reset the OIL LIFE accidentally at any time other than when the oil has just been changed. It cannot be reset accurately until the next oil change. To reset the engine oil life system, see *Engine Oil Life System on page 10-9*.

Units

Press until UNITS displays. This display allows you to select between metric or English units of measurement. Once in this display, press ✓ to select between METRIC or ENGLISH units.

Tire Pressure

If the vehicle has the Tire Pressure Monitor System (TPMS), the pressure for each tire can be viewed in the DIC. The tire pressure will be shown in either kilopascals (kPa) or pounds per square inch (psi). Press until the DIC displays FRONT TIRES PSI (kPa) LEFT ## RIGHT ##. Press again until the DIC displays REAR TIRES PSI (kPa) LEFT ## RIGHT ##.

If a low tire pressure condition is detected by the system while driving, a message advising you to check the pressure in a specific tire will appear in the display. See *Tire Pressure on page 10-53* and *Tire Messages on page 5-36* for more information.

If the tire pressure display shows dashes instead of a value, there may be a problem with the vehicle. If this consistently occurs, see your dealer for service.

Engine Hours

Press until ENGINE HOURS displays. This display shows the total number of hours the engine has run.

Relearn Tire Positions

The vehicle may have this display. To access this display, the vehicle must be in P (Park). If the vehicle has the Tire Pressure Monitor System (TPMS), after rotating the tires or after replacing a tire or sensor, the system must re-learn the tire positions. To re-learn the tire positions, see *Tire Pressure Monitor System on page 10-54*. See *Tire Inspection on page 10-58*, *Tire Rotation on page 10-58* and *Tire Messages on page 5-36* for more information.

Change Compass Zone

The vehicle may have this feature. To change the compass zone through the DIC, see *Compass on page 5-4*.

Calibrate Compass

The vehicle may have this feature. The compass can be manually calibrated. To calibrate the compass through the DIC, see *Compass on page 5-4*.

Blank Display

This display shows no information.

Vehicle Messages

Messages displayed on the DIC indicate the status of the vehicle or some action may be needed to correct a condition. Multiple messages may appear one after another.

The messages that do not require immediate action can be acknowledged and cleared by pressing ✓ (Set/Reset).

The messages that require immediate action cannot be cleared until that action is performed.

All messages should be taken seriously and clearing the message does not correct the problem.

The following are the possible messages and some information about them.

If the vehicle has a diesel engine, see the Duramax diesel supplement.

Battery Voltage and Charging Messages

SERVICE BATTERY CHARGING SYSTEM

On some vehicles, this message displays if there is a problem with the battery charging system. Under certain conditions, the charging system light may also turn on in the instrument cluster. See *Charging System Light on page 5-17*. Driving with this problem could drain the battery. Turn off all unnecessary accessories. Have the electrical system checked as soon as possible. See your dealer.

Brake System Messages

SERVICE BRAKE SYSTEM

This message displays along with the brake system warning light if there is a problem with the brake system. See *Brake System Warning Light on page 5-20*. If this message appears, stop as soon as possible and turn off the vehicle. Restart the vehicle and check for the message on the DIC display. If the message is still displayed or appears again when you begin driving, the brake system needs service as soon as possible. See your dealer.

Compass Messages

CALIBRATING: DRIVE IN CIRCLES

This message displays when calibrating the compass. Drive the vehicle in circles at less than 8 km/h (5 mph) to complete the calibration. See *Compass on page 5-4* for more information.

CALIBRATION COMPLETE

This message displays when the compass calibration is complete. See *Compass on page 5-4* for more information.

Door Ajar Messages

CARGO DOOR OPEN

This message displays and a chime sounds if the cargo door is open while the ignition is in ON/RUN. Turn off the vehicle and check the cargo door. Restart the vehicle and check for the message on the DIC display.

DRIVER DOOR OPEN

This message displays and a chime sounds if the driver door is not fully closed and the vehicle is in a drive gear. Stop and turn off the vehicle, check the door for obstructions, and close the door again. Check to see if the message still appears on the DIC.

LEFT REAR DOOR OPEN

On some vehicles, this message displays and a chime sounds if the driver side rear door is not fully closed and the vehicle is in a drive gear. Stop and turn off the vehicle, check the door for obstructions, and

close the door again. Check to see if the message still appears on the DIC.

PASSENGER DOOR OPEN

This message displays and a chime sounds if the passenger door is not fully closed and the vehicle is in a drive gear. Stop and turn off the vehicle, check the door for obstructions, and close the door again. Check to see if the message still appears on the DIC.

RIGHT REAR DOOR OPEN

On some vehicles, this message displays and a chime sounds if the passenger side rear door is not fully closed and the vehicle is in a drive gear. Stop and turn off the vehicle, check the door for obstructions, and close the door again. Check to see if the message still appears on the DIC.

Engine Cooling System Messages

ENGINE HOT A/C (Air Conditioning) OFF

This message displays when the engine coolant becomes hotter than the normal operating temperature. See *Engine Coolant Temperature Gauge on page 5-12*. To avoid added strain on a hot engine, the air conditioning compressor automatically turns off. When the coolant temperature returns to normal, the air conditioning compressor turns back on. You can continue to drive the vehicle.

If this message continues to appear, have the system repaired by your dealer as soon as possible to avoid damage to the engine.

ENGINE OVERHEATED IDLE ENGINE

Notice: **If you drive the vehicle while the engine is overheating, severe engine damage may occur. If an overheat warning appears on the instrument cluster and/or DIC, stop the vehicle as soon as possible. See *Engine Overheating on page 10-21*.**

This message displays when the engine coolant temperature is too hot. Stop and allow the vehicle to idle until it cools down. See *Engine Coolant Temperature Gauge on page 5-12*.

ENGINE OVERHEATED STOP ENGINE

Notice: **If you drive the vehicle while the engine is overheating, severe engine damage may occur. If an overheat warning appears on the instrument cluster and/or DIC, stop the vehicle as soon as possible. See *Engine Overheating on page 10-21*.**

This message displays and a chime sounds if the engine cooling system reaches unsafe temperatures for operation. Stop and turn off the vehicle as soon as it is safe to do so to avoid severe damage. This message clears when the engine has cooled to a safe operating temperature.

Engine Oil Messages

CHANGE ENGINE OIL SOON

This message displays when the engine oil needs to be changed. When you change the engine oil, be sure to reset the CHANGE ENGINE OIL SOON message. See *Engine Oil Life System on page 10-9* for information on how to reset the message. See *Engine Oil on page 10-7* and *Maintenance Schedule on page 11-3* for more information.

ENGINE OIL LOW ADD OIL

If the vehicle has an oil level sensor, this message displays if the oil level in the vehicle is low. Check the oil level and correct it as necessary. You may need to let the vehicle cool or warm up and cycle the ignition to be sure this message clears. See *Engine Oil on page 10-7* for additional information.

OIL PRESSURE LOW STOP ENGINE

Notice: **If you drive the vehicle while the engine oil pressure is low, severe engine damage may occur. If a low oil pressure warning appears on the Driver Information Center (DIC), stop the vehicle as soon as possible. Do not drive the vehicle until the cause of the low oil pressure is corrected. See *Engine Oil on page 10-7* for more information.**

This message displays if low oil pressure levels occur. Stop the vehicle as soon as safely possible and do not operate it until the cause of the low oil pressure has been corrected. Check the oil as soon as possible and have the vehicle serviced by your dealer. See *Engine Oil on page 10-7*.

Engine Power Messages

ENGINE POWER IS REDUCED

This message displays and a chime sounds when the cooling system temperature gets too hot and the engine further enters the engine coolant protection mode. See *Engine Overheating on page 10-21* for further information.

This message also displays when the engine power is reduced. Reduced engine power can affect the vehicle's ability to accelerate. If this message is on, but there is no reduction in performance, proceed to your destination. The performance may be reduced the next time the vehicle is driven. The vehicle may be driven at a reduced speed while this message is on, but

acceleration and speed may be reduced. Anytime this message stays on, the vehicle should be taken to your dealer for service as soon as possible.

Fuel System Messages

FUEL LEVEL LOW

This message displays and a chime sounds if the fuel level is low. Refuel as soon as possible. See *Fuel Gauge on page 5-10* and *Fuel on page 9-42* for more information.

TIGHTEN GAS CAP

This message may display along with the check engine light on the instrument cluster if the fuel cap is not tightened properly. See *Malfunction Indicator Lamp on page 5-17*. Reinstall the fuel cap fully. See *Filling the Tank on page 9-45*. The diagnostic system can determine if the fuel cap has been left off or improperly installed. A loose or missing fuel cap allows fuel to evaporate into the atmosphere. A few driving trips with the cap properly installed should turn this light and message off.

Key and Lock Messages

REPLACE BATTERY IN REMOTE KEY

This message displays if a Remote Keyless Entry (RKE) transmitter battery is low. The battery needs to be replaced in the transmitter. See “Battery Replacement” under *Remote Keyless Entry (RKE) System Operation on page 2-2*.

Lamp Messages

AUTOMATIC LIGHT CONTROL OFF

This message displays when the automatic headlamps are turned off. See *Exterior Lamp Controls on page 6-1* for more information.

AUTOMATIC LIGHT CONTROL ON

This message displays when the automatic headlamps are turned on. See *Exterior Lamp Controls on page 6-1* for more information.

TURN SIGNAL ON

This message displays and a chime sounds if a turn signal is left on for 1.2 km (3/4 of a mile). Move the turn signal/multifunction lever to the off position.

Object Detection System Messages

PARK ASST BLOCKED SEE OWNERS MANUAL

This message displays if there is something interfering with the park assist system. See *Ultrasonic Parking Assist on page 9-37* for more information.

PARK ASSIST OFF

After the vehicle has been started, this message displays to remind the driver that the URPA system has been turned off. Press the set/reset button or the trip odometer reset stem to acknowledge this message and clear it from the DIC display. To turn the URPA system back on, see *Ultrasonic Parking Assist on page 9-37*.

SERVICE PARK ASSIST

This message displays if there is a problem with the Ultrasonic Rear Parking Assist (URPA) system. Do not use this system to help you park. See *Ultrasonic Parking Assist on page 9-37* for more information. See your dealer for service.

Ride Control System Messages

SERVICE STABILITRAK

If the vehicle has StabiliTrak® and this message displays, it means there may be a problem with the StabiliTrak system. If you see this message, try to reset the system. Stop; turn off the engine for at least 15 seconds; then start the engine again. If this message still comes on, it means there is a problem. You should see your dealer for service. The vehicle is safe to drive, however, you do not have the benefit of StabiliTrak, so reduce your speed and drive accordingly.

SERVICE TRACTION CONTROL

If the vehicle has StabiliTrak, this message displays when there is a problem with the Traction Control System (TCS). When this message displays, the system will not limit wheel spin. Adjust your driving accordingly. See your dealer for service. See *StabiliTrak® System on page 9-32* for more information.

STABILITRAK INITIALIZING

If the vehicle has StabiliTrak, this message may display until first driving the vehicle and exceeding 40 km/h (25 mph) for two minutes. The StabiliTrak system is not functional until this message has turned off. See *StabiliTrak® System on page 9-32* for more information.

TRACTION XX STABILITRAK XX

If the vehicle has StabiliTrak, this message displays when the traction control and/or StabiliTrak systems have been turned on or off. Adjust your driving accordingly. To limit wheel spin and realize the full benefits of the stability enhancement system, you should normally leave StabiliTrak on.

However, you should turn StabiliTrak off if the vehicle gets stuck in sand, mud, ice, or snow and you want to rock the vehicle to attempt to free it, or if you are driving in extreme off-road conditions and require more wheel spin. See *If the Vehicle Is Stuck on page 9-9*. To turn the StabiliTrak system on or off, see *StabiliTrak® System on page 9-32*.

STABILITRAK OFF may also display when the stability control has been automatically disabled. There are several conditions that can cause this message to appear.

- One condition is overheating, which could occur if StabiliTrak activates continuously for an extended period of time.
- The message also displays if the brake system warning light is on. See *Brake System Warning Light on page 5-20*.
- The message could display if the stability system takes longer than usual to complete its diagnostic checks due to driving conditions.
- The message displays if an engine or vehicle related problem has been detected and the vehicle needs service. See your dealer.

The message turns off as soon as the conditions that caused the message to be displayed are no longer present.

Airbag System Messages

SERVICE AIR BAG

This message displays if there is a problem with the airbag system. Have your dealer inspect the system for problems. See *Airbag Readiness Light on page 5-14* and *Airbag System on page 3-16* for more information.

Security Messages

SERVICE THEFT DETERRENT SYSTEM

This message displays when there is a problem with the theft-deterrent system. The vehicle may or may not restart so you may want to take the vehicle to your dealer before turning off the engine. See *Immobilizer Operation on page 2-11* for more information.

WAIT TO START

This message displays briefly when the theft-deterrent system has initially found incorrect conditions within the vehicle and is making a double check. If your vehicle does not start soon after, try to start it again. If it still does not start, have your vehicle serviced by your dealer.

Service Vehicle Messages

SERVICE A/C SYSTEM

This message displays when the electronic sensors that control the air conditioning and heating systems are no longer working. Have the climate control system serviced by your dealer if you notice a drop in heating and air conditioning efficiency.

SERVICE VEHICLE SOON

This message displays when a non-emissions related malfunction occurs. Have the vehicle serviced by your dealer as soon as possible.

STARTING DISABLED SERVICE THROTTLE

This message displays if the starting of the engine is disabled due to the electronic throttle control system. Have the vehicle serviced by your dealer immediately.

This message only appears while the ignition is in ON/RUN, and will not disappear until the problem is resolved.

This message cannot be acknowledged.

Tire Messages

CHECK TIRE PRESSURE or TIRE LOW ADD AIR TO TIRE

If the vehicle has the Tire Pressure Monitor System (TPMS), this message displays when the pressure in one or more of the tires is low. The low tire pressure warning light will also come on. See *Tire Pressure Light on page 5-22*. This message will also indicate which tire needs to be checked. You can receive more than one tire pressure message at a time. To read the other messages that may have been sent at the same time, press the set/reset button. If a tire pressure message appears on the DIC, stop as soon as you can. Have the tire pressures checked and set to those shown on the Tire Loading Information label. See *Tires on page 10-44*, *Vehicle Load Limits on page 9-10*, and *Tire Pressure on page 10-53*. The DIC also shows the tire pressure values. See *Driver Information Center (DIC) on page 5-24*.

SERVICE TIRE MONITOR SYSTEM

If the vehicle has the Tire Pressure Monitor System (TPMS), this message displays if a part on the system is not working properly. The tire pressure light also flashes and then remains on during the same ignition cycle. See *Tire Pressure Light on page 5-22*. Several conditions may cause this message to appear. See *Tire Pressure Monitor Operation on page 10-55* for more information. If the warning comes on and stays on, there may be a problem with the TPMS. See your dealer.

TIRE LEARNING ACTIVE

If the vehicle has the Tire Pressure Monitor System (TPMS), this message displays when the system is re-learning the tire positions on the vehicle. See *Driver Information Center (DIC) on page 5-24* for more information. The tire positions must be re-learned after rotating the tires or after replacing a tire or sensor. See *Tire Inspection on page 10-58*, *Tire Rotation on page 10-58*, *Tire Pressure Monitor Operation on page 10-55*, and *Tire Pressure on page 10-53* for more information.

Transmission Messages

GRADE BRAKING DISABLED

This message displays when the grade braking has been disabled with the tow/haul mode button on the end of the shift lever. See *Tow/Haul Mode on page 9-29*, *Automatic Transmission (Six Speed) on page 9-22* or *Automatic Transmission (Four Speed) on page 9-34*, and *Cruise Control on page 9-34*.

GRADE BRAKING ENABLED

This message displays when the grade braking has been enabled with the tow/haul mode button on the end of the shift lever. See *Tow/Haul Mode on page 9-29*, *Automatic Transmission (Six Speed) on page 9-22* or *Automatic Transmission (Four Speed) on page 9-26*, and *Cruise Control on page 9-34*.

GRADE BRAKING ON

This message displays when the grade braking has been activated while driving on downhill grades. This message will only appear the first time the feature is activated in an ignition cycle. See *Tow/Haul Mode on page 9-29*, *Automatic Transmission (Six Speed) on page 9-22* or *Automatic Transmission (Four Speed) on page 9-34*, and *Cruise Control on page 9-34*.

SERVICE TRANSMISSION

This message displays when there is a problem with the transmission. See your dealer for service.

TRANSMISSION HOT IDLE ENGINE

Notice: **Do not drive the vehicle while the transmission fluid is overheating and the transmission temperature warning is displayed on the instrument cluster and/or DIC, or the transmission can be damaged. This could lead to costly repairs that would not be covered by the warranty.**

This message displays along with a chime if the transmission fluid in the vehicle gets hot. Driving with the transmission fluid temperature high can cause damage to the vehicle. Stop the vehicle and let it idle to allow the transmission to cool. This message clears and the chime stops when the fluid temperature reaches a safe level.

Vehicle Reminder Messages

ICE POSSIBLE DRIVE WITH CARE

This message displays when the outside air temperature is cold enough to create icy road conditions. Adjust your driving accordingly.

Vehicle Personalization

This vehicle may have customization capabilities that allow you to program certain features to one preferred setting. Customization features can only be programmed to one setting on the vehicle and cannot be programmed to a preferred setting for two different drivers.

All of the customization options may not be available on your vehicle. Only the options available will be displayed on the DIC.

The default settings for the customization features were set when the vehicle left the factory, but may have been changed from their default state since then.

The customization preferences are automatically recalled.

To change customization preferences, use the following procedure.

Entering the Feature Settings Menu

1. Turn the ignition on and place the vehicle in P (Park).

   To avoid excessive drain on the battery, it is recommended that the headlamps are turned off.

2. Press to enter the feature settings menu.

   If the menu is not available, FEATURE SETTINGS AVAILABLE IN PARK will display. Before entering the menu, make sure the vehicle is in P (Park).

Feature Settings Menu Items

The following are customization features that allow you to program settings to the vehicle:

DISPLAY IN ENGLISH

This feature will only display if a language other than English has been set. This feature allows you to change the language in which the DIC messages appear to English.

Press until the PRESS ✓ TO DISPLAY IN ENGLISH screen appears on the DIC display. Press the set/reset button once to display all DIC messages in English.

LANGUAGE

This feature allows you to select the language in which the DIC messages will appear.

Press until the LANGUAGE screen appears on the DIC display. Press ✓ once to access the settings for this feature. Then press to scroll through the following settings:

ENGLISH (default): All messages will appear in English.

FRANCAIS: All messages will appear in French.

ESPANOL: All messages will appear in Spanish.

ARABIC: All messages will appear in Arabic.

NO CHANGE: No change will be made to this feature. The current setting will remain.

To select a setting, press ✓ while the desired setting is displayed on the DIC. A beep will sound once a language has been selected.

AUTO DOOR LOCK

This feature allows you to select when the doors will automatically lock.

Press until AUTO DOOR LOCK appears on the DIC display. Press ✓ once to access the settings for this feature. Then press to scroll through the following settings:

SHIFT OUT OF PARK (default): The doors will automatically lock when the vehicle is shifted out of P (Park).

AT VEHICLE SPEED: The doors will automatically lock when the vehicle speed is above 13 km/h (8 mph) for three seconds.

NO CHANGE: No change will be made to this feature. The current setting will remain.

To select a setting, press ✓ while the desired setting is displayed on the DIC.

AUTO DOOR UNLOCK

This feature allows you to select whether or not to turn off the automatic door unlocking feature. It also allows you to select which doors and when the doors will automatically unlock.

Press until AUTO DOOR UNLOCK appears on the DIC display. Press ✓ once to access the settings for this feature. Then press to scroll through the following settings:

OFF: None of the doors will automatically unlock.

DRIVER AT KEY OUT: Only the driver door will unlock when the key is taken out of the ignition.

DRIVER IN PARK: Only the driver door will unlock when the vehicle is shifted into P (Park).

ALL AT KEY OUT: All of the doors will unlock when the key is taken out of the ignition.

ALL IN PARK (default): All of the doors will unlock when the vehicle is shifted into P (Park).

NO CHANGE: No change will be made to this feature. The current setting will remain.

To select a setting, press ✓ while the desired setting is displayed on the DIC.

REMOTE DOOR LOCK

This feature allows you to select the type of feedback you will receive when locking the vehicle with the Remote Keyless Entry (RKE) transmitter. You will not receive feedback when locking the vehicle with the RKE transmitter if the doors are open. See *Remote Keyless Entry (RKE) System Operation on page 2-2* for more information.

Press until REMOTE DOOR LOCK appears on the DIC display. Press ✓ once to access the settings for this feature. Then press to scroll through the following settings:

OFF: There will be no feedback when you press on the RKE transmitter.

LIGHTS ONLY: The exterior lamps will flash when you press on the RKE transmitter.

HORN ONLY: The horn will sound on the second press of on the RKE transmitter.

HORN & LIGHTS (default): The exterior lamps will flash when you press on the RKE transmitter, and the horn will sound when is pressed again within five seconds of the previous command.

NO CHANGE: No change will be made to this feature. The current setting will remain.

To select a setting, press ✓ while the desired setting is displayed on the DIC.

REMOTE DOOR UNLOCK

This feature allows you to select the type of feedback you will receive when unlocking the vehicle with the Remote Keyless Entry (RKE) transmitter. You will not receive feedback when unlocking the vehicle with the RKE transmitter if the doors are open. See *Remote Keyless Entry (RKE) System Operation on page 2-2* for more information.

Press until REMOTE DOOR UNLOCK appears on the DIC display. Press ✓ once to access the settings for this feature. Then press to scroll through the following settings:

LIGHTS OFF: The exterior lamps will not flash when you press on the RKE transmitter.

LIGHTS ON (default): The exterior lamps will flash when you press on the RKE transmitter.

NO CHANGE: No change will be made to this feature. The current setting will remain.

To select a setting, press ✓ while the desired setting is displayed on the DIC.

DELAY DOOR LOCK

This feature allows you to select whether or not the locking of the doors will be delayed. When locking the doors with the power door lock switch and a door is open, this feature will delay locking the doors until five seconds after the last door is closed. You will hear three chimes to signal that the delayed locking feature is in use. The key must be out of the ignition for this feature to work. You can temporarily override delayed locking by pressing the power door lock switch twice or on the RKE transmitter twice. See *Delayed Locking on page 2-7* for more information.

Press until DELAY DOOR LOCK appears on the DIC display. Press ✓ once to access the settings for this feature. Then press to scroll through the following settings:

OFF: There will be no delayed locking of the vehicle's doors.

ON (default): The doors will not lock until five seconds after the last door is closed.

NO CHANGE: No change will be made to this feature. The current setting will remain.

To select a setting, press ✓ while the desired setting is displayed on the DIC.

EXIT LIGHTING

This feature allows you to select the amount of time you want the exterior lamps to remain on when it

is dark enough outside. This happens after the key is turned from ON/RUN to LOCK/OFF.

Press until EXIT LIGHTING appears on the DIC display. Press ✓ once to access the settings for this feature. Then press to scroll through the following settings:

OFF: The exterior lamps will not turn on.

10 SECONDS (default): The exterior lamps will stay on for 10 seconds.

1 MINUTE: The exterior lamps will stay on for one minute.

2 MINUTES: The exterior lamps will stay on for two minutes.

NO CHANGE: No change will be made to this feature. The current setting will remain.

To select a setting, press ✓ while the desired setting is displayed on the DIC.

APPROACH LIGHTING

This feature allows you to select whether or not to have the exterior lamps turn on briefly during low light periods after unlocking the vehicle using the Remote Keyless Entry (RKE) transmitter.

Press until APPROACH LIGHTING appears on the DIC display. Press ✓ once to access the settings for this feature. Then press to scroll through the following settings:

OFF: The exterior lamps will not turn on when you unlock the vehicle with the RKE transmitter.

ON (default): If it is dark enough outside, the exterior lamps will turn on briefly when you unlock the vehicle with the RKE transmitter. The lamps will remain on for 20 seconds or until on the RKE transmitter is pressed, or the vehicle is no longer off. See *Remote Keyless Entry (RKE) System Operation on page 2-2* for more information.

NO CHANGE: No change will be made to this feature. The current setting will remain.

To select a setting, press ✓ while the desired setting is displayed on the DIC.

CHIME VOLUME

This feature allows you to select the volume level of the chime.

Press until CHIME VOLUME appears on the DIC display. Press ✓ once to access the settings for this feature. Then press to scroll through the following settings:

NORMAL: The chime volume will be set to a normal level.

LOUD: The chime volume will be set to a loud level.

NO CHANGE: No change will be made to this feature. The current setting will remain.

There is no default for chime volume. The volume will stay at the last known setting.

To select a setting, press ✓ while the desired setting is displayed on the DIC.

FACTORY SETTINGS

This feature allows you to set all of the customization features back to their factory default settings.

Press until FACTORY SETTINGS appears on the DIC display. Press ✓ once to access the settings for this feature. Then press to scroll through the following settings:

RESTORE ALL (default): The customization features will be set to their factory default settings.

DO NOT RESTORE: The customization features will not be set to their factory default settings.

To select a setting, press ✓ while the desired setting is displayed on the DIC.

EXIT FEATURE SETTINGS

This feature allows you to exit the feature settings menu.

Press until FEATURE SETTINGS PRESS ✓ TO EXIT appears in the DIC display. Press ✓ once to exit the menu.

If you do not exit, pressing will return you to the beginning of the feature settings menu.

Exiting the Feature Settings Menu

The feature settings menu will be exited when any of the following occurs:

- The vehicle is no longer in ON/RUN.
- The or DIC buttons are pressed.
- The end of the feature settings menu is reached and exited.
- A 40 second time period has elapsed with no selection made.

✍ NOTES

Lighting

Exterior Lighting
Exterior Lamp Controls 6-1
Exterior Lamps Off Reminder 6-2
Headlamp High/Low-Beam Changer 6-2
Flash-to-Pass 6-2
Daytime Running Lamps (DRL) 6-2
Automatic Headlamp System 6-3
Hazard Warning Flashers 6-4
Turn and Lane-Change Signals 6-4

Interior Lighting
Instrument Panel Illumination Control 6-5
Dome Lamps 6-5
Reading Lamps 6-6

Lighting Features
Entry/Exit Lighting 6-6
Battery Load Management 6-6
Battery Power Protection 6-7

Exterior Lighting

Exterior Lamp Controls

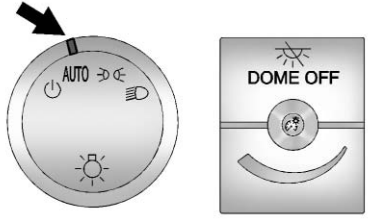

The exterior lamp control is on the instrument panel to the left of the steering wheel.

There are four positions:

(Off): Briefly turn the control to this position to turn the automatic headlamps and Daytime Running Lamps (DRL) off or back on.

For vehicles first sold in Canada, the off position only works for vehicles that are shifted into the P (Park) position.

AUTO (Automatic): Turns on the headlamps automatically at normal brightness, together with the following:

- Parking Lamps
- Instrument Panel Lights
- Taillamps
- License Plate Lamps

(Parking Lamps): Turns on the parking lamps together with the following:

- Instrument Panel Lights
- Taillamps
- License Plate Lamps

(Headlamps): Turns on the headlamps together with the following:

- Parking Lamps
- Instrument Panel Lights
- Taillamps
- License Plate Lamps

If the headlamps are turned on while the vehicle is on, the headlamps turn off automatically 10 minutes after the ignition is turned off. If the headlamps are turned on while the vehicle is off, the headlamps will continue to stay on. To prevent the battery from being drained, turn the control to the ⏻ position.

A warning chime sounds if the driver door is opened while the ignition switch is off and the headlamps are on.

To change the headlamps from low beam to high beam, pull the turn signal/multifunction lever all the way toward you. Then release it.

Exterior Lamps Off Reminder

If a door is open, a reminder chime sounds when the headlamps or parking lamps are manually turned on and the key is out of the ignition. To turn off the chime, turn the headlamp switch to ⏻ or AUTO and then back on, or close and re-open the door. In the auto mode, the headlamps turn off once the ignition is in LOCK/OFF or may remain on until the headlamp delay ends, if enabled in the Driver Information Center (DIC). See “Exit Lighting” under *Vehicle Personalization on page 5-38*.

Headlamp High/ Low-Beam Changer

(Headlamp High/Low-Beam Changer): Pull the turn signal lever all the way toward you to change the headlamps from low to high beam. Then release it.

This instrument cluster light comes on when the high-beam headlamps are on.

Flash-to-Pass

This feature is used to signal to the vehicle ahead that you want to pass.

If the headlamps are off or in the low-beam position, pull the turn signal lever toward you to momentarily switch to high beams.

Release the lever to turn the high-beam headlamps off.

Daytime Running Lamps (DRL)

DRL can make it easier for others to see the front of the vehicle during the day. Fully functional daytime running lamps are required on all vehicles first sold in Canada.

The DRL system comes on in daylight when the following conditions are met:

- The ignition is on.
- The exterior lamp control is in the AUTO position.

- The shift lever is not in P (Park).
- The light sensor determines it is daytime.

When the DRL are on, the taillamps, sidemarker, instrument panel lights, and other lamps will not be on.

The automatic headlamp system automatically switches from DRL to the headlamps depending on the darkness of the surroundings.

To turn off the DRL, turn the exterior lamp control to ⏻ and then release it. For vehicles first sold in Canada, the transmission must be in the P (Park) position, before the DRL can be turned off.

Automatic Headlamp System

When it is dark enough outside and the headlamp switch is in AUTO, the automatic headlamp system turns on the headlamps, along with the taillamps, sidemarker lamps, parking lamps, and the instrument panel lights. The radio lights will also be dim.

To turn off the automatic headlamp system, turn the exterior lamp control to the off position and then release. For vehicles first sold in Canada, the transmission must be in the P (Park) position, before the automatic headlamp system can be turned off.

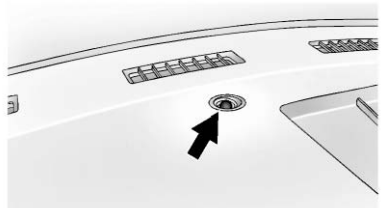

The vehicle has a light sensor on the top of the instrument panel. Do not cover the sensor; otherwise the system will come on whenever the ignition is on.

The system may also turn on the headlamps when driving through a parking garage or tunnel.

There is a delay in the transition between the daytime and nighttime operation of the Daytime Running Lamps (DRL) and the automatic headlamp system so that driving under bridges or bright overhead street lights does not affect the system. The DRL and automatic headlamp system are only affected when the light sensor sees a change in lighting lasting longer than the delay.

If the vehicle is started in a dark garage, the automatic headlamp system comes on immediately. Once the vehicle leaves the garage, it takes approximately 30 seconds for the automatic headlamp system to change to DRL if it is light outside. During that delay, the instrument cluster may not be as bright as usual. Make sure the instrument panel brightness control

is in the full bright position. See *Instrument Panel Illumination Control on page 6-5*.

Lights On with Wipers

If the windshield wipers are activated in daylight with the engine on, and the exterior lamp control is in AUTO, the headlamps, parking lamps, and other exterior lamps come on. The transition time for the lamps coming on varies based on wiper speed. When the wipers are not operating, these lamps turn off. Move the exterior lamp control to ⏻ or ≋ to disable this feature.

Hazard Warning Flashers

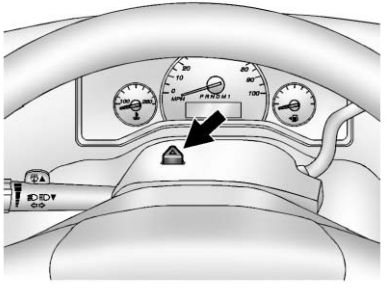

⚠ **(Hazard Warning Flashers):** Press this button to make the front and rear turn signal lamps flash on and off. This warns others that you are having trouble. Press again to turn the flashers off.

When the hazard warning flashers are on, the vehicle's turn signals will not work.

Turn and Lane-Change Signals

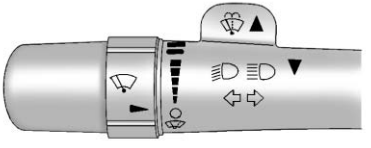

⇦⇨ **(Turn Signals):** An arrow on the instrument cluster flashes in the direction of the turn or lane change.

To signal a turn, move the lever all the way up or down.

To signal a lane change, raise or lower the lever until the arrow starts to flash. The turn signal automatically flashes three times and if the Tow/Haul Mode is active it flashes six times. Holding the turn signal lever for more than one second causes the turn signals to flash continually until the lever is released.

The lever returns to its starting position when released.

If after signaling a turn or lane change the arrow flashes rapidly or does not come on, a signal bulb may be burned out.

Have any burned out bulbs replaced. If the bulb is not burned out, check the fuse. See *Fuses and Circuit Breakers on page 10-38*.

Turn Signal On Chime

If the turn signal is left on for more than 1.2 km (0.75 mi), a chime sounds at each flash of the turn signal and the message TURN SIGNAL ON also appears in the Driver Information Center (DIC). See *Lamp Messages on page 5-33*. To turn off the chime and message, move the turn signal lever to the off position.

Interior Lighting

Instrument Panel Illumination Control

The knob for this feature is to the left of the steering column.

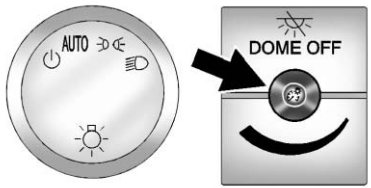

(Instrument Panel Lights): Push the knob to extend and then turn clockwise or counterclockwise to brighten or dim the instrument panel lights and the radio display. This only works if the headlamps or parking lamps are on.

Dome Lamps

The dome lamps come on when any door is opened. They turn off after all the doors are closed.

The instrument panel brightness knob extends when is pressed. To manually turn on the dome lamps, press then turn the knob clockwise to the farthest position. In this position, the dome lamps remain on whether a door is opened or closed.

Dome Lamp Override

The DOME OFF button is above the instrument panel brightness knob.

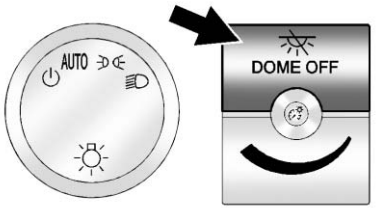

The dome lamp override sets the dome lamps to remain off or come on automatically when a door is opened.

DOME OFF: Press this button in and the dome lamps remain off when a door is opened. Press the button again to return it to the extended position so that the dome lamps come on when a door is opened.

Reading Lamps

For vehicles with reading lamps, press the button next to each lamp to turn it on or off.

The vehicle may also have reading lamps in other locations. The lamps cannot be adjusted.

Lighting Features

Entry/Exit Lighting

The vehicle has an illuminated entry/exit feature.

The dome lamps come on if the DOME OFF button is in the extended position, when a door is opened, or the key is removed from the ignition.

Battery Load Management

The vehicle may have Electric Power Management (EPM) that estimates the battery's temperature and state of charge. It then adjusts the voltage for best performance and extended life of the battery.

When the battery's state of charge is low, the voltage is raised slightly to quickly bring the charge back up. When the state of charge is high, the voltage is lowered slightly to prevent overcharging. If the vehicle

has a voltmeter gauge or a voltage display on the Driver Information Center (DIC), you may see the voltage move up or down. This is normal. If there is a problem, an alert will be displayed.

The battery can be discharged at idle if the electrical loads are very high. This is true for all vehicles. This is because the generator (alternator) may not be spinning fast enough at idle to produce all the power that is needed for very high electrical loads.

A high electrical load occurs when several of the following are on, such as: headlamps, high beams, fog lamps, rear window defogger, climate control fan at high speed, heated seats, engine cooling fans, trailer loads, and loads plugged into accessory power outlets.

EPM works to prevent excessive discharge of the battery. It does this by balancing the generator's output and the vehicle's electrical needs. It can increase engine idle speed to generate more power, whenever needed. It can temporarily reduce the power demands of some accessories.

Normally, these actions occur in steps or levels, without being noticeable. In rare cases at the highest levels of corrective action, this action may be noticeable to the driver. If so, a Driver Information Center (DIC) message might be displayed, such as SERVICE BATTERY CHARGING SYSTEM. If this messages displays, it is recommended that the driver reduce the electrical loads as much as possible. See *Battery Voltage and Charging Messages on page 5-30*.

Battery Power Protection

This feature shuts off the dome lamps if they are left on for more than 10 minutes when the ignition is in LOCK/OFF. This helps to prevent the battery from running down.

✍ NOTES

Infotainment System

Introduction
Infotainment 7-1
Theft-Deterrent Feature 7-2
Overview (AM-FM Radio) 7-3
Overview (Radio with CD) 7-4
Operation 7-5

Radio
AM-FM Radio 7-7
Satellite Radio 7-9
Radio Reception 7-10
Fixed Mast Antenna (Multi-Band) 7-11
Fixed Mast Antenna (Care) 7-11

Audio Players
CD Player 7-12
Auxiliary Devices 7-17

Phone
Bluetooth 7-21

Introduction

Infotainment

If the vehicle came without a radio, the wiring provisions for a radio and an antenna were installed at the assembly plant, so that if you want, a radio can be installed at the dealer.

Determine which radio the vehicle has and read the following pages to become familiar with its features.

⚠ WARNING

Taking your eyes off the road for extended periods could cause a crash resulting in injury or death to you or others. Do not give extended attention to infotainment tasks while driving.

This system provides access to many audio and non-audio listings.

To minimize taking your eyes off the road while driving, do the following while the vehicle is parked:

- Become familiar with the operation and controls of the audio system.
- Set up the tone, speaker adjustments, and preset radio stations.

For more information, see *Defensive Driving on page 9-3*.

Notice: **Contact your dealer before adding any equipment.**

Adding audio or communication equipment could interfere with the operation of the engine, radio, or other systems, and could damage them. Follow federal rules covering mobile radio and telephone equipment.

Notice: **The chime signals related to safety belts, parking brake, and other functions of the vehicle operate through the radio/ entertainment system. If that equipment is replaced or additional equipment is added to the vehicle, the chimes may not work. Make sure that replacement or additional equipment is compatible with the vehicle before installing it. See *Accessories and Modifications on page 10-3*.**

The vehicle has Retained Accessory Power (RAP). With RAP, the audio system can be played even after the ignition is turned off. See *Retained Accessory Power (RAP) on page 9-19* for more information.

Theft-Deterrent Feature

The theft-deterrent feature works by learning a portion of the Vehicle Identification Number (VIN) to the infotainment system. The infotainment system does not operate if it is stolen or moved to a different vehicle.

Overview (AM-FM Radio)

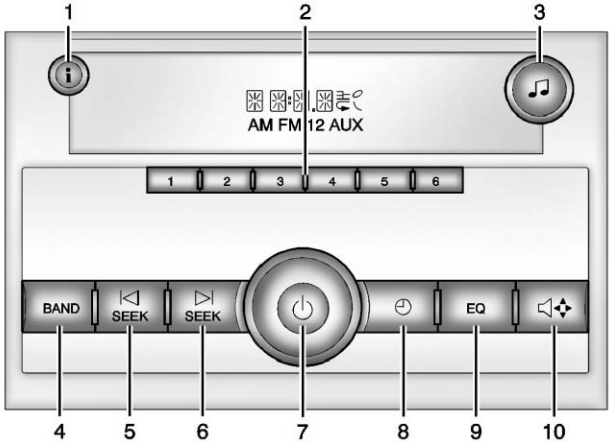

Overview (AM-FM Radio)

1. ℹ (Information)
   - Press to show information on the current station or track.
2. Buttons 1 - 6
   - Saves and selects favorite stations.
3. ♫ (Tone/Tune)
   - Press to set the bass or treble.
   - Turn to manually select radio stations.
4. BAND
   - Press to scroll through the available bands AM, FM, or XM if equipped.
5. ⏮ SEEK
   - Seeks the previous station.
6. ⏭ SEEK
   - Seeks the next station.
7. ⏻ (Power/Volume)
   - Press to turn the infotainment system on or off.
   - Turn to adjust the volume.
8. ◷ (Clock)
   - Press to set the clock.

9. EQ (Equalizer)
   - Press to adjust the equalizer settings.
10. (Fade/Balance)
   - Press to set the fade and balance.

Overview (Radio with CD)

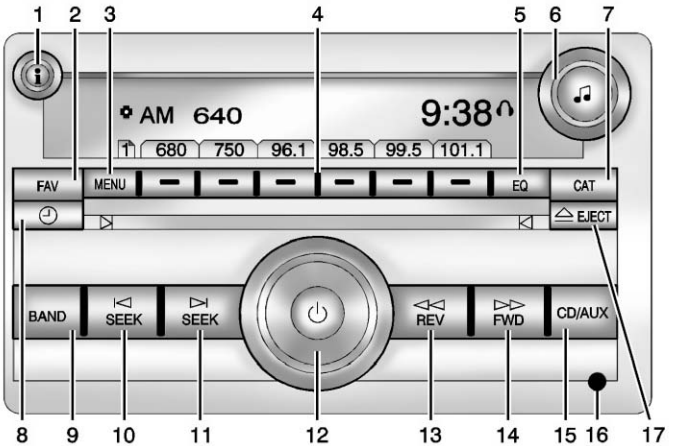

Overview (Radio with CD)

1. (Information)
   - Press to show information on the current station or track.
2. FAV (Favorites Pages)
   - Press to scroll through the favorite pages.

3. MENU
   - Press to open the tone menu to adjust the bass, midrange, treble, fade, and balance.
4. Buttons 1 - 6
   - Saves and selects favorite stations.
5. EQ (Equalizer)
   - Press to adjust the equalizer.
6. ♫ (Tone/Tune)
   - Press to set the bass or treble.
   - Turn to manually select radio stations.
7. CAT (Category)
   - Press to display a list of XM categories.
8. ◷ (Clock)
   - Press to set the clock.
9. BAND
   - Press to scroll through the available bands AM, FM, or XM if equipped.
10. ⏮ SEEK
    - Seeks the previous station.
11. ⏭ SEEK
    - Seeks the next station.
12. ⏻ (Power/Volume)
    - Press to turn the infotainment system on or off.
    - Turn to adjust the volume.
13. ◁◁ REV (Reverse)
    - Press and hold to go backward fast through a track.
14. ▷▷ FWD (Forward)
    - Press and hold to fast forward through a track.
15. CD/AUX
    - Press to scroll through selecting the CD or an auxiliary device.
16. Auxiliary Input Jack
    - Use to connect external audio devices.
17. ⏏ EJECT
    - Press to eject the loaded CD.

Operation

Using the Radio

⏻ **(Power/Volume):** Press to turn the system on and off.

Turn clockwise or counterclockwise to increase or decrease the volume.

i (Information): Press to switch the display between the radio station frequency and the time. While the ignition is off, press this button to display the time. Press to display additional text information related to the current FM-RDS

station or MP3 song. A choice of additional information such as Channel, Song, Artist, and CAT (category) can display. Continue pressing to highlight the desired tab, or press the softkey under any one of the tabs and the information about that tab displays.

Speed Compensated Volume (SCV): Radios with CD have SCV that automatically adjust the radio volume to compensate for road and wind noise as the vehicle speed changes while driving, so that the volume level stays consistent.

To activate SCV:

1. Set the radio volume to the desired level.
2. Press the MENU button to display the radio setup menu.
3. Press the softkey under the AUTO VOLUM (automatic volume) tab on the radio display.
4. Press the softkey under the desired SCV setting (OFF, Low, Med, or High) to select the level of radio volume compensation. The display times out after approximately 10 seconds. Each higher setting allows for more radio volume compensation at faster vehicle speeds.

Setting the Tone (Bass/Treble)

To adjust the bass or treble:

1. Press the ♫ knob until Bass or Treble displays.
2. To adjust the setting, do one of the following:
   - Turn the ♫ knob.
   - Press either ⏭ SEEK, or ⏮ SEEK.

EQ (Equalization): Press this button to choose bass and treble equalization settings designed for different types of music. Selecting MANUAL, or changing bass or treble, returns the EQ to the manual bass and treble settings.

Unique EQ settings can be saved for each source.

Adjusting the Speakers (Balance/Fade)

To adjust the balance or fade:

1. Press 🔊✥ or press the ♫ knob until the speaker control tab displays.
2. To adjust the setting, do one of the following:
   - Turn the ♫ knob.
   - Press either ⏭ SEEK, or ⏮ SEEK.

Radio Messages

Calibration Error: The audio system has been calibrated for the vehicle from the factory.
If Calibration Error displays, it means that the radio has not been configured properly for the vehicle and it must be returned to your dealer for service.

VIN or NO VIN: One of these messages will display when the TheftLock system has locked up the radio. Take the vehicle to your dealer for service.

If any error occurs repeatedly or if an error cannot be corrected, contact your dealer.

Radio

AM-FM Radio

Radio Data System (RDS)

The radio may have an RDS. The RDS feature is available for use only on FM stations that broadcast RDS information. This system relies upon receiving specific information from these stations and only works when the information is available. While the radio is tuned to an FM-RDS station, the station name or call letters display. In rare cases, a radio station could broadcast incorrect information that causes the radio features to work improperly. If this happens, contact the radio station.

Finding a Station

BAND: Press to switch between FM1, FM2, AM, and XM. The selection displays.

♫ (Tune): Turn clockwise or counterclockwise to increase or decrease the station frequency.

⏮ SEEK or ⏭ SEEK: Press ⏮ SEEK to go to the previous or ⏭ SEEK to go to the next station and stay there.

To scan stations, press and hold either button for two seconds until a beep sounds. The radio goes to a station, plays for a few seconds, then goes to the next station. For AM-FM Radio and Radio with CD, the station frequency flashes while the radio is in the scan mode. Press either button again to stop scanning.

The radio seeks and scans stations only with a strong signal that are in the selected band.

For AM-FM Radio and Radio with CD, scan presets within the current selected band by pressing and holding either SEEK button for four seconds until a double beep sounds. The radio goes to a stored preset, plays for a few seconds if a

strong signal is present, then goes to the next stored preset. The station frequency flashes while the radio is in the scan mode.

Setting Preset Stations

If the radio does not have a FAV button, up to 18 stations (six FM1, six FM2, and six AM), can be programmed on the six numbered softkeys, by performing the following steps:

1. Turn the radio on.
2. Press BAND to select FM1, FM2, or AM.
3. Tune in the desired station.
4. Press and hold one of the six numbered softkeys for three seconds until a beep sounds. When that softkey is pressed and released, the station that was set, returns.
5. Repeat Steps 2–4 for each softkey.

Storing a Radio Station as a Favorite

Drivers are encouraged to set up radio station favorites while the vehicle is parked. Tune to favorite stations using the presets, favorites button, and steering wheel controls, if the vehicle has this feature. See *Defensive Driving on page 9-3*.

FAV (Favorites): If the vehicle has a FAV button, a maximum of 36 stations can be programmed as favorites using the six softkeys below the radio station frequency tabs and by using the radio favorites page button (FAV button). Press the FAV button to go through up to six pages of favorites, each having six favorite stations available per page. Each page of favorites can contain any combination of AM and FM stations.

The balance/fade and tone settings that were previously adjusted, are stored with the favorite stations.

To store a station as a favorite:

1. Tune to the desired radio station.
2. Press the FAV button to display the page where the station is to be stored.
3. Press and hold one of the six softkeys until a beep sounds. When that softkey is pressed and released, the station that was set, returns.
4. Repeat the steps for each softkey radio station to be stored as a favorite.

The number of favorites pages can be set up using the MENU button. To set up the number of favorites pages:

1. Press the MENU button to display the radio setup menu.
2. Press the softkey below the FAV 1-6 tab.
3. Select the desired number of favorites pages by pressing the softkey below the displayed page numbers.

4. Press the FAV button, or let the menu time out, to return to the original main radio screen showing the radio station frequency tabs and to begin the process of programming favorites for the chosen number of numbered pages.

Satellite Radio

SiriusXM®, if equipped, is a satellite radio service based in the United States and Canada only.

Finding a Category (CAT) Station

CAT (Category): The CAT button is used to find XM stations (if equipped) while the radio is in the XM mode.

Finding a Station

BAND: Press to switch between FM1, FM2, AM, and XM. The selection displays.

♫ (Tune): Turn clockwise or counterclockwise to increase or decrease the station frequency.

⏮ SEEK or ⏭ SEEK: Press ⏮ SEEK to go to the previous or ⏭ SEEK to go to the next station and stay there.

To scan stations, press and hold either button for two seconds until a beep sounds. The radio goes to a station, plays for a few seconds, then goes to the next station. The station frequency flashes while the radio is in the scan mode. Press either button again to stop scanning.

The radio seeks and scans stations only with a strong signal that are in the selected band.

To scan presets within the current selected band by pressing and holding either SEEK button for four seconds until a double beep sounds. The radio goes to a stored preset, plays for a few seconds if a strong signal is present, then goes to the next stored preset. The station frequency flashes while the radio is in the scan mode.

Setting Preset Stations

If the radio does not have a FAV button, up to 18 stations (six FM1, six FM2, and six AM), can be programmed on the six numbered softkeys, by performing the following steps:

1. Turn the radio on.
2. Press BAND to select FM1, FM2, or AM.
3. Tune in the desired station.
4. Press and hold one of the six numbered softkeys for three seconds until a beep sounds. When that softkey is pressed and released, the station that was set, returns.
5. Repeat Steps 2–4 for each softkey.

Storing a Radio Station as a Favorite

Drivers are encouraged to set up radio station favorites while the vehicle is parked. Tune to favorite stations using the presets, favorites button, and steering wheel controls, if the vehicle has this feature. See *Defensive Driving on page 9-3*.

FAV (Favorites): If the vehicle has a FAV button, a maximum of 36 stations can be programmed as favorites using the six softkeys below the radio station frequency tabs and by using the radio favorites page button (FAV button). Press the FAV button to go through up to six pages of favorites, each having six favorite stations available per page. Each page of favorites can contain any combination of AM and FM stations.

The balance/fade and tone settings that were previously adjusted, are stored with the favorite stations.

To store a station as a favorite:

1. Tune to the desired radio station.
2. Press the FAV button to display the page where the station is to be stored.
3. Press and hold one of the six softkeys until a beep sounds. When that softkey is pressed and released, the station that was set, returns.
4. Repeat the steps for each softkey radio station to be stored as a favorite.

The number of favorites pages can be set up using the MENU button. To set up the number of favorites pages:

1. Press the MENU button to display the radio setup menu.
2. Press the softkey below the FAV 1-6 tab.
3. Select the desired number of favorites pages by pressing the softkey below the displayed page numbers.
4. Press the FAV button, or let the menu time out, to return to the original main radio screen showing the radio station frequency tabs and to begin the process of programming favorites for the chosen number of numbered pages.

Radio Reception

Frequency interference and static can occur during normal radio reception if items such as cell phone chargers, vehicle convenience accessories, and external electronic devices are plugged into the accessory power outlet. If there is interference or static, unplug the item from the accessory power outlet.

AM

The range for most AM stations is greater than for FM, especially at night. The longer range can cause station frequencies to interfere with each other. For better radio reception, most AM radio stations

boost the power levels during the day, and then reduce these levels during the night. Static can also occur when things like storms and power lines interfere with radio reception. When this happens, try reducing the treble on the radio.

FM Stereo

FM stereo gives the best sound, but FM signals reach only about 16 to 65 km (10 to 40 mi). Tall buildings or hills can interfere with FM signals, causing the sound to fade in and out.

Cellular Phone Usage

Cellular phone usage may cause interference with the radio. This interference may occur when making or receiving phone calls, charging the phone's battery, or simply having the phone on. This interference causes an increased level of static while listening to the radio. If static is received while listening to the radio, unplug the cellular phone and turn it off.

Fixed Mast Antenna (Multi-Band)

The multi-band antenna is on the roof of the vehicle. The antenna is used for OnStar® and the SiriusXM® Satellite Radio Service System if the vehicle has these features. Keep the antenna clear of obstructions for clear reception. Make sure there is sufficient clearance when entering garages or parking structures.

Fixed Mast Antenna (Care)

The fixed mast antenna can withstand most car washes without being damaged as long as it is securely attached to the base. If the mast becomes slightly bent, straighten it out by hand. If the mast is badly bent, replace it.

Make sure there is sufficient clearance when entering garages or parking structures.

Occasionally check to make sure the antenna is tightened to its base. If tightening is required, tighten by hand.

Audio Players

CD Player

Care of the CD Player

Do not add any label to a CD. It could get caught in the CD. If a CD is recorded on a personal computer and a description label is needed, try labeling the top of the recorded CD with a marking pen.

The use of CD lens cleaners is not advised, due to the risk of contaminating the lens of the CD optics with lubricants internal to the CD player mechanism.

Notice: **If a label is added to a CD, more than one CD is inserted into the slot at a time, or an attempt is made to play scratched or damaged CDs, the CD player could be damaged. While using the CD player, use only CDs in good condition without any label, load one CD at a time, and keep the CD player and the loading slot free of foreign materials, liquids, and debris.**

If an error displays, see “CD Player Messages” later in this section.

Care of CDs

If playing a CD-R, the sound quality can be reduced due to CD-R or CD-RW quality, the method of recording, the quality of the music that has been recorded, and the way the CD-R or CD-RW has been handled. Handle them carefully. Store CD-Rs or CD-RWs in their original cases or other protective cases and away from direct sunlight and dust. The CD player scans the bottom surface of the disc. If the surface of a CD is damaged, such as cracked, broken, or scratched, the CD does not play properly or not at all. Do not touch the bottom side of a CD while handling it; this could damage the surface. Pick up CDs by the outer edges or the edge of the hole and the outer edge.

If the surface of a CD is soiled, clean it with a soft, lint-free cloth or dampen a clean, soft cloth in a mild, neutral detergent solution mixed with water. Make sure the wiping process starts from the center to the edge.

Inserting a CD

Insert a CD partway into the slot, label side up. The player pulls it in and the CD should begin playing.

Ejecting a CD

⏏ **EJECT:** Press and release to eject the disc. Remove the CD when Remove Disc displays. If the disc is not removed, after several seconds the disc is automatically pulled back into the player.

Playing a CD

If the ignition or radio is turned off with a CD in the player, it stays in the player. When the ignition or radio is turned on, the CD starts playing where it stopped, if it was the last selected audio source.

When a CD is inserted, the CD symbol displays on the left side of the radio display. As each new track starts to play, the track number displays.

The CD player can play the smaller 8 cm (3 in) single CDs with an adapter ring. Full-size CDs and the smaller CDs are loaded in the same manner.

CD/AUX (CD/Auxiliary): Press to cycle between CD or Auxiliary when listening to the radio. The CD icon and a message showing the disc and/or track number will display when a CD is in the player. Press again and the system automatically searches for an auxiliary input device; see *Auxiliary Devices on page 7-17*. If a portable audio player is not connected, “No Input Device Found” displays.

i (Information): Press to display additional text information related to the current song. If information is available, the song title information displays on the top line of the display and artist information displays on the bottom line. When information is not available, NO INFO displays.

♫ (Tune): Turn to select tracks on the CD that is currently playing.

⏮ SEEK: Press to go to the start of the current track if more than 10 seconds on the CD have played.

Press to go to the previous track if less than 10 seconds on the CD have played.

Press and hold, or press multiple times, to continue moving backward through the tracks on the CD.

⏭ SEEK: Press to go to the next track.

Press and hold, or press multiple times, to continue moving forward through the tracks on the CD.

◁◁ REV (Reverse): Press and hold to reverse playback quickly within a track.

▷▷ FWD (Fast Forward): Press and hold to advance playback quickly within a track.

RDM (Random): For Radios with CD/MP3. Press to listen to tracks in random, rather than sequential order.

To use random:

1. Press the softkey under the RDM tab until Random Current Disc displays.
2. Press the softkey again to turn off random play.

MP3-Supported Files

Radios with CD/MP3 have the capability of playing an MP3 CD-R or CD-RW disc.

Format

Radios that have the capability of playing MP3s can play .mp3 or .wma files that were recorded onto a CD-R or CD-RW disc. The files can be recorded with the following fixed bit rates: 32 kbps, 40 kbps, 56 kbps, 64 kbps, 80 kbps, 96 kbps, 112 kbps,

128 kbps, 160 kbps, 192 kbps, 224 kbps, 256 kbps, and 320 kbps or a variable bit rate.

Compressed Audio or Mixed Mode Discs

The radio can play discs that contain both uncompressed CD audio and MP3 files. If both formats are on the disc, the radio reads all MP3 files first, then the uncompressed CD audio files.

CD-R- or CD-RW-Supported File and Folder Structure

The radio supports:

- Up to 50 folders.
- Up to eight folders in depth.
- Up to 50 playlists.
- Up to 255 files.
- Playlists with an .m3u or .wpl extension.
- Files with an .mp3, .wma, or .cda file extension.

Root Directory

The root directory is treated as a folder. Files are stored in the root directory when the disc or storage device does not contain folders. Files accessed from the root directory of a CD display as F1 ROOT.

Empty Folder

Folders that do not contain files are skipped, and the player advances to the next folder that contains files.

Order of Play

Compressed audio files are accessed in the following order:

- Playlists (Px).
- Files stored in the root directory.
- Files stored in folders in the root directory.

Tracks are played in the following order:

- Play begins from the first track in the first playlist and continues sequentially through all tracks in each playlist. When the last track of the last playlist has played, play continues from the first track of the first playlist.
- Play begins from the first track in the first folder and continues sequentially through all tracks in each folder. When the last track of the last folder has played, play continues from the first track of the first folder.

File System and Naming

The song name that displays is the song name contained in the ID3 tag. If the song name is not present in the ID3 tag, then the radio displays the file name without the extension (such as .mp3) as the track name.

Track names longer than 32 characters or four pages are shortened. The display does not show parts of words on the last page of text, and the extension of the file name is not displayed.

Preprogrammed Playlists

CDs that have preprogrammed playlists created using WinAmp™, MusicMatch™, or Real Jukebox™ software can be accessed; however, there is no playlist-editing capability using the radio. These playlists are treated as special folders containing compressed audio song files.

Playlists that have an .m3u or .pls file extension and are stored on a USB device may be supported by the radio with a USB port.

Playlists can be changed by using the softkeys below the < 🗀 and 🗀 > tabs, the ♫ knob, the ⏮ SEEK button, or the ⏭ SEEK button. An MP3 CD-R or CD-RW that has been recorded without using file folders can be played. If a CD-R or CD-RW contains more than the maximum of 50 folders, 15 playlists, and 512 folders and files, the player allows access and navigates up to the maximum, but all items over the maximum are not accessible.

Playing an MP3

ℹ (Information): Press to display additional text information related to the current song. If information is available, the song title information displays on the top line of the display and artist information displays on the bottom line. When information is not available, NO INFO displays.

♫ (Tune): Turn to select MP3s on the CD currently playing.

⏮ SEEK: Press to go to the start of the track, if more than 10 seconds have played. Press and hold or press multiple times to continue moving backward through tracks.

⏭ SEEK: Press to go to the next track. Press and hold or press multiple times to continue moving forward through tracks.

◁◁ REV (Reverse): Press and hold to reverse playback quickly. Sound is heard at a reduced volume and the elapsed time of the file displays. Release ◁◁ REV to resume playing.

▷▷ FWD (Fast Forward): Press and hold to advance playback quickly. Sound is heard at a reduced volume and the elapsed time of the file displays. Release ▷▷ FWD to resume playing. The elapsed time of the file displays.

< 🗀 (Previous Folder): Press the softkey below the < 🗀 tab to go to the first track in the previous folder.

🗀 > (Next Folder): Press the softkey below the 🗀 > tab to go to the first track in the next folder.

RDM (Random): For Radios with CD/MP3. Press to listen to tracks in random, rather than sequential order.

To use random:

1. Press the softkey under the RDM tab until Random Current Disc displays.
2. Press the softkey again to turn off random play.

(Music Navigator): Press the softkey below the tab to play the files in order by artist or album.

The player scans the disc to sort the files by artist and album ID3 tag information. It can take several minutes to scan the disc depending on the number of files on the disc. The radio may begin playing while it is scanning in the background.

When the scan is finished, the disc begins playing files in order by artist. The current artist playing is shown on the second line of the display. Once all songs by that artist are played, the player moves to the next artist in alphabetical order and begins playing files by that artist.

To listen to files by another artist, press the softkey below either arrow tab. The disc goes to the next or previous artist in alphabetical order. Continue pressing either softkey below the arrow tab until the desired artist displays.

To change from playback by artist to playback by album:

1. Press the softkey below the Sort By tab.
2. Press one of the softkeys below the Album tab from the sort screen.
3. Press the softkey below the Back tab to return to the main music navigator screen.

The album name displays on the second line between the arrows, and songs from the current album begin to play. Once all songs from that album have played, the player moves to the next album in alphabetical order on the CD and begins playing MP3s from that album.

To exit music navigator mode, press the softkey below the Back tab to return to normal MP3 playback.

CD Player Messages

CHECK DISC: If this message displays and/or the CD ejects, it could be for one of the following reasons:

- It is very hot. When the temperature returns to normal, the CD should play.
- The road is very rough. When the road becomes smoother, the CD should play.
- The CD is dirty, scratched, wet, or upside down.
- The air is very humid. If so, wait about an hour and try again.
- There was a problem while burning the CD.
- The label is caught in the CD player.

If the CD is not playing correctly, for any other reason, try a known good CD.

If any error occurs repeatedly or if an error cannot be corrected, contact your dealer. If the radio

displays an error message, write it down and provide it to your dealer when reporting the problem.

Auxiliary Devices

Using the Auxiliary Input Jack

Radios with an auxiliary input jack on the lower right side of the faceplate can connect to an external audio device such as an iPod®, MP3 player, or CD player, for use as another source for audio listening. This input jack is not an audio output; do not plug headphones into the front auxiliary input jack.

Drivers are encouraged to set up any auxiliary device while the vehicle is in P (Park). See *Defensive Driving on page 9-3* for more information on driver distraction.

To use a portable audio player, connect a 3.5 mm (1/8 in) cable to the radio's front auxiliary input jack.

When a device is connected, press the radio CD/AUX button to begin playing audio from the device over the vehicle speakers.

For optimal sound quality, increase the portable audio device's volume to the loudest level.

It is always best to power the portable audio device through its own battery while playing.

⏻ **(Power/Volume):** Turn clockwise or counterclockwise to increase or decrease the volume of the portable player. Additional volume adjustments might have to be made from the portable device if the volume is not loud or soft enough.

BAND: Press to listen to the radio when a portable audio device is playing. The portable audio device continues playing.

CD/AUX (CD/Auxiliary): Press to play a CD when a portable audio device is playing. Press again and the system begins playing audio from the connected portable audio player. If a portable audio player is not connected, “No Input Device Found” displays.

Using the USB Port

Radios with a USB port can control a USB storage device or an iPod® using the radio buttons and knobs. See “Playing an MP3” in *CD Player on page 7-12* for information about how to connect and control a USB storage device or an iPod.

USB Support

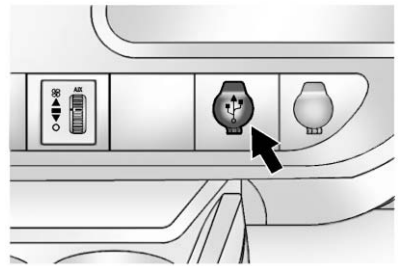

The USB port is on the instrument panel and uses the USB 2.0 standard.

USB-Supported Devices

- USB flash drive
- Portable USB hard drive
- Fifth generation or later iPod
- iPod nano®
- iPod touch®
- iPod classic®

Not all iPods and USB drives are compatible with the USB port.

Make sure the iPod has the latest firmware from Apple® for proper operation. iPod firmware can be updated using the latest iTunes® application. See www.apple.com/itunes.

For help with identifying the iPod, go to www.apple.com/support.

Radios that have a USB port can play .mp3 and .wma files that are stored on a USB storage device as well as AAC files that are stored on an iPod.

USB-Supported File and Folder Structure

The radio supports:

- Up to 700 folders.
- Up to eight folders in depth.
- Up to 65,535 files.
- Folder and file names up to 64 bytes.
- Files with an .mp3 or .wma file extension.
- AAC files stored on an iPod.
- FAT16.
- FAT32.

Connecting a USB Storage Device or iPod

The USB port can be used to control an iPod or a USB storage device.

To connect a USB storage device, connect the device to the USB port on the instrument panel.

To connect an iPod, connect one end of the USB cable that came with the iPod to the iPod's dock connector and connect the other end to the USB port on the instrument panel. If the vehicle is on and the USB connection works, "OK to disconnect" and a GM logo may appear on the iPod, and iPod appears on the radio display. The iPod music appears on the radio display and begins playing.

The iPod charges while it is connected to the vehicle if the vehicle is in the ACC/ACCESSORY or ON/RUN position. When the vehicle is turned off, the iPod automatically powers off and will not charge or draw power from the vehicle's battery.

If you have an older iPod model that is not supported, it can still be used by connecting it to the auxiliary input jack using a standard 3.5 mm

(1/8 in) stereo cable. See “Using the Auxiliary Input Jack” previously in this section.

Using the Radio to Control a USB Storage Device or iPod

The radio can control a USB storage device or an iPod using the radio buttons and knobs, and display song information on the radio display.

♫ **(Tune):** Turn to select files.

⏮ **SEEK:** Press to go to the start of the track, if more than 10 seconds have played. Press and hold or press multiple times to continue moving backward through tracks.

⏭ **SEEK:** Press to go to the next track. Press and hold or press multiple times to continue moving forward through tracks.

◁◁ **REV (Reverse):** Press and hold to reverse playback quickly. Sound is heard at a reduced volume. Release ◁◁ REV to resume playing. The elapsed time of the file displays.

▷▷ **FWD (Fast Forward):** Press and hold to advance playback quickly. Sound is heard at a reduced volume. Release ▷▷ FWD to resume playing. The elapsed time of the file displays.

i (Information): Press to display additional information about the selected track.

Using Softkeys to Control a USB Storage Device or iPod

The five softkeys below the radio display are used to control the functions listed below.

To use the softkeys:

1. Press the first or fifth softkey below the radio display to display the functions listed below, or press the softkey below the function if it is currently displayed.
2. Press the softkey below the tab with the function on it to use that function.

II (Pause): Press the softkey below II to pause the track. The tab appears raised when pause is being used. Press the softkey below II again to resume playback.

Back: Press the softkey below the Back tab to go back to the main display screen on an iPod, or the root directory on a USB storage device.

🗀 **(Folder View):** Press the softkey below 🗀 to view the contents of the current folder on the USB drive. To browse and select files:

1. Press the softkey below 🗀.
2. Turn ♫ to scroll through the list of folders.
3. Press ♫ to select the desired folder. If there is more then one folder, repeat Steps 1 and 2 until the desired folder is reached.

4. Turn ♫ to scroll through the files in the selected folder.
5. Press ♫ to select the desired file to be played.

To skip through large lists, the five softkeys can be used to navigate in the following order:

- First softkey, first item in the list.
- Second softkey, 1% through the list each time the softkey is pressed.
- Third softkey, 5% through the list each time the softkey is pressed.
- Fourth softkey, 10% through the list each time the softkey is pressed.
- Fifth softkey, end of the list.

(Music Navigator): Press the softkey below to view and select a file on an iPod, using the iPod's menu system. Files are sorted by:

- Playlists
- Artists
- Albums
- Genres
- Songs
- Composers

To select files:

1. Press the softkey below .
2. Turn ♫ to scroll through the list of menus.
3. Press ♫ to select the desired menu.
4. Turn ♫ to scroll through the folders or files in the selected menu.
5. Press ♫ to select the desired file to be played.

To skip through large lists, the five softkeys can be used to navigate in the following order:

- First softkey, first item in the list.
- Second softkey, 1% through the list each time the softkey is pressed.
- Third softkey, 5% through the list each time the softkey is pressed.
- Fourth softkey, 10% through the list each time the softkey is pressed.
- Fifth softkey, end of the list.

Repeat Functionality

To use Repeat:

Press the softkey below or 1 to select between Repeat All and Repeat Track.

(Repeat All): Press the softkey below to repeat all tracks. The tab appears lowered when Repeat All is being used. This is the default mode when a USB storage device or iPod is first connected.

1 **(Repeat Track):** Press the softkey below 1 to repeat one track. The tab appears raised when Repeat Track is being used.

Shuffle Functionality

To use Shuffle:

Press the softkey below ⇉, ⤮S, ⤮A , or ⤮F to select between Shuffle Off, Shuffle All Songs/ Shuffle Songs, Shuffle Album, or Shuffle Folder.

⇉ **(Shuffle Off):** Press the softkey below ⤮S to turn shuffle off. This is the default mode when a USB storage device or iPod is first connected.

⤮S **(Shuffle All Songs/Shuffle Songs):** Press the softkey below ⤮F or ⤮A to shuffle all songs on the USB storage device or iPod.

⤮A **(Shuffle Album):** Press the softkey below ⇉ to shuffle all songs in the current album on an iPod.

⤮F **(Shuffle Folder):** Press the softkey below ⇉ to shuffle all songs in the current folder on a USB storage device.

Phone

Bluetooth

For vehicles equipped with Bluetooth capability, the system can interact with many cell phones, allowing:

- Placement and receipt of calls in a hands-free mode.
- Sharing of the cell phone's address book or contact list with the vehicle.

To minimize driver distraction, before driving, and with the vehicle parked:

- Become familiar with the features of the cell phone. Organize the phone book and contact lists clearly and delete duplicate or rarely used entries. If possible, program speed dial or other shortcuts.
- Review the controls and operation of the infotainment system.
- Pair cell phone(s) to the vehicle. The system may not work with all cell phones. See "Pairing" in this section for more information.
- If the cell phone has voice dialing capability, learn to use that feature to access the address book or contact list. See "Voice Pass-Thru" in this section for more information.
- See "Storing and Deleting Phone Numbers" in this section for more information.

⚠ WARNING

When using a cell phone, it can be distracting to look too long or too often at the screen of the phone or the infotainment (navigation) system. Taking your eyes off the road too long or too often could cause a crash resulting in injury or death. Focus your attention on driving.

A Bluetooth system can use a Bluetooth-capable cell phone with a Hands-Free Profile to make and receive phone calls. The system can be used while the key is in the ON/RUN or ACC/ACCESSORY position. The range of the Bluetooth system can be up to 9.1 m (30 ft). Not all phones support all functions, and not all phones work with the in-vehicle Bluetooth system. See www.gm.com/bluetooth for more information on compatible phones.

Voice Recognition

The Bluetooth system uses voice recognition to interpret voice commands to dial phone numbers and name tags.

For additional information, say “Help” while you are in a voice recognition menu.

Noise: Keep interior noise levels to a minimum. The system may not recognize voice commands if there is too much background noise.

When to Speak: A short tone sounds after the system responds indicating when it is waiting for a voice command. Wait until the tone and then speak.

How to Speak: Speak clearly in a calm and natural voice.

Audio System

When using the in-vehicle Bluetooth system, sound comes through the vehicle's front audio system speakers and overrides the audio system. Use the audio system volume knob, during a call, to change the volume level. The adjusted volume level remains in memory for later calls. To prevent missed calls, a minimum volume level is used if the volume is turned down too low.

Bluetooth Controls

Use the buttons on the steering wheel to operate the in-vehicle Bluetooth system. See *Steering Wheel Controls on page 5-2*.

/ (Push to Talk): Press to answer incoming calls, confirm system information, and start speech recognition.

/ (End): Press to end a call, reject a call, or cancel an operation.

Pairing

A Bluetooth-enabled cell phone must be paired to the Bluetooth system and then connected to the vehicle before it can be used. See the cell phone manufacturer's user guide for Bluetooth functions before pairing the cell phone. If a Bluetooth phone is not connected, calls will be made using OnStar Hands-Free Calling, if equipped. See *OnStar Overview on page 14-1*.

Pairing Information

- A Bluetooth phone with MP3 capability cannot be paired to the vehicle as a phone and an MP3 player at the same time.
- Up to five cell phones can be paired to the Bluetooth system.

- The pairing process is disabled when the vehicle is moving.
- Pairing only needs to be completed once, unless the pairing information on the cell phone changes or the cell phone is deleted from the system.
- Only one paired cell phone can be connected to the Bluetooth system at a time.
- If multiple paired cell phones are within range of the system, the system connects to the first available paired cell phone in the order that they were first paired to the system. To connect to a different paired phone, see “Connecting to a Different Phone” later in this section.

Pairing a Phone

1. Press and hold / for two seconds.
2. Say “Bluetooth.” This command can be skipped.
3. Say “Pair.” The system responds with instructions and a four-digit Personal Identification Number (PIN). The PIN is used in Step 5.
4. Start the pairing process on the cell phone that you want to pair. For help with this process, see the cell phone manufacturer's user guide.
5. Locate the device named “Your Vehicle” in the list on the cell phone. Follow the instructions on the cell phone to enter the PIN provided in Step 3. After the PIN is successfully entered, the system prompts you to provide a name for the paired cell phone. This name will be used to indicate which phones are paired and connected to the vehicle. The system responds with “<phone name> has been successfully paired” after the pairing process is complete.
6. Repeat Steps 1–5 to pair additional phones.

Listing All Paired and Connected Phones

The system can list all cell phones paired to it. If a paired cell phone is also connected to the vehicle, the system responds with “is connected” after that phone name.

1. Press and hold / for two seconds.
2. Say “Bluetooth.”
3. Say “List.”

Deleting a Paired Phone

If the phone name you want to delete is unknown, see “Listing All Paired and Connected Phones.”

1. Press and hold / for two seconds.
2. Say “Bluetooth.”
3. Say “Delete.” The system asks which phone to delete.
4. Say the name of the phone you want to delete.

Connecting to a Different Phone

To connect to a different cell phone, the Bluetooth system looks for the next available cell phone in the order in which all the available cell phones were paired. Depending on which cell phone you want to connect to, you may have to use this command several times.

1. Press and hold ✆ / ⌇ for two seconds.
2. Say “Bluetooth.”
3. Say “Change phone.”
   - If another cell phone is found, the response will be “<Phone name> is now connected.”
   - If another cell phone is not found, the original phone remains connected.

Storing and Deleting Phone Numbers

The system can store up to 30 phone numbers as name tags in the Hands-Free Directory that is shared between the Bluetooth and OnStar systems, if equipped.

The following commands are used to delete and store phone numbers.

Store: This command will store a phone number, or a group of numbers as a name tag.

Digit Store: This command allows a phone number to be stored as a name tag by entering the digits one at a time.

Delete: This command is used to delete individual name tags.

Delete All Name Tags: This command deletes all stored name tags in the Hands-Free Calling Directory and the OnStar Turn-by-Turn Destinations Directory, if equipped.

Using the “Store” Command

1. Press and hold ✆ / ⌇ for two seconds.
2. Say “Store.”
3. Say the phone number or group of numbers you want to store all at once with no pauses, then follow the directions given by the system to save a name tag for this number.

Using the “Digit Store” Command

If an unwanted number is recognized by the system, say “Clear” at any time to clear the last number.

To hear all of the numbers recognized by the system, say “Verify” at any time.

1. Press and hold ✆ / ⌇ for two seconds.
2. Say “Digit Store.”
3. Say each digit, one at a time, that you want to store. After each digit is entered, the system

repeats back the digit it heard followed by a tone. After the last digit has been entered, say "Store," and then follow the directions given by the system to save a name tag for this number.

Using the "Delete" Command

1. Press and hold ✆ / ⌇ for two seconds.
2. Say "Delete."
3. Say the name tag you want to delete.

Using the "Delete All Name Tags" Command

This command deletes all stored name tags in the Hands-Free Calling Directory and the OnStar Turn-by-Turn Destinations Directory, if equipped.

To delete all name tags:

1. Press and hold ✆ / ⌇ for two seconds.
2. Say "Delete all name tags."

Listing Stored Numbers

The list command will list all stored numbers and name tags.

Using the "List" Command

1. Press and hold ✆ / ⌇ for two seconds.
2. Say "Directory."
3. Say "Hands-Free Calling."
4. Say "List."

Making a Call

Calls can be made using the following commands.

Dial or Call: The dial or call command can be used interchangeably to dial a phone number or a stored name tag.

Digit Dial: This command allows a phone number to be dialed by entering the digits one at a time.

Re-dial: This command is used to dial the last number used on the cell phone.

Using the "Dial" or "Call" Command

1. Press and hold ✆ / ⌇ for two seconds.
2. Say "Dial" or "Call."
3. Say the entire number without pausing, or say the name tag.

Once connected, the person called will be heard through the audio speakers.

Calling 911 Emergency

1. Press and hold ✆ / ⌇ for two seconds.
2. Say "Dial" or "Call."
3. Say "911."
4. Say "Dial" or "Call."

Once connected, the person called will be heard through the audio speakers.

Using the "Digit Dial" Command

The digit dial command allows a phone number to be dialed by entering the digits one at a time.

After each digit is entered, the system repeats back the digit it heard followed by a tone.

If an unwanted number is recognized by the system, say “Clear” at any time to clear the last number.

To hear all of the numbers recognized by the system, say “Verify” at any time.

1. Press and hold ✆ / ⌇ for two seconds.
2. Say “Digit Dial.”
3. Say each digit, one at a time, that you want to dial. After each digit is entered, the system repeats back the digit it heard followed by a tone. After the last digit has been entered, say “Dial.”

Once connected, the person called will be heard through the audio speakers.

Using the “Re-dial” Command

1. Press and hold ✆ / ⌇ for two seconds.
2. After the tone, say “Re-dial.”

Once connected, the person called will be heard through the audio speakers.

Receiving a Call

When an incoming call is received, the audio system mutes and a ring tone is heard in the vehicle.

- Press ✆ / ⌇ to answer the call.
- Press ☎ / ▽ to ignore a call.

Call Waiting

Call waiting must be supported on the cell phone and enabled by the wireless service carrier.

- Press ✆ / ⌇ to answer an incoming call when another call is active. The original call is placed on hold.
- Press ✆ / ⌇ again to return to the original call.
- To ignore the incoming call, no action is required.
- Press ☎ / ▽ to disconnect the current call and switch to the call on hold.

Three-Way Calling

Three-way calling must be supported on the cell phone and enabled by the wireless service carrier.

1. While on a call, press ✆ / ⌇.
2. Say “Three-way call.”
3. Use the dial or call command to dial the number of the third party to be called.
4. Once the call is connected, press ✆ / ⌇ to link all callers together.

Ending a Call

Press ☎ / ▽ to end a call.

Muting a Call

During a call, all sounds from inside the vehicle can be muted so that the person on the other end of the call cannot hear them.

- To mute a call, press / , and then say “Mute call.”
- To cancel mute, press / , and then say “Un-mute call.”

Transferring a Call

Audio can be transferred between the Bluetooth system and the cell phone.

The cell phone must be paired and connected with the Bluetooth system before a call can be transferred. The connection process can take up to two minutes after the ignition is turned to ON/RUN.

Transferring Audio from the Bluetooth System to a Cell Phone

During a call with the audio in the vehicle:

1. Press / .
2. Say “Transfer Call.”

Transferring Audio to the Bluetooth System from a Cell Phone

During a call with the audio on the cell phone, press / . The audio transfers to the vehicle. If the audio does not transfer to the vehicle, use the audio transfer feature on the cell phone. See your cell phone manufacturer's user guide for more information.

Voice Pass-Thru

Voice pass-thru allows access to the voice recognition commands on the cell phone. See your cell phone manufacturer's user guide to see if the cell phone supports this feature.

To access contacts stored in the cell phone:

1. Press and hold / for two seconds.
2. Say “Bluetooth.” This command can be skipped.
3. Say “Voice.” The system responds “OK, accessing <phone name>.”

The cell phone's normal prompt messages will go through their cycle according to the phone's operating instructions.

Dual Tone Multi-Frequency (DTMF) Tones

The Bluetooth system can send numbers and the numbers stored as name tags during a call. You can use this feature when calling a menu-driven phone system. Account numbers can also be stored for use.

Sending a Number or Name Tag During a Call

1. Press / . The system responds “Ready,” followed by a tone.
2. Say “Dial.”
3. Say the number or name tag to send.

Clearing the System

Unless information is deleted out of the in-vehicle Bluetooth system, it will be retained indefinitely. This includes all saved name tags in the phone book and phone pairing information. For information on how to delete this information, see the previous section “Deleting a Paired Phone” and the previous sections on deleting name tags.

Other Information

The Bluetooth® word mark and logos are owned by the Bluetooth® SIG, Inc. and any use of such marks by General Motors is under license. Other trademarks and trade names are those of their respective owners.

See *Radio Frequency Statement on page 13-20* for information regarding Part 15 of the Federal Communications Commission (FCC) rules and Industry Canada Standards RSS-GEN/210/220/310.

Climate Controls

Climate Control Systems
Climate Control Systems 8-1
Rear Heating System 8-4
Rear Climate Control System 8-5

Air Vents
Air Vents 8-7

Climate Control Systems

The heating, cooling, and ventilation for the vehicle can be controlled with this system.

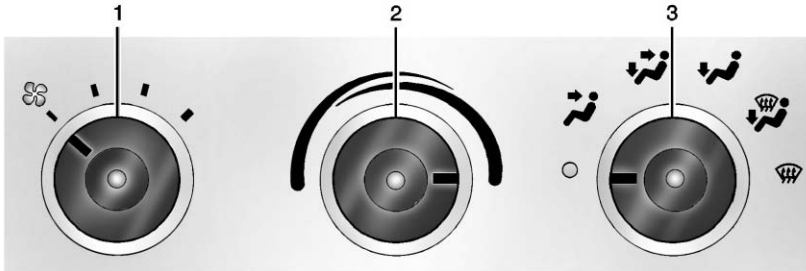

Vehicles without Air Conditioning

1. Fan Control
2. Temperature Control
3. Air Delivery Mode Control

(Fan Control): Turn the knob clockwise or counterclockwise to increase or decrease the fan speed.

(Off): Turns the system off.

Temperature Control: Turn the knob clockwise or counterclockwise to increase or decrease the temperature inside the vehicle.

Air Delivery Mode Control: Turn the knob clockwise or counterclockwise to change the current airflow mode.

(Vent): Air is directed to the instrument panel outlets.

(Bi-Level): Air is divided between the instrument panel and floor outlets, with some air directed toward the windshield.

(Floor): Air is directed to the floor outlets with some air directed to the windshield and side windows.

(Defog): This mode clears the windows of fog or moisture. Outside air is directed to the floor and defroster outlets. Adjust the temperature knob for warmer or cooler air. The air conditioning compressor might turn on in this setting to dehumidify the air.

(Defrost): This mode clears the windshield of fog or frost more quickly. Air is directed to the windshield, with some to the floor outlets and front side windows. The air conditioning compressor might turn on in this setting to dehumidify the air.

Do not drive the vehicle until all the windows are clear.

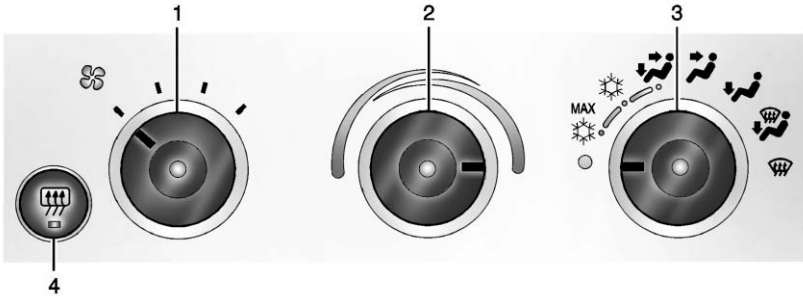

Vehicles with Air Conditioning

1. Fan Control
2. Temperature Control
3. Air Delivery Mode Control
4. Rear Window Defogger

On hot days, open the windows to let hot inside air escape; then close them. This helps to reduce the time needed for the vehicle to cool down and the system operates more efficiently.

(Air Conditioning): Cools and dehumidifies the air inside of the vehicle.

MAX **(Maximum Air Conditioning):** Cools the air inside the vehicle faster, by recirculating the inside air.

Rear Window Defogger

For vehicles with a rear window defogger, a warming grid is used to remove fog or frost from the rear window.

It only works when the ignition is in ON/RUN.

(Rear Window Defogger): Press to turn the rear window defogger on or off.

The rear window defogger turns off several minutes after the button is pressed. If turned on again, the defogger will run for several more minutes before turning off. The defogger can also be turned off by turning off the engine.

Do not drive the vehicle until all the windows are clear.

Notice: **Do not use a razor blade or sharp object to clear the inside rear window. Do not adhere anything to the defogger grid lines in the rear glass. These actions may damage the rear defogger. Repairs would not be covered by your warranty.**

Rear Heating System

For vehicles with a rear heating system, it lets you adjust the amount of air flowing into the rear of the vehicle, from the front-seating area. This feature works with the main climate-control system in the vehicle.

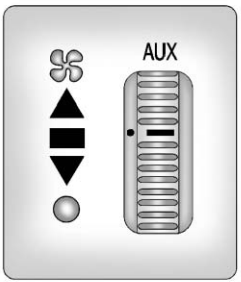

AUX: The thumbwheel for this system is located in the instrument panel switchbank below the audio system.

(Fan): Turn the thumbwheel up or down to increase or decrease the amount of heated air sent to the rear-seating area.

(High): This position supplies the most amount of heat to the rear-seating area.

(Medium): This position supplies half the amount of heat to the rear-seating area.

(Low): This position supplies the least amount of heat to the rear-seating area.

(Off): Turns the rear heating system off.

Rear Climate Control System

For vehicles with a rear heating and air-conditioning system, it controls the temperature, fan speed and air delivery for the rear-seat passengers only. The front climate control panel is located in the overhead console between the driver and front passenger.

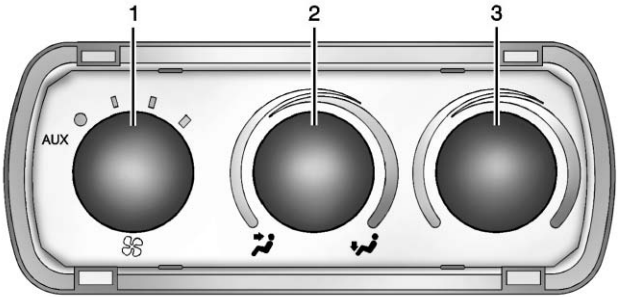

Front Climate Control Panel

1. Fan Control
2. Air Delivery Mode Control
3. Temperature Control

Use this control panel to maintain a separate temperature setting. Adjust the direction of the airflow or adjust the fan speed for the rear seat passenger(s).

When the fan knob is in the AUX position, the rear climate control panel can be used to adjust the climate settings in the rear seating area.

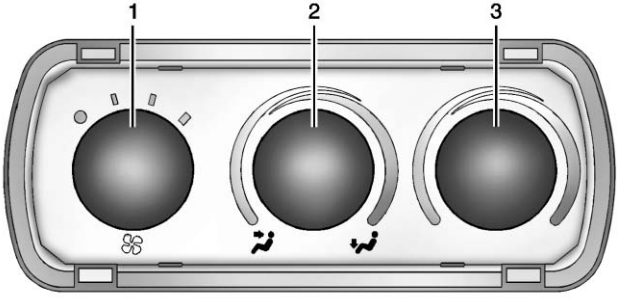

Rear Climate Control Panel

1. Fan Control
2. Air Delivery Mode Control
3. Temperature Control

For vehicles with a rear climate control panel, it is located overhead behind the driver and front passenger, centered in front of the second row. To adjust the rear climate control panel settings by a rear seat passenger, the front climate control panel fan knob must be in the AUX position. The fan speed, air delivery mode, and temperature can then be adjusted.

AUX (Auxiliary): Turn the fan knob on the front climate control panel to AUX to let rear seat passengers use the control panel in the rear seating area. This disables the front control panel. To return control to the front panel, move the fan knob out of AUX.

: Turns the system off.

(Fan Control): Turn clockwise or counterclockwise to increase or decrease the fan speed in the rear-seating area.

Temperature Control: Turn clockwise or counterclockwise to increase or decrease the temperature in the rear-seating area.

The air-conditioning system on the main climate control panel must be turned on to direct cooled air to the rear of the vehicle. If it is not on, then the temperature in the rear of the vehicle remains at cabin temperature.

Air Delivery Mode Control: Turn clockwise or counterclockwise to change the direction of the airflow in the rear seating area.

To change the current mode, select one of the following:

(Vent): Air is directed to the upper outlets, with some directed to the floor outlets.

(Floor): Air is directed to the floor outlets.

Be sure to keep the area under the front seats clear of any objects so that the air inside of the vehicle can circulate effectively.

For information on how to use the main climate control system, see *Climate Control Systems on page 8-1*. For information on ventilation, see *Air Vents on page 8-7*.

Air Vents

Use the outlets located near the center and on the sides of the instrument panel to change the direction of airflow.

Operation Tips

- Clear away any ice, snow or leaves from the air inlets at the base of the windshield that may block the flow of air into the vehicle.
- Use of non-GM approved hood deflectors may adversely affect the performance of the system.
- Keep the path under the front seats clear of objects to help circulate the air inside of the vehicle more effectively.

✍ NOTES

Driving and Operating

Driving Information
Distracted Driving 9-2
Defensive Driving 9-3
Drunk Driving 9-3
Control of a Vehicle 9-3
Braking 9-3
Steering 9-4
Off-Road Recovery 9-4
Loss of Control 9-5
Driving on Wet Roads 9-5
Highway Hypnosis 9-6
Hill and Mountain Roads 9-7
Winter Driving 9-7
If the Vehicle Is Stuck 9-9
Vehicle Load Limits 9-10

Starting and Operating
New Vehicle Break-In 9-14
Ignition Positions 9-15
Starting the Engine 9-16
Fast Idle System 9-18
Engine Heater 9-18
Retained Accessory Power (RAP) 9-19
Shifting Into Park 9-19
Shifting out of Park 9-20
Parking over Things That Burn 9-21

Engine Exhaust
Engine Exhaust 9-21
Running the Vehicle While Parked 9-22

Automatic Transmission
Automatic Transmission (Six Speed) 9-22
Automatic Transmission (Four Speed) 9-26
Manual Mode 9-28
Tow/Haul Mode 9-29

Drive Systems
All-Wheel Drive 9-30

Brakes
Antilock Brake System (ABS) 9-30
Parking Brake 9-31

Ride Control Systems
StabiliTrak® System 9-32
Locking Rear Axle 9-34

Cruise Control
Cruise Control 9-34

Object Detection Systems
Ultrasonic Parking Assist 9-37
Rear Vision Camera (RVC) 9-38

Fuel
Fuel 9-42
Recommended Fuel 9-42
Gasoline Specifications 9-42
California Fuel Requirements 9-42
Fuels in Foreign Countries . . . 9-43
Fuel Additives 9-43
Fuel E85 (85% Ethanol) 9-44
Filling the Tank 9-45
Filling a Portable Fuel Container 9-46

Towing
General Towing Information 9-47
Driving Characteristics and Towing Tips 9-47
Trailer Towing 9-49
Towing Equipment 9-54

Conversions and Add-Ons
Add-On Electrical Equipment 9-57

Driving Information

Distracted Driving

Distraction comes in many forms and can take your focus from the task of driving. Exercise good judgment and do not let other activities divert your attention away from the road. Many local governments have enacted laws regarding driver distraction. Become familiar with the local laws in your area.

To avoid distracted driving, always keep your eyes on the road, hands on the wheel, and mind on the drive.

- Do not use a phone in demanding driving situations. Use a hands-free method to place or receive necessary phone calls.
- Watch the road. Do not read, take notes, or look up information on phones or other electronic devices.
- Designate a front seat passenger to handle potential distractions.
- Become familiar with vehicle features before driving, such as programming favorite radio stations and adjusting climate control and seat settings. Program all trip information into any navigation device prior to driving.
- Wait until the vehicle is parked to retrieve items that have fallen to the floor.
- Stop or park the vehicle to tend to children.
- Keep pets in an appropriate carrier or restraint.
- Avoid stressful conversations while driving, whether with a passenger or on a cell phone.

⚠ WARNING

Taking your eyes off the road too long or too often could cause a crash resulting in injury or death. Focus your attention on driving.

Refer to the infotainment section for more information on using that system, including pairing and using a cell phone.

If equipped, refer to the navigation manual for information on that system, including pairing and using a cell phone.

Defensive Driving

Defensive driving means “always expect the unexpected.” The first step in driving defensively is to wear the safety belt. See *Safety Belts on page 3-8*.

- Assume that other road users (pedestrians, bicyclists, and other drivers) are going to be careless and make mistakes. Anticipate what they might do and be ready.
- Allow enough following distance between you and the driver in front of you.
- Focus on the task of driving.

Drunk Driving

Death and injury associated with drinking and driving is a global tragedy.

⚠ WARNING

Drinking and then driving is very dangerous. Your reflexes, perceptions, attentiveness, and judgment can be affected by even a small amount of alcohol. You can have a serious — or even fatal — collision if you drive after drinking.

(Continued)

WARNING (CONTINUED)

Do not drink and drive or ride with a driver who has been drinking. Ride home in a cab; or if you are with a group, designate a driver who will not drink.

Control of a Vehicle

Braking, steering, and accelerating are important factors in helping to control a vehicle while driving.

Braking

Braking action involves perception time and reaction time. Deciding to push the brake pedal is perception time. Actually doing it is reaction time.

Average driver reaction time is about three-quarters of a second. In that time, a vehicle moving at 100 km/h (60 mph) travels 20 m (66 ft), which could be a lot of distance in an emergency.

Helpful braking tips to keep in mind include:

- Keep enough distance between you and the vehicle in front of you.
- Avoid needless heavy braking.
- Keep pace with traffic.

If the engine ever stops while the vehicle is being driven, brake normally but do not pump the brakes. Doing so could make the pedal harder to push down. If the engine stops, there will be some power brake assist but it will be used when the brake is applied. Once the power assist is used up, it can take longer to stop and the brake pedal will be harder to push.

Steering

Hydraulic Power Steering

Your vehicle has hydraulic power steering. It may require maintenance. See *Power Steering Fluid on page 10-23*.

If power steering assist is lost because the engine stops or because of a system malfunction, the vehicle can be steered but may required increased effort. See your dealer if there is a problem.

If the vehicle is a hybrid, see the hybrid supplement for more information.

Curve Tips

- Take curves at a reasonable speed.
- Reduce speed before entering a curve.
- Maintain a reasonable steady speed through the curve
- Wait until the vehicle is out of the curve before accelerating gently into the straightaway.

Steering in Emergencies

- There are some situations when steering around a problem may be more effective than braking.
- Holding both sides of the steering wheel allows you to turn 180 degrees without removing a hand.
- Antilock Brake System (ABS) allows steering while braking.

Off-Road Recovery

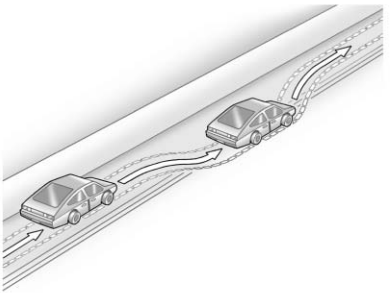

The vehicle's right wheels can drop off the edge of a road onto the shoulder while driving. Follow these tips:

1. Ease off the accelerator and then, if there is nothing in the way, steer the vehicle so that it straddles the edge of the pavement.
2. Turn the steering wheel about one-eighth of a turn, until the right front tire contacts the pavement edge.
3. Turn the steering wheel to go straight down the roadway.

Loss of Control

Skidding

There are three types of skids that correspond to the vehicle's three control systems:

- Braking Skid — wheels are not rolling.
- Steering or Cornering Skid — too much speed or steering in a curve causes tires to slip and lose cornering force.
- Acceleration Skid — too much throttle causes the driving wheels to spin.

Defensive drivers avoid most skids by taking reasonable care suited to existing conditions, and by not overdriving those conditions. But skids are always possible.

If the vehicle starts to slide, follow these suggestions:

- Ease your foot off the accelerator pedal and quickly steer the way you want the vehicle to go. The vehicle may straighten out. Be ready for a second skid if it occurs.
- Slow down and adjust your driving according to weather conditions. Stopping distance can be longer and vehicle control can be affected when traction is reduced by water, snow, ice, gravel, or other material on the road. Learn to recognize warning clues — such as enough water, ice, or packed snow on the road to make a mirrored surface — and slow down when you have any doubt.
- Try to avoid sudden steering, acceleration, or braking, including reducing vehicle speed by shifting to a lower gear. Any sudden changes could cause the tires to slide.

Remember: Antilock brakes help avoid only the braking skid.

Driving on Wet Roads

Rain and wet roads can reduce vehicle traction and affect your ability to stop and accelerate. Always drive slower in these types of driving conditions and avoid driving through large puddles and deep-standing or flowing water.

⚠ WARNING

Wet brakes can cause crashes. They might not work as well in a quick stop and could cause pulling to one side. You could lose control of the vehicle.

After driving through a large puddle of water or a car/vehicle wash, lightly apply the brake pedal until the brakes work normally.

Flowing or rushing water creates strong forces. Driving through flowing water could cause the vehicle to be carried away. If this happens, you and other vehicle occupants could drown. Do not ignore police warnings and be very cautious about trying to drive through flowing water.

Hydroplaning

Hydroplaning is dangerous. Water can build up under the vehicle's tires so they actually ride on the water. This can happen if the road is wet enough and you are going fast enough. When the vehicle is hydroplaning, it has little or no contact with the road.

There is no hard and fast rule about hydroplaning. The best advice is to slow down when the road is wet.

Other Rainy Weather Tips

Besides slowing down, other wet weather driving tips include:

- Allow extra following distance.
- Pass with caution.
- Keep windshield wiping equipment in good shape.
- Keep the windshield washer fluid reservoir filled.
- Have good tires with proper tread depth. See *Tires on page 10-44*.
- Turn off cruise control.

Highway Hypnosis

Always be alert and pay attention to your surroundings while driving. If you become tired or sleepy, find a safe place to park the vehicle and rest.

Other driving tips include:

- Keep the vehicle well ventilated.
- Keep the interior temperature cool.
- Keep your eyes moving — scan the road ahead and to the sides.
- Check the rearview mirror and vehicle instruments often.

Hill and Mountain Roads

Driving on steep hills or through mountains is different than driving on flat or rolling terrain. Tips for driving in these conditions include:

- Keep the vehicle serviced and in good shape.
- Check all fluid levels and brakes, tires, cooling system, and transmission.
- Shift to a lower gear when going down steep or long hills.

⚠ WARNING

If you do not shift down, the brakes could get so hot that they would not work well. You would then have poor braking or even none going down a hill. You could crash. Shift down to let the engine assist the brakes on a steep downhill slope.

⚠ WARNING

Coasting downhill in N (Neutral) or with the ignition off is dangerous. The brakes will have to do all the work of slowing down and they could get so hot that they would not work well. You would then have poor braking or even none going down a hill. You could crash. Always have the engine running and the vehicle in gear when going downhill.

- Stay in your own lane. Do not swing wide or cut across the center of the road. Drive at speeds that let you stay in your own lane.
- Be alert on top of hills; something could be in your lane (stalled car, accident).
- Pay attention to special road signs (falling rocks area, winding roads, long grades, passing or no-passing zones) and take appropriate action.

Winter Driving

Driving on Snow or Ice

Drive carefully when there is snow or ice between the tires and the road, creating less traction or grip. Wet ice can occur at about 0°C (32°F) when freezing rain begins to fall, resulting in even less traction. Avoid driving on wet ice or in freezing rain until roads can be treated with salt or sand.

Drive with caution, whatever the condition. Accelerate gently so traction is not lost. Accelerating too quickly causes the wheels to spin and makes the surface under the tires slick, so there is even less traction.

Try not to break the fragile traction. If you accelerate too fast, the drive wheels will spin and polish the surface under the tires even more.

The *Antilock Brake System (ABS) on page 9-30* improves vehicle stability during hard stops on a slippery roads, but apply the brakes sooner than when on dry pavement.

Allow greater following distance on any slippery road and watch for slippery spots. Icy patches can occur on otherwise clear roads in shaded areas. The surface of a curve or an overpass can remain icy when the surrounding roads are clear. Avoid sudden steering maneuvers and braking while on ice.

Turn off cruise control, if equipped, on slippery surfaces.

Blizzard Conditions

Being stuck in snow can be a serious situation. Stay with the vehicle unless there is help nearby. If possible, use the *Roadside Assistance Program (Mexico) on page 13-7* or *Roadside Assistance Program (U.S. and Canada) on page 13-11*. To get help and keep everyone in the vehicle safe:

- Turn on the hazard warning flashers.
- Tie a red cloth to an outside mirror.

⚠ WARNING

Snow can trap engine exhaust under the vehicle. This may cause exhaust gases to get inside. Engine exhaust contains carbon monoxide (CO) which cannot be seen or smelled. It can cause unconsciousness and even death.

(Continued)

WARNING (CONTINUED)

If the vehicle is stuck in the snow:

- Clear away snow from around the base of your vehicle, especially any that is blocking the exhaust pipe and/or the fuel operated heater exhaust system, if equipped. If the vehicle has a diesel engine and a fuel operated heater, see “Fuel Operated Heater (FOH)” in the diesel engine supplement.
- Check again from time to time to be sure snow does not collect there.
- Open a window about 5 cm (2 in) on the side of the vehicle that is away from the wind to bring in fresh air.
- Fully open the air outlets on or under the instrument panel.

(Continued)

WARNING (CONTINUED)

- Adjust the climate control system to a setting that circulates the air inside the vehicle and set the fan speed to the highest setting. See "Climate Control Systems" in the Index.

For more information about carbon monoxide, see *Engine Exhaust on page 9-21*.

Run the engine for short periods only as needed to keep warm, but be careful.

To save fuel, run the engine for only short periods as needed to warm the vehicle and then shut the engine off and close the window most of the way to save heat. Repeat this until help arrives but only when you feel really uncomfortable from the cold. Moving about to keep warm also helps.

If it takes some time for help to arrive, now and then when you run the engine, push the accelerator pedal slightly so the engine runs faster than the idle speed. This keeps the battery charged to restart the vehicle and to signal for help with the headlamps. Do this as little as possible to save fuel.

If the Vehicle Is Stuck

Slowly and cautiously spin the wheels to free the vehicle when stuck in sand, mud, ice, or snow.

If stuck too severely for the traction system to free the vehicle, turn the traction system off and use the rocking method. See *StabiliTrak® System on page 9-32*.

⚠ WARNING

If the vehicle's tires spin at high speed, they can explode, and you or others could be injured. The vehicle can overheat, causing an

(Continued)

WARNING (CONTINUED)

engine compartment fire or other damage. Spin the wheels as little as possible and avoid going above 56 km/h (35 mph).

Rocking the Vehicle to Get it Out

Turn the steering wheel left and right to clear the area around the front wheels. Turn off any traction system. Shift back and forth between R (Reverse) and a low forward gear, spinning the wheels as little as possible. To prevent transmission wear, wait until the wheels stop spinning before shifting gears. Release the accelerator pedal while shifting, and press lightly on the accelerator pedal when the transmission is in gear. Slowly spinning the wheels in the forward and reverse directions causes a rocking motion that could free the vehicle. If that does not get the vehicle out after a few tries, it

might need to be towed out. If the vehicle does need to be towed out, see *Towing the Vehicle on page 10-81*.

Vehicle Load Limits

It is very important to know how much weight the vehicle can carry. This weight is called the vehicle capacity weight and includes the weight of all occupants, cargo, and all nonfactory-installed options. Two labels on the vehicle show how much weight it was designed to carry, the Tire and Loading Information label and the Certification/Tire label.

⚠ WARNING

Do not load the vehicle any heavier than the Gross Vehicle Weight Rating (GVWR), or either the maximum front or rear Gross Axle Weight Rating (GAWR). This can cause systems to break and change the way the vehicle handles. This could cause loss of control and a crash. Overloading can also shorten the life of the vehicle.

Tire and Loading Information Label

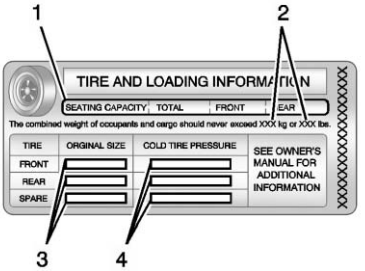

Label Example

A vehicle specific Tire and Loading Information label is attached to the center pillar (B-pillar). With the driver door open, you will find the label attached below the door lock post (striker). The tire and loading information label shows the number of occupant seating

positions (1), and the maximum vehicle capacity weight (2) in kilograms and pounds.

The Tire and Loading Information label also shows the size of the original equipment tires (3) and the recommended cold tire inflation pressures (4). For more information on tires and inflation see *Tires on page 10-44* and *Tire Pressure on page 10-53*.

There is also important loading information on the vehicle Certification/Tire label. It tells you the Gross Vehicle Weight Rating (GVWR) and the Gross Axle Weight Rating (GAWR) for the front and rear axle. See “Certification/Tire Label” later in this section.

Steps for Determining Correct Load Limit

1. Locate the statement “The combined weight of occupants and cargo should never exceed XXX kg or XXX lbs” on your vehicle's placard.
2. Determine the combined weight of the driver and passengers that will be riding in your vehicle.
3. Subtract the combined weight of the driver and passengers from XXX kg or XXX lbs.
4. The resulting figure equals the available amount of cargo and luggage load capacity. For example, if the “XXX” amount equals 1400 lbs and there will be five 150 lb passengers in your vehicle, the amount of available cargo and luggage load capacity is 650 lbs (1400 − 750 (5 x 150) = 650 lbs).
5. Determine the combined weight of luggage and cargo being loaded on the vehicle. That weight may not safely exceed the available cargo and luggage load capacity calculated in Step 4.
6. If your vehicle will be towing a trailer, the load from your trailer will be transferred to your vehicle. Consult this manual to determine how this reduces the available cargo and luggage load capacity of your vehicle. See *Trailer Towing on page 9-49* for important information on towing a trailer, towing safety rules and trailering tips.

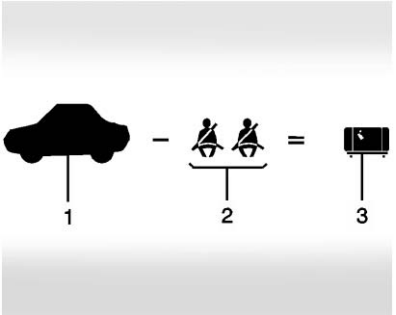

Example 1

1. Vehicle Capacity Weight for Example 1 = 453 kg (1,000 lbs)
2. Subtract Occupant Weight @ 68 kg (150 lbs) × 2 = 136 kg (300 lbs)
3. Available Occupant and Cargo Weight = 317 kg (700 lbs)

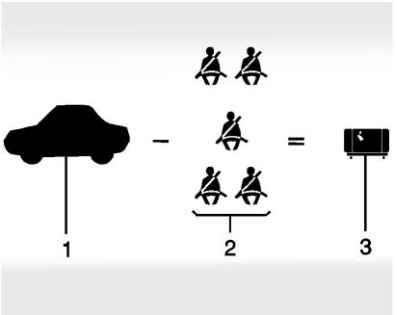

Example 2

A. Vehicle Capacity Weight for Example 2 = 453 kg (1,000 lbs)

B. Subtract Occupant Weight @ 68 kg (150 lbs) × 5 = 136 kg (750 lbs)

C. Available Cargo Weight = 113 kg (250 lbs)

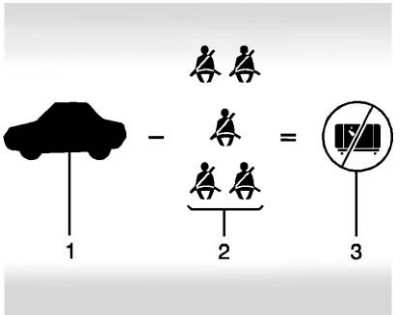

Example 3

1. Maximum Vehicle Capacity Weight for Example 3 = 453 kg (1,000 lbs)
2. Subtract Occupant Weight @ 91 kg (200 lbs) × 5 = 453 kg (1,000 lbs)
3. Available Cargo Weight = 0 kg (0 lbs)

Refer to the vehicle tire and loading information label for specific information about the vehicle's capacity weight and seating positions. The combined weight of the driver, passengers, and cargo should never exceed the vehicle capacity weight.

Certification/Tire Label

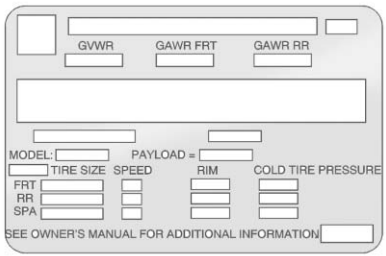

A vehicle specific Certification/Tire label is found on the rear edge of the driver door. The label shows the size of the vehicle's original tires and the inflation pressures needed to obtain the gross weight capacity of the vehicle. This is called Gross Vehicle Weight Rating (GVWR). The GVWR includes the weight of the vehicle, all occupants, fuel, and cargo.

The Certification/Tire label also tells you the maximum weights for the front and rear axles, called Gross Axle Weight Rating (GAWR). To find out the actual loads on the front and rear axles, you need to go to a weigh station and weigh the vehicle. Your dealer can help you with this. Be sure to spread out the load equally on both sides of the centerline.

Never exceed the GVWR for the vehicle, or the GAWR for either the front or rear axle.

If there is a heavy load, it should be spread out.

⚠ WARNING

Do not load the vehicle any heavier than the Gross Vehicle Weight Rating (GVWR), or either the maximum front or rear Gross Axle Weight Rating (GAWR). This can cause systems to break and change the way the vehicle handles. This could cause loss of control and a crash. Overloading can also shorten the life of the vehicle.

⚠ WARNING

Things you put inside the vehicle can strike and injure people in a sudden stop or turn, or in a crash.

- Put things in the cargo area of the vehicle. Try to spread the weight evenly.
- Never stack heavier things, like suitcases, inside the vehicle so that some of them are above the tops of the seats.
- Do not leave an unsecured child restraint in the vehicle.
- When you carry something inside the vehicle, secure it whenever you can.
- Do not leave a seat folded down unless you need to.

Add-On Equipment

When you carry removable items, you may need to put a limit on how many people you carry inside the vehicle. Be sure to weigh the vehicle before you buy and install the new equipment.

Starting and Operating

New Vehicle Break-In

Notice: **The vehicle does not need an elaborate break-in. But it will perform better in the long run if you follow these guidelines:**

- **Keep the vehicle speed at 88 km/h (55 mph) or less for the first 805 km (500 miles).**
- **Do not drive at any one constant speed, fast or slow, for the first 805 km (500 miles). Do not make full-throttle starts. Avoid downshifting to brake or slow the vehicle.**
- **Avoid making hard stops for the first 322 km (200 miles) or so. During this time the new brake linings are not yet broken in. Hard stops with new linings can mean premature wear and earlier replacement. Follow this**

breaking-in guideline every time you get new brake linings.

- **Do not tow a trailer during break-in. See *Trailer Towing on page 9-49* for the trailer towing capabilities of the vehicle and more information.**

Following break-in, engine speed and load can be gradually increased.

Ignition Positions

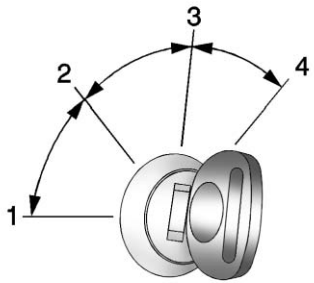

The ignition switch has four different positions.

To shift out of P (Park), the ignition must be in ON/RUN or ACC/ACCESSORY and the regular brake pedal applied.

1 (STOPPING THE ENGINE/LOCK/OFF): When the vehicle is stopped, turn the ignition switch to LOCK/OFF to turn the engine off. Retained Accessory Power (RAP) will remain active. See *Retained Accessory Power (RAP) on page 9-19*.

This position locks the ignition and transmission.

Do not turn the engine off when the vehicle is moving. This will cause a loss of power assist in the brake and steering systems and disable the airbags.

If the vehicle must be shut off in an emergency:

1. Brake using a firm and steady pressure. Do not pump the brakes repeatedly. This may deplete power assist, requiring increased brake pedal force.
2. Shift the vehicle to N (Neutral). This can be done while the vehicle is moving. After shifting to N (Neutral), firmly apply the brakes and steer the vehicle to a safe location.
3. Come to a complete stop, shift to P (Park), and turn the ignition to LOCK/OFF. On vehicles with an automatic transmission, the shift lever must be in P (Park) to turn the ignition switch to the LOCK/OFF position.
4. Set the parking brake. See *Parking Brake on page 9-31*.

⚠ WARNING

Turning off the vehicle while moving may cause loss of power assist in the brake and steering systems and disable the airbags. While driving, only shut the vehicle off in an emergency.

If the vehicle cannot be pulled over, and must be shut off while driving, turn the ignition to ACC/ACCESSORY.

Notice: **Using a tool to force the key to turn in the ignition could cause damage to the switch or break the key. Use the correct key, make sure it is all the way in, and turn it only with your hand. If the key cannot be turned by hand, see your dealer.**

2 (ACC/ACCESSORY): This is the position in which you can operate things like the radio and the windshield wipers when the engine is off.

3 (ON/RUN): This position can be used to operate the electrical accessories and to display some instrument cluster warning and indicator lights. This position can also be used for service and diagnostics, and to verify the proper operation of the malfunction indicator lamp as may be required for emission inspection purposes. The switch stays in this position when the engine is running.

If you leave the key in the ACC/ACCESSORY or ON/RUN position with the engine off, the battery could be drained. You may not be able to start the vehicle if the battery is allowed to drain for an extended period of time.

4 (START): This is the position that starts the engine. When the engine starts, release the key. The ignition switch returns to ON/RUN for driving.

A warning tone will sound when the driver door is opened, the ignition is in ACC/ACCESSORY or LOCK/OFF and the key is in the ignition.

Starting the Engine

If the vehicle has a diesel engine, see the Duramax diesel supplement.

To place the transmission in the proper gear:

Move the shift lever to P (Park) or N (Neutral). The engine will not start in any other position. To restart the engine when the vehicle is already moving, use N (Neutral) only.

Starting Procedure

1. With your foot off the accelerator pedal, turn the ignition key to START. When the engine starts, let go of the key. The idle speed will go down as your engine gets warm. Do not race the engine immediately after starting it. Operate the engine and transmission gently to allow the oil to warm up and lubricate all moving parts.

   The vehicle has a Computer-Controlled Cranking System. This feature assists in starting the engine and protects components. If the ignition key is turned to the START position, and then released when the engine begins cranking, the engine will continue cranking for a few seconds or until the vehicle starts. If the engine does not start and the key is held in START for many seconds, cranking will be stopped after 15 seconds to prevent cranking motor damage. To prevent gear damage, this system also prevents cranking if the engine is already running. Engine cranking can be stopped by turning the ignition switch to the ACC/ACCESSORY or LOCK/OFF position.

   When the Low Fuel warning lamp is on and the FUEL LEVEL LOW message is displayed in the Driver Information Center (DIC), the Computer-Controlled Cranking System is disabled to prevent possible vehicle component damage. When this happens, hold the ignition switch in the START position to continue engine cranking.

Notice: **Cranking the engine for long periods of time, by returning the key to the START position immediately after cranking has ended, can overheat and damage the cranking motor, and drain the battery. Wait at least 15 seconds between each try, to let the cranking motor cool down.**

2. If the engine does not start after 5-10 seconds, especially in very cold weather (below −18°C or 0°F), it could be flooded with too much gasoline. Try pushing the accelerator pedal all the way to the floor and holding it there as you hold the key in START for up to 15 seconds. Wait at least 15 seconds between each try, to allow the cranking motor to cool down. When the engine starts, let go of the key and accelerator. If the vehicle starts briefly but then stops again, do the same thing. This clears the extra gasoline from the engine. Do not race the engine immediately after starting it. Operate the engine and transmission gently until the oil warms up and lubricates all moving parts.

***Notice:* If you add electrical parts or accessories, you could change the way the engine operates. Any resulting damage would not be covered by the vehicle warranty. See *Add-On Electrical Equipment on page 9-57*.**

Fast Idle System

If the vehicle has this feature it is available only with cruise control. The manual fast idle switch is operated using the cruise control buttons located on the left hand side of the steering wheel.

This system can be used to increase engine idle speed whenever the following conditions are met:

- The parking brake is set.
- The brake pedal is not pressed.
- The vehicle must not be moving and the accelerator must not be pressed.

To control the fast idle:

- To enable the Fast Idle System, press and release the cruise control on/off button and ensure that the switch indicator light is lit.
- Press and release the cruise control SET-button. Engine speed will be held at approximately 1200 RPM.

When the fast idle is active the Driver Information Center (DIC) will display “FAST IDLE ON.”

One of the following actions will turn off the fast idle:

- Pressing the brake.
- Selecting the cruise control cancel button.
- Releasing the parking brake.
- The transmission shift lever is moved out of P (Park) or N (Neutral).
- Selecting the cruise control on/off button when it was previously on.
- Pressing the cruise control SET-button a second time.
- Pressing the accelerator greater than a quarter of the way down.
- Turning the ignition switch to the LOCK/OFF position.

Engine Heater

If the vehicle has a diesel engine, see the Duramax diesel supplement for more information.

The engine coolant heater can provide easier starting and better fuel economy during engine warm-up in cold weather conditions at or below −18°C (0°F). Vehicles with an engine coolant heater should be plugged in at least four hours before starting. An internal thermostat in the plug-end of the cord may exist which will prevent engine coolant heater operation at temperatures above −18°C (0°F).

To Use the Engine Coolant Heater

1. Turn off the engine.
2. Open the hood and unwrap the electrical cord.

   The cord for the engine coolant heater is located on the driver side of the engine compartment and is attached to the hose for the power steering reservoir.
3. Plug it into a normal, grounded 110-volt AC outlet.

⚠ WARNING

Plugging the cord into an ungrounded outlet could cause an electrical shock. Also, the wrong kind of extension cord could overheat and cause a fire. You could be seriously injured. Plug the cord into a properly grounded three-prong 110-volt AC outlet.

(Continued)

WARNING (CONTINUED)

If the cord will not reach, use a heavy-duty three-prong extension cord rated for at least 15 amps.

4. Before starting the engine, be sure to unplug and store the cord as it was before to keep it away from moving engine parts and prevent damage.

The length of time the heater should remain plugged in depends on several factors. Ask a dealer in the area where you will be parking the vehicle for the best advice on this.

Retained Accessory Power (RAP)

These vehicle accessories can be used for up to 10 minutes after the engine is turned off:

- Audio System
- Power Windows (if equipped)

These features will work when the ignition key is in ON/RUN or ACC/ACCESSORY. Once the key is turned from ON/RUN to LOCK/OFF, power to the radio and power windows will continue to work 10 minutes or until the driver door is opened.

Shifting Into Park

1. Hold the brake pedal down, then set the parking brake.
2. Move the shift lever into the P (Park) position by pulling the shift lever toward you and moving it up as far as it will go.
3. Turn the ignition key to LOCK/OFF.
4. Remove the key and take it with you. If you can leave the vehicle with the ignition key in your hand, the vehicle is in P (Park).

Leaving the Vehicle with the Engine Running

⚠ WARNING

It can be dangerous to leave the vehicle with the engine running. It could overheat and catch fire.

It is dangerous to get out of the vehicle if the shift lever is not fully in P (Park) with the parking brake firmly set. The vehicle can roll.

Do not leave the vehicle when the engine is running. If you have left the engine running, the vehicle can move suddenly. You or others could be injured. To be sure the vehicle will not move, even when you are on fairly level ground, always set the parking brake and move the shift lever to P (Park). See *Shifting Into Park on page 9-19*. If you are towing a trailer, see *Driving Characteristics and Towing Tips on page 9-47*.

If you have to leave the vehicle with the engine running, be sure the vehicle is in P (Park) and the parking brake is firmly set. After the shift lever is moved into P (Park), hold the regular brake pedal down. Then, see if you can move the shift lever away from P (Park) without first pulling it toward you. If you can, it means that the shift lever was not fully locked into P (Park).

Torque Lock

If you are parking on a hill and you do not shift the transmission into P (Park) properly, the weight of the vehicle can put too much force on the parking pawl in the transmission. It might be difficult to pull the shift lever out of P (Park). This is called torque lock. To prevent torque lock, set the parking brake and then shift into P (Park) properly before you leave the driver seat. To find out how, see *Shifting Into Park on page 9-19*.

When you are ready to drive, move the shift lever out of P (Park) before releasing the parking brake.

If torque lock does occur, you might need to have another vehicle push yours a little uphill to take some of the pressure from the parking pawl in the transmission. Then you should be able to pull the shift lever out of P (Park).

Shifting out of Park

The vehicle has an automatic transmission shift lock control system. You have to fully apply the brakes before you can shift from P (Park) when the ignition is in ON/RUN or ACC/ACCESSORY. See *Automatic Transmission (Six Speed) on page 9-22* or *Automatic Transmission (Four Speed) on page 9-26*.

The shift lock control system is designed to do the following:

- Prevent the ignition key from being removed unless the shift lever is in P (Park).

- Prevent movement of the shift lever out of P (Park), unless the ignition is in ON/RUN or ACC/ ACCESSORY and the regular brake pedal is applied.

The shift lock control system is always functional except in the case of a dead battery or low voltage (less than 9 V) battery.

If the vehicle has an uncharged battery or a battery with low voltage, try charging or jump starting the battery. See *Jump Starting on page 10-78* for more information.

To shift out of P (Park) use the following:

1. Apply the brake pedal.
2. Turn the ignition to ACC/ ACCESSORY or ON/RUN.
3. Move the shift lever to the desired position.

If you still are unable to shift out of P (Park):

1. Ease the pressure on the shift lever.
2. While holding down the brake pedal, push the shift lever all the way into P (Park).
3. Move the shift lever to the desired position.

If you are still having a problem shifting, have the vehicle serviced.

Parking over Things That Burn

⚠ WARNING

Things that can burn could touch hot exhaust parts under the vehicle and ignite. Do not park over papers, leaves, dry grass, or other things that can burn.

Engine Exhaust

⚠ WARNING

Engine exhaust contains carbon monoxide (CO) which cannot be seen or smelled. Exposure to CO can cause unconsciousness and even death.

Exhaust may enter the vehicle if:

- The vehicle idles in areas with poor ventilation (parking garages, tunnels, deep snow that may block underbody airflow or tail pipes).
- The exhaust smells or sounds strange or different.
- The exhaust system leaks due to corrosion or damage.
- The vehicle exhaust system has been modified, damaged, or improperly repaired.

(Continued)

WARNING (CONTINUED)

- There are holes or openings in the vehicle body from damage or aftermarket modifications that are not completely sealed.

If unusual fumes are detected or if it is suspected that exhaust is coming into the vehicle:

- Drive it only with the windows completely down.
- Have the vehicle repaired immediately.

Never park the vehicle with the engine running in an enclosed area such as a garage or a building that has no fresh air ventilation.

Running the Vehicle While Parked

It is better not to park with the engine running.

If the vehicle is left with the engine running, follow the proper steps to be sure the vehicle will not move. See *Shifting Into Park on page 9-19* and *Engine Exhaust on page 9-21*.

If parking on a hill and pulling a trailer, see *Driving Characteristics and Towing Tips on page 9-47*.

Automatic Transmission

Automatic Transmission (Six Speed)

Vehicles with a six speed automatic transmission have a shift position indicator within the instrument cluster.

There are several different positions for the shift lever.

See “Range Selection Mode” under *Manual Mode on page 9-28*.

P (Park): This position locks the rear wheels. It is the best position to use when starting the engine because the vehicle cannot move easily. When parked on a hill,

especially when the vehicle has a heavy load, you might notice an increase in the effort to shift out of P (Park). See “Torque Lock” under *Shifting Into Park on page 9-19* for more information.

⚠ WARNING

It is dangerous to get out of the vehicle if the shift lever is not fully in P (Park) with the parking brake firmly set. The vehicle can roll.

Do not leave the vehicle when the engine is running. If you have left the engine running, the vehicle can move suddenly. You or others could be injured. To be sure the vehicle will not move, even when you are on fairly level ground, always set the parking brake and move the shift lever to P (Park). See *Shifting Into Park on page 9-19* and *Driving Characteristics and Towing Tips on page 9-47*.

R (Reverse): Use this gear to back up.

Notice: **Shifting to R (Reverse) while the vehicle is moving forward could damage the transmission. The repairs would not be covered by the vehicle warranty. Shift to R (Reverse) only after the vehicle is stopped.**

To rock the vehicle back and forth to get out of snow, ice, or sand without damaging the transmission, see *If the Vehicle Is Stuck on page 9-9*.

N (Neutral): In this position, the engine does not connect with the wheels. To restart when you are already moving, use N (Neutral) only. Also, use N (Neutral) when the vehicle is being towed.

⚠ WARNING

Shifting into a drive gear while the engine is running at high speed is dangerous. Unless your foot is

(Continued)

WARNING (CONTINUED)

firmly on the brake pedal, the vehicle could move very rapidly. You could lose control and hit people or objects. Do not shift into a drive gear while the engine is running at high speed.

Notice: **Shifting out of P (Park) or N (Neutral) with the engine running at high speed may damage the transmission. The repairs would not be covered by the vehicle warranty. Be sure the engine is not running at high speed when shifting the vehicle.**

D (Drive): This position is for normal driving. It provides the best fuel economy. If you need more power for passing, and you are:

- Going less than about 55 km/h (35 mph), push the accelerator pedal about halfway down.

- Going about 55 km/h (35 mph) or more, push the accelerator all the way down.

  By doing this, the vehicle shifts down to the next gear and has more power.

D (Drive) can be used when towing a trailer, carrying a heavy load or driving on steep hills. You might want to shift the transmission to a lower gear selection if the transmission shifts too often.

Downshifting the transmission in slippery road conditions could result in skidding. See “Skidding” under *Loss of Control on page 9-5*.

The vehicle has a shift stabilization feature that adjusts the transmission shifting to the current driving conditions in order to reduce rapid upshifts and downshifts. This shift stabilization feature is designed to determine, before making an upshift, if the engine is able to maintain vehicle speed by analyzing things such as vehicle speed, throttle position, and vehicle load.

If the shift stabilization feature determines that a current vehicle speed cannot be maintained, the transmission does not upshift and instead holds the current gear. In some cases, this could appear to be a delayed shift, however the transmission is operating normally.

The transmission uses adaptive shift controls. Adaptive shift controls continually compares key shift parameters to pre-programmed ideal shifts stored in the transmissions computer. The transmission constantly makes adjustments to improve vehicle performance according to how the vehicle is being used, such as with a heavy load or when temperature changes. During this adaptive shift control process, shifting might feel different as the transmission determines the best settings.

The shift quality of a new vehicle may not be ideal because the Adaptive Shift Control process may not have determined the best settings for a particular shift or condition. Shift quality will improve with continued driving.

When temperatures are very cold, the transmission's gear shifting could be delayed providing more stable shifts until the engine warms up. Shifts could be more noticeable with a cold transmission. This difference in shifting is normal.

M (Manual Mode): This position lets drivers select the range of gears appropriate for current driving conditions. If the vehicle has this feature, see “Range Selection Mode” under *Manual Mode on page 9-28*.

3 (Third): This position is also used for normal driving. It reduces vehicle speed more than D (Drive) without using the brakes. You might choose 3 (Third) instead of D (Drive) when driving on hilly, winding roads, when towing a trailer, so there is less shifting between gears and when

going down a steep hill. See “Range Selection Mode” under *Manual Mode on page 9-28*.

2 (Second): This position reduces vehicle speed even more than 3 (Third) without using the brakes. You can use 2 (Second) on hills. It can help control vehicle speed as you go down steep mountain roads, but then you would also want to use the brakes off and on. See “Range Selection Mode” under *Manual Mode on page 9-28*.

If you manually select 2 (Second) in an automatic transmission, the transmission will start in second gear. You can use this feature for reducing the speed of the rear wheels when you are trying to start the vehicle from a stop on slippery road surfaces.

1 (First): This position reduces vehicle speed without using the brakes. You can use it for major/severe downgrades where the vehicle would otherwise accelerate due to steepness of grade. When you shift to 1 (First) it provides the lowest gear appropriate to current road speed and continues to downshift as the vehicle slows, eventually downshifting to 1 (First) gear. The transmission can be held in 1 (First) gear using Range Selection Mode or the shift lever. See “Range Selection Mode” under *Manual Mode on page 9-28*.

Notice: **Spinning the tires or holding the vehicle in one place on a hill using only the accelerator pedal may damage the transmission. The repair will not be covered by the vehicle warranty. If you are stuck, do not spin the tires. When stopping on a hill, use the brakes to hold the vehicle in place.**

Normal Mode Grade Braking

Vehicles with a 6-Speed automatic transmission have Normal Mode Grade Braking that is enabled when the vehicle is started, but is not enabled in Range Selection Mode. It assists in maintaining desired vehicle speeds when driving on downhill grades by using the engine and transmission to slow the vehicle. The first time the system activates for each ignition key cycle, a DIC message will be displayed. See *Transmission Messages on page 5-37*.

To disable or enable Normal Mode Grade Braking within the current ignition key cycle, press and hold the Tow/Haul button for three seconds. A DIC message displays. See *Transmission Messages on page 5-37*.

For other forms of grade braking, see *Tow/Haul Mode on page 9-29* and *Cruise Control on page 9-34*.

Automatic Transmission (Four Speed)

There are several different positions for the shift lever.

P (Park): This position locks the rear wheels. It is the best position to use when you start the engine because the vehicle cannot move easily.

⚠ WARNING

It is dangerous to get out of the vehicle if the shift lever is not fully in P (Park) with the parking brake firmly set. The vehicle can roll.

(Continued)

WARNING (CONTINUED)

Do not leave the vehicle when the engine is running. If you have left the engine running, the vehicle can move suddenly. You or others could be injured. To be sure the vehicle will not move, even when you are on fairly level ground, always set the parking brake and move the shift lever to P (Park). See *Shifting Into Park on page 9-19* and *Driving Characteristics and Towing Tips on page 9-47*.

Make sure the shift lever is fully in P (Park) before starting the engine. The vehicle has an automatic transmission shift lock control system. You must first press the brake pedal before you can shift from P (Park) with the ignition in ON/RUN.

If you cannot shift out of P (Park), ease pressure on the shift lever and push the shift lever all the way into P (Park) as you maintain brake application. Then move the shift lever into another gear. See *Shifting out of Park on page 9-20*.

R (Reverse): Use this gear to back up.

Notice: **Shifting to R (Reverse) while the vehicle is moving forward could damage the transmission. The repairs would not be covered by the vehicle warranty. Shift to R (Reverse) only after the vehicle is stopped.**

To rock the vehicle back and forth to get out of snow, ice or sand without damaging the transmission, see *If the Vehicle Is Stuck on page 9-9*.

N (Neutral): In this position, the engine does not connect with the wheels. To restart the engine when the vehicle is already moving, use N (Neutral) only. Also, use N (Neutral) when the vehicle is being towed.

⚠ WARNING

Shifting into a drive gear while the engine is running at high speed is dangerous. Unless your foot is firmly on the brake pedal, the vehicle could move very rapidly. You could lose control and hit people or objects. Do not shift into a drive gear while the engine is running at high speed.

Notice: **Shifting out of P (Park) or N (Neutral) with the engine running at high speed may damage the transmission. The repairs would not be covered by the vehicle warranty. Be sure the engine is not running at high speed when shifting the vehicle.**

D (Drive): This position is for normal driving. It provides the best fuel economy. If you need more power for passing, and you are:

- Going less than about 55 km/h (35 mph), push the accelerator pedal about halfway down.
- Going about 55 km/h (35 mph) or more, push the accelerator all the way down.

  You will shift down to the next gear and have more power.

Downshifting the transmission in slippery road conditions could result in skidding. See “Skidding” under *Loss of Control on page 9-5*.

3 (Third): This position is also used for normal driving. However it reduces vehicle speed more than D (Drive) without using the brakes. You might choose 3 (Third) instead of D (Drive) when driving on hilly, winding roads, when towing a trailer, so there is less shifting between gears and when going down a steep hill.

You should use 3 (Third) (or a lower gear as needed) when towing a trailer to minimize heat build-up and extend the life of the transmission.

2 (Second): This position reduces vehicle speed even more than 3 (Third) without using the brakes. You can use 2 (Second) on hills. It can help control vehicle speed as you go down steep mountain roads, but then you would also want to use the brakes off and on.

You may use this feature for reducing torque to the rear wheels when you are trying to start the vehicle from a stop on slippery road surfaces.

1 (First): This position reduces vehicle speed even more than 2 (Second) without using the brakes. You can use it on very steep hills, or in deep snow or mud. If the shift lever is put in 1 (First) while the vehicle is moving forward, the transmission will not shift into first gear until the vehicle is going slowly enough.

Notice: **Spinning the tires or holding the vehicle in one place on a hill using only the accelerator pedal may damage the transmission. The repair will not be covered by the vehicle warranty. If you are stuck, do not spin the tires. When stopping on a hill, use the brakes to hold the vehicle in place.**

Manual Mode

Range Selection Mode

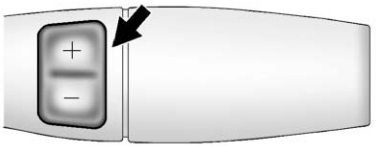

The vehicle may have a Range Selection Mode. The Range Selection Mode helps control the vehicle's transmission and vehicle speed while driving down hill or towing a trailer by letting you select a desired range of gears.

To use this feature:

1. Move the shift lever to M (Manual Mode).
2. Press the +/− buttons on the shift lever, to select the desired range of gears for current driving conditions.

When M (Manual Mode) is selected a number displays in the DIC next to the M indicating the current gear.

This number is the highest gear that can be used. However, the vehicle can automatically shift to lower gears as it adjusts to driving conditions. This means that all gears below that number are available. When 5 (Fifth) is selected, 1 (First) through 5 (Fifth) gears are automatically shifted by the vehicle, but 6 (Sixth) cannot be used until the +/− button located on the steering column lever is used to change to the gear.

Grade Braking is not available when Range Selection Mode is active. See *Tow/Haul Mode on page 9-29*.

While using Range Selection Mode, Cruise Control and the Tow/Haul Mode can be used.

Notice: **Spinning the tires or holding the vehicle in one place on a hill using only the accelerator pedal may damage the transmission. The repair will not be covered by the vehicle warranty. If you are stuck, do not spin the tires. When stopping on a hill, use the brakes to hold the vehicle in place.**

Low Traction Mode

Low Traction Mode can assist in vehicle acceleration when road conditions are slippery. While the vehicle is at a stop, select the second gear range using Range Selection Mode. This will limit torque to the wheels after it detects wheel slip, preventing the tires from spinning.

Tow/Haul Mode

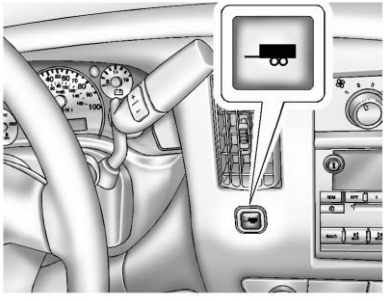

Vehicles with an automatic transmission have a Tow/Haul Mode. The Tow/Haul Mode adjusts the transmission shift pattern to reduce shift cycling, providing increased performance, vehicle control, and transmission cooling when towing or hauling heavy loads.

Turn the Tow/Haul Mode on and off by pressing the button on the instrument panel. When Tow/Haul is on, a light on the instrument cluster will come on.

See *Tow/Haul Mode Light on page 5-21* for more information.

Also see “Tow/Haul Mode” under *Towing Equipment on page 9-54*.

Tow/Haul Mode Grade Braking (6-Speed Automatic Transmission)

Tow/Haul Mode Grade Braking is only enabled while the Tow/Haul Mode is selected and the vehicle is not in the Range Selection Mode. See “Tow/Haul Mode” listed previously and *Manual Mode on page 9-28*. Tow/Haul Mode Grade Braking assists in maintaining desired vehicle speeds when driving on downhill grades by using the engine and transmission to slow the vehicle.

To disable or enable Tow/Haul Grade Braking within the current ignition key cycle, press and hold the Tow/Haul button for three seconds. A DIC message will be displayed. See *Transmission Messages on page 5-37*.

See *Towing Equipment on page 9-54*.

For other forms of grade braking, see *Automatic Transmission (Six Speed) on page 9-22* or *Automatic Transmission (Four Speed) on page 9-26* and *Cruise Control on page 9-34*.

Drive Systems

All-Wheel Drive

If the vehicle has this feature, engine power is sent to all four wheels when extra traction is needed. This is like four-wheel drive, but there is no separate lever or switch to engage or disengage the front axle. It is fully automatic, and adjusts itself as needed for road conditions.

Brakes

Antilock Brake System (ABS)

This vehicle has the Antilock Brake System (ABS), an advanced electronic braking system that helps prevent a braking skid.

When the engine is started and the vehicle begins to drive away, ABS checks itself. A momentary motor or clicking noise might be heard while this test is going on, and it might even be noticed that the brake pedal moves a little. This is normal.

If there is a problem with ABS, this warning light stays on. See *Antilock Brake System (ABS) Warning Light on page 5-21*.

If driving safely on a wet road and it becomes necessary to slam on the brakes and continue braking to avoid a sudden obstacle, a computer senses that the wheels are slowing down. If one of the wheels is about to stop rolling, the computer will separately work the brakes at each wheel.

ABS can change the brake pressure to each wheel, as required, faster than any driver could. This can help the driver steer around the obstacle while braking hard.

As the brakes are applied, the computer keeps receiving updates on wheel speed and controls braking pressure accordingly.

Remember: ABS does not change the time needed to get a foot up to the brake pedal or always decrease stopping distance. If you get too close to the vehicle in front of you, there will not be enough time to apply the brakes if that vehicle

suddenly slows or stops. Always leave enough room up ahead to stop, even with ABS.

Using ABS

Do not pump the brakes. Just hold the brake pedal down firmly and let ABS work. You might hear the ABS pump or motor operating and feel the brake pedal pulsate, but this is normal.

Braking in Emergencies

ABS allows the driver to steer and brake at the same time. In many emergencies, steering can help more than even the very best braking.

Parking Brake

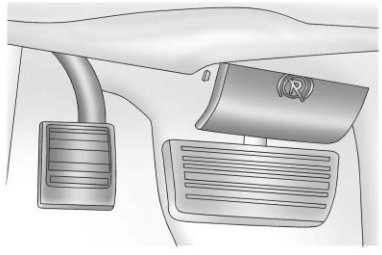

To set the parking brake, hold the regular brake pedal, then push down the parking brake pedal.

If the ignition is on, the brake system warning light will come on.

To release the parking brake, hold the regular brake pedal down. Pull the handle, located just above the parking brake pedal, with the parking brake symbol, to release the parking brake.

If the ignition is on when the parking brake is released, the brake system warning light will go off.

Notice: **Driving with the parking brake on can overheat the brake system and cause premature wear or damage to brake system parts. Verify that the parking brake is fully released and the brake warning light is off before driving.**

If you are towing a trailer and are parking on a hill, see *Driving Characteristics and Towing Tips on page 9-47*.

Ride Control Systems

StabiliTrak® System

The vehicle may have a vehicle stability enhancement system called StabiliTrak. It is an advanced computer controlled system that assists the driver with directional control of the vehicle in difficult driving conditions.

StabiliTrak activates when the computer senses a discrepancy between the intended path and the direction the vehicle is actually traveling. StabiliTrak selectively applies braking pressure at any one of the vehicle's brakes to assist the driver with keeping the vehicle on the intended path.

When the vehicle is started and begins to move, the system performs several diagnostic checks to ensure there are no problems. The system may be heard or felt while it is working. This is normal and does not mean there is a problem with the vehicle. The system should initialize before the vehicle reaches 40 km/h (25 mph). In some cases, it may take approximately 3.2 km (2 mi) of driving before the system initializes.

The Traction Control System (TCS)/ StabiliTrak indicator light comes on in the instrument cluster when the system requires service.

When StabiliTrak activates, the TCS/StabiliTrak indicator light flashes in the instrument cluster. This also occurs when TCS is activated.

See *Traction Control System (TCS)/ StabiliTrak® Light on page 5-22*.

For your safety, the system can only be disabled when the vehicle speed is less than 40 km/h (25 mph).

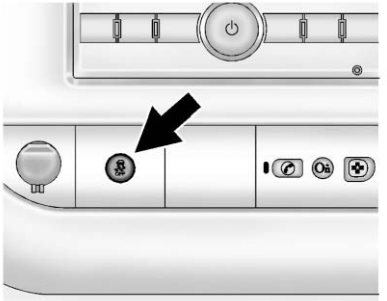

Press the StabiliTrak button on the instrument panel once to turn off the Traction Control System (TCS). The appropriate message is displayed in the DIC.

Press and hold the StabiliTrak button to turn off StabiliTrak and TCS. The StabiliTrak Off light

illuminates and the appropriate messages will be displayed in the DIC.

To turn StabiliTrak and TCS back on, press the StabiliTrak button again. StabiliTrak will automatically turn back on when the vehicle speed exceeds 40 km/h (25 mph).

When the StabiliTrak system has been turned off, system noises may still be heard as a result of the brake-traction control coming on.

It is recommended to leave the system on for normal driving conditions, but it may be necessary to turn the system off if the vehicle is stuck in sand, mud, ice or snow, and you want to “rock” the vehicle to attempt to free it. See *If the Vehicle Is Stuck on page 9-9*.

StabiliTrak System Operation

The StabiliTrak system is normally on, except when the system is initializing or has been disabled with the StabiliTrak button. The StabiliTrak system will automatically activate to assist the driver in maintaining vehicle directional control in most driving conditions. When activated, the StabiliTrak system may reduce engine power to the wheels and apply braking to individual wheels as necessary to assist the driver with vehicle directional control. If cruise control is being used when StabiliTrak activates, the cruise control automatically disengages. The cruise control can be re-engaged when road conditions allow. See *Cruise Control on page 9-34*.

The StabiliTrak system may also turn off automatically if it determines that a problem exists with the system. If the problem does not clear itself after restarting the vehicle, see your dealer for service.

Traction Control Operation

TCS is part of the StabiliTrak system. TCS limits wheel spin by reducing engine power to the wheels and by applying brakes to each individual wheel as necessary.

If the brake-traction control system activates constantly or if the brakes have heated up due to high speed braking, the brake-traction control will be automatically disabled. The system will come back on after the brakes have cooled. This can take up to two minutes or longer depending on brake usage.

TCS may activate on dry or rough roads or under conditions such as heavy acceleration while turning or abrupt upshifts/downshifts of the transmission. When this reduction in acceleration occurs, it may be noticed, or a noise or vibration may be heard. This is normal.

Adding non-dealer accessories can affect the vehicle's performance. See *Accessories and Modifications on page 10-3* for more information.

Locking Rear Axle

Vehicles with a locking rear axle can give more traction on snow, mud, ice, sand, or gravel. It works like a standard axle most of the time, but when traction is low, this feature will allow the rear wheel with the most traction to move the vehicle.

Cruise Control

⚠ WARNING

Cruise control can be dangerous where you cannot drive safely at a steady speed. So, do not use the cruise control on winding roads or in heavy traffic.

Cruise control can be dangerous on slippery roads. On such roads, fast changes in tire traction can cause excessive wheel slip, and you could lose control. Do not use cruise control on slippery roads.

For vehicles with cruise control, a speed of about 40 km/h (25 mph) or more can be maintained without keeping your foot on the accelerator. Cruise control does not work at speeds below about 40 km/h (25 mph).

When the brakes are applied, cruise control is turned off.

If the vehicle has StabiliTrak and the system begins to limit wheel spin, cruise control will automatically disengage. See *StabiliTrak® System on page 9-32*. When road conditions allow the cruise control to be safely used again, it can be turned back on.

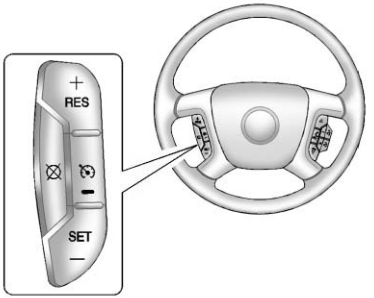

(On/Off): Press to turn the system on or off. The indicator light is on when cruise control is on and turns off when cruise control is off.

+RES (Resume/Accelerate): Press briefly to make the vehicle resume to a previously set speed, or press and hold to accelerate.

SET− (Set/Coast): Press to set the speed and activate cruise control or press and hold to decelerate.

⊗ **(Cancel):** Press to disengage cruise control without erasing the set speed from memory.

Setting Cruise Control

If the cruise button is on when not in use, it could get bumped and go into cruise when not desired. Keep the cruise control switch off when cruise is not being used.

The cruise control light on the instrument cluster comes on after the cruise control has been set to the desired speed.

1. Press the button.
2. Get up to the desired speed.
3. Press the SET− button on the steering wheel and release it.
4. Take your foot off the accelerator.

Resuming a Set Speed

If the cruise control is set at a desired speed and then the brakes are applied, the cruise control is disengaged without erasing the set speed from memory.

Once the vehicle speed reaches about 40 km/h (25 mph) or more, press the +RES button on the steering wheel. The vehicle returns to the previous set speed and stays there.

Increasing Speed While Using Cruise Control

If the cruise control system is already activated,

- Press and hold the +RES button on the steering wheel until the desired speed is reached, then release it.
- To increase vehicle speed in small amounts, press the +RES button. Each time this is done, the vehicle goes about 1.6 km/h (1 mph) faster.

Reducing Speed While Using Cruise Control

If the cruise control system is already activated:

- Press and hold the SET– button on the steering wheel until the desired lower speed is reached, then release it.

- To slow down in small amounts, press the SET– button on the steering wheel briefly. Each time this is done, the vehicle goes about 1.6 km/h (1 mph) slower.

Passing Another Vehicle While Using Cruise Control

Use the accelerator pedal to increase the vehicle speed. When you take your foot off the pedal, the vehicle will slow down to the previous set cruise speed.

Using Cruise Control on Hills

How well the cruise control works on hills depends on the vehicle speed, the load, and the steepness of the hills. When going up steep hills, pressing the accelerator pedal may be necessary to maintain vehicle speed.

While going downhill:

- Vehicles with a four speed automatic transmission may need to have the brakes applied or the transmission shifted to a lower gear to help maintain driver selected speed.
- Vehicles with a six speed automatic transmission have Cruise Grade Braking to help maintain driver selected speed.

Cruise Grade Braking is enabled when the vehicle is started and Cruise Control is active. It is not enabled in Range Selection Mode. It assists in maintaining driver selected speed when driving on downhill grades by using the engine and transmission to slow the vehicle.

To disable and enable Cruise Grade Braking for the current ignition key cycle, press and hold the Tow/Haul button for three seconds. A DIC message displays. See *Transmission Messages on page 5-37*.

When the brakes are manually applied the cruise control is disengaged.

Ending Cruise Control

There are three ways to end cruise control:

- To disengage cruise control, step lightly on the brake pedal.
- Press the ⊗ on the steering wheel.
- To turn off the cruise control, press on the steering wheel.

Erasing Speed Memory

The cruise control set speed is erased from memory if is pressed or if the vehicle is turned off.

Object Detection Systems

Ultrasonic Parking Assist

If available, the Ultrasonic Rear Parking Assist (URPA) system uses sensors on the rear bumper to assist with parking and avoiding objects while in R (Reverse).

⚠ WARNING

The URPA system does not detect children, pedestrians, bicyclists, animals, or objects below the bumper or that are too close or too far from the vehicle. It is not available at speeds greater than 8 km/h (5 mph). To prevent injury, death, or vehicle damage, even with URPA, always check the area around the vehicle and check all mirrors before backing.

How the System Works

URPA comes on automatically when the shift lever is moved into R (Reverse). A single tone sounds to indicate the system is working.

URPA operates only at speeds less than 8 km/h (5 mph).

An obstacle is indicated by audible beeps. The time between the beeps gets shorter as the vehicle approaches the obstacle. A continuous tone is heard when the distance is less than 30 cm (12 in).

To be detected, objects must be at least 25 cm (10 in) off the ground and below rear door level. Objects must also be within 2.5 m (8 ft) from the rear bumper. This distance may be less during warmer or humid weather.

Turning the System On and Off

Press this button, located next to the radio, to disable URPA.

The indicator light comes on and PARK ASSIST OFF displays on the Driver Information Center (DIC). See *Object Detection System Messages on page 5-33*.

When the System Does Not Seem to Work Properly

The following messages may be displayed on the DIC:

SERVICE PARK ASSIST: this message occurs, take the vehicle to your dealer for repair.

PARK ASSIST OFF: This message occurs if the driver disables the system or if the vehicle is driven above 8 km/h (5 mph) in R (Reverse).

PARK ASST BLOCKED SEE OWNERS MANUAL: This message can occur under the following conditions:

- The ultrasonic sensors are not clean. Keep the rear bumper free of mud, dirt, snow, ice, slush, and frost. The message may not clear until frost or ice has melted all around and inside the sensor.
- A trailer is attached to the vehicle, or a bicycle or an object hanging out of the rear door during the current or last drive cycle. URPA will return to normal operation after it is determined the object is removed. This could take a few drive cycles.
- A tow bar is attached to the vehicle.

Other conditions may affect system performance, such as vibrations from a jackhammer or the compression of air brakes on a very large truck.

Rear Vision Camera (RVC)

If available, the Rear Vision Camera (RVC) system displays part of the scene behind the vehicle.

⚠ WARNING

The RVC system does not display children, pedestrians, bicyclists, animals, or any other object located outside the camera's field of view, below the bumper, or under the vehicle. Perceived distances may be different from actual distances. Do not back the vehicle using only the RVC screen, during longer, higher speed backing maneuvers,

(Continued)

WARNING (CONTINUED)

or where there could be cross traffic. Failure to use proper care before backing may result in injury, death, or vehicle damage. Always check behind and around the vehicle before backing.

Vehicles without Navigation System

The RVC system displays a view of the area behind the vehicle. When the vehicle is on and shifted into R (Reverse) the video image appears on the inside rearview mirror. The video image disappears after the vehicle is shifted out of R (Reverse).

Vehicles with Navigation System

The RVC system is designed to help the driver when backing up by displaying a view of the area behind the vehicle. When the vehicle is

shifted into R (Reverse), the video image appears on the navigation screen. After a delay, the navigation screen displays the last screen after the vehicle is shifted out of R (Reverse).

Turning the RVC System On or Off

To turn the RVC system on or off:

1. Shift into P (Park).
2. Press MENU to enter the configure menu options. Turn the Multifunction knob until the Display feature is highlighted and press the Multifunction knob. Or press the Display screen button
3. Select the Rear Camera Options screen button. The Rear Camera Options screen displays.
4. Select the Video screen button. When the Video screen button is highlighted the RVC system is on.

The delay that is received after shifting out of R (Reverse) is approximately 10 seconds. The delay can be canceled by performing one of the following:

- Pressing a hard key on the navigation system.
- Shifting into P (Park).
- Reach a vehicle speed of 8 km/h (5 mph).

Symbols

The navigation system may have a feature that allows for viewing parking assist symbols on the navigation screen while using the RVC. The Ultrasonic Rear Park Assist (URPA) system must not be disabled to use the caution symbols. If URPA has been disabled and the symbols have been turned on, the Rear Parking Assist Symbols Unavailable error message may display. See *Ultrasonic Parking Assist on page 9-37*.

The symbols appear near objects detected by the URPA system. The symbol may cover the object when viewing the navigation screen.

To turn the symbols on or off:

1. Make sure that URPA has not been disabled.
2. Shift into P (Park).
3. Press MENU to enter the configure menu options. Turn the Multifunction knob until the Display feature is highlighted and press the Multifunction knob. Or press the Display screen button
4. Select the Rear Camera Options screen button. The Rear Camera Options screen displays.
5. Touch the Symbols screen button. The screen button will be highlighted when on.

Guidelines

The RVC system may have a guideline overlay that can help the driver align the vehicle when backing into a parking spot.

To turn the guidelines on or off:

1. Make sure that URPA has not been disabled.
2. Shift into P (Park).
3. Press MENU to enter the configure menu options. Turn the Multifunction knob until the Display feature is highlighted and press the Multifunction knob. Or press the Display screen button
4. Select the Rear Camera Options screen button. The Rear Camera Options screen displays.
5. Touch the Guidelines screen button. The screen button will be highlighted when on.

RVC Location

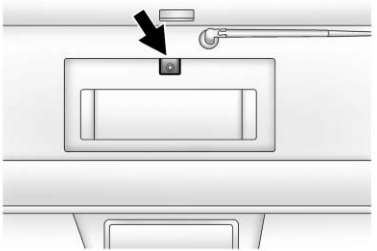

The camera is above the license plate.

This shows the field of view that the camera provides.

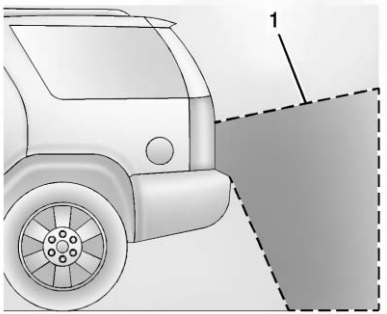

1. View displayed by the camera

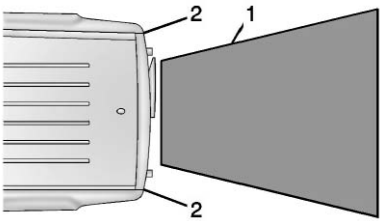

1. View displayed by the camera
2. Corners of the rear bumper

Displayed images may be further or closer than they appear. The area displayed is limited and objects which are close to either corner of the bumper or under the bumper do not display.

When the System Does Not Seem To Work Properly

The RVC system might not work properly or display a clear image if:

- The RVC is turned off. See “Turning the RVC System On or Off” earlier in this section.
- It is dark.
- The sun or the beam of headlamps is shining directly into the camera lens.
- Ice, snow, mud, or anything else builds up on the camera lens. Clean the lens, rinse it with water, and wipe it with a soft cloth.
- The back of the vehicle is in an accident, the position and mounting angle of the camera can change or the camera can be affected. Be sure to have the camera and its position and mounting angle checked at your dealer.

The RVC system display in the rearview mirror may turn off or not appear as expected due to one of the following conditions. If this occurs the left indicator light on the mirror will flash.

- A slow flash may indicate a loss of video signal, or no video signal present during the reverse cycle.
- A fast flash may indicate that the display has been on for the maximum allowable time during a reverse cycle, or the display has reached an Over Temperature limit.

  The fast flash conditions are used to protect the video device from high temperature conditions. Once conditions return to normal the device will reset and the green indicator will stop flashing.

During any of these fault conditions, the display will be blank and the indicator will flash while the vehicle is in R (Reverse) or until the conditions return to normal.

Fuel

For diesel engine vehicles, see “Fuel for Diesel Engines” in the Duramax diesel supplement.

For Vehicles with gasoline engines, please read this.

Gasoline

Use of the recommended fuel is an important part of the proper maintenance of this vehicle. To help keep the engine clean and maintain optimum vehicle performance, we recommend the use of gasoline advertised as TOP TIER Detergent Gasoline.

Look for the TOP TIER label on the fuel pump to ensure gasoline meets enhanced detergency standards developed by auto companies. A list of marketers providing TOP TIER Detergent Gasoline can be found at www.toptiergas.com. TOP TIER gasoline is only available in the U.S. and Canada.

TOP TIER™
Detergent Gasoline

CATEGORIE SUPERIEURE™
Essences Détergentes

Vehicles that have a yellow fuel cap can use either unleaded gasoline or ethanol fuel containing up to 85% ethanol (E85). See *Fuel E85 (85% Ethanol) on page 9-44*. For all other vehicles, use only the unleaded gasoline described under *Recommended Fuel on page 9-42*.

Recommended Fuel

Use regular unleaded gasoline with a posted octane rating of 87 or higher. If the octane rating is less than 87, an audible knocking noise, commonly referred to as spark knock, might be heard when driving. If this occurs, use a gasoline rated at 87 octane or higher as soon as possible. If heavy knocking is heard when using gasoline rated at 87 octane or higher, the engine needs service.

Gasoline Specifications

At a minimum, gasoline should meet ASTM specification D 4814. Some gasolines contain an octane-enhancing additive called methylcyclopentadienyl manganese tricarbonyl (MMT). We recommend against the use of gasolines containing MMT. See *Fuel Additives on page 9-43* for additional information.

California Fuel Requirements

If the vehicle is certified to meet California Emissions Standards, it is designed to operate on fuels that meet California specifications. See the underhood emission control label. If this fuel is not available in

states adopting California Emissions Standards, the vehicle will operate satisfactorily on fuels meeting federal specifications, but emission control system performance might be affected. The malfunction indicator lamp could turn on and the vehicle might fail a smog-check test. See *Malfunction Indicator Lamp on page 5-17*. If this occurs, return to your authorized dealer for diagnosis. If it is determined that the condition is caused by the type of fuel used, repairs might not be covered by the vehicle warranty.

Fuels in Foreign Countries

Never use leaded gasoline or any other fuel not recommended in the previous text on fuel. Costly repairs caused by use of improper fuel would not be covered by the vehicle warranty.

To check the fuel availability, ask an auto club, or contact a major oil company that does business in the country where you will be driving.

Fuel Additives

To provide cleaner air, all gasolines in the United States are now required to contain additives that help prevent engine and fuel system deposits from forming, allowing the emission control system to work properly. In most cases, nothing should have to be added to the fuel. However, some gasolines contain only the minimum amount of additive required to meet U.S. Environmental Protection Agency regulations. To help keep fuel injectors and intake valves clean and avoid problems due to dirty injectors or valves, look for gasoline that is advertised as TOP TIER Detergent Gasoline. Look for the TOP TIER label on the fuel pump to ensure gasoline meets enhanced detergency standards developed by the auto companies. A list of marketers providing TOP TIER Detergent Gasoline can be found at www.toptiergas.com.

For customers who do not use TOP TIER Detergent Gasoline regularly, one bottle of GM Fuel System Treatment PLUS, added to the fuel tank at every engine oil change, can help clean deposits from fuel injectors and intake valves. GM Fuel System Treatment PLUS is the only gasoline additive recommended by General Motors. It is available at your dealer.

Gasolines containing oxygenates, such as ethers and ethanol, and reformulated gasolines might be available in your area. We recommend that you use these gasolines, if they comply with the specifications described earlier. However, E85 (85% ethanol) and other fuels containing more than 15% ethanol must not be used in vehicles that were not designed for those fuels.

Notice: **This vehicle was not designed for fuel that contains methanol. Do not use fuel containing methanol. It can corrode metal parts in the fuel system and also damage plastic and rubber parts. That damage would not be covered under the vehicle warranty.**

Some gasolines that are not reformulated for low emissions can contain an octane-enhancing additive called methylcyclopentadienyl manganese tricarbonyl (MMT); ask the attendant where you buy gasoline whether the fuel contains MMT. We recommend against the use of such gasolines. Fuels containing MMT can reduce spark plug life and affect emission control system performance. The malfunction indicator lamp might turn on. If this occurs, return to your dealer for service.

Fuel E85 (85% Ethanol)

Vehicles that have a yellow fuel cap can use either unleaded gasoline or ethanol fuel containing up to 85% ethanol (E85). For all other vehicles, use only the unleaded gasoline described under *Recommended Fuel on page 9-42*.

We encourage the use of E85 in vehicles that are designed to use it. The ethanol in E85 is a “renewable” fuel, meaning it is made from renewable sources such as corn and other crops.

Many service stations will not have an 85% ethanol fuel (E85) pump available. The U.S. Department of Energy has an alternative fuels website (www.afdc.energy.gov/afdc/locator/stations/) that can help you find E85 fuel. Those stations that do have E85 should have a label indicating ethanol content. Do not use the fuel if the ethanol content is greater than 85%.

At a minimum, E85 should meet ASTM Specification D 5798 or CGSB Specification 3.512. Filling the tank with fuel mixtures that do not meet ASTM or CGSB specifications can affect driveability and could cause the malfunction indicator lamp to come on. As the outside temperature approaches freezing, ethanol fuel distributors should supply winter grade ethanol, the same as with unleaded gasoline.

It is best not to alternate repeatedly between gasoline and E85. If you do switch fuels, it is recommended that you add as much fuel as possible — do not add less than 11 L (3 gal) when refueling. You should drive the vehicle immediately after refueling for at least 11 km (7 mi) to allow the vehicle to adapt to the change in ethanol concentration.

E85 has less energy per liter (gallon) than gasoline, so you will need to refill the fuel tank more often when using E85 than when you are using gasoline. See *Filling the Tank on page 9-45*.

Notice: **Some additives are not compatible with E85 fuel and can harm the vehicle's fuel system. Do not add anything to E85. Damage caused by additives would not be covered by the vehicle warranty.**

Notice: **This vehicle was not designed for fuel that contains methanol. Do not use fuel containing methanol. It can corrode metal parts in the fuel system and also damage plastic and rubber parts. That damage would not be covered under the vehicle warranty.**

Filling the Tank

⚠ WARNING

Fuel vapors and fuel fires burn violently and can cause injury or death.

- To help avoid injuries to you and others, read and follow all the instructions on the fuel pump island.
- Turn off the engine when refueling.
- Keep sparks, flames, and smoking materials away from fuel.
- Do not leave the fuel pump unattended.
- Do not reenter the vehicle while pumping fuel.
- Keep children away from the fuel pump and never let children pump fuel.

(Continued)

WARNING (CONTINUED)

- Fuel can spray out if the fuel cap is opened too quickly. This spray can happen if the tank is nearly full, and is more likely in hot weather. Open the fuel cap slowly and wait for any hiss noise to stop then unscrew the cap all the way

The tethered fuel cap is located behind a hinged fuel door on the driver side of the vehicle.

If the vehicle has E85 fuel capability, the fuel cap will be yellow and state that E85 or gasoline can be used. See *Fuel E85 (85% Ethanol) on page 9-44*.

To remove the fuel cap, turn it slowly counterclockwise.

While refueling, hang the tethered fuel cap from the hook on the fuel door.

Be careful not to spill fuel. Do not top off or overfill the tank and wait a few seconds after you have finished pumping before removing the nozzle. Clean fuel from painted surfaces as soon as possible. See *Exterior Care on page 10-84*.

When replacing the fuel cap, turn it clockwise until it clicks. Make sure the cap is fully installed. The diagnostic system can determine if the fuel cap has been left off or improperly installed. This would allow fuel to evaporate into the atmosphere. See *Malfunction Indicator Lamp on page 5-17*.

⚠ WARNING

If a fire starts while you are refueling, do not remove the nozzle. Shut off the flow of fuel by shutting off the pump or by notifying the station attendant. Leave the area immediately.

Notice: **If you need a new fuel cap, be sure to get the right type. Your dealer can get one for you. If you get the wrong type, it may not fit properly. This may cause the malfunction indicator lamp to light and may damage the fuel tank and emissions system. See *Malfunction Indicator Lamp on page 5-17*.**

Filling a Portable Fuel Container

⚠ WARNING

Filling a portable fuel container while it is in the vehicle can cause fuel vapors that can ignite either by static electricity or other means. You or others could be badly burned and the vehicle could be damaged. Always:

- Use approved fuel containers.

(Continued)

WARNING (CONTINUED)

- Remove container from vehicle, trunk, or pickup bed before filling.
- Place container on the ground.
- Place the nozzle inside the fill opening of the container before dispensing fuel, and keep it in contact with the fill opening until filling is complete.
- Do not smoke while pumping fuel.

Towing

General Towing Information

Only use towing equipment that has been designed for the vehicle. Contact your dealer or trailering dealer for assistance with preparing the vehicle for towing a trailer. Read the entire section before towing a trailer.

For towing a disabled vehicle, see *Towing the Vehicle on page 10-81*. For towing the vehicle behind another vehicle such as a motor home, see *Recreational Vehicle Towing on page 10-81*.

Driving Characteristics and Towing Tips

Driving with a Trailer

When towing a trailer:

- Become familiar with the state and local laws that apply to trailer towing.
- Do not tow a trailer during the first 800 km (500 mi) to prevent damage to the engine, axle, or other parts.
- Then during the first 800 km (500 mi) of trailer towing, do not drive over 80 km/h (50 mph) and do not make starts at full throttle.
- Vehicles can tow in D (Drive). Shift the transmission to a lower gear if the transmission shifts too often under heavy loads and/or hilly conditions.

⚠ WARNING

When towing a trailer, exhaust gases may collect at the rear of the vehicle and enter if the liftgate, trunk/hatch, or rear-most window is open.

When towing a trailer:

- Do not drive with the liftgate, trunk/hatch, or rear-most window open.

(Continued)

WARNING (CONTINUED)

- Fully open the air outlets on or under the instrument panel.
- Also adjust the Climate Control system to a setting that brings in only outside air. See “Climate Control System” in the Index.

For more information about Carbon Monoxide, see *Engine Exhaust on page 9-21*.

Towing a trailer requires a certain amount of experience. The combination you are driving is longer and not as responsive as the vehicle itself. Get acquainted with the handling and braking of the rig before setting out for the open road.

Before starting, check all trailer hitch parts and attachments, safety chains, electrical connectors, lamps, tires, and mirrors. If the trailer has electric brakes, start the

combination moving and then apply the trailer brake controller by hand to be sure the brakes work.

During the trip, check occasionally to be sure that the load is secure and the lamps and any trailer brakes still work.

Following Distance

Stay at least twice as far behind the vehicle ahead as you would when driving the vehicle without a trailer. This can help to avoid heavy braking and sudden turns.

Passing

More passing distance is needed when towing a trailer. The combination will not accelerate as quickly and is longer so it is necessary to go much farther beyond the passed vehicle before returning to the lane.

Backing Up

Hold the bottom of the steering wheel with one hand. To move the trailer to the left, move that hand to the left. To move the trailer to the right, move your hand to the right. Always back up slowly and, if possible, have someone guide you.

Making Turns

Notice: **Making very sharp turns while trailering could cause the trailer to come in contact with the vehicle. The vehicle could be damaged. Avoid making very sharp turns while trailering.**

When turning with a trailer, make wider turns than normal. Do this so the trailer will not strike soft shoulders, curbs, road signs, trees, or other objects. Avoid jerky or sudden maneuvers. Signal well in advance.

If the trailer turn signal bulbs burn out, the arrows on the instrument cluster will still flash for turns. It is important to check occasionally to be sure the trailer bulbs are still working.

Driving on Grades

Reduce speed and shift to a lower gear *before* starting down a long or steep downgrade. If the transmission is not shifted down, the brakes might get hot and no longer work well.

Vehicles can tow in D (Drive). Shift the transmission to a lower gear if the transmission shifts too often under heavy loads and/or hilly conditions.

The Tow/Haul Mode may be used if the transmission shifts too often. See *Tow/Haul Mode on page 9-29*.

When towing at high altitude on steep uphill grades, consider the following: Engine coolant will boil at a lower temperature than at normal altitudes. If the engine is turned off immediately after towing at high altitude on steep uphill grades, the vehicle may show signs similar to engine overheating. To avoid this, let the engine run while parked, preferably on level ground, with the automatic transmission in P (Park)

for a few minutes before turning the engine off. If the overheat warning comes on, see *Engine Overheating on page 10-21*.

Parking on Hills

⚠ WARNING

Parking the vehicle on a hill with the trailer attached can be dangerous. If something goes wrong, the rig could start to move. People can be injured, and both the vehicle and the trailer can be damaged. When possible, always park the rig on a flat surface.

If parking the rig on a hill:

1. Press the brake pedal, but do not shift into P (Park) yet. Turn the wheels into the curb if facing downhill or into traffic if facing uphill.
2. Have someone place chocks under the trailer wheels.
3. When the wheel chocks are in place, release the regular brakes until the chocks absorb the load.
4. Reapply the brake pedal. Then apply the parking brake and shift into P (Park).
5. Release the brake pedal.

Leaving After Parking on a Hill

1. Apply and hold the brake pedal.
2. Start the engine.
3. Shift into a gear.
4. Release the parking brake.
5. Let up on the brake pedal.
6. Drive slowly until the trailer is clear of the chocks.
7. Stop and have someone pick up and store the chocks.

Maintenance when Trailer Towing

The vehicle needs service more often when pulling a trailer. See *Maintenance Schedule on page 11-3*. Things that are especially important in trailer operation are automatic transmission fluid, engine oil, axle lubricant, belts, cooling system, and brake system. It is a good idea to inspect these before and during the trip.

Check periodically to see that all hitch nuts and bolts are tight.

Trailer Towing

If the vehicle has a diesel engine, see the Duramax diesel supplement.

⚠ WARNING

The driver can lose control when pulling a trailer if the correct equipment is not used or the vehicle is not driven properly. For example, if the trailer is too heavy, the brakes may not work well — or even at all. The driver and passengers could be

(Continued)

WARNING (CONTINUED)

seriously injured. The vehicle may also be damaged; the resulting repairs would not be covered by the vehicle warranty. Pull a trailer only if all the steps in this section have been followed. Ask your dealer for advice and information about towing a trailer with the vehicle.

Notice: **Pulling a trailer improperly can damage the vehicle and result in costly repairs not covered by the vehicle warranty. To pull a trailer correctly, follow the advice in this section and see your dealer for important information about towing a trailer with the vehicle.**

To identify the trailering capacity of the vehicle, read the information in “Weight of the Trailer” that appears later in this section.

Trailering is different than just driving the vehicle by itself. Trailering means changes in handling, acceleration, braking, durability, and fuel economy. Successful, safe trailering takes correct equipment, and it has to be used properly.

The following information has many time-tested, important trailering tips and safety rules. Many of these are important for your safety and that of your passengers. So please read this section carefully before pulling a trailer.

Weight of the Trailer

How heavy can a trailer safely be?

It depends on how the rig is used. For example, speed, altitude, road grades, outside temperature, and how much the vehicle is used to pull a trailer are all important. It can depend on any special equipment on the vehicle, and the amount of tongue weight the vehicle can carry.

See “Weight of the Trailer Tongue” later in this section for more information.

Maximum trailer weight is calculated assuming only the driver is in the tow vehicle and it has all the required trailering equipment. The weight of additional optional equipment, passengers,and cargo in the tow vehicle must be subtracted from the maximum trailer weight.

Use the following chart to determine how much the vehicle can weigh, based upon the vehicle model and options.

Vehicle	Axle Ratio	Maximum Trailer Weight	GCWR*
G1500 Cargo Van 2WD			
4.3L V6	3.42	1 950 kg (4,300 lbs)	4 309 kg (9,500 lbs)
5.3L V8	3.42 3.73	3 039 kg (6,700 lbs)	5 443 kg (12,000 lbs)
H1500 Cargo Van AWD			
5.3L V8	3.42	2 948 kg (6,500 lbs)	5 443 kg (12,000 lbs)
G1500 Passenger Van 2WD			
5.3L V8	3.42 3.73	2 812 kg (6,200 lbs)	5 443 kg (12,000 lbs)
H1500 Passenger Van AWD			
5.3L V8	3.42 3.73	2 722 kg (6,000 lbs)	5 443 kg (12,000 lbs)
G2500 Cargo Van 2WD Short Wheelbase			
4.8L V8	3.42	3 357 kg (7,400 lbs)	5 897 kg (13,000 lbs)
6.0L V8	3.42	4 536 kg (10,000 lbs)	7 257 kg (16,000 lbs)
G2500 Cargo Van 2WD Long Wheelbase			
4.8L V8	3.42	3 266 kg (7,200 lbs)	5 897 kg (13,000 lbs)
6.0L V8	3.42	4 536 kg (10,000 lbs)	7 257 kg (16,000 lbs)

Vehicle	Axle Ratio	Maximum Trailer Weight	GCWR*
G2500 Passenger Van 2WD Short Wheelbase			
4.8L V8	3.42	3 039 kg (6,700 lbs)	5 897 kg (13,000 lbs)
6.0L V8	3.42	4 445 kg (9,800 lbs)	7 257 kg (16,000 lbs)
G3500 Cargo Van 2WD Short Wheelbase			
4.8L V8	3.42	3 357 kg (7,400 lbs)	5 897 kg (13,000 lbs)
6.0L V8	3.42	4 536 kg (10,000 lbs)	7 257 kg (16,000 lbs)
G3500 Cargo Van 2WD Long Wheelbase			
4.8L V8	3.42	3 221 kg (7,100 lbs)	5 897 kg (13,000 lbs)
6.0L V8	3.42	4 536 kg (10,000 lbs)	7 257 kg (16,000 lbs)
G3500 Passenger Van 2WD Short Wheelbase			
6.0L V8	3.42	4 400 kg (9,700 lbs)	7 257 kg (16,000 lbs)
G3500 Passenger Van 2WD Long Wheelbase			
6.0L V8	3.42	4 218 kg (9,300 lbs)	7 257 kg (16,000 lbs)
*The Gross Combined Weight Rating (GCWR) is the total allowable weight of the completely loaded vehicle and trailer including any passengers, cargo equipment and conversion. The GCWR for the vehicle should not be exceeded.			

Ask your dealer for our trailering information or advice, or write us at our Customer Assistance Offices. See *Customer Assistance Offices (U.S. and Canada) on page 13-5* or *Customer Assistance Offices (Mexico) on page 13-5* for more information.

Weight of the Trailer Tongue

The tongue load (1) of any trailer is an important weight to measure because it affects the total gross weight of the vehicle. The Gross Vehicle Weight (GVW) includes the curb weight of the vehicle, any cargo carried in it, and the people who will be riding in the vehicle. If there are a lot of options, equipment, passengers, or cargo in the vehicle, it will reduce the tongue weight the vehicle can carry, which will also reduce the trailer weight the vehicle can tow. If towing a trailer, the tongue load must be added to the GVW because the vehicle will be carrying that weight, too. See *Vehicle Load Limits on page 9-10* for more information about the vehicle's maximum load capacity.

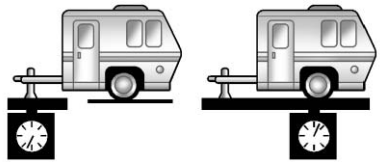

The trailer tongue weight (1) should be 10 percent to 15 percent of the total loaded trailer weight (2), up to a maximum of 181 kg (400 lbs) with a weight carrying hitch. The trailer tongue weight (1) should be 10 percent to 15 percent of the total loaded trailer weight (2), up to a maximum of 454 kg (1,000 lbs) with a weight distributing hitch.

Do not exceed the maximum allowable tongue weight for the vehicle. Choose the shortest hitch extension that will position the hitch ball closest to the vehicle. This will help reduce the effect of trailer tongue weight on the rear axle.

After loading the trailer, weigh the trailer and then the tongue, separately, to see if the weights are proper. If they are not, adjustments might be made by moving some items around in the trailer.

Trailering may be limited by the vehicle's ability to carry tongue weight. Tongue weight cannot cause the vehicle to exceed the GVWR (Gross Vehicle Weight Rating) or the RGAWR (Rear Gross Axle Weight Rating). The effect of additional weight may reduce the trailering capacity more than the total of the additional weight.

It is important that the vehicle does not exceed any of its ratings — GCWR, GVWR, RGAWR, Maximum Trailer Rating or Tongue

Weight. The only way to be sure it is not exceeding any of these ratings is to weigh the vehicle and trailer.

Total Weight on the Vehicle's Tires

Be sure the vehicle tires are inflated to the upper limit for cold tires. These numbers can be found on the Certification label at the rear edge of the driver door, or see *Vehicle Load Limits on page 9-10*. Make sure not to go over the GVW limit for the vehicle, or the GAWR, including the weight of the trailer tongue. If using a weight distributing hitch, make sure not to go over the rear axle limit before applying the weight distribution spring bars.

Towing Equipment

Hitches

It is important to have the correct hitch equipment. Crosswinds, large trucks going by and rough roads are a few reasons why the right hitch is needed.

Weight-Distributing Hitches and Weight Carrying Hitches

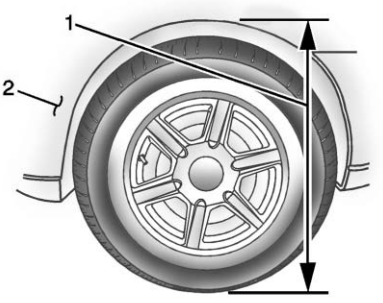

1. Body to Ground Distance
2. Front of Vehicle

When using a weight-distributing hitch, the hitch must be adjusted so the distance (1) remains the same both before and after coupling the trailer to the tow vehicle.

If a step-bumper hitch will be used, the bumper could be damaged in sharp turns. Make sure there is ample room when turning to avoid contact between the trailer and the bumper.

If the loaded trailer being pulled will weigh more than 2 270 kg (5,000 lbs), be sure to use a properly mounted weight-distributing hitch and sway control of the proper size. This equipment is very important for proper vehicle loading and good handling when driving. Always use a sway control if the trailer will weigh more than these limits. Ask a hitch dealer about sway controls.

Will any holes need to be made in the body of the vehicle when a trailer hitch is installed?

If using the wiring provided with the factory-installed trailering package, no holes need to be made in the body of the vehicle. However, if an aftermarket hitch is installed, holes may need to be made in the body.

If holes are made in the body, then be sure to seal the holes later when the hitch is removed. If the holes are

not sealed, deadly carbon monoxide (CO) from the engine's exhaust can get into the vehicle as well as dirt and water. See “Carbon Monoxide” under *Engine Exhaust on page 9-21*.

Safety Chains

Always attach chains between the vehicle and the trailer. Cross the safety chains under the tongue of the trailer to help prevent the tongue from contacting the road if it becomes separated from the hitch. Always leave just enough slack so the rig can turn. Never allow safety chains to drag on the ground.

Trailer Brakes

A loaded trailer that weighs more than 680 kg (1,500 lbs) needs to have its own brake system that is adequate for the weight of the trailer. Be sure to read and follow the instructions for the trailer brakes so they are installed, adjusted and maintained properly.

Trailer Wiring Harness

The optional heavy-duty trailer wiring package includes a wiring harness, with a seven-pin connector at the rear of the vehicle and a four-wire harness assembly under the driver side of the instrument panel. The four-wire harness assembly comes without a connector.

If the vehicle does not have a trailer hitch, the seven-wire harness assembly with connector is taped together and located in a frame pocket at the driver side rear left corner of the frame.

If the vehicle has a trailer hitch, the seven-wire harness assembly with connector is attached to a bracket on the hitch platform. In both cases, the seven-wire harness has a connector and includes a 30-amp feed wire.

The seven-wire harness connector contains the following trailer circuits:

- Light Green: Back-up Lamps (10A fuse)**
- White: Ground
- Dark Blue: Trailer Brake Signal
- Dark Green: Right Rear Stop and Turn Signal*
- Red/Black Stripe: Battery Feed (30A Fuse)
- Brown: Trailer Park Lamp Supply Voltage (15A fuse)**
- Yellow: Left Rear Stop and Turn Signal *

The four-wire harness (without connector) contains the following circuits:

- Black: Ground
- Red/White: Battery Feed
- Dark Blue: Trailer Brake Signal
- Light Blue: CHMSL/Stoplamp Supply Voltage

* If the vehicle is a cutaway with trailer provisions, a 15 amp fuse will be shared for both left/stop trailer turn and right/stop trailer turn signals. However, the cutaway lighting connector will have a 10 amp fuse for each signal.

** If the vehicle is a cutaway with trailer provisions, a 15 amp fuse will be shared for trailer park lamps and cutaway rear lighting connector park lamps. Also, a 10 amp fuse will be shared for trailer back-up lamps and cutaway rear lighting connector back-up lamps.

Tow/Haul Mode

This button is on the instrument panel, to the right of the steering wheel.

Pressing this button turns on and off the Tow/Haul Mode.

This indicator light on the instrument cluster comes on when the Tow/Haul Mode is on.

Tow/Haul is a feature that assists when pulling a heavy trailer or a large or heavy load. See *Tow/Haul Mode on page 9-29*.

Tow/Haul is designed to be most effective when the vehicle and trailer combined weight is at least 75 percent of the vehicle Gross Combined Weight Rating (GCWR). See “Weight of the Trailer” in *Trailer Towing on page 9-49*. Tow/Haul is most useful under the following driving conditions:

- When pulling a heavy trailer or a large or heavy load through rolling terrain.
- When pulling a heavy trailer or a large or heavy load in stop and go traffic.
- When pulling a heavy trailer or a large or heavy load in busy parking lots where improved low speed control of the vehicle is desired.

Operating the vehicle in Tow/Haul when lightly loaded or with no trailer at all will not cause damage. However, there is no benefit to the selection of Tow/Haul when the vehicle is unloaded. Such a selection when unloaded may result in unpleasant engine and transmission driving characteristics and reduced fuel economy. Tow/Haul is recommended only when pulling a heavy trailer or a large or heavy load.

Conversions and Add-Ons

Add-On Electrical Equipment

Notice: **Some electrical equipment can damage the vehicle or cause components to not work and would not be covered by the warranty. Always check with your dealer before adding electrical equipment.**

Add-on equipment can drain the vehicle's 12-volt battery, even if the vehicle is not operating.

The vehicle has an airbag system. Before attempting to add anything electrical to the vehicle, see *Servicing the Airbag-Equipped Vehicle on page 3-31* and *Adding Equipment to the Airbag-Equipped Vehicle on page 3-31*.

✍ NOTES

Vehicle Care

General Information

General Information 10-2
California Proposition 65 Warning 10-3
California Perchlorate Materials Requirements 10-3
Accessories and Modifications 10-3

Vehicle Checks

Doing Your Own Service Work 10-4
Hood 10-4
Engine Compartment Overview 10-6
Engine Oil 10-7
Engine Oil Life System 10-9
Automatic Transmission Fluid (4-Speed Transmission) 10-10
Automatic Transmission Fluid (6-Speed Transmission) 10-12
Engine Air Cleaner/Filter 10-15
Cooling System 10-16
Engine Coolant 10-17
Engine Overheating 10-21
Engine Fan 10-22
Power Steering Fluid 10-23
Washer Fluid 10-23
Brakes 10-24
Brake Fluid 10-25
Battery 10-27
All-Wheel Drive 10-27
Front Axle 10-28
Rear Axle 10-28
Noise Control System 10-29
Starter Switch Check 10-30
Automatic Transmission Shift Lock Control Function Check 10-30
Ignition Transmission Lock Check 10-31
Park Brake and P (Park) Mechanism Check 10-31
Wiper Blade Replacement 10-31

Headlamp Aiming

Headlamp Aiming 10-32

Bulb Replacement

Bulb Replacement 10-32
Halogen Bulbs 10-32
Headlamps 10-33
Front Turn Signal, Sidemarker, and Parking Lamps 10-34
Taillamps 10-35
Center High-Mounted Stoplamp (CHMSL) 10-36
License Plate Lamp 10-37
Replacement Bulbs 10-37

Electrical System

Electrical System Overload 10-38
Fuses and Circuit Breakers 10-38
Engine Compartment Fuse Block 10-38
Floor Console Fuse Block 10-41

Wheels and Tires
Tires 10-44
All-Season Tires 10-45
Winter Tires 10-45
Summer Tires 10-46
Tire Sidewall Labeling 10-46
Tire Designations 10-48
Tire Terminology and Definitions 10-50
Tire Pressure 10-53
Tire Pressure Monitor System 10-54
Tire Pressure Monitor Operation 10-55
Tire Inspection 10-58
Tire Rotation 10-58
Dual Tire Rotation 10-59
When It Is Time for New Tires 10-60
Buying New Tires 10-61
Different Size Tires and Wheels 10-62
Uniform Tire Quality Grading 10-63
Wheel Alignment and Tire Balance 10-64
Wheel Replacement 10-65
Tire Chains 10-65
If a Tire Goes Flat 10-66
Tire Changing 10-68
Secondary Latch System . . . 10-75
Full-Size Spare Tire 10-77

Jump Starting
Jump Starting 10-78

Towing
Towing the Vehicle 10-81
Recreational Vehicle Towing 10-81

Appearance Care
Exterior Care 10-84
Interior Care 10-87
Floor Mats 10-90

General Information

For service and parts needs, visit your dealer. You will receive genuine GM parts and GM-trained and supported service people.

Genuine GM parts have one of these marks:

ACDelco®

Genuine GM | Parts

GM Accessories

California Proposition 65 Warning

Most motor vehicles, including this one, contain and/or emit chemicals known to the State of California to cause cancer and birth defects or other reproductive harm. Engine exhaust, many parts and systems, many fluids, and some component wear by-products contain and/or emit these chemicals.

California Perchlorate Materials Requirements

Certain types of automotive applications, such as airbag initiators, safety belt pretensioners, and lithium batteries contained in Remote Keyless Entry transmitters, may contain perchlorate materials. Special handling may be necessary. For additional information, see www.dtsc.ca.gov/hazardouswaste/perchlorate.

Accessories and Modifications

Adding non-dealer accessories or making modifications to the vehicle can affect vehicle performance and safety, including such things as airbags, braking, stability, ride and handling, emissions systems, aerodynamics, durability, and electronic systems like antilock brakes, traction control, and stability control. These accessories or modifications could even cause malfunction or damage not covered by the vehicle warranty.

Damage to vehicle components resulting from modifications or the installation or use of non-GM certified parts, including control module or software modifications, is not covered under the terms of the vehicle warranty and may affect remaining warranty coverage for affected parts.

GM Accessories are designed to complement and function with other systems on the vehicle. See your dealer to accessorize the vehicle using genuine GM Accessories installed by a dealer technician.

Also, see *Adding Equipment to the Airbag-Equipped Vehicle on page 3-31*.

Vehicle Checks

Doing Your Own Service Work

⚠ WARNING

It can be dangerous to work on your vehicle if you do not have the proper knowledge, service manual, tools, or parts. Always follow owner manual procedures and consult the service manual for your vehicle before doing any service work.

If doing some of your own service work, use the proper service manual. It tells you much more about how to service the vehicle than this manual can. To order the proper service manual, see *Service Publications Ordering Information on page 13-16*.

This vehicle has an airbag system. Before attempting to do your own service work, see *Servicing the Airbag-Equipped Vehicle on page 3-31*.

Keep a record with all parts receipts and list the mileage and the date of any service work performed. See *Maintenance Records on page 11-15*.

Notice: **Even small amounts of contamination can cause damage to vehicle systems. Do not allow contaminants to contact the fluids, reservoir caps, or dipsticks.**

Hood

To open the hood:

1. Pull the handle with this symbol on it. It is in front of the driver side door frame near the floor.

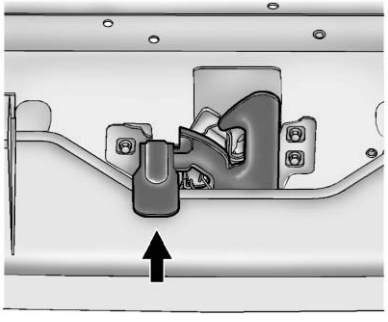

2. Go to the front of the vehicle and lift up the secondary hood release, which is underneath the middle of the hood.

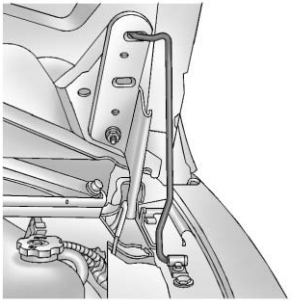

3. Lift the hood, release the hood prop from its retainer, and put the hood prop into the slot in the hood.

If the vehicle has an underhood lamp, it will automatically come on and stay on until the hood is closed.

Before closing the hood, be sure all of the filler caps are on properly. Then lift the hood to relieve pressure on the hood prop. Remove the hood prop from the slot in the hood and return the prop to its retainer. Let the hood down and close it firmly.

Engine Compartment Overview

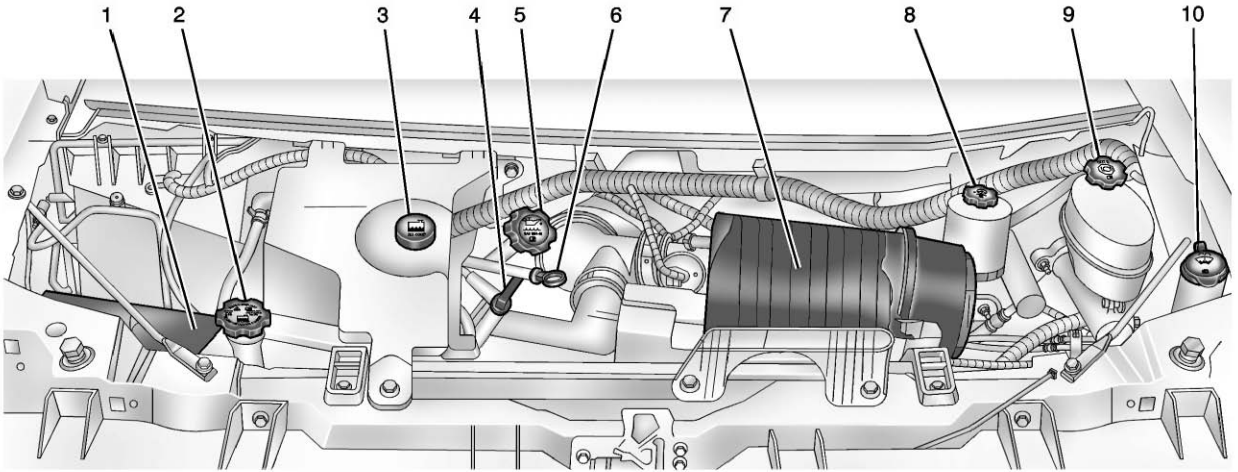

4.3L V6 Engine Shown (4.8L V8 Engine, 5.3L V8 Engine, and 6.0L V8 Engine Similar)

1. *Battery on page 10-27*.
2. Radiator Pressure Cap. See *Cooling System on page 10-16*.
3. Coolant Recovery Tank. See *Cooling System on page 10-16*.
4. Automatic Transmission Fluid Dipstick. See “Checking the Fluid Level” under *Automatic Transmission Fluid (4-Speed Transmission) on page 10-10* or *Automatic Transmission Fluid (6-Speed Transmission) on page 10-12*.
5. Engine Oil Fill Cap. See “When to Add Engine Oil” under *Engine Oil on page 10-7*.
6. Engine Oil Dipstick. See “Checking Engine Oil” under *Engine Oil on page 10-7*.
7. *Engine Air Cleaner/Filter on page 10-15*.
8. Power Steering Fluid Reservoir. See *Power Steering Fluid on page 10-23*.
9. Brake Master Cylinder Reservoir. See *Brake Fluid on page 10-25*.
10. Windshield Washer Fluid Reservoir. See “Adding Washer Fluid” under *Washer Fluid on page 10-23*.

Engine Oil

For diesel engine vehicles, see “Engine Oil” in the Duramax diesel supplement.

To ensure proper engine performance and long life, careful attention must be paid to engine oil. Following these simple, but important steps will help protect your investment:

- Always use engine oil approved to the proper specification and of the proper viscosity grade. See “Selecting the Right Engine Oil” in this section.
- Check the engine oil level regularly and maintain the proper oil level. See “Checking Engine Oil” and “When to Add Engine Oil” in this section.
- Change the engine oil at the appropriate time. See *Engine Oil Life System on page 10-9*.
- Always dispose of engine oil properly. See “What to Do with Used Oil” in this section.

Checking Engine Oil

It is a good idea to check the engine oil level at each fuel fill. In order to get an accurate reading, the vehicle must be on level ground. The engine oil dipstick handle is a loop. See *Engine Compartment Overview on page 10-6* for the location of the engine oil dipstick.

Obtaining an accurate oil level reading is essential:

1. If the engine has been running recently, turn off the engine and allow several minutes for the oil to drain back into the oil pan.

Checking the oil level too soon after engine shutoff will not provide an accurate oil level reading.

⚠ WARNING

The engine oil dipstick handle may be hot; it could burn you. Use a towel or glove to touch the dipstick handle.

2. Pull out the dipstick and clean it with a paper towel or cloth, then push it back in all the way. Remove it again, keeping the tip down, and check the level.

When to Add Engine Oil

If the oil is below the cross-hatched area at the tip of the dipstick, add 1 L (1 qt) of the recommended oil and then recheck the level. See "Selecting the Right Engine Oil" in this section for an explanation of what kind of oil to use. For engine oil crankcase capacity, see *Capacities and Specifications on page 12-2*.

Notice: **Do not add too much oil. Oil levels above or below the acceptable operating range shown on the dipstick are harmful to the engine. If you find that you have an oil level above the operating range, i.e., the engine has so much oil that the oil level gets above the cross-hatched area that shows the proper operating range, the engine could be damaged. You should drain out the excess oil or limit driving of the vehicle and seek a service professional to remove the excess amount of oil.**

See *Engine Compartment Overview on page 10-6* for the location of the engine oil fill cap.

Add enough oil to put the level somewhere in the proper operating range. Push the dipstick all the way back in when through.

Selecting the Right Engine Oil

Selecting the right engine oil depends on both the proper oil specification and viscosity grade. See *Recommended Fluids and Lubricants on page 11-12*.

Specification

Use and ask for licensed engine oils with the dexos1® approved certification mark. Engine oils meeting the requirements for the vehicle should have the dexos1 approved certification mark. This certification mark indicates that the oil has been approved to the dexos1 specification.

Notice: **Failure to use the recommended engine oil or equivalent can result in engine damage not covered by the vehicle warranty. Check with your dealer or service provider on whether the oil is approved to the dexos1 specification.**

Viscosity Grade

SAE 5W-30 is the best viscosity grade for the vehicle. Do not use other viscosity grade oils such as SAE 10W-30, 10W-40, or 20W-50.

Cold Temperature Operation: In an area of extreme cold, where the temperature falls below −29°C (−20°F), an SAE 0W-30 oil may be used. An oil of this viscosity grade will provide easier cold starting for the engine at extremely low temperatures. When selecting an oil of the appropriate viscosity grade, always select an oil of the correct specification. See “Specification” earlier in this section for more information.

Engine Oil Additives/Engine Oil Flushes

Do not add anything to the oil. The recommended oils with the dexos specification and displaying the dexos certification mark are all that is needed for good performance and engine protection.

Engine oil system flushes are not recommended and could cause engine damage not covered by the vehicle warranty.

What to Do with Used Oil

Used engine oil contains certain elements that can be unhealthy for your skin and could even cause cancer. Do not let used oil stay on your skin for very long. Clean your skin and nails with soap and water, or a good hand cleaner. Wash or properly dispose of clothing or rags containing used engine oil. See the manufacturer's warnings about the use and disposal of oil products.

Used oil can be a threat to the environment. If you change your own oil, be sure to drain all the oil from the filter before disposal. Never dispose of oil by putting it in the trash or pouring it on the ground, into sewers, or into streams or bodies of water. Recycle it by taking it to a place that collects used oil.

Engine Oil Life System

When to Change Engine Oil

This vehicle has a computer system that indicates when to change the engine oil and filter. This is based on a combination of factors which include engine revolutions, engine temperature, and miles driven. Based on driving conditions, the mileage at which an oil change is indicated can vary considerably. For the oil life system to work properly, the system must be reset every time the oil is changed.

When the system has calculated that oil life has been diminished, it indicates that an oil change is necessary. A CHANGE ENGINE OIL SOON message comes on. See *Engine Oil Messages on page 5-32*. Change the oil as soon as possible within the next 1 000 km (600 mi). It is possible that, if driving under the best conditions, the oil life system might indicate that an oil change is not necessary for up to a year. The engine oil and filter must be changed at least once a year and, at this time, the system must be reset. Your dealer has trained service people who will perform this work and reset the system. It is also important to check the oil regularly over the course of an oil drain interval and keep it at the proper level.

If the system is ever reset accidentally, the oil must be changed at 5 000 km (3,000 mi) since the last oil change. Remember to reset the oil life system whenever the oil is changed.

How to Reset the Engine Oil Life System

Reset the system whenever the engine oil is changed so that the system can calculate the next engine oil change. To reset the system:

1. Turn the ignition key to ON/RUN with the engine off.
2. Fully press and release the accelerator pedal slowly three times within five seconds.
3. Turn the key to LOCK/OFF.

If the CHANGE ENGINE OIL SOON message comes back on when the vehicle is started, the engine oil life system has not reset. Repeat the procedure.

Automatic Transmission Fluid (4-Speed Transmission)

If the vehicle has a diesel engine, see the Duramax diesel supplement for more information.

When to Check and Change Automatic Transmission Fluid

A good time to check the automatic transmission fluid level is when the engine oil is changed.

Change the fluid and filter at the intervals listed in *Maintenance Schedule on page 11-3* and be sure to use the transmission fluid listed in *Recommended Fluids and Lubricants on page 11-12*.

How to Check Automatic Transmission Fluid

Because this operation can be a little difficult, it may be decided to have this done at the dealer.

If not taken to the dealer, be sure to follow all the instructions here or a false reading on the dipstick could result.

Notice: **Too much or too little fluid can damage the transmission. Too much can mean that some of the fluid could come out and fall on hot engine**

parts or exhaust system parts, starting a fire. Too little fluid could cause the transmission to overheat. Be sure to get an accurate reading if checking the transmission fluid.

Wait at least 30 minutes before checking the transmission fluid level if you have been driving:

- When outside temperatures are above 32°C (90°F).
- At high speed for quite a while.
- In heavy traffic — especially in hot weather.
- While pulling a trailer.

To get the right reading, the fluid should be at normal operating temperature, which is 82°C to 93°C (180°F to 200°F).

Get the vehicle warmed up by driving about 24 km (15 mi) when outside temperatures are above 10°C (50°F). If it is colder than 10°C (50°F), drive the vehicle in 3 (Third) until the engine temperature gauge moves and then remains steady for 10 minutes.

A cold fluid check can be made after the vehicle has been sitting for eight hours or more with the engine off, but this is used only as a reference. Let the engine run at idle for five minutes if outside temperatures are 10°C (50°F) or more. If it is colder than 10°C (50°F), the engine may have to idle longer. Should the fluid level be low during this cold check, the fluid must be checked hot before adding fluid. Checking the fluid hot will give a more accurate reading of the fluid level.

Checking the Fluid Level

Prepare the vehicle as follows:

1. Park the vehicle on a level place. Keep the engine running.
2. With the parking brake applied, place the shift lever in P (Park).
3. With your foot on the brake pedal, move the shift lever through each gear range, pausing for about three seconds in each range. Then, position the shift lever in P (Park).
4. Let the engine run at idle for three minutes or more.

Then, without shutting off the engine, use the steps that follow.

The transmission dipstick is near the center of the engine compartment and will be labeled with the graphic shown.

See *Engine Compartment Overview on page 10-6*.

1. Flip the handle up, pull out the dipstick, and wipe it with a clean rag or paper towel.

2. Push it back in all the way, wait three seconds, then pull it back out again.

3. Check both sides of the dipstick, and read the lower level. The fluid level must be in the COLD area for a cold check or in the HOT or cross-hatched area for a hot check. Be sure to keep the dipstick pointed down to get an accurate reading.
4. If the fluid level is in the acceptable range, push the dipstick back in all the way; then flip the handle down to lock the dipstick in place.

How to Add Automatic Transmission Fluid

Refer to *Recommended Fluids and Lubricants on page 11-12* to determine what kind of transmission fluid to use.

Using a funnel, add fluid down the transmission dipstick tube only after checking the transmission fluid while it is hot. A cold check is used only as a reference. If the fluid level is low, add only enough of the proper fluid to bring the level up to the HOT area for a hot check. It does not take much fluid, generally less than 0.5 L (1 pt). Do not overfill.

Notice: **Use of the incorrect automatic transmission fluid may damage the vehicle, and the damages may not be covered by the vehicle warranty. Always use the automatic transmission fluid listed in *Recommended Fluids and Lubricants on page 11-12*.**

- After adding fluid, recheck the fluid level as described under “How to Check Automatic Transmission Fluid,” earlier in this section.
- When the correct fluid level is obtained, push the dipstick back in all the way; then flip the handle down to lock the dipstick in place.

Automatic Transmission Fluid (6-Speed Transmission)

When to Check and Change Automatic Transmission Fluid

It is usually not necessary to check the transmission fluid level. The only reason for fluid loss is a transmission leak or overheated transmission. If a small leak is suspected, use the following procedures to check the fluid level. However, if there is a large leak, it may be necessary to have the

vehicle towed to a dealer and have it repaired before driving the vehicle further.

Change the fluid and filter at the intervals listed in *Maintenance Schedule on page 11-3*, and be sure to use the transmission fluid listed in *Recommended Fluids and Lubricants on page 11-12*.

How to Check Automatic Transmission Fluid

Because this operation can be difficult, it is recommended to have this check done at your dealer, which can monitor the transmission temperature. The transmission fluid level increases with temperature. To obtain a highly accurate fluid level check, the transmission temperature must be measured.

If it is decided to check the fluid level, be sure to follow all the instructions here, or a false reading on the dipstick may occur.

Notice: **Too much or too little fluid can damage the transmission. Too much can mean that some of the fluid could come out and fall on hot engine parts or exhaust system parts, starting a fire. Too little fluid could cause the transmission to overheat. Be sure to get an accurate reading if checking the transmission fluid.**

Wait at least 30 minutes with the engine off, before checking the transmission fluid level if the vehicle has been driven:

- In hot weather, when outside temperatures are above 32°C (90°F).
- The vehicle is heavily loaded.
- At high speed for quite a while in hot weather.
- In heavy traffic and hot weather.
- While pulling a trailer.

After driving under these conditions, a hot check can be performed. The fluid should be hot, which is 71°C to 93°C (160°F to 200°F).

A cold fluid level check can be performed after the vehicle has been sitting for eight hours or more with the engine off, but this is used only as a reference. Let the engine run at idle for five minutes if the outside temperature is between 15°C to 32°C (60°F to 90°F). Should the fluid level be low during this cold check, the fluid must be checked warm or hot before adding fluid. If the outside temperature is colder than 15°C (60°F) or hotter than 32°C (90°F), a cold check cannot be performed.

A warm fluid level check can be performed by driving the vehicle under lightly loaded conditions and outside temperatures between 10°C to 27°C (50°F to 80°F). The vehicle should be driven for at least 24 km (15 mi) before performing a warm check. Checking the fluid warm or

hot will give a more accurate reading of the fluid level than a cold check.

Because the vehicle is equipped with a high-efficiency air-to-oil cooler, the transmission fluid temperature may not reach the required hot fluid level checking temperature under normal lightly loaded driving vehicle conditions.

Checking the Fluid Level

Prepare the vehicle:

1. Park the vehicle on a level place. Keep the engine running.
2. With the parking brake applied, place the shift lever in P (Park).
3. With a foot on the brake pedal, move the shift lever through each gear range, pausing for about three seconds in each range. When M is reached, move the selector from M1 through M3. Then, position the shift lever in P (Park).
4. Let the engine run at idle for two minutes or more.

Then, without shutting off the engine, use the steps that follow.

The transmission dipstick is near the center of the engine compartment and will be labeled with the graphic shown.

See *Engine Compartment Overview on page 10-6* for more information on location.

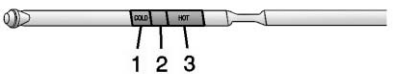

1. COLD Range
2. WARM Range
3. HOT Range

1. Flip the handle up, pull out the dipstick, and wipe it with a clean rag or paper towel.
2. Push it back in all the way, wait three seconds, and pull it back out again.
3. Check both sides of the dipstick, and read the lower level. The fluid level must be in the COLD (1) range for a cold check, transmission temperature 27°C to 32°C (80°F to 90°F); between the COLD (1) and HOT (3) range for a WARM (2) check, 50°C to 60°C (122°F to 140°F); or in the HOT (3) cross-hatched range for a hot check, 71°C to 93°C (160°F to 200°F). Be sure to keep the dipstick pointed down to get an accurate reading.
4. If the fluid level is in the acceptable range, push the dipstick back in all the way; then flip the handle down to lock the dipstick in place.

How to Add Automatic Transmission Fluid

Refer to *Recommended Fluids and Lubricants on page 11-12* to determine what kind of transmission fluid to use.

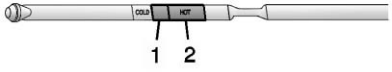

1. WARM Range
2. HOT Range

Using a funnel, add fluid down the transmission dipstick tube only after checking the transmission fluid while it is warm or hot. A cold check is used only as a reference. If the fluid level is low, add only enough of the proper fluid to bring the level up to the middle of the WARM (1) or HOT (2) range depending on the ambient temperature and prior driving conditions. Refer to “How to Check Automatic Transmission Fluid” earlier in this section for instructions on driving to achieve warm or hot transmission fluid. It does not take much fluid, generally less than 0.5 L (1 pt). Do not overfill.

Notice: **Use of the incorrect automatic transmission fluid may damage the vehicle, and the damages may not be covered by the vehicle warranty. Always use the automatic transmission fluid listed in *Recommended Fluids and Lubricants on page 11-12*.**

- After adding fluid, recheck the fluid level as described under “How to Check Automatic Transmission Fluid,” earlier in this section.
- When the correct fluid level is obtained, push the dipstick back in all the way; then flip the handle down to lock the dipstick in place.

Engine Air Cleaner/Filter

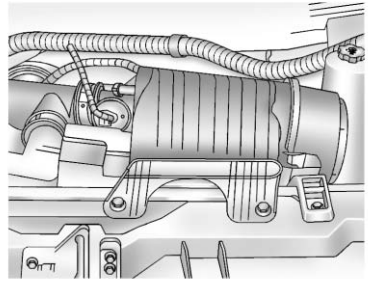

The engine air cleaner/filter is near the center of the engine compartment. See *Engine Compartment Overview on page 10-6*.

When to Inspect the Engine Air Cleaner/Filter

Inspect or replace the air cleaner/filter at the scheduled maintenance intervals. See *Maintenance Schedule on page 11-3*. If driving in dusty/dirty conditions, inspect the filter at each engine oil change.

How to Inspect the Engine Air Cleaner/Filter

To inspect the air cleaner/filter, remove the filter from the vehicle and lightly shake it to release loose dust and dirt. If the filter remains covered with dirt, a new filter is required. Never use compressed air to clean the filter.

To inspect or replace the engine air cleaner/filter:

1. Unhook the retainer clips and remove the cover.
2. Lift the filter out of the engine air cleaner/filter housing. Care should be taken to dislodge as little dirt as possible.
3. Clean the engine air cleaner/filter housing.
4. Inspect or replace the engine air cleaner/filter. Make sure that the filter fits properly into the housing.
5. Reinstall the cover and fasten the retaining clips.

⚠ WARNING

Operating the engine with the air cleaner/filter off can cause you or others to be burned. The air cleaner not only cleans the air; it helps to stop flames if the engine backfires. Use caution when working on the engine and do not drive with the air cleaner/filter off.

Notice: **If the air cleaner/filter is off, dirt can easily get into the engine, which could damage it. Always have the air cleaner/filter in place when you are driving.**

Cooling System

The cooling system allows the engine to maintain the correct working temperature.

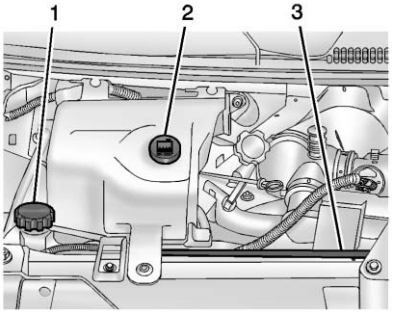

4.3L V6 Engine Shown (4.8L V8 Engine, 5.3L V8 Engine, and 6.0L V8 Engine Similar)

1. Radiator Pressure Cap
2. Coolant Recovery Tank
3. Engine Cooling Fan (Out of View)

⚠ WARNING

An electric engine cooling fan can start even when the engine is not running. To avoid injury, always keep hands, clothing, and tools away from any engine cooling fan.

⚠ WARNING

Heater and radiator hoses, and other engine parts, can be very hot. Do not touch them. If you do, you can be burned.

Do not run the engine if there is a leak. If you run the engine, it could lose all coolant. That could cause an engine fire, and you could be burned. Get any leak fixed before you drive the vehicle.

Notice: **Using coolant other than DEX-COOL® can cause premature engine, heater core, or radiator corrosion. In addition, the engine coolant could require changing sooner, at 50 000 km (30,000 mi) or 24 months, whichever occurs first. Any repairs would not be covered by the vehicle warranty. Always use DEX-COOL (silicate-free) coolant in the vehicle.**

Engine Coolant

The cooling system in the vehicle is filled with DEX-COOL® engine coolant. This coolant is designed to remain in the vehicle for 5 years or 240 000 km (150,000 mi), whichever occurs first.

The following explains the cooling system and how to check and add coolant when it is low. If there is a problem with engine overheating, see *Engine Overheating on page 10-21*.

What to Use

⚠ WARNING

Adding only plain water or some other liquid to the cooling system can be dangerous. Plain water and other liquids, can boil before the proper coolant mixture will. The coolant warning system is set for the proper coolant mixture. With plain water or the wrong mixture, the engine could get too hot but you would not get the overheat warning. The engine could catch fire and you or others could be burned. Use a 50/50 mixture of clean, drinkable water and DEX-COOL coolant.

Use a 50/50 mixture of clean, drinkable water and DEX-COOL coolant. If using this mixture, nothing else needs to be added. This mixture:

- Gives freezing protection down to −37°C (−34°F), outside temperature.
- Gives boiling protection up to 129°C (265°F), engine temperature.
- Protects against rust and corrosion.
- Will not damage aluminum parts.
- Helps keep the proper engine temperature.

Notice: **If improper coolant mixture, inhibitors, or additives are used in the vehicle cooling system, the engine could overheat and be damaged. Too much water in the mixture can freeze and crack engine cooling parts. The repairs would not be covered by the warranty. Use only the proper mixture of engine coolant for the cooling system. See *Recommended Fluids and Lubricants on page 11-12*.**

Never dispose of engine coolant by putting it in the trash, pouring it on the ground, or into sewers, streams, or bodies of water. Have the coolant changed by an authorized service center, familiar with legal requirements regarding used coolant disposal. This will help protect the environment and your health.

Checking Coolant

The vehicle must be on a level surface when checking the coolant level.

Check to see if coolant is visible in the coolant recovery tank. If the coolant inside the coolant recovery tank is boiling, do not do anything else until it cools down. If coolant is visible but the coolant level is not at or above the COLD FILL mark, add a 50/50 mixture of clean, drinkable water and DEX-COOL coolant at the coolant recovery tank, but be sure the cooling system is cool before this is done.

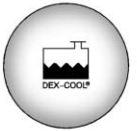

The coolant recovery tank cap has this symbol on it.

When the engine is cold, the coolant level should be at or above the COLD FILL mark. If it is not, there could be a leak in the cooling system.

If the coolant is low, add the coolant or take the vehicle to a dealer for service.

How to Add Coolant to the Recovery Tank for Gasoline Engines

⚠ WARNING

You can be burned if you spill coolant on hot engine parts. Coolant contains ethylene glycol and it will burn if the engine parts are hot enough. Do not spill coolant on a hot engine.

Notice: **This vehicle has a specific coolant fill procedure. Failure to follow this procedure could cause the engine to overheat and be severely damaged.**

If coolant is needed, add the proper DEX-COOL coolant mixture at the coolant recovery tank.

How to Add Coolant to the Radiator

⚠ WARNING

Steam and scalding liquids from a hot cooling system can blow out and burn you badly. Never turn the cap when the cooling system, including the surge tank pressure cap, is hot. Wait for the cooling system and surge tank pressure cap to cool.

If coolant is needed, add the proper mixture directly to the radiator, but be sure the cooling system is cool before this is done.

1. Remove the radiator pressure cap when the cooling system, including the radiator pressure cap and upper radiator hose, is no longer hot. Turn the pressure cap slowly counterclockwise until it first stops. Do not press down while turning the pressure cap.

   If a hiss is heard, wait for that to stop. A hiss means there is still some pressure left.

2. Keep turning the pressure cap, but now push down as you turn it. Remove the pressure cap.

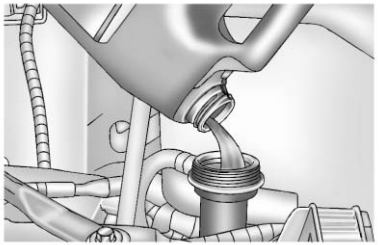

3. Fill the radiator with the proper DEX-COOL coolant mixture, up to the base of the filler neck. See *Recommended Fluids and Lubricants on page 11-12* for more information about the proper coolant mixture.

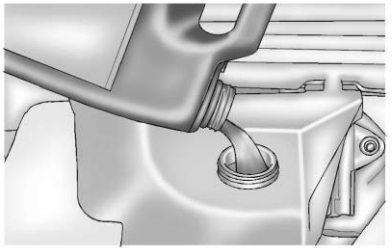

4. Fill the coolant recovery tank to the COLD FILL mark.
5. Reinstall the cap back on the coolant recovery tank, but leave the radiator pressure cap off.

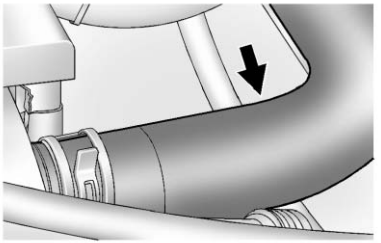

6. Start the engine and let it run until the upper radiator hose can be felt getting hot. Watch out for the engine cooling fan.
7. By this time, the coolant level inside the radiator filler neck may be lower. If the level is lower, add more of the proper DEX-COOL coolant mixture through the filler neck until the level reaches the base of the filler neck.

8. Replace the pressure cap. At any time during this procedure if coolant begins to flow out of the filler neck, reinstall the pressure cap.

Notice: **If the pressure cap is not tightly installed, coolant loss and possible engine damage may occur. Be sure the cap is properly and tightly secured.**

Engine Overheating

If the vehicle has a diesel engine, see the Duramax diesel supplement.

The vehicle has an indicator to warn of engine overheating.

There is an engine coolant temperature gauge on the vehicle's instrument cluster. See *Engine Coolant Temperature Gauge on page 5-12*.

If the decision is made not to lift the hood when this warning appears, but instead get service help right away, see *Roadside Assistance Program (Mexico) on page 13-11* or *Roadside Assistance Program (U.S. and Canada) on page 13-11*.

If the decision is made to lift the hood, make sure the vehicle is parked on a level surface.

Then check to see if the engine cooling fans are running. If the engine is overheating, the fan should be running. If it is not, do not continue to run the engine and have the vehicle serviced.

See if the engine cooling fan speed increases when idle speed is doubled by pushing the accelerator pedal down. If it does not, the vehicle needs service. Turn off the engine.

Notice: **Running the engine without coolant may cause damage or a fire. Vehicle damage would not be covered by the warranty.**

If Steam is Coming from the Engine Compartment

⚠ WARNING

Steam from an overheated engine can burn you badly, even if you just open the hood. Stay away from the engine if you see or hear steam coming from it. Just turn it off and get everyone away from the vehicle until it cools down. Wait until there is no sign of steam or coolant before you open the hood.

If you keep driving when the engine is overheated, the liquids in it can catch fire. You or others could be badly burned. Stop the engine if it overheats, and get out of the vehicle until the engine is cool.

If No Steam is Coming from the Engine Compartment

If an engine overheat warning is displayed but no steam can be seen or heard, the problem may not be too serious. Sometimes the engine can get a little too hot when the vehicle:

- Climbs a long hill on a hot day.
- Stops after high-speed driving.
- Idles for long periods in traffic.
- Tows a trailer. See “Driving on Grades” under *Trailer Towing on page 9-49*.

If the overheat warning is displayed with no sign of steam:

1. Turn the air off.
2. Turn the heater on to the highest temperature and to the highest fan speed. Open the windows as necessary.
3. In heavy traffic, let the engine idle in N (Neutral) while stopped. If it is safe to do so, pull off the road, shift to P (Park) or N (Neutral) and let the engine idle.

If the engine coolant temperature gauge is no longer in the overheat zone or an overheat warning no longer displays, the vehicle can be driven. Continue to drive the vehicle slowly for about 10 minutes. Keep a safe vehicle distance from the vehicle in front. If the warning does not come back on, continue to drive normally.

If the warning continues, pull over, stop, and park the vehicle right away.

If there is still no sign of steam, push down the accelerator until the engine speed is about twice as fast as normal idle speed for at least three minutes while parked. If the warning is still on, turn off the engine until it cools down.

If the decision is made not to lift the hood, get service help right away.

Engine Fan

The vehicle has a clutched engine cooling fan. When the clutch is engaged, the fan spins faster to provide more air to cool the engine. In most everyday driving conditions, the fan is spinning slower and the clutch is not fully engaged. This improves fuel economy and reduces fan noise. Under heavy vehicle loading, trailer towing, and/or high outside temperatures, the fan speed increases as the clutch more fully engages, so an increase in fan noise may be heard. This is normal and should not be mistaken as the transmission slipping or making extra shifts. It is merely the cooling system functioning properly. The fan will slow down when additional cooling is not required and the clutch partially disengages.

This fan noise may be heard when starting the engine. It will go away as the fan clutch partially disengages.

Power Steering Fluid

The power steering fluid reservoir is in the engine compartment on the driver side of the vehicle. See *Engine Compartment Overview on page 10-6* for reservoir location.

When to Check Power Steering Fluid

It is not necessary to regularly check power steering fluid unless there is a leak suspected in the system or an unusual noise is heard. A fluid loss in this system could indicate a problem. Have the system inspected and repaired.

How to Check Power Steering Fluid

To check the power steering fluid:

1. Turn the key off and let the engine compartment cool down.
2. Wipe the cap and the top of the reservoir clean.
3. Unscrew the cap and wipe the dipstick with a clean rag.
4. Replace the cap and completely tighten it.
5. Remove the cap again and look at the fluid level on the dipstick.

The level should be at the COLD FILL mark. If necessary, add only enough fluid to bring the level up to the mark.

To prevent contamination of brake fluid, never check or fill the power steering reservoir with the brake master cylinder cover off.

What to Use

To determine what kind of fluid to use, see *Recommended Fluids and Lubricants on page 11-12*. Always use the proper fluid. Failure to use the proper fluid can cause leaks and damage hoses and seals.

Washer Fluid

What to Use

When the vehicle needs windshield washer fluid, be sure to read the manufacturer's instructions before use. If operating the vehicle in an area where the temperature may fall below freezing, use a fluid that has sufficient protection against freezing.

Adding Washer Fluid

Open the cap with the washer symbol on it. Add washer fluid until the tank is full. See *Engine Compartment Overview on page 10-6* for reservoir location.

Notice

- **When using concentrated washer fluid, follow the manufacturer instructions for adding water.**
- **Do not mix water with ready-to-use washer fluid. Water can cause the solution to freeze and damage the washer fluid tank and other parts of the washer system.**
- **Fill the washer fluid tank only three-quarters full when it is very cold. This allows for fluid expansion if freezing occurs, which could damage the tank if it is completely full.**
- **Do not use engine coolant (antifreeze) in the windshield washer. It can damage the windshield washer system and paint.**

Brakes

This vehicle has disc brakes. Disc brake pads have built-in wear indicators that make a high-pitched warning sound when the brake pads are worn and new pads are needed. The sound can come and go or be heard all the time the vehicle is moving, except when applying the brake pedal firmly.

⚠ WARNING

The brake wear warning sound means that soon the brakes will not work well. That could lead to a crash. When the brake wear warning sound is heard, have the vehicle serviced.

Notice: **Continuing to drive with worn-out brake pads could result in costly brake repair.**

Some driving conditions or climates can cause a brake squeal when the brakes are first applied or lightly applied. This does not mean something is wrong with the brakes.

Properly torqued wheel nuts are necessary to help prevent brake pulsation. When tires are rotated, inspect brake pads for wear and evenly tighten wheel nuts in the proper sequence to torque specifications in *Capacities and Specifications on page 12-2*.

Brake linings should always be replaced as complete axle sets.

Brake Pedal Travel

See your dealer if the brake pedal does not return to normal height, or if there is a rapid increase in pedal travel. This could be a sign that brake service might be required.

Brake Adjustment

Every time the brakes are applied, with or without the vehicle moving, the brakes adjust for wear.

Replacing Brake System Parts

The braking system on a vehicle is complex. Its many parts have to be of top quality and work well together if the vehicle is to have really good braking. The vehicle was designed and tested with top-quality brake parts. When parts of the braking system are replaced, be sure to get new, approved replacement parts. If this is not done, the brakes might not work properly. For example, installing disc brake pads that are wrong for the vehicle, can change the balance between the front and rear brakes — for the worse. The braking performance expected can change in many other ways if the wrong replacement brake parts are installed.

Brake Fluid

The brake master cylinder reservoir is filled with DOT 3 brake fluid. See *Engine Compartment Overview on page 10-6* for the location of the reservoir.

There are only two reasons why the brake fluid level in the reservoir might go down:

- The brake fluid level goes down because of normal brake lining wear. When new linings are installed, the fluid level goes back up.
- A fluid leak in the brake hydraulic system can also cause a low fluid level. Have the brake hydraulic system fixed, since a leak means that sooner or later the brakes will not work well.

Do not top off the brake fluid. Adding fluid does not correct a leak. If fluid is added when the linings are worn, there will be too much fluid when new brake linings are installed. Add or remove brake fluid, as necessary, only when work is done on the brake hydraulic system.

⚠ WARNING

If too much brake fluid is added, it can spill on the engine and/or fuel operated heater parts, if equipped. If the vehicle has a diesel engine and a fuel operated heater, see “Fuel Operated Heater (FOH)” in the diesel engine supplement. The fluid will burn if the engine is hot enough. You or others could be burned, and the vehicle could be damaged. Add brake fluid only when work is done on the brake hydraulic system. See “Checking Brake Fluid” in this section.

Refer to the Maintenance Schedule to determine when to check the brake fluid. See *Maintenance Schedule on page 11-3*.

Checking Brake Fluid

Check brake fluid by looking at the brake fluid reservoir. See *Engine Compartment Overview on page 10-6*.

The fluid level should be above MIN. If it is not, have the brake hydraulic system checked to see if there is a leak.

After work is done on the brake hydraulic system, make sure the level is above the MIN but not over the MAX mark.

What to Add

Use only new DOT 3 brake fluid from a sealed container. See *Recommended Fluids and Lubricants on page 11-12*.

Always clean the brake fluid reservoir cap and the area around the cap before removing it. This helps keep dirt from entering the reservoir.

⚠ WARNING

With the wrong kind of fluid in the brake hydraulic system, the brakes might not work well. This could cause a crash. Always use the proper brake fluid.

Notice

- **Using the wrong fluid can badly damage brake hydraulic system parts. For example, just a few drops of mineral-based oil, such as engine oil, in the brake hydraulic system can damage brake hydraulic system parts so badly that they will have to be replaced. Do not let someone put in the wrong kind of fluid.**
- **If brake fluid is spilled on the vehicle's painted surfaces, the paint finish can be damaged. Be careful not to spill brake fluid on the vehicle. If you do, wash it off immediately.**

Battery

Refer to the replacement number shown on the original battery label when a new battery is needed. See *Engine Compartment Overview on page 10-6* for battery location.

⚠ WARNING

Battery posts, terminals, and related accessories contain lead and lead compounds, chemicals known to the State of California to cause cancer and reproductive harm. Wash hands after handling.

Vehicle Storage

⚠ WARNING

Batteries have acid that can burn you and gas that can explode. You can be badly hurt if you are not careful. See *Jump Starting on page 10-78* for tips on working around a battery without getting hurt.

Infrequent Usage: Remove the black, negative (−) cable from the battery to keep the battery from running down.

Extended Storage: Remove the black, negative (−) cable from the battery or use a battery trickle charger.

All-Wheel Drive

Transfer Case

When to Check Lubricant

Refer to the Maintenance Schedule to determine how often to check the lubricant. See *Maintenance Schedule on page 11-3*.

How to Check Lubricant

To get an accurate reading, the vehicle should be on a level surface.

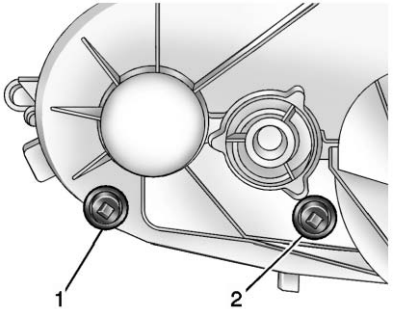

1. Drain Plug
2. Fill Plug

If the level is below the bottom of the fill plug hole, on the transfer case, some lubricant will need to be added. Add enough lubricant to raise the level to the bottom of the fill plug hole. Use care not to overtighten the plug.

What to Use

Refer to *Recommended Fluids and Lubricants on page 11-12* to determine what kind of lubricant to use.

Front Axle

When to Check and Change Lubricant

Refer to the Maintenance Schedule to determine how often to check the lubricant and when to change it. See *Maintenance Schedule on page 11-3*.

How to Check Lubricant

To get an accurate reading, the vehicle should be on a level surface.

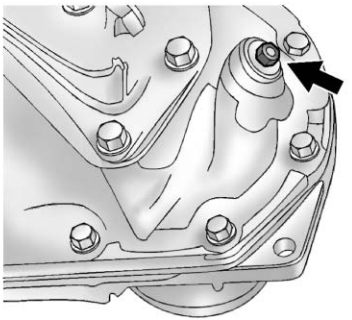

If the level is below the bottom of the fill plug hole, some lubricant may need to be added.

When the differential is cold, add enough lubricant to raise the level to 10 mm (3/8 in) below the fill plug hole.

When the differential is at operating temperature (warm), add enough lubricant to raise the level to the bottom of the fill plug hole.

What to Use

Refer to *Recommended Fluids and Lubricants on page 11-12* to determine what kind of lubricant to use.

Rear Axle

When to Check Lubricant

Refer to the *Maintenance Schedule on page 11-3* to determine how often to check the lubricant.

How to Check Lubricant

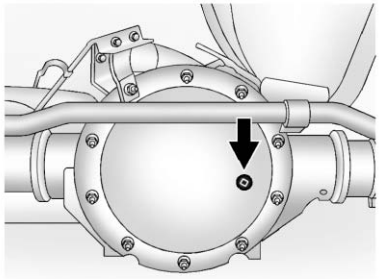

To get an accurate reading, the vehicle should be on a level surface.

If you have the 1500 Series, the proper level is from 15 mm (5/8 in) to 40 mm (1 5/8 in) below the bottom of the fill plug hole. The proper level for the 2500 and 3500 Series is from 0 to 6 mm (1/4 in) below the bottom of the fill plug hole. Add only enough fluid to reach the proper level.

What to Use

Refer to *Recommended Fluids and Lubricants on page 11-12* to determine what kind of lubricant to use.

Noise Control System

The following information relates to compliance with federal noise emission standards for vehicles with a Gross Vehicle Weight Rating (GVWR) of more than 4 536 kg (10,000 lbs). The Maintenance Schedule provides information on maintaining the noise control system to minimize degradation of the noise emission control system during the life of the vehicle. The noise control system warranty is given in the vehicle warranty booklet.

These standards apply only to vehicles sold in the United States.

Federal law prohibits the following acts or the causing thereof:

1. The removal or rendering inoperative by any person, other than for purposes of maintenance, repair or replacement, of any device or element of design incorporated into any new vehicle for the purpose of noise control, prior to its sale or delivery to the ultimate purchaser or while it is in use; or
2. The use of the vehicle after such device or element of design has been removed or rendered inoperative by any person.

Among those acts presumed to constitute tampering are the acts listed below.

Insulation:

- Removal of the noise shields or any underhood insulation.

Engine:

- Removal or rendering engine speed governor, if the vehicle has one, inoperative so as to allow engine speed to exceed manufacturer specifications.

Fan and Drive:

- Removal of fan clutch, if the vehicle has one, or rendering clutch inoperative.
- Removal of the fan shroud, if the vehicle has one.

Air Intake:

- Removal of the air cleaner silencer.
- Modification of the air cleaner.

Exhaust:

- Removal of the muffler and/or resonator.
- Removal of the exhaust pipes and exhaust pipe clamps.

Fuel Operated Heater (FOH) — Diesel Engine:

- Removal of the muffler.

Starter Switch Check

⚠ WARNING

When you are doing this inspection, the vehicle could move suddenly. If the vehicle moves, you or others could be injured.

1. Before starting this check, be sure there is enough room around the vehicle.
2. Firmly apply both the parking brake and the regular brake. See *Parking Brake on page 9-31*.

   Do not use the accelerator pedal, and be ready to turn off the engine immediately if it starts.
3. Try to start the engine in each gear. The vehicle should start only in P (Park) or N (Neutral). If the vehicle starts in any other position, contact your dealer for service.

Automatic Transmission Shift Lock Control Function Check

⚠ WARNING

When you are doing this inspection, the vehicle could move suddenly. If the vehicle moves, you or others could be injured.

1. Before starting this check, be sure there is enough room around the vehicle. It should be parked on a level surface.

2. Firmly apply the parking brake. See *Parking Brake on page 9-31*.

   Be ready to apply the regular brake immediately if the vehicle begins to move.

3. With the engine off, turn the ignition on, but do not start the engine. Without applying the regular brake, try to move the shift lever out of P (Park) with normal effort. If the shift lever moves out of P (Park), contact your dealer for service.

Ignition Transmission Lock Check

While parked, and with the parking brake set, try to turn the ignition to LOCK/OFF in each shift lever position.

- The ignition should turn to LOCK/OFF only when the shift lever is in P (Park).
- The ignition key should come out only in LOCK/OFF.

Contact your dealer if service is required.

Park Brake and P (Park) Mechanism Check

⚠ WARNING

When you are doing this check, the vehicle could begin to move. You or others could be injured and property could be damaged. Make sure there is room in front of the vehicle in case it begins to roll. Be ready to apply the regular brake at once should the vehicle begin to move.

Park on a fairly steep hill, with the vehicle facing downhill. Keeping your foot on the regular brake, set the parking brake.

- To check the parking brake's holding ability: With the engine running and the transmission in N (Neutral), slowly remove foot pressure from the regular brake pedal. Do this until the vehicle is held by the parking brake only.
- To check the P (Park) mechanism's holding ability: With the engine running, shift to P (Park). Then release the parking brake followed by the regular brake.

Contact your dealer if service is required.

Wiper Blade Replacement

Windshield wiper blades should be inspected for wear and cracking. See *Maintenance Schedule on page 11-3*.

Replacement blades come in different types and are removed in different ways. For proper type and length, see *Maintenance Replacement Parts on page 11-14*.

Notice: **Allowing the wiper arm to touch the windshield when no wiper blade is installed could damage the windshield. Any damage that occurs would not be covered by your warranty. Do not allow the wiper arm to touch the windshield.**

1. Lift the wiper arm away from the windshield.

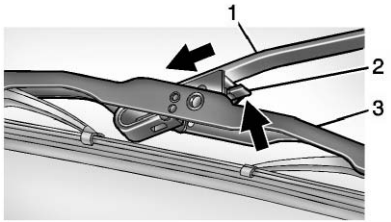

2. Push the release lever (2) to disengage the hook and push the wiper arm (1) out of the blade assembly (3).
3. Push the new blade assembly securely on the wiper arm until the release lever clicks into place.

Headlamp Aiming

Headlamp aim has been preset and should need no further adjustment.

If the vehicle is damaged in a crash, the headlamp aim may be affected. If adjustment to the headlamps is necessary, see your dealer.

Bulb Replacement

For the proper type of replacement bulbs, see *Replacement Bulbs on page 10-37*.

For any bulb-changing procedure not listed in this section, contact your dealer.

Halogen Bulbs

⚠ WARNING

Halogen bulbs have pressurized gas inside and can burst if you drop or scratch the bulb. You or others could be injured. Be sure to read and follow the instructions on the bulb package.

Headlamps

Composite Headlamp

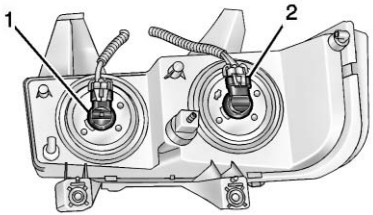

1. High-Beam Headlamp
2. Low-Beam Headlamp

To remove the headlamp assembly from the vehicle and access the bulbs:

1. Open the hood. See *Hood on page 10-4*.

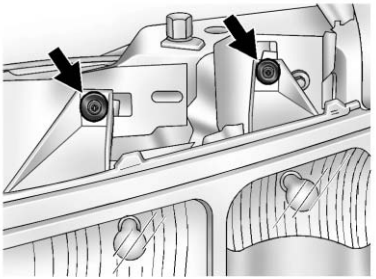

2. Remove the two bolts from the headlamp assembly.
3. Lift the headlamp assembly to release the lower tabs from the radiator support.
4. Turn the headlamp forward and upward to remove it from the grille.

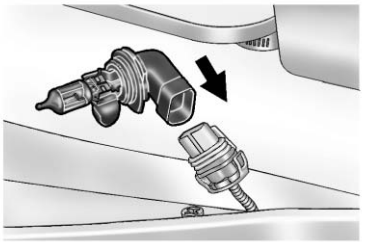

5. Disconnect the electrical connector.
6. Turn the bulb counterclockwise one-quarter turn to remove it from the headlamp assembly.
7. Install the new bulb into the headlamp assembly and connect the electrical connector.

8. Reverse the steps to reinstall the headlamp assembly.

   To prevent headlamp vibration and shortened bulb life, be sure to insert the headlamp assembly tabs in the slots at the lower portion of the housing.

Sealed-Beam Headlamp

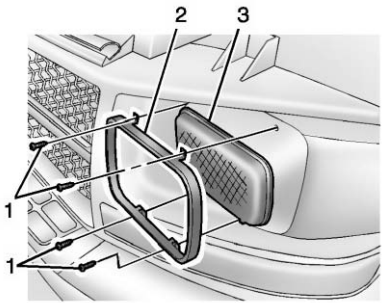

1. Headlamp retainer screws
2. Headlamp retainer
3. Sealed-beam headlamp bulb

To replace one of these bulbs:

1. Remove the four screws (1) from the headlamp retainer (2).

   Pull the retainer (2) out and set it aside.
2. Pull the bulb (3) forward to gain access to the electrical connector.

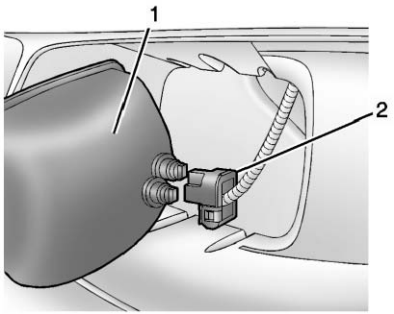

3. Disconnect the electrical connector (2) and remove the headlamp bulb (1).
4. Reverse Steps 1–3 to reinstall the headlamp.

Front Turn Signal, Sidemarker, and Parking Lamps

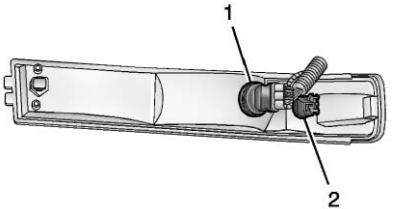

1. Front Parking and Turn Signal Lamp
2. Front Sidemarker Lamp

To replace the front turn signal, sidemarker, and/or parking lamp bulb(s):

1. Use a small tool to unlatch the outboard clip on the lamp by pushing inboard and prying the lamp assembly forward.
2. Remove the lamp from the grille.
3. Turn the bulb socket counterclockwise one-quarter turn and remove it from the lamp assembly.
4. Remove the bulb from the socket by pulling it straight out.
5. Replace the bulb.
6. Turn the bulb socket clockwise to reinstall it in the lamp assembly.
7. Reinstall the lamp assembly into the grille until the outboard clip snaps into place.

Taillamps

To replace a taillamp/turn signal lamp or back-up lamp bulb:

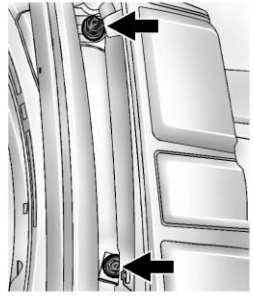

1. Remove the two inboard nuts from the inside of the taillamp assembly.

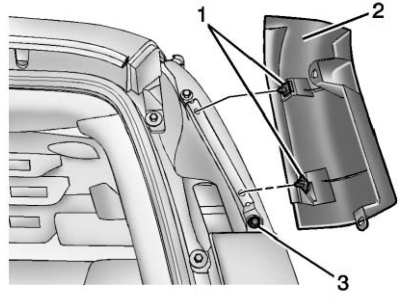

2. The third nut (3) is under the applique piece (2) above the lamp. Remove the two inboard applique nuts. Pull the applique (2) straight rearward slightly to clear the studs. Then rotate the applique (2) just far enough to gain access to the outer push pins (1).
3. Carefully disconnect the push pins (1) from the applique bracket.
4. Remove the third nut (3) from the upper outboard side of the lamp.

5. Remove the taillamp assembly from the vehicle.

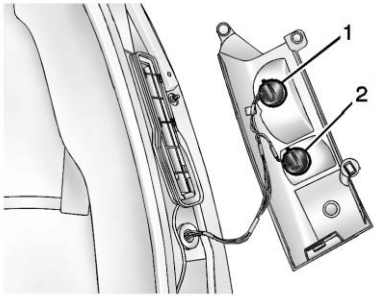

6. Remove the taillamp/turn signal lamp (1) or back-up lamp (2) bulb socket by turning it counterclockwise one-quarter turn and pulling it out of the lamp assembly.
7. Remove the bulb by pulling it straight out.
8. Push the new bulb into the socket.
9. Reinstall the bulb socket by turning it clockwise into the lamp assembly.
10. Reverse Steps 1–5 to reinstall the taillamp assembly and applique.

Center High-Mounted Stoplamp (CHMSL)

The CHMSL is above the rear doors at the center of the vehicle.

To replace a bulb:

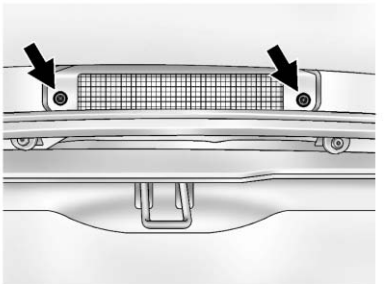

1. Remove the two screws from the CHMSL assembly.
2. Remove the CHMSL assembly.
3. Turn the bulb socket counterclockwise one-quarter turn to remove it from the lamp assembly.
4. Pull the old bulb straight out of the socket and push the new bulb into the socket.
5. Turn the bulb socket clockwise one-quarter turn to install it in the lamp assembly.
6. Reinstall the CHMSL assembly and two screws.

Do not block or damage the CHMSL when items are loaded on the roof of the vehicle.

License Plate Lamp

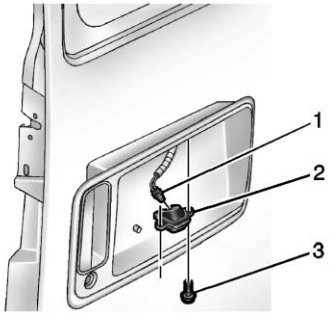

1. Bulb Socket
2. License Plate Bulb Assembly
3. Screws

To replace one of these bulbs:

1. Remove the screws (3) that secure the license plate bulb assembly (2).
2. Turn the bulb socket (1) counterclockwise and pull the bulb straight out of the socket.
3. Install the new bulb.
4. Reverse Steps 1 and 2 to reinstall the license plate bulb assembly.

Replacement Bulbs

Exterior Lamp	Bulb Number
Back-up, Rear Parking, Stoplamp, and Turn Signal Lamp	3157KX
Center High-Mounted Stoplamp (CHMSL)	912LL
Front Parking and Turn Signal Lamp	3157KX
Front Sidemarker Lamp	194LL
License Plate Lamp	194LL
Headlamps	
Composite High-Beam Headlamp	9005LL
Composite Low-Beam Headlamp	9006LL
Sealed Beam Headlamp	H6054

For replacement bulbs not listed here, contact your dealer.

Electrical System

Electrical System Overload

The vehicle has fuses and circuit breakers to protect against an electrical system overload.

When the current electrical load is too heavy, the circuit breaker opens and closes, protecting the circuit until the current load returns to normal or the problem is fixed. This greatly reduces the chance of circuit overload and fire caused by electrical problems.

Fuses and circuit breakers protect power devices in the vehicle.

Replace a bad fuse with a new one of the identical size and rating.

If there is a problem on the road and a fuse needs to be replaced, the same amperage fuse can be borrowed. Choose some feature of the vehicle that is not needed to use and replace it as soon as possible.

Headlamp Wiring

An electrical overload may cause the lamps to go on and off, or in some cases to remain off. Have the headlamp wiring checked right away if the lamps go on and off or remain off.

Windshield Wipers

If the wiper motor overheats due to heavy snow or ice, the windshield wipers will stop until the motor cools and will then restart.

Although the circuit is protected from electrical overload, overload due to heavy snow or ice may cause wiper linkage damage. Always clear ice and heavy snow from the windshield before using the windshield wipers.

If the overload is caused by an electrical problem and not snow or ice, be sure to get it fixed.

Fuses and Circuit Breakers

The wiring circuits in the vehicle are protected from short circuits by a combination of fuses and circuit breakers. This greatly reduces the chance of fires caused by electrical problems.

Look at the silver-colored band inside the fuse. If the band is broken or melted, replace the fuse. Be sure you replace a bad fuse with a new one of the identical size and rating.

Engine Compartment Fuse Block

The fuse block is located in the engine compartment on the driver side of the vehicle.

Notice: **Spilling liquid on any electrical component on the vehicle may damage it. Always keep the covers on any electrical component.**

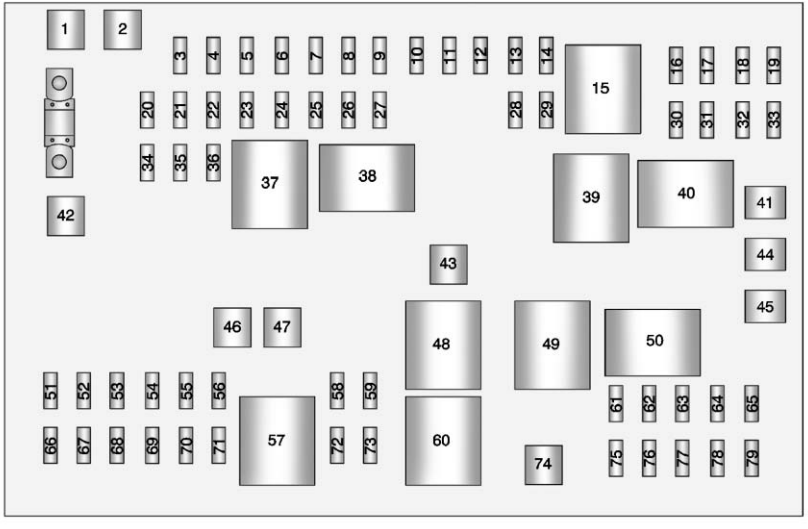

The vehicle may not be equipped with all of the fuses, relays, and features shown.

Mini Fuse	Usage
3	Right Stop/Turn Trailer
4	Spare
5	Spare
6	Fuel System Control Module Ignition
7	Body Control Module 5
8	Body Control Module 7
9	Body Control Module 4
10	Instrument Panel Cluster
11	Trailer Wiring
12	Inside Rear Vision Camera Module
13	Spare
14	Windshield Washer
16	Horn

Mini Fuse	Usage
17	Transmission
18	Air Conditioning Compressor
19	Engine Control Module Battery
20	Spare
21	Left Stop/Turn Trailer
22	Spare
23	Spare
24	Fuel Pump
25	Auxiliary Power Outlet
26	Body Control Module 3
27	Special Equipment Option
28	Airbag
29	Steering Wheel Sensor

Mini Fuse	Usage
30	Engine Control Module Ignition/ Glow Plug Module
31	Transmission Control Module Ignition
32	Transmission Control Module Battery
33	Rear Parking Aid Module
34	Spare
35	Fuel Operated Heater Module
36	Fuel System Control Module Battery
51	Left High-Beam Headlamp
52	Right High-Beam Headlamp

Mini Fuse	Usage
53	Left Low-Beam Headlamp
54	Right Low-Beam Headlamp
55	Wiper
56	Canister Vent Solenoid
58	Body Control Module 2
59	Body Control Module 1
61	Spare
62	Oxygen Sensor 2 (Post), EV Fan (Diesel)
63	Spare
64	Mass Air Flow/ Canister Vent
65	Odd Ignition/ Injectors

Mini Fuse	Usage
66	Daytime Running Lamps 2 (LOLVL-V22) (If Equipped)
67	Daytime Running Lamps 1 (UPLVL+V22) (If Equipped)
68	Auxiliary Stop Lamps
69	Trailer Stop Lamps
70	Spare
71	Fuel Heater/Flex Fuel Sensor
72	Body Control Module 6
73	Lighter/Data Link Connection
75	V6 Fuel Injectors
76	Spare

Mini Fuse	Usage
77	Oxygen Sensor 2 (Pre)
78	Engine Control Module Powertrain
79	Even Ignition/ Injectors

J-Case Fuse	Usage
1	ABS Motor
2	ABS Module
41	Spare
42	Trailer Wiring
43	Fan High
44	Starter Solenoid
45	Engine Control Module/Powertrain
46	Spare
47	Fan Lo
74	Front Blower

Relay	Usage
15	Run/Crank
37	Spare
38	Fuel Pump
39	Crank
40	Air Conditioning Compressor
48	Fan High
49	Powertrain
50	Spare
57	Fan Low
60	Fan Control

Floor Console Fuse Block

The floor console fuse block is under the driver seat.

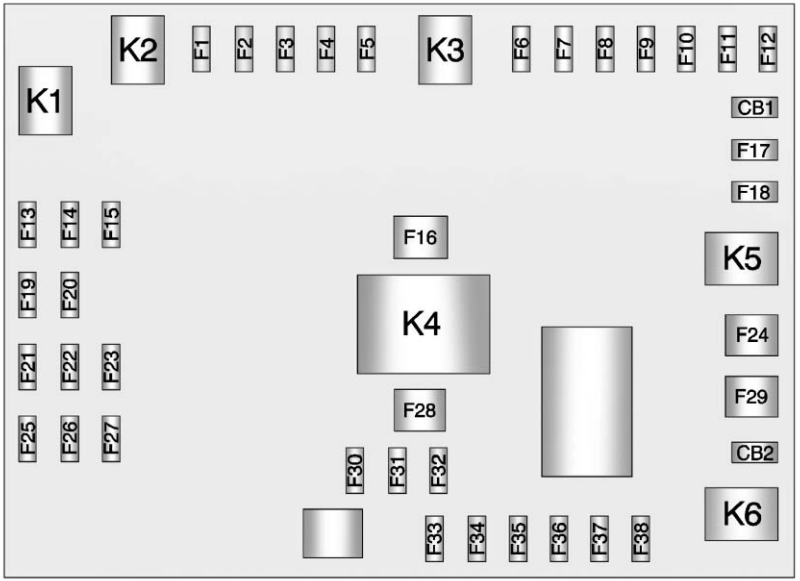

The vehicle may not be equipped with all of the fuses, relays, and features shown.

Mini-Fuse	Usage
F1	Empty
F2	Steering Wheel Sensor
F3	Auxiliary Parking Lamps (Cut-Away)
F4	Front Park Lamps
F5	Trailer Park Lamps
F6	Upfitter Park Lamps
F7	Right Rear Park Lamp
F8	Left Rear Park Lamp
F9	Outside Rearview Mirror Switch
F10	Airbag/Automatic Occupant Sensing
F11	OnStar® (If Equipped)
F12	Empty

Mini-Fuse	Usage
F13	Heating, Ventilation and Air Conditioning 2
F14	Heating, Ventilation and Air Conditioning 1
F15	Empty
F17	Outside Rearview Mirror Heater
F18	Rear Window Defogger
F19	Compass
F20	Radio/Chime/ SiriusXM Satellite Radio (If Equipped)
F21	Remote Function Actuator/Tire Pressure Monitor
F22	Ignition Switch/ Discrete Logic Ignition Sensor (PK3)

Mini-Fuse	Usage
F23	Instrument Cluster
F25	Heating, Ventilation and Air Conditioning Control
F26	Auxiliary/Trailer Backup
F27	Taillamps Backup
F30	Upfitter Courtesy Lamps
F31	Front Door Lock
F32	Rear Door Lock
F33	Cargo Door Unlock
F34	Passenger Door Unlock
F35	Rear Passenger Door Unlock
F36	Driver Door Unlock
F37	Empty
F38	Empty

J-Case Fuse	Usage
F16	Upfitter Auxiliary 1
F24	Empty
F28	Upfitter Auxiliary 2 Reading Lamps
F29	Rear Blower

Relays	Usage
K1	Run (High Current Micro)
K2	Empty (High Current Micro)
K3	Park Lamps (High Current Micro)
K4	Upfitter Auxiliary 2 (High Current Mini)
K5	Rear Defogger (High Current Micro)
K6	Retained Accessory Power (RAP) (High Current Micro)

Circuit Breaker	Usage
CB1	Power Seats
CB2	Power Windows

Wheels and Tires

Tires

Every new GM vehicle has high-quality tires made by a leading tire manufacturer. See the warranty manual for information regarding the tire warranty and where to get service. For additional information refer to the tire manufacturer.

⚠ WARNING

- Poorly maintained and improperly used tires are dangerous.
- Overloading the tires can cause overheating as a result of too much flexing. There could be a blowout and a serious crash. See *Vehicle Load Limits on page 9-10*.

(Continued)

WARNING (CONTINUED)

- Underinflated tires pose the same danger as overloaded tires. The resulting crash could cause serious injury. Check all tires frequently to maintain the recommended pressure. Tire pressure should be checked when the tires are cold.
- Overinflated tires are more likely to be cut, punctured, or broken by a sudden impact — such as when hitting a pothole. Keep tires at the recommended pressure.
- Worn or old tires can cause a crash. If the tread is badly worn, replace them.
- Replace any tires that have been damaged by impacts with potholes, curbs, etc.

(Continued)

WARNING (CONTINUED)

- Improperly repaired tires can cause a crash. Only the dealer or an authorized tire service center should repair, replace, dismount, and mount the tires.
- Do not spin the tires in excess of 56 km/h (35 mph) on slippery surfaces such as snow, mud, ice, etc. Excessive spinning may cause the tires to explode.

All-Season Tires

This vehicle may come with all-season tires. These tires are designed to provide good overall performance on most road surfaces and weather conditions. Original equipment tires designed to GM's specific tire performance criteria have a TPC specification code molded onto the sidewall. Original equipment all-season tires can be identified by the last two characters of this TPC code, which will be “MS.”

Consider installing winter tires on the vehicle if frequent driving on snow or ice-covered roads is expected. All-season tires provide adequate performance for most winter driving conditions, but they may not offer the same level of traction or performance as winter tires on snow or ice-covered roads. See *Winter Tires on page 10-45*.

Winter Tires

This vehicle was not, originally, equipped with winter tires. Winter tires are designed for increased traction on snow and ice-covered roads. Consider installing winter tires on the vehicle if frequent driving on snow or ice-covered roads is expected. See your dealer for details regarding winter tire availability and proper tire selection. Also, see *Buying New Tires on page 10-61*.

With winter tires, there may be decreased dry road traction, increased road noise, and shorter tread life. After changing to winter tires, be alert for changes in vehicle handling and braking.

If using winter tires:

- Use tires of the same brand and tread type on all four wheel positions.
- Use only radial ply tires of the same size, load range, and speed rating as the original equipment tires.

Winter tires with the same speed rating as the original equipment tires may not be available for H, V, W, Y, and ZR speed rated tires. If winter tires with a lower speed rating are chosen, never exceed the tire's maximum speed capability.

Summer Tires

This vehicle may come with high performance summer tires. These tires have a special tread and compound that are optimized for maximum dry and wet road performance. This special tread and compound will decrease performance in cold climates, and on ice and snow. We recommend installing winter tires on the vehicle if frequent driving in cold temperatures or on snow or ice covered roads is expected. See *Winter Tires on page 10-45*.

Tire Sidewall Labeling

Useful information about a tire is molded into the sidewall. The examples show a typical passenger vehicle and light truck tire sidewall.

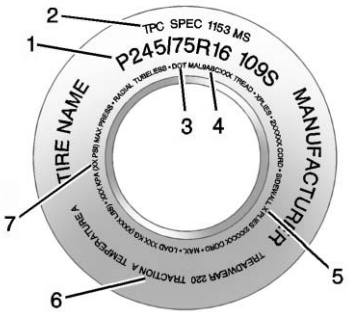

Passenger (P-Metric) Tire

(1) Tire Size: The tire size code is a combination of letters and numbers used to define a particular tire's width, height, aspect ratio, construction type, and service description. See the “Tire Size” illustration later in this section for more detail.

(2) TPC Spec (Tire Performance Criteria Specification): Original equipment tires designed to GM's specific tire performance criteria have a TPC specification code molded onto the sidewall. GM's TPC specifications meet or exceed all federal safety guidelines.

(3) DOT (Department of Transportation): The Department of Transportation (DOT) code indicates that the tire is in compliance with the U.S. Department of Transportation Motor Vehicle Safety Standards.

DOT Tire Date of Manufacture: The last four digits of the TIN indicate the tire manufactured date. The first two digits represent the week (01-52) and the last two digits, the year. For example, the third week of the year 2010 would have a four-digit DOT date of 0310.

(4) Tire Identification Number (TIN): The letters and numbers following the DOT code are the Tire Identification Number (TIN). The TIN shows the manufacturer and plant code, tire size, and date the tire was manufactured. The TIN is molded onto both sides of the tire, although only one side may have the date of manufacture.

(5) Tire Ply Material: The type of cord and number of plies in the sidewall and under the tread.

(6) Uniform Tire Quality Grading (UTQG): Tire manufacturers are required to grade tires based on three performance factors: treadwear, traction, and temperature resistance. For more information, see *Uniform Tire Quality Grading on page 10-63*.

(7) Maximum Cold Inflation Load Limit: Maximum load that can be carried and the maximum pressure needed to support that load. For information on recommended tire pressure see *Tire Pressure on page 10-53* and *Vehicle Load Limits on page 9-10*.

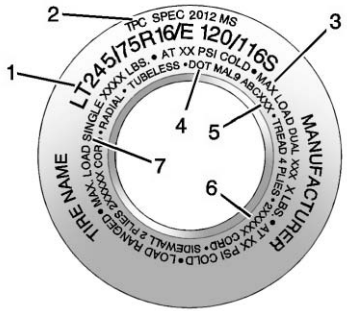

Light Truck (LT-Metric) Tire

(1) Tire Size: The tire size code is a combination of letters and numbers used to define a particular tire's width, height, aspect ratio, construction type, and service description. See the “Tire Size” illustration later in this section for more detail.

(2) TPC Spec (Tire Performance Criteria Specification): Original equipment tires designed to GM's specific tire performance criteria have a TPC specification code molded onto the sidewall. GM's TPC specifications meet or exceed all federal safety guidelines. This does not apply to Goodyear LT225/75R16 G949 RSA and Goodyear LT225/75R16 G933 RSD commercial truck tires.

(3) Dual Tire Maximum Load: Maximum load that can be carried and the maximum pressure needed to support that load when used in a dual configuration. For information on recommended tire pressure

see *Tire Pressure on page 10-53* and *Vehicle Load Limits on page 9-10*.

(4) DOT (Department of Transportation): The Department of Transportation (DOT) code indicates that the tire is in compliance with the U.S. Department of Transportation Motor Vehicle Safety Standards.

DOT Tire Date of Manufacture: The last four digits of the TIN indicate the tire manufactured date. The first two digits represent the week (01-52) and the last two digits, the year. For example, the third week of the year 2010 would have a four-digit DOT date of 0310.

(5) Tire Identification Number (TIN): The letters and numbers following the DOT code are the Tire Identification Number (TIN). The TIN shows the manufacturer and plant code, tire size, and date the tire was manufactured. The TIN is molded onto both sides of the tire, although only one side may have the date of manufacture.

(6) Tire Ply Material: The type of cord and number of plies in the sidewall and under the tread.

(7) Single Tire Maximum Load: Maximum load that can be carried and the maximum pressure needed to support that load when used as a single. For information on recommended tire pressure see *Tire Pressure on page 10-53* and *Vehicle Load Limits on page 9-10*.

Tire Designations

Tire Size

The following examples show the different parts of a tire size.

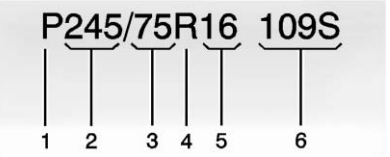

Passenger (P-Metric) Tire

(1) Passenger (P-Metric) Tire: The United States version of a metric tire sizing system. The letter P as the first character in the tire size means a passenger vehicle tire engineered to standards set by the U.S. Tire and Rim Association.

(2) Tire Width: The three-digit number indicates the tire section width in millimeters from sidewall to sidewall.

(3) Aspect Ratio: A two-digit number that indicates the tire height-to-width measurements.

For example, if the tire size aspect ratio is 75, as shown in item 3 of the illustration, it would mean that the tire's sidewall is 75 percent as high as it is wide.

(4) Construction Code: A letter code is used to indicate the type of ply construction in the tire. The letter R means radial ply construction; the letter D means diagonal or bias ply construction; and the letter B means belted-bias ply construction.

(5) Rim Diameter: Diameter of the wheel in inches.

(6) Service Description: These characters represent the load index and speed rating of the tire. The load index represents the load carrying capacity a tire is certified to carry. The speed rating is the maximum speed a tire is certified to carry a load.

Light Truck (LT-Metric) Tire

(1) Light Truck (LT-Metric) Tire: The United States version of a metric tire sizing system. The letters LT as the first two characters in the tire size mean a light truck tire engineered to standards set by the U.S. Tire and Rim Association.

(2) Tire Width: The three-digit number indicates the tire section width in millimeters from sidewall to sidewall.

(3) Aspect Ratio: A two-digit number that indicates the tire height-to-width measurements. For example, if the tire size aspect ratio is 75, as shown in item 3 of the light truck (LT-Metric) tire illustration, it would mean that the tire's sidewall is 75 percent as high as it is wide.

(4) Construction Code: A letter code is used to indicate the type of ply construction in the tire. The letter R means radial ply construction; the letter D means diagonal or bias ply construction; and the letter B means belted-bias ply construction.

(5) Rim Diameter: Diameter of the wheel in inches.

(6) Load Range: Load Range.

(7) Service Description: The service description indicates the load index and speed rating of a tire. If two numbers are given as in the example, 120/116, then this represents the load index for single versus dual wheel usage (single/dual). The speed rating is

the maximum speed a tire is certified to carry a load. This does not apply to Goodyear LT225/75R16 G949 RSA and Goodyear LT225/75R16 G933 RSD commercial truck tires; see the dual tire and single tire maximum load and load range letter designations on the tire sidewall.

Tire Terminology and Definitions

Air Pressure: The amount of air inside the tire pressing outward on each square inch of the tire. Air pressure is expressed in kPa (kilopascal) or psi (pounds per square inch).

Accessory Weight: The combined weight of optional accessories. Some examples of optional accessories are automatic transmission, power steering, power brakes, power windows, power seats, and air conditioning.

Aspect Ratio: The relationship of a tire's height to its width.

Belt: A rubber coated layer of cords between the plies and the tread. Cords may be made from steel or other reinforcing materials.

Bead: The tire bead contains steel wires wrapped by steel cords that hold the tire onto the rim.

Bias Ply Tire: A pneumatic tire in which the plies are laid at alternate angles less than 90 degrees to the centerline of the tread.

Cold Tire Pressure: The amount of air pressure in a tire, measured in kPa (kilopascal) or psi (pounds per square inch) before a tire has built up heat from driving. See *Tire Pressure on page 10-53*.

Curb Weight: The weight of a motor vehicle with standard and optional equipment including the maximum capacity of fuel, oil, and coolant, but without passengers and cargo.

DOT Markings: A code molded into the sidewall of a tire signifying that the tire is in compliance with the U.S. Department of Transportation (DOT) Motor Vehicle Safety Standards. The DOT code includes the Tire Identification Number (TIN), an alphanumeric designator which can also identify the tire manufacturer, production plant, brand, and date of production.

GVWR: Gross Vehicle Weight Rating. See *Vehicle Load Limits on page 9-10*.

GAWR FRT: Gross Axle Weight Rating for the front axle. See *Vehicle Load Limits on page 9-10*.

GAWR RR: Gross Axle Weight Rating for the rear axle. See *Vehicle Load Limits on page 9-10*.

Intended Outboard Sidewall: The side of an asymmetrical tire, that must always face outward when mounted on a vehicle.

Kilopascal (kPa): The metric unit for air pressure.

Light Truck (LT-Metric) Tire: A tire used on light duty trucks and some multipurpose passenger vehicles.

Load Index: An assigned number ranging from 1 to 279 that corresponds to the load carrying capacity of a tire.

Maximum Inflation Pressure: The maximum air pressure to which a cold tire can be inflated. The maximum air pressure is molded onto the sidewall.

Maximum Load Rating: The load rating for a tire at the maximum permissible inflation pressure for that tire.

Maximum Loaded Vehicle Weight: The sum of curb weight, accessory weight, vehicle capacity weight, and production options weight.

Normal Occupant Weight: The number of occupants a vehicle is designed to seat multiplied by 68 kg (150 lbs). See *Vehicle Load Limits on page 9-10*.

Occupant Distribution: Designated seating positions.

Outward Facing Sidewall: The side of an asymmetrical tire that has a particular side that faces outward when mounted on a vehicle. The side of the tire that contains a whitewall, bears white lettering, or bears manufacturer, brand, and/or model name molding that is higher or deeper than the same moldings on the other sidewall of the tire.

Passenger (P-Metric) Tire: A tire used on passenger cars and some light duty trucks and multipurpose vehicles.

Recommended Inflation Pressure: Vehicle manufacturer's recommended tire inflation pressure as shown on the tire placard. See *Tire Pressure on page 10-53* and *Vehicle Load Limits on page 9-10*.

Radial Ply Tire: A pneumatic tire in which the ply cords that extend to the beads are laid at 90 degrees to the centerline of the tread.

Rim: A metal support for a tire and upon which the tire beads are seated.

Sidewall: The portion of a tire between the tread and the bead.

Speed Rating: An alphanumeric code assigned to a tire indicating the maximum speed at which a tire can operate.

Traction: The friction between the tire and the road surface. The amount of grip provided.

Tread: The portion of a tire that comes into contact with the road.

Treadwear Indicators: Narrow bands, sometimes called wear bars, that show across the tread of a tire when only 1.6 mm (1/16 in) of tread remains. See *When It Is Time for New Tires on page 10-60*.

UTQGS (Uniform Tire Quality Grading Standards): A tire information system that provides consumers with ratings for a tire's traction, temperature, and treadwear. Ratings are determined by tire manufacturers using government testing procedures. The ratings are molded into the sidewall of the tire. See *Uniform Tire Quality Grading on page 10-63*.

Vehicle Capacity Weight: The number of designated seating positions multiplied by 68 kg (150 lbs) plus the rated cargo load. See *Vehicle Load Limits on page 9-10*.

Vehicle Maximum Load on the Tire: Load on an individual tire due to curb weight, accessory weight, occupant weight, and cargo weight.

Vehicle Placard: A label permanently attached to a vehicle showing the vehicle capacity weight and the original equipment tire size and recommended inflation pressure. See “Tire and Loading Information Label” under *Vehicle Load Limits on page 9-10*.

Tire Pressure

Tires need the correct amount of air pressure to operate effectively.

Notice: **Neither tire underinflation nor overinflation is good. Underinflated tires, or tires that do not have enough air, can result in:**

- **Tire overloading and overheating which could lead to a blowout.**
- **Premature or irregular wear.**
- **Poor handling.**
- **Reduced fuel economy.**

Overinflated tires, or tires that have too much air, can result in:

- **Unusual wear.**
- **Poor handling.**
- **Rough ride.**
- **Needless damage from road hazards.**

The Tire and Loading Information label on the vehicle indicates the original equipment tires and the correct cold tire inflation pressures. The recommended pressure is the minimum air pressure needed to support the vehicle's maximum load carrying capacity.

For additional information regarding how much weight the vehicle can carry, and an example of the Tire and Loading Information label, see *Vehicle Load Limits on page 9-10*. How the vehicle is loaded affects vehicle handling and ride comfort. Never load the vehicle with more weight than it was designed to carry.

When to Check

Check the tires once a month or more.

Do not forget the spare tire, if the vehicle has one. See *Full-Size Spare Tire on page 10-77* for additional information.

How to Check

Use a good quality pocket-type gauge to check tire pressure. Proper tire inflation cannot be determined by looking at the tire. Check the tire inflation pressure when the tires are cold, meaning the vehicle has not been driven for at least three hours or no more than 1.6 km (1 mi).

Remove the valve cap from the tire valve stem. Press the tire gauge firmly onto the valve to get a pressure measurement. If the cold tire inflation pressure matches the recommended

pressure on the Tire and Loading Information label, no further adjustment is necessary. If the inflation pressure is low, add air until the recommended pressure is reached. If the inflation pressure is high, press on the metal stem in the center of the tire valve to release air.

Re-check the tire pressure with the tire gauge.

Return the valve caps on the valve stems to prevent leaks and keep out dirt and moisture.

Tire Pressure Monitor System

The Tire Pressure Monitor System (TPMS) uses radio and sensor technology to check tire pressure levels. The TPMS sensors monitor the air pressure in your tires and transmit tire pressure readings to a receiver located in the vehicle.

Each tire, including the spare (if provided), should be checked monthly when cold and inflated to the inflation pressure recommended by the vehicle manufacturer on the vehicle placard or tire inflation pressure label. (If your vehicle has tires of a different size than the size indicated on the vehicle placard or tire inflation pressure label, you should determine the proper tire inflation pressure for those tires.)

As an added safety feature, your vehicle has been equipped with a tire pressure monitoring system (TPMS) that illuminates a low tire pressure telltale when one or more of your tires is significantly under-inflated.

Accordingly, when the low tire pressure telltale illuminates, you should stop and check your tires as soon as possible, and inflate them to the proper pressure. Driving on a significantly under-inflated tire causes the tire to overheat and can lead to tire failure. Under-inflation also reduces fuel efficiency and tire tread life, and may affect the vehicle's handling and stopping ability.

Please note that the TPMS is not a substitute for proper tire maintenance, and it is the driver's responsibility to maintain correct tire pressure, even if under-inflation has not reached the level to trigger illumination of the TPMS low tire pressure telltale.

Your vehicle has also been equipped with a TPMS malfunction indicator to indicate when the system is not operating properly. The TPMS malfunction indicator is combined with the low tire pressure telltale. When the system detects a malfunction, the telltale will flash for approximately one minute and then remain continuously illuminated. This sequence will continue upon subsequent vehicle start-ups as long as the malfunction exists.

When the malfunction indicator is illuminated, the system may not be able to detect or signal low tire

pressure as intended. TPMS malfunctions may occur for a variety of reasons, including the installation of replacement or alternate tires or wheels on the vehicle that prevent the TPMS from functioning properly. Always check the TPMS malfunction telltale after replacing one or more tires or wheels on your vehicle to ensure that the replacement or alternate tires and wheels allow the TPMS to continue to function properly.

See *Tire Pressure Monitor Operation on page 10-55*.

Federal Communications Commission (FCC) Rules and with Industry Canada Standards

See *Radio Frequency Statement on page 13-20* for information regarding Part 15 of the Federal Communications Commission (FCC) Rules and with Industry Canada Standards RSS-GEN/210/220/310.

Tire Pressure Monitor Operation

This vehicle may have a Tire Pressure Monitor System (TPMS). The TPMS is designed to warn the driver when a low tire pressure condition exists. TPMS sensors are mounted onto each tire and wheel assembly, excluding the spare tire and wheel assembly. The TPMS sensors monitor the air pressure in the tires and transmit the tire pressure readings to a receiver located in the vehicle.

When a low tire pressure condition is detected, the TPMS illuminates the low tire pressure warning light located on the instrument cluster. If the warning light comes on, stop as soon as possible and inflate the tires to the recommended pressure shown on the Tire and Loading Information label. See *Vehicle Load Limits on page 9-10*.

A message to check the pressure in a specific tire displays in the Driver Information Center (DIC). The low tire pressure warning light and the DIC warning message come on at each ignition cycle until the tires are inflated to the correct inflation pressure. If the vehicle has DIC buttons, tire pressure levels can be viewed. For additional information and details about the DIC operation and displays, see *Driver Information Center (DIC) on page 5-24* and *Tire Messages on page 5-36*.

The low tire pressure warning light may come on in cool weather when the vehicle is first started, and then turn off as the vehicle is driven. This could be an early indicator that the air pressure is getting low and needs to be inflated to the proper pressure.

A Tire and Loading Information label shows the size of the original equipment tires and the correct inflation pressure for the tires when they are cold. See *Vehicle Load Limits on page 9-10*, for an example of the Tire and Loading Information label and its location. Also see *Tire Pressure on page 10-53*.

The TPMS can warn about a low tire pressure condition but it does not replace normal tire maintenance. See *Tire Inspection on page 10-58*, *Tire Rotation on page 10-58* and *Tires on page 10-44*.

Notice: **Tire sealant materials are not all the same. A non-approved tire sealant could damage the TPMS sensors. TPMS sensor damage caused by using an incorrect tire sealant is not covered by the vehicle warranty. Always use only the GM-approved tire sealant available through your dealer or included in the vehicle.**

TPMS Malfunction Light and Message

The TPMS will not function properly if one or more of the TPMS sensors are missing or inoperable. When the system detects a malfunction, the low tire pressure warning light flashes for about one minute and then stays on for the remainder of the ignition cycle. A DIC warning message also displays. The malfunction light and DIC warning message come on at each ignition cycle until the problem is corrected. Some of the conditions that can cause these to come on are:

- One of the road tires has been replaced with the spare tire. The spare tire does not have a TPMS sensor. The malfunction light and the DIC message should go off after the road tire is replaced and the sensor matching process is performed successfully. See "TPMS Sensor Matching Process" later in this section.
- The TPMS sensor matching process was not done or not completed successfully after rotating the tires. The malfunction light and the DIC message should go off after successfully completing the sensor matching process. See "TPMS Sensor Matching Process" later in this section.
- One or more TPMS sensors are missing or damaged. The malfunction light and the DIC message should go off when the TPMS sensors are installed and the sensor matching process is performed successfully. See your dealer for service.
- Replacement tires or wheels do not match the original equipment tires or wheels. Tires and wheels other than those recommended could prevent the TPMS from functioning properly. See *Buying New Tires on page 10-61*.

- Operating electronic devices or being near facilities using radio wave frequencies similar to the TPMS could cause the TPMS sensors to malfunction.

If the TPMS is not functioning properly, it cannot detect or signal a low tire condition. See your dealer for service if the TPMS malfunction light and DIC message come on and stay on.

TPMS Sensor Matching Process

Each TPMS sensor has a unique identification code. The identification code needs to be matched to a new tire/wheel position after rotating the vehicle's tires or replacing one or more of the TPMS sensors. Also, the TPMS sensor matching process should be performed after replacing a spare tire with a road tire containing the TPMS sensor. The malfunction light and the DIC message should go off at the next ignition cycle. The sensors are matched to the tire/wheel positions, using a TPMS relearn tool, in the following order: driver side front tire, passenger side front tire, passenger side rear tire, and driver side rear. See your dealer for service or to purchase a relearn tool.

There are two minutes to match the first tire/wheel position, and five minutes overall to match all four tire/wheel positions. If it takes longer, the matching process stops and must be restarted.

The TPMS sensor matching process is:

1. Set the parking brake.
2. Turn the ignition to ON/RUN with the engine off.
3. Press the Remote Keyless Entry (RKE) transmitter's 🔒 and 🔓 buttons at the same time for approximately five seconds.

   The horn sounds twice to signal the receiver is in relearn mode and the TIRE LEARNING ACTIVE message displays on the DIC screen.

   If the vehicle does not have RKE, press the Driver Information Center (DIC) vehicle information button until the PRESS ✓ TO RELEARN TIRE POSITIONS message displays. The horn sounds twice to signal the receiver is in relearn mode and TIRE LEARNING ACTIVE message displays on the DIC screen.

   If the vehicle does not have RKE or DIC buttons, press the trip odometer reset stem on the instrument cluster until the PRESS ✓ TO RELEARN TIRE POSITIONS message displays. The horn sounds twice to signal the receiver is in relearn mode and TIRE LEARNING ACTIVE message displays on the DIC screen.

4. Start with the driver side front tire.
5. Place the relearn tool against the tire sidewall, near the valve stem. Then press the button to activate the TPMS sensor. A horn chirp confirms that the sensor identification code has been matched to this tire and wheel position.
6. Proceed to the passenger side front tire, and repeat the procedure in Step 5.
7. Proceed to the passenger side rear tire, and repeat the procedure in Step 5.
8. Proceed to the driver side rear tire, and repeat the procedure in Step 5. The horn sounds two times to indicate the sensor identification code has been matched to the driver side rear tire, and the TPMS sensor matching process is no longer active. The TIRE LEARNING ACTIVE message on the DIC display screen goes off.
9. Turn the ignition switch to LOCK/OFF.
10. Set all four tires to the recommended air pressure level as indicated on the Tire and Loading Information label.

Tire Inspection

We recommend that the tires, including the spare tire, if the vehicle has one, be inspected for signs of wear or damage at least once a month.

Replace the tire if:

- The indicators at three or more places around the tire can be seen.
- There is cord or fabric showing through the tire's rubber.
- The tread or sidewall is cracked, cut, or snagged deep enough to show cord or fabric.
- The tire has a bump, bulge, or split.
- The tire has a puncture, cut, or other damage that cannot be repaired well because of the size or location of the damage.

Tire Rotation

Tires should be rotated every 12 000 km (7,500 mi). See *Maintenance Schedule on page 11-3*.

Tires are rotated to achieve a uniform wear for all tires. The first rotation is the most important.

Any time unusual wear is noticed, rotate the tires as soon as possible and check the wheel alignment. Also check for damaged tires or wheels. See *When It Is Time for New Tires on page 10-60* and *Wheel Replacement on page 10-65*.

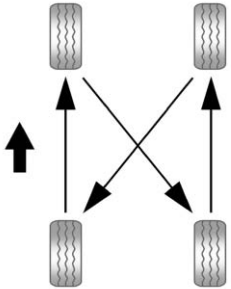

Use this rotation pattern when rotating the tires.

If the vehicle has a compact spare tire, do not include it in the tire rotation.

Adjust the front and rear tires to the recommended inflation pressure on the Tire and Loading Information label after the tires have been rotated. See *Tire Pressure on page 10-53* and *Vehicle Load Limits on page 9-10*.

Reset the Tire Pressure Monitor System. See *Tire Pressure Monitor Operation on page 10-55*.

Check that all wheel nuts are properly tightened. See “Wheel Nut Torque” under *Capacities and Specifications on page 12-2*.

⚠ WARNING

Rust or dirt on a wheel, or on the parts to which it is fastened, can make wheel nuts become loose after time. The wheel could come off and cause an accident. When changing a wheel, remove any rust or dirt from places where the wheel attaches to the vehicle. In an emergency, a cloth or a paper towel can be used; however, use a scraper or wire brush later to remove all rust or dirt.

Lightly coat the center of the wheel hub with wheel bearing grease after a wheel change or tire rotation to prevent corrosion or rust build-up. Do not get grease on the flat wheel mounting surface or on the wheel nuts or bolts.

Dual Tire Rotation

When the vehicle is new, or whenever a wheel, wheel bolt, or wheel nut is replaced, check the wheel nut torque after 160, 1 600, and 10 000 km (100, 1,000, and 6,000 mi) of driving. For proper wheel nut tightening information, see “Removing the Flat Tire and Installing the Spare Tire” under *Tire Changing on page 10-68*. Also see “Wheel Nut Torque” under *Capacities and Specifications on page 12-2*.

The outer tire on a dual wheel setup generally wears faster than the inner tire. Tires last longer and wear more evenly if they are rotated. See

Tire Inspection on page 11-3 and *Tire Rotation on page 10-58*. Also see *Maintenance Schedule on page 11-3*.

⚠ WARNING

If the vehicle is operated with a tire that is underinflated, the tire can overheat. An overheated tire can lose air suddenly or catch fire. You or others could be injured. Properly inflate all tires, including the spare.

See *Tires on page 10-44* and *Tire Pressure on page 10-53* for more information on proper tire inflation.

When It Is Time for New Tires

Factors such as maintenance, temperatures, driving speeds, vehicle loading, and road conditions affect the wear rate of the tires.

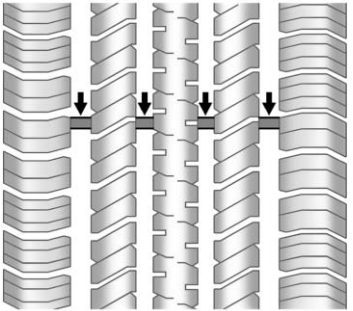

Treadwear indicators are one way to tell when it is time for new tires. Treadwear indicators appear when the tires have only 1.6 mm (1/16 in) or less of tread remaining.

Some commercial truck tires, including Goodyear LT225/75R16 G949 RSA and Goodyear LT225/75R16 G933 RSD, may not have treadwear indicators. If the tires do not have treadwear indicators, replace the tires when the tread depth is down to 3.2 mm (1/8 in) for the front tires, or 1.6 mm (1/16 in) for the rear tires. See *Tire Inspection on page 10-58* and *Tire Rotation on page 10-58* for additional information.

The rubber in tires ages over time. This also applies to the spare tire, if the vehicle has one, even if it is never used. Multiple factors including temperatures, loading conditions, and inflation pressure maintenance affect how fast aging takes place. GM recommends that tires, including the spare if equipped, be replaced after six years, regardless of tread wear. The tire manufacturer date is the last four digits of the DOT Tire Identification Number (TIN) which is molded into one side of the tire sidewall. The first two digits represent the week (01-52) and the last two digits, the year. For example, the third week of the year 2010 would have a four-digit DOT date of 0310.

Vehicle Storage

Tires age when stored normally mounted on a parked vehicle. Park a vehicle that will be stored for at least a month in a cool, dry, clean area away from direct sunlight to slow aging. This area should be free of grease, gasoline or other substances that can deteriorate rubber.

Parking for an extended period can cause flat spots on the tires that may result in vibrations while driving. When storing a vehicle for at least a month, remove the tires or raise the vehicle to reduce the weight from the tires.

Buying New Tires

GM has developed and matched specific tires for the vehicle. The original equipment tires installed were designed to meet General Motors Tire Performance Criteria Specification (TPC Spec) system rating. When replacement tires are needed, GM strongly recommends buying tires with the same TPC Spec rating.

GM's exclusive TPC Spec system considers over a dozen critical specifications that impact the overall performance of the vehicle, including brake system performance, ride and handling, traction control, and tire pressure monitoring performance. GM's TPC Spec number is molded onto the tire's sidewall near the tire size. If the tires have an all-season tread design, the TPC Spec number will be followed by MS for mud and snow. See *Tire Sidewall Labeling on page 10-46* for additional information.

GM recommends replacing worn tires in complete sets of four (six for dual rear wheels). Uniform tread depth on all tires will help to maintain the performance of the vehicle. Braking and handling performance may be adversely affected if all the tires are not replaced at the same time. If proper rotation and maintenance have been done, all four tires (six for dual rear wheels) should wear out at about the same time. See *Tire Rotation on page 10-58* for information on proper tire rotation. However, if it is necessary to replace only one axle set of worn tires, place the new tires on the rear axle (two for single rear wheels, four for dual rear wheels).

⚠ WARNING

Tires could explode during improper service. Attempting to mount or dismount a tire could cause injury or death.

(Continued)

WARNING (CONTINUED)

Only your dealer or authorized tire service center should mount or dismount the tires.

⚠ WARNING

Mixing tires of different sizes, brands, or types may cause loss of control of the vehicle, resulting in a crash or other vehicle damage. Use the correct size, brand, and type of tires on all wheels.

This vehicle may have a different size spare than the road tires originally installed on the vehicle. When new, the vehicle included a spare tire and wheel assembly with a similar overall diameter as the road tires and wheels, so it is all right to drive on it. The spare

(Continued)

WARNING (CONTINUED)

tire was developed for use on this vehicle and will not affect vehicle handling.

⚠ WARNING

Using bias-ply tires on the vehicle may cause the wheel rim flanges to develop cracks after many miles of driving. A tire and/or wheel could fail suddenly and cause a crash. Use only radial-ply tires with the wheels on the vehicle.

If the vehicle tires must be replaced with a tire that does not have a TPC Spec number, make sure they are the same size, load range, speed rating, and construction (radial) as the original tires.

Vehicles that have a tire pressure monitoring system could give an inaccurate low-pressure warning if non-TPC Spec rated tires are installed. See *Tire Pressure Monitor System on page 10-54*.

The Tire and Loading Information label indicates the original equipment tires on the vehicle. See *Vehicle Load Limits on page 9-10* for the label location and more information about the Tire and Loading Information label.

Different Size Tires and Wheels

If wheels or tires are installed that are a different size than the original equipment wheels and tires, vehicle performance, including its braking, ride and handling characteristics, stability, and resistance to rollover may be affected. If the vehicle has electronic systems such as antilock

brakes, rollover airbags, traction control, and electronic stability control, the performance of these systems can also be affected.

⚠ WARNING

If different sized wheels are used, there may not be an acceptable level of performance and safety if tires not recommended for those wheels are selected. This increases the chance of a crash and serious injury. Only use GM specific wheel and tire systems developed for the vehicle, and have them properly installed by a GM certified technician.

See *Buying New Tires on page 10-61* and *Accessories and Modifications on page 10-3*.

Uniform Tire Quality Grading

Quality grades can be found where applicable on the tire sidewall between tread shoulder and maximum section width. For example:

Treadwear 200 Traction AA Temperature A

The following information relates to the system developed by the United States National Highway Traffic Safety Administration (NHTSA), which grades tires by treadwear, traction, and temperature performance. This applies only to vehicles sold in the United States. The grades are molded on the sidewalls of most passenger car tires. The Uniform Tire Quality Grading (UTQG) system does not apply to deep tread, winter tires, compact spare tires, tires with nominal rim diameters of 10 to 12 inches (25 to 30 cm), or to some limited-production tires.

While the tires available on General Motors passenger cars and light trucks may vary with respect to these grades, they must also conform to federal safety requirements and additional General Motors Tire Performance Criteria (TPC) standards.

All Passenger Car Tires Must Conform to Federal Safety Requirements In Addition To These Grades.

Treadwear

The treadwear grade is a comparative rating based on the wear rate of the tire when tested under controlled conditions on a specified government test course. For example, a tire

graded 150 would wear one and one-half (1½) times as well on the government course as a tire graded 100. The relative performance of tires depends upon the actual conditions of their use, however, and may depart significantly from the norm due to variations in driving habits, service practices and differences in road characteristics and climate.

Traction – AA, A, B, C

The traction grades, from highest to lowest, are AA, A, B, and C. Those grades represent the tire's ability to stop on wet pavement as measured under controlled conditions on specified government test surfaces of asphalt and concrete. A tire marked C may have poor traction performance. Warning: The traction grade assigned to this tire is based on straight-ahead braking traction tests, and does not include acceleration, cornering, hydroplaning, or peak traction characteristics.

Temperature – A, B, C

The temperature grades are A (the highest), B, and C, representing the tire's resistance to the generation of heat and its ability to dissipate heat when tested under controlled conditions on a specified indoor laboratory test wheel. Sustained high temperature can cause the material of the tire to degenerate and reduce tire life, and excessive temperature can lead to sudden tire failure. The grade C corresponds to a level of performance which all passenger car tires must meet under the Federal Motor Safety Standard No. 109. Grades B and A represent higher levels of performance on the laboratory test wheel than the minimum required by law. Warning: The temperature grade for this tire is established for a tire that is properly inflated and not overloaded. Excessive speed, underinflation, or excessive loading, either separately or in combination, can cause heat buildup and possible tire failure.

Wheel Alignment and Tire Balance

The tires and wheels were aligned and balanced at the factory to provide the longest tire life and best overall performance. Adjustments to wheel alignment and tire balancing will not be necessary on a regular basis. However, check the alignment if there is unusual tire wear or if the vehicle is pulling to one side or the other. If the vehicle vibrates when driving on a smooth

road, the tires and wheels might need to be rebalanced. See your dealer for proper diagnosis.

Wheel Replacement

Replace any wheel that is bent, cracked, or badly rusted or corroded. If wheel nuts keep coming loose, the wheel, wheel bolts, and wheel nuts should be replaced. If the wheel leaks air, replace it. Some aluminum wheels can be repaired. See your dealer if any of these conditions exist.

Your dealer will know the kind of wheel that is needed.

Each new wheel should have the same load-carrying capacity, diameter, width, offset, and be mounted the same way as the one it replaces.

Replace wheels, wheel bolts, wheel nuts, or Tire Pressure Monitor System (TPMS) sensors with new GM original equipment parts.

⚠ WARNING

Using the wrong replacement wheels, wheel bolts, or wheel nuts can be dangerous. It could affect the braking and handling of the vehicle. Tires can lose air, and cause loss of control, causing a crash. Always use the correct wheel, wheel bolts, and wheel nuts for replacement.

Notice: **The wrong wheel can also cause problems with bearing life, brake cooling, speedometer or odometer calibration, headlamp aim, bumper height, vehicle ground clearance, and tire or tire chain clearance to the body and chassis.**

Used Replacement Wheels

⚠ WARNING

Replacing a wheel with a used one is dangerous. How it has been used or how far it has been driven may be unknown. It could fail suddenly and cause a crash. When replacing wheels, use a new GM original equipment wheel.

Tire Chains

⚠ WARNING

Tire chains used on a vehicle without the proper amount of clearance can cause damage to the brakes, suspension, or other vehicle parts. The area damaged by the tire chains could cause you to lose control of the vehicle and you or others may be injured in a

(Continued)

WARNING (CONTINUED)

crash. To help avoid damage to the vehicle, drive slowly, readjust, or remove the device if it is contacting the vehicle. Do not spin the vehicle's tires. Follow the manufacturer's instructions.

Notice: **Use tire chains only where legal and only when you must. Use chains that are the proper size for the tires. Install them on the tires of the rear axle. Do not use chains on the tires of the front axle. Tighten them as tightly as possible with the ends securely fastened. Drive slowly and follow the chain manufacturer's instructions. If you can hear the chains contacting the vehicle, stop and retighten them. If the contact continues, slow down until it stops. Driving too fast or spinning the wheels with chains on will damage the vehicle.**

For Cutaway models with LT245/75R16, LT225/75R16 or LT215/85R16 size single or dual rear tires, use Low Profile Z-Chain or SAE Class S cables.

For Cargo or Passenger models with P245/70R17, LT225/75R16 or LT245/75R16 size tires, use Low Profile Z-Chain cables. SAE Class S chains are not recommended.

If the vehicle has dual rear tires, do not use individual tire chains. Use tire chains that fit across both dual tires.

If a Tire Goes Flat

It is unusual for a tire to blow out while driving, especially if the tires are maintained properly. See *Tires on page 10-44*. If air goes out of a tire, it is much more likely to leak out slowly. But if there ever is a blowout, here are a few tips about what to expect and what to do:

If a front tire fails, the flat tire creates a drag that pulls the vehicle toward that side. Take your foot off the accelerator pedal and grip the steering wheel firmly. Steer to maintain lane position, and then gently brake to a stop, well off the road, if possible.

A rear blowout, particularly on a curve, acts much like a skid and may require the same correction as used in a skid. Stop pressing the accelerator pedal and steer to straighten the vehicle. It may be very bumpy and noisy. Gently brake to a stop, well off the road, if possible.

⚠ WARNING

Driving on a flat tire will cause permanent damage to the tire. Re-inflating a tire after it has been driven on while severely underinflated or flat may cause a blowout and a serious crash. Never attempt to re-inflate a tire that has been driven on while severely underinflated or flat.

(Continued)

WARNING (CONTINUED)

Have your dealer or an authorized tire service center repair or replace the flat tire as soon as possible.

⚠ WARNING

Lifting a vehicle and getting under it to do maintenance or repairs is dangerous without the appropriate safety equipment and training. If a jack is provided with the vehicle, it is designed only for changing a flat tire. If it is used for anything else, you or others could be badly injured or killed if the vehicle slips off the jack. If a jack is provided with the vehicle, only use it for changing a flat tire.

If a tire goes flat, avoid further tire and wheel damage by driving slowly to a level place, well off the road, if possible. Turn on the hazard warning flashers. See *Hazard Warning Flashers on page 6-4*.

⚠ WARNING

Changing a tire can be dangerous. The vehicle can slip off the jack and roll over or fall causing injury or death. Find a level place to change the tire. To help prevent the vehicle from moving:

1. Set the parking brake firmly.
2. Put an automatic transmission in P (Park) or a manual transmission in 1 (First) or R (Reverse).
3. Turn off the engine and do not restart while the vehicle is raised.
4. Do not allow passengers to remain in the vehicle.

(Continued)

WARNING (CONTINUED)

5. Place wheel blocks on both sides of the tire at the opposite corner of the tire being changed.

When the vehicle has a flat tire (2), use the following example as a guide to assist in the placement of the wheel blocks (1).

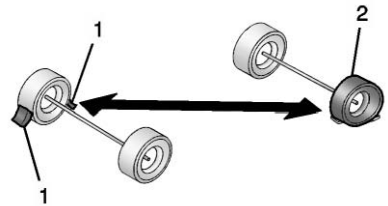

1. Wheel Block
2. Flat Tire

The following information explains how to repair or change a tire.

Tire Changing

Removing the Spare Tire and Tools

Equipment needed for a cargo van or a passenger van is in the passenger side rear corner of the vehicle.

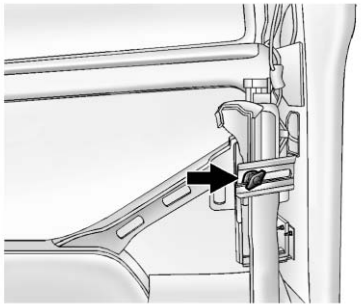

Remove the retaining wing bolt and lift it off of the mounting bracket.

Equipment needed for a 15-passenger seating arrangement is secured on the rear floor on the passenger side of the vehicle.

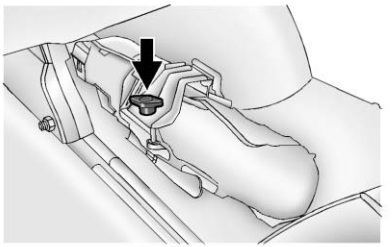

Remove the retaining wing bolt and lift it out of the mounting bracket to access the equipment.

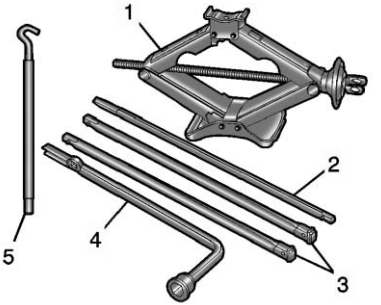

The tools you will be using include:

1. Jack
2. Hoist Handle
3. Extension(s)
4. Wheel Wrench
5. Jack Handle

The spare tire is mounted in the rear underbody of the vehicle.

Use the hoist handle, extension(s), and the wheel wrench to remove the underbody-mounted spare tire.

To lower the spare tire from the vehicle:

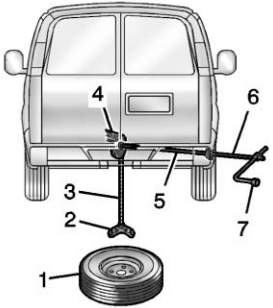

1. Spare Tire
2. Tire/Wheel Retainer
3. Hoist Cable
4. Hoist Assembly
5. Hoist Shaft
6. Hoist Handle and Extension(s)
7. Wheel Wrench

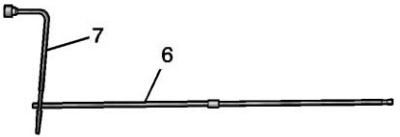

1. Assemble the wheel wrench (7) to the hoist handle and the extension(s) (6).

   Insert the extension end through the hole in the rear bumper.

2. Be sure the extension end connects to the hoist shaft. The chiseled end of the extension is used to lower the spare tire.

3. Turn the wheel wrench counterclockwise to lower the spare tire to the ground. Continue to turn the wheel wrench until the spare tire can be pulled out from under the vehicle.

   If the spare tire does not lower to the ground, the secondary latch is engaged causing the tire not to lower. See *Secondary Latch System on page 10-75*.

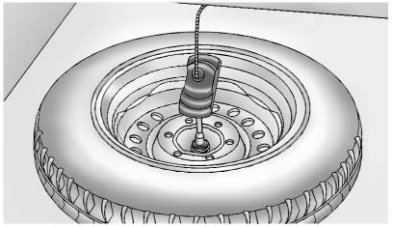

4. When the tire has been lowered, pull it closer to reach the tire retainer and pull it up through the wheel opening.

   For a vehicle that was completed from a cab and chassis, refer to the information from the body supplier/installer.

   The spare tire is a full-size tire, like the other tires on the vehicle.

5. Put the spare tire near the flat tire.

Removing the Flat Tire and Installing the Spare Tire

If the vehicle has plastic wheel nut caps, loosen them by turning the wheel wrench counterclockwise. The wheel nut caps are designed to remain with the center cap. Remove the center cap.

If the wheel has a smooth center piece, place the chisel end of the wheel wrench in the slot on the wheel and gently pry it out.

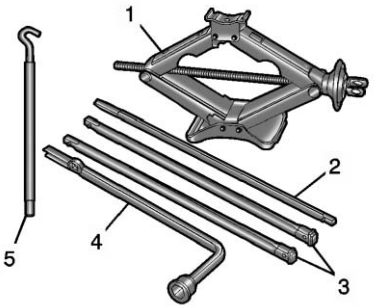

1. Jack
2. Hoist Handle
3. Extension(s)
4. Wheel Wrench
5. Jack Handle

1. Do a safety check before proceeding. See *If a Tire Goes Flat on page 10-66*.
2. Loosen all the wheel nuts with the wheel wrench. Do not remove them yet.
3. Assemble the jack and tools:

   Front Flat: Assemble the jack (1) together with the jack handle (5), one or two extension(s) (3), and the wheel wrench (4).

   Rear Flat: Assemble the jack (1) together with the jack handle (5), two extensions (3), and the wheel wrench (4).

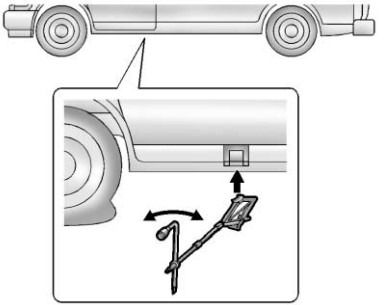

Front Position

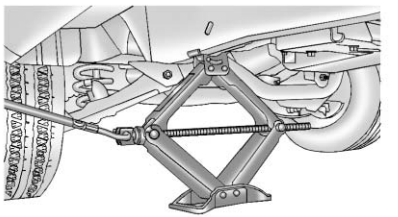

Front Position

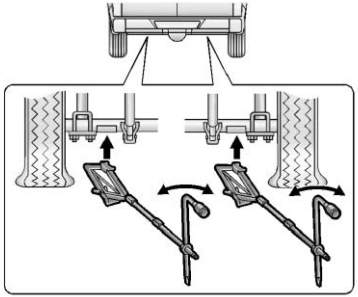

Rear Position

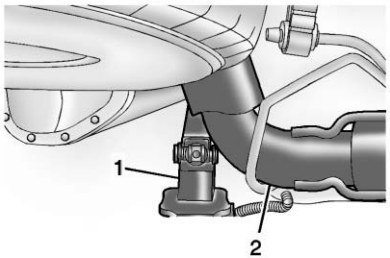

Rear Alternative Position (Diesel Vehicles)

4. Position the jack under the vehicle, as shown.

   The front position jacking point is on the frame. The rear position jacking point is on the rear axle.

   If the exhaust system interferes with the jack location in the rear axle, such as in Diesel vehicles, place the jack (1) on the rear axle between the axle housing and the shock absorber bracket in order to avoid any interference with the exhaust pipe (2).

⚠ WARNING

Getting under a vehicle when it is jacked up is dangerous. If the vehicle slips off the jack you could be badly injured or killed. Never get under a vehicle when it is supported only by a jack.

⚠ WARNING

Raising the vehicle with the jack improperly positioned can damage the vehicle and even make the vehicle fall. To help avoid personal injury and vehicle damage, be sure to fit the jack lift head into the proper location before raising the vehicle.

5. Turn the wheel wrench clockwise to raise the vehicle. Raise the vehicle far enough off the ground so there is enough room for the spare tire to fit.

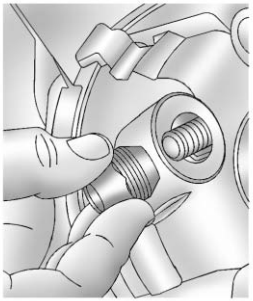

6. Remove all the wheel nuts.
7. Take the flat tire off of the mounting surface.

⚠ WARNING

Rust or dirt on a wheel, or on the parts to which it is fastened, can make wheel nuts become loose after time. The wheel could come off and cause an accident. When changing a wheel, remove any rust or dirt from places where the

(Continued)

WARNING (CONTINUED)

wheel attaches to the vehicle. In an emergency, a cloth or a paper towel can be used; however, use a scraper or wire brush later to remove all rust or dirt.

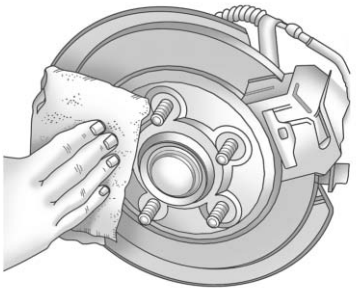

8. Remove any rust or dirt from the wheel bolts, mounting surfaces, and spare wheel.

⚠ WARNING

Never use oil or grease on bolts or nuts because the nuts might come loose. The vehicle's wheel could fall off, causing a crash.

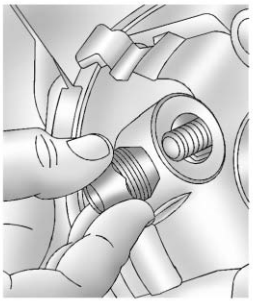

9. Put the wheel nuts back on with the rounded end of the nuts toward the wheel. Tighten each wheel nut by hand until the wheel is held against the hub.

10. Turn the jack handle counterclockwise to lower the vehicle. Lower the jack completely.

⚠ WARNING

Wheel nuts that are not tight can work loose. If all the nuts on a wheel come off, the wheel can come off the vehicle, causing a crash. All wheel nuts must be properly tightened. Follow the rules in this section to be sure they are.

⚠ WARNING

If wheel studs are damaged, they can break. If all the studs on a wheel broke, the wheel could come off and cause a crash.
If any stud is damaged because of a loose-running wheel, it could be that all of the studs are

(Continued)

WARNING (CONTINUED)

damaged. To be sure, replace all studs on the wheel. If the stud holes in a wheel have become larger, the wheel could collapse in operation. Replace any wheel if its stud holes have become larger or distorted in any way. Inspect hubs and hub-piloted wheels for damage. Because of loose running wheels, piloting pad damage may occur and require replacement of the entire hub, for proper centering of the wheels. When replacing studs, hubs, wheel nuts or wheels, be sure to use GM original equipment parts.

⚠ WARNING

Wheel nuts that are improperly or incorrectly tightened can cause the wheels to become loose or

(Continued)

WARNING (CONTINUED)

come off. The wheel nuts should be tightened with a torque wrench to the proper torque specification after replacing. Follow the torque specification supplied by the aftermarket manufacturer when using accessory locking wheel nuts. See *Capacities and Specifications on page 12-2* for original equipment wheel nut torque specifications.

Notice: **Improperly tightened wheel nuts can lead to brake pulsation and rotor damage. To avoid expensive brake repairs, evenly tighten the wheel nuts in the proper sequence and to the proper torque specification. See *Capacities and Specifications on page 12-2* for the wheel nut torque specification.**

11. Use the wheel wrench to tighten the nuts firmly. Turn the wheel wrench clockwise and in a crisscross sequence, as shown.
12. Put the wheel cover or the center cap and plastic wheel nut caps back on. Remove any wheel blocks.

    Have a technician check the wheel nut tightness of all wheels with a torque wrench after the first 160 km (100 mi) and then 1 600 km (1,000 mi) after that. Repeat this service whenever a tire is removed or serviced. See *Capacities and Specifications on page 12-2* for more information.

Storing a Flat or Spare Tire and Tools

⚠ WARNING

Storing a jack, a tire, or other equipment in the passenger compartment of the vehicle could cause injury. In a sudden stop or collision, loose equipment could strike someone. Store all these in the proper place.

1. Put the tire on the ground at the rear of the vehicle with the valve stem pointed down.

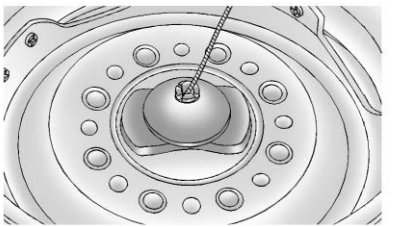

2. Pull the retaining bar through the center of the wheel, making sure it is properly attached.
3. Pull the wheel toward the rear of the vehicle, keeping the cable tight.
4. Put the chisel end of the hoist extension on an angle through the hole in the rear door frame, above the bumper.
5. Raise the tire fully against the underside of the vehicle. Continue turning the wheel wrench until the tire is secure and the cable is tight. The spare tire hoist cannot be overtightened.

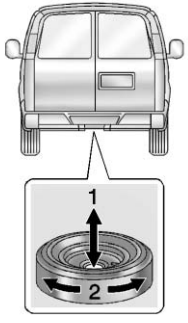

6. Make sure the tire is stored securely. Push, pull (1), and then try to turn (2) the tire. If the tire moves, use the wheel wrench to tighten the cable.

   Two clicks mean the tire is up all the way.

7. Return the jacking equipment to the proper location. Secure the items and replace the jack cover.

Secondary Latch System

This vehicle has an underbody-mounted tire hoist assembly equipped with a secondary latch system. It is designed to stop the spare tire from suddenly falling off the vehicle if the cable holding the spare tire is damaged. For the secondary latch to work, the tire must be stowed with the valve stem pointing down.

See “Storing a Flat or Spare Tire and Tools” under *Tire Changing on page 10-68* for instructions on storing the spare tire correctly.

⚠ WARNING

Before beginning this procedure read all the instructions. Failure to read and follow the instructions could damage the hoist assembly and you and others could get hurt. Read and follow the instructions listed next.

To release the spare tire from the secondary latch:

⚠ WARNING

Someone standing too close during the procedure could be injured by the jack. If the spare tire does not slide off the jack completely, make sure no one is behind you or on either side of you as you pull the jack out from under the spare.

1. Check under the vehicle to see if the cable end is visible.

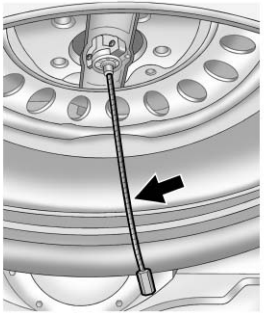

If the cable is not visible, start this procedure at Step 6.

2. Turn the hoist extension counterclockwise until approximately 15 cm (6 in) of cable is exposed.

3. Attach the jack handle/jack handle extension and wheel wrench to the jack.

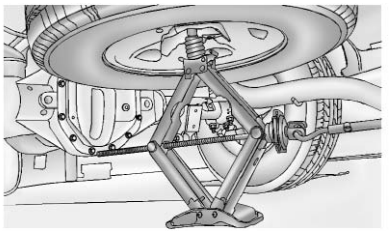

4. Place the jack under the vehicle, ahead of the rear bumper. Position the center lift point of the jack under the center of the spare tire and turn the handle clockwise to raise the jack until it lifts the secondary latch spring.

5. Keep raising the jack until the spare tire stops moving upward and is held firmly in place. This lets you know that the secondary latch has released. The spare tire is now balancing on the jack.

6. Lower the jack by turning the wheel wrench counterclockwise. Keep lowering the jack until the spare tire slides off the jack or is hanging by the cable.

7. Disconnect the jack handle from the jack and carefully remove the jack. Use one hand to push against the spare while firmly pulling the jack out from under the spare tire with the other hand.

   If the spare tire is hanging from the cable, assembly the wheel wrench onto the hoist extension and insert the chisel end of the hoist extension into the hoist shaft hole above the bumper. Turn the wheel wrench counterclockwise to lower the spare the rest of the way.

8. Tilt the retainer at the end of the cable and pull it through the wheel opening. Pull the tire out from under the vehicle.

Notice: **If you drive away before the spare tire or secondary latch system cable has been reinstalled, you could damage the vehicle. Always reinstall this cable before driving the vehicle.**

9. If the cable is hanging under the vehicle, turn the wheel wrench in the hoist shaft hole in the bumper clockwise to raise the cable back up.

Have the hoist assembly inspected as soon as you can. You will not be able to store a spare or flat tire using the hoist assembly until it has been repaired or replaced.

To continue changing the flat tire, return to Step 4 of “Storing a Flat or Spare Tire and Tools” under *Tire Changing on page 10-68*.

Full-Size Spare Tire

If this vehicle came with a full-size spare tire, it was fully inflated when new, however, it can lose air over time. Check the inflation pressure regularly. See *Tire Pressure on page 10-53* and *Vehicle Load Limits on page 9-10*. For instructions on how to remove, install, or store a spare tire, see *Tire Changing on page 10-68*.

After installing the spare tire on the vehicle, stop as soon as possible and check that the spare is correctly inflated. The spare tire is made to perform well at speeds up to 112 km/h (70 mph) at the recommended inflation pressure, so you can finish your trip.

Have the damaged or flat road tire repaired or replaced back onto the vehicle, as soon as possible, so the spare tire will be available in case it is needed again.

Do not mix tires and wheels of different sizes, because they will not fit. Keep the spare tire and its wheel together.

Jump Starting

For more information about the vehicle battery, see *Battery on page 10-27*.

If the vehicle battery has run down, you may want to use another vehicle and some jumper cables to start your vehicle. Be sure to use the following steps to do it safely.

⚠ WARNING

Batteries can hurt you. They can be dangerous because:

- They contain acid that can burn you.
- They contain gas that can explode or ignite.
- They contain enough electricity to burn you.

If you do not follow these steps exactly, some or all of these things can hurt you.

Notice: **Ignoring these steps could result in costly damage to the vehicle that would not be covered by the warranty.**

Trying to start the vehicle by pushing or pulling it will not work, and it could damage the vehicle.

1. Check the other vehicle. It must have a 12-volt battery with a negative ground system.

Notice: **Only use a vehicle that has a 12-volt system with a negative ground for jump starting. If the other vehicle does not have a 12-volt system with a negative ground, both vehicles can be damaged.**

2. Get the vehicles close enough so the jumper cables can reach, but be sure the vehicles are not touching each other. If they are, it could cause a ground connection you do not want. You would not be able to start your vehicle, and the bad grounding could damage the electrical systems.

   To avoid the possibility of the vehicles rolling, set the parking brake firmly on both vehicles involved in the jump start procedure. Put an automatic transmission in P (Park) or a manual transmission in Neutral before setting the parking brake.

Notice: **If any accessories are left on or plugged in during the jump starting procedure, they could be damaged. The repairs would not be covered by the vehicle warranty. Whenever possible, turn off or unplug all accessories on either vehicle when jump starting the vehicle.**

3. Turn off the ignition on both vehicles. Unplug unnecessary accessories plugged into the cigarette lighter or the accessory power outlet. Turn off the radio and all lamps that are not needed. This will avoid sparks and help save both batteries. And it could save the radio!
4. Open the hoods and locate the positive (+) and negative (−) terminal locations of the other vehicle.

   On your van, use the unpainted radio antenna bracket as a remote negative (−) terminal.

⚠ WARNING

Using an open flame near a battery can cause battery gas to explode. People have been hurt doing this, and some have been blinded. Use a flashlight if you need more light.

(Continued)

WARNING (CONTINUED)

Be sure the battery has enough water. You do not need to add water to the battery installed in your new vehicle. But if a battery has filler caps, be sure the right amount of fluid is there. If it is low, add water to take care of that first. If you do not, explosive gas could be present.

Battery fluid contains acid that can burn you. Do not get it on you. If you accidentally get it in your eyes or on your skin, flush the place with water and get medical help immediately.

⚠ WARNING

Fans or other moving engine parts can injure you badly. Keep your hands away from moving parts once the engine is running.

5. Check that the jumper cables do not have loose or missing insulation. If they do, you could get a shock. The vehicles could be damaged too.

   Before you connect the cables, here are some basic things you should know. Positive (+) will go to positive (+) or to a remote positive (+) terminal if the vehicle has one. Negative (−) will go to an unpainted metal part or to a remote negative (−) terminal if the vehicle has one. On your van, use the unpainted radio antenna bracket as a remote negative (−) terminal.

   Do not connect positive (+) to negative (−) or you will get a short that would damage the battery and maybe other parts too. And do not connect the negative (−) cable to the negative (−) terminal on the dead battery because this can cause sparks.

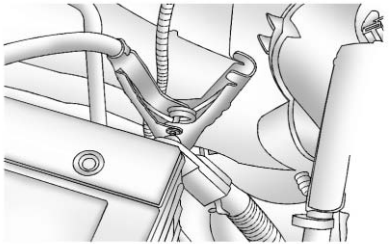

6. Connect the red positive (+) cable to the positive (+) terminal of the dead battery. Use a remote positive (+) terminal if the vehicle has one. Do not let the other end touch metal. Connect it to the positive (+) terminal of the good battery. Use a remote positive (+) terminal if the vehicle has one.

7. Now connect the black negative (−) cable to the negative (−) terminal of the good battery. Use a remote negative (−) terminal if the vehicle has one.

   Do not let the other end touch anything until the next step. The other end of the negative (−) cable does not go to the dead battery. It goes to a heavy, unpainted metal engine part or to a remote negative (−) terminal on the vehicle with the dead battery. On your van, use the unpainted radio antenna bracket as a remote negative (−) terminal.

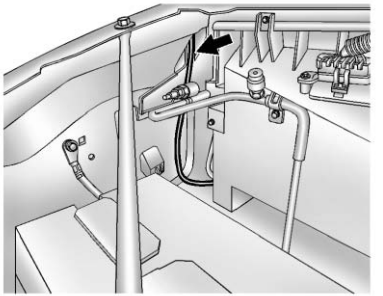

8. Connect the other end of the negative (−) cable to the negative (−) terminal location on the vehicle with the dead battery. On your van, use the unpainted radio antenna bracket as a remote negative (−) terminal.

Notice: **Your vehicle uses the unpainted radio antenna bracket as a remote negative (−) terminal. Move the antenna coax cable out of the way before clamping the negative jumper cable to the fixed antenna bracket. Avoid touching the negative cable clamp to the air conditioning line. Failure to do**

either of these could damage your vehicle. The repairs would not be covered by the warranty.

9. Now start the vehicle with the good battery and run the engine for a while.
10. Try to start the vehicle that had the dead battery. If it will not start after a few tries, it probably needs service.

Notice: **If the jumper cables are connected or removed in the wrong order, electrical shorting may occur and damage the vehicle. The repairs would not be covered by the vehicle warranty. Always connect and remove the jumper cables in the correct order, making sure that the cables do not touch each other or other metal.**

Jumper Cable Removal

Reverse the sequence exactly when removing the jumper cables.

Towing

Towing the Vehicle

Notice: **Incorrectly towing a disabled vehicle may cause damage. The damage would not be covered by the vehicle warranty.**

Have the vehicle towed on a flatbed car carrier or a wheel lift tow truck. If a wheel lift tow truck is used, the drive wheels cannot contact the road while the vehicle is being towed. A wheel dolly must be used to lift all drive wheels off the ground.

Consult your dealer or a professional towing service if the disabled vehicle must be towed.

To tow the vehicle behind another vehicle for recreational purposes, such as behind a motor home, see “Recreational Vehicle Towing” in this section.

Recreational Vehicle Towing

Recreational vehicle towing means towing the vehicle behind another vehicle, such as behind a motor home. The two most common types of recreational vehicle towing are known as dinghy towing and dolly towing. Dinghy towing is towing the vehicle with all four wheels on the ground. Dolly towing is towing the vehicle with two wheels on the ground and two wheels up on a device known as a dolly.

Here are some important things to consider before recreational vehicle towing:

- What is the towing capacity of the towing vehicle? Be sure to read the tow vehicle manufacturer's recommendations.
- What is the distance that will be travelled? Some vehicles have restrictions on how far and how long they can tow.

- Is the proper towing equipment going to be used? See your dealer or trailering professional for additional advice and equipment recommendations.
- Is the vehicle ready to be towed? Just as preparing the vehicle for a long trip, make sure the vehicle is prepared to be towed.

Dinghy Towing

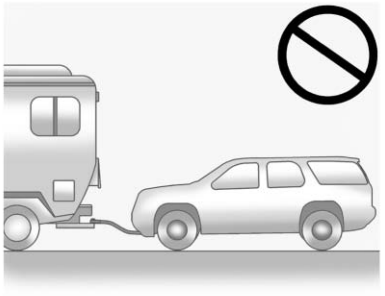

Two-Wheel-Drive Vehicles

Notice: **If the vehicle is towed with all four wheels on the ground, the drivetrain components could be damaged. The repairs would not be covered by the vehicle warranty. Do not tow the vehicle with all four wheels on the ground.**

Two-wheel-drive vehicles should not be towed with all four wheels on the ground. Two-wheel-drive transmissions have no provisions for internal lubrication while being towed.

All-Wheel-Drive Vehicles

The vehicle was not designed to be towed with all four wheels on the ground. To properly tow these vehicles, they should be placed on a platform trailer with all four wheels off the ground.

Notice: **Towing an all-wheel-drive vehicle with all four wheels on the ground, or even with only two of its wheels on the ground, will damage drivetrain components. Do not tow an all-wheel-drive vehicle with any of its wheels on the ground.**

Dolly Towing

Rear Towing (Rear Wheels Off the Ground) – Two-Wheel-Drive Vehicles

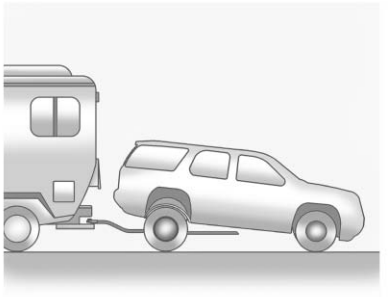

Use the following procedure to tow the vehicle from the rear:

1. Attach the dolly to the tow vehicle following the dolly manufacturer's instructions.
2. Drive the rear wheels onto the dolly.
3. Firmly set the parking brake. See *Parking Brake on page 9-31* for more information.
4. Put the transmission in P (Park).
5. Secure the vehicle to the dolly following the manufacturer's instructions.
6. Use an adequate clamping device designed for towing to ensure that the front wheels are locked into the straight position.
7. Turn the ignition to LOCK/OFF.

   If the tow vehicle will not be started or driven for six weeks or more, remove the battery cable from the negative terminal (post) of the battery to prevent the battery from draining while towing.

Rear Towing (Rear Wheels Off the Ground) – All-Wheel-Drive Vehicles

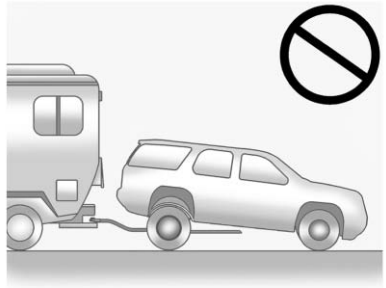

The vehicle was not designed to be towed with two wheels on the ground. To properly tow these vehicles, they should be placed on a platform trailer with all four wheels off the ground.

Notice: **Towing an all-wheel-drive vehicle with all four wheels on the ground, or even with only two of its wheels on the ground, will damage drivetrain components. Do not tow an all-wheel-drive vehicle with any of its wheels on the ground.**

Appearance Care

Exterior Care

Washing the Vehicle

To preserve the vehicle's finish, wash it often and out of direct sunlight.

Notice: **Do not use petroleum-based, acidic, or abrasive cleaning agents as they can damage the vehicle's paint, metal, or plastic parts. If damage occurs, it would not be covered by the vehicle's warranty. Approved cleaning products can be obtained from your dealer. Follow all manufacturer directions regarding correct product usage, necessary safety precautions, and appropriate disposal of any vehicle care product.**

Notice: **Avoid using high-pressure washes closer than 30 cm (12 in) to the surface of the vehicle. Use of power washers exceeding 8,274 kPa (1,200 psi) can result in damage or removal of paint and decals.**

Rinse the vehicle well, before washing and after, to remove all cleaning agents completely. If they are allowed to dry on the surface, they could stain.

Dry the finish with a soft, clean chamois or an all-cotton towel to avoid surface scratches and water spotting.

Finish Care

Application of aftermarket clearcoat sealant/wax materials is not recommended. If painted surfaces are damaged, see your dealer to have the damage assessed and repaired. Foreign materials such as calcium chloride and other salts, ice melting agents, road oil and tar, tree sap, bird droppings, chemicals from industrial chimneys, etc., can damage the vehicle's finish if they remain on painted surfaces. Wash the vehicle as soon as possible.

If necessary, use non-abrasive cleaners that are marked safe for painted surfaces to remove foreign matter.

Occasional hand waxing or mild polishing should be done to remove residue from the paint finish. See your dealer for approved cleaning products.

Do not apply waxes or polishes to uncoated plastic, vinyl, rubber, decals, simulated wood, or flat paint as damage can occur.

Notice: **Machine compounding or aggressive polishing on a basecoat/clearcoat paint finish may damage it. Use only non-abrasive waxes and polishes that are made for a basecoat/clearcoat paint finish on the vehicle.**

To keep the paint finish looking new, keep the vehicle garaged or covered whenever possible.

Protecting Exterior Bright Metal Parts

Regularly clean bright metal parts with water or chrome polish on chrome or stainless steel trim, if necessary.

For aluminum, never use auto or chrome polish, steam, or caustic soap to clean. A coating of wax, rubbed to a high polish, is recommended for all bright metal parts.

Cleaning Exterior Lamps/ Lenses and Emblems

Use only lukewarm or cold water, a soft cloth, and a car washing soap to clean exterior lamps, lenses and emblems. Follow instructions under "Washing the Vehicle" in this section.

Windshield and Wiper Blades

Clean the outside of the windshield with glass cleaner.

Clean rubber blades using a lint-free cloth or paper towel soaked with windshield washer fluid or a mild detergent. Wash the windshield thoroughly when cleaning the blades. Bugs, road grime, sap, and a buildup of vehicle wash/wax treatments may cause wiper streaking.

Replace the wiper blades if they are worn or damaged. Damage can be caused by extreme dusty conditions, sand, salt, heat, sun, snow, and ice.

Weatherstrips

Apply silicone grease on weatherstrips to make them last longer, seal better, and not stick or squeak. Lubricate weatherstrips once a year. Black marks from rubber material on painted surfaces can be removed by rubbing with a clean cloth. See *Recommended Fluids and Lubricants on page 11-12*.

Tires

Use a stiff brush with tire cleaner to clean the tires.

Notice: **Using petroleum-based tire dressing products on the vehicle may damage the paint finish and/or tires. When applying a tire dressing, always wipe off any overspray from all painted surfaces on the vehicle.**

Wheels and Trim — Aluminum or Chrome

Use a soft, clean cloth with mild soap and water to clean the wheels. After rinsing thoroughly with clean water, dry with a soft, clean towel. A wax may then be applied.

Notice: **Chrome wheels and other chrome trim may be damaged if the vehicle is not washed after driving on roads that have been sprayed with magnesium, calcium, or sodium chloride. These chlorides are used on roads for conditions such as ice**

and dust. Always wash the chrome with soap and water after exposure.

Notice: **To avoid surface damage, do not use strong soaps, chemicals, abrasive polishes, cleaners, brushes, or cleaners that contain acid on aluminum or chrome-plated wheels. Use only approved cleaners. Also, never drive a vehicle with aluminum or chrome-plated wheels through an automatic car wash that uses silicone carbide tire cleaning brushes. Damage could occur and the repairs would not be covered by the vehicle warranty.**

Steering, Suspension, and Chassis Components

Visually inspect the front and rear suspension and steering system for damaged, loose, or missing parts or signs of wear. Inspect the power steering for proper hook-up, binding, leaks, cracks, chafing, etc. Visually check constant velocity joints, rubber boots, and axle seals for leaks.

Body Component Lubrication

Lubricate all key lock cylinders, hood hinges, liftgate hinges, and the steel fuel door hinge unless the components are plastic. Applying silicone grease on weatherstrips with a clean cloth will make them last longer, seal better, and not stick or squeak.

Underbody Maintenance

Use plain water to flush dirt and debris from the vehicle's underbody. Your dealer or an underbody car washing system can do this. If not removed, rust and corrosion can develop.

Sheet Metal Damage

If the vehicle is damaged and requires sheet metal repair or replacement, make sure the body repair shop applies anti-corrosion material to parts repaired or replaced to restore corrosion protection.

Original manufacturer replacement parts will provide the corrosion protection while maintaining the vehicle warranty.

Finish Damage

Quickly repair minor chips and scratches with touch-up materials available from your dealer to avoid corrosion. Larger areas of finish damage can be corrected in your dealer's body and paint shop.

Chemical Paint Spotting

Airborne pollutants can fall upon and attack painted vehicle surfaces causing blotchy, ring-shaped discolorations, and small, irregular dark spots etched into the paint surface.

Interior Care

To prevent dirt particle abrasions, regularly clean the vehicle's interior. Immediately remove any soils. Note that newspapers or dark garments that can transfer color to home furnishings can also permanently transfer color to the vehicle's interior.

Use a soft bristle brush to remove dust from knobs and crevices on the instrument cluster. Using a mild soap solution, immediately remove hand lotions, sunscreen, and insect repellent from all interior surfaces or permanent damage may result.

Your dealer may have products for cleaning the interior. Use cleaners specifically designed for the surfaces being cleaned to prevent permanent damage. Apply all cleaners directly to the cleaning cloth. Do not spray cleaners directly on any switches or controls. Cleaners should be removed quickly. Never allow cleaners to remain on the surface being cleaned for extended periods of time.

Cleaners may contain solvents that can become concentrated in the interior. Before using cleaners, read and adhere to all safety instructions on the label. While cleaning the interior, maintain adequate ventilation by opening the doors and windows.

To prevent damage, do not clean the interior using the following cleaners or techniques:

- Never use a razor or any other sharp object to remove a soil from any interior surface.
- Never use a brush with stiff bristles.
- Never rub any surface aggressively or with excessive pressure.
- Do not use laundry detergents or dishwashing soaps with degreasers. For liquid cleaners, use approximately 20 drops per 3.78 L (1 gal) of water. A concentrated soap solution will leave a residue that creates streaks and attracts dirt. Do not use solutions that contain strong or caustic soap.
- Do not heavily saturate the upholstery when cleaning.
- Do not use solvents or cleaners containing solvents.

Interior Glass

To clean, use a terry cloth fabric dampened with water. Wipe droplets left behind with a clean dry cloth. Commercial glass cleaners may be used, if necessary, after cleaning the interior glass with plain water.

Notice: **To prevent scratching, never use abrasive cleaners on automotive glass. Abrasive cleaners or aggressive cleaning may damage the rear window defogger.**

Notice: **Cleaning the windshield with water during the first three to six months of ownership will reduce tendency to fog.**

Speaker Covers

Vacuum around a speaker cover gently, so that the speaker will not be damaged. Clean spots with just water and mild soap.

Coated Moldings

Coated moldings should be cleaned.

- When lightly soiled, wipe with a sponge or soft lint-free cloth dampened with water.
- When heavily soiled, use warm soapy water.

Fabric/Carpet/Suede

Start by vacuuming the surface using a soft brush attachment. If a rotating brush attachment is being used during vacuuming, only use it on the floor carpet. Before cleaning, gently remove as much of the soil as possible using one of the following techniques:

- Gently blot liquids with a paper towel. Continue blotting until no more soil can be removed.
- For solid soils, remove as much as possible prior to vacuuming.

To clean:

1. Saturate a clean lint-free colorfast cloth with water or club soda. Microfiber cloth is recommended to prevent lint transfer to the fabric or carpet.
2. Remove excess moisture by gently wringing until water does not drip from the cleaning cloth.
3. Start on the outside edge of the soil and gently rub toward the center. Rotate the cleaning cloth to a clean area frequently to prevent forcing the soil in to the fabric.
4. Continue gently rubbing the soiled area until there is no longer any color transfer from the soil to the cleaning cloth.
5. If the soil is not completely removed, use a mild soap solution followed only by club soda or plain water.

If the soil is not completely removed, it may be necessary to use a commercial upholstery cleaner or spot lifter. Test a small hidden area for colorfastness before using a commercial upholstery cleaner or spot lifter. If ring formation occurs, clean the entire fabric or carpet.

Following the cleaning process, a paper towel can be used to blot excess moisture.

Cleaning High Gloss Surfaces and Vehicle Information and Radio Displays

For vehicles with high gloss surfaces or vehicle displays, use a microfiber cloth to wipe surfaces. Before wiping the surface with the microfiber cloth, use a soft bristle brush to remove dirt that could scratch the surface. Then use the microfiber cloth by gently rubbing to clean. Never use window cleaners or solvents. Periodically hand wash the microfiber cloth separately, using mild soap. Do not use bleach or fabric softener. Rinse thoroughly and air dry before next use.

Notice: **Do not attach a device with a suction cup to the display. This may cause damage and would not be covered by the warranty.**

Instrument Panel, Leather, Vinyl, & Other Plastic Surfaces

Use a soft microfiber cloth dampened with water to remove dust and loose dirt. For a more thorough cleaning, use a soft microfiber cloth dampened with a mild soap solution.

Notice: **Soaking or saturating leather, especially perforated leather, as well as other interior surfaces, may cause permanent damage. Wipe excess moisture from these surfaces after cleaning and allow them to dry naturally. Never use heat, steam, spot lifters, or spot removers. Do not use cleaners that contain silicone or wax-based products. Cleaners containing these solvents can permanently change the appearance and feel of leather or soft trim and are not recommended.**

Do not use cleaners that increase gloss, especially on the instrument panel. Reflected glare can decrease visibility through the windshield under certain conditions.

Notice: **Use of air fresheners may cause permanent damage to plastics and painted surfaces. If an air freshener comes in contact with any plastic or painted surface in the vehicle, blot immediately and clean with a soft cloth dampened with a mild soap solution. Damage caused by air fresheners would not be covered by the vehicle warranty.**

Care of Safety Belts

Keep belts clean and dry.

⚠ WARNING

Do not bleach or dye safety belts. It may severely weaken them. In a crash, they might not be able to provide adequate protection. Clean safety belts only with mild soap and lukewarm water.

Floor Mats

⚠ WARNING

If a floor mat is the wrong size or is not properly installed, it can interfere with the pedals. Interference with the pedals can cause unintended acceleration and/or increased stopping distance which can cause a crash and injury. Make sure the floor mat does not interfere with the pedals.

Use the following guidelines for proper floor mat usage.

- The original equipment floor mats were designed for the vehicle. If the floor mats need replacing, it is recommended that GM certified floor mats be purchased. Non-GM floor mats may not fit properly and may interfere with the pedals. Always check that the floor mats do not interfere with the pedals.
- Use the floor mat with the correct side up. Do not turn it over.
- Do not place anything on top of the driver side floor mat.
- Use only a single floor mat on the driver side.
- Do not place one floor mat on top of another.

Service and Maintenance

General Information
General Information 11-1

Maintenance Schedule
Maintenance Schedule 11-3

Special Application Services
Special Application Services 11-8

Additional Maintenance and Care
Additional Maintenance and Care 11-8

Recommended Fluids
Recommended Fluids and Lubricants 11-12
Maintenance Replacement Parts 11-14

Maintenance Records
Maintenance Records 11-15

General Information

This maintenance section applies to vehicles with a gasoline engine. For diesel engine vehicles, see the maintenance schedule section in the Duramax diesel supplement.

Your vehicle is an important investment. This section describes the required maintenance for the vehicle. Follow this schedule to help protect against major repair expenses resulting from neglect or inadequate maintenance. It may also help to maintain the value of the vehicle if it is sold. It is the responsibility of the owner to have all required maintenance performed.

Your dealer has trained technicians who can perform required maintenance using genuine replacement parts. They have up-to-date tools and equipment for fast and accurate diagnostics. Many dealers have extended evening and Saturday hours, courtesy transportation, and online scheduling to assist with service needs.

Your dealer recognizes the importance of providing competitively priced maintenance and repair services. With trained technicians, the dealer is the place for routine maintenance such as oil changes and tire rotations and additional maintenance items like tires, brakes, batteries, and wiper blades.

Notice: **Damage caused by improper maintenance can lead to costly repairs and may not be covered by the vehicle warranty. Maintenance intervals, checks, inspections, recommended fluids, and lubricants are important to keep the vehicle in good working condition.**

The Tire Rotation and Required Services are the responsibility of the vehicle owner. It is recommended to have your dealer perform these services every 12 000 km/7,500 mi.

Proper vehicle maintenance helps to keep the vehicle in good working condition, improves fuel economy, and reduces vehicle emissions.

Because of the way people use vehicles, maintenance needs vary. There may need to be more frequent checks and services. The Additional Required Services - Normal are for vehicles that:

- Carry passengers and cargo within recommended limits on the Tire and Loading Information label. See *Vehicle Load Limits on page 9-10*.
- Are driven on reasonable road surfaces within legal driving limits.
- Use the recommended fuel. See *Recommended Fuel on page 9-42*.

Refer to the information in the Maintenance Schedule Additional Required Services - Normal chart.

The Additional Required Services - Severe are for vehicles that are:

- Mainly driven in heavy city traffic in hot weather.
- Mainly driven in hilly or mountainous terrain.
- Frequently towing a trailer.
- Used for high speed or competitive driving.
- Used for taxi, police, or delivery service.

Refer to the information in the Maintenance Schedule Additional Required Services - Severe chart.

⚠ WARNING

Performing maintenance work can be dangerous and can cause serious injury. Perform maintenance work only if the required information, proper tools, and equipment are available. If they are not, see your dealer to have a trained technician do the work. See *Doing Your Own Service Work on page 10-4*.

Maintenance Schedule

Owner Checks and Services

At Each Fuel Stop

- Check the engine oil level. See *Engine Oil on page 10-7*.

Once a Month

- Check the tire inflation pressures. See *Tire Pressure on page 10-53*.
- Inspect the tires for wear. See *Tire Inspection on page 10-58*.
- Check the windshield washer fluid level. See *Washer Fluid on page 10-23*.

Engine Oil Change

When the CHANGE ENGINE OIL SOON message displays, have the engine oil and filter changed within the next 1 000 km/600 mi. If driven under the best conditions, the engine oil life system might not indicate the need for vehicle service for more than a year. The engine oil and filter must be changed at least once a year and the oil life system must be reset. Your trained dealer technician can perform this work. If the engine oil life system is reset accidentally, service the vehicle within 5 000 km/3,000 mi since the last service. Reset the oil life system when the oil is changed. See *Engine Oil Life System on page 10-9*.

Tire Rotation and Required Services Every 12 000 km/ 7,500 mi

Rotate the tires, if recommended for the vehicle, and perform the following services. See *Tire Rotation on page 10-58*.

- Check engine oil level and oil life percentage. If needed, change engine oil and filter, and reset oil life system. See *Engine Oil on page 10-7* and *Engine Oil Life System on page 10-9*.
- Check engine coolant level. See *Engine Coolant on page 10-17*.
- Check windshield washer fluid level. See *Washer Fluid on page 10-23*.
- Visually inspect windshield wiper blades for wear, cracking, or contamination. See *Exterior Care on page 10-84*. Replace worn or damaged wiper blades. See *Wiper Blade Replacement on page 10-31*.
- Check tire inflation pressures. See *Tire Pressure on page 10-53*.
- Inspect tire wear. See *Tire Inspection on page 10-58*.
- Visually check for fluid leaks.
- Inspect engine air cleaner filter. See *Engine Air Cleaner/Filter on page 10-15*.
- Inspect brake system.
- Visually inspect steering, suspension, and chassis components for damaged, loose,

or missing parts or signs of wear. See *Exterior Care on page 10-84*.

- Check restraint system components. See *Safety System Check on page 3-15*.
- Visually inspect fuel system for damage or leaks.
- Visually inspect exhaust system and nearby heat shields for loose or damaged parts.
- Lubricate body components. See *Exterior Care on page 10-84*.
- Check starter switch. See *Starter Switch Check on page 10-30*.
- Check automatic transmission shift lock control function. See *Automatic Transmission Shift Lock Control Function Check on page 10-30*.
- Check ignition transmission lock. See *Ignition Transmission Lock Check on page 10-31*.
- Check parking brake and automatic transmission park mechanism. See *Park Brake and P (Park) Mechanism Check on page 10-31*.
- Check accelerator pedal for damage, high effort, or binding. Replace if needed.
- Visually inspect gas strut for signs of wear, cracks, or other damage. Check the hold open ability of the strut. See your dealer if service is required.

Maintenance Schedule Additional Required Services – Normal	12 000 km/7,500 mi	24 000 km/15,000 mi	36 000 km/22,500 mi	48 000 km/30,000 mi	60 000 km/37,500 mi	72 000 km/45,000 mi	84 000 km/52,500 mi	96 000 km/60,000 mi	108 000 km/67,500 mi	120 000 km/75,000 mi	132 000 km/82,500 mi	144 000 km/90,000 mi	156 000 km/97,500 mi	168 000 km/105,000 mi	180 000 km/112,500 mi	192 000 km/120,000 mi	204 000 km/127,500 mi	216 000 km/135,000 mi	228 000 km/142,500 mi	240 000 km/150,000 mi
Rotate tires and perform Required Services. Check engine oil level and oil life percentage. Change engine oil and filter, if needed.	✓	✓	✓	✓	✓	✓	✓	✓	✓	✓	✓	✓	✓	✓	✓	✓	✓	✓	✓	✓
Inspect evaporative control system. (1)						✓						✓						✓		
Replace engine air cleaner filter. (2)						✓						✓						✓		
Replace spark plugs. Inspect spark plug wires.													✓							
Change automatic transmission fluid, if equipped. If filter is serviceable, change filter.													✓							
Change transfer case fluid, if equipped with AWD. (3)													✓							
Drain, flush, and fill engine cooling system. (4)																				✓
Visually inspect accessory drive belts. (5) (6)																				✓
Replace brake fluid. (5)																				✓

Footnotes — Maintenance Schedule Additional Required Services — Normal

(1) Check all fuel and vapor lines and hoses for proper hook-up, routing, and condition. Check that the purge valve, if the vehicle has one, works properly. Replace as needed.

(2) Or every four years, whichever comes first.

(3) Do not directly power wash the transfer case output seals. High pressure water can overcome the seals and contaminate the transfer case fluid. Contaminated fluid will decrease the life of the transfer case and should be replaced.

(4) Or every five years, whichever comes first. See *Cooling System on page 10-16*.

(5) Or every 10 years, whichever comes first.

(6) Inspect for fraying, excessive cracking, or damage; replace, if needed.

Maintenance Schedule Additional Required Services – Severe	12 000 km/7,500 mi	24 000 km/15,000 mi	36 000 km/22,500 mi	48 000 km/30,000 mi	60 000 km/37,500 mi	72 000 km/45,000 mi	84 000 km/52,500 mi	96 000 km/60,000 mi	108 000 km/67,500 mi	120 000 km/75,000 mi	132 000 km/82,500 mi	144 000 km/90,000 mi	156 000 km/97,500 mi	168 000 km/105,000 mi	180 000 km/112,500 mi	192 000 km/120,000 mi	204 000 km/127,500 mi	216 000 km/135,000 mi	228 000 km/142,500 mi	240 000 km/150,000 mi
Rotate tires and perform Required Services. Check engine oil level and oil life percentage. Change engine oil and filter, if needed.	✓	✓	✓	✓	✓	✓	✓	✓	✓	✓	✓	✓	✓	✓	✓	✓	✓	✓	✓	✓
Inspect evaporative control system. (1)						✓						✓						✓		
Replace engine air cleaner filter. (2)						✓						✓						✓		
Change automatic transmission fluid, if equipped. If filter is servicable, change filter.						✓						✓						✓		
Change transfer case fluid, if equipped with AWD. (3)						✓						✓						✓		
Replace spark plugs. Inspect spark plug wires.													✓							
Drain, flush, and fill engine cooling system. (4)																				✓
Visually inspect accessory drive belts. (5) (6)																				✓
Replace brake fluid (5)																				✓

Footnotes — Maintenance Schedule Additional Required Services — Severe

(1) Check all fuel and vapor lines and hoses for proper hook-up, routing, and condition. Check that the purge valve, if the vehicle has one, works properly. Replace as needed.

(2) Or every four years, whichever comes first.

(3) Do not directly power wash the transfer case output seals. High pressure water can overcome the seals and contaminate the transfer case fluid. Contaminated fluid will decrease the life of the transfer case and should be replaced.

(4) Or every five years, whichever comes first. See *Cooling System on page 10-16*.

(5) Or every 10 years, whichever comes first.

(5) Inspect for fraying, excessive cracking, or damage; replace, if needed.

Special Application Services

- Vehicles with Dual Wheels: Check dual wheel nut torque at 160 km/100 mi, 1 600 km/ 1,000 mi and 9 700 km/6,000 mi.
- Severe Commercial Use Vehicles Only: Lubricate chassis components every 5 000 km/ 3,000 mi.
- Have underbody flushing service performed once a year.

Additional Maintenance and Care

Your vehicle is an important investment and caring for it properly may help to avoid future costly repairs. To maintain vehicle performance, additional maintenance services may be required. It is recommended that your dealer perform these services — their trained dealer technicians know your vehicle best. Your dealer can also perform a thorough assessment with a multi-point inspection to recommend when your vehicle may need attention. The following list is intended to explain the services and conditions to look for that may indicate services are required.

Battery

The battery supplies power to start the engine and operate any additional electrical accessories.

- To avoid break-down or failure to start the vehicle, maintain a battery with full cranking power.
- Trained dealer technicians have the diagnostic equipment to test the battery and ensure that the connections and cables are corrosion-free.

Belts

- Belts may need replacing if they squeak or show signs of cracking or splitting.
- Trained dealer technicians can inspect the belts and recommend replacement when necessary.

Brakes

Brakes stop the vehicle and are crucial to safe driving.

- Signs of brake wear may include chirping, grinding, or squealing noises, or difficulty stopping.
- Trained dealer technicians have access to tools and equipment to inspect the brakes and recommend quality parts engineered for the vehicle.

Fluids

Proper fluid levels and approved fluids protect the vehicle's systems and components. See *Recommended Fluids and Lubricants on page 11-12* for GM approved fluids.

- Engine oil and windshield washer fluid levels should be checked at every fuel fill.
- Instrument cluster lights may come on to indicate that fluids may be low and need to be filled.

Hoses

Hoses transport fluids and should be regularly inspected to ensure that there are no cracks or leaks. With a multi-point inspection, your dealer can inspect the hoses and advise if replacement is needed.

Lamps

Properly working headlamps, taillamps, and brake lamps are important to see and be seen on the road.

- Signs that the headlamps need attention include dimming, failure to light, cracking, or damage. The brake lamps need to be checked periodically to ensure that they light when braking.
- With a multi-point inspection, your dealer can check the lamps and note any concerns.

Shocks and Struts

Shocks and struts help aid in control for a smoother ride.

- Signs of wear may include steering wheel vibration, bounce/sway while braking, longer stopping distance, or uneven tire wear.
- As part of the multi-point inspection, trained dealer technicians can visually inspect the shocks and struts for signs of leaking, blown seals, or damage, and can advise when service is needed.

Tires

Tires need to be properly inflated, rotated, and balanced. Maintaining the tires can save money, fuel, and can reduce the risk of tire failure.

- Signs that the tires need to be replaced include three or more visible treadwear indicators; cord or fabric showing through the rubber; cracks or cuts in the tread or sidewall; or a bulge or split in the tire.
- Trained dealer technicians can inspect and recommend the right tires. Your dealer can also provide tire/wheel balancing services to ensure smooth vehicle operation at all speeds. Your dealer sells and services name brand tires.

Vehicle Care

To help keep the vehicle looking like new, vehicle care products are available from your dealer. For information on how to clean and protect the vehicle's interior and exterior, see *Interior Care on page 10-87* and *Exterior Care on page 10-84*.

Wheel Alignment

Wheel alignment is critical for ensuring that the tires deliver optimal wear and performance.

- Signs that the alignment may need to be adjusted include pulling, improper vehicle handling, or unusual tire wear.
- Your dealer has the required equipment to ensure proper wheel alignment.

Windshield

For safety, appearance, and the best viewing, keep the windshield clean and clear.

- Signs of damage include scratches, cracks, and chips.
- Trained dealer technicians can inspect the windshield and recommend proper replacement if needed.

Wiper Blades

Wiper blades need to be cleaned and kept in good condition to provide a clear view.

- Signs of wear include streaking, skipping across the windshield, and worn or split rubber.
- Trained dealer technicians can check the wiper blades and replace them when needed.

Recommended Fluids

Recommended Fluids and Lubricants

This maintenance section applies to vehicles with a gasoline engine. If the vehicle has a diesel engine, see the maintenance schedule section in the Duramax diesel supplement.

Fluids and lubricants identified below by name, part number, or specification can be obtained from your dealer.

Usage	Fluid/Lubricant
Engine Oil	Use only engine oil licensed to the dexos1 specfication, or equivalent, of the proper SAE viscosity grade. ACDelco dexos1 Synthetic Blend is recommended. See *Engine Oil on page 10-7*.
Engine Coolant	50/50 mixture of clean, drinkable water and use only DEX-COOL Coolant. See *Engine Coolant on page 10-17*.
Hydraulic Brake System	DOT 3 Hydraulic Brake Fluid (GM Part No. 12377967, in Canada 89021320).
Windshield Washer	Automotive windshield washer fluid that meets regional freeze protection requirements.
Parking Brake Cable Guides	Chassis Lubricant (GM Part No. 12377985, in Canada 88901242) or lubricant meeting requirements of NLGI #2, Category LB or GC-LB.
Power Steering System	GM Power Steering Fluid (GM Part No. 89021184, in Canada 89021186).
Automatic Transmission	DEXRON®-VI Automatic Transmission Fluid.

Usage	Fluid/Lubricant
Key Lock Cylinders	Multi-Purpose Lubricant, Superlube (GM Part No. 12346241, in Canada 10953474).
Chassis Lubrication	Chassis Lubricant (GM Part No. 12377985, in Canada 88901242) or lubricant meeting requirements of NLGI #2, Category LB or GC-LB.
Front Wheel Bearings	Wheel bearing lubricant meeting requirements of NLGI #2, Category GC or GC-LB (GM Part No. 1051344, in Canada 993037).
Front and Rear Axle	SAE 75W-90 Synthetic Axle Lubricant (GM Part No. 89021677, in Canada 89021678).
Transfer Case	DEXRON®-VI Automatic Transmission Fluid.
Hood Hinges	Multi-Purpose Lubricant, Superlube (GM Part No. 12346241, in Canada 10953474).
Weatherstrip Conditioning	Weatherstrip Lubricant (GM Part No. 3634770, in Canada 10953518) or Dielectric Silicone Grease (GM Part No. 12345579, in Canada 10953481).
Weatherstrip Squeaks	Synthetic Grease with Teflon, Superlube (GM Part No. 12371287, in Canada 10953437).

Maintenance Replacement Parts

If the vehicle has the Duramax diesel engine, see the Duramax diesel supplement.

Replacement parts identified below by name, part number, or specification can be obtained from your dealer.

Part	GM Part Number	ACDelco Part Number
Engine Air Cleaner/Filter	15950115	A3097C
Engine Oil Filter		
4.3L V6	25010792	PF47
4.8L V8; 5.3L V8; 6.0L V8	89017524	PF48
Spark Plugs		
4.3L V6	12568387	41-101
4.8L V8; 5.3L V8; 6.0L V8	12621258	41-110
Wiper Blades – 56.0 cm (22 in)	25949887	—

Maintenance Records

After the scheduled services are performed, record the date, odometer reading, who performed the service, and the type of services performed in the boxes provided. Retain all maintenance receipts.

Date	Odometer Reading	Serviced By	Services Performed

Date	Odometer Reading	Serviced By	Services Performed

Date	Odometer Reading	Serviced By	Services Performed

Date	Odometer Reading	Serviced By	Services Performed

Technical Data

Vehicle Identification
Vehicle Identification Number (VIN) 12-1
Service Parts Identification Label 12-1

Vehicle Data
Capacities and Specifications 12-2
Engine Drive Belt Routing . . . 12-5

Vehicle Identification

Vehicle Identification Number (VIN)

This legal identifier is in the front corner of the instrument panel, on the left side of the vehicle. It can be seen through the windshield from outside. The VIN also appears on the Vehicle Certification and Service Parts labels and certificates of title and registration.

Engine Identification

The eighth character in the VIN is the engine code. This code identifies the vehicle's engine, specifications, and replacement parts. See “Engine Specifications” under *Capacities and Specifications on page 12-2* for the vehicle's engine code.

Service Parts Identification Label

This label, on the rear edge of the passenger side front door, has the following information:

- Vehicle Identification Number (VIN).
- Model designation.
- Paint information.
- Production options and special equipment.

Do not remove this label from the vehicle.

Vehicle Data

Capacities and Specifications

If the vehicle has a diesel engine, see the Duramax diesel supplement for more information.

The following approximate capacities are given in metric and English conversions. See *Recommended Fluids and Lubricants on page 11-12* for more information.

Application	Capacities	
	Metric	English
Air Conditioning Refrigerant R134a	For the air conditioning system refrigerant charge amount, see the refrigerant label located under the hood. See your dealer for more information.	
Cooling System without Rear Heat		
4.3L V6	9.5 L	10.0 qt
4.8L V8, 5.3L V8	11.8 L	12.4 qt
6.0L V8	13.1 L	13.8 qt
Cooling System with Rear Heat		
4.3L V6	12.3 L	13.0 qt
4.8L V8, 5.3L V8	14.6 L	15.4 qt
6.0L V8	16.1 L	17.0 qt

Application	Capacities	
	Metric	English
Engine Oil with Filter		
4.3L V6	4.3 L	4.5 qt
4.8L V8, 5.3L V8, 6.0L V8	5.7 L	6.0 qt
Fuel Tank		
Cutaway (Optional Tank)*	215.7 L	57.0 gal
Cutaway (Standard Tank)	124.9 L	33.0 gal
Passenger and Cargo	117.3 L	31.0 gal
* 4 039 mm (159 inch) wheelbase or 4 496 mm (177 inch) wheelbase only		
Transmission Fluid (Pan Removal and Filter Replacement)		
4-SPD 4L60-E	4.7 L	5.0 qt
6-SPD 6L90	6.0 L	6.3 qt
Transfer Case Fluid	1.4 L	1.5 qt
Wheel Nut Torque	190 N•m	140 ft lb
All capacities are approximate. When adding, be sure to fill to the approximate level, as recommended in this manual. Recheck fluid level after filling.		

Engine Specifications

Engine	VIN Code	Transmission	Spark Plug Gap
4.3L V6	X	Automatic	1.52 mm (0.060 in)
4.8L V8	A	Automatic	1.02 mm (0.040 in)
5.3L V8	4	Automatic	1.02 mm (0.040 in)
6.0L V8	G	Automatic	1.02 mm (0.040 in)

Engine Drive Belt Routing

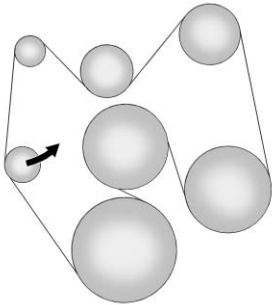

V6 Engines

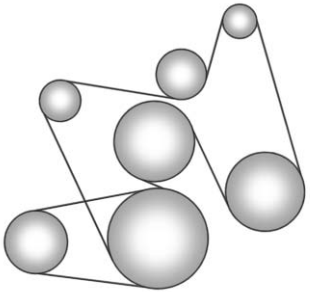

V8 Engines

If the vehicle has a diesel engine, see the Duramax diesel supplement for more information.

✍ NOTES

Customer Information

Customer Information

Customer Satisfaction Procedure (Mexico) 13-2
Customer Satisfaction Procedure (U.S. and Canada) 13-3
Customer Assistance Offices (U.S. and Canada) 13-5
Customer Assistance Offices (Mexico) 13-5
Customer Assistance for Text Telephone (TTY) Users (U.S. and Canada) 13-6
Online Owner Center 13-6
GM Mobility Reimbursement Program (U.S. and Canada) 13-7
Roadside Assistance Program (Mexico) 13-7
Roadside Assistance Program (U.S. and Canada) 13-11
Scheduling Service Appointments (U.S. and Canada) 13-12
Courtesy Transportation Program (U.S. and Canada) 13-13
Collision Damage Repair (U.S. and Canada) 13-14
Service Publications Ordering Information 13-16

Reporting Safety Defects

Reporting Safety Defects to the United States Government 13-17
Reporting Safety Defects to the Canadian Government 13-18
Reporting Safety Defects to General Motors 13-18

Vehicle Data Recording and Privacy

Vehicle Data Recording 13-19
OnStar® 13-19
Navigation System 13-19
Radio Frequency Identification (RFID) 13-20
Radio Frequency Statement 13-20

Customer Information

Customer Satisfaction Procedure (Mexico)

Did you get the Warranty Extension Plan? This plan is recommended by General Motors to supplement the warranty included with the new vehicle purchase.

See your dealer for details.

Customer Assistance Procedure

Owner satisfaction and goodwill are very important to your dealer and General Motors.

Normally, any problem with the transaction, sale, or usage of the vehicle must be handled by your dealer sales or service departments. However, we recognize that despite the good intentions of all parties involved, sometimes a misunderstanding may occur.

If you have a problem that has not been satisfactorily handled through the normal means, we suggest the following steps:

STEP ONE

Explain your case to your dealer service agent, service manager, dealer sales agent, or sales manager, depending on your case.

Make sure that they have all necessary information. They are interested in your continual satisfaction.

STEP TWO

If you are not satisfied, please contact the general manager or your dealership owner to ask for their help. If they are not able to resolve your case, ask them to contact the right people at General Motors for support, if needed.

STEP THREE

If your case is not resolved in a reasonable amount of time by your dealer, please call the General Motors Customer Assistance Center (CAC) and provide the following information:

- Name
- Address
- Phone number
- Model year
- Brand
- Vehicle Identification Number (VIN)
- Mileage
- Delivery date
- Description of the problem
- Dealership name
- Dealership address

See *Customer Assistance Offices (U.S. and Canada) on page 13-5* or *Customer Assistance Offices (Mexico) on page 13-5*.

Customer Satisfaction Procedure (U.S. and Canada)

Your satisfaction and goodwill are important to your dealer and to Chevrolet. Normally, any concerns with the sales transaction or the operation of the vehicle will be resolved by your dealer's sales or service departments. Sometimes, however, despite the best intentions of all concerned, misunderstandings can occur. If your concern has not been resolved to your satisfaction, the following steps should be taken:

STEP ONE: Discuss your concern with a member of dealership management. Normally, concerns can be quickly resolved at that level. If the matter has already been reviewed with the sales, service, or parts manager, contact the owner of your dealership or the general manager.

STEP TWO: If after contacting a member of dealership management, it appears your concern cannot be resolved by your dealership without further help, in the U.S., call the Chevrolet Customer Assistance Center at 1-800-222-1020. In Canada, call General Motors of Canada Customer Care Centre at 1-800-263-3777 (English), or 1-800-263-7854 (French).

We encourage you to call the toll-free number in order to give your inquiry prompt attention. Have the following information available to give the Customer Assistance representative:

- Vehicle Identification Number (VIN). This is available from the vehicle registration or title, or the plate at the top left of the instrument panel and visible through the windshield.
- Dealership name and location.
- Vehicle delivery date and present mileage.

When contacting Chevrolet, remember that your concern will likely be resolved at a dealer's facility. That is why we suggest following Step One first.

STEP THREE — U.S. Owners: Both General Motors and your dealer are committed to making sure you are completely satisfied with your new vehicle. However, if you continue to remain unsatisfied after following the procedure outlined in Steps One and Two, you can file with the Better Business Bureau (BBB) Auto Line® Program to enforce your rights.

The BBB Auto Line Program is an out-of-court program administered by the Council of Better Business Bureaus to settle automotive disputes regarding vehicle repairs or the interpretation of the New Vehicle Limited Warranty. Although you may be required to resort to this informal dispute resolution program prior to filing a court action, use of the program is free of charge and your case will generally be heard within

40 days. If you do not agree with the decision given in your case, you may reject it and proceed with any other venue for relief available to you.

You may contact the BBB Auto Line Program using the toll-free telephone number or write them at the following address:

BBB Auto Line Program
Council of Better Business Bureaus, Inc.
4200 Wilson Boulevard
Suite 800
Arlington, VA 22203-1838

Telephone: 1-800-955-5100
www.dr.bbb.org/goauto

This program is available in all 50 states and the District of Columbia. Eligibility is limited by vehicle age, mileage, and other factors. General Motors reserves the right to change eligibility limitations and/or discontinue its participation in this program.

STEP THREE — Canadian Owners: In the event that you do not feel your concerns have been addressed after following the procedure outlined in Steps One and Two, General Motors of Canada Limited wants you to be aware of its participation in a no-charge Mediation/Arbitration Program. General Motors of Canada Limited has committed to binding arbitration of owner disputes involving factory-related vehicle service claims. The program provides for the review of the facts involved by an impartial third party arbiter, and may include an informal hearing before the arbiter. The program is designed so that the entire dispute settlement process, from the time you file your complaint to the final decision, should be completed in about 70 days. We believe our impartial program offers advantages over courts in most jurisdictions because it is informal, quick, and free of charge.

For further information concerning eligibility in the Canadian Motor Vehicle Arbitration Plan (CAMVAP), call toll-free 1-800-207-0685, or call the General Motors Customer Care Centre, 1-800-263-3777 (English), 1-800-263-7854 (French), or write to:

The Mediation/Arbitration Program
c/o Customer Care Centre
General Motors of Canada Limited
Mail Code: CA1-163-005
1908 Colonel Sam Drive
Oshawa, Ontario L1H 8P7

Your inquiry should be accompanied by the Vehicle Identification Number (VIN).

Customer Assistance Offices (U.S. and Canada)

Chevrolet encourages customers to call the toll-free number for assistance. However, if a customer wishes to write or e-mail Chevrolet, the letter should be addressed to:

United States and Puerto Rico

Chevrolet Motor Division
Chevrolet Customer Assistance Center
P.O. Box 33170
Detroit, MI 48232-5170
www.Chevrolet.com

1-800-222-1020
1-800-833-2438 (For Text Telephone Devices (TTYs))
Roadside Assistance:
1-800-243-8872

From U.S. Virgin Islands:

1-800-496-9994

Canada

General Motors of Canada Limited
Customer Care Centre, Mail Code: CA1-163-005
1908 Colonel Sam Drive
Oshawa, Ontario L1H 8P7
www.gm.ca

1-800-263-3777 (English)
1-800-263-7854 (French)
1-800-263-3830 (For Text Telephone devices (TTYs))
Roadside Assistance:
1-800-268-6800

Overseas

Please contact the local General Motors Business Unit.

Customer Assistance Offices (Mexico)

To contact the Customer Assistance Center (CAC), use the phone numbers listed in this section. Customer assistance is available Monday through Friday, 08:00 to 20:00 hours, and Saturdays from 08:00 to 15:00 hours.

All e-mail inquiries to the Customer Assistance Center (CAC) should be sent to: cac.chevrolet@gm.com.

Mexico

From Mexico City

5329-0811

From Other Mexico Locations

01-800-466-0811

United States and Canada

1-866-466-8190

Costa Rica

00-800-052-1005

Guatemala

1-800-999-5252

Panama

00-800-052-0001

Dominican Republic

1-888-751-5301

El Salvador

800-6273

Honduras

800-0122-6101

Customer Assistance for Text Telephone (TTY) Users (U.S. and Canada)

To assist customers who are deaf, hard of hearing, or speech-impaired and who use Text Telephones (TTYs), Chevrolet has TTY equipment available at its Customer Assistance Center. Any TTY user in the U.S. can communicate with Chevrolet by dialing: 1-800-833-2438. TTY users in Canada can dial 1-800-263-3830.

Online Owner Center

Online Owner Experience (U.S.) my.chevrolet.com

The Chevrolet online owner experience is a one-stop resource that allows interaction with Chevrolet and keeps important vehicle-specific information in one place.

Membership Benefits

(Vehicle Information): Download owner manuals and view vehicle-specific how-to videos.

(Maintenance Information): View maintenance schedules, required alerts, OnStar onboard vehicle diagnostic information, and schedule service appointments.

(Service History): View printable dealer-recorded service records and self-recorded service records.

(Preferred Dealer Information): Select a preferred dealer and view dealer location, maps, phone numbers, and hours.

(Warranty Tracking Information): Track the vehicle's warranty information.

(Recall Information): View active recalls or search by Vehicle Identification Number (VIN). See *Vehicle Identification Number (VIN) on page 12-1*.

(Other Account Information): View GM Card, SiriusXM Satellite radio, and OnStar account information.

(Live Chat Support): Chat live with online help representatives.

Visit my.chevrolet.com to register your vehicle.

Chevrolet Owner Centre (Canada) chevroletowner.ca

Take a trip to the Chevrolet Owner Centre:

- Chat live with online help representatives.
- Use the Vehicle Tools section.
- Access third party enthusiast sites and social media networks.
- Locate owner resources such as lease-end, financing, and warranty information.
- Retrieve your favorite articles, quizzes, tips, and multimedia galleries organized into the Features and Auto Care Sections.
- Download the owner manual for your vehicle, quickly and easily.
- Find the Chevrolet-recommended maintenance services for your vehicle.

GM Mobility Reimbursement Program (U.S. and Canada)

This program is available to qualified applicants for cost reimbursement of eligible aftermarket adaptive equipment required for the vehicle, such as hand controls or a wheelchair/scooter lift for the vehicle.

For more information on the limited offer, visit www.gmmobility.com or call the GM Mobility Assistance Center at 1-800-323-9935. Text Telephone (TTY) users, call 1-800-833-9935.

General Motors of Canada also has a Mobility Program. Call 1-800-GM-DRIVE (463-7483) for details. TTY users call 1-800-263-3830.

Roadside Assistance Program (Mexico)

As a new owner, your vehicle is automatically enrolled in the Roadside Assistance program. The services are available at no cost under the terms and conditions of the program. The Roadside Assistance program is not part of, or included, in the coverage provided by the New Vehicle Limited Warranty.

Roadside Assistance provides assistance to the driver and passengers while driving the vehicle within your city of residence or on any passable road in Mexico, the United States, and Canada.

Services are subject to the limitations described in the following pages. Program coverage varies by country.

Roadside Assistance is available 24 hours a day, 365 days of the year.

This program expires two years from the date of the invoice for the vehicle, regardless of vehicle mileage and changes in vehicle ownership.

For more information about the renewal of this program at the end of its term, contact the Chevrolet Customer Assistance Center at 01-800-466-0800.

Services Provided

- **Flat Tire Change**: If unable to change a flat tire, Roadside Assistance will provide towing service to the nearest authorized Chevrolet dealership. It is the owner's responsibility for the repair or replacement of the tire.

  This service is limited to the transfer of the vehicle to the repair facility.
- **Emergency Fuel Delivery**: Delivery of enough fuel for the vehicle to get to the nearest service station.
- **Lock-Out Service**: Service to unlock the vehicle if you are locked out.
- **Battery Jump Start**: Service to jump start a dead battery.
- ***Emergency Messages**: Transmission of urgent phone messages.
- ***Emergency Calls**: Call for emergency services.
- ***Dealership Location Assistance**: Information regarding addresses and telephone numbers for Chevrolet dealers.
- **Emergency Towing**: Tow to the nearest dealer for warranty service if the vehicle cannot be driven.

  If the vehicle is involved in an accident during the commission of a crime, administrative violation, or breach of traffic regulations, Roadside Assistance will not provide service. When the vehicle is not accessible to be towed, all maneuvers required to access it will be at the owner's expense.

  If the vehicle is in another city outside of your residence, Roadside Assistance is limited to moving the vehicle to the nearest dealer. If you would like the vehicle moved to a different dealer, you will be asked to cover the difference in cost at the time of the move.

  If the vehicle cannot be received by the nearest Chevrolet dealer due to scheduling conflicts, the vehicle will be taken to a safe place where it will remain for up

to 48 hours until it can be taken to the dealer. If the storage costs exceed the amount authorized, the owner is responsible to pay the difference at the time of service. Contact Roadside Assistance for more information on authorized amounts.

- ***Trip Interruption**: This service is provided if you are prevented from further usage of your vehicle while traveling and it is not possible for the nearest Chevrolet dealership to repair the vehicle the same day, requiring the vehicle to stay at the dealership for a night or more. If this happens, in addition to the previously listed services and prior to confirmation by the dealership, you are entitled to choose one of the following alternatives, within the limits of existing Roadside Assistance program guidelines. If the costs exceed the amount authorized for these services, you must pay the difference at the time of service.

  Roadside Assistance will coordinate hotel accommodations for all vehicle travelers for up to two nights.

  A rental car will be provided for up to two days and the vehicle must be returned to its original destination, excluding vehicles with a carrying capacity greater than 3.5 tons.

  Complimentary Transportation: If you prefer to continue your trip to the intended destination or return to your place of residence, and the trip requires more than eight hours driving on the road, transportation for the driver and passengers by first class bus or coach commercial airline will be provided to a location chosen by Roadside Assistance, depending on availability at the chosen destination. Restrictions apply based on vehicle specifications.

  If you are on the road, taxi service to the nearest bus station or airport will be provided.

- ***Complimentary Transportation for Vehicle Pick Up**: Transportation to pick up your vehicle after repairs are complete. Once the dealer has reported that the vehicle has been repaired, Roadside Assistance will provide bus or commercial airline one-way service (subject to availability) for the person designated by you to collect your vehicle at the dealership's location if you or the designated person are not in the same town or city as the dealership.

*These services are not provided for U.S. or Canada residents. All services provided in the U.S. and

Canada are at the owner's expense and will be reimbursed by Roadside Assistance.

Services Not Included in Roadside Assistance

Roadside Assistance does not cover or reimburse services for the following:

- Events caused by fraud or bad faith by the driver.
- Vehicle immobilization situations due to a major force or unforeseen circumstances, such as natural phenomena of an extraordinary nature, earthquakes, volcanic eruptions, and other cyclonic storms.
- Vehicle immobilization situations arising from car accidents caused by the driver of the vehicle or third parties. This means any occurrence that causes physical injury to the occupants and/or the vehicle caused by external forces.
- Acts of terrorism, riot or uproar, armed forces or police actions which prevent timely delivery of assistance services.
- Food service, beverages, telephone calls, or other extra costs. Accommodation costs apply only to Mexico per the terms and conditions of the Roadside Assistance program.
- Any damage to the vehicle without intent, derived from the services provided.
- Cost of towing a trailer when choosing a Chevrolet dealer that is nearest to the temporary storage facility for the disabled vehicle.
- Cost of all maneuvers required to access the vehicle when it is not available to be towed.
- Cost of fuel provided.

Routine vehicle repair costs are not covered by the Roadside Assistance program. For more information, see your new vehicle warranty.

Contacting Roadside Assistance

Roadside Assistance services are of no cost to you and available 24 hours a day, 365 days a year. Costs are only incurred in situations that exceed the limits of the program, some of which are listed previously in this section.

To contact Roadside Assistance by phone, use the following numbers:

Mexico

01-800-466-0800

United States

1-866-466-8901

Canada

1-800-268-6800

E-mail

asistencia.chevrolet@gm.com

Chevrolet reserves the right to make any changes or discontinue the Roadside Assistance program at any time without notification.

Roadside Assistance Program (U.S. and Canada)

For U.S.-purchased vehicles, call 1-800-243-8872; (Text Telephone (TTY): 1-888-889-2438).

For Canadian-purchased vehicles, call 1-800-268-6800.

Service is available 24 hours a day, 365 days a year.

Calling for Assistance

When calling Roadside Assistance, have the following information ready:

- Your name, home address, and home telephone number.
- Telephone number of your location.
- Location of the vehicle.
- Model, year, color, and license plate number of the vehicle.
- Odometer reading, Vehicle Identification Number (VIN), and delivery date of the vehicle.
- Description of the problem.

Coverage

Services are provided up to 5 years/ 160 000 km (100,000 mi), whichever comes first.

In the U.S., anyone driving the vehicle is covered. In Canada, a person driving the vehicle without permission from the owner is not covered.

Roadside Assistance is not a part of the New Vehicle Limited Warranty. Chevrolet and General Motors of Canada Limited reserve the right to make any changes or discontinue the Roadside Assistance program at any time without notification.

Chevrolet and General Motors of Canada Limited reserve the right to limit services or payment to an owner or driver if they decide the claims are made too often, or the same type of claim is made many times.

Services Provided

- **Emergency Fuel Delivery:** Delivery of enough fuel for the vehicle to get to the nearest service station.
- **Lock-Out Service:** Service to unlock the vehicle if you are locked out. A remote unlock may be available if you have OnStar. For security reasons, the driver must present identification before this service is given.
- **Emergency Tow from a Public Road or Highway:** Tow to the nearest Chevrolet dealer for warranty service, or if the vehicle was in a crash and cannot be driven. Assistance is also given when the vehicle is stuck in the sand, mud, or snow.
- **Flat Tire Change:** Service to change a flat tire with the spare tire. The spare tire, if equipped,

must be in good condition and properly inflated. It is the owner's responsibility for the repair or replacement of the tire if it is not covered by the warranty.

- **Battery Jump Start:** Service to jump start a dead battery.

Services Not Included in Roadside Assistance

- Impound towing caused by violation of any laws.
- Legal fines.
- Mounting, dismounting, or changing of snow tires, chains, or other traction devices.
- Towing or services for vehicles driven on a non-public road or highway.

Services Specific to Canadian-Purchased Vehicles

- **Fuel Delivery:** Reimbursement is approximately $5 Canadian. Diesel fuel delivery may be restricted. Propane and other fuels are not provided through this service.
- **Lock-Out Service:** Vehicle registration is required.
- **Trip Interruption Benefits and Assistance:** Must be over 250 kilometers from where your trip was started to qualify. General Motors of Canada Limited requires pre-authorization, original detailed receipts, and a copy of the repair orders. Once authorization has been received, the Roadside Assistance advisor will help to make arrangements and explain how to receive payment.
- **Alternative Service:** If assistance cannot be provided right away, the Roadside Assistance advisor may give permission to get local emergency road service. You will receive payment, up to $100, after sending the original receipt to Roadside Assistance. Mechanical failures may be covered, however any cost for parts and labor for repairs not covered by the warranty are the owner responsibility.

Scheduling Service Appointments (U.S. and Canada)

When the vehicle requires warranty service, contact your dealer and request an appointment. By scheduling a service appointment and advising the service consultant of your transportation needs, your dealer can help minimize your inconvenience.

If the vehicle cannot be scheduled into the service department immediately, keep driving it until it can be scheduled for service, unless, of course, the problem is safety related. If it is, please call your dealership, let them know this, and ask for instructions.

If your dealer requests you to bring the vehicle for service, you are urged to do so as early in the work day as possible to allow for same-day repair.

Courtesy Transportation Program (U.S. and Canada)

To enhance your ownership experience, we and our participating dealers are proud to offer Courtesy Transportation, a customer support program for vehicles with the Bumper-to-Bumper (Base Warranty Coverage period in Canada), extended powertrain, and/or hybrid-specific warranties in both the U.S. and Canada.

The Courtesy Transportation program is no longer available for cutaway vehicles.

Several Courtesy Transportation options are available to assist in reducing inconvenience when warranty repairs are required.

Courtesy Transportation is not a part of the New Vehicle Limited Warranty. A separate booklet entitled “Limited Warranty and Owner Assistance Information” furnished with each new vehicle provides detailed warranty coverage information.

Transportation Options

Warranty service can generally be completed while you wait. However, if you are unable to wait, GM helps to minimize inconvenience by providing several transportation options. Depending on the circumstances, your dealer can offer one of the following:

Shuttle Service

Shuttle service is the preferred means of offering Courtesy Transportation. Dealers may provide shuttle service to get you to your destination with minimal interruption of your daily schedule. This includes one-way or round-trip shuttle service within reasonable time and distance parameters of your dealer's area.

Public Transportation or Fuel Reimbursement

If the vehicle requires overnight warranty repairs, and public transportation is used instead of your dealer's shuttle service, the expense must be supported by original receipts and can only be up to the maximum amount allowed by GM for shuttle service. In addition, for U.S. customers, should you arrange transportation through a friend or relative, limited reimbursement for reasonable fuel expenses may be available. Claim amounts should reflect actual costs and be supported by original receipts. See your dealer for information regarding the allowance amounts for reimbursement of fuel or other transportation costs.

Courtesy Rental Vehicle

Your dealer may arrange to provide you with a courtesy rental vehicle or reimburse you for a rental vehicle that you obtain if the vehicle is kept for an overnight warranty repair. Rental reimbursement will be limited and must be supported by original receipts. This requires that you sign and complete a rental agreement and meet state/provincial, local, and rental vehicle provider requirements. Requirements vary and may include minimum age requirements, insurance coverage, credit card, etc. You are responsible for fuel usage charges and may also be responsible for taxes, levies, usage fees, excessive mileage, or rental usage beyond the completion of the repair.

It may not be possible to provide a like vehicle as a courtesy rental.

Additional Program Information

All program options, such as shuttle service, may not be available at every dealer. Please contact your dealer for specific information about availability. All Courtesy Transportation arrangements will be administered by appropriate dealer personnel.

General Motors reserves the right to unilaterally modify, change, or discontinue Courtesy Transportation at any time and to resolve all questions of claim eligibility pursuant to the terms and conditions described herein at its sole discretion.

Collision Damage Repair (U.S. and Canada)

If the vehicle is involved in a collision and it is damaged, have the damage repaired by a qualified technician using the proper equipment and quality replacement parts. Poorly performed collision repairs diminish the vehicle resale value, and safety performance can be compromised in subsequent collisions.

Collision Parts

Genuine GM Collision parts are new parts made with the same materials and construction methods as the parts with which the vehicle was originally built. Genuine GM Collision parts are the best choice to ensure that the vehicle's designed appearance, durability, and safety are preserved. The use of Genuine GM parts can help maintain the GM New Vehicle Limited Warranty.

Recycled original equipment parts may also be used for repair. These parts are typically removed from vehicles that were total losses in prior crashes. In most cases, the parts being recycled are from undamaged sections of the vehicle. A recycled original equipment GM part may be an acceptable choice to maintain the vehicle's originally designed appearance and safety

performance; however, the history of these parts is not known. Such parts are not covered by the GM New Vehicle Limited Warranty, and any related failures are not covered by that warranty.

Aftermarket collision parts are also available. These are made by companies other than GM and may not have been tested for the vehicle. As a result, these parts may fit poorly, exhibit premature durability/corrosion problems, and may not perform properly in subsequent collisions. Aftermarket parts are not covered by the GM New Vehicle Limited Warranty, and any vehicle failure related to such parts is not covered by that warranty.

Repair Facility

GM also recommends that you choose a collision repair facility that meets your needs before you ever need collision repairs. Your dealer may have a collision repair center with GM-trained technicians and state-of-the-art equipment, or be able to recommend a collision repair center that has GM-trained technicians and comparable equipment.

Insuring the Vehicle

Protect your investment in the GM vehicle with comprehensive and collision insurance coverage. There are significant differences in the quality of coverage afforded by various insurance policy terms. Many insurance policies provide reduced protection to the GM vehicle by limiting compensation for damage repairs through the use of aftermarket collision parts. Some insurance companies will not specify aftermarket collision parts. When purchasing insurance, we recommend that you ensure that the vehicle will be repaired with GM original equipment collision parts. If such insurance coverage is not available from your current insurance carrier, consider switching to another insurance carrier.

If the vehicle is leased, the leasing company may require you to have insurance that ensures repairs with Genuine GM Original Equipment Manufacturer (OEM) parts or Genuine Manufacturer replacement parts. Read the lease carefully, as you may be charged at the end of the lease for poor quality repairs.

If a Crash Occurs

If there has been an injury, call emergency services for help. Do not leave the scene of a crash until all matters have been taken care of. Move the vehicle only if its position puts you in danger, or you are instructed to move it by a police officer.

Give only the necessary information to police and other parties involved in the crash.

For emergency towing see *Roadside Assistance Program (Mexico) on page 13-7* or *Roadside Assistance Program (U.S. and Canada) on page 13-11*.

Gather the following information:

- Driver name, address, and telephone number.
- Driver license number.
- Owner name, address, and telephone number.
- Vehicle license plate number.
- Vehicle make, model, and model year.
- Vehicle Identification Number (VIN).
- Insurance company and policy number.
- General description of the damage to the other vehicle.

Choose a reputable repair facility that uses quality replacement parts. See “Collision Parts” earlier in this section.

If the airbag has inflated, see *What Will You See after an Airbag Inflates? on page 3-22*.

Managing the Vehicle Damage Repair Process

In the event that the vehicle requires damage repairs, GM recommends that you take an active role in its repair. If you have a pre-determined repair facility of choice, take the vehicle there, or have it towed there. Specify to the facility that any required replacement collision parts be original equipment parts, either new Genuine GM parts or recycled original GM parts. Remember, recycled parts will not be covered by the GM vehicle warranty.

Insurance pays the bill for the repair, but you must live with the repair. Depending on your policy limits, your insurance company may initially value the repair using aftermarket parts. Discuss this with the repair professional, and insist on Genuine GM parts. Remember, if the vehicle is leased, you may be obligated to have the vehicle repaired with Genuine GM parts, even if your insurance coverage does not pay the full cost.

If another party's insurance company is paying for the repairs, you are not obligated to accept a repair valuation based on that insurance company's collision policy repair limits, as you have no contractual limits with that company. In such cases, you can have control of the repair and parts choices as long as the cost stays within reasonable limits.

Service Publications Ordering Information

Service Manuals

Service Manuals have the diagnosis and repair information on the engines, transmission, axle, suspension, brakes, electrical, steering, body, etc.

Service Bulletins

Service Bulletins give additional technical service information needed to knowledgeably service General Motors cars and trucks.

Each bulletin contains instructions to assist in the diagnosis and service of the vehicle.

Owner Information

Owner publications are written specifically for owners and intended to provide basic operational information about the vehicle. The Owner Manual includes the Maintenance Schedule for all models.

In-Portfolio: Includes a Portfolio, Owner Manual, and Warranty Booklet.

RETAIL SELL PRICE:
$35.00 (U.S.) plus handling and shipping fees.

Without Portfolio: Owner Manual only.

RETAIL SELL PRICE:
$25.00 (U.S.) plus handling and shipping fees.

Current and Past Models

Technical Service Bulletins and Manuals are available for current and past model GM vehicles.

ORDER TOLL FREE:
1-800-551-4123 Monday – Friday
8:00 AM – 6:00 PM Eastern Time

For Credit Card Orders Only (VISA-MasterCard-Discover), visit Helm, Inc. at: www.helminc.com.

Or write to:

Helm, Incorporated
Attention: Customer Service
47911 Halyard Drive
Plymouth, MI 48170

Prices are subject to change without notice and without incurring obligation. Allow ample time for delivery.

All listed prices are quoted in U.S. funds. Make checks payable in U.S. funds.

Reporting Safety Defects

Reporting Safety Defects to the United States Government

If you believe that your vehicle has a defect which could cause a crash or could cause injury or death, you should immediately inform the National Highway Traffic Safety Administration (NHTSA) in addition to notifying General Motors.

If NHTSA receives similar complaints, it may open an investigation, and if it finds that a safety defect exists in a group of vehicles, it may order a recall and remedy campaign. However, NHTSA cannot become involved in individual problems between you, your dealer, or General Motors.

To contact NHTSA, you may call the Vehicle Safety Hotline toll-free at 1-888-327-4236 (TTY: 1-800-424-9153); go to *http://www.safercar.gov;* or write to:

Administrator, NHTSA
1200 New Jersey Avenue, S.E.
Washington, D.C. 20590

You can also obtain other information about motor vehicle safety from *http://www.safercar.gov*.

Reporting Safety Defects to the Canadian Government

If you live in Canada, and you believe that the vehicle has a safety defect, notify Transport Canada immediately, and notify General Motors of Canada Limited. Call Transport Canada at 1-800-333-0510 or write to:

Transport Canada
Road Safety Branch
80 rue Noel
Gatineau, QC J8Z 0A1

Reporting Safety Defects to General Motors

In addition to notifying NHTSA (or Transport Canada) in a situation like this, notify General Motors.

Call 1-800-222-1020, or write:

Chevrolet Motor Division
Chevrolet Customer Assistance Center
P.O. Box 33170
Detroit, MI 48232-5170

In Canada, call 1-800-263-3777 (English) or 1-800-263-7854 (French), or write:

General Motors of Canada Limited
Customer Care Centre,
Mail Code: CA1-163-005
1908 Colonel Sam Drive
Oshawa, Ontario L1H 8P7

Vehicle Data Recording and Privacy

Vehicle Data Recording

This vehicle may be equipped with a module that records data in certain crash or near crash-like situations, such as when an air bag deploys or the vehicle hits a road obstacle. This data could help provide a better understanding of the circumstances in which crashes and injuries occur. Some data may be related to the vehicle dynamics and safety systems operation. The data may show:

- How various systems in the vehicle were operating.
- Whether or not the driver and passenger safety belts were buckled/fastened.
- If and how far the driver was pressing the accelerator and/or brake pedal.
- How fast the vehicle was traveling.

This data could provide an understanding of the circumstances in which crashes and injuries occur. Data could be recorded by the vehicle only if a non-trivial crash situation occurs; no data are recorded under normal driving conditions and no personal data are recorded. However, other parties, such as law enforcement, could combine recorded data with the type of personally identifying data routinely acquired during a crash investigation.

To read recorded data, special equipment is required, and access to the vehicle or the module is needed. In addition to the vehicle manufacturer, other parties, such as law enforcement, that have the special equipment, can read the information if they have access to the vehicle or the module.

GM will not access this data or share it with others except: with the consent of the vehicle owner or, if the vehicle is leased, with the consent of the lessee; in response to an official request by police or similar government office; as part of GM's defense of litigation through the discovery process; or, as required by law. Data that GM collects or receives may also be used for GM research needs or may be made available to others for research purposes, where a need is shown and the data is not tied to a specific vehicle or vehicle owner.

OnStar®

If the vehicle is equipped with OnStar® and has an active subscription, refer to the OnStar® Terms and Conditions for information on data collection and use. See *OnStar Overview on page 14-1*.

Navigation System

If the vehicle is equipped with a navigation system, use of the system may result in the storage of

destinations, addresses, telephone numbers, and other trip information. See the navigation manual for information on stored data and for deletion instructions.

Radio Frequency Identification (RFID)

RFID technology is used in some vehicles for functions such as tire pressure monitoring and ignition system security, as well as in connection with conveniences such as Remote Keyless Entry (RKE) transmitters for remote door locking/unlocking and starting, and in-vehicle transmitters for garage door openers. RFID technology in GM vehicles does not use or record personal information or link with any other GM system containing personal information.

Radio Frequency Statement

This vehicle has systems that operate on a radio frequency that comply with Part 15 of the Federal Communications Commission (FCC) rules and with Industry Canada Standards RSS-GEN/210/220/310.

Operation is subject to the following two conditions:

1. The device may not cause harmful interference.
2. The device must accept any interference received, including interference that may cause undesired operation of the device.

Changes or modifications to any of these systems by other than an authorized service facility could void authorization to use this equipment.

OnStar

OnStar Overview
OnStar Overview 14-1

OnStar Services
Emergency 14-2
Security 14-2
Navigation 14-2
Connections 14-4
Diagnostics 14-5

OnStar Additional Information
OnStar Additional Information 14-5

OnStar Overview

The vehicle will have one of these sets of buttons.

If equipped, this vehicle has a comprehensive, in-vehicle system that can connect to a live Advisor for Emergency, Security, Navigation, Connection, and Diagnostic Services.

The OnStar system status light is next to the OnStar buttons. If the status light is:

- Solid Green: System is ready.
- Flashing Green: On a call.
- Red: Indicates a problem.

Push or , or call 1-888-4ONSTAR (1-888-466-7827) to speak to an Advisor.

Push or to:

- Make a call, end a call, or answer an incoming call.
- Give OnStar Hands-Free Calling voice commands.
- Give OnStar Turn-by-Turn Navigation voice commands. Requires the available Directions and Connections service plan.

Push On or On to connect to a live Advisor to:

- Verify account information or update contact information.
- Get driving directions. Requires the available Directions and Connections service plan.
- Receive On-Demand Diagnostics for a check of the vehicle's key operating systems.
- Receive Roadside Assistance.

Push the OnStar Emergency button, or SOS , to get a priority connection to an Emergency Advisor available 24/7 to:

- Get help for an emergency.
- Be a Good Samaritan or respond to an AMBER Alert.
- Get crisis assistance and evacuation routes.

OnStar Services

Emergency

With Automatic Crash Response, the built-in system can automatically connect to help in most crashes, even if help cannot be requested.

Push or SOS to connect to an Emergency Advisor. GPS technology is used to identify the vehicle location and can provide critical information to emergency personnel. The Advisor is also trained to offer critical assistance in emergency situations before first responders arrive.

Security

OnStar provides services like Stolen Vehicle Assistance, Remote Ignition Block, and Roadside Assistance, if the vehicle is equipped with these services. OnStar can unlock the vehicle doors remotely, if it is equipped with automatic door locks, and can help police locate the vehicle if it is stolen.

Navigation

OnStar navigation requires the Directions and Connections service plan.

Push On or On to receive directions or have them sent to the vehicle navigation screen, if equipped. Destinations can also be forwarded to the vehicle from Google Maps™ or MapQuest.com. The OnStar mapping database is continuously updated. Visit www.onstar.com for coverage maps.

Turn-by-Turn Navigation

1. Push On or On to connect to a live Advisor.
2. Request directions.
3. Directions are downloaded to the vehicle.
4. Follow the voice-guided commands.

Using Voice Commands During a Planned Route

Cancel Route

1. Push or . System responds: “OnStar ready,” then a tone. Say “Cancel route.” System responds: “Do you want to cancel directions?”
2. Say “Yes.” System responds: “OK, request completed, thank you, goodbye.”

Route Preview

1. Push or . System responds: “OnStar ready,” then a tone.
2. Say “Route preview.” System responds with the next three maneuvers.
3. Say “Goodbye.” Exits voice commands.

Repeat

1. Push or . System responds: “OnStar ready,” then a tone.
2. Say “Repeat.” System responds with the last direction given, then responds with “OnStar ready,” then a tone.
3. Say “Goodbye.” Exits voice commands.

Get My Destination

1. Push or . System responds: “OnStar ready,” then a tone.
2. Say “Get my destination.” System responds with address and the distance to the destination, then responds with “OnStar ready,” then a tone.
3. Say “Goodbye.” Exits voice commands.

Other Navigation Services Available from OnStar

OnStar eNav: Allows subscribers to send destinations from Google Maps and MapQuest.com to their Turn-by-Turn Navigation or screen-based navigation system. When ready, the directions will be downloaded to the vehicle.

Destination Download: Push or , then request the Advisor to download directions to the navigation system in the vehicle. After the call ends, push the “Go” button on the navigation screen to begin driving directions.

Destinations can also be downloaded on the go. For information about eNav, Destination Download, and coverage maps visit www.onstar.com.

Connections

OnStar Hands-Free Calling allows calls to be made and received from the vehicle. The vehicle can also be controlled from a cell phone through the OnStar RemoteLink mobile app. See www.onstar.com for coverage maps.

Hands-Free Calling

1. Push or . System responds: “OnStar ready.”
2. Say “Call.” System responds: “Please say the name or number to call.”
3. Say the entire number without pausing, including a “1” and the area code. System responds: “OK calling.”

Calling 911 Emergency

1. Press or . System responds “OnStar Ready,” followed by a tone.
2. Say “Call.” System responds “Please say the name or number to call.”
3. Say “911” without pausing. System responds “911.”
4. Say “Call.” System responds “OK, dialing 911.”

Retrieve My Number

1. Push or . System responds: “OnStar ready.”
2. Say “My number.” System responds: “Your OnStar Hands-Free Calling number is.”

End a Call

Push or . System responds: “Call ended.”

Store a Name Tag for Speed Dialing

1. Push or . System responds: “OnStar ready.”
2. Say “Store.” System responds: “Please say the number you would like to store.”
3. Say the entire number without pausing. System responds: “Please say the name tag.”
4. Pick a name tag. System responds: “About to store <name tag>. Does that sound OK?”
5. Say “Yes” or “No” to try again. System responds: “OK, storing <name tag>.”

Place a Call Using a Stored Number

1. Push or . System responds: “OnStar ready.”
2. Say “Call <name tag>.” System responds: “OK, calling <name tag>.”

Verify Minutes and Expiration

Push or and say “Minutes” then “Verify” to check how many minutes remain and their expiration date.

OnStar Mobile App

Download the OnStar RemoteLink mobile app to your iPhone or Android smartphone to check vehicle fuel level, oil life, or tire pressure; to start the vehicle (if equipped) or unlock it; or to connect to an OnStar Advisor. For OnStar RemoteLink information and compatibility, see www.onstar.com.

Diagnostics

OnStar Vehicle Diagnostics will perform a vehicle check every month. It will check the engine, transmission, antilock brakes, and major vehicle systems. It also checks the tire pressures, if the vehicle is equipped with the Tire Pressure Monitoring System. If a diagnostics check is needed between e-mails, push or , and an Advisor can run a check.

OnStar Additional Information

Transferring Service

Push or to request account transfer eligibility information. The Advisor can assist in canceling or removing account information.
If OnStar receives information that vehicle ownership has changed, OnStar may send a voice message to the vehicle, requesting updated account information.

Reactivation for Subsequent Owners

Push or and follow the prompts to speak to an Advisor as soon as possible after acquiring the vehicle. The Advisor will update vehicle records and will explain the OnStar service offers and options available.

How OnStar Service Works

Automatic Crash Response, Emergency Services, Crisis Assist, Stolen Vehicle Assistance, Vehicle Diagnostics, Remote Door Unlock, Roadside Assistance, Turn-by-Turn Navigation, and Hands-Free Calling are available on most vehicles. Not all OnStar services are available everywhere or on all vehicles. For more information, a full description of OnStar services, system limitations, and OnStar terms and conditions, see www.onstar.com (U.S.) or www.onstar.ca (Canada); contact OnStar at 1-888-4ONSTAR (1-888-466-7827) or TTY 1-877-248-2080; or push ⊙ or ⊙ to speak with an Advisor. OnStar services require a vehicle electrical system, wireless service, and GPS satellite technologies to be available and operating for features to function properly. These systems may not operate if the battery is discharged or disconnected.

OnStar service cannot work unless your vehicle is in a place where OnStar has an agreement with a wireless service provider for service in that area, and the wireless service provider has coverage, network capacity, reception, and technology compatible with OnStar service. Service involving location information about the vehicle cannot work unless GPS signals are available, unobstructed, and compatible with the OnStar hardware. OnStar service may not work if the OnStar equipment is not properly installed or it has not been properly maintained. If equipment or software is added, connected, or modified, OnStar service may not work. Other problems beyond the control of OnStar may prevent service such as hills, tall buildings, tunnels, weather, electrical system design and architecture of the vehicle, damage to the vehicle in a crash, or wireless phone network congestion or jamming.

See *Radio Frequency Statement on page 13-20* for information regarding Part 15 of the Federal Communications Commission (FCC) rules and Industry Canada Standards RSS-GEN/210/220/310.

Services for People with Disabilities

Advisors provide services to help subscribers with physical disabilities and medical conditions.

Push ⊙ or ⊙ for help with:

- Locating a gas station with an attendant to pump gas.
- Finding a hotel, restaurant, etc., that meets accessibility needs.
- Providing directions to the closest hospital or pharmacy in urgent situations.

TTY Users

OnStar has the ability to communicate to the deaf, hard-of-hearing, or speech-impaired customers while in the vehicle. The available dealer-installed TTY system can provide in-vehicle access to all of the OnStar services, except Virtual Advisor and OnStar Turn-by-Turn Navigation.

OnStar.com

The website provides access to account information, manages the OnStar subscription, and allows viewing of videos of each service. Get subscription plan pricing and sign up for OnStar Vehicle Diagnostics. Click on the “My Account” tab on the home page.

OnStar Personal Identification Number (PIN)

A PIN is needed to access some of the OnStar services, like Remote Door Unlock and Stolen Vehicle Assistance. You will be prompted to change the PIN the first time when speaking with an Advisor. To change the OnStar PIN, call OnStar and provide the Advisor with the current number.

Warranty

OnStar equipment may be warranted as part of the New Vehicle Limited Warranty. The manufacturer of the vehicle furnishes detailed warranty information.

Languages

The vehicle can be programmed to respond in French or Spanish. Push or and ask an Advisor. Advisors can speak French or Spanish.

Potential Issues

Some OnStar services are disabled after five days. OnStar cannot perform Remote Door Unlock or Stolen Vehicle Assistance after the vehicle has been off continuously for five days. After five days, OnStar can contact Roadside Assistance and a locksmith to help gain access to the vehicle.

Global Positioning System (GPS)

- Obstruction of the GPS can occur in a large city with tall buildings; in parking garages; around airports; in tunnels, underpasses, or parking garages; or in an area with very dense trees. If GPS signals are not available, the OnStar system should still operate to call OnStar. However, OnStar could have difficulty identifying the exact location.
- In emergency situations, OnStar can use the last stored GPS location to send to emergency responders.
- A temporary loss of GPS can cause loss of the ability to send a Turn-by-Turn Navigation route. The Advisor may give a verbal

route or may ask for a call back after the vehicle is driven into an open area.

Cellular and GPS Antennas

Avoid placing items over or near the antenna to prevent blocking cellular and GPS signal reception. Cellular reception is required for OnStar to send remote signals to the vehicle.

Unable to Connect to OnStar Message

If there is limited cellular coverage or the cellular network has reached maximum capacity, this message may come on. Push On or Off to try the call again or try again after driving a few miles into another cellular area.

Vehicle and Power Issues

OnStar services require a vehicle electrical system, wireless service, and GPS satellite technologies to be available and operating for features to function properly. These systems may not operate if the battery is discharged or disconnected.

Add-on Electrical Equipment

The OnStar system is integrated into the electrical architecture of the vehicle. Do not add any electrical equipment. See *Add-On Electrical Equipment on page 9-57*. Added electrical equipment may interfere with the operation of the OnStar system and cause it to not operate.

Privacy

The complete OnStar Privacy Statement may be found at www.onstar.com. Privacy-sensitive users of wireless communications are cautioned that the privacy of any information sent via wireless cellular communications cannot be assured. Third parties may unlawfully intercept or access transmissions and private communications without consent.

A

Accessories and Modifications 10-3
Accessory Power 9-19
Add-On Electrical Equipment 9-57
Additional Information
OnStar® 14-5
Air Cleaner/Filter, Engine 10-15
Air Vents 8-7
Airbag System
Check 3-32
How Does an Airbag Restrain? 3-21
Passenger Sensing System 3-26
What Makes an Airbag Inflate? 3-21
What Will You See after an Airbag Inflates? 3-22
When Should an Airbag Inflate? 3-20
Where Are the Airbags? 3-18
Airbags
Adding Equipment to the Vehicle 3-31
Light On-Off 5-15
On-Off Light 5-15
On-Off Switch 3-23
Passenger Status Indicator . . .5-16
Readiness Light 5-14
Servicing Airbag-Equipped Vehicles 3-31
System Check 3-16
All-Wheel Drive 10-27, 9-30
AM-FM Radio 7-7
Antilock Brake System (ABS) 9-30
Warning Light 5-21
Appearance Care
Exterior 10-84
Interior 10-87
Ashtrays 5-8
Assistance Program, Roadside 13-7, 13-11
Audio Players 7-12
CD 7-12
Audio System
Fixed Mast Antenna 7-11
Radio Reception 7-10
Theft-Deterrent Feature 7-2
Automatic
Door Locks 2-8
Headlamp System 6-3
Transmission 9-22, 9-26
Transmission Fluid 10-10, 10-12
Automatic Transmission
Manual Mode 9-28
Shift Lock Control Function Check 10-30
Auxiliary Devices 7-17
Axle, Front 10-28
Axle, Rear 10-28

B

Battery 10-27
Jump Starting 10-78
Load Management 6-6
Power Protection 6-7
Voltage and Charging Messages 5-30
Blade Replacement, Wiper ... 10-31
Bluetooth 7-21
Brake
System Warning Light 5-20
Brakes 10-24
Antilock 9-30
Fluid 10-25
Parking 9-31
System Messages 5-30
Braking 9-3
Break-In, New Vehicle 9-14
Bulb Replacement 10-37
Center High-Mounted Stoplamp (CHMSL) 10-36
Front Turn Signal, Sidemarker, and Parking Lamps 10-34
Halogen Bulbs 10-32
Headlamp Aiming 10-32
Bulb Replacement (cont'd)
Headlamps 10-32, 10-33
License Plate Lamps 10-37
Taillamps 10-35
Buying New Tires 10-61

C

Calibration 5-4
California
Fuel Requirements 9-42
Perchlorate Materials Requirements 10-3
Warning 10-3
Camera, Rear Vision 9-38
Canadian Vehicle Owners iii
Capacities and Specifications 12-2
Carbon Monoxide
Engine Exhaust 9-21
Winter Driving 9-7
Cargo Door Relocking 2-7
Cautions, Danger, and Warnings iv
CD Player 7-12
Center High-Mounted Stoplamp (CHMSL) 10-36
Chains, Tire 10-65
Charging System Light 5-17
Check
Engine Light 5-17
Ignition Transmission Lock 10-31
Child Restraints
Infants and Young Children 3-35
Lower Anchors and Tethers for Children 3-41
Older Children 3-33
Securing 3-48, 3-50, 3-53
Systems 3-38
Cigarette Lighter 5-7
Circuit Breakers 10-38
Cleaning
Exterior Care 10-84
Interior Care 10-87
Climate Control Systems 8-1
Air Conditioning 8-1
Heating 8-1
Rear 8-5
Rear Heating System 8-4
Clock 5-6

Cluster, Instrument 5-9
Collision Damage Repair 13-14
Compass 5-4
  Messages 5-30
Connections
  OnStar® 14-4
Control of a Vehicle 9-3
Convex Mirrors 2-13
Coolant
  Engine 10-17
  Engine Temperature
    Gauge 5-12
Cooling System 10-16
  Engine Messages 5-31
Courtesy Transportation
  Program 13-13
Cruise Control 9-34
  Light 5-24
Customer Assistance 13-6
  Offices 13-5
  Text Telephone (TTY)
    Users 13-6
Customer Information
  Service Publications
    Ordering Information 13-16
Customer Satisfaction
  Procedure 13-2, 13-3

D

Damage Repair, Collision 13-14
Danger, Warnings, and
  Cautions iv
Daytime Running
  Lamps (DRL) 6-2
Defensive Driving 9-3
Delayed Locking 2-7
Devices
  Auxiliary 7-17
Diagnostics
  OnStar® 14-5
Distracted Driving 9-2
Dome Lamps 6-5
Door
  Ajar Messages 5-30
  Cargo Door Relocking 2-7
  Delayed Locking 2-7
  Locks 2-6
  Power Locks 2-7
Door (cont'd)
  Rear Doors 2-10
  Side 2-9
  Sliding 2-10
Drive Belt Routing, Engine 12-5
Drive Systems
  All-Wheel Drive 10-27, 9-30
Driver Information
  Center (DIC) 5-24
Driving
  Characteristics and
    Towing Tips 9-47
  Defensive 9-3
  Drunk 9-3
  For Better Fuel Economy 1-20
  Highway Hypnosis 9-6
  Hill and Mountain Roads 9-7
  If the Vehicle is Stuck 9-9
  Loss of Control 9-5
  Off-Road Recovery 9-4
  Vehicle Load Limits 9-10
  Wet Roads 9-5
  Winter 9-7
Dual Tire
  Rotation 10-59

E

E85 Fuel 9-44
Electrical Equipment,
Add-On 9-57
Electrical System
Engine Compartment
Fuse Block 10-38
Floor Console Fuse Block . . 10-41
Fuses and Circuit
Breakers 10-38
Overload 10-38
Emergency
OnStar® 14-2
Engine
Air Cleaner/Filter 10-15
Check and Service Engine
Soon Light 5-17
Compartment Overview 10-6
Coolant 10-17
Coolant Temperature
Gauge 5-12
Cooling System 10-16
Cooling System Messages . . . 5-31
Drive Belt Routing 12-5
Exhaust 9-21
Fan 10-22
Engine (cont'd)
Heater 9-18
Oil Life System 10-9
Oil Messages 5-32
Oil Pressure Gauge 5-11
Overheating 10-21
Power Messages 5-32
Pressure Light 5-23
Running While Parked 9-22
Starting 9-16
Enhanced Technology
Glass 2-17
Entry/Exit Lighting 6-6
Equipment, Towing 9-54
Extender, Safety Belt 3-15
Exterior Lamp Controls 6-1
Exterior Lamps Off Reminder . . . 6-2

F

Fan
Engine 10-22
Fast Idle System 9-18
Filter,
Engine Air Cleaner 10-15
Flash-to-Pass 6-2
Flashers, Hazard Warning 6-4
Flat Tire 10-66
Changing 10-68
Floor Mats 10-90
Fluid
Automatic
Transmission 10-10, 10-12
Brakes 10-25
Power Steering 10-23
Washer 10-23
Front Axle 10-28
Front Seats
Adjustment 3-2
Front Storage 4-1
Front Turn Signal
Bulb Replacement 10-34
Fuel 9-42
Additives 9-43
E85 (85% Ethanol) 9-44
Economy Driving 1-20
Filling a Portable Fuel
Container 9-46
Filling the Tank 9-45
Foreign Countries 9-43
Gasoline Specifications 9-42
Gauge 5-10
Low Fuel Warning Light 5-23

Fuel (cont'd)
Recommended 9-42
Requirements, California 9-42
System Messages 5-33
Full-Size Spare Tire 10-77
Fuses
Engine Compartment
Fuse Block 10-38
Floor Console Fuse Block .. 10-41
Fuses and Circuit
Breakers 10-38

G

Gasoline
Specifications.....9-42
Gauges
Engine Coolant
Temperature 5-12
Engine Oil Pressure 5-11
Fuel 5-10
Odometer.....5-10
Speedometer 5-10
Trip Odometer 5-10
Voltmeter 5-13
Warning Lights and
Indicators 5-8
General Information
Service and Maintenance 11-1
Towing 9-47
Vehicle Care 10-2
Glass, Enhanced
Technology 2-17
GM Mobility Reimbursement
Program 13-7

H

Halogen Bulbs 10-32
Hazard Warning Flashers 6-4
Head Restraints 3-2
Headlamps 10-33
Aiming 10-32
Automatic.....6-3
Bulb Replacement 10-32
Daytime Running
Lamps (DRL).....6-2
Flash-to-Pass.....6-2
High-Beam On Light 5-24
High/Low Beam Changer 6-2
Heated Mirrors..... 2-14
Heater
Engine 9-18
Heating and Air Conditioning ... 8-1
High-Beam On Light 5-24
Highway Hypnosis 9-6
Hill and Mountain Roads 9-7
Hood 10-4
Horn 5-3
How to Wear Safety Belts
Properly 3-9

I

Idle System
Fast 9-18
Ignition Positions 9-15
Ignition Transmission Lock
Check 10-31
Immobilizer 2-11
Infants and Young Children,
Restraints 3-35
Infotainment 7-1
Instrument Cluster 5-9
Introduction iii

J

Jump Starting 10-78

K

Key and Lock Messages 5-33
Keyless Entry
  Remote (RKE) System 2-2
Keys 2-1

L

Labeling, Tire Sidewall 10-46
Lamps
  Daytime Running (DRL) 6-2
  Dome 6-5
  Exterior Controls 6-1
  Exterior Lamps Off
    Reminder 6-2
  License Plate 10-37
  Malfunction Indicator 5-17
  Messages 5-33
  Reading 6-6
  Taillamps 10-35
Lamps, Bulb Replacement 10-34
Lap-Shoulder Belt 3-10
LATCH System
  Replacing Parts after a
    Crash 3-47
LATCH, Lower Anchors and
  Tethers for Children 3-41
Lighter, Cigarette 5-7
Lighting
  Entry/Exit 6-6
  Illumination Control 6-5
Lights
  Airbag On-Off 5-15
  Airbag Readiness 5-14
  Antilock Brake System
    (ABS) Warning 5-21
  Brake System Warning 5-20
  Charging System 5-17
  Cruise Control 5-24
  Engine Oil Pressure 5-23
  Flash-to-Pass 6-2
  High-Beam On 5-24
  High/Low Beam Changer 6-2
  Low Fuel Warning 5-23
Lights (cont'd)
  Safety Belt Reminders 5-14
  Security 5-23
  StabiliTrak® OFF 5-21
  Tire Pressure 5-22
  Tow/Haul Mode 5-21
  Traction Control System
    (TCS)/StabiliTrak® 5-22
Locking Rear Axle 9-34
Locks
  Automatic Door 2-8
  Cargo Door Relocking 2-7
  Delayed Locking 2-7
  Door 2-6
  Lockout Protection 2-8
  Power Door 2-7
  Safety 2-8
Loss of Control 9-5
Low Fuel Warning Light 5-23
Lower Anchors and Tethers
  for Children (LATCH
  System) 3-41

M

Maintenance
Records 11-15
Maintenance Schedule
Recommended Fluids
and Lubricants 11-12
Malfunction Indicator Lamp 5-17
Manual Mirrors 2-13
Manual Mode 9-28
Manual Windows 2-15
Messages
Airbag System 5-35
Battery Voltage and
Charging 5-30
Brake System 5-30
Compass 5-30
Door Ajar 5-30
Engine Cooling System 5-31
Engine Oil 5-32
Engine Power 5-32
Fuel System 5-33
Key and Lock 5-33
Lamp 5-33
Object Detection System 5-33
Ride Control System 5-34
Security 5-35
Messages (cont'd)
Service Vehicle 5-36
Tire 5-36
Transmission 5-37
Vehicle 5-29
Vehicle Reminder 5-38
Mirrors
Convex 2-13
Heated 2-14
Manual 2-13
Manual Rearview 2-15
Power 2-14
Trailer Tow 2-14
Monitor System, Tire
Pressure 10-54

N

Navigation
OnStar® 14-2
Vehicle Data Recording
and Privacy 13-19
New Vehicle Break-In 9-14
Noise Control System 10-29

O

Object Detection System
Messages 5-33
Odometer 5-10
Trip 5-10
Off-Road
Recovery 9-4
Oil
Engine 10-7
Engine Oil Life System 10-9
Engine Oil Pressure
Gauge 5-11
Messages 5-32
Pressure Light 5-23
Older Children, Restraints 3-33
Online Owner Center 13-6
OnStar®
System, In Brief 1-20
OnStar® Additional
Information 14-5
OnStar® Connections 14-4
OnStar® Diagnostics 14-5
OnStar® Emergency 14-2
OnStar® Navigation 14-2
OnStar® Overview 14-1
OnStar® Security 14-2

Operation, Infotainment
System 7-5
Ordering
Service Publications 13-16
Outlets
Power 5-7
Overheating, Engine 10-21
Overview, Infotainment
System 7-3, 7-4

P

Park
Shifting Into 9-19
Shifting Out of 9-20
Parking
Assist, Ultrasonic 9-37
Brake 9-31
Brake and P (Park)
Mechanism Check 10-31
Over Things That Burn 9-21
Passenger Airbag Status
Indicator 5-16
Passenger Sensing System . . . 3-26
Perchlorate Materials
Requirements, California 10-3
Personalization
Vehicle 5-38
Phone
Bluetooth 7-21
Power
Door Locks 2-7
Mirrors 2-14
Outlets 5-7
Protection, Battery 6-7
Retained Accessory (RAP) . . . 9-19
Seat Adjustment 3-3
Steering Fluid 10-23
Windows 2-15
Pregnancy, Using Safety
Belts 3-14
Privacy
Radio Frequency
Identification (RFID) 13-20
Program
Courtesy Transportation 13-13
Proposition 65 Warning,
California 10-3

R

Radio Frequency
Identification (RFID) 13-20
Statement 13-20
Radios
AM-FM Radio 7-7
Reception 7-10
Satellite 7-9
Reading Lamps 6-6
Rear Axle 10-28
Locking 9-34
Rear Climate Control System . . . 8-5
Rear Doors 2-10
Rear Heating System 8-4
Rear Seats 3-4
Rear Vision Camera (RVC) 9-38
Rearview Mirrors 2-15
Reclining Seatbacks 3-3
Recommended
Fuel 9-42
Recommended Fluids and
Lubricants 11-12
Recording
Vehicle Data 13-19
Records
Maintenance 11-15

Recreational Vehicle
Towing 10-81
Reimbursement Program,
GM Mobility 13-7
Remote Keyless Entry (RKE)
System 2-2
Remote Vehicle Start 2-4
Replacement Bulbs 10-37
Replacement Parts
Airbags 3-33
Maintenance 11-14
Replacing Airbag System 3-33
Replacing LATCH System
Parts after a Crash 3-47
Replacing Safety Belt
System Parts after a Crash . . . 3-15
Reporting Safety Defects
Canadian Government 13-18
General Motors 13-18
U.S. Government 13-17
Restraints
Where to Put 3-39
Retained Accessory
Power (RAP) 9-19
Ride Control Systems
Messages 5-34
Roads
Driving, Wet 9-5
Roadside Assistance
Program 13-7, 13-11
Rotation, Tires 10-58
Routing, Engine Drive Belt 12-5
Running the Vehicle While
Parked 9-22

S

Safety Belts 3-8
Care 3-15
Extender 3-15
How to Wear Safety Belts
Properly 3-9
Lap-Shoulder Belt 3-10
Reminders 5-14
Replacing after a Crash 3-15
Use During Pregnancy 3-14
Safety Defects Reporting
Canadian Government 13-18
General Motors 13-18
U.S. Government 13-17
Safety Locks 2-8
Safety System Check 3-15
Satellite Radio 7-9
Scheduling Appointments 13-12
Seats
Adjustment, Front 3-2
Head Restraints 3-2
Power Adjustment, Front 3-3
Rear 3-4
Reclining Seatbacks 3-3
Secondary Latch System 10-75
Securing Child
Restraints 3-48, 3-50, 3-53
Security
Light 5-23
Messages 5-35
OnStar® 14-2
Vehicle 2-11
Service
Accessories and
Modifications 10-3
Doing Your Own Work 10-4
Engine Soon Light 5-17
Maintenance Records 11-15
Maintenance, General
Information 11-1
Parts Identification Label 12-1

Service (cont'd)
Publications Ordering Information 13-16
Scheduling Appointments . . . 13-12
Vehicle Messages 5-36
Servicing the Airbag 3-31
Shift Lock Control Function Check, Automatic Transmission 10-30
Shifting
Into Park 9-19
Out of Park 9-20
Side Door 2-9
Sidemarker
Bulb Replacement 10-34
Signals, Turn and Lane-Change 6-4
Sliding Door 2-10
Specifications and Capacities 12-2
Speedometer 5-10
StabiliTrak
OFF Light 5-21
System 9-32
Start Vehicle, Remote 2-4
Starter Switch Check 10-30
Starting the Engine 9-16
Steering 9-4
Fluid, Power 10-23
Wheel Adjustment 5-2
Wheel Controls 5-2
Storage Areas
Front 4-1
Stuck Vehicle 9-9
Sun Visors 2-18
Swing-out Windows 2-16
Switches
Airbag On-Off 3-23
Symbols iv
System
Infotainment 7-1
Noise Control 10-29

T

Taillamps 10-35
Text Telephone (TTY) Users . . . 13-6
Theft-Deterrent Systems 2-11
Immobilizer 2-11
Time 5-6
Tires
Buying New Tires 10-61
Chains 10-65
Changing 10-68
Tires (cont'd)
Designations 10-48
Different Size 10-62
Dual Rotation 10-59
Full-Size Spare 10-77
If a Tire Goes Flat 10-66
Inflation Monitor System 10-55
Inspection 10-58
Messages 5-36
Pressure Light 5-22
Pressure Monitor System . . . 10-54
Rotation 10-58
Secondary Latch System . . . 10-75
Sidewall Labeling 10-46
Terminology and Definitions 10-50
Uniform Tire Quality Grading 10-63
Wheel Alignment and Tire Balance 10-64
Wheel Replacement 10-65
When It Is Time for New Tires 10-60
Winter 10-45
Tow/Haul Mode 9-29
Tow/Haul Mode Light 5-21

Towing
Driving Characteristics 9-47
Equipment 9-54
General Information 9-47
Recreational Vehicle 10-81
Trailer 9-49
Vehicle 10-81
Traction
Control System (TCS)/
StabiliTrak® Light 5-22
Trailer
Tow Mirrors 2-14
Towing 9-49
Transmission
Automatic 9-22, 9-26
Fluid, Automatic 10-10, 10-12
Messages 5-37
Transportation Program,
Courtesy 13-13
Trip Odometer 5-10
Turn and Lane-Change
Signals 6-4

U

Ultrasonic Parking Assist 9-37
Uniform Tire Quality
Grading 10-63
Using This Manual iii

V

Vehicle
Canadian Owners iii
Control 9-3
Identification
Number (VIN) 12-1
Load Limits 9-10
Messages 5-29
Personalization 5-38
Reminder Messages 5-38
Remote Start 2-4
Security 2-11
Towing 10-81
Vehicle Care
Tire Pressure 10-53
Vehicle Data Recording 13-19
Ventilation, Air 8-7
Visors 2-18
Voltmeter Gauge 5-13

W

Warning
Brake System Light 5-20
Warning Lights, Gauges, and
Indicators 5-8
Warnings iv
Cautions and Danger iv
Hazard Flashers 6-4
Washer Fluid 10-23
Wheels
Alignment and Tire
Balance 10-64
Different Size 10-62
Replacement 10-65

When It Is Time for New Tires 10-60
Where to Put the Restraint 3-39
Windows 2-15
Enhanced Technology Glass 2-17
Manual 2-15
Power 2-15
Swing-out Windows 2-16
Windshield Wiper/Washer 5-3
Winter Driving 9-7
Winter Tires 10-45
Wiper Blade Replacement 10-31