COMPOSITION

The vehicle's exterior lighting system has been designed and produced with two objectives in mind:
- guaranteeing maximum efficiency with regard to the international regulations that define the lighting technology specifications for the various components;
- being integrated with the design of the car so that the various components enhance the image.

Location of components on vehicle

The vehicle components and their location are illustrated below.

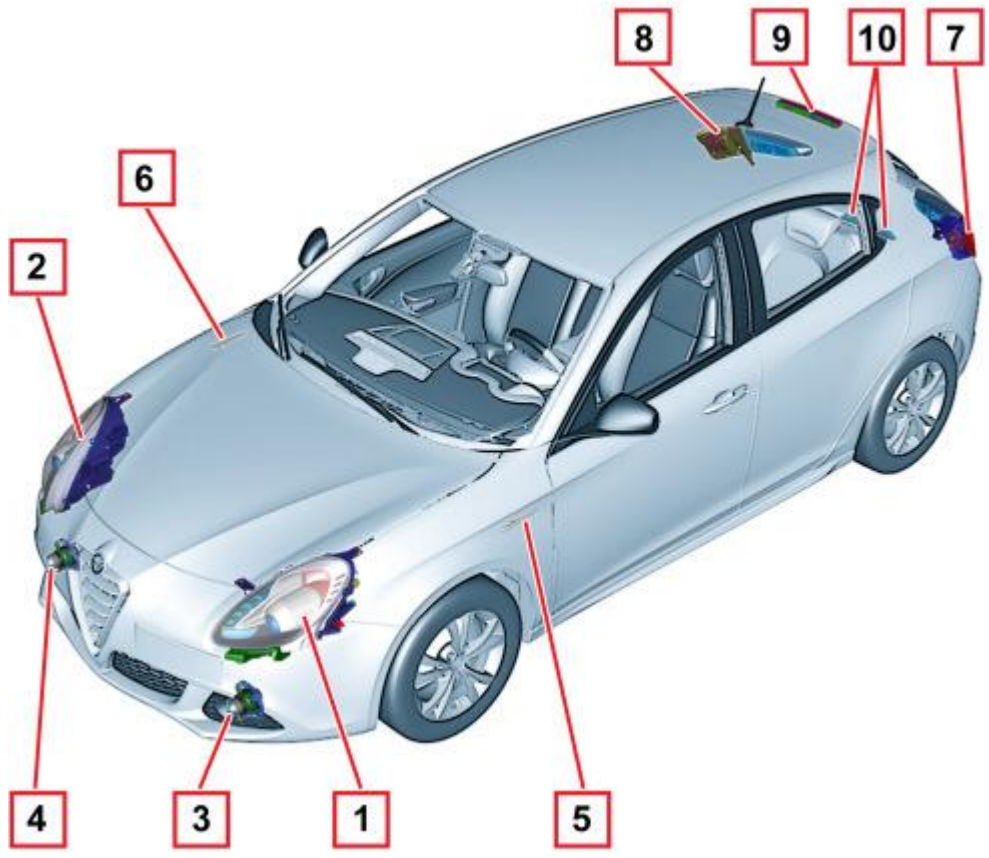

cardiagn.com

1 - LH front light cluster
2 - Right front light cluster
3 - Left fog light
4 - Right fog light
5 - Left front direction indicator
6 - Right front direction indicator
7 - Left tail-light cluster
8 - Right rear light cluster
9 - Central brake light (third brake light)
10 - Number plate lights

Operation

Day lights (drl)

With the key in the ON position and the ring nut in position "O" the daytime lights come on automatically; the other lights and the interior lighting remain off.
If the DRL function is off (instrument panel setup menu), no light will come on when the ring is turned to the "O" position.
When the day lights are switched on, the Body Computer powers the two bulbs (right and left) located in the front headlights.
Each day light bulb is diagnosed. A "day light failure" indication will be shown by the Body Computer if a faulty bulb is found.

Taillights

With the ignition key at MAR, when the steering stalk ring nut is turned to the "dipped beams" position, the daytime lights go out and the side lights and dipped headlamps are turned on.
The corresponding warning lights light up on the instrument panel.
When the day lights are switched on, the Body Computer powers the four bulbs (right/left, front/rear).
At key-on, the side lights are always switched on with the dipped beam lights.
All side lights will be supplied for the necessary time when the "Follow Me Home" function is on.
At key-off, the "courtesy light function" will switch on the rear side lights for a certain time when the doors or tailgate are opened using the remote control.
Diagnosis is performed for each lamp. A "side light fault" indication is indicated by the Body Computer when a bulb fault is found.

Number plate lights

The two external number plate lights light up when the side lights are switched on.
At key-off, the "courtesy light function" will switch on the number plate lights for a certain time when the doors or tailgate are opened using the remote control.
Each number plate is diagnosed and a number plate light failure indicator is present on the instrument panel.

Parking lights

This function is used to switch on the side lights and the number plate lights at key-off to indicate the presence of the parked vehicle.
The function (at key-off only) is obtained by turning the ring on the left stalk from the "O" position to the "dipped beam" position. To switch the function off, turn the ring from the "dipped beam" position to the "O" position.
At key-on, the "parking light" function is deactivated and cancelled.The side lights and number plate lights are switched off and may be switched on automatically by the dusk sensor (where fitted). The function will not be reactivated at the next key-off.Repeat the procedure to reactivate the sequence.

Dipped beam headlights

With the ignition key at MAR, when the steering stalk ring nut is turned to the "dipped beams" position, the daytime lights go out and the side lights and dipped headlamps are turned on.
The corresponding warning lights light up on the instrument panel.
At key-on, the dipped beam lights are always switched on with the side lights.
Within a certain time from key-off, the "Follow Me Home" function for switching on the dipped beam lights for a certain time.
Furthermore, at key-off, the "courtesy light function" will switch on the dipped beam lights for a certain time when the doors or tailgate are opened using the remote control.

External light activation by dusk sensor (if installed)

At key-on, the dusk sensor informs the Body Computer via LIN serial network of the environmental light conditions both if the ring on the left stalk is turned to the "Auto" position or if the function is not active.
The sensor is activated when the ring of the left stalk is taken to the "Auto" position, the instrument panel shows the last set light sensitivity value and the user can set a new one.
After sensor activation, sensitivity can be changed by the user by means of the instrument panel setup menu.The body computer switches the external lights on and off according to the environmental light data it receives from the sensor. The day lights are switched on if there is more light; otherwise, the side lights, the instrument panel warning light, the number plate lights and the dipped beam headlights are switched on.
A "dusk sensor failure" indicator will appear on the instrument panel if a dusk sensor fault is detected. The side lights along with the panel warning light, the number plate lights and the dipped beam headlights appear if the stalk ring is turned to the "Auto" position.

Follow me home

The “Follow Me Home” function lights up the side lights and dipped beam headlights immediately after stopping the vehicle and for a certain time.
The function can be activated within 2 minutes from key-off using the steering column stalk flasher control.
After the function has been activated and the side lights and dipped beam headlights are on, each further flasher operation will increase the operation time by 30 seconds. The flasher control can be operated for up to 7 times for a total of 210 seconds of operation.
The “Follow Me Home” function may be deactivated by holding the flasher for longer than 2 seconds. This control will only apply if the function is on and will switch the side lights and dipped beam headlights off and will reset the lights on timer and the 7 control counter.
The “Follow Me Home” can be switched on again after having been switched off by using the flasher stalk within 2 minutes from key-off.
The Follow Me Home will be deactivated when switching from key-off to key-on.
The Follow Me Home function will be deactivated and the side lights and dipped beam headlights will go out after the timeout.

Main beam headlights

The main beam headlamps are operated using the steering column stalk by pulling the lever towards the steering wheel:
- with the dipped beams on, by pushing the lever towards the dashboard (stable mode)
- in flashing mode, by pulling the lever toward the steering wheel (unstable mode).
The switching on of the main beam headlamps is managed by the Body Computer.
Activation and/or deactivation information is sent through the CAN: in this way, the "main beam" warning light switches on in the instrument panel.
It is not possible to switch on the main beam headlights constantly if the automatic control system is activated by the dusk sensor.

Direction indicators/hazard warning lights

At key-on, the Body Computer controls the direction indicators according to how the left steering stalk is operated.
The direction indicators on one side only of the car will be operated according to the control (either left front, side and rear indicators or right left front, side and rear indicators).
A tone will be heard in the passenger compartment at the same time.
When the lever is returned to the rest position, the lights and the other direction indicators go out.
If the direction indicators are on, they go out at the key-off.
When the hazard lights are operated, at key-on or key-off, the Body Computer operates each 6 direction indicator (front, side, rear, left and right) and activates the tone in the passenger compartment.
If the hazard light switch is operate while the indicators on one side of the car are on, the indicators will continue to blink without interruptions or delays.
If a fault is detected with one of the front or rear direction indicator bulbs, on the side of the vehicle selected for the Direction indicators function or for the Hazard warning lights function, at the same time as the failure indication comes on, the flashing frequency of the visual display and acoustic signal are increased.
NB.The flashing frequency of the exterior lights remains unchanged.
The direction indicators are also used by the vehicle access system while operates them in priority manner for indicating locking and unlocking using the remote control.
The direction indicators can be operated by the alarm control unit for indicating situation of danger via the Body Computer.

Cardiagn.com

Rear fog light

The rear fog light is switched off when the "rear fog light" button is pressed providing the side lights and dipped beam headlights are on.
When the rear fog lamp switches on, the corresponding warning light on the instrument panel comes on, as well as the LED on the button.
The corresponding indication will appear on the panel when the rear fog light is switched on. If the fog light is on at key-off, it will not be switched on at the following key-on. The Body Computer carries out the following fault diagnosis for the rear fog lamp bulb: when a fault with the bulb is recognized, the corresponding "rear fog lamp failure" signal is activated.

Front fog lights

The rear fog light is switched off when the "rear fog light" button is pressed providing the side lights and dipped beam headlights are on.The light is switched off by pressing the same button or switching off the side light and dipped beam headlights.
If the fog lights are switched off when the side lights and dipped beam headlights were switched off, the fog lights will not be switched back on when the side lights and dipped beam headlights are switched on. The fog lights can be switched on by pressing the button after switching on the side lights and the dipped beam headlights.
When the fog lights are switched on, the corresponding warning light on the instrument panel comes on, as well as the LED on the button.
If the fog lights are on at key-off, the will not be switched on at the following key-on.
The fog lights will be switched off while cranking the engine but the control is not reset in this case.

1- Fog lights control
2 - Rear fog lamps control
3 - fog lights on LED
4 - rear fog lights on LED

Front light cluster (basic version - not gas discharge)

The unit consists of:

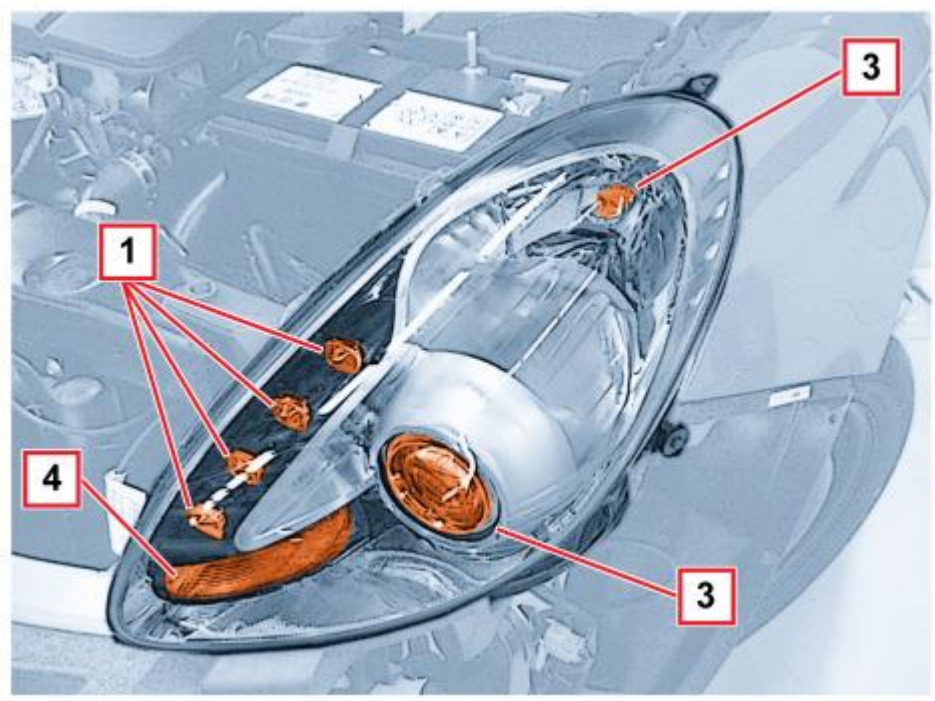

1 - Side/day light
2 - Main beam headlamp
3 - Dipped headlamp
4 - Direction indicator
Bulbs present:

cardiagn.com

- Halogen H1 55W - 12V for main beams function
- Halogen H7 55W - 12V for dipped beam function
- Module with 4 "K2 lumiled" type LEDs for side lights and daytime running lights function
- "Hypervision" PY 24 W module for direction indicators function

Headlight features

The front light cluster mainly consists of:
- **clear polycarbonate outer lens** with scratch-proof and anti-UV paint;
- **polypropylene casing** with fibreglass containing extensions for fixing to the body; the latter are collapsible to meet pedestrian impact type approval requirements; at the bottom, the casing comes with a housing for fixing a bumper supporting bracket creating a profile between the two parts;
The casing also contains housings for fixing direction bulb holders and the electrical connection, ventilation plugs and housings for the LED control unit.
- main **decorative frame** in metallic polyamide; the frame/reflector and LED base are secured to this; its surface finish enhances its technological aspect; it has some slots on the sides;
- **direction reflector** made out of metallic polyamide with a housing for attaching to a clear diaphragm with horizontal prism designs;
- **side light/DRL LED unit** made out of a black polycarbonate frame, a metallic polyamide reflector casing onto which the LEDs are attached, fitted on a flexible structure;
-**main beam reflector** made out of painted, metallic BMC with a seat for adjustment blocks and attachment of elliptical module;
- **elliptical module unit** complete with adjustment through a system of brackets that support the module and the electrical corrector;
- **electrical corrector** that allows the light beam to be adjusted if the current ride setting could dazzle cars coming in the opposite direction.

Rear view

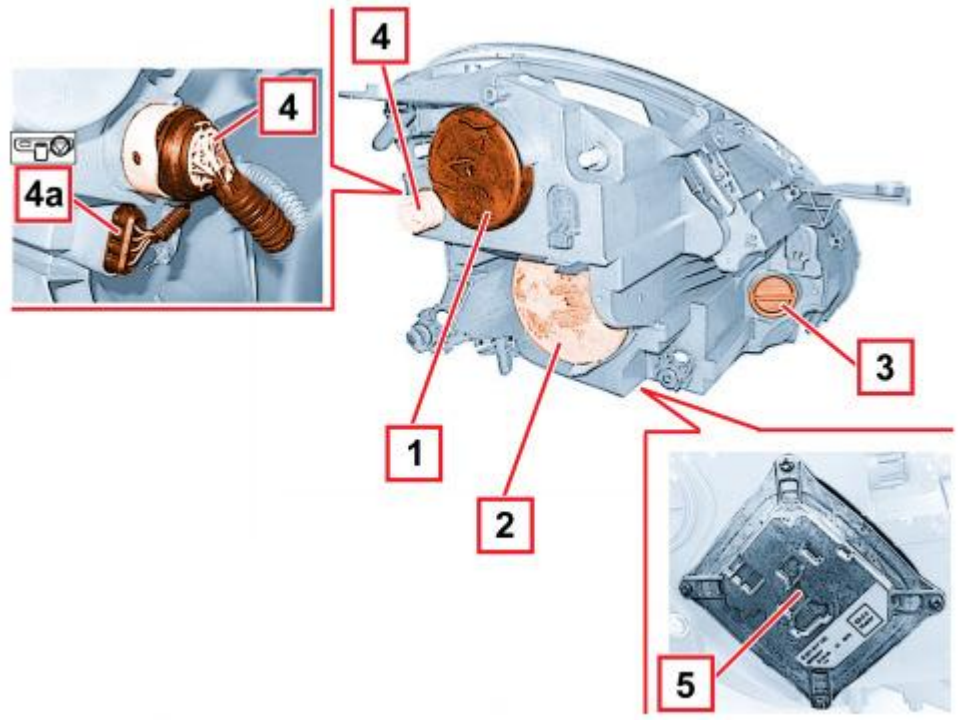

cardiagn.com

1 - Dipped beam and side/day light lid
2 - Dipped headlamps lid
3 - Direction indicators lid
4 - Connector
4b - Connector (for right headlamp only)
5 - LED control unit

Electrically controlled headlamp alignment corrector

For gas discharge versions, see below

The headlamp alignment device is designed to adjust dipped light beam correctly in a vertical direction irrespective of the load on the axles.

With the dipped headlamps on, using the buttons in the controls on the left of the dashboard, it is possible to alter the angle/direction of the light cluster in 4 standard positions: the following loads correspond to the four positions:
- 0: 1 person (driver), 2 persons (in the front seats)
- 1: 5 persons, 2 persons (in the front seats), 3 persons (in the rear seats)
- 2: 5 persons plus maximum load
- 3: 1 person (driver) plus maximum permitted load in luggage compartment without backrest folded down

The maximum load refers to: the maximum permitted load on the rear axle or: the total permitted load for the vehicle. The weight of a person is taken as 75 kg.
The instrument panel display shows the position in relation to the adjustment set.
The headlamp incorporates an electric motor: the latter controls the position by means of a pinion and an adjustment screw suitably tilting the dipped headlamp reflector.

Rear light clusters

The tail light is symmetrical and consists mainly of a fixed part and a mobile part. Both parts contain LED technology for the side light and brake light functions.
To meet legal requirements for the mobile part, the brake light function in the mobile part is inhibited during rear fog light operation, but the side light function remains on to maintain the typical shape that characterises the car's rear end.

cardiagn.com

Led lights

LEDS (light emitting diodes) are used for the main rear light cluster functions.
This ensures compact size and light weight in addition to low consumption and high light efficiency (LEDs consume up to 60% less than traditionally light bulbs and to heat up).
Furthermore, they lack the traditional filament, which is the part most subject to breakage.For this reason, they are totally shock-resistant and guarantee a duration of 100,000 hours of operation, against the 3-5,000 hours of a traditional light bulb, which is considerably longer than the average vehicle life.
Other features include better visibility, faster response times beneficial for example for brake lights to warn other drivers (LEDs light up quicker, in 1 thousandth of a second inside of 200).This allows the driver of the following vehicle to see the braking more in advance and gain a space of approximately 5 metres at 120 km/h.
The fixed light is mainly composed of:
- lens in pink PMMA methacrylate, welded to the casing, with a set of contour ribbing;
- container casing: made out of red bayblend ABS+PC T45 with a housing for fixing to the body and a locating pin built into the inner side partition;
- internal decorative frame with built in reflectors: made of polycarbonate PC with metallic finish on the whole surface;
- bulb holder base assembly for direction indicator bulb R10W;
- flexible base: circuit with 21 OSRAM LAE67F type LEDs divided into 7 branches for the side light/brake light functions, connected to the control electronics;
- LED control electronics that adjust current in the brake light and side light LED matrixes and generates a diagnosis signal; in rated operating conditions, the ECU guarantees a minimum current uptake within the specified input voltage and adjusts current to the LEDs.

Bulbs present:
- 21 OSRAM "LAE67F" type LEDs for side lights/brake lights
- R10W bulb for direction indicators.

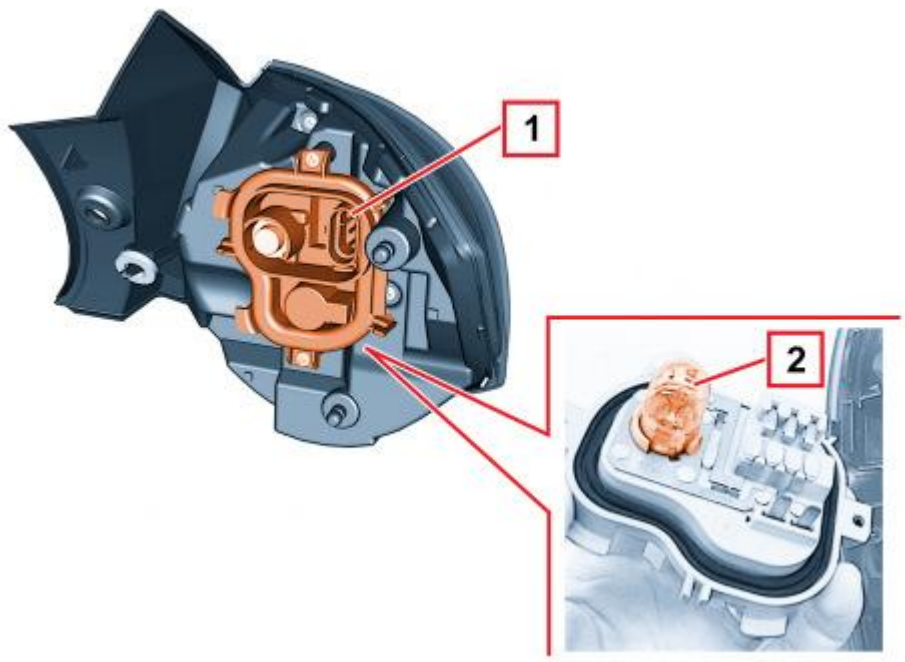

cardiagn.com

Rear view
1 - Connector
2 - Direction indicator bulb
The mobile light is made of colourless and pink PMMA methacrylate.
Ribs are present around the outside and on the inner screens facing the reverse and rear fog lights functions.
The container casing made out of red ABS+PC T45 bayblend is fitted with bosses for links used for fixing to the bodywork and also a reference pin. A decorative side partition is formed out of the body.
Optical reflectors made with integral optics in aluminium-coated polycarbonate PC.
Decorative frame with built in LED reflectors made with integral optics in aluminium-coated polycarbonate PC.
Bulb holder assembly with circuit for bulbs, P21W type for reverse and H21W for the rear fog light function.
Electronic control circuit for ECU, the mobile part meets the same diagnosis requirements as the fixed part.
The brake and side light functions are made with 15 LDS on a flexible circuit; they are Osram LAE67F type LEDs, in a pure matrix with 5 branches and 3 LED, in series and powered by a current regulator to provide the same values as the fixed part.

Bulb types: 15 OSRAM "LAE67F" type LEDs for side lights/brake lights;
- P21W bulb for reversing lights;
- H21W bulb for rear fog lights.

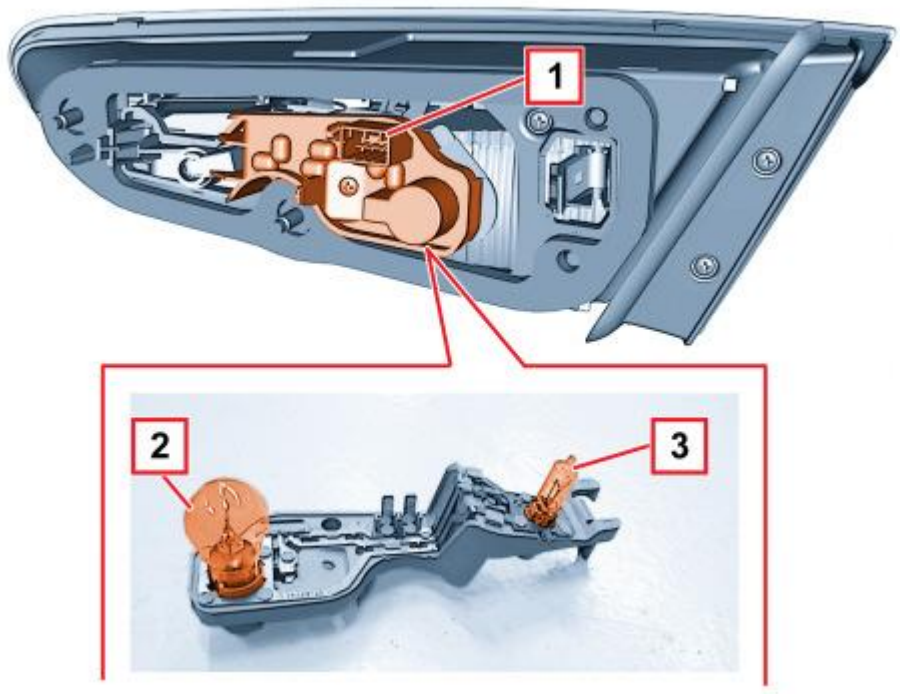

Rear view
1 - Connector
2 - Reversing light bulb
3 - Rear fog light bulb

Number plate light

The number plate light function is achieved by means of two light clusters fitted using a metal clip and a reference fastened to the panel.
Each lamp has a W5W (12V - 5W) all glass bulb

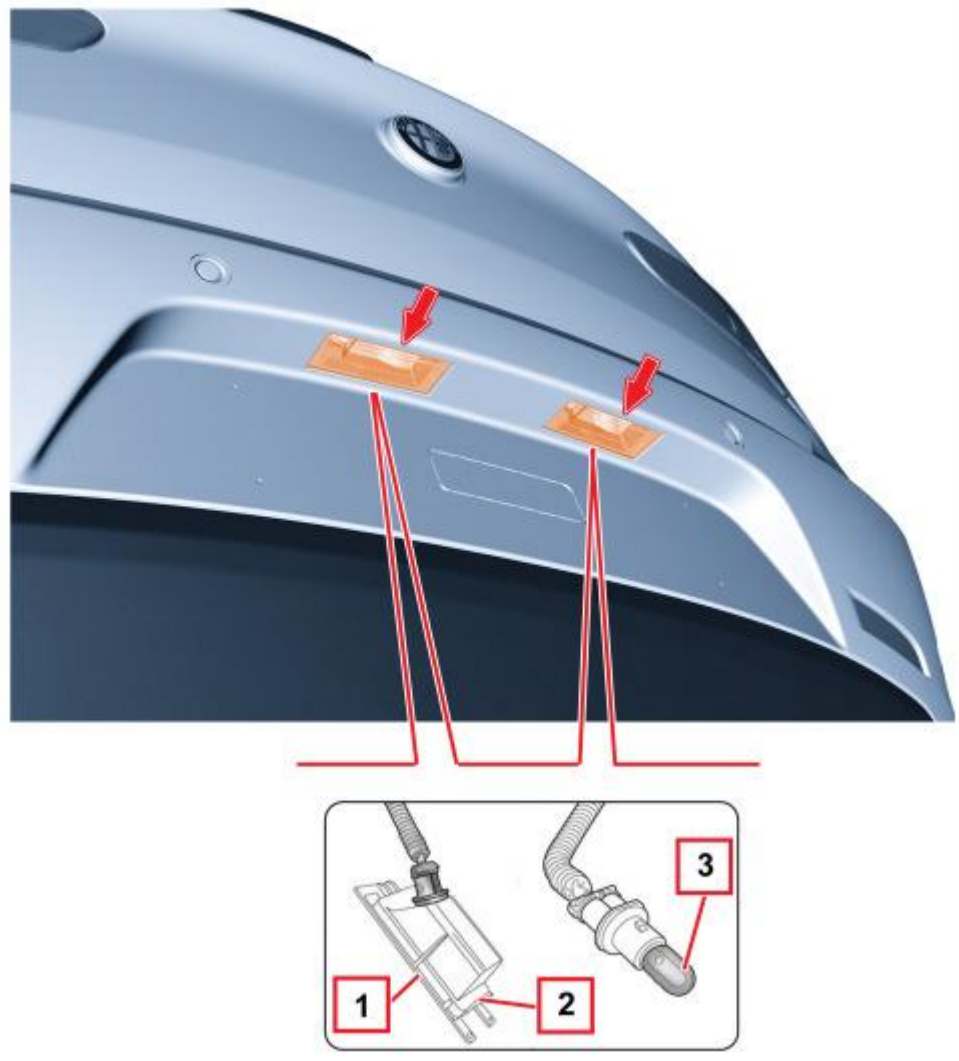

1 - Lens cover
2 - Clip
3 - All glass bulb

Direction indicators side repeater

The side direction indicators, with their particular elongated shape, consist of LED circuits controlled by dedicated internal electronics.

cardiagn.com

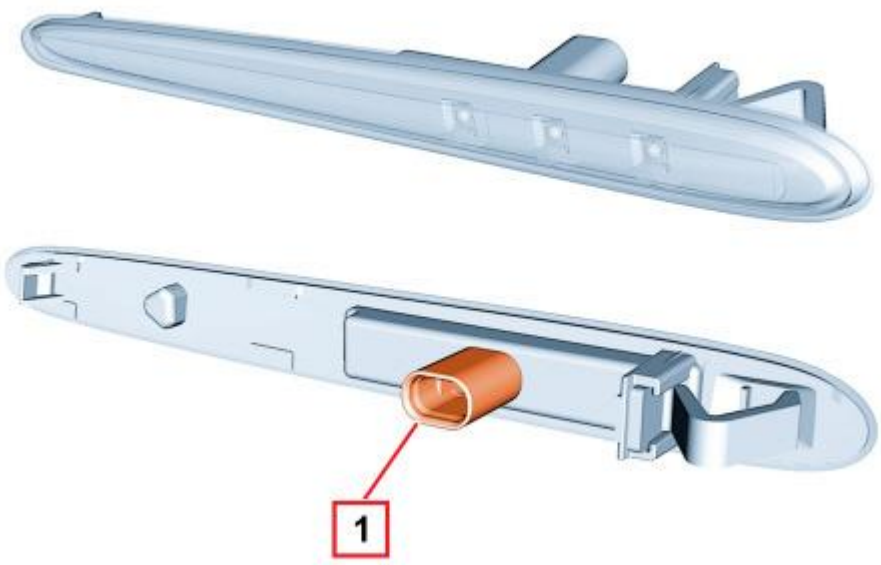

1 - Connector

Additional (third) brake light

The additional brake light function consists of an electronic LED device and is arranged over the rear window serigraphy.
The grey body contains the LED device made in a single part and snapped onto the structure of the tailgate.

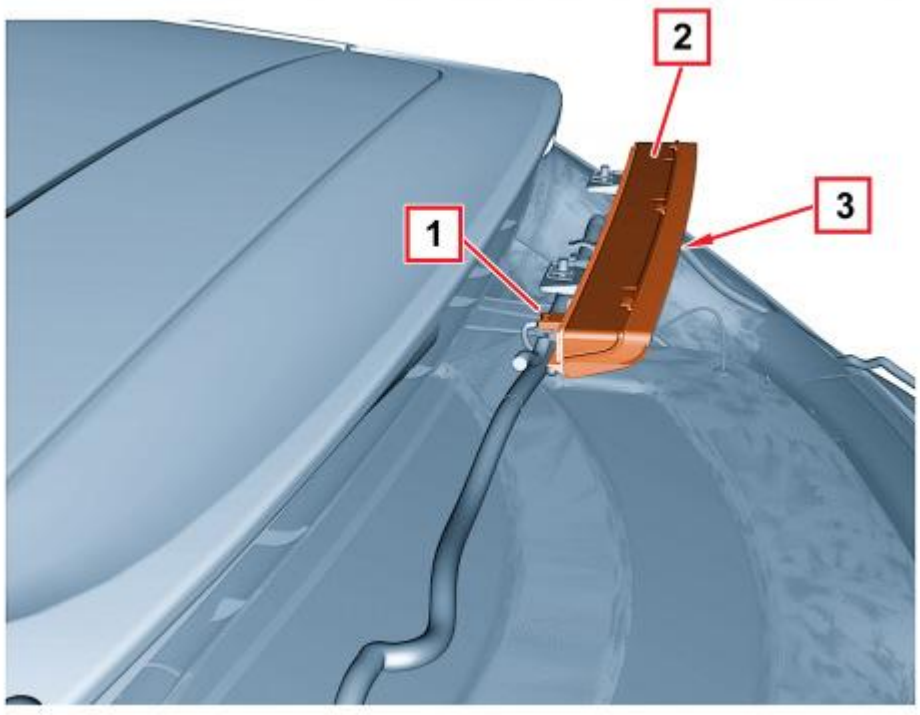

cardiagn.com

1- Connector
2 - LED unit
3 - (Red) lens cover

Fog lights

The fog lights are located in the lower part of the front bumper. The unit has a screw to adjust the light beam, that can be reached through the special front hole.

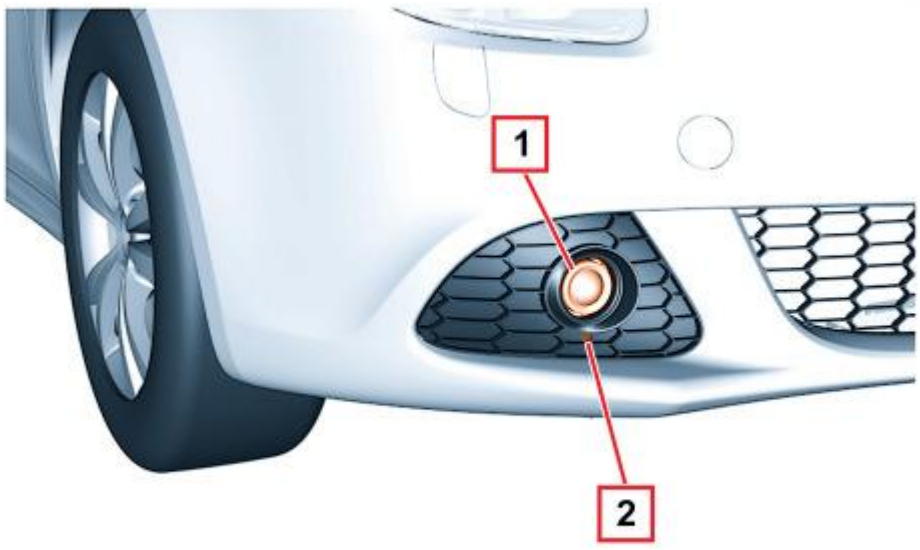

1 - Lamp casing

2 - Access hole for the adjustment screw
The bulb used for the fog light function is a halogen H3 55W - 12V.

cardiagn.com