# 2000-02 STEERING

## Steering Wheel & Column - Corvette

# SPECIFICATIONS

### FASTENER TIGHTENING SPECIFICATIONS

| Application | Specification | |
|---|---|---|
| | Metric | English |
| Driver Inflator Module Screws | 6 N·m | 53 lb in |
| Lower Coupling Retainer Bolt | 34 N·m | 25 lb ft |
| Lower Trim Cover Screws | 4 N·m | 35 lb in |
| Lower Steering Column Support Plate Nuts | 24 N·m | 17 lb ft |
| Lower Steering Coupling Shield Screw | 3.5 N·m | 31 lb in |
| Multifunction Switch Screws | 7 N·m | 62 lb in |
| Steering Column Support Screws | 9 N·m | 80 lb in |
| Steering Wheel Set Nut | 41 N·m | 30 lb ft |
| Upper Coupling Bolt | 48 N·m | 35 lb ft |
| Upper Trim Cover Screw | 1.4 N·m | 12 lb in |
| Upper Steering Column Bracket Nut | 24 N·m | 17 lb ft |

G01727466

**Fig. 1: Fastener Tightening Specifications**
**Courtesy of GENERAL MOTORS CORP.**

# SCHEMATIC & ROUTING DIAGRAMS

### COLUMN/IGNITION LOCK SCHEMATICS (DOMESTIC MANUAL TRANSMISSION AND ALL ALL EXPORT)

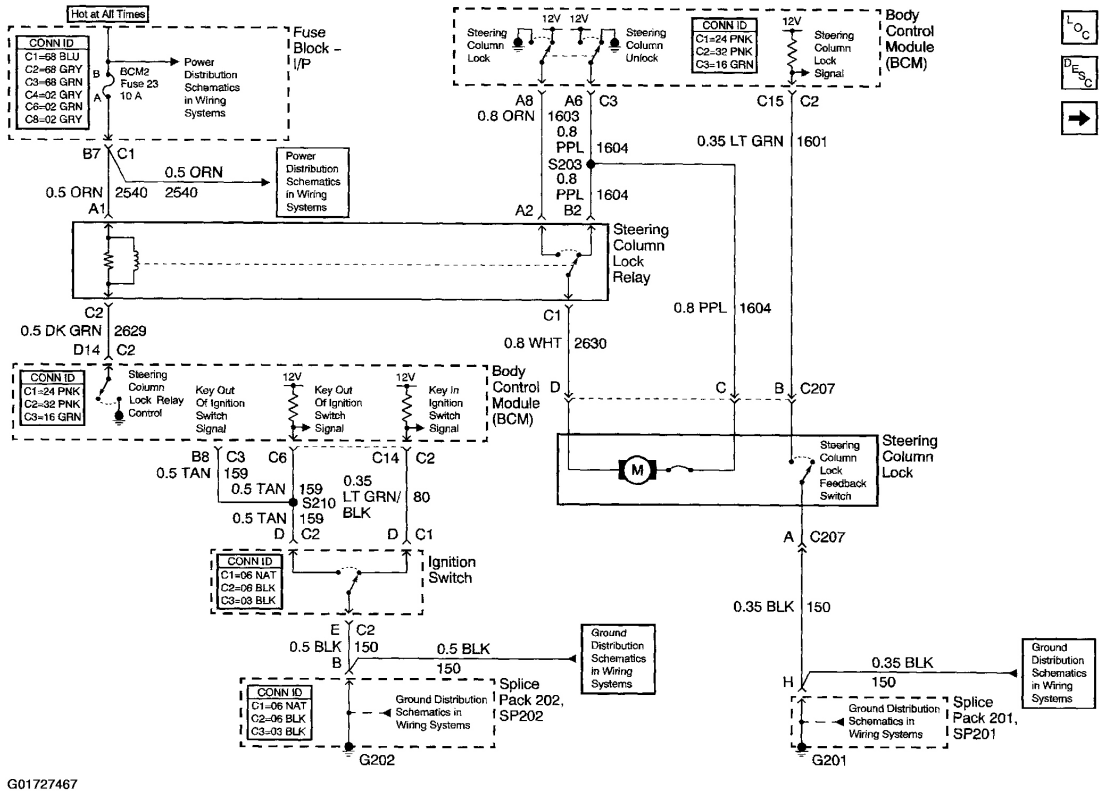


**Fig. 2: Column/Ignition Lock Schematics (Domestic Manual Transmission and All Export)**

**Courtesy of GENERAL MOTORS CORP.**

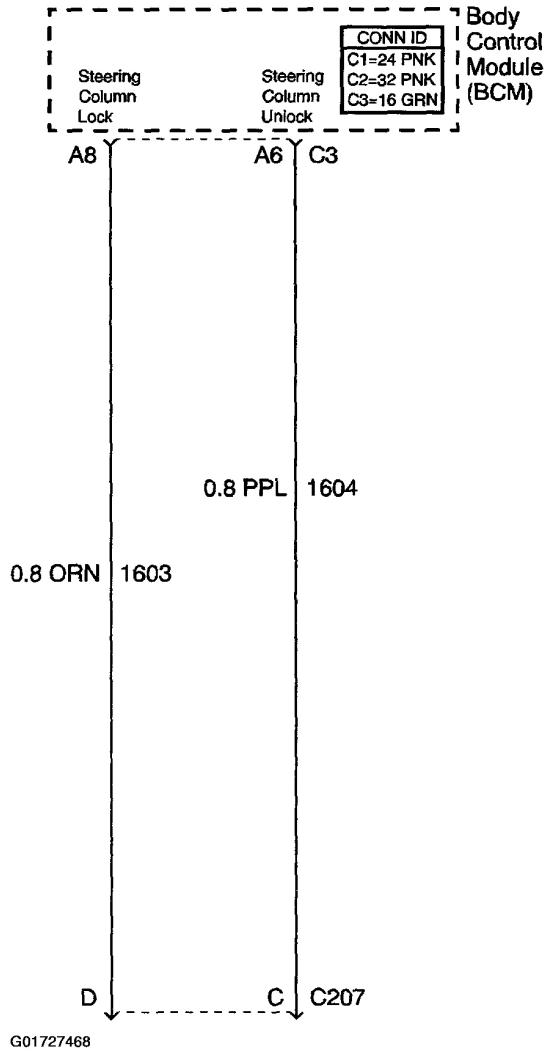


**Fig. 3: Column/Ignition Lock Schematics (Domestic Automatic Transmission)**
**Courtesy of GENERAL MOTORS CORP.**

### TILT/TELESCOPING STEERING COLUMN SCHEMATICS

Refer to **MEMORY SYSTEMS** .

## COMPONENT LOCATOR

### STEERING COLUMN DISASSEMBLED VIEW (TELESCOPING)

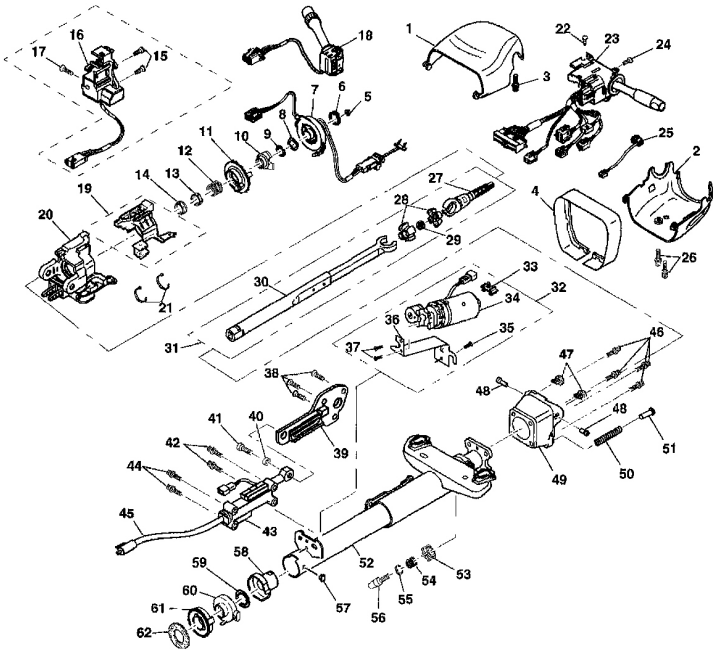

(1) Upper Trim Cover
(2) Lower Trim Cover
(3) TORX® Head Screw
(4) Steering Column Close Out Trim Cover
(5) Flanged Prevailing Torque Nut
(6) Retaining Ring
(7) Inflatable Restraint Steering Wheel Module Coil
(8) Wave Washer
(9) Bearing Retainer
(10) Cam Orientation Plate
(11) Turn Signal Cancel Cam Assembly
(12) Upper Bearing Spring
(13) Upper Bearing Inner Race Seat
(14) Inner Race
(15) Pan Head Tapping Screws
(16) Electric Column Lock
(17) Pan Head Tapping Screws
(18) Windshield Wiper and Washer Switch Assembly
(19) Signal Switch Housing Assembly
(20) Steering Column Tilt Head Assembly
(21) Wire Harness Strap
(22) Pan Head Tapping Screws
(23) Turn Signal and Multifunction Switch Assembly
(24) Pan Head Tapping Screws
(25) Telescoping Switch Assembly
(26) Pan Head Tapping Screw
(27) Race and Upper Shaft Assembly
(28) Centering Sphere
(29) Joint Preload Spring
(30) Lower Steering Shaft Assembly
(31) Steering Shaft Assembly
(32) Telescope Motor and Bracket Assembly
(33) Connector Clip
(34) Telescope Drive Motor Assembly
(35) Pan Head Tapping Screws
(36) Telescope Drive Bracket
(37) Pan Head Tapping Screws
(38) Flat Head 6–Lobed Soc Tap Screw
(39) Telescope Adapter Assembly
(40) Telescope Drive Ball
(41) Telescope Drive Bolt
(42) TORX® Head Screw
(43) Telescope Actuator Assembly
(44) TORX® Head Screw
(45) Cable Assembly
(46) Support Screw
(47) Tilt Bumper
(48) Pivot Pin
(49) Steering Column Support Assembly
(50) Tilt Spring
(51) Spring Guide
(52) Telebearing and Jacket Assembly
(53) Anti Rotation Ball
(54) Compression Spring
(55) Retaining Ring
(56) Shoulder Bolt
(57) Switch Housing Blocking Plug
(58) Adapter and Bearing Assembly
(59) Lower Spring Retainer
(60) Dual Triangle Sensor Assembly
(61) Sensor Retainer
(62) Steering Shaft Seal

G01727470

## Fig. 4: Telescoping Steering Column
## Courtesy of GENERAL MOTORS CORP.

### STEERING COLUMN DISASSEMBLED VIEW (MANUAL)

# 2001 Chevrolet Corvette

## 2000-02 STEERING Steering Wheel & Column - Corvette

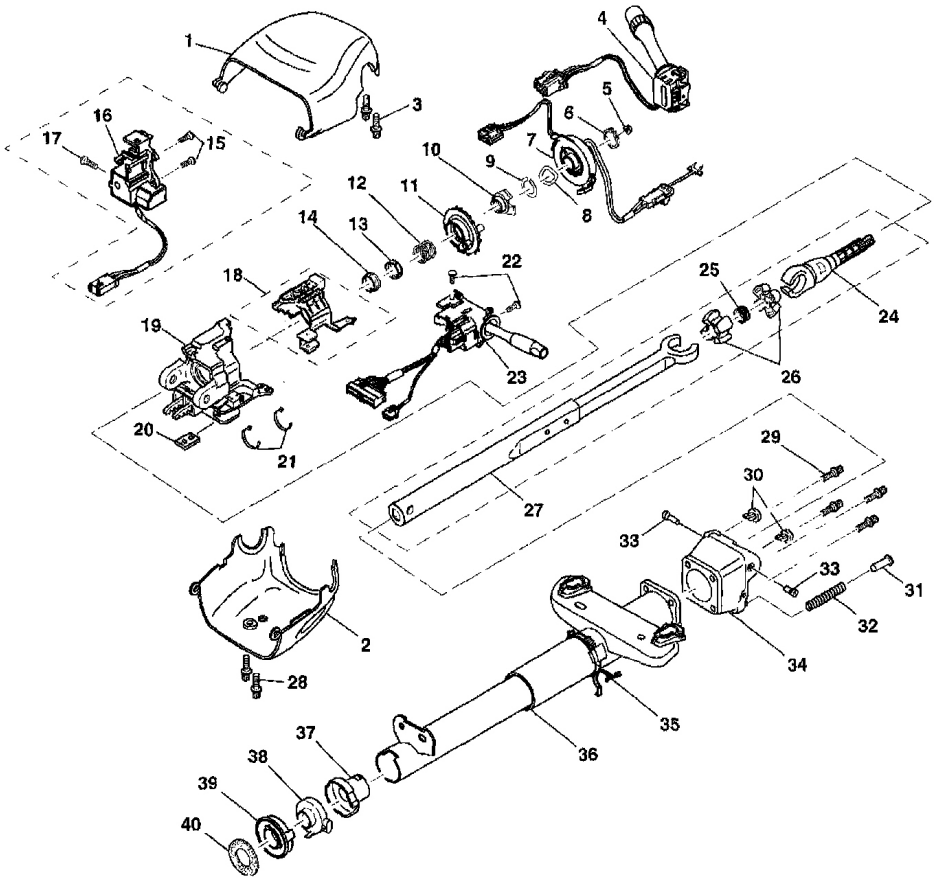


(1) Upper Trim Cover
(2) Lower Trim Cover
(3) TORX® Head Screw
(4) Windshield Wiper and Washer Switch Assembly
(5) Flanged Prevailing Torque Nut
(6) Retaining Ring
(7) Inflatable Restraint Steering Wheel Module Coil
(8) Wave Washer
(9) Bearing Retainer
(10) Cam Orientation Plate
(11) Turn Signal Cancel Cam Assembly
(12) Upper Bearing Spring
(13) Upper Bearing Inner Race Seat
(14) Inner Race
(15) Pan Head Tapping Screw
(16) Electric Column Lock
(17) Pan Head Tapping Screws
(18) Signal Switch Housing Assembly
(19) Steering Column Tilt Head Assembly
(20) Wire Harness Spacer
(21) Wire Harness Straps
(22) Pan Head Tapping Screws
(23) Turn Signal and Multifunction Switch Assembly
(24) Race and Upper Shaft Assembly
(25) Joint Preload Spring
(26) Centering Sphere
(27) Lower Steering Shaft Assembly
(28) TORX® Head Screw
(29) TORX® Head Screw
(30) Tilt Bumper
(31) Spring Guide
(32) Tilt Spring
(33) Pivot Pin
(34) Steering Column Support Assembly
(35) Wire Harness Strap
(36) Steering Column Jacket Assembly
(37) Adapter and Bearing Assembly
(38) High Resolution Steering Wheel Position Sensor Assembly
(39) Sensor Retainer
(40) Steering Shaft Seal

G01727471

## Fig. 5: Tilt Steering Column
## Courtesy of GENERAL MOTORS CORP.

### STEERING WHEEL & COLUMN COMPONENT VIEWS

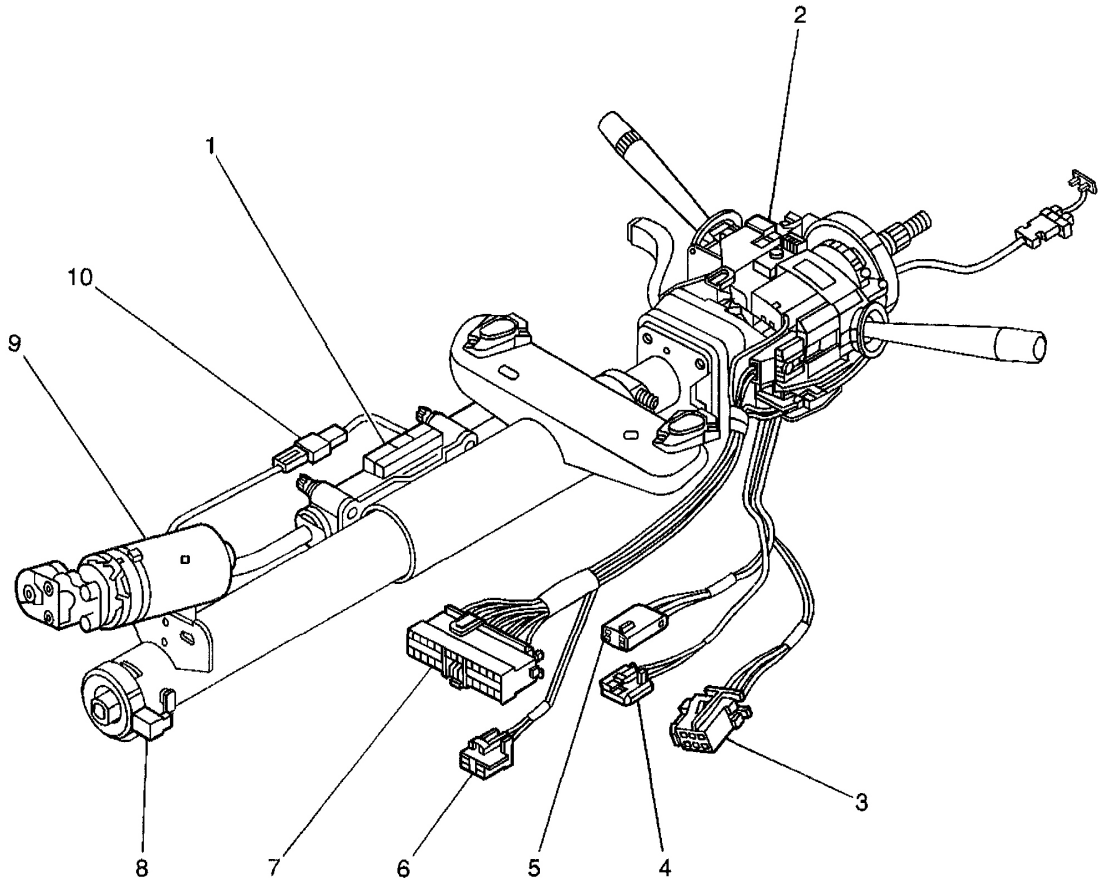


(1) Telescoping Sensor
(2) Steering Column Lock
(3) C219
(4) C207
(5) C211
(6) C217
(7) C209
(8) Steering Wheel Position Sensor
(9) Telescoping Drive Motor
(10) C210

G01727472

## Fig. 6: Steering Column
## Courtesy of GENERAL MOTORS CORP.

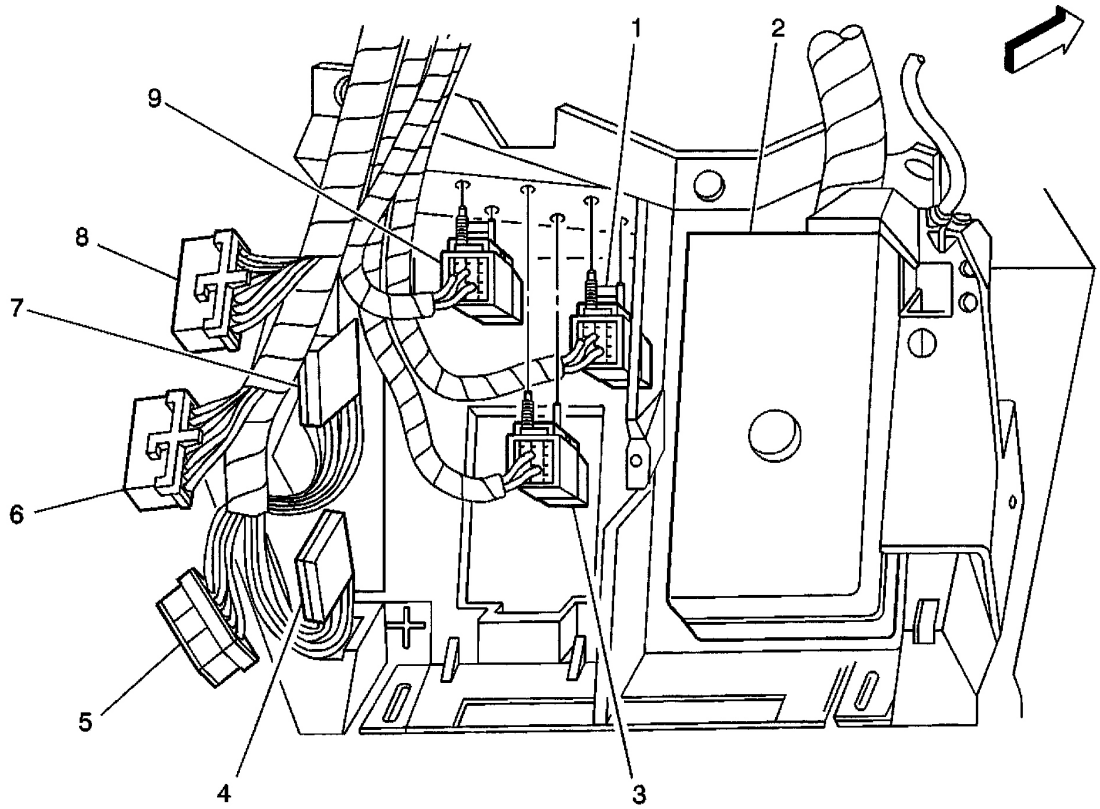


(1) Theft Deterrent Relay
(2) Fuse Block-IP
(3) Blower Motor Relay
(4) Star Connector #2
(5) Body Control Module (BCM) C3
(6) Body Control Module (BCM) C1
(7) Star Connector #1
(8) Body Control Module (BCM) C2
(9) Steering Column Lock Relay

G01727473

**Fig. 7: Under RH Side of Dash**
**Courtesy of GENERAL MOTORS CORP.**

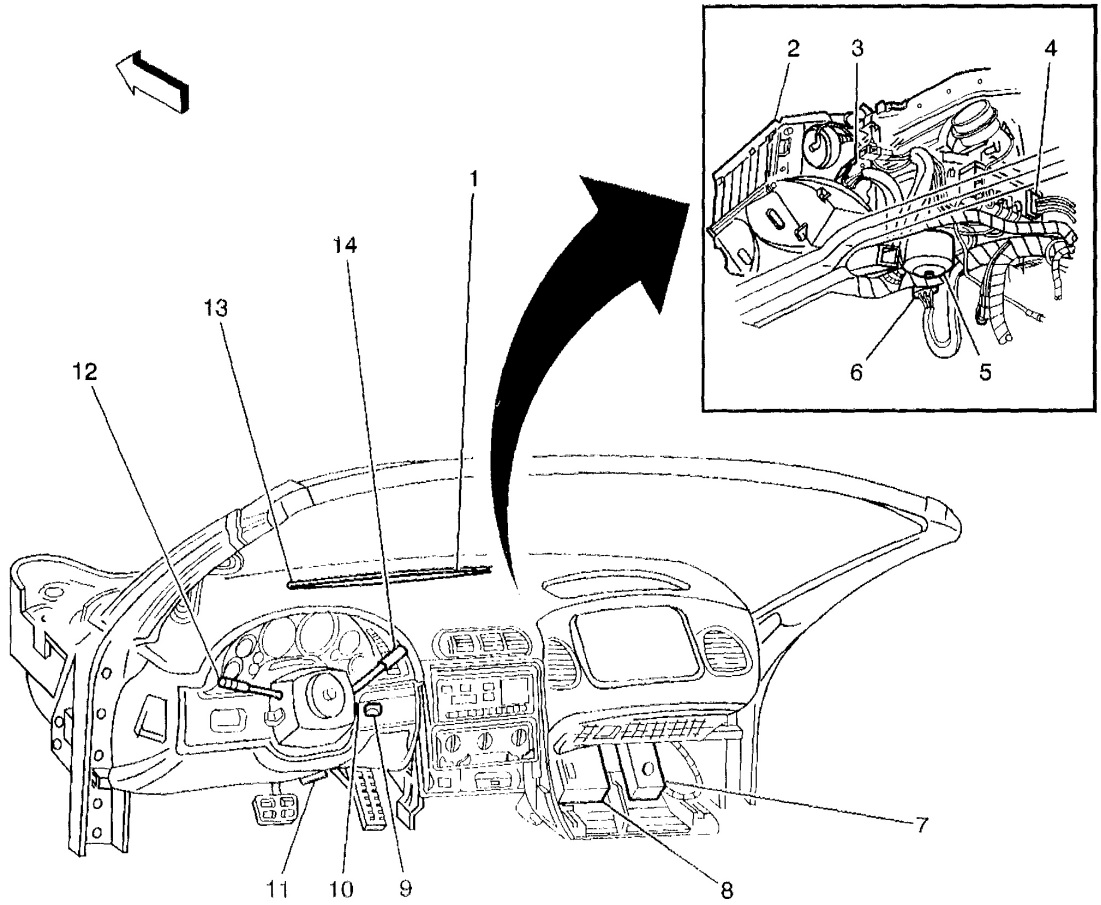


(1) Sunload Sensor
(2) HVAC Module Assembly
(3) Air Temperature Actuator (C60)
(4) Vacuum Control Assembly (CJ2)
(5) Blower Motor
(6) Blower Motor Control Processor
(7) Fuse Block-IP
(8) Body Control Module (BCM)
(9) Ignition Switch
(10) Telescoping Actuator Switch
(11) Data Link Connector (DLC)
(12) Multifunction Turn Signal Lever
(13) Ambient Light Sensor
(14) Windshield Wiper/Washer Switch

G01727474

**Fig. 8: Instrument Panel**
**Courtesy of GENERAL MOTORS CORP.**

## STEERING WHEEL & COLUMN CONNECTOR END VIEWS

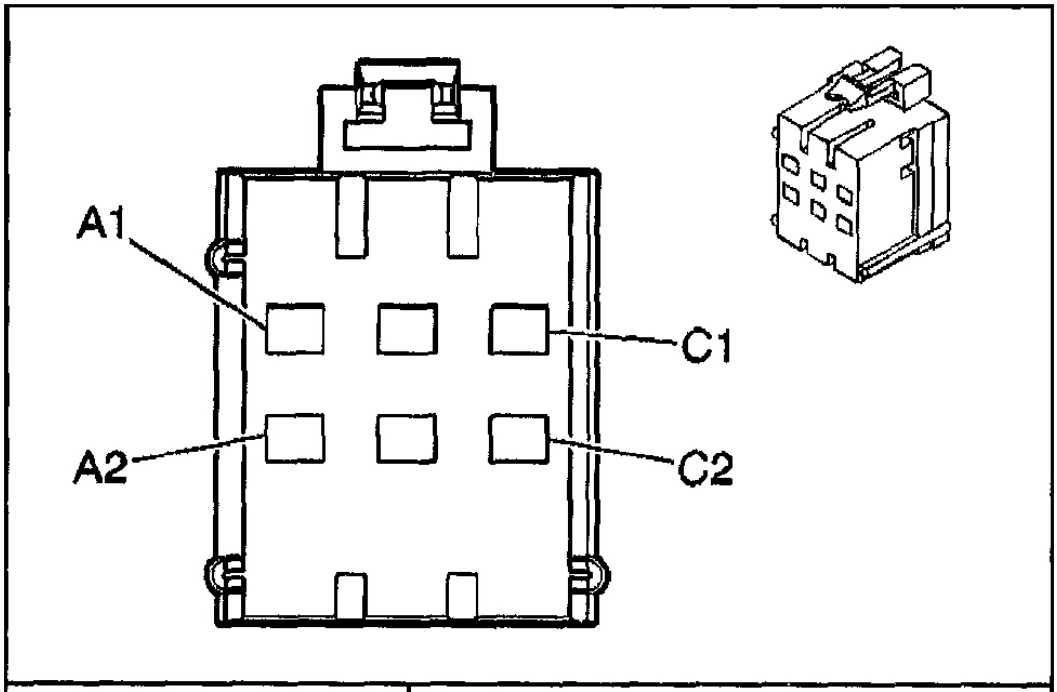


| Connector Part Information | | • 12110541<br>• 6 Way F Metri-Pack 280 Series (BLK) | |
|---|---|---|---|
| **Pin** | **Wire Color** | **Circuit No.** | **Function** |
| A1 | ORN | 2540 | Battery Positive Voltage |
| A2 | ORN | 1603 | Steering Column Lock |
| B1 | — | — | Not Used |
| B2 | PPL | 1604 | Steering Column Unlock |
| C1 | WHT | 2630 | Steering Column Lock |
| C2 | DK GRN | 2629 | Steering Column Lock Relay Control |

G01727475

**Fig. 9: Steering Column Lock Relay**
**Courtesy of GENERAL MOTORS CORP.**

# DIAGNOSTIC INFORMATION & PROCEDURES

### DIAGNOSTIC STARTING POINT - STEERING COLUMN

Begin the system diagnosis with **DIAGNOSTIC SYSTEM CHECK - STEERING WHEEL & Column** . . The Diagnostic System Check will provide the following information:

- The identification of the control modules which command the system
- The ability of the control modules to communicate through the serial data circuit
- The identification of any stored diagnostic trouble codes (DTCs) and their status

The use of the Diagnostic System Check will identify the correct procedure for diagnosing the system and where the procedure is located.

### DIAGNOSTIC SYSTEM CHECK - STEERING WHEEL & COLUMN

#### Test Description

The numbers below refer to the step numbers on the diagnostic table.

**2.** Lack of communication may be due to a partial malfunction of the class 2 serial data circuit or due to a total malfunction of the class 2 serial data circuit. The specified procedure will determine the particular condition.

**3.** Determine if any Seat Control Module, Body Control Module, or Powertrain Control Module DTCs are present.

**4.** The presence of DTCs which begin with "U" indicate some other module is not communicating. The specified procedure will compile all the available information before tests are performed.

| Step | Action | Yes | No |
|---|---|---|---|
| 1 | Install a scan tool.<br>Does the scan tool power up? | Go to *Step 2* | Go to *Scan Tool Does Not Power Up* in Data Link Communications |
| 2 | 1. Turn ON the ignition, with the engine OFF.<br>2. Attempt to establish communication with the following systems:<br>• The seat control module<br>• The body control module<br>• The powertrain control module<br>Does the scan tool communicate with these systems? | Go to *Step 3* | Go to *Scan Tool Does Not Communicate with Class 2 Device* in Data Link Communications |
| 3 | 1. Select the seat control module display DTCs function on the scan tool.<br>2. Select the body control module display DTCs function on the scan tool.<br>3. Select the powertrain control module display DTCs function on the scan tool.<br>Does the scan tool display any DTCs? | Go to *Step 4* | Go to *Symptoms - Steering Wheel and Column* |
| 4 | Does the scan tool display any DTCs which begin with a *"U"*? | Go to *Scan Tool Does Not Communicate with Class 2 Device* in Data Link Communications | Go to *Step 5* |
| 5 | Does the scan tool display DTC B0605? | Go to *DTC B0605* in Body Control Modules | Go to *Step 6* |
| 6 | Does the scan tool display DTC P0562 or P0563? | Go to Diagnostic System *Check -* | Go to *Diagnostic Trouble Code (DTC) List* |

G01727476

**Fig. 10: Diagnostic System Check - Steering Wheel & Column**
**Courtesy of GENERAL MOTORS CORP.**

## SCAN TOOL OUTPUT CONTROLS

| Scan Tool Output Control | Additional Menu Selection(s) | Description |
|---|---|---|
| Steering Column | Telescope In/Out Test | The SCM can be commanded by using the scan tool to run the Telescoping Drive Motor in or out. The SCM commands the Telescoping Drive Motor for 1 second. |

G01727477

**Fig. 11: Scan Tool Output Controls**
**Courtesy of GENERAL MOTORS CORP.**

## SCAN TOOL DATA LIST

| Scan Tool Parameter | Data List | Units Displayed | Typical Data Value |
|---|---|---|---|
| Column Feedback | Input Data 2 | Active/Inactive | Active |
| Column Lock State | Input Data 2 | Current State | Ignition On Unlocked |
| Column Lock/Unlock A | Input Data 2 | Active/Inactive | Inactive |
| Column Lock/Unlock B | Input Data 2 | Active/Inactive | Inactive |
| Current Power Mode | Input Data 1 | Power Mode | Run |
| Driver Door Ajar Switch | Input Data 2 | Open/Closed | Closed |
| Ignition 1 | Input Data 1 | On/Off | On |
| Ignition 2 | Input Data 1 | On/Off | On |
| Ignition 3 | Input Data 1 | On/Off | On |
| Key In Ignition | Input Data 1 | Active/Inactive | Active |
| Key Out of Ignition | Input Data 1 | Active/Inactive | Inactive |
| Passenger Door Ajar Switch | Input Data 2 | Open/Closed | Closed |

G01727478

**Fig. 12: BCM Scan Tool Data List**
**Courtesy of GENERAL MOTORS CORP.**

| Scan Tool Parameter | Data List | Units Displayed | Typical Data Value |
|---|---|---|---|
| Column Aft Motor Stop | Column Info | Volts | 0–5 Volts |
| Column Fore Mtr Stop | Column Info | Volts | 0–5 Volts |
| Column Fore/Aft Motor | Column Info | In/Out/Idle | Idle |
| Column Fore/Aft Switch | Column Info | In/Out/Idle | Idle |
| Column Position Fdbk | Column Info | Volts | 0–5 Volts |
| Memory 1 Stored Position | Column Info | Volts | 0–5 Volts |
| Memory 2 Stored Position | Column Info | Volts | 0–5 Volts |
| Memory 3 Stored Position | Column Info | Volts | 0–5 Volts |

G01727479

**Fig. 13: SCM Scan Tool Data List**
**Courtesy of GENERAL MOTORS CORP.**

## SCAN TOOL DATA DEFINITIONS

### BCM Scan Tool Data Definitions

The BCM Scan Tool Data Definitions contains a brief description of all steering column related BCM parameters available on the scan tool.

**Column Feedback:** The scan tool displays Active or Inactive. When the steering column lock motor is LOCKED, the scan tool will display Inactive. When the steering column lock motor is UNLOCKED, the scan tool displays Active.

**Column Lock State:** The scan tool displays the current column lock state. This data represents what column lock functional mode the BCM is in. The BCM enters different column lock states based upon information received from various inputs associated with the column lock system.

**Column Lock/Unlock A:** The scan tool displays Active or Inactive. When the BCM LOCKS the steering column, the scan tool will display Active. When the BCM UNLOCKS the steering column, the scan tool displays Inactive.

**Column Lock/Unlock B:** The scan tool displays Active or Inactive. When the BCM UNLOCKS the steering column, the scan tool will display Active. When the BCM LOCKS the steering column, the scan tool displays Inactive.

**Current Power Mode:** The scan tool displays the current power mode. The BCM determines ignition switch position from it's ignition inputs. This ignition switch information is sent on the serial data line to systems that relay on this information to preform certain functions (RAP, wake-up, etc.).

**Driver Door Ajar Switch:** The scan tool displays Open or Closed. When the driver door is open, the scan tool will display Open. When the driver door is closed, the scan tool displays Closed.

**Ignition 1:** The scan tool displays ON or OFF. When the BCM detects ignition 1 is present, the scan tool will display Yes. When the BCM does not detect ignition 1, the scan tool will display OFF. This ignition switch information is sent on the serial data line to systems that relay on this information to preform certain functions like RAP, wake-up, etc.

**Ignition 2:** The scan tool displays ON or OFF. When the BCM detects ignition 2 is present, the scan tool will display Yes. When the BCM does not detect ignition 2, the scan tool will display OFF. This ignition switch information is sent on the serial data line to systems that relay on this information to preform certain functions like RAP, wake-up, etc.

**Ignition 3:** The scan tool displays ON or OFF. When the BCM detects ignition 3 is present, the scan tool will display Yes. When the BCM does not detect ignition 3, the scan tool will display OFF. This ignition switch information is sent on the serial data line to systems that relay on this information to preform certain functions like RAP, wake-up, etc.

**Key In Ignition:** The scan tool displays Active or Inactive. When the BCM detects the key is IN the ignition switch, the scan tool will display Active. When the key is removed from the ignition switch, the scan tool will display Inactive.

**Key Out of Ignition:** The scan tool displays Active or Inactive. When the BCM detects the key is OUT of the ignition switch, the scan tool will display Active. When the key is IN the ignition switch, the scan tool will display Inactive.

**Passenger Door Ajar Switch:** The scan tool displays Open or Closed. When the passenger door

is open, the scan tool will display Open. When the passenger door is closed, the scan tool displays Closed.

**SCM Scan Tool Data Definitions**

The SCM Scan Tool Data Definitions contains a brief description of all steering column related SCM parameters available on the scan tool.

**Column Aft Motor Stop:** The scan tool displays 0-5 volts. The value displayed is the position sensor signal voltage where the steering column outward movement will stop. This function may be used to determine if the adjustment range of the steering column has been limited due to an obstruction or binding condition. The stop can be recalibrated by pressing switch 6-8 times in one direction.

**Column Fore Motor Stop:** The scan tool displays 0-5 volts. The value displayed is the position sensor signal voltage where the steering column inward movement will stop. This function may be used to determine if the adjustment range of the steering column has been limited due to an obstruction or binding condition. The stop can be recalibrated by pressing switch 6-8 times in one direction.

**Column Fore/Aft Motor:** The scan tool displays In, Out, or Idle. When the SCM supplies voltage to operate the steering column motor In the scan tool displays In and when the SCM supplies voltage to operate the steering column motor out the scan tool displays Out. This may occur with switch operation or memory operation. When SCM is not supplying voltage to the motor the scan tool displays Idle.

**Column Fore/Aft Switch:** The scan tool displays In, Out, or Idle. When the Column Fore/Aft Switch is pressed toward the I/P the scan tool displays Out. When the switch is pressed toward the driver the scan tool displays In. When the switch is released the scan tool displays Idle.

**Column Position Fdbk:** The scan tool displays 0-5 volts. The value displayed is the telescoping column position sensor signal voltage. This voltage varies when the steering column is moved In and Out and is used by the SCM to determine the steering column position when memory settings are stored and recalled.

**Memory 1 Stored Position:** The scan tool displays 0-5 volts. The value displayed is the position sensor signal voltage stored by the SCM and used to recall the memory 1 position.

**Memory 2 Stored Position:** The scan tool displays 0-5 volts. The value displayed is the position sensor signal voltage stored by the SCM and used to recall the memory 2 position.

**Memory 3 Stored Position:** The scan tool displays 0-5 volts. The value displayed is the position sensor signal voltage stored by the SCM and used to recall the memory 3 position.

**DIAGNOSTIC TROUBLE CODE (DTC) LIST**

| DTC | Diagnostic Procedure | Module(s) |
|---|---|---|
| B2587 | *DTC B2587* | BCM |
| B2588 | *DTC B2588* | BCM |
| B2592 | *DTC B2592* | BCM |
| B2593 | *DTC B2593* | BCM |
| B2852 | *DTC B2852* | SCM |
| B2857 | *DTC B2857* | SCM |
| B2860 | *DTC B2860* | SCM |

G01727480

**Fig. 14: Diagnostic Trouble Code (DTC) List**
**Courtesy of GENERAL MOTORS CORP.**

**DTC B2587**

**Circuit Description**

The Body Control Module (BCM) provides the steering column control function which allows the column to be electronically locked or unlocked. The BCM provides three outputs, steering column lock, steering column unlock, and a steering column lock relay control. The BCM can apply a ground or battery output on the steering column lock or steering column unlock depending on the desired steering column lock motor position. The BCM uses the feedback switch in order to monitor the motor position and determine if the commanded position was accomplished. The BCM controls the position of the steering column lock motor based on the following input information:

- Ignition position
- Key IN ignition status
- Key OUT of Ignition status
- Steering column lock feedback switch
- PASS-Key(R) system
- PCM password information
- System voltage

The BCM also monitors its circuitry for the steering column lock circuit. If the BCM detects a malfunction present a DTC will set.

**Conditions for Setting the DTC**

- The BCM detects an internal malfunction, an open or a short to ground, in the column lock drive A circuit.
- There is an open in the BCM battery positive voltage circuit from BCM2 fuse.
- The condition must be present for 100 ms.

**Action Taken When the DTC Sets**

- Stores a DTC B2587 in the BCM memory.
- The PCM may disable fuel if vehicle speed is detected over 2.4 km/h (1.5 mph).
- Sends a message to the IPC to display the SERVICE COLUMN LOCK message.

**Conditions for Clearing the DTC**

- The BCM no longer detects an internal malfunction, an open or a short to ground, in the steering column lock circuit.
- Supply voltage is available on the battery positive voltage circuit from BCM2 fuse.
- A history DTC will clear after 50 consecutive ignition cycles if the condition for the malfunction is no longer present.
- Use a scan tool.

**Diagnostic Aids**

- The following conditions may cause an intermittent malfunction:
  - There is an intermittent open in BCM battery positive voltage circuit from BCM2 fuse.
  - The steering column lock or unlock circuits are shorted together or to ground.
- A short to ground in the BCM battery positive voltage circuit will cause BCM2 fuse to open. The BCM receives supply voltage for the steering column lock motor through the BCM battery positive voltage circuit. If the BCM is unable to supply voltage to the steering column lock motor through the BCM battery positive voltage circuit, the BCM will set a DTC B2587.
- Disconnecting or opening the steering column lock feedback circuit with the ignition in the ON position will cause the BCM to enter a Fail Enable Standby mode. The steering column will remain inoperative until the Fail Enable Standby mode is cleared. To clear this mode, disconnect the BCM1 & IPC fuse in the I/P fuse block for 15 seconds.
- The BCM1 fuse will become open if the steering column lock motor or the steering column lock or unlock circuits are shorted together or to ground.
- If the DTC is a history DTC, the problem may be intermittent. Perform the tests shown

while moving related wiring and connectors. This can often cause the malfunction to occur.

**Test Description**

The numbers below refer to the step numbers on the diagnostic table.

**2.** Tests for an open in the BCM2 fuse. BCM2 fuse supplies power to the BCM to operate the steering column lock motor.

**3.** Tests for an open in the BCM battery positive voltage circuit at the BCM.

**4.** Tests for an open or short to ground in the BCM battery positive voltage circuit between the steering column lock relay and the I/P fuse block.

**5.** Tests for an open or short to ground in the steering column lock or unlock circuit. If steering column lock or unlock circuit is shorted to ground the BCM2 fuse will open.

**8.** When the BCM is replaced, use a scan tool to perform the BCM RPO Reprogram procedure.

| Step | Action | Yes | No |
|---|---|---|---|
| **Schematic Reference:** *Column/Ignition Lock Schematics* | | | |
| 1 | Did you perform the Diagnostic System Check? | Go to *Step 2* | Go to *Diagnostic System Check - Steering Wheel and Column* |
| 2 | Test BCM2 fuse for an open.<br>Did you find the fuse open? | Go to *Step 4* | Go to *Step 3* |
| 3 | 1. Turn OFF the ignition.<br>2. Disconnect the BCM connectors.<br>3. Turn ON the ignition, with the engine OFF.<br>4. Probe the BCM battery positive voltage circuit at the BCM connector with a test lamp that is connected to a good ground.<br>Does the test lamp illuminate? | Go to *Step 6* | Go to *Step 4* |
| 4 | Test the BCM battery positive voltage circuit for an open or short to ground. Refer to *Circuit Testing* and *Wiring Repairs* in Wiring Systems.<br>Did you find and correct the condition? | Go to *Step 9* | Go to *Step 5* |
| 5 | Test the steering column lock and unlock circuits for a short to ground. Refer to *Circuit Testing* and *Wiring Repairs* in Wiring Systems.<br>Did you find and correct the condition? | Go to *Step 9* | Go to *Step 7* |
| 6 | Inspect for poor connections at the harness connector of the BCM. Refer to *Testing for Intermittent and Poor Connections* and *Connector Repairs* in Wiring Systems.<br>Did you find and correct the condition? | Go to *Step 9* | Go to *Step 8* |
| 7 | Replace the steering column lock motor. Refer to *Electronic Column Lock Module Replacement - On Vehicle (Non-Telescoping)* or *Electronic Column Lock Module Replacement - On Vehicle (Telescoping)* in Steering Wheel Column.<br>Did you complete the replacement? | Go to *Step 9* | — |
| 8 | **Important:** Perform the BCM RPO Reprogram procedure. Refer to *Body Control Module (BCM) Programming/RPO Configuration* in Body Control Modules.<br>Replace the BCM. Refer to *Body Control Module Replacement* in Body Control Modules.<br>Did you complete the replacement? | Go to *Step 9* | — |
| 9 | 1. Use the scan tool in order to clear the DTCs.<br>2. Clear the BCM steering column lock fail enable mode by disconnecting BCM1 & IPC fuse for 15 seconds.<br>3. Operate the vehicle within the Conditions for Setting the DTC as specified in the supporting text.<br>Does the DTC reset? | Go to *Step 2* | System OK |

G01727481

**Fig. 15: DTC B2587**
**Courtesy of GENERAL MOTORS CORP.**

### DTC B2588

#### Circuit Description

The BCM provides the steering column control function which allows the column to be electronically locked or unlocked. The BCM provides three outputs, steering column lock, steering column unlock, and a steering column lock relay control. The BCM can apply a ground or battery output on the steering column lock or steering column unlock depending on the desired

steering column lock motor position. The BCM uses the feedback switch in order to monitor the motor position and determine if the commanded position was accomplished.

The BCM controls the position of the steering column lock motor based on the following input information:

- Ignition position
- Key IN ignition status
- Key OUT of ignition status
- Steering column lock feedback switch
- PASS-Key(R) system
- PCM password information
- System voltage

The BCM also monitors its circuitry for the steering column lock circuit. If the BCM detects a malfunction present a DTC will set.

**Conditions for Setting the DTC**

- The BCM detects an internal malfunction, an open or a short to voltage, in the steering column lock circuit.
- The condition must be present for 100 ms.

**Action Taken When the DTC Sets**

- Stores a DTC B2588 in the BCM memory.
- The PCM may disable fuel if vehicle speed is detected over 2.4 km/h (1.5 mph).
- Sends a message to the IPC to display the SERVICE COLUMN LOCK message.

**Conditions for Clearing the DTC**

- The BCM no longer detects an internal malfunction, a short to voltage, in the steering column lock circuit.
- A history DTC will clear after 50 consecutive ignition cycles if the condition for the malfunction is no longer present.
- Use a scan tool.

**Diagnostic Aids**

- Disconnecting the steering column lock connector with the ignition in the ON position will

cause the BCM to enter a Fail Enable Standby mode. The steering column will remain inoperative until the Fail Enable Standby mode is cleared. To clear this mode, disconnect the BCM1 & IPC fuse in the I/P fuse block for 15 seconds.

- If the DTC is a history DTC, the problem may be intermittent. Perform the tests shown while moving related wiring and connectors. This can often cause the malfunction to occur.

**Test Description**

The number below refers to the step number on the diagnostic table.

**4.** When the BCM is replaced, use a scan tool to perform the BCM RPO Reprogram procedure.

| Step | Action | Yes | No |
|---|---|---|---|
| **Schematic Reference:** *Column/Ignition Lock Schematics* | | | |
| 1 | Did you perform the Steering Wheel and Column Diagnostic System Check? | Go to *Step 2* | Go to *Diagnostic System Check - Steering Wheel and Column* |
| 2 | Test the steering column lock and steering column unlock circuits for a short to voltage. Refer to *Circuit Testing* and *Wiring Repairs* in Wiring Systems.<br>Did you find and correct the condition? | Go to *Step 5* | Go to *Step 3* |
| 3 | Inspect for poor connections at the harness connector of the BCM. Refer to *Testing for Intermittent and Poor Connections* and *Connector Repairs* in Wiring Systems.<br>Did you find and correct the condition? | Go to *Step 5* | Go to *Step 4* |
| 4 | **Important:** Perform the BCM RPO Reprogram procedure. Refer to *Body Control Module (BCM) Programming/RPO Configuration* in Body Control Modules.<br>Replace the BCM. Refer to *Body Control Module Replacement* in Body Control Modules.<br>Did you complete the replacement? | Go to *Step 5* | — |
| 5 | 1. Use the scan tool in order to clear the DTCs.<br>2. Clear the BCM steering column lock fail enable mode by disconnecting BCM1 & IPC fuse for 15 seconds.<br>3. Operate the vehicle within the Conditions for Setting the DTC as specified in the supporting text.<br>Does the DTC reset? | Go to *Step 2* | System OK |

G01727482

**Fig. 16: DTC B2588**
**Courtesy of GENERAL MOTORS CORP.**

**DTC B2592**

**Circuit Description**

The BCM provides the steering column control function which allows the column to be electronically locked or unlocked. The BCM provides three outputs, steering column lock,

steering column unlock, and a steering column lock relay control. The BCM can apply a ground or battery output on the steering column lock or steering column unlock depending on the desired steering column lock motor position. The BCM uses the feedback switch in order to monitor the motor position and determine if the commanded position was accomplished. The BCM controls the position of the steering column lock motor based on the following input information:

- Ignition position
- Key IN ignition status
- Key OUT of ignition status
- Steering column lock feedback switch
- PASS-Key(R) system
- PCM password information
- System voltage

The BCM also monitors its circuitry for the steering column unlock circuit. If the BCM detects a malfunction present a DTC will set.

**Conditions for Setting the DTC**

- The BCM detects an internal malfunction, an open or a short to ground, in the steering column unlock circuit.
- There is an open in the BCM battery positive voltage circuit from BCM2 fuse.
- The condition must be present for 100 ms.

**Action Taken When the DTC Sets**

- Stores a DTC B2592 in the BCM memory.
- The PCM may disable fuel if vehicle speed is detected over 2.4 km/h (1.5 mph).
- Sends a message to the IPC to display the SERVICE COLUMN LOCK message.

**Conditions for Clearing the DTC**

- The BCM no longer detects an internal malfunction, an open or a short to ground, in the column unlock circuit.
- Supply voltage is available on the battery positive voltage circuit from BCM2 fuse.
- A history DTC will clear after 50 consecutive ignition cycles if the condition for the malfunction is no longer present.
- Use a scan tool.

**Diagnostic Aids**

- The following conditions may cause an intermittent malfunction:
  - There is an intermittent open in BCM battery positive voltage circuit from BCM2 fuse.
  - The steering column lock or unlock are shorted together or to ground.
- A short to ground in the BCM battery positive voltage circuit will cause BCM2 fuse to open. The BCM receives supply voltage for the steering column lock motor through the BCM battery positive voltage circuit. If the BCM is unable to supply voltage to the steering column lock motor through the BCM battery positive voltage circuit, the BCM will set a DTC B2592.
- Disconnecting or opening the steering column lock feedback circuit with the ignition in the ON position will cause the BCM to enter a Fail Enable Standby mode. The steering column will remain inoperative until the Fail Enable Standby mode is cleared. To clear this mode, disconnect the BCM1 & IPC fuse in the I/P fuse block for 15 seconds.
- The BCM2 fuse will become open if the steering column lock motor or the steering column lock or unlock circuits are shorted together or to ground.
- If the DTC is a history DTC, the problem may be intermittent. Perform the tests shown while moving related wiring and connectors. This can often cause the malfunction to occur.

**Test Description**

The numbers below refer to the step numbers on the diagnostic table.

**2.** Tests for an open in the BCM2 fuse. BCM2 fuse supplies power to the BCM to operate the steering column lock motor.

**3.** Tests for an open in the BCM battery positive voltage circuit at the BCM.

**4.** Tests for an open or short to ground in the BCM battery positive voltage circuit at the steering column lock relay.

**5.** Tests for an open or short to ground in the steering column lock or unlock circuit. If steering column lock or unlock circuit is shorted to ground the BCM2 fuse will open.

**8.** When the BCM is replaced, use a scan tool to perform the BCM RPO Reprogram procedure.

| Step | Action | Yes | No |
|---|---|---|---|
| **Schematic Reference:** *Column/Ignition Lock Schematics* | | | |
| 1 | Did you perform the Diagnostic System Check? | Go to *Step 2* | Go to *Diagnostic System Check - Steering Wheel and Column* |
| 2 | Test BCM2 fuse for an open.<br>Did you find the fuse open? | Go to *Step 4* | Go to *Step 3* |
| 3 | 1. Turn OFF the ignition.<br>2. Disconnect the BCM connectors.<br>3. Turn ON the ignition, with the engine OFF.<br>4. Probe the BCM battery positive voltage circuit at the BCM connector with a test lamp that is connected to a good ground.<br>Does the test lamp illuminate? | Go to *Step 6* | Go to *Step 4* |
| 4 | Test the BCM battery positive voltage circuit for an open or short to ground. Refer to *Circuit Testing* and *Wiring Repairs* in Wiring Systems.<br>Did you find and correct the condition? | Go to *Step 9* | Go to *Step 5* |
| 5 | Test the steering column lock and unlock circuits for a short to ground. Refer to *Circuit Testing* and *Wiring Repairs* in Wiring Systems.<br>Did you find and correct the condition? | Go to *Step 9* | Go to *Step 7* |
| 6 | Inspect for poor connections at the harness connector of the BCM. Refer to *Testing for Intermittent and Poor Connections* and *Connector Repairs* in Wiring Systems.<br>Did you find and correct the condition? | Go to *Step 9* | Go to *Step 8* |
| 7 | Replace the steering column lock motor. Refer to *Electronic Column Lock Module Replacement - On Vehicle (Non-Telescoping)* or *Electronic Column Lock Module Replacement - On Vehicle (Telescoping).*<br>Did you complete the replacement? | Go to *Step 9* | — |
| 8 | **Important:** Perform the BCM RPO Reprogram procedure. Refer to *Body Control Module (BCM) Programming/RPO Configuration* in Body Control Modules.<br>Replace the BCM. Refer to *Body Control Module Replacement* in Body Control Modules.<br>Did you complete the replacement? | Go to *Step 9* | — |
| 9 | 1. Use the scan tool in order to clear the DTCs.<br>2. Clear the BCM steering column lock fail enable mode by disconnecting BCM1 & IPC fuse for 15 seconds.<br>3. Operate the vehicle within the Conditions for Setting the DTC as specified in the supporting text.<br>Does the DTC reset? | Go to *Step 2* | System OK |

G01727483

**Fig. 17: DTC B2592**
**Courtesy of GENERAL MOTORS CORP.**

### DTC B2593

#### Circuit Description

The BCM provides the steering column control function which allows the column to be electronically locked or unlocked. The BCM provides three outputs, steering column lock, steering column unlock, and a steering column lock relay control. The BCM can apply a ground or battery output on the steering column lock or steering column unlock depending on the desired

steering column lock motor position. The BCM uses the feedback switch in order to monitor the motor position and determine if the commanded position was accomplished. The BCM controls the position of the steering column lock motor based on the following input information:

- Ignition position
- Key IN ignition status
- Key OUT of ignition status
- Steering column lock feedback switch
- PASS-Key(R) system
- PCM password information
- System voltage

The BCM also monitors its circuitry for the steering column unlock circuit. If the BCM detects a malfunction present, a DTC will set.

**Conditions for Setting the DTC**

- The BCM detects an internal malfunction, an open or a short to voltage, in the steering column unlock circuit.
- The condition must be present for 100 ms.

**Action Taken When the DTC Sets**

- Stores a DTC B2593 in the BCM memory.
- The PCM may disable fuel if vehicle speed is detected over 2.4 km/h (1.5 mph).
- Sends a message to the IPC to display the SERVICE COLUMN LOCK message.

**Conditions for Clearing the DTC**

- The BCM no longer detects an internal malfunction, an open or a short to voltage, in the steering column unlock circuit.
- A history DTC will clear after 50 consecutive ignition cycles if the condition for the malfunction is no longer present.
- Use a scan tool.

**Diagnostic Aids**

- The BCM grounds the steering column lock motor through the ignition switch ground. If the BCM is unable to ground steering column lock motor through the ignition switch ground, the BCM will set a DTC B2593.

- Disconnecting the steering column lock connector with the ignition in the ON position will cause the BCM to enter a Fail Enable Standby mode. The steering column will remain inoperative until the Fail Enable Standby mode is cleared. To clear this mode, disconnect the BCM1 & IPC fuse for 15 seconds.
- If the DTC is a history DTC, the problem may be intermittent. Perform the tests shown while moving related wiring and connectors. This can often cause the malfunction to occur.

**Test Description**

The number below refers to the step number on the diagnostic table.

**4.** When the BCM is replaced, use a scan tool to perform the BCM RPO Reprogram procedure.

| Step | Action | Yes | No |
|---|---|---|---|
| **Schematic Reference:** *Column/Ignition Lock Schematics* | | | |
| 1 | Did you perform the Steering Wheel and Column Diagnostic System Check? | Go to *Step 2* | Go to *Diagnostic System Check - Steering Wheel and Column* |
| 2 | Test the steering column lock and steering column unlock circuits for a short to voltage. Refer to *Circuit Testing* and *Wiring Repairs* in Wiring Systems.<br>Did you find and correct the condition? | Go to *Step 5* | Go to *Step 3* |
| 3 | Inspect for poor connections at the harness connector of the BCM. Refer to *Testing for Intermittent and Poor Connections* and *Connector Repairs* in Wiring Systems.<br>Did you find and correct the condition? | Go to *Step 5* | Go to *Step 4* |
| 4 | **Important:** Perform the BCM RPO Reprogram procedure. Refer to *Body Control Module (BCM) Programming/RPO Configuration* in Body Control Modules.<br>Replace the BCM. Refer to *Body Control Module Replacement* in Body Control Modules.<br>Did you complete the replacement? | Go to *Step 5* | — |
| 5 | 1. Use the scan tool in order to clear the DTCs.<br>2. Clear the BCM steering column lock fail enable mode by disconnecting BCM1 & IPC fuse for 15 seconds.<br>3. Operate the vehicle within the Conditions for Setting the DTC as specified in the supporting text.<br>Does the DTC reset? | Go to *Step 2* | System OK |

G01727484

**Fig. 18: DTC B2593**
**Courtesy of GENERAL MOTORS CORP.**

**DTC B2852**

**Circuit Description**

The telescoping steering column switch circuit provides an input to the LH Seat Control Module

(SCM) when the switch is held closed in the in, button pressed toward driver, or out, button pressed toward I/P, position. The SCM monitors a 12 volt signal applied to the steering column switch circuit. When the steering column switch is closed in the position, the column in 12 volt signal is grounded and pulled low within the SCM, indicating a column out request.

**Conditions for Setting the DTC**

The steering column switch input, to the SCM, is active for more than 20 seconds.

**Action Taken When the DTC Sets**

- Stores a history DTC B2852 in the SCM memory.
- This DTC can only be set as a history code even if the malfunction is current.
- No driver warning message will be displayed for this DTC.
- The operation/function of the steering column switch is disabled.

**Conditions for Clearing the DTC**

- The steering column switch input, to the SCM, is inactive for more than 20 seconds.
- Using a scan tool.

**Diagnostic Aids**

- The following conditions may cause an intermittent malfunction.
  - There is an intermittent short to ground in the steering column telescope reverse switch signal circuit.
  - The steering column switch is shorted to ground internally or is sticking.
  - The steering column switch was closed for longer than 20 seconds.
- If the steering column telescope reverse switch signal circuit is shorted to ground or the steering column switch is stuck closed, the steering column will remain in the full out position at all times.
- Using a scan tool, select scan tool inputs and monitor steering column switch status. If the scan tool displays Out, disconnect the steering column switch. If the display changes to Idle, replace the switch. If the scan tool still displays Out, check steering column telescope reverse switch signal circuit for a short to ground.
- If the DTC does not reset after the code is cleared, then the problem may be intermittent. Perform the tests shown while moving related wiring and connectors. This can often cause the malfunction to occur. Refer to **TESTING FOR INTERMITTENT & POOR CONNECTIONS** in Wiring Systems.

- Activate the steering column switch numerous times while monitoring the status on the scan tool to see if it sticks intermittently.

**Test Description**

The numbers below refer to the step numbers on the diagnostic table:

**2.** This test determines the status of the column in switch using a scan tool. The scan tool will display the column switch status as Out, button pressed toward I/P, and Idle, button released.

**3.** This test checks if the column in switch is shorted to ground or stuck. If the column in switch status changes from Out to Idle when the column in switch is disconnected, then the switch assembly must be replaced.

| Step | Action | Yes | No |
|---|---|---|---|
| **Schematic Reference:** Memory Systems | | | |
| 1 | Did you perform the Steering Column Diagnostic System Check? | Go to *Step 2* | Go to *Diagnostic System Check - Steering Wheel and Column* |
| 2 | Using a scan tool, select SCM input display and monitor the column in switch status.<br>Does the scan tool display column in switch status as Out? | Go to *Step 3* | Go to Diagnostic Aids |
| 3 | 1. Disconnect the column switch connector.<br>2. Using a scan tool, select SCM input display and monitor the column switch status.<br>Does the scan tool display column in switch status as Out? | Go to *Step 4* | Go to *Step 5* |
| 4 | Check for a short to ground in the Steering Column Tilt and Telescope Reverse Switch Signal circuit. Refer to *Circuit Testing* and *Wiring Repairs* in Wiring Systems.<br>Did you find and correct the condition? | Go to *Step 7* | Go to *Step 6* |
| 5 | Replace the telescoping column switch assembly. Refer to *Telescope Actuator Switch Replacement - On Vehicle*.<br>Did you complete the replacement? | Go to *Step 7* | — |
| 6 | **Important:** Perform the set up procedure for the Seat Control Module.<br>Replace the Seat Control Module. Refer to *Seat Control Module*.<br>Did you complete the replacement? | Go to *Step 7* | — |
| 7 | 1. Use a scan tool in order to clear the DTCs.<br>2. Operate the vehicle within the Conditions for Running the DTC as Specified in the supporting text.<br>Does the DTC reset? | Go to *Step 2* | System OK |

G01727485

**Fig. 19: DTC B2852**
**Courtesy of GENERAL MOTORS CORP.**

**DTC B2857**

**Circuit Description**

The telescoping steering column switch circuit provides an input to the LH Seat Control Module (SCM) when the switch is held closed in the in, button pressed toward the driver, or out, button pressed toward I/P, position. The SCM monitors a 12 volt signal applied to the steering column telescope forward switch signal circuit. When the steering column switch is closed in the In position, the column in 12 volt signal is grounded and pulled low within the SCM, indicating a column In request.

**Conditions for Setting the DTC**

The steering column switch input, to the SCM, is active for more than 20 seconds.

**Action Taken When the DTC Sets**

- Stores a history DTC B2857 in the SCM memory.
- This DTC can only be set as a history code even if the malfunction is current.
- No driver warning message will be displayed for this DTC.
- The operation/function of the steering column switch is disabled.

**Conditions for Clearing the DTC**

- The steering column switch input, to the SCM, is inactive for more than 20 seconds.
- Using a scan tool.

**Diagnostic Aids**

- The following conditions may cause an intermittent malfunction.
  - There is an intermittent short to ground in the steering column telescope forward switch signal circuit.
  - The steering column switch is shorted to ground internally or is sticking.
  - The steering column switch was closed for longer than 20 seconds.
- If steering column telescope forward switch signal circuit is shorted to ground or the steering column switch is stuck closed, the steering column will remain in the full In position at all times.
- Using a scan tool, select scan tool inputs and monitor steering column switch status. If the scan tool displays In, disconnect the steering column switch. If the display changes to Idle, replace the switch. If the display remains In check steering column telescope forward switch signal circuit for a short to ground.
- If the DTC does not reset after the code is cleared, then the problem may be intermittent.

Perform the tests shown while moving related wiring and connectors. This can often cause the malfunction to occur. Refer to **TESTING FOR INTERMITTENT & POOR CONNECTIONS** in Wiring Systems.

- Activate the steering column switch numerous times while monitoring the status on the scan tool to see if it sticks intermittently.
- Can be caused by holding switch down for more than 20 seconds.

**Test Description**

The numbers below refer to the step numbers on the diagnostic table:

**2.** This test determines the status of the column switch using a scan tool. The scan tool will display the column switch status as In, button pressed toward driver, and Idle, button released.

**3.** This test checks if the column switch is shorted to ground or stuck. If the column switch status changes from In to Idle when the column switch is disconnected, then the switch assembly must be replaced.

| Step | Action | Yes | No |
|---|---|---|---|
| **Schematic Reference:** Memory Systems | | | |
| 1 | Did you perform the Steering Column Diagnostic System Check? | Go to *Step 2* | Go to *Diagnostic System Check - Steering Wheel and Column* |
| 2 | Using a scan tool, select SCM input display and monitor the column switch status.<br>Does the scan tool display column switch status as In? | Go to *Step 3* | Go to Diagnostic Aids |
| 3 | 1. Disconnect the column switch connector.<br>2. Using a scan tool, select SCM input display and monitor the column switch status.<br>Does the scan tool display column switch status as In? | Go to *Step 4* | Go to *Step 5* |
| 4 | Check for a short to ground in Steering Column Tilt and Telescope Forward Switch Signal Circuit. Refer to *Circuit Testing* and *Wiring Repairs* in Wiring Systems.<br>Did you find and correct the condition? | Go to *Step 7* | Go to *Step 6* |
| 5 | Replace the telescoping column switch assembly. Refer to *Telescope Actuator Switch Replacement - On Vehicle*.<br>Did you complete the replacement? | Go to *Step 7* | — |
| 6 | **Important:** Perform the set up procedure for the Seat Control Module<br>Replace the Seat Control Module. Refer to *Seat Control Module*.<br>Did you complete the replacement? | Go to *Step 7* | — |
| 7 | 1. Use scan tool in order to clear the DTCs.<br>2. Operate the vehicle within the Conditions for Running the DTC as specified in the supporting text.<br>Does the DTC reset? | Go to *Step 2* | System OK |

G01727486

**Fig. 20: DTC B2857**

## Courtesy of GENERAL MOTORS CORP.

### DTC B2860

#### Circuit Description

The memory seat and telescoping steering column position settings are stored in the LH Seat Control Module (SCM). The SCM measures and stores the steering column position by using a position sensor, which is an internal part of the telescoping actuator. The SCM provides the position sensor with a 5 volt power supply, and ground. The SCM monitors the position sensor signal voltage, which ranges from 0.1-4.78 volts depending on the steering column position. The steering column position sensor becomes active only when the SCM detects a steering column switch input.

#### Conditions for Setting the DTC

The steering column position sensor signal, to the SCM, is less than 0.1 volt or greater than 4.78 volts for 2 seconds or more.

#### Action Taken When the DTC Sets

- A history DTC B2860 is stored in the SCM memory.
- This DTC can only be set as a history code even if the malfunction is current.
- No driver warning message will be displayed for this DTC.
- The memory operation/function of the faulted position sensor is disabled.

#### Conditions for Clearing the DTC

- The steering column position sensor input, to the SCM, is within 0.1 volt to 4.78 volts for 2 seconds or more.
- Using a scan tool.

#### Diagnostic Aids

- If the DTC does not reset after the code is cleared the problem may be intermittent. Perform the tests shown while moving related wiring and connectors. This can often cause the malfunction to occur. Refer to **TESTING FOR INTERMITTENT & POOR CONNECTIONS** in Wiring Systems.
- The following conditions may also cause an intermittent malfunction:
  - There is an intermittent open, short to ground, or short to voltage in steering column telescope motor signal circuit.

- The steering column position sensor is open or shorted internally.

- If the SCM is unable to determine the correct steering column position, limited manual operation of the telescoping steering column will be functional, but the SCM will be unable to recall the correct memory settings.
- Using a scan tool, select SCM data display and monitor the Column Position Fdbk data. Operate the steering column in both directions while monitoring the position sensor data. The voltage should range from 0.1 volt to 4.78 volts depending on the steering column position.

**Test Description**

The number(s) below refer to the step number(s) on the diagnostic table.

**3.** Tests for the proper operation of the circuit in the high voltage range.

**4.** Tests for the proper operation of the circuit in the low voltage range. If the fuse in the jumper opens when you perform this test, the signal circuit is shorted to voltage.

**5.** Tests for a short to ground in the 5 volt reference circuit.

| Step | Action | Value(s) | Yes | No |
|---|---|---|---|---|
| **Schematic Reference:** Memory Systems | | | | |
| 1 | Did you perform the Steering Wheel and Column *Diagnostic System Check*? | — | Go to *Step 2* | Go to *Diagnostic System Check - Steering Wheel and Column* |
| 2 | 1. Install a scan tool.<br>2. Turn ON the ignition, with the engine OFF.<br>3. With a scan tool, observe the Column Position Feedback data parameter in the Seat Control Module Column Info list.<br>Does the scan tool indicate that the Column Position Feedback data parameter is within the specified range? | 0.1–4.78 V | Go to Diagnostic Aids | Go to *Step 3* |
| 3 | 1. Turn OFF the ignition.<br>2. Disconnect the Telescoping Sensor.<br>3. Turn ON the ignition, with the engine OFF.<br>4. With a scan tool, observe the Column Position Feedback data parameter.<br>Does the scan tool indicate that the Column Position Feedback data parameteris greater than the specified value? | 4.78 V | Go to *Step 4* | Go to *Step 8* |
| 4 | 1. Turn OFF the ignition<br>2. Connect a 3 amp fused jumper wire between the signal circuit of the Telescoping Sensor and the low reference circuit of the Telescoping Sensor.<br>3. Turn ON the ignition, with the engine OFF.<br>4. With a scan tool, observe the Column Position Feedback data parameter.<br>Does the scan tool indicate that the Column Position Feedback data parameter is less than the specified value? | 0.1 V | Go to *Step 5* | Go to *Step 9* |
| 5 | 1. Turn OFF the ignition<br>2. Disconnect the fused jumper wire.<br>3. Connect a 3 amp fused jumper wire between the 5 volt reference circuit of the Telescoping Sensor and the signal circuit of the Telescoping Sensor.<br>4. Turn ON the ignition, with the engine OFF.<br>5. With a scan tool, observe the Column Position Feedback data parameter.<br>Does the scan tool indicate that the Column Position Feedback data parameter is greater than the specified value? | 4.78 V | Go to *Step 7* | Go to *Step 6* |
| 6 | Test the 5 volt reference circuit of the Telescoping Sensor for a short to ground. Refer to *Circuit Testing* and *Wiring Repairs* in Wiring Systems.<br>Did you find and correct the condition? | — | Go to *Step 15* | Go to *Step 12* |
| 7 | Test the 5 volt reference circuit of the Telescoping Sensor for a short to voltage, a high resistance, or an open. Refer to *Circuit Testing* and *Wiring Repairs* in Wiring Systems.<br>Did you find and correct the condition? | — | Go to *Step 15* | Go to *Step 11* |
| 8 | Test the signal circuit of the Telescoping Sensor for a short to ground. Refer to *Circuit Testing* and *Wiring Repairs* in Wiring Systems.<br>Did you find and correct the condition? | — | Go to *Step 15* | Go to *Step 12* |

G01727487

**Fig. 21: DTC B2860 (1 Of 2)**
**Courtesy of GENERAL MOTORS CORP.**

| Step | Action | Value(s) | Yes | No |
|---|---|---|---|---|
| 9 | Test the signal circuit of the Telescoping Sensor for a short to voltage, a high resistance, or an open. Refer to *Circuit Testing* and *Wiring Repairs* in Wiring Systems.<br><br>Did you find and correct the condition? | — | Go to *Step 15* | Go to *Step 10* |
| 10 | Test the low reference circuit of the Telescoping Sensor for a high resistance or an open. Refer to *Circuit Testing* and *Wiring Repairs* in Wiring Systems.<br><br>Did you find and correct the condition? | — | Go to *Step 15* | Go to *Step 12* |
| 11 | Inspect for poor connections at the harness connector of the Telescoping Sensor. Refer to *Testing for Intermittent and Poor Connections* and *Connector Repairs* in Wiring Systems.<br>Did you find and correct the condition? | — | Go to *Step 15* | Go to *Step 13* |
| 12 | Inspect for poor connections at the harness connector of the Seat Control Module. Refer to *Testing for Intermittent and Poor Connections* and *Connector Repairs* in Wiring Systems.<br>Did you find and correct the condition? | — | Go to *Step 15* | Go to *Step 14* |
| 13 | Replace the Telescoping Sensor. Refer to *Telescope Actuator Switch Replacement - On Vehicle*.<br>Did you complete the replacement? | — | Go to *Step 15* | — |
| 14 | **Important:** Perform the set up procedure for the Seat Control Module.<br>Replace the Seat Control Module. Refer to *Seat Control Module*.<br>Did you complete the replacement? | — | Go to *Step 15* | — |
| 15 | 1. Use the scan tool in order to clear the DTCs.<br>2. Operate the vehicle within the Conditions for Running the DTC as specified in the supporting text.<br>Does the DTC reset? | — | Go to *Step 2* | System OK |

G01727488

**Fig. 22: DTC B2860 (2 Of 2)**
**Courtesy of GENERAL MOTORS CORP.**

### SYMPTOMS - STEERING WHEEL & COLUMN

**Important:** The following steps must be completed before using the symptom tables:

- Refer to **Diagnostic Starting Point - Steering Column**
  - There are no DTCs set.
  - The control module(s) can communicate via the serial data link.
- Review the system operation in order to familiarize yourself with the system functions. Refer to **STEERING WHEEL & COLUMN DESCRIPTION & Operation** .

#### Visual/Physical Inspection

- Inspect for aftermarket devices which could affect the operation of the tilt/telescoping steering column. Refer to **CHECKING AFTERMARKET ACCESSORIES** in Wiring Systems.

- Inspect the easily accessible or visible system components for obvious damage or conditions which could cause the symptom.

**Intermittent**

Faulty electrical connections or wiring may be the cause of intermittent conditions. Refer to **TESTING FOR INTERMITTENT & POOR CONNECTIONS** in Wiring Systems.

**Symptom List**

Refer to a symptom diagnostic procedure from the following list in order to diagnose the symptom:

- **Noise In Steering Column**
- **Looseness In Steering Column**
- **Steering Column Tilt Function Inoperative**
- **Steering Column Does Not Telescope In/Out**
- **Electronic Column Lock Does Not Unlock**
- **Electronic Column Lock Does Not Lock**
- **Service Column Lock Indicator Always On**
- **Service Column Lock Indicator Inoperative**

**STEERING COLUMN DOES NOT TELESCOPE IN/OUT**

| Step | Action | Yes | No |
|---|---|---|---|
| **Schematic Reference:** Memory Systems<br>DEFINITION: This table is for a telescoping steering column system in which the telescope functions are inoperative. | | | |
| 1 | Did you perform the Steering Wheel and Column Diagnostic System Check? | Go to *Step 2* | Go to *Diagnostic System Check - Steering Wheel and Column* |
| 2 | Verify that the telescoping function is inoperative.<br>Does the telescoping function operate normally? | Go to *Testing for Intermittent and Poor Connections* in Wiring Systems | Go to *Step 3* |
| 3 | 1. Install a scan tool.<br>2. Observe the column fore/aft switch parameter in the seat control module data display list while activating the column fore/aft switch to the In and Out positions.<br>Did the parameter change states as expected? | Go to *Step 4* | Go to *Step 5* |
| 4 | With the scan tool, observe the column feedback parameter in the seat control module data display list while activating the column fore/aft switch to the In and Out positions.<br>Did the parameter change states? | Go to *Step 7* | Go to *Step 6* |
| 5 | Test both of the column fore/aft switch In and Out signal and ground circuits for an open or short to voltage. Refer to *Circuit Testing* and *Wiring Repairs* in Wiring Systems.<br>Did you find and correct the condition? | Go to *Step 14* | Go to *Step 8* |
| 6 | Test the steering column telescope actuator control circuits for an open. Refer to *Circuit Testing* and *Wiring Repairs* in Wiring Systems.<br>Did you find and correct the condition? | Go to *Step 14* | Go to *Step 9* |

G01727489

**Fig. 23: Steering Column Does Not Telescope In/Out (1 Of 2)**
**Courtesy of GENERAL MOTORS CORP.**

| Step | Action | Yes | No |
|---|---|---|---|
| 7 | Test the 5 volt reference and memory seat/mirror sensor low reference circuits for an open and the steering column telescope motor signal circuit for a short to voltage. Refer to *Circuit Testing* and *Wiring Repairs* in Wiring Systems.<br><br>Did you find and correct the condition? | Go to *Step 14* | Go to *Step 10* |
| 8 | Inspect for poor connections at the harness connector of the column fore/aft switch. Refer to *Testing for Intermittent and Poor Connections* and *Connector Repairs* in Wiring Systems.<br><br>Did you find and correct the condition? | Go to *Step 14* | Go to *Step 11* |
| 9 | Inspect for poor connections at the harness connector of the telescope actuator. Refer to *Testing for Intermittent and Poor Connections* and *Connector Repairs* in Wiring Systems.<br><br>Did you find and correct the condition? | Go to *Step 14* | Go to *Step 12* |
| 10 | Inspect for poor connections at the harness connector of the seat control module. Refer to *Testing for Intermittent and Poor Connections* and *Connector Repairs* in Wiring Systems.<br><br>Did you find and correct the condition? | Go to *Step 14* | Go to *Step 13* |
| 11 | Replace the column fore/aft switch. Refer to *Telescope Actuator Switch Replacement - On Vehicle*.<br>Did you complete the replacement? | Go to *Step 14* | — |
| 12 | Replace the telescope actuator. Refer to *Telescope Actuator Assembly Replacement - On Vehicle*.<br>Did you complete the replacement? | Go to *Step 14* | — |
| 13 | **Important:** Perform the set up procedure for the seat control module.<br>Replace the seat control module. Refer to *Seat Control Module* in Seats.<br>Did you complete the replacement? | Go to *Step 14* | — |
| 14 | Perform the steering column control module programming. Refer to *Telescoping Steering Column Calibration*.<br>Did you complete the action? | Go to *Step 15* | — |
| 15 | Operate the system in order to verify the repair.<br>Did you correct the condition? | System OK | Go to *Step 2* |

G01727490

## Fig. 24: Steering Column Does Not Telescope In/Out (2 Of 2)
## Courtesy of GENERAL MOTORS CORP.

### ELECTRONIC COLUMN LOCK DOES NOT UNLOCK

**Diagnostic Aids**

- An open on the key in ignition switch signal circuit will intermittently cause the column not to unlock.
- Disconnecting or opening the steering column lock feedback circuit will cause the BCM to enter a Fail Enable Standby mode. The steering column will remain inoperative until the Fail Enable Standby mode is cleared. To clear this mode, disconnect the BCM1 & IPC fuse in the I/P fuse block for 15 seconds.

| Step | Action | Yes | No |
|---|---|---|---|
| **Schematic Reference:** *Column/Ignition Lock Schematics* | | | |
| 1 | Did you perform the Steering Wheel and Column Diagnostic System Check? | Go to *Step 2* | Go to *Diagnostic System Check - Steering Wheel and Column* |
| 2 | Verify the fault is present.<br>Does the system operate normally? | Go to Diagnostic Aids | Go to *Step 3* |
| 3 | With a test lamp, back probe between steering column lock circuit on the BCM and ground.<br>Does the test lamp illuminate? | Go to *Step 4* | Go to *Step 8* |
| 4 | With a test lamp, back probe between steering column unlock circuit on the BCM and battery voltage.<br>Does the test lamp illuminate? | Go to *Step 5* | Go to *Step 8* |
| 5 | Test the steering column lock and unlock circuits for an open. Refer to *Circuit Testing* and *Wiring Repairs* in Wiring Systems.<br>Did you find and correct the condition? | Go to *Step 11* | Go to *Step 6* |
| 6 | Test the steering column lock relay control circuit for an open or short to voltage. Refer to *Circuit Testing* and *Wiring Repairs* in Wiring Systems.<br>Did you find and correct the condition? | Go to *Step 11* | Go to *Step 7* |
| 7 | Inspect for poor connections at the harness connector of the steering column lock. Refer to *Testing for Intermittent and Poor Connections* and *Connector Repairs* in Wiring Systems.<br>Did you find and correct the condition? | Go to *Step 11* | Go to *Step 9* |
| 8 | Inspect for poor connections at the harness connector of the BCM. Refer to *Testing for Intermittent and Poor Connections* and *Connector Repairs* in Wiring Systems.<br>Did you find and correct the condition? | Go to *Step 11* | Go to *Step 10* |
| 9 | Replace the steering column lock. Refer to *Electronic Column Lock Module Replacement - On Vehicle (Non-Telescoping)* or *Electronic Column Lock Module Replacement - On Vehicle (Telescoping)* in Steering Wheel and Column.<br>Did you complete the replacement? | Go to *Step 11* | — |
| 10 | **Important:** Perform the BCM RPO Reprogram procedure. Refer to *Body Control Module (BCM) Programming/RPO Configuration* in Body Control System.<br>Replace the BCM. Refer to *Body Control Module Replacement* in Body Control System.<br>Did you complete the replacement? | Go to *Step 11* | — |
| 11 | Operate the system in order to verify the repair.<br>Did you correct the condition? | System OK | Go to *Step 3* |

G01727491

**Fig. 25: Electronic Column Lock Does Not Unlock**
**Courtesy of GENERAL MOTORS CORP.**

## ELECTRONIC COLUMN LOCK DOES NOT LOCK

### Diagnostic Aids

- An open on the key in ignition switch signal circuit will intermittently cause the column not to unlock.
- Disconnecting or opening the steering column lock feedback circuit will cause the BCM to

enter a Fail Enable Standby mode. The steering column will remain inoperative until the Fail Enable Standby mode is cleared. To clear this mode, disconnect the BCM1 & IPC fuse in the I/P fuse block for 15 seconds.

| Step | Action | Yes | No |
|---|---|---|---|
| **Schematic Reference:** *Column/Ignition Lock Schematics* | | | |
| 1 | Did you perform the Steering Wheel and Column Diagnostic System Check? | Go to *Step 2* | Go to *Diagnostic System Check - Steering Wheel and Column* |
| 2 | Verify the fault is present.<br>Does the system operate normally? | Go to Diagnostic Aids | Go to *Step 3* |
| 3 | 1. Turn On the ignition.<br>2. With a test lamp, back probe between steering column lock circuit on the BCM and battery voltage.<br>3. Turn Off the ignition and remove the key.<br>Does the test lamp illuminate momentarily? | Go to *Step 4* | Go to *Step 7* |
| 4 | 1. Turn On the ignition.<br>2. With a test lamp, back probe between steering column unlock circuits on the BCM and ground.<br>3. Turn Off the ignition and remove the key.<br>Does the test lamp illuminate momentarily? | Go to *Step 5* | Go to *Step 7* |
| 5 | Test the steering column lock and unlock circuits for an open. Refer to *Circuit Testing* and *Wiring Repairs* in Wiring Systems.<br>Did you find and correct the condition? | Go to *Step 14* | Go to *Step 6* |
| 6 | Test the steering column lock relay control circuit for an open or short to voltage. Refer to *Circuit Testing* and *Wiring Repairs* in Wiring Systems.<br>Did you find and correct the condition? | Go to *Step 14* | Go to *Step 10* |
| 7 | Test the key out of ignition switch signal and key in ignition switch signal circuit for an open or short to ground. Refer to *Circuit Testing* and *Wiring Repairs* in Wiring Systems.<br>Did you find and correct the condition? | Go to *Step 14* | Go to *Step 8* |
| 8 | Test the steering column lock relay control circuit for an open or short to voltage. Refer to *Circuit Testing* and *Wiring Repairs* in Wiring Systems.<br>Did you find and correct the condition? | Go to *Step 14* | Go to *Step 9* |
| 9 | Test the ignition switch ground circuit for an open. Refer to *Circuit Testing* and *Wiring Repairs* in Wiring Systems.<br>Did you find and correct the condition? | Go to *Step 14* | Go to *Step 11* |
| 10 | Inspect for poor connections at the harness connector of the steering column lock. Refer to *Testing for Intermittent and Poor Connections* and *Connector Repairs* in Wiring Systems.<br>Did you find and correct the condition? | Go to *Step 14* | Go to *Step 12* |
| 11 | Inspect for poor connections at the harness connector of the BCM. Refer to *Testing for Intermittent and Poor Connections* and *Connector Repairs* in Wiring Systems.<br>Did you find and correct the condition? | Go to *Step 14* | Go to *Step 13* |

G01727492

**Fig. 26: Electronic Column Lock Does Not Lock (1 Of 2)**
**Courtesy of GENERAL MOTORS CORP.**

| Step | Action | Yes | No |
|---|---|---|---|
| 12 | Replace the steering column lock. Refer to *Electronic Column Lock Module Replacement - On Vehicle (Non-Telescoping)* or *Electronic Column Lock Module Replacement - On Vehicle (Telescoping)* in Steering Wheel and Column.<br><br>Did you complete the replacement? | Go to *Step 14* | — |
| 13 | **Important:** Perform the BCM RPO Reprogram procedure. Refer to *Body Control Module (BCM) Programming/RPO Configuration* in Body Control Modules.<br>Replace the BCM. Refer to *Body Control Module Replacement* in Body Control Modules.<br>Did you complete the replacement? | Go to *Step 14* | — |
| 14 | Operate the system in order to verify the repair.<br>Did you correct the condition? | System OK | Go to *Step 3* |

G01727493

## Fig. 27: Electronic Column Lock Does Not Lock (2 Of 2)
## Courtesy of GENERAL MOTORS CORP.

### SERVICE COLUMN LOCK INDICATOR ALWAYS ON

**Diagnostic Aids**

- An open on the key in ignition switch signal circuit will intermittently cause the column not to unlock.
- Disconnecting or opening the steering column lock feedback circuit will cause the BCM to enter a Fail Enable Standby mode. The steering column will remain inoperative until the Fail Enable Standby mode is cleared. To clear this mode, disconnect the BCM1 & IPC fuse in the I/P fuse block for 15 seconds.

| Step | Action | Yes | No |
|---|---|---|---|
| **Schematic Reference:** *Column/Ignition Lock Schematics* | | | |
| 1 | Did you perform the Steering Wheel and Column Diagnostic System Check? | Go to *Step 2* | Go to *Diagnostic System Check - Steering Wheel and Column* |
| 2 | Verify the fault is present.<br>Does the system operate normally? | Go to Diagnostic Aids | Go to *Step 3* |
| 3 | Verify that the column will lock or unlock cycling the steering column lock function by cycling the ignition key and also removing the ignition key.<br>Does the steering column lock unlock and lock normally? | Go to *Step 4* | Go to *Electronic Column Lock Does Not Unlock* or *Electronic Column Lock Does Not Lock*. |
| 4 | With a test lamp, back probe between steering column lock signal circuit on the BCM and a good ground.<br>Does the test lamp illuminate? | Go to *Step 5* | Go to *Step 7* |
| 5 | Test the control and ground circuit of the steering column lock feedback switch for an open or short to ground. Refer to *Circuit Testing* and *Wiring Repairs* in Wiring Systems.<br>Did you find and correct the condition? | Go to *Step 10* | Go to *Step 6* |
| 6 | Inspect for poor connections at the harness connector of the steering column lock. Refer to *Testing for Intermittent and Poor Connections* and *Connector Repairs* in Wiring Systems.<br>Did you find and correct the condition? | Go to *Step 10* | Go to *Step 8* |
| 7 | Inspect for poor connections at the harness connector of the BCM. Refer to *Testing for Intermittent and Poor Connections on page 8-23* and *Connector Repairs* in Wiring Systems.<br>Did you find and correct the condition? | Go to *Step 10* | Go to *Step 9* |
| 8 | Replace the steering column lock. Refer to *Electronic Column Lock Module Replacement - On Vehicle (Non-Telescoping)* or *Electronic Column Lock Module Replacement - On Vehicle (Telescoping)* in Steering Wheel and Column.<br>Did you complete the replacement? | Go to *Step 10* | — |
| 9 | **Important:** Perform the BCM RPO Reprogram procedure. Refer to *Body Control Module (BCM) Programming/RPO Configuration* in Body Control Modules.<br>Replace the BCM. Refer to *Body Control Module Replacement* in Body Control Modules.<br>Did you complete the replacement? | Go to *Step 10* | — |
| 10 | Operate the system in order to verify the repair.<br>Did you correct the condition? | System OK | Go to *Step 3* |

G01727494

**Fig. 28: Service Column Lock Indicator Always On**
**Courtesy of GENERAL MOTORS CORP.**

## SERVICE COLUMN LOCK INDICATOR INOPERATIVE

| Step | Action | Yes | No |
|---|---|---|---|
| 1 | Did you perform the Steering Wheel and Column Diagnostic System Check? | Go to *Step 2* | Go to *Diagnostic System Check - Steering Wheel and Column* |
| 2 | 1. Turn OFF the ignition.<br>2. Remove BCM2 fuse.<br>3. Turn ON the Ignition<br>Is the Service Column Lock message displayed? | System OK | Go to *Step 3* |
| 3 | Replace the instrument panel cluster. Refer to *Instrument Panel Cluster*.<br>Did you complete the replacement? | System OK | — |

G01727495

**Fig. 29: Service Column Lock Indicator Inoperative**
**Courtesy of GENERAL MOTORS CORP.**

## NOISE IN STEERING COLUMN

| Step | Action | Yes | No |
|---|---|---|---|
| 1 | Did you review the Steering Wheel and Column Description and perform the necessary inspections? | Go to *Step 2* | Go to *Symptoms - Steering Wheel and Column* |
| 2 | Verify that noise is present in the steering column during operation.<br>Is noise present in the steering column during operation? | Go to *Step 3* | System OK |
| 3 | Inspect the steering column components for looseness.<br>Is the steering column components loose? | Go to *Step 10* | Go to *Step 4* |
| 4 | Inspect the SIR/SRS coil for noise.<br>Is the SIR/SRS coil noisy? | Go to *Step 11* | Go to *Step 5* |
| 5 | Inspect the horn contact ring for lubrication.<br>Is the horn contact ring lubricated? | Go to *Step 12* | Go to *Step 6* |
| 6 | Inspect the lock plate retaining ring for the correct installation.<br>Is the lock plate retaining ring installed properly? | Go to *Step 13* | Go to *Step 7* |
| 7 | Inspect the shaft bearing for the following conditions:<br>• Damage<br>• Lubrication<br>• Wear<br>• Proper seating<br>Are the bearings in need of repair or replacement? | Go to *Step 14* | Go to *Step 8* |
| 8 | Inspect the spherical joint for lubrication.<br>Is the spherical joint lubricated? | Go to *Step 15* | Go to *Step 9* |
| 9 | Inspect the steering column coupling for looseness.<br>Is the steering column coupling loose? | Go to *Step 16* | Go to *Step 3* |
| 10 | Tighten the steering column components to specifications. Refer to *Fastener Tightening Specifications*.<br>Did you complete the repair? | Go to *Step 17* | — |
| 11 | Replace the SIR coil. Refer to<br>SIR Coit Assembly in SIR.<br>Did you complete the repair? | Go to *Step 17* | — |
| 12 | Lubricate the horn contact ring.<br>Did you complete the repair? | Go to *Step 17* | — |
| 13 | Install the lock plate retaining ring properly.<br>Did you complete the repair? | Go to *Step 17* | — |
| 14 | Repair the shaft bearings as necessary. Refer to *Steering Shaft, Lower Bearing, and Jacket - Disassemble - Off Vehicle (Telescoping Column)* or *Steering Shaft, Lower Bearing, and Jacket - Disassemble - Off Vehicle (Non-Telescoping).*<br>Did you complete the repair? | Go to *Step 17* | — |

G01727496

## Fig. 30: Noise in Steering Column (1 Of 2)
## Courtesy of GENERAL MOTORS CORP.

| Step | Action | Yes | No |
|---|---|---|---|
| 15 | Lubricate the spherical joints.<br>Did you complete the repair? | Go to *Step 17* | — |
| 16 | Tighten the steering column coupling to specifications. Refer to *Fastener Tightening Specifications*.<br>Did you complete the repair? | Go to *Step 17* | — |
| 17 | Operate the system in order to verify the repair.<br>Did you correct the condition? | System OK | Go to *Step 3* |

G01727497

## Fig. 31: Noise in Steering Column (2 Of 2)

# Courtesy of GENERAL MOTORS CORP.

## LOOSENESS IN STEERING COLUMN

| Step | Action | Yes | No |
|---|---|---|---|
| 1 | Did you review the Steering Wheel and Column - Tilt Description and Operation and perform the necessary inspections? | Go to *Step 2* | Go to *Symptoms - Steering Wheel and Column* |
| 2 | Verify that the steering column is loose.<br>Is the steering column loose? | Go to *Step 3* | System OK |
| 3 | Inspect the steering column mounting brackets for looseness.<br>Are the steering column mounting brackets loose? | Go to *Step 8* | Go to *Step 4* |
| 4 | Verify that the steering column bracket capsule is not sheared.<br>Is the steering column bracket capsule sheared? | Go to *Step 9* | Go to *Step 5* |
| 5 | Inspect the support screws for looseness.<br>Are the support screws loose? | Go to *Step 10* | Go to *Step 6* |
| 6 | Inspect the intermediate shaft for worn joints or looseness.<br>Is the intermediate joint worn or loose? | Go to *Step 11* | Go to *Step 7* |
| 7 | Inspect the tilt head, support and pivot pins for looseness.<br>Are there any loose components? | Go to *Step 12* | Go to *Step 2* |
| 8 | ***Notice:*** Refer to *Fastener Notice*.<br><br>Tighten the brackets to specifications. Refer to *Fastener Tightening Specifications*.<br>Did you complete the repair? | Go to *Step 13* | — |
| 9 | Replace the jacket assembly. Refer to *Steering Shaft, Lower Bearing, and Jacket - Disassemble - Off Vehicle (Telescoping Column)* or *Steering Shaft, Lower Bearing, and Jacket - Disassemble - Off Vehicle (Non-Telescoping)* and *Steering Shaft, Lower Bearing, and Jacket - Assemble - Off Vehicle (Telescoping Column)* or *Steering Shaft, Lower Bearing, and Jacket - Assemble - Off Vehicle (Non-Telescoping)*.<br>Did you complete the replacement? | Go to *Step 13* | — |
| 10 | Tighten the support screws to specifications. Refer to *Fastener Tightening Specifications*.<br>Did you complete the repair? | Go to *Step 13* | — |
| 11 | Tighten or replace the intermediate shaft as needed. Refer to *Intermediate Steering Shaft Replacement*.<br>Did you complete the repair? | Go to *Step 13* | — |
| 12 | Repair or replace the tilt head, support and pivot pins as necessary. Refer to *Steering Shaft, Lower Bearing, and Jacket - Disassemble - Off Vehicle (Telescoping Column)* or *Steering Shaft, Lower Bearing, and Jacket - Disassemble - Off Vehicle (Non-Telescoping)* and *Steering Shaft, Lower Bearing, and Jacket - Assemble - Off Vehicle (Telescoping Column)* or *Steering Shaft, Lower Bearing, and Jacket - Assemble - Off Vehicle (Non-Telescoping)*.<br><br>Did you complete the replacement? | Go to *Step 13* | — |
| 13 | Operate the system in order to verify the repair.<br>Did you correct the condition? | System OK | Go to *Step 3* |

G01727498

**Fig. 32: Looseness in Steering Column**
**Courtesy of GENERAL MOTORS CORP.**

## STEERING COLUMN TILT FUNCTION INOPERATIVE

| Step | Action | Yes | No |
|---|---|---|---|
| 1 | Did you review the Steering Wheel and Column - Tilt Description and Operation and perform the necessary inspections? | Go to *Step 2* | Go to *Symptoms - Steering Wheel and Column* |
| 2 | Verify that the steering column tilt function is inoperative.<br>Does the steering column tilt function operate normally? | System OK | Go to *Step 3* |
| 3 | Verify that the shoe is not seized on the pivot pin.<br>Is the shoe seized on the pivot pin? | Go to *Step 9* | Go to *Step 4* |
| 4 | Inspect the shoe grooves for dirt, burrs, or rust.<br>Are the shoe grooves free of dirt, burrs, and rust? | Go to *Step 9* | Go to *Step 5* |
| 5 | Inspect weak or broken shoe lock spring.<br>Is the shoe lock spring weak or broken? | Go to *Step 9* | Go to *Step 6* |
| 6 | Inspect the pivot pins for binding.<br>Are the pivot pins binding? | Go to *Step 10* | Go to *Step 7* |
| 7 | Inspect for a weak or broken wheel tilt spring.<br>Is the wheel tilt spring weak or broken? | Go to *Step 11* | Go to *Step 8* |
| 8 | Inspect the steering column wiring harness for tightness.<br>Is the steering column wiring harness too tight? | Go to *Step 12* | Go to *Step 3* |
| 9 | Replace the tilt head. Refer to *Steering Shaft, Lower Bearing, and Jacket - Disassemble - Off Vehicle (Telescoping Column)* or *Steering Shaft, Lower Bearing, and Jacket - Disassemble - Off Vehicle (Non-Telescoping)* and *Steering Shaft, Lower Bearing, and Jacket - Assemble - Off Vehicle (Telescoping Column)* or *Steering Shaft, Lower Bearing, and Jacket - Assemble - Off Vehicle (Non-Telescoping)*.<br>Is the repair complete? | Go to *Step 13* | — |
| 10 | Replace the pivot pins. Refer to *Steering Shaft, Lower Bearing, and Jacket - Disassemble - Off Vehicle (Telescoping Column)* or *Steering Shaft, Lower Bearing, and Jacket - Disassemble - Off Vehicle (Non-Telescoping)* and *Steering Shaft, Lower Bearing, and Jacket - Assemble - Off Vehicle (Telescoping Column)* or *Steering Shaft, Lower Bearing, and Jacket - Assemble - Off Vehicle (Non-Telescoping)*.<br>Is the repair complete? | Go to *Step 13* | — |
| 11 | Replace the tilt spring. Refer to *Tilt Spring - Disassemble - Off Vehicle (Telescoping Column)* or *Tilt Spring - Disassemble - Off Vehicle (Non-Telescoping Column)* and *Tilt Spring - Assemble - Off Vehicle (Telescoping Column)* or *Tilt Spring - Assemble - Off Vehicle (Non-Telescoping Column)*.<br>Is the repair complete? | Go to *Step 13* | — |
| 12 | Reroute the steering column wiring harness to the correct location.<br>Is the steering column wiring harness routed properly? | Go to *Step 13* | — |
| 13 | Operate the steering column tilt function in order to verify the repair.<br>Did you correct the condition? | System OK | Go to *Step 3* |

G01727499

**Fig. 33: Steering Column Tilt Function Inoperative**
**Courtesy of GENERAL MOTORS CORP.**

## REPAIR INSTRUCTIONS

### STEERING COLUMN ACCIDENT DAMAGE INSPECTION - OFF VEHICLE (TELESCOPING)

**NOTE: Vehicles involved in accidents that result in any of the following**

**kinds of damage or situations, may also have a damaged or misaligned steering column:**

- Frame damage
- Major body damage
- Sheet metal damage
- If the steering column has been impacted
- If the supplemental inflatable restraints system was deployed
- Check the capsules on the steering column bracket assembly; all capsules must be securely seated in the bracket slots and checked for any loose conditions when pushed or pulled by hand. If not, the bracket should be replaced if bolted to the jacket assembly. If the bracket is welded to the jacket assembly replace the jacket assembly.

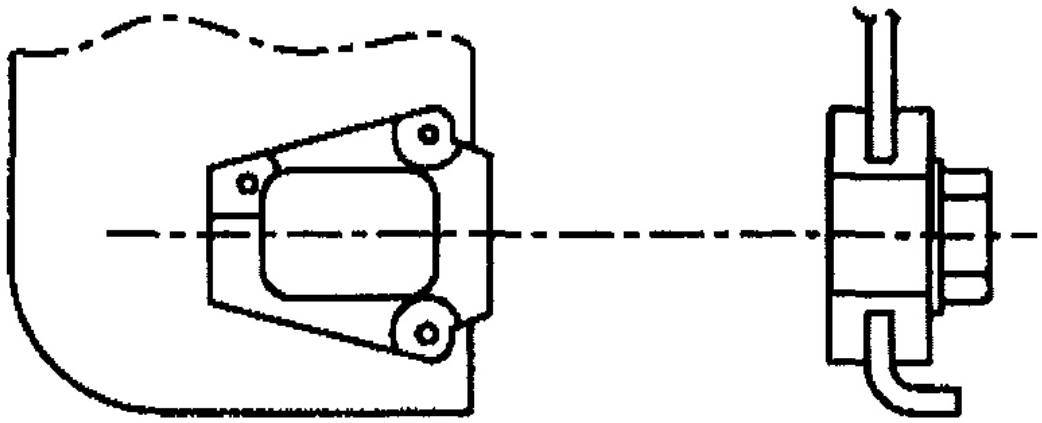


**Fig. 34: Checking Steering Column Bracket Capsule**
**Courtesy of GENERAL MOTORS CORP.**

- Check for jacket assembly collapse by measuring the distance from the lower edge of the upper jacket to a defined point on the lower jacket. Replace the jacket assembly if the measured dimensions are not within specifications.

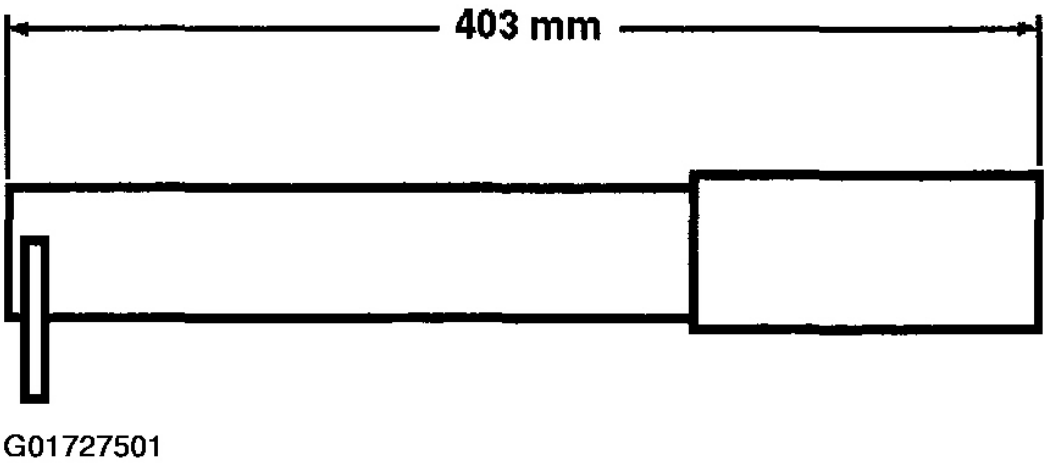


**Fig. 35: Checking Jacket Assembly**
**Courtesy of GENERAL MOTORS CORP.**

- Visually inspect steering shaft for sheared injected plastic (1). If steering shaft shows sheared plastic, replace the steering shaft.
- Check steering shaft runout for any frame damage that could cause a bent steering shaft. Using a dial indicator (1) at the lower end of the steering shaft, rotate the steering wheel. The runout must not exceed 1.60 mm (0.06 in).

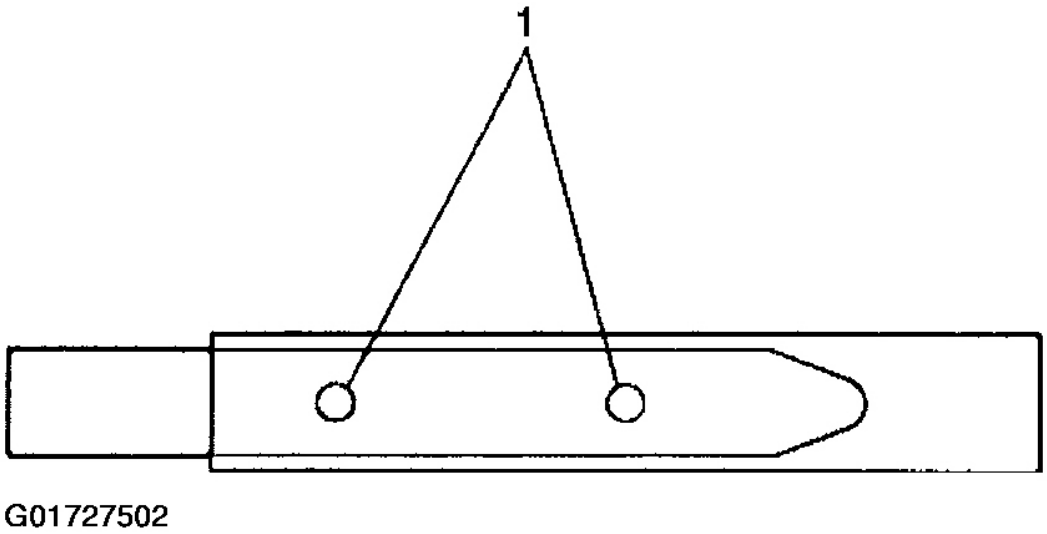


**Fig. 36: Checking Steering Shaft**
**Courtesy of GENERAL MOTORS CORP.**

**STEERING COLUMN ACCIDENT DAMAGE INSPECTION - OFF VEHICLE (MANUAL)**

**NOTE: Vehicles involved in accidents that result in any of the following kinds of damage or situations, may also have a damaged or misaligned steering column:**

- Frame damage
- Major body damage
- Sheet metal damage
- If the steering column has been impacted
- If the supplemental inflatable restraints system was deployed
- Check the capsules on the steering column bracket assembly; all capsules must be securely seated in the bracket slots and checked for any loose conditions when pushed or pulled by hand. If not, the bracket should be replaced if bolted to the jacket assembly. If the bracket is welded to the jacket assembly replace the jacket assembly.

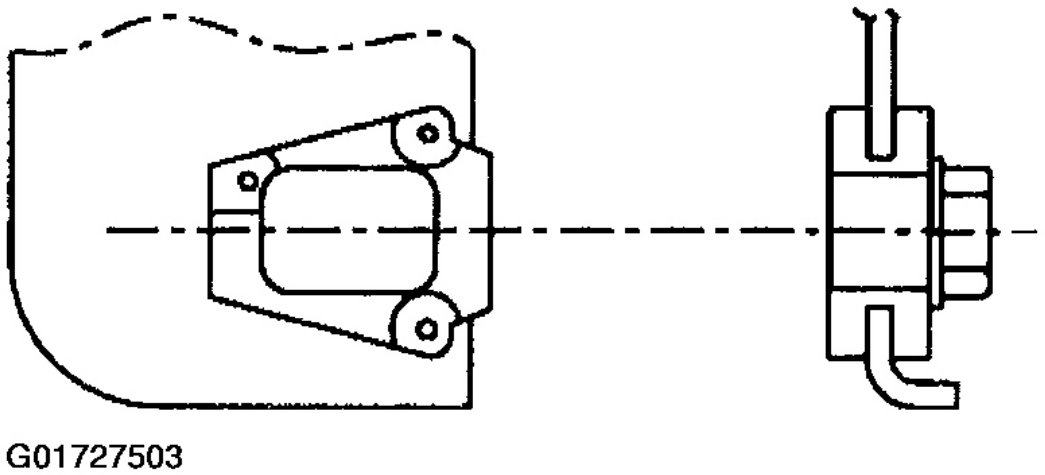


**Fig. 37: Checking Steering Column Bracket Capsule**
**Courtesy of GENERAL MOTORS CORP.**

- Check for jacket assembly collapse by measuring the distance from the lower edge of the upper jacket to a defined point on the lower jacket. Replace the jacket assembly if the measured dimensions are not within specifications.

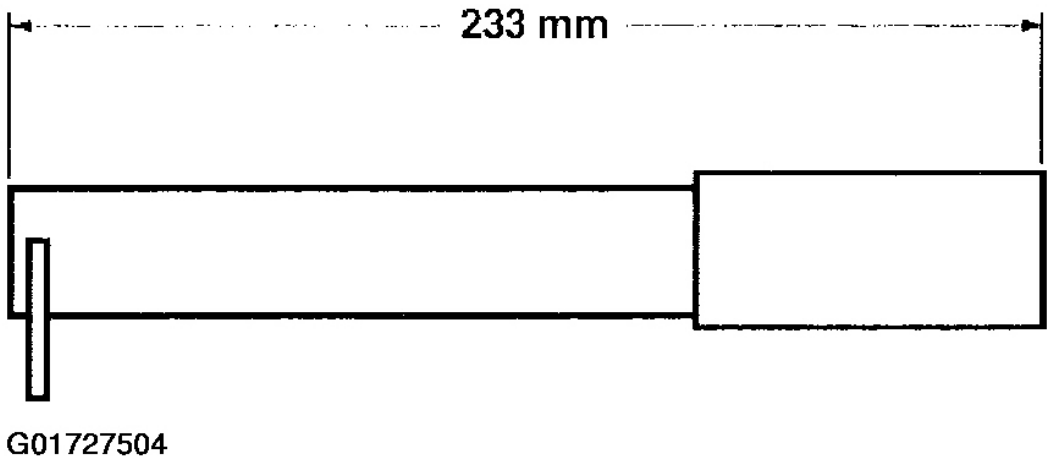


**Fig. 38: Checking Jacket Assembly**
**Courtesy of GENERAL MOTORS CORP.**

- Visually inspect steering shaft for sheared injected plastic (1). If steering shaft shows sheared plastic, replace the steering shaft.
- Any frame damage that could cause a bent steering shaft must have the steering shaft runout checked. Using a dial indicator at the lower end of the steering shaft, rotate the steering wheel. The runout must not exceed 1.59 mm (0.0625 in).

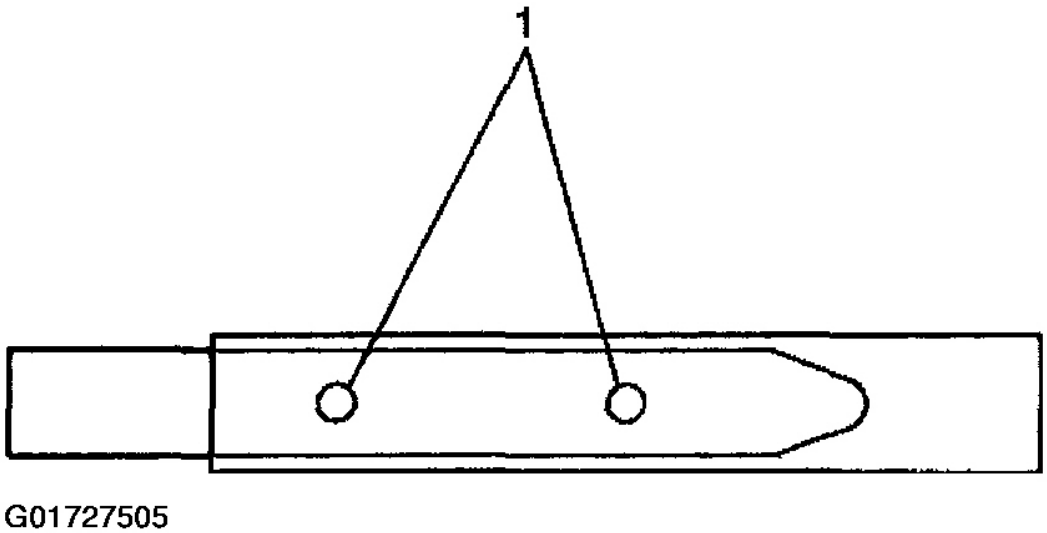


**Fig. 39: Checking Steering Shaft**
**Courtesy of GENERAL MOTORS CORP.**

**STEERING COLUMN TRIM COVERS REPLACEMENT - ON VEHICLE (NON-TELESCOPING)**

**Removal Procedure**

1. Disable the SIR system. Refer to **DISABLING SYSTEM** .
2. Remove the steering wheel from the steering column. Refer to **Steering Wheel Replacement** . .
3. Remove the tilt lever from the steering column. Refer to **Tilt Lever Replacement - On Vehicle** . .
4. Remove the driver knee bolster trim panel. Refer to **INSTRUMENT PANEL ACCESSORY TRIM PLATE & KNEE BOLSTER PANEL** .
5. Remove the 2 TORX(R) head screws from the lower trim cover.

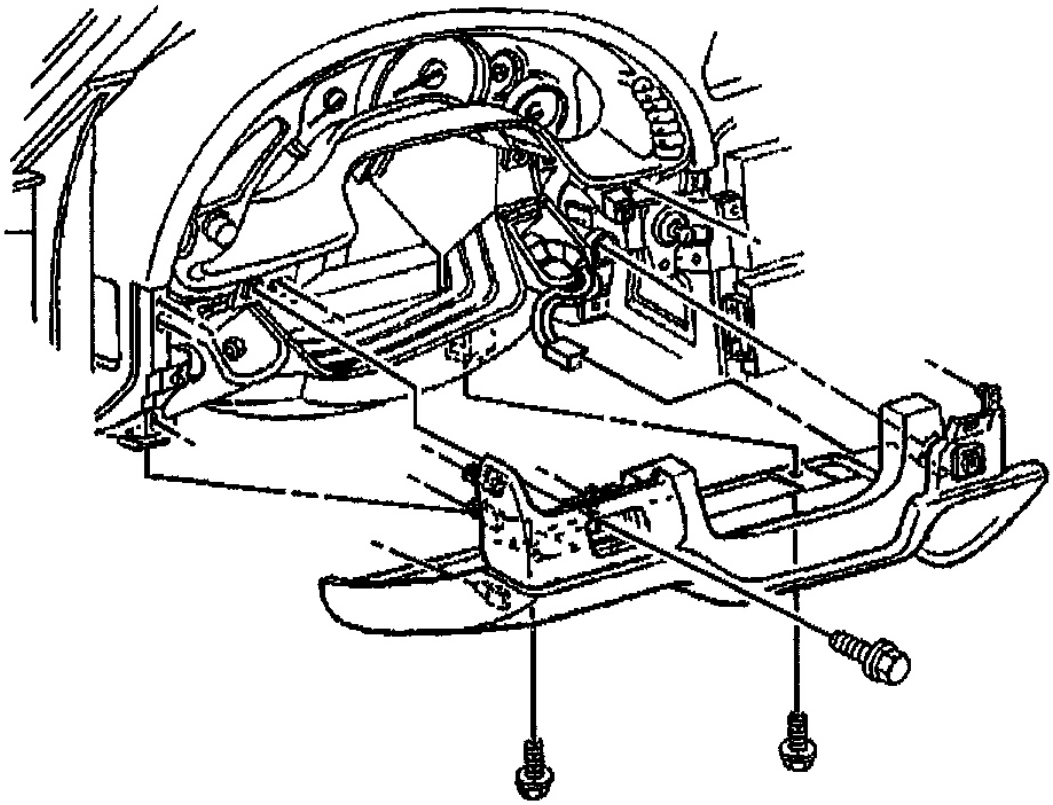

G01727506

**Fig. 40: Removing Driver Knee Bolster Trim Panel Bolts**
**Courtesy of GENERAL MOTORS CORP.**

6. Perform the following steps to remove the lower trim cover:
   - **6.1.** Tilt the trim cover down.
   - **6.2.** Slide the lower trim cover back to disengage from the upper trim cover.

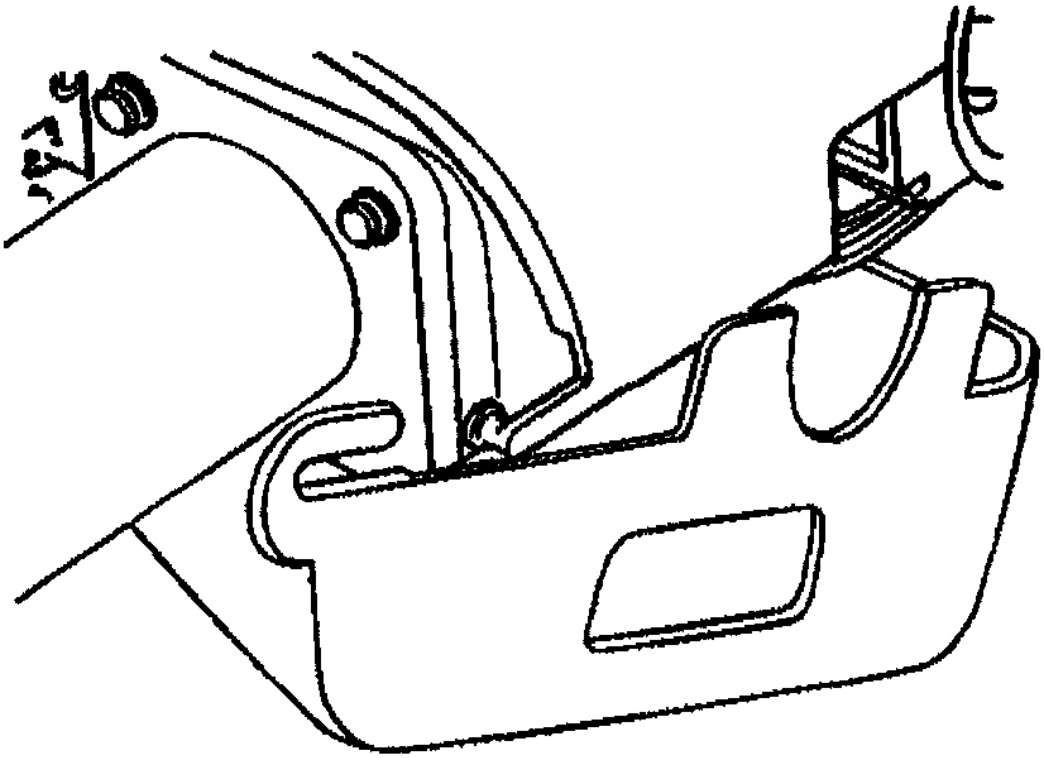

G01727507

**Fig. 41: Removing Lower Trim Cover**
**Courtesy of GENERAL MOTORS CORP.**

7. Remove the 2 TORX(R) head screws (2) from the upper trim cover (1).
8. Remove the upper trim cover (1).

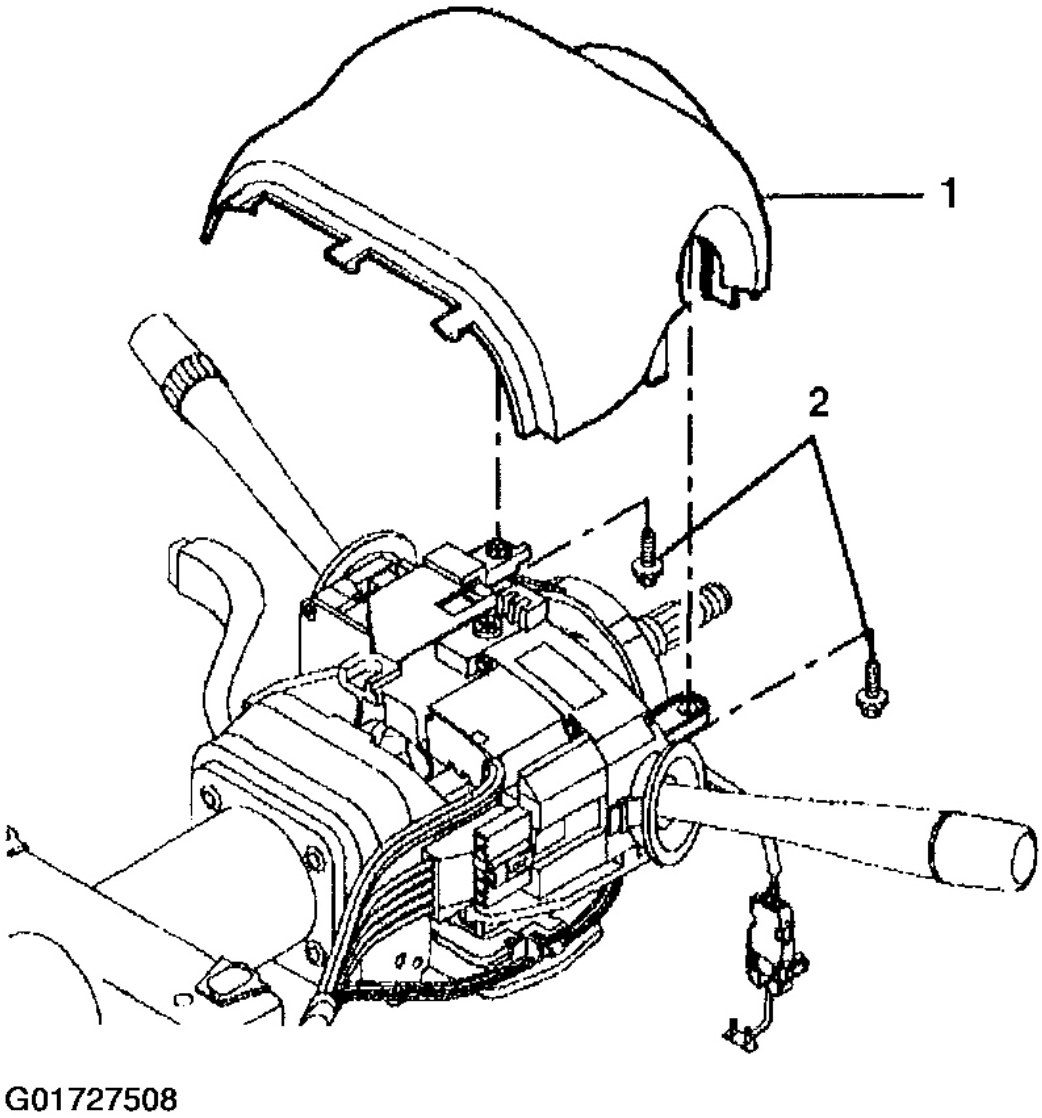


**Fig. 42: Removing Upper Trim Cover Screws**
**Courtesy of GENERAL MOTORS CORP.**

**Installation Procedure**

1. Install the upper trim cover.

**CAUTION: Refer to FASTENER NOTICE .**

2. Secure the upper trim cover (1) with 2 TORX(R) head screws (2).

   **Tighten**

   Tighten the screws to 1.4 N.m (12 lb in).

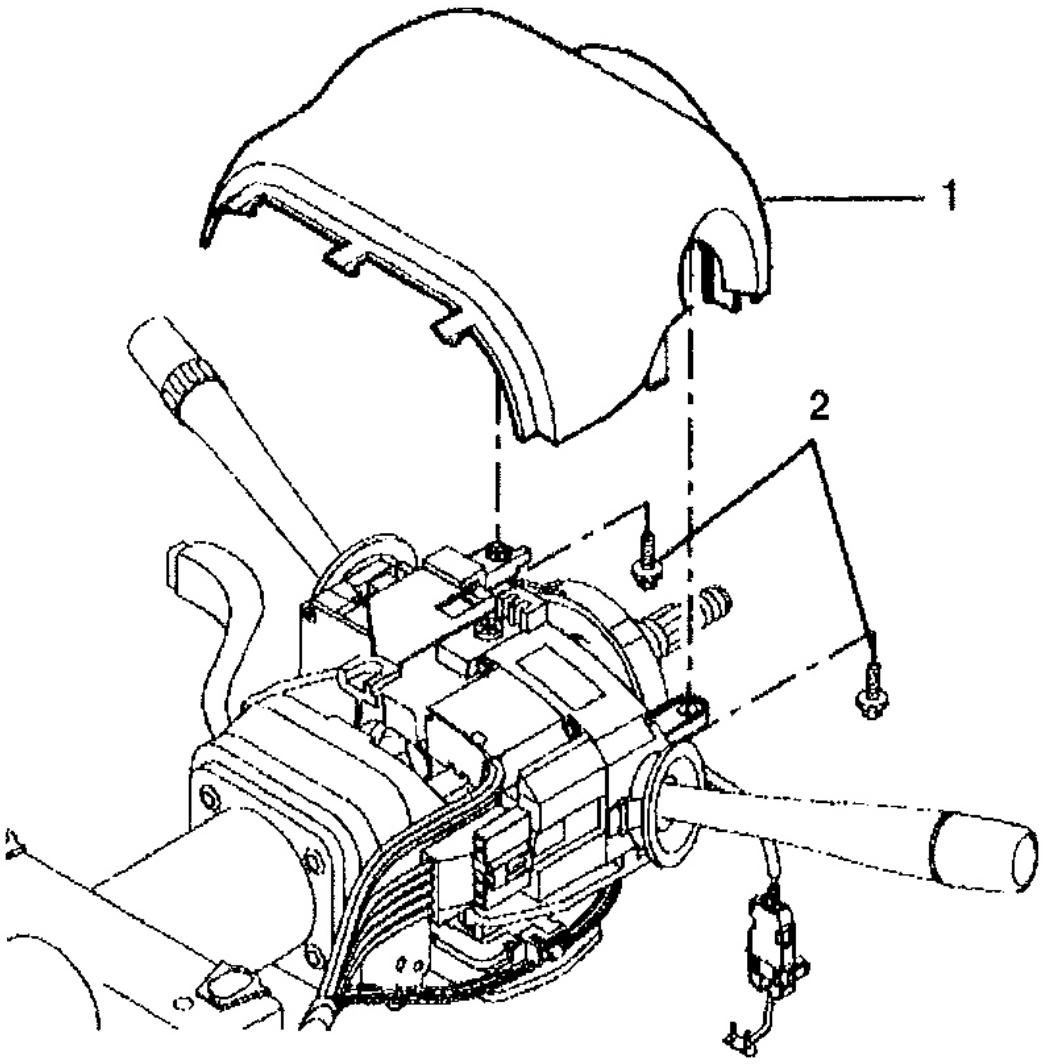


**Fig. 43: Installing Upper Trim Cover**
**Courtesy of GENERAL MOTORS CORP.**

3. Perform the following steps to install the lower trim cover:

   **3.1.** Check that the slots on the lower trim cover engage with the tabs on the upper trim cover.

   **3.2.** Tilt the lower trim cover up and snap the trim covers together.

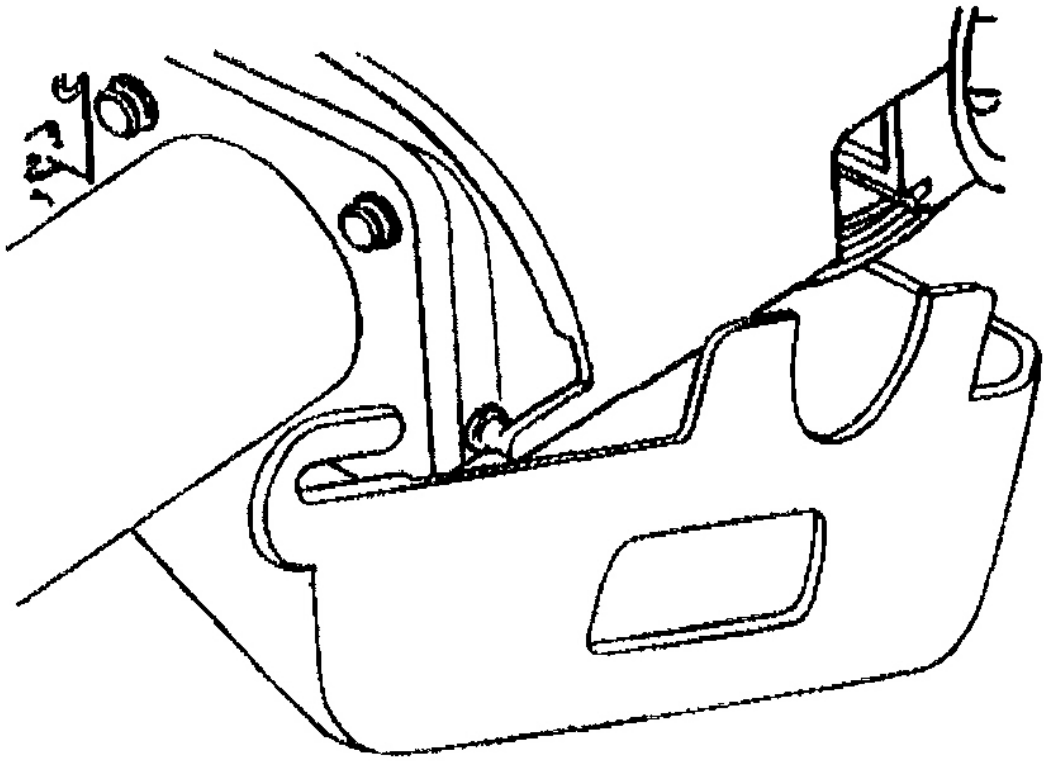

G01727510

**Fig. 44: Installing Lower Trim Cover**
**Courtesy of GENERAL MOTORS CORP.**

4. Install the 2 TORX(R) head screws (1) to the lower trim cover (2).

   **Tighten**

   Tighten the screws to 4 N.m (35 lb in).

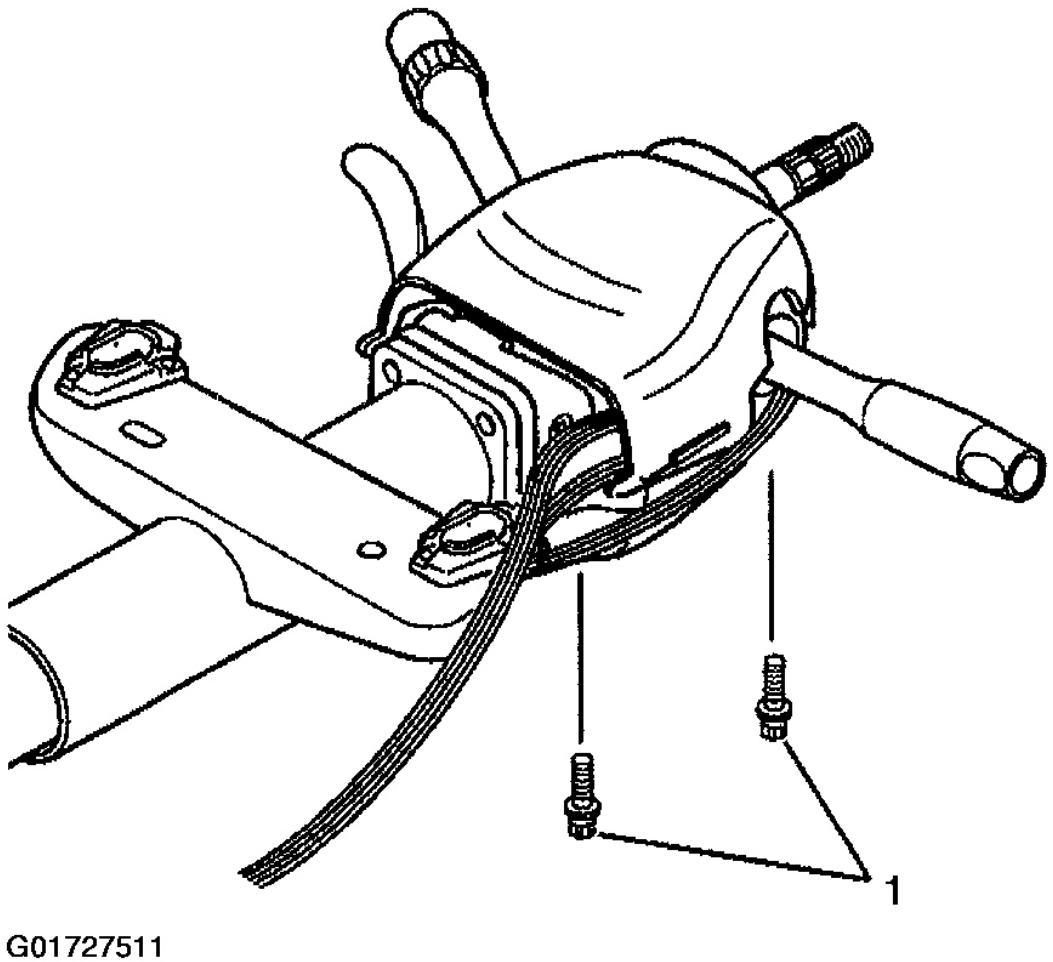


**Fig. 45: Installing Lower Trim Cover Screws**
**Courtesy of GENERAL MOTORS CORP.**

5. Install the driver knee bolster trim panel. Refer to **INSTRUMENT PANEL ACCESSORY TRIM PLATE & KNEE BOLSTER PANEL** .
6. Install the tilt lever. Refer to **Tilt Lever Replacement - On Vehicle** . .
7. Install the steering wheel. Refer to **Steering Wheel Replacement** . .
8. Enable the SIR system. Refer to **ACTIVATING SYSTEM** .

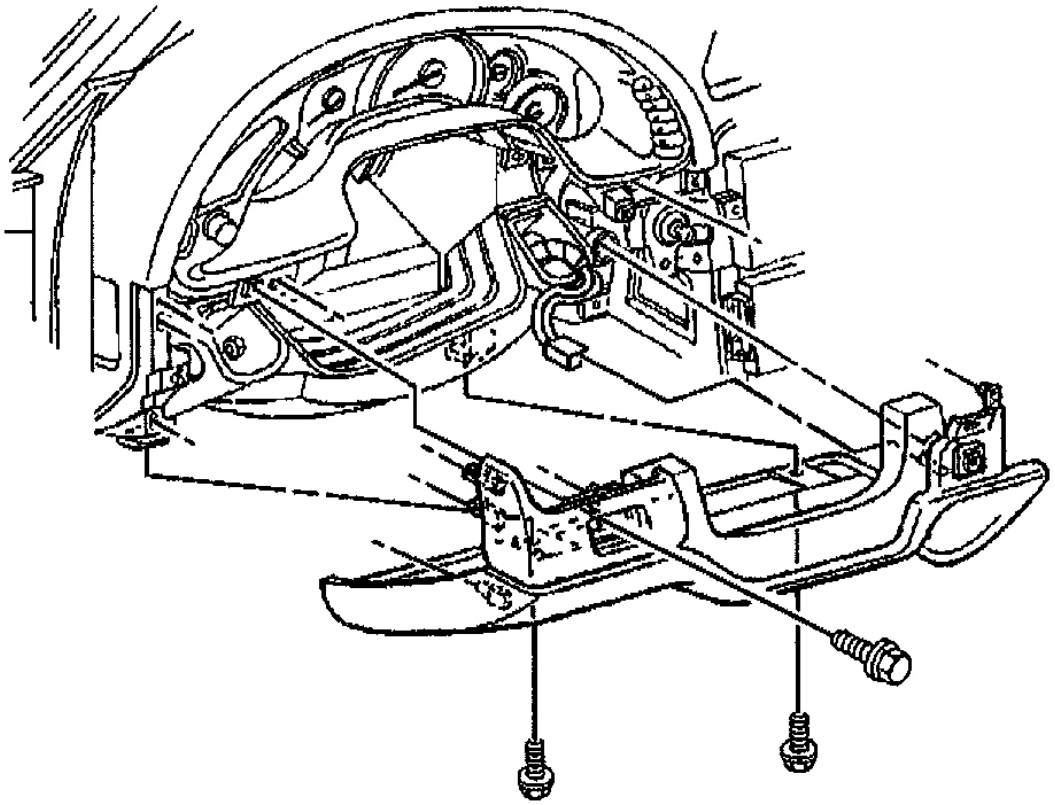


**Fig. 46: Installing Driver Knee Bolster Trim Panel Bolts**
**Courtesy of GENERAL MOTORS CORP.**

**STEERING COLUMN TRIM COVERS REPLACEMENT - ON VEHICLE (TELESCOPING)**

**Removal Procedure**

1. Disable the SIR system. Refer to **DISABLING SYSTEM** .
2. Remove the steering wheel from the steering column. Refer to **Steering Wheel Replacement** . .
3. Remove the tilt lever from the steering column. Refer to **Tilt Lever Replacement - On Vehicle** . .
4. Remove the driver knee bolster trim panel. Refer to **INSTRUMENT PANEL ACCESSORY TRIM PLATE & KNEE BOLSTER PANEL** .
5. Remove the 2 TORX(R) head screws from the lower trim cover.

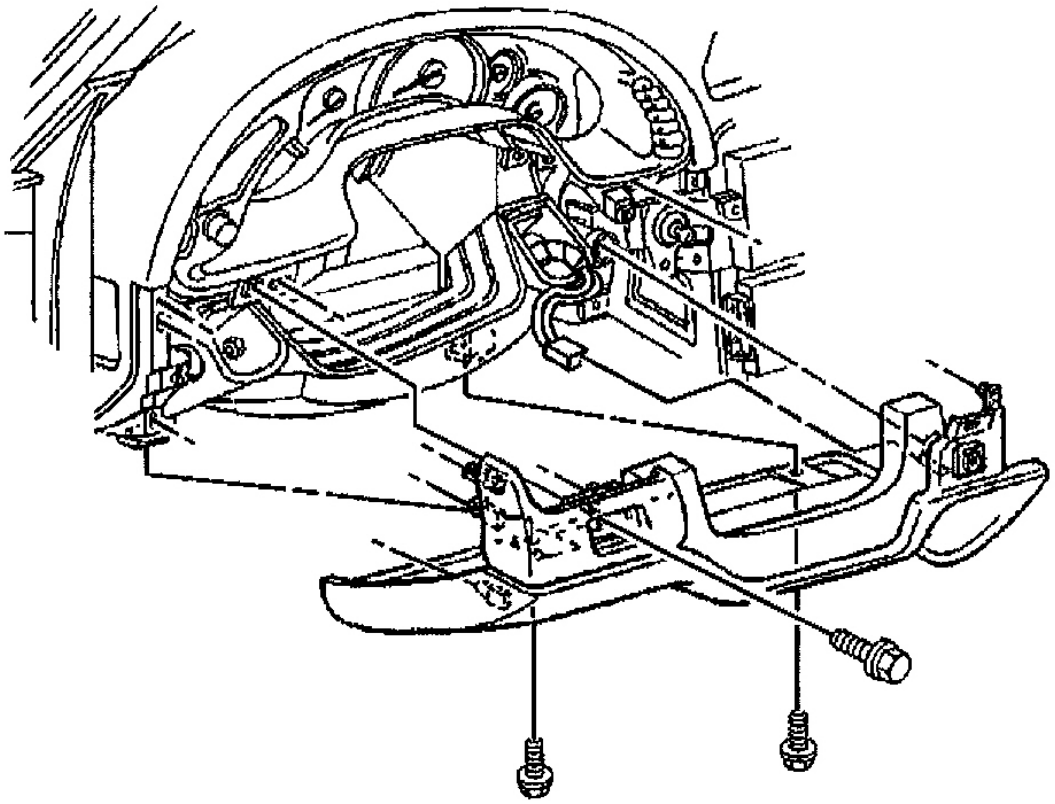

G01727513

**Fig. 47: Removing Driver Knee Bolster Trim Panel Bolts**
**Courtesy of GENERAL MOTORS CORP.**

6. Separate the lower trim cover tabs from the slots in the steering column close out trim cover.
7. Remove the telescope actuator assembly switch wires routed in clips along the bottom of the lower trim cover.
8. From the inside of the lower trim cover, push out the telescope actuator assembly switch.
9. Disconnect the telescope actuator assembly switch connector from the instrument panel wiring harness.
10. Remove the telescope actuator assembly switch and wires from the trim cover.
11. Remove the lower trim cover.

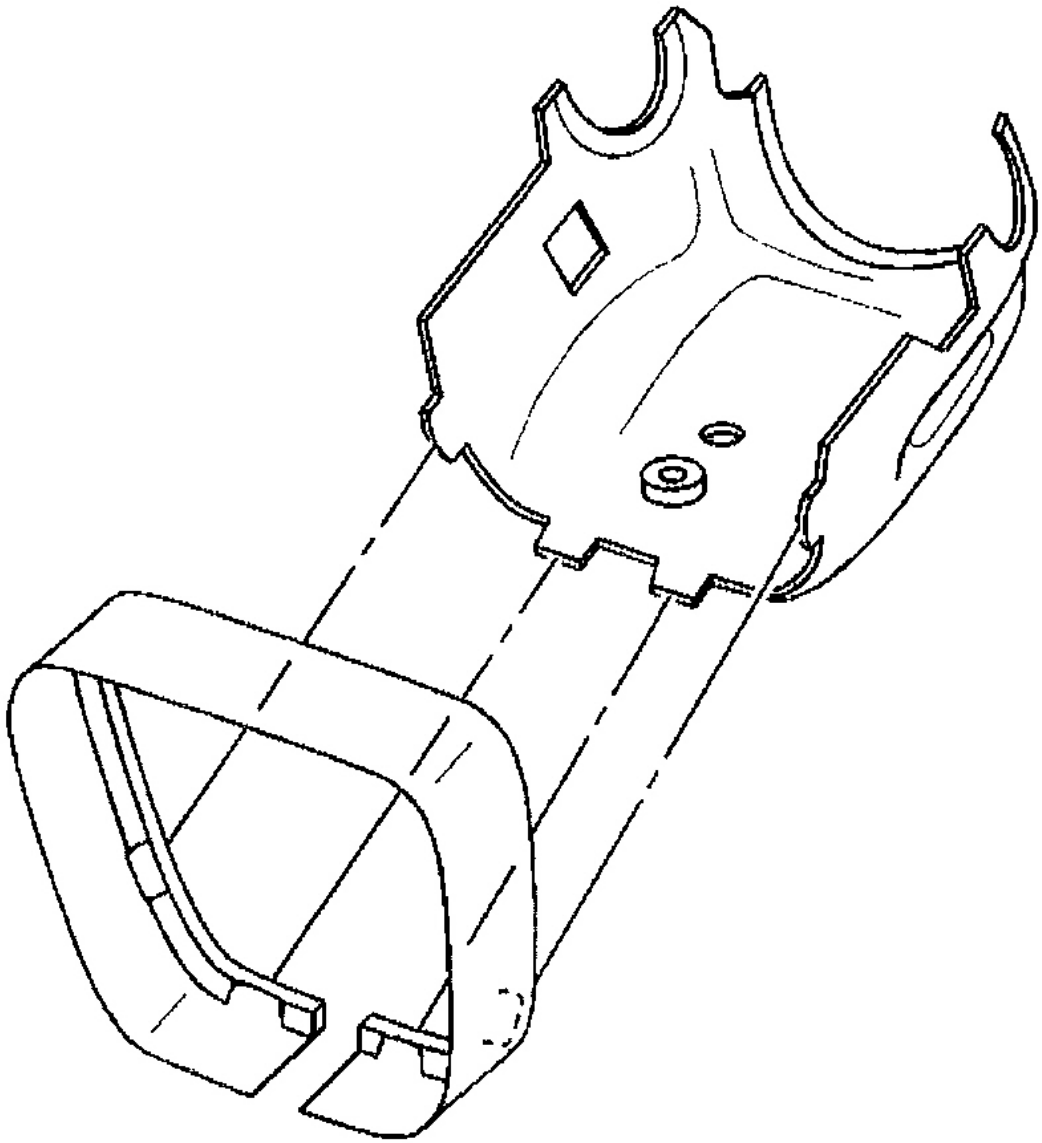


**Fig. 48: Removing Lower Steering Column Trim Cover**
**Courtesy of GENERAL MOTORS CORP.**

12. Remove the 2 TORX(R) head screws (2) from the upper trim cover (1).
13. Separate the upper trim cover tabs from the slots in the steering column close out trim cover.
14. Remove the upper trim cover (1).

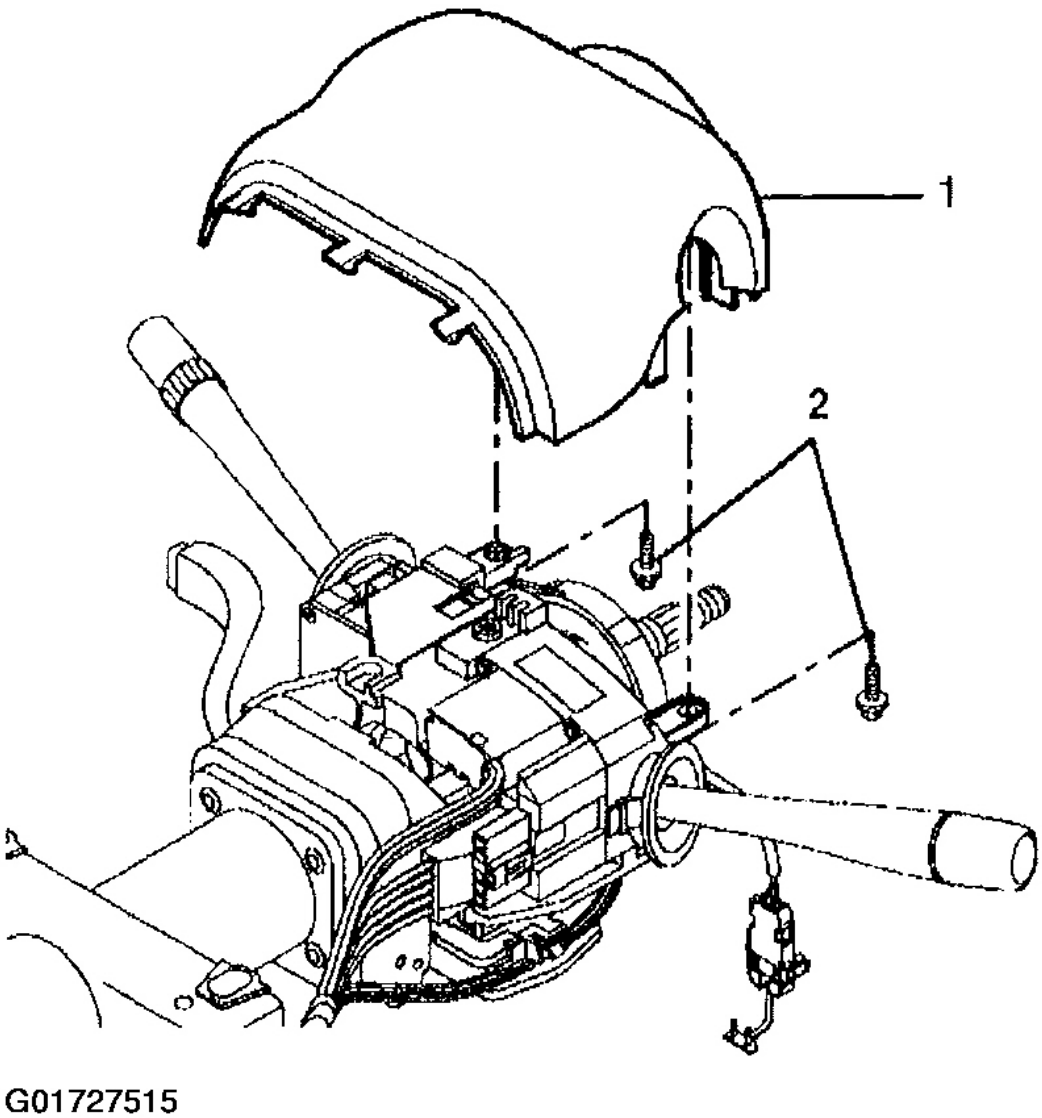


**Fig. 49: Removing Upper Steering Column Trim Covers Screws**
**Courtesy of GENERAL MOTORS CORP.**

**Installation Procedure**

1. Install the upper trim cover to the steering column close out trim cover.
2. Check to ensure that the tabs on the upper trim cover are fully engaged with the slots in the steering column close out trim cover.

**CAUTION: Refer to FASTENER NOTICE .**

3. Secure the upper trim cover (1) with 2 TORX(R) head screws (2).

   **Tighten**

   Tighten the upper trim cover screws to 1.4 N.m (12 lb in).

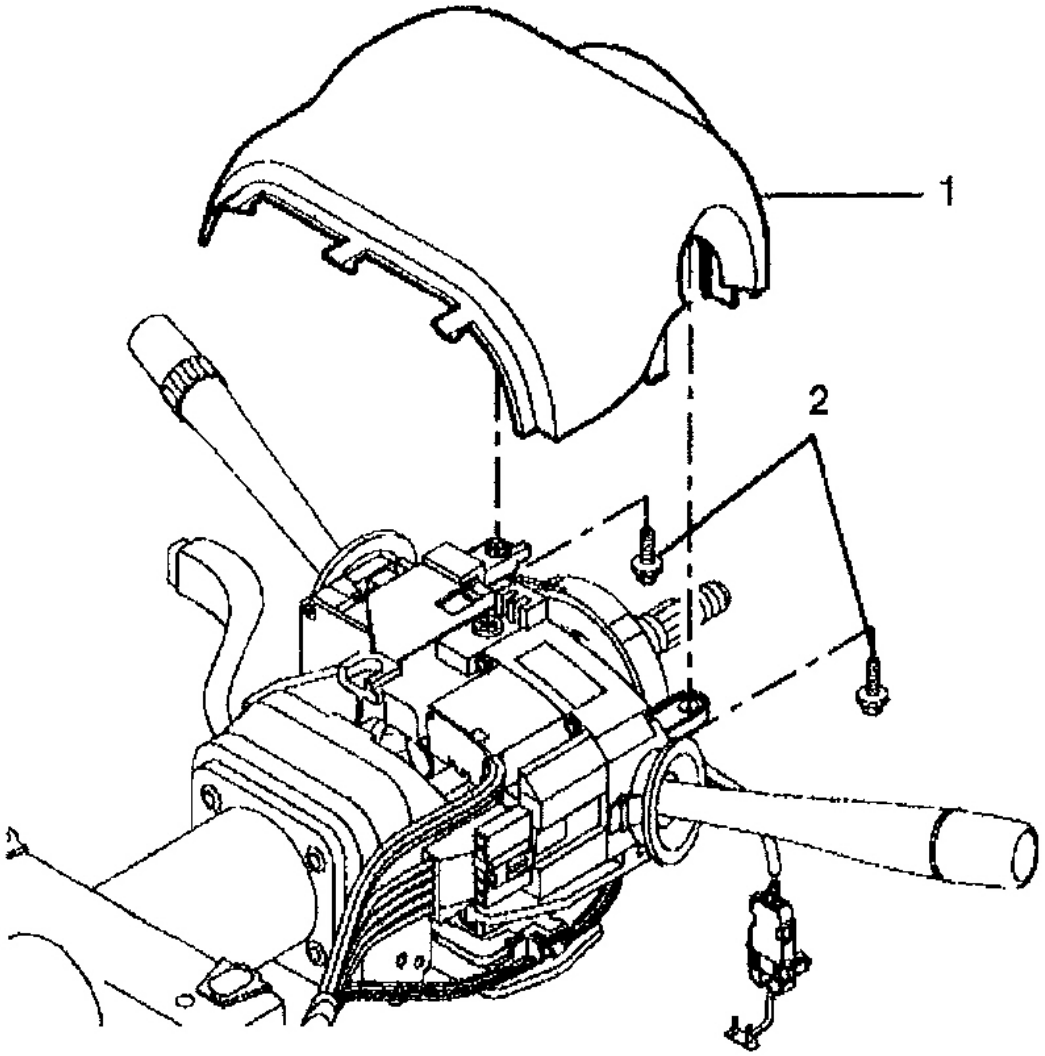


G01727516

**Fig. 50: Installing Upper Steering Column Trim Covers Screws**

**Courtesy of GENERAL MOTORS CORP.**

4. Install the telescope actuator assembly switch and wires through the opening in the lower trim cover.
5. Snap the wiring to the retaining clips in the lower trim cover.
6. Route the telescope actuator assembly switch wires along the column and strap.
7. Connect the telescope actuator assembly switch connector to the instrument panel wiring harness.
8. Install the lower trim cover tabs into the steering column close out trim cover.
9. Check to ensure that the tabs on the lower trim cover are fully engaged with the slots in the steering column close out trim cover.

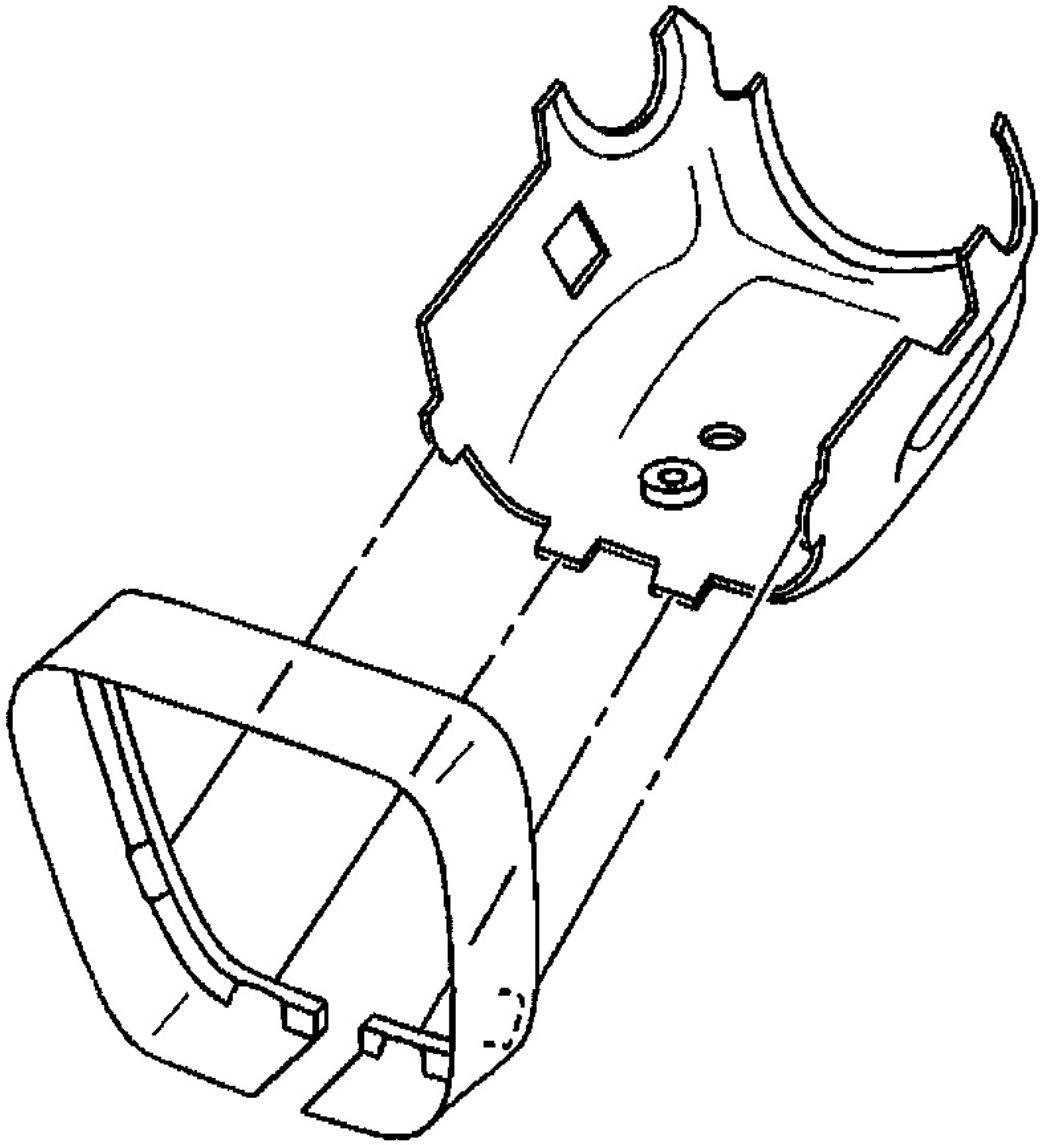


**Fig. 51: Installing Lower Steering Column Trim Cover**
**Courtesy of GENERAL MOTORS CORP.**

10. Install the 2 TORX(R) head screws (1) to the lower trim cover.

**Tighten**

Tighten the 2 TORX(R) head screws to 4.0 N.m (35 lb in).

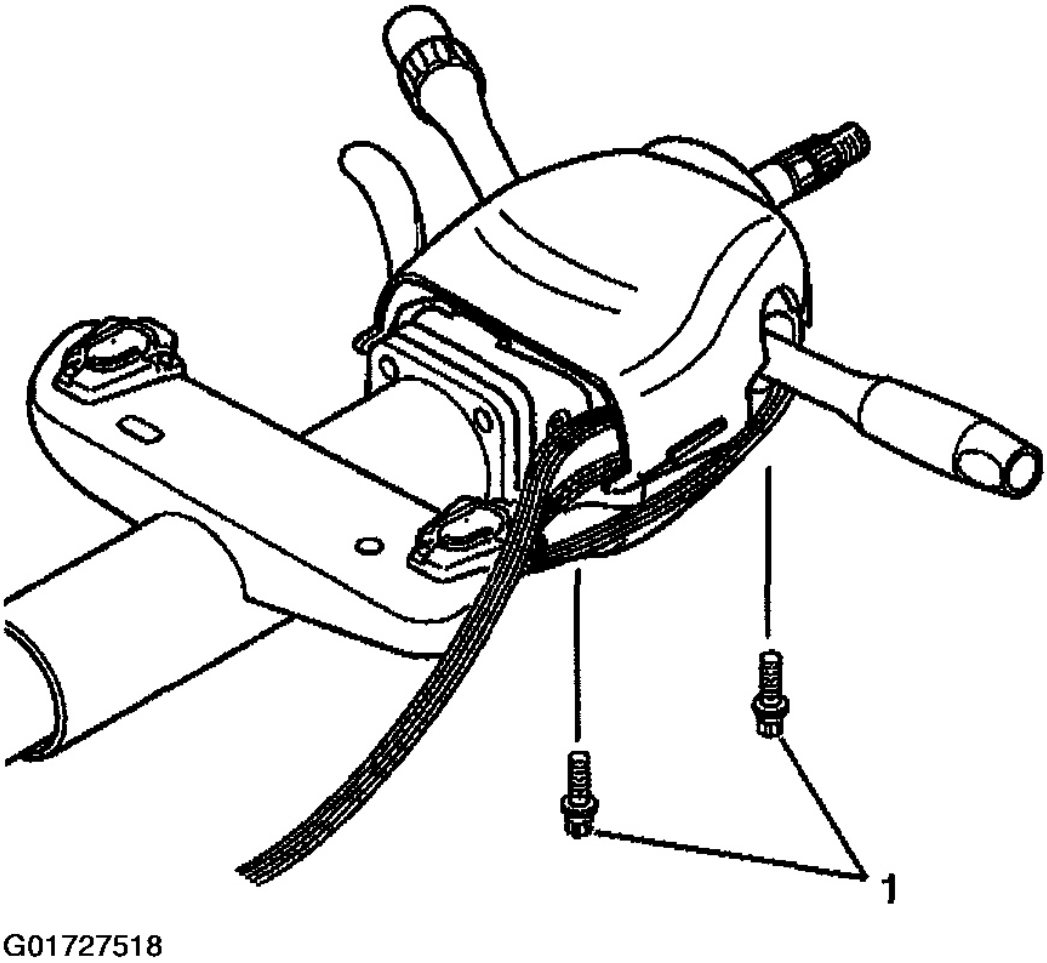


**Fig. 52: Installing Lower Steering Column Trim Cover Screws**
**Courtesy of GENERAL MOTORS CORP.**

11. Install the driver knee bolster trim panel. Refer to **INSTRUMENT PANEL ACCESSORY TRIM PLATE & KNEE BOLSTER PANEL** .
12. Install the tilt lever. Refer to **Tilt Lever Replacement - On Vehicle** . .
13. Install the steering wheel. Refer to **Steering Wheel Replacement** . .
14. Enable the SIR system. Refer to **ACTIVATING SYSTEM** .

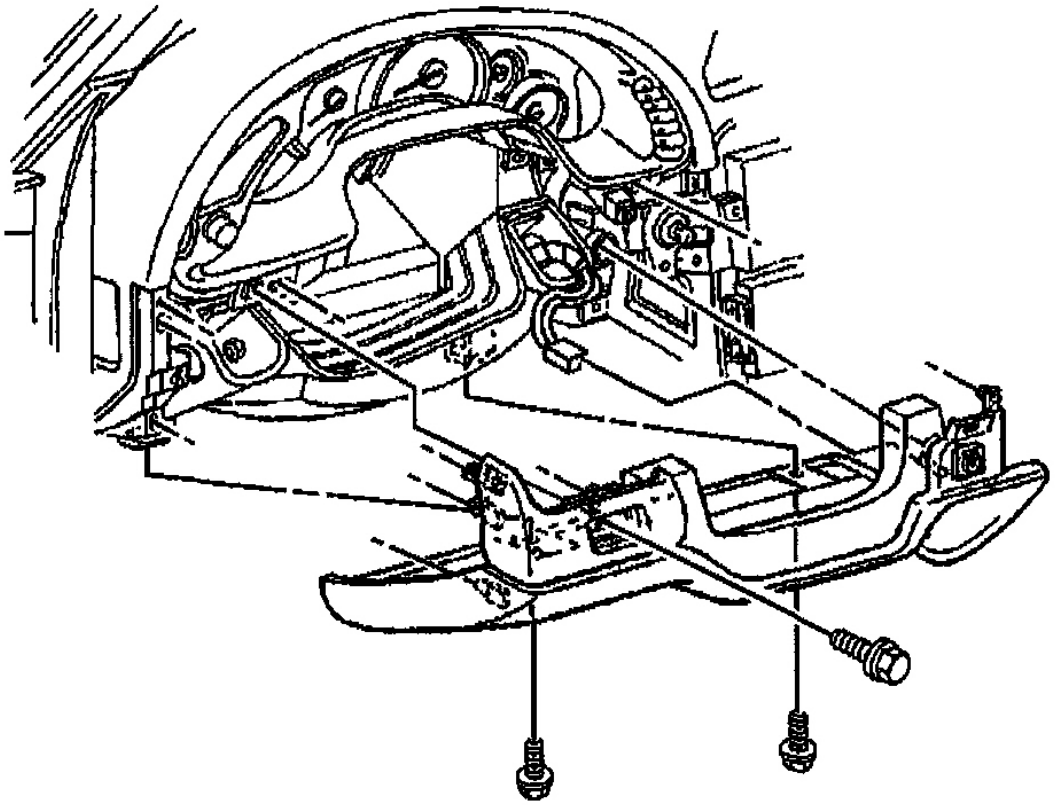

G01727519

**Fig. 53: Installing Driver Knee Bolster Trim Panel Bolts**
**Courtesy of GENERAL MOTORS CORP.**

## TELESCOPING STEERING COLUMN CALIBRATION

### Telescoping Soft Stops

After replacement of the seat control module, it is necessary to program the telescoping soft stops. Each soft stop is a programmable end of travel that is set approximately 0.5 inch (1.3 cm) from the mechanical end of travel. The steering column has a soft stop set at each end of the telescoping in/out movement. The system uses soft stops to prevent wear on the system by ensuring that the steering column movement stops before it reaches its mechanical end of travel in any direction. The soft stops are initially programmed at the factory. The stop positions may be reprogrammed, which is necessary any time the seat control module is replaced, as described in the following procedure.

### Telescoping Soft Stop Programming Procedure

1. Turn ignition to ON, leaving the engine off.
2. To set the telescoping in soft stop, press the telescoping COLUMN IN switch at least eight times or until the column moves, then release the switch.
3. Press the telescoping COLUMN IN switch and hold the switch until the column travels all the way up, and continue to hold the switch about a second after motion stops at the mechanical end of travel. The soft stop for the column in position is now set. The seat control module automatically goes back to the normal mode of operation.
4. Repeat steps 2 and 3, using the COLUMN OUT switch, to set the column out position soft stop.

**TURN SIGNAL CANCEL CAM & STEERING SHAFT UPPER BEARING SPRING REPLA REPLACEMENT - ON VEHICLE (TELESCOPING COLUMN)**

**Removal Procedure**

1. Remove the upper and lower steering column trim covers. Refer to **Steering Column Trim Covers Replacement - On Vehicle (Non-Telescoping)** or **Steering Column Trim Covers Replacement - On Vehicle (Telescoping)** .
2. Remove the turn signal cancel cam assembly (4), upper bearing spring, upper bearing inner race seat and inner race from the steering shaft. Refer to **Steering Column Tilt Head Housing - Assemble - Off Vehicle (Telescoping)** or **Steering Column Tilt Head Housing - Assemble - Off Vehicle (Non- Telescoping)** .

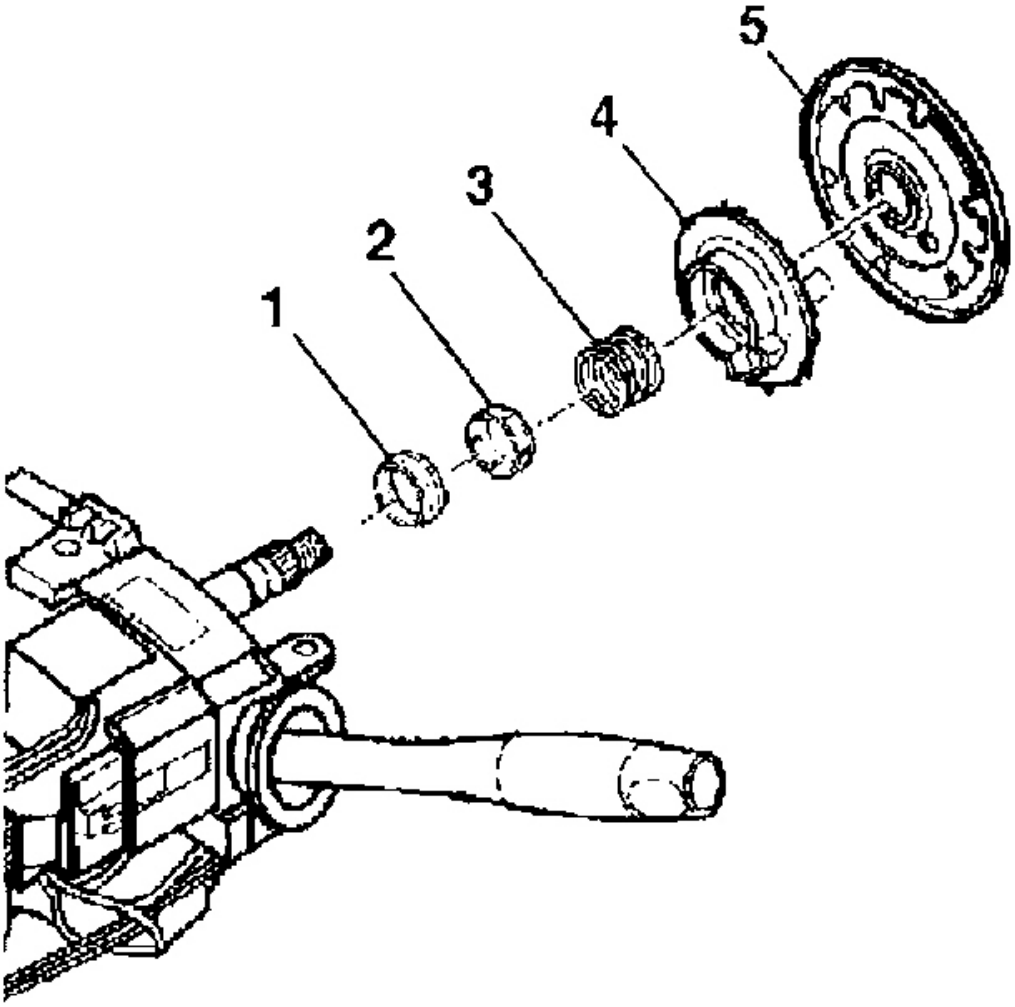


G01727520

**Fig. 54: Removing Turn Signal Cancel Cam Assembly**
**Courtesy of GENERAL MOTORS CORP.**

**Installation Procedure**

1. Install the inner race, upper bearing inner race seat, upper bearing spring and turn signal cancel cam assembly (4) to the steering shaft. Refer to **Electronic Column Lock Module - Assemble - Off Vehicle (Telescoping Column)** or **Electronic Column Lock Module - Assemble - Off Vehicle (Non-Telescoping Column)** .

2. Install the upper and lower steering column trim covers. Refer to **Steering Column Trim Covers Replacement - On Vehicle (Non-Telescoping)** or **Steering Column Trim Covers Replacement - On Vehicle (Telescoping)** . .

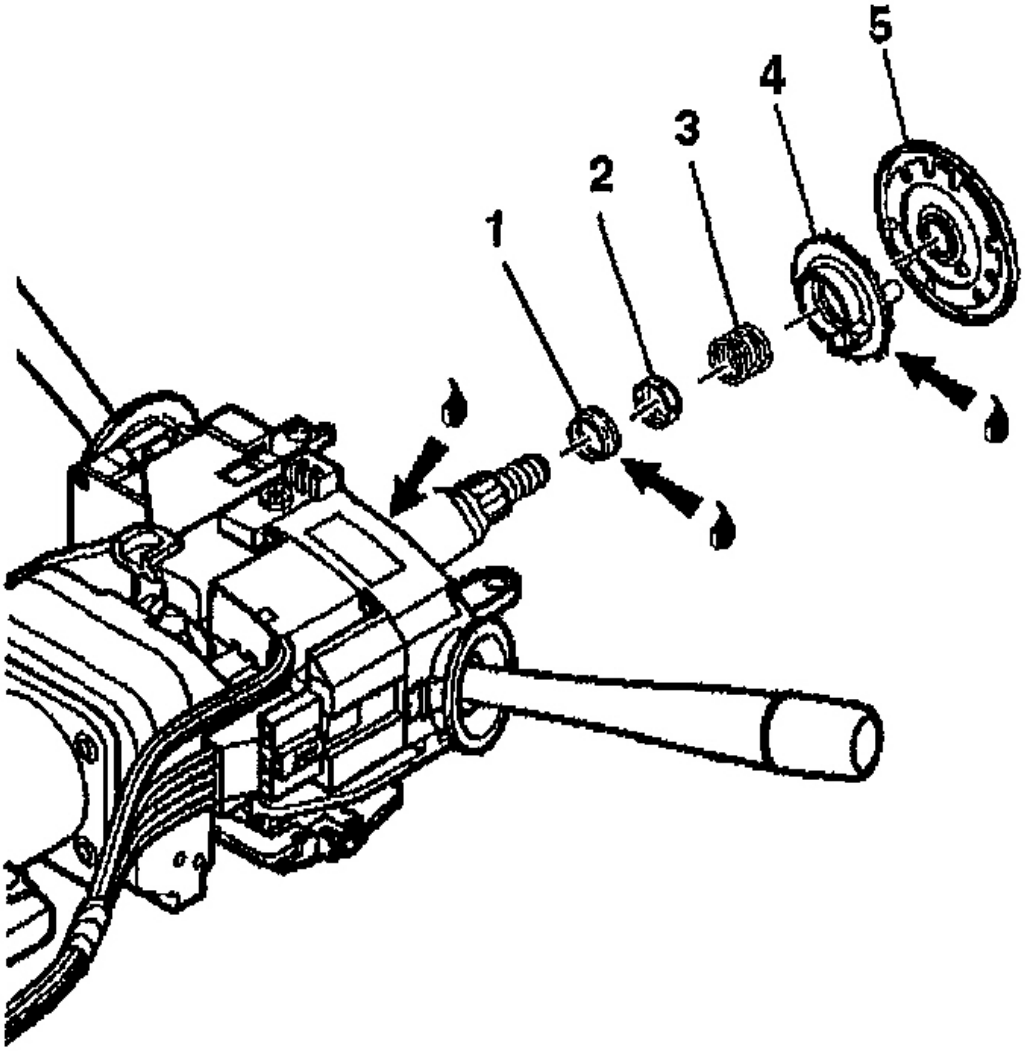


**Fig. 55: Installing Turn Signal Cancel Cam Assembly**
**Courtesy of GENERAL MOTORS CORP.**

**TURN SIGNAL CANCEL CAM & STEERING SHAFT UPPER BEARING SPRING REPLA**

## REPLACEMENT - ON VEHICLE (NON-TELESCOPING COLUMN)

### Removal Procedure

1. Remove the upper and lower steering column trim covers. Refer to **Steering Column Trim Covers Replacement - On Vehicle (Non-Telescoping)** or **Steering Column Trim Covers Replacement - On Vehicle (Telescoping)** . .
2. Remove the turn signal cancel cam assembly (4), upper bearing spring, upper bearing inner race seat and inner race from the steering shaft. Refer to **Steering Column Tilt Head Housing - Assemble - Off Vehicle (Telescoping)** or **Steering Column Tilt Head Housing - Assemble - Off Vehicle (Non- Telescoping)** . .

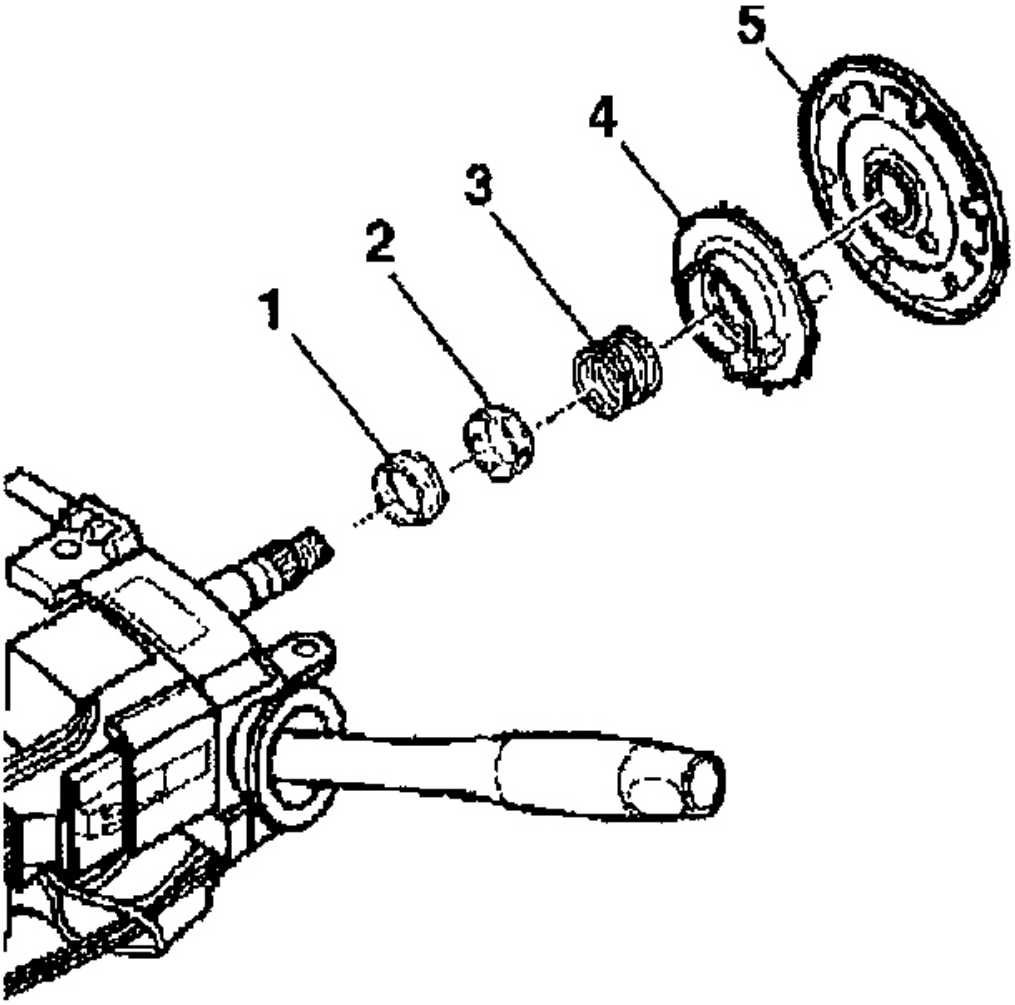


G01727522

**Fig. 56: Removing Turn Signal Cancel Cam Assembly**
**Courtesy of GENERAL MOTORS CORP.**

**Installation Procedure**

1. Install the inner race, upper bearing inner race seat, upper bearing spring and turn signal cancel cam assembly (4) to the steering shaft. Refer to **Steering Column Tilt Head Housing - Assemble - Off Vehicle (Telescoping)** or **Steering Column Tilt Head Housing - Assemble - Off Vehicle (Non- Telescoping)** .

2. Install the upper and lower steering column trim covers. Refer to **Steering Column Trim Covers Replacement - On Vehicle (Non-Telescoping)** or **Steering Column Trim Covers Replacement - On Vehicle (Telescoping)** . .

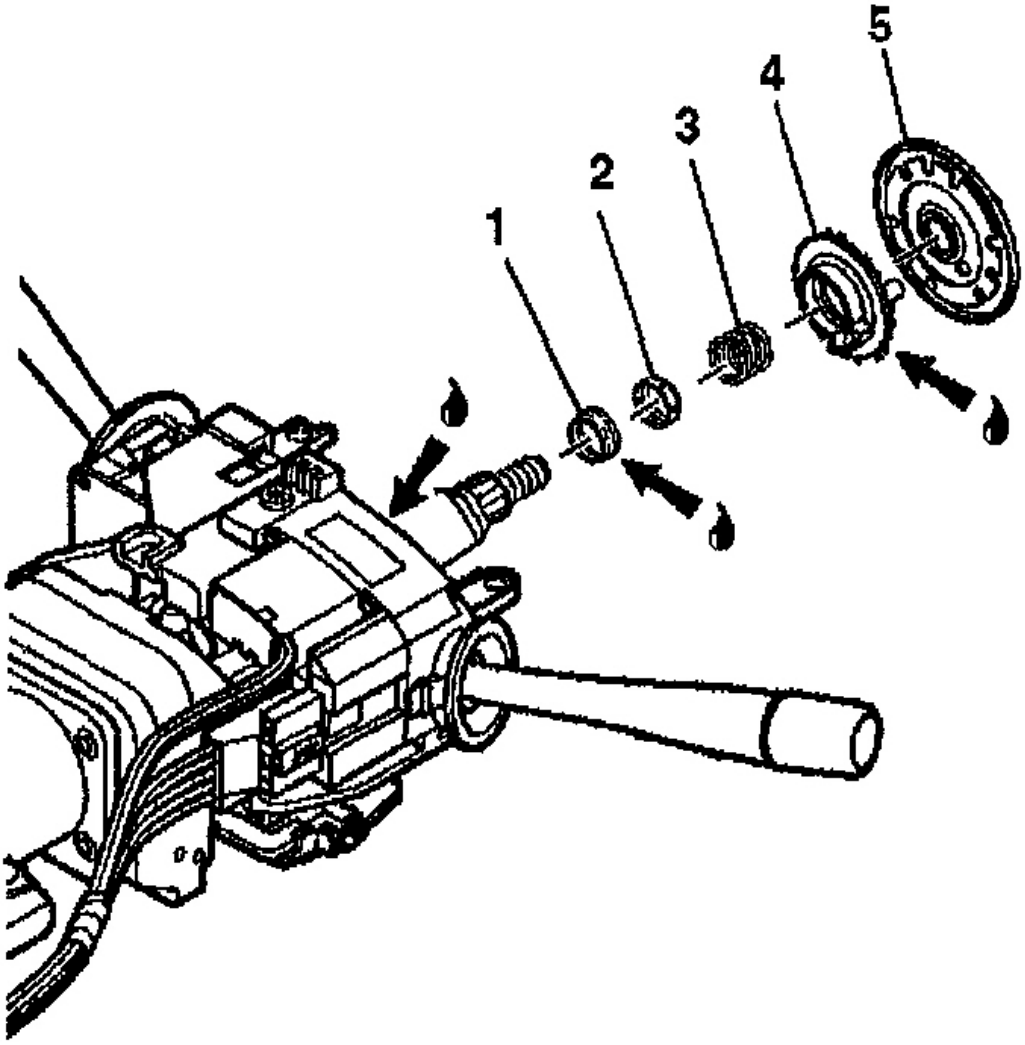


**Fig. 57: Installing Turn Signal Cancel Cam Assembly**
**Courtesy of GENERAL MOTORS CORP.**

**MULTIFUNCTION TURN SIGNAL LEVER REPLACEMENT - ON VEHICLE**

**Removal Procedure**

1. Remove the upper and lower steering column trim covers. Refer to **Steering Column Trim Covers Replacement - On Vehicle (Non-Telescoping)** or **Steering Column Tilt Head Housing - Assemble - Off Vehicle (Non- Telescoping)** . .

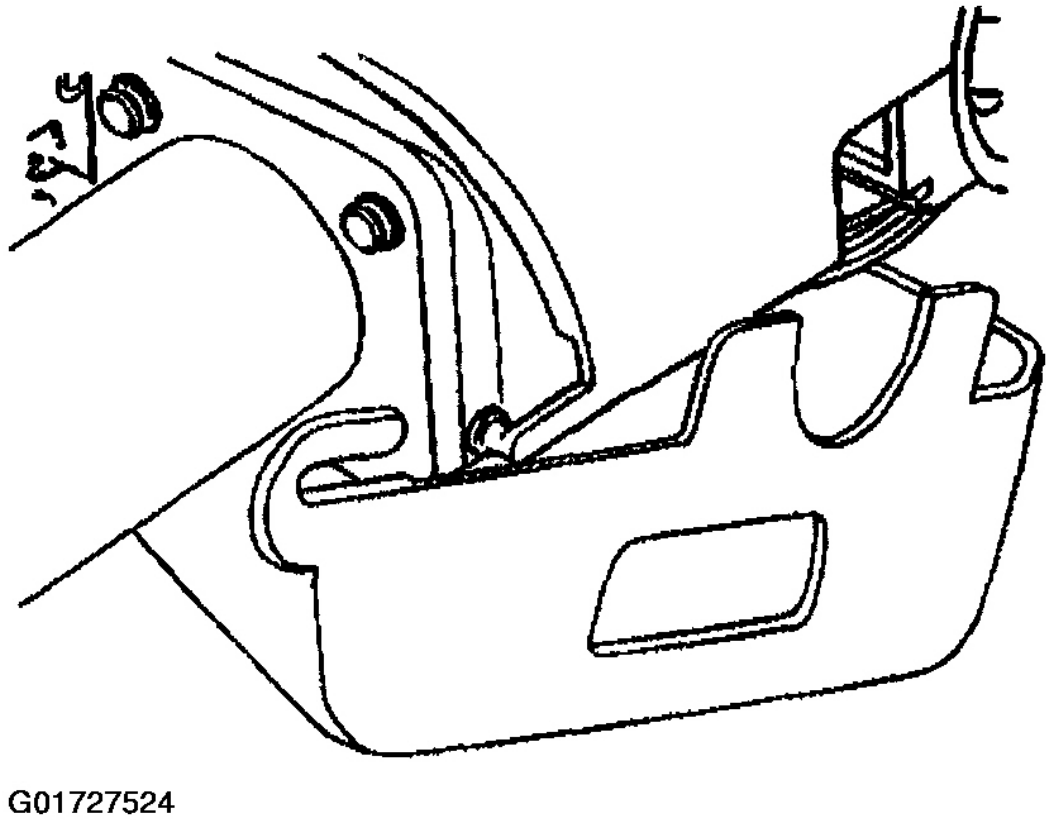


**Fig. 58: Removing Lower Trim Cover**
**Courtesy of GENERAL MOTORS CORP.**

2. Remove the wire harness straps (2) from the steering column tilt head assembly (1) and the column.

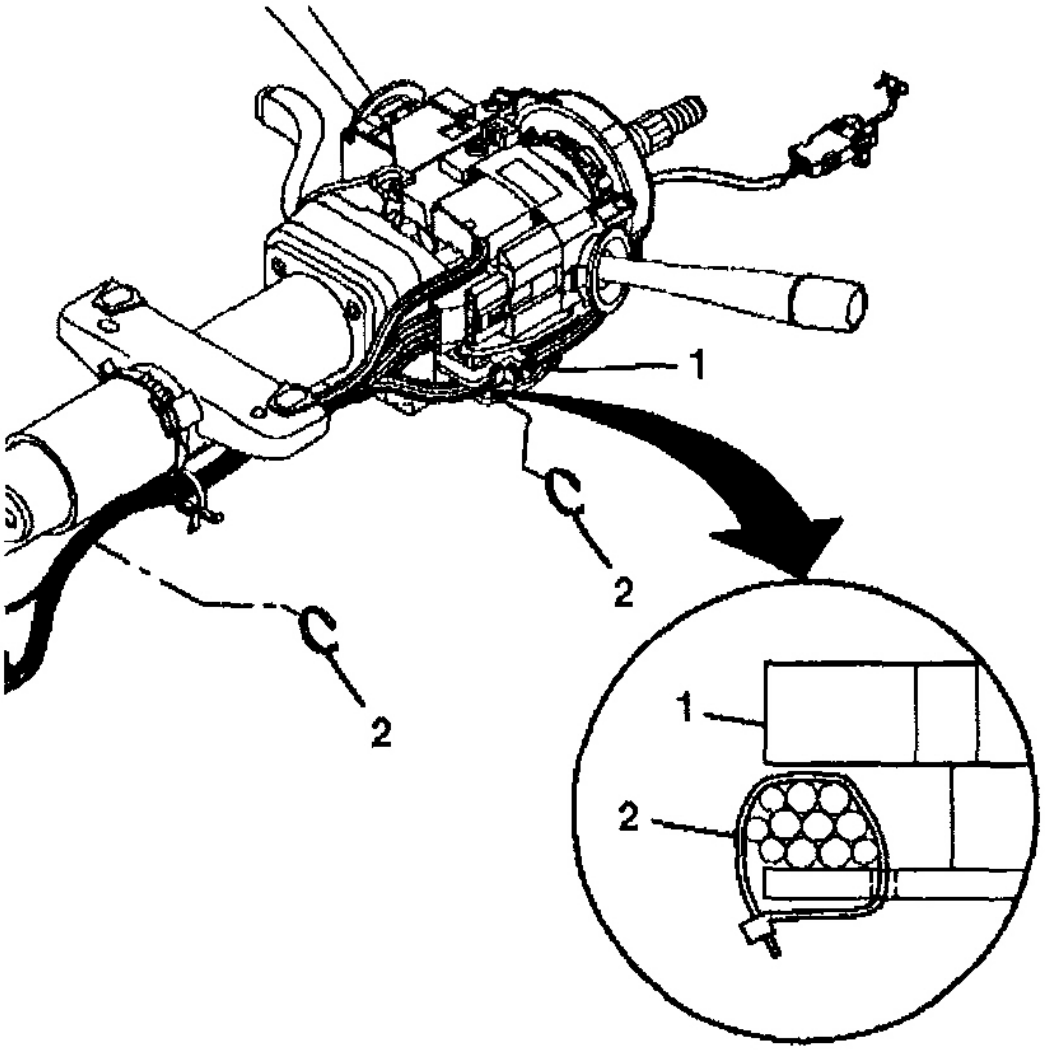


**Fig. 59: Removing Steering Column Tilt Head Assembly Wire Harness Straps**
**Courtesy of GENERAL MOTORS CORP.**

3. Remove the wire harness assembly (1) from the wire harness strap (2).

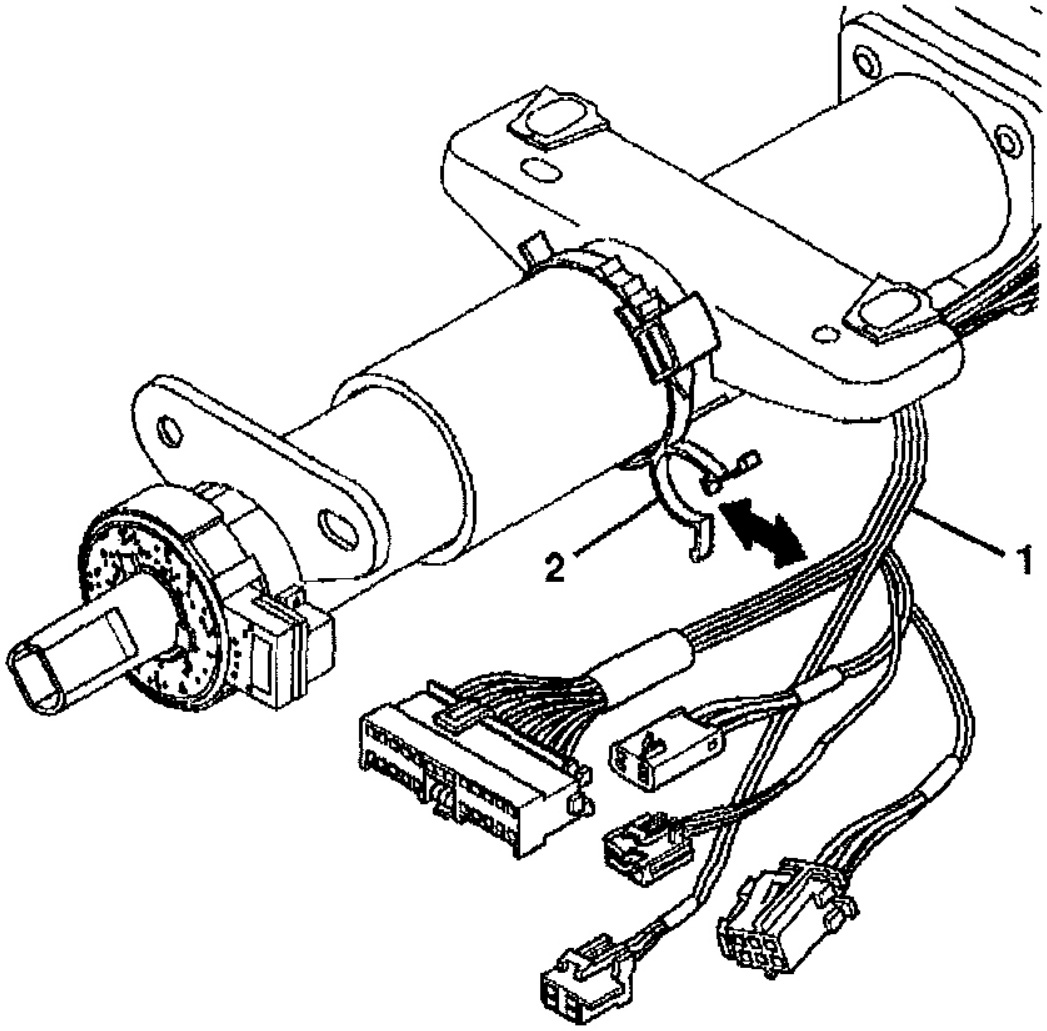


**Fig. 60: Removing Steering Column Tilt Head Assembly Wire Harness**
**Courtesy of GENERAL MOTORS CORP.**

4. Remove the 2 pan head tapping screws (1).

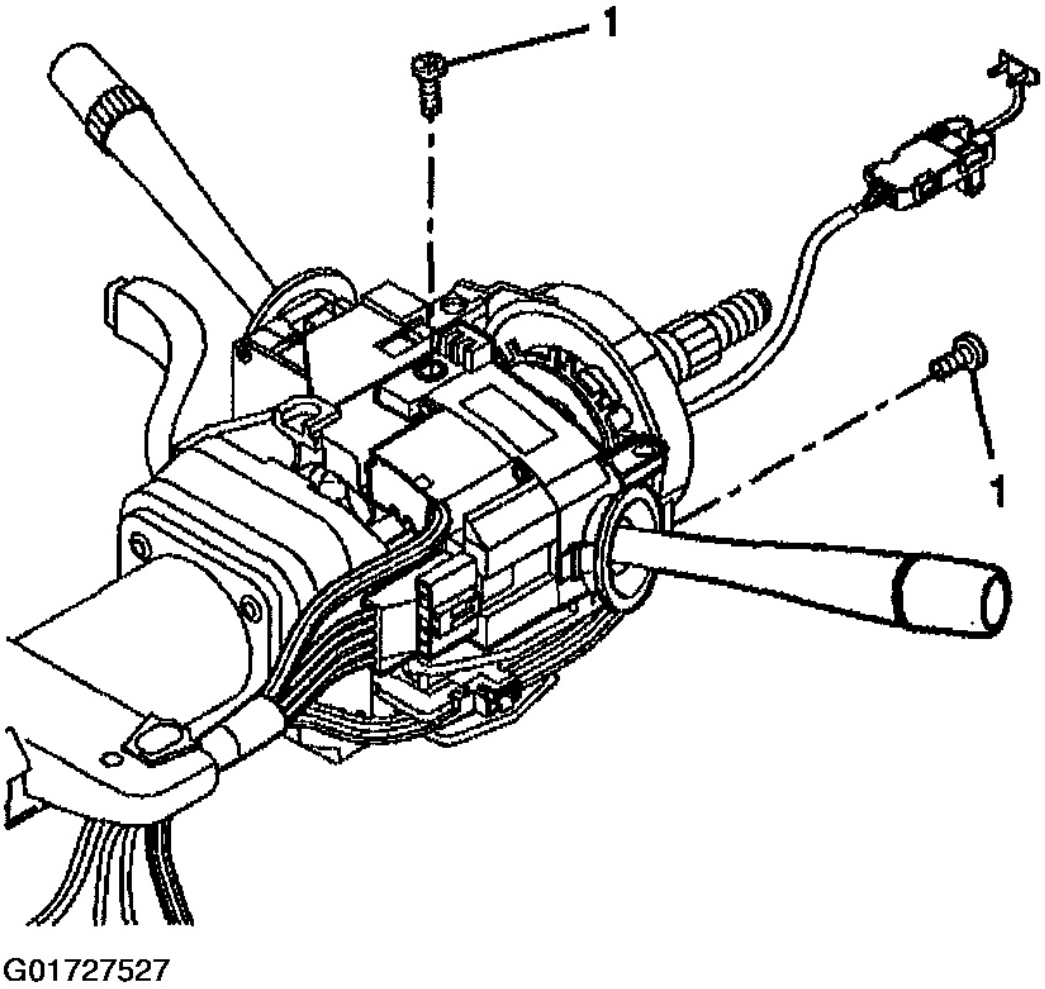


**Fig. 61: Removing Multifunction Turn Signal Switch Assembly Screws**
**Courtesy of GENERAL MOTORS CORP.**

5. Remove the multifunction turn signal switch assembly (1).

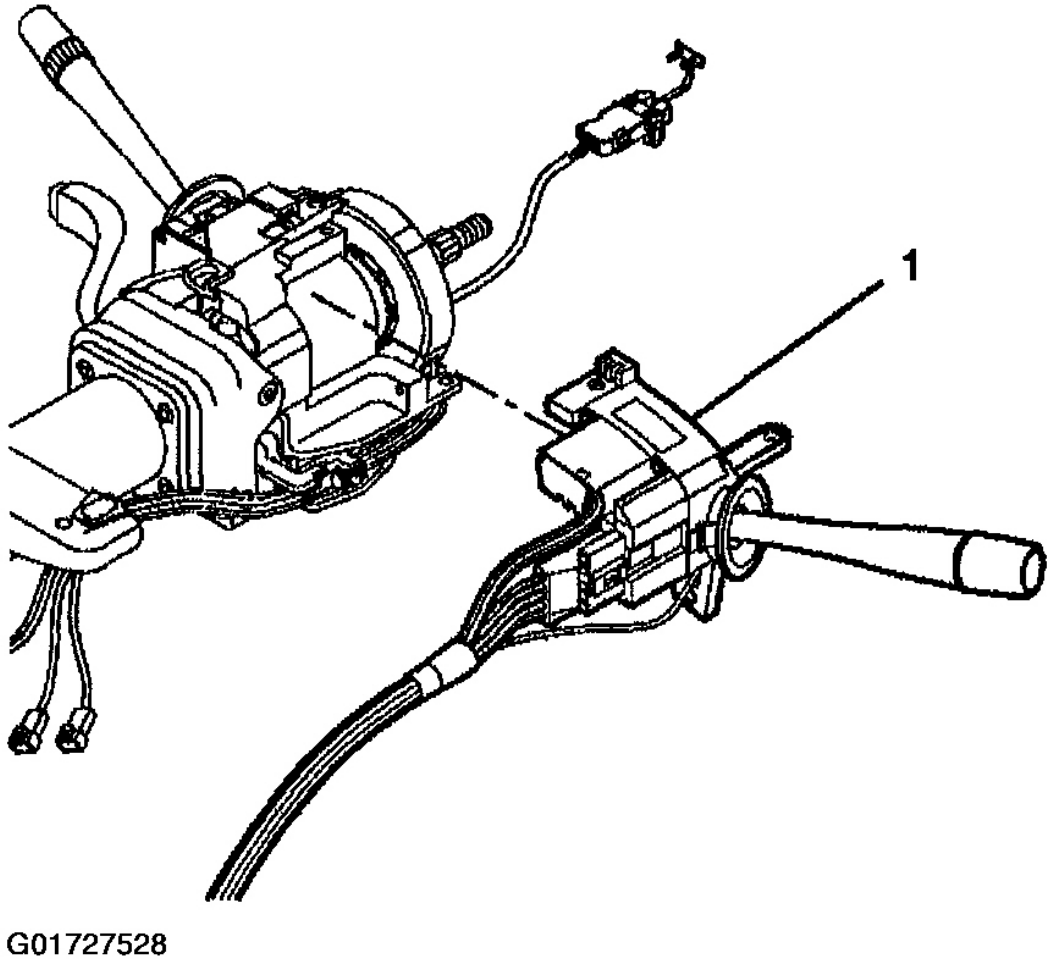


**Fig. 62: Removing Multifunction Turn Signal Switch Assembly**
**Courtesy of GENERAL MOTORS CORP.**

**Installation Procedure**

**Important:** The electrical contact must rest on the turn signal cancel cam assembly.

1. Install the multifunction turn signal switch assembly (1) to the steering column assembly.

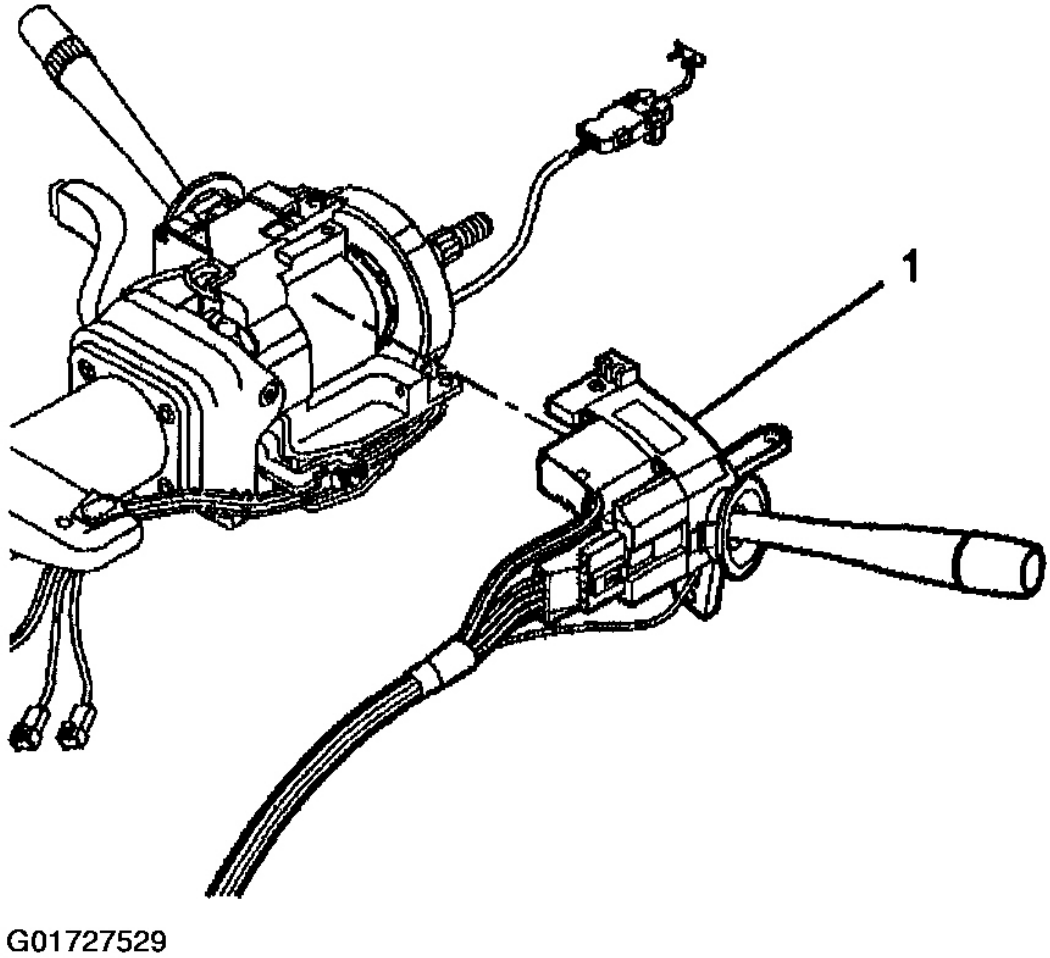


**Fig. 63: Installing Multifunction Turn Signal Switch Assembly**
**Courtesy of GENERAL MOTORS CORP.**

**CAUTION: Refer to FASTENER NOTICE .**

2. Install the 2 pan head tapping screws (1).

**Tighten**

Tighten the screws to 6 N.m (53 lb in).

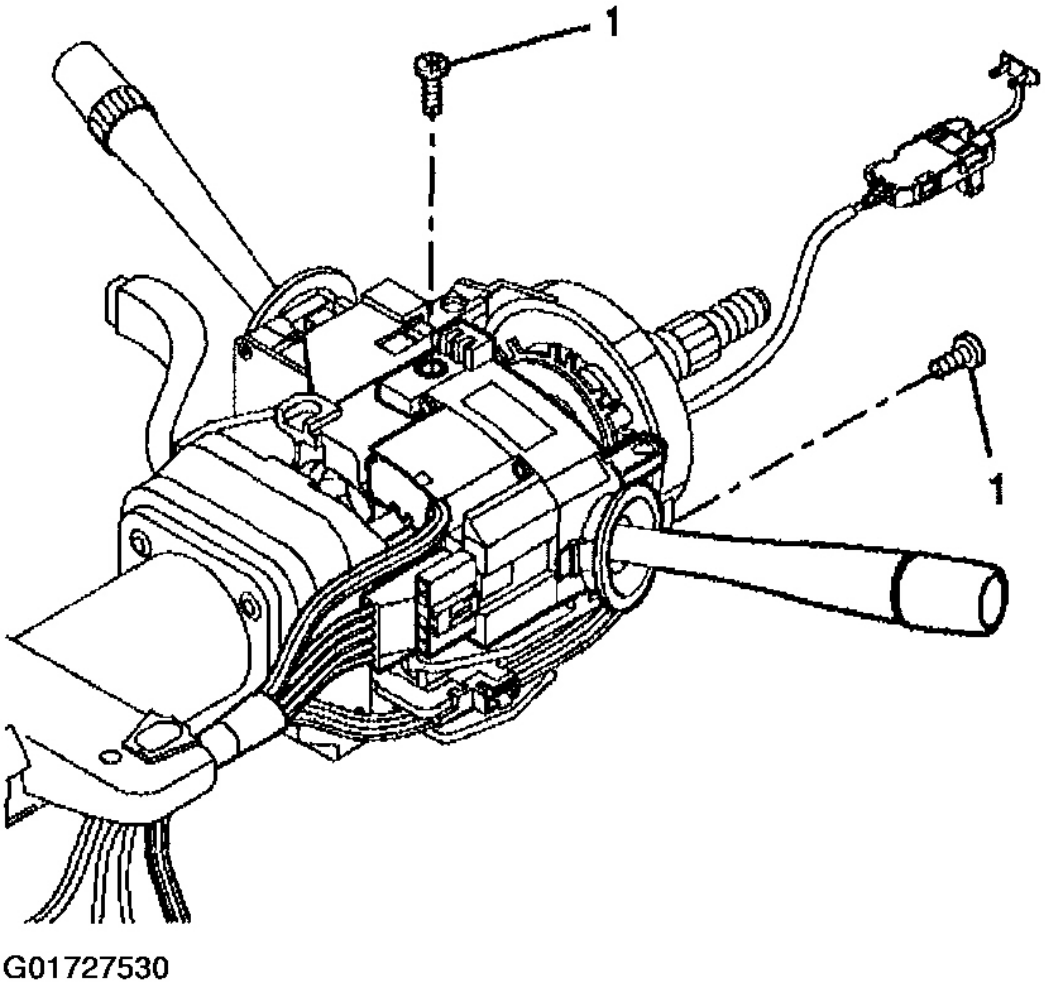


**Fig. 64: Installing Multifunction Turn Signal Switch Assembly Screws**
**Courtesy of GENERAL MOTORS CORP.**

3. Route the wire harness assembly along the steering column jacket assembly.

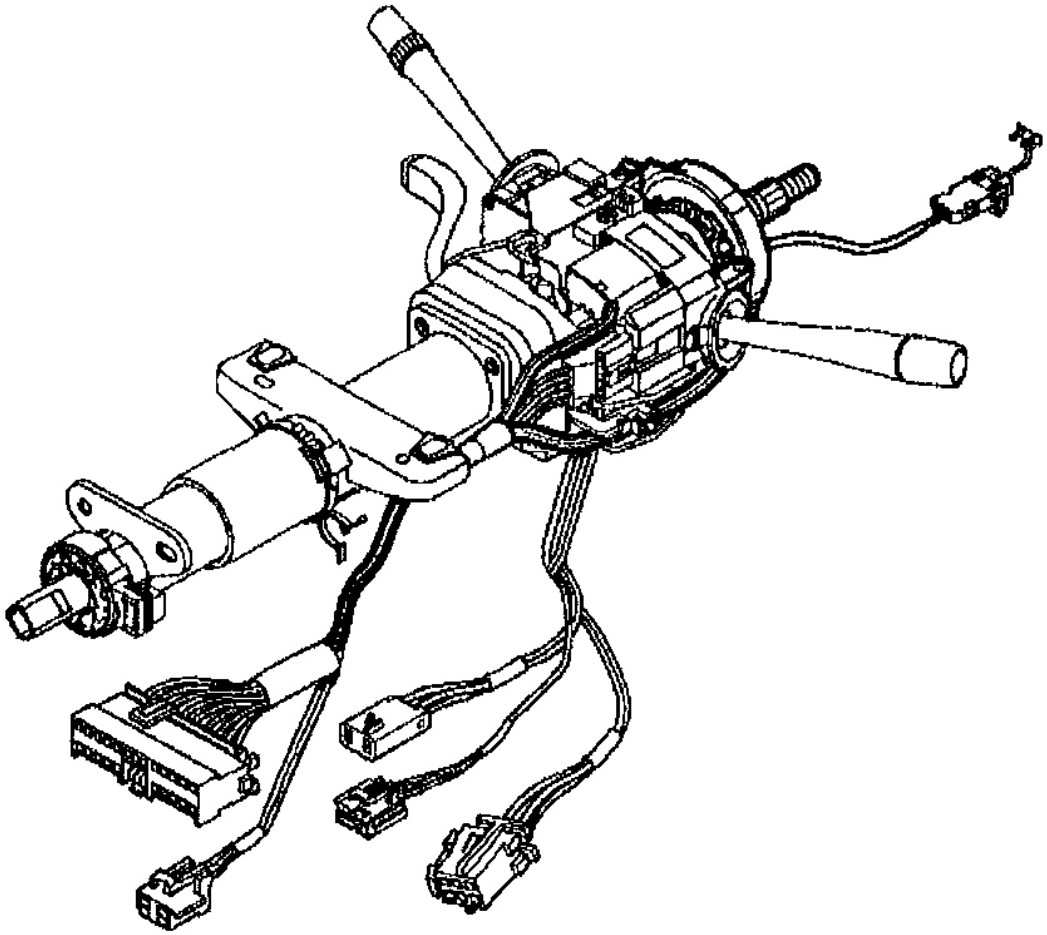


**Fig. 65: Aligning Steering Column Tilt Head Assembly Wire Harness**
**Courtesy of GENERAL MOTORS CORP.**

4. Install the wire harness assembly (1) into the wire harness strap (2).

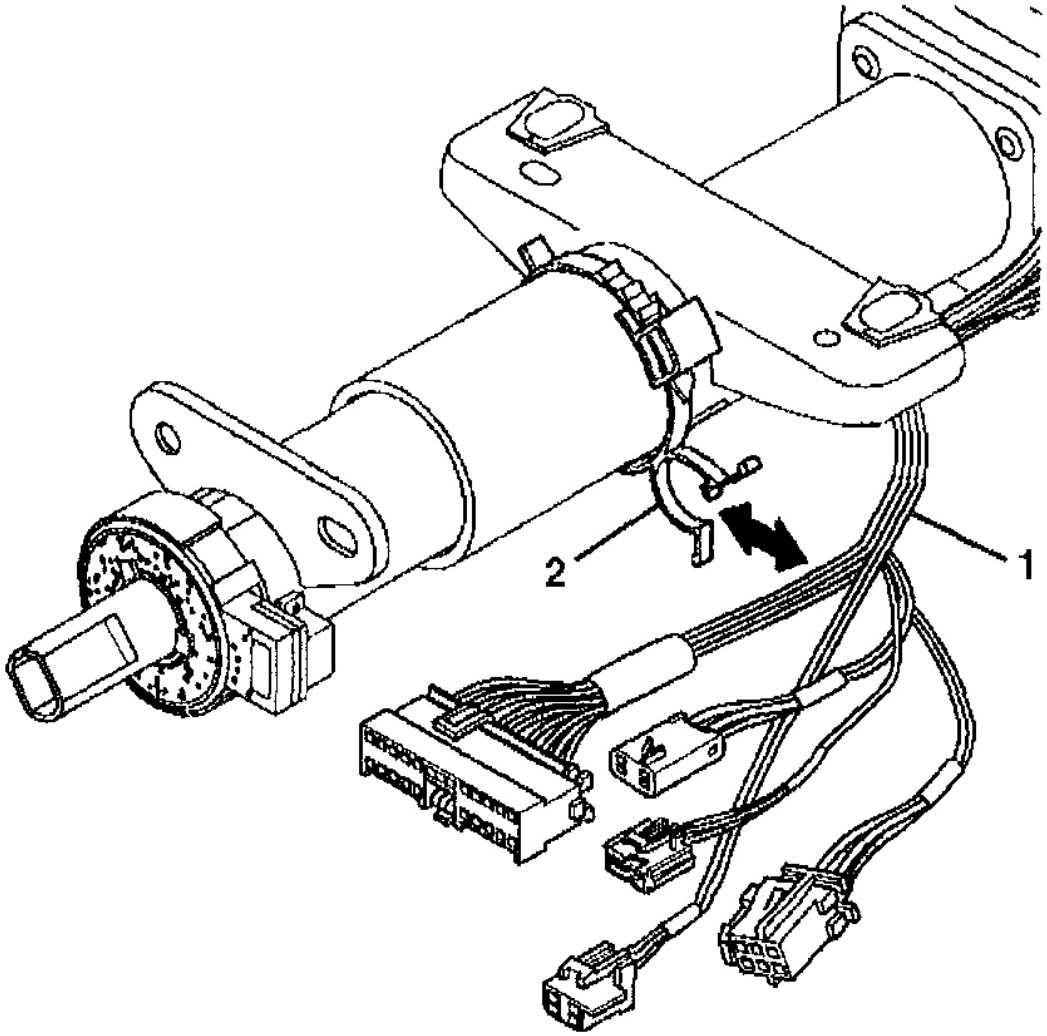


**Fig. 66: Installing Steering Column Tilt Head Assembly Wire Harness**
**Courtesy of GENERAL MOTORS CORP.**

5. Install new wire harness straps (2) to the steering column assembly (1) and the column.

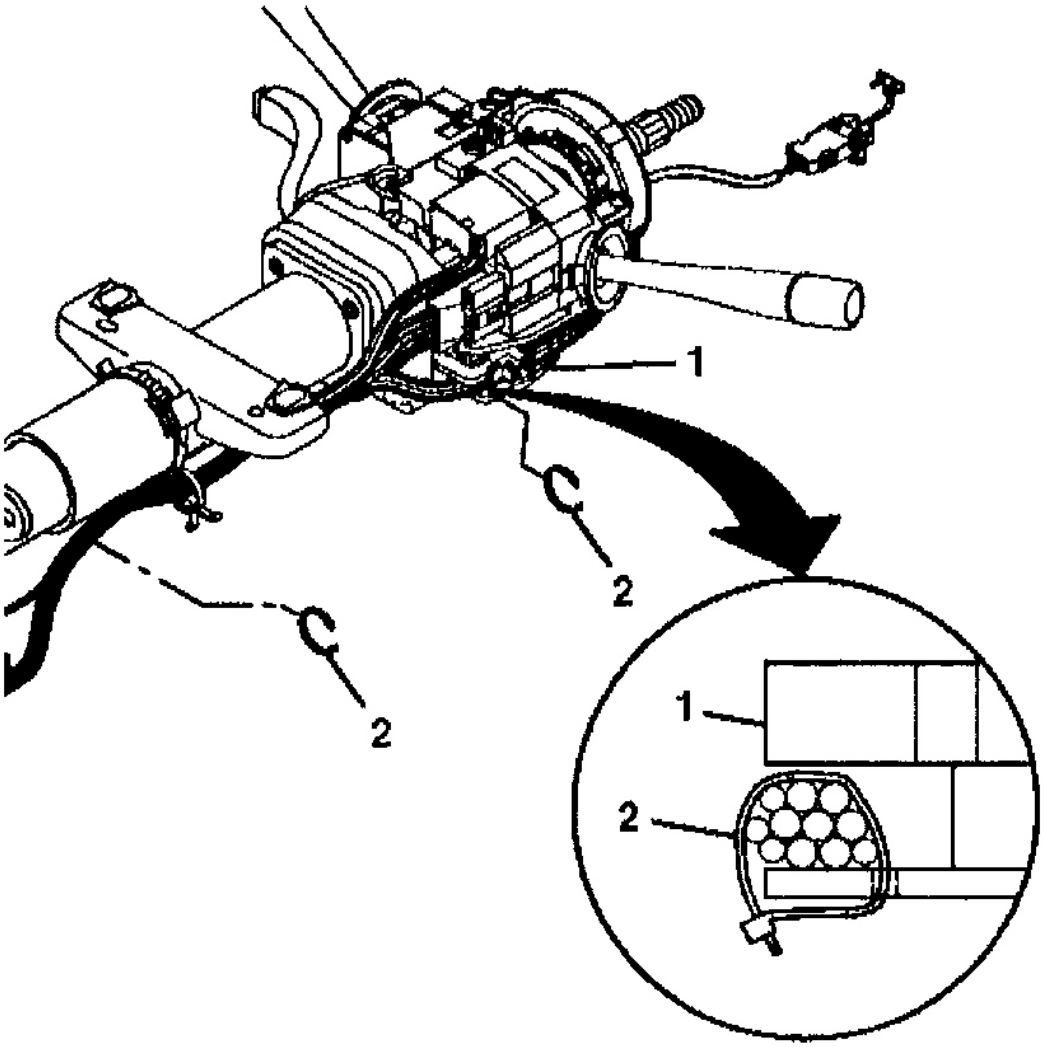


**Fig. 67: Installing Steering Column Tilt Head Assembly Wire Harness Straps**
**Courtesy of GENERAL MOTORS CORP.**

6. Install the upper and lower steering column trim covers. Refer to **Steering Column Trim Covers Replacement - On Vehicle (Non-Telescoping)** or **Steering Column Tilt Head Housing - Assemble - Off Vehicle (Non- Telescoping)** . .

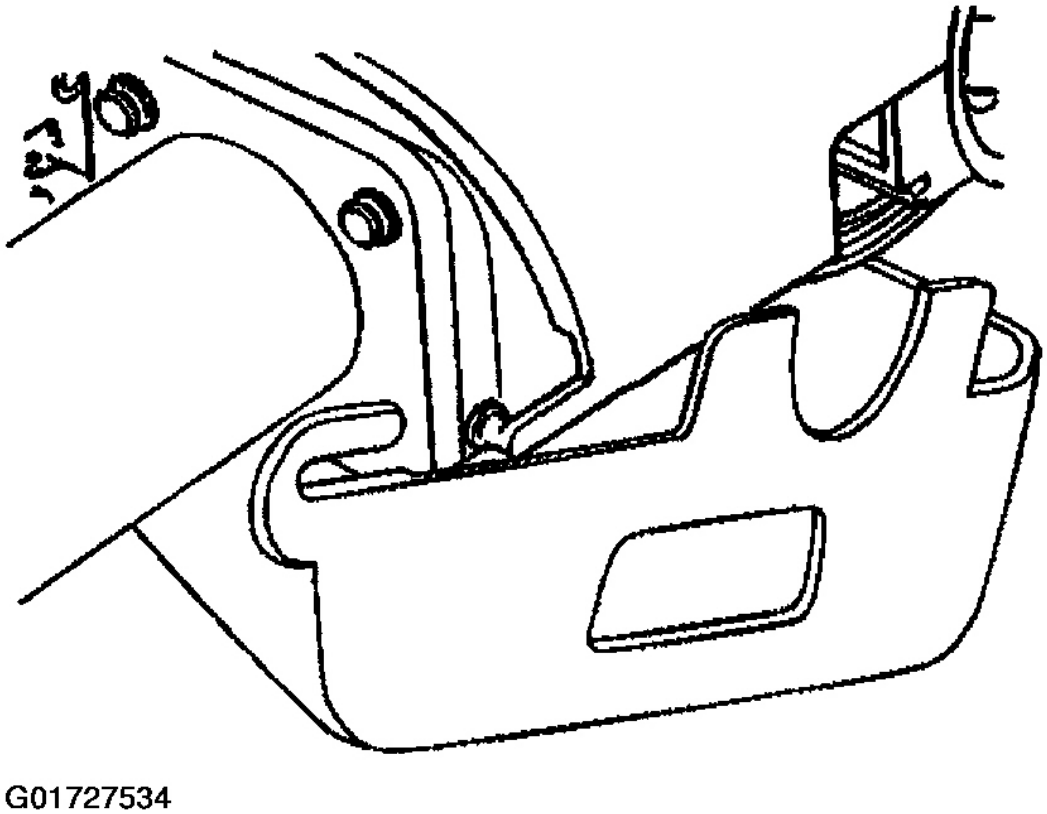


**Fig. 68: Installing Lower Trim Cover**
**Courtesy of GENERAL MOTORS CORP.**

**TILT LEVER REPLACEMENT - ON VEHICLE**

**Removal Procedure**

1. Using a small screw driver, release the locking tab from the tilt lever handle.
2. Slide the tilt lever handle straight out from the steering column.

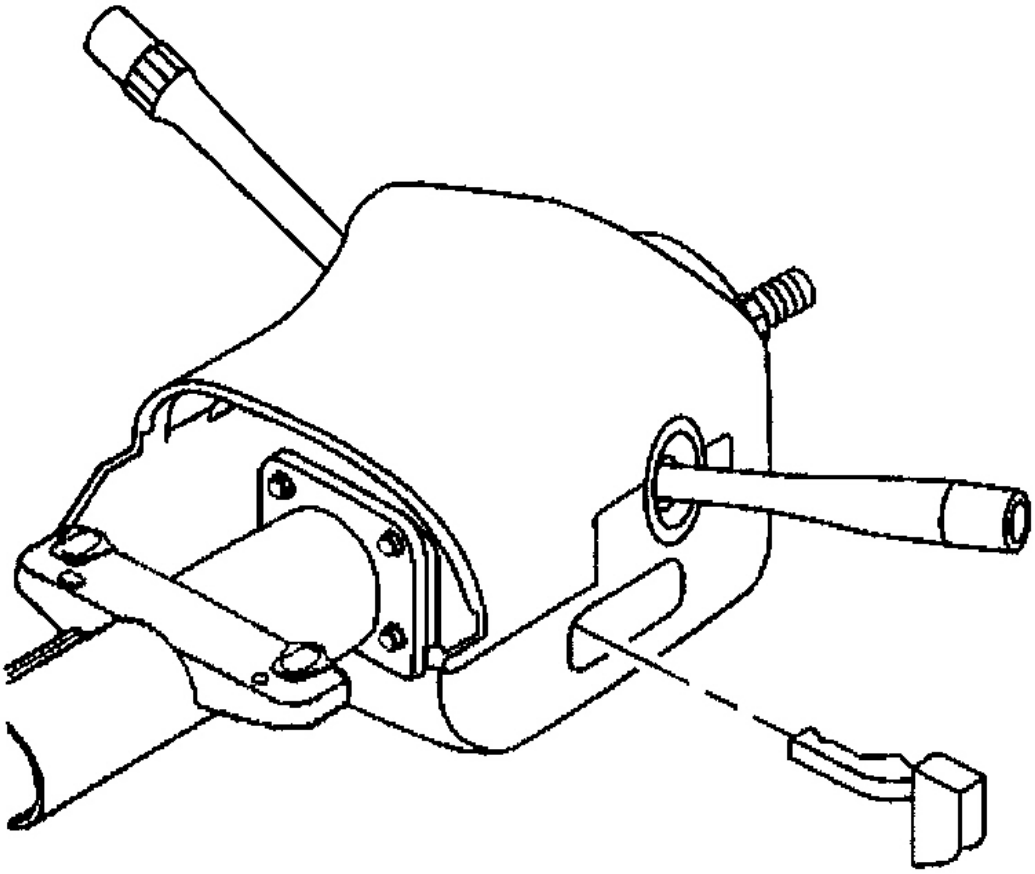


**Fig. 69: Removing Tilt Lever Handle**
**Courtesy of GENERAL MOTORS CORP.**

**Installation Procedure**

Slide the tilt lever handle into the steering column until the locking tab clicks into place.

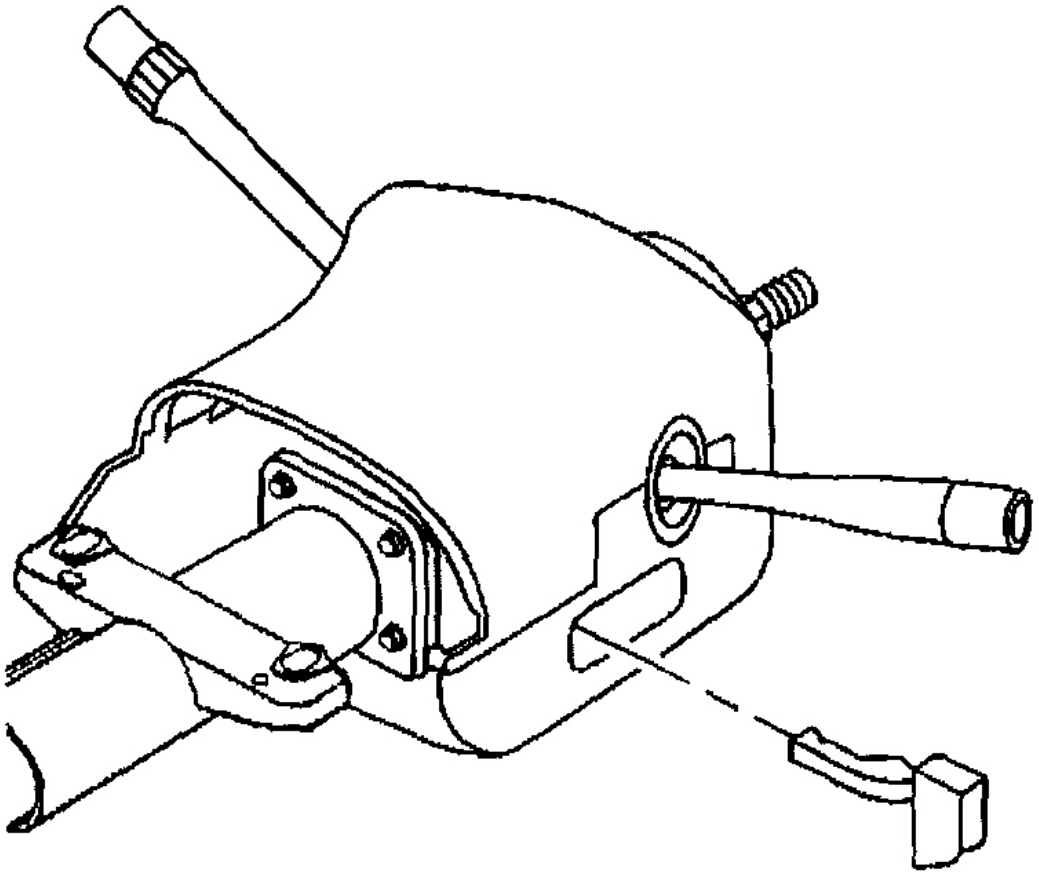


**Fig. 70: Installing Tilt Lever Handle**
**Courtesy of GENERAL MOTORS CORP.**

#### HORN SWITCH REPLACEMENT - ON VEHICLE

The horn switch is an internal component of the steering wheel inflator module and is not serviceable. If the horn switch fails and needs replacement. Refer to **REMOVAL & INSTALLATION (DRIVER-SIDE)** .

#### STEERING WHEEL REPLACEMENT

### Tools Required

- **J 42120** Steering Wheel Puller Legs

- **J 1859-A** Steering Wheel Puller
- **J 42640** Steering Column Lock Pin

**Removal Procedure**

1. Remove the steering wheel inflator module. Refer to **REMOVAL & INSTALLATION (DRIVER-SIDE)** .
2. Remove the horn electrical connector.
3. Install **J 42640** to the steering column.
4. Remove the steering wheel set nut.
5. Discard the steering wheel set nut.
6. Install **J 42120** and **J 1859-A** to the steering wheel.
7. Tighten the puller center screw against steering column shaft until the steering wheel slides off the steering column shaft.

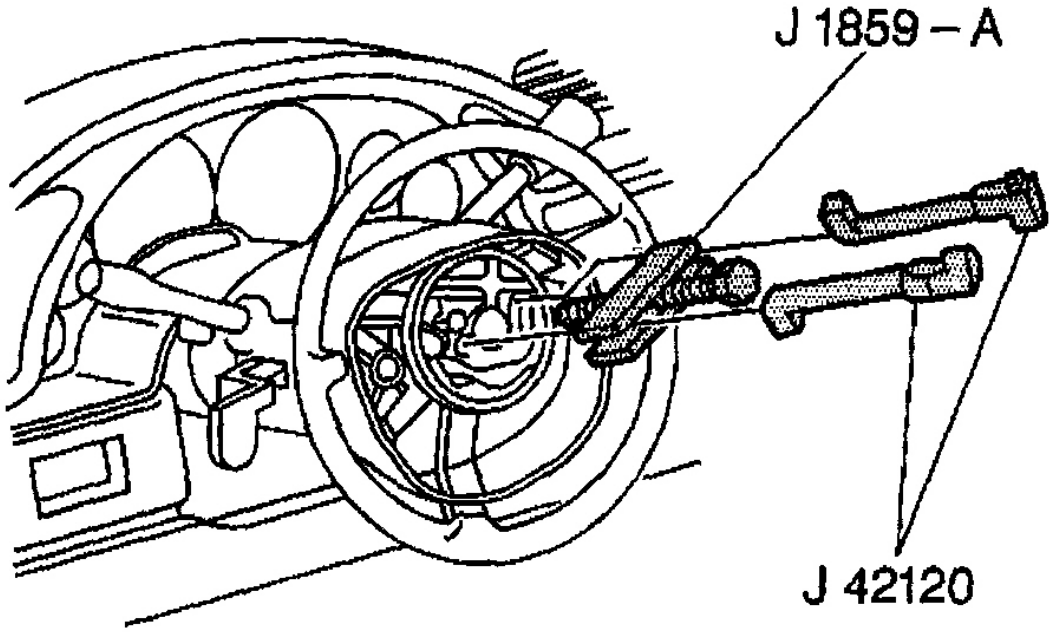


G01727537

**Fig. 71: Removing Steering Wheel Set Nut**
**Courtesy of GENERAL MOTORS CORP.**

8. Remove **J 42120** and **J 1859-A** from the steering wheel.

**Installation Procedure**

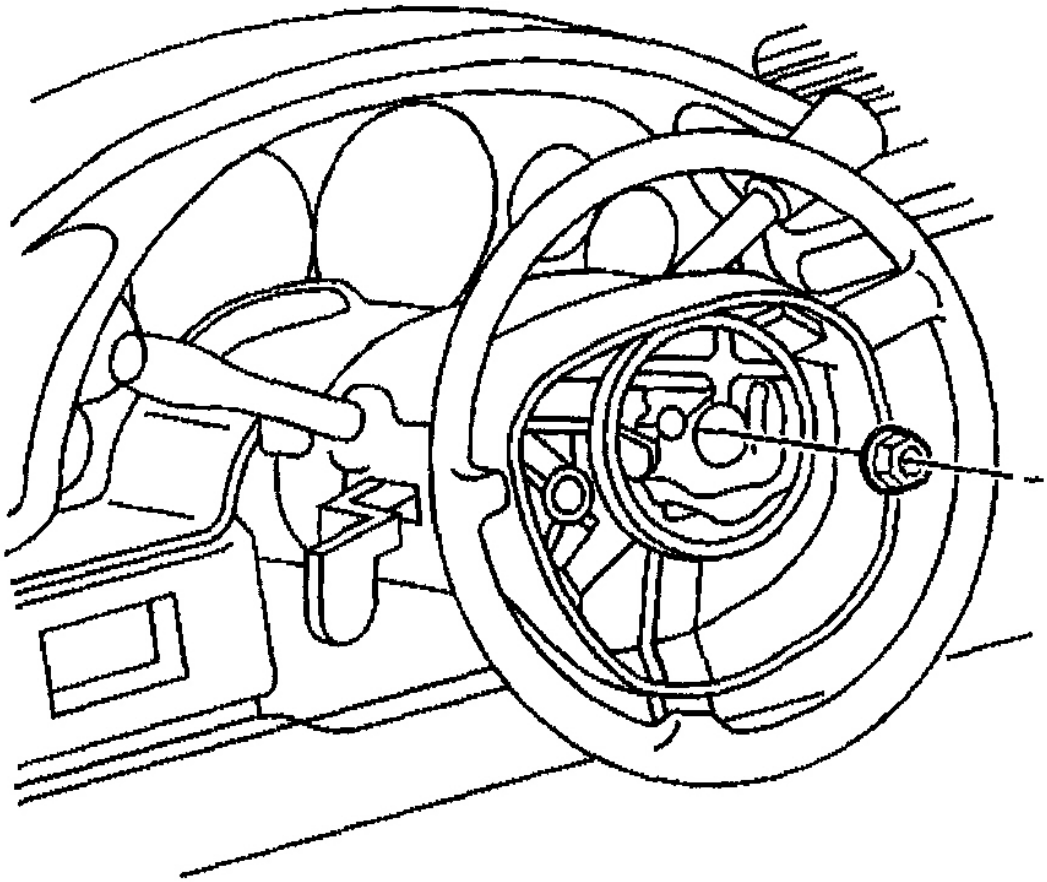


**Fig. 72: Installing Steering Wheel Nut**
**Courtesy of GENERAL MOTORS CORP.**

1. Install the steering wheel to the steering column, observing the alignment marks (splines).

**CAUTION: Refer to FASTENER NOTICE .**

2. Install a new steering wheel set nut.

**Tighten**

Tighten the new steering wheel set nut to 41 N.m (30 lb ft).

3. Remove **J 42640** from the steering column.
4. Connect the horn electrical connector.
5. Install the steering wheel inflator module. Refer to **REMOVAL & INSTALLATION (DRIVER-SIDE)** .
6. Perform a SIR Diagnostic System Check. Refer to **SIR DIAGNOSTIC SYSTEM CHECK** .

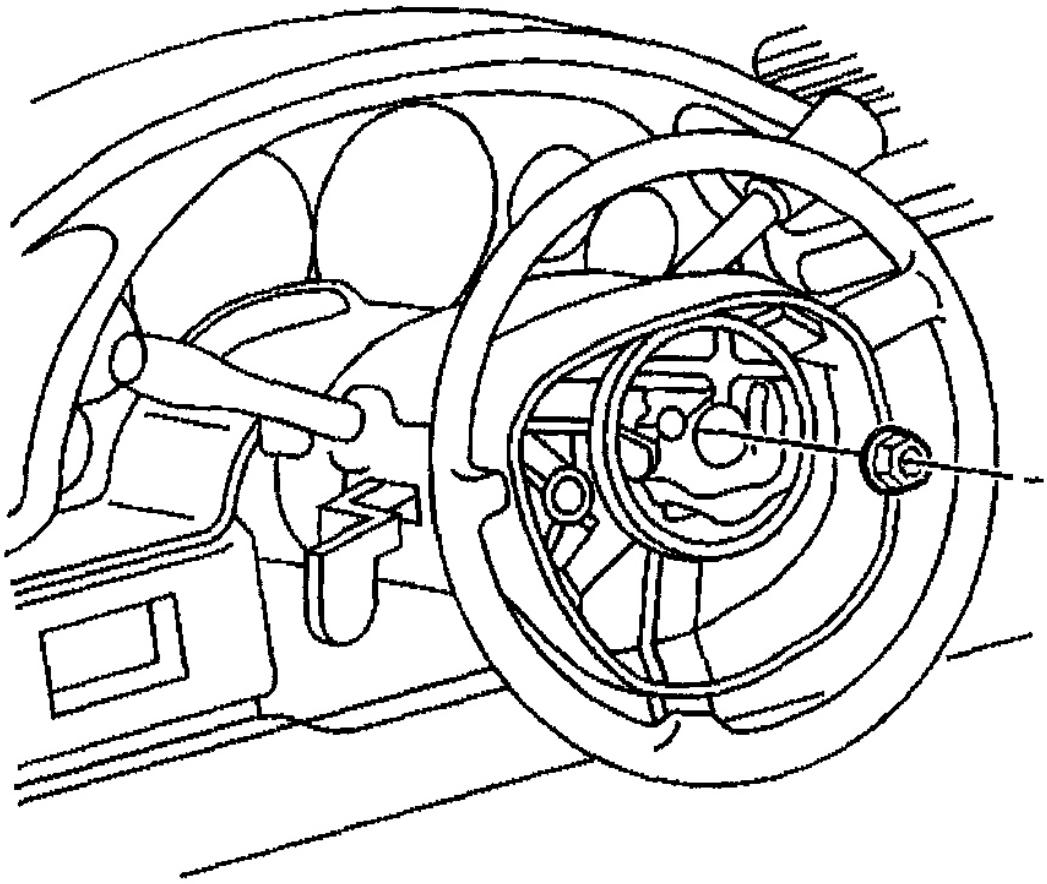


**Fig. 73: Installing Steering Wheel Set Nut**
**Courtesy of GENERAL MOTORS CORP.**

**INTERMEDIATE STEERING SHAFT REPLACEMENT**

## Tools Required

**J 42640** Steering Column Lock Pin

**Removal Procedure**

1. Turn the steering wheel far enough to the left to gain access to the upper coupling bolt.
2. Remove the upper coupling bolt.
3. Turn the steering wheel back to the right until the wheels are in a straight ahead position, then lock the steering column.

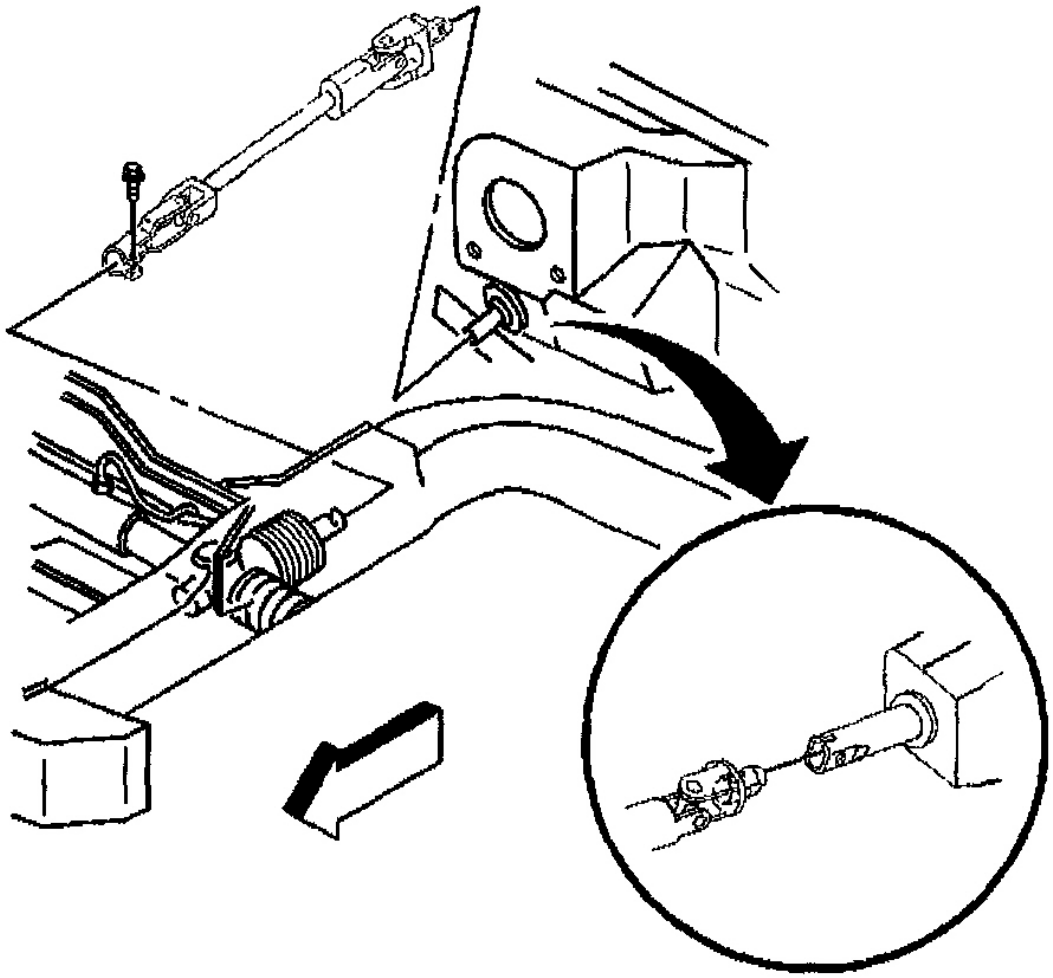


**Fig. 74: Removing Upper Coupling Bolt**
**Courtesy of GENERAL MOTORS CORP.**

4. Remove the lower coupling shield.
5. Remove the lower coupling retaining bolt.
6. Install **J 42640** to the steering column.
7. Remove the lower coupling from the steering gear.
8. Slide the upper coupling from the steering column shaft.
9. Remove the intermediate shaft from the vehicle.

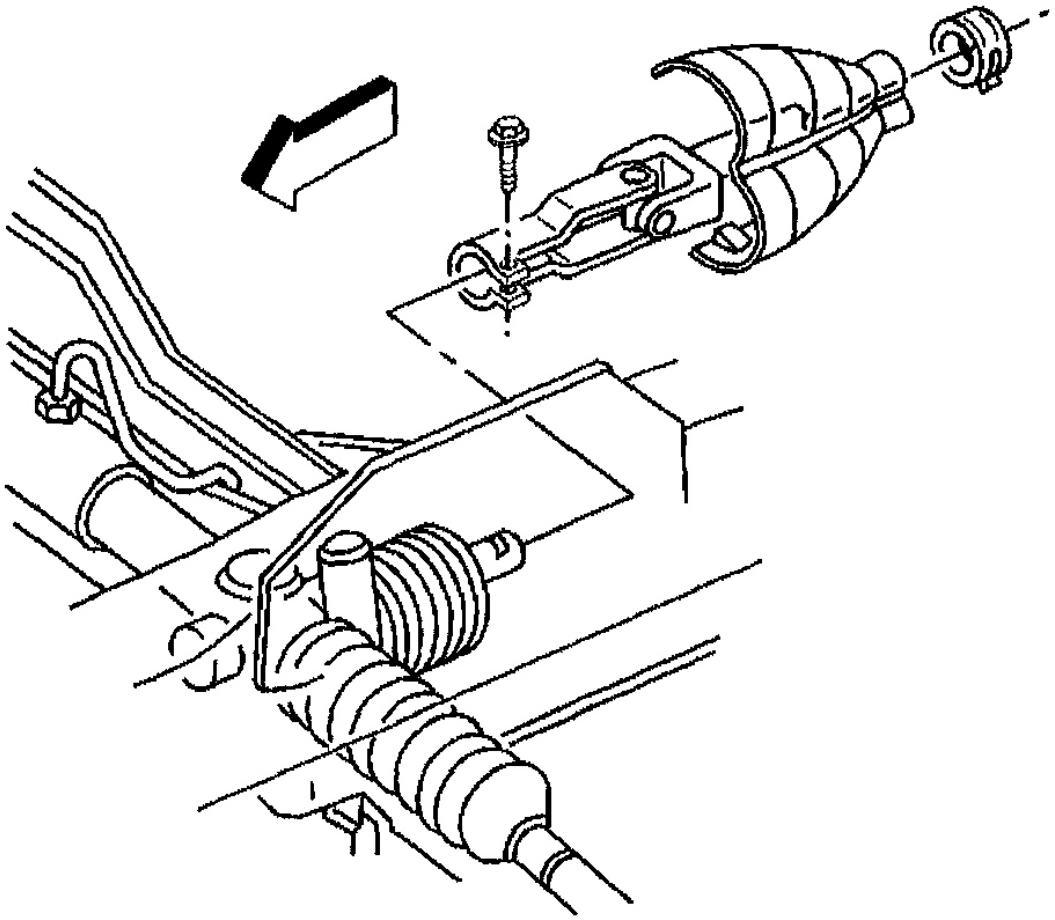


**Fig. 75: Removing Lower Coupling Retaining Bolt**
**Courtesy of GENERAL MOTORS CORP.**

**Installation Procedure**

1. Place the intermediate shaft into vehicle.
2. Slide the upper coupling into the steering column shaft.
3. Connect the lower coupling onto the steering gear.

**CAUTION: Refer to FASTENER NOTICE .**

4. Install the lower coupling retaining bolt into the lower coupling.

**Tighten**

Tighten the lower coupling retaining bolt to 34 N.m (25 lb ft).

5. Remove **J 42640** from the steering column.

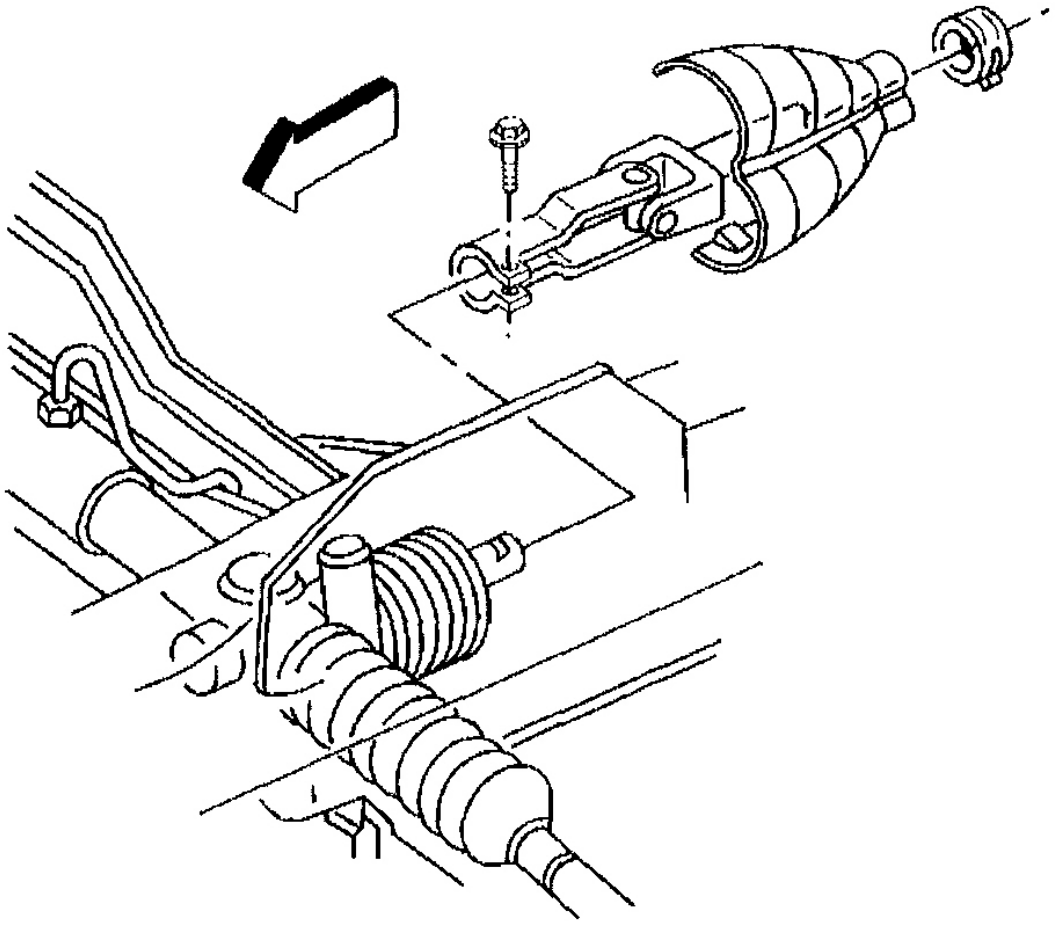


**Fig. 76: Installing Lower Coupling Retaining Bolt**
**Courtesy of GENERAL MOTORS CORP.**

6. Unlock the steering column.
7. Turn the steering wheel far enough to the left to gain access to the upper coupling bolt hole.
8. Install the upper coupling bolt into the upper coupling.

**Tighten**

Tighten the upper coupling bolt to 48 N.m (35 lb ft).

9. Turn the steering wheel back to the right until the wheels are in a straight ahead position, then lock the steering column.
10. Install the lower steering coupling shield.

**Tighten**

Tighten the lower steering coupling shield screw to 3.5 N.m (31 lb in).

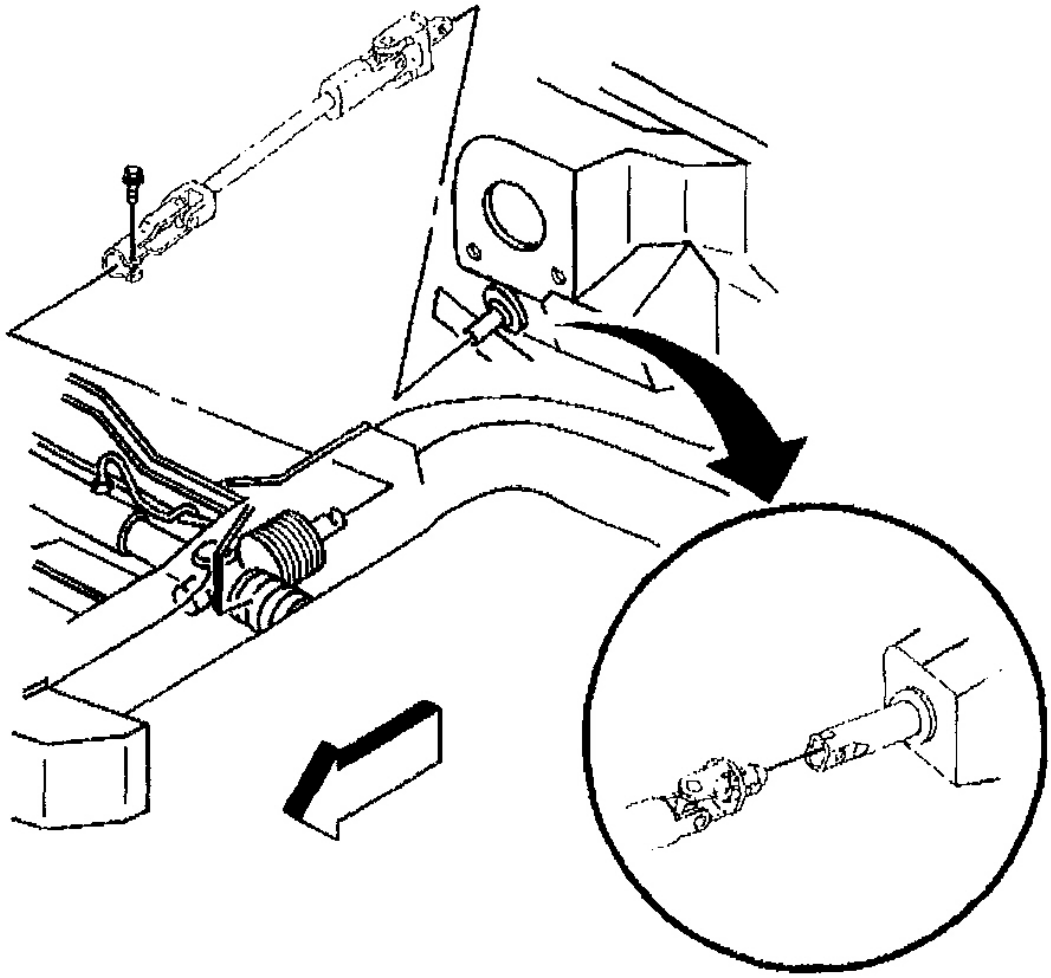

G01727542

**Fig. 77: Installing Upper Coupling Bolt**
**Courtesy of GENERAL MOTORS CORP.**

**TELESCOPE ACTUATOR SWITCH REPLACEMENT - ON VEHICLE**

**Removal Procedure**

1. With the column fully extended remove the key from the ignition.
2. Remove the tilt lever from the steering column. Refer to **Tilt Lever Replacement - On Vehicle.**
3. Remove the driver knee bolster trim panel. Refer to **INSTRUMENT PANEL ACCESSORY TRIM PLATE & KNEE BOLSTER PANEL** .
4. Remove the 2 TORX(R) head screws from the lower trim cover.

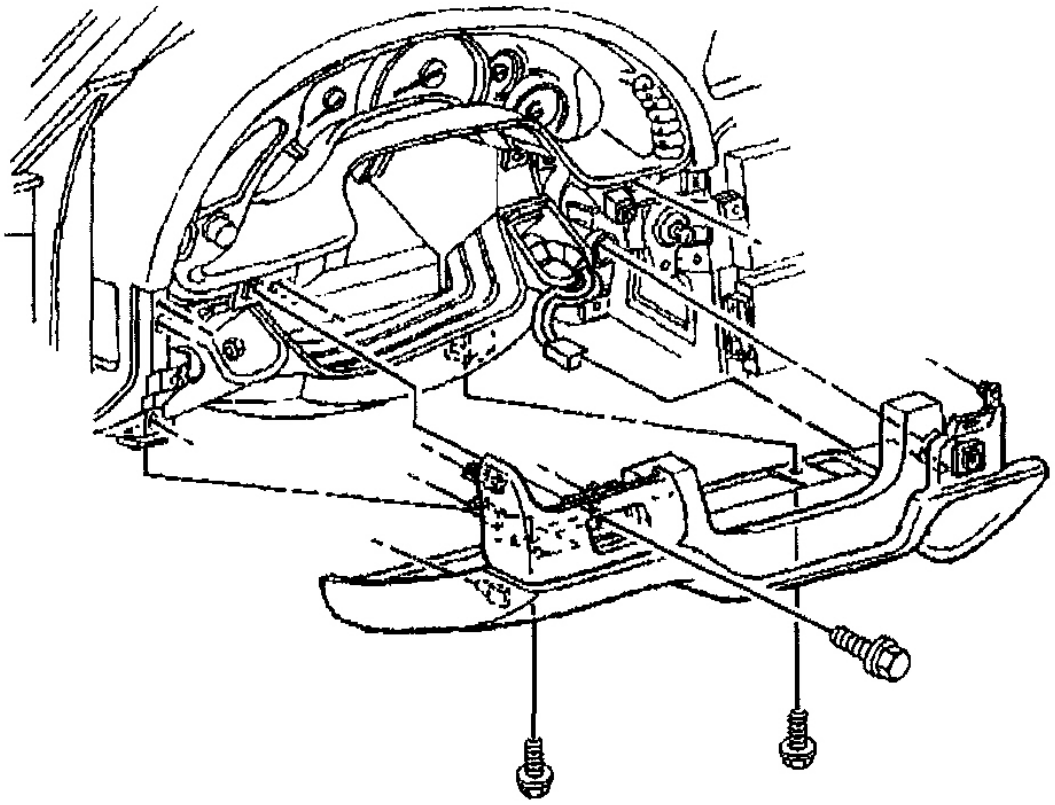

G01727543

**Fig. 78: Removing Driver Knee Bolster Trim Panel**
**Courtesy of GENERAL MOTORS CORP.**

5. Separate the lower trim cover retaining tabs from the steering column close out trim cover.
6. Remove the telescope actuator assembly switch wires routed in clips along the bottom of the lower trim cover.
7. From the inside of the lower trim cover, push out the telescope actuator assembly switch.
8. Disconnect the telescope actuator assembly switch connector from the instrument panel wiring harness.
9. Remove the telescope actuator assembly switch and wires from the trim cover.

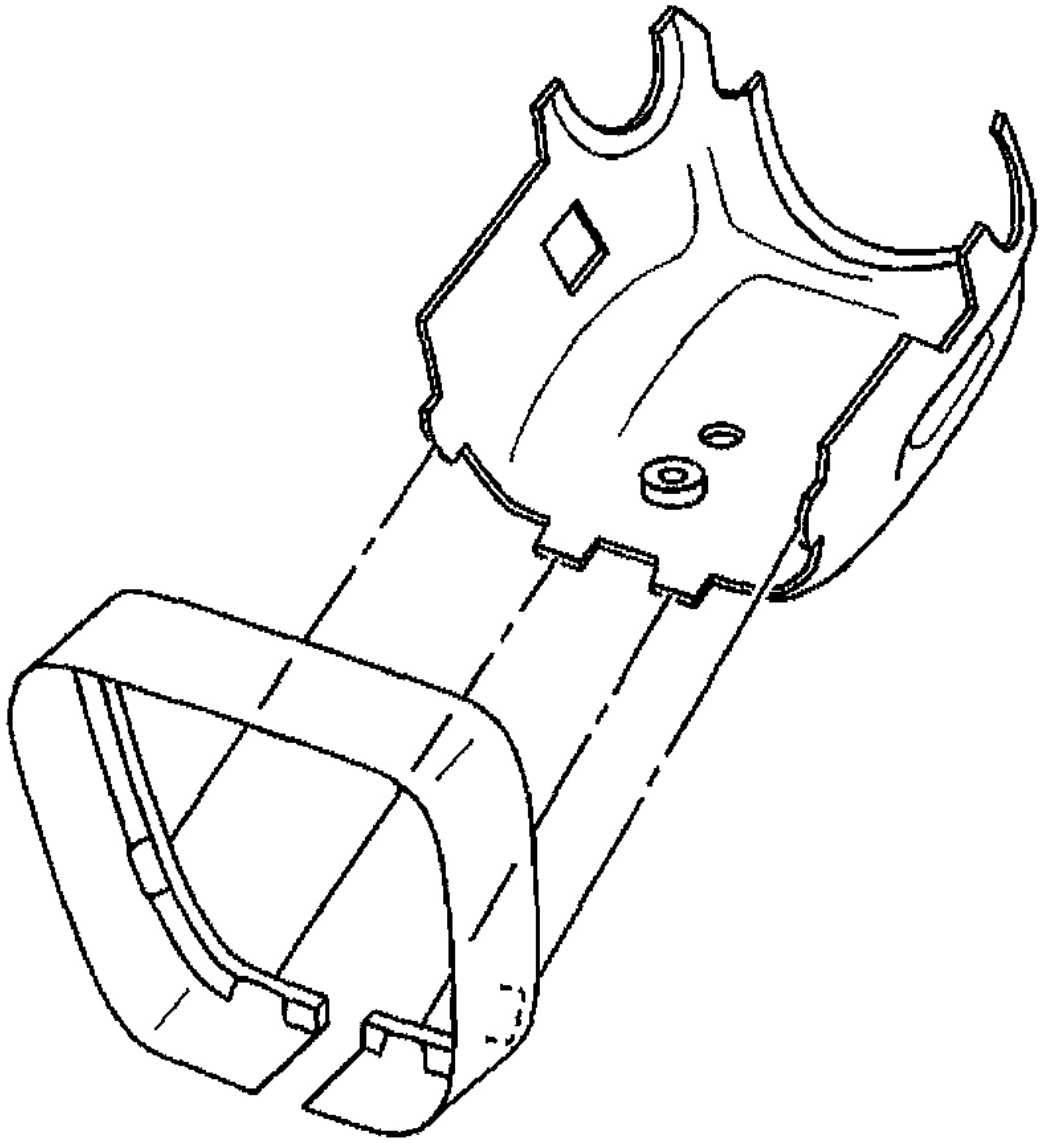


**Fig. 79: Removing Lower Trim Cover**
**Courtesy of GENERAL MOTORS CORP.**

**Installation Procedure**

1. Install the telescope actuator assembly switch and wires through the opening in the lower trim cover.

2. Snap the wiring to the retaining clips in the lower trim cover.
3. Route the telescope actuator assembly switch wires along the column and strap.
4. Connect the telescope actuator assembly switch connector to the instrument panel wiring harness.
5. Install the lower trim cover tabs into the steering column close out trim cover.
6. Check to ensure that the tabs on the lower trim cover are fully engaged with the slots in the steering column close out trim cover.

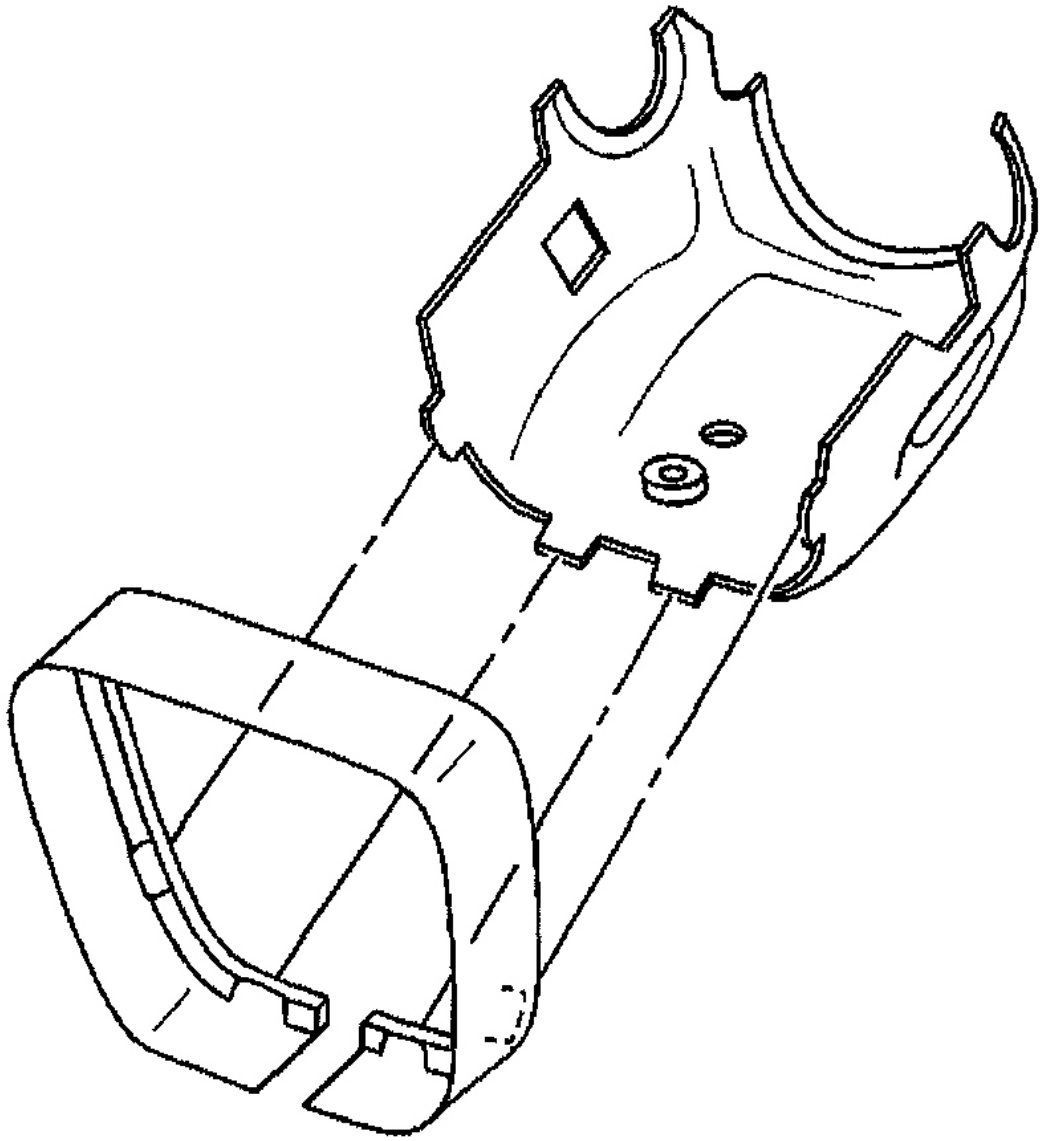

G01727545

**Fig. 80: Installing Lower Trim Cover**
**Courtesy of GENERAL MOTORS CORP.**

**CAUTION: Refer to FASTENER NOTICE .**

7. Install the 2 TORX(R) head screws (1) to the lower trim cover.

**Tighten**

Tighten the 2 TORX(R) head screws to 4.0 N.m (35 lb in).

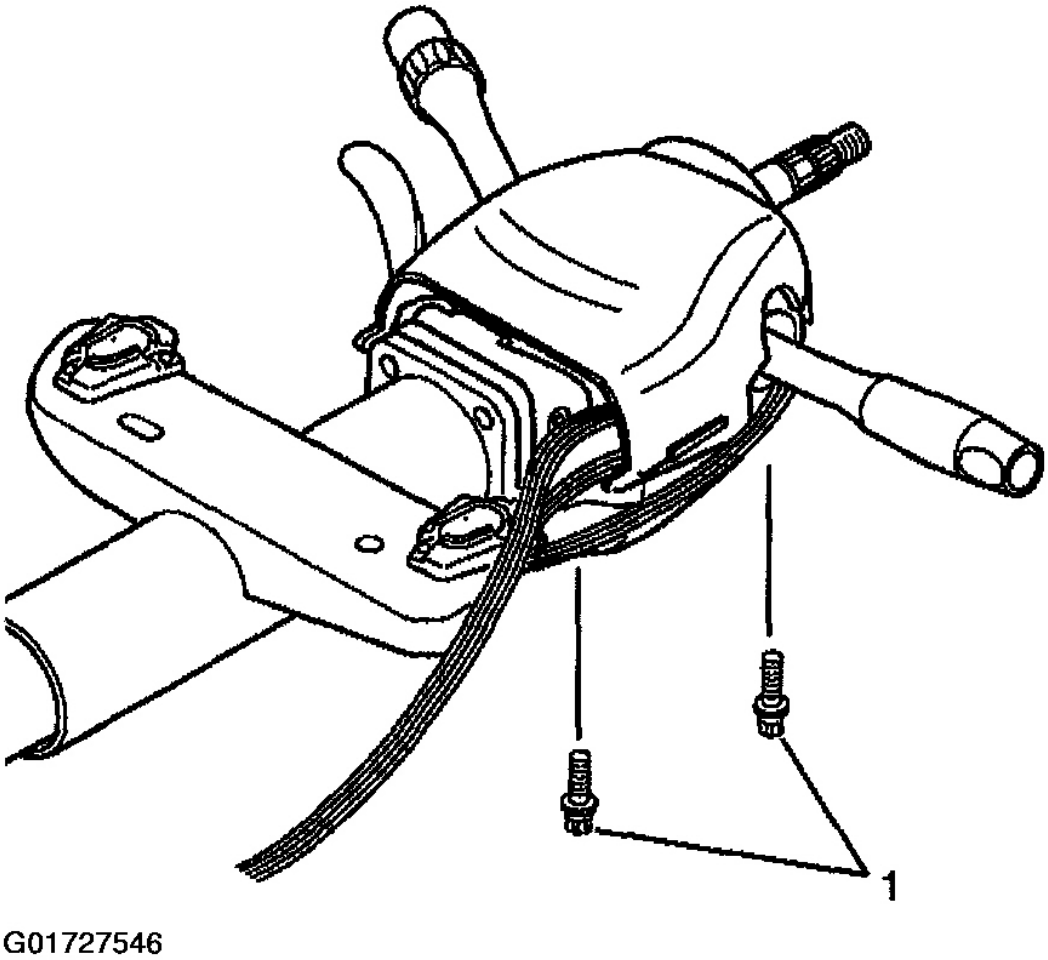


**Fig. 81: Installing Lower Trim Cover Screws**
**Courtesy of GENERAL MOTORS CORP.**

8. Install the driver knee bolster trim panel. Refer to **INSTRUMENT PANEL ACCESSORY TRIM PLATE & KNEE BOLSTER PANEL** .
9. Install the tilt lever. Refer to **Tilt Lever Replacement - On Vehicle** .

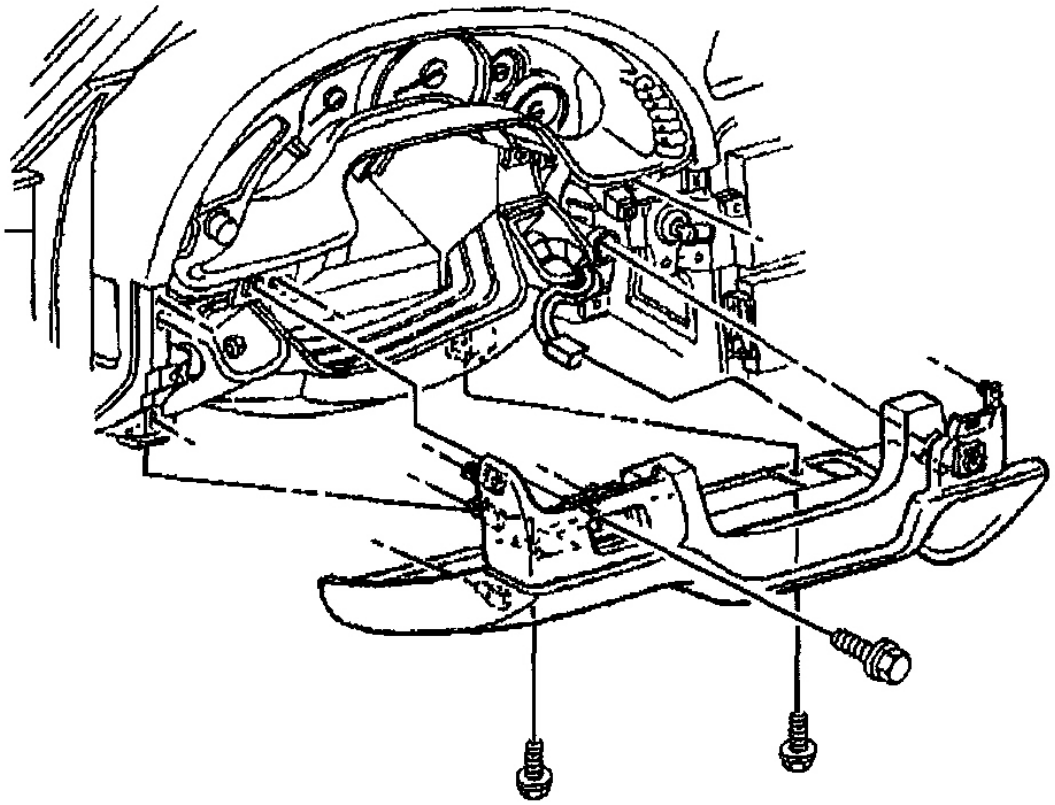

G01727547

**Fig. 82: Installing Driver Knee Bolster Trim Panel**
**Courtesy of GENERAL MOTORS CORP.**

**TELESCOPE ACTUATOR ASSEMBLY REPLACEMENT - ON VEHICLE**

## Tools Required

**J 42640** Steering Column Anti Rotation Pin

**Removal Procedure**

1. Disable the SIR system. Refer to **DISABLING SYSTEM** .
2. Insert the **J 42640** into the bottom of the lower trim cover.
3. Remove the driver side knee bolster trim panel. Refer to **INSTRUMENT PANEL ACCESSORY TRIM PLATE & KNEE BOLSTER PANEL** .
4. Remove the following items from the telebearing and jacket assembly:

**4.1.** Remove the retaining ring (1).

**4.2.** Remove the compression spring (2).

**4.3.** Remove the shoulder bolt (3).

**4.4.** Remove the anti rotation ball (4).

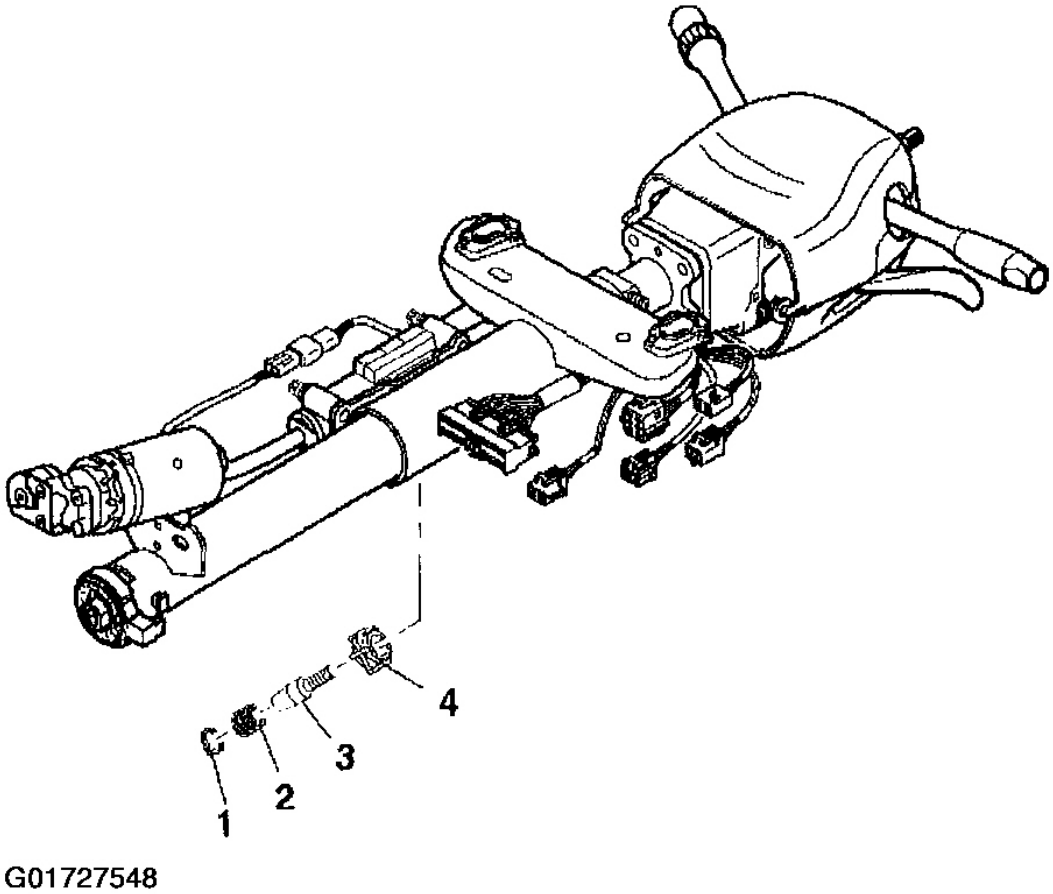


**Fig. 83: Identifying Telebearing & Jacket Assembly Components**
**Courtesy of GENERAL MOTORS CORP.**

5. Disconnect the cable assembly (2) from the telescope drive motor assembly (1).

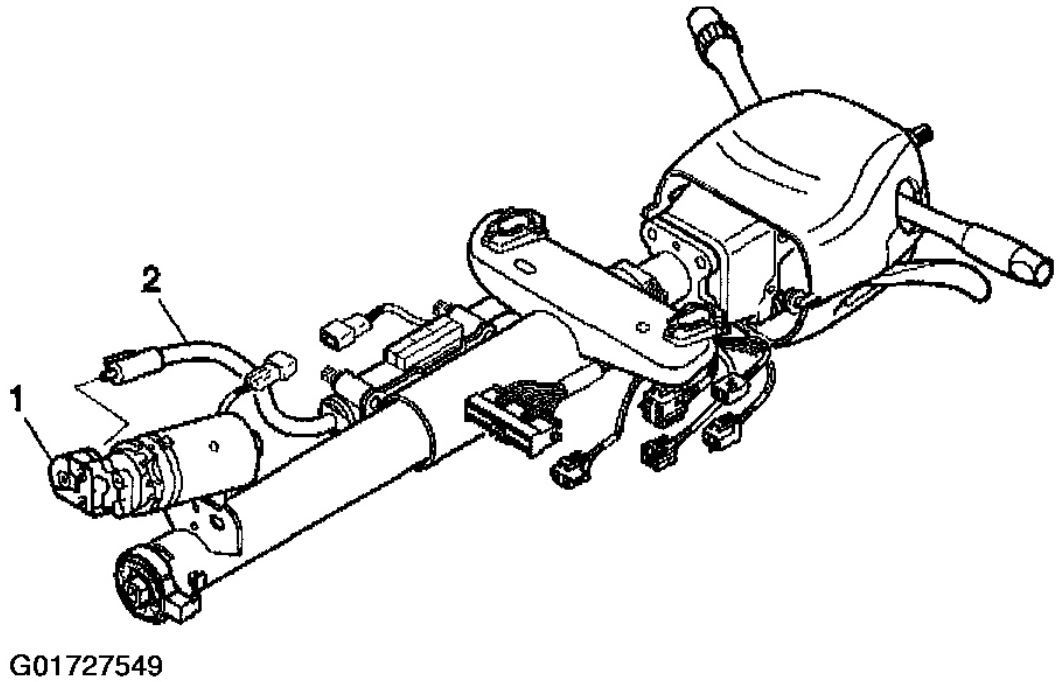


**Fig. 84: Disconnecting Telescope Drive Motor Cable**
**Courtesy of GENERAL MOTORS CORP.**

6. Remove the screws retaining the telescope actuator assembly (3) to the steering column.
7. Remove the telescope drive bolt (1) and ball (2) from the actuator assembly.

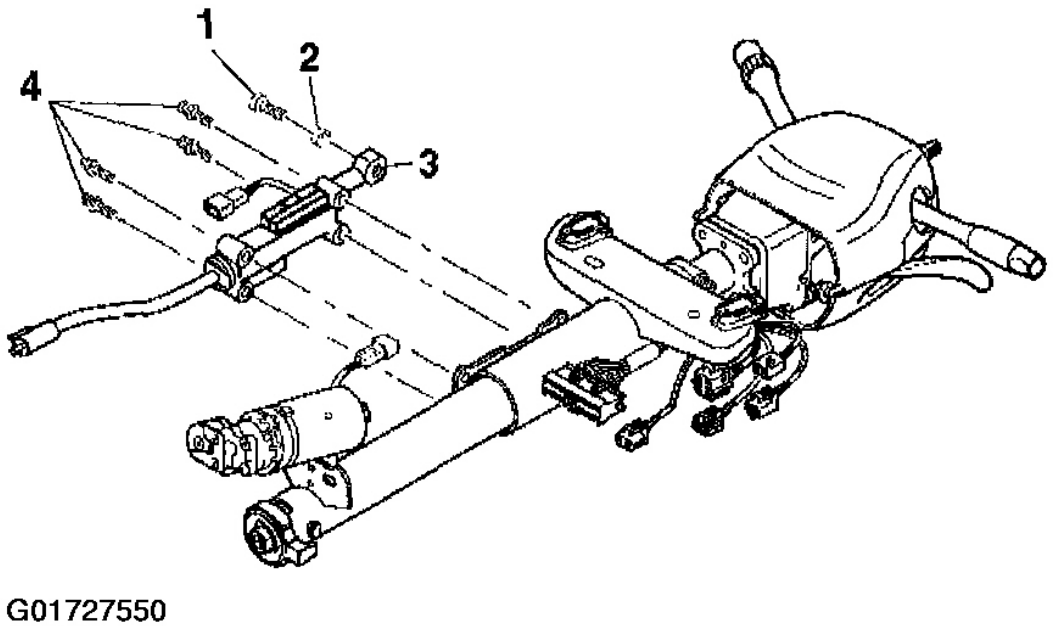


**Fig. 85: Removing Telescope Actuator Assembly Screws**
**Courtesy of GENERAL MOTORS CORP.**

8. Remove the retaining screws from the telescope adapter assembly (2).
9. Remove the telescope adapter assembly (2) from the telebearing adapter assembly.

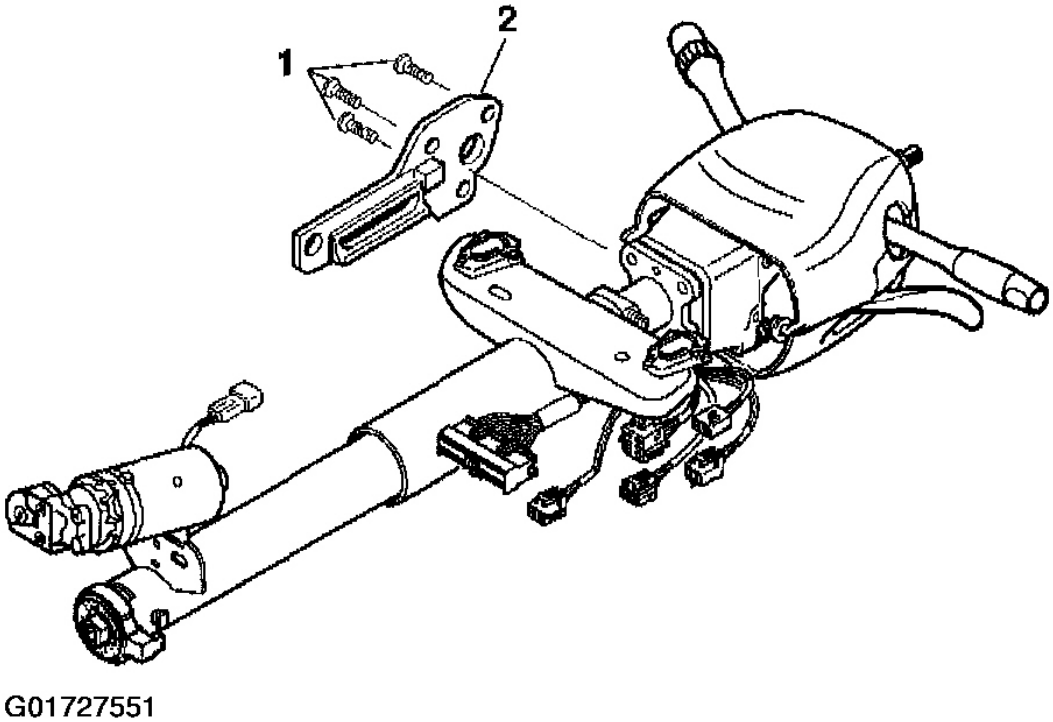


**Fig. 86: Removing Telescope Adapter Retaining Screws**
**Courtesy of GENERAL MOTORS CORP.**

**Installation Procedure**

**CAUTION: Refer to FASTENER NOTICE .**

1. Install the telescope adapter assembly (2) to the telebearing and jacket assembly.
2. Install the actuator retaining screws (1).

**Tighten**

Tighten the retaining screws to 9 N.m (80 lb in).

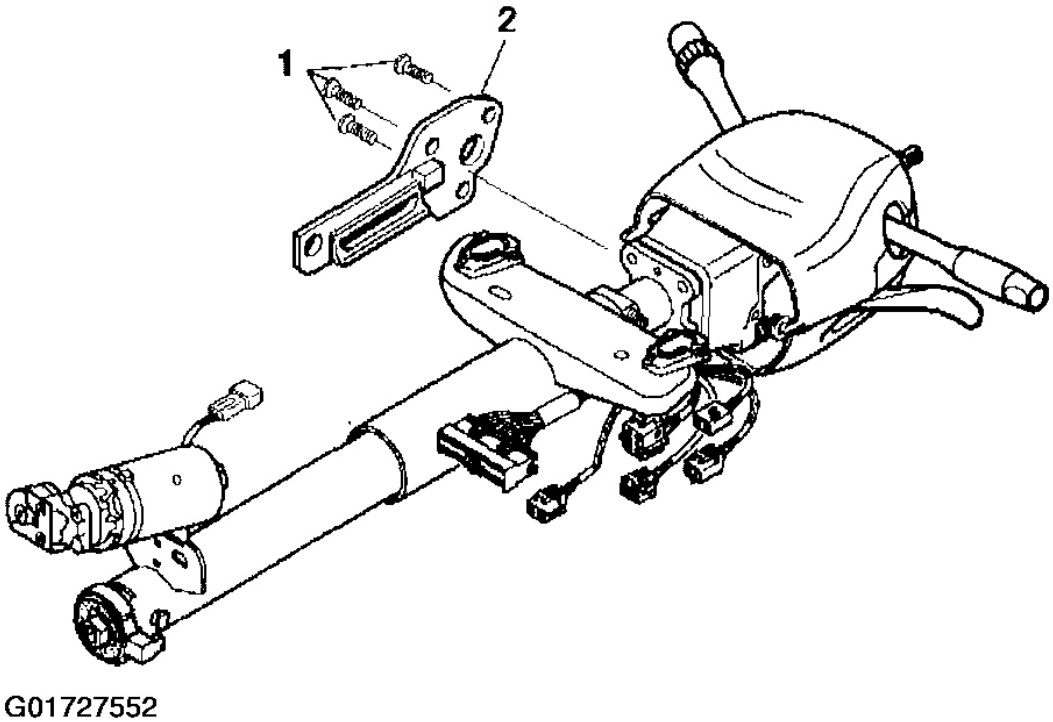


**Fig. 87: Installing Telescope Adapter Retaining Screws**
**Courtesy of GENERAL MOTORS CORP.**

3. Install the telescope actuator assembly (3) to the telebearing jacket assembly.
4. Install the actuator retaining screws (4).

**Tighten**

Tighten the retaining screws to 9 N.m (80 lb in).

**4.1.** Install the telescope drive ball (2).
**4.2.** Lubricate the telescope drive bolt (1).
**4.3.** Install the telescope drive bolt (1).

**Tighten**

Tighten the telescope drive bolt to 7 N.m (62 lb in).

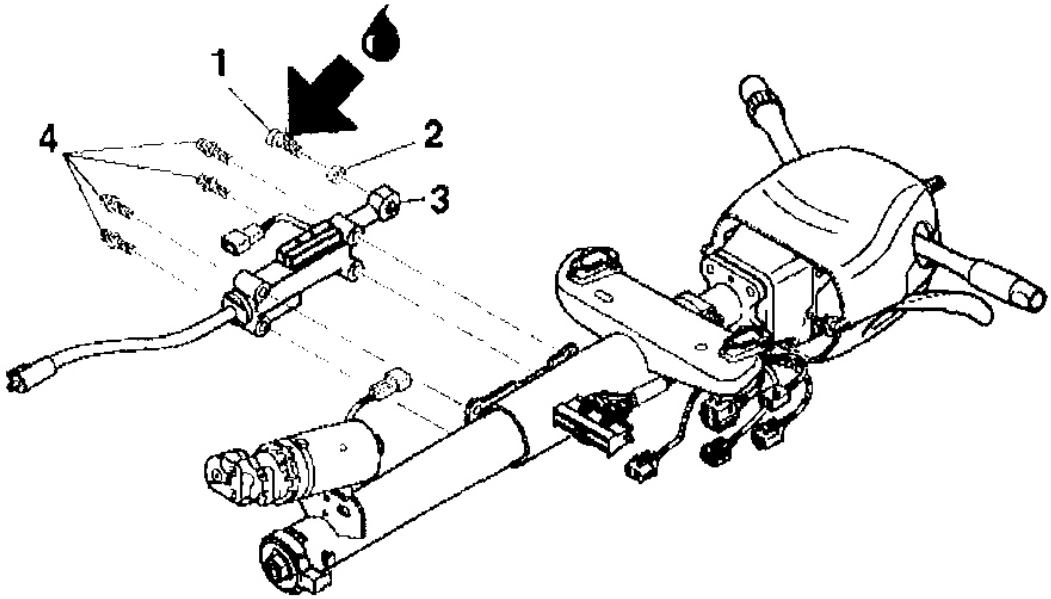


**Fig. 88: Installing Telescope Actuator Assembly Screws**
**Courtesy of GENERAL MOTORS CORP.**

5. Connect the cable assembly (2) to the telescope drive motor assembly (1).

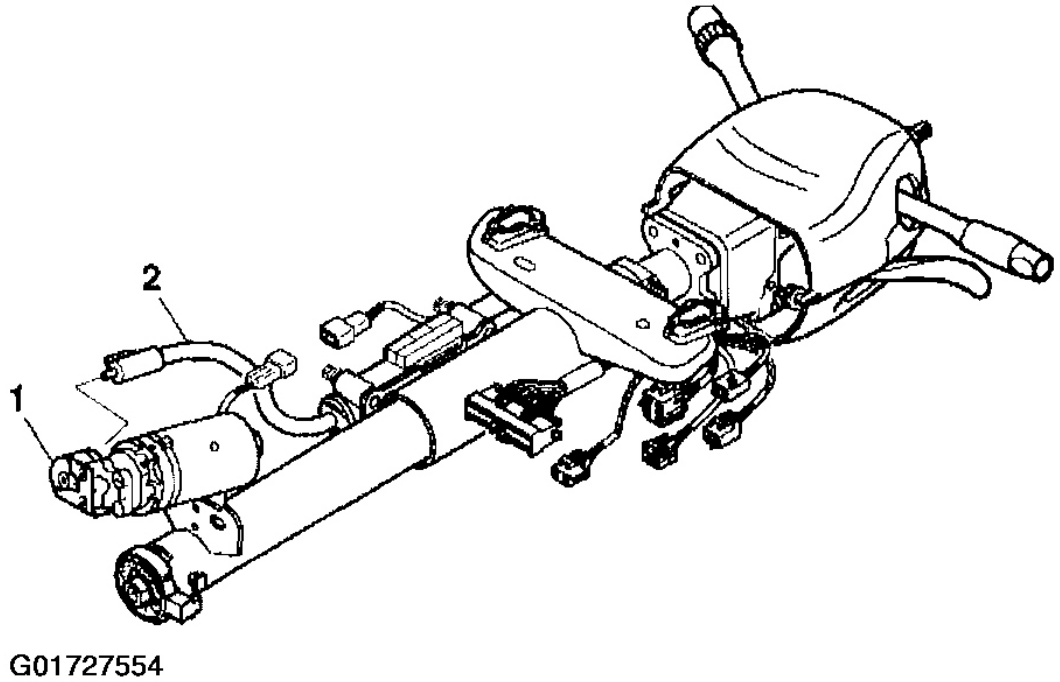


**Fig. 89: Connecting Telescope Drive Motor Cable**
**Courtesy of GENERAL MOTORS CORP.**

6. Install the following items onto the telebearing and jacket assembly:
   - **6.1.** Install the anti rotation ball (4).
   - **6.1.** Lubricate the shoulder bolt (3).
   - **6.3.** Install the shoulder bolt (3).
   - **6..4.** Install the compression spring (2).
   - **6.5.** Install the retaining ring (1).

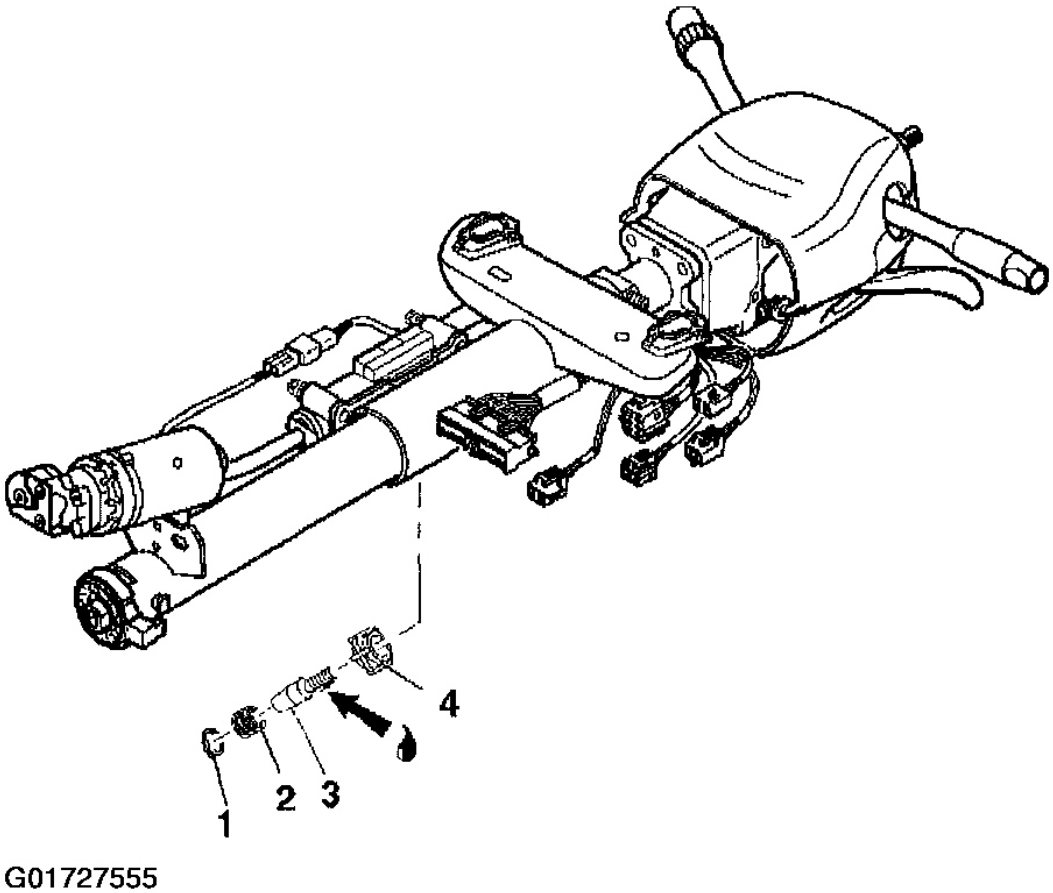


**Fig. 90: Identifying Telebearing & Jacket Assembly Components**
**Courtesy of GENERAL MOTORS CORP.**

7. Install the driver side knee bolster trim panel. Refer to **INSTRUMENT PANEL ACCESSORY TRIM PLATE & KNEE BOLSTER PANEL** .
8. Remove the **J 42640** from the lower steering column trim cover.
9. Enable the SIR system. Refer to **ACTIVATING SYSTEM** .

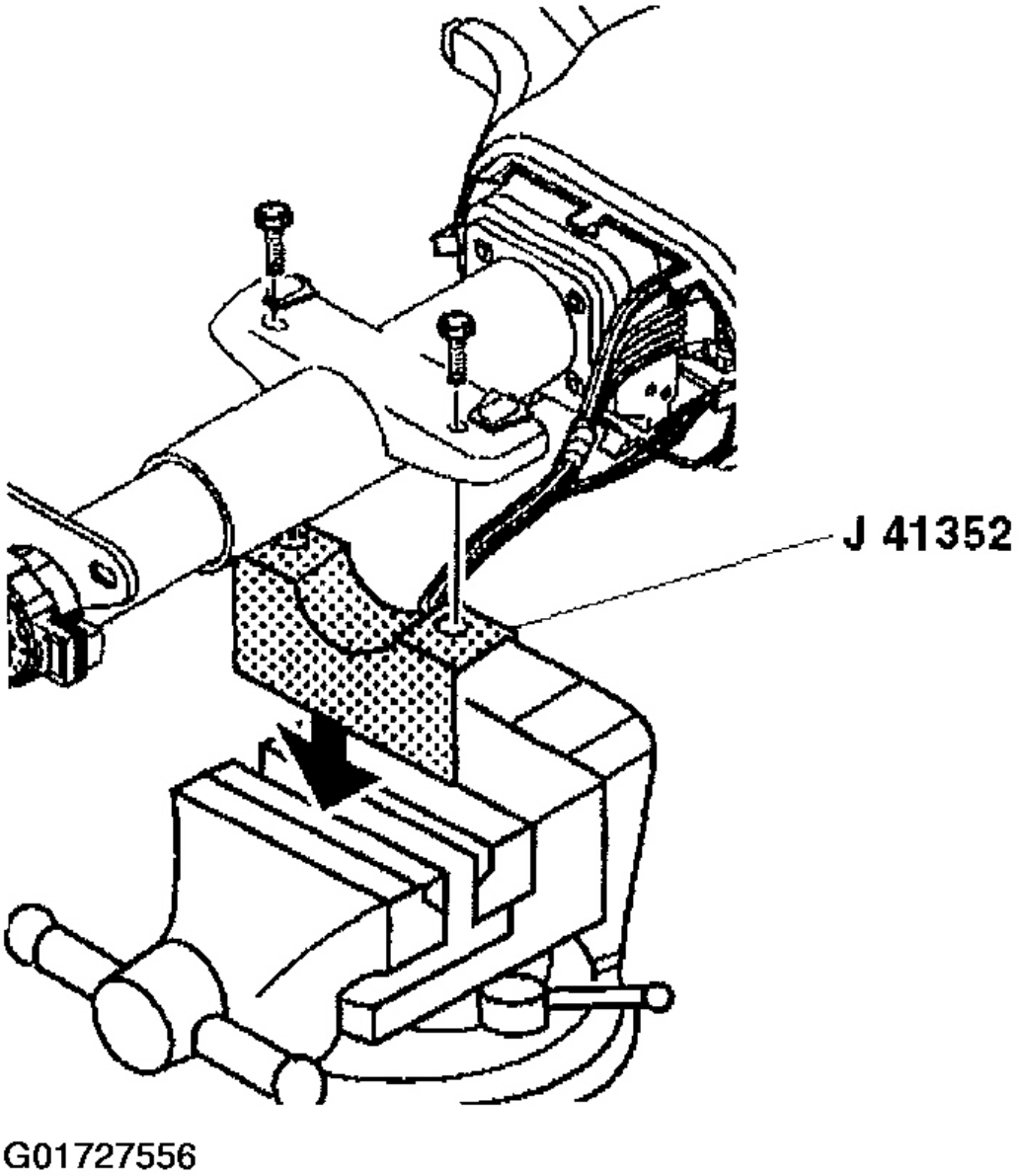


**Fig. 91: Removing J 42640 Steering Column Lock Pin**
**Courtesy of GENERAL MOTORS CORP.**

**ELECTRONIC COLUMN LOCK MODULE REPLACEMENT - ON VEHICLE (NON-TELESCOPING)**

## Tools Required

**J 42640** Steering Column Lock Pin

**Removal Procedure**

**Important:** If the steering column connectors are disconnected with the ignition in the ON position, the BCM will enter a fail enable mode and prevent steering column lock operation. The PCM will also inhibit vehicle motion by disabling fuel. To clear the BCM fail enable mode, disconnect the BCM fuse #25 for 15 seconds.

1. Remove the upper and lower steering column trim covers. Refer to **Steering Column Trim Covers Replacement - On Vehicle (Non-Telescoping)** or **Steering Column Trim Covers Replacement - On Vehicle (Telescoping)** . .

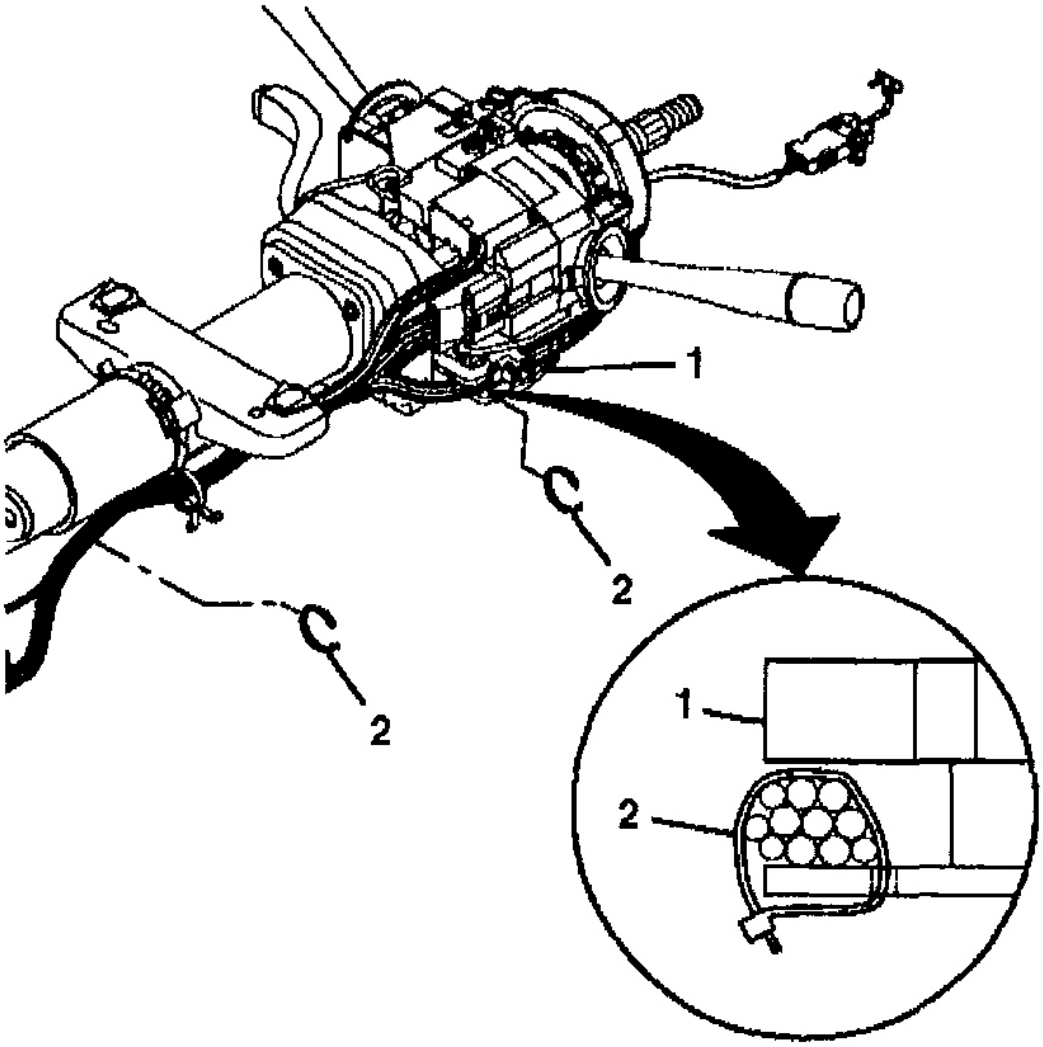


**Fig. 92: Removing Steering Column Tilt Head Assembly Wiring Harness Straps**
**Courtesy of GENERAL MOTORS CORP.**

2. Remove the wire harness straps (2) from the steering column tilt head assembly (1) and the column.
3. Install **J 42640** to the steering column.
4. Remove the steering column tilt head assembly. Refer to **Steering Column Tilt Head Housing - Disassemble - Off Vehicle (Telescoping)** or **Steering Column Tilt Head Housing - Disassemble - Off Vehicle (Non- Telescoping)** .

5. Remove the electronic column lock module. Refer to**Electronic Column Lock Module - Disassemble - Off Vehicle (Telescoping Column)** or **Electronic Column Lock Module - Disassemble - Off Vehicle (Non - Telescoping Column)** .

**Installation Procedure**

1. Install the electronic column lock module. Refer to **Electronic Column Lock Module - Assemble - Off Vehicle (Telescoping Column)** or **Electronic Column Lock Module - Assemble - Off Vehicle (Non-Telescoping Column)** .
2. Route the wire harness assembly along the steering column jacket assembly.
3. Remove **J 42640** from the steering column.

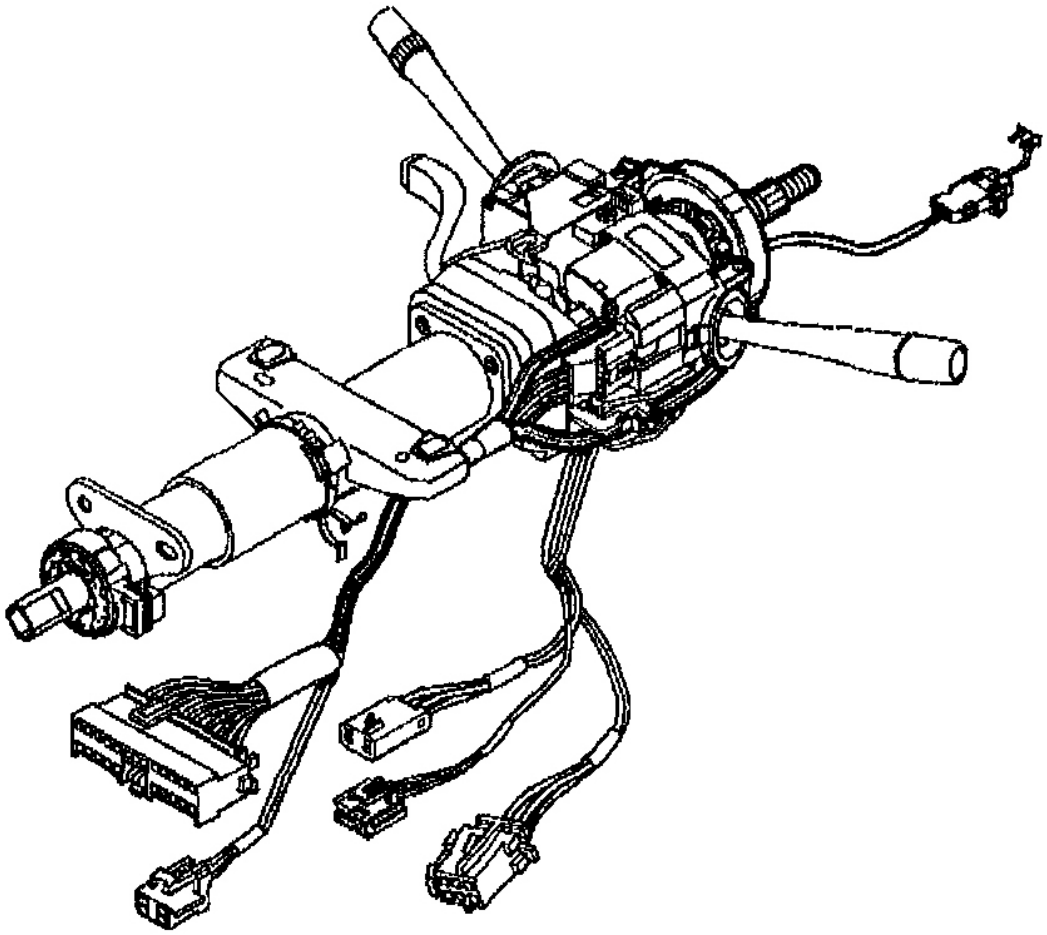

G01727558

**Fig. 93: Aligning Steering Column Wiring Harness**
**Courtesy of GENERAL MOTORS CORP.**

4. Install the wire harness assembly (1) into the wire harness strap (2).

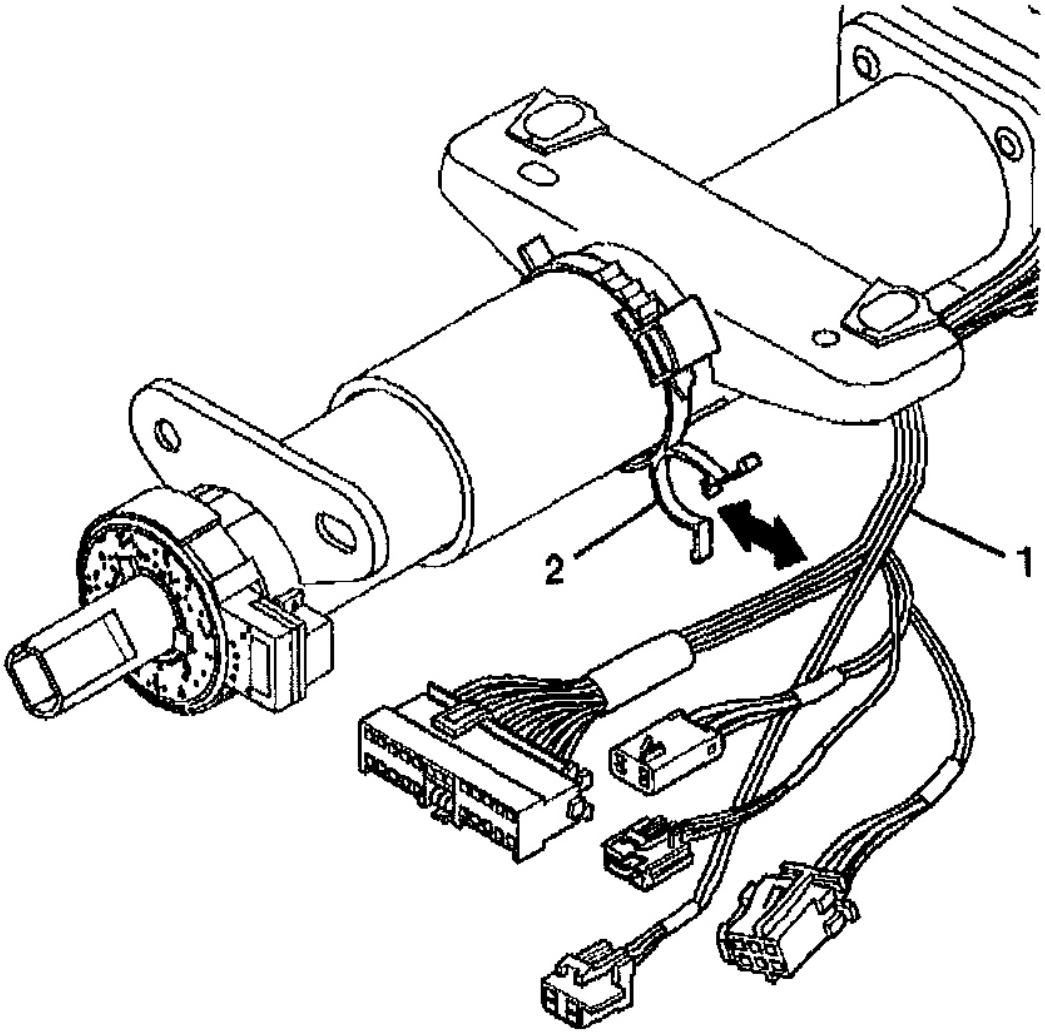


G01727559

**Fig. 94: Installing Steering Column Wiring Harness**
**Courtesy of GENERAL MOTORS CORP.**

5. Install new wire harness straps (2) to the steering column assembly (1) and the column.
6. Install the steering column tilt head assembly. Refer to **Steering Column Tilt Head**

**Housing - Assemble - Off Vehicle (Telescoping)** or **Steering Column Tilt Head Housing - Assemble - Off Vehicle (Non- Telescoping)** .

7. Install the upper and lower steering column trim covers. Refer to **Steering Column Trim Covers Replacement - On Vehicle (Non-Telescoping)** or **Steering Column Trim Covers Replacement - On Vehicle (Telescoping)** .

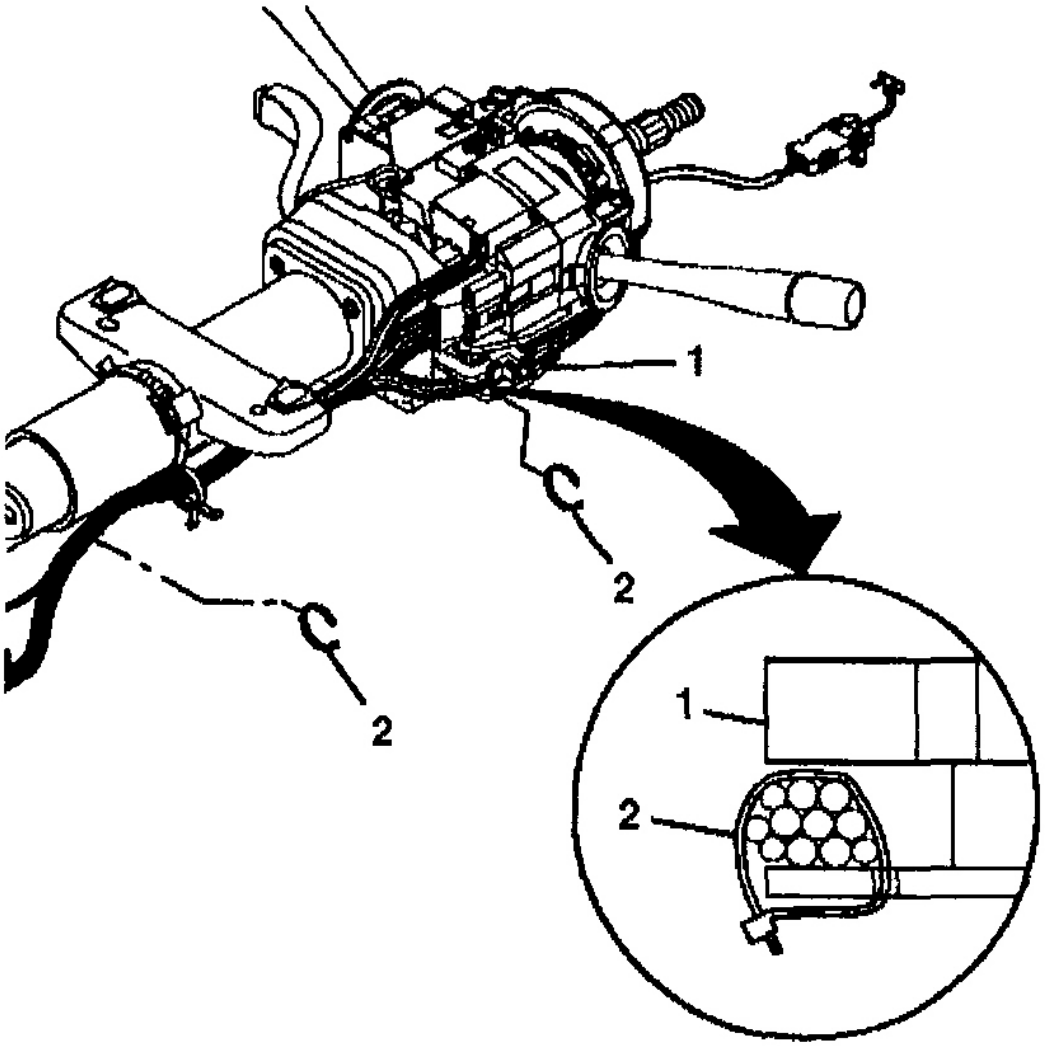


**Fig. 95: Installing Steering Column Wiring Harness Straps**
**Courtesy of GENERAL MOTORS CORP.**

## ELECTRONIC COLUMN LOCK MODULE REPLACEMENT - ON VEHICLE (TELESCOPING)

### Tools Required

**J 42640** Steering Column Lock Pin

#### Removal Procedure

**Important:** If the steering column connectors are disconnected with the ignition in the ON position, the BCM will enter a fail enable mode and prevent steering column lock operation. The PCM will also inhibit vehicle motion by disabling fuel. To clear the BCM fail enable mode, disconnect the BCM fuse #25 for 15 seconds.

1. Remove the upper and lower steering column trim covers. Refer to **Steering Column Trim Covers Replacement - On Vehicle (Non-Telescoping)** or **Steering Column Trim Covers Replacement - On Vehicle (Telescoping)** .
2. Remove the wire harness straps (2) from the steering column tilt head assembly (1) and the column.
3. Install **J 42640** to the steering column.
4. Remove the steering column tilt head assembly. Refer to **Steering Column Tilt Head Housing - Disassemble - Off Vehicle (Telescoping)** or **Steering Column Tilt Head Housing - Disassemble - Off Vehicle (Non- Telescoping)** .
5. Remove the electronic column lock module. Refer to **Electronic Column Lock Module - Disassemble - Off Vehicle (Telescoping Column)** or **Electronic Column Lock Module - Disassemble - Off Vehicle (Non - Telescoping Column)** .

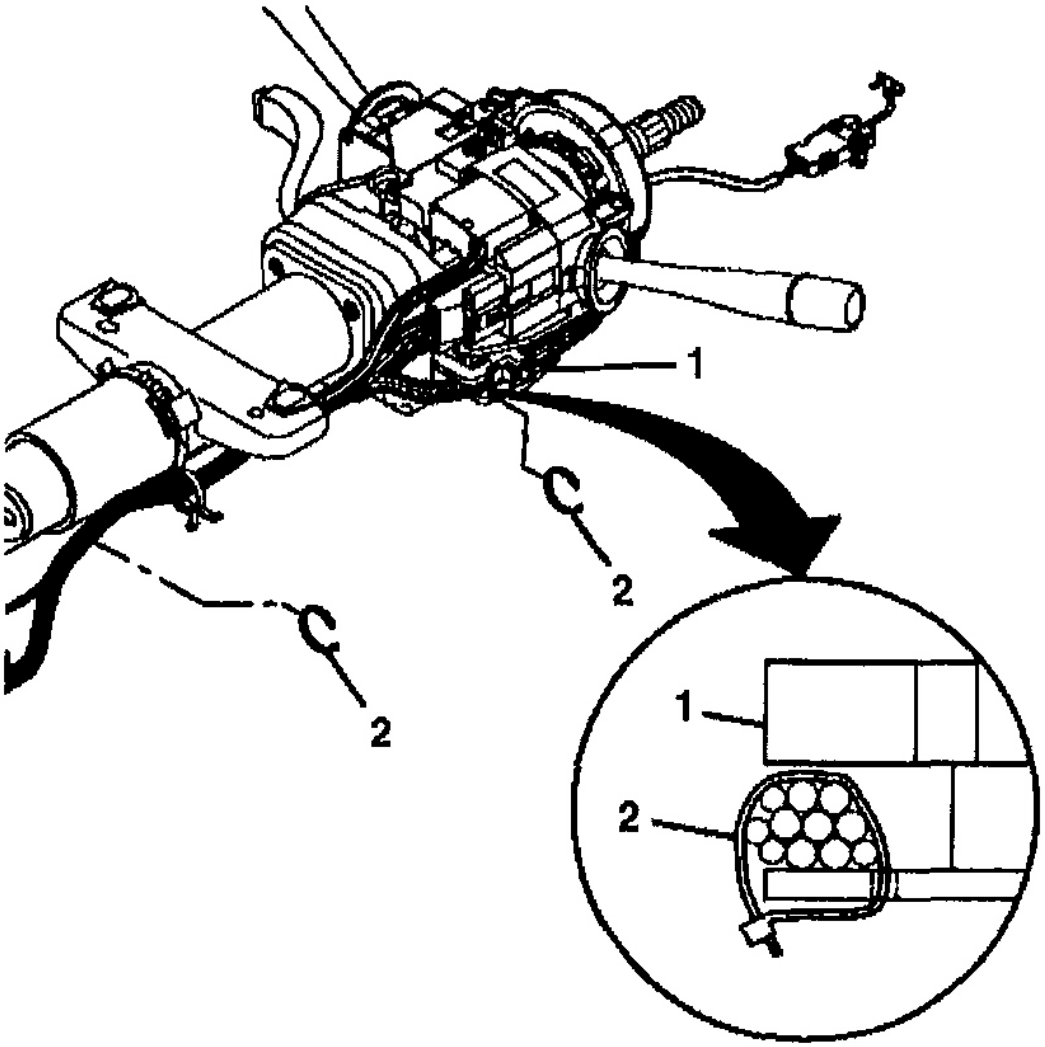


**Fig. 96: Removing Steering Column Wiring Harness Straps**
**Courtesy of GENERAL MOTORS CORP.**

**Installation Procedure**

1. Install the electronic column lock module. Refer to **Electronic Column Lock Module - Assemble - Off Vehicle (Telescoping Column)** or **Electronic Column Lock Module - Assemble - Off Vehicle (Non-Telescoping Column)** .
2. Route the wire harness assembly along the steering column jacket assembly.

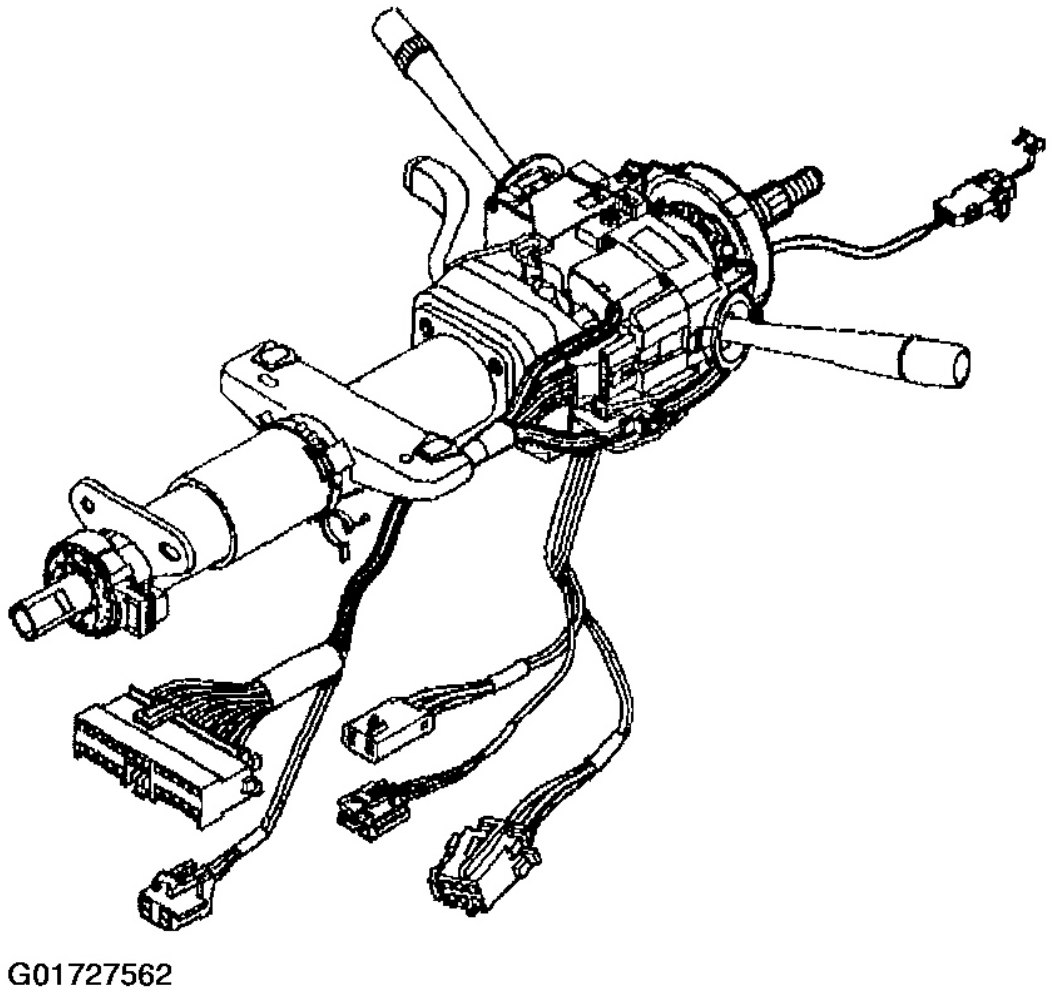


**Fig. 97: Aligning Steering Column Wiring Harness**
**Courtesy of GENERAL MOTORS CORP.**

3. Install the wire harness assembly (1) into the wire harness strap (2).
4. Install the steering column tilt head assembly. Refer to **Steering Column Tilt Head Housing - Assemble - Off Vehicle (Telescoping)** or **Steering Column Tilt Head Housing - Assemble - Off Vehicle (Non- Telescoping)** .
5. Remove **J 42640** from the steering column.
6. Install the upper and lower steering column trim covers. Refer to **Steering Column Trim Covers Replacement - On Vehicle (Non-Telescoping)** or **Steering Column Trim Covers Replacement - On Vehicle (Telescoping)** .

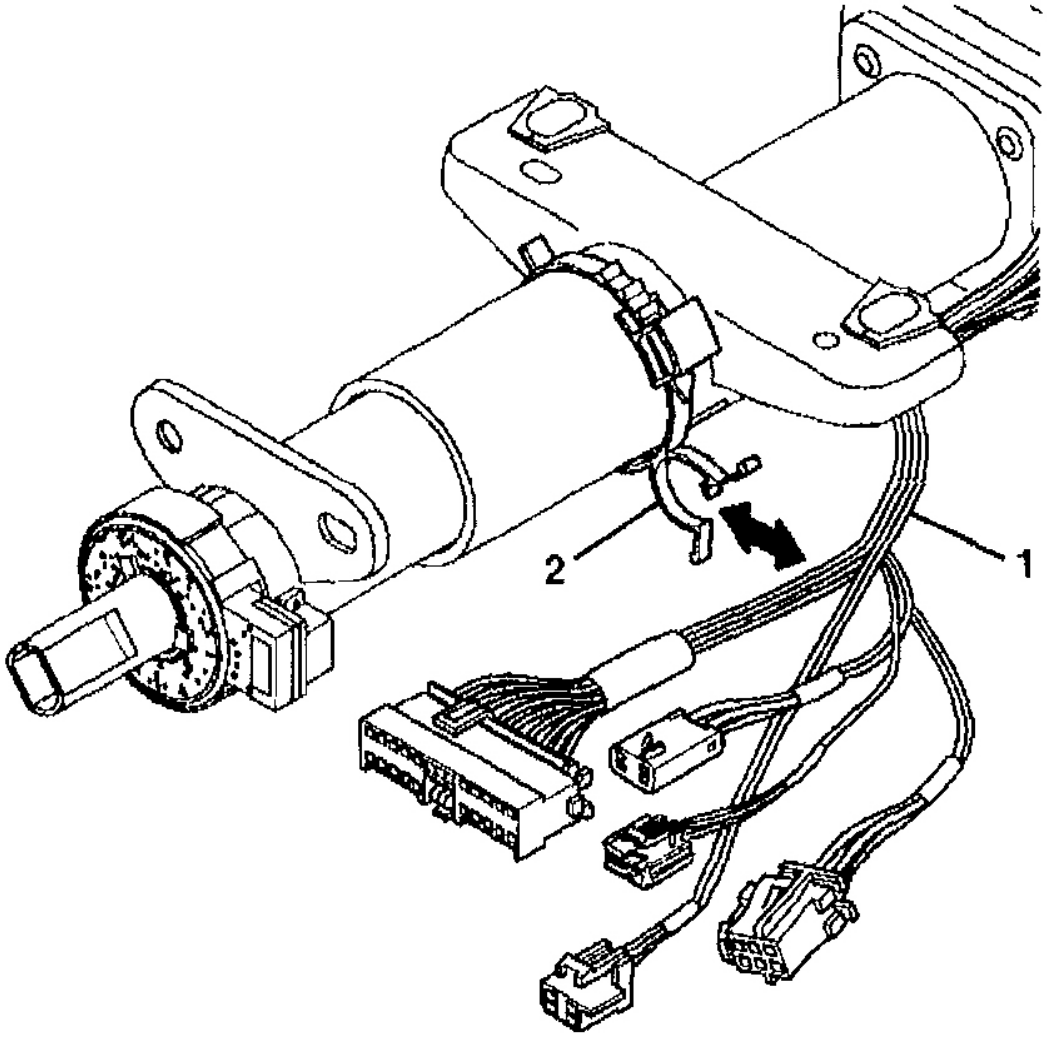


**Fig. 98: Installing Steering Column Wiring Harness**
**Courtesy of GENERAL MOTORS CORP.**

**STEERING COLUMN REPLACEMENT**

## Tools Required

**J 42640** Steering Column Lock Pin

**Removal Procedure**

**Important:** If the steering column connectors are disconnected with the ignition in the ON position, the BCM will enter a fail enable mode and prevent steering column lock operation. The PCM will also inhibit vehicle motion by disabling fuel. To clear the BCM fail enable mode, disconnect the BCM fuse #25 for 15 seconds.

1. Disable the SIR system. Refer to **DISABLING SYSTEM** .
2. Turn the steering wheel far enough to the left to gain access to the upper coupling bolt.
3. Remove the upper coupling bolt.

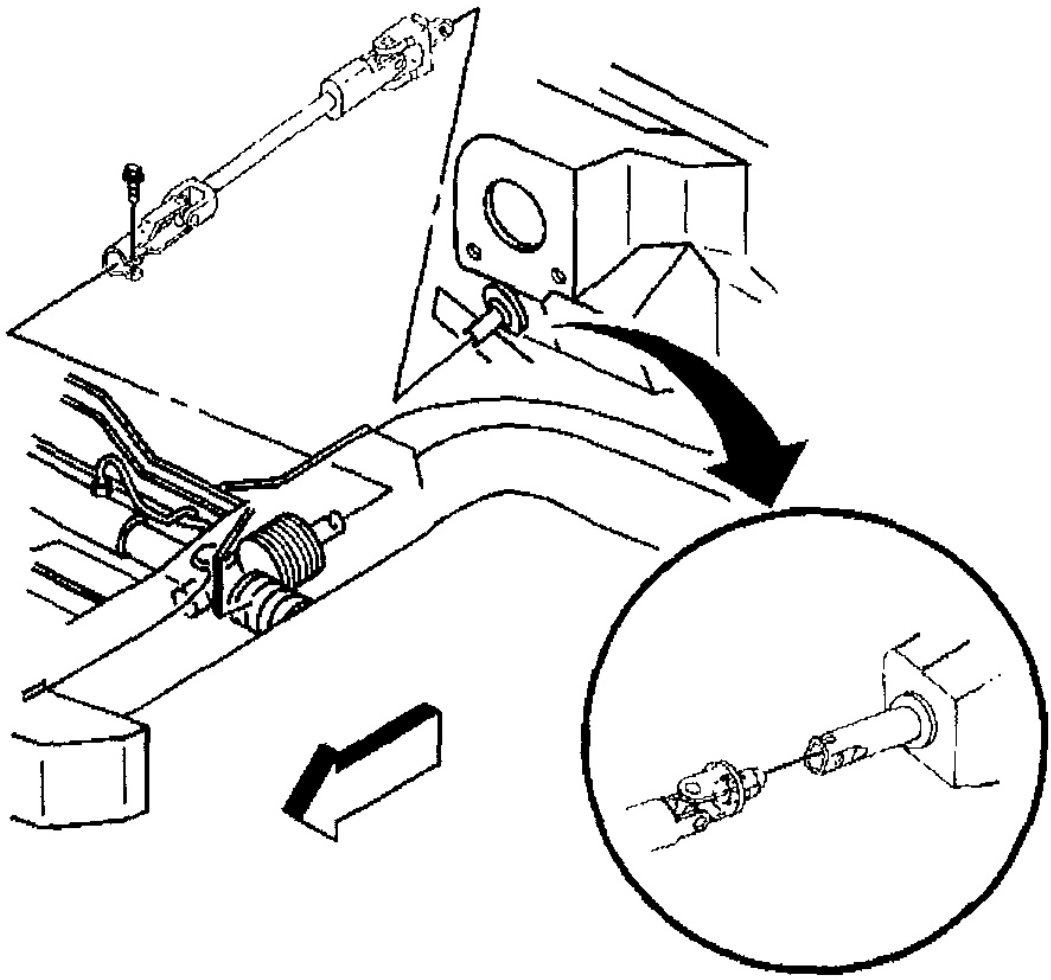


**Fig. 99: Removing Upper Coupling Bolt**
**Courtesy of GENERAL MOTORS CORP.**

4. Turn the steering wheel back to the right until the wheels are in a straight ahead position and then lock the steering column.
5. Install the **J 42640** to the steering column.
6. Remove the driver knee bolster trim panel. Refer to **INSTRUMENT PANEL ACCESSORY TRIM PLATE & KNEE BOLSTER PANEL** .
7. Remove the driver knee bolster bracket. Refer to **INSTRUMENT PANEL ACCESSORY TRIM PLATE & KNEE BOLSTER PANEL** .
8. Disconnect the electrical connectors from the instrument panel wiring harness.

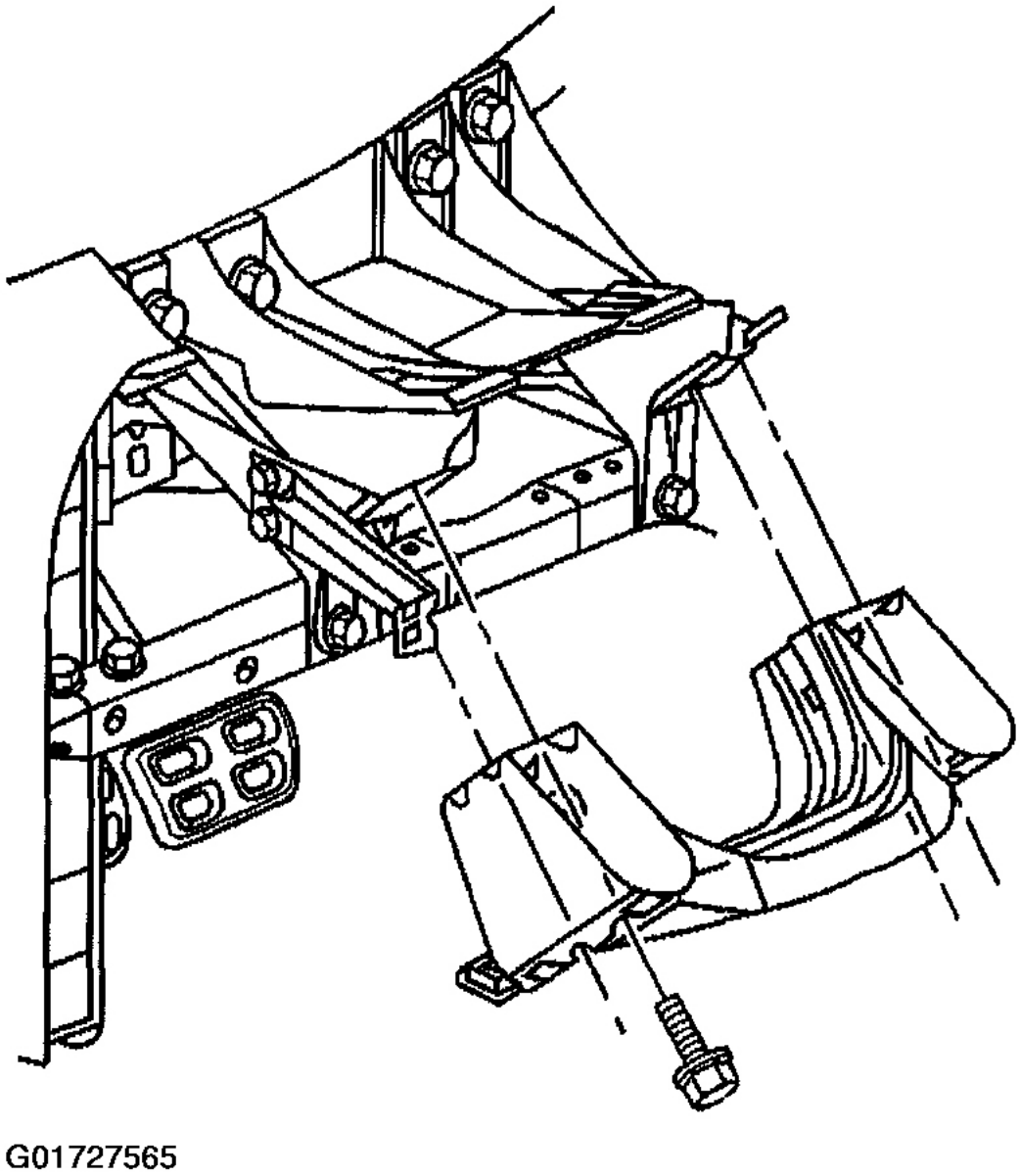


**Fig. 100: Removing Driver Knee Bolster Bracket Bolts**
**Courtesy of GENERAL MOTORS CORP.**

9. Remove the nuts from lower steering column support plate (1).

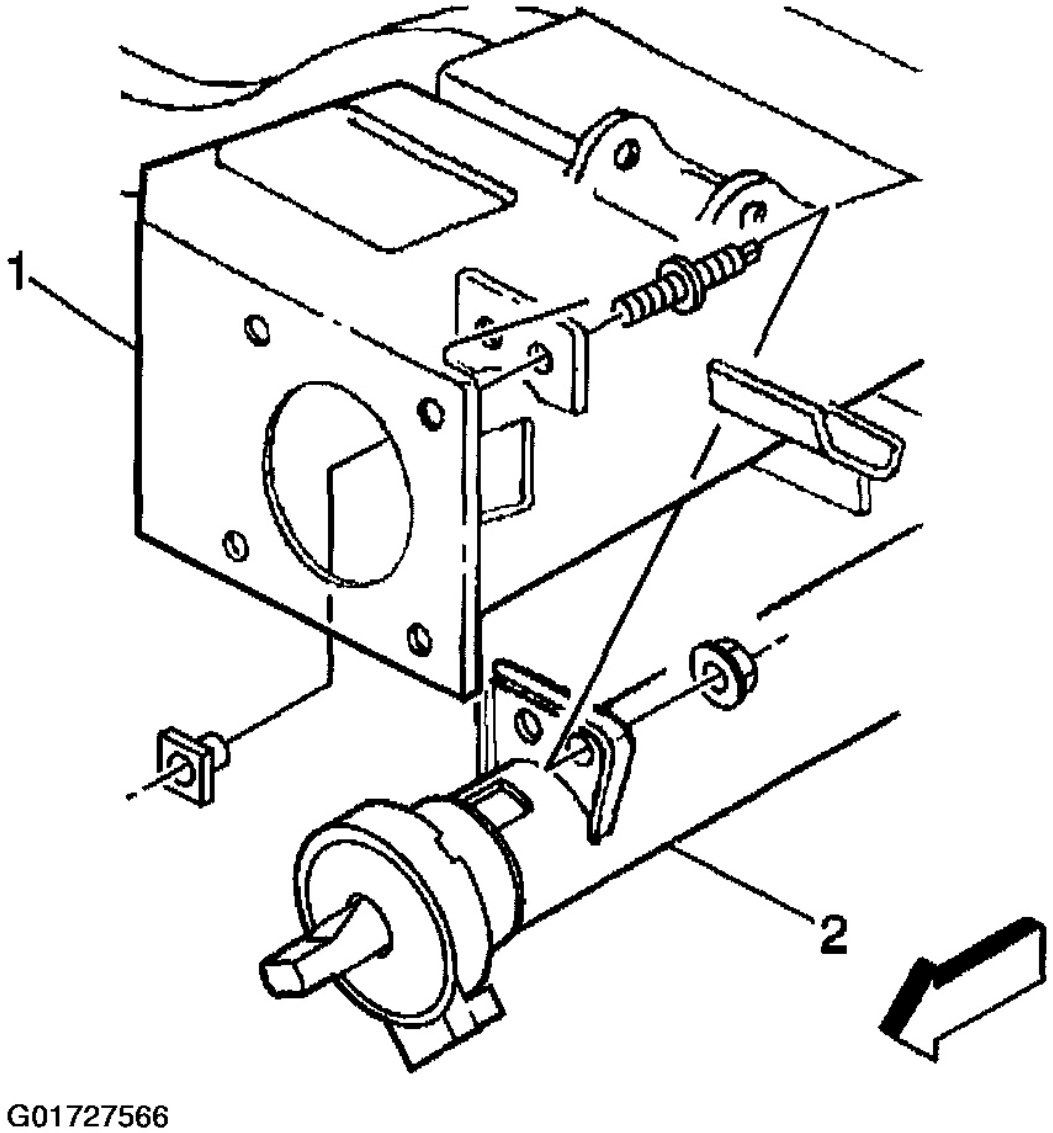


**Fig. 101: Removing Lower Steering Column Support Plate Nuts**
**Courtesy of GENERAL MOTORS CORP.**

10. Remove the upper steering column bracket nuts from the upper reinforcement assembly (3).
11. Slide the steering column (2) off of the intermediate shaft.
12. Remove the steering column (2) from the vehicle. Rotate the steering column clockwise as the bottom of the steering column reaches the reinforcement assembly. This will allow the telescoping steering column motor and the steering wheel position sensor room to clear the

instrument panel brace.

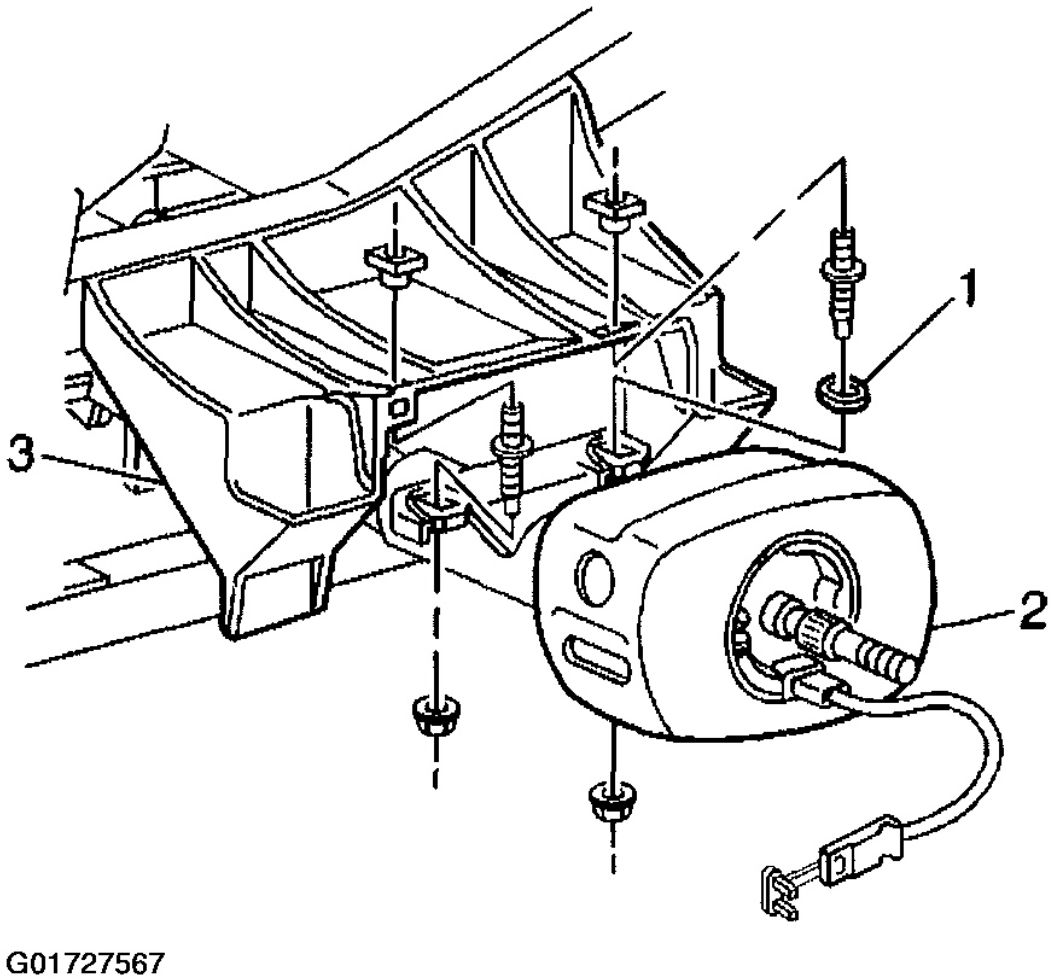


**Fig. 102: Removing Upper Steering Column Bracket Nuts**
**Courtesy of GENERAL MOTORS CORP.**

**Installation Procedure**

1. Position the steering column assembly (2) into the vehicle and insert the lower steering shaft assembly into the upper coupling of the intermediate shaft.
2. Install the cross car locating bushing (1) on the right hand mounting stud.

**CAUTION: Refer to FASTENER NOTICE .**

3. Install the upper steering column bracket nuts to the upper reinforcement assembly (3).

   **Tighten**

   Tighten the upper steering column bracket nuts to 24 N.m (17 lb ft).

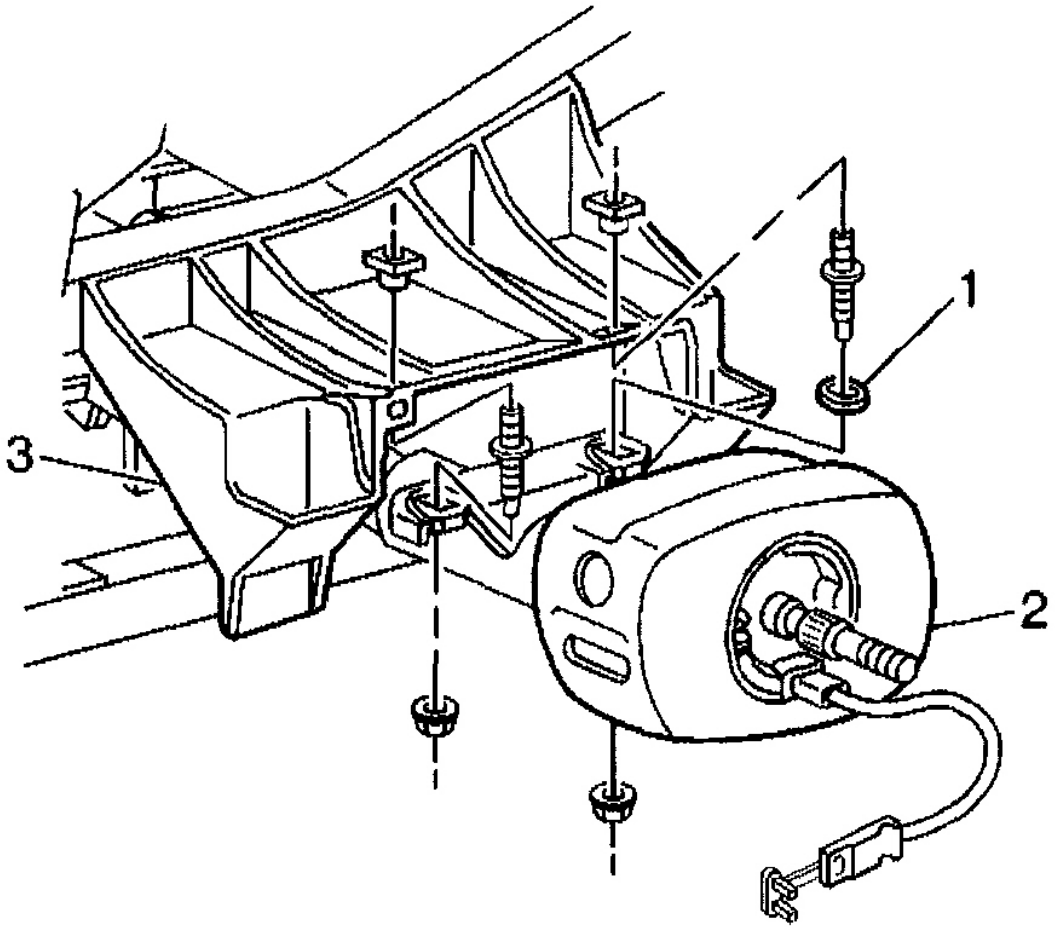


**Fig. 103: Installing Upper Steering Column Bracket Nuts**
**Courtesy of GENERAL MOTORS CORP.**

4. Install the lower steering column support plate (1) nuts.

   **Tighten**

Tighten the lower steering column support plate nuts to 24 N.m (17 lb ft).

5. Turn the steering wheel far enough to the left to gain access to the upper coupling of the intermediate shaft.

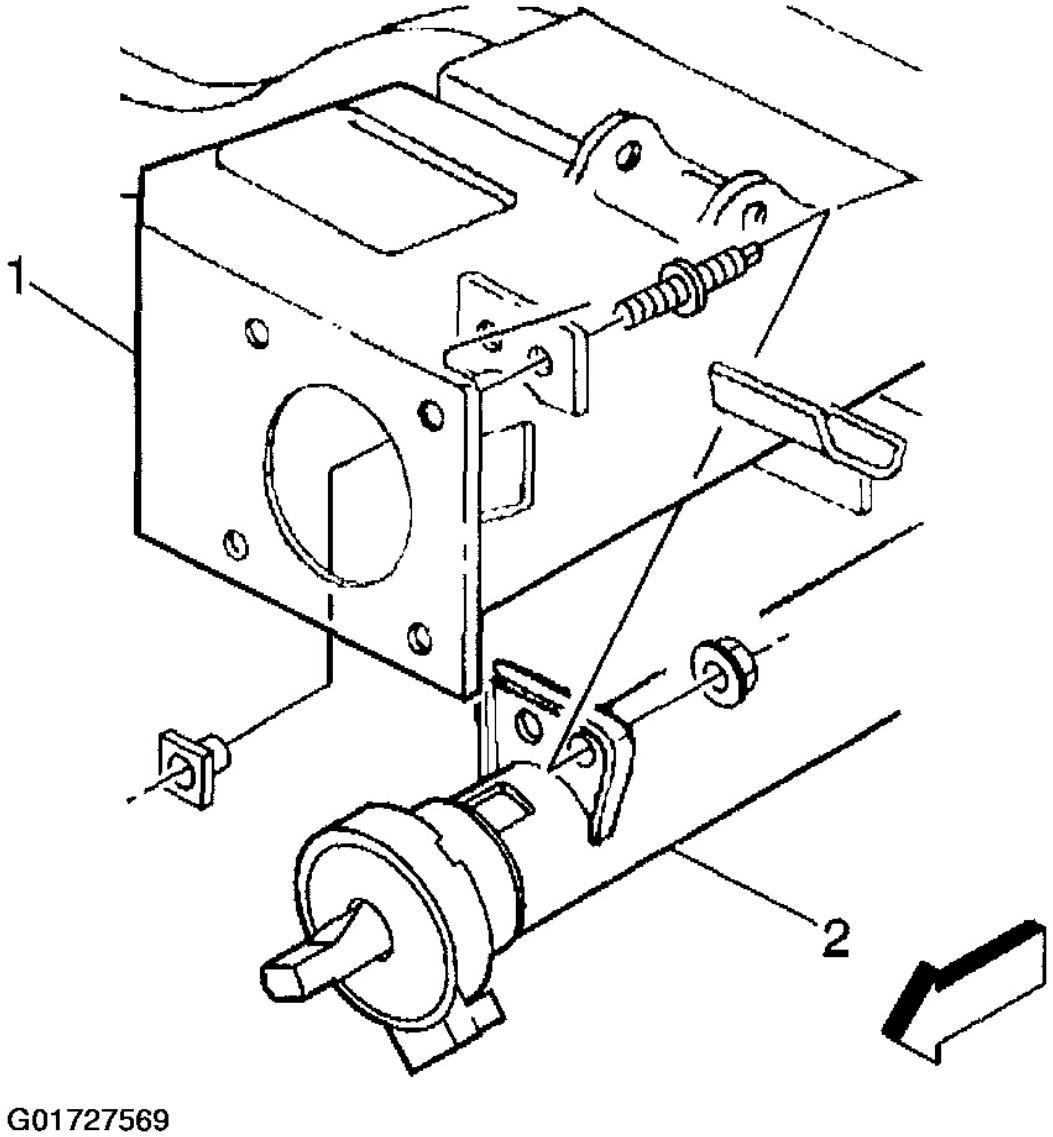


**Fig. 104: Installing Lower Steering Column Support Plate Nuts**
**Courtesy of GENERAL MOTORS CORP.**

6. Install the upper coupling bolt.

**Tighten**

Tighten the upper coupling bolt to 48 N.m (35 lb ft).

7. Connect all the electrical connectors to the instrument panel wiring harness.
8. Remove **J 42640** from the steering column.

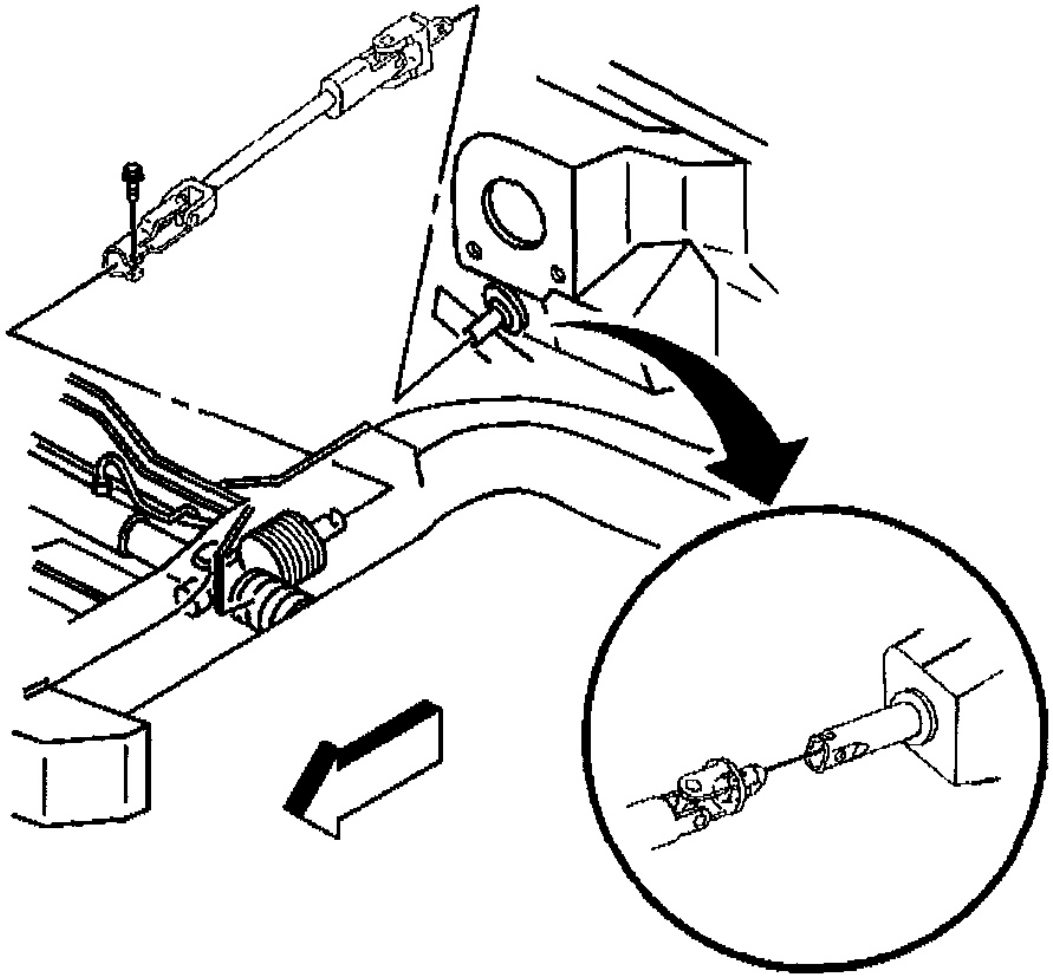


**Fig. 105: Installing Upper Coupling Bolt**
**Courtesy of GENERAL MOTORS CORP.**

9. Install the driver knee bolster bracket (1). Refer to **INSTRUMENT PANEL ACCESSORY TRIM PLATE & KNEE BOLSTER PANEL** .

10. Install the driver knee bolster trim panel. Refer to **INSTRUMENT PANEL ACCESSORY TRIM PLATE & KNEE BOLSTER PANEL** .
11. Enable the SIR system. Refer to **ACTIVATING SYSTEM** .

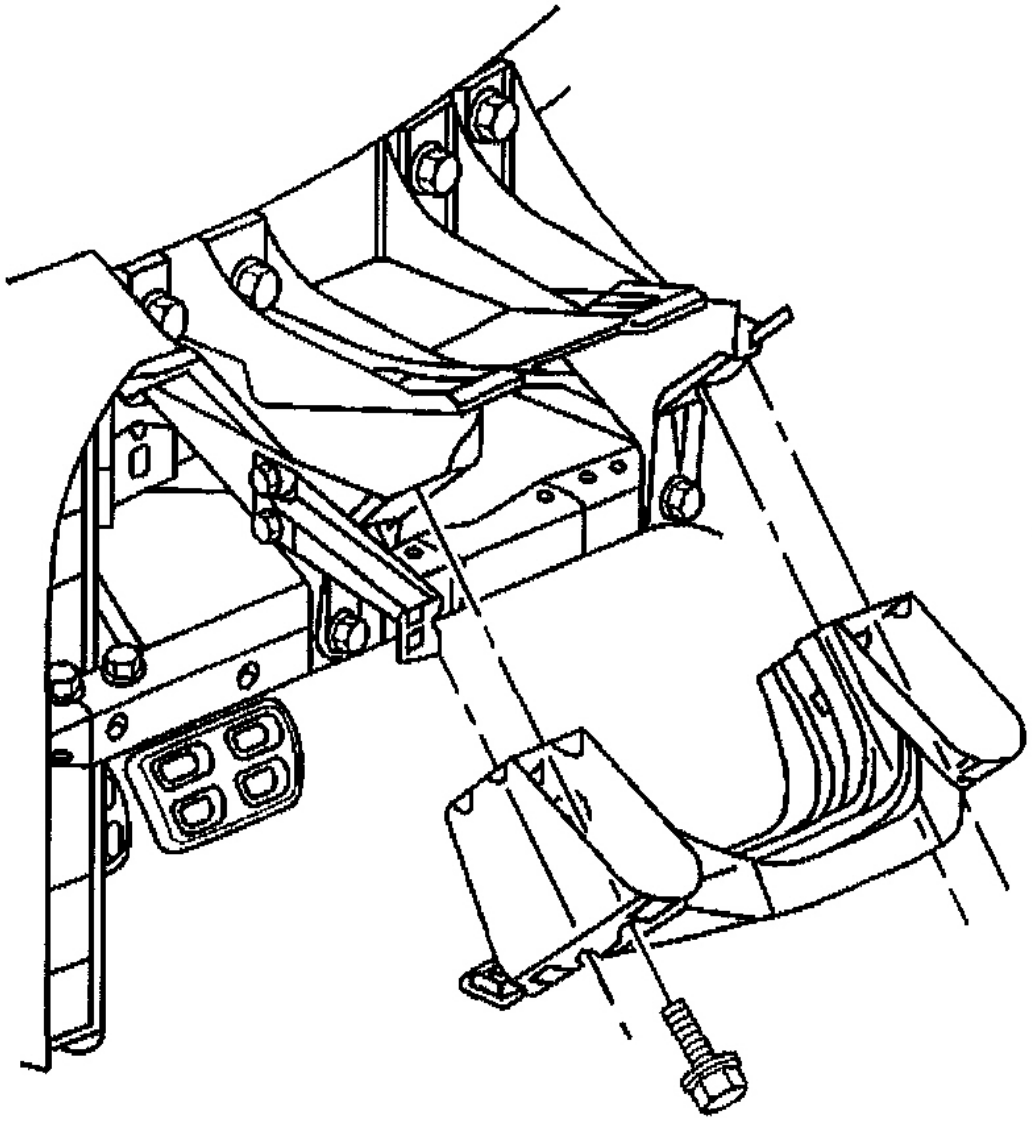


**Fig. 106: Installing Driver Knee Bolster Bracket Bolts**
**Courtesy of GENERAL MOTORS CORP.**

## STEERING COLUMN TRIM COVERS - DISASSEMBLE - OFF VEHICLE (TELESCOPING)

**WARNING: Refer to SIR CAUTION .**

1. Disable the inflatable restraint steering wheel module. Refer to **DISABLING SYSTEM** .
2. Remove the steering wheel. Refer to **Steering Wheel Replacement.**
3. Remove the steering column. Refer to **Steering Column Replacement.**
4. Inspect the lower steering shaft assembly for accident damage. Refer to**Steering Column Accident Damage Inspection - Off Vehicle (Telescoping)** or **Steering Column Accident Damage Inspection - Off Vehicle (Manual)** .

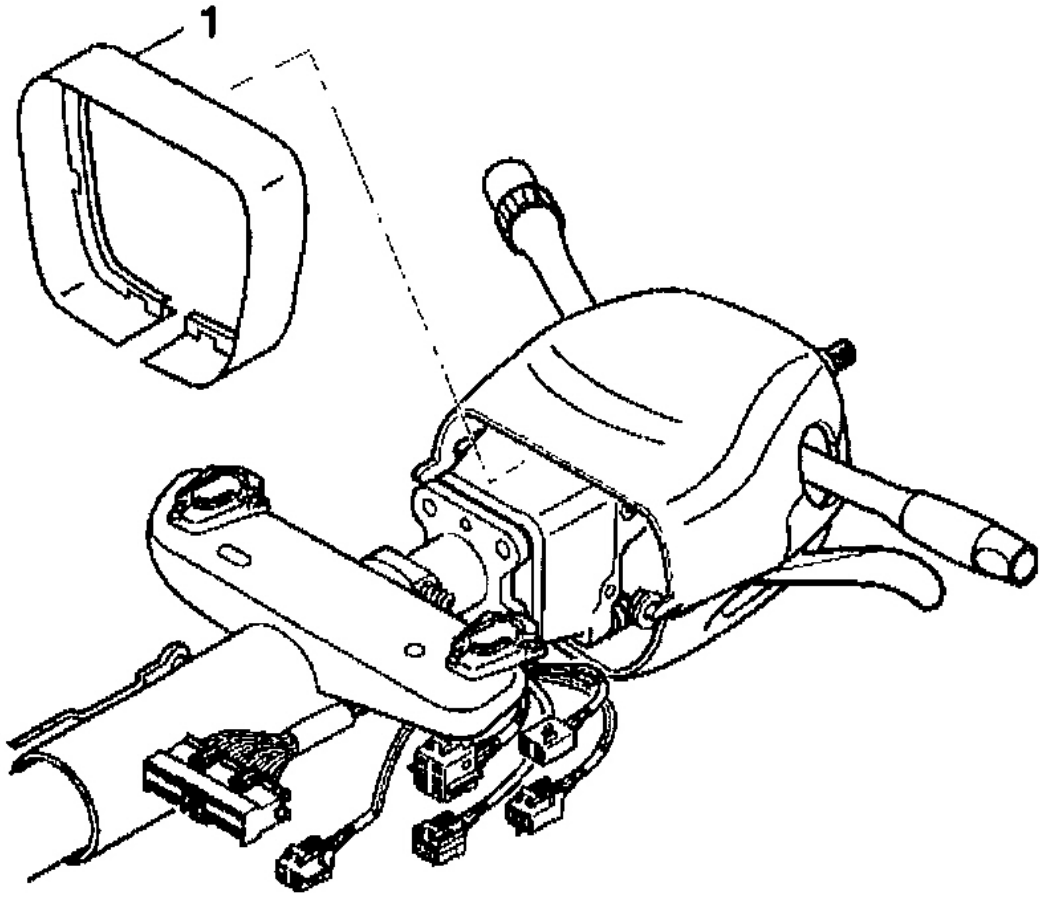


G01727572

**Fig. 107: Removing Steering Column Closeout Trim Cover**
**Courtesy of GENERAL MOTORS CORP.**

5. Remove the steering column closeout trim cover (1) from the upper and lower trim covers, if necessary. Otherwise take the steering column closeout trim cover (1) off with the upper trim cover.
6. Remove the 2 wire harness straps (1) from the steering column wire harness assembly.

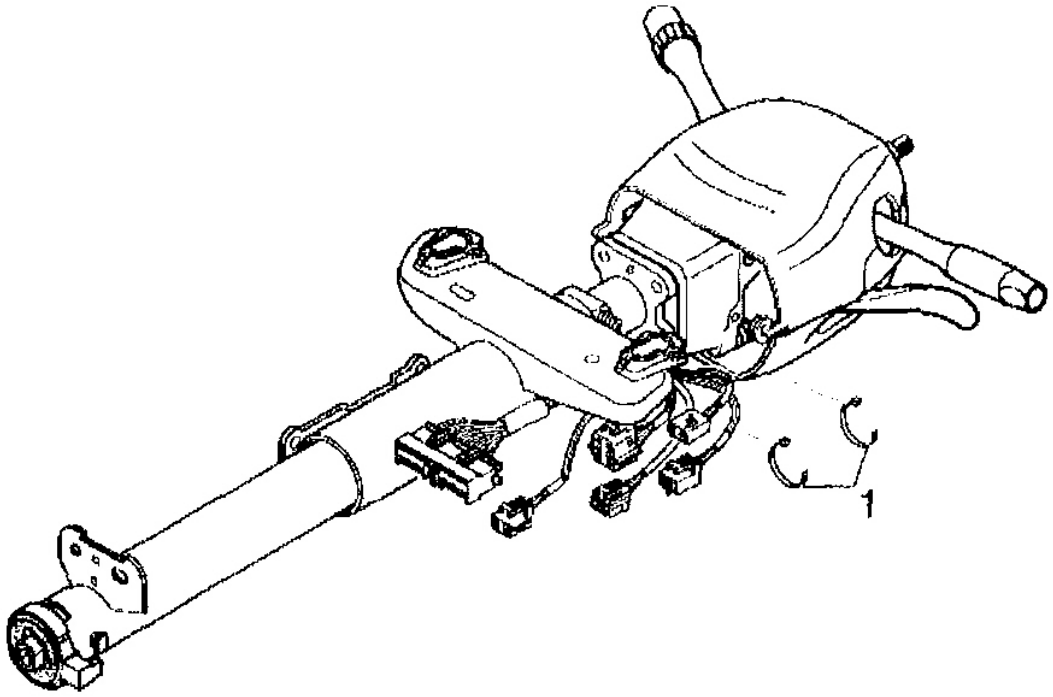


G01727573

**Fig. 108: Removing Steering Column Wiring Harness Assembly Straps**
**Courtesy of GENERAL MOTORS CORP.**

7. Remove the 2 pan head tapping screws (2) from the lower trim cover (1).

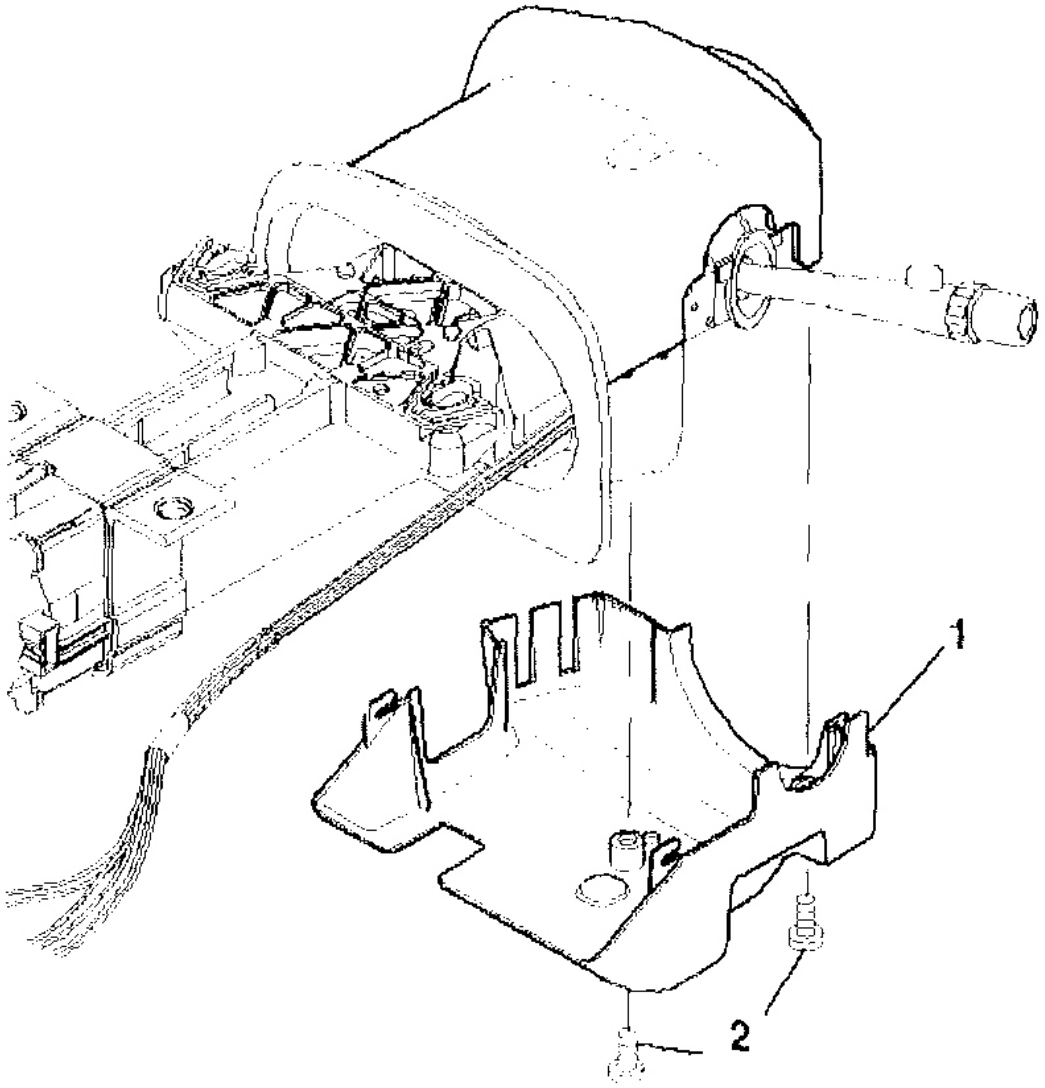


**Fig. 109: Removing Lower Trim Cover Screws**
**Courtesy of GENERAL MOTORS CORP.**

8. Perform the following steps to remove the lower trim cover:
   - **8.1.** Tilt the lower trim cover down.
   - **8.2.** Slide the lower trim cover back to disengage from the upper trim cover.

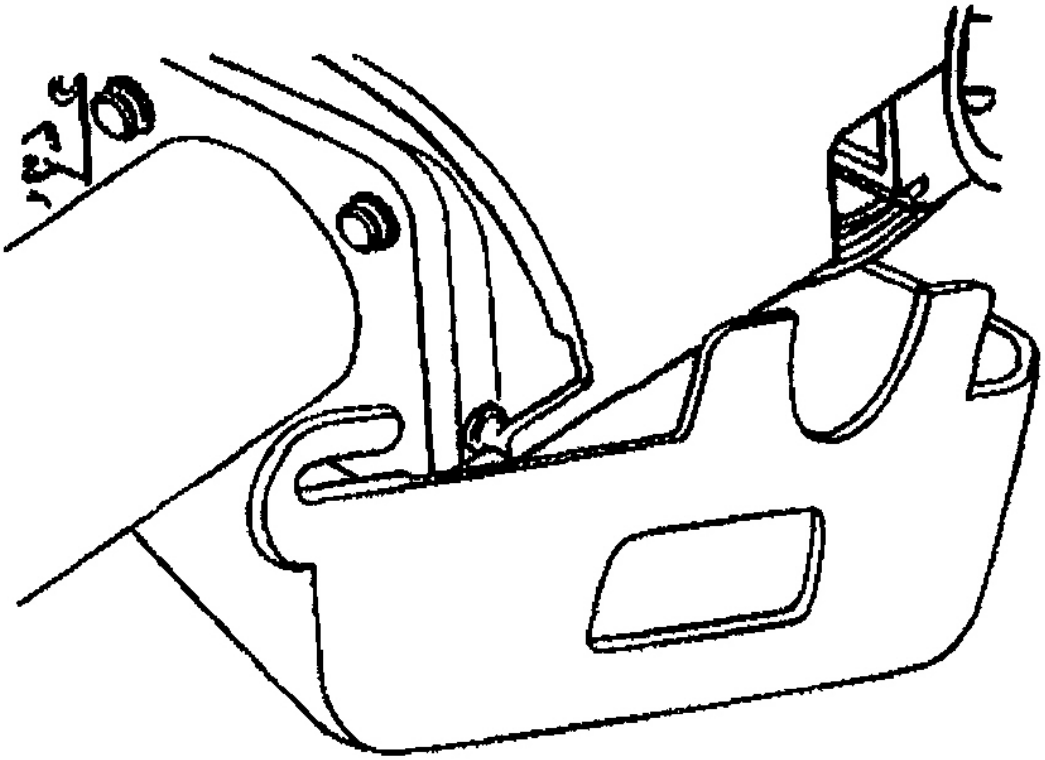

G01727575

**Fig. 110: Removing Lower Trim Cover**
**Courtesy of GENERAL MOTORS CORP.**

9. Remove the telescope switch assembly (2) from the lower trim cover (1) if replacing.

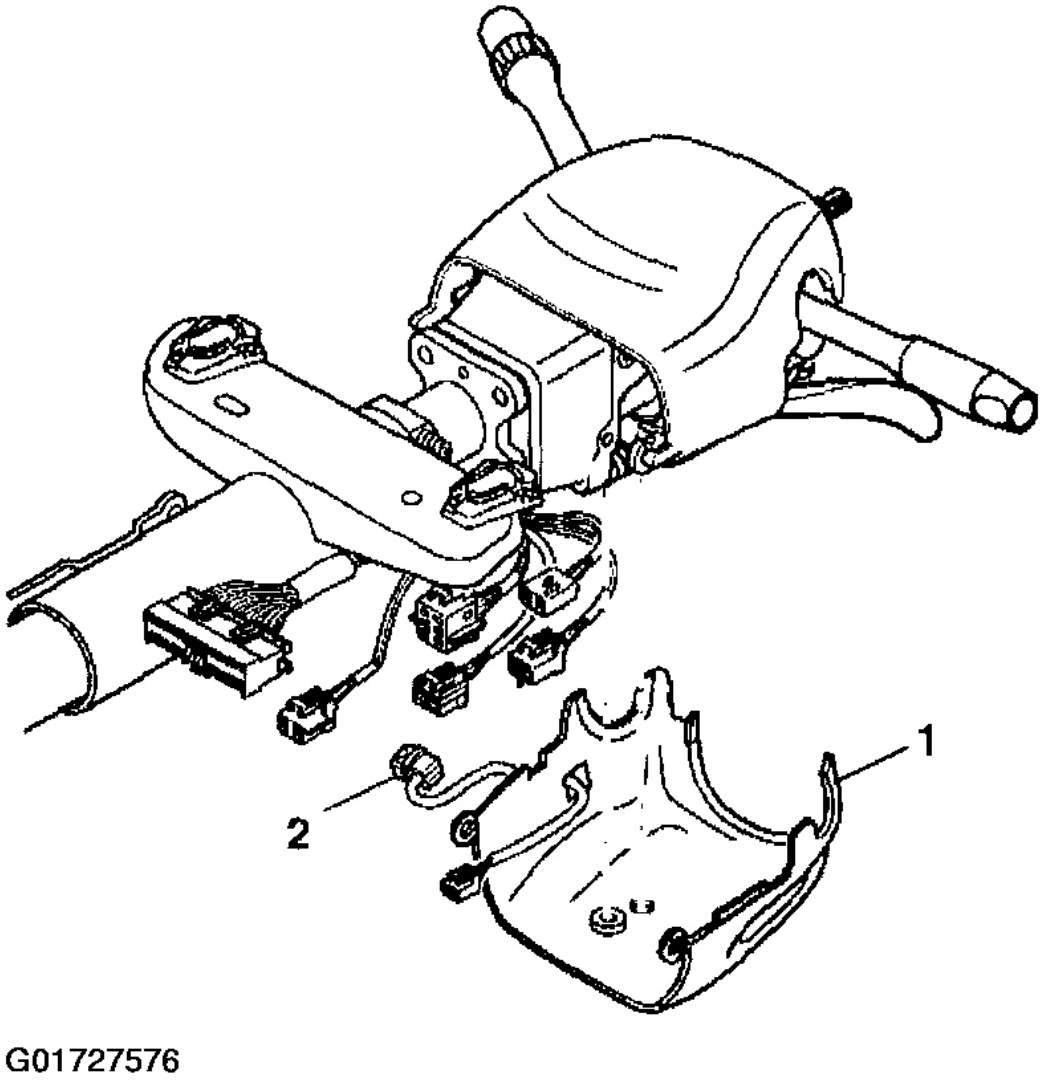


**Fig. 111: Removing Telescope Switch Assembly**
**Courtesy of GENERAL MOTORS CORP.**

10. Remove the TORX(R) head screw (2) from the upper trim cover (1).
11. Remove the upper trim cover (1).

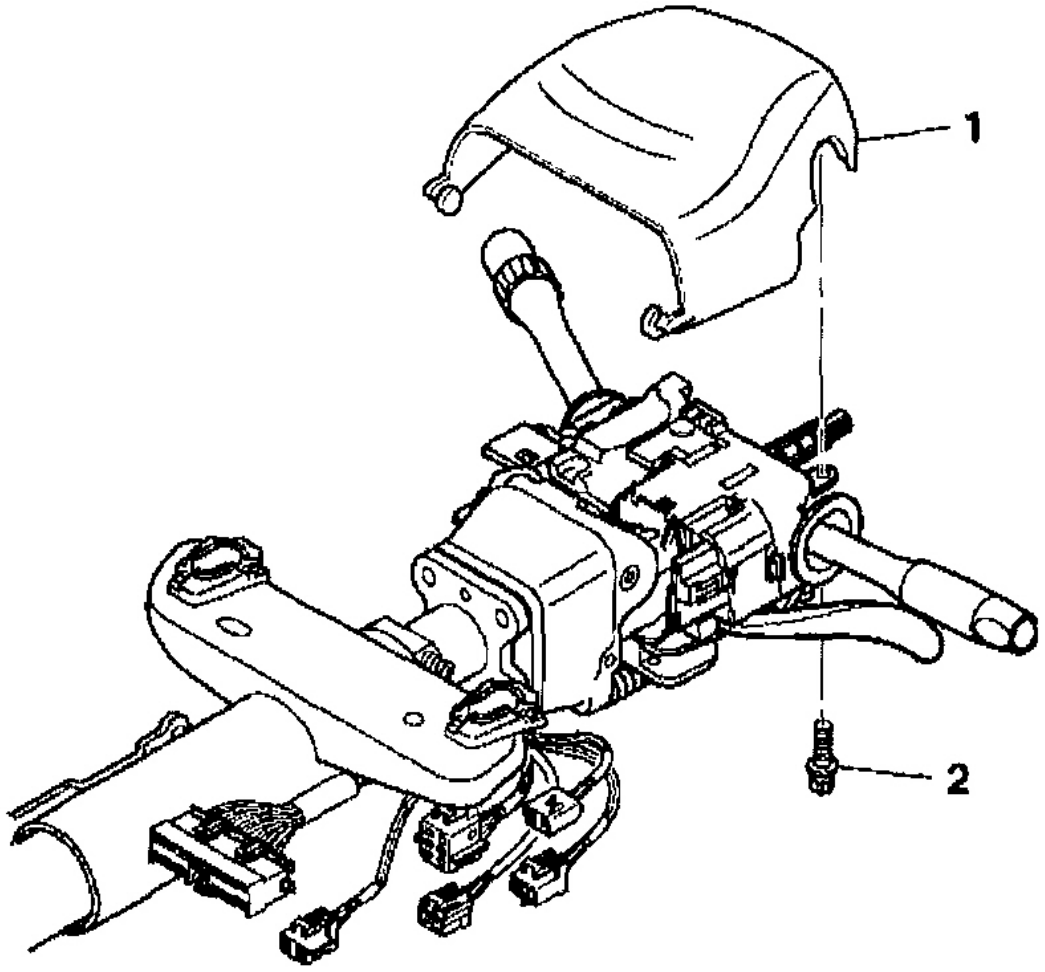


G01727577

**Fig. 112: Removing Upper Trim Cover Screws**
**Courtesy of GENERAL MOTORS CORP.**

**STEERING COLUMN TRIM COVERS - DISASSEMBLE - OFF VEHICLE (NON-TELES TELESCOPING)**

## Tools Required

**J 41352** Modular Column Holding Fixture

**WARNING: Refer to SIR CAUTION .**

1. Disable the inflatable restraint steering wheel module. Refer to **DISABLING SYSTEM** .
2. Remove the tilt lever. Refer to **Tilt Lever Replacement - On Vehicle** .
3. Remove the steering wheel. Refer to **Steering Wheel Replacement** .
4. Remove the steering column. Refer to **Steering Column Replacement** .
5. Place **J 41352** into the vise.
6. Secure the steering column to **J 41352** .

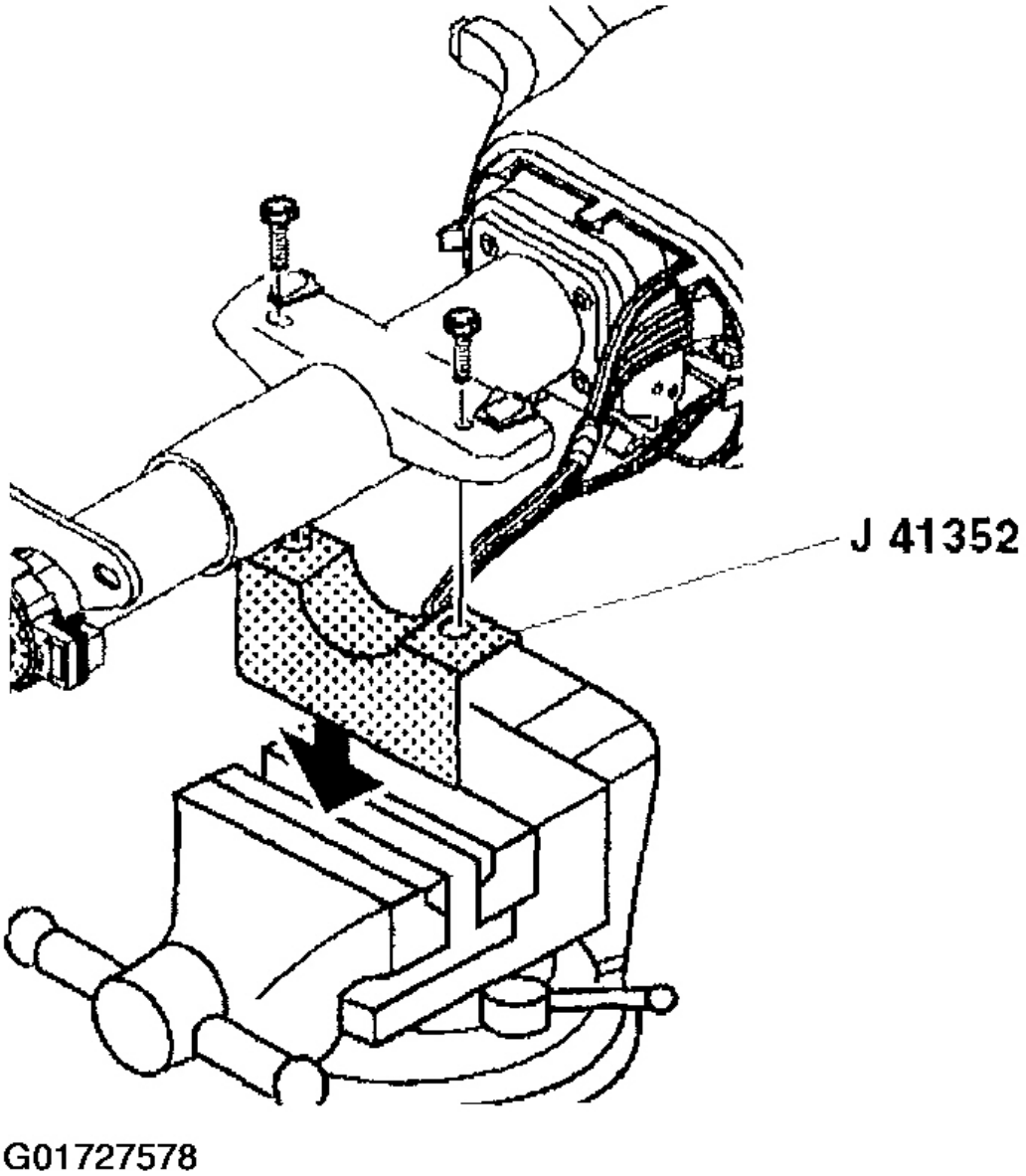


**Fig. 113: Installing J 41352 Modular Column Holding Fixture**
**Courtesy of GENERAL MOTORS CORP.**

7. Inspect the lower steering shaft assembly for accident damage. Refer to **Steering Column Accident Damage Inspection - Off Vehicle (Telescoping)** or **Steering Column Accident Damage Inspection - Off Vehicle (Manual).**
8. Remove the 2 TORX(R) head screws (1) from the lower trim cover.

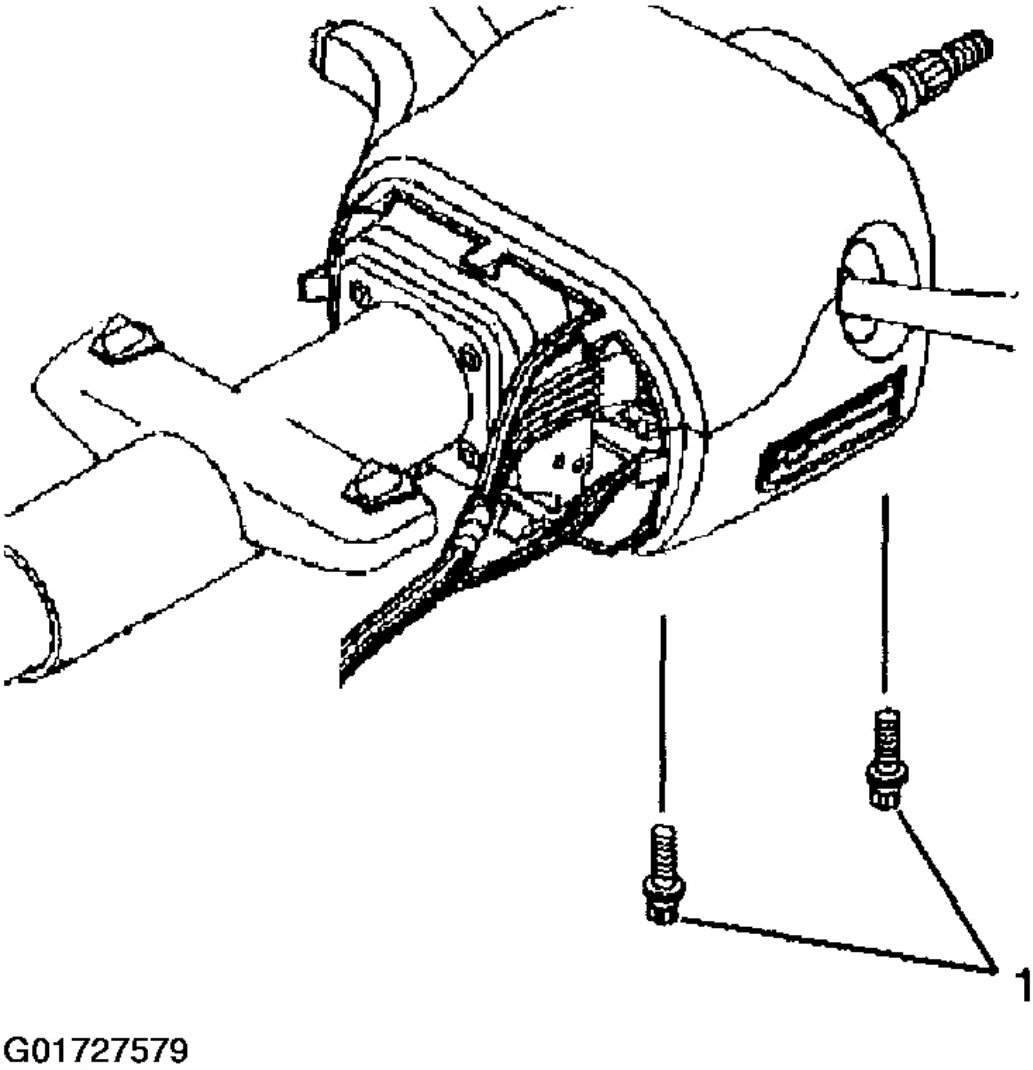


**Fig. 114: Removing Lower Trim Cover Screws**
**Courtesy of GENERAL MOTORS CORP.**

9. Perform the following steps to remove the lower trim cover
    - **9.1.** Tilt the lower trim cover down.
    - **9.2.** Slide the lower trim cover back to disengage from the upper trim cover.

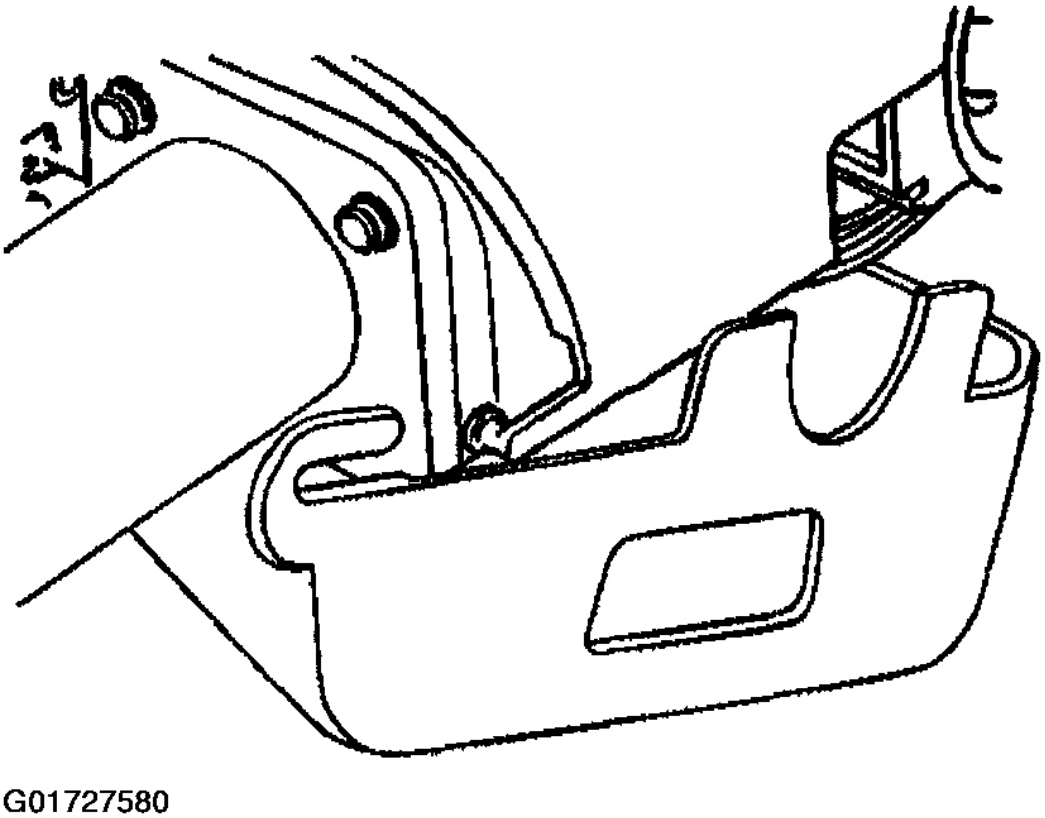


**Fig. 115: Removing Lower Trim Cover**
**Courtesy of GENERAL MOTORS CORP.**

10. Remove the 2 TORX(R) head screws (2) from the upper trim cover (1).
11. Remove the upper trim cover (1).

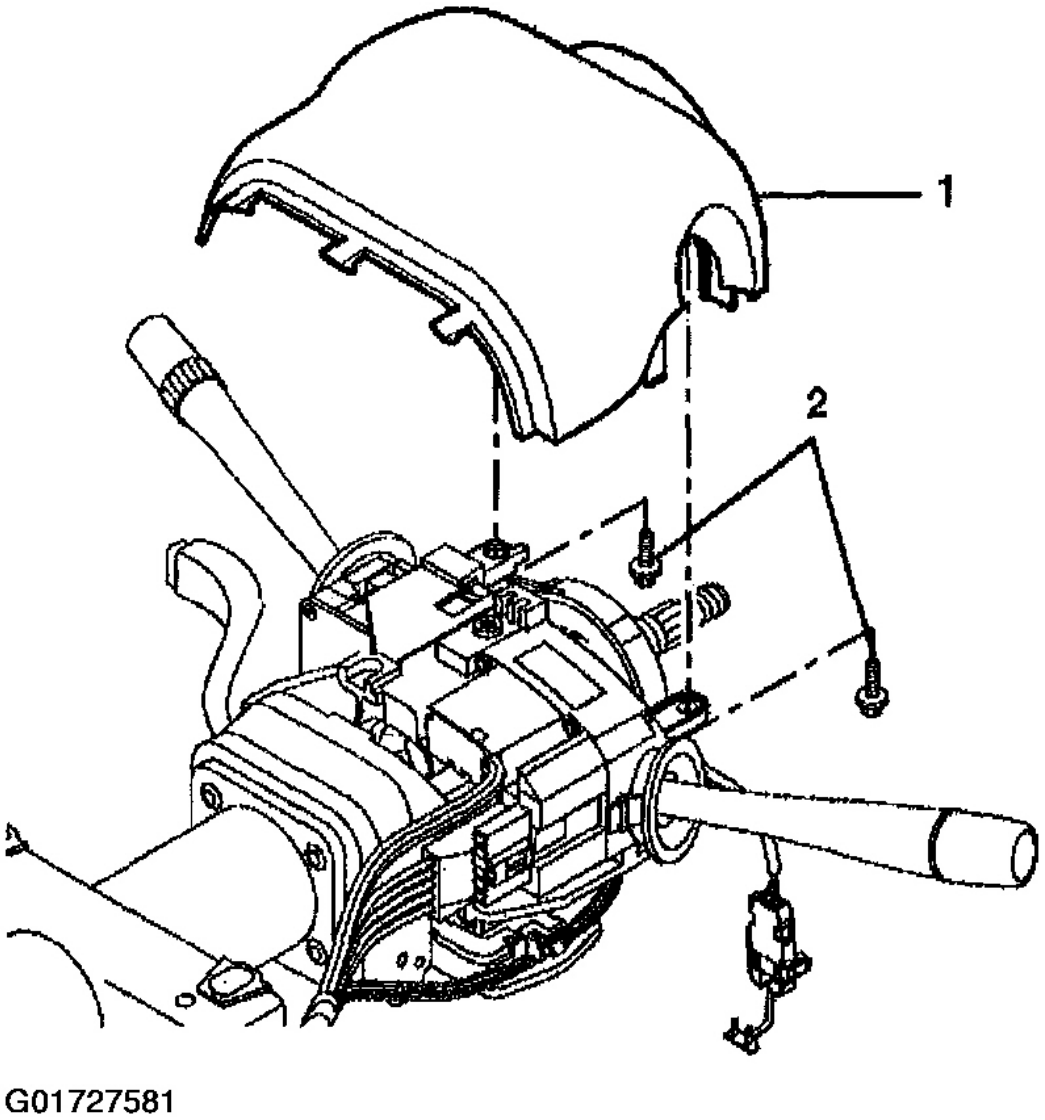


**Fig. 116: Removing Upper Trim Cover Screws**
**Courtesy of GENERAL MOTORS CORP.**

**STEERING COLUMN TRIM COVERS - ASSEMBLE - OFF VEHICLE (TELESCOPING COLUM COLUMN)**

**CAUTION: Refer to FASTENER NOTICE .**

1. Install the upper trim cover (1) and secure by using the TORX(R) head screw (2).

   **Tighten**

   Tighten the screw to 1.5 N.m (13 lb in).

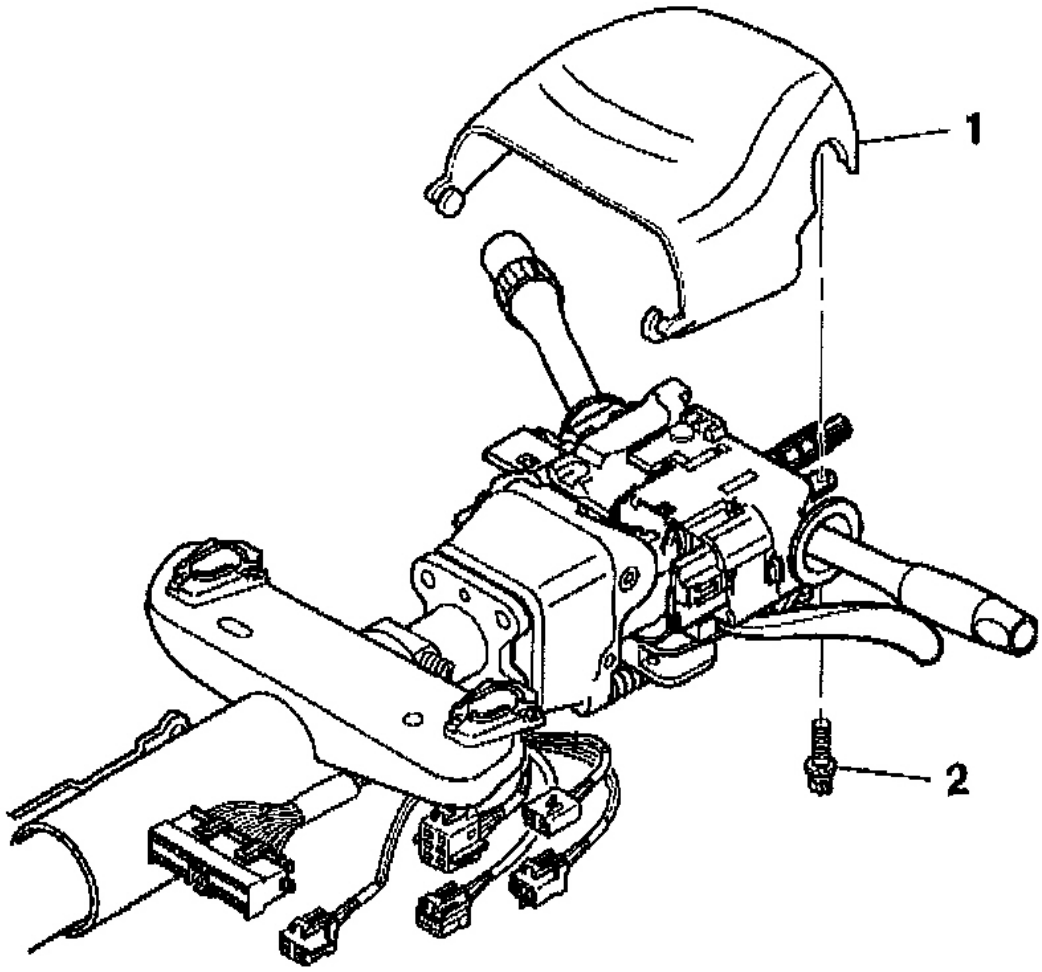


**Fig. 117: Installing Upper Trim Cover Screws**
**Courtesy of GENERAL MOTORS CORP.**

**WARNING: Refer to SIR CAUTION .**

2. Install the telescope switch assembly (2) into the lower trim cover (1).

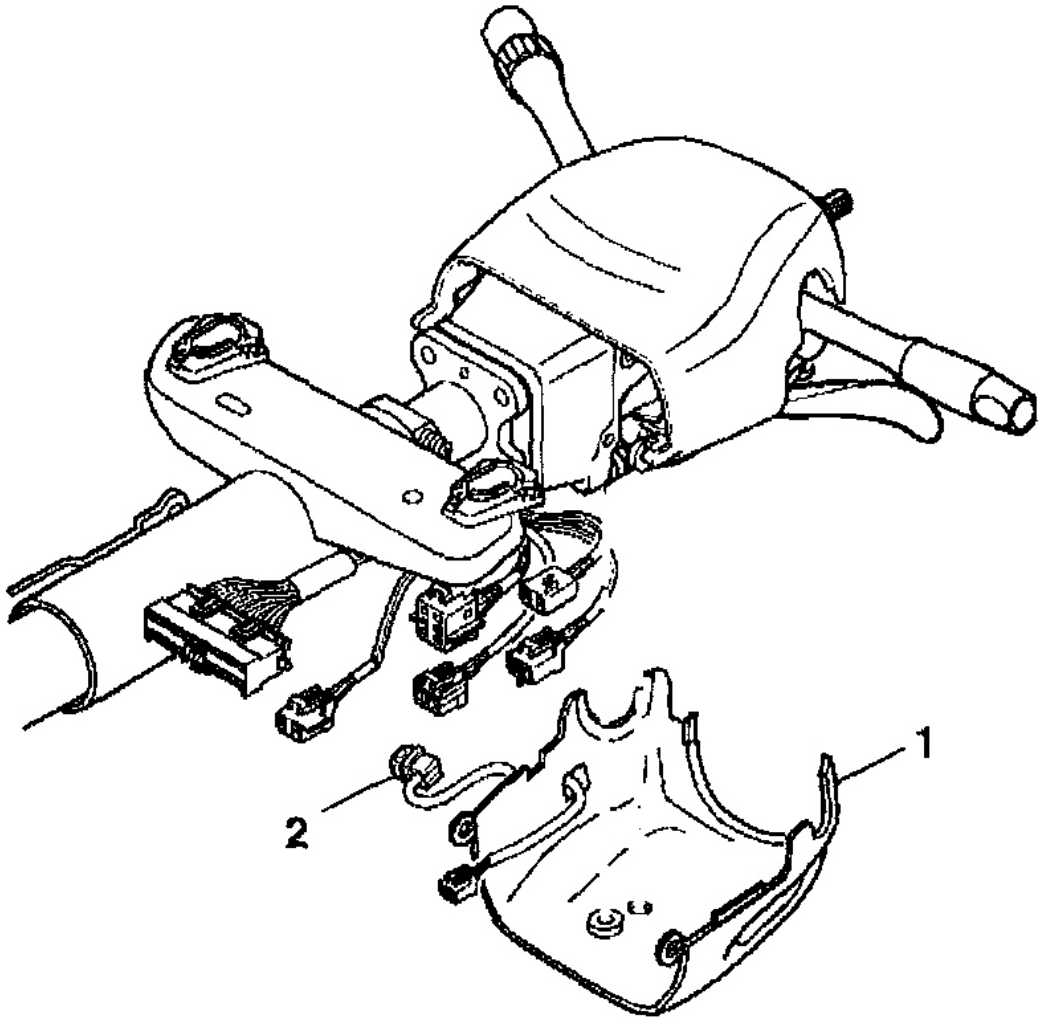


**Fig. 118: Installing Telescope Switch Assembly**
**Courtesy of GENERAL MOTORS CORP.**

3. Perform the following steps to install the lower trim cover:

   **3.1.** Verify that the slots on the lower trim cover engage with the tabs on the upper trim cover.

   **3.2.** Tilt the lower trim cover up and snap the trim covers together.

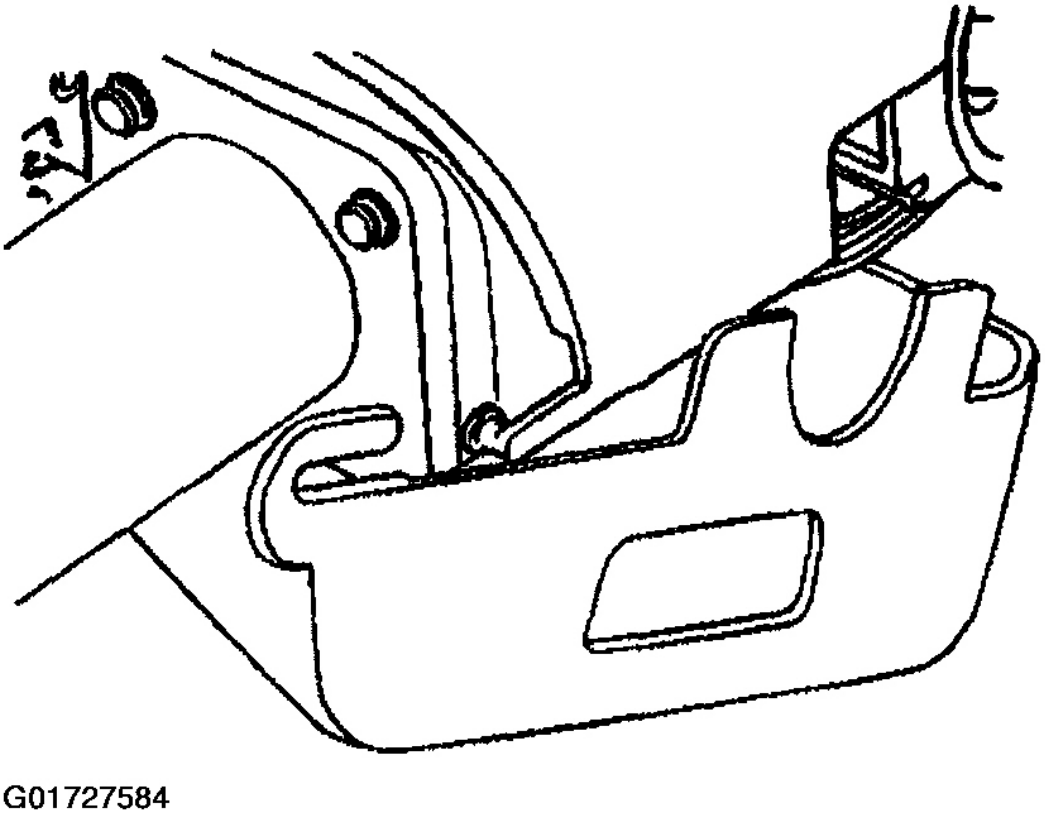


**Fig. 119: Installing Lower Trim Cover**
**Courtesy of GENERAL MOTORS CORP.**

4. Install the 2 pan head tapping screws (2) to the lower trim cover (1).

   **Tighten**

   Tighten the screws to 3.5 N.m (31 lb in).

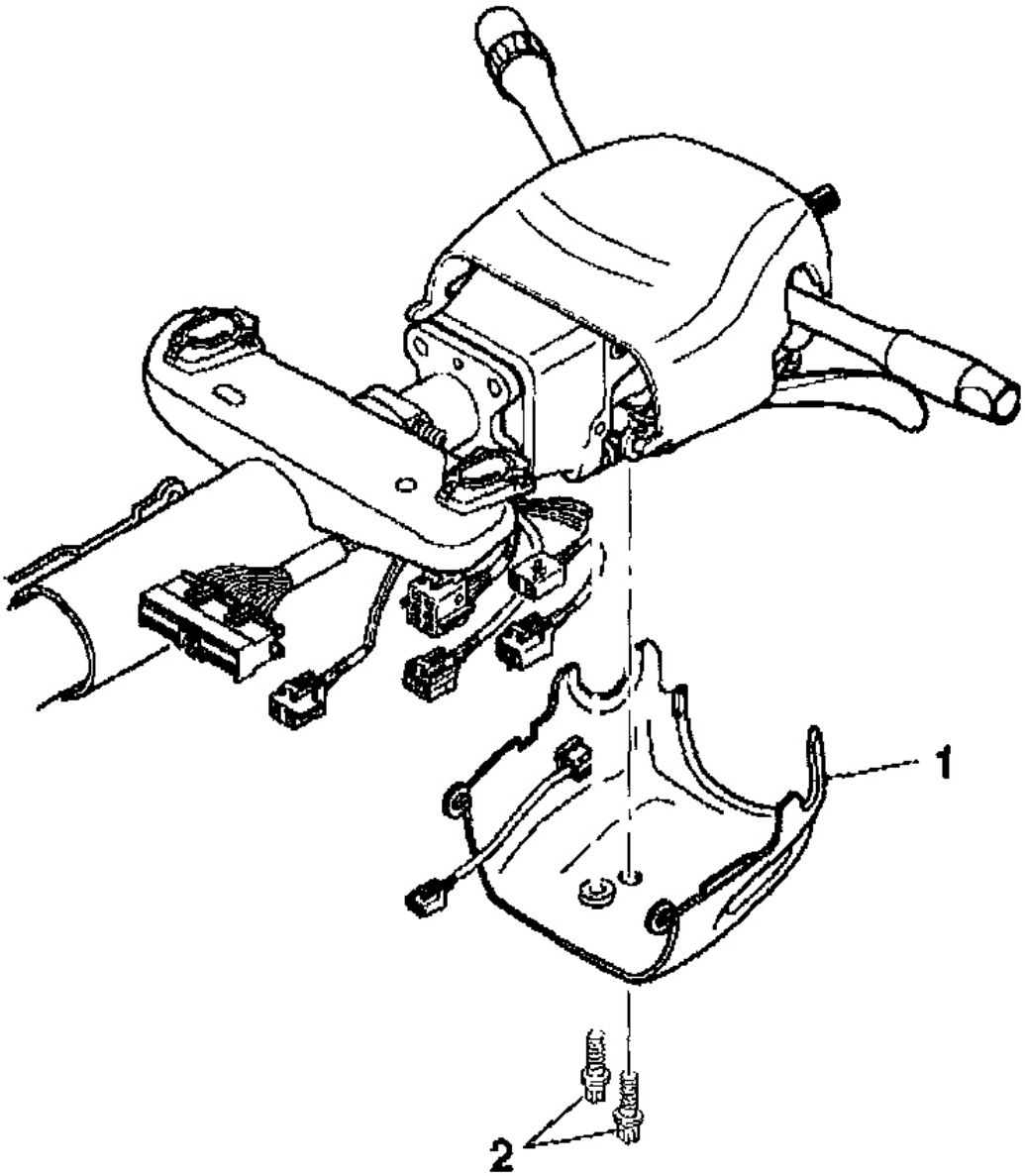


**Fig. 120: Installing Lower Trim Cover Screws**
**Courtesy of GENERAL MOTORS CORP.**

5. Install the wire harness straps (1) to the steering column wire harness assembly.

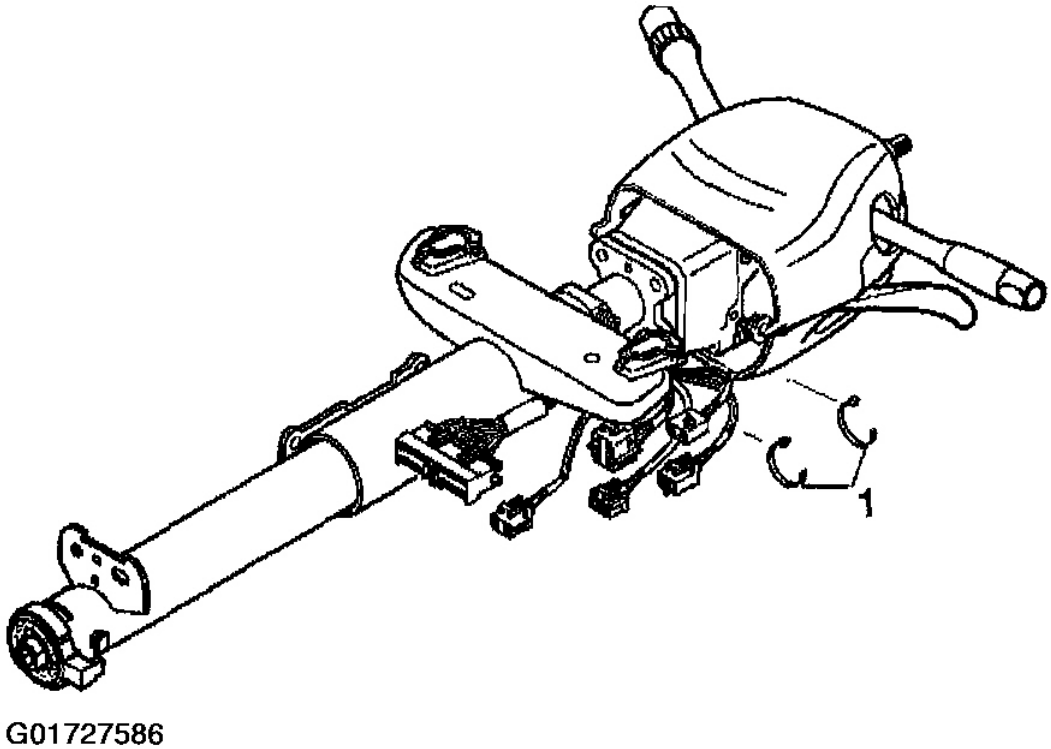


**Fig. 121: Installing Steering Column Wiring Harness Straps**
**Courtesy of GENERAL MOTORS CORP.**

6. Install the steering column close out trim cover (1).
7. Install the steering column. Refer to **Steering Column Replacement** .
8. Install the steering wheel. Refer to **Steering Wheel Replacement** .
9. Enable the inflatable restraint steering wheel module. Refer to **ACTIVATING SYSTEM** .

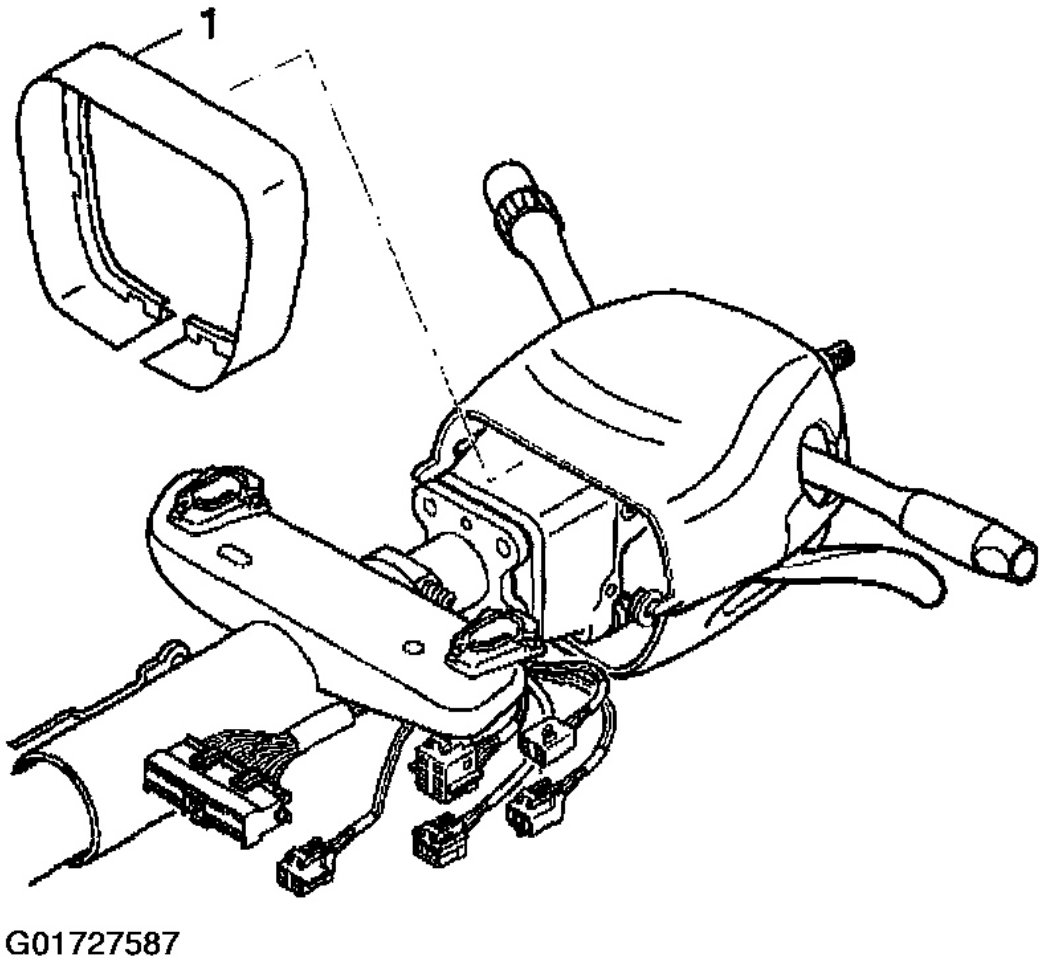


**Fig. 122: Installing Steering Column Close Out Panel**
**Courtesy of GENERAL MOTORS CORP.**

**STEERING COLUMN TRIM COVERS - ASSEMBLE - OFF VEHICLE (NON-TELESCOPING COLUMN)**

## Tools Required

**J 41352** Modular Column Holding Fixture

1. Install the upper trim cover (1).

**CAUTION: Refer to FASTENER NOTICE .**

2. Secure the upper trim cover (1) with the 2 TORX(R) head screws (2).

   **Tighten**

   Tighten the screws to 1.5 N.m (13 lb in).

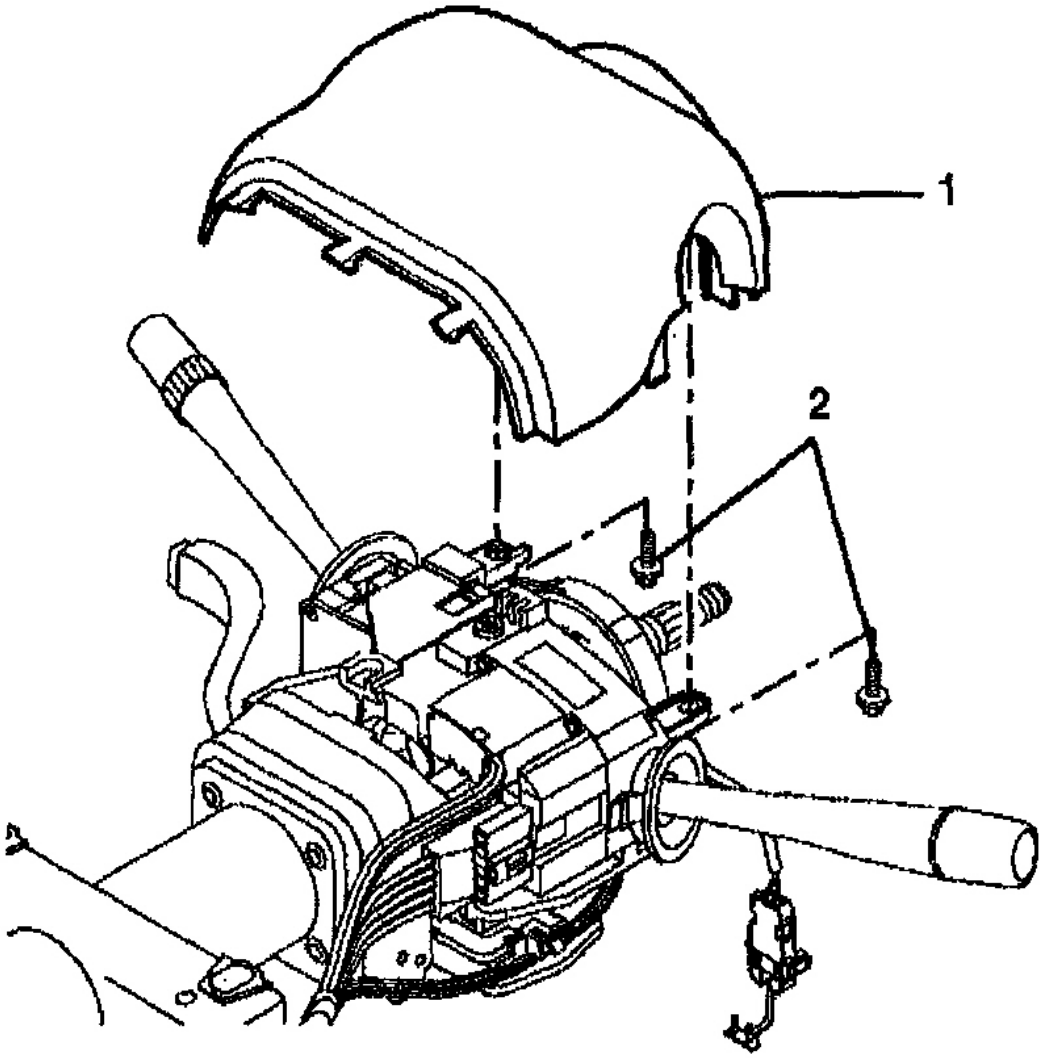


**Fig. 123: Installing Upper Trim Cover Screws**
**Courtesy of GENERAL MOTORS CORP.**

3. Perform the following steps to install the lower trim cover:
   1. **3.1.** Verify that the slots on the lower trim cover engage with the tabs on the upper trim cover.
   2. **3.2.** Tilt the lower trim cover up and snap the trim covers together.

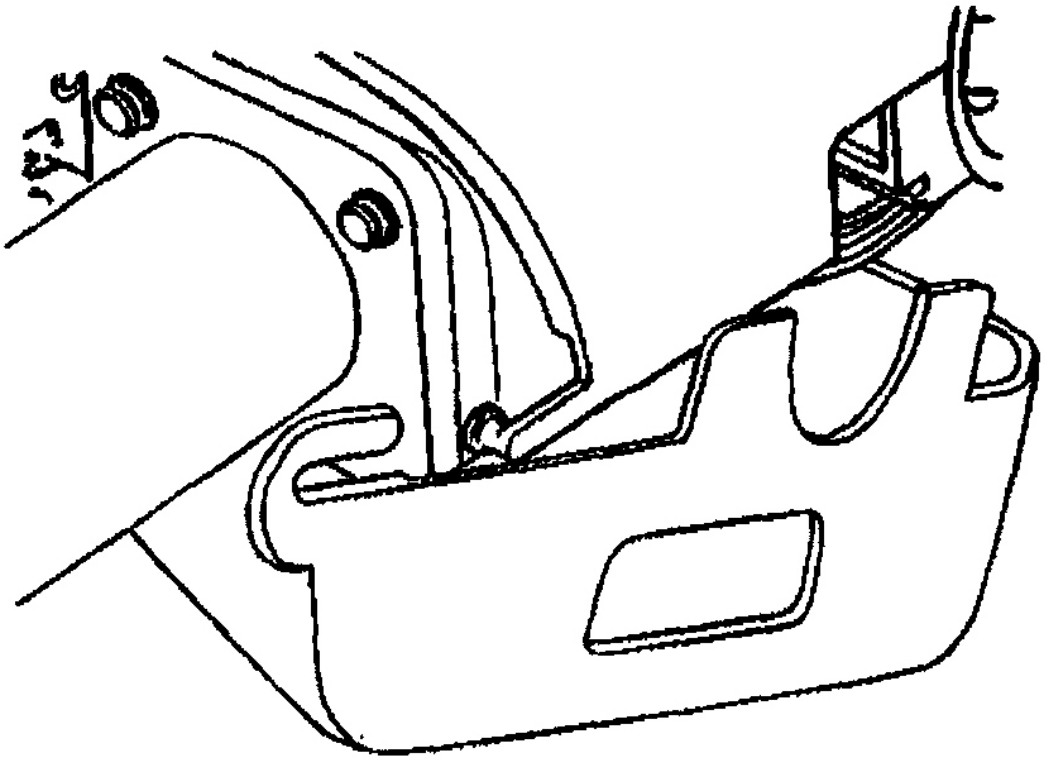

G01727589

**Fig. 124: Installing Lower Trim Cover**
**Courtesy of GENERAL MOTORS CORP.**

4. Install the 2 TORX(R) head screws (1) to the lower trim cover.

   **Tighten**

   Tighten the screws to 3.5 N.m (31 lb in).

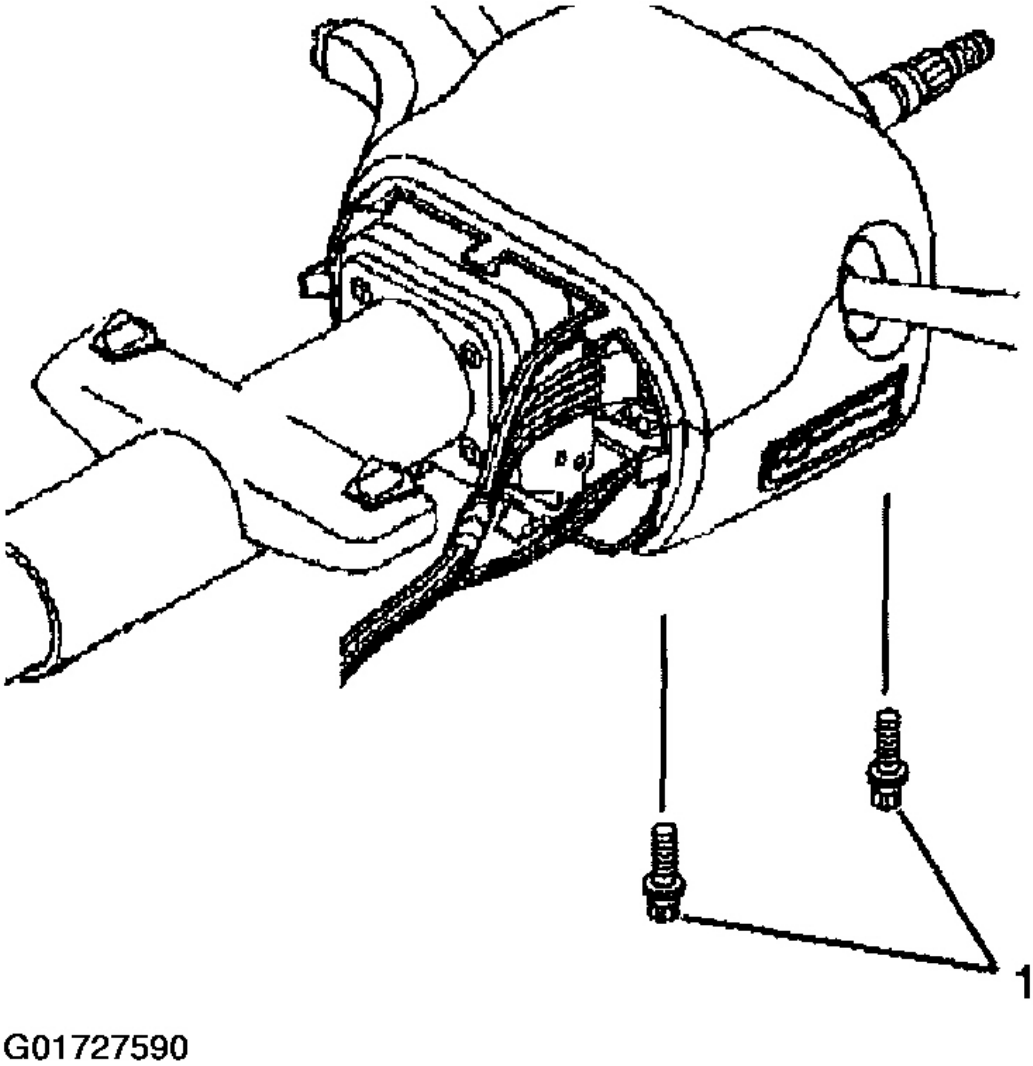


**Fig. 125: Installing Lower Trim Cover Screws**
**Courtesy of GENERAL MOTORS CORP.**

5. Remove the steering column from **J 41352** .
6. Remove **J 41352** from the vise.

**WARNING: Refer to SIR INFLATOR MODULE COIL CAUTION .**

7. Install the steering column. Refer to **Steering Column Replacement** .

8. Install the steering wheel. Refer to **Steering Wheel Replacement** .
9. Install the tilt lever. Refer to **Tilt Lever Replacement - On Vehicle** .
10. Enable the inflatable restraint steering wheel module. Refer to **ACTIVATING SYSTEM** .

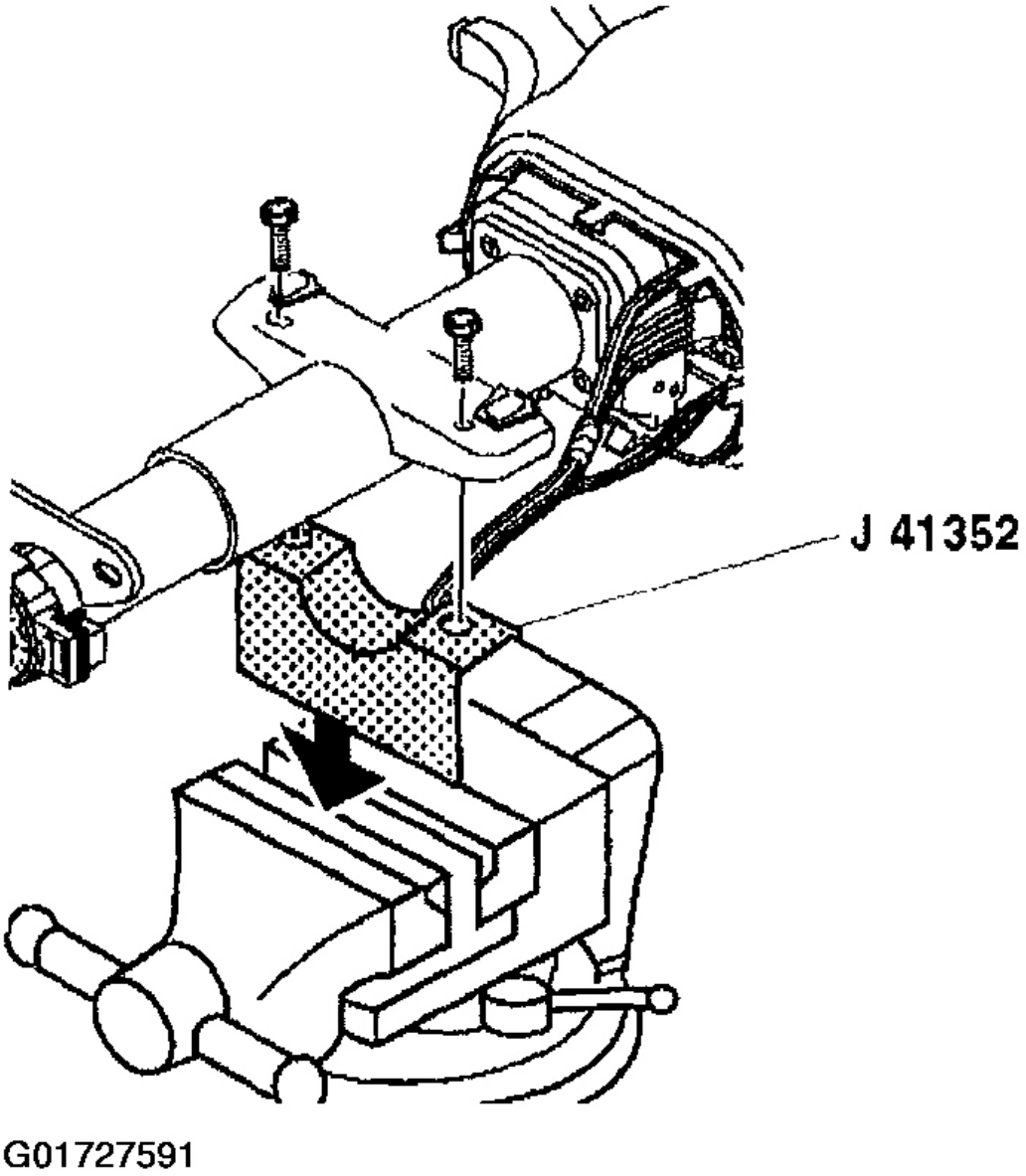


**Fig. 126: Removing J 41352 Modular Column Holding Fixture**
**Courtesy of GENERAL MOTORS CORP.**

**INFLATABLE RESTRAINT STEERING WHEEL MODULE COIL - DISASSEMBLE - OFF VEHIC VEHICLE (TELESCOPING COLUMN)**

**WARNING: Refer to SIR CAUTION .**

1. Disable the inflatable restraint steering wheel module. Refer to **DISABLING SYSTEM** .
2. Remove the upper and lower trim covers. Refer to **Steering Column Trim Covers - Disassemble - Off Vehicle (Telescoping)** or **Steering Column Trim Covers - Disassemble - Off Vehicle (Non-Telescoping)** .
3. Remove the retaining ring (3) using snap ring pliers.
4. Remove the inflatable restraint steering wheel module coil (4) from the steering shaft assembly (2).

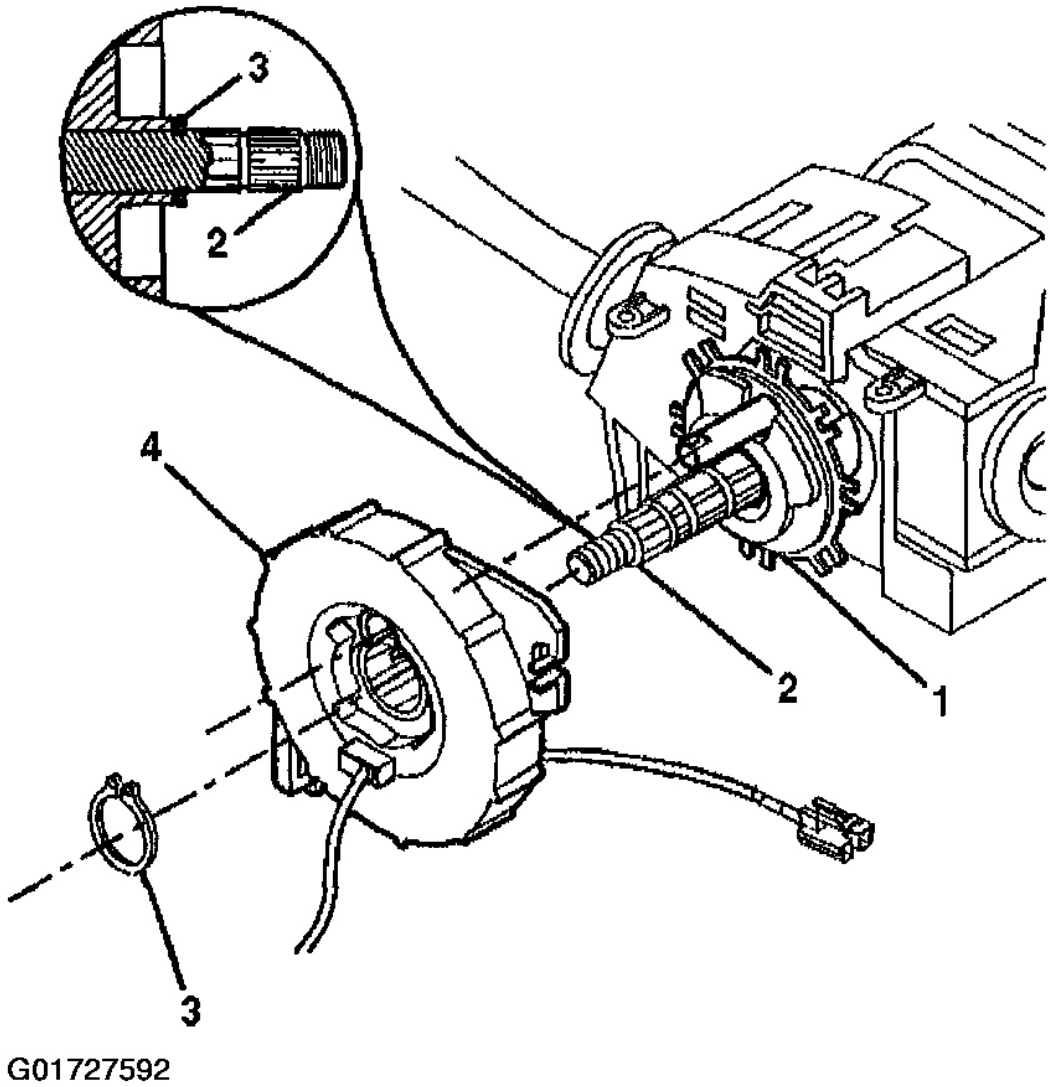


**Fig. 127: Removing Inflatable Restraint Steering Wheel Module Coil**
**Courtesy of GENERAL MOTORS CORP.**

**INFLATABLE RESTRAINT STEERING WHEEL MODULE COIL - DISASSEMBLE - OFF VEHIC VEHICLE (NON-TELESCOPING COLUMN)**

**WARNING: Refer to SIR CAUTION .**

1. Disable the inflatable restraint steering wheel module. Refer to **DISABLING SYSTEM** .

2. Remove the upper and lower trim covers. Refer to **Steering Column Trim Covers - Disassemble - Off Vehicle (Telescoping)** or **Steering Column Trim Covers - Disassemble - Off Vehicle (Non-Telescoping)** .
3. Remove the wire harness straps (2) from the steering column tilt head assembly (1).

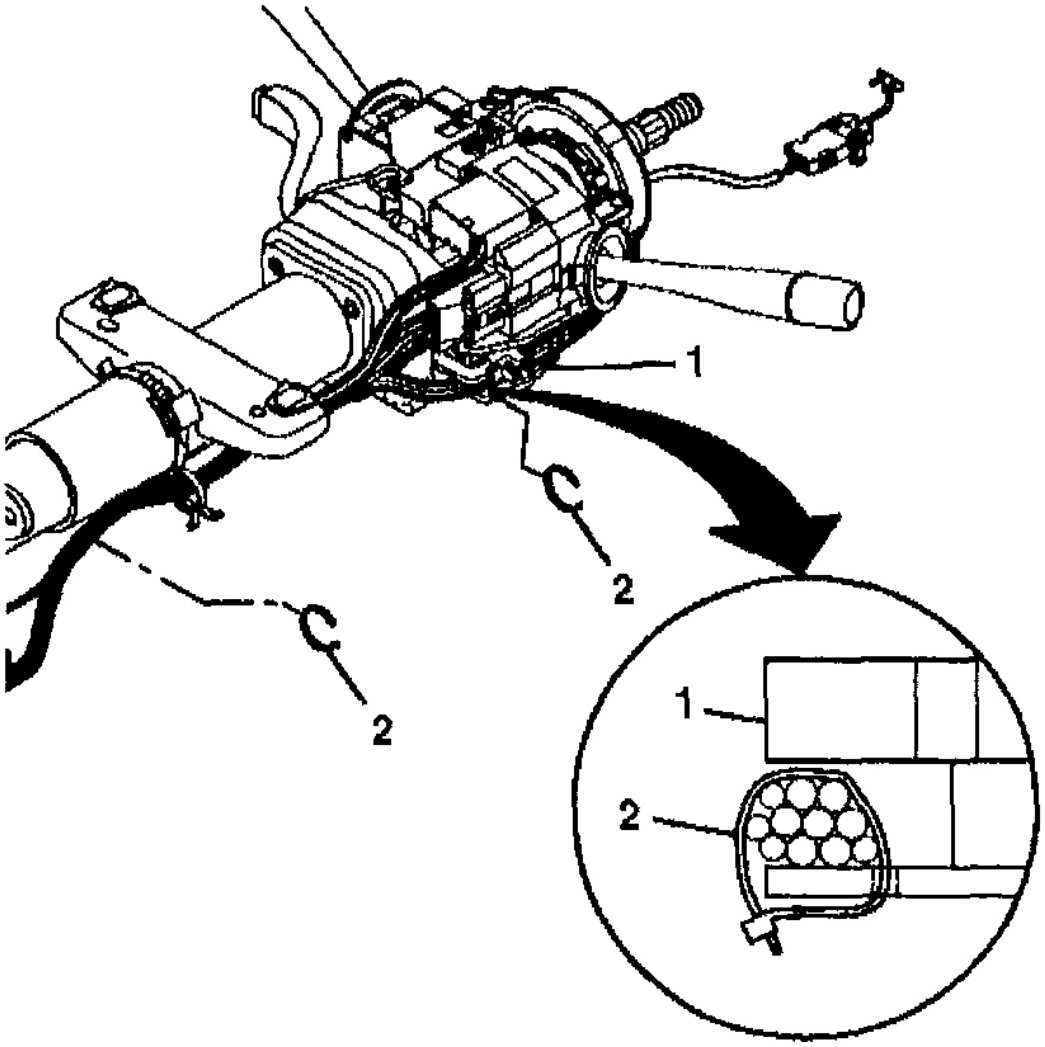


**Fig. 128: Removing Steering Column Wiring Harness Straps**
**Courtesy of GENERAL MOTORS CORP.**

4. Pop the wire harness assembly (1) from the wire harness strap (2).

5. Disconnect the inflatable restraint steering wheel module coil connector.

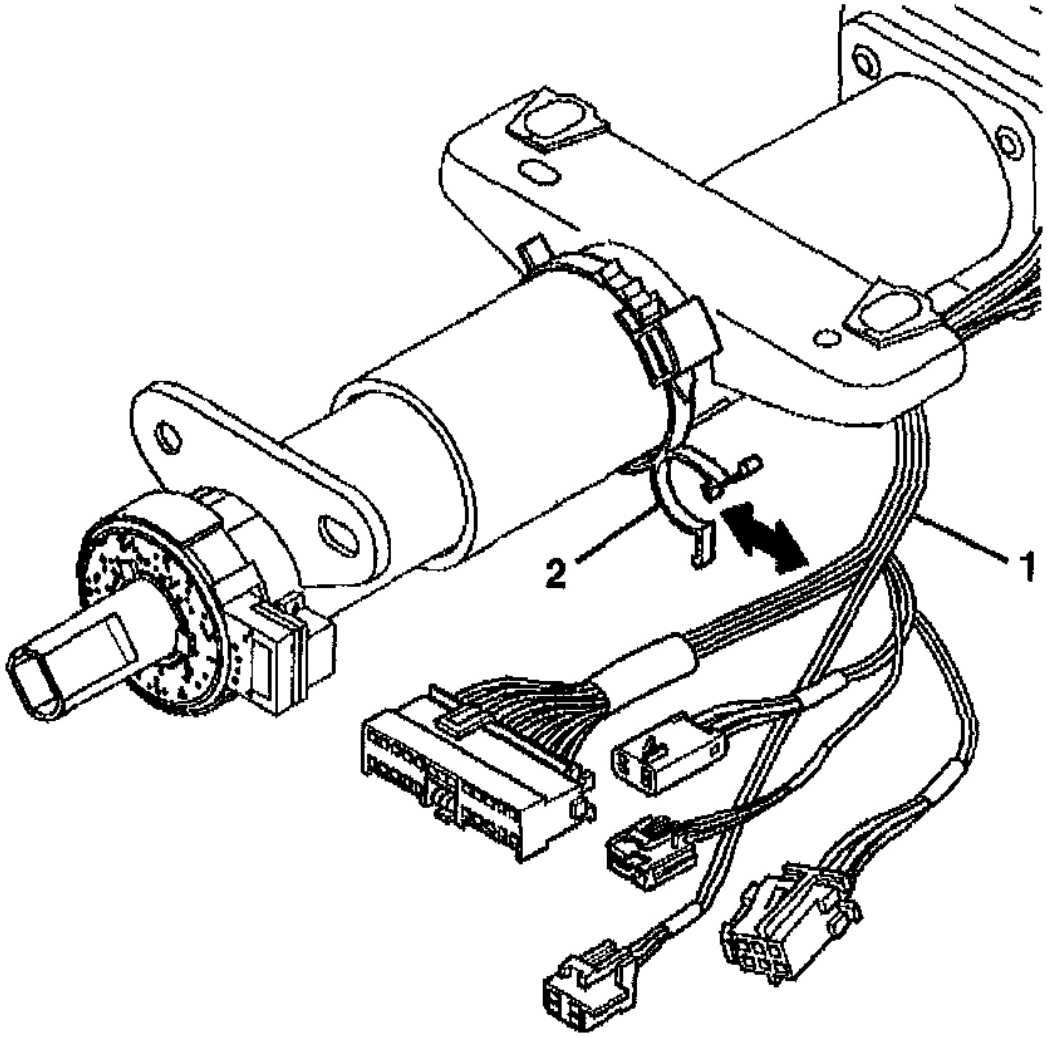


**Fig. 129: Removing Steering Column Wiring Harness**
**Courtesy of GENERAL MOTORS CORP.**

6. Remove the retaining ring (3) using snap ring pliers.
7. Remove the inflatable restraint steering wheel module coil (4) from the steering shaft assembly (2).

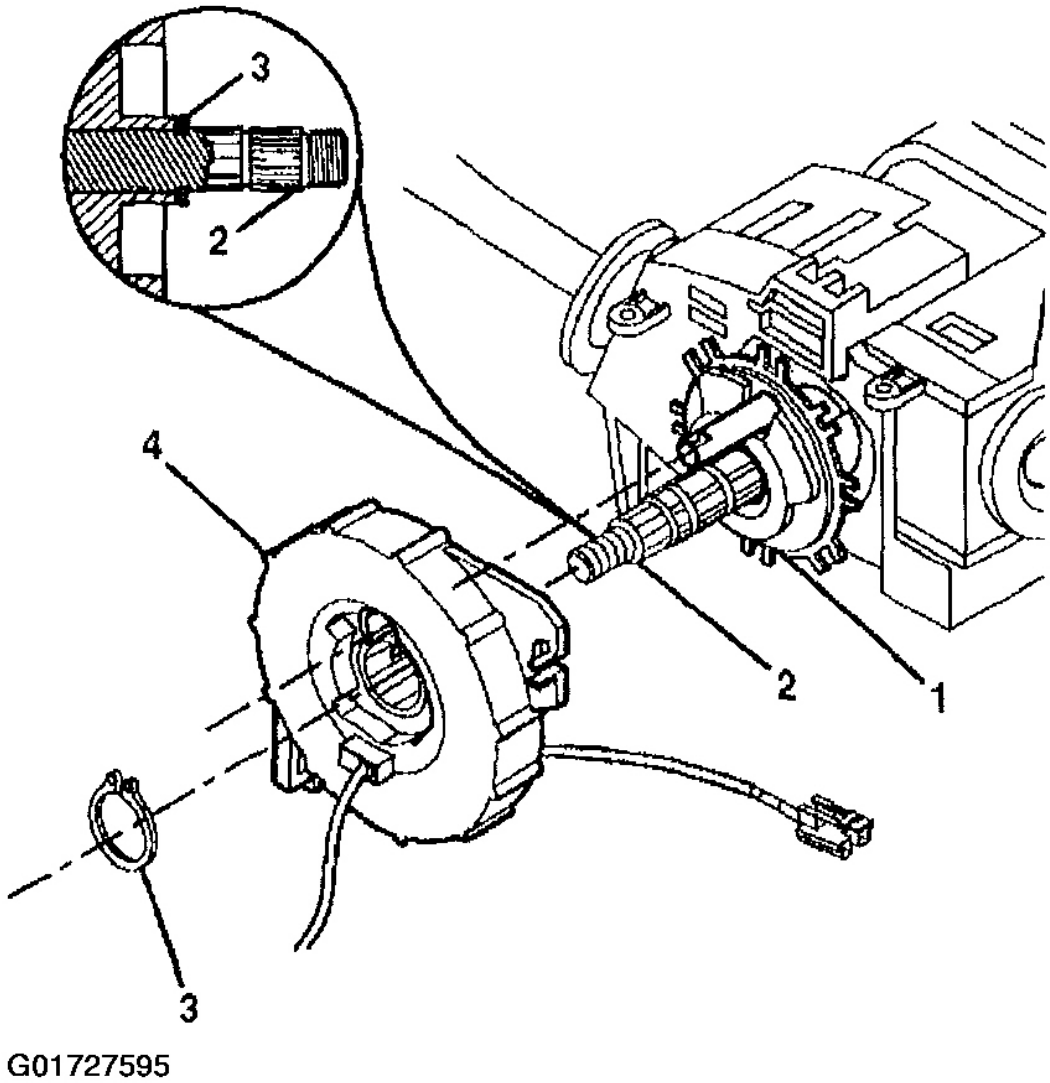


**Fig. 130: Removing Inflatable Restraint Steering Wheel Module Coil**
**Courtesy of GENERAL MOTORS CORP.**

**INFLATABLE RESTRAINT STEERING WHEEL MODULE COIL - ASSEMBLE - OFF VEHIC VEHICLE (TELESCOPING COLUMN)**

1. Align the block tooth on the steering shaft assembly (1) to the 12 o'clock position.

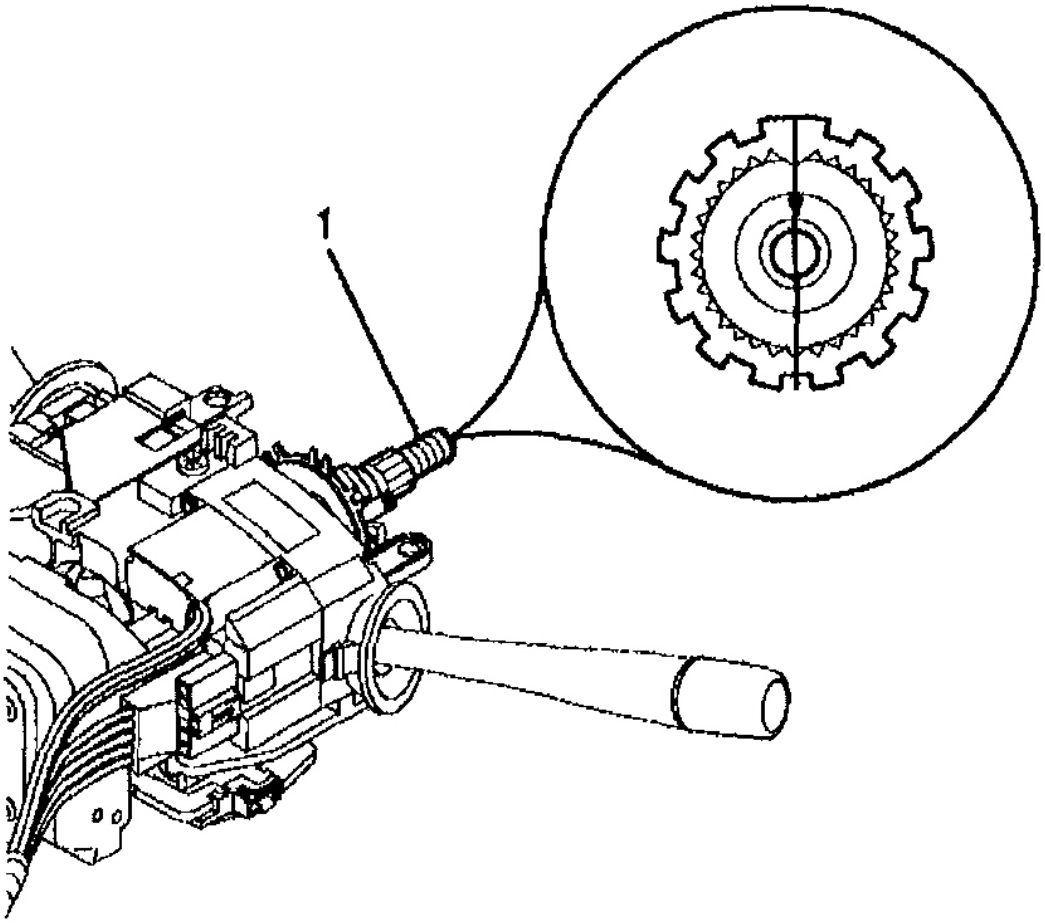


**Fig. 131: Aligning Steering Shaft Assembly Block Tooth**
**Courtesy of GENERAL MOTORS CORP.**

**Important:** A new inflatable restraint steering wheel module coil will be pre-centered. Do not remove the centering tab from the new inflatable restraint steering wheel module coil until the installation is complete.

2. Align the inflatable restraint steering wheel module coil (4) with the horn tower on the turn signal cancel cam assembly (1).
3. Firmly seat the retaining ring (3) into the groove on the steering shaft assembly (2).
4. If installing the existing inflatable restraint steering wheel module coil it must be centered first. Refer to **INFLATABLE RESTRAINT COIL CENTERING - OFF VEHICLE**

**(COLUMN SHIFT & FLOOR SHIFT)** .

5. Slide the new inflatable restraint steering wheel module coil (4) onto the steering shaft assembly (2).
6. Remove and discard the centering tab from the new inflatable restraint steering wheel module coil (4).

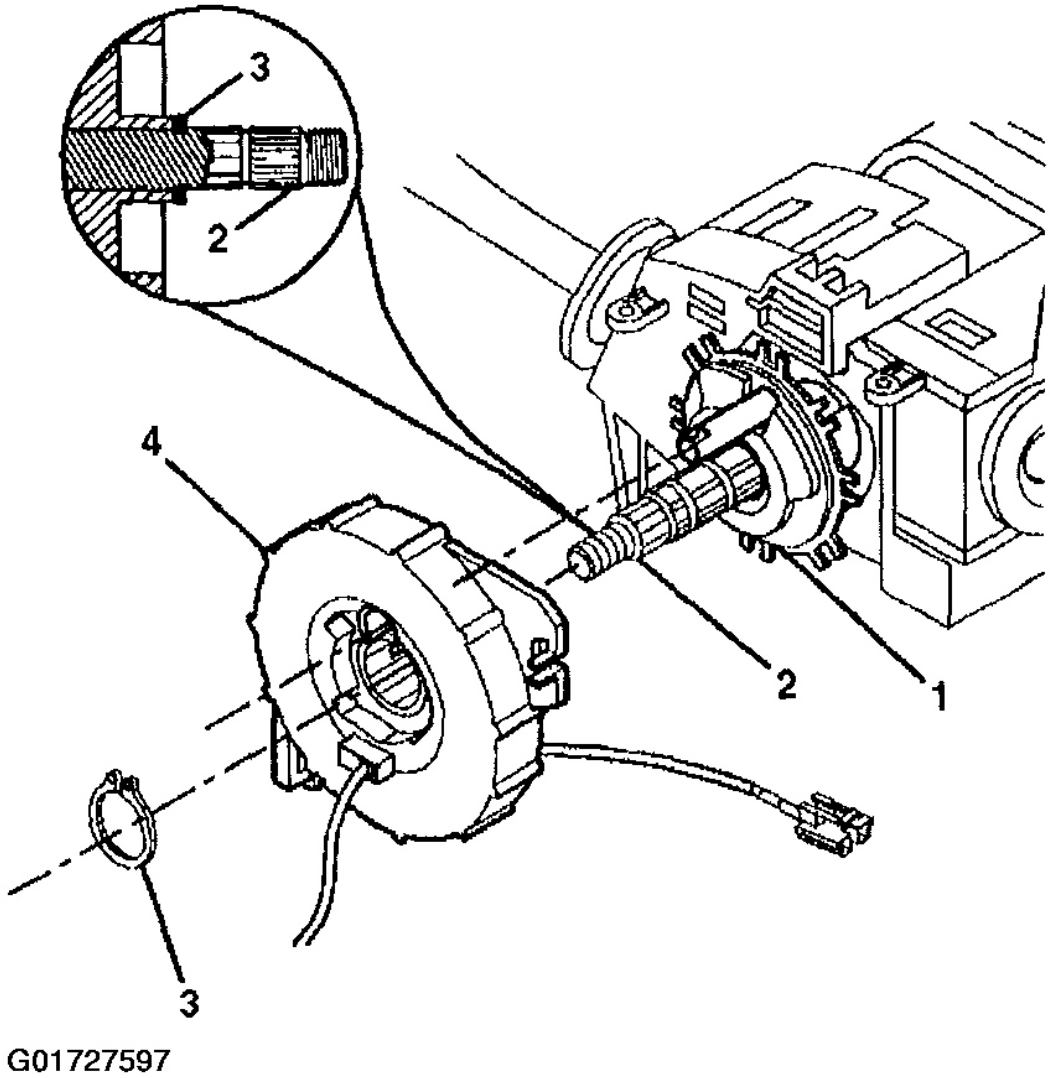


**Fig. 132: Installing Inflatable Restraint Steering Wheel Module Coil**
**Courtesy of GENERAL MOTORS CORP.**

**WARNING: Refer to SIR INFLATOR MODULE COIL CAUTION .**

7. Reconnect the inflatable restraint steering wheel module coil connector.
8. Attach new wire harness strap (2) to the wire harness assembly (1) and the steering column.
9. Install the upper and lower trim covers. Refer to **Steering Column Trim Covers - Assemble - Off Vehicle (Telescoping Column)** or **Steering Column Trim Covers - Assemble - Off Vehicle (Non-Telescoping Column)** .
10. Enable the inflatable restraint steering wheel module. Refer to **ACTIVATING SYSTEM** .

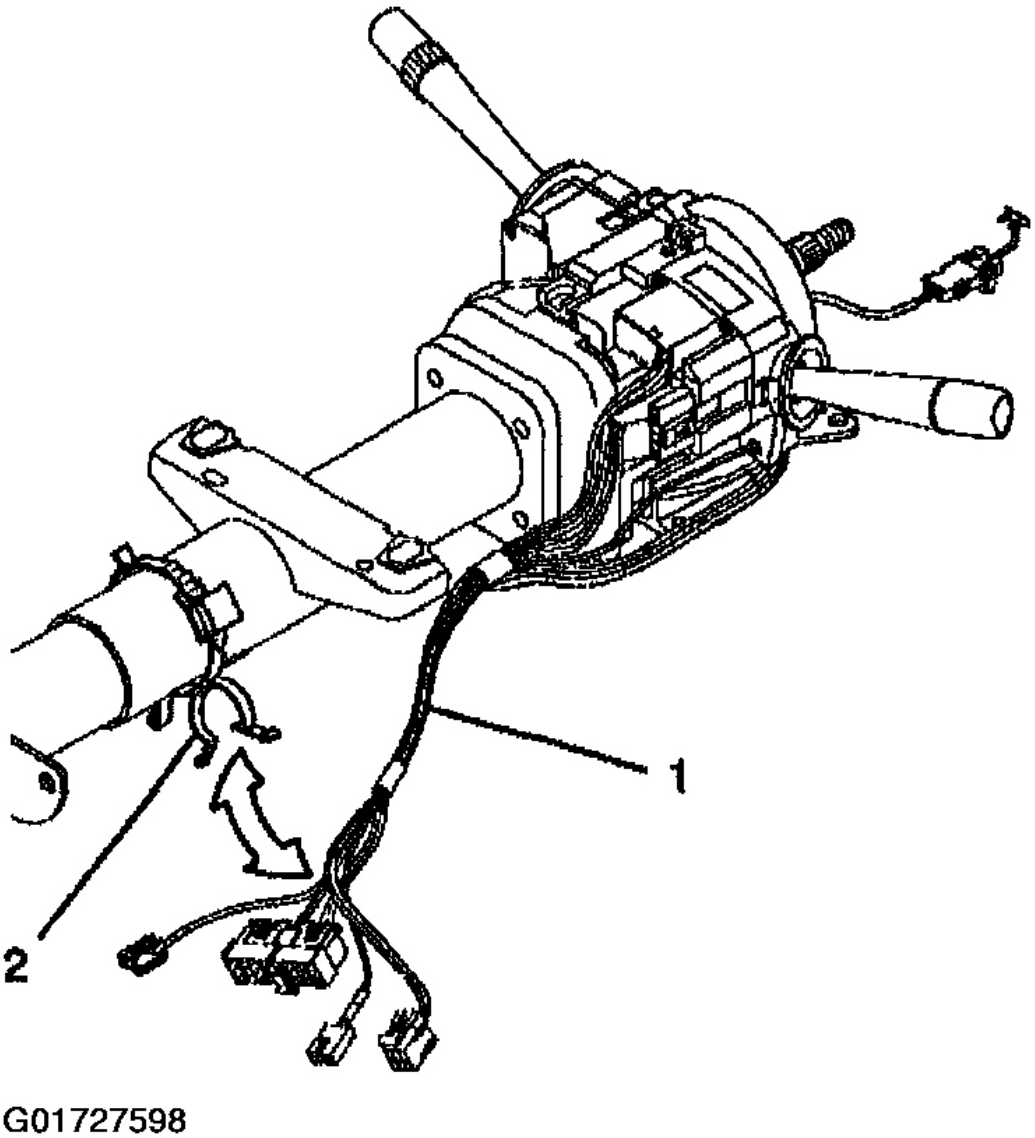


**Fig. 133: Installing Steering Column Wiring Harness**
**Courtesy of GENERAL MOTORS CORP.**

**INFLATABLE RESTRAINT STEERING WHEEL MODULE COIL - ASSEMBLE - OFF VEHIC VEHICLE (NON-TELESCOPING COLUMN)**

1. Align the block tooth on the steering shaft assembly (1) to the 12 o'clock position.
2. Place the ignition switch in the LOCK position.

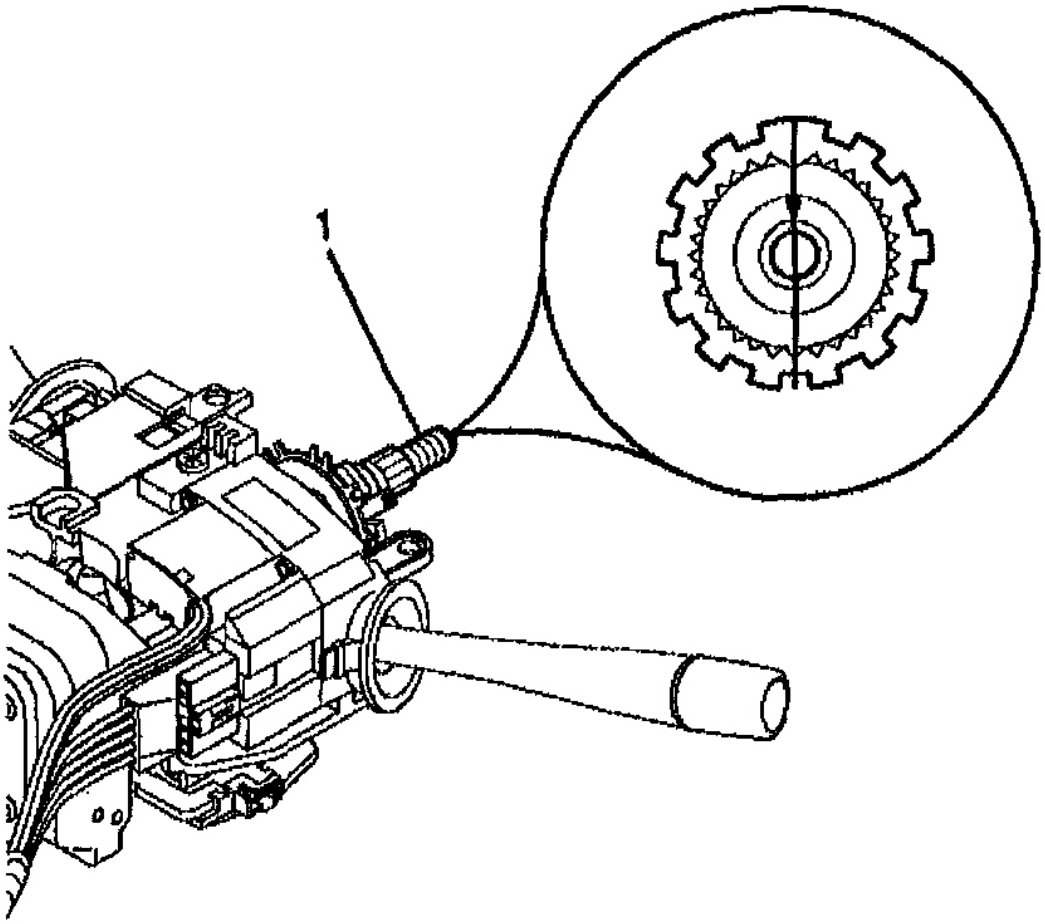


**Fig. 134: Aligning Steering Shaft Assembly Block Tooth**
**Courtesy of GENERAL MOTORS CORP.**

**Important:** A new inflatable restraint steering wheel module coil will be pre-centered. Do not remove the centering tab from the new inflatable restraint steering wheel module coil until the installation is complete.

3. If installing the existing inflatable restraint steering wheel module coil, it must be centered first. Refer to **INFLATABLE RESTRAINT COIL CENTERING - OFF VEHICLE (COLUMN SHIFT & FLOOR SHIFT)** .
4. Align the inflatable restraint steering wheel module coil (4) with the horn tower on the turn signal cancel cam assembly (1).

5. Slide the inflatable restraint steering wheel module coil (4) onto the steering shaft assembly (2).
6. Firmly seat the retaining ring (3) into the groove on the steering shaft assembly (2).
7. Remove and discard the centering tab from the new inflatable restraint steering wheel module coil (4).

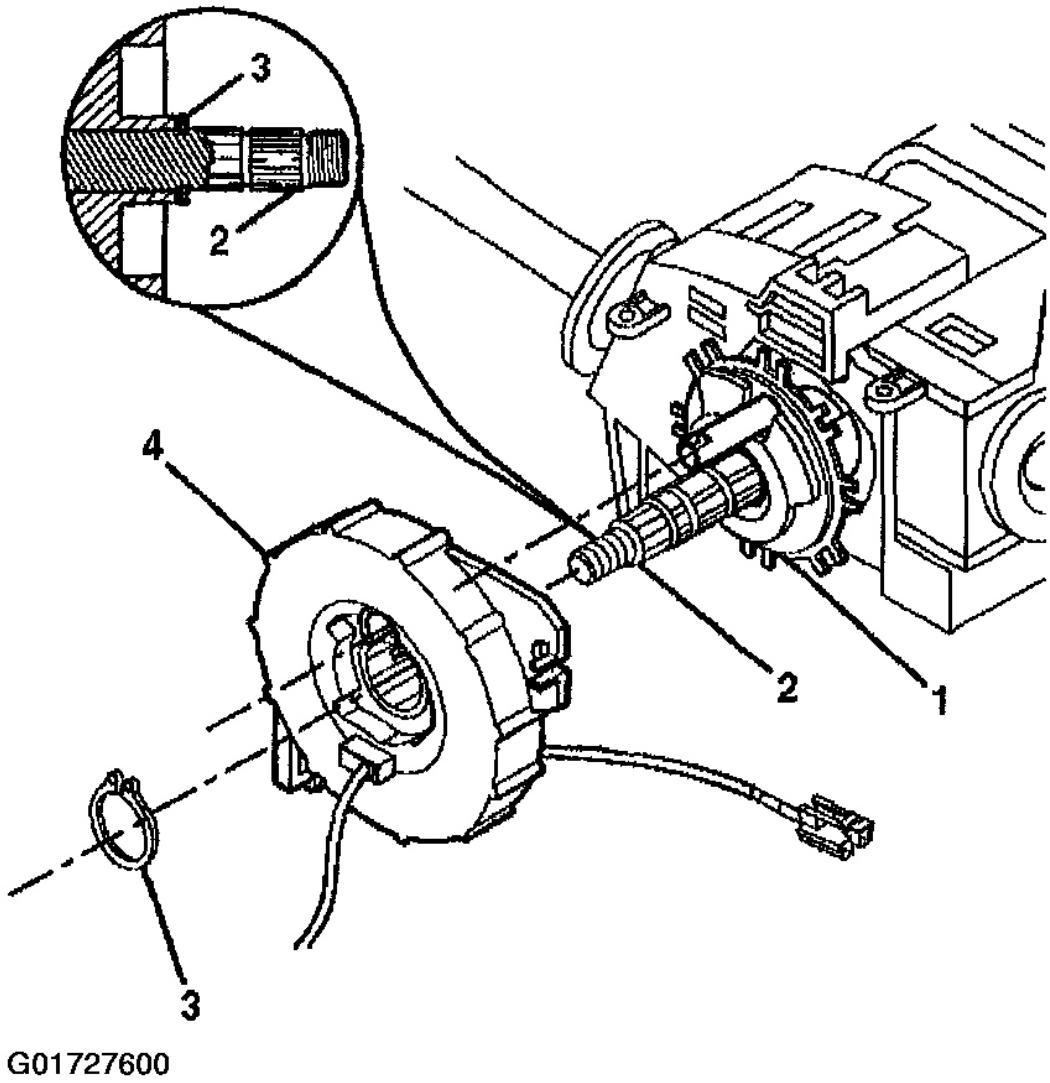


**Fig. 135: Installing Inflatable Restraint Steering Wheel Module Coil**
**Courtesy of GENERAL MOTORS CORP.**

**WARNING: Refer to SIR INFLATOR MODULE COIL CAUTION .**

8. Reconnect the inflatable restraint steering wheel module coil connector.
9. Attach new wire harness strap (2) to the wire harness assembly (1) and the steering column.
10. Install the upper and lower trim covers. Refer to **Steering Column Trim Covers - Assemble - Off Vehicle (Telescoping Column)** or **Steering Column Trim Covers - Assemble - Off Vehicle (Non-Telescoping Column)** .
11. Enable the inflatable restraint steering wheel module. Refer to **ACTIVATING SYSTEM** .

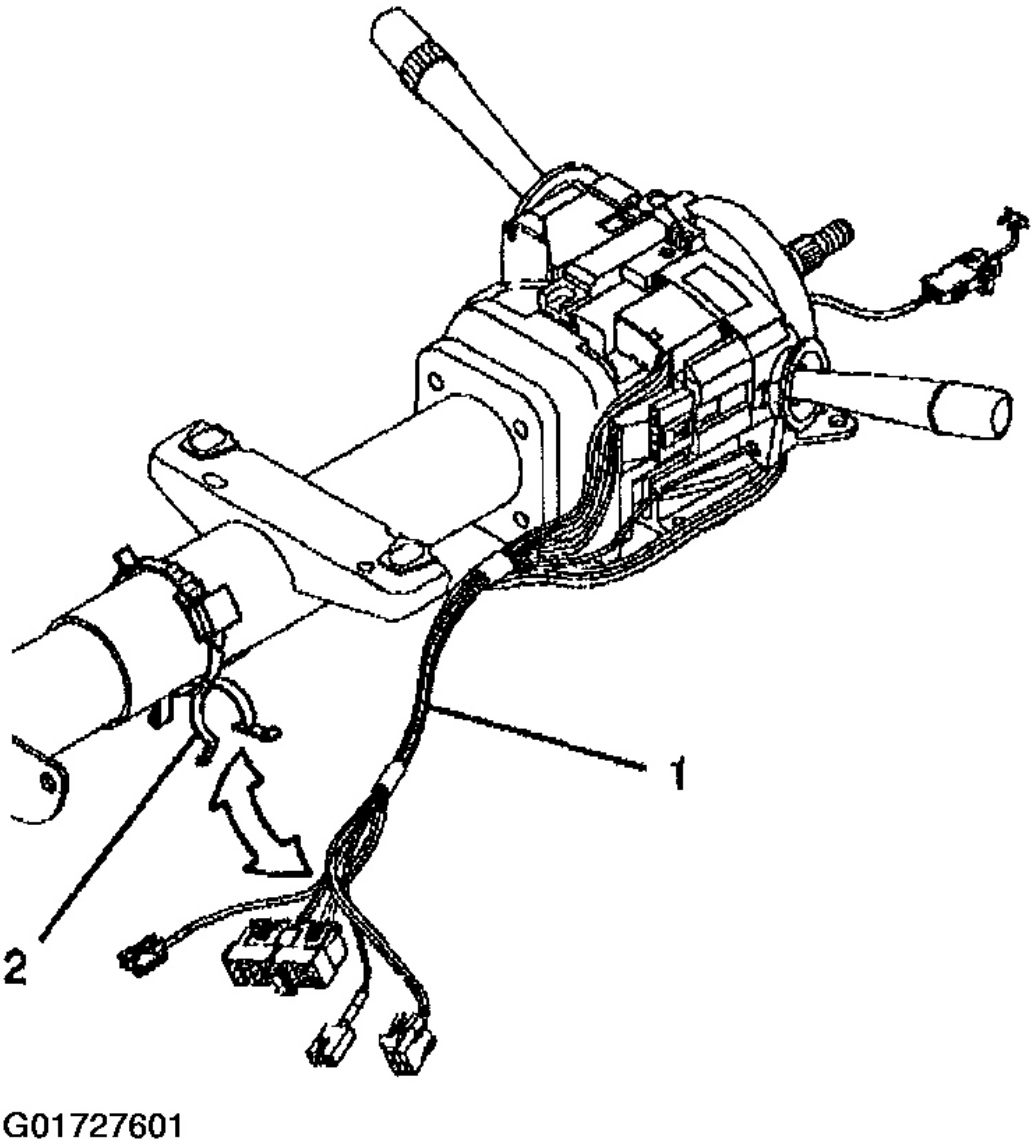


**Fig. 136: Installing Steering Column Wiring Harness**
**Courtesy of GENERAL MOTORS CORP.**

**TURN SIGNAL & MULTIFUNCTION SWITCH ASSEMBLY - DISASSEMBLE - OFF VEHICLE (TELESCOPING COLUMN)**

1. Remove the upper and lower trim covers. Refer to **Steering Column Trim Covers - Disassemble - Off Vehicle (Telescoping)** or **Steering Column Trim Covers -**

**Disassemble - Off Vehicle (Non-Telescoping)** .

2. Remove the 2 pan head tapping screws (1).

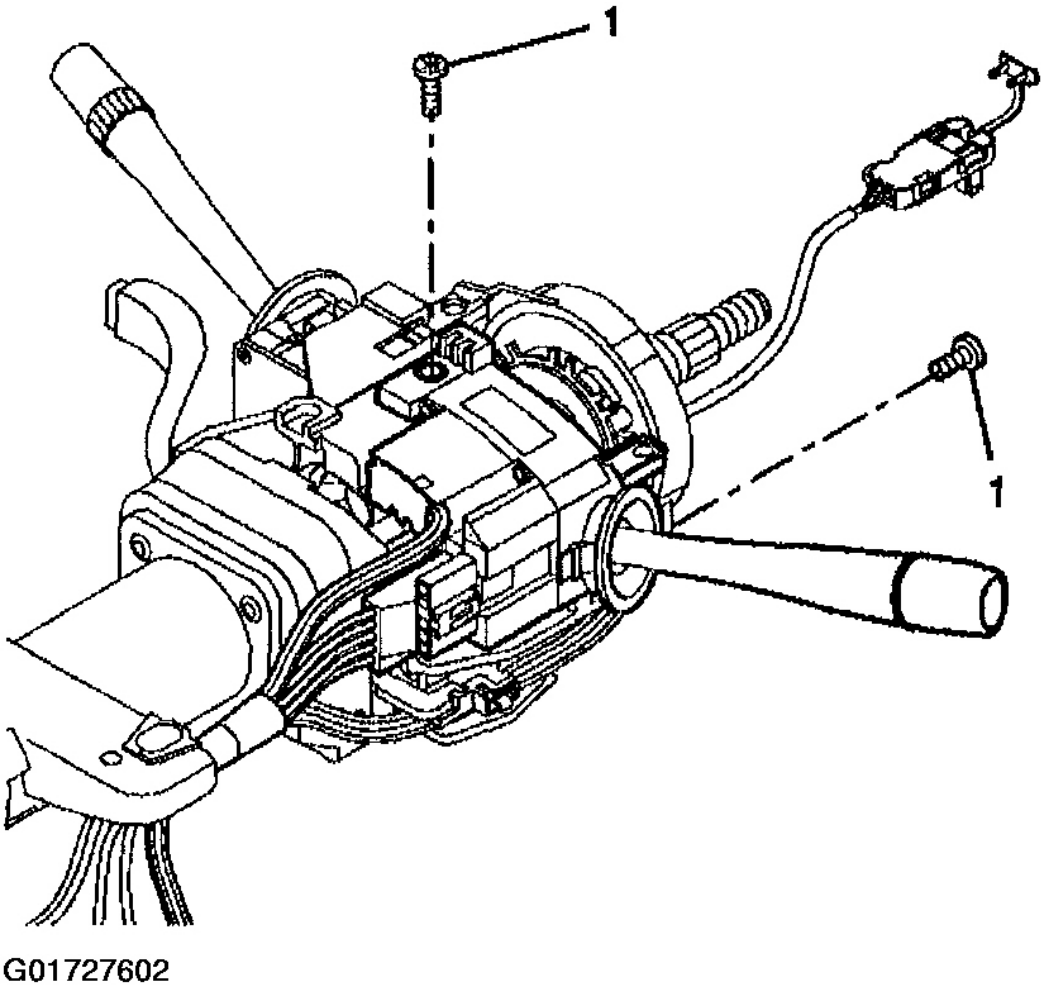


**Fig. 137: Removing Turn Signal & Multifunction Switch Assembly Screws**
**Courtesy of GENERAL MOTORS CORP.**

3. Remove the turn signal and multifunction switch assembly (1).

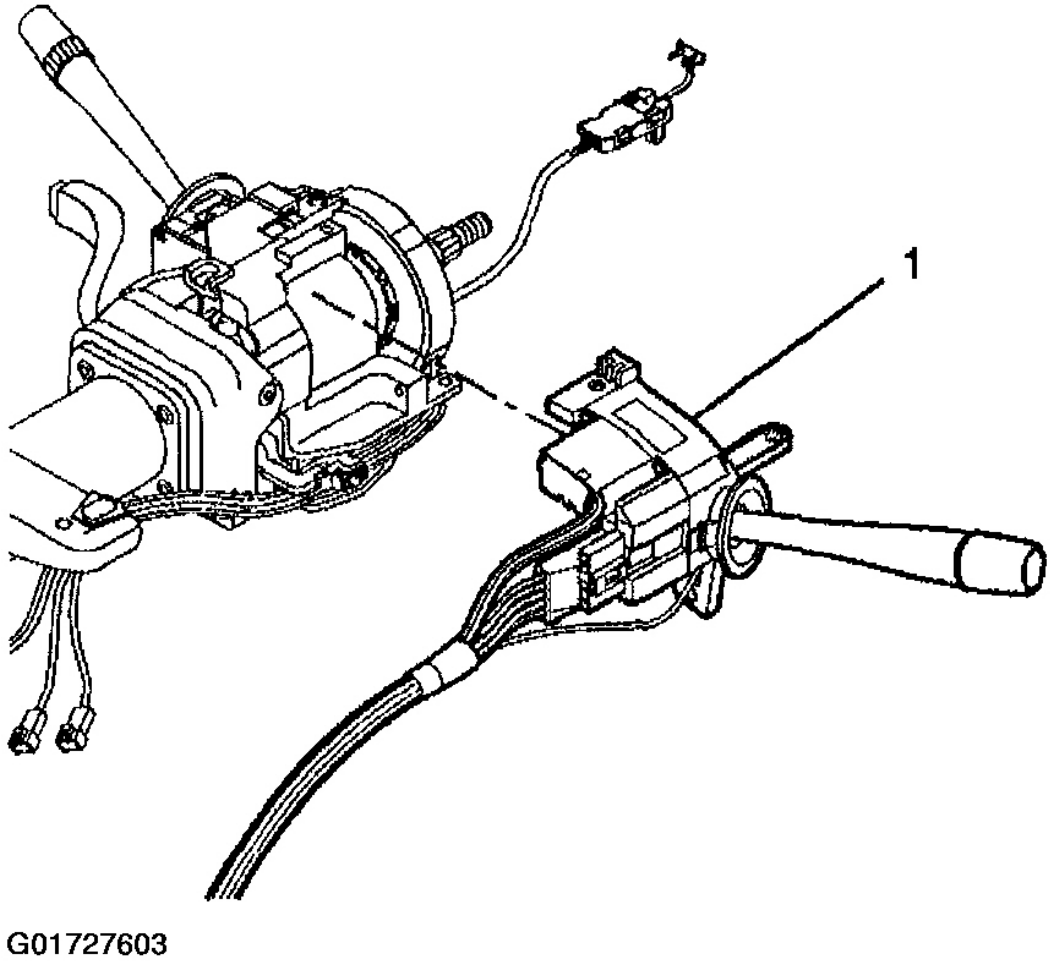


**Fig. 138: Removing Turn Signal & Multifunction Switch Assembly**
**Courtesy of GENERAL MOTORS CORP.**

**TURN SIGNAL & MULTIFUNCTION SWITCH ASSEMBLY - DISASSEMBLE - OFF VEHICLE (NON-TELESCOPING COLUMN)**

**WARNING: Refer to SIR CAUTION .**

1. Disable the inflatable restraint steering wheel module. Refer to **DISABLING SYSTEM** .
2. Remove the upper and lower trim covers. Refer to **Steering Column Trim Covers - Disassemble - Off Vehicle (Telescoping)** or **Steering Column Trim Covers - Disassemble - Off Vehicle (Non-Telescoping)** .

3. Remove the wire harness straps (2) from the steering column tilt head assembly (1).

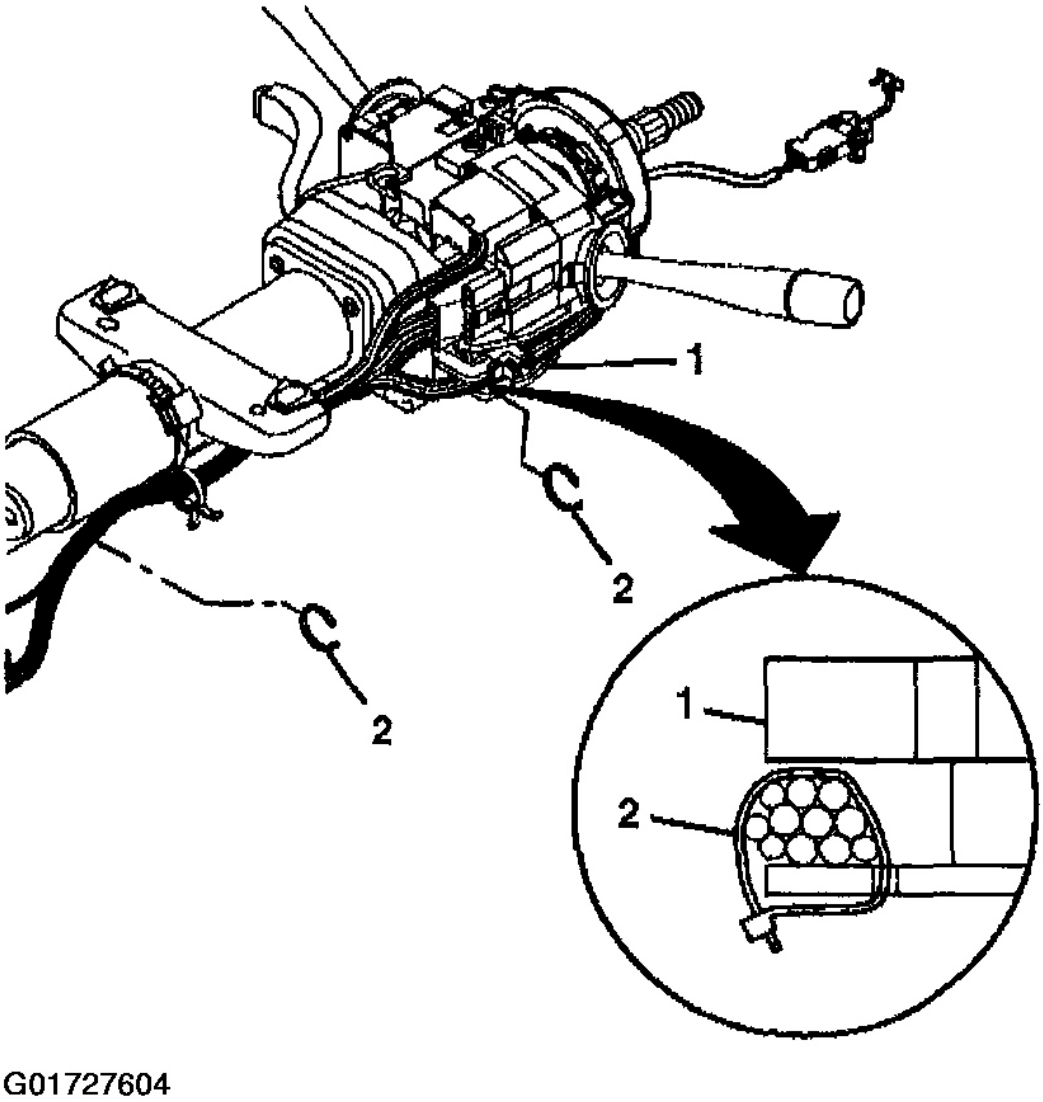


**Fig. 139: Removing Steering Column Wiring Harness Straps**
**Courtesy of GENERAL MOTORS CORP.**

4. Pop the wire harness assembly (1) from the wire harness strap (2).
5. Disconnect the turn signal and multifunction switch assembly connector.

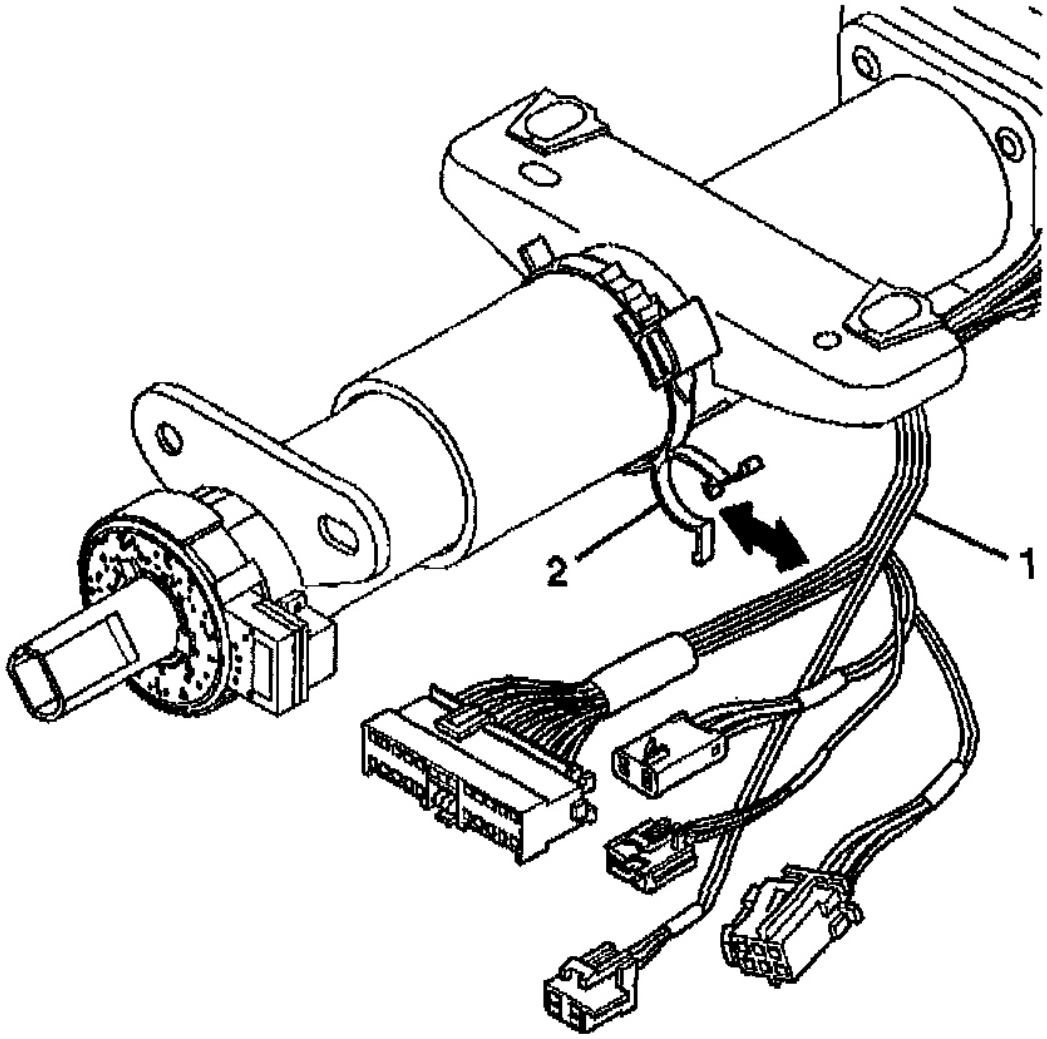


**Fig. 140: Removing Steering Column Wiring Harness**
**Courtesy of GENERAL MOTORS CORP.**

6. Remove the 2 pan head tapping screws (1).

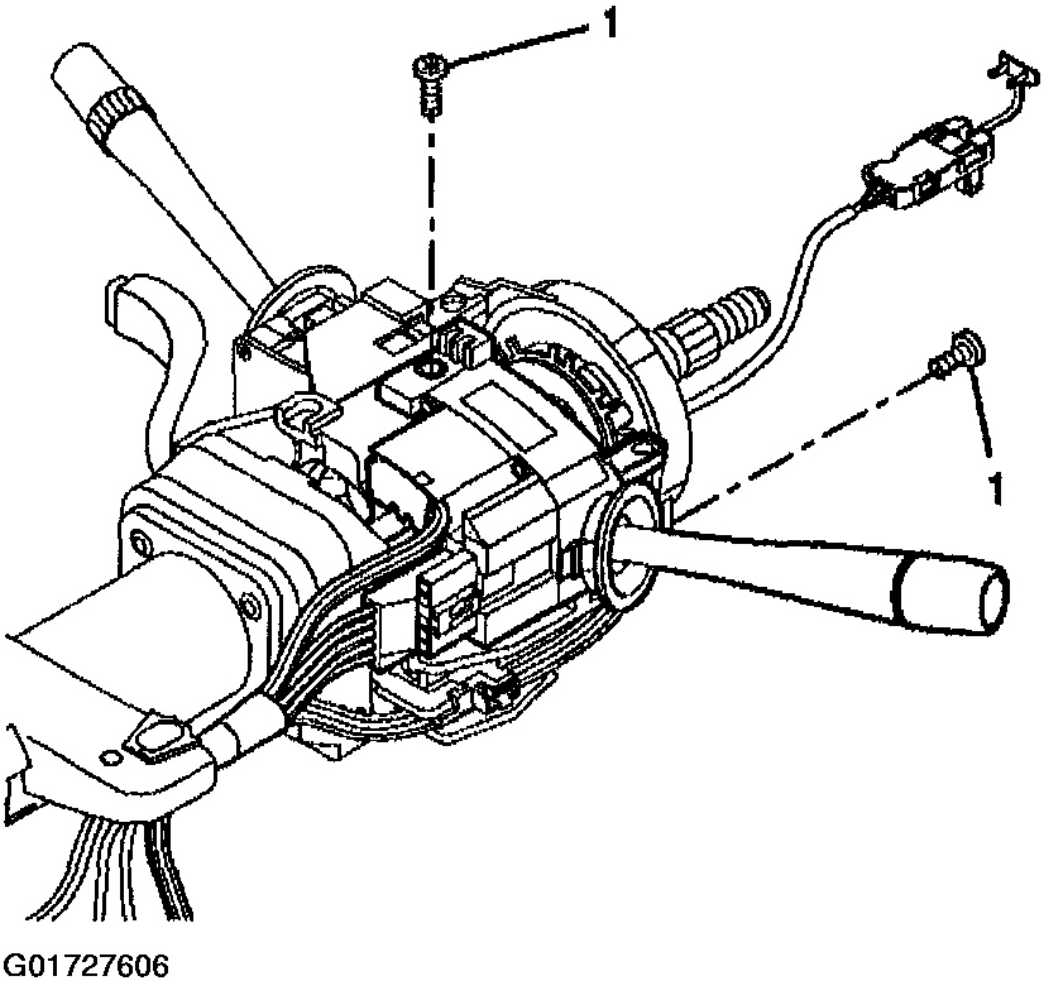


**Fig. 141: Removing Turn Signal & Multifunction Switch Assembly Screws**
**Courtesy of GENERAL MOTORS CORP.**

7. Remove the turn signal and multifunction switch assembly (1).

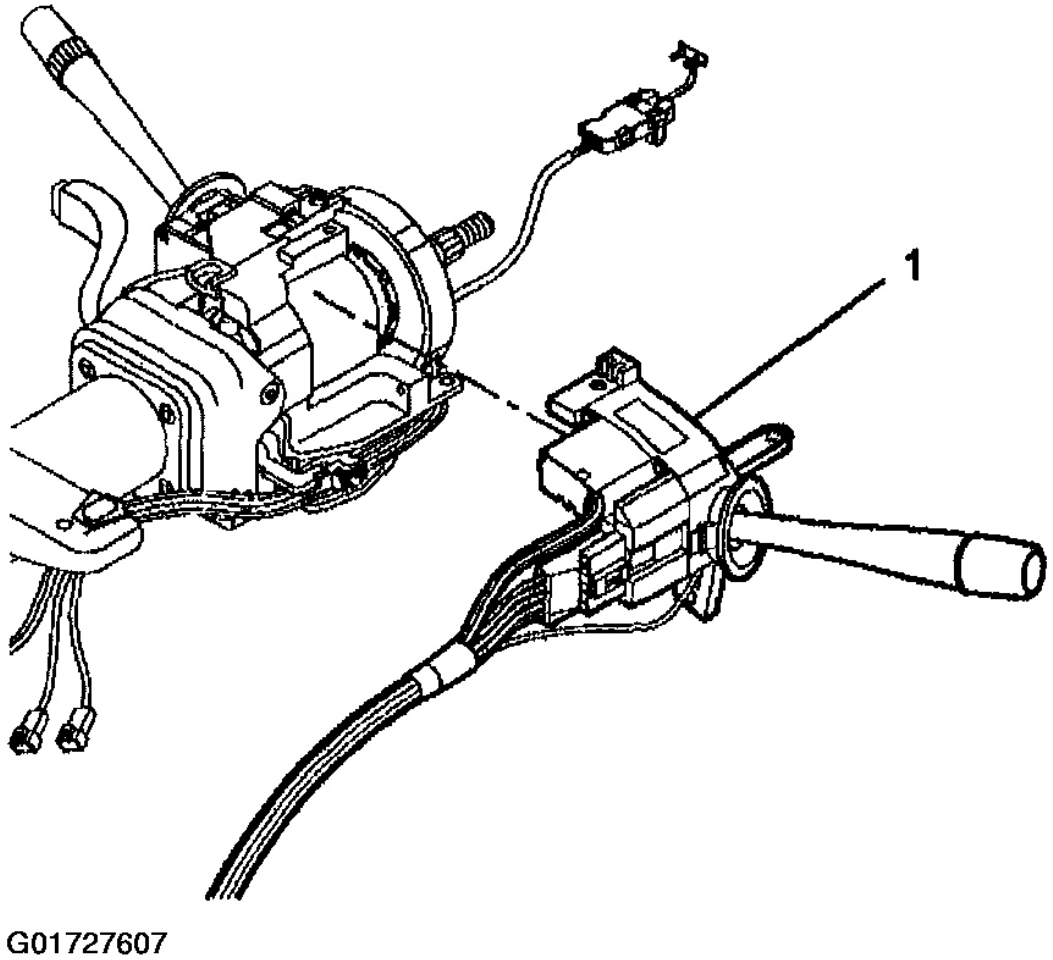


**Fig. 142: Removing Turn Signal & Multifunction Switch Assembly**
**Courtesy of GENERAL MOTORS CORP.**

**TURN SIGNAL & MULTIFUNCTION SWITCH ASSEMBLY - ASSEMBLE - OFF VEHICLE (TELESCOPING COLUMN)**

**Important:** The electrical contact must rest on the turn signal cancel cam assembly.

1. Install the turn signal and multifunction switch assembly (1) to the steering column tilt head assembly.

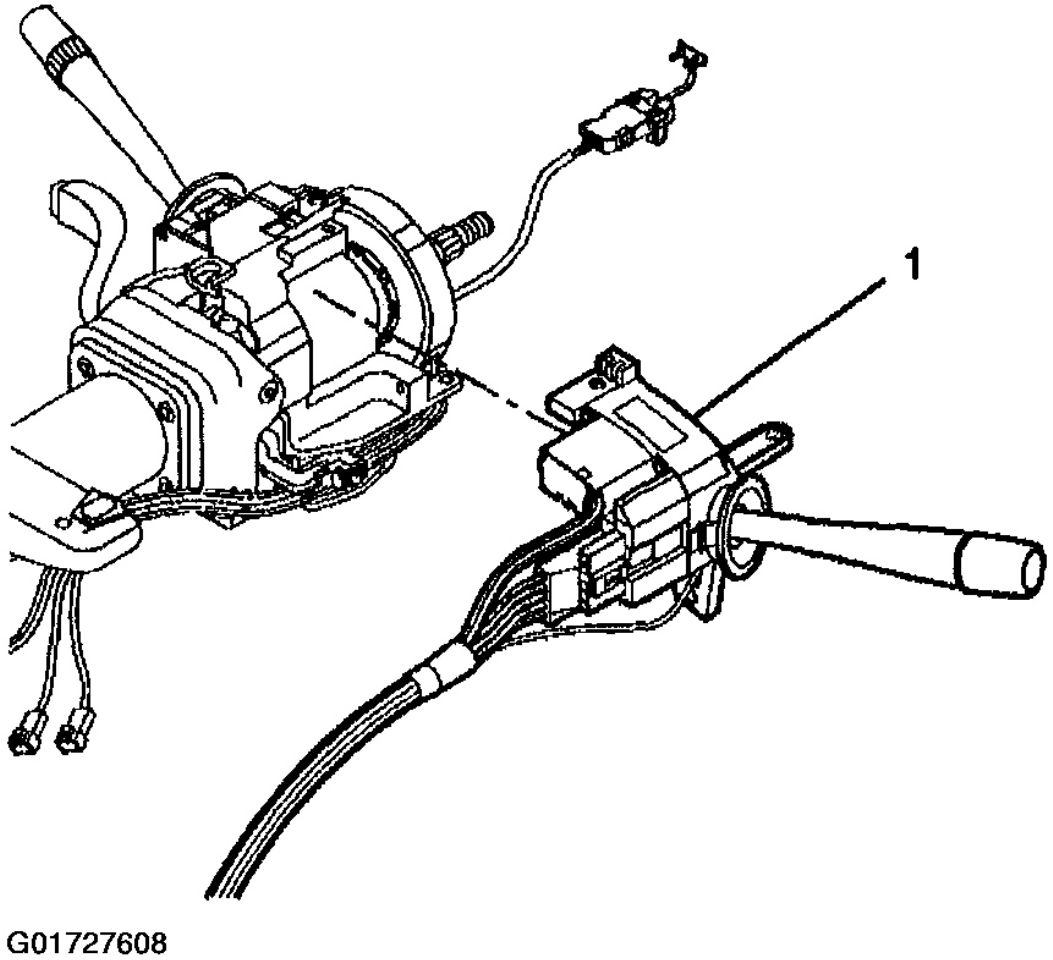


**Fig. 143: Installing Turn Signal & Multifunction Switch Assembly**
**Courtesy of GENERAL MOTORS CORP.**

**CAUTION: Refer to FASTENER NOTICE .**

2. Install the 2 pan head tapping screws (1).

**Tighten**

Tighten the screws to 7 N.m (62 lb in).

**WARNING: Refer to SIR INFLATOR MODULE COIL CAUTION .**

3. Install the upper and lower trim covers. Refer to **Steering Column Trim Covers - Assemble - Off Vehicle (Telescoping Column)** or **Steering Column Trim Covers - Assemble - Off Vehicle (Non-Telescoping Column)** .
4. Enable the inflatable restraint steering wheel module. Refer to **ACTIVATING SYSTEM** .

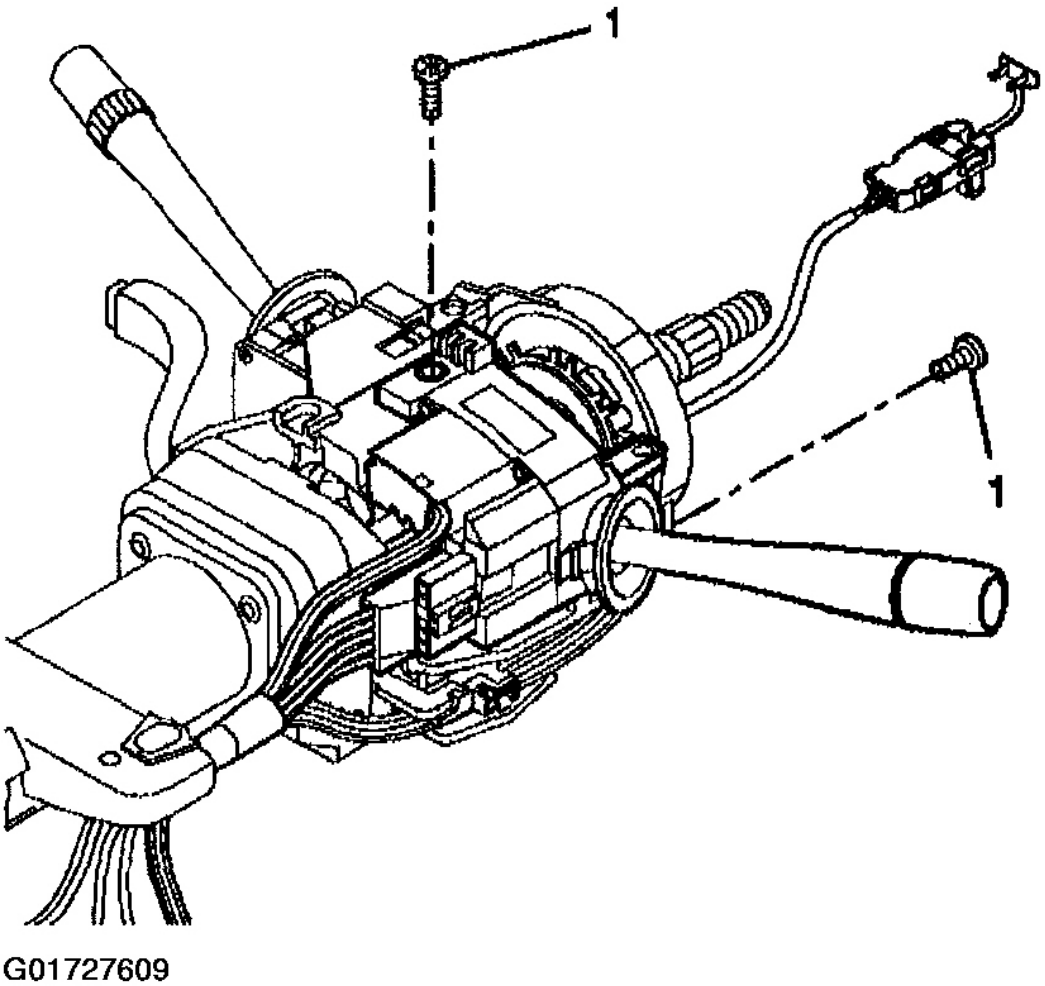


**Fig. 144: Installing Turn Signal & Multifunction Switch Assembly Screws**
**Courtesy of GENERAL MOTORS CORP.**

**TURN SIGNAL & MULTIFUNCTION SWITCH ASSEMBLY - ASSEMBLE - OFF VEHICLE (NON-(NON-TELESCOPING COLUMN)**

**Important:** The electrical contact must rest on the turn signal cancel cam assembly.

1. Install the turn signal and multifunction switch assembly (1) to the steering column tilt head assembly.

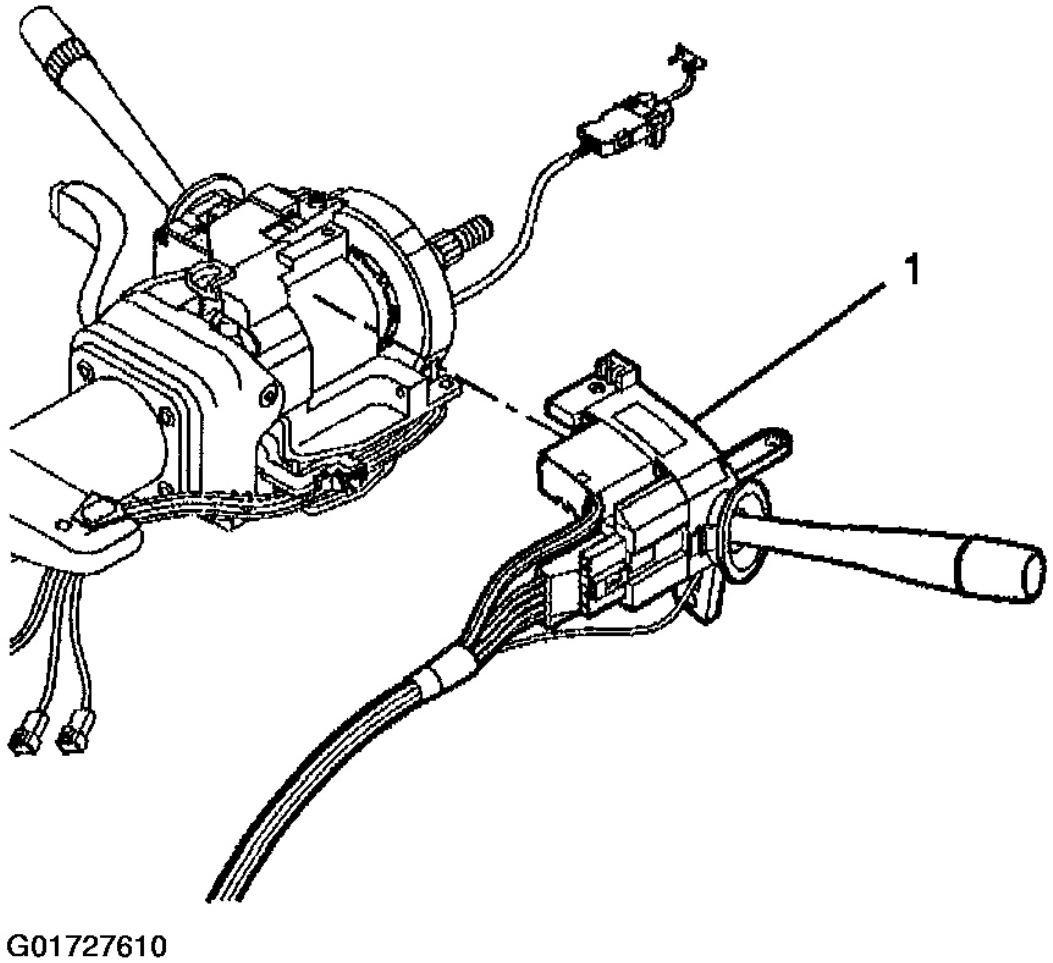


**Fig. 145: Installing Turn Signal & Multifunction Switch Assembly**
**Courtesy of GENERAL MOTORS CORP.**

**CAUTION: Refer to FASTENER NOTICE .**

2. Install the 2 pan head tapping screws (1).

**Tighten**

Tighten the screws to 7 N.m (62 lb in).

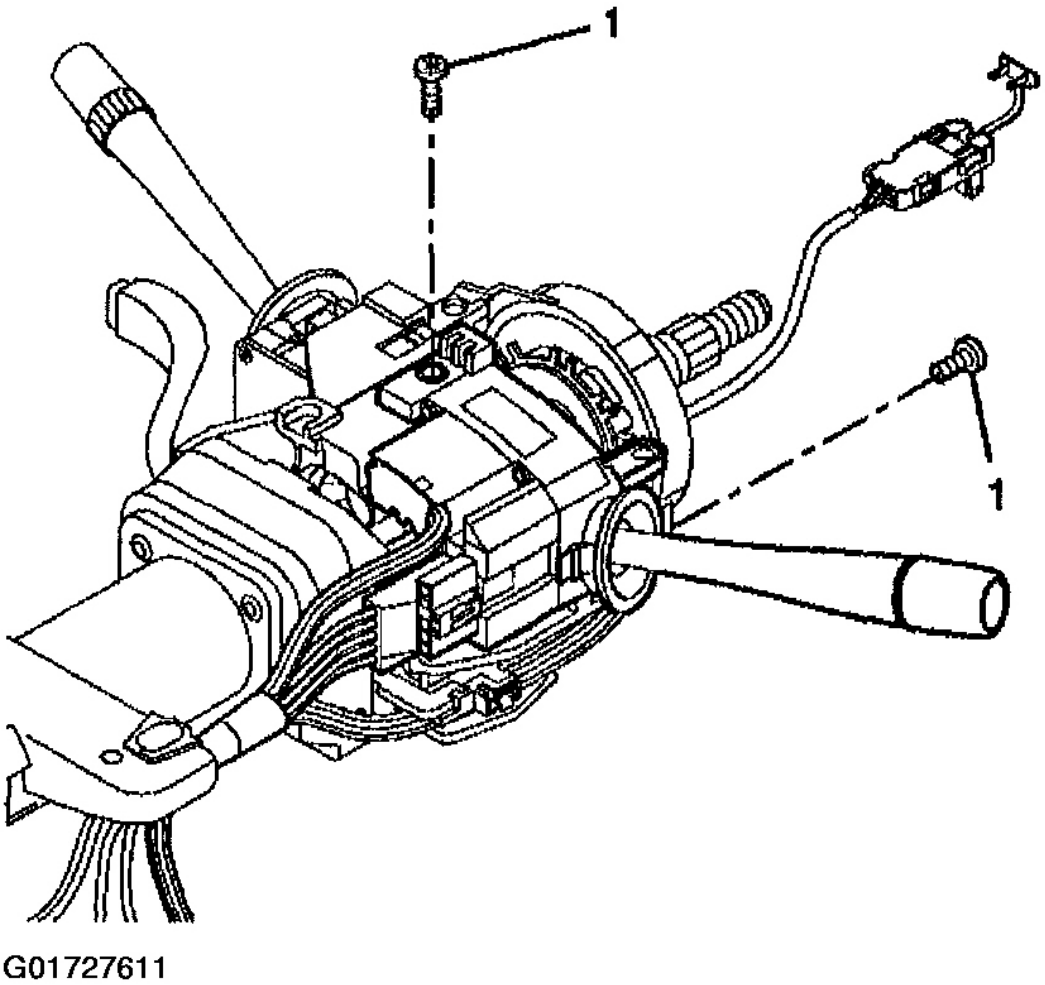


**Fig. 146: Installing Turn Signal & Multifunction Switch Assembly Screws**
**Courtesy of GENERAL MOTORS CORP.**

**WARNING: Refer to SIR INFLATOR MODULE COIL CAUTION .**

3. Route the wire harness assembly along the steering column jacket assembly.
4. Connect the turn signal and multifunction switch assembly connector.

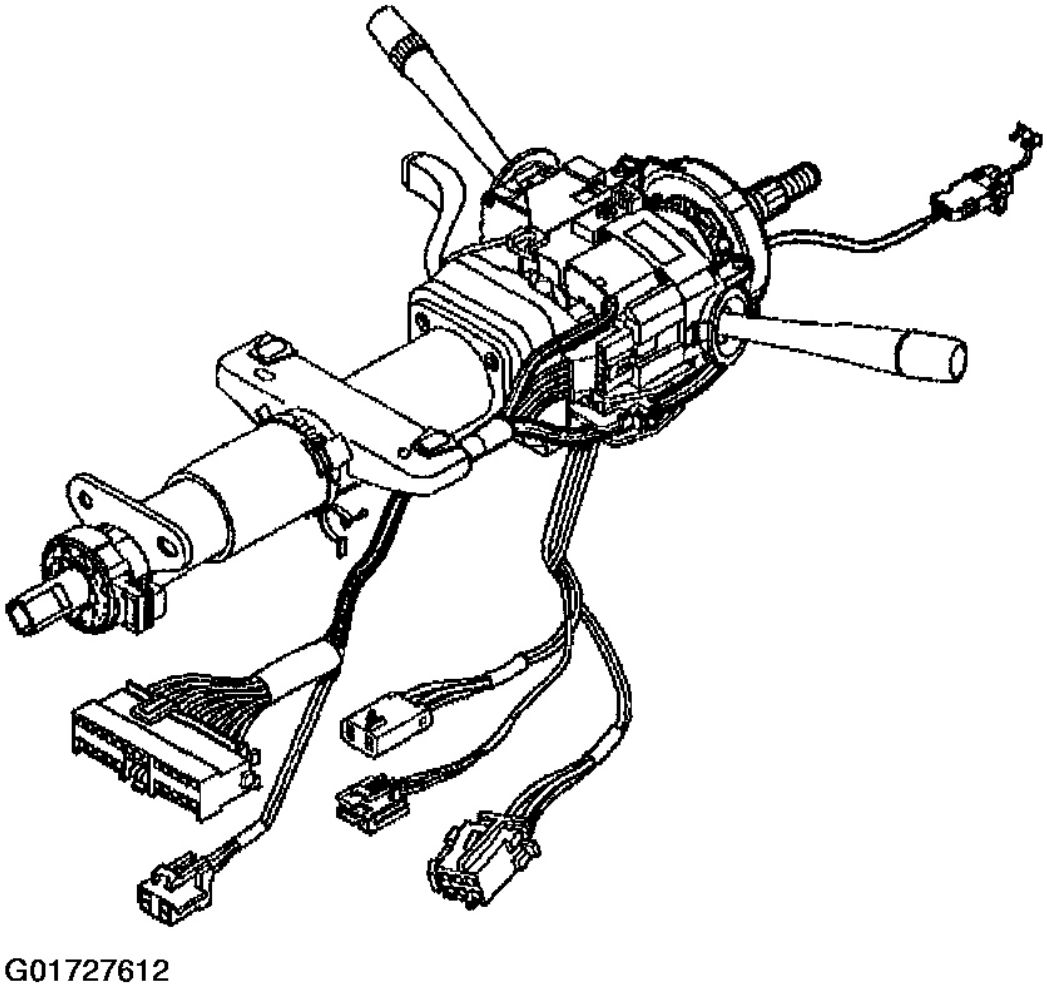


**Fig. 147: Aligning Steering Column Wiring Harness**
**Courtesy of GENERAL MOTORS CORP.**

5. Insert the wire harness assembly (1) firmly into the wire harness strap (2).

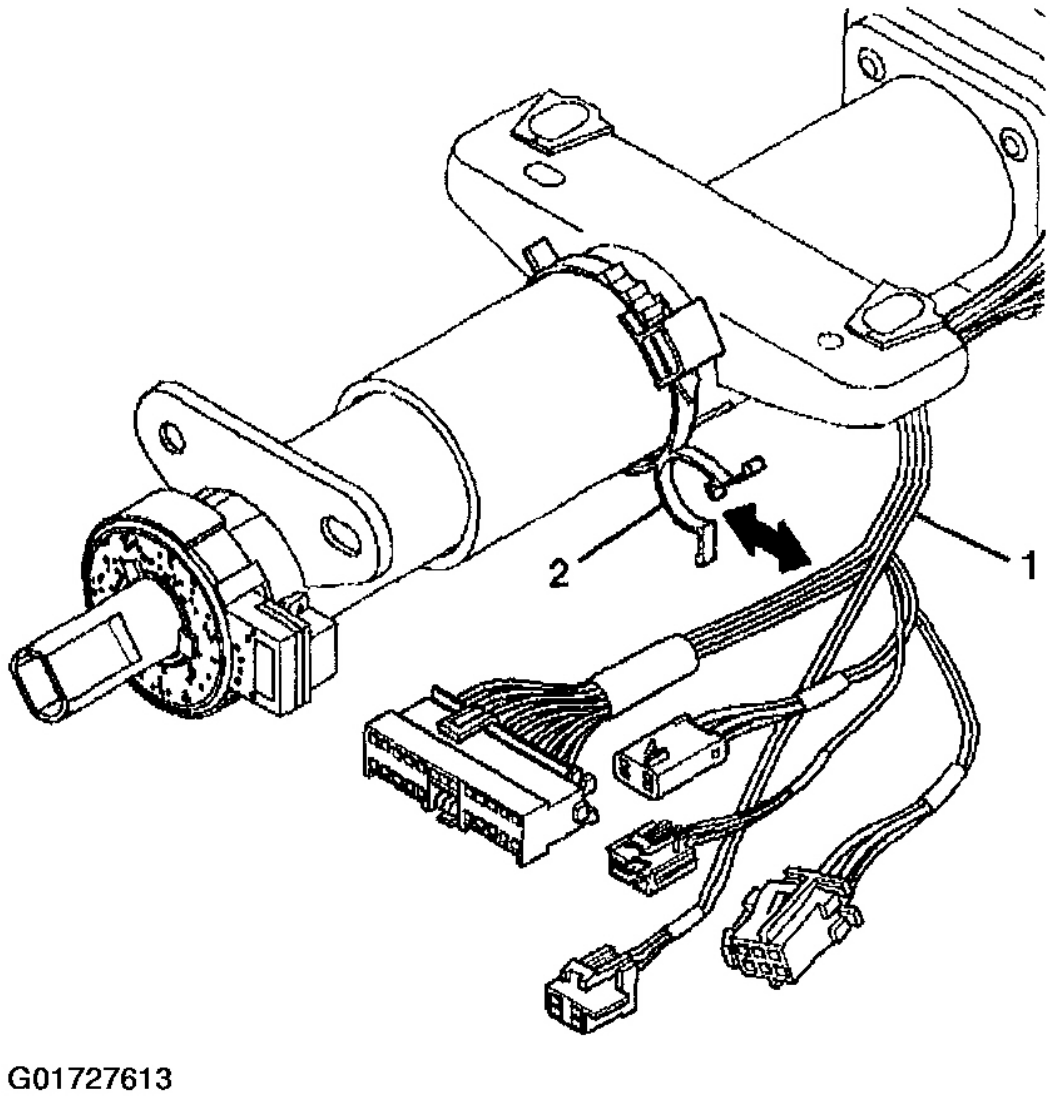


**Fig. 148: Installing Steering Column Wiring Harness**
**Courtesy of GENERAL MOTORS CORP.**

6. Install the wire harness straps (2) to the steering column tilt head assembly (1).
7. Install the upper and lower trim covers. Refer to **Steering Column Trim Covers - Assemble - Off Vehicle (Telescoping Column)** or **Steering Column Trim Covers - Assemble - Off Vehicle (Non-Telescoping Column)** .
8. Enable the inflatable restraint steering wheel module. Refer to **ACTIVATING SYSTEM** .

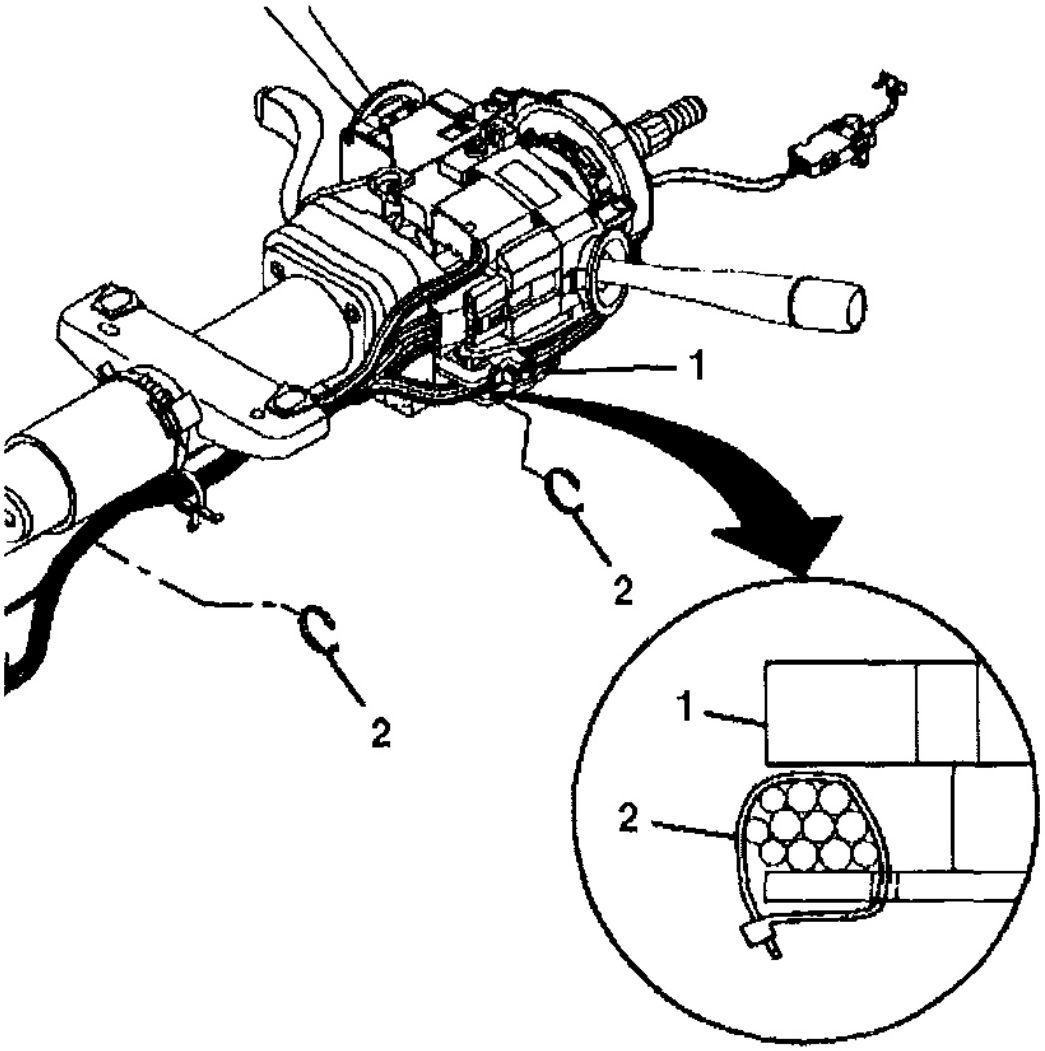


**Fig. 149: Installing Steering Column Wiring Harness Straps**
**Courtesy of GENERAL MOTORS CORP.**

**WINDSHIELD WIPER & WASHER SWITCH ASSEMBLY - DISASSEMBLE - OFF VEHICLE (TELESCOPING)**

**WARNING: Refer to SIR CAUTION .**

1. Disable the inflatable restraint steering wheel module. Refer to **DISABLING SYSTEM** .
2. Remove the upper and lower trim covers. Refer to**Steering Column Trim Covers - Disassemble - Off Vehicle (Telescoping)** or **Steering Column Trim Covers - Disassemble - Off Vehicle (Non-Telescoping)** .
3. Remove all wire harness straps.
4. Disconnect connectors, if necessary.

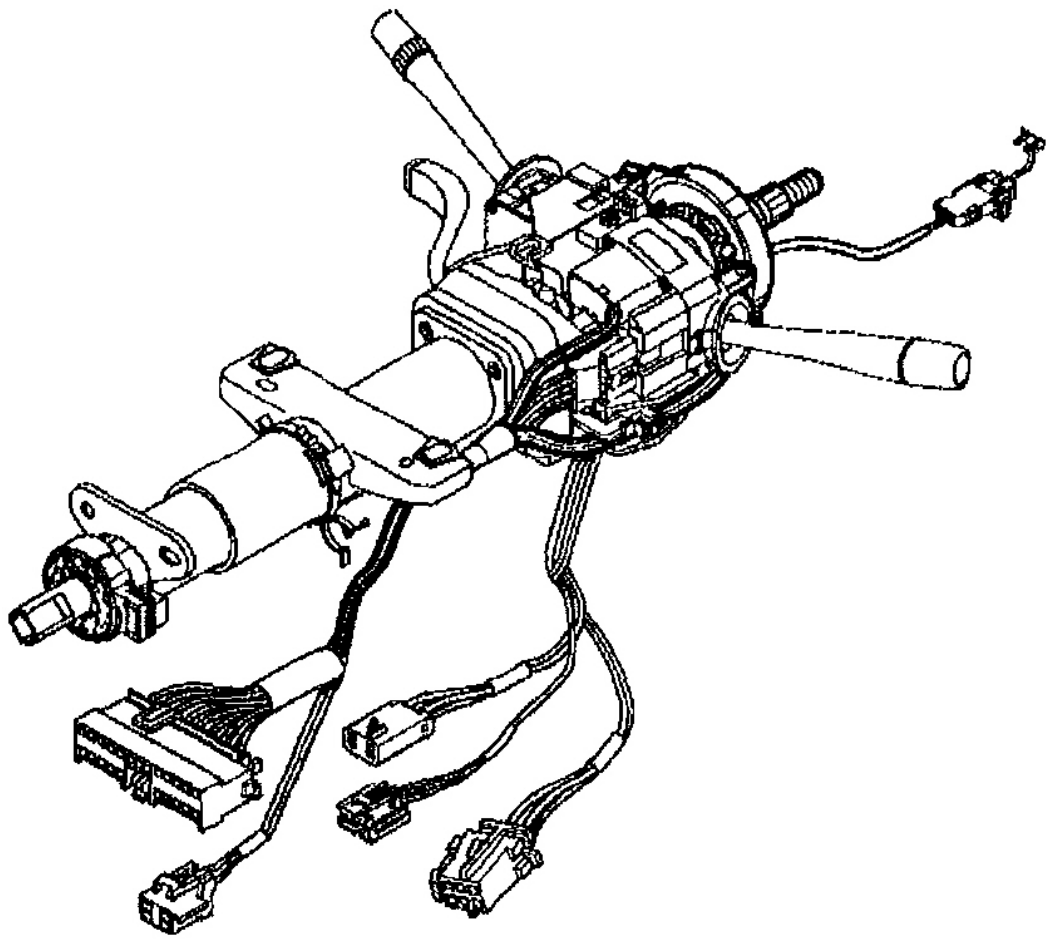


**Fig. 150: Disconnecting Steering Column Wiring Harness**
**Courtesy of GENERAL MOTORS CORP.**

5. Depress the top and bottom clips on the windshield wiper and washer switch assembly.

6. Slide the windshield wiper and washer switch assembly away from the bracket to disengage.

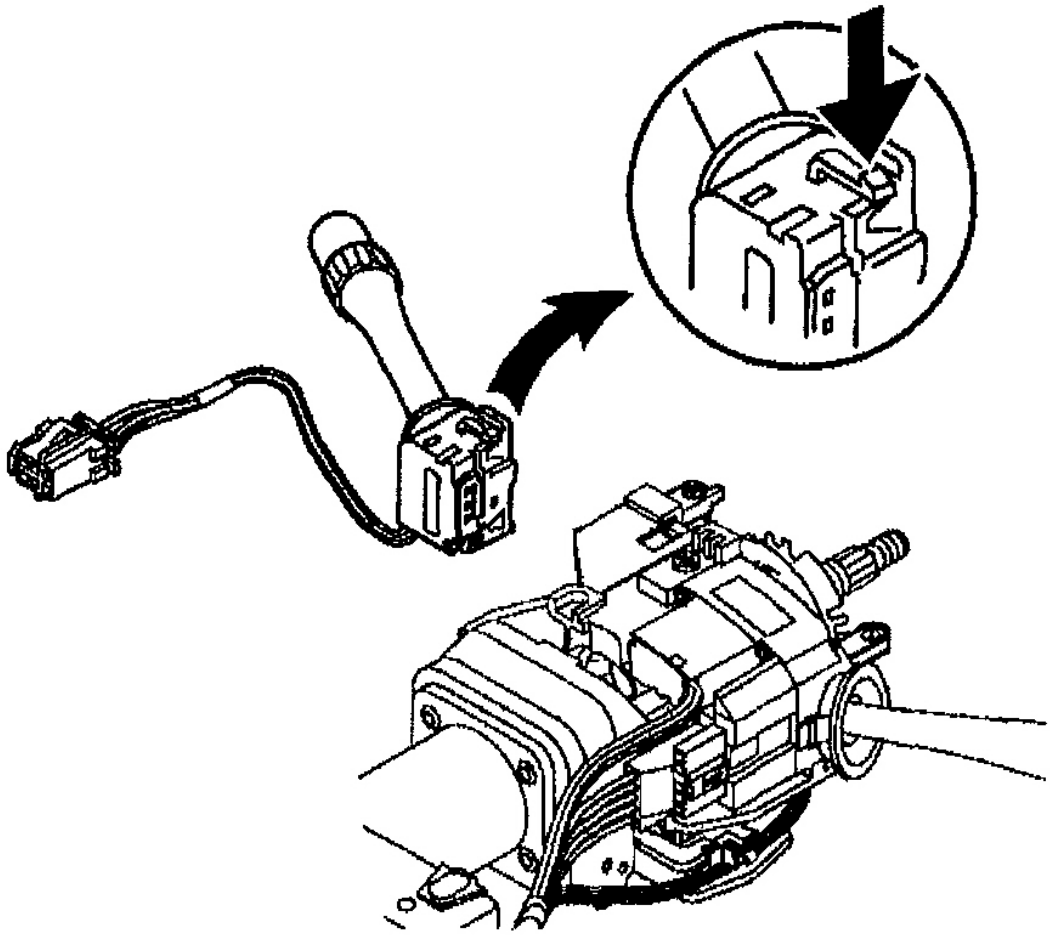


**Fig. 151: Locating Windshield Wiper & Washer Switch Assembly Clips**
**Courtesy of GENERAL MOTORS CORP.**

**WINDSHIELD WIPER & WASHER SWITCH ASSEMBLY - DISASSEMBLE - OFF VEHICLE (NON-(NON-TELESCOPING)**

**WARNING: Refer to SIR CAUTION .**

1. Disable the inflatable restraint steering wheel module. Refer to **DISABLING SYSTEM** .

2. Remove the upper and lower trim covers. Refer to **Steering Column Trim Covers - Disassemble - Off Vehicle (Telescoping)** or **Steering Column Trim Covers - Disassemble - Off Vehicle (Non-Telescoping)** .
3. Remove the wire harness straps (2) from the steering column tilt head assembly.

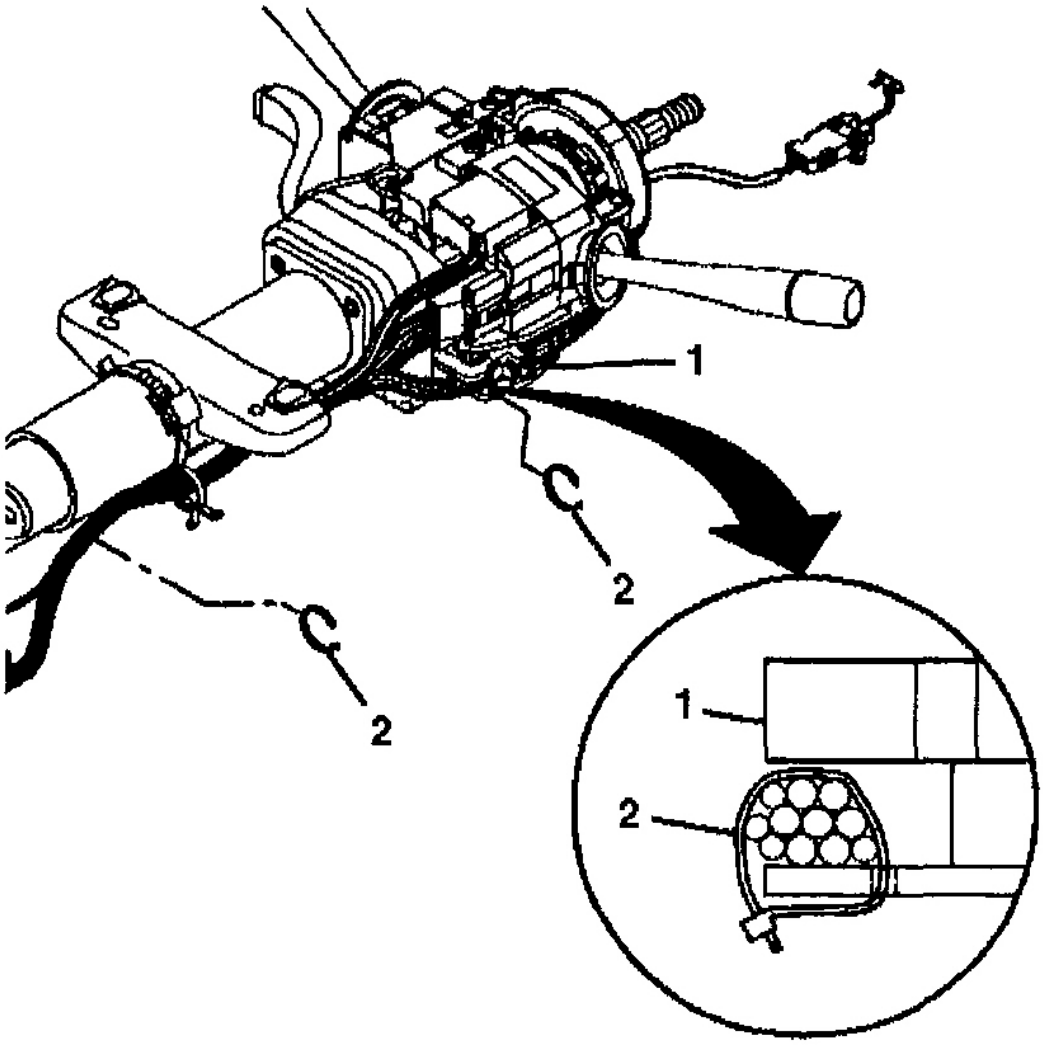


**Fig. 152: Removing Steering Column Wiring Harness Straps**
**Courtesy of GENERAL MOTORS CORP.**

4. Pop the wire harness assembly (1) from the wire harness strap (2).

5. Disconnect the windshield wiper and washer switch assembly connector.

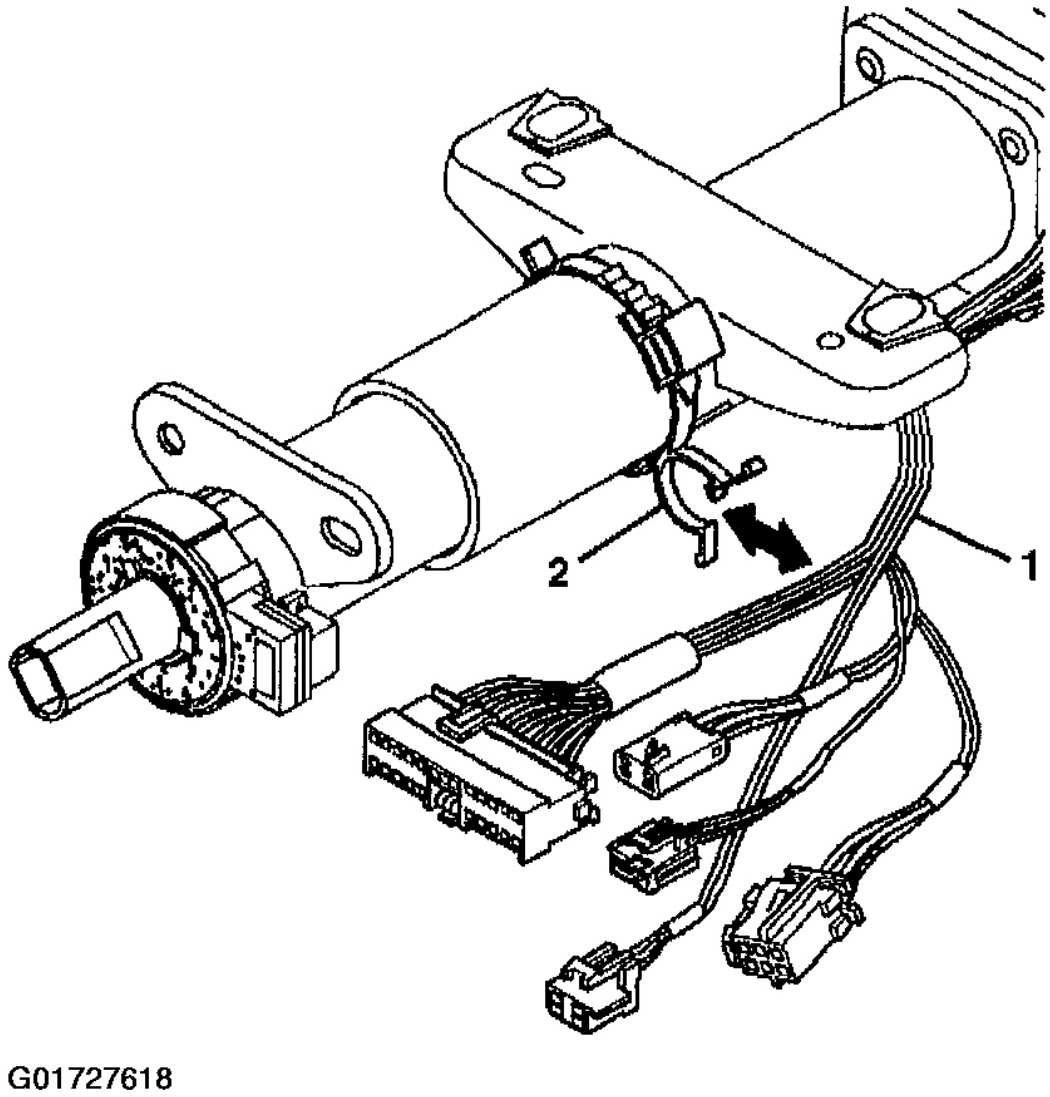


**Fig. 153: Disconnecting Steering Column Wiring Harness**
**Courtesy of GENERAL MOTORS CORP.**

6. Depress the top and bottom clips on the windshield wiper and washer switch assembly.
7. Slide the windshield wiper and washer switch assembly away from the bracket to disengage.

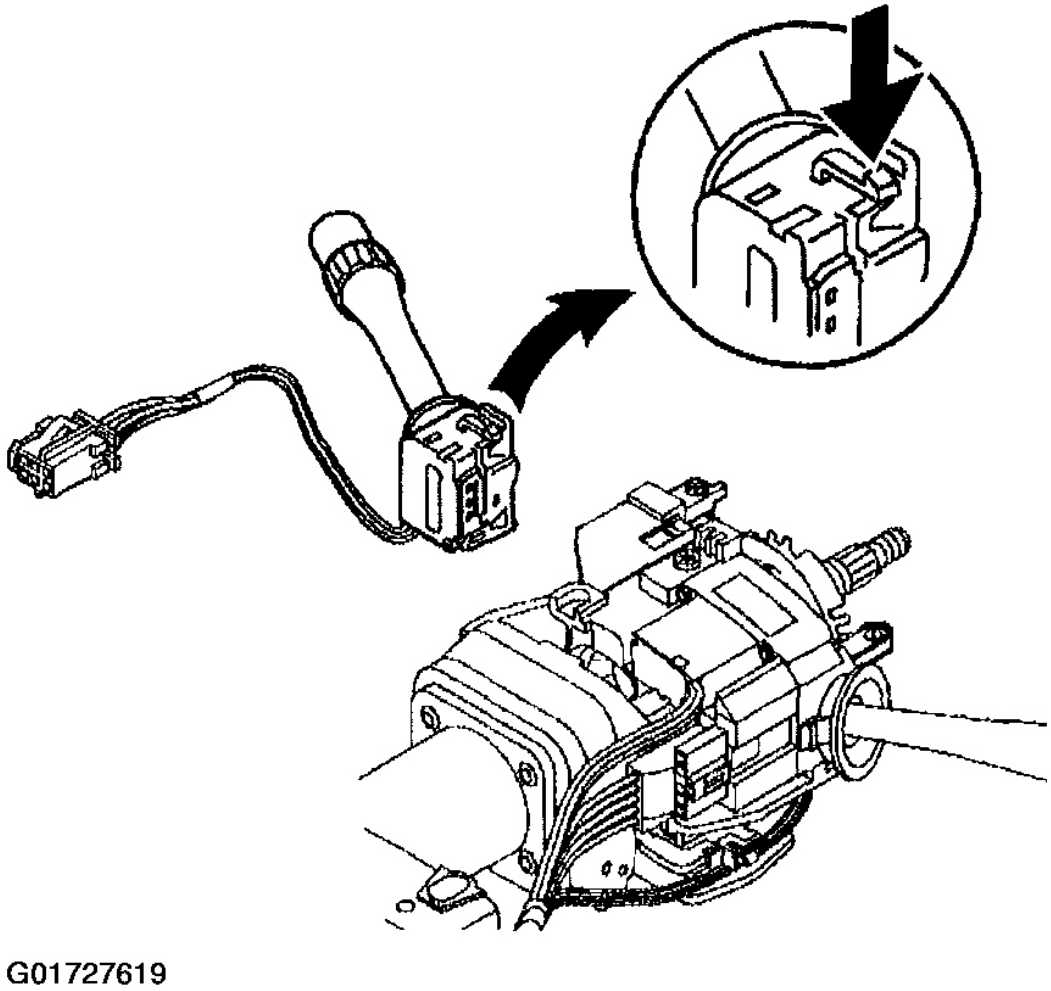


**Fig. 154: Locating Windshield Wiper & Washer Switch Assembly Clips**
**Courtesy of GENERAL MOTORS CORP.**

**WINDSHIELD WIPER & WASHER SWITCH ASSEMBLY - ASSEMBLE - OFF VEHICLE (TELESCOPING)**

1. Slide the windshield wiper and washer switch assembly into the bracket until the clips engage.

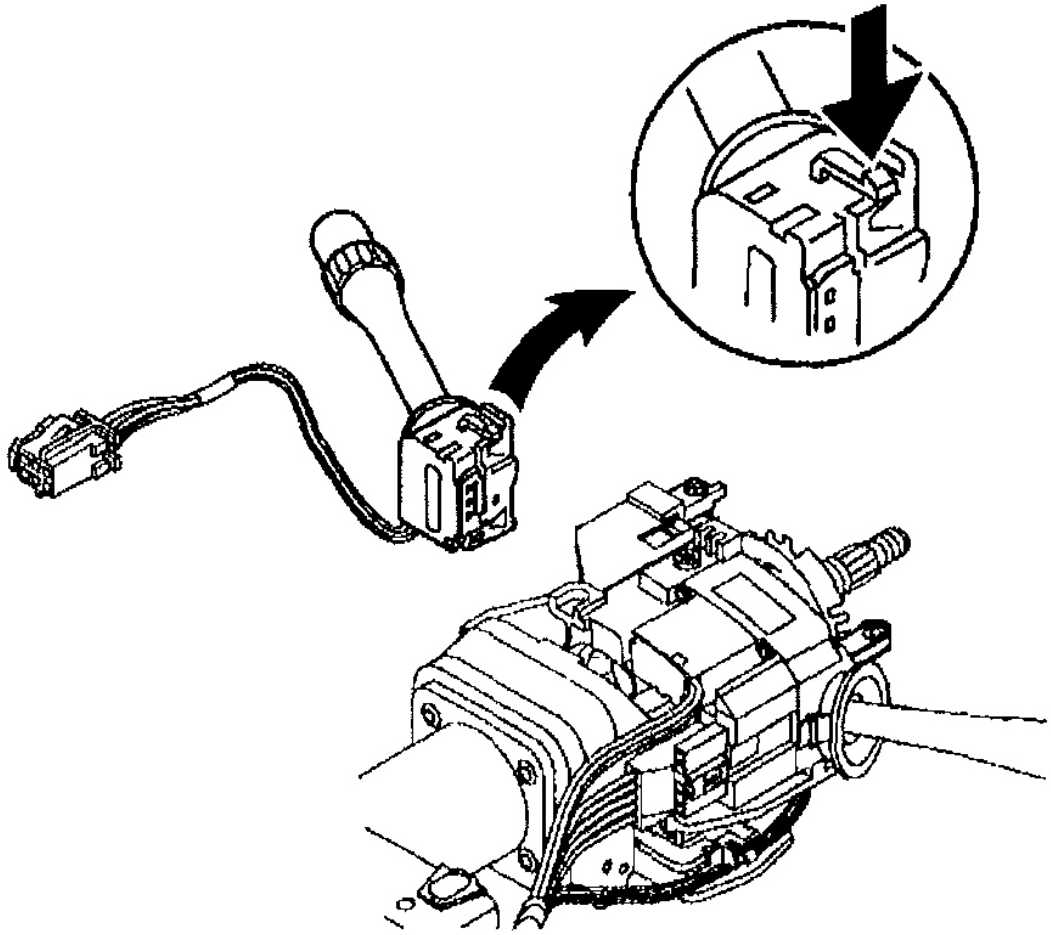


**Fig. 155: Locating Windshield Wiper & Washer Switch Assembly Clips**
**Courtesy of GENERAL MOTORS CORP.**

**WARNING: Refer to SIR INFLATOR MODULE COIL CAUTION .**

2. Route the wire harness assembly along the steering column jacket assembly.
3. Connect the windshield wiper and washer switch assembly connector, if necessary.

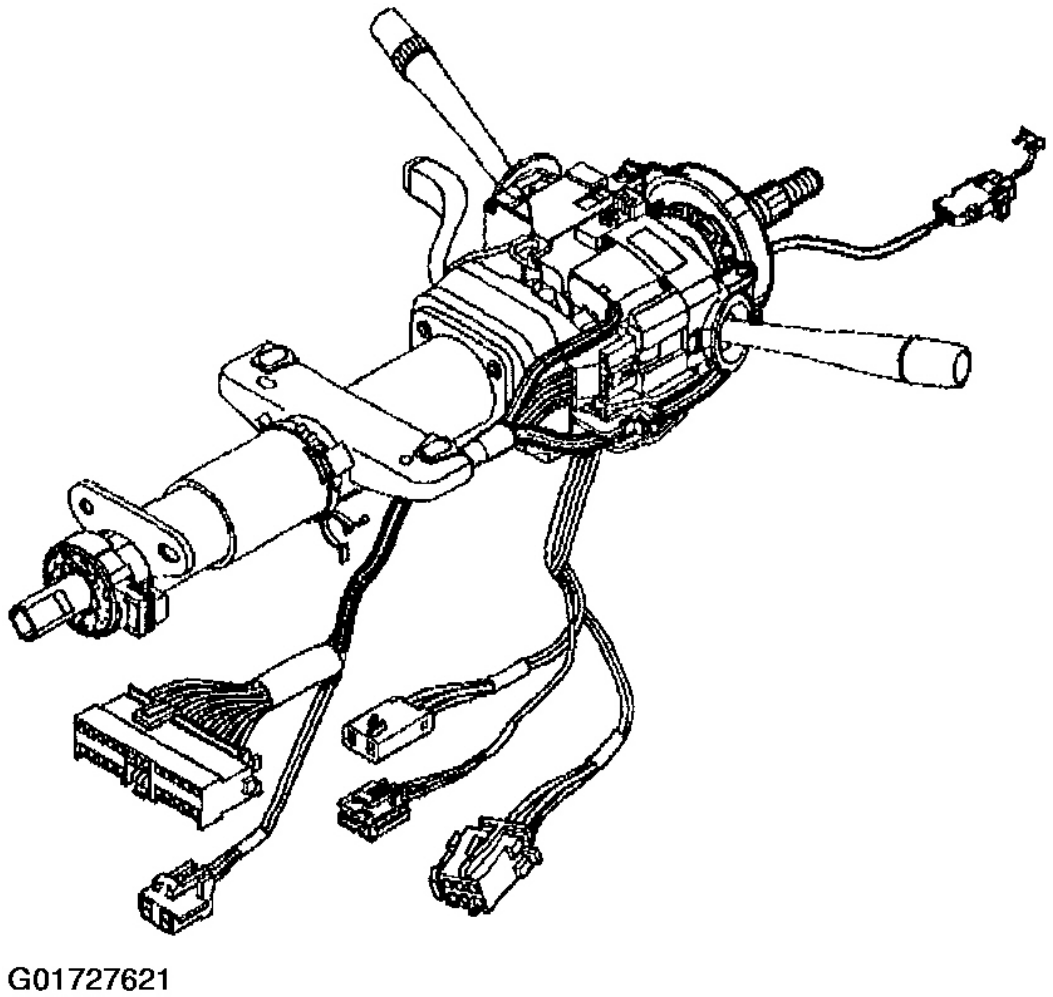


**Fig. 156: Aligning Steering Column Wiring Harness**
**Courtesy of GENERAL MOTORS CORP.**

4. Install the wire harness strap (2) to the steering column tilt head assembly (1).
5. Install the wire harness strap (2) to the wire harness assembly.

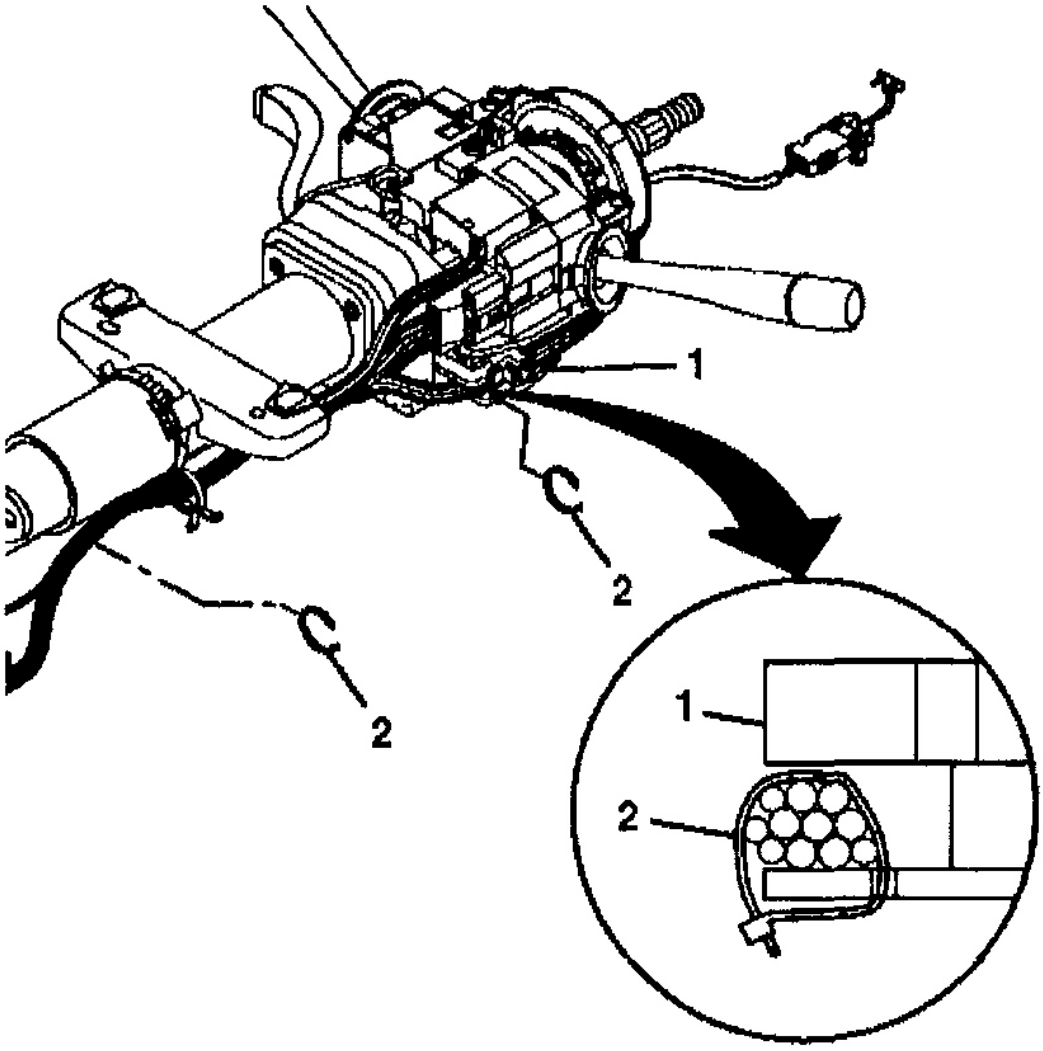


**Fig. 157: Installing Steering Column Wiring Harness Straps**
**Courtesy of GENERAL MOTORS CORP.**

6. Pop the wire harness assembly (1) into the wire harness strap (2).
7. Install the upper and lower trim covers. Refer to **Steering Column Trim Covers - Assemble - Off Vehicle (Telescoping Column)** or **Steering Column Trim Covers - Assemble - Off Vehicle (Non-Telescoping Column)** .
8. Enable the inflatable restraint steering wheel module. Refer to **ACTIVATING SYSTEM** .

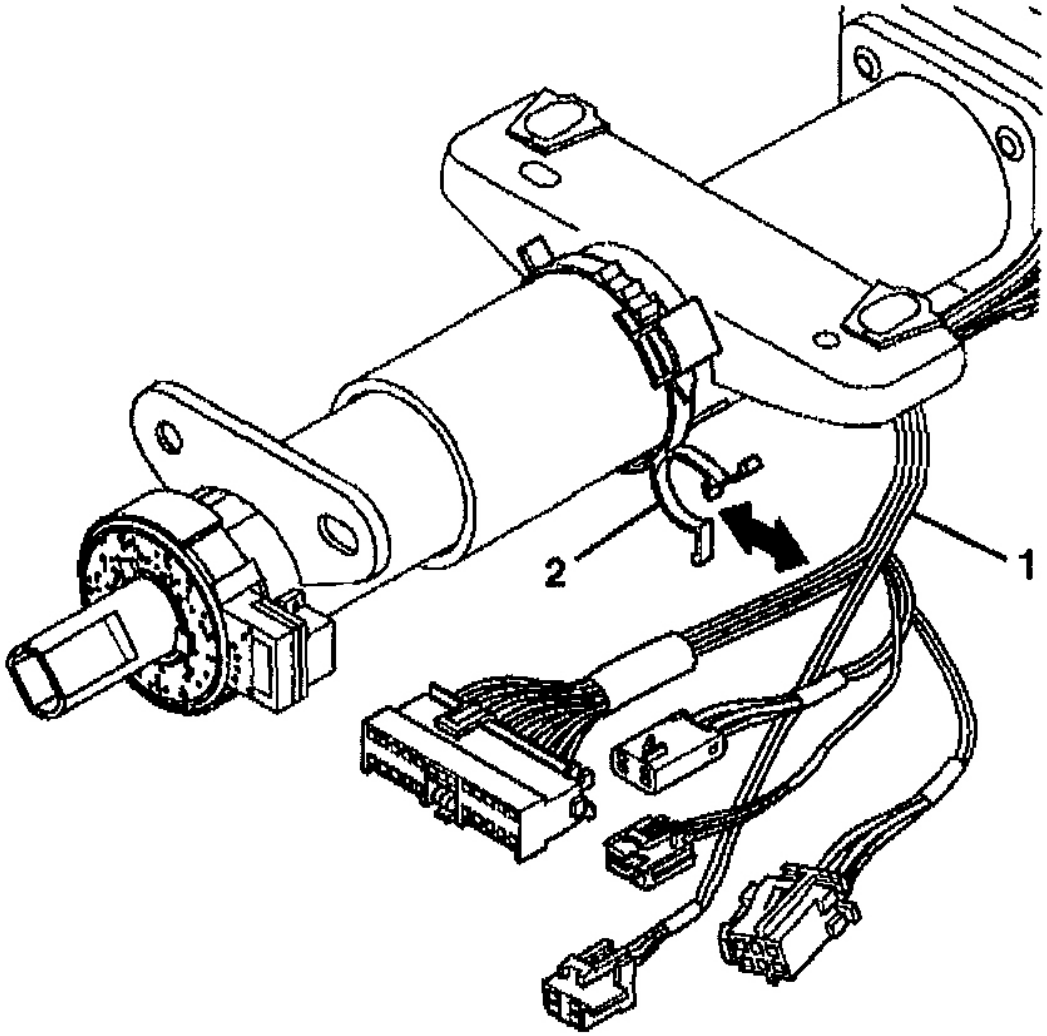


**Fig. 158: Installing Steering Column Wiring Harness**
**Courtesy of GENERAL MOTORS CORP.**

**WINDSHIELD WIPER & WASHER SWITCH ASSEMBLY - ASSEMBLE - OFF VEHICLE (NON-TELESCOPING)**

1. Slide the windshield wiper and Washer switch assembly into the bracket until the clips engage.

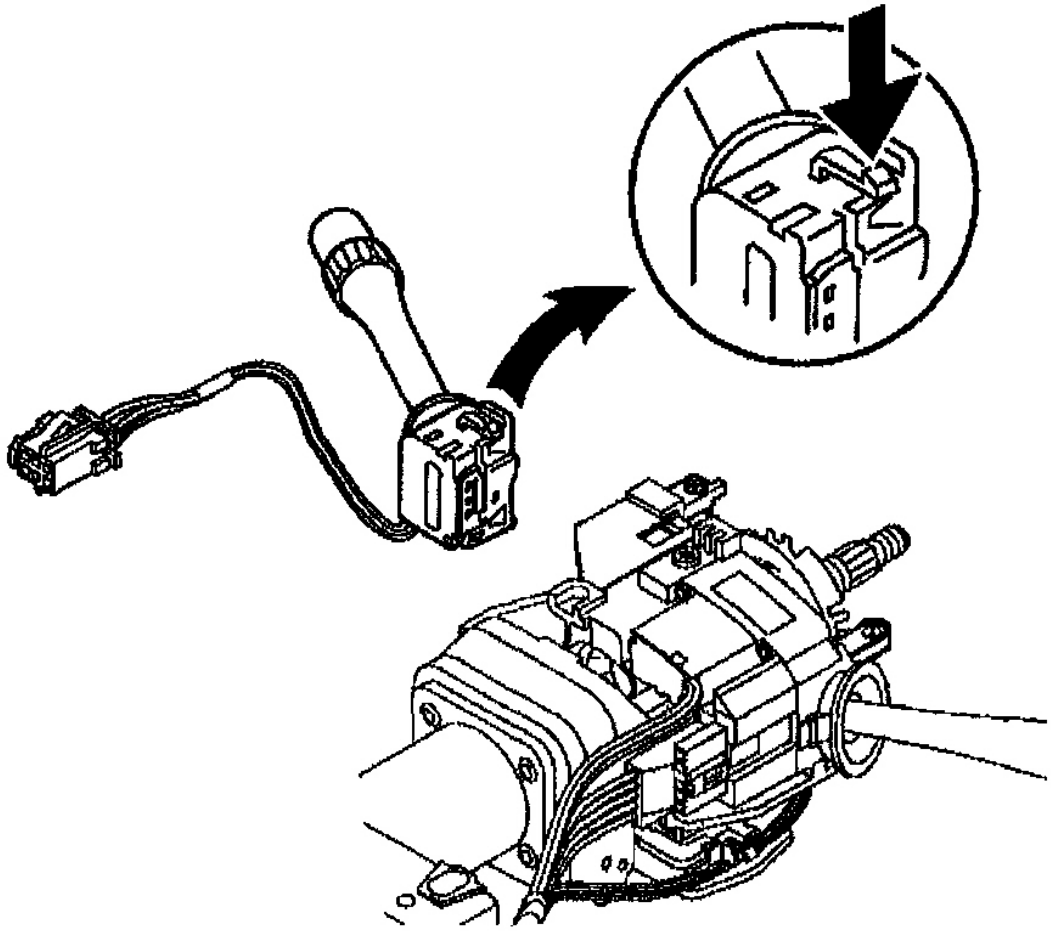


**Fig. 159: Locating Windshield Wiper & Washer Switch Assembly Clips**
**Courtesy of GENERAL MOTORS CORP.**

2. Route the wire harness assembly along the steering column jacket assembly.
3. Connect the windshield wiper and washer switch assembly connector, if necessary.

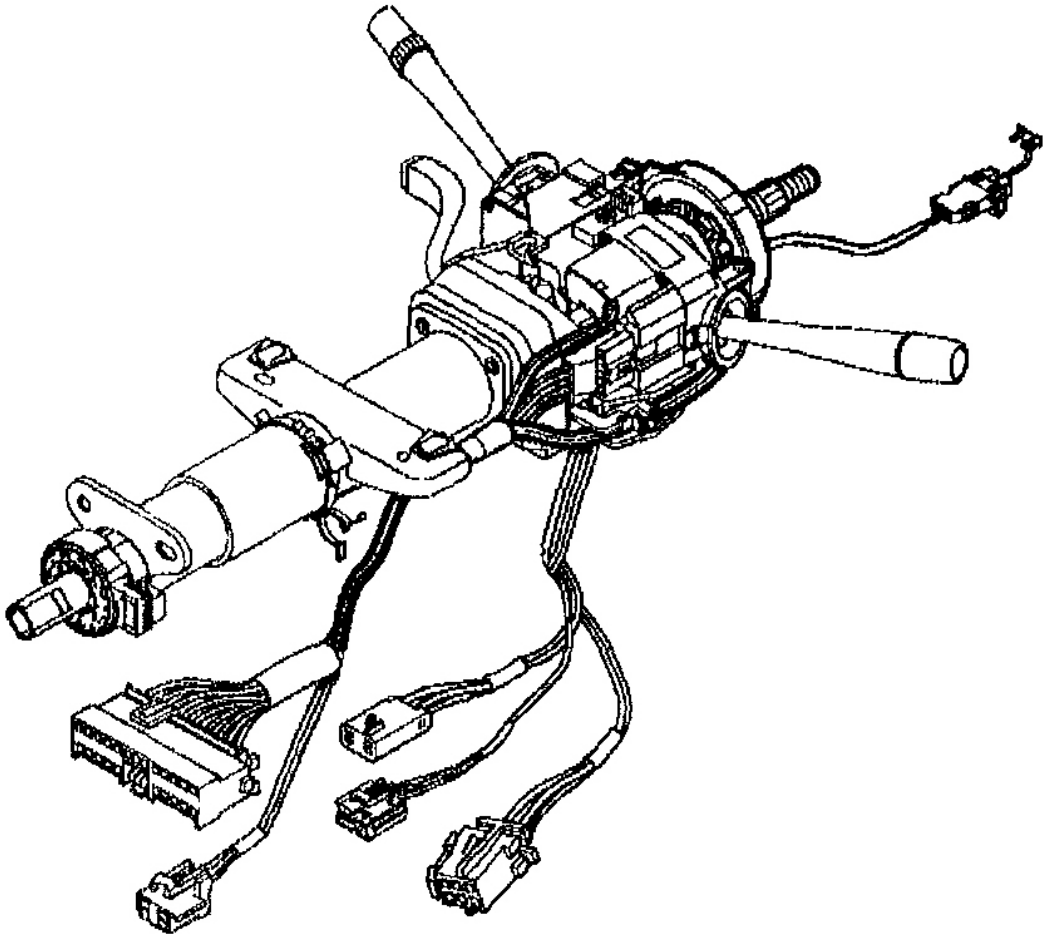


**Fig. 160: Aligning Steering Column Wiring Harness**
**Courtesy of GENERAL MOTORS CORP.**

4. Pop the wire harness assembly (1) into the wire harness strap (2).

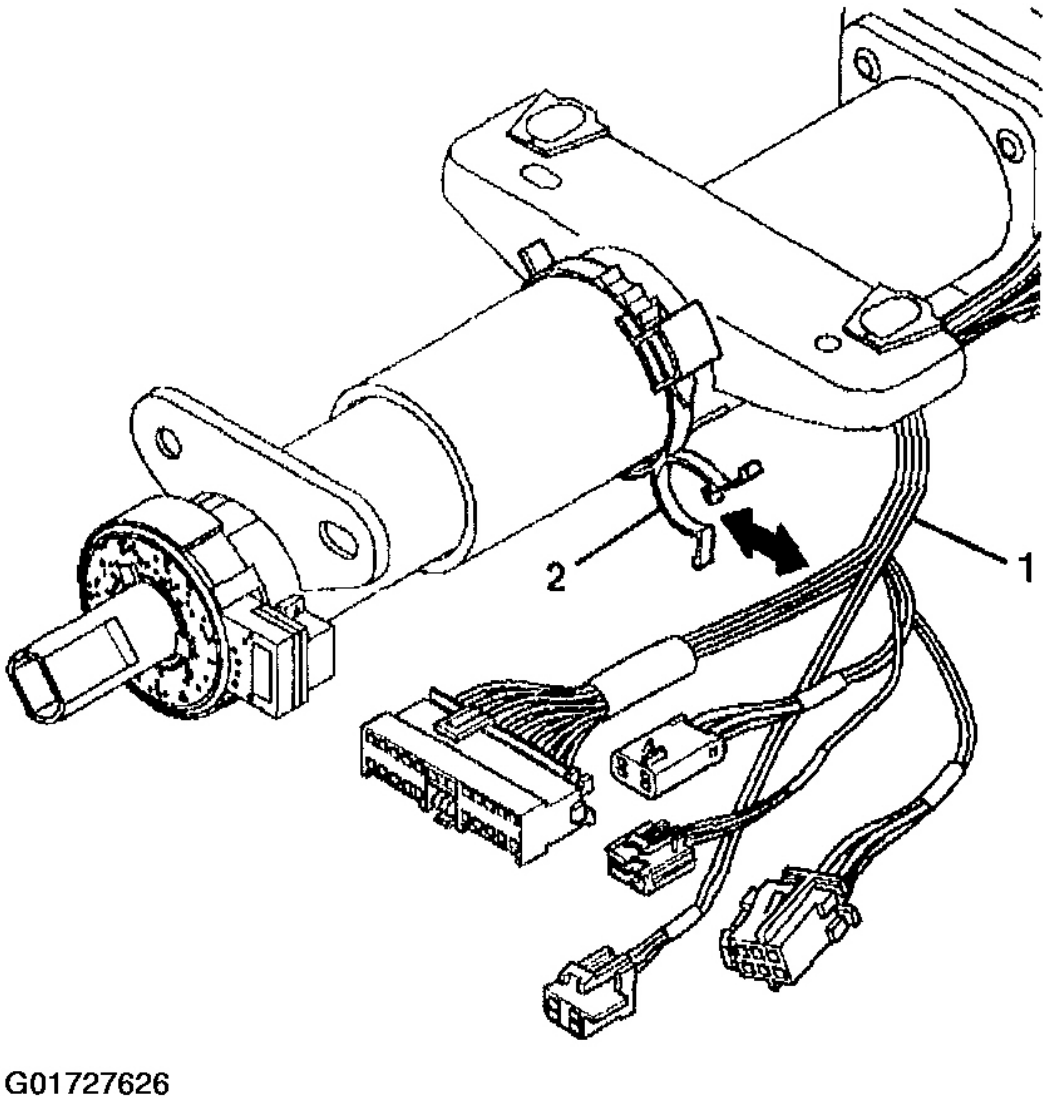


**Fig. 161: Installing Steering Column Wiring Harness**
**Courtesy of GENERAL MOTORS CORP.**

5. Install the wire harness straps (2) to the steering column tilt head assembly (1).
6. Install the upper and lower trim covers. Refer to **Steering Column Trim Covers - Assemble - Off Vehicle (Telescoping Column)** or **Steering Column Trim Covers - Assemble - Off Vehicle (Non-Telescoping Column)** .
7. Enable the inflatable restraint steering wheel module. Refer to **ACTIVATING SYSTEM** .

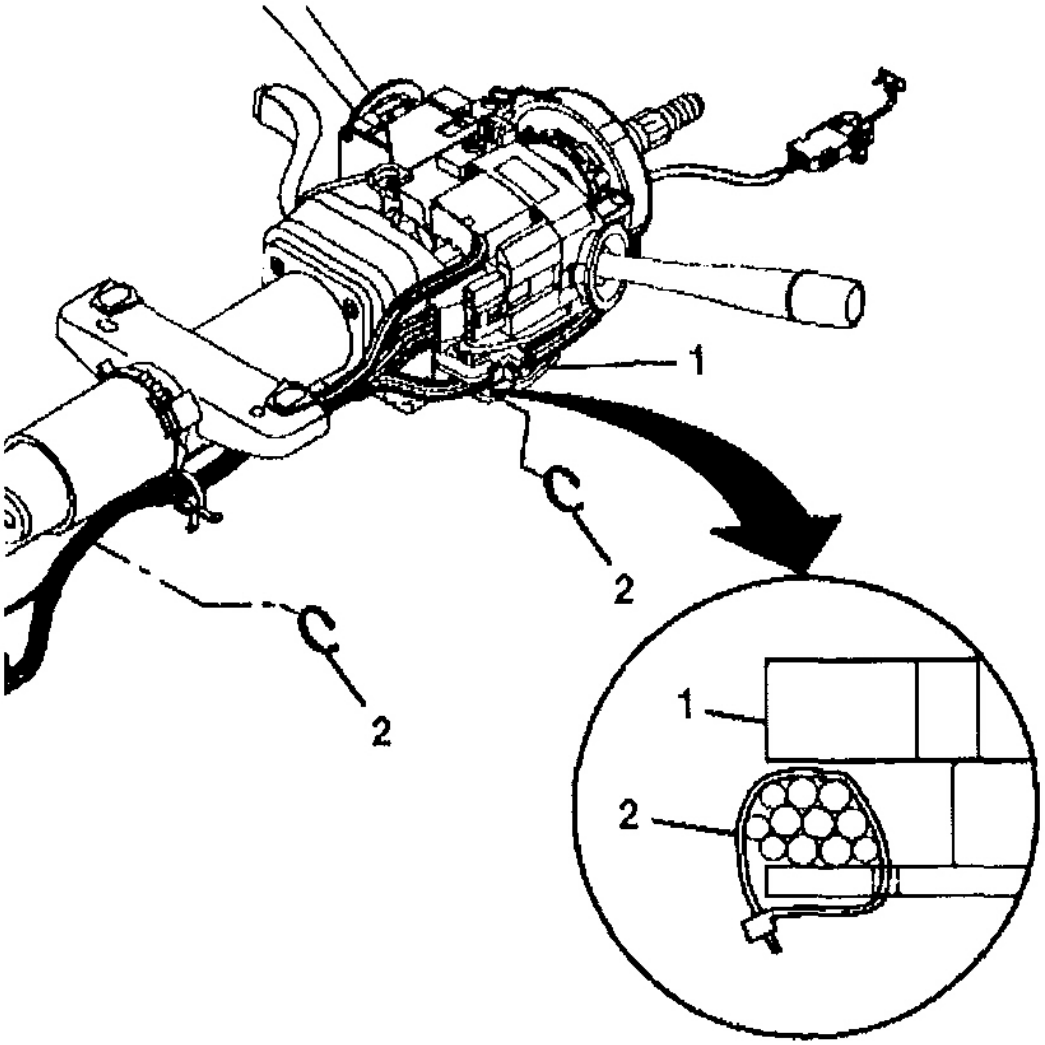


**Fig. 162: Installing Steering Column Wiring Harness Straps**
**Courtesy of GENERAL MOTORS CORP.**

**TILT SPRING - DISASSEMBLE - OFF VEHICLE (TELESCOPING COLUMN)**

**WARNING: Refer to SIR CAUTION .**

1. Disable the inflatable restraint steering wheel module. Refer to **DISABLING SYSTEM** .

2. Remove the upper and lower trim covers. Refer to **Steering Column Trim Covers - Disassemble - Off Vehicle (Telescoping)** or **Steering Column Trim Covers - Disassemble - Off Vehicle (Non-Telescoping)** .
3. Tilt the column in the UP position.

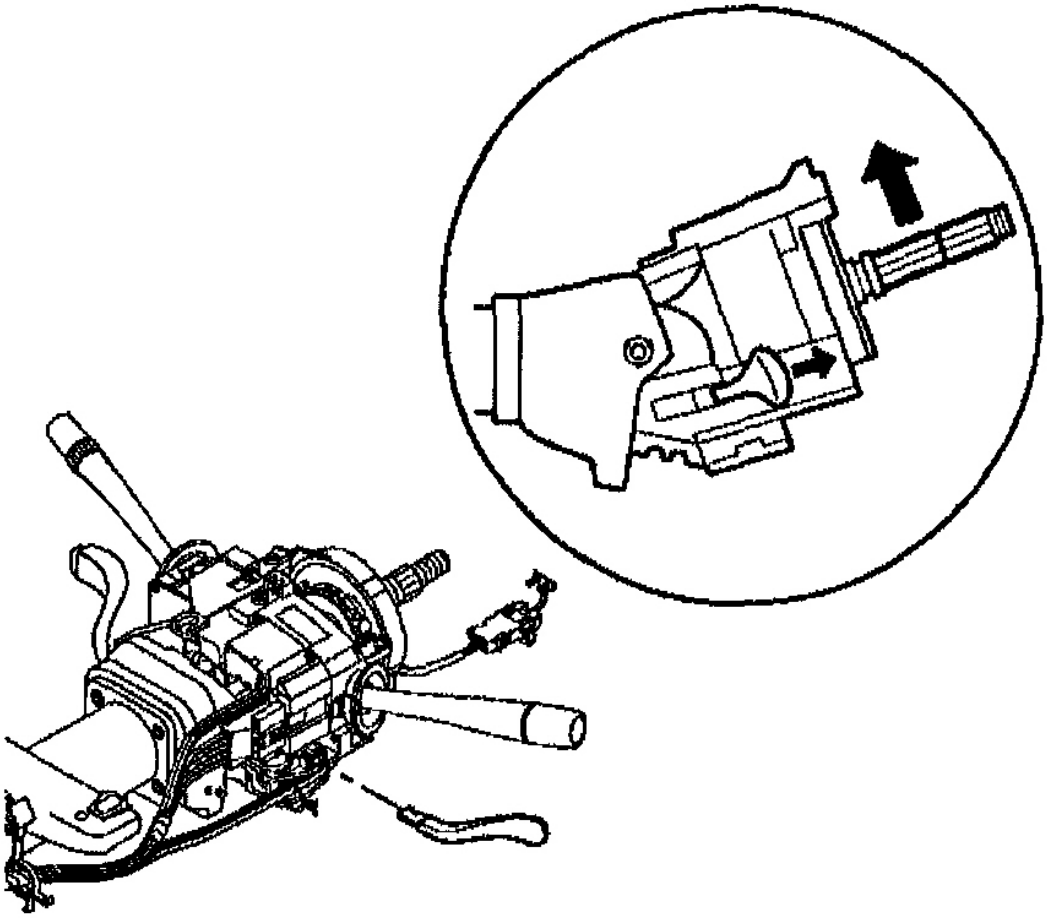


**Fig. 163: Aligning Steering Column**
**Courtesy of GENERAL MOTORS CORP.**

WARNING: **The tilt spring and the spring guide are under pressure. The tilt spring and the spring guide may become a projectile. Secure the spring with locking pliers during removal. Secure the spring with locking pliers during**

**installation. Bodily injury may result during removal and installation of the tilt spring and the spring guide. Always use caution during removal and installation of the tilt spring and the spring guide.**

4. Perform the following steps to remove the tilt spring (1):

   **4.1.** Pry the tilt spring (1) up with a screwdriver until a bulge occurs. The spring tension is mostly removed.

   **4.2.** Secure the tilt spring (1) with locking pliers.

   **4.3.** Continue to pry until the tilt spring (1) disengages from the post on the steering column support (2) and the steering column tilt head assembly (3).

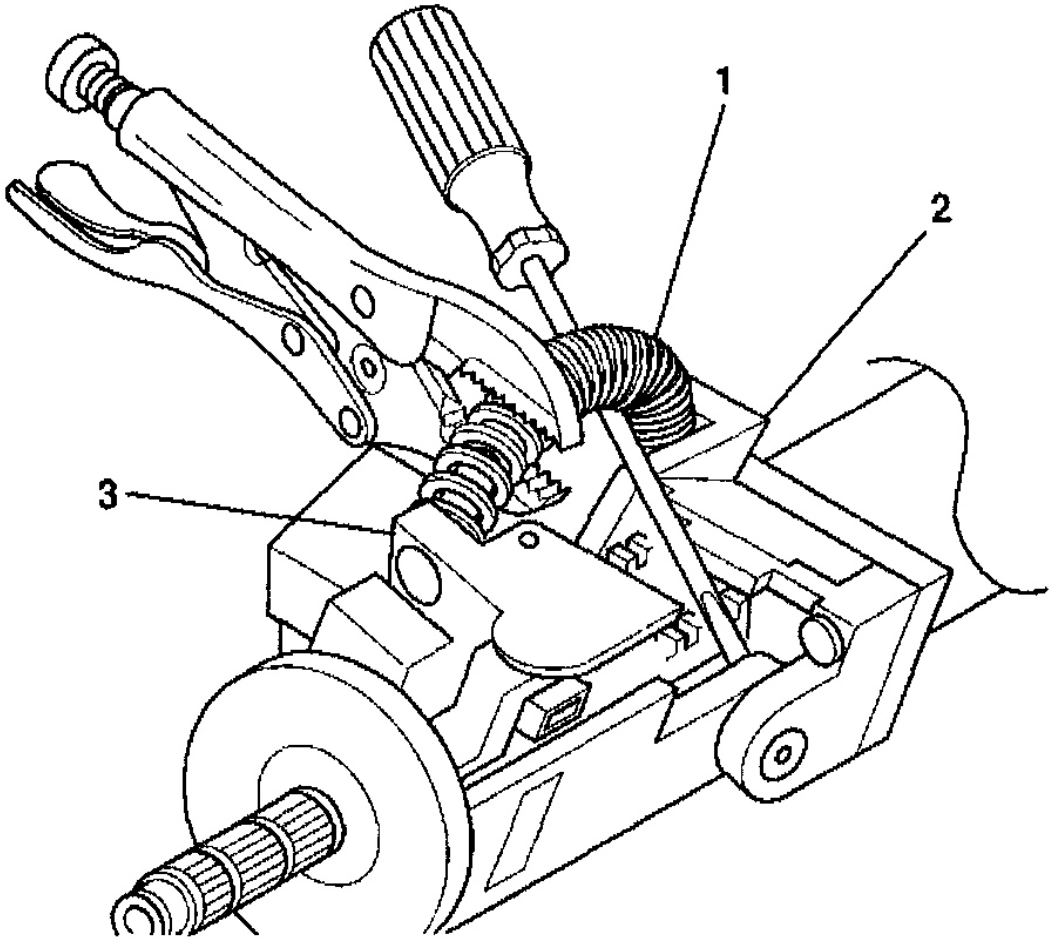


G01727629

**Fig. 164: Removing Tilt Spring**
**Courtesy of GENERAL MOTORS CORP.**

5. Remove the spring guide from the tilt spring.

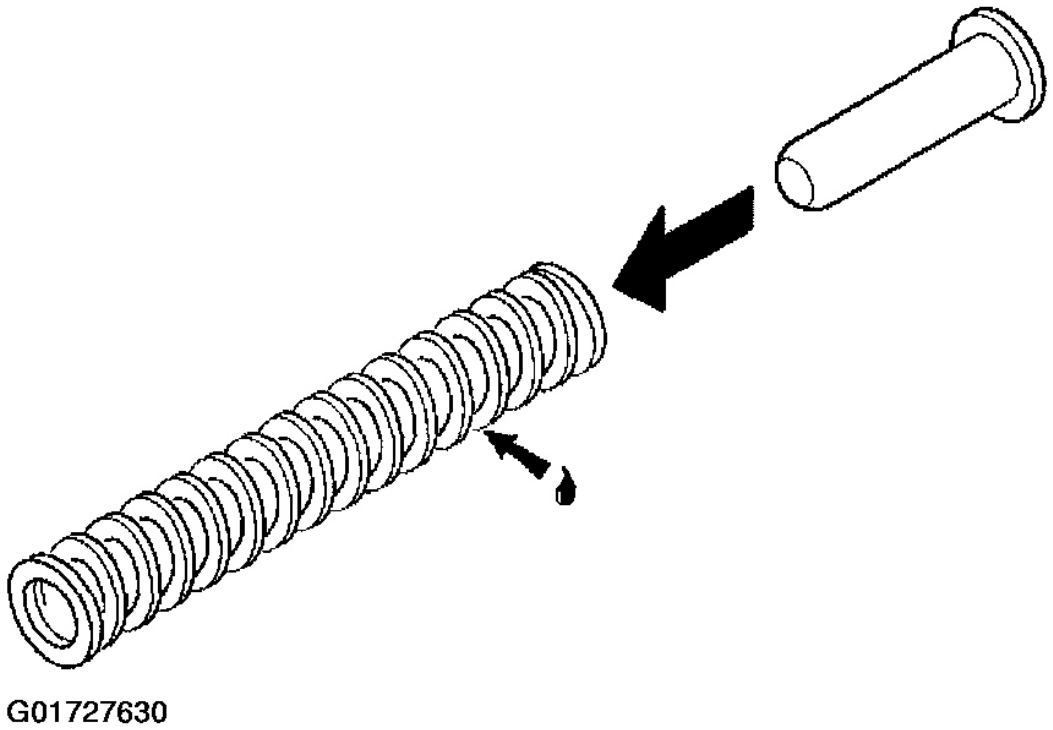


**Fig. 165: Removing Tilt Spring Guide**
**Courtesy of GENERAL MOTORS CORP.**

**TILT SPRING - DISASSEMBLE - OFF VEHICLE (NON-TELESCOPING COLUMN)**

**WARNING: Refer to SIR CAUTION .**

1. Disable the inflatable restraint steering wheel module. Refer to **DISABLING SYSTEM** .
2. Remove the upper and lower trim covers. Refer to **Steering Column Trim Covers - Disassemble - Off Vehicle (Telescoping)** or **Steering Column Trim Covers - Disassemble - Off Vehicle (Non-Telescoping)** .
3. Use the tilt lever to tilt the column in the UP position.

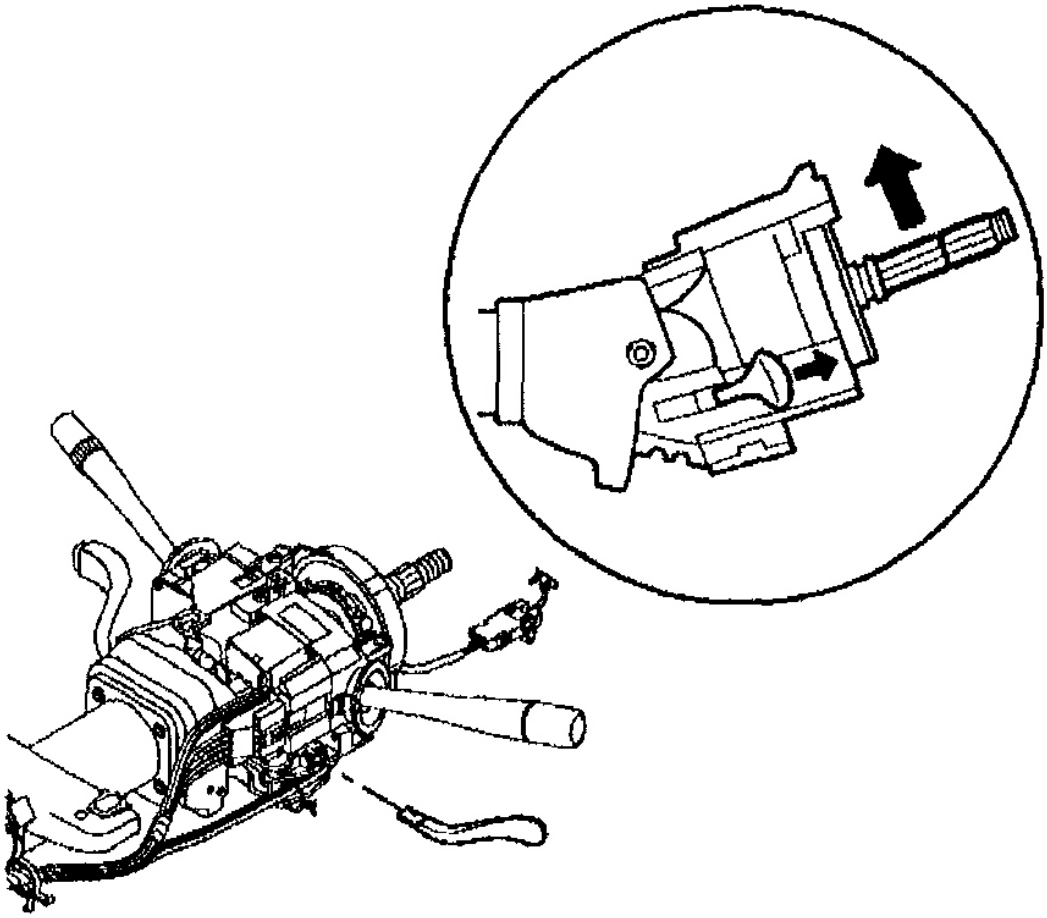


**Fig. 166: Aligning Steering Column**
**Courtesy of GENERAL MOTORS CORP.**

WARNING: **The tilt spring and the spring guide are under pressure. The tilt spring and the spring guide may become a projectile. Secure the spring with locking pliers during removal. Secure the spring with locking pliers during installation. Bodily injury may result during removal and installation of the tilt spring and the spring guide. Always use caution during removal and installation of the tilt spring and the spring guide.**

4. Perform the following steps to remove the tilt spring (1):

   **4.1.** Pry the tilt spring (1) up with a screwdriver until a bulge occurs. The spring tension is mostly removed.

   **4.2.** Secure the tilt spring (1) with locking pliers.

   **4.3.** Continue to pry until the tilt spring (1) disengages from the post on the steering column support (2) and the steering column tilt head assembly (3).

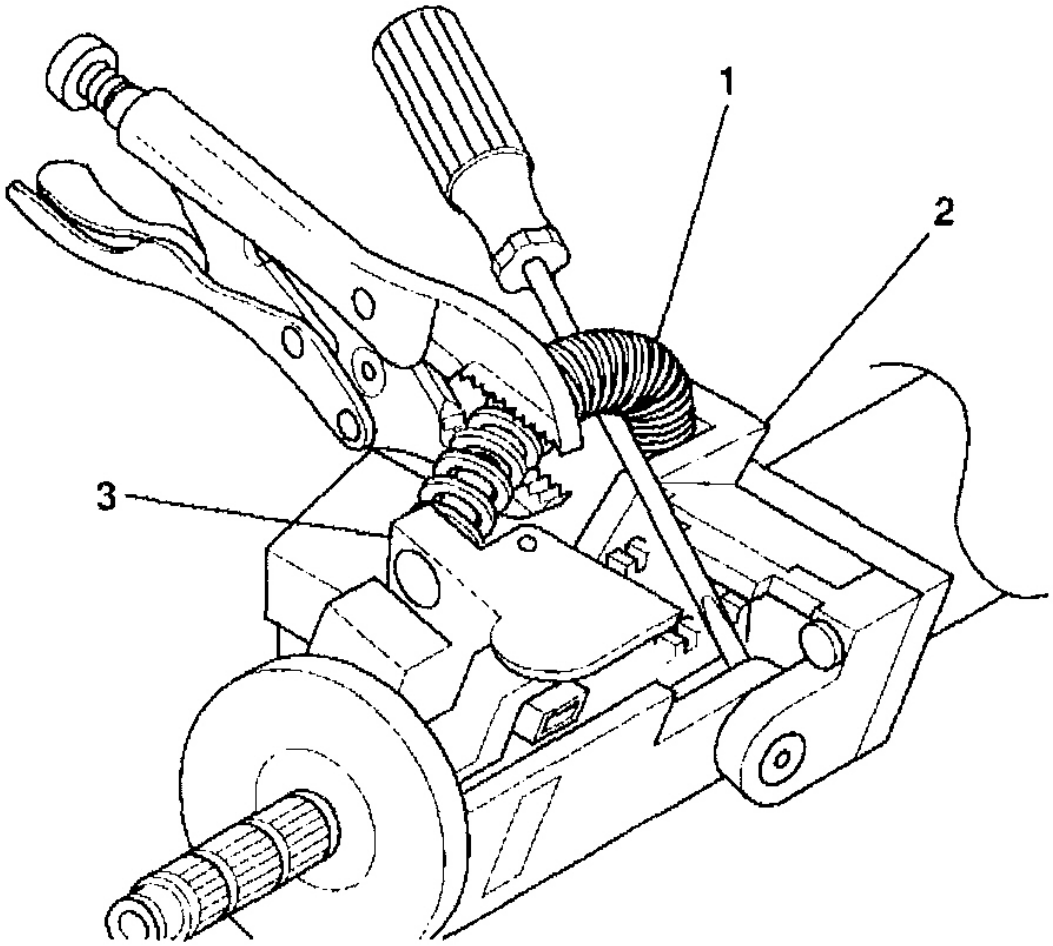


**Fig. 167: Removing Tilt Spring**
**Courtesy of GENERAL MOTORS CORP.**

5. Remove the spring guide (1) from the tilt spring (2).

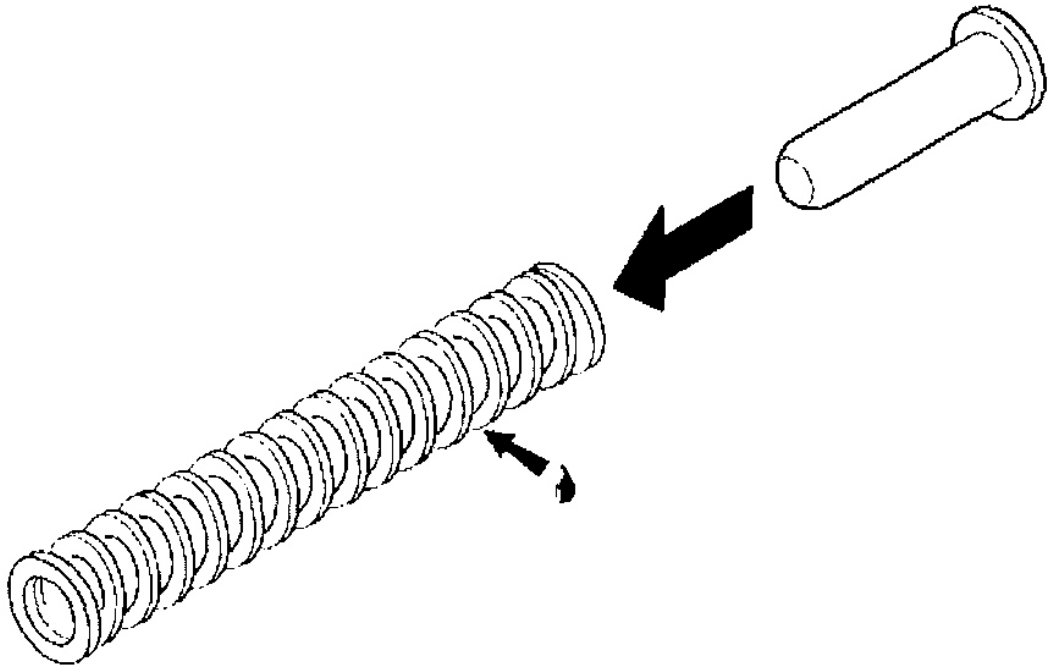


**Fig. 168: Removing Tilt Spring Guide**
**Courtesy of GENERAL MOTORS CORP.**

**TILT SPRING - ASSEMBLE - OFF VEHICLE (TELESCOPING COLUMN)**

1. Install the spring guide (1) to the tilt spring (2). Lubricate with synthetic grease (service kit).

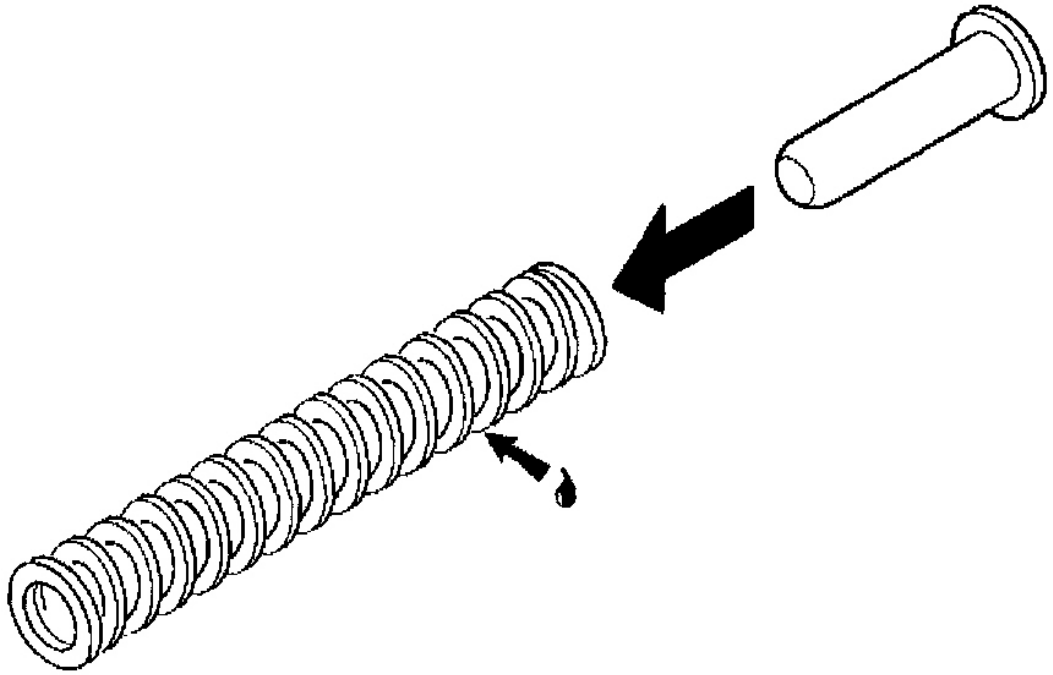


**Fig. 169: Installing Tilt Spring Guide**
**Courtesy of GENERAL MOTORS CORP.**

**WARNING: Refer to TILT SPRING CAUTION .**

2. Perform the following steps to install the tilt spring (1):
   - **2.1.** Install the tilt spring (1) to the post on the steering column support assembly (2).
   - **2.2.** Secure the tilt spring (1) with locking pliers.
   - **2.3.** Push the guide end of the tilt spring (1) onto the post on the steering column tilt head assembly.
   - **2.4.** Push the tilt spring (1) into position.
3. Install the upper and lower trim covers. Refer to **Steering Column Trim Covers - Assemble - Off Vehicle (Telescoping Column)** or **Steering Column Trim Covers - Assemble - Off Vehicle (Non-Telescoping Column)** .
4. Enable the inflatable restraint steering wheel module. Refer to **ACTIVATING SYSTEM** .

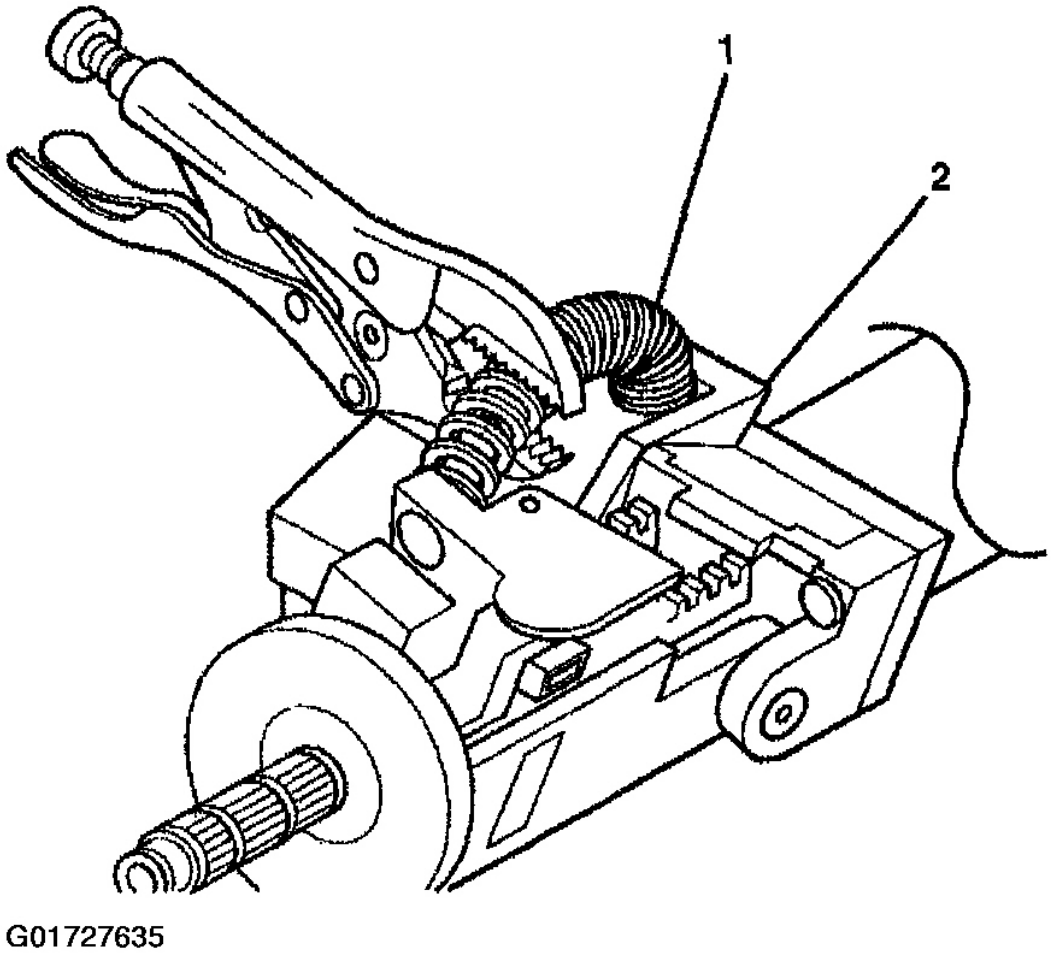


**Fig. 170: Installing Tilt Spring**
**Courtesy of GENERAL MOTORS CORP.**

**TILT SPRING - ASSEMBLE - OFF VEHICLE (NON-TELESCOPING COLUMN)**

1. Install the spring guide (1) to the tilt spring (2). Lubricate with synthetic grease (service kit).

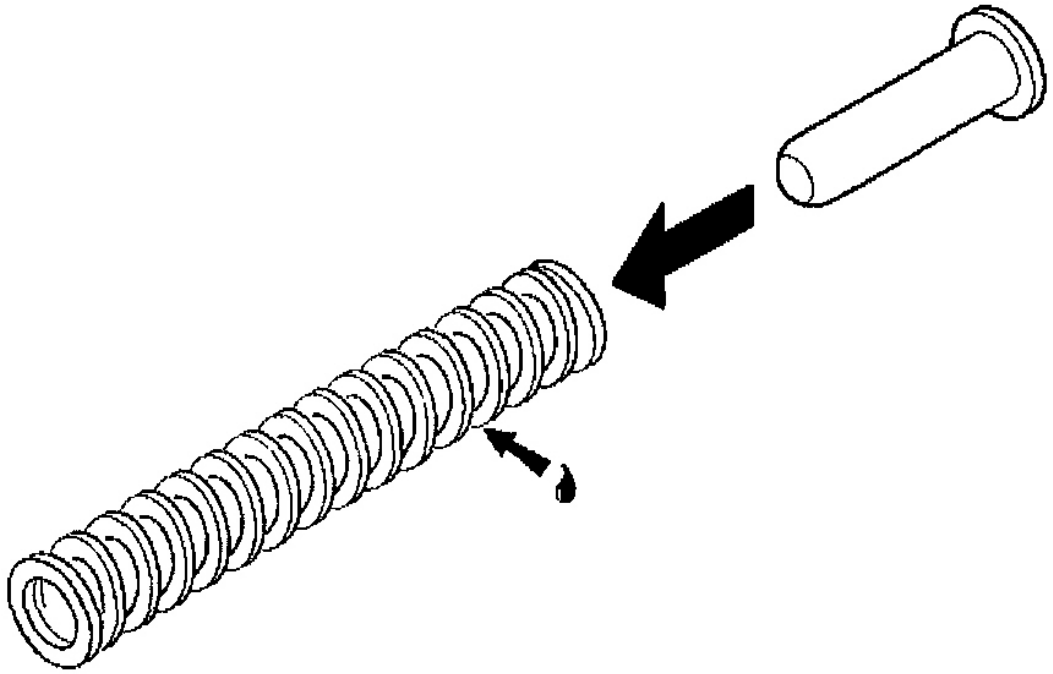


**Fig. 171: Installing Tilt Spring Guide**
**Courtesy of GENERAL MOTORS CORP.**

**WARNING: Refer to TILT SPRING CAUTION .**

2. Perform the following steps to install the tilt spring (1):
   1. **2.1.** 2.1. Install the tilt spring (1) to the post on the steering column support assembly (2).
   2. **2.2.** 2.2. Secure the tilt spring (1) with locking pliers.
   3. **2.3.** 2.3. Push the guide end of the tilt spring (1) onto the post on the steering column tilt head assembly.
   4. **2.4.** 2.4. Push the tilt spring (1) into position.
3. Install the upper and lower trim covers. Refer to **Steering Column Trim Covers - Assemble - Off Vehicle (Telescoping Column)** or **Steering Column Trim Covers - Assemble - Off Vehicle (Non-Telescoping Column)** .
4. Enable the inflatable restraint steering wheel module. Refer to **ACTIVATING SYSTEM** .

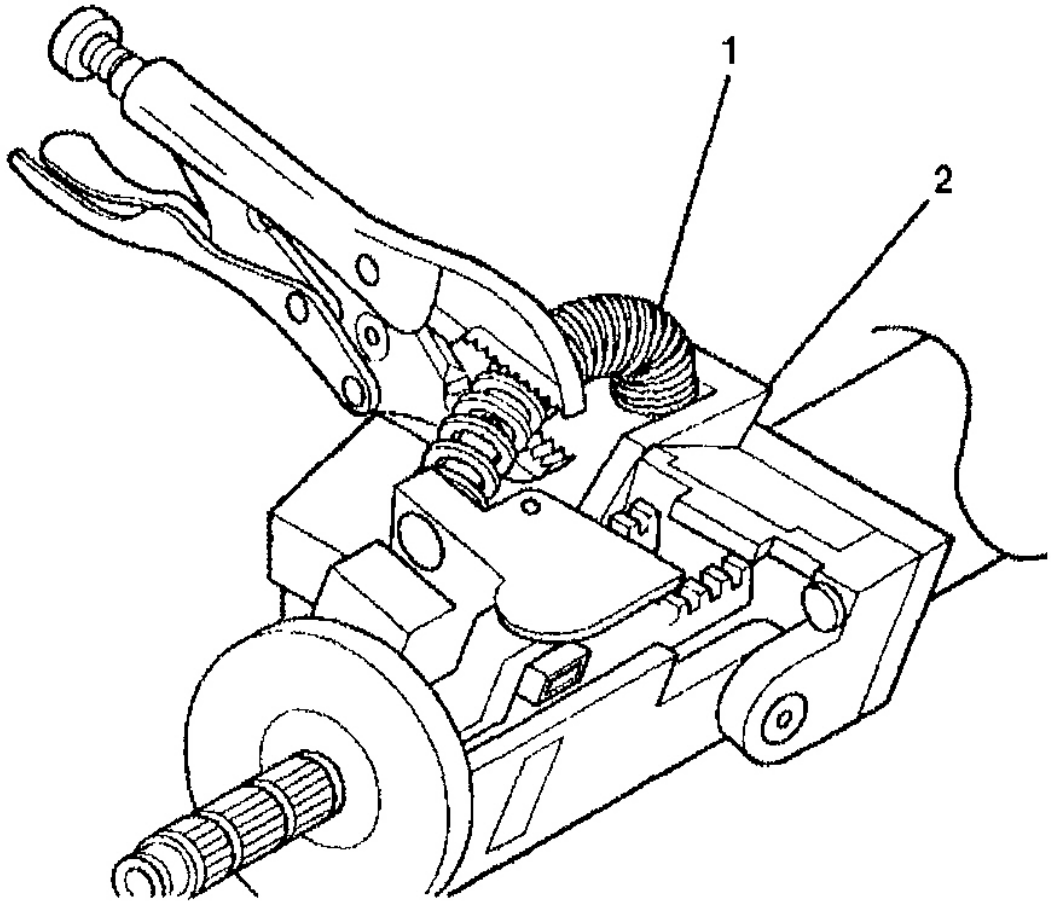


**Fig. 172: Installing Tilt Spring**
**Courtesy of GENERAL MOTORS CORP.**

**ELECTRONIC COLUMN LOCK MODULE - DISASSEMBLE - OFF VEHICLE (TELESCOPING COLUMN)**

**WARNING: Refer to SIR CAUTION .**

1. Disable the inflatable restraint steering wheel module. Refer to **DISABLING SYSTEM** .
2. Remove the upper tilt head components. Refer to **Steering Column Tilt Head Housing - Disassemble - Off Vehicle (Telescoping)** or **Steering Column Tilt Head Housing - Disassemble - Off Vehicle (Non- Telescoping)** .

3. Pop the wire harness assembly (1) from the wire harness strap (2).
4. Disconnect the connector, if necessary

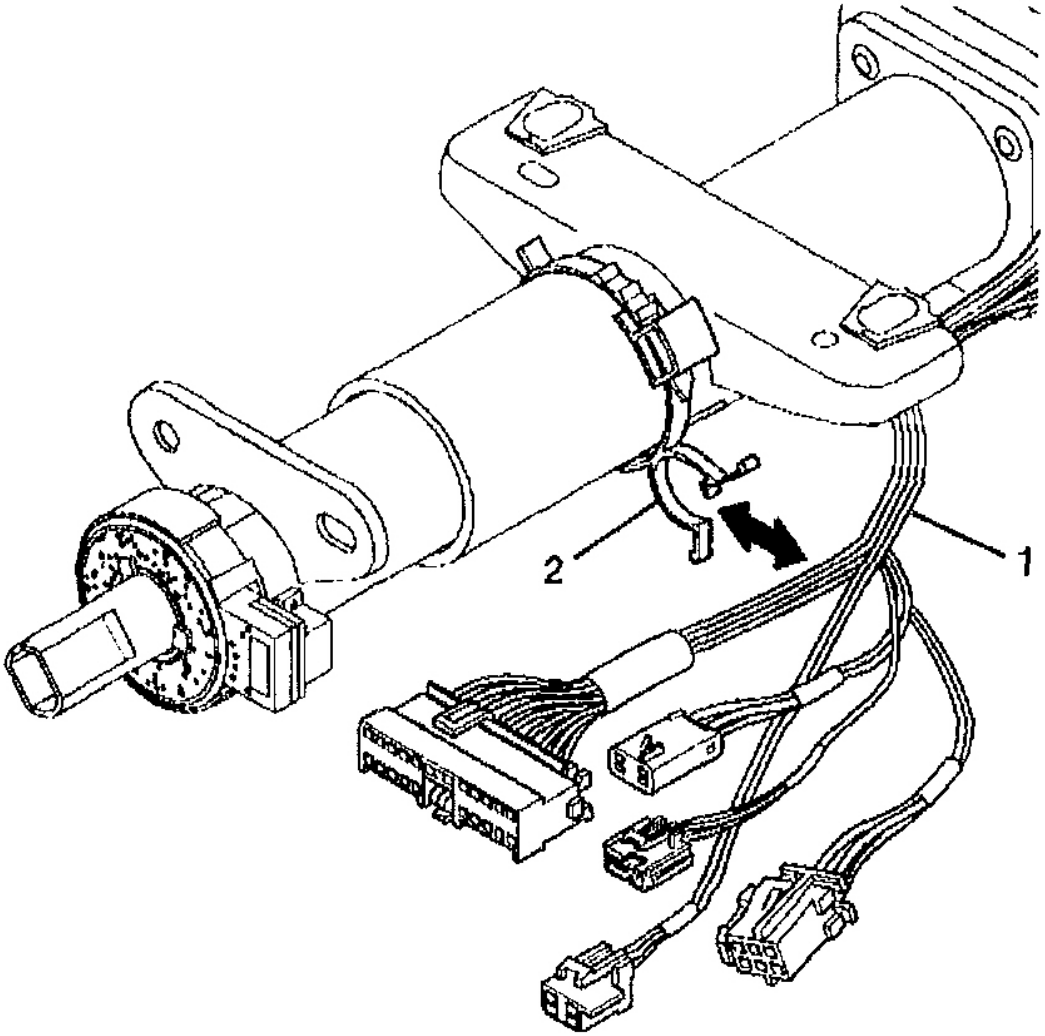


**Fig. 173: Disconnecting Steering Column Wiring Harness**
**Courtesy of GENERAL MOTORS CORP.**

5. Remove the wire harness straps (2) from the steering column tilt head assembly.

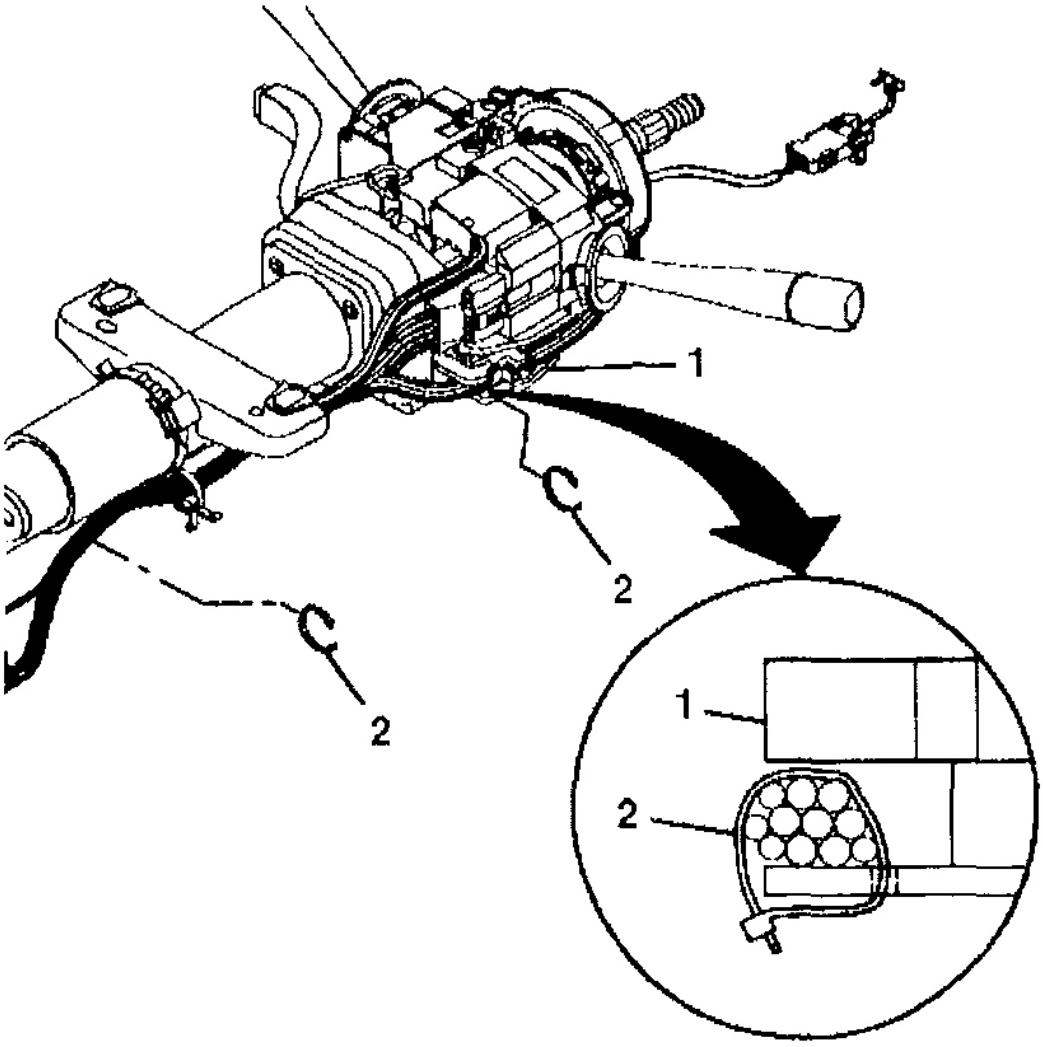


**Fig. 174: Removing Steering Column Wiring Harness Straps**
**Courtesy of GENERAL MOTORS CORP.**

6. Depress the top and bottom clips on the windshield wiper and washer switch assembly.
7. Slide the windshield wiper and washer switch assembly away from the electric column lock to disengage.

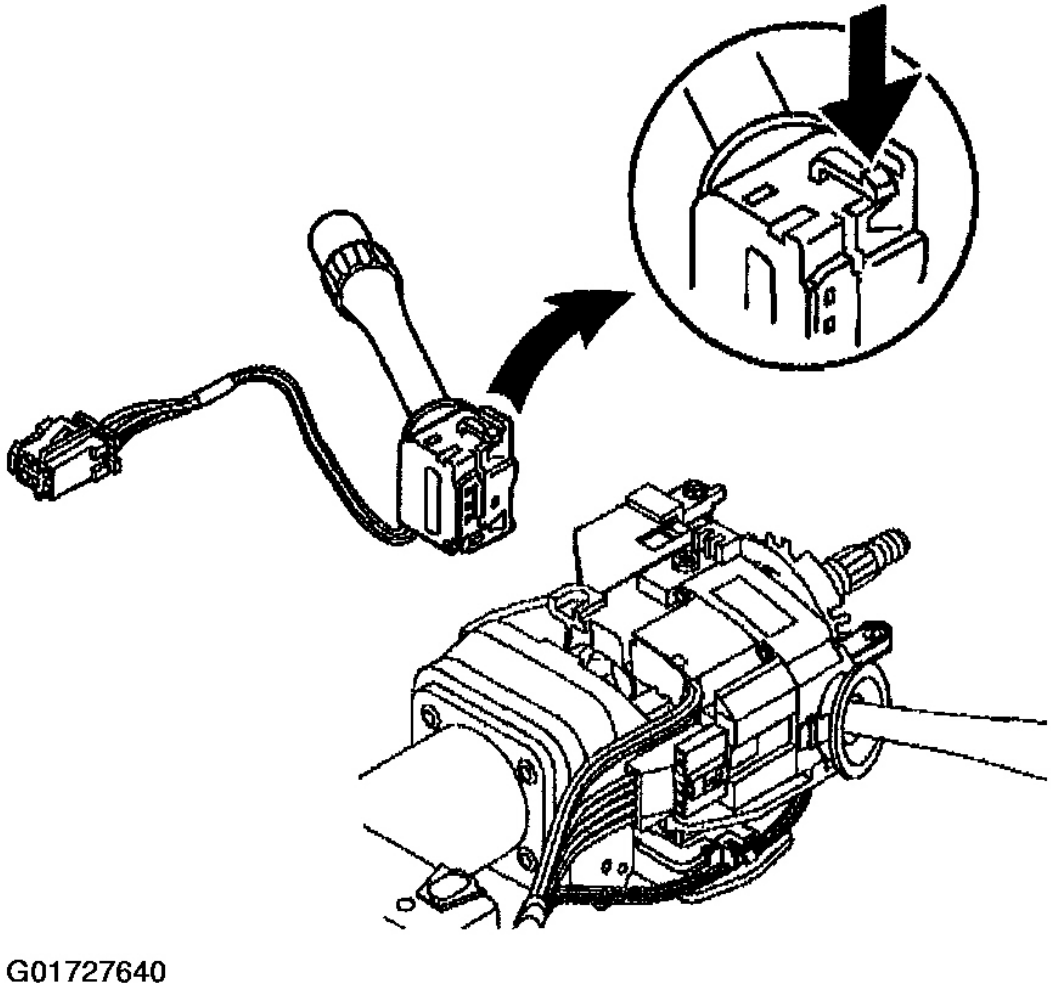


**Fig. 175: Locating Windshield Wiper & Washer Switch Assembly Clips**
**Courtesy of GENERAL MOTORS CORP.**

8. Remove the 3 pan head tapping screws (1).
9. Remove the electric column lock (2) from the steering column tilt head assembly.

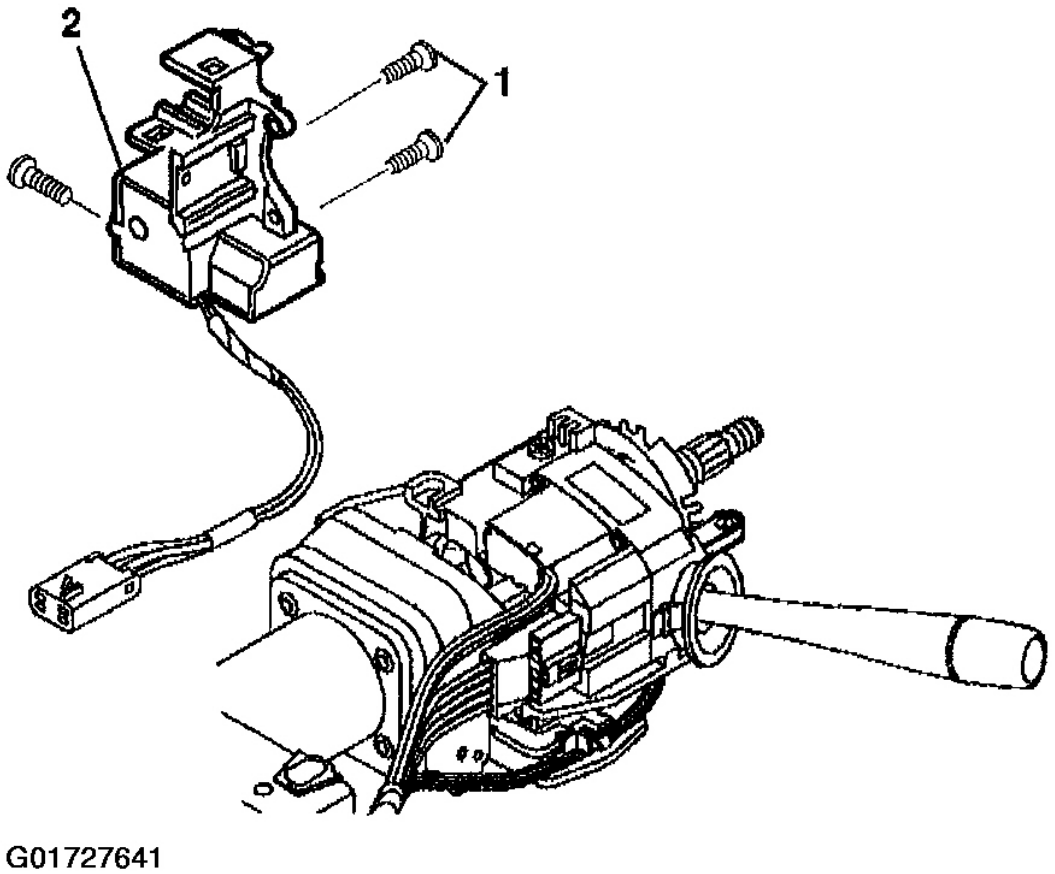


**Fig. 176: Removing Electric Column Lock Module Screws**
**Courtesy of GENERAL MOTORS CORP.**

**ELECTRONIC COLUMN LOCK MODULE - DISASSEMBLE - OFF VEHICLE (NON - TELESCOPING COLUMN)**

**WARNING: Refer to SIR CAUTION .**

1. Disable the inflatable restraint steering wheel module. Refer to **DISABLING SYSTEM** .
2. Remove the steering column tilt head assembly. Refer to **Steering Column Tilt Head Housing - Disassemble - Off Vehicle (Telescoping)** or **Steering Column Tilt Head Housing - Disassemble - Off Vehicle (Non- Telescoping)** .
3. Pop the wire harness assembly (1) from the wire harness strap (2).

4. Disconnect the connector, if necessary.

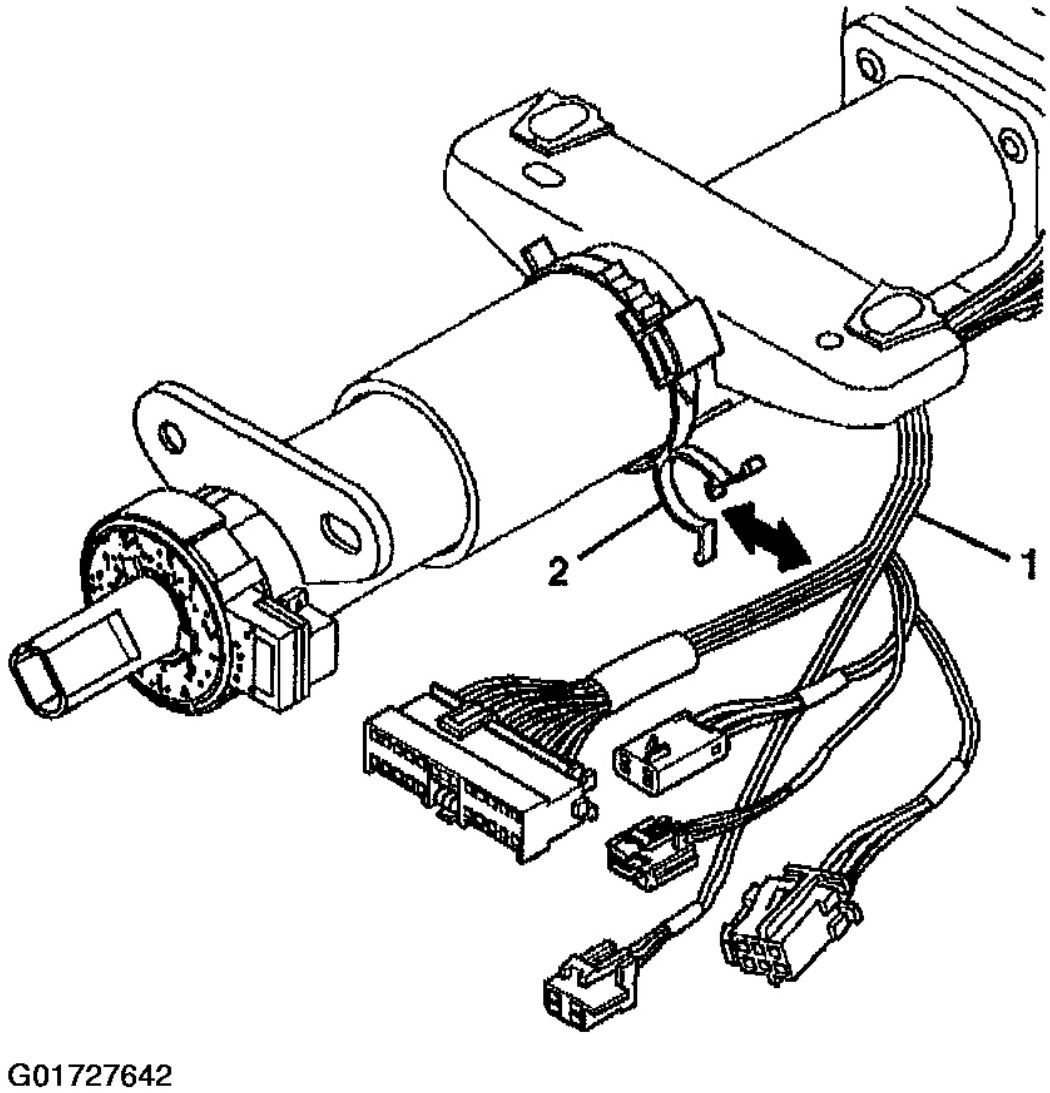


**Fig. 177: Disconnecting Steering Column Wiring Harness**
**Courtesy of GENERAL MOTORS CORP.**

5. Remove the wire harness strap (2) from the steering column tilt head assembly.
6. Remove the wire harness strap (2) from the wire harness assemblies.

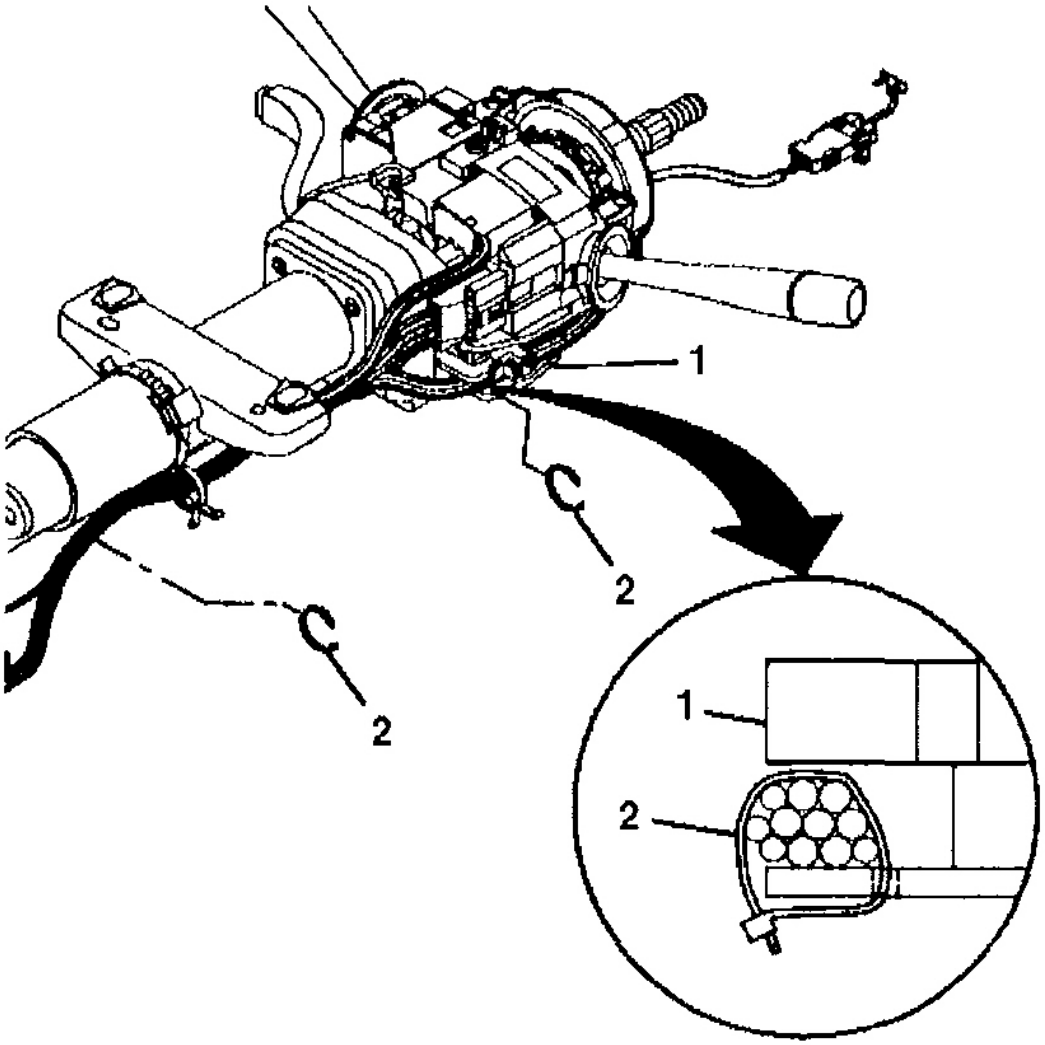


**Fig. 178: Removing Steering Column Wiring Harness Straps**
**Courtesy of GENERAL MOTORS CORP.**

7. Depress the top and bottom clips on the windshield wiper and washer switch assembly.
8. Slide the windshield wiper and washer switch assembly away from the electric column lock to disengage.

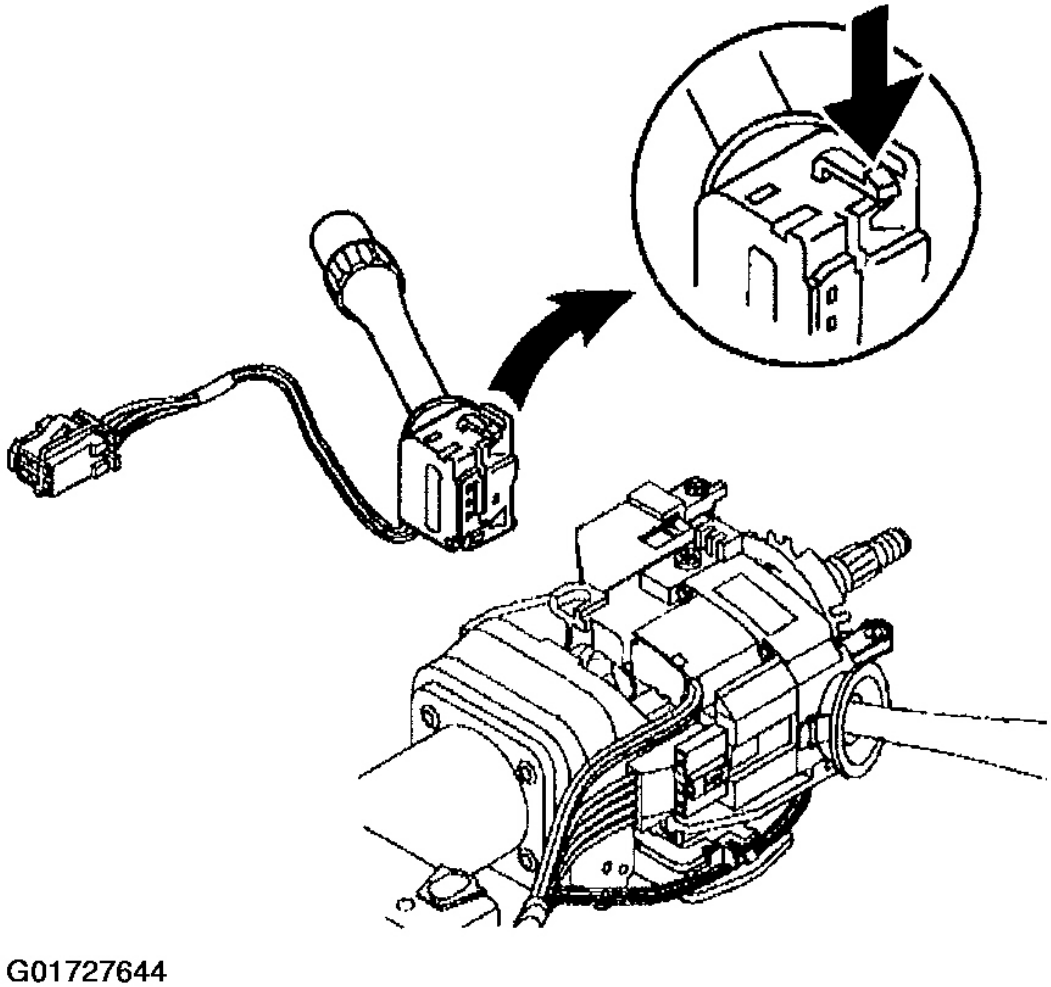


**Fig. 179: Locating Windshield Wiper & Washer Switch Assembly Clips**
**Courtesy of GENERAL MOTORS CORP.**

9. Disconnect the electric column lock connector.
10. Remove the 2 pan head tapping screws.
11. Remove the electric column lock from the steering column tilt head assembly.

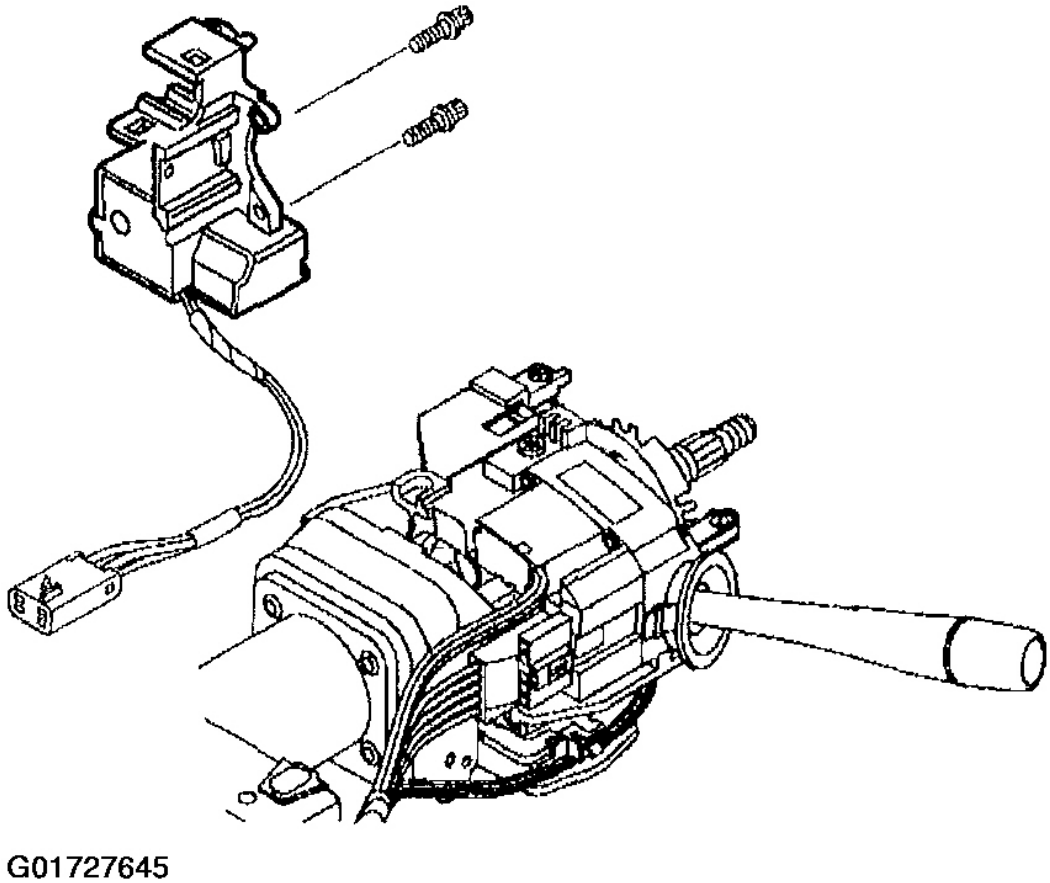


**Fig. 180: Removing Electric Column Lock Module Screws**
**Courtesy of GENERAL MOTORS CORP.**

**ELECTRONIC COLUMN LOCK MODULE - ASSEMBLE - OFF VEHICLE (TELESCOPING COLUMN)**

1. Install the electric column lock (2) to the steering column tilt head assembly.

   **CAUTION: Refer to FASTENER NOTICE .**

2. Install the 3 pan head tapping screws (1).

   **Tighten**

Tighten the screws to 7 N.m (62 lb in).

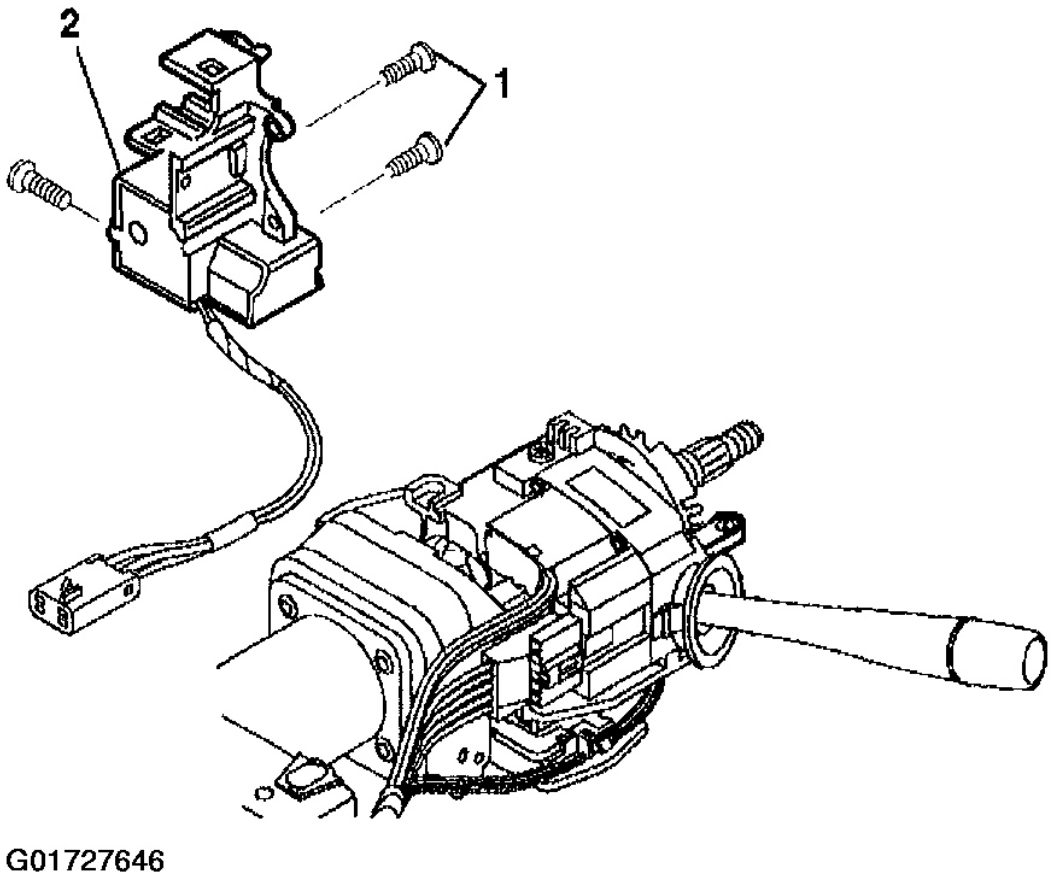


**Fig. 181: Installing Electric Column Lock Module Screws**
**Courtesy of GENERAL MOTORS CORP.**

3. Slide the windshield wiper and washer switch assembly into the electric column lock until the clips engage.

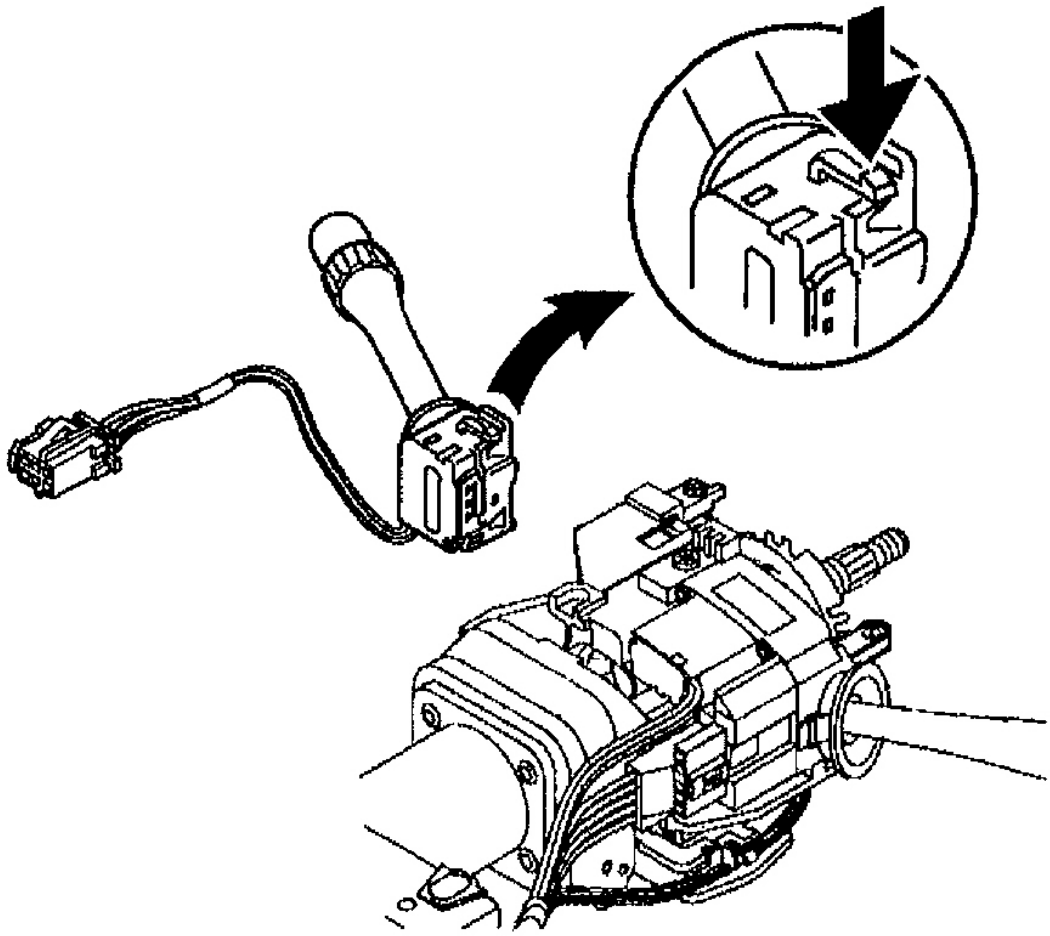


**Fig. 182: Locating Windshield Wiper & Washer Switch Assembly Clips**
**Courtesy of GENERAL MOTORS CORP.**

**WARNING: Refer to SIR INFLATOR MODULE COIL CAUTION .**

4. Route the wire harness assembly along the steering column jacket assembly.
5. Connect the connector, if necessary.

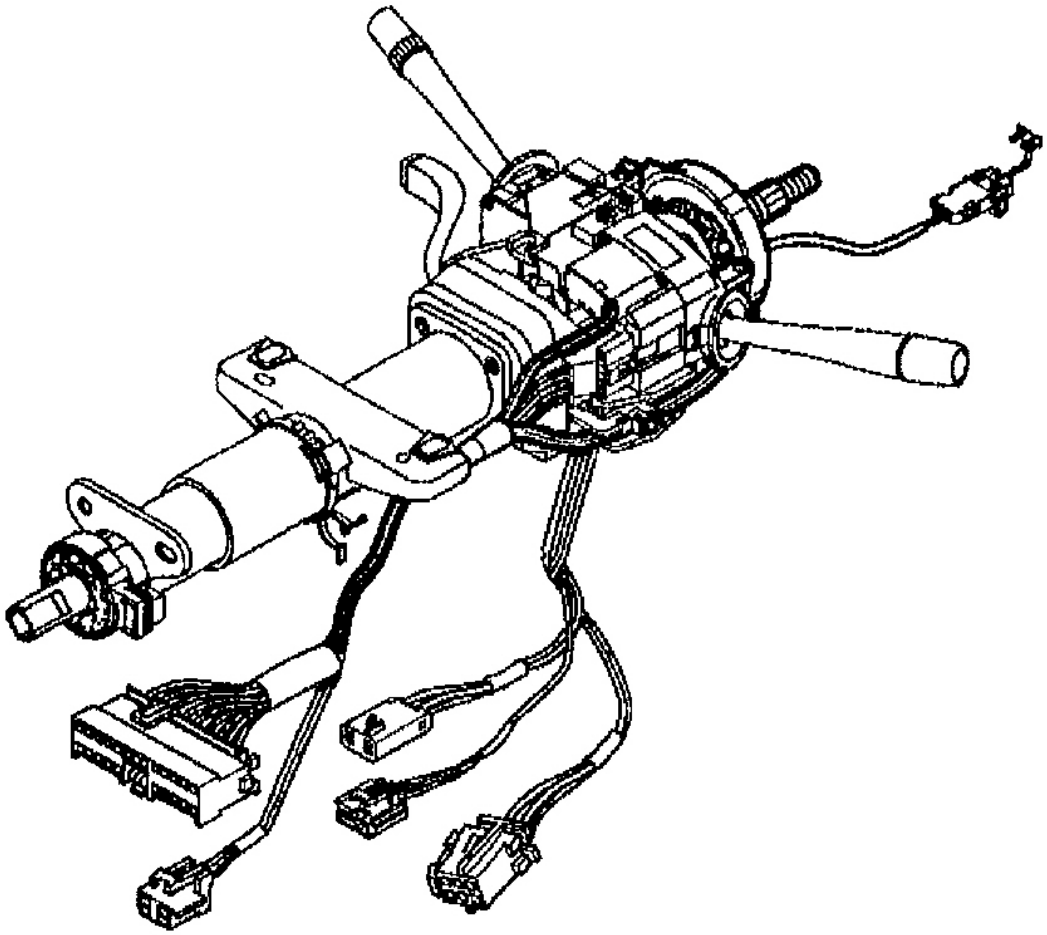


**Fig. 183: Aligning Steering Column Wiring Harness**
**Courtesy of GENERAL MOTORS CORP.**

6. Install the wire harness strap (2) to the steering column tilt head assembly (1).
7. Install the wire harness strap (2) onto the wire harness assembly.

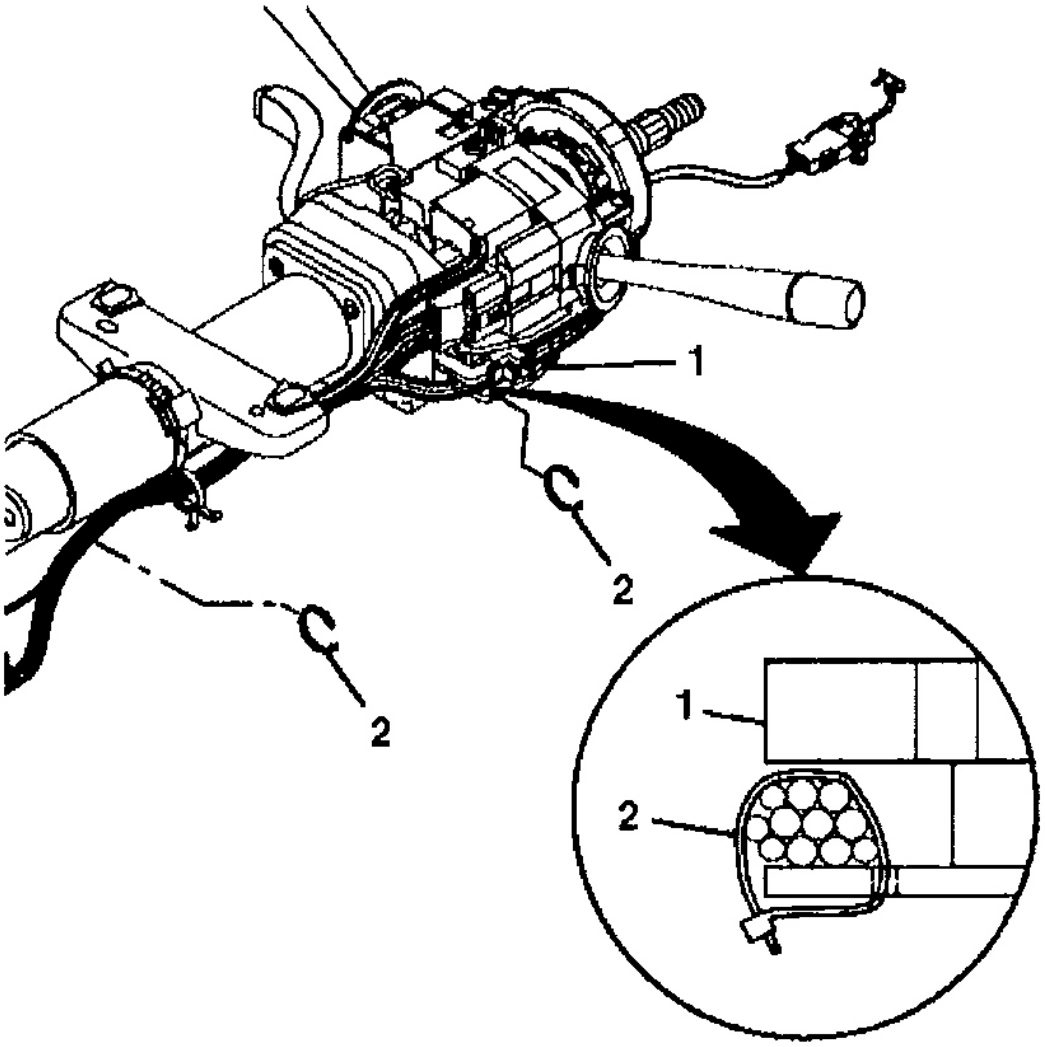


**Fig. 184: Installing Steering Column Wiring Harness Straps**
**Courtesy of GENERAL MOTORS CORP.**

8. Pop the wire harness assembly (1) into the wire harness strap (2).
9. Install the steering column tilt head housing. Refer to **Steering Column Tilt Head Housing - Assemble - Off Vehicle (Telescoping)** or **Steering Column Tilt Head Housing - Assemble - Off Vehicle (Non- Telescoping)** .
10. Enable the inflatable restraint steering wheel module. Refer to **ACTIVATING SYSTEM** .

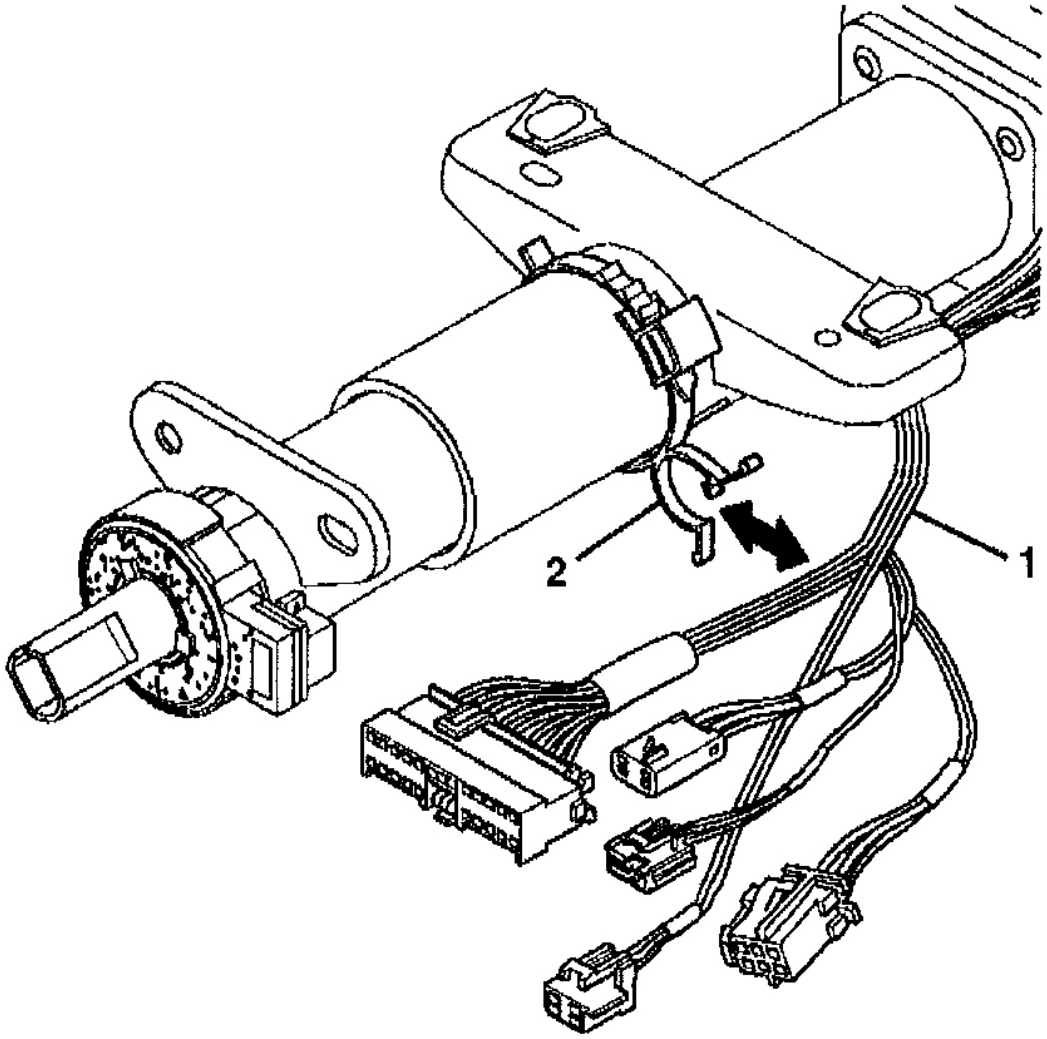


**Fig. 185: Installing Steering Column Wiring Harness**
**Courtesy of GENERAL MOTORS CORP.**

**ELECTRONIC COLUMN LOCK MODULE - ASSEMBLE - OFF VEHICLE (NON-TELES TELESCOPING COLUMN)**

1. Install the electric column lock to the steering column tilt head assembly.

**CAUTION: Refer to FASTENER NOTICE .**

2. Install the 2 pan head tapping screws.

   **Tighten**

   Tighten the screws to 7 N.m (62 lb in).

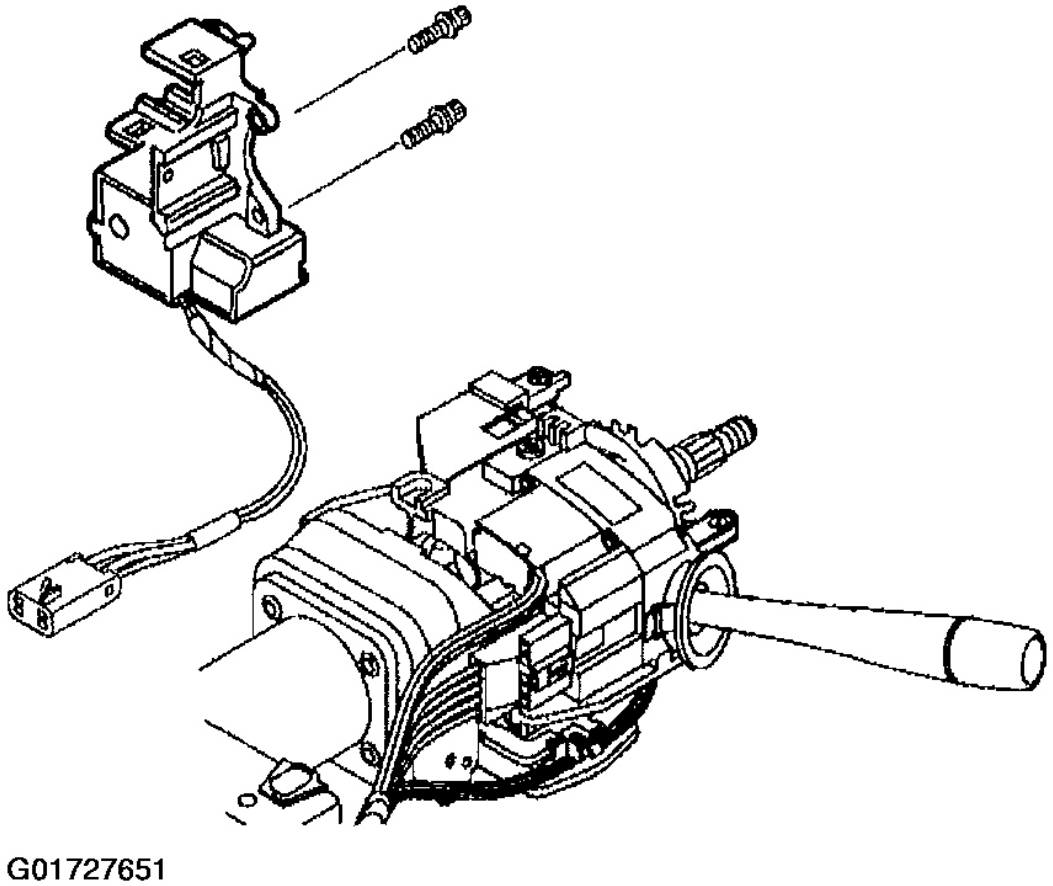


**Fig. 186: Installing Electric Column Lock Module Screws**
**Courtesy of GENERAL MOTORS CORP.**

3. Slide the windshield wiper and washer switch assembly into the electric column lock until the clips engage.
4. Connect the electric lock module connector.

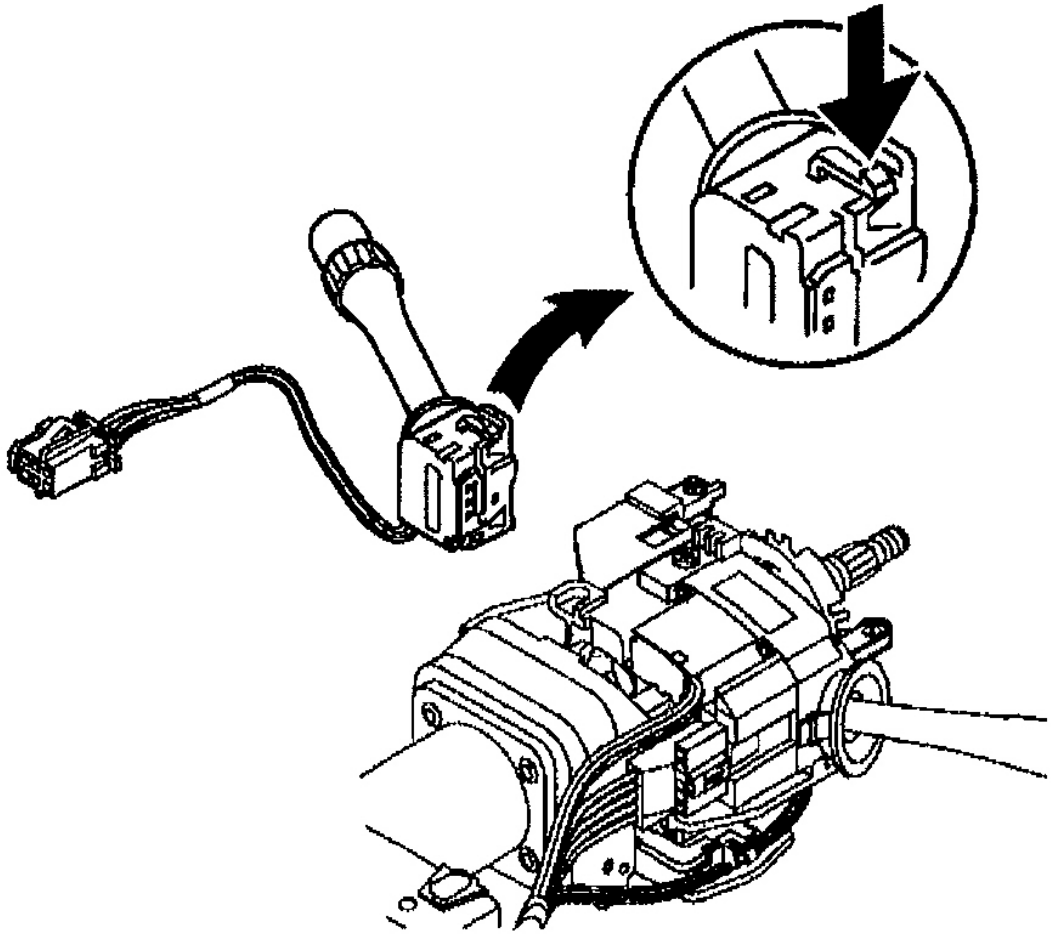


**Fig. 187: Locating Windshield Wiper & Washer Switch Assembly Clips**
**Courtesy of GENERAL MOTORS CORP.**

**WARNING: Refer to DISABLING SYSTEM .**

5. Route the wire harness assembly along the steering column jacket assembly.
6. Connect the connector, if necessary.

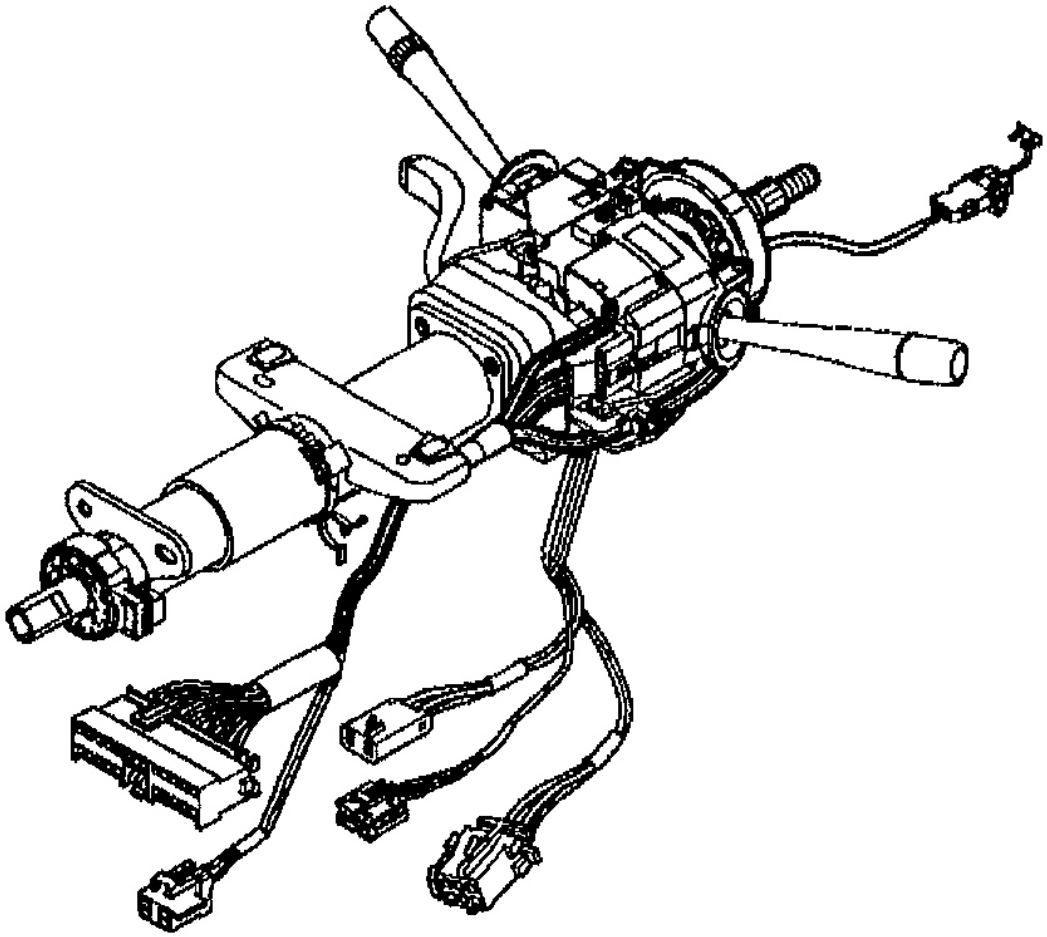


**Fig. 188: Aligning Steering Column Wiring Harness**
**Courtesy of GENERAL MOTORS CORP.**

7. Install the wire harness strap (2) to the steering column tilt head assembly (1).
8. Install the wire harness strap (2) onto the wire harness assembly.

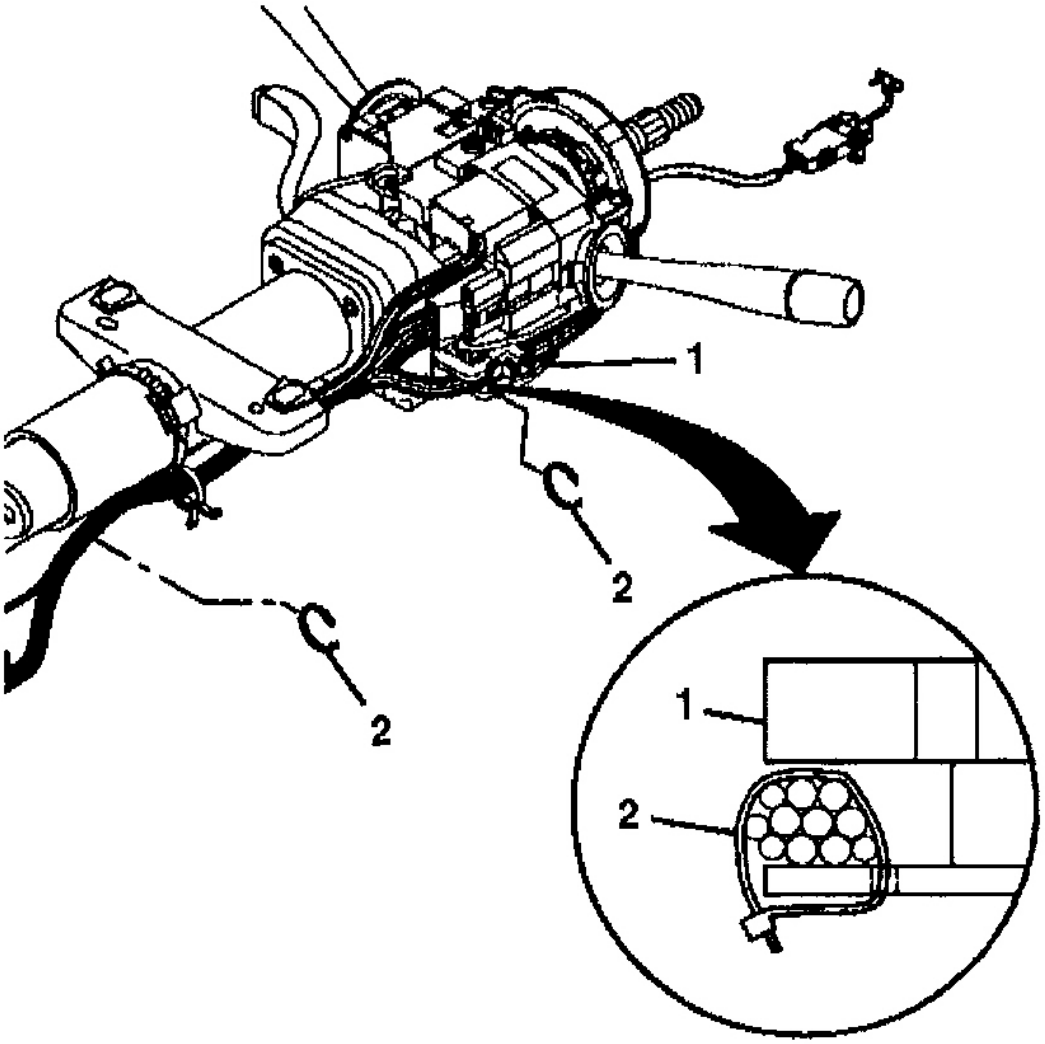


**Fig. 189: Installing Steering Column Wiring Harness Straps**
**Courtesy of GENERAL MOTORS CORP.**

9. Pop the wire harness assembly (1) into the wire harness strap (2).
10. Install the steering column tilt head housing. Refer to **Steering Column Tilt Head Housing - Assemble - Off Vehicle (Telescoping)** or **Steering Column Tilt Head Housing - Assemble - Off Vehicle (Non- Telescoping)** .
11. Enable the inflatable restraint steering wheel module. Refer to **ACTIVATING SYSTEM** .

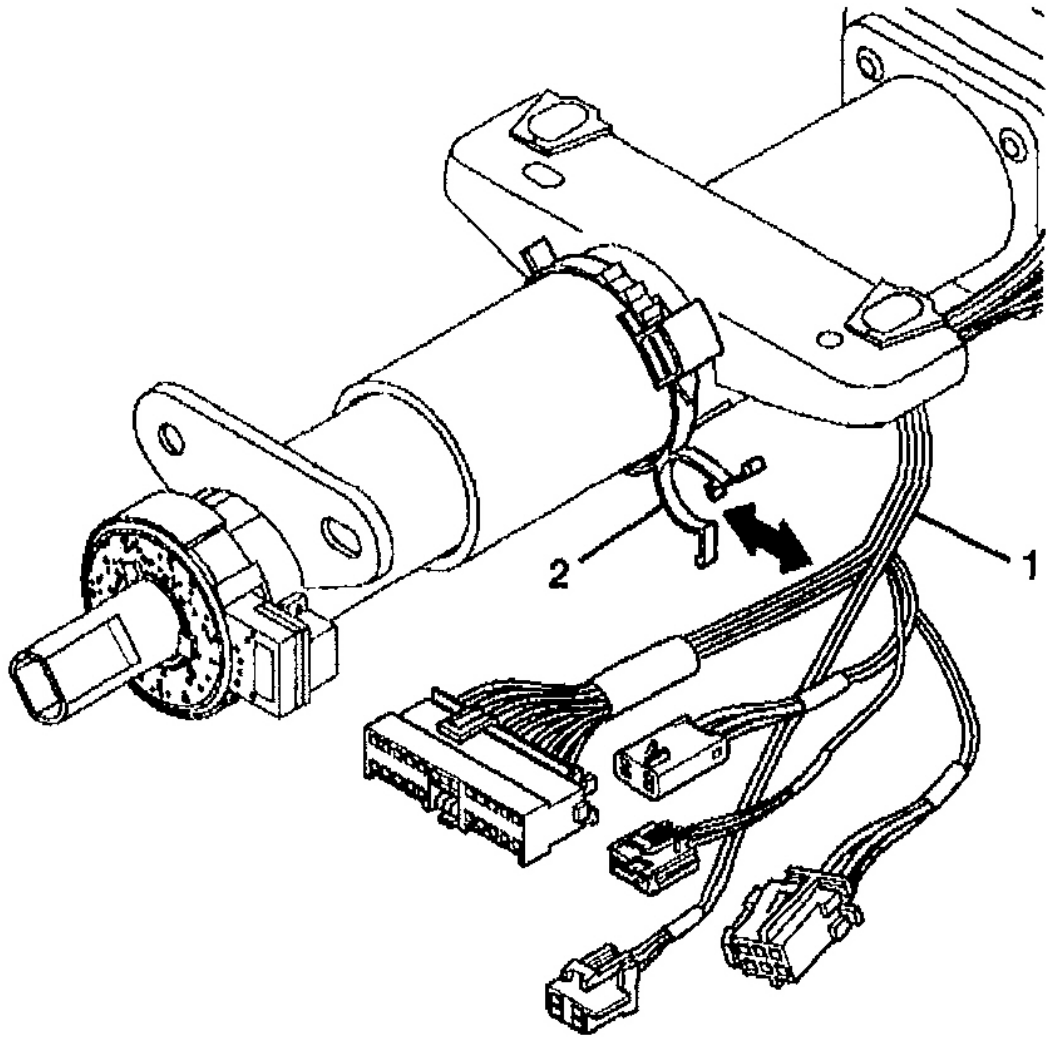


**Fig. 190: Installing Steering Column Wiring Harness**
**Courtesy of GENERAL MOTORS CORP.**

**STEERING COLUMN TILT HEAD HOUSING - DISASSEMBLE - OFF VEHICLE (TELE (TELESCOPING)**

## Tools Required

- **J 23653-SIR** Steering Column Lock Plate Compressor
- **J 42137** Steering Column Lock Plate Compressor Adapter

**WARNING: Refer to SIR CAUTION .**

1. Disable the inflatable restraint steering wheel module. Refer to **DISABLING SYSTEM** .

   **Important:** Let the inflatable restraint steering wheel module coil hang freely after removal.

2. Remove the inflatable restraint steering wheel module coil. Refer to **Inflatable Restraint Steering Wheel Module Coil - Disassemble - Off Vehicle (Telescoping Column)** or **Inflatable Restraint Steering Wheel Module Coil - Disassemble - Off Vehicle (Non-Telescoping Column)** .
3. Remove the wave washer (1) from the steering shaft assembly (2).

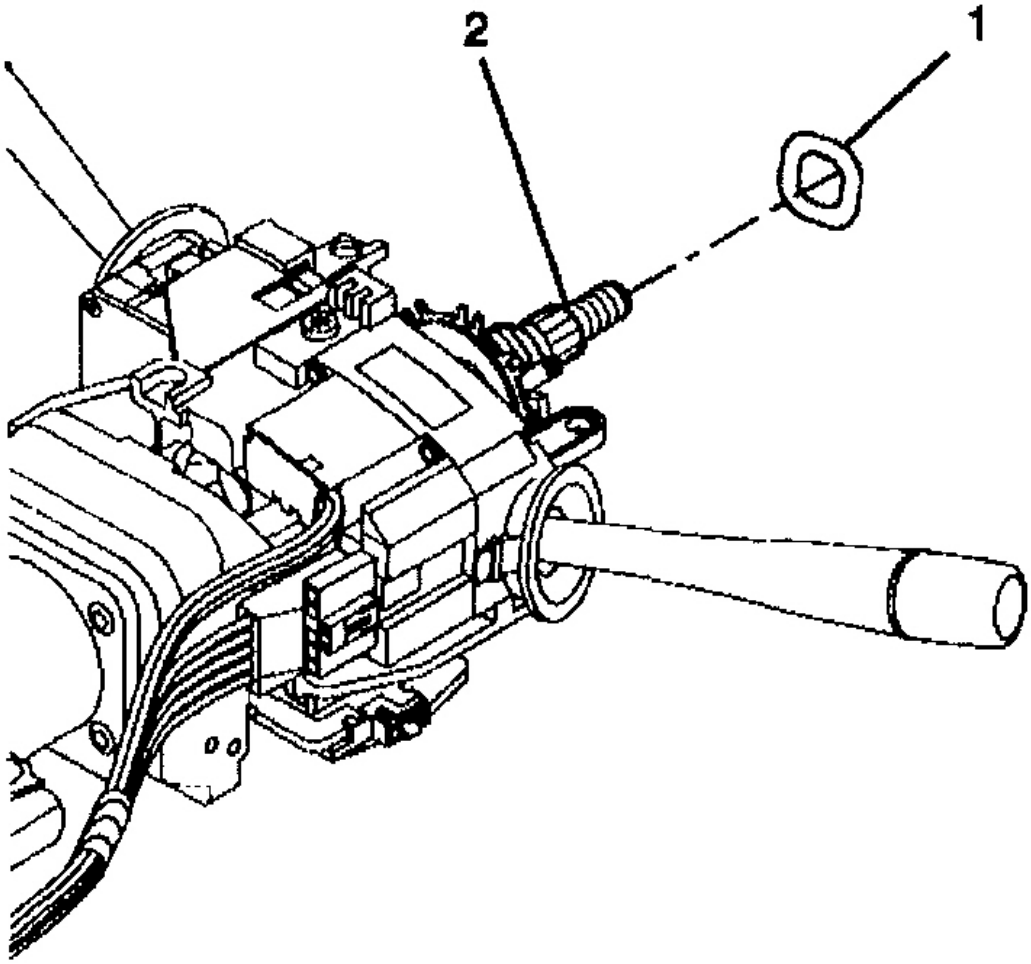


G01727656

**Fig. 191: Removing Steering Shaft Assembly Wave Washer**
**Courtesy of GENERAL MOTORS CORP.**

4. Compress the cam orientation plate using **J 23653-SIR** and **J 42137** .
5. Remove the bearing retainer from the steering shaft assembly.
6. Remove **J 23653-SIR** and **J 42137** .
7. Dispose of the bearing retainer.

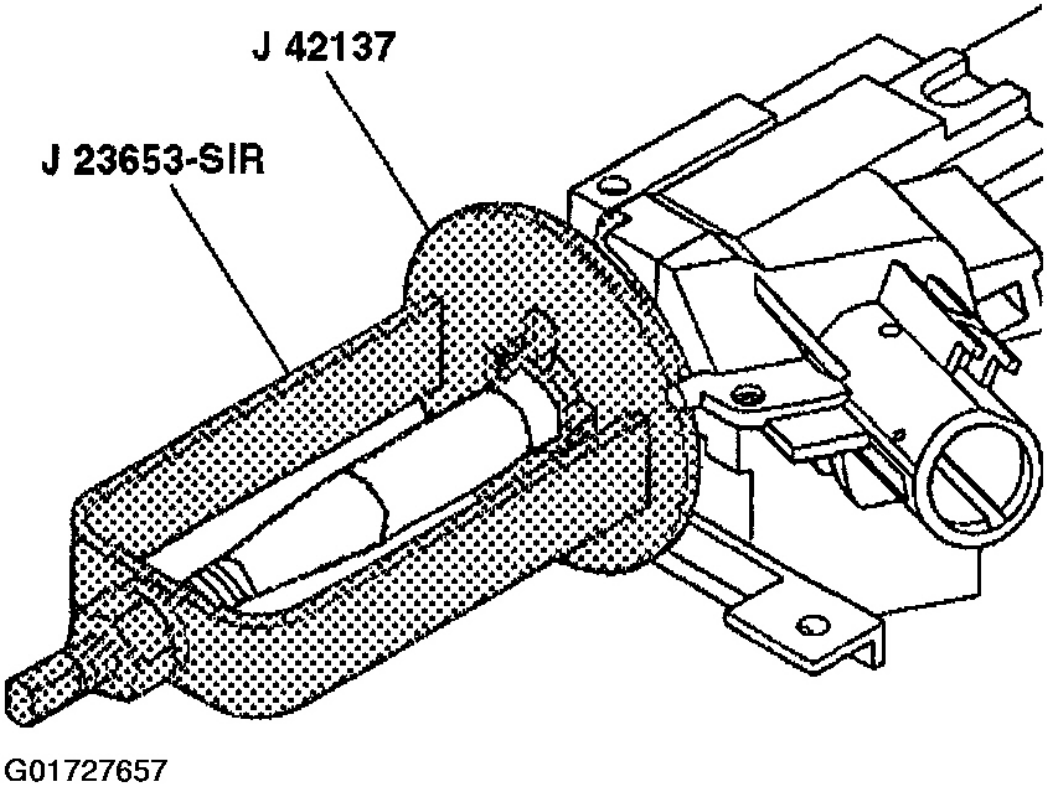


**Fig. 192: Identifying J 23653-SIR Plate Compressor & J 42137 Compressor Adaptor**
**Courtesy of GENERAL MOTORS CORP.**

8. Remove the cam orientation plate (5) from the steering shaft assembly.
9. Remove the turn signal cancel cam assembly (4) from the steering shaft assembly.
10. Remove the upper bearing spring (3) from the steering shaft assembly.
11. Remove the upper bearing inner race seat (2) from the steering shaft assembly.
12. Remove the inner race (1) from the steering shaft assembly.

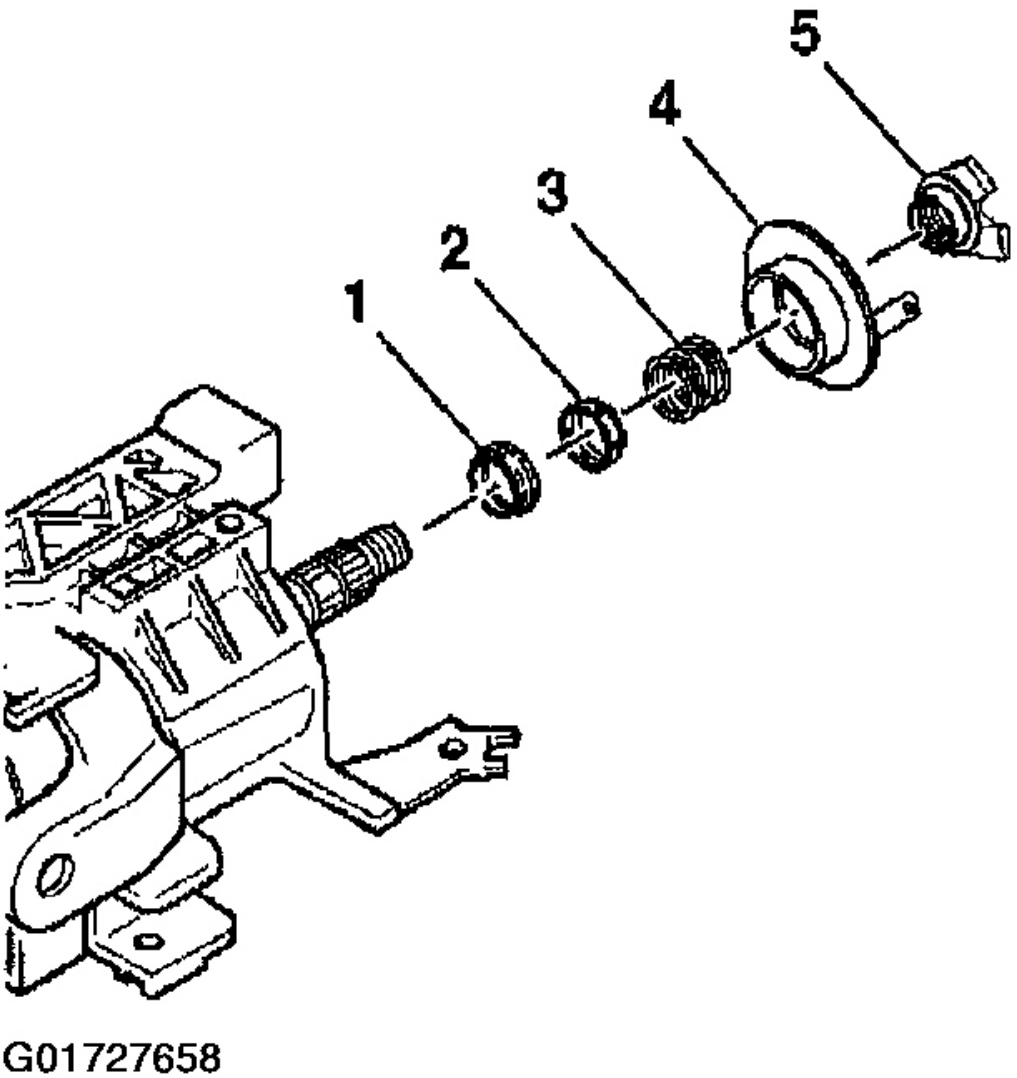


**Fig. 193: Identifying Cam Orientation Plate**
**Courtesy of GENERAL MOTORS CORP.**

**STEERING COLUMN TILT HEAD HOUSING - DISASSEMBLE - OFF VEHICLE (NON-TELESCOPING)**

## Tools Required

- **J 23653-SIR** Steering Column Lock Plate Compressor

- **J 42137** Steering Column Lock Plate Compressor Adapter

**WARNING: Refer to SIR CAUTION .**

1. Disable the inflatable restraint steering wheel module. Refer to **DISABLING SYSTEM** .

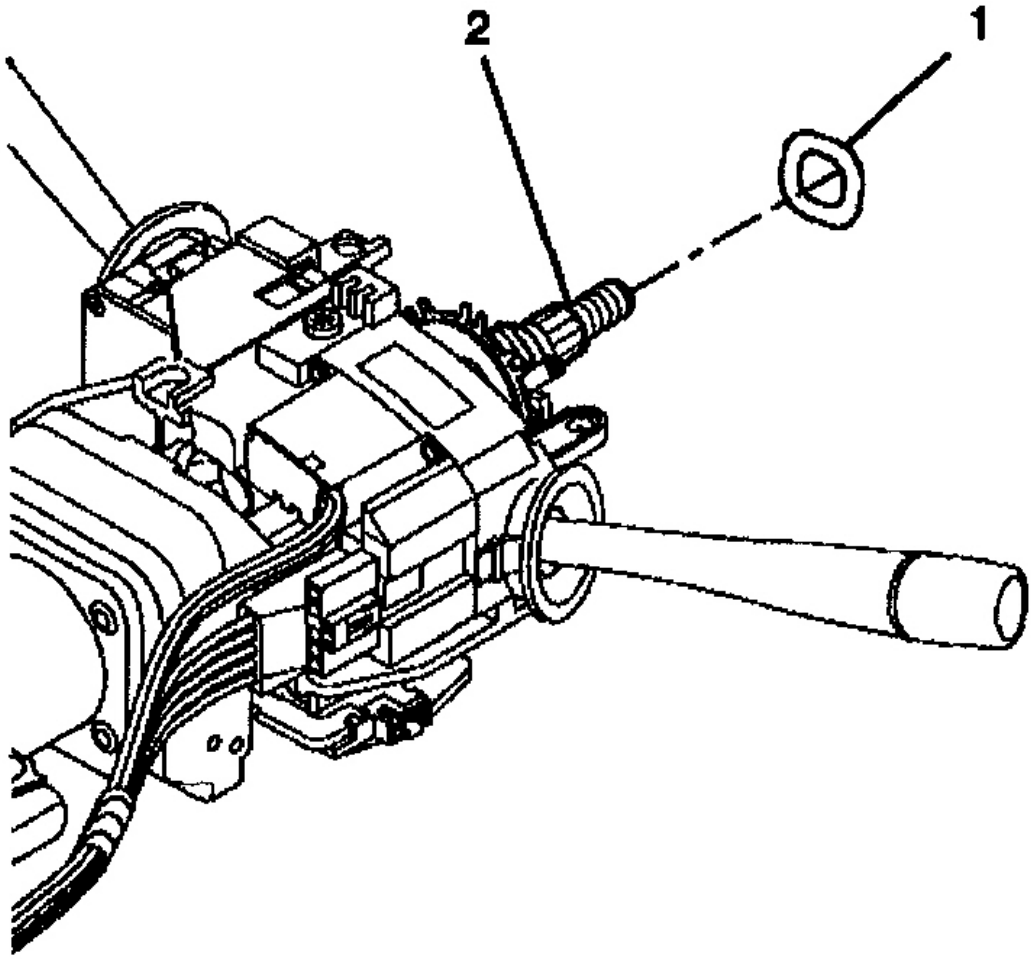


G01727659

**Fig. 194: Removing Steering Shaft Assembly Wave Washer**
**Courtesy of GENERAL MOTORS CORP.**

**Important:** Let the inflatable restraint steering wheel module coil hang freely after

removal.

2. Remove the inflatable restraint steering wheel module coil. Refer to **Inflatable Restraint Steering Wheel Module Coil - Disassemble - Off Vehicle (Telescoping Column)** or **Inflatable Restraint Steering Wheel Module Coil - Disassemble - Off Vehicle (Non-Telescoping Column)** .
3. Remove the wave washer (1) from the steering shaft assembly (2).
4. Compress the cam orientation plate using **J 23653-SIR** and **J 42137** .
5. Remove the bearing retainer from the steering shaft assembly.
6. Remove **J 23653-SIR** and **J 42137** .
7. Dispose of the bearing retainer.

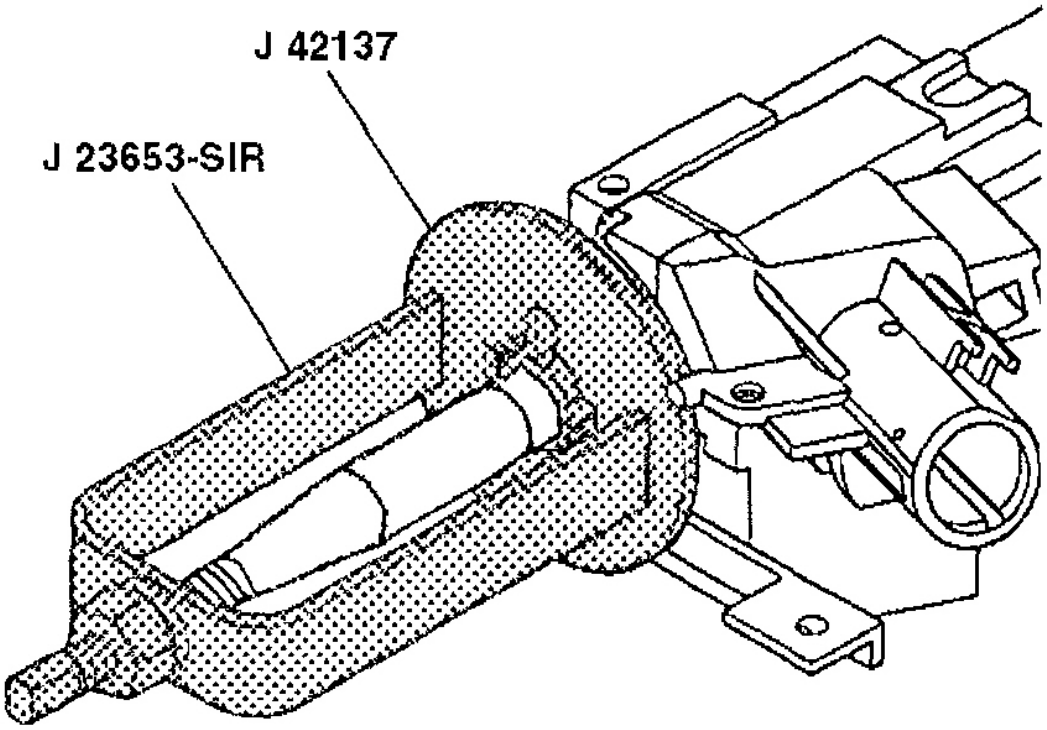


**Fig. 195: Identifying J 23653-SIR Plate Compressor & J 42137 Compressor Adaptor**
**Courtesy of GENERAL MOTORS CORP.**

8. Remove the cam orientation plate (5) from the steering shaft assembly.

9. Remove the turn signal cancel cam assembly (4) from the steering shaft assembly.
10. Remove the upper bearing spring (3) from the steering shaft assembly.
11. Remove the upper bearing inner race seat (2) from the steering shaft assembly.
12. Remove the inner race (1) from the steering shaft assembly.

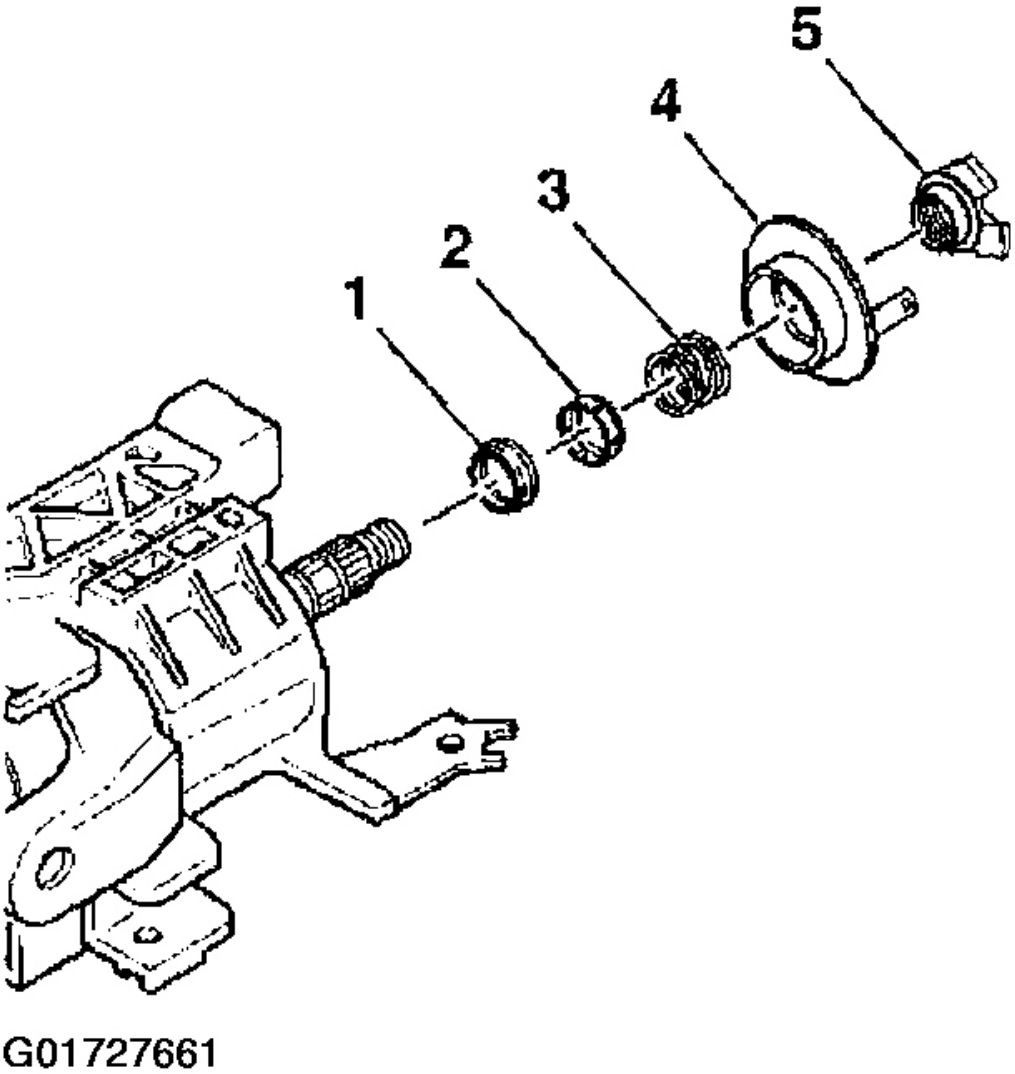


**Fig. 196: Identifying Cam Orientation Plate**
**Courtesy of GENERAL MOTORS CORP.**

**STEERING COLUMN TILT HEAD HOUSING - ASSEMBLE - OFF VEHICLE (TELESCOPING)**

## Tools Required

- **J 23653-SIR** Steering Column Lock Plate Compressor
- **J 42137** Steering Column Lock Plate Compressor Adapter

1. Lubricate the inner race (1) with synthetic grease.
2. Install the inner race (1) onto the steering shaft assembly.
3. Install the upper bearing inner race seat (2) onto the steering shaft assembly.
4. Install the upper bearing spring (3) onto the steering shaft assembly.
5. Lubricate the lower brass surface of the turn signal cancel cam assembly (4) with synthetic grease.
6. Install the turn signal cancel cam assembly (4) onto the steering shaft assembly.

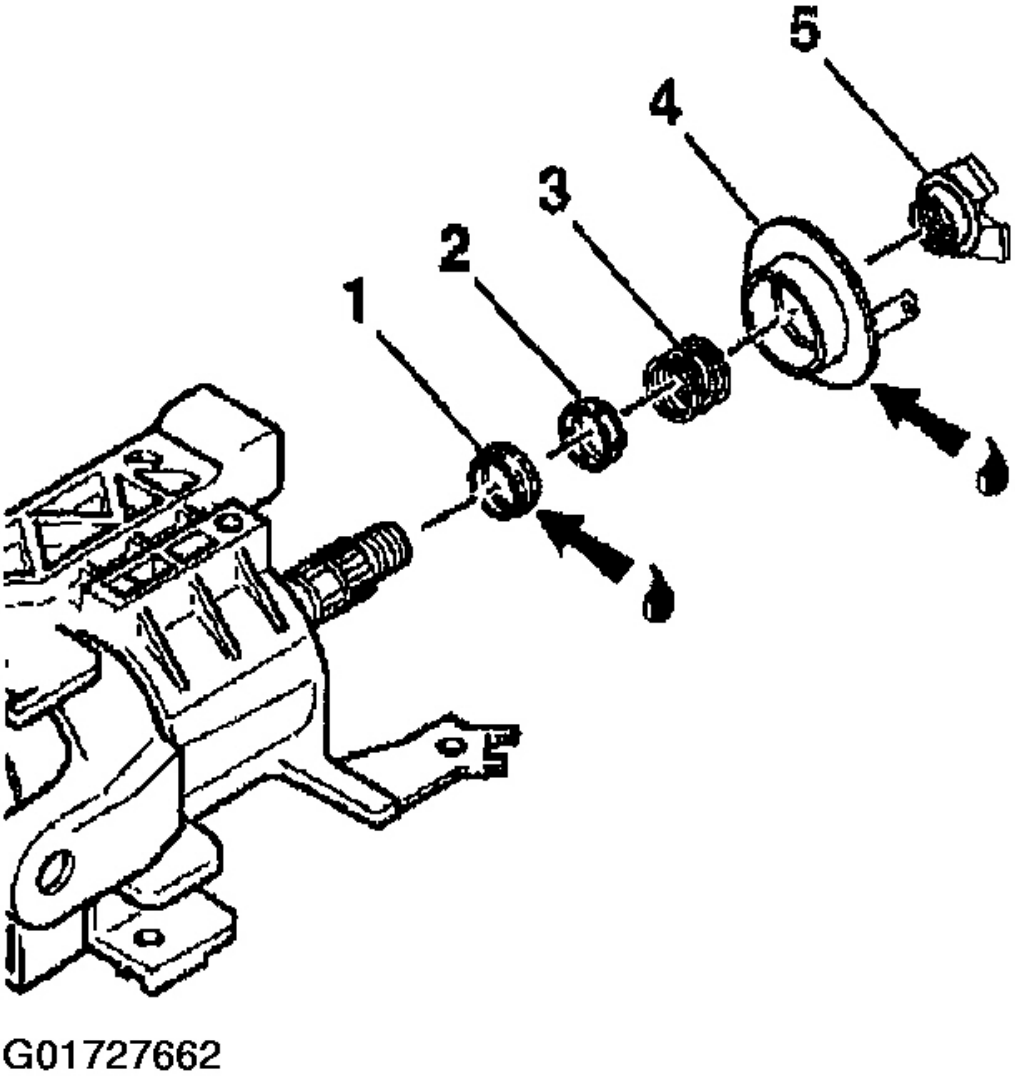


**Fig. 197: Identifying Cam Orientation Plate**
**Courtesy of GENERAL MOTORS CORP.**

7. Install the cam orientation plate (5) onto the steering shaft assembly.
8. Install the new bearing retainer onto the steering shaft assembly.
9. Compress the cam orientation plate using **J 23653-SIR** and **J 42137** .
10. Firmly seat the bearing retainer into the groove on the steering shaft assembly.
11. Remove **J 23653-SIR** and **J 42137** .

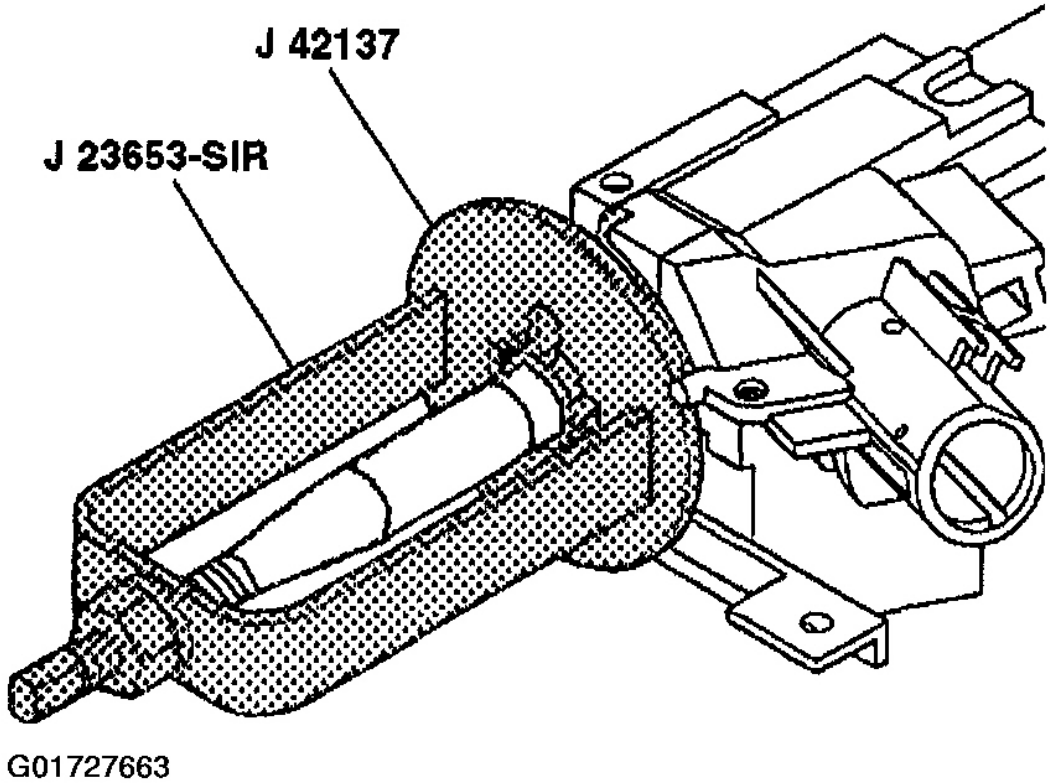


**Fig. 198: Identifying J 23653-SIR Plate Compressor & J 42137 Compressor Adaptor**
**Courtesy of GENERAL MOTORS CORP.**

12. Install the wave washer (1) to the steering shaft assembly (2).
13. Install the inflatable restraint steering wheel module coil. Refer to **Inflatable Restraint Steering Wheel Module Coil - Assemble - Off Vehicle (Telescoping Column)** or **Inflatable Restraint Steering Wheel Module Coil - Assemble - Off Vehicle (Non-Telescoping Column)** .
14. Enable the inflatable restraint steering wheel module. Refer to **ACTIVATING SYSTEM** .

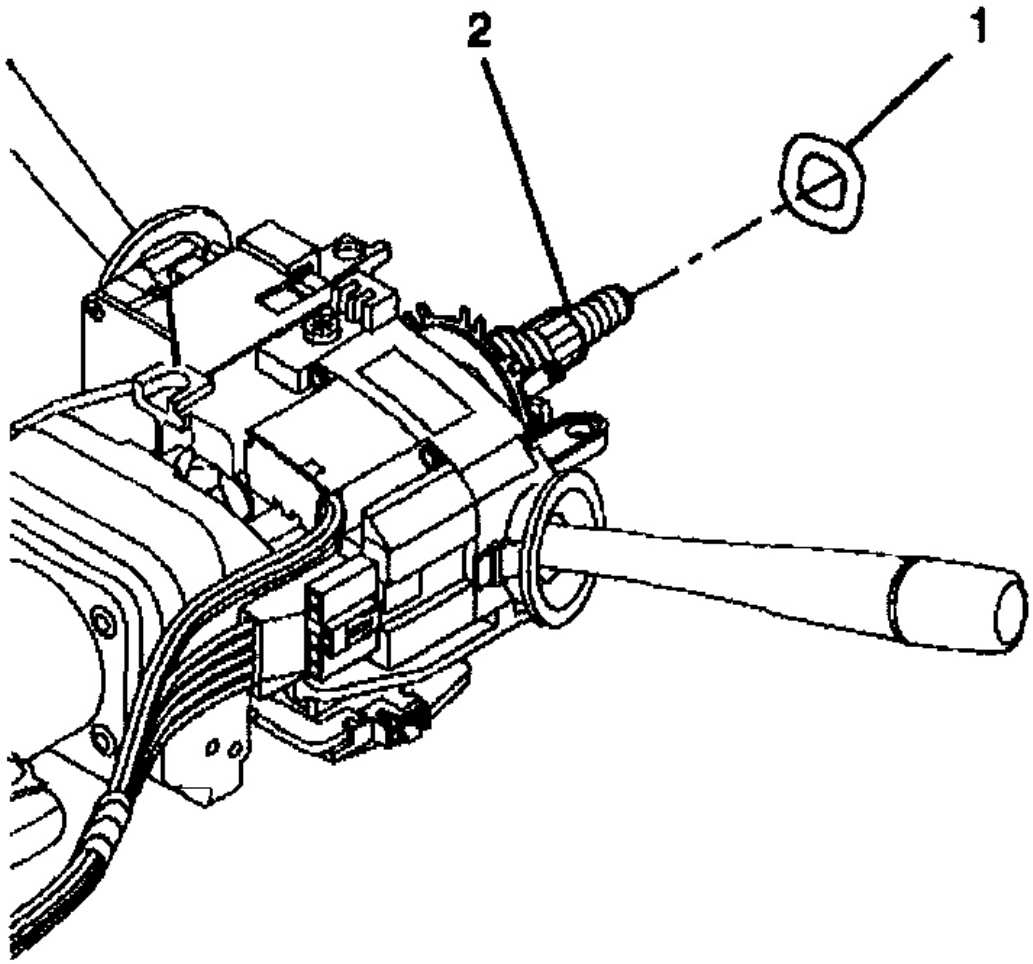


G01727664

**Fig. 199: Installing Steering Shaft Assembly Wave Washer**
**Courtesy of GENERAL MOTORS CORP.**

**STEERING COLUMN TILT HEAD HOUSING - ASSEMBLE - OFF VEHICLE (NON-TELESCOPING)**

## Tools Required

- **J 23653-SIR** Steering Column Lock Plate Compressor
- **J 42137** Steering Column Lock Plate Compressor Adapter

1. Lubricate the inner race (1) with synthetic grease.
2. Install the inner race (1) onto the steering shaft assembly.
3. Install the upper bearing inner race seat (2) onto the steering shaft assembly.
4. Install the upper bearing spring (3) onto the steering shaft assembly.
5. Lubricate the lower brass surface of the turn signal cancel cam assembly (4) with synthetic grease.

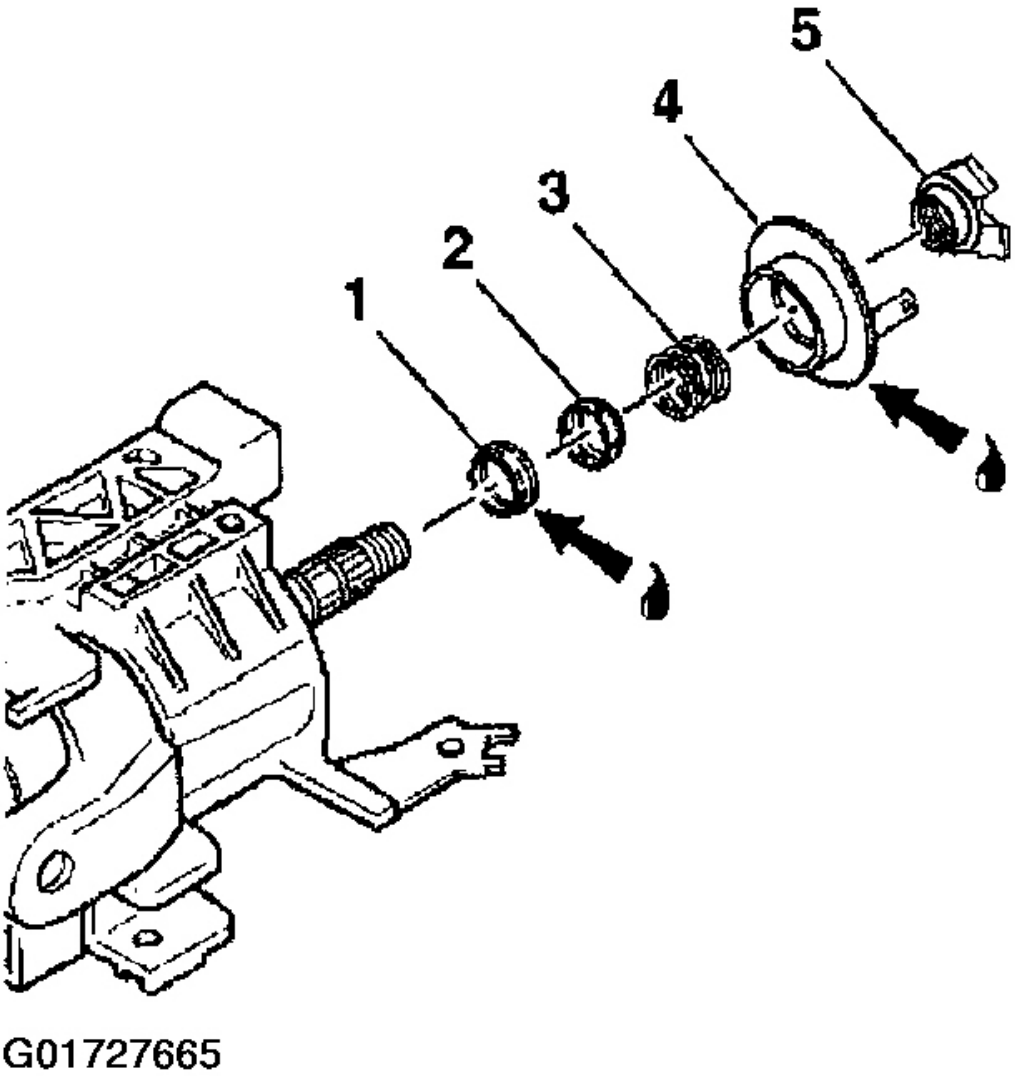


**Fig. 200: Identifying Cam Orientation Plate**

**Courtesy of GENERAL MOTORS CORP.**

6. Install the turn signal cancel cam assembly (4) onto the steering shaft assembly.
7. Install the cam orientation plate (5) onto the steering shaft assembly.
8. Install the new bearing retainer onto the steering shaft assembly.
9. Compress the cam orientation plate using **J 23653-SIR** and **J 42137** .
10. Firmly seat the bearing retainer into the groove on the steering shaft assembly.
11. Remove **J 23653-SIR** and **J 42137** .

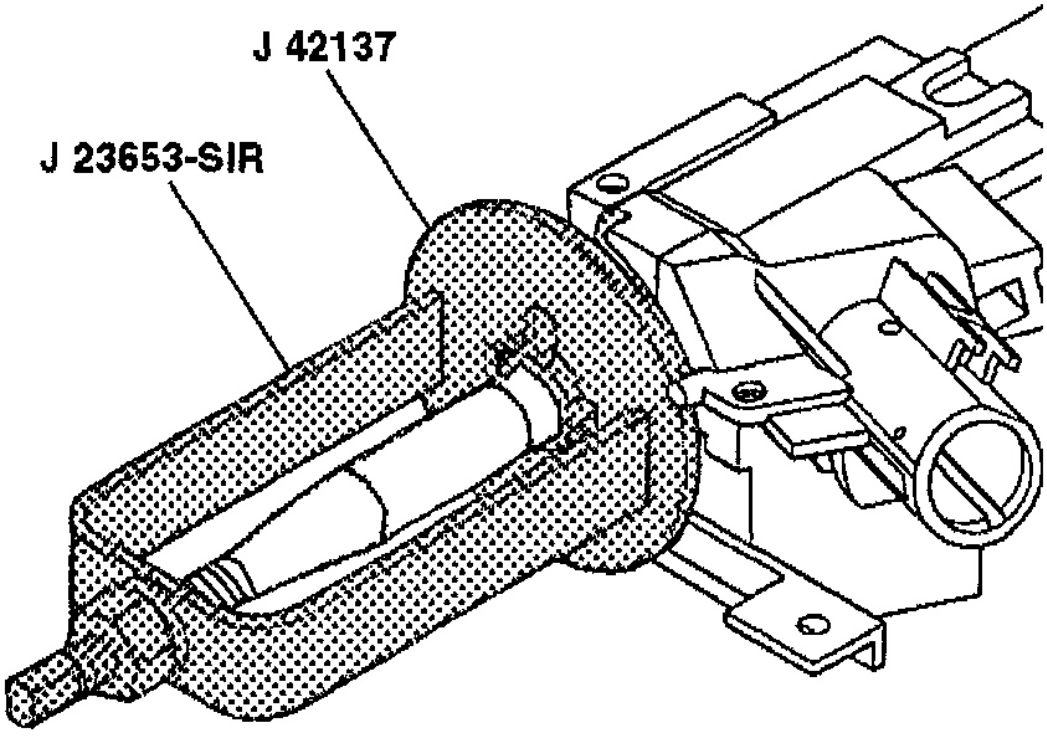


**Fig. 201: Identifying J 23653-SIR Plate Compressor & J 42137 Compressor Adaptor**
**Courtesy of GENERAL MOTORS CORP.**

12. Install the wave washer (1) to the steering shaft assembly (2).
13. Install the inflatable restraint steering wheel module coil. Refer to **Inflatable Restraint Steering Wheel Module Coil - Assemble - Off Vehicle (Telescoping Column)** or **Inflatable Restraint Steering Wheel Module Coil - Assemble - Off Vehicle (Non-**

**Telescoping Column)** .

14. Enable the inflatable restraint steering wheel module. Refer to **ACTIVATING SYSTEM** .

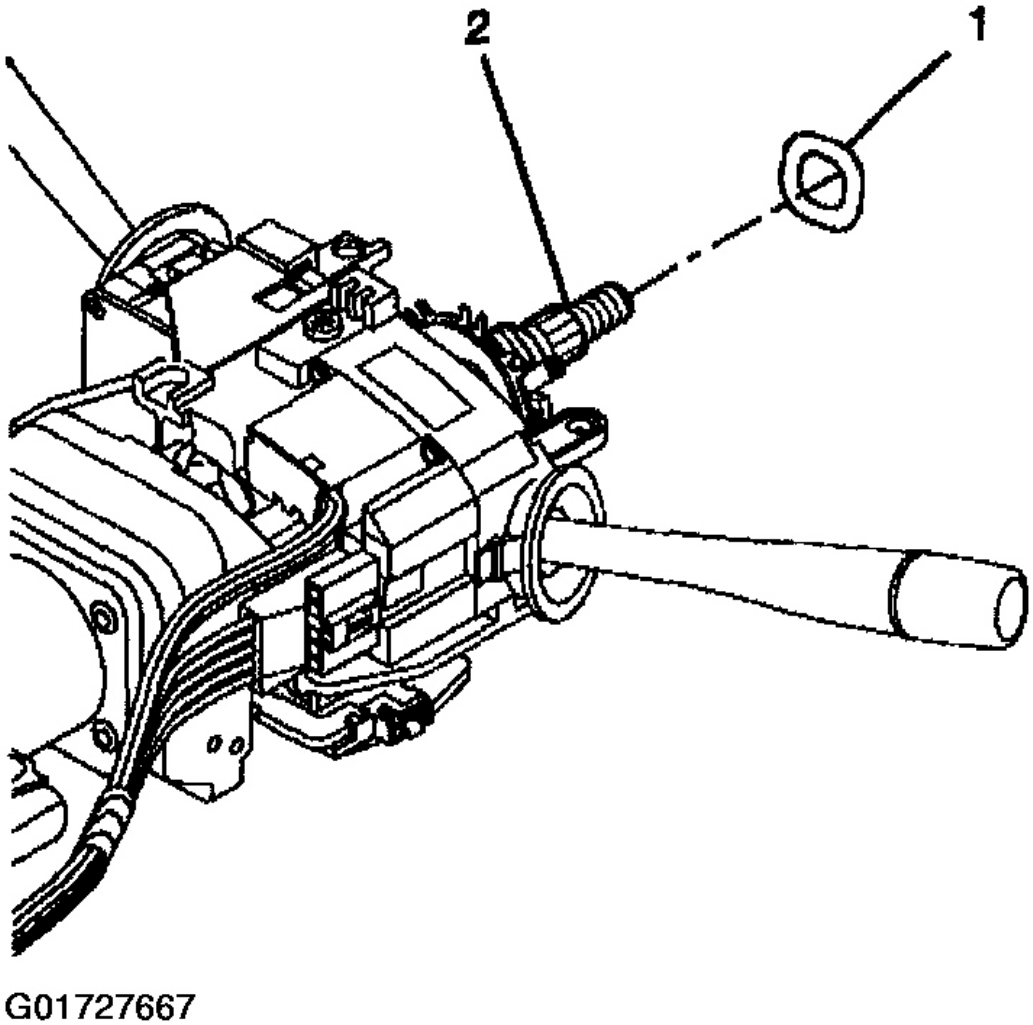


**Fig. 202: Installing Steering Shaft Assembly Wave Washer**
**Courtesy of GENERAL MOTORS CORP.**

**TURN SIGNAL SWITCH HOUSING - DISASSEMBLE - OFF VEHICLE (TELESCOPING COLUM COLUMN)**

**WARNING: Refer to SIR CAUTION .**

1. Disable the inflatable restraint steering wheel module. Refer to **DISABLING SYSTEM** .
2. Remove the steering column tilt head components. Refer to **Steering Column Tilt Head Housing - Disassemble - Off Vehicle (Telescoping)** or **Steering Column Tilt Head Housing - Disassemble - Off Vehicle (Non- Telescoping)** .

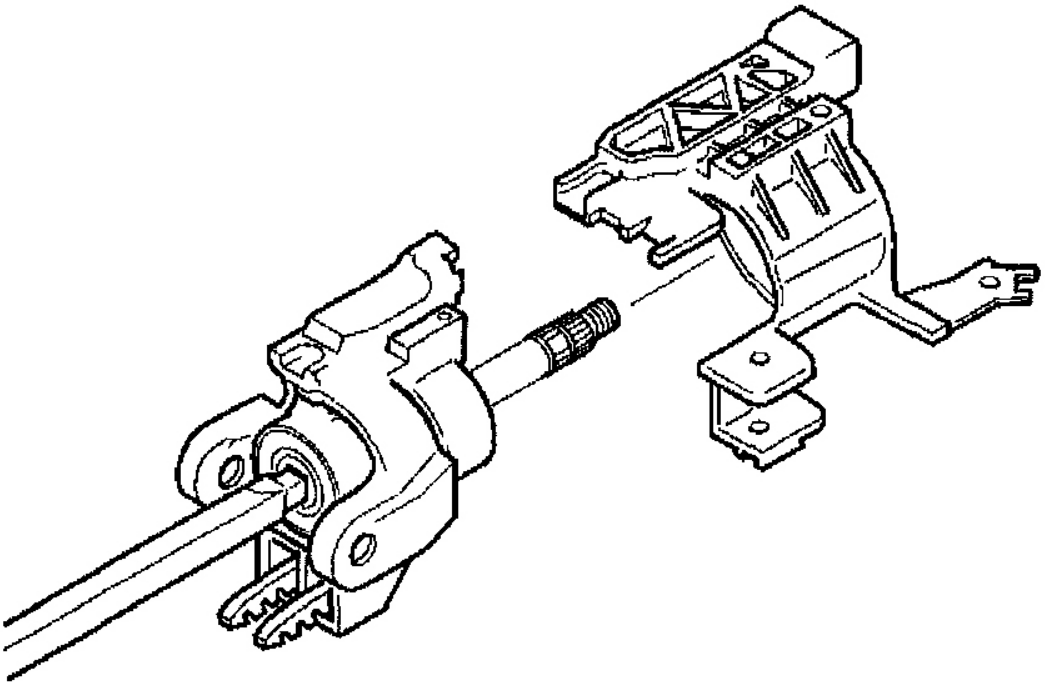


**Fig. 203: Removing Signal Switch Housing**
**Courtesy of GENERAL MOTORS CORP.**

3. Remove the windshield wiper and washer switch assembly only. Refer to **WINDSHIELD WIPER & Washer Switch Assembly - Disassemble - Off Vehicle (Telescoping)** or **WINDSHIELD WIPER & Washer Switch Assembly - Disassemble - Off Vehicle (Non-Telescoping)** .
4. Remove the turn signal and multifunction switch assembly only. Refer to **TURN SIGNAL & Multifunction Switch Assembly - Disassemble - Off Vehicle (Telescoping Column)** or **TURN SIGNAL & Multifunction Switch Assembly - Disassemble - Off Vehicle (Non-Telescoping Column)** .
5. Slide the signal switch housing off of the steering column shaft assembly.

**TURN SIGNAL SWITCH HOUSING - ASSEMBLE - OFF VEHICLE (TELESCOPING COLUMN)**

**Important:** The switch mounting bracket must be pressed firmly against the steering column tilt head in order for the screws from the turn signal and multifunction switch assembly screws to line up.

1. Slide the turn signal switch housing onto the steering column.

   **WARNING: Refer to SIR CAUTION .**

2. Slide the windshield wiper and washer switch assembly into the signal switch housing. Refer to **WINDSHIELD WIPER & Washer Switch Assembly - Assemble - Off Vehicle (Telescoping)** or **WINDSHIELD WIPER & Washer Switch Assembly - Assemble - Off Vehicle (Non-Telescoping)** .

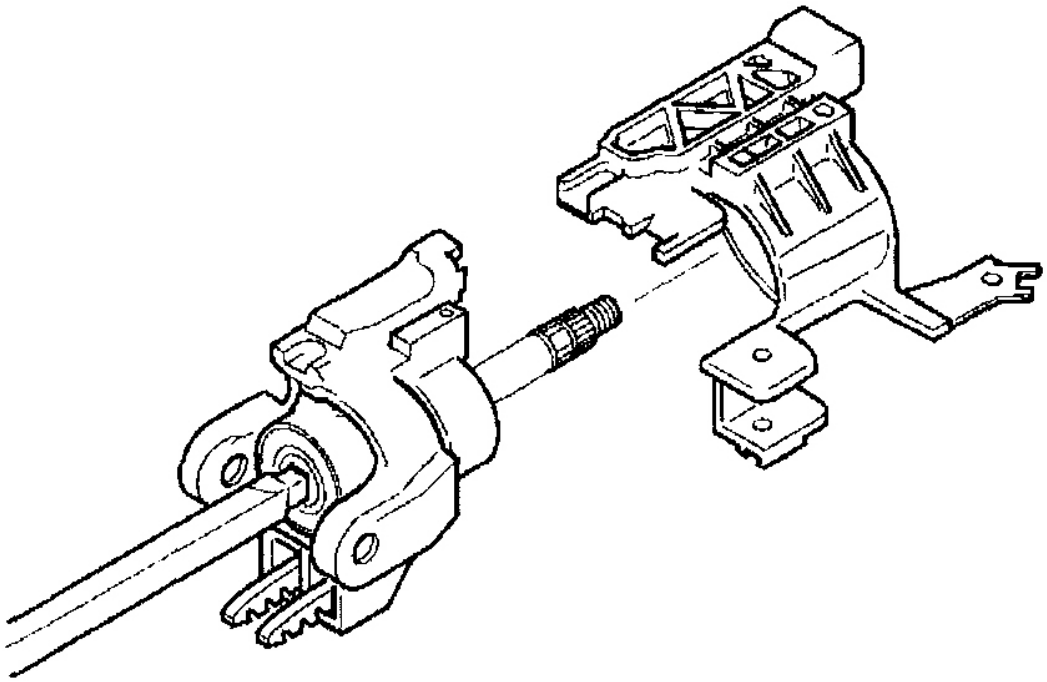

G01727669

**Fig. 204: Installing Signal Switch Housing**
**Courtesy of GENERAL MOTORS CORP.**

3. Install the turn signal and multifunction switch assembly only. Refer to **TURN SIGNAL & Multifunction Switch Assembly - Assemble - Off Vehicle (Telescoping Column)** or **TURN SIGNAL & Multifunction Switch Assembly - Assemble - Off Vehicle (Non-Telescoping Column).**
4. Install the steering column tilt head components. Refer to **Steering Column Tilt Head Housing - Assemble - Off Vehicle (Telescoping)** or **Steering Column Tilt Head Housing - Assemble - Off Vehicle (Non- Telescoping)** .
5. Enable the inflatable restraint steering wheel module. Refer to **ACTIVATING SYSTEM** .

**TELESCOPE MOTOR ASSEMBLY - DISASSEMBLE - OFF VEHICLE (TELESCOPING COLUM COLUMN)**

## Tools Required

- **J 41352** Steering Column Holding Fixture
- **J 42640** Steering Column Anti Rotation Pin

**WARNING: Refer to SIR CAUTION .**

1. Disable the inflatable restraint steering wheel module. Refer to **DISABLING SYSTEM** .
2. Insert **J 41352** into a vise.
3. Secure the steering column to **J 41352** .
4. Insert **J 42640** into the bottom of the lower trim cover.

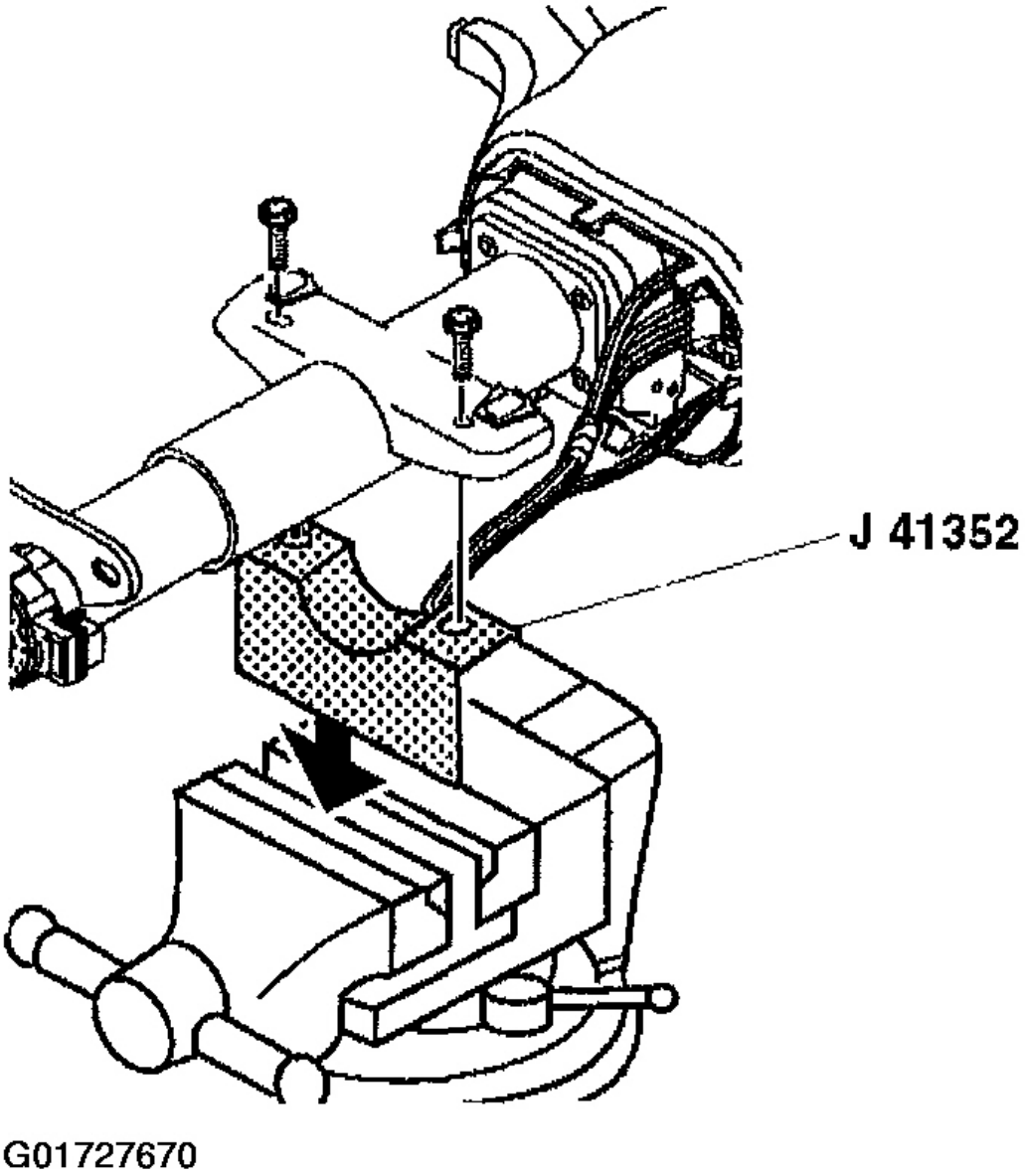


**Fig. 205: Installing J 41352 Steering Column Holding Fixture**
**Courtesy of GENERAL MOTORS CORP.**

5. Disconnect the cable assembly (2) from the telescope drive motor assembly (1).

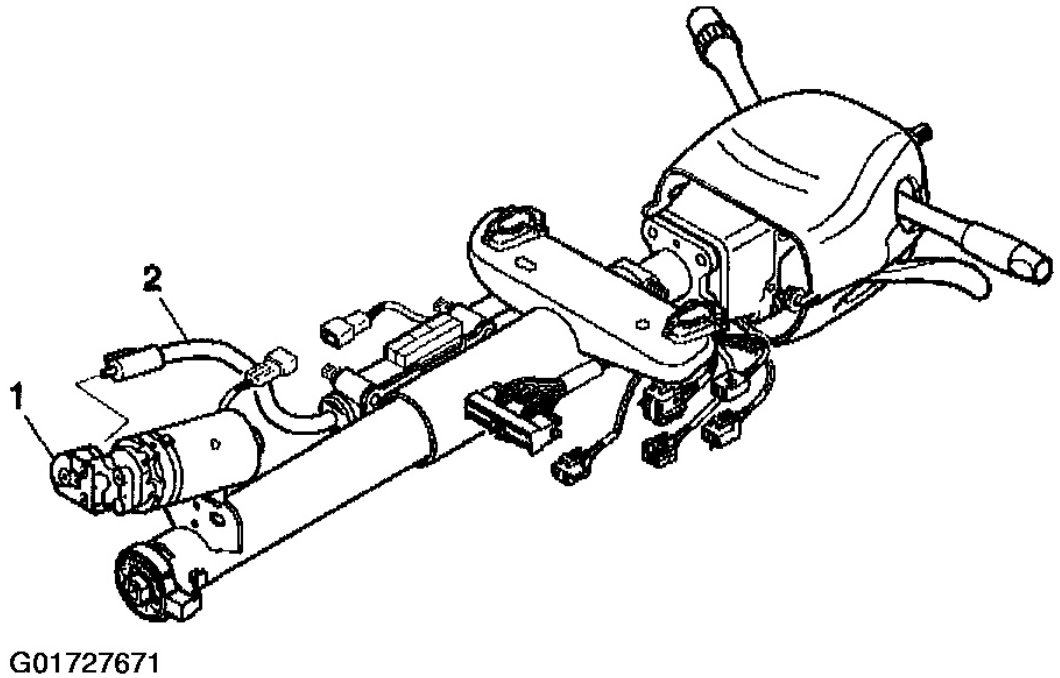


**Fig. 206: Disconnecting Telescope Drive Motor Assembly Cable**
**Courtesy of GENERAL MOTORS CORP.**

6. Remove the connector clip (1) from the telescope drive motor assembly connector (2).
7. Remove the 2 pan head tapping screws (4) from the telescope drive bracket (5).
8. Remove the telescope drive motor assembly (2) from the telescope drive bracket (5).
9. Perform the following steps for removal of the telescope drive bracket
   - **9.1.** Remove the pan head tapping screw (3) from the telescope drive bracket (5).
   - **9.2.** Remove the telescope drive bracket (5) from the telebearing and jacket assembly.

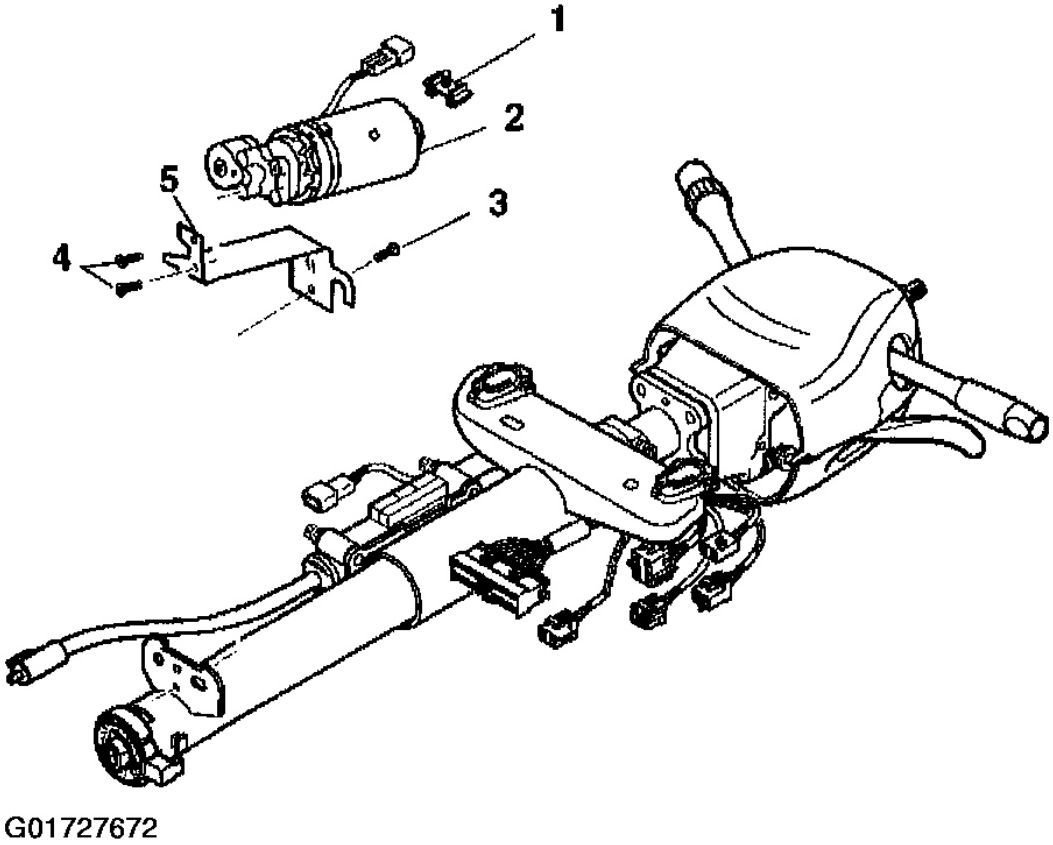


**Fig. 207: Removing Telescope Drive Bracket Screws**
**Courtesy of GENERAL MOTORS CORP.**

**TELESCOPE MOTOR ASSEMBLY - ASSEMBLE - OFF VEHICLE (TELESCOPING COLUMN)**

## Tools Required

**J 41352** Steering Column Holding Fixture

1. Install the telescope drive bracket (5) to the telebearing and jacket assembly.
2. Install the pan head tapping screw (3) to the telescope drive bracket (5).

**CAUTION: Refer to FASTENER NOTICE .**

3. Install the guide retainer bolts.

**Tighten**

Tighten the screw to 7 N.m (62 lb in).

4. Install the telescope drive motor assembly (2) to the telescope drive bracket (5).
5. Install the 2 pan head tapping screws (4) to the telescope drive bracket (5).

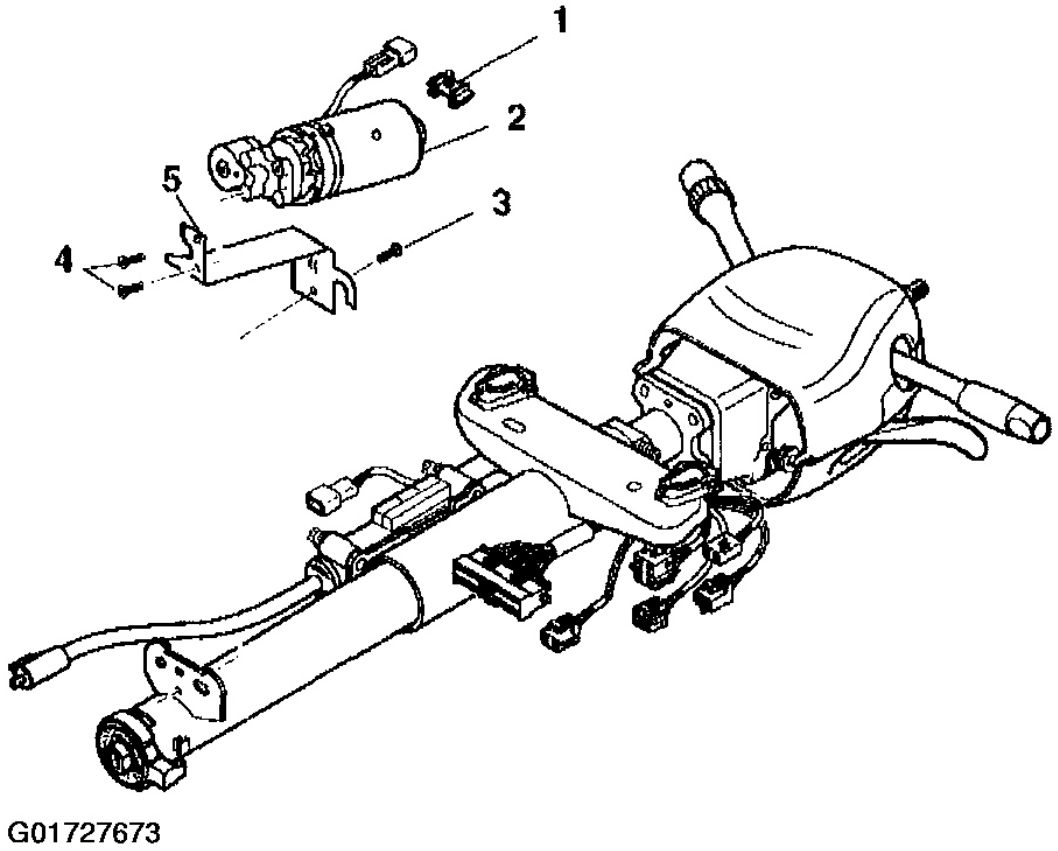


**Fig. 208: Installing Telescope Drive Bracket Screws**
**Courtesy of GENERAL MOTORS CORP.**

**Tighten**

Tighten the screws to 7 N.m (62 lb in).

6. Install the connector clip (1) to the telescope drive motor assembly connector (2).

**WARNING: Refer to SIR INFLATOR MODULE COIL CAUTION .**

7. Connect the cable assembly (2) to the telescope drive motor assembly connector (1).

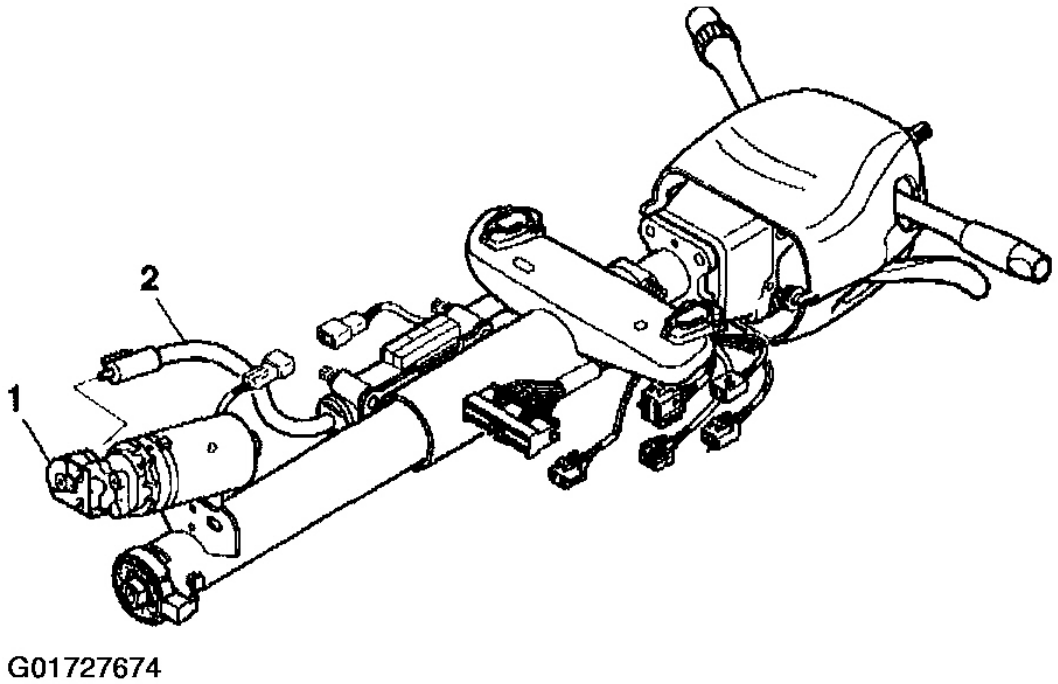


**Fig. 209: Connecting Telescope Drive Motor Assembly Cable**
**Courtesy of GENERAL MOTORS CORP.**

8. Remove the steering column from **J 41352** .
9. Remove **J 41352** from the vise.
10. Enable the inflatable restraint steering wheel module. Refer to **ACTIVATING SYSTEM** .

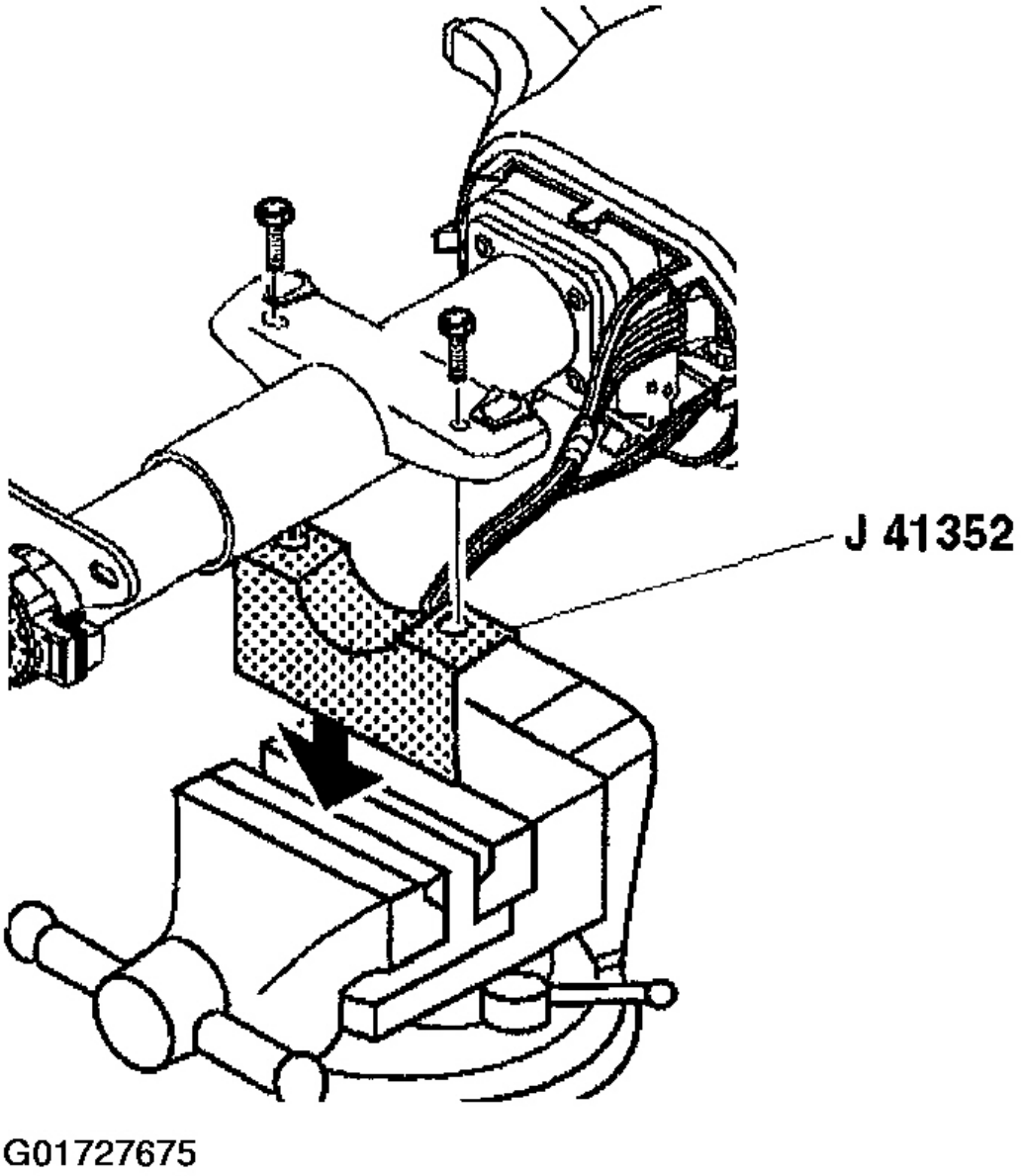


**Fig. 210: Removing J 41352 Steering Column Holding Fixture**
**Courtesy of GENERAL MOTORS CORP.**

**TELESCOPE ACTUATOR ASSEMBLY - DISASSEMBLE - OFF VEHICLE (TELESCOPING COLUMN)**

## Tools Required

**J 41352** Steering Column Holding Fixture

**WARNING: Refer to SIR CAUTION .**

1. Disable the inflatable restraint steering wheel module. Refer to **DISABLING SYSTEM** .
2. Insert **J 41352** into a vise.
3. Secure the steering column to **J 41352** .

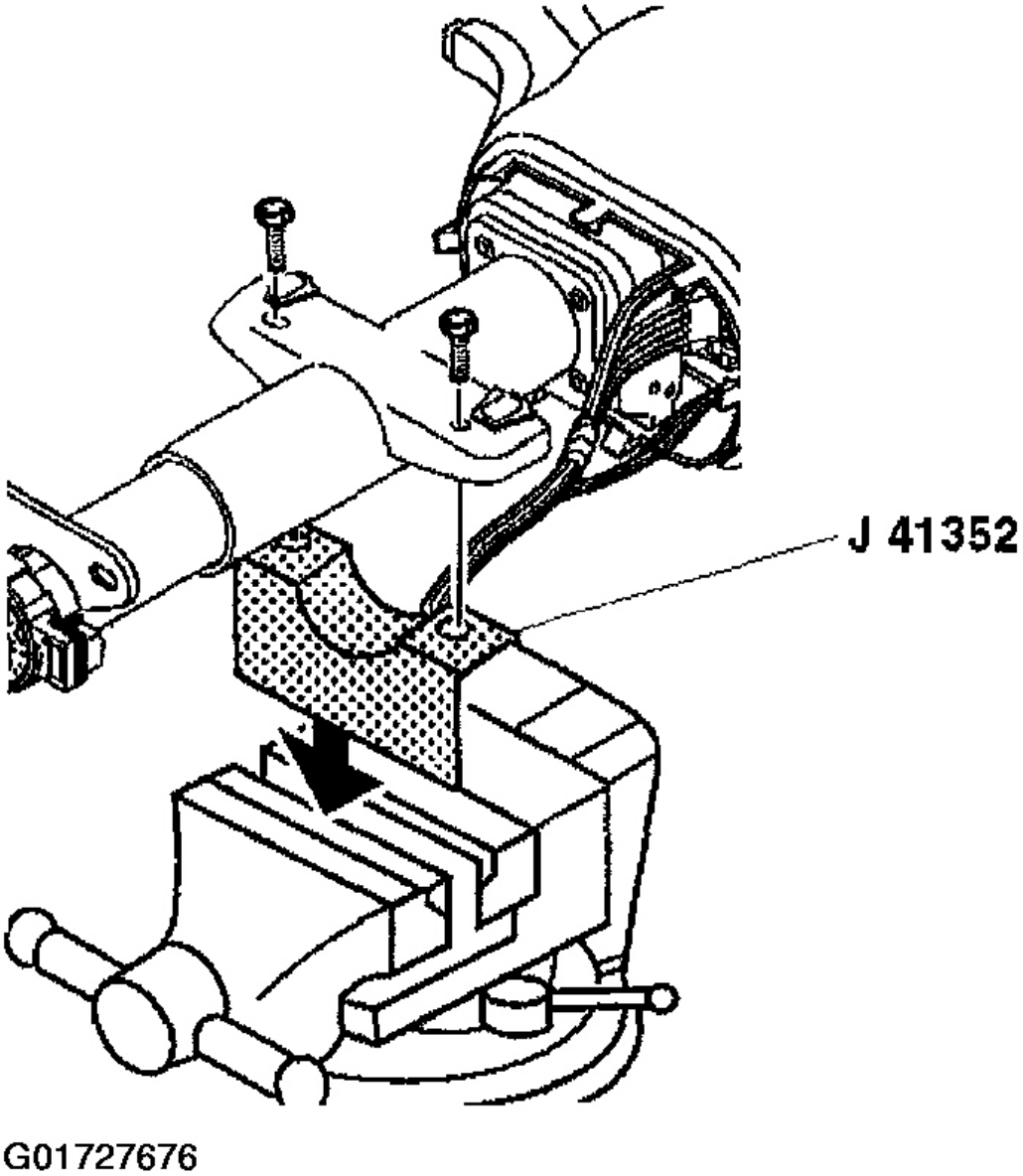


**Fig. 211: Installing J 41352 Steering Column Holding Fixture**
**Courtesy of GENERAL MOTORS CORP.**

4. Remove the following items from the telebearing and jacket assembly:
   - **4.1.** Remove the retaining ring (1).
   - **4.2.** Remove the compression spring (2).

**4.3.** Remove the shoulder bolt (3).

**4.4.** Remove the anti rotation ball (4).

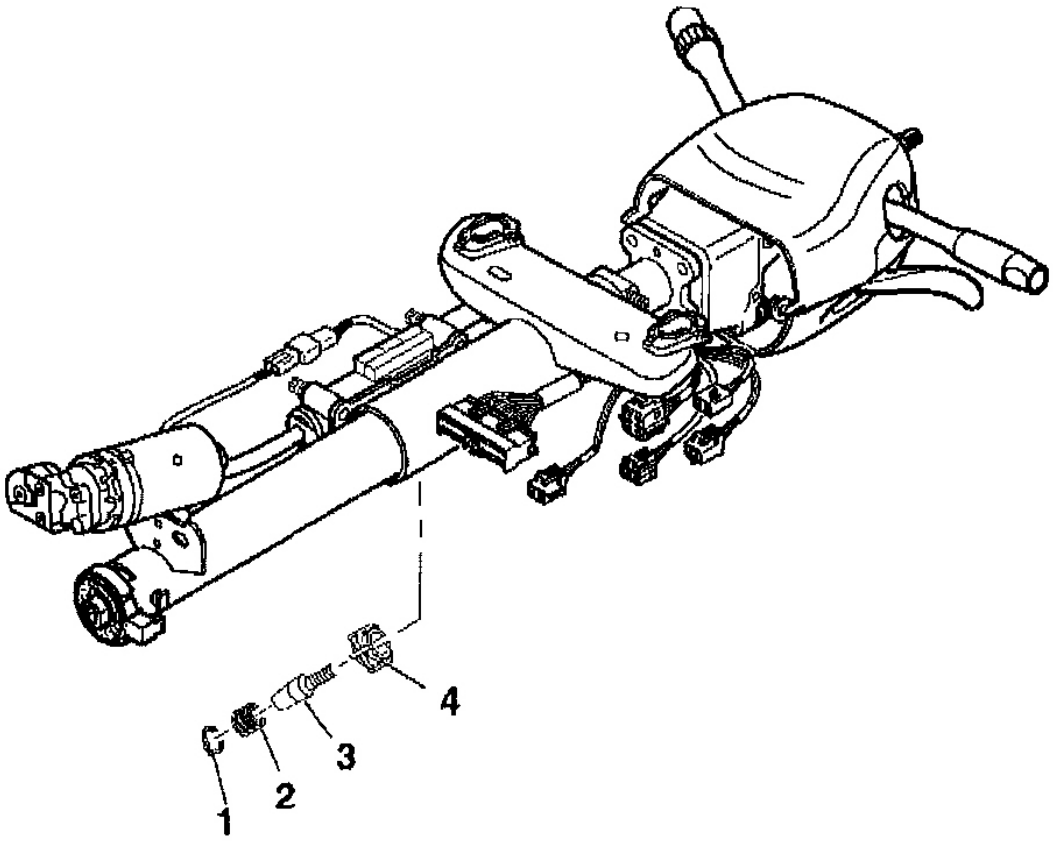


**Fig. 212: Identifying Telebearing & Jacket Assembly Components**
**Courtesy of GENERAL MOTORS CORP.**

5. Disconnect the cable assembly (2) from the telescope drive motor assembly (1).

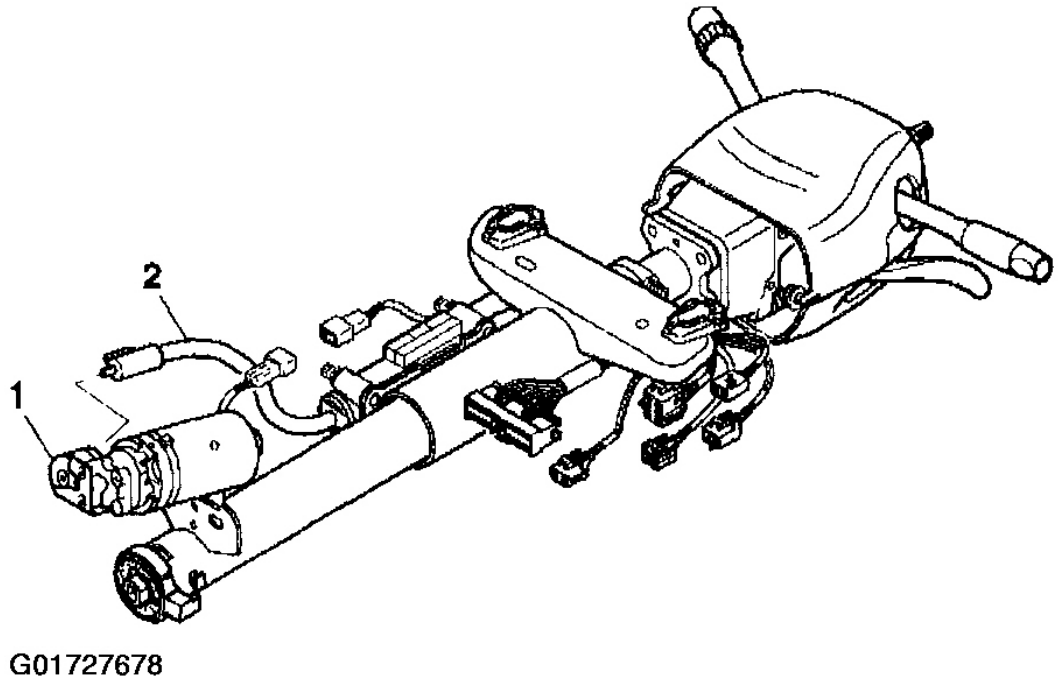


**Fig. 213: Disconnecting Telescope Drive Motor Assembly Cable**
**Courtesy of GENERAL MOTORS CORP.**

6. To remove the telescope actuator assembly (3) follow these steps:
   - **6.1.** Remove the 4 TORX(R) head screws (4).
   - **6.2.** Remove the telescope drive bolt (1).
   - **6.3.** Remove the telescope drive ball (2).

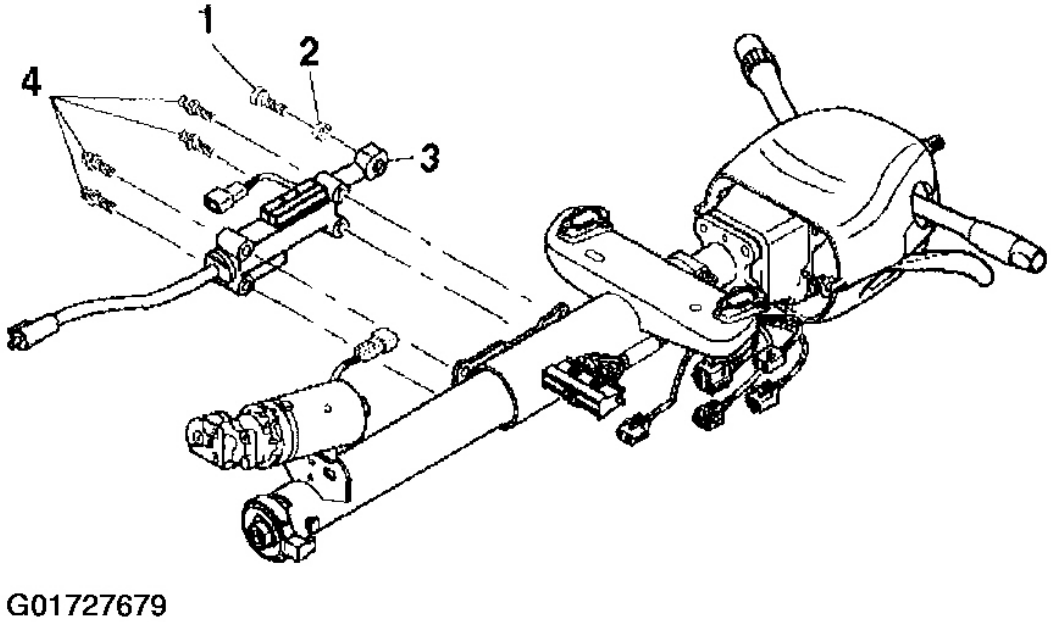


**Fig. 214: Removing Telescope Drive Bolt**
**Courtesy of GENERAL MOTORS CORP.**

7. Perform the following steps to remove the telescope adapter assembly:

   **7.1.** Remove the 3 flat head 6-lobed soc tap screws (1) from the telescope adapter assembly (2).

   **7.2.** Remove the telescope adapter assembly (2) from the telebearing adapter assembly.

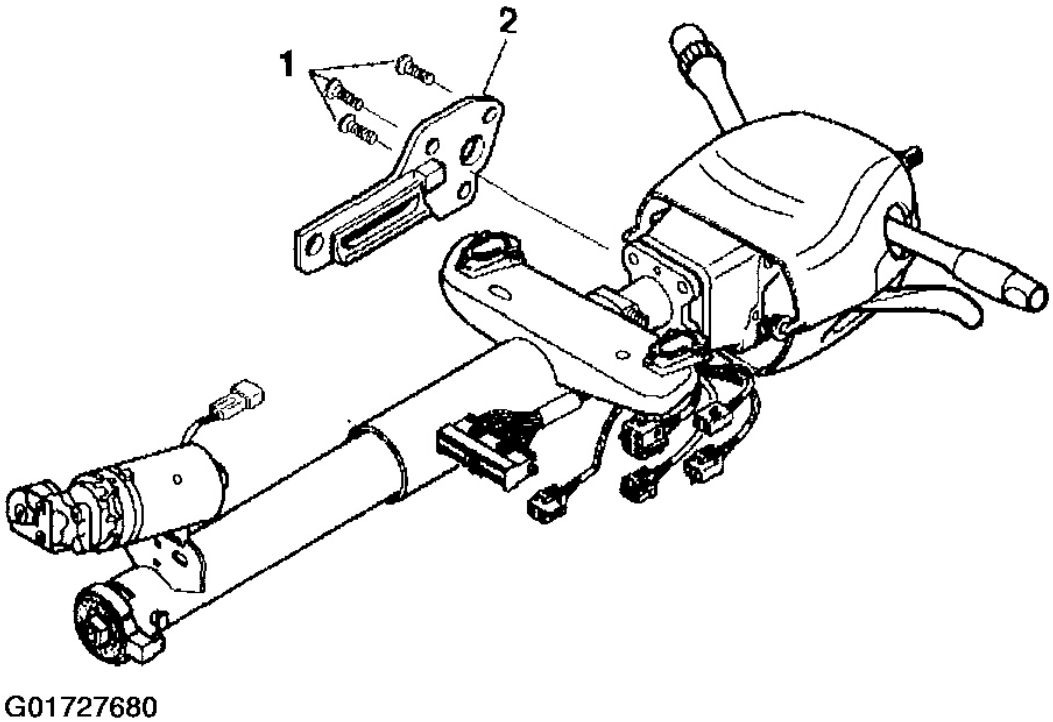


**Fig. 215: Removing Telescope Adapter Assembly Retaining Screws**
**Courtesy of GENERAL MOTORS CORP.**

**TELESCOPE ACTUATOR ASSEMBLY - ASSEMBLE - OFF VEHICLE (TELESCOPING COLUM COLUMN)**

## Tools Required

**J 41352** Steering Column Holding Fixture

**CAUTION: Refer to FASTENER NOTICE .**

1. Perform the following to install the telescope adapter assembly:
   - **1.1.** Install the telescope adapter assembly (2) to the telebearing and jacket assembly.
   - **1.2.** Install the 3 flat head 6-lobed soc tap screws (1).

**Tighten**

Tighten the screws to 9 N.m (80 lb in).

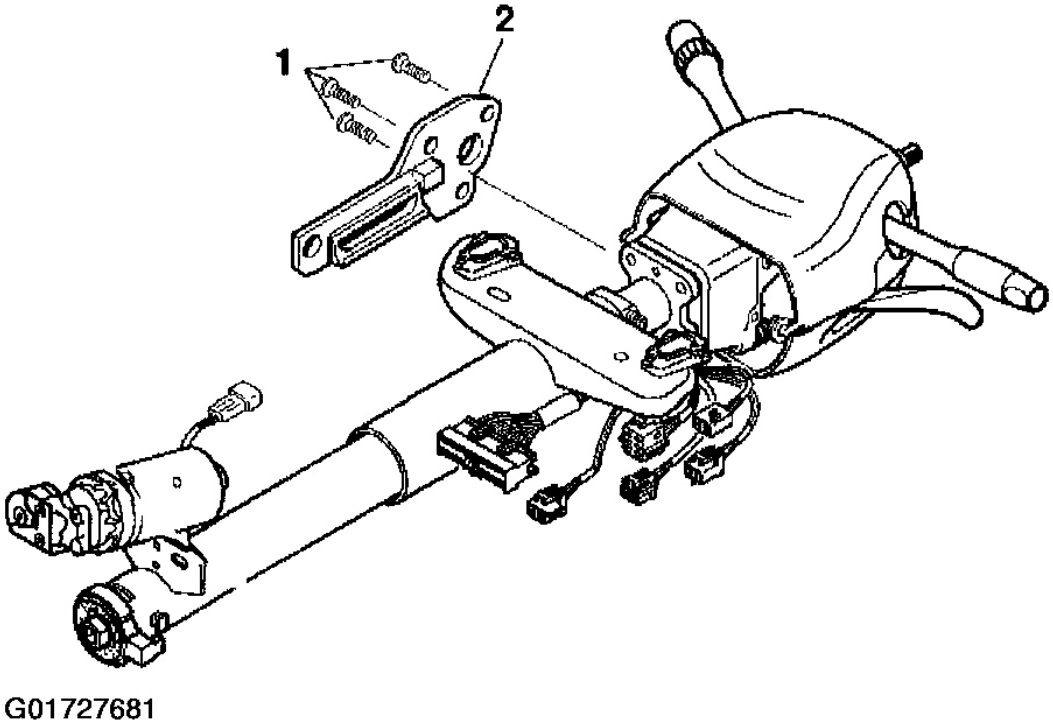


**Fig. 216: Installing Telescope Adjuster Assembly Screws**
**Courtesy of GENERAL MOTORS CORP.**

2. To install the telescope actuator assembly (3), follow these steps:
   **2.1.** Install the telescope actuator assembly (3) to the telebearing jacket assembly.
   **2.2.** Install the 4 TORX(R) head screws (4).

   **Tighten**

   Tighten the screws to 9 N.m (80 lb in).

   **2.3.** Install the telescope drive ball (2).
   **2.4.** Lubricate the telescope drive bolt (1).
   **2.5.** Install the telescope drive bolt (1).

**Tighten**

Tighten the bolt to 7 N.m (62 lb in).

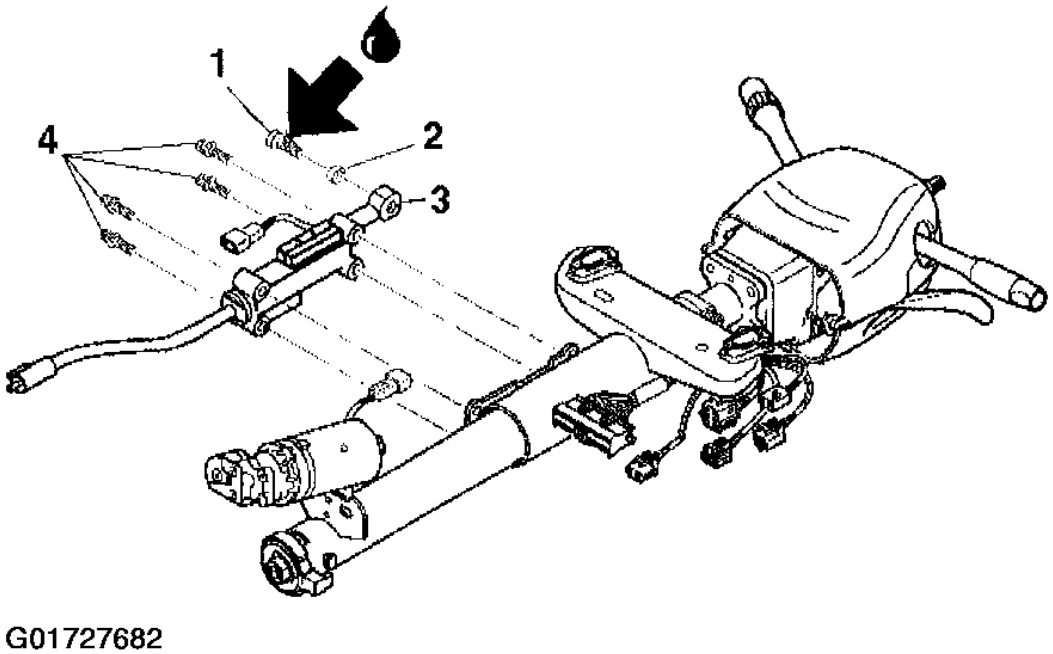


**Fig. 217: Installing Telescope Drive Bolt**
**Courtesy of GENERAL MOTORS CORP.**

**WARNING: Refer to SIR INFLATOR MODULE COIL CAUTION .**

3. Connect the cable assembly (2) to the telescope drive motor assembly (1).

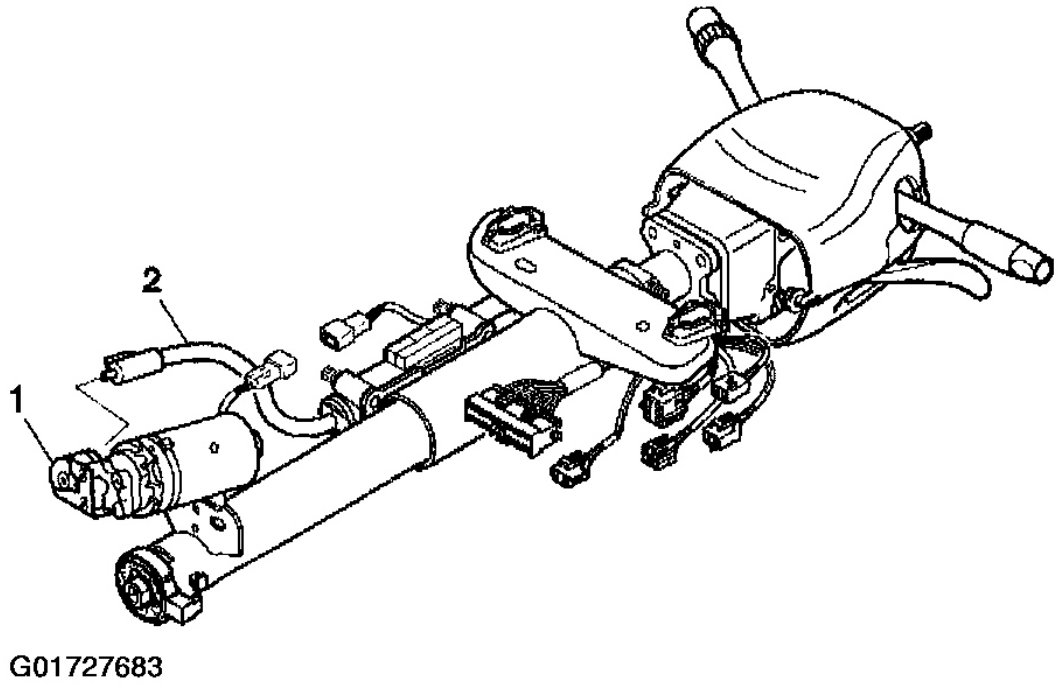


**Fig. 218: Connecting Telescope Drive Motor Assembly Cable**
**Courtesy of GENERAL MOTORS CORP.**

4. Install the following items onto the telebearing and jacket assembly:
    - **4.1.** Install the anti rotation ball (4).
    - **4.2.** Lubricate the shoulder bolt (3).
    - **4.3.** Install the shoulder bolt (3).
    - **4.4.** Install the compression spring (2).
    - **4.5.** Install the retaining ring (1).

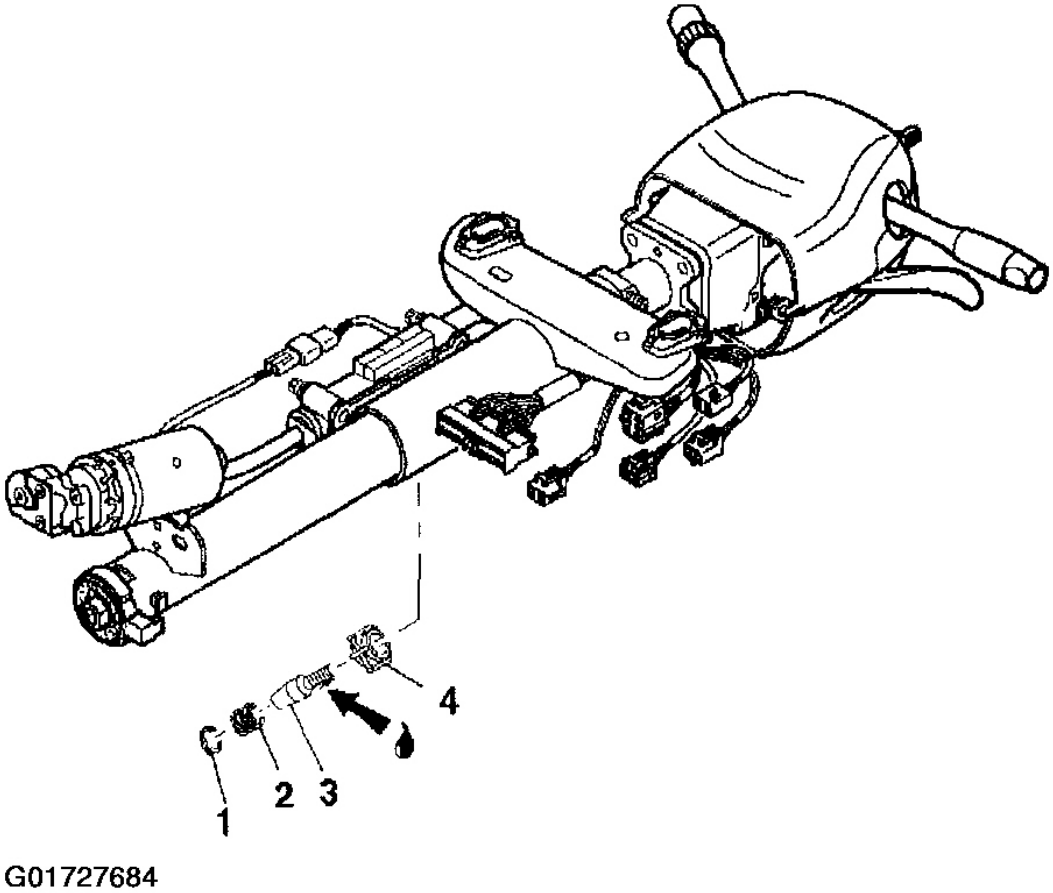


**Fig. 219: Installing Telebearing & Jacket Assembly Components**
**Courtesy of GENERAL MOTORS CORP.**

5. Remove the steering column from **J 41352** .
6. Remove **J 41352** from the vise.
7. Enable the inflatable restraint steering wheel module. Refer to **ACTIVATING SYSTEM** .

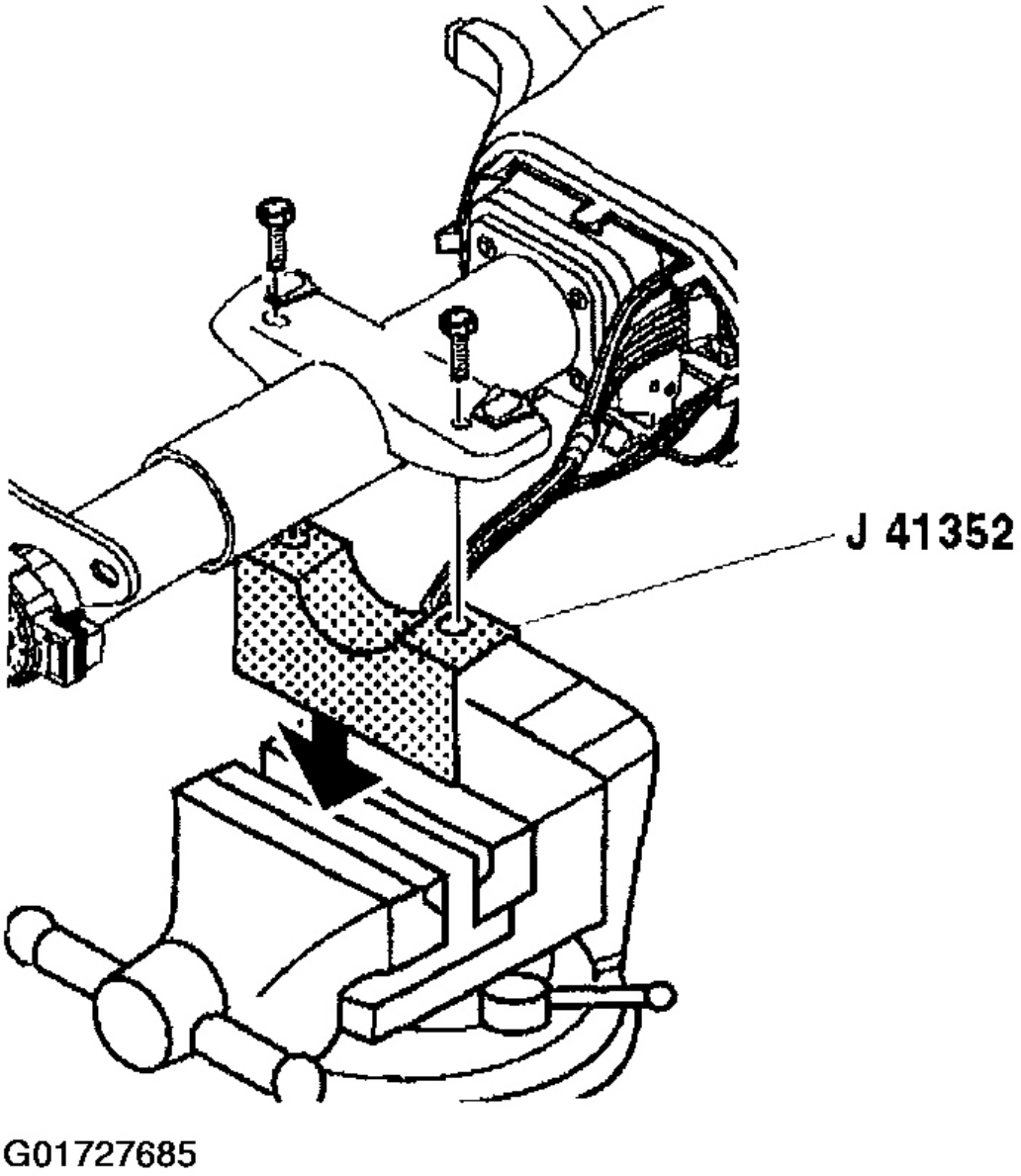


**Fig. 220: Removing J 41352 Steering Column Holding Fixture**
**Courtesy of GENERAL MOTORS CORP.**

**STEERING SHAFT, LOWER BEARING, AND JACKET - DISASSEMBLE - OFF VEHICLE (TELESCOPING COLUMN)**

## Tools Required

**J 21854-01** Pivot Pin Remover

**WARNING: Refer to SIR CAUTION .**

1. Disable the inflatable restraint steering wheel module. Refer to **DISABLING SYSTEM.**
2. Remove the signal switch housing. Refer to **Turn Signal Switch Housing - Disassemble - Off Vehicle (Telescoping Column)** .
3. Remove the tilt spring only. Refer to **Tilt Spring - Disassemble - Off Vehicle (Telescoping Column)** or **Tilt Spring - Disassemble - Off Vehicle (Non-Telescoping Column)** .
4. Remove the telescoping actuator assembly. Refer to **Telescope Actuator Assembly - Disassemble - Off Vehicle (Telescoping Column)** .
5. Remove the telescoping motor assembly. Refer to **Telescope Motor Assembly - Disassemble - Off Vehicle (Telescoping Column)** .

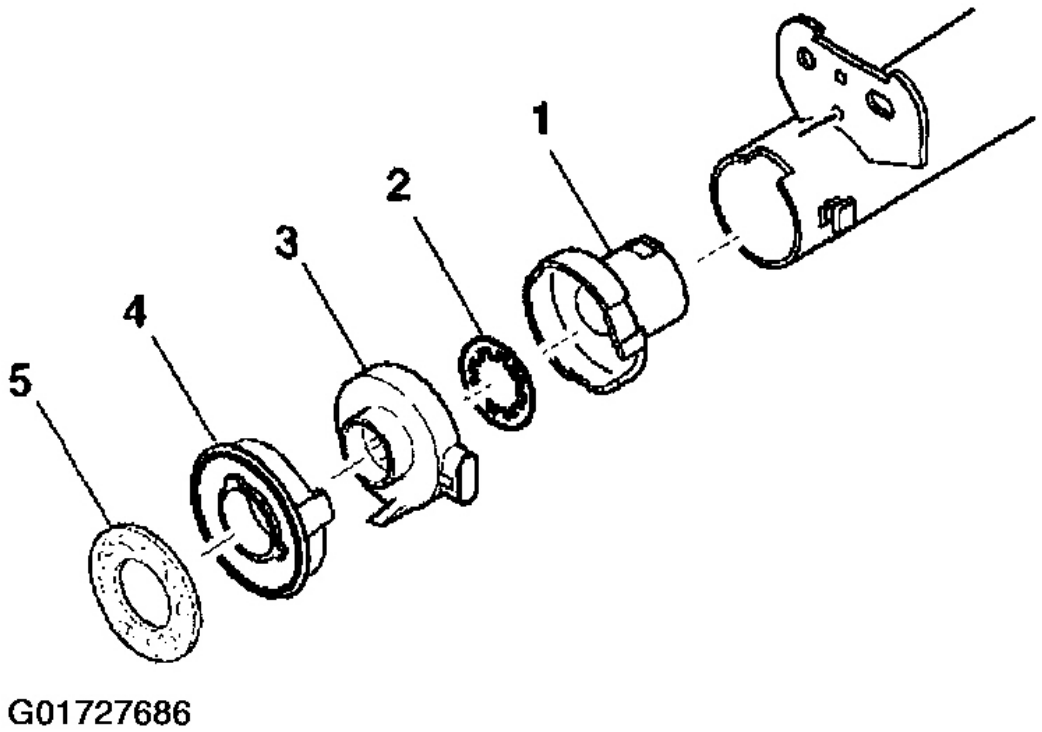


**Fig. 221: Identifying Adaptor & Bearing Assembly**

**Courtesy of GENERAL MOTORS CORP.**

6. Remove the steering shaft seal (5).
7. Remove the sensor retainer (4).
8. Remove the dual triangle sensor assembly (3).
9. Remove the lower spring retainer (2).
10. Remove the adapter and bearing assembly (1).
11. Remove the switch housing blocking plug (1).

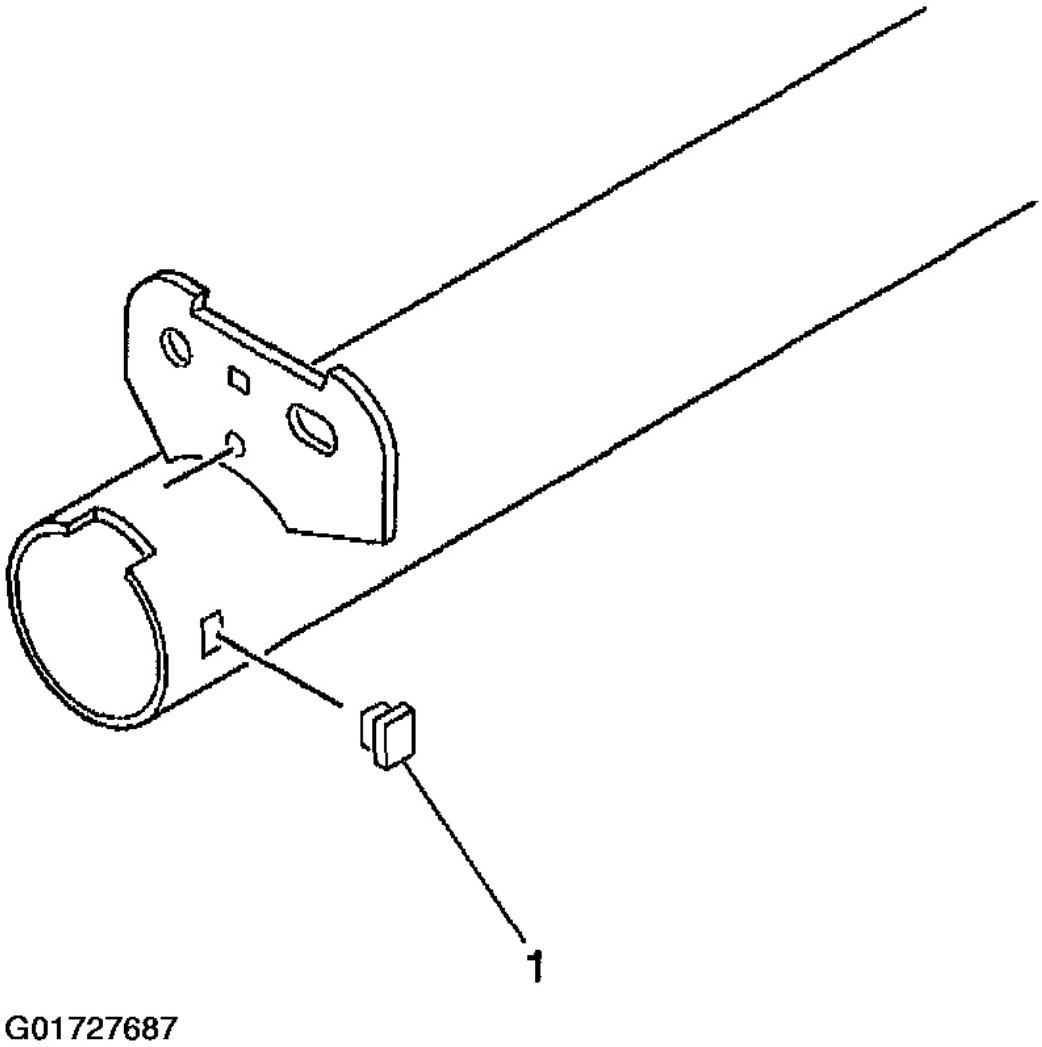


**Fig. 222: Removing Switch Housing Blocking Plug**

**Courtesy of GENERAL MOTORS CORP.**

12. Remove the 2 pivot pins (1) from the steering column support assembly using **J 21854-01** .

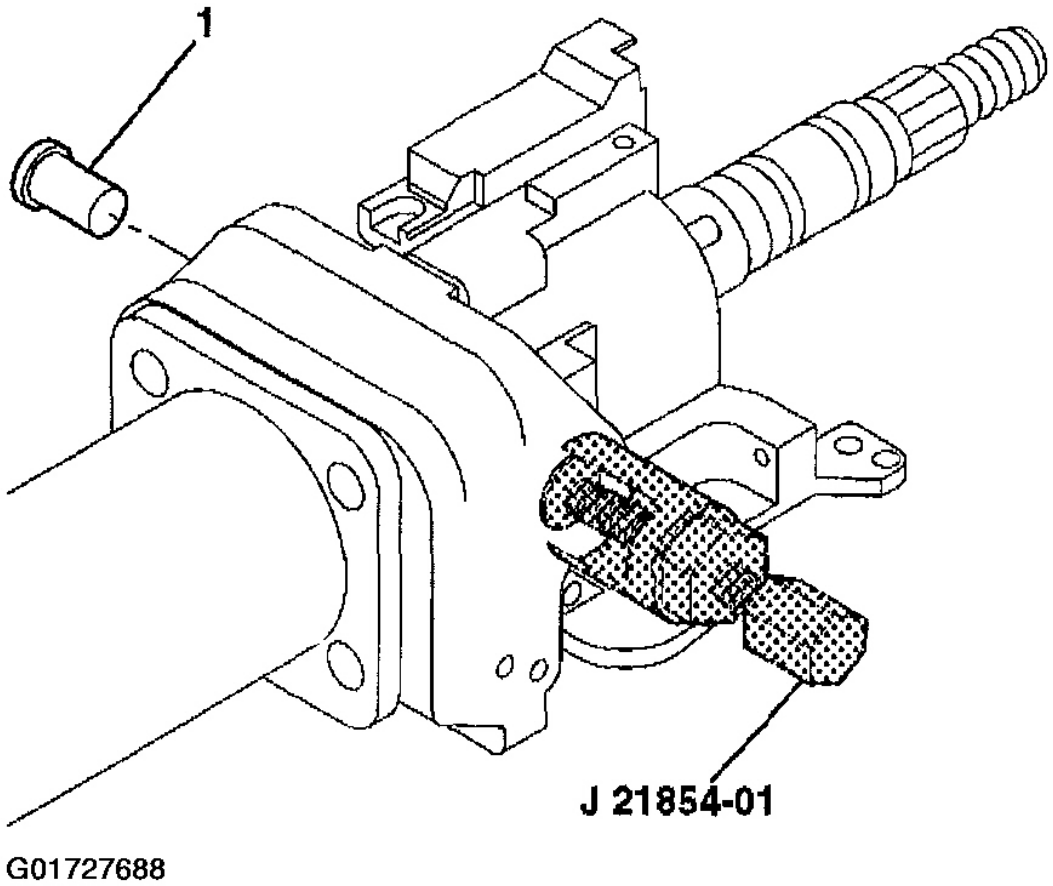


**Fig. 223: Removing Steering Column Support Assembly Pivot Pins**
**Courtesy of GENERAL MOTORS CORP.**

13. Disengage the steering column lock shoes from the dowel pins in the steering column tilt head assembly (1).
14. Remove the steering column tilt head assembly (1) with the steering shaft assembly from the telebearing and jacket assembly.

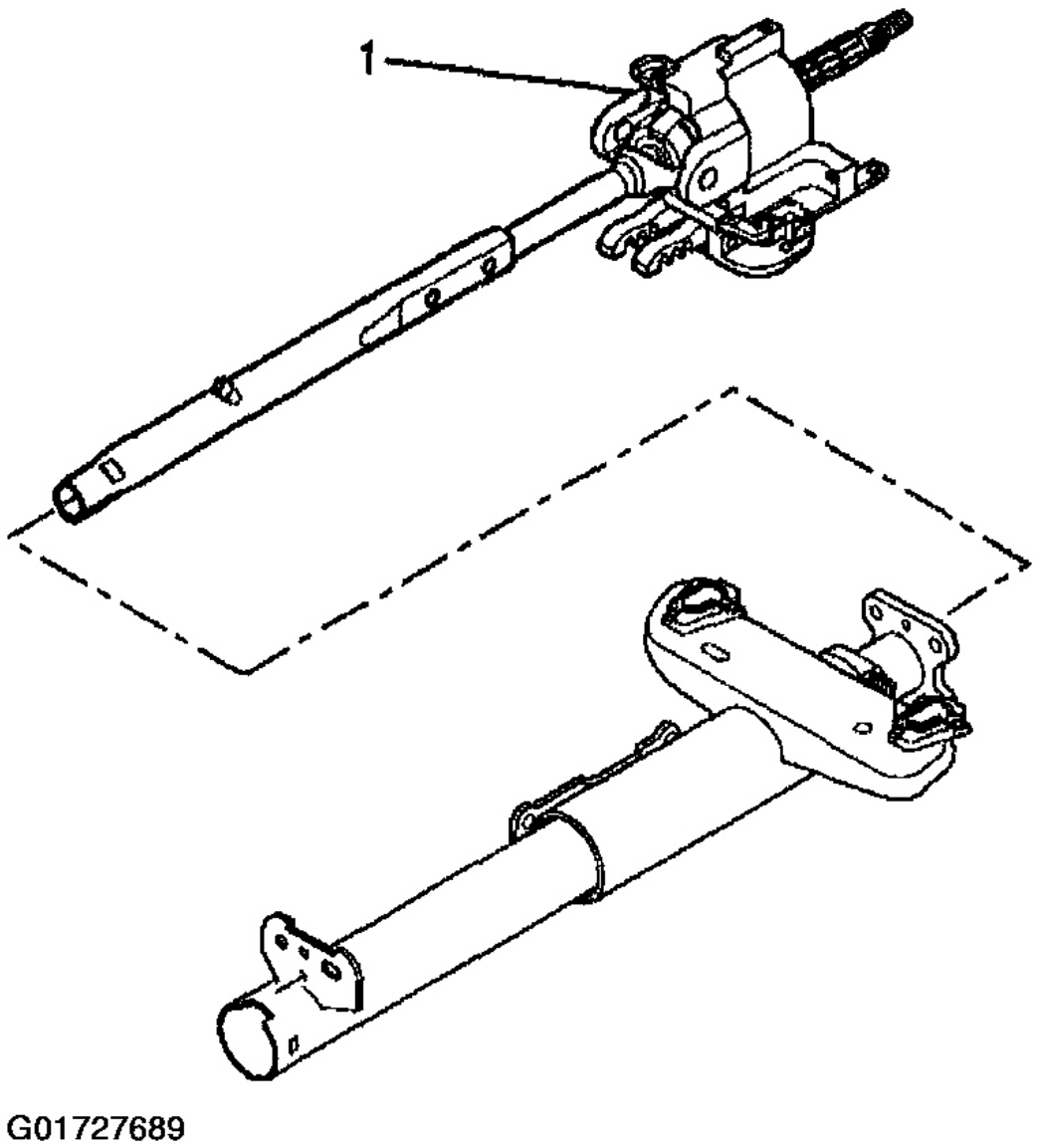


**Fig. 224: Removing Steering Column Tilt Head Assembly**
**Courtesy of GENERAL MOTORS CORP.**

15. Remove the steering shaft assembly (2) from the steering column tilt head assembly (1).

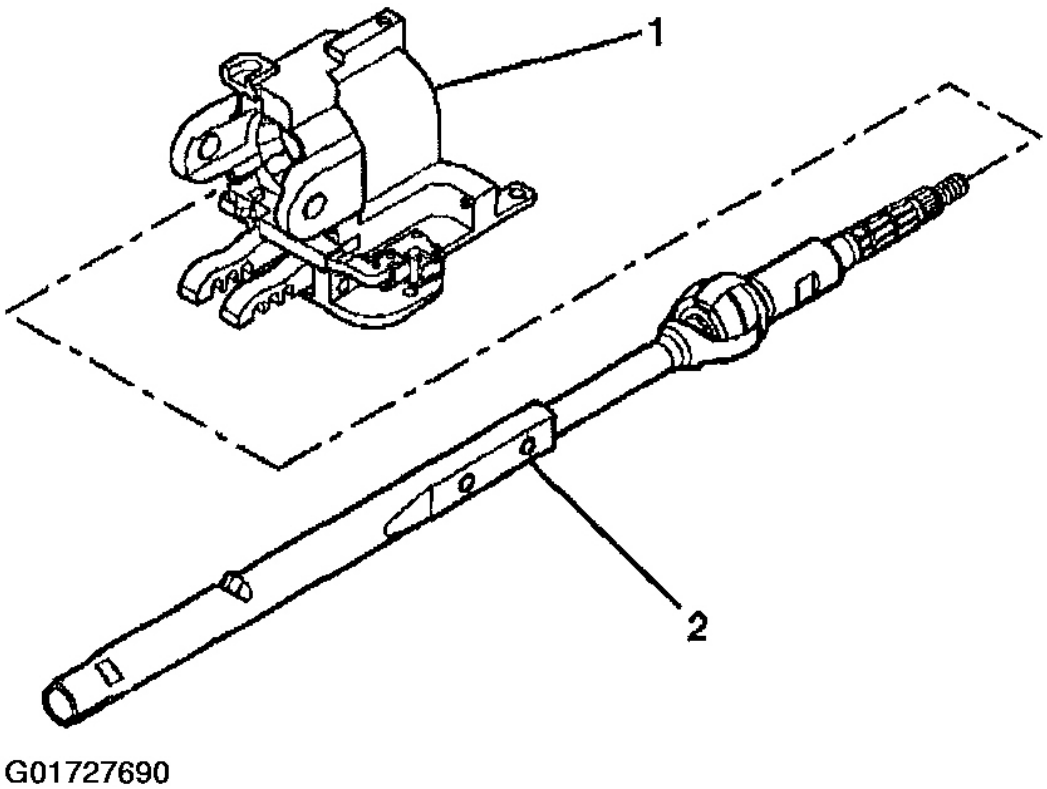


**Fig. 225: Removing Steering Shaft Assembly**
**Courtesy of GENERAL MOTORS CORP.**

**Important:** Carefully mark the parts to ensure proper assembly. Failure to assemble properly will cause the steering wheel to be turned 180 degrees.

16. Mark the race and upper shaft assembly.
17. Mark the lower steering shaft assembly.
18. Tilt the race and upper shaft assembly 90 degrees to the lower steering shaft assembly to disengage.

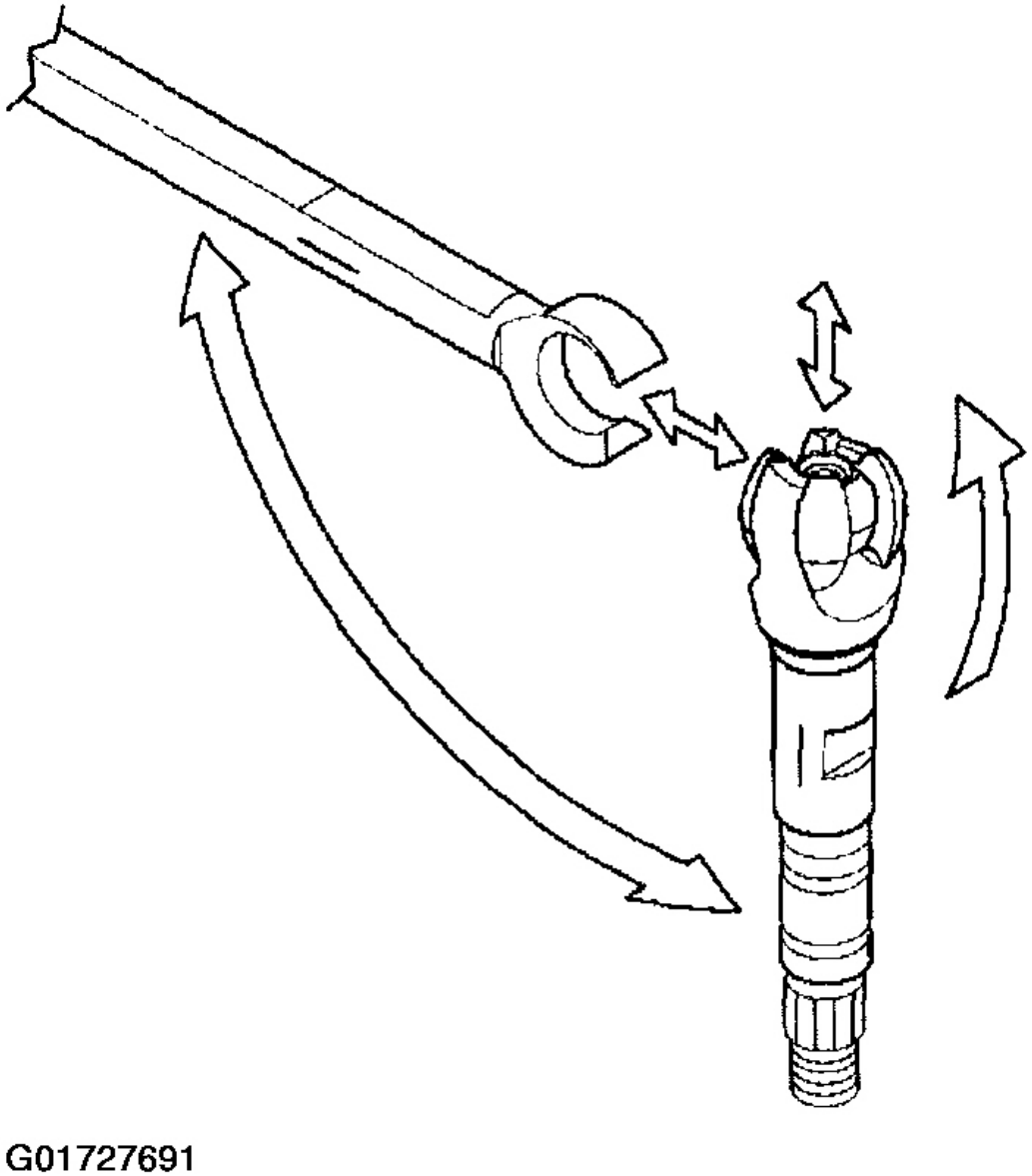


**Fig. 226: Separating Upper & Lower Steering Shaft Assembly**
**Courtesy of GENERAL MOTORS CORP.**

19. Remove the 4 TORX(R) head screws (2).
20. Remove the steering column support assembly (1) from the telebearing and jacket assembly.

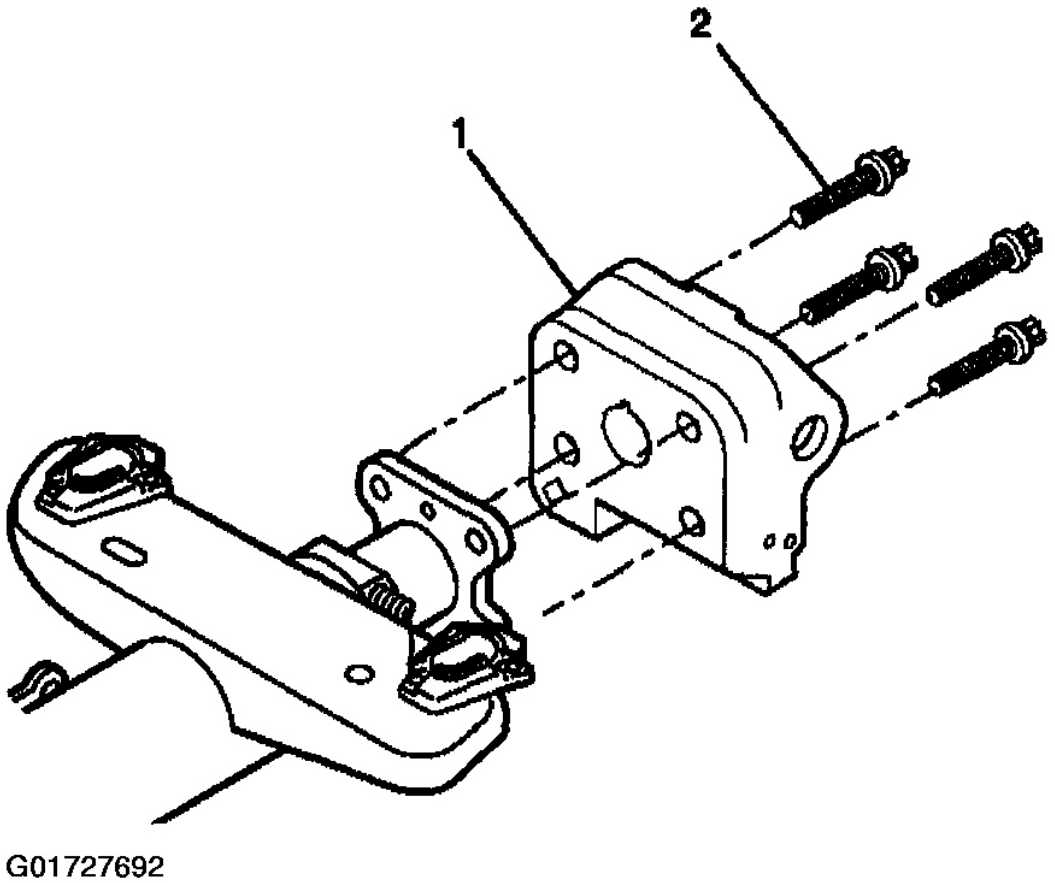


**Fig. 227: Removing Steering Column Support Assembly Screws**
**Courtesy of GENERAL MOTORS CORP.**

**STEERING SHAFT, LOWER BEARING, & JACKET - DISASSEMBLE - OFF VEHICLE (NON-TELESCOPING)**

## Tools Required

**J 21854-01** Pivot Pin Remover

**WARNING: Refer to SIR CAUTION .**

1. Disable the inflatable restraint steering wheel module. Refer to **DISABLING SYSTEM** .
2. Remove the signal switch housing. Refer to **Turn Signal Switch Housing - Disassemble -**

**Off Vehicle (Telescoping Column)** .

3. Remove the tilt spring. Refer to **Tilt Spring - Disassemble - Off Vehicle (Telescoping Column)** or **Tilt Spring - Disassemble - Off Vehicle (Non-Telescoping Column)** .

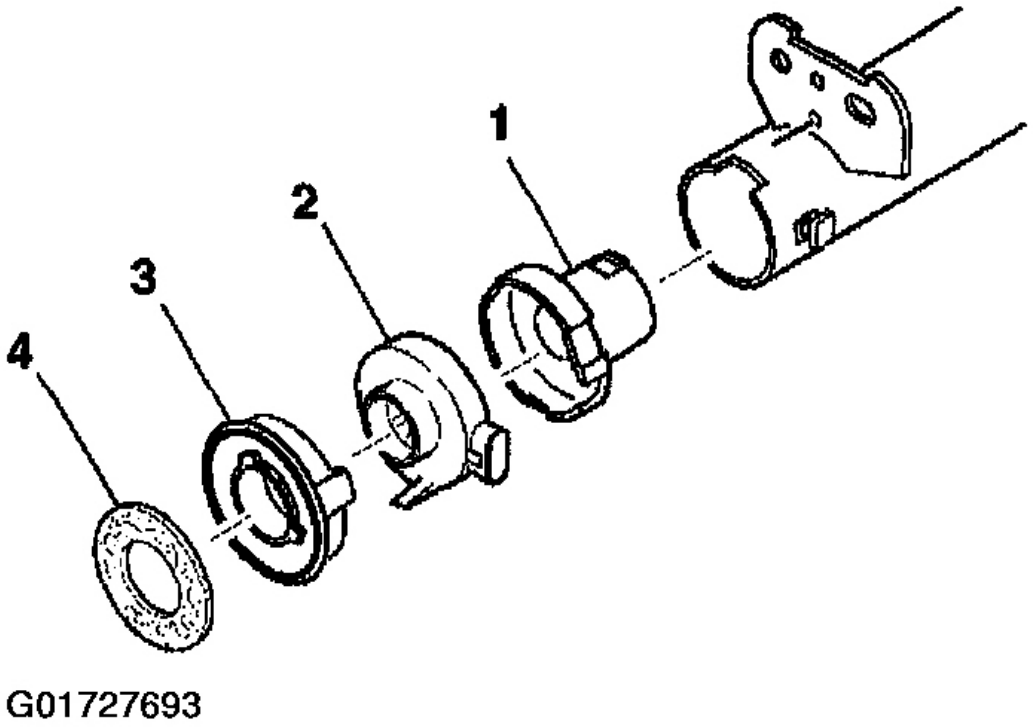


**Fig. 228: Identifying Adaptor & Bearing Assembly**
**Courtesy of GENERAL MOTORS CORP.**

4. Remove the steering shaft seal (4).
5. Remove the sensor retainer (3).
6. Remove the dual triangle sensor assembly (2).
7. Remove the adapter and bearing assembly (1).
8. Remove the 2 pivot pins (1) from the steering column support assembly using **J 21854-01** .

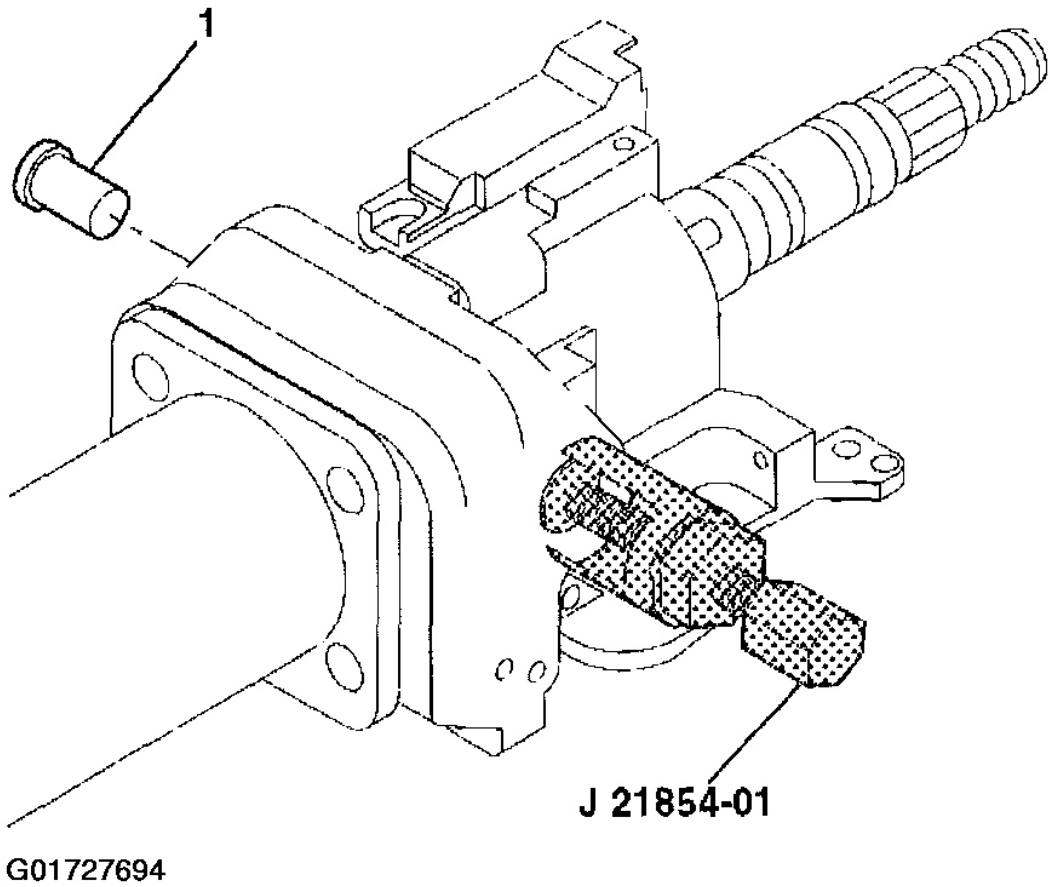


**Fig. 229: Removing Steering Column Support Assembly Pivot Pins**
**Courtesy of GENERAL MOTORS CORP.**

9. Install the tilt lever.
10. Pull the tilt lever to disengage the steering column lock shoes from the dowel pins in the steering column tilt head assembly.
11. Remove the steering column tilt head assembly (1) with the steering shaft assembly from the steering column jacket assembly.

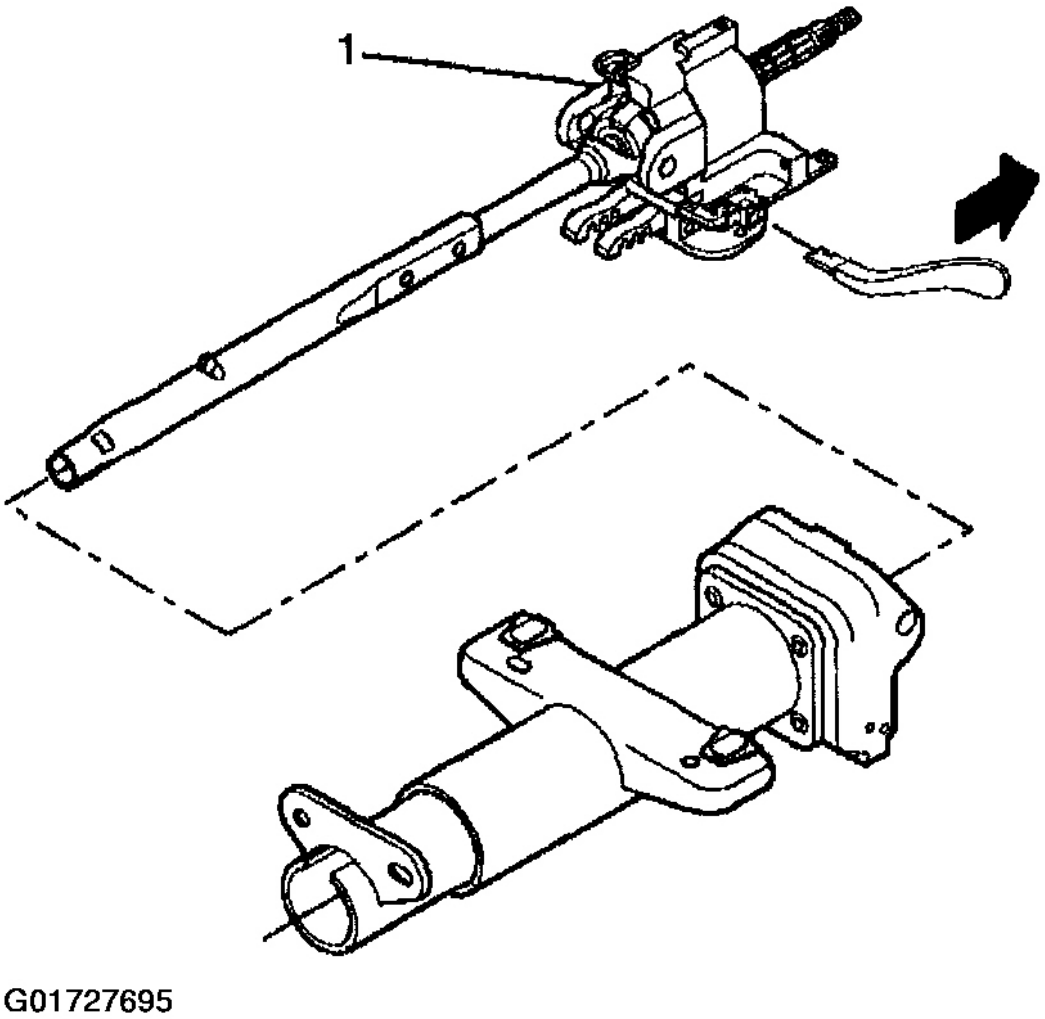


**Fig. 230: Removing Steering Column Tilt Head Assembly**
**Courtesy of GENERAL MOTORS CORP.**

12. Remove the steering shaft assembly (2) from the steering column tilt head assembly (1).

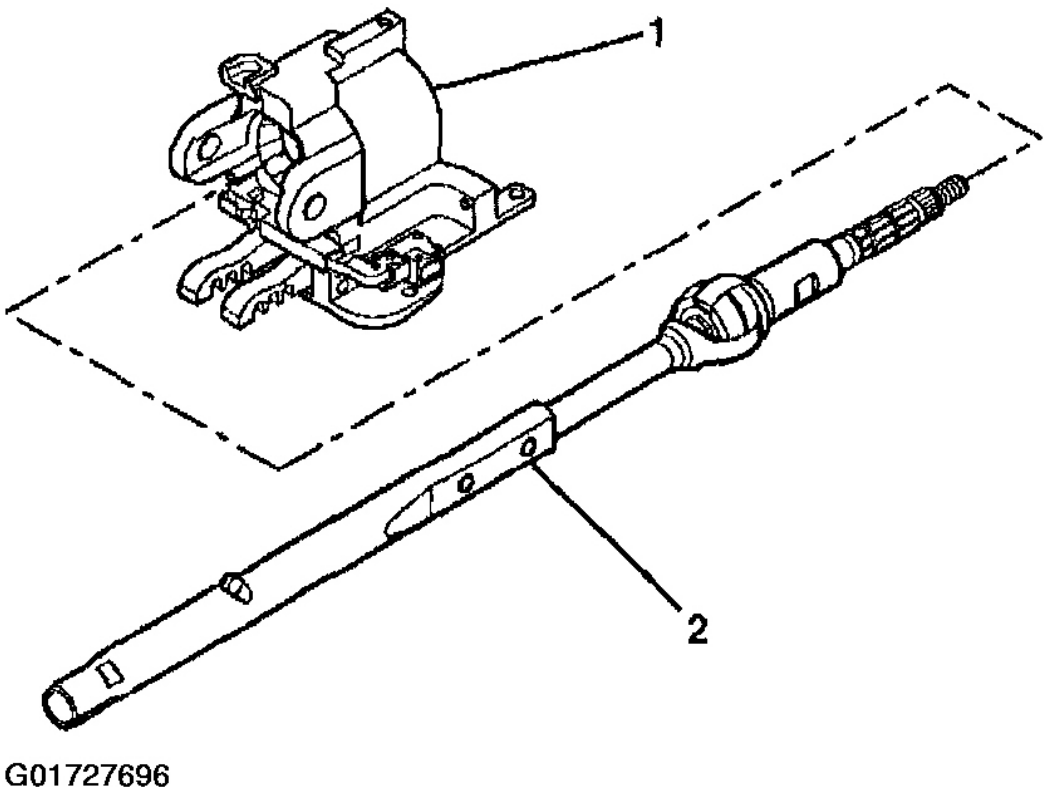


**Fig. 231: Removing Steering Shaft Assembly**
**Courtesy of GENERAL MOTORS CORP.**

**Important:** Carefully mark the parts to ensure proper assembly. Failure to assemble properly will cause the steering wheel to be turned 180 degrees.

13. Mark the race and upper shaft assembly.
14. Mark the lower steering shaft assembly.
15. Tilt the race and upper shaft assembly 90 degrees to the lower steering shaft assembly to disengage.

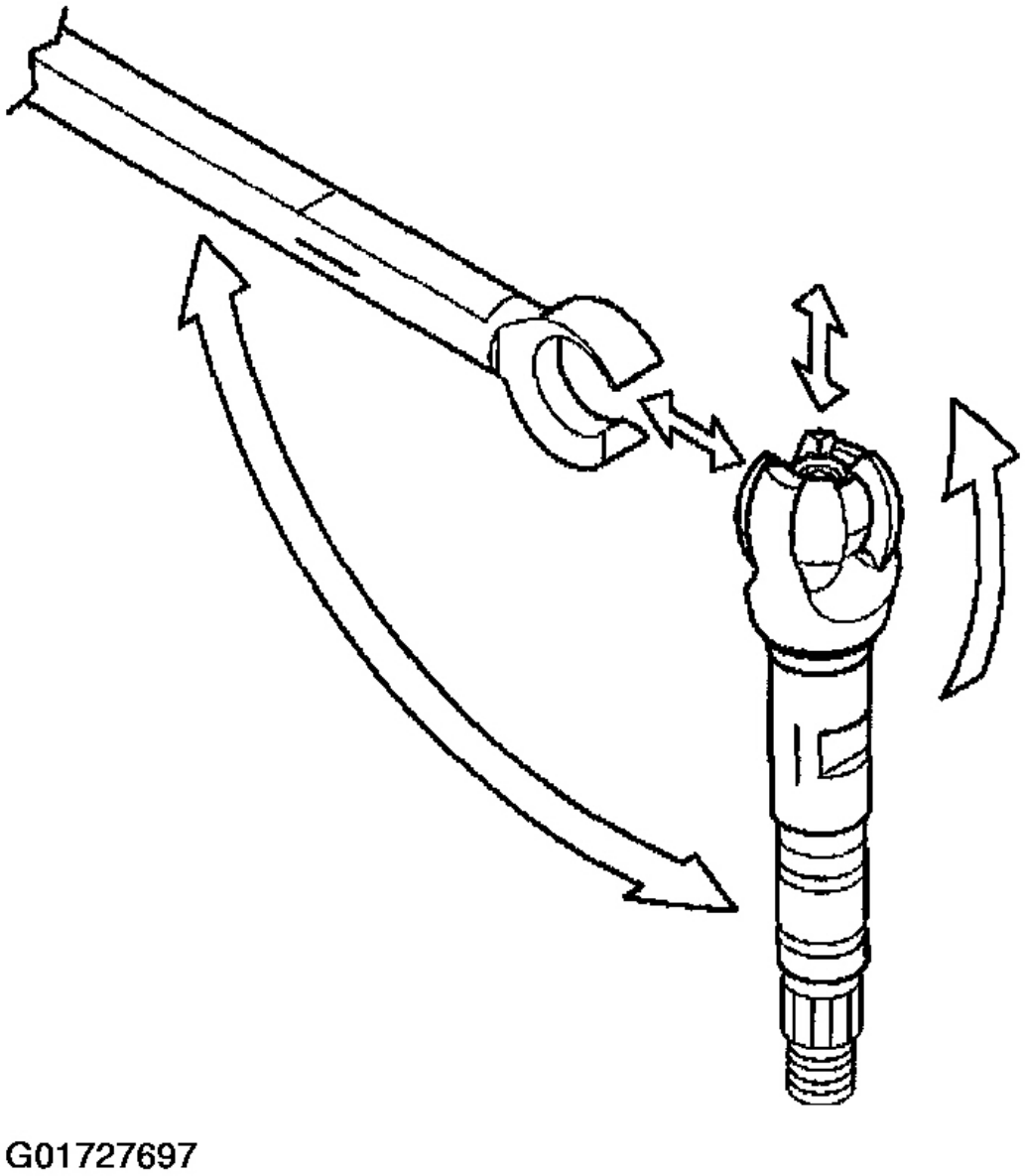


**Fig. 232: Separating Upper & Lower Steering Shaft Assembly**
**Courtesy of GENERAL MOTORS CORP.**

16. Remove the 4 TORX(R) head screws (2).
17. Remove the steering column support assembly (1) from the steering column jacket assembly (3).

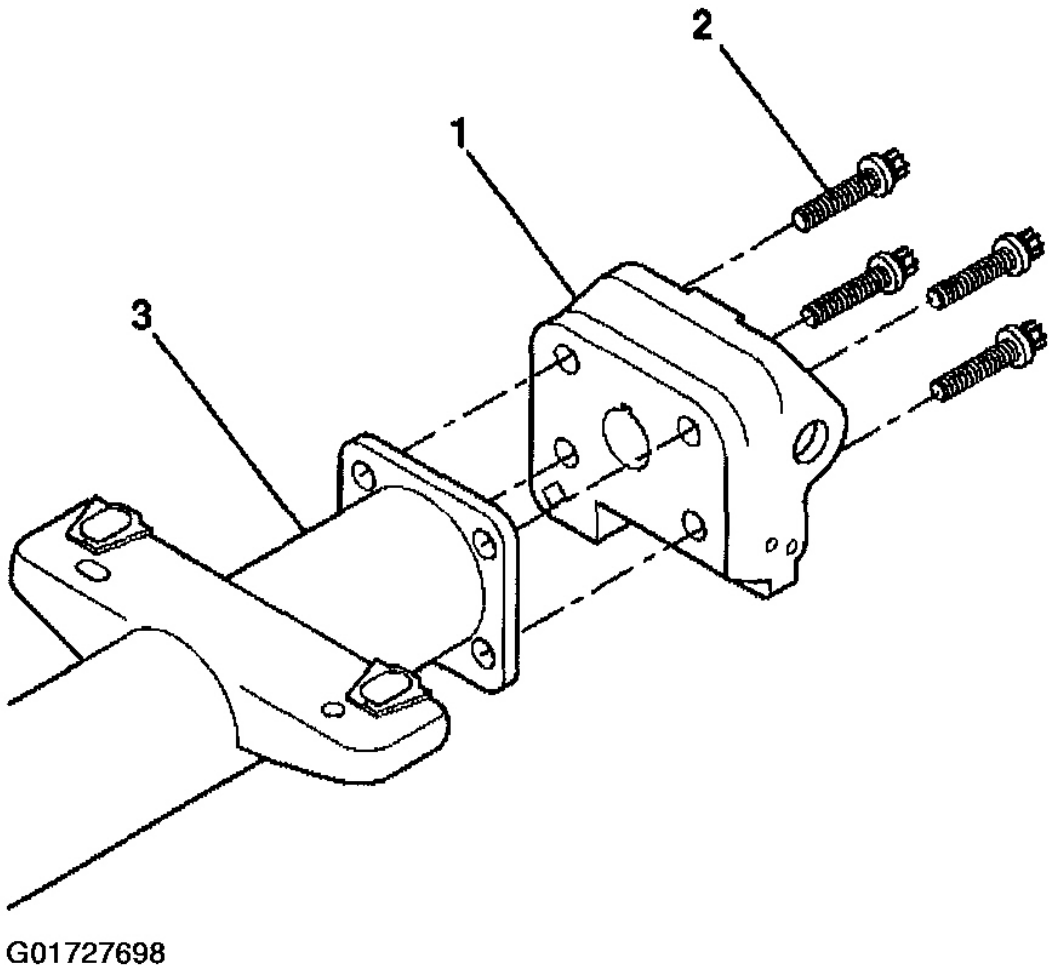


**Fig. 233: Removing Steering Column Support Assembly Screws**
**Courtesy of GENERAL MOTORS CORP.**

**STEERING SHAFT, LOWER BEARING, & JACKET - ASSEMBLE - OFF VEHICLE (TELESCOPING COLUMN)**

**Important:** Replace the steering column support assembly if the steering column support assembly has been staked 3 times.

1. Install the steering column support assembly (1) to the telebearing and jacket assembly.

**CAUTION: Refer to FASTENER NOTICE .**

2. Install the 4 TORX(R) screws (2).

   **Tighten**

   Tighten the screws to 17 N.m (13 lb ft).

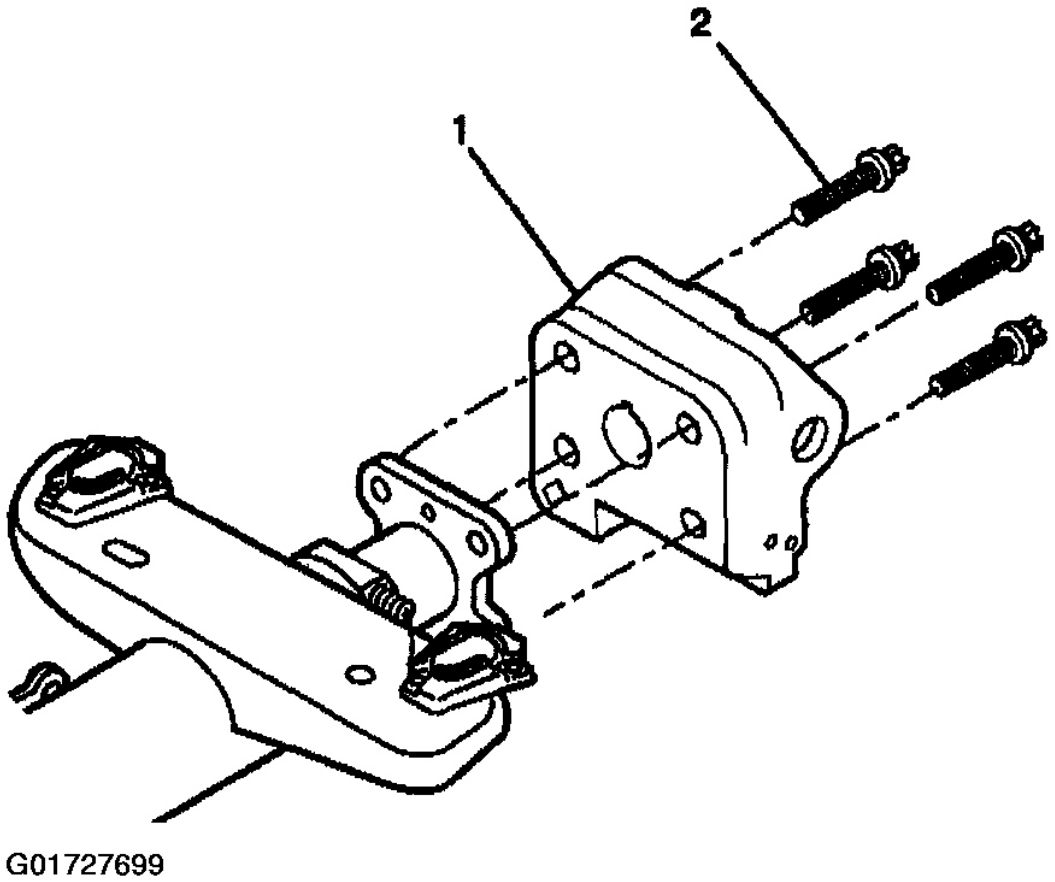


**Fig. 234: Installing Steering Column Support Assembly Screws**
**Courtesy of GENERAL MOTORS CORP.**

3. Apply lithium grease to the exposed shaft engagement areas on the centering sphere.
4. Install the lower steering shaft assembly to the race and upper shaft assembly to engage.

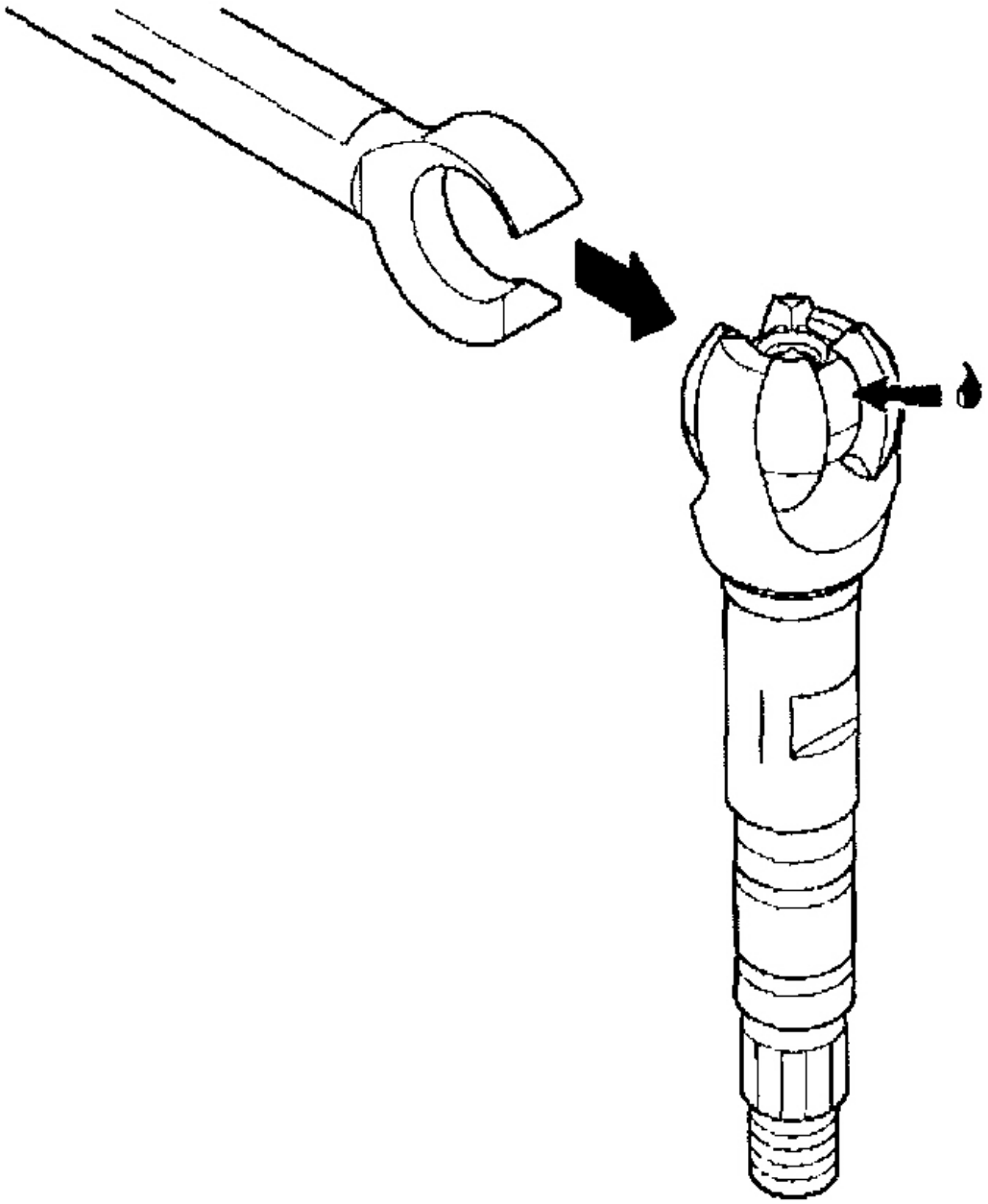


**Fig. 235: Installing Upper & Lower Steering Shaft Assembly**
**Courtesy of GENERAL MOTORS CORP.**

5. Install the steering shaft assembly (2) into the steering column tilt head assembly (1).

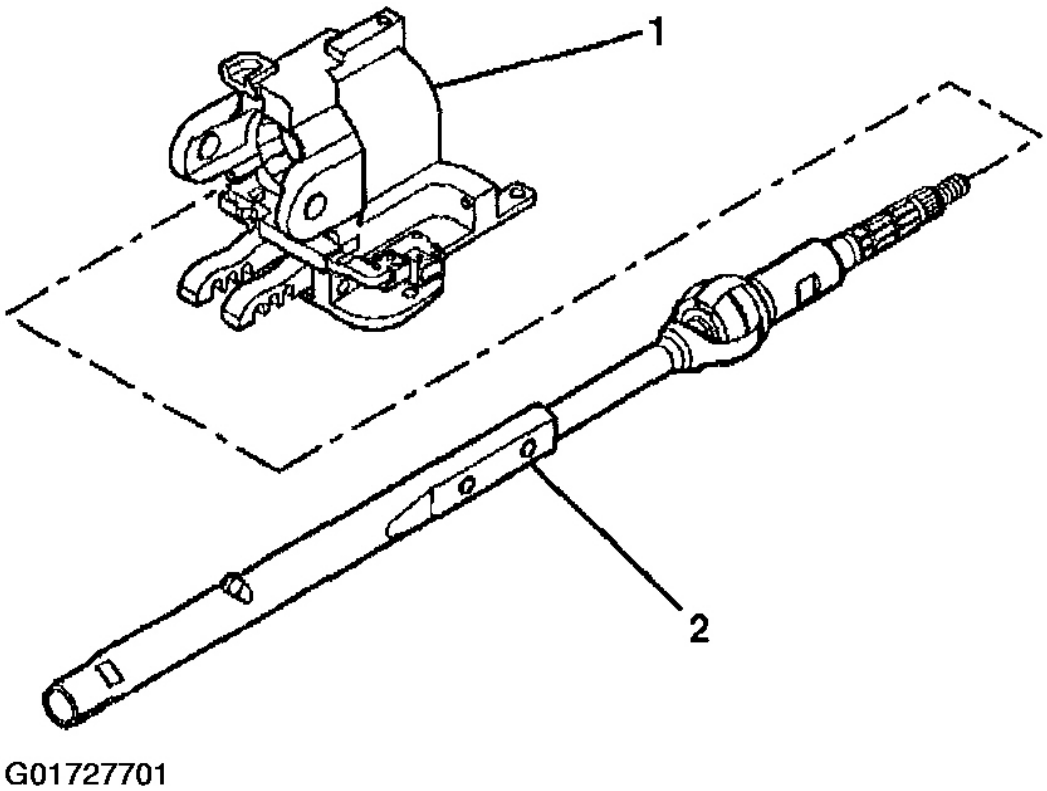


**Fig. 236: Installing Steering Shaft Assembly**
**Courtesy of GENERAL MOTORS CORP.**

6. Install the steering column tilt head assembly (1) and the steering shaft assembly to the telebearing and jacket assembly.

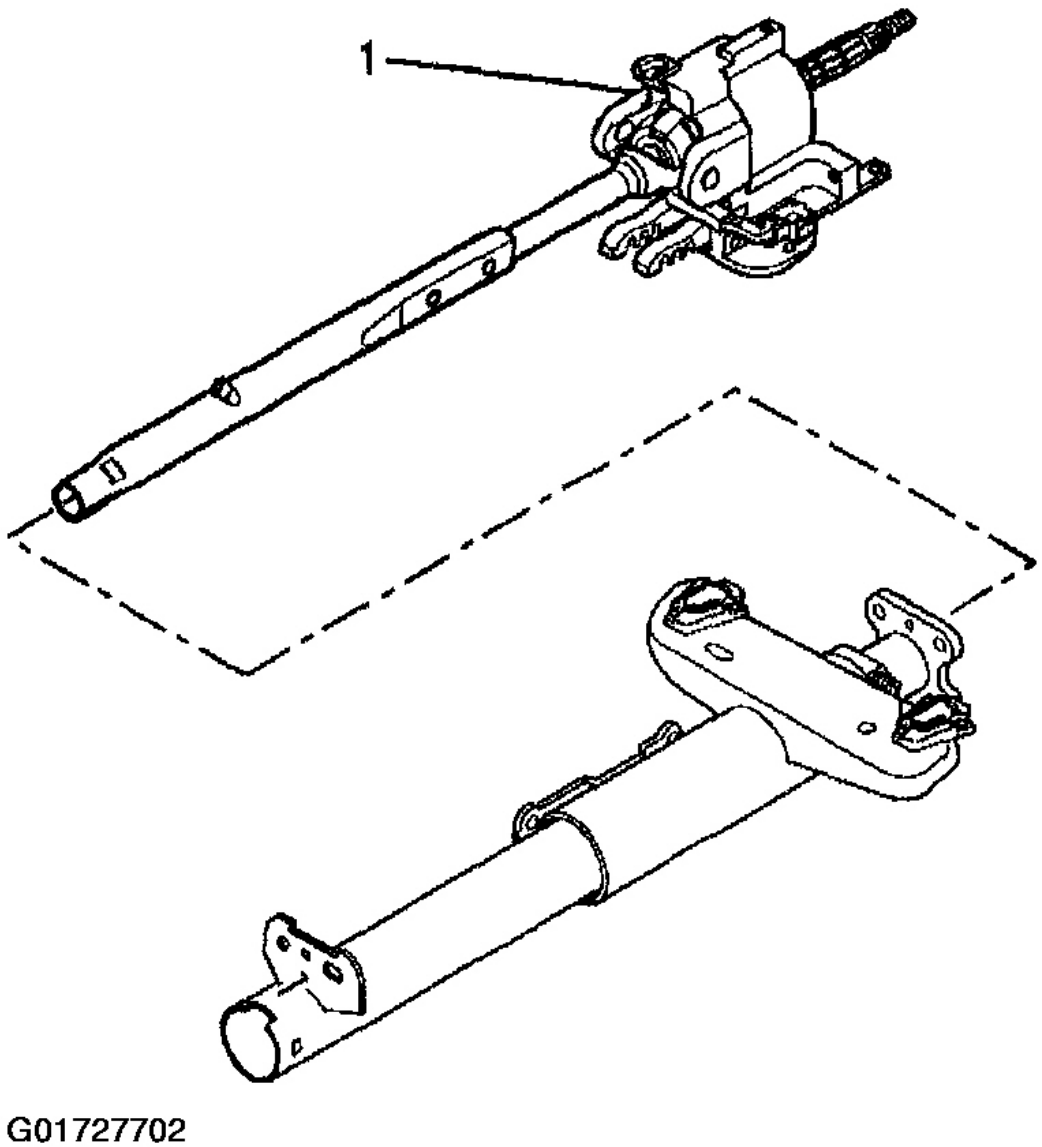


**Fig. 237: Installing Steering Column Tilt Head Assembly**
**Courtesy of GENERAL MOTORS CORP.**

**Important:** Replace the steering column support assembly if the steering column support assembly has been staked 3 times.

7. Install the 2 pivot pins (1) to the steering column support assembly.
8. Stake the pivot pins locations (1).

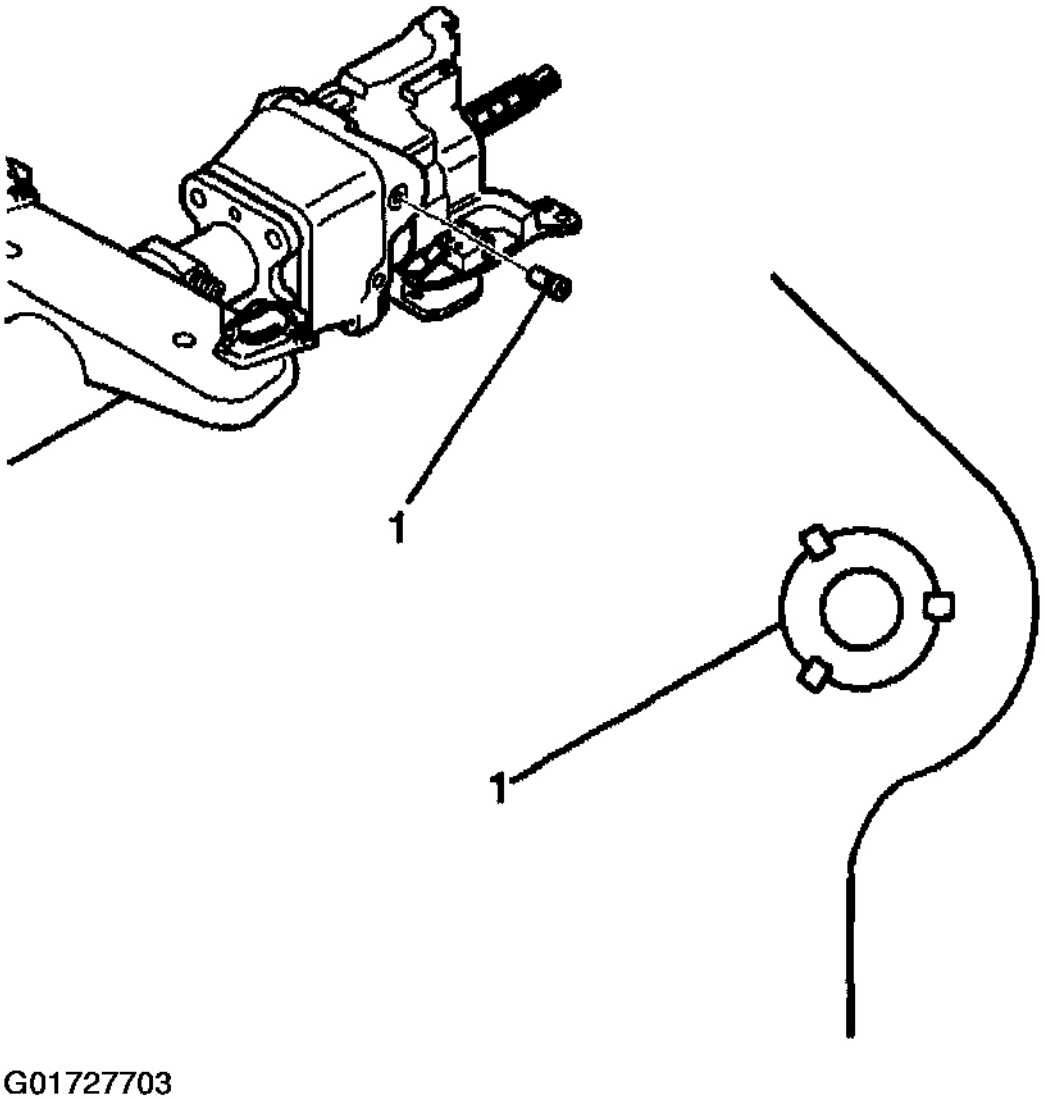


**Fig. 238: Installing Steering Column Support Assembly Pivot Pins**
**Courtesy of GENERAL MOTORS CORP.**

9. Install the adapter and bearing assembly (1) to the steering shaft assembly.
10. Install the lower spring retainer (2) to the adapter and bearing assembly (1).

**Important:** Rotate the steering shaft assembly to the 12 o'clock position.

11. Install the dual triangle sensor assembly (3) onto the steering shaft assembly.

Install the sensor retainer (4) and seal (5) onto the steering shaft assembly.

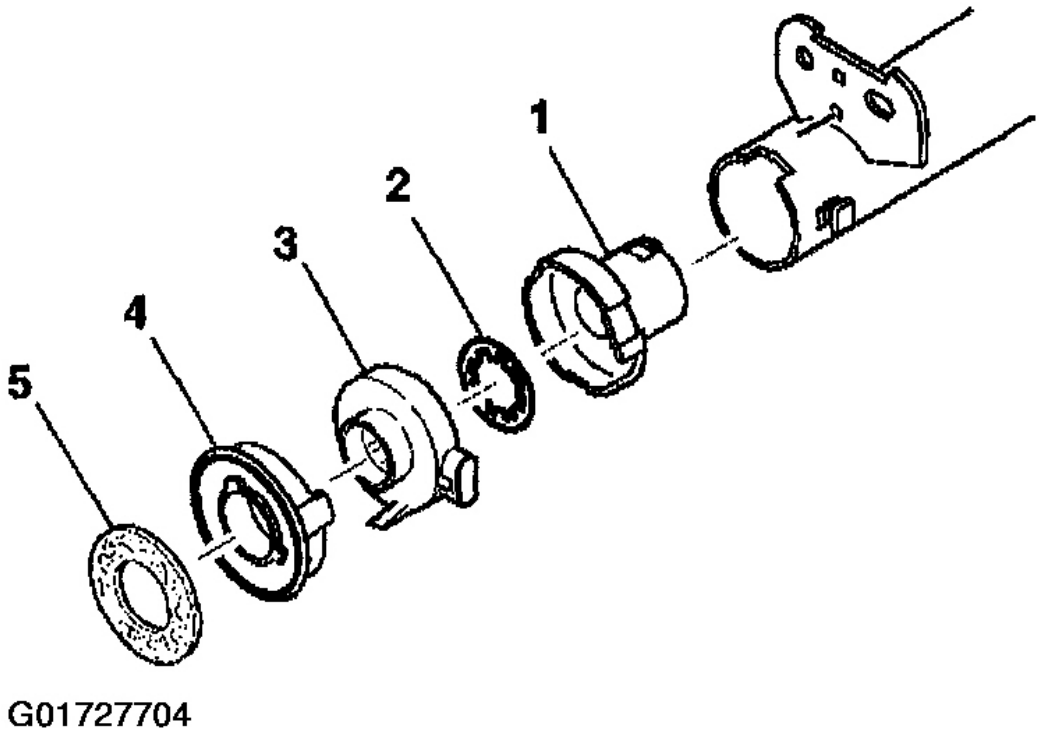


**Fig. 239: Identifying Adaptor & Bearing Assembly**
**Courtesy of GENERAL MOTORS CORP.**

12. Install the steering shaft seal (1).

**WARNING: Refer to SIR INFLATOR MODULE COIL CAUTION .**

13. Install the telescope actuator assembly. Refer to **Telescope Actuator Assembly - Assemble - Off Vehicle (Telescoping Column)**
14. Install the telescope motor assembly. Refer to **Telescope Motor Assembly - Assemble - Off Vehicle (Telescoping Column)** .
15. Install the tilt spring only. Refer to **Tilt Spring - Assemble - Off Vehicle (Telescoping Column)** or **Tilt Spring - Assemble - Off Vehicle (Non-Telescoping Column).**

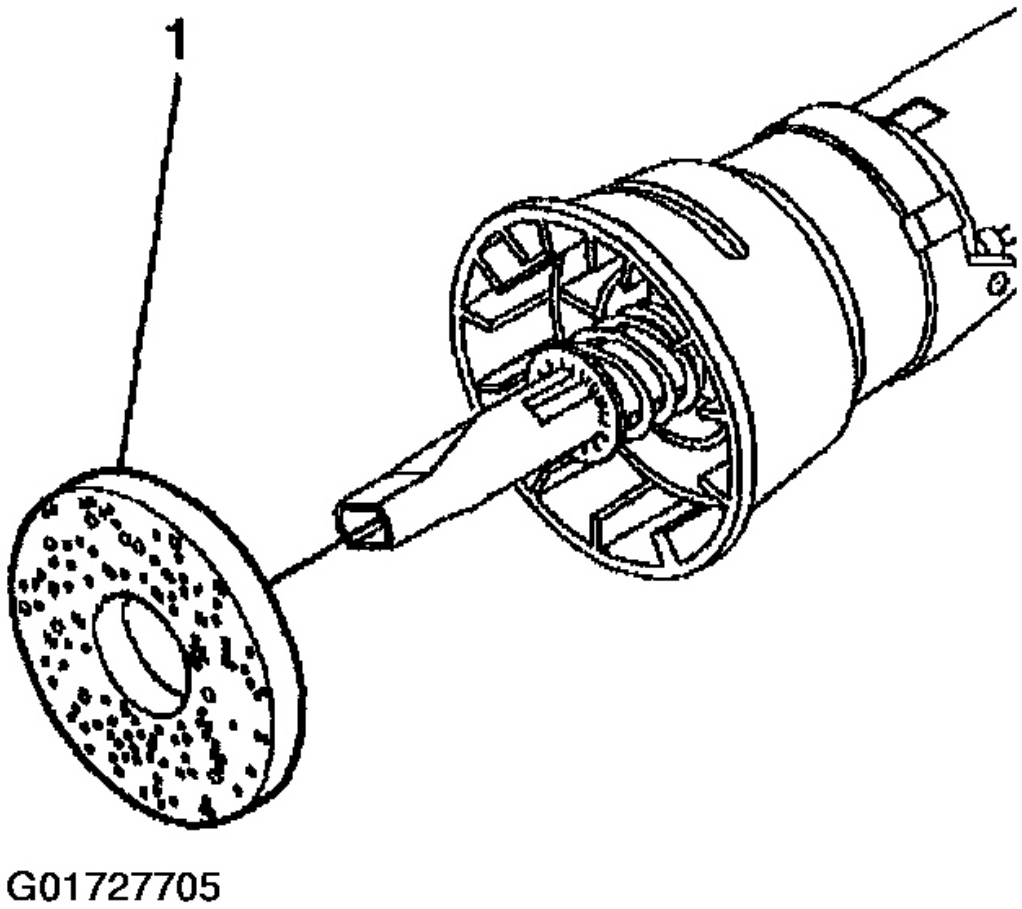


**Fig. 240: Installing Steering Shaft Seal**
**Courtesy of GENERAL MOTORS CORP.**

16. Install the signal switch housing. Refer to **Turn Signal Switch Housing - Assemble - Off Vehicle (Telescoping Column)** .
17. Enable the inflatable restraint steering wheel module. Refer to **ACTIVATING SYSTEM.**

**STEERING SHAFT, LOWER BEARING, & JACKET - ASSEMBLE - OFF VEHICLE (NON-TELESCOPING)**

**Important:** Replace the steering column support assembly if the steering column support assembly has been staked 3 times.

1. Install the steering column support assembly (1) to the steering column jacket assembly (3).

   **CAUTION: Refer to FASTENER NOTICE .**

2. Install the 4 TORX(R) head screws (2).

   **Tighten**

   Tighten the 4 TORX(R) head screws to 17 N.m (13 lb ft).

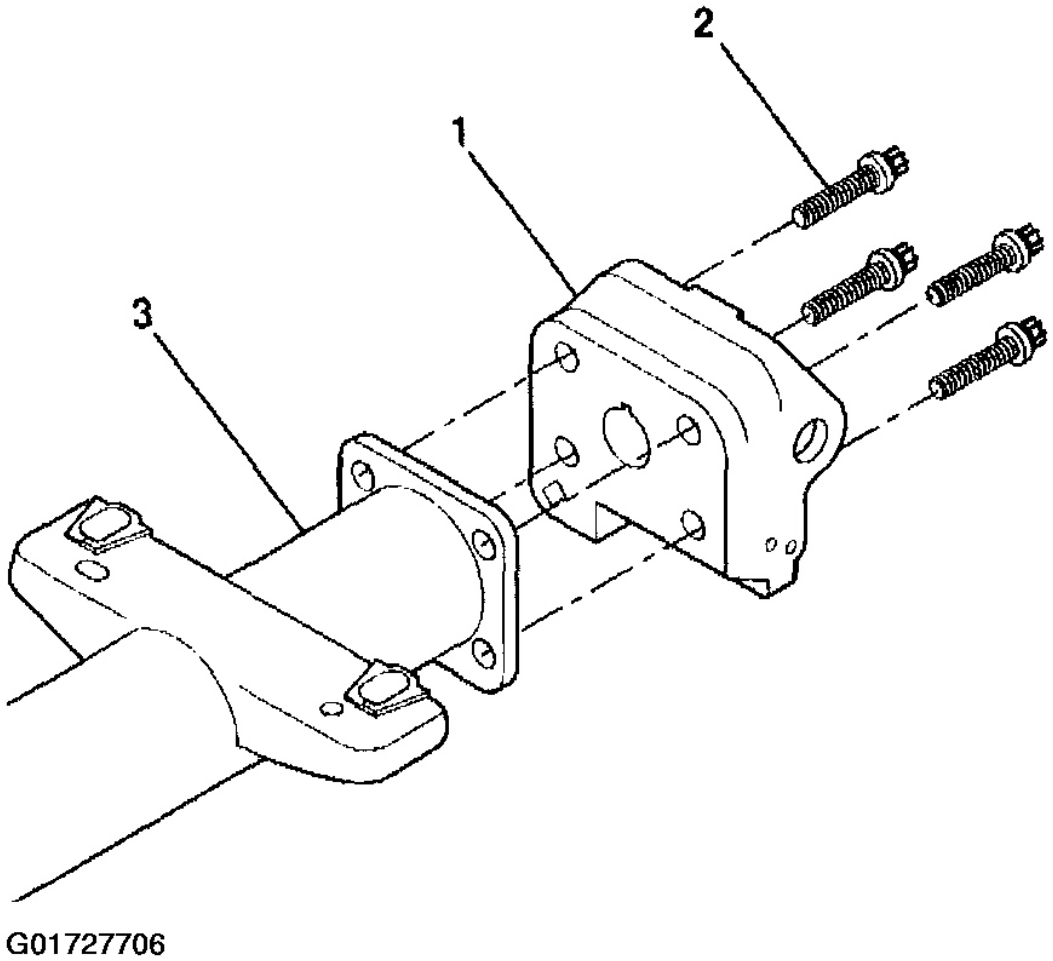


**Fig. 241: Installing Steering Column Support Assembly Screws**
**Courtesy of GENERAL MOTORS CORP.**

3. Apply lithium grease to the exposed shaft engagement areas on the centering sphere.
4. Install the lower steering shaft assembly to the race and upper shaft assembly to engage.

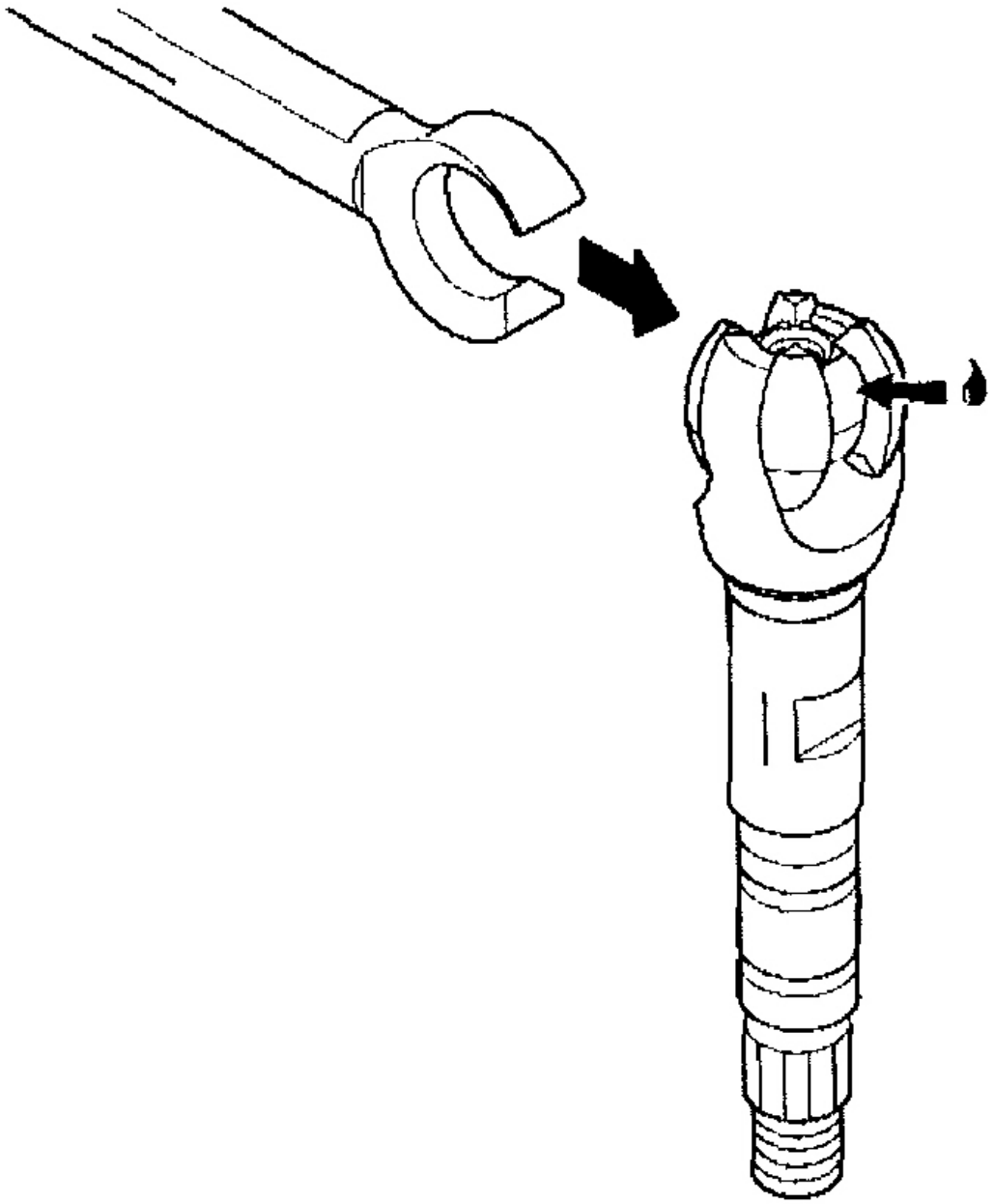

G01727707

**Fig. 242: Installing Upper & Lower Steering Shaft Assembly**
**Courtesy of GENERAL MOTORS CORP.**

5. Install the steering shaft assembly (2) into the steering column tilt head assembly (1).

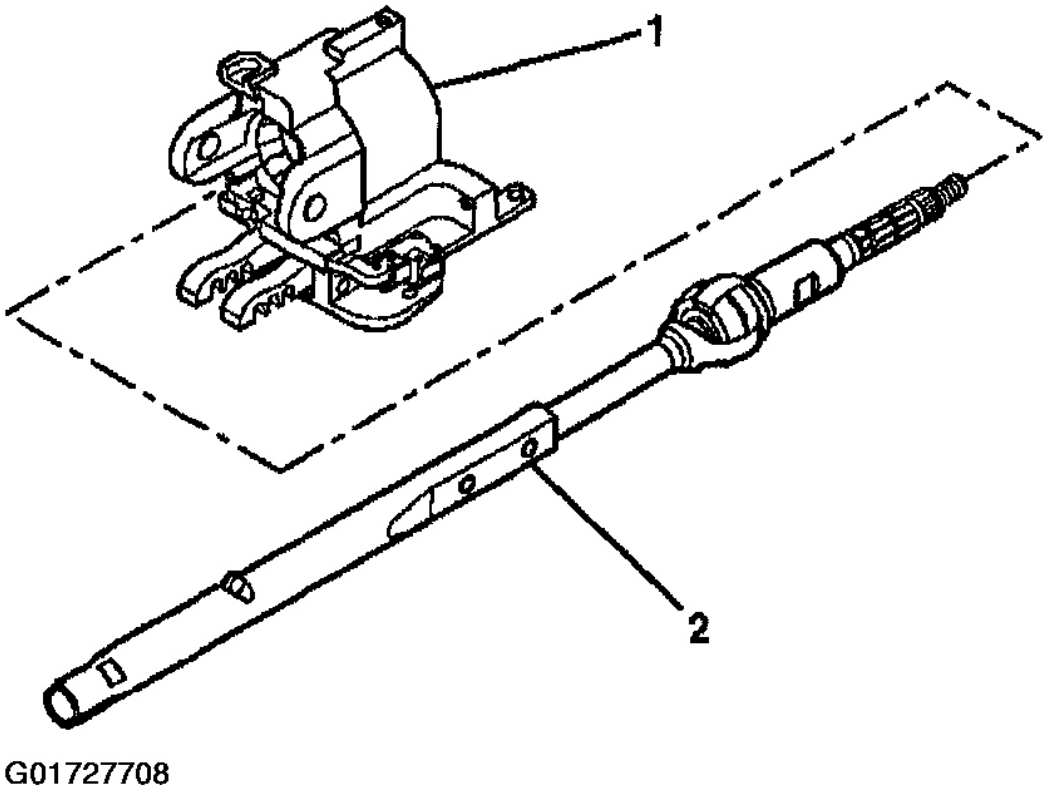


**Fig. 243: Installing Steering Shaft Assembly**
**Courtesy of GENERAL MOTORS CORP.**

6. Install the steering column tilt head assembly (1) and the steering shaft assembly to the steering column jacket assembly.

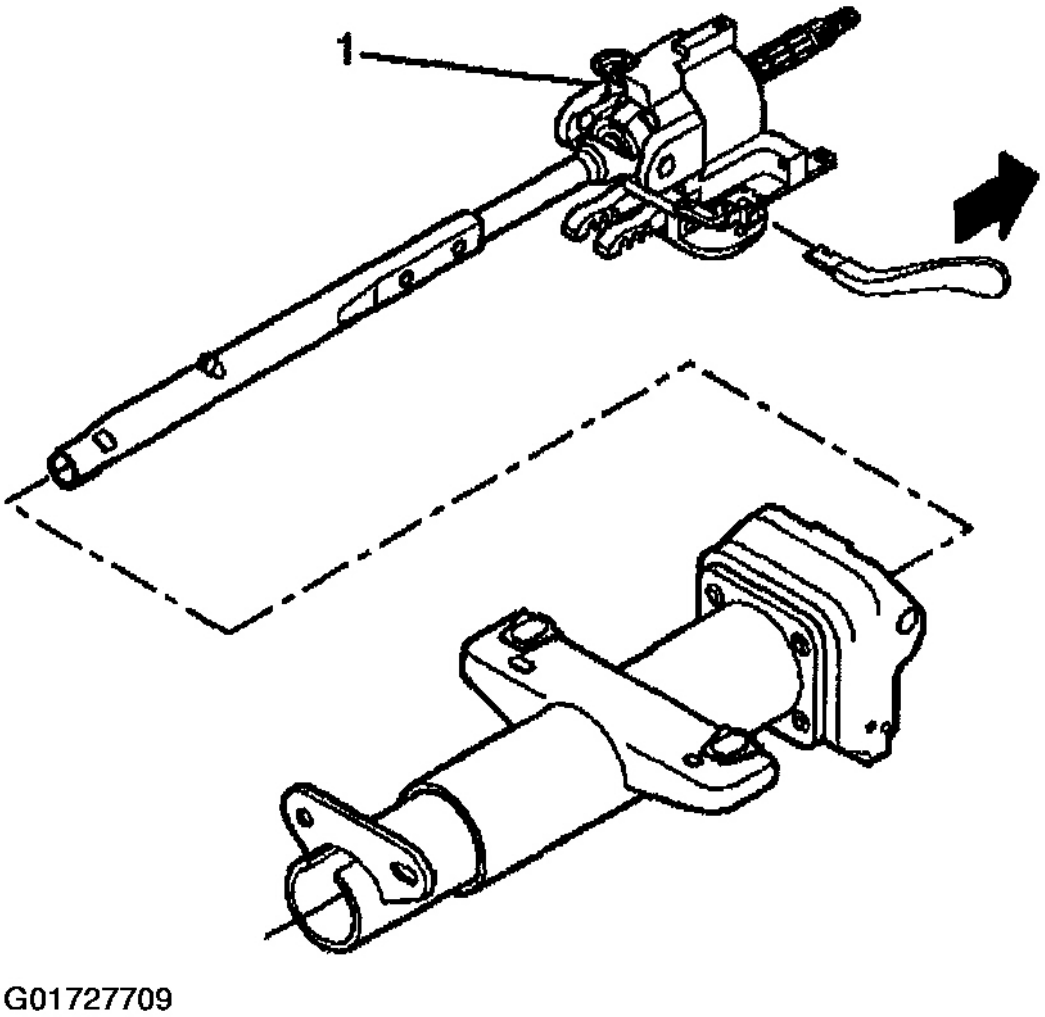


**Fig. 244: Installing Steering Column Tilt Head Assembly**
**Courtesy of GENERAL MOTORS CORP.**

**Important:** Replace the steering column support assembly if the steering column support assembly has been staked 3 times.

7. Install the 2 pivot pins (1) to the steering column support assembly.
8. Stake the pivot pins locations (1).

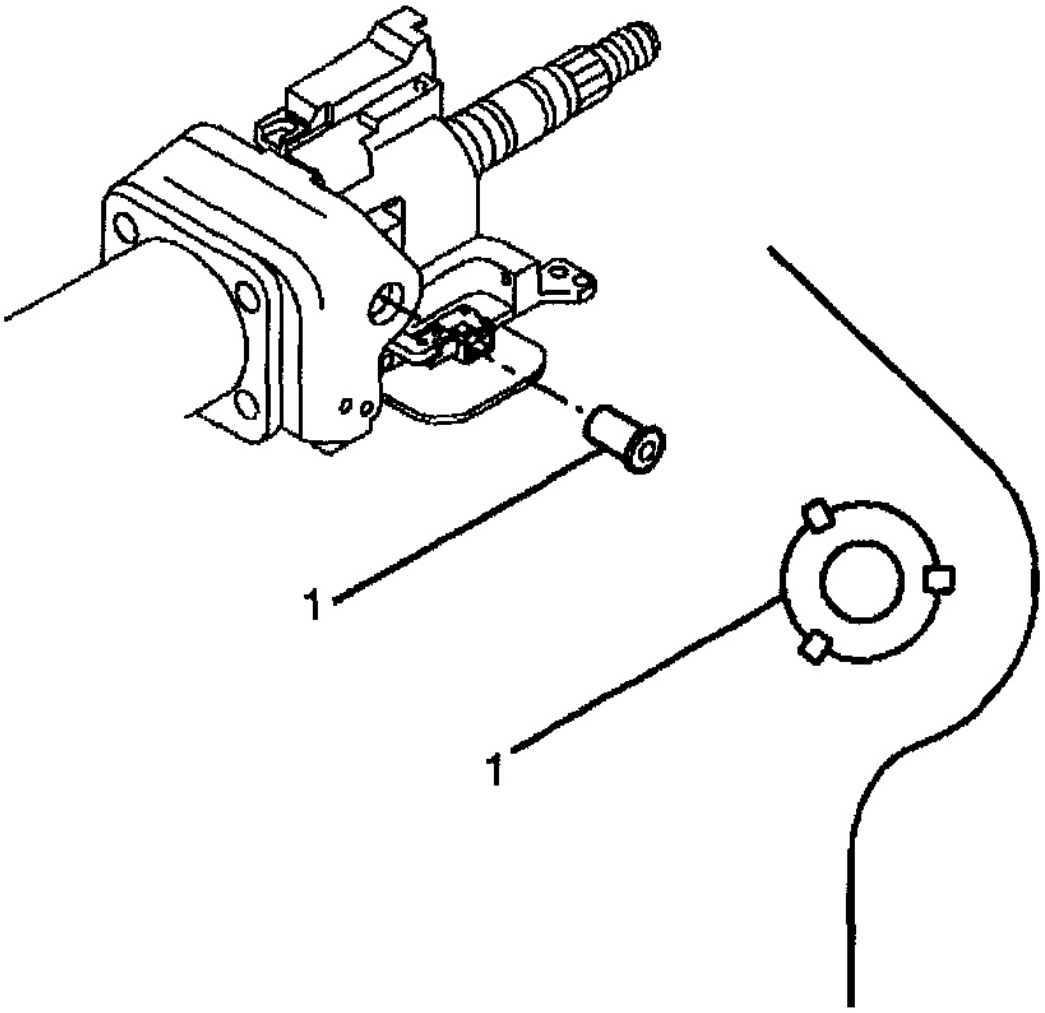


**Fig. 245: Installing Steering Column Support Assembly Pivot Pins**
**Courtesy of GENERAL MOTORS CORP.**

9. Install the adapter and bearing assembly (1) to the steering shaft assembly.

**Important:** The steering shaft assembly must be rotated to the 12 o'clock position.

10. Install the dual triangle sensor assembly (2) onto the steering shaft assembly.
11. Install the sensor retainer (3) onto the steering shaft assembly.
12. Install the steering shaft seal (4).

13. Install the signal switch housing. Refer to **Turn Signal Switch Housing - Assemble - Off Vehicle (Telescoping Column)** .
14. Install the tilt spring. Refer to **Tilt Spring - Assemble - Off Vehicle (Telescoping Column)** or **Tilt Spring - Assemble - Off Vehicle (Non-Telescoping Column)** .

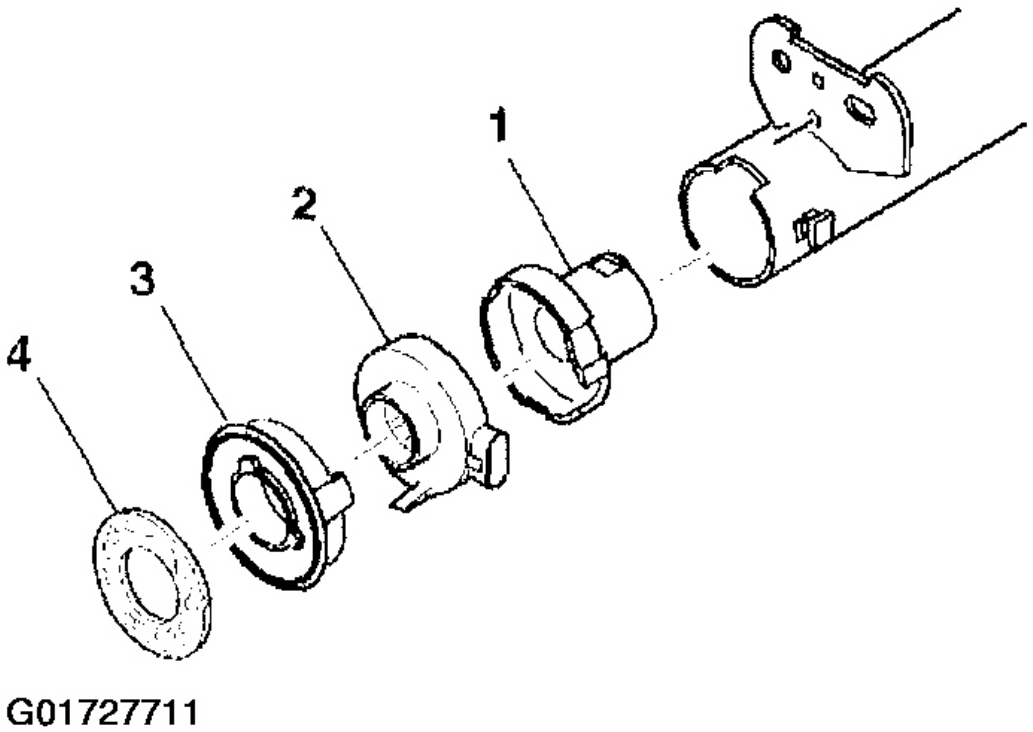


**Fig. 246: Identifying Adaptor & Bearing Assembly**
**Courtesy of GENERAL MOTORS CORP.**

15. Enable the inflatable restraint steering wheel module. Refer to **ACTIVATING SYSTEM** .

**INFLATABLE RESTRAINT COIL CENTERING - OFF VEHICLE (COLUMN SHIFT & FLOOR SHIFT)**

**CAUTION: The new SIR coil assembly should be centered. Improper alignment of the SIR coil assembly may damage the unit, causing an inflatable restraint malfunction.**

1. Verify the following before centering the inflatable restraint steering wheel module coil:
   - The wheels on the vehicle are straight ahead.
   - The block tooth (1) of the steering shaft assembly is in the 12 o'clock position.
   - The ignition switch is in the LOCK position.

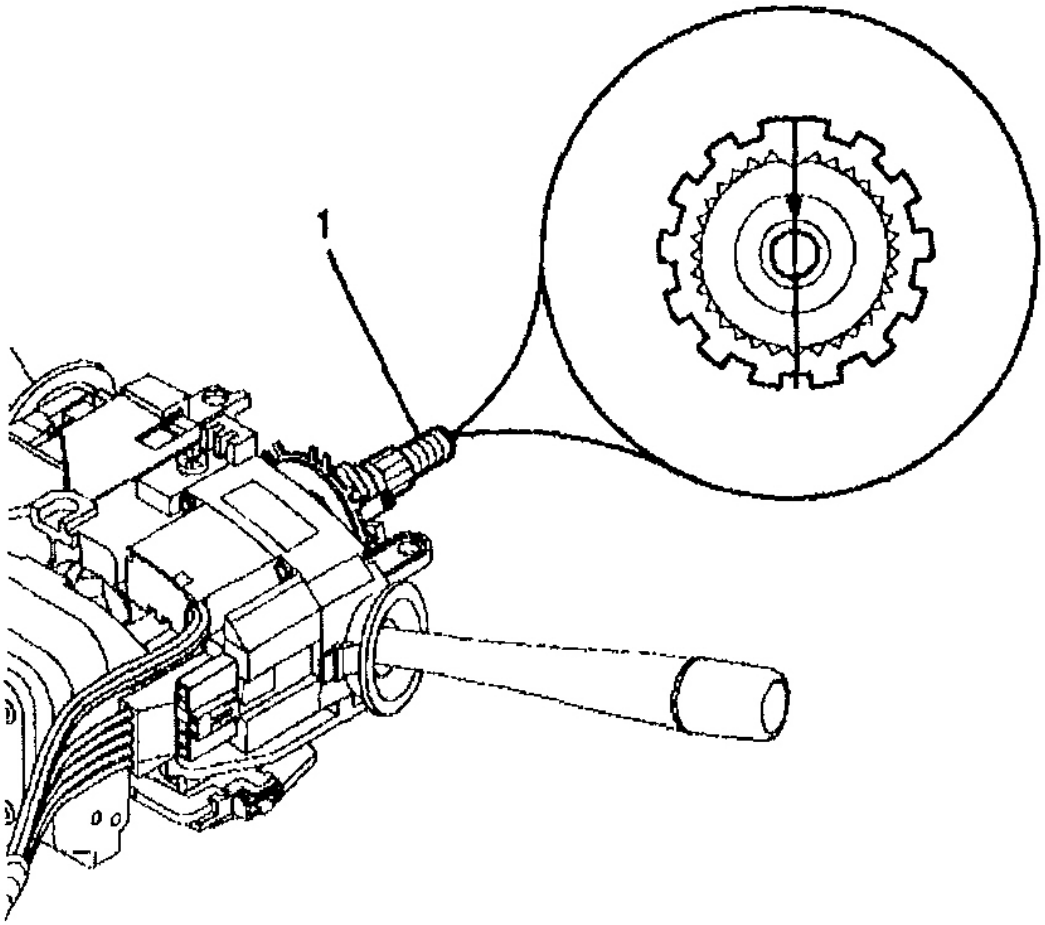


**Fig. 247: Identifying Steering Shaft Assembly Block Tooth**
**Courtesy of GENERAL MOTORS CORP.**

2. If the front (5) of the inflatable restraint steering wheel module coil has a centering window (4), and on the back side (2) a spring service lock (1), perform the following steps:

   **2.1.** Hold the inflatable restraint steering wheel module coil with the face up.

**2.2.** While depressing the spring service lock, rotate the coil hub clockwise until the coil ribbon stops.

**2.3.** Rotate the coil hub slowly, counterclockwise, until the centering window appears yellow and both arrows (3) line up.

**2.4.** Release spring service lock between the locking tab. The inflatable restraint steering wheel module coil is now centered.

**2.5.** Align the centered inflatable restraint steering wheel module coil with the horn tower and slide onto the steering shaft assembly.

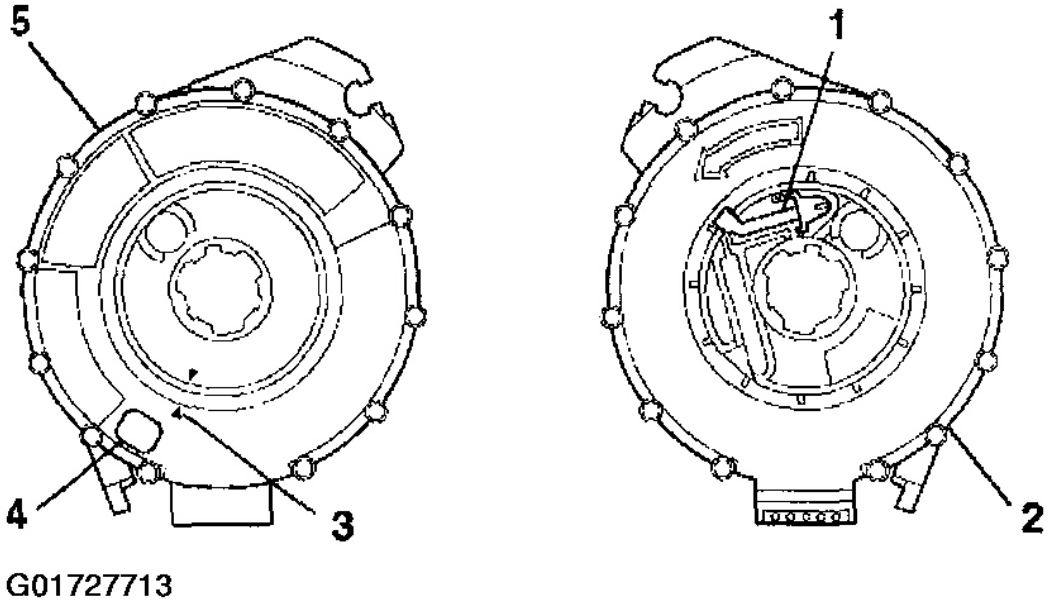


**Fig. 248: Identifying Inflatable Restraint Steering Wheel Module**
**Courtesy of GENERAL MOTORS CORP.**

3. If the front (4) of the inflatable restraint steering wheel module coil has a centering window (3) and no spring service lock on the back side (1), perform the following steps:

   **3.1.** Hold the inflatable restraint steering wheel module coil with the face up.

   **3.2.** Rotate the coil hub clockwise until the coil ribbon stops.

   **3.3.** Rotate the coil hub slowly, counterclockwise until the centering window appears yellow and both arrows (2) line up. This is the CENTER position.

   **3.4.** While holding the coil hub in the CENTER position, align the inflatable restraint

steering wheel module coil with the horn tower and slide onto the steering shaft assembly.

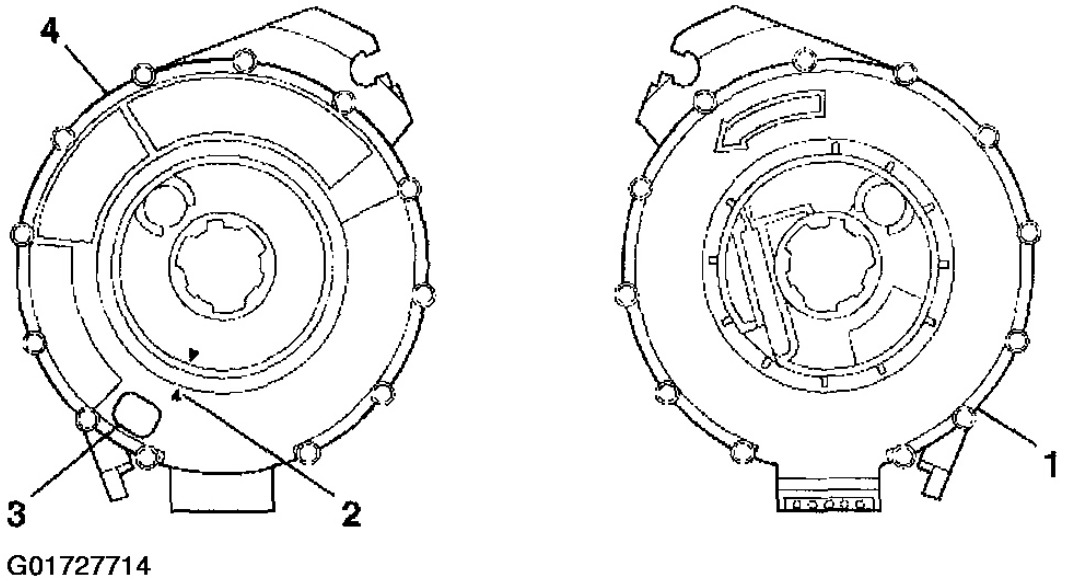


**Fig. 249: Identifying Inflatable Restraint Steering Wheel Module**
**Courtesy of GENERAL MOTORS CORP.**

4. If no centering window is present on the front side (3) of the inflatable restraint steering wheel module coil, but a spring service lock (1) is on the back side (2), perform the following steps:

   **4.1.** Hold the inflatable restraint steering wheel module coil with the back side up.

   **4.2.** While depressing the spring service lock, rotate the coil hub in the direction of the arrow (4) until the coil ribbon stops.

   **4.3.** Still pressing the spring service lock, rotate the coil hub in the opposite direction 2 1/2 revolutions.

   **4.4.** Release the spring service lock between locking tabs. The inflatable restraint steering wheel module coil is now centered.

   **4.5.** Align the centered inflatable restraint steering wheel module coil with the horn tower and slide onto the steering shaft assembly.

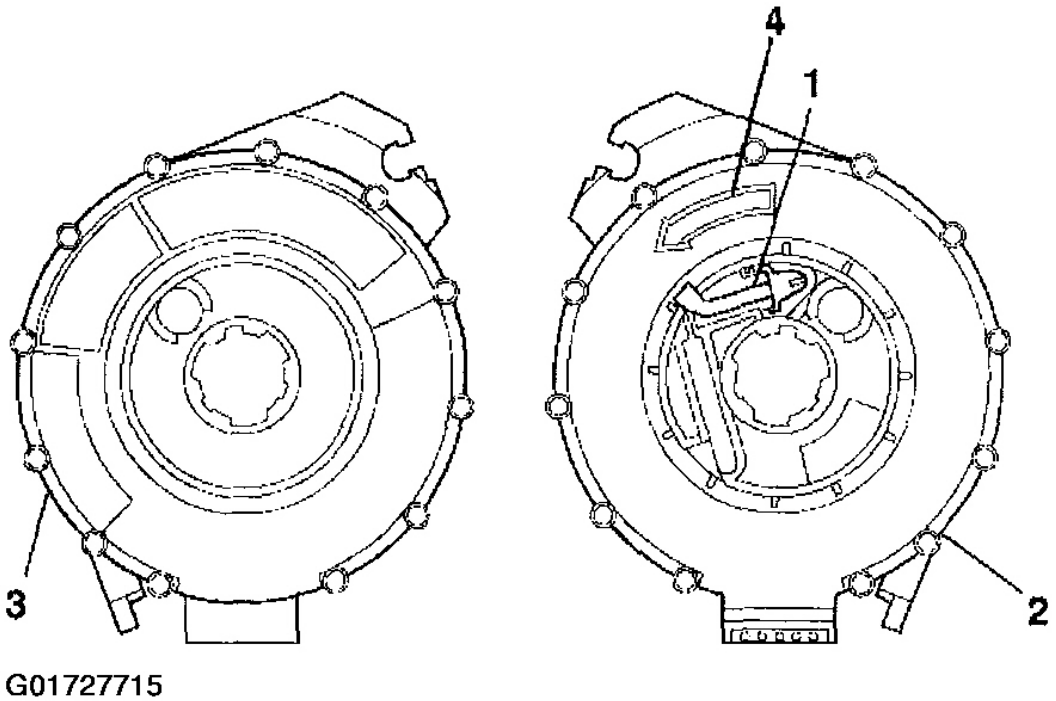


**Fig. 250: Identifying Inflatable Restraint Steering Wheel Module**
**Courtesy of GENERAL MOTORS CORP.**

5. For no centering window on the front side (2) of the inflatable restraint steering wheel module coil and no spring service lock on the back side (1), perform the following steps:

   **5.1.** Hold the inflatable restraint steering wheel module coil with the face up.

   **5.2.** Rotate the coil hub in the direction of the arrow until the coil ribbon stops.

   **5.3.** Rotate the coil hub, slowly, counterclockwise, for 2 1/2 revolutions. This is the CENTER position.

   **5.4.** While maintaining the coil hub in the CENTER position, align the centered inflatable restraint steering wheel module coil with the horn tower and slide onto the steering shaft assembly.

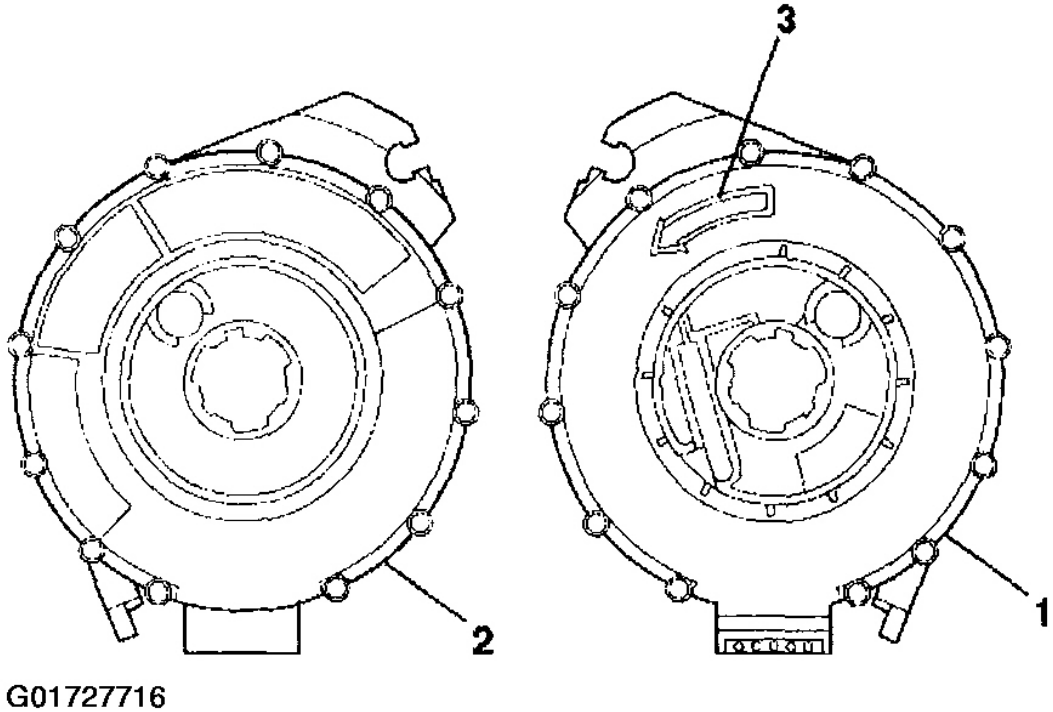


**Fig. 251: Identifying Inflatable Restraint Steering Wheel Module**
**Courtesy of GENERAL MOTORS CORP.**

## DESCRIPTION & OPERATION

### STEERING WHEEL & COLUMN DESCRIPTION & OPERATION

#### Tilt/Telescoping Description

The tilt/telescoping steering column uses the same tilt lever as the non- telescoping column and functions in the same manner. The telescoping function of this column consists of the telescoping drive motor, the telescoping actuator assembly and the telescoping actuator switch. The telescoping actuator assembly is cable driven by the telescoping drive motor. The telescoping actuator switch operates the inward or outward movement of the steering wheel.

The energy absorbing and locking steering column includes three important features in addition to the steering function.

1. The steering column is energy absorbing and is designed to compress in a front-end collision which will lessen the chance of injury to the driver.

2. The steering column has a telescoping control system that consists of an electronic control module capable of Class 2 serial data communication, a steering column power assembly with positioning motor and sensor, and a steering column control switch.
3. The multi-function lever provides for the control of the headlamp high beams, and the windshield washer and wiper.

The steering column may be removed, disassembled and reassembled with relative ease. It is important to use only the specified screws, bolts and nuts and to tighten them to the specified torque in order to ensure the proper energy absorbing functions. When the steering column assembly is removed from the vehicle, special care must be taken in handling it.

Avoid the use of a steering wheel puller other than the special one recommended in this manual. Sharply striking the end of the steering shaft, leaning on the assembly or dropping the assembly could shear off or loosen the plastic fasteners which maintain the steering column rigidity.

**Tilt/Telescoping Operation**

The telescoping steering column in/out switch is an input to the seat control module. The telescoping drive motor is an output function of the seat control module. The telescoping actuator assembly is cable driven by the telescoping drive motor.

Steering column memory settings are stored in the seat control module. The steering column position sensor is an internal part of the telescoping actuator assembly, and is an input to the seat control module. The seat control module uses the position sensor input when storing and recalling memory settings.

Memory steering column, and the easy enter/exit operations are performed by the seat control module. However the left door control module assumes control when memory settings are stored and recalled, by use of the serial data link. The body control module assumes control when the easy enter/exit operation occurs, by use of the serial data link.

The body control module stores the RPO code configuration which signals to the seat control module whether or not the telescoping steering column option is active. This RPO code configuration must be correct, and received by the seat control module, or power seat, and telescoping steering column operation will be inoperative or incorrect.

**Steering Column Lock Motor Description**

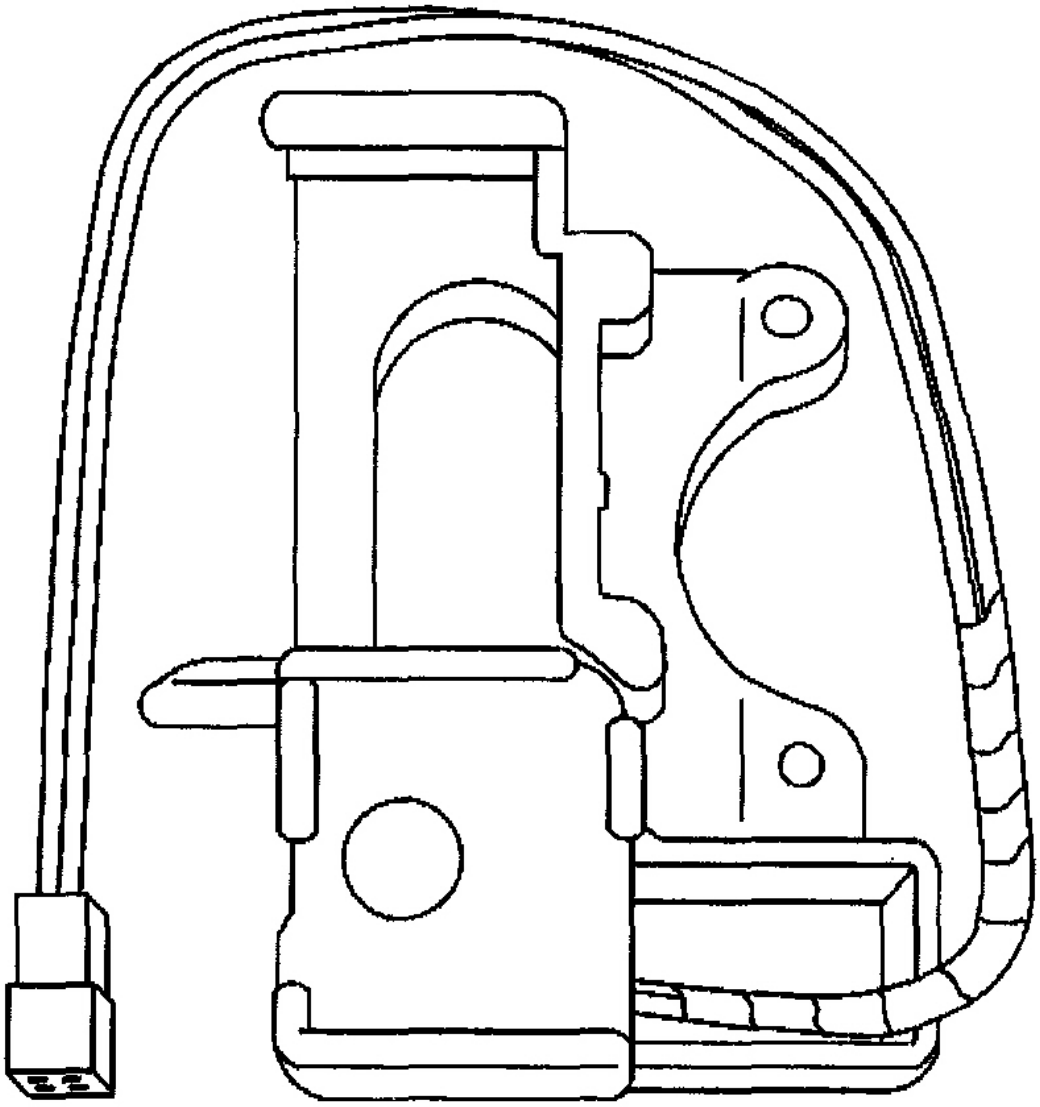


**Fig. 252: Identifying BCM**
**Courtesy of GENERAL MOTORS CORP.**

The BCM provides the steering column control function which allows the column to be electronically locked or unlocked. The BCM provides two outputs, steering column lock and steering column unlock. The BCM can apply a ground or battery output on the steering column lock circuit or steering column unlock circuit depending on the desired steering column lock motor position. The BCM accomplishes steering column lock motor operation based on the

following output commands:

**Steering Wheel and Column Description and Operation**

| Steering Column Unlock | Steering Column Lock | Steering Column Lock Motor Operation |
|---|---|---|
| GROUND | GROUND | NONE |
| GROUND | BATTERY | UNLOCK |
| BATTERY | GROUND | LOCK |
| BATTERY | BATTERY | NONE |

G01727718

**Fig. 253: Steering Wheel Column Lock Motor Operation**
**Courtesy of GENERAL MOTORS CORP.**

The BCM controls the position of the steering column lock motor based on the following input information:

- Ignition position
- Key IN ignition status
- Key OUT of ignition status
- Steering column lock feedback switch
- PASS-Key(R) system
- PCM password information
- System voltage

**Steering Column Lock Motor Operation**

The BCM supplies the ground to the steering column motor through the key OUT of ignition switch which is integrated within the ignition switch. This prevents the BCM from locking the steering column with the key IN the ignition. The BCM supplies battery voltage to the steering column lock motor through BCM2 fuse. The BCM uses a feedback switch which is integrated within the steering column lock motor in order to monitor the motor position. The feedback switch allows the BCM to determine if the commanded position was actually accomplished. If the

BCM is unable to determine the steering column lock state, due to a steering column lock system malfunction or by disconnecting the steering column motor with the ignition in the ON position, the BCM will enter a fail enable mode and prevent steering column lock operation. The PCM will also inhibit vehicle motion by disabling fuel. To clear the BCM fail enable mode, disconnect the BCM & IPC fuse in the I/P fuse block for 15 seconds. The BCM also monitors its circuitry for the column lock circuit. If the BCM detects a malfunction present the Driver Information Center (DIC) will display PULL KEY- WAIT 10 SEC. When the key is pulled out of the ignition for 10 seconds and then key is turned to the ON position the DIC will display SERVICE COLUMN LOCK and a DTC will set in the BCM memory. Always perform the BCM Diagnostic System Check before attempting any diagnosis on the steering column lock system.

## SPECIAL TOOLS & EQUIPMENT

| Illustration | Tool Number/ Description |
|---|---|
| 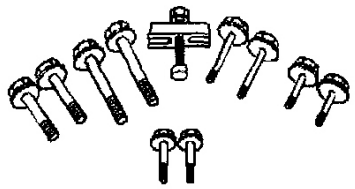 | J 1859-A<br>Steering Wheel Puller |
| 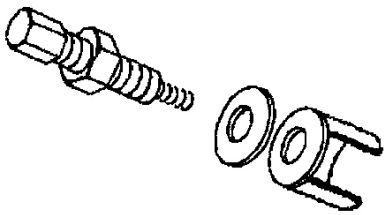 | J 21854-01<br>Pivot Pin Remover |
| 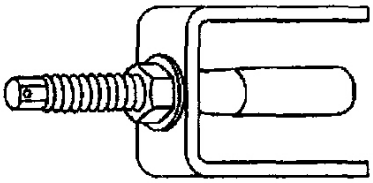 | J 23653-SIR<br>Lock Plate Compressor |

G01727719

**Fig. 254: Special Tools & Equipment (1 Of 2)**
**Courtesy of GENERAL MOTORS CORP.**

| Illustration | Tool Number/ Description |
|---|---|
| 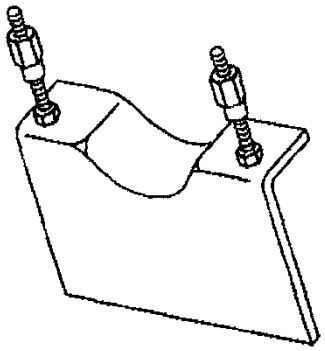 | J 41352<br>Modular Column Holding Fixture |
| 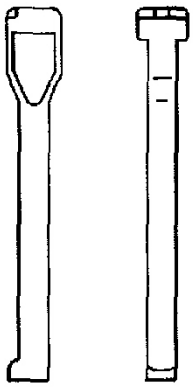 | J 42120<br>Steering Wheel Puller Legs |
| 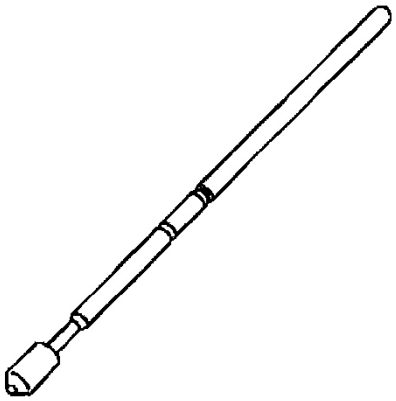 | J 42640<br>Steering Column Lock Pin |

G01727720

**Fig. 255: Special Tools & Equipment (2 Of 2)**
**Courtesy of GENERAL MOTORS CORP.**