# ENGINE

# 4G1 SERIES

## CONTENTS


GENERAL INFORMATION ..... 11A- 0- 3
1. SPECIFICATIONS ..... 11A- 1- 1
   GENERAL SPECIFICATIONS ..... 11A- 1- 1
   SERVICE SPECIFICATIONS ..... 11A- 1- 3
   TORQUE SPECIFICATIONS ..... 11A- 1- 9
   SEALANT ..... 11A- 1-10
2. SPECIAL TOOLS ..... 11A- 2- 1
3. DRIVE BELT AND TIMING BELT ..... 11A- 3- 1
4. INTAKE MANIFOLD ..... 11A- 4- 1
5. EXHAUST MANIFOLD AND WATER PUMP ..... 11A- 5- 1
6. ROCKER ARMS AND CAMSHAFT ..... 11A- 6- 1
7. ROCKER ARMS AND ROCKER SHAFTS ..... 11A- 7- 1
8. CYLINDER HEAD AND VALVES ..... 11A- 8- 1
9. JET VALVE (ENGINE WITH JET VALVES) ..... 11A- 9- 1
10. FRONT CASE AND OIL PUMP ..... 11A-10- 1
11. PISTON AND CONNECTING ROD ..... 11A-11- 1
12. CRANKSHAFT, FLYWHEEL AND DRIVE PLATE ..... 11A-12- 1
13. CYLINDER BLOCK ..... 11A-13- 1


© Mitsubishi Motors Corporation Apr. 1990

# GENERAL INFORMATION

## ENGINE SECTIONAL VIEW – 12-VALVE ENGINE

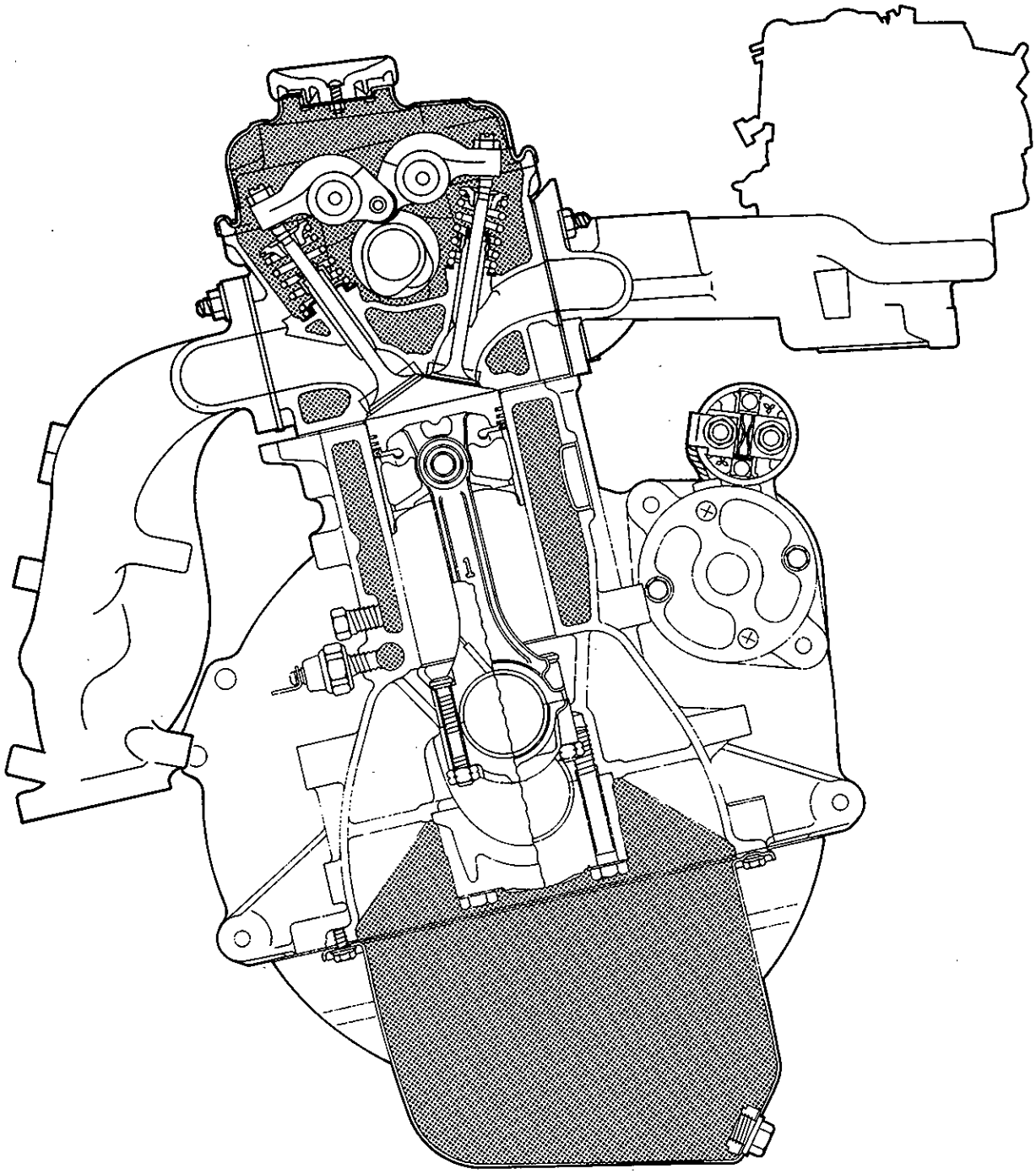

1EN0085

© Mitsubishi Motors Corporation Apr. 1990

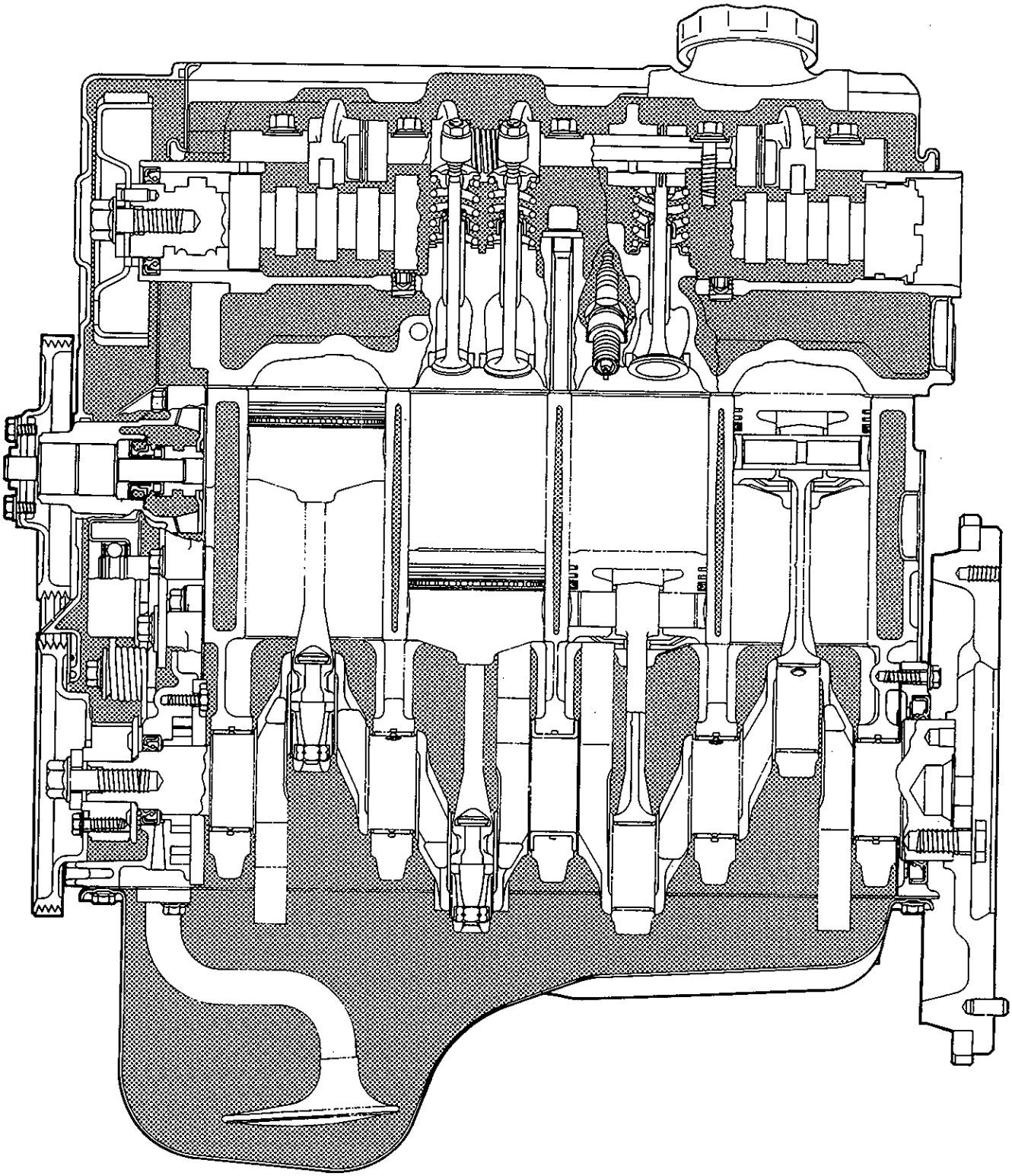

1EN0086

© Mitsubishi Motors Corporation Apr. 1990

## ENGINE SECTIONAL VIEW – 8-VALVE ENGINE

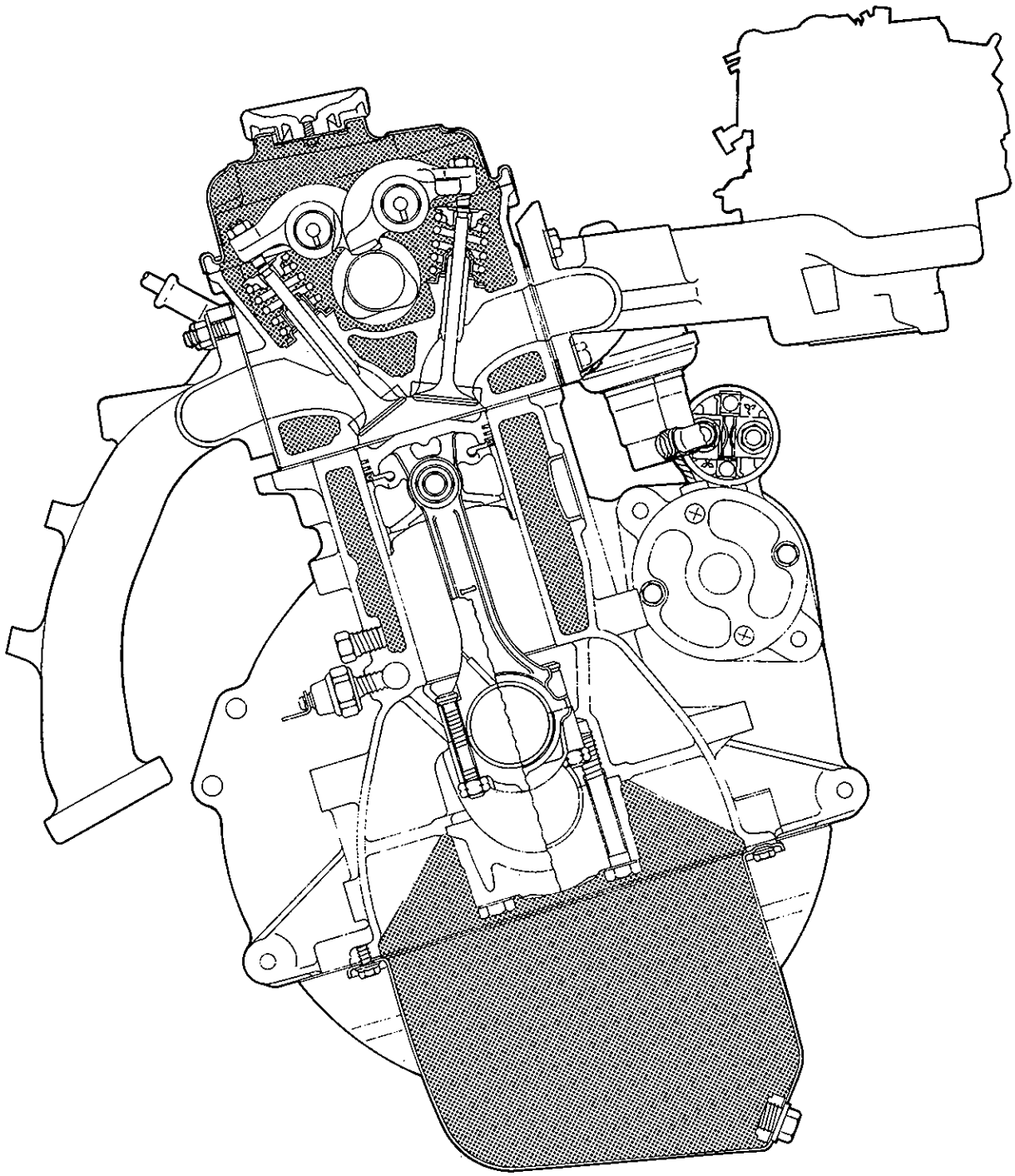

1EN312

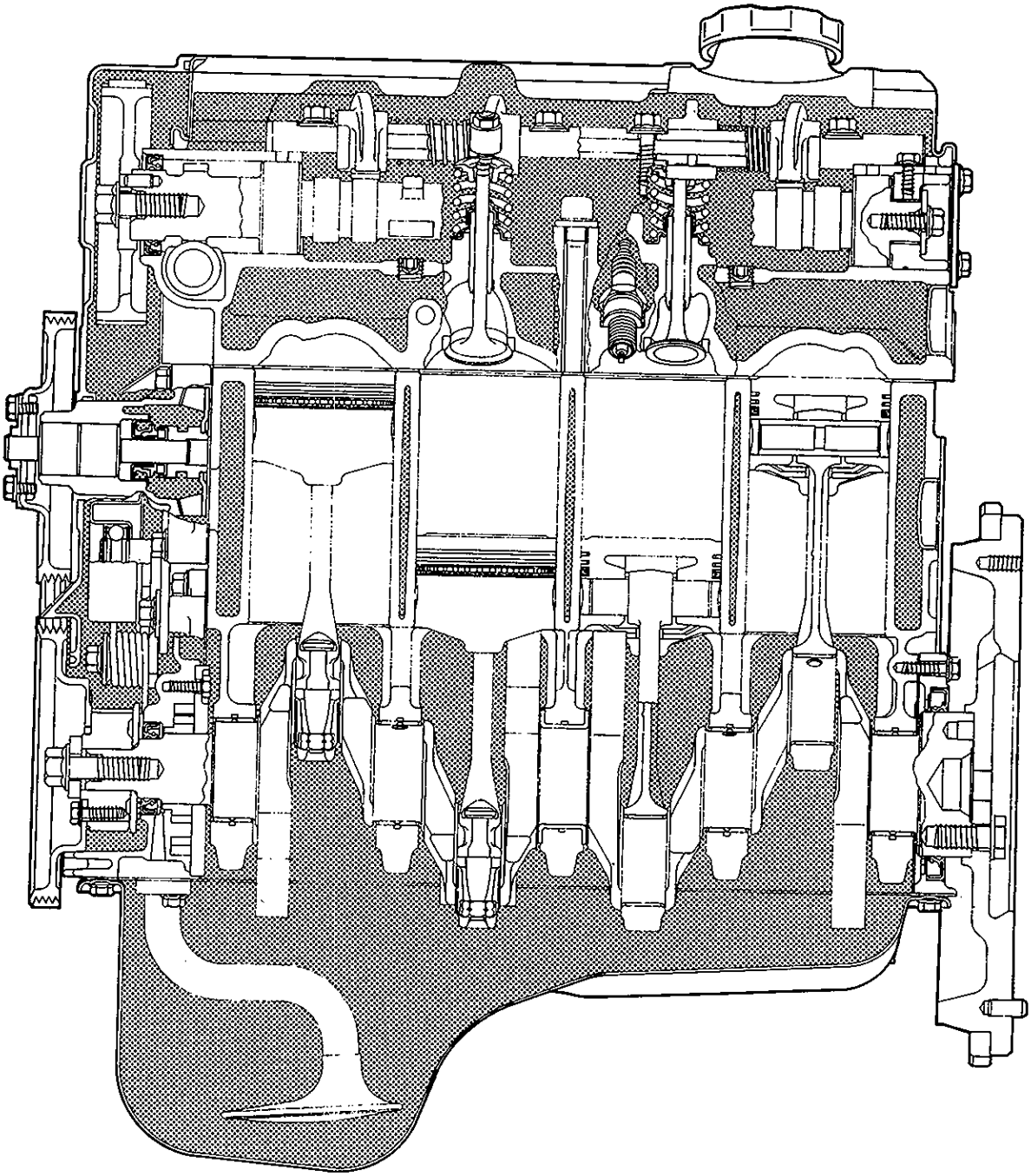

1EN313

© Mitsubishi Motors Corporation Apr. 1990

## LUBRICATION SYSTEM – 12-VALVE ENGINE

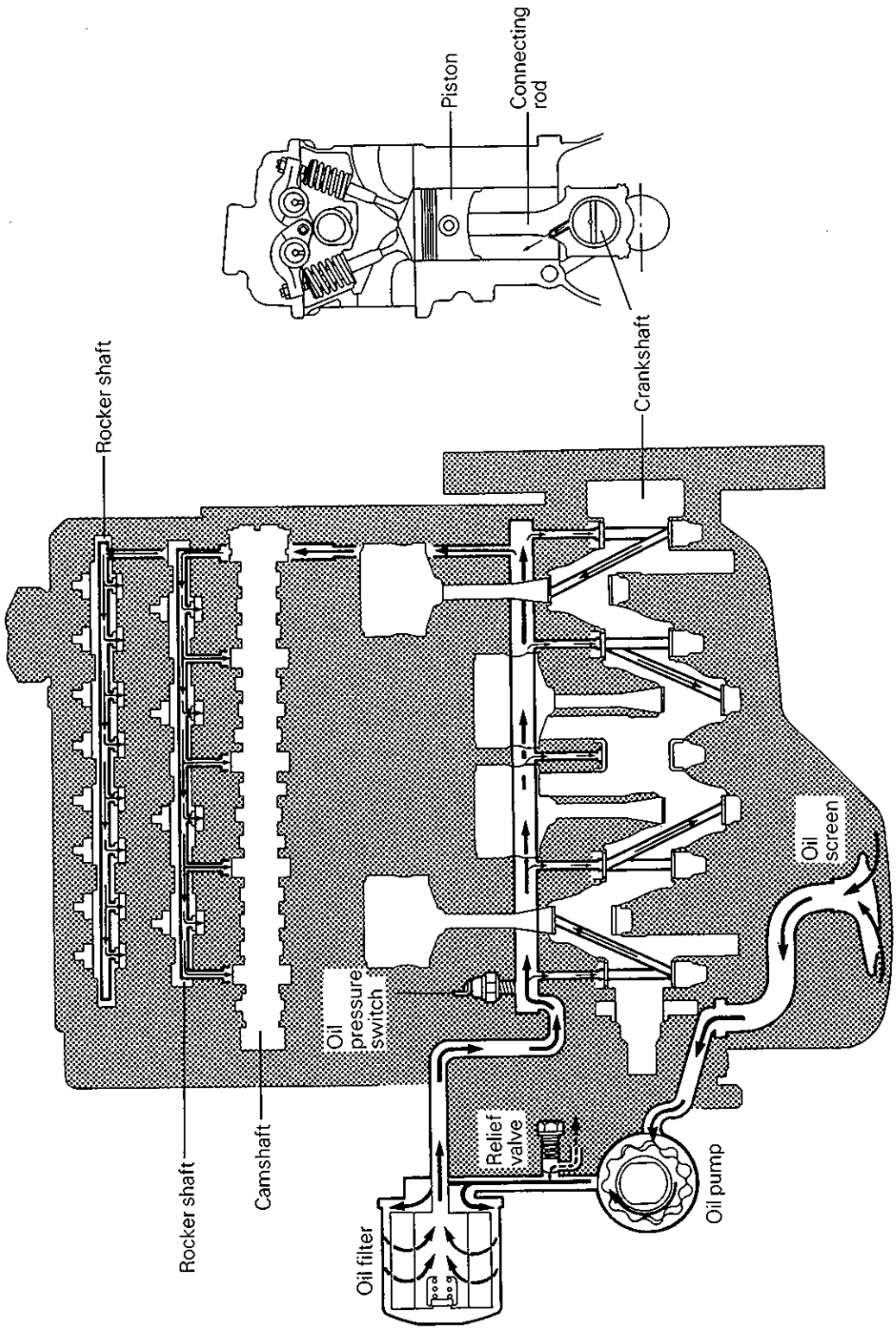


1LU0009

## LUBRICATION SYSTEM – 8-VALVE ENGINE

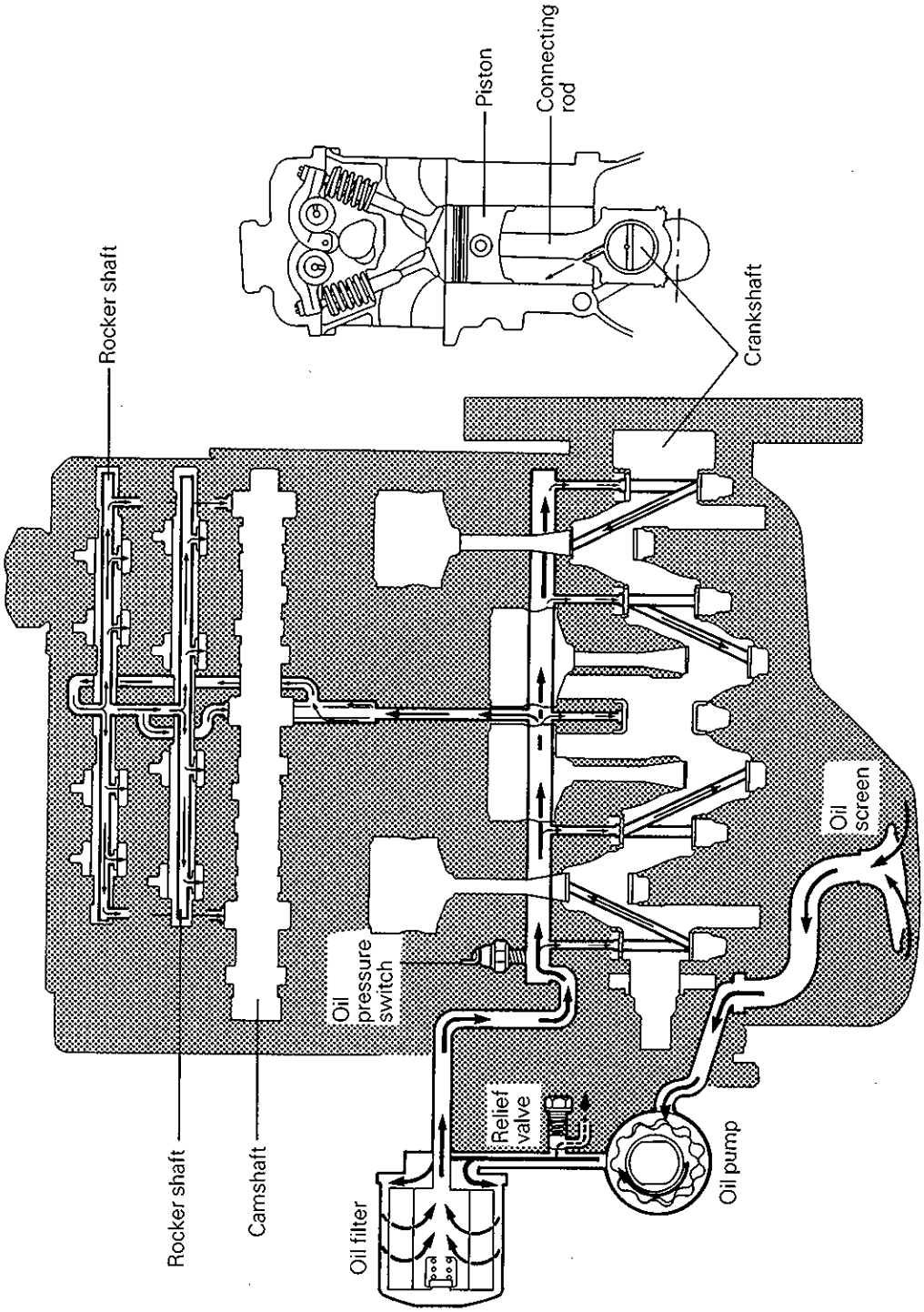


1LU0008

## LIST OF MAJOR CHANGES

| Description of change | | Applicable Engine Model | Effective Date |
|---|---|---|---|
| ① | Oil pump has been changed from gear type to trochoid type. | All | From Aug. 1988 |
| ② | The connecting rod and crankshaft have been changed for weight reduction of major moving parts.<br>With this change, the tightening method of the connecting rod cap nut has also been changed. | All | From Aug. 1988 |
| ③ | The crankshaft is now fillet rolled. | All | From Jan. 1989 |
| ④ | According to the adoption of the selective connecting rod bearings and crankshaft bearings, the bearing selecting procedures have been added. | All | From May 1995 |

## NOTES

# 1. SPECIFICATIONS

## GENERAL SPECIFICATIONS – 12-VALVE ENGINE

| Description | Specifications |
|---|---|
| Type | In-line OHV, SOHC |
| Number of cylinders | 4 |
| Combustion chamber | Pentroof type |
| Total displacement | |
| 4G13 | 1,298 cc (79.21 cu.in.) |
| 4G15 | 1,468 cc (89.58 cu.in.) |
| Cylinder bore | |
| 4G13 | 71 mm (2.795 in.) |
| 4G15 | 75.5 mm (2.972 in.) |
| Piston stroke | 82 mm (3.228 in.) |
| Compression ratio | |
| 4G13 | 9.5 |
| 4G15 | 9.2 |
| Valve timing: 4G13 and 4G15 carburetor engine | |
| Intake valve | |
| Opens | 15° BTDC |
| Closes | 53° ABDC |
| Exhaust valve | |
| Opens | 57° BBDC |
| Closes | 15° ATDC |
| Valve timing: 4G15 multi-point fuel injection engine for Europe and General Export | |
| Intake valve | |
| Opens | 17° BTDC |
| Closes | 55° ABDC |
| Exhaust valve | |
| Opens | 59° BBDC |
| Closes | 17° ATDC |
| Valve timing: 4G15 multi-point fuel injection engine for Australia | |
| Intake valve | |
| Opens | 14.5° BTDC |
| Closes | 51.5° ABDC |
| Exhaust valve | |
| Opens | 51.5° BBDC |
| Closes | 14.5° ATDC |
| Lubrication system | Pressure feed, full-flow filtration |
| Oil pump type | Trochoid type |
| Cooling system | Water-cooled forced circulation |
| Water pump type | Centrifugal impeller type |

© Mitsubishi Motors Corporation Apr. 1990

## GENERAL SPECIFICATIONS – 8-VALVE ENGINE

| Description | Specifications |
|---|---|
| Type | In-line OHV, SOHC |
| Number of cylinders | 4 |
| Combustion chamber | Compact type |
| Total displacement | |
| 4G16 | 1,198 cc (73.11 cu.in.) |
| 4G13, G13B | 1,298 cc (79.21 cu.in.) |
| 4G15, G15B | 1,468 cc (89.58 cu.in.) |
| Cylinder bore | |
| 4G16 | 68.2 mm (2.685 in.) |
| 4G13, G13B | 71 mm (2.795 in.) |
| 4G15, G15B | 75.5 mm (2.972 in.) |
| Piston stroke | 82 mm (3.228 in.) |
| Compression ratio | |
| 4G16 | 9.5 |
| 4G13, G13B | 9.7 |
| 4G15, G15B | 9.4 |
| Valve timing: 4G16, 4G13 and 4G15 | |
| Intake valve | |
| Opens | 19° BTDC |
| Closes | 57° ABDC |
| Exhaust valve | |
| Opens | 57° BBDC |
| Closes | 19° ATDC |
| Valve timing: 4G15 multi-point fuel injection engine for Australia | |
| Intake valve | |
| Opens | 18.5° BTDC |
| Closes | 51.5° ABDC |
| Exhaust valve | |
| Opens | 51.5° BBDC |
| Closes | 18.5° ATDC |
| Valve timing: G13B and G15B | |
| Intake valve | |
| Opens | 18° BTDC |
| Closes | 49° ABDC |
| Exhaust valve | |
| Opens | 49° BBDC |
| Closes | 18° ATDC |
| Lubrication system | Pressure feed, full-flow filtration |
| Oil pump type | |
| Up to July 1988 | Involute gear type |
| From August 1988 | Trochoid type |
| Cooling system | Water-cooled forced circulation |
| Water pump type | Centrifugal impeller type |

## SERVICE SPECIFICATIONS

mm (in.)

| | Standard | Limit |
|---|---|---|
| **Cylinder head – 12-valve engine** | | |
| Flatness of gasket surface | 0.05 (0.0020) | 0.2 (0.008) |
| Grinding limit | | *0.2 (0.008) |
| *If cylinder block gasket surface has already been ground, thickness of the removed stock should be included in the grinding limit of 0.2 mm (0.008 in.). | | |
| Flatness of manifold mounting surface | 0.15 (0.0059) | 0.3 (0.012) |
| Overall height | 106.9 – 107.1 (4.209 – 4.217) | |
| Oversize rework dimensions of valve guide hole (both intake and exhaust) | | |
| 0.05 | 12.050 – 12.068 (0.4744 – 0.4751) | |
| 0.25 | 12.250 – 12.268 (0.4823 – 0.4830) | |
| 0.50 | 12.500 – 12.518 (0.4921 – 0.4928) | |
| Oversize rework dimensions of intake valve seat ring hole (primary) | | |
| 0.3 | 27.300 – 27.325 (1.0748 – 1.0758) | |
| 0.6 | 27.600 – 27.625 (1.0866 – 1.0876) | |
| Oversize rework dimensions of intake valve seat ring hole (secondary) | | |
| 0.3 | 32.300 – 32.325 (1.2717 – 1.2726) | |
| 0.6 | 32.600 – 32.625 (1.2835 – 1.2845) | |
| Oversize rework dimensions of exhaust valve seat ring hole | | |
| 0.3 | 35.300 – 35.325 (1.3898 – 1.3907) | |
| 0.6 | 35.600 – 35.625 (1.4016 – 1.4026) | |
| **Cylinder head – 8-valve engine** | | |
| Flatness of gasket surface | 0.05 (0.0020) | 0.2 (0.008) |
| Grinding limit | | *0.2 (0.008) |
| *If cylinder block gasket surface has already been ground, thickness of the removed stock should be included in the grinding limit of 0.2 mm (0.008 in.). | | |
| Flatness of manifold mounting surface | 0.15 (0.0059) | 0.3 (0.012) |
| Overall height | 106.9 – 107.1 (4.209 – 4.217) | |
| Oversize rework dimensions of valve guide hole (both intake and exhaust) | | |
| 0.05 | 12.050 – 12.068 (0.4744 – 0.4751) | |
| 0.25 | 12.250 – 12.268 (0.4823 – 0.4830) | |
| 0.50 | 12.500 – 12.518 (0.4921 – 0.4928) | |
| Oversize rework dimensions of intake valve seat ring hole | | |
| 0.3 | 36.300 – 36.325 (1.4291 – 1.4301) | |
| 0.6 | 36.600 – 36.625 (1.4409 – 1.4419) | |
| Oversize rework dimensions of exhaust valve seat ring hole | | |
| 0.3 | 32.300 – 32.325 (1.2717 – 1.2726) | |
| 0.6 | 32.600 – 32.625 (1.2835 – 1.2845) | |

mm (in.)

| | Standard | Limit |
|---|---|---|
| **Camshaft – 12-valve engine** | | |
| Cam height | | |
| Intake | 38.75 (1.5256) | 38.25 (1.5059) |
| Exhaust | 39.10 (1.5394) | 38.60 (1.5197) |
| Fuel pump driving cam diameter | 38.0 (1.500) | 37.5 (1.476) |
| Journal diameter | 45.925 – 45.940 (1.8081 – 1.8087) | |
| Oil clearance | 0.06 – 0.10 (0.0024 – 0.0039) | |
| End play | 0.05 – 0.20 (0.0020 – 0.0079) | 0.4 (0.016) |
| **Camshaft – 8-valve engine** | | |
| Cam height | | |
| Intake | 38.08 (1.4992) | 37.58 (1.4795) |
| | *38.91 (1.5319) | 38.41 (1.5122) |
| Exhaust | 38.15 (1.5020) | 37.65 (1.4823) |
| | *38.97 (1.5342) | 38.47 (1.5146) |
| Fuel pump driving cam diameter | 38.0 (1.500) | 37.5 (1.476) |
| Journal diameter | 45.925 – 45.940 (1.8081 – 1.8087) | |
| Oil clearance | 0.06 – 0.10 (0.0024 – 0.0039) | |
| End play | 0.05 – 0.20 (0.0020 – 0.0079) | 0.4 (0.016) |
| *Multi-point fuel injection engine for Australia | | |
| **Rocker arm** | | |
| I.D. | 18.910 – 18.928 (0.7445 – 0.7452) | |
| Rocker arm-to-shaft clearance | 0.01 – 0.04 (0.0004 – 0.0016) | 0.1 (0.004) |
| **Rocker shaft – 12-valve engine** | | |
| O.D. | 18.885 – 18.898 (0.7435 – 0.7440) | |
| Overall length | | |
| Intake | 365 (14.37) | |
| Exhaust | 346 (13.62) | |
| **Rocker shaft – 8-valve engine** | | |
| O.D. | 18.885 – 18.898 (0.7435 – 0.7440) | |
| Overall length | | |
| Intake | 340 (13.39) | |
| Exhaust | 327 (12.87) | |
| **Valve – 12-valve engine** | | |
| Overall length | | |
| Intake | 100.75 (3.9665) | |
| Exhaust | 101.05 (3.9783) | |
| Stem diameter | | |
| Intake | 6.565 – 6.580 (0.2585 – 0.2591) | |
| Exhaust | 6.530 – 6.550 (0.2571 – 0.2579) | |
| Face angle | 45° – 45°30′ | |
| Thickness of valve head (margin) | | |
| Intake | 1.0 (0.039) | 0.5 (0.020) |
| Exhaust | 1.5 (0.059) | 1.0 (0.039) |
| Stem-to-guide clearance | | |
| Intake | 0.02 – 0.05 (0.0008 – 0.0020) | 0.10 (0.0039) |
| Exhaust | 0.05 – 0.09 (0.0020 – 0.0035) | 0.15 (0.0059) |

© Mitsubishi Motors Corporation Apr. 1990

mm (in.)

| | Standard | Limit |
|---|---|---|
| Valve stem projection | | |
| Intake | 43.70 (1.7205) | 44.20 (1.7402) |
| Exhaust | 43.30 (1.7047) | 43.80 (1.7244) |
| **Valve – 8-valve engine** | | |
| Overall length | | |
| Intake (Carburetor) | 102.1 (4.020) | |
| (MPI) | 101.6 (4.000) | |
| Exhaust | 100.9 (3.972) | |
| Stem diameter | | |
| Intake | 6.565 – 6.580 (0.2585 – 0.2591) | |
| Exhaust | 6.530 – 6.550 (0.2571 – 0.2579) | |
| Face angle | 45° – 45°30′ | |
| Thickness of valve head (margin) | | |
| Intake | 1.0 (0.039) | 0.5 (0.020) |
| Exhaust | 1.5 (0.059) | 1.0 (0.039) |
| Stem-to-guide clearance | | |
| Intake | 0.02 – 0.05 (0.0008 – 0.0020) | 0.10 (0.0039) |
| Exhaust | 0.05 – 0.09 (0.0020 – 0.0035) | 0.15 (0.0059) |
| Valve stem projection | | |
| Intake | 41.45 (1.6319) | 41.95 (1.6516) |
| Exhaust | 41.35 (1.6279) | 41.85 (1.6476) |
| **Valve spring – 12-valve engine** | | |
| Free height | | |
| Intake | 46.1 (1.815) | 45.1 (1.776) |
| Exhaust | 46.8 (1.843) | 45.8 (1.803) |
| Load/installed height N (kg,lbs.)/mm (in.) | | |
| Intake | 230 (23, 51)/40 (1.57) | |
| Exhaust | 290 (29, 64)/40 (1.57) | |
| Out-of-squareness | Max. 2° | 4° |
| **Valve spring – 8-valve engine** | | |
| Free height | 44.6 (1.756) | 43.6 (1.717) |
| Load/installed height N (kg,lbs.)/mm (in.) | 242 (24.2, 53)/37.3 (1.469) | |
| Out-of-squareness | Max. 2° | 4° |
| **Valve guide** | | |
| Overall length | | |
| Intake | 44 (1.732) | |
| Exhaust | 49.5 (1.949) | |
| I.D. | 6.600 – 6.615 (0.2598 – 0.2604) | |
| O.D. | 12.055 – 12.065 (0.4746 – 0.4750) | |
| Service size | 0.05 (0.002), 0.25 (0.01), 0.50 (0.02) oversize | |
| Press-in temperature | Room temperature | |
| **Valve seat** | | |
| Seat angle | 45° | |
| Valve contact width | 0.9 – 1.3 (0.035 – 0.051) | |
| Sinkage | | 0.2 (0.008) |
| Service size | 0.3 (0.012), 0.6 (0.024) oversize | |

mm (in.)

| | Standard | Limit |
|---|---|---|
| **Jet valve (G13B and G15B only)** | | |
| Overall height | 97.53 (3.8398) | |
| Stem diameter | 4.3 (0.169) | |
| Face angle | 45° | |
| **Jet valve spring (G13B and G15B only)** | | |
| Free height | 29.60 (1.1654) | 28.60 (1.1260) |
| Load/installed height N (kg, lbs.)/mm (in.) | 35 (3.5, 7.7)/21.5 (0.846) | |
| **Piston** | | |
| O.D. | 4G16:68.17 – 68.20 (2.6839 – 2.6850) | |
| | 4G13, G13B:70.97 – 71.00 (2.7941 – 2.7953) | |
| | 4G15, G15B:75.47 – 75.50 (2.9713 – 2.9724) | |
| Piston-to-cylinder clearance | 0.02 – 0.04 (0.0008 – 0.0016) | |
| Ring groove width | | |
| No. 1 ring | 1.52 – 1.54 (0.0598 – 0.0606) | |
| No. 2 ring | 1.51 – 1.53 (0.0594 – 0.0602) | |
| Oil ring | 4.02 – 4.05 (0.1583 – 0.1594) | |
| Service size | 0.25 (0.01), 0.50 (0.02), 0.75 (0.03), 1.00 (0.04) oversize | |
| **Piston ring** | | |
| End gap | | |
| No. 1 ring | 0.20 – 0.35 (0.0079 – 0.0138) | 0.8 (0.031) |
| | *0.20 – 0.40 (0.0079 – 0.0157) | 0.8 (0.031) |
| *Multi-point fuel injection engine for Australia | | |
| No. 2 ring | 0.20 – 0.35 (0.0079 – 0.0138) | 0.8 (0.031) |
| | *0.20 – 0.40 (0.0079 – 0.0157) | 0.8 (0.031) |
| *8-valve engines 4G16, G13B, 4G13 and 4G15 for Europe and General Export | | |
| Oil ring | 0.20 – 0.70 (0.0079 – 0.0276) | 1.0 (0.039) |
| Ring-to-ring groove clearance | | |
| No. 1 ring | 0.03 – 0.07 (0.0012 – 0.0028) | 0.1 (0.004) |
| No. 2 ring | 0.02 – 0.06 (0.0008 – 0.0024) | 0.1 (0.004) |
| Service size | 0.25 (0.01), 0.50 (0.02), 0.75 (0.03), 1.00 (0.04) oversize | |
| **Piston pin** | | |
| O.D. | 18.01 (0.7091) | |
| Press-in load N (kg, psi) | 5,000 – 15,000 (500 – 1,500, 1,102 – 3,307) | |
| Press-in temperature | Room temperature | |
| **Connecting rod** | | |
| Big end center-to small end center length | 130.95 – 131.05 (5.1555 – 5.1594) | |
| Bend | 0.05 (0.0020) | |
| Twist | 0.1 (0.004) | |
| Big end side clearance | 0.10 – 0.25 (0.0039 – 0.0098) | 0.4 (0.016) |

mm (in.)

| | Standard | Limit |
|---|---|---|
| **Crankshaft** | | |
| End play | 0.05 – 0.18 (0.0020 – 0.0071) | 0.25 (0.0098) |
| Journal O.D. | 48 (1.89) | |
| Pin O.D. | 42 (1.65) | |
| Out-of-roundness and taper of journal and pin | 0.05 (0.0020) | |
| Concentricity of journal | 0.015 (0.0006) | |
| Oil clearance of journal | 0.02 – 0.07 (0.0008 – 0.0028) | 0.15 (0.0059) |
| Oil clearance of pin | 0.02 – 0.06 (0.0008 – 0.0024) | 0.15 (0.0059) |
| Journal under size | | |
| 0.25 U.S. | 47.740 – 47.725 (1.8795 – 1.8789) | |
| 0.50 U.S. | 47.490 – 47.475 (1.8697 – 1.8691) | |
| 0.75 U.S. | 47.240 – 47.225 (1.8598 – 1.8593) | |
| Pin under size | | |
| 0.25 U.S. | 41.740 – 41.725 (1.6433 – 1.6427) | |
| 0.50 U.S. | 41.490 – 41.475 (1.6335 – 1.6329) | |
| 0.75 U.S. | 41.240 – 41.225 (1.6236 – 1.6230) | |
| **Cylinder block** | | |
| I.D. | 4G16: 68.20 – 68.23 (2.6850 – 2.6862)<br>4G13, G13B: 71.00 – 71.03 (2.7953 – 2.7965)<br>4G15, G15B: 75.50 – 75.53 (2.9724 – 2.9736) | |
| Flatness of gasket surface | 0.05 (0.020) | 0.1 (0.004) |
| Grinding limit | | *0.2 (0.008) |
| *If cylinder head gasket surface has already been ground, thickness of the removed stock should be included in the grinding limit of −0.2 mm (−0.008 in.). | | |
| Overall height | 255.9 – 256.1 (10.075 – 10.083) | |
| **Flywheel** | | |
| Runout | | 0.13 (0.0051) |
| **Oil pump (Involute gear type)** | | |
| Tip clearance | | |
| Inner gear | 0.21 – 0.34 (0.0083 – 0.0134) | 0.5 (0.020) |
| Outer gear | 0.22 – 0.44 (0.0087 – 0.0173) | 0.6 (0.024) |
| Side clearance | 0.04 – 0.10 (0.0016 – 0.0039) | 0.15 (0.006) |
| Body clearance | 0.10 – 0.20 (0.0039 – 0.0079) | 0.30 (0.012) |
| **Oil pump (Trochoid type)** | | |
| Tip clearance | 0.06 – 0.18 (0.0024 – 0.0071) | 0.35 (0.0138) |
| Side clearance | 0.04 – 0.10 (0.0016 – 0.0039) | 0.2 (0.0079) |
| Body clearance | 0.10 – 0.18 (0.0039 – 0.0071) | 0.35 (0.0138) |
| **Drive belt deflection** | | |
| New belt | 5.5 – 7.0 (0.22 – 0.28) | |
| Used belt | 8.0 (0.32) | |

© Mitsubishi Motors Corporation Apr. 1990

mm (in.

| | Standard | Limit |
|---|---|---|
| **Thermostat** | | |
| Identification mark "82" | | |
| Initial opening temperature | 82°C (179°F) | |
| Fully opened temperature | 95°C (203°F) | |
| Lift | 8 (0.32) or more | |
| Identification mark "88" | | |
| Initial opening temperature | 88°C (179°F) | |
| Fully opened temperature | 100°C (212°F) | |
| Lift | 8 (0.32) or more | |
| **Coolant temperature gauge unit** | | |
| Resistance | 230Ω at 50°C (122°F) | |
| | 104Ω at 70°C (158°F) | |
| **Coolant temperature sensor** | | |
| Resistance | 5.9kΩ at 0°C (32°F) | |
| | 2.5kΩ at 20°C (68°F) | |
| | 1.1kΩ at 40°C (104°F) | |
| | 0.3kΩ at 80°C (176°F) | |

© Mitsubishi Motors Corporation Apr. 1990

## TORQUE SPECIFICATIONS

| | Torque | | |
|---|---|---|---|
| | Nm | kgm | ft.lbs. |
| **Drive belt and timing belt** | | | |
| Water pump pulley bolt | 9 | 0.9 | 7 |
| Crankshaft pulley bolt | 14 | 1.4 | 11 |
| Crankshaft bolt | 105 | 10.5 | 76 |
| Timing belt tensioner bolt | 24 | 2.4 | 18 |
| Camshaft sprocket bolt | 70 | 7.0 | 51 |
| **Intake manifold** | | | |
| Cable bracket bolt | 14 | 1.4 | 11 |
| Coolant temperature gauge unit | 11 | 1.1 | 8 |
| Coolant temperature sensor | 30 | 3.0 | 22 |
| Water outlet fitting bolt | 19 | 1.9 | 14 |
| Thermostat housing bolt and nut | 19 | 1.9 | 14 |
| Intake manifold stay bolt | | | |
| MPI engine | 22 | 2.2 | 16 |
| Carburetor engine | 26 | 2.6 | 19 |
| Intake manifold bolt and nut | 18 | 1.8 | 13 |
| Air intake plenum stay bolt | 18 | 1.8 | 13 |
| Air intake plenum bolt and nut | 18 | 1.8 | 13 |
| **Exhaust manifold and water pump** | | | |
| Exhaust manifold cover "A" bolt | 30 | 3.0 | 22 |
| Exhaust manifold cover "A" and "B" mounting bolt | 9 | 0.9 | 7 |
| Exhaust manifold cover "A" bolt | 24 | 2.4 | 18 |
| Water inlet pipe bolt | 14 | 1.4 | 11 |
| Water pump bolt | 14 | 1.4 | 11 |
| Alternator brace installed portion | 24 | 2.4 | 18 |
| **Rocker arms and camshaft** | | | |
| Rocker cover bolt | 1.8 | 0.18 | 1.3 |
| Rocker arm shaft bolt | | | |
| 12-valve engine | 32 | 3.2 | 24 |
| 8-valve engine | 24 | 2.4 | 18 |
| **Rocker arm lock nut** | | | |
| Intake and exhaust | 15 | 1.5 | 11 |
| Jet valve | 9 | 0.9 | 7 |
| **Cylinder head and valves** | | | |
| Cylinder head bolt | 73 | 7.3 | 53 |
| Jet valve assembly (with engine oil applied to threads and seat surface) | 20 | 2.0 | 15 |

| | Nm | Torque kgm | Nm ft.lbs. |
|---|---|---|---|
| **Front case and oil pump** | | | |
| Oil pan drain plug | 40 | 4.0 | 29 |
| Oil pan bolt | 7 | 0.7 | 5 |
| Oil screen bolt | 19 | 1.9 | 14 |
| Oil relief valve plug | 45 | 4.5 | 33 |
| Front case bolt | 14 | 1.4 | 11 |
| Oil pump cover screw | 9 | 0.9 | 7 |
| **Piston and connecting rod** | | | |
| Connecting rod cap nut | | | |
| M7 | 20 + 1/4 turns | 2.0 + 1/4 turns | 15 + 1/4 turns |
| M8 | 34 | 3.4 | 25 |
| **Crankshaft, flywheel and drive plate** | | | |
| Flywheel and drive plate | 135 | 13.5 | 98 |
| Bell housing cover bolt | 9 | 0.9 | 7 |
| Oil seal case bolt | 11 | 1.1 | 8 |
| Bearing cap bolt | 53 | 5.3 | 38 |
| **Cylinder block** | | | |
| Engine support bracket, front | 60 | 6.0 | 64 |
| Engine support bracket, left | 36 | 3.6 | 26 |
| Roll stopper bracket, front | 65 | 6.5 | 47 |
| Roll stopper bracket, left | 65 | 6.5 | 47 |
| Oil pressure switch | 19 | 1.9 | 14 |

## SEALANT

| | Specified sealant | Quantity |
|---|---|---|
| Engine coolant temperature sensor | 3M Nut Locking part No. 4171 or equivalent | As required |
| Engine coolant temperature gauge unit | 3M ATD Part No. 8660 or equivalent | As required |
| Oil pan | 3M ATD Part No. 8660 or equivalent | As required |
| Oil pressure switch threads | 3M ATD Part No. 8660 or equivalent | As required |

© Mitsubishi Motors Corporation Apr. 1990

# 2. SPECIAL TOOLS

| Tool | Number | Name | Use |
|---|---|---|---|
| 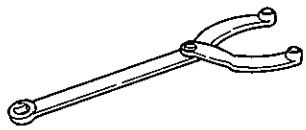 | MB990767 | End yoke holder | Holding of sprocket when loosening or tightening camshaft sprocket bolt [used with MD998719] |
| 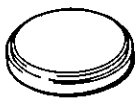 | MD998011 | Crankshaft rear oil seal installer | Installation of crankshaft rear oil seal |
| | MD998054 | Oil pressure switch wrench | Removal and installation of oil pressure switch |
| | MD998158 (intake)<br>MD998156 (exhaust) | Valve seat cutter 45° | Correction of valve seat |
| | MD998165 (intake)<br>MD998614 (exhaust) | Valve seat cutter 65° | Correction of valve seat |
| | MD998173 (intake)<br>MD998171 (exhaust) | Valve seat cutter 30° | Correction of valve seat |
| 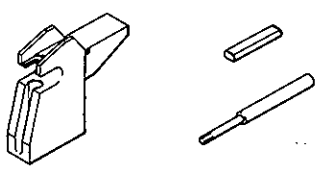 | MD998300 | Piston pin setting tool | Removal and installation of piston pin <8-valve engine><br>[Guide is only for vehicles built up to August 1988] |

| Tool | Number | Name | Use |
|---|---|---|---|
| 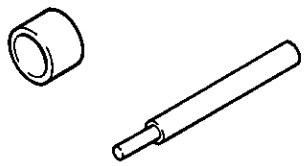 | MD998301 | Valve guide installer | Removal and installation of valve guide |
| 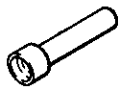 | MD998302 | Valve stem seal installer | Installation of valve stem seal <8-valve engine> |
| 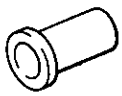 | MD998304 | Crankshaft front oil seal installer | Installation of crankshaft front oil seal |
| 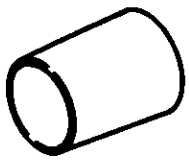 | MD998305 | Crankshaft front oil seal guide | Guide for installation of crankshaft front oil seal |
| 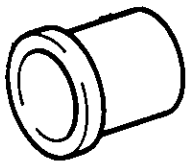 | MD998306 | Camshaft oil seal installer | Installation of camshaft oil seal |
| 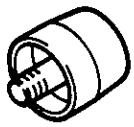 | MD998307 | Camshaft oil seal guide | Guide for installing camshaft oil seal (Used with MD998306) |
| 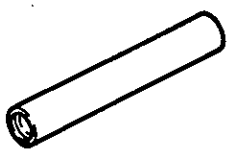 | MD998308 | Jet valve stem seal installer | Installation of jet valve stem seal oil seal |

| Tool | Number | Name | Use |
|---|---|---|---|
| 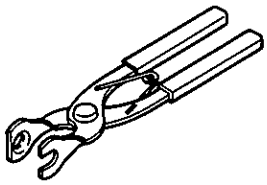 | MD998309 | Jet valve spring pliers | Compression of jet valve spring |
| 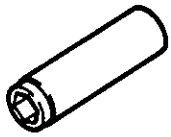 | MD998310 | Jet valve socket wrench | Removal and installation of jet valve |
| 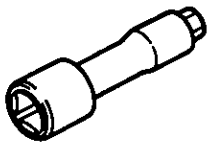 | MD998360 | Cylinder head bolt wrench | Removal and installation of cylinder head bolt |
| 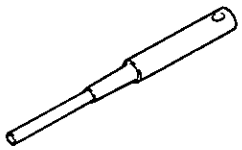 | MD998615 | Valve seat cutter pilot | Correction of valve seat |
| 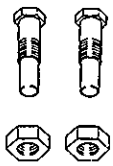 | MD998715 | Pin | Holding of sprocket when loosening or tightening camshaft sprocket bolt [used with MD990767] |
| 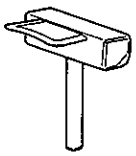 | MB998727 | Oil pan remover | Removal of oil pan |
| 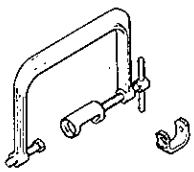 | MD998735 | Valve spring compressor | Compression of valve spring |

| Tool | Number | Name | Use |
|---|---|---|---|
| 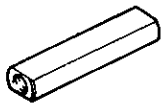 | MD998756 | Guide | Installation of piston pin<br><8-valve engine><br>[For vehicles built from September 1988. Used in combination with MD998300] |
| 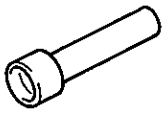 | MD998760 | Valve stem seal installer | Installation of valve stem seal<br><12-valve engine> |
| 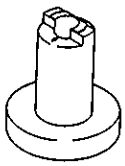 | MD998764 | Piston pin setting base | Removal and installation of piston pin<br><12-valve engine><br>[used with MD998766] |
| 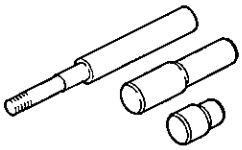 | MD998766 | Push rod & guide set | Removal and installation of piston pin<br><12-valve engine><br>[used with MD998764] |

# 3. DRIVE BELT AND TIMING BELT

## REMOVAL AND INSTALLATION

Pre-removal/post-installation operations
- Removal/installation of alternator (See Group 16A).

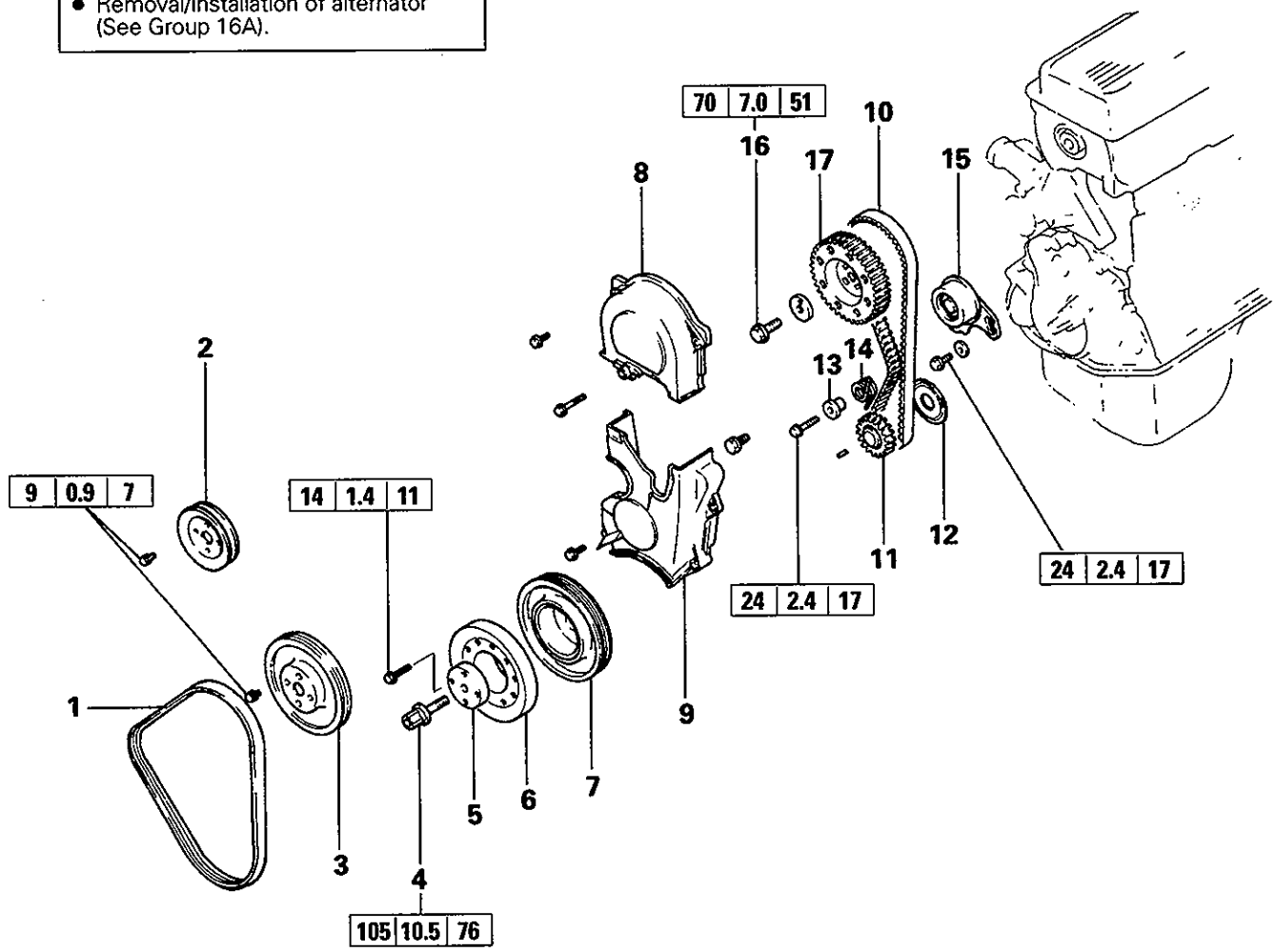


**Removal steps**

- ◗E◖ 1. Drive belt
- 2. Pulley (for power steering pump drive)
- 3. Water pump pulley
- 4. Crankshaft pulley bolt
- 5. Special washer
- 6. Crankshaft pulley
- 7. Damper pulley
- 8. Timing belt upper cover
- 9. Timing belt lower cover
- ◊A◊ ◗D◖ 10. Timing belt
- 11. Crankshaft sprocket
- ◗C◖ 12. Flange
- 13. Tensioner spacer
- 14. Tensioner spring
- ◗B◖ 15. Timing belt tensioner
- ◊B◊ ◗A◖ 16. Camshaft sprocket bolt
- 17. Camshaft sprocket

1EN0179

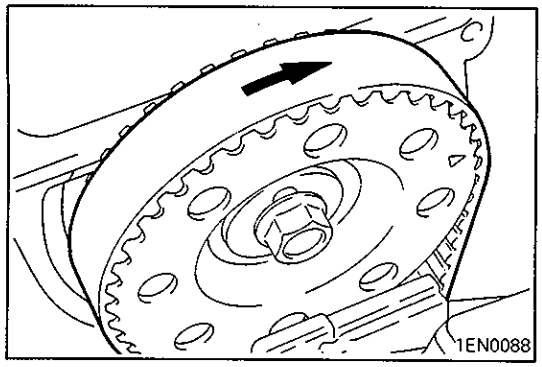


## SERVICE POINTS OF DISASSEMBLY

### ◇A◇ REMOVAL OF TIMING BELT

(1) Using chalk, etc., mark an arrow on the back of the timing belt to indicate the direction of rotation. This is to ensure correct installation of the belt in case it is reused.

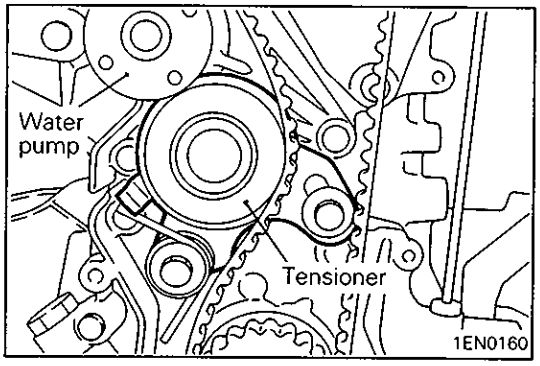


(2) Slide the tensioner toward the pump as illustrated and tighten the bolt.
(3) Remove the timing belt.

NOTE
(1) Water or oil on the belt shortens its life drastically, so the removed timing belt, sprocket, and tensioner must be free from oil and water. Do not immerse parts in cleaning solvent.
(2) If there is oil or water on any part, check front case oil seal, camshaft oil seal and water pump for leaks.

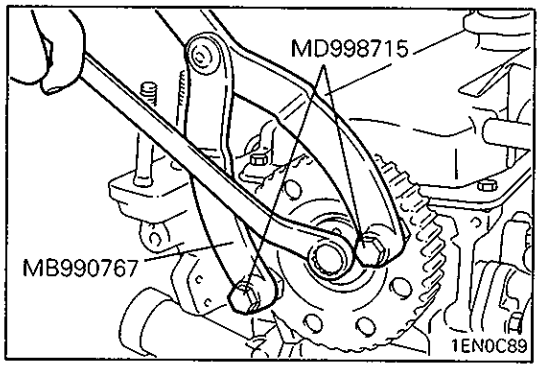


### ◇B◇ LOOSENING OF CAMSHAFT SPROCKET BOLT

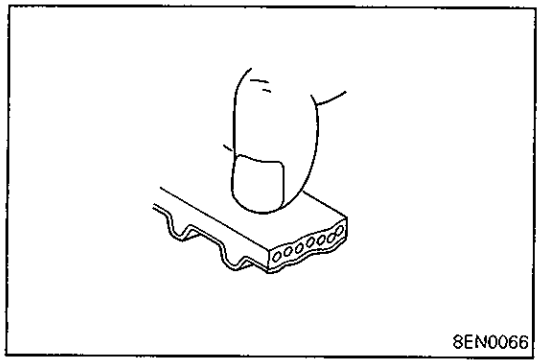


## INSPECTION

### TIMING BELT

The timing belts must be checked closely. Should the following defects be evident, replace the belt with a new one.

(1) Hardened back surface rubber
Glossy, non-elastic and so hard that no mark is produced even when scratched by fingernails.

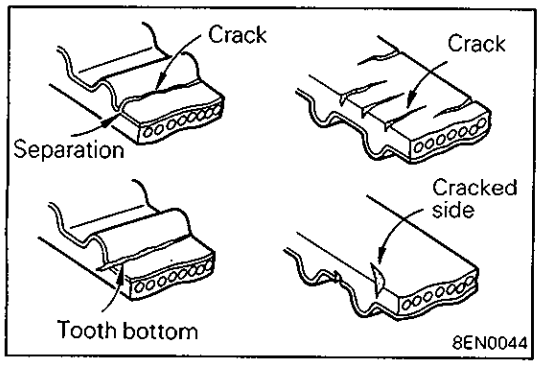


(2) Cracked back surface rubber
(3) Cracked or separated canvas
(4) Cracked tooth bottom
(5) Cracked side

© Mitsubishi Motors Corporation Apr. 1990

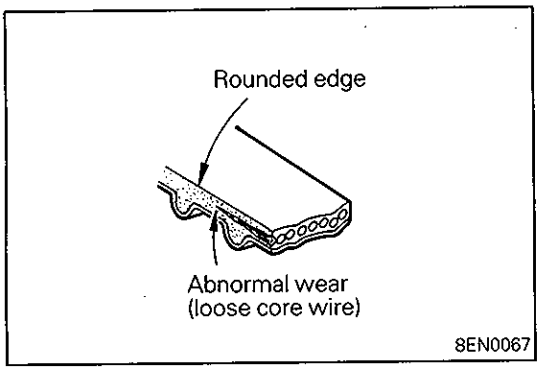


(6) Abnormal wear on side

NOTE
Normal belt should have clear-cut sides as if cut by a sharp knife.

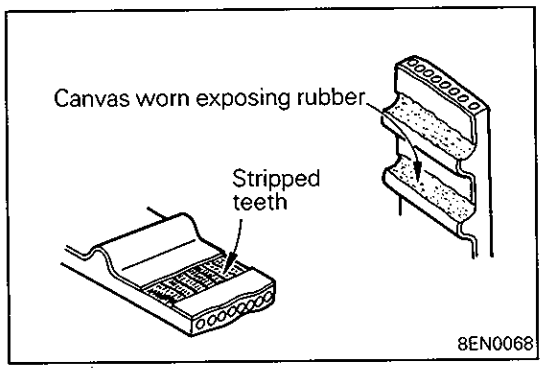


(7) Abnormal wear in teeth

Initial stage:
Canvas on load side tooth flank worn (Fluffy canvas fibers, rubber gone and color changed to white, and unclear canvas texture)

Final stage:
Canvas on load side tooth flank worn down and rubber exposed (tooth width reduced)

(8) Missing tooth

## SERVICE POINTS OF REASSEMBLY

### ◆A◆ TIGHTENING OF CAMSHAFT SPROCKET BOLT

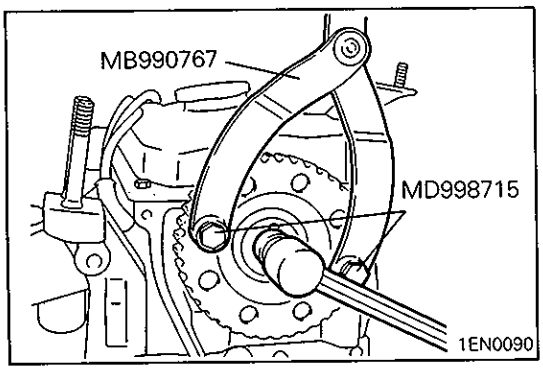


### ◆B◆ INSTALLATION OF TIMING BELT TENSIONER

(1) Move tensioner pulley toward water pump and tighten tensioner mounting bolts.

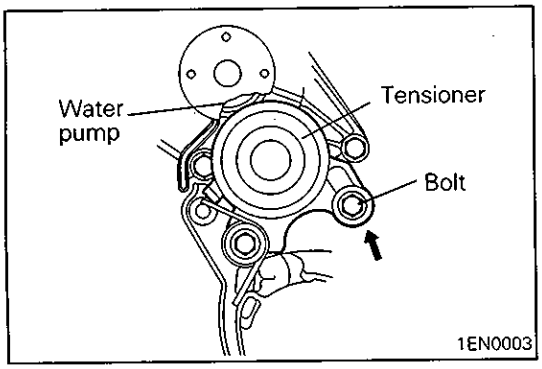


### ◆C◆ INSTALLATION OF FLANGE

(1) Flange must be installed with its chamfered face toward the sprocket.

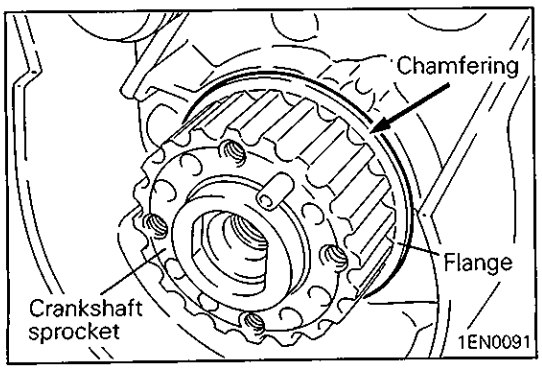


© Mitsubishi Motors Corporation Apr. 1990

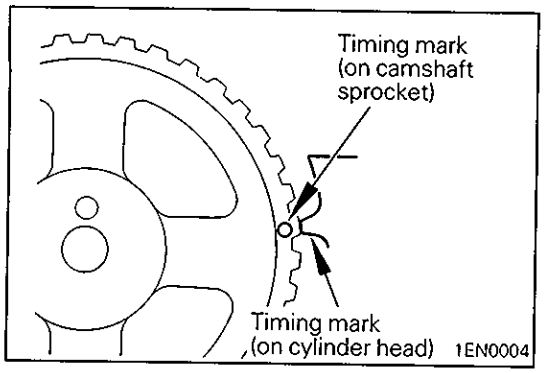


## ◆D◆ INSTALLATION OF TIMING BELT

(1) Align timing marks on camshaft sprocket and crankshaft sprocket with their timing marks.

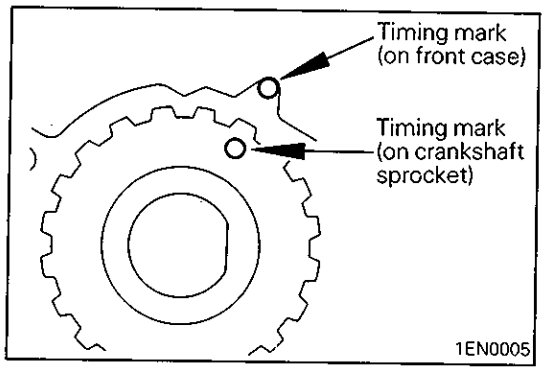


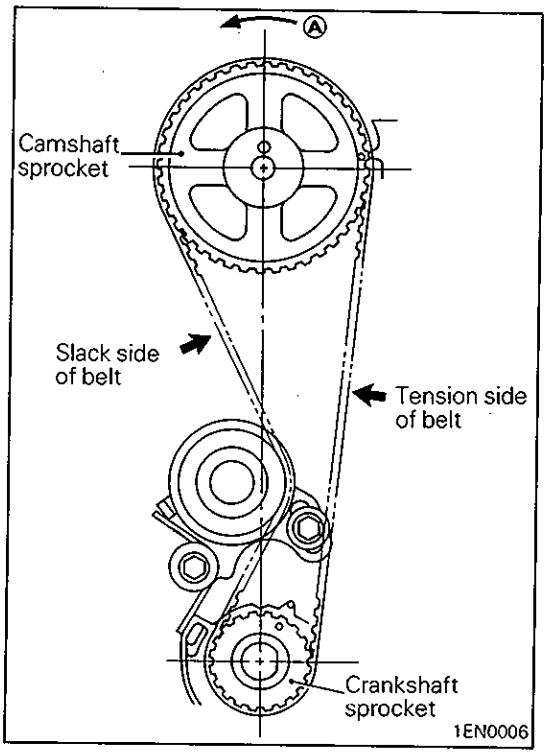


(2) Set the timing belt first on crankshaft sprocket and then keeping the tension side belt tight, set on the camshaft sprocket.

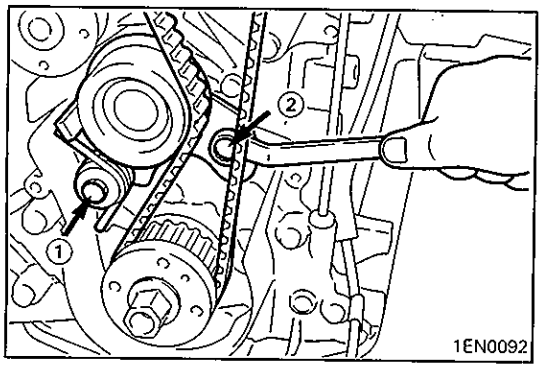


(3) Loosen the tensioner mounting bolts ① and ② to apply tension to the belt by tensioner spring force.
(4) Check that the belt completely meshes with the sprocket. Also check the alignment of the timing marks on the sprockets.

© Mitsubishi Motors Corporation Apr. 1990

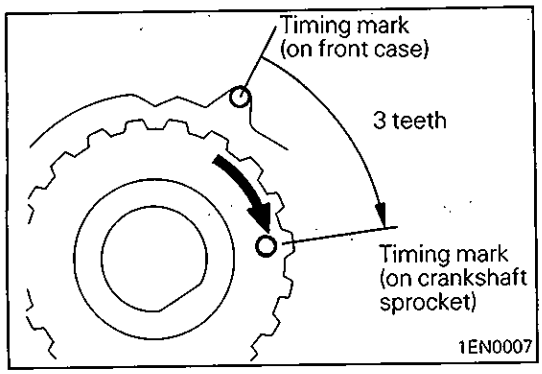


(5) Turn the crankshaft clockwise by 3 teeth of crankshaft sprocket.

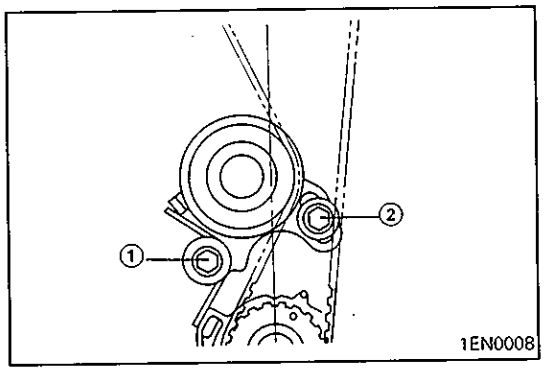


(6) Tighten the bolt ② first and then tighten the bolt ①. Do not tighten the bolt ① first, otherwise the tensioner will move with the bolt when tightening, resulting in an overtensioned belt.

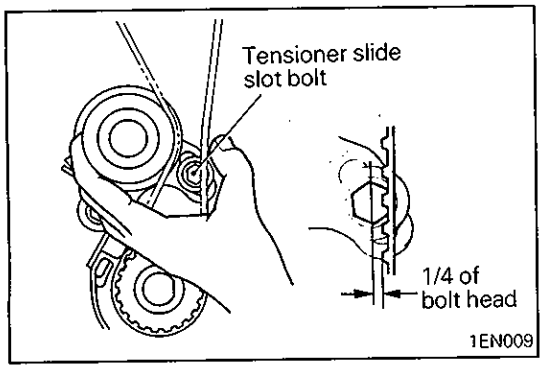


(7) Check the belt tension. Hold the tensioner and timing belt together by hand and give the belt a slight thumb pressure at a point level with tensioner center. Make sure that belt cog crest comes as deep as about 1/4 of the width of the slot side tensioner bolt head.

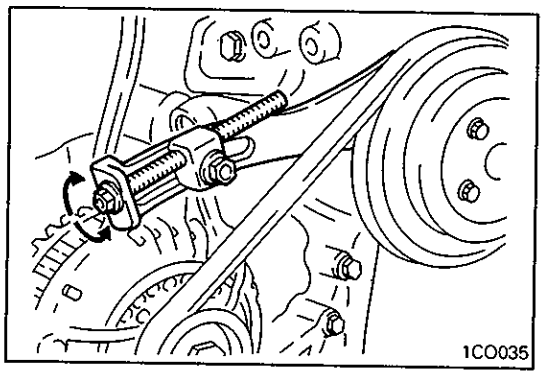


## ◆E◆ ADJUSTMENT OF DRIVE BELT TENSION

(1) Adjust belt deflection to standard value. Turn adjusting bolt clockwise to increase the belt tension and turn adjusting bolt counterclockwise to decrease the belt tension.

**Standard value:**
**New belt: 5.5 – 7.0 mm (0.22 – 0.28 in.)**
**Used belt: 8.0 mm (0.32 in.)**

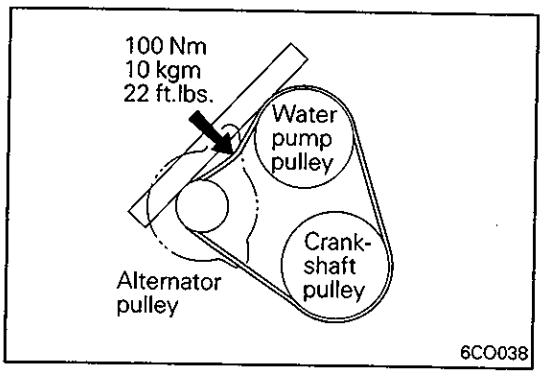


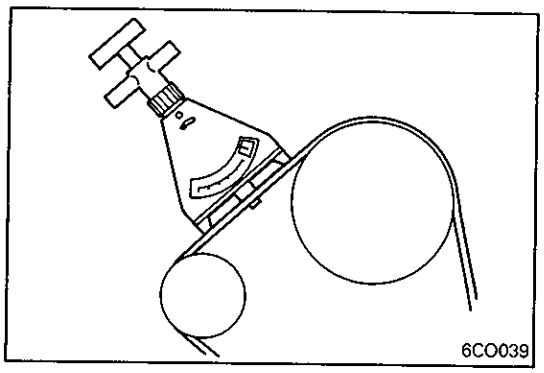


Or using tension gauge, turn adjusting bolt to adjust tension to standard value.

**Standard value:**
**New belt: 500 – 700 N (50 – 70 kg, 110 – 154 lbs.)**
**Used belt: 400 N (40 kg, 88 lbs.)**

(2) Tighten lock bolt to the specified torque.
(3) Tighten nut for pivot bolt to the specified torque.

# 4. INTAKE MANIFOLD

## REMOVAL AND INSTALLATION

### <12-VALVE ENGINE – CARBURETOR TYPE>

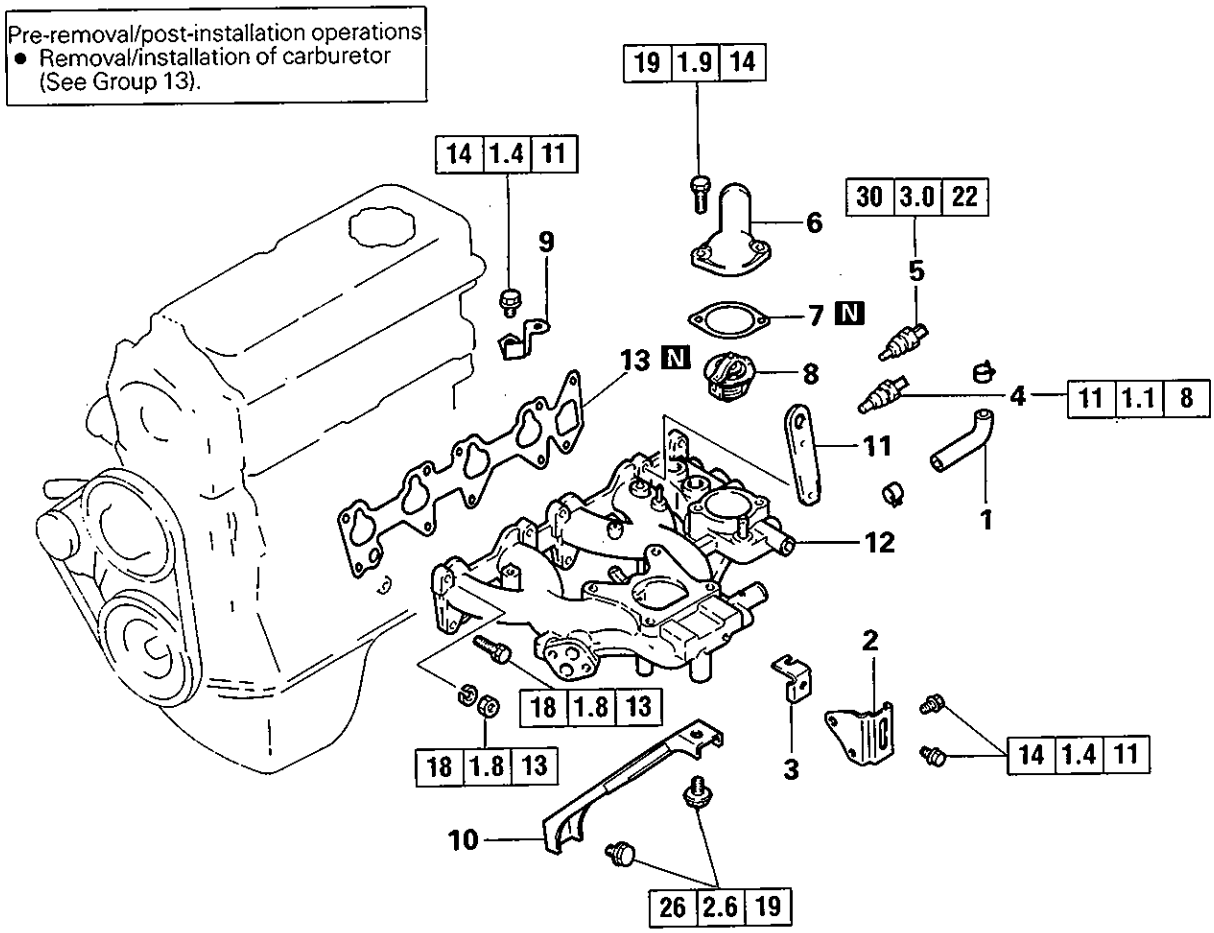


**Removal steps**

1. Water hose
2. Cable bracket, outer } (A/T only)
3. Cable bracket, inner } (A/T only)
- ◆C◆ 4. Coolant temperature gauge unit
- ◆B◆ 5. Coolant temperature sensor (Only for engine with electronic control carburetor)
6. Water outlet fitting
- ◆A◆ 7. Water outlet fitting gasket
8. Thermostat
9. Bracket
10. Intake manifold stay
11. Engine hanger
12. Intake manifold
13. Intake manifold gasket

1EN0180

© Mitsubishi Motors Corporation Apr. 1990

## REMOVAL AND INSTALLATION
### <8-VALVE ENGINE – CARBURETOR TYPE>

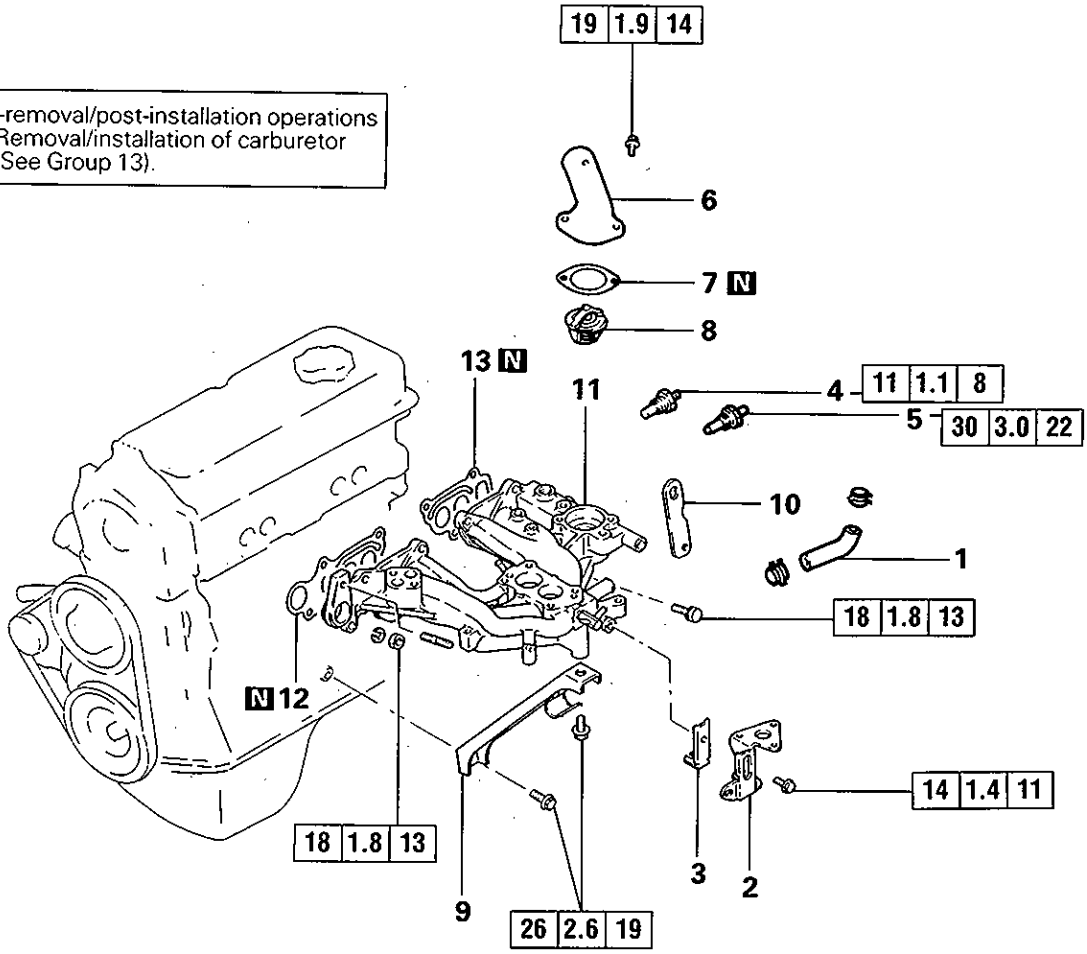


**Removal steps**

1. Water hose
2. Cable bracket, outer } (A/T only)
3. Cable bracket, inner } (A/T only)
- ◆C◆ 4. Coolant temperature gauge unit
- ◆B◆ 5. Coolant temperature sensor (Only for engine with electronic control carburetor)
6. Water outlet fitting
- ◆A◆ 7. Water outlet fitting gasket
8. Thermostat
9. Intake manifold stay
10. Engine hanger
11. Intake manifold
12. Intake manifold gasket, front
13. Intake manifold gasket, rear

1EN0161

© Mitsubishi Motors Corporation Apr. 1990

## REMOVAL AND INSTALLATION
### <12-VALVE ENGINE – MULTI-POINT FUEL INJECTION TYPE>

Pre-removal/post-installation operations
- Removal/installation of throttle body (See Group 13).

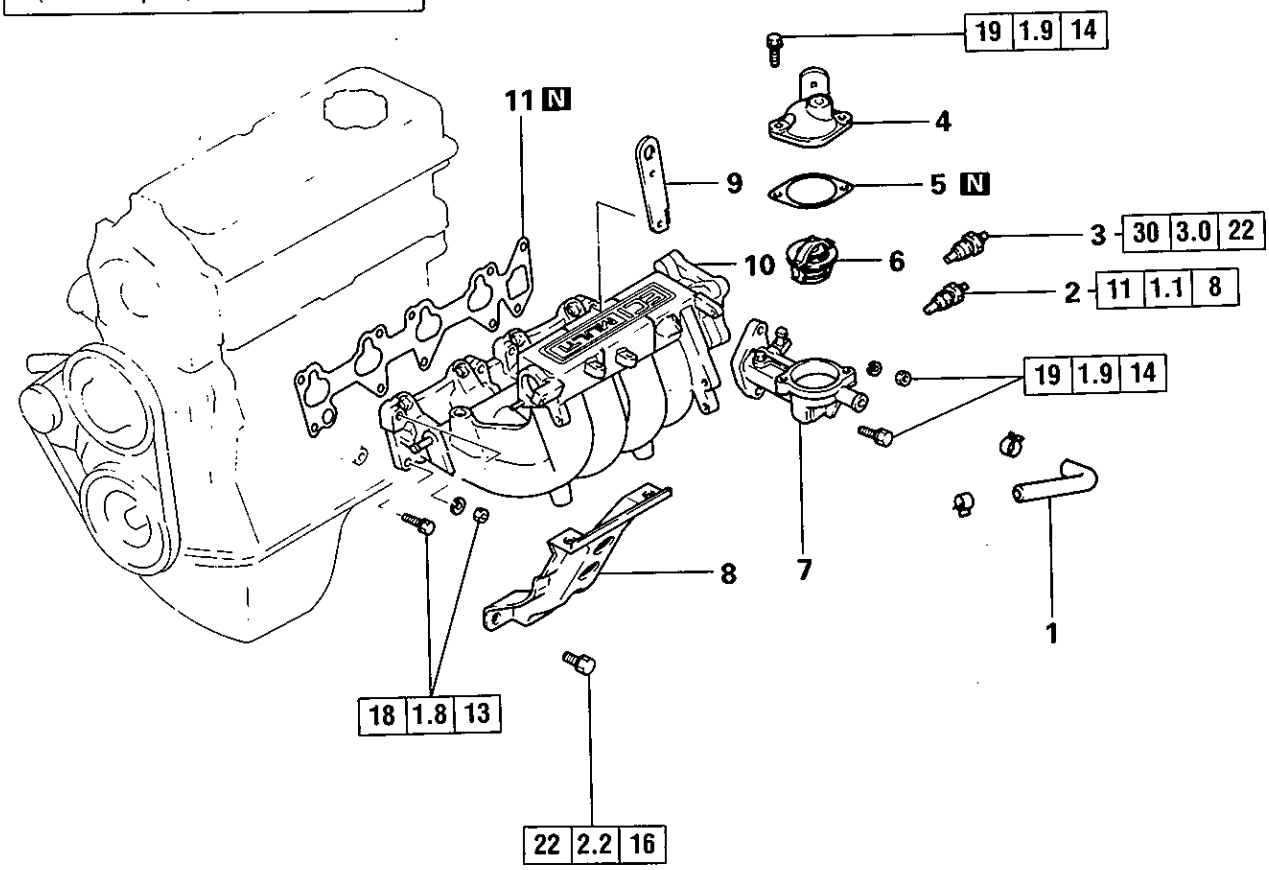


**Removal steps**

1. Water hose
- ◆C◆ 2. Coolant temperature gauge unit
- ◆B◆ 3. Coolant temperature sensor
4. Water outlet fitting
- ◆A◆ 5. Water outlet fitting gasket
6. Thermostat
7. Thermostat housing
8. Intake manifold stay
9. Engine hanger
10. Intake manifold
11. Intake manifold gasket

1EN0181

© Mitsubishi Motors Corporation Apr. 1990 

## REMOVAL AND INSTALLATION

### <8-VALVE ENGINE – MULTI-POINT FUEL INJECTION TYPE>

Pre-removal/post-installation operations
- Removal/installation of throttle body (See Group 13).

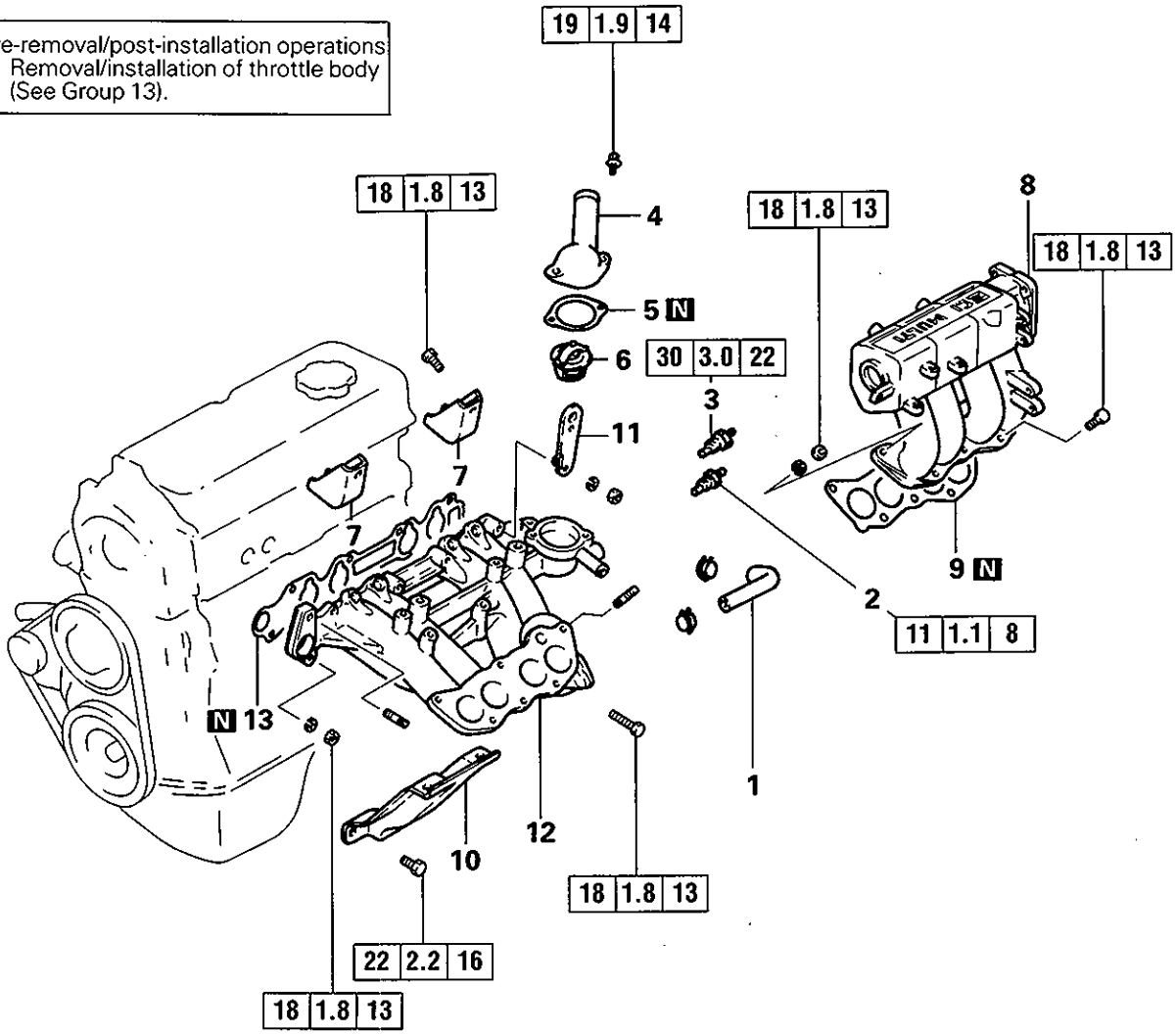


**Removal steps**

1. Water hose
- ◆C◆ 2. Coolant temperature gauge unit
- ◆B◆ 3. Coolant temperature sensor
- ◆A◆ 4. Water outlet fitting
5. Water outlet fitting gasket
6. Thermostat
7. Air intake plenum stay
8. Air intake plenum
9. Air intake plenum gasket
10. Intake manifold stay
11. Engine hanger
12. Intake manifold
13. Intake manifold gasket

1EN0162

© Mitsubishi Motors Corporation Apr. 1990

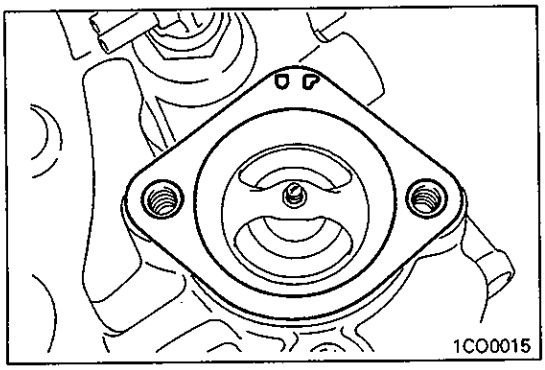


## SERVICE POINTS OF INSTALLATION

### ◗A◖ INSTALLATION OF WATER OUTLET FITTING GASKET FOR RUBBER COATED METAL GASKET ONLY

(1) Install the water outlet fitting gasket with its "UP" mark facing up (toward the water outlet fitting side).

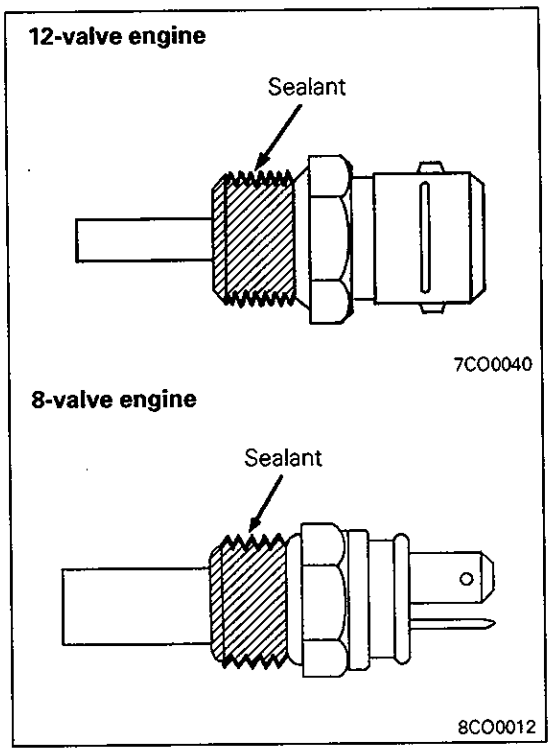


### ◗B◖ APPLICATION OF SEALANT TO WATER TEMPERATURE SENSOR

**Specified sealant:**
**3M Nut Locking Part No. 4171 or equivalent**

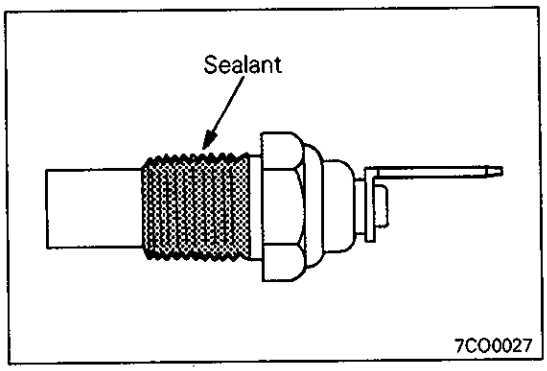


### ◗C◖ APPLICATION OF SEALANT TO WATER TEMPERATURE GAUGE UNIT

**Specified sealant:**
**3M ATD Part No. 8660 or equivalent**

## NOTES

# 5. EXHAUST MANIFOLD AND WATER PUMP

## REMOVAL AND INSTALLATION

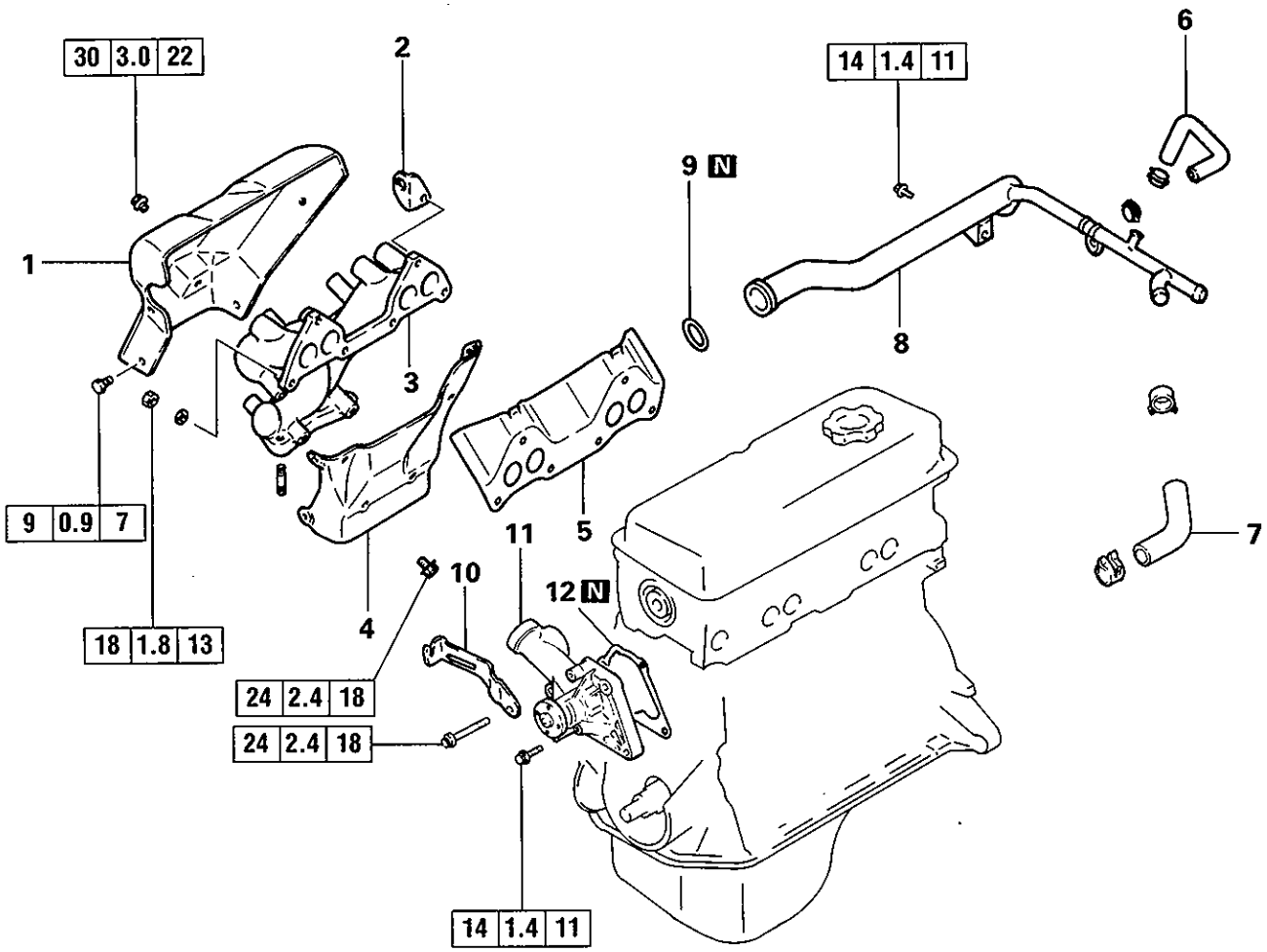


**Removal steps**

1. Exhaust manifold cover "A"
2. Engine hanger
3. Exhaust manifold
4. Exhaust manifold cover "B"
5. Exhaust manifold gasket
6. Water hose
7. Water by-bass hose (Carburetor type only)
◆A◆ 8. Water inlet pipe
◆A◆ 9. O-ring
10. Alternator brace
11. Water pump
12. Water pump gasket

1EN0163

© Mitsubishi Motors Corporation Apr. 1990 

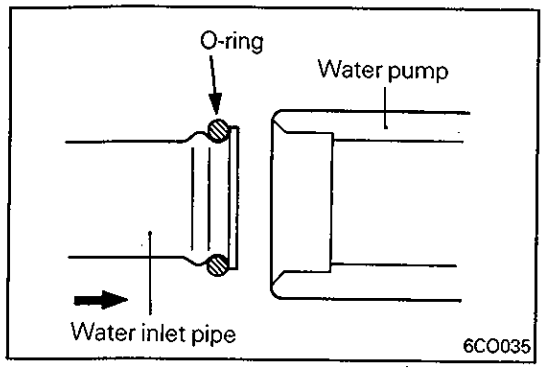


## SERVICE POINTS OF INSTALLATION

### ◆A◆ INSTALLATION OF WATER PIPE / O-RING

(1) Apply water to O-ring for easier insertion into the water pump body.

**Caution**

- **Never apply engine oil or other lubricant to the O-ring.**

# 6. ROCKER ARMS AND CAMSHAFT

## REMOVAL AND INSTALLATION <12-VALVE ENGINE>

Pre-removal/post-installation operations
- Removal/installation of distributor (See Group 16C).

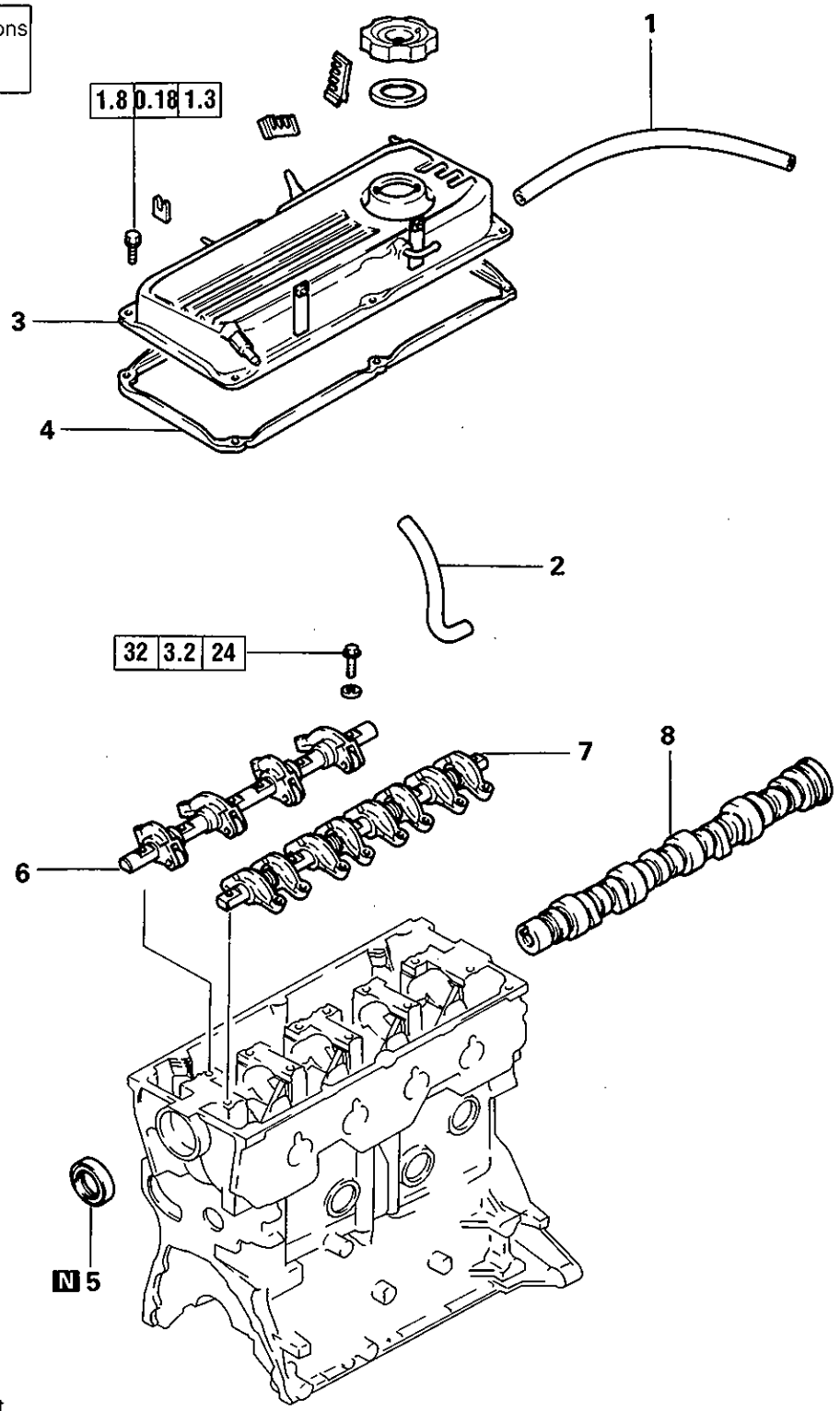


**Removal steps**

1. Breather hose
2. PCV hose
3. Rocker cover
4. Rocker cover gasket
- ◆C◆ 5. Oil seal
6. Rocker arm and shaft assembly
7. Rocker arm and shaft assembly
- ◆A◆ 8. Camshaft

1EN0201

© Mitsubishi Motors Corporation Apr. 1990 

## REMOVAL AND INSTALLATION <8-VALVE ENGINE>

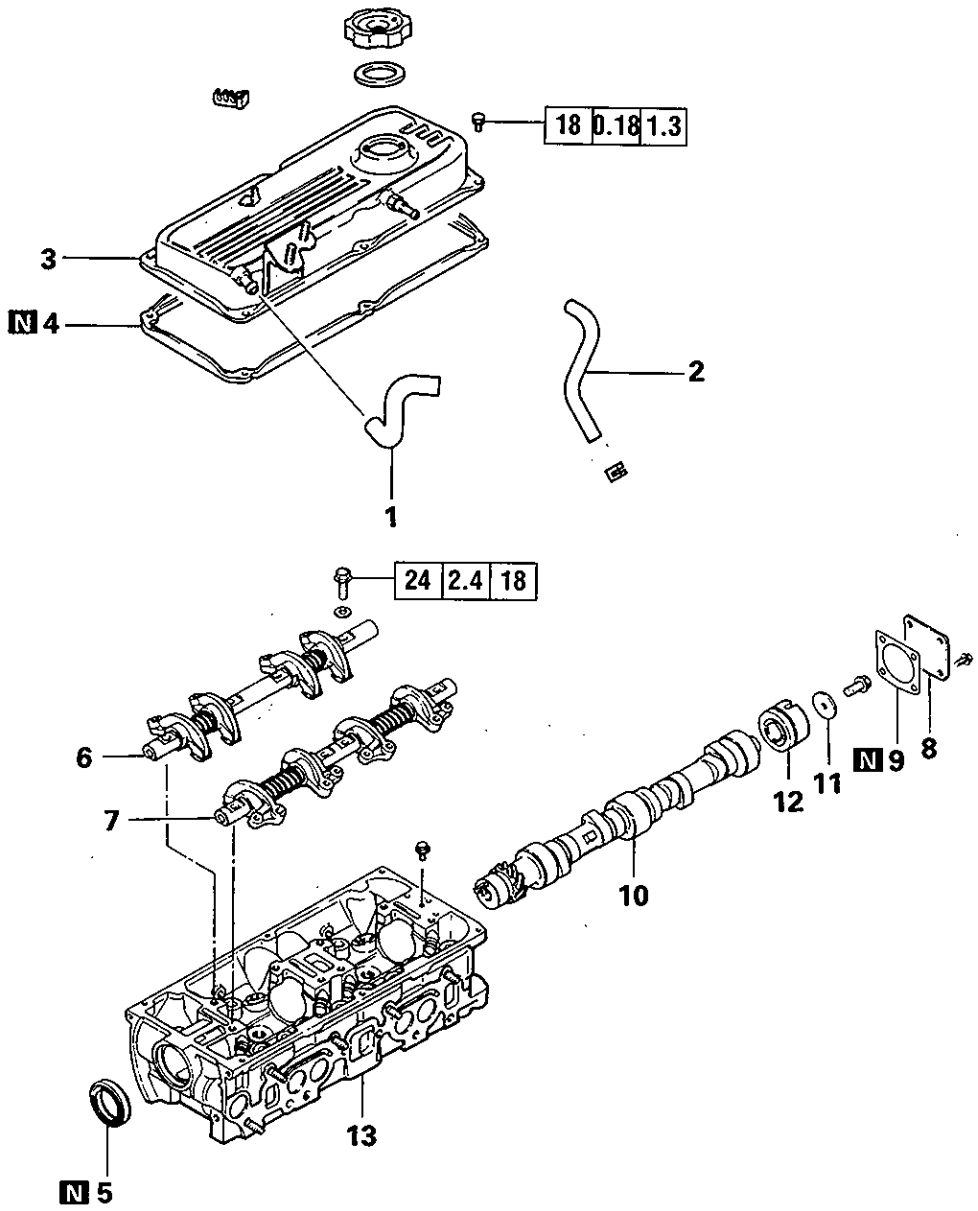


**Removal steps**

1. Breather hose
2. PCV hose
3. Rocker cover
4. Rocker cover gasket
- ◆C◆ 5. Oil seal
6. Rocker arm and shaft assembly
7. Rocker arm and shaft assembly
8. Rear cover
9. Rear cover gasket
- ◆A◆ 10. Camshaft
11. Thrust plate
- ◆B◆ 12. Camshaft thrust case
13. Cylinder head

1EN0202

© Mitsubishi Motors Corporation Apr. 1990 

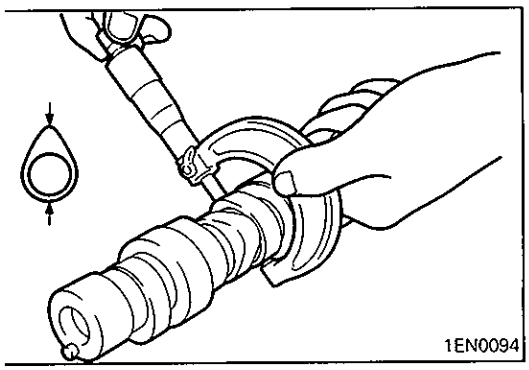


## INSPECTION

### CAMSHAFT

(1) Measure the cam height.

**12-VALVE ENGINE**

**Standard value:**

| | |
|---|---|
| **Intake** | **38.75 mm (1.5256 in.)** |
| **Exhaust** | **39.10 mm (1.5394 in.)** |

**Limit:**

| | |
|---|---|
| **Intake** | **38.25 mm (1.5059 in.)** |
| **Exhaust** | **38.60 mm (1.5197 in.)** |

**8-VALVE ENGINE**

**Standard value:**

| | |
|---|---|
| **Intake** | **38.08 mm (1.4992 in.)** |
| | **38.91 mm (1.5319 in.)*** |
| **Exhaust** | **38.15 mm (1.5020 in.)** |
| | **38.97 mm (1.5342 in.)*** |

**Limit:**

| | |
|---|---|
| **Intake** | **37.58 mm (1.4795 in.)** |
| | **38.41 mm (1.5122 in.)*** |
| **Exhaust** | **37.65 mm (1.4823 in.)** |
| | **38.47 mm (1.5146 in.)*** |

NOTE
*4G15 Multi-point fuel injection for Australia only.

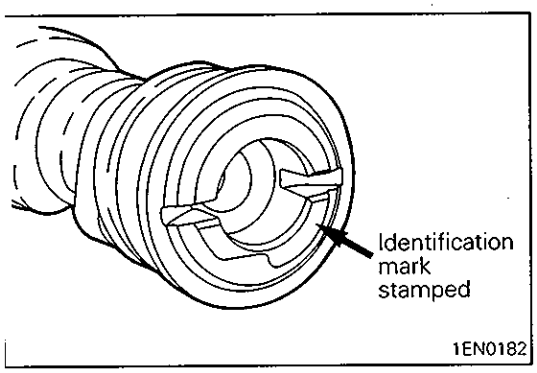


## SERVICE POINTS OF INSTALLATION

**▶A◀ IDENTIFICATION OF CAMSHAFT – 12-VALVE ENGINE**

**Identification mark:**

| | |
|---|---|
| **Multi-point fuel injection engine for Australia** | **1** |
| **Carburetor engine** | **3** |
| **Multi-point fuel injection engine for Europe and General Export** | **4** |

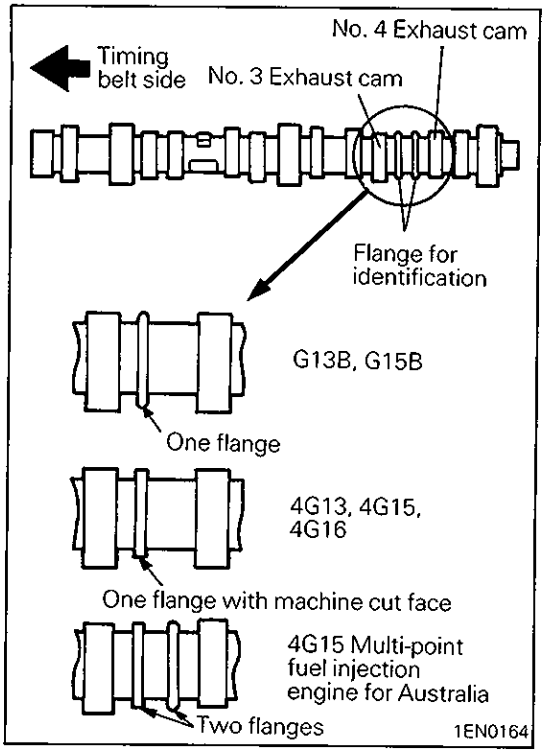


### ◆A◆ IDENTIFICATION OF CAMSHAFT – 8-VALVE ENGINE

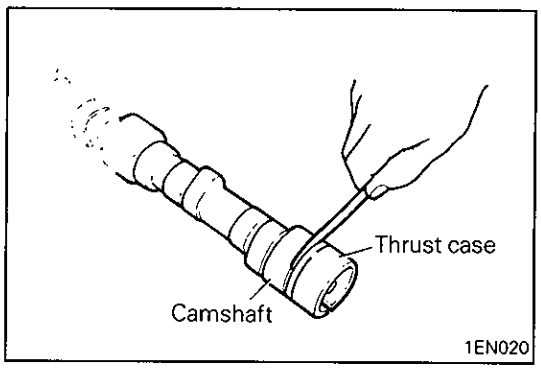


### ◆B◆ INSTALLATION OF CAMSHAFT THRUST CASE

(1) Install the thrust case to the camshaft.
(2) Measure the camshaft end play using a feeler gauge. If it exceeds the limit, replace the thrust case.

**Standard value: 0.05 – 0.20 mm (0.0020 – 0.0079 in.)**

**Limit: 0.4 mm (0.0157 in.)**

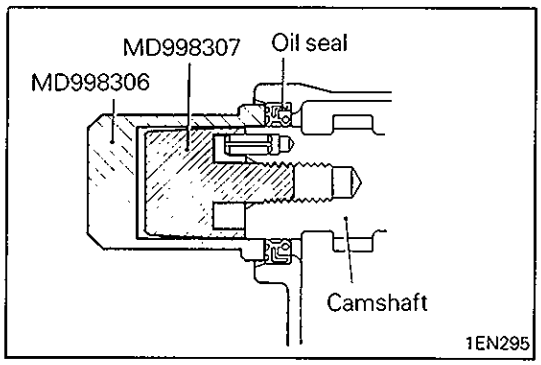


### ◆C◆ INSTALLATION OF OIL SEAL

(1) Install the special tool, Guide, on the camshaft.
(2) Apply oil to the oil seal and insert the oil seal along the Guide until it contacts the cylinder head.
(3) Using the special tool, Installer, press-fit the oil seal into the cylinder head.

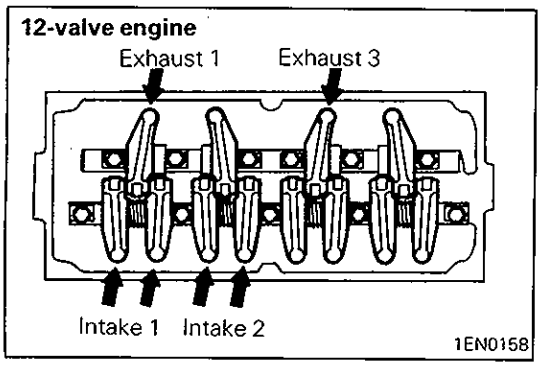


## VALVE CLEARANCE ADJUSTMENT

(1) Position the No. 1 cylinder at top dead center on the compression stroke.
(2) Adjust the valve clearance at the points shown in the illustration.

© Mitsubishi Motors Corporation Apr. 1990

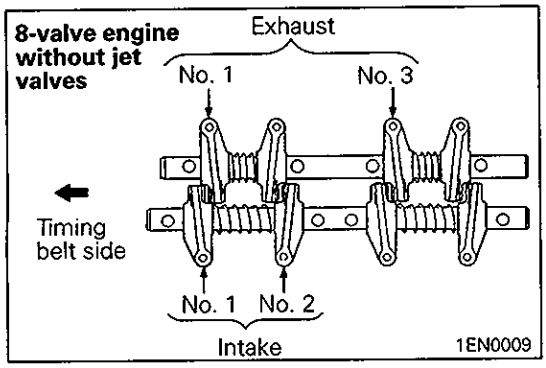


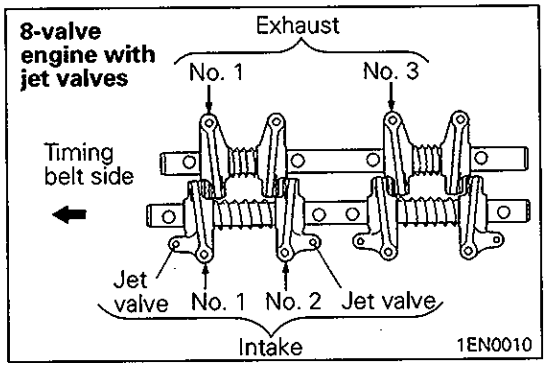


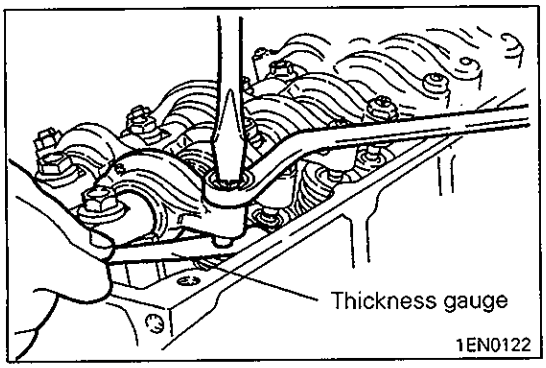


(3) Loosen the adjusting screw locknut.
(4) Using a feeler gauge, adjust the valve clearance by turning the adjusting screw.

**Standard value: on cold engine**

| | |
|---|---|
| **Intake** | **0.09 mm (0.0035 in.)** |
| **Exhaust** | **0.17 mm (0.0067 in.)** |
| **Jet valve** | **0.17 mm (0.0067 in.)** |

(5) While holding the adjusting screw with a screwdriver, tighten the lock nut.

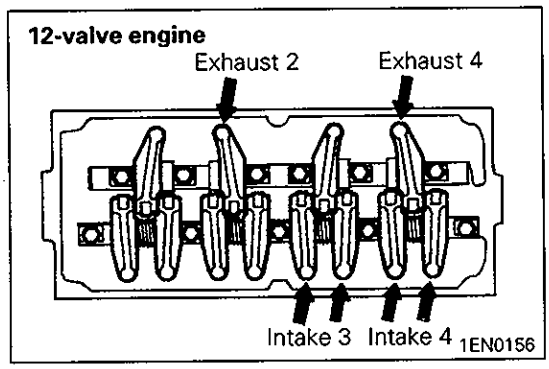


(6) Rotate clockwise the crankshaft one complete turn (360° degree).
(7) Adjust the valve clearance at points as shown in the illustration.
(8) Repeat steps (3) to (5) to adjust the valve clearance of remaining valves.

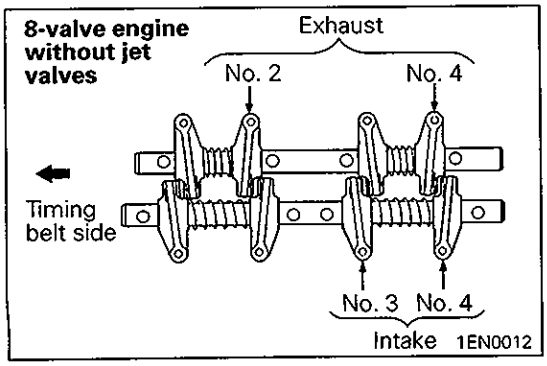


© Mitsubishi Motors Corporation Dec. 1995

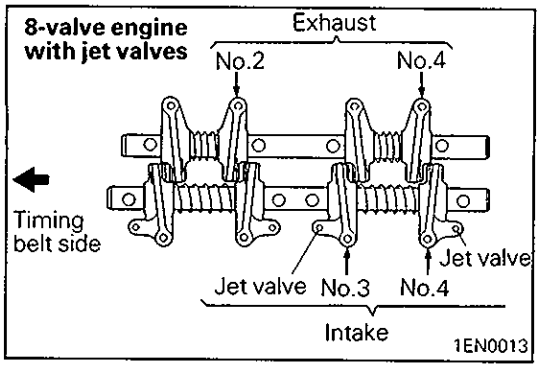
8-valve engine with jet valves
Exhaust
No.2
No.4
Timing belt side
Jet valve
Jet valve
No.3
No.4
Intake
1EN0013

# 7. ROCKER ARMS AND ROCKER SHAFTS

## REMOVAL AND INSTALLATION <12-VALVE ENGINE>

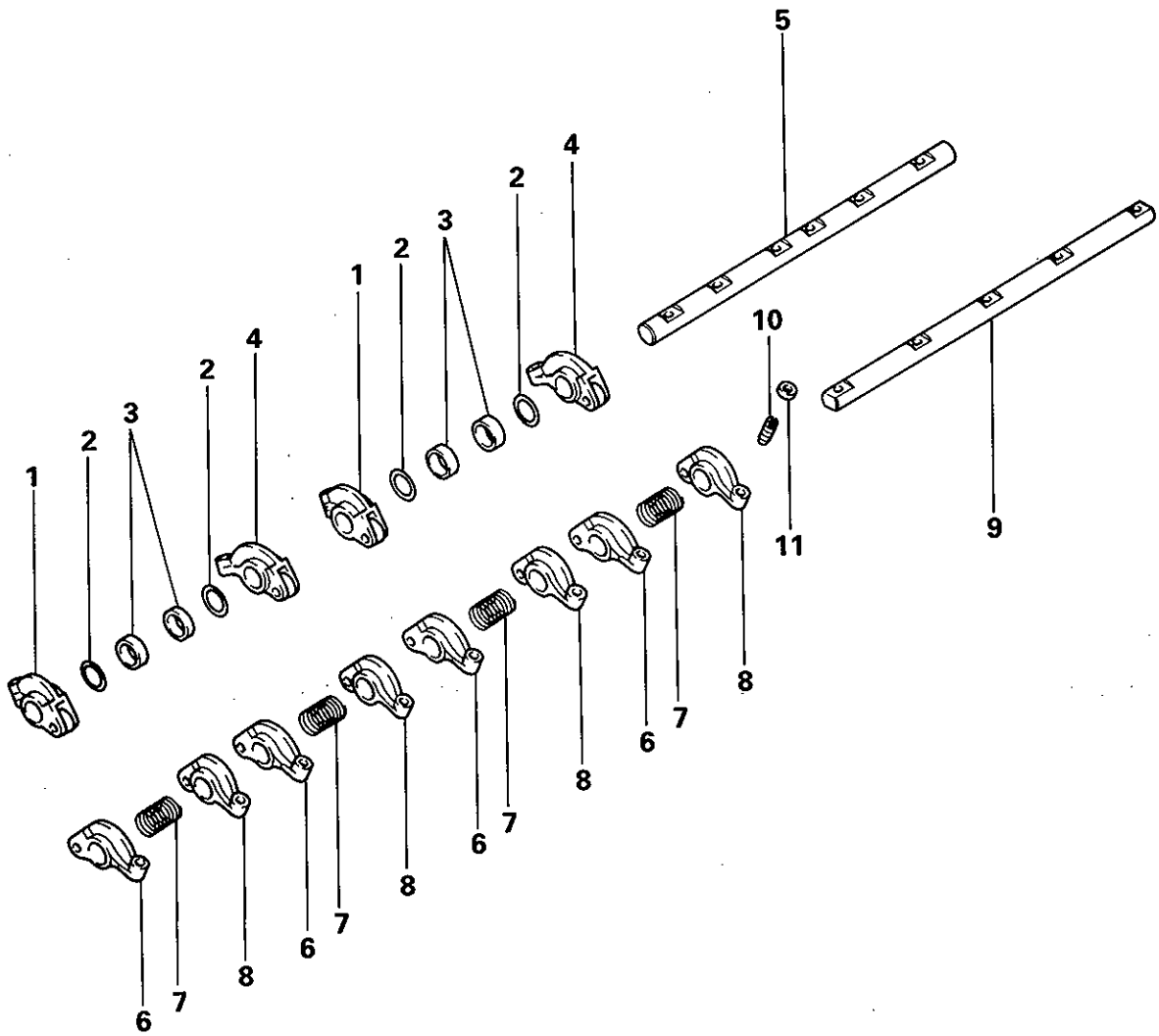


**Disassembly steps**

- ◆A◆ 1. Rocker arm "D"
- 2. Wave washer
- 3. Spacer
- ◆A◆ 4. Rocker arm "C"
- 5. Rocker shaft (exhaust side)
- ◆A◆ 6. Rocker arm "B"
- 7. Rocker arm spring
- ◆A◆ 8. Rocker arm "A"
- 9. Rocker shaft (intake side)
- 10. Adjusting screw
- 11. Nut

1EN0097

© Mitsubishi Motors Corporation Apr. 1990

## REMOVAL AND INSTALLATION <8-VALVE ENGINE WITHOUT JET VALVES>

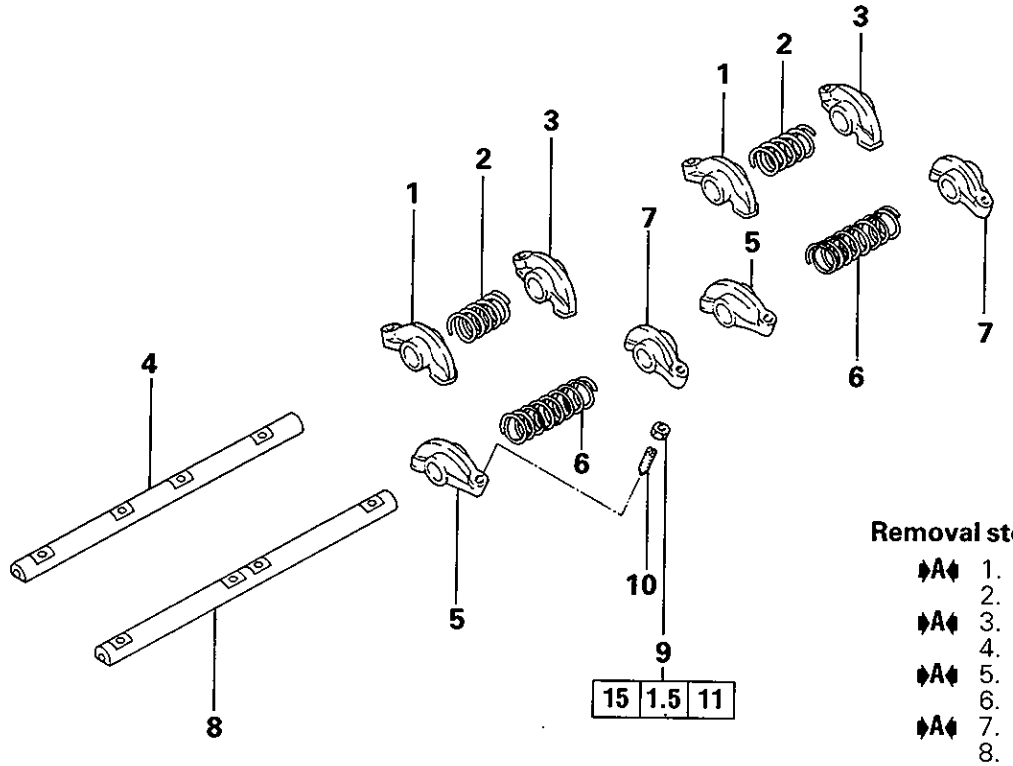


**Removal steps**

- ◆A◆ 1. Rocker arm (1-3)
- 2. Rocker shaft spring
- ◆A◆ 3. Rocker arm (2-4)
- 4. Rocker shaft (exhaust)
- ◆A◆ 5. Rocker arm (1-3)
- 6. Rocker shaft spring
- ◆A◆ 7. Rocker arm (2-4)
- 8. Rocker shaft (intake)
- 9. Adjusting screw
- 10. Nut

1EN0175

## REMOVAL AND INSTALLATION <8-VALVE ENGINE WITH JET VALVES>

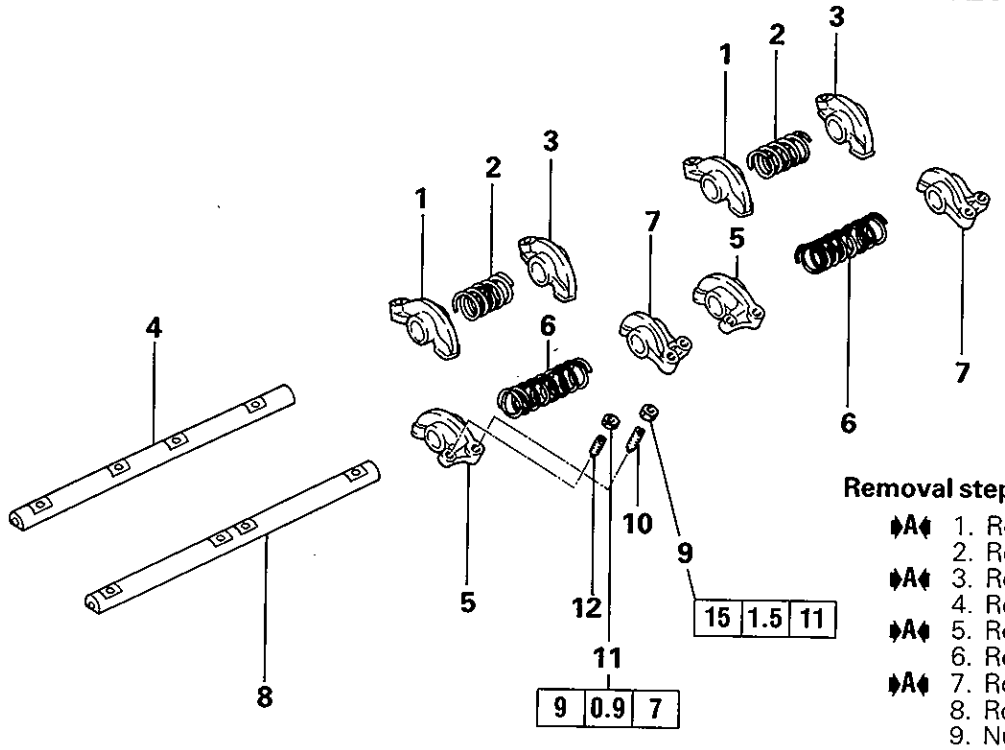


**Removal steps**

- ◆A◆ 1. Rocker arm (1-3)
- 2. Rocker shaft spring
- ◆A◆ 3. Rocker arm (2-4)
- 4. Rocker shaft (exhaust)
- ◆A◆ 5. Rocker arm (1-3)
- 6. Rocker shaft spring
- ◆A◆ 7. Rocker arm (2-4)
- 8. Rocker shaft (intake)
- 9. Nut
- 10. Adjusting screw
- 11. Nut (jet valve)
- 12. Adjusting screw (jet valve)

1EN0176

© Mitsubishi Motors Corporation Apr. 1990

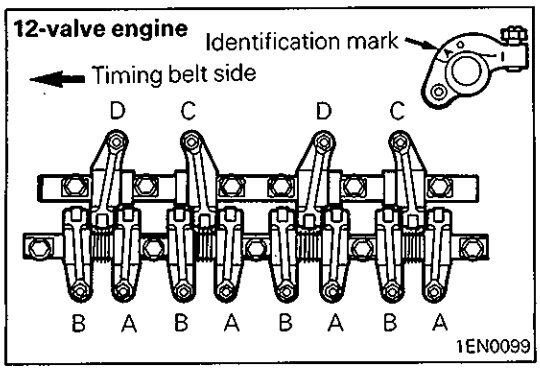


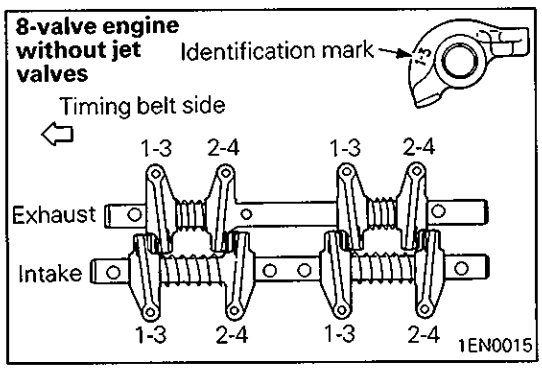


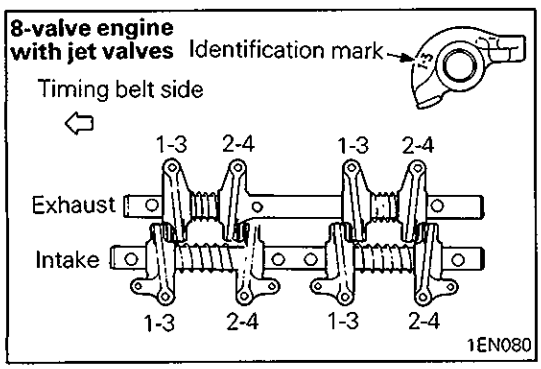


## SERVICE POINTS OF INSTALLATION

### ▶A◀ INSTALLATION OF ROCKER ARMS

(1) Install the rocker arms paying attention to the identification marks.

## NOTES

# 8. CYLINDER HEAD AND VALVES

## REMOVAL AND INSTALLATION <12-VALVE ENGINE>

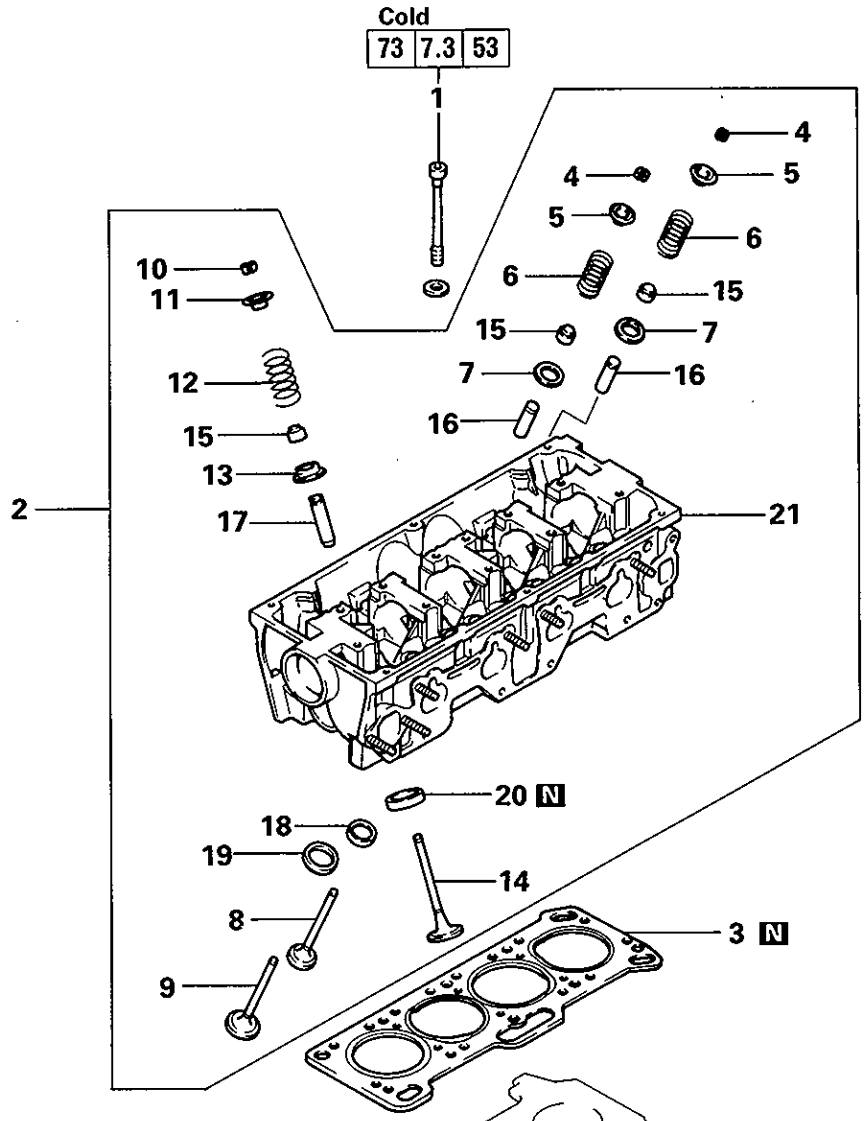


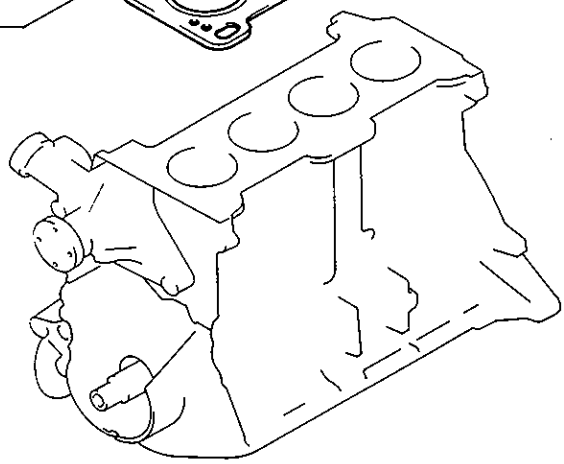

**Removal steps**

◊A◊ ◆E◆ 1. Cylinder head bolt
2. Cylinder head, valve assembly
◆D◆ 3. Cylinder head gasket
◊B◊ ◆C◆ 4. Retainer lock
5. Valve spring retainer
◆B◆ 6. Valve spring
7. Valve spring seat
8. Intake valve (primary)
9. Intake valve (secondary)
◊B◊ ◆C◆ 10. Retainer lock
11. Valve spring retainer
◆B◆ 12. Valve spring
13. Valve spring seat
14. Exhaust valve
◊C◊ ◆A◆ 15. Valve stem seal
16. Intake valve guide
17. Exhaust valve guide
18. Intake valve seat (primary)
19. Intake valve seat (secondary)
20. Exhaust valve seat
21. Cylinder head

1EN0101

© Mitsubishi Motors Corporation Apr. 1990

## REMOVAL AND INSTALLATION <8-VALVE ENGINE>

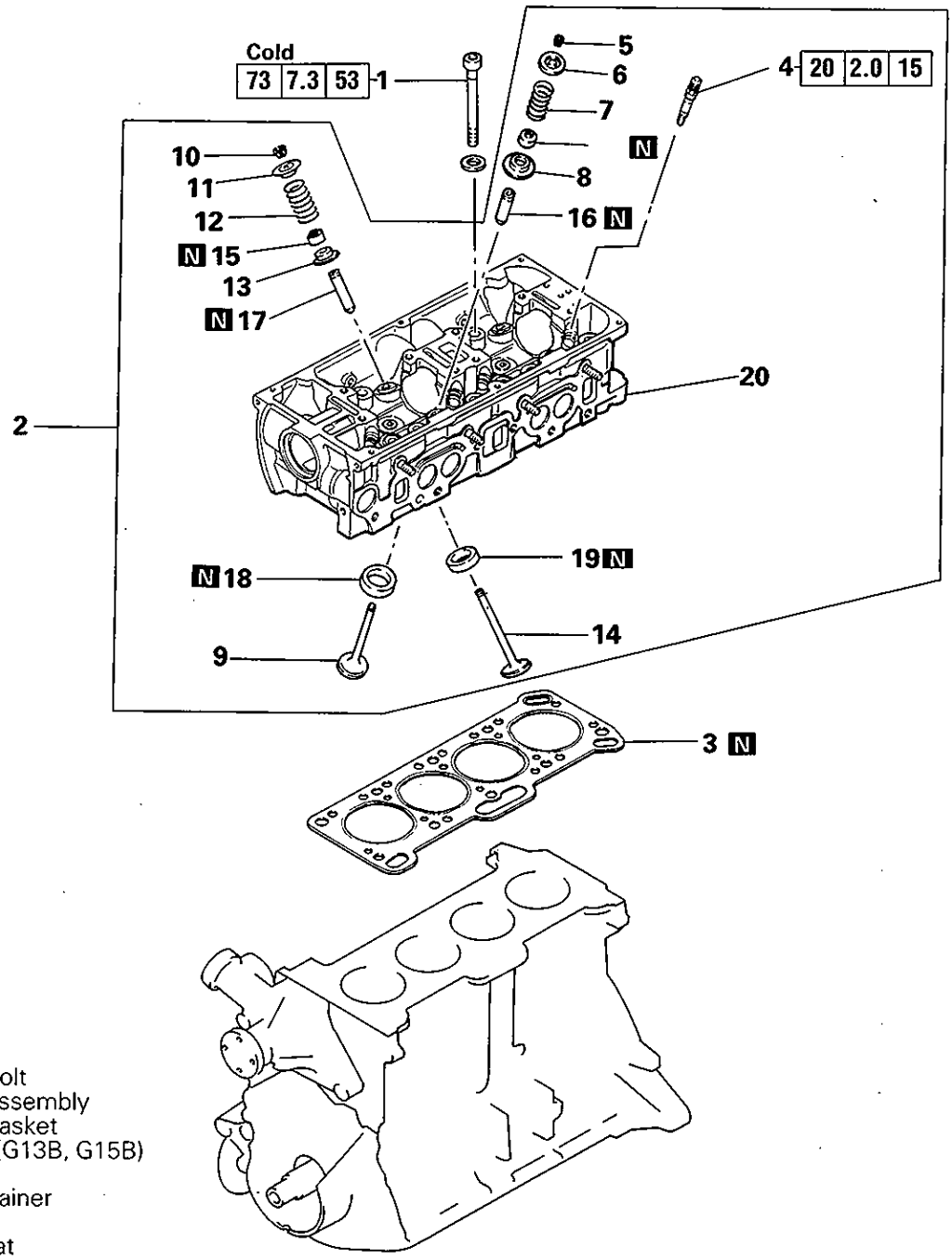


**Removal steps**

◊A◊ ◆E◆ 1. Cylinder head bolt
2. Cylinder head assembly
◆D◆ 3. Cylinder head gasket
◊B◊ ◆G◆ 4. Jet valve ass'y (G13B, G15B)
◊C◊ ◆B◆ 5. Retainer lock
6. Valve spring retainer
7. Valve spring
8. Valve spring seat
9. Inlet valve
◊C◊ ◆B◆ 10. Retainer lock
11. Valve spring retainer
12. Valve spring
13. Valve spring seat
14. Exhaut valve
◊D◊ ◆A◆ 15. Valve stem seal
16. Intake valve guide
17. Exhaust valve guide
18. Intake valve seat
19. Exhaust valve seat
20. Cylinder head

1EN297

© Mitsubishi Motors Corporation Apr. 1990

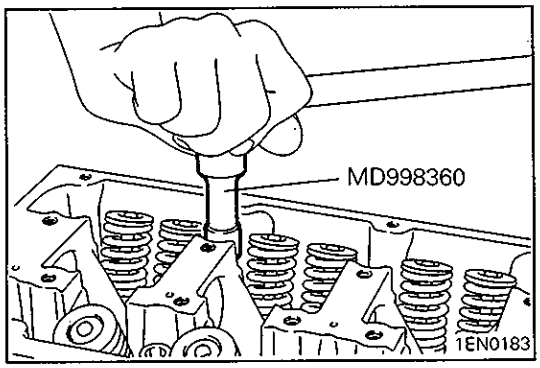


## SERVICE POINTS OF REMOVAL

### ◊A◊ REMOVAL OF CYLINDER HEAD BOLT

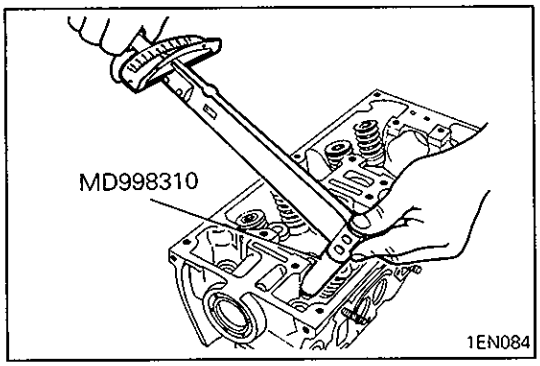


### ◊B◊ REMOVAL OF JET VALVE

(1) When loosening a jet valve, hold the special tool securely so that it is not tilted with respect to the jet valve center line. Also avoid applying force abruptly.

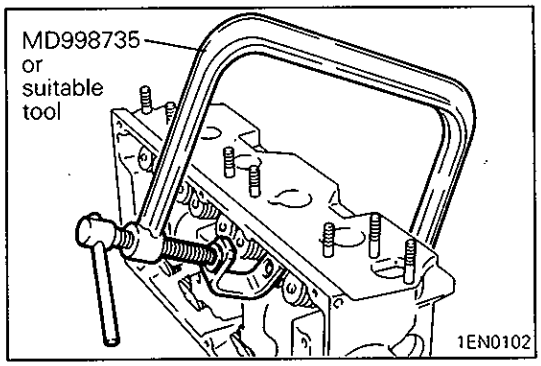


### ◊C◊ REMOVAL OF RETAINER LOCK

(1) Store removed valves, springs and other parts, tagged to indicate their cylinder No. and location for reassembly.

NOTE
The valve spring retainers of the 12-valve engine differ in size between the intake and exhaust sides. Therefore, use the following retainer holders.

**Identification mark:**
**Intake** ..... **A**
**Exhaust** ..... **B**

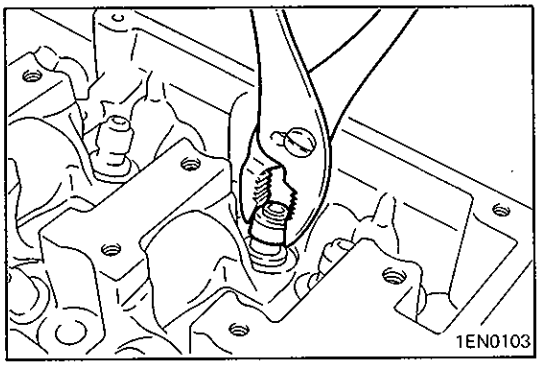


### ◊D◊ REMOVAL OF VALVE STEM SEAL

**Caution**
- **The stem seal is not reusable.**

## INSPECTION

### CYLINDER HEAD

(1) Check the cylinder head gasket surface for flatness by using a straightedge and thickness gauge.

**Standard value: 0.05 mm (0.0020 in.)**
**Limit: 0.2 mm (0.008 in.)**

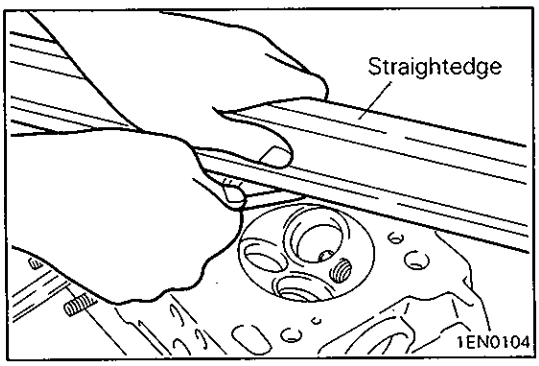


(2) If the service limit is exceeded, correct to meet specification.

**Grinding limit: 0.2 mm (0.008 in.)**

**Caution**
- **The total thickness of the stock allowed to be removed from cylinder head and mating cylinder block is 0.2 mm (0.008 in.) in thickness.**

**Cylinder head height (Specification when new):**
**106.9 – 107.1 mm (4.209 – 4.217 in.)**

© Mitsubishi Motors Corporation Apr. 1990

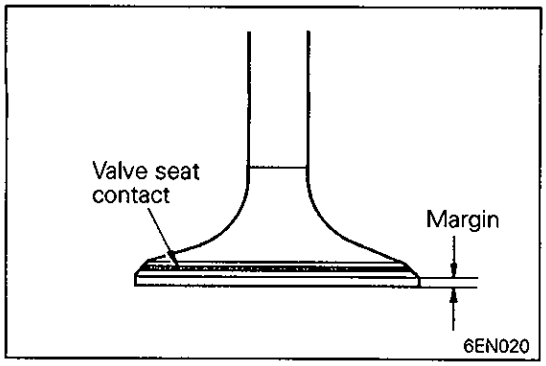


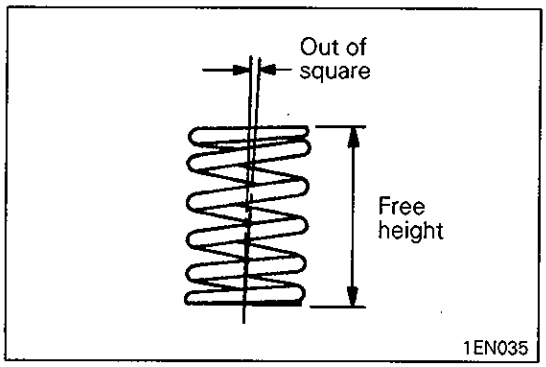


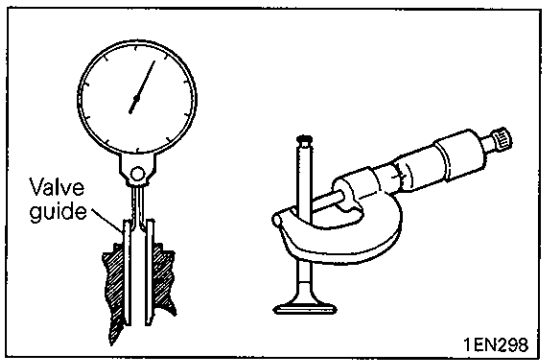


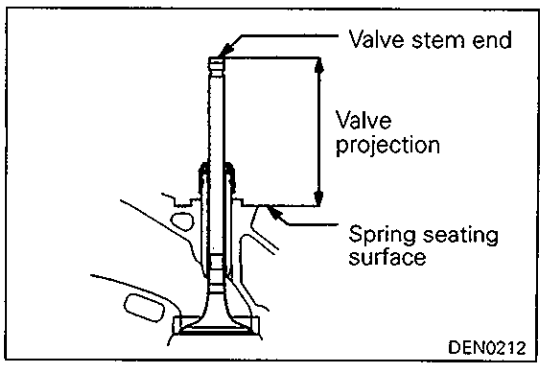


## VALVE

(1) Check the valve face for correct contact. If incorrect, reface using valve refacer. Valve seat contact should be maintained uniform at the center of valve face.

(2) If the margin is smaller than the service limit, replace the valve.

**Standard value:**
- **Intake** ..... **1.0 mm (0.039 in.)**
- **Exhaust** ..... **1.5 mm (0.059 in.)**

**Limit:**
- **Intake** ..... **0.5 mm (0.020 in.)**
- **Exhaust** ..... **1.0 mm (0.039 in.)**

## VALVE SPRING

(1) Measure the free height of the spring and, if it is smaller than the limit, replace.

**12-VALVE ENGINE**

**Standard value:**
- **Intake** ..... **46.1 mm (1.815 in.)**
- **Exhaust** ..... **46.8 mm (1.843 in.)**

**Limit:**
- **Intake** ..... **45.1 mm (1.776 in.)**
- **Exhaust** ..... **45.8 mm (1.803 in.)**

**8-VALVE ENGINE**

**Standard value: 44.6 mm (1.756 in.)**

**Limit: 43.6 mm (1.717 in.)**

(2) Measure the squareness of the spring and, if the limit is exceeded, replace.

**Standard value: 2° or less**

**Limit: 4°**

## VALVE GUIDE

(1) Measure the clearance between the valve guide and valve stem. If the limit is exceeded, replace the valve guide or valve, or both.

**Standard value:**
- **Intake** ..... **0.02 – 0.05 mm (0.0008 – 0.0020 in.)**
- **Exhaust** ..... **0.05 – 0.09 mm (0.0020 – 0.0035 in.)**

**Limit:**
- **Intake** ..... **0.10 mm (0.0039 in.)**
- **Exhaust** ..... **0.15 mm (0.0059 in.)**

## VALVE SEATS

(1) Assemble the valve, then measure the valve stem projection between the end of the valve stem and the spring seating surface while seating the valve against the valve seat. If the measurement exceeds the specified limit, replace the valve seat.

**8-VALVE ENGINE**

**Standard value:**
- **Intake** ..... **41.45 mm (1.6319 in.)**
- **Exhaust** ..... **41.35 mm (1.6279 in.)**

**Limit:**
- **Intake** ..... **41.95 mm (1.6516 in.)**
- **Exhaust** ..... **41.85 mm (1.6476 in.)**

© Mitsubishi Motors Corporation Dec. 1995

**12-VALVE ENGINE**

**Standard value:**

| | |
|---|---|
| **Intake** | **43.70 mm (1.7205 in.)** |
| **Exhaust** | **43.30 mm (1.7047 in.)** |

**Limit:**

| | |
|---|---|
| **Intake** | **44.20 mm (1.7402 in.)** |
| **Exhaust** | **43.80 mm (1.7244 in.)** |

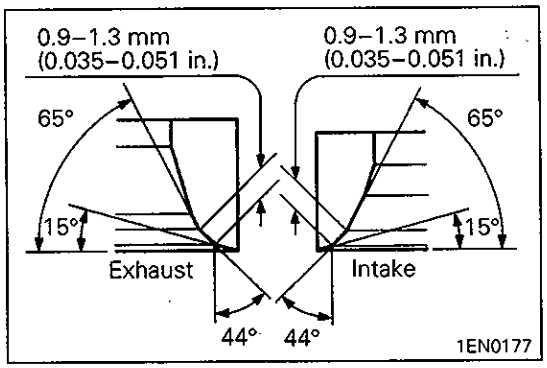


## VALVE SEAT RECONDITIONING PROCEDURE – 12-VALVE ENGINE

(1) Before attempting reconditioning of the valve seat, check the valve guide-to-valve stem clearance and replace the valve guide if necessary.
(2) Recondition to the specified seat width and seat angle.
(3) After correcting the valve seat, lap the valve and valve seat using lapping compound. Then, check the valve stem projection (refer to VALVE SEAT in INSPECTION).

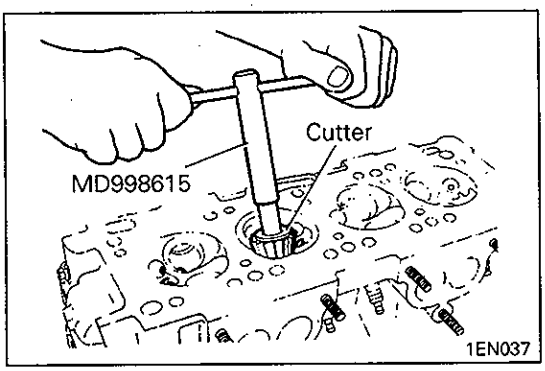


## VALVE SEAT RECONDITIONING PROCEDURE – 8-VALVE ENGINE

(1) Before correcting the valve seat, check for clearance between the valve guide and valve and, if necessary, replace the valve guide.
(2) Using the special tool or seat grinder, correct to obtain the specified seat width and angle.

| Cutter angle | Tool number | |
|---|---|---|
| | Intake | Exhaust |
| 45° | MD998158 | MD998156 |
| 65° | MD998165 | MD998614 |
| 30° | MD998173 | MD998171 |

(3) After correcting the valve seat, lap the valve and valve seat using lapping compound. Then, check the valve stem projection (refer to VALVE SEAT in INSPECTION).

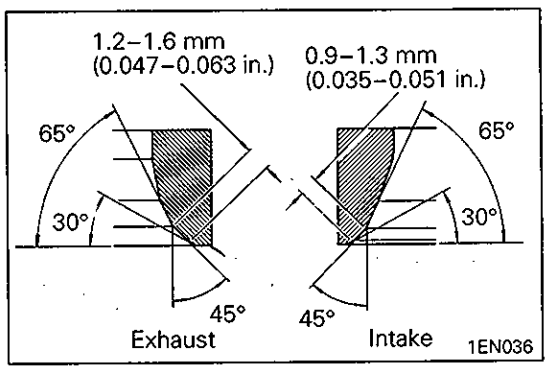


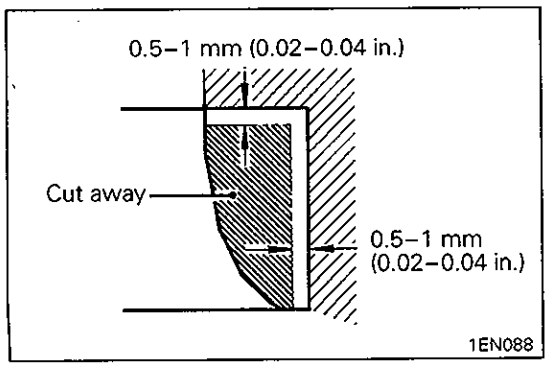


## VALVE SEAT REPLACEMENT PROCEDURE

(1) Cut the valve seat to be replaced from the inside to thin the wall thickness. Then, remove the valve seat.

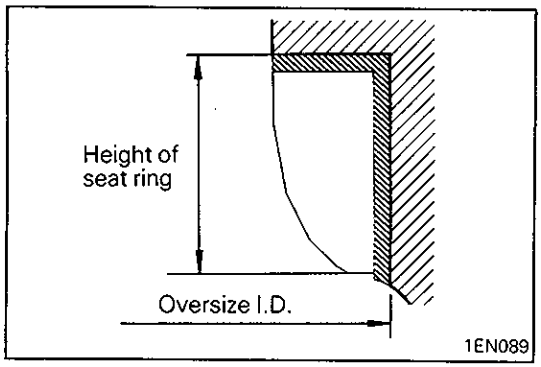


(2) Rebore the valve seat hole in cylinder head to a selected oversize valve seat diameter.

**Seat ring hole diameter:**
**12-valve engine**

| | |
|---|---|
| **Intake (primary) 0.30 O.S.** | **27.421 – 27.441 mm (1.0796 – 1.0804 in.)** |
| **0.60 O.S.** | **27.721 – 27.741 mm (1.0914 – 1.0922 in.)** |
| **Intake (secondary) 0.30 O.S.** | **32.425 – 32.445 mm (1.2766 – 1.2774 in.)** |
| **0.60 O.S.** | **32.725 – 32.745 mm (1.2884 – 1.2892 in.)** |
| **Exhaust 0.30 O.S.** | **35.425 – 35.445 mm (1.3947 – 1.3955 in.)** |
| **0.60 O.S.** | **35.725 – 35.745 mm (1.4065 – 1.4073 in.)** |

**8-valve engine**

| | |
|---|---|
| **Intake 0.30 O.S.** | **36.300 – 36.325 mm (1.4291 – 1.4301 in.)** |
| **0.60 O.S.** | **36.600 – 36.625 mm (1.4409 – 1.4419 in.)** |
| **Exhaust 0.30 O.S.** | **32.300 – 32.325 mm (1.2717 – 1.2726 in.)** |
| **0.60 O.S.** | **32.600 – 32.625 mm (1.2835 – 1.2845 in.)** |

(3) Before fitting the valve seat, either heat the cylinder head up to approximately 250°C (482°F) or cool the valve seat using cooling spray, to prevent the cylinder head bore from galling.

(4) Using valve seat cutter, correct the valve seat to the specified width and angle. See "VALVE SEAT RECONDITIONING PROCEDURE."

## VALVE GUIDE REPLACEMENT PROCEDURE – 12-VALVE ENGINE

(1) Push out the valve guide toward the combustion chamber side using a press.

(2) Rebore the valve guide hole of the cylinder head to the size of the oversize valve guide to be installed.

**Caution**

- **Do not install a valve guide of the same size again.**

**Valve guide hole diameter**

| | |
|---|---|
| **0.05 O.S** | **12.050 – 12.068 mm (0.4744 – 0.4751 in.)** |
| **0.25 O.S** | **12.250 – 12.268 mm (0.4823 – 0.4830 in.)** |
| **0.50 O.S** | **12.500 – 12.518 mm (0.4921 – 0.4928 in.)** |

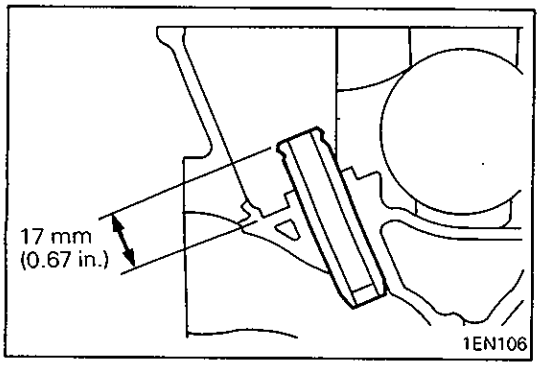


(3) Install the valve guide until it projects 17 mm (0.67 in.) as illustrated.

NOTE
(1) The valve guide must be installed from the upper side of the cylinder head.
(2) Note that the valve guides differ in length 44 mm (1.732 in.) on intake side, 49.5 mm (1.949 in.) on exhaust side.
(3) After installation of the valve guide, install a new valve and check that it slides smoothly.

© Mitsubishi Motors Corporation Apr. 1990

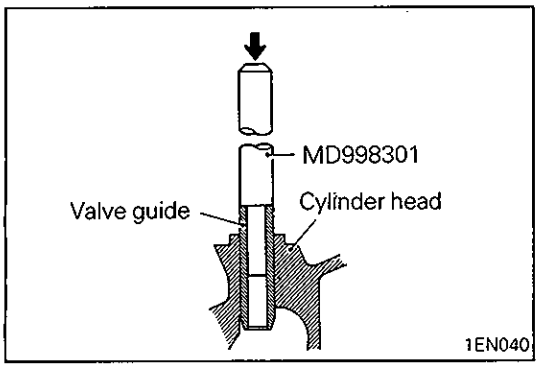


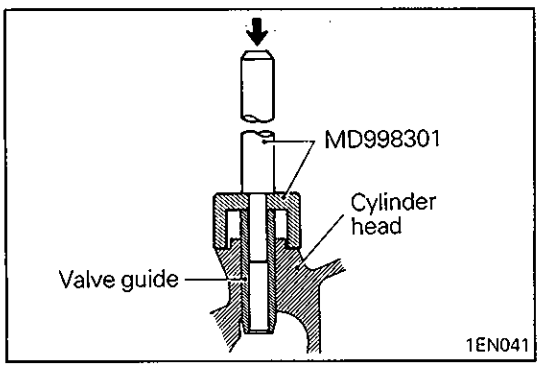


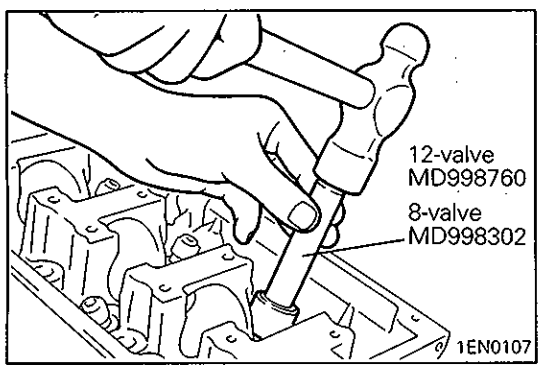


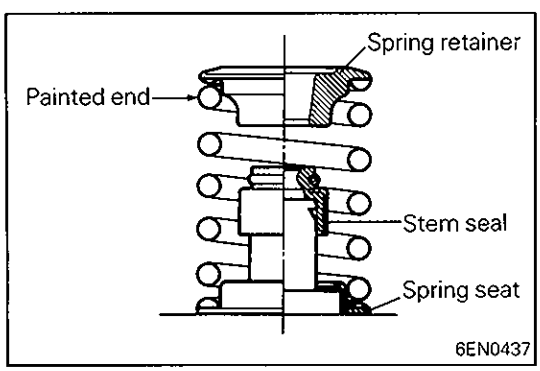


## VALVE GUIDE REPLACEMENT PROCEDURE – 8-VALVE ENGINE

(1) Using the special tool and a press, remove the valve guide toward cylinder head gasket surface.

(2) Rebore valve guide hole to the new oversize valve guide outside diameter.

**Valve guide hole diameter:**
**0.05 O.S. .... 12.050 – 12.068 mm (0.4744 – 0.4751 in.)**
**0.25 O.S. .... 12.250 – 12.268 mm (0.4823 – 0.4830 in.)**
**0.50 O.S. .... 12.500 – 12.518 mm (0.4921 – 0.4928 in.)**

NOTE
Do not install a valve guide of the same size again.

(3) Using the special tool, press-fit the valve guide, working from the cylinder head top surface.

NOTE
Intake valve guide [44 mm (1.732 in.)] is different in length from exhaust valve guide [49.5 mm (1.949 in.)].
Make sure to install them in their correct positions.

(4) After installing valve guides, insert new valves in them to check for sliding condition.

(5) When valve guides have been replaced check for valve contact and correct valve seats as necessary.

## SERVICE POINTS OF REASSEMBLY

### ◆A◆ INSTALLATION OF VALVE STEM SEAL

(1) Install the valve spring seat.

(2) The special tool must be used to install the valve stem seal. Improper installation could result in oil leaking past the valve guide.

NOTE
The valve stem seal cannot be reused.

### ◆B◆ INSTALLATION OF VALVE SPRING

(1) Install the valve spring with the painted end on the rocker arm side.

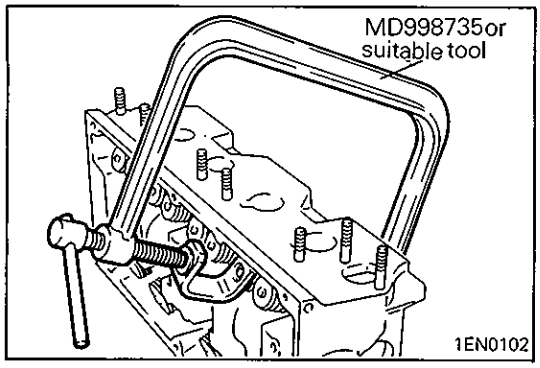


## ◆C◆ INSTALLATION OF RETAINER LOCK

(1) The valve spring, if excessively compressed, causes th bottom end of retainer to be in contact with, and damage the stem seal.

NOTE
The valve spring retainers differ in size between the intak and exhaust sides. Therefore, use the following retaine holders.

**Identification mark:**
**Intake** ..... **E**
**Exhaust** ..... **A**

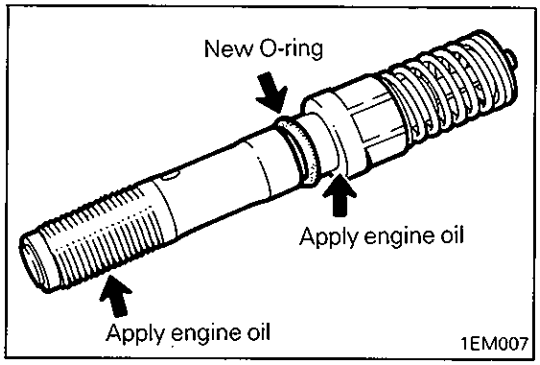


## ◆D◆ INSTALLATION OF JET VALVE

(1) Install a new O-ring to the jet body.
(2) Apply engine oil to threads and seat surface of jet body.

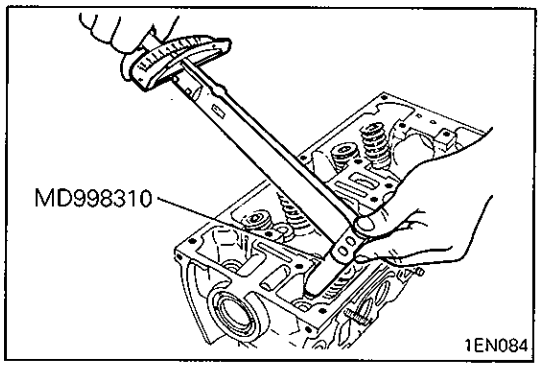


(3) Install the jet valve in the cylinder head finger tight.
(4) Using the special tool and torque wrench, tighten the jet valve to the specified torque.

**Caution**
- **Hold the special tool securely not to tilt with respect to center of jet valve.**

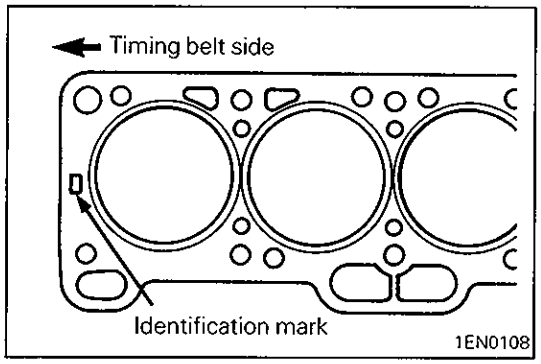


## ◆E◆ INSTALLATION OF CYLINDER HEAD GASKET

(1) Clean both gasket surfaces of cylinder block and cylinder head.
(2) Confirm identification mark on cylinder head gasket. The identification mark is stamped on the front end upper surface of gasket.

**Identification mark:**
**12-Valve engine** ..... **3V**
**8-Valve engine**
**4G16** ..... **11**
**4G13.G13B** ..... **13**
**4G15.G15B** ..... **15**

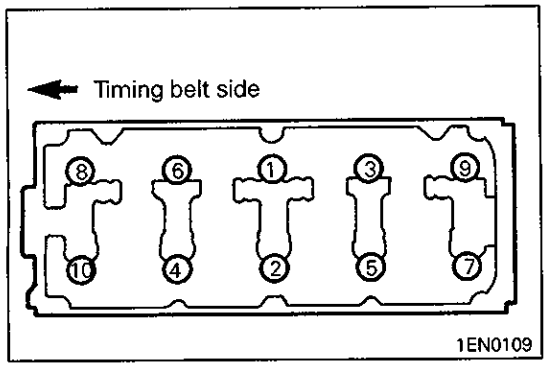


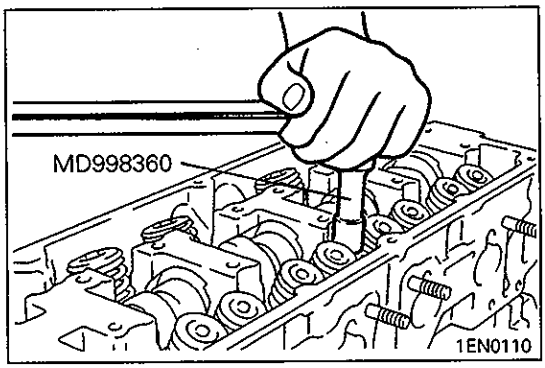


## ◆F◆ INSTALLATION OF CYLINDER HEAD BOLT

(1) Using the special tool and torque wrench, tighten bolts in the shown sequence.
(2) Repeat the tightening sequence several times, and torque the bolts to specification in the final sequence.

## NOTES

# 9. JET VALVE (ENGINE WITH JET VALVES)

## DISASSEMBLY AND REASSEMBLY

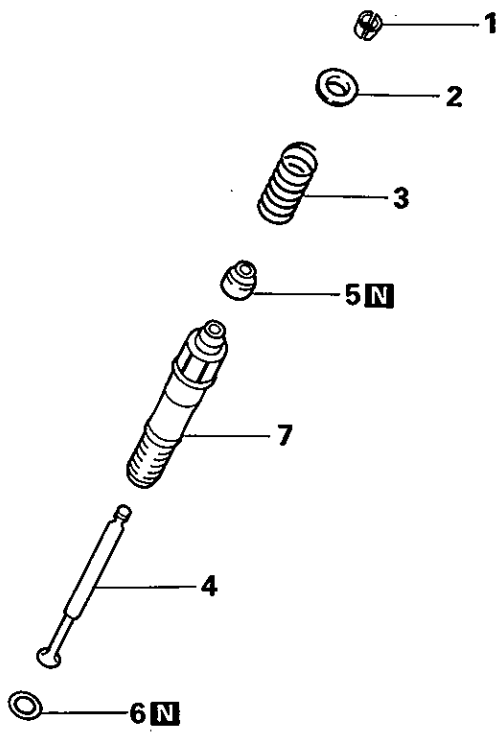


**Disassembly steps**

◇A◇ ◆B◆ 1. Retainer lock
2. Valve spring retainer
3. Valve spring
4. Jet valve
◆A◆ 5. Stem seal
6. O-ring
7. Jet body

1EM177

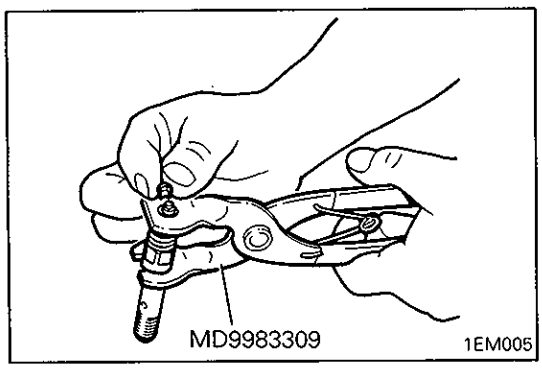


## SERVICE POINT OF DISASSEMBLY

### ◇A◇ REMOVAL OF RETAINER LOCK

(1) Keep disassembled parts neatly arranged for each cylinder.

### INSPECTION

- Insert a jet valve into jet body and check for sliding conditions. If it does not slide smoothly, or too loose in the body, replace.

  NOTE
  Replace jet valve and jet body as an assembly.

© Mitsubishi Motors Corporation Apr. 1990

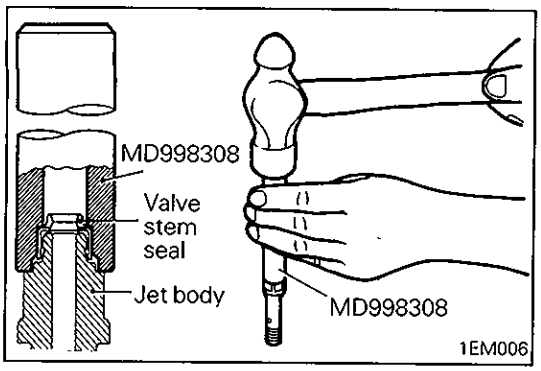


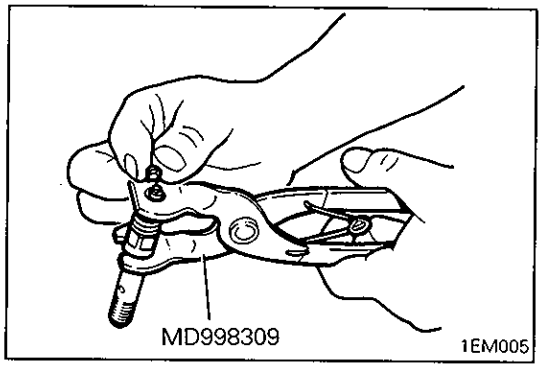


## SERVICE POINTS OF REASSEMBLY

### ▶A◀ INSTALLATION OF STEM SEAL

(1) Incorrect installation of valve stem seal could cause an ingress of oil into cylinder. Make sure to use the special tool to install the seal.

**Caution**

- **Valve stem seal cannot be reused.**

### ▶B◀ INSTALLATION OF RETAINER LOCK

(1) While compressing the valve spring with the special tool, install the retainer lock. Use care not to damage the valve stem seal with the retainer bottom edge when compressing the spring.

© Mitsubishi Motors Corporation Apr. 1990

# 10. FRONT CASE AND OIL PUMP

## REMOVAL AND INSTALLATION

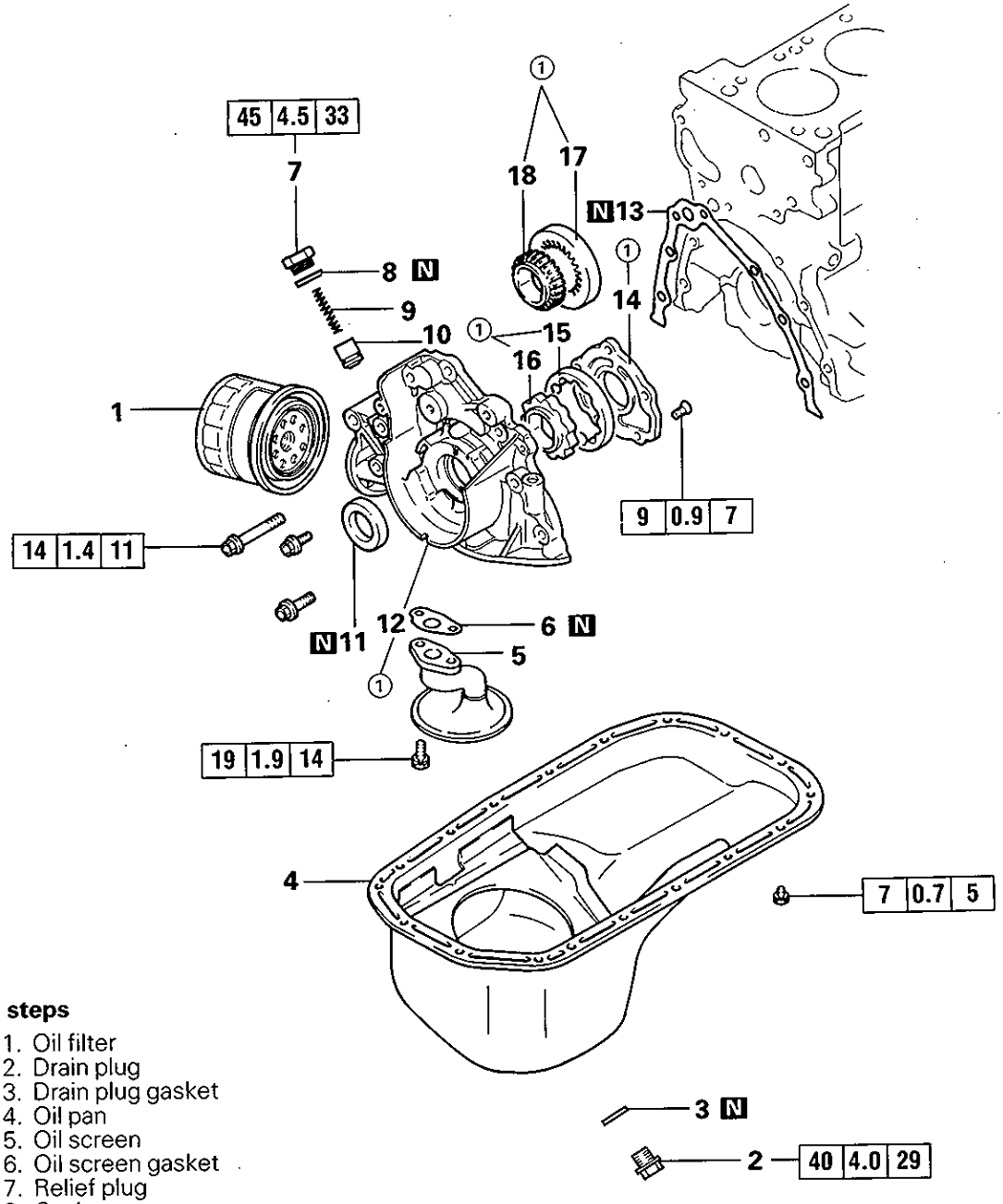


**Removal steps**

- ◆D◆ 1. Oil filter
- 2. Drain plug
- 3. Drain plug gasket
- ◇A◇ ◆C◆ 4. Oil pan
- 5. Oil screen
- 6. Oil screen gasket
- 7. Relief plug
- 8. Gasket
- 9. Relief spring
- 10. Relief plunger
- ◆B◆ 11. Oil seal
- 12. Front case
- 13. Front case gasket
- 14. Oil pump cover
- ◇B◇ ◆A◆ 15. Outer rotor } Trochoid type
- ◇B◇ ◆A◆ 16. Inner rotor } Trochoid type
- ◇B◇ ◆A◆ 17. Outer gear } Gear type
- ◇B◇ ◆A◆ 18. Inner gear } Gear type

NOTE
①: See "Details of Change" table.

1EN0165

Details of Change

| | |
|---|---|
| ① | **Rotors**<br> 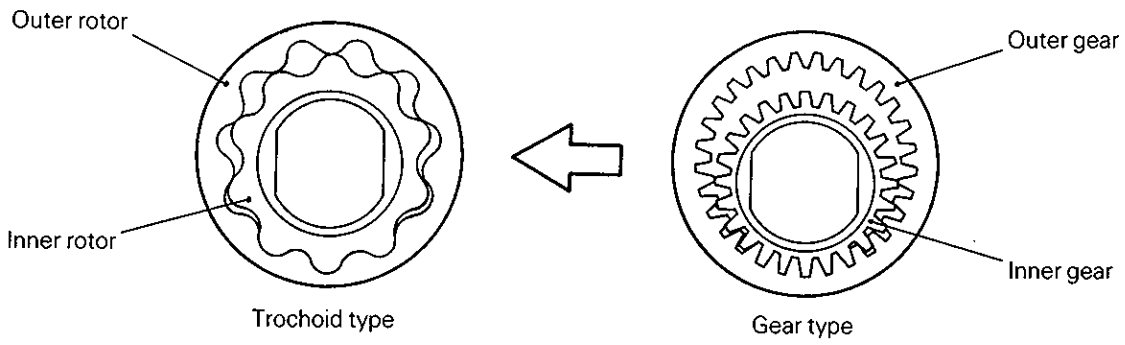 <br><br>NOTE: With the change of oil pump, the front case and oil pump cover have also been changed. |

© Mitsubishi Motors Corporation Apr. 1990

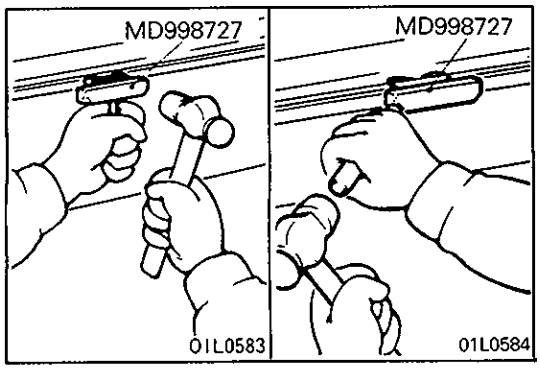


## SERVICE POINTS OF REMOVAL

### ◊A◊ REMOVAL OF OIL PAN

(1) Knock the special tool deeply between the oil pan and the cylinder block.
(2) Hitting the side of the special tool, slide the special tool along the oil pan to remove it.

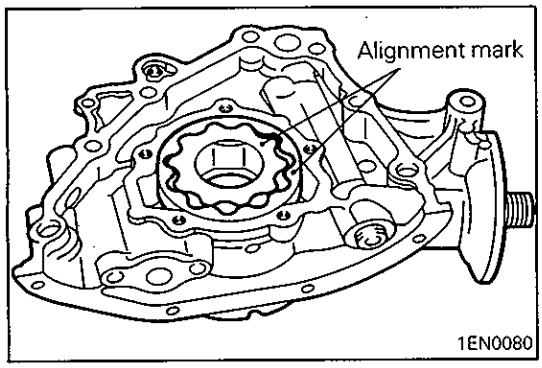


### ◊B◊ REMOVAL OF OUTER ROTOR / INNER ROTOR / OUTER GEAR / INNER GEAR

(1) Put alignment marks on the outer and inner rotors or outer and inner gears for reference in reassembly.

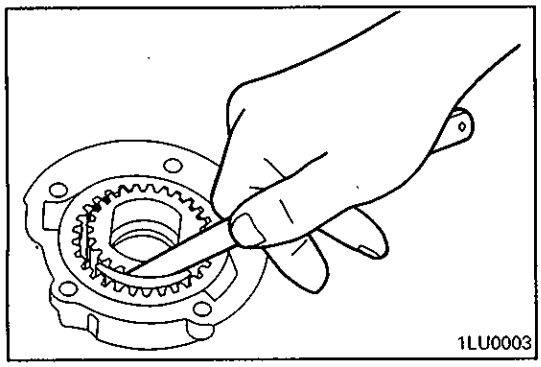


## INSPECTION

### OIL PUMP – Gear type

(1) Check the inner gear tooth to crescent clearance.
**Standard value: 0.21 – 0.34 mm (0.0083 – 0.0134 in.)**
**Limit: 0.5 mm (0.020 in.)**

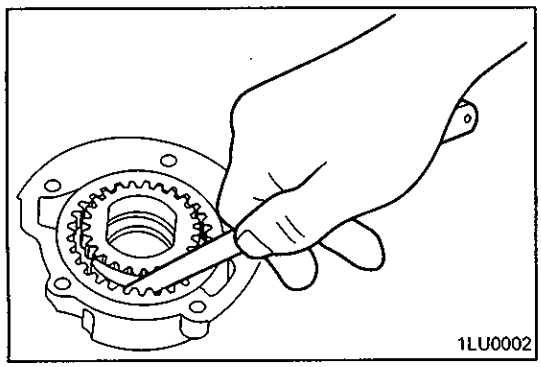


(2) Check the outer gear tooth to crescent clearance.
**Standard value: 0.22 – 0.44 mm (0.0087 – 0.0173 in.)**
**Limit: 0.6 mm (0.024 in.)**

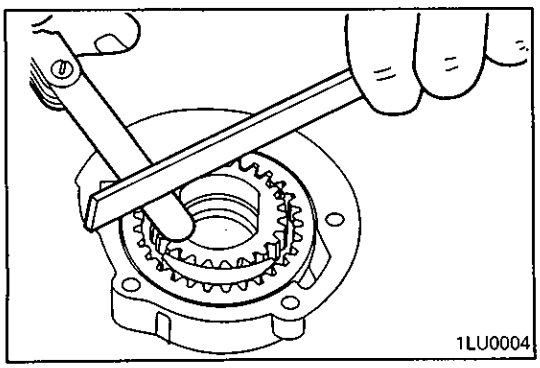


(3) Check the inner gear and outer gear side clearance.
**Standard value: 0.04 – 0.10 mm (0.0016 – 0.0039 in.)**
**Limit: 0.15 mm (0.006 in.)**

© Mitsubishi Motors Corporation Apr. 1990

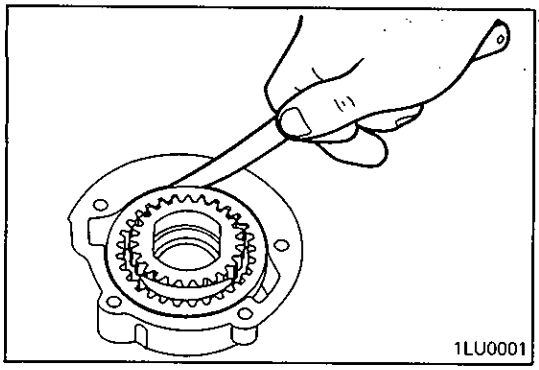


(4) Check the outer gear outer circumference to front case clearance (body clearance).

**Standard value: 0.10 – 0.20 mm (0.0039 – 0.0079 in.)**
**Limit: 0.3 mm (0.012 in.)**

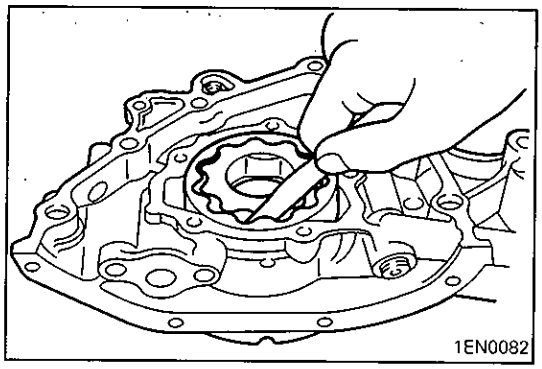


## OIL PUMP – Trochoid type

(1) Check the tip clearance.

**Standard value: 0.06 – 0.18 mm (0.0024 – 0.0071 in.)**
**Limit: 0.35 mm (0.0138 in.)**

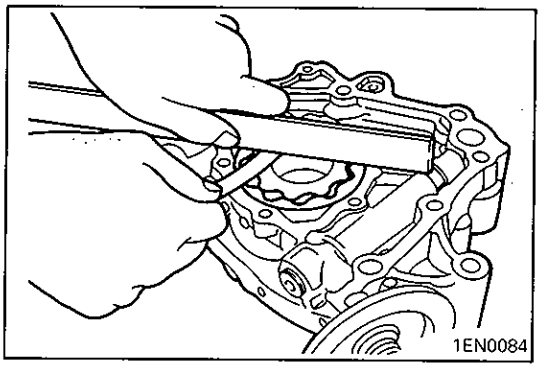


(2) Check the side clearance.

**Standard value: 0.04 – 0.10 mm (0.0016 – 0.0039 in.)**
**Limit: 0.2 mm (0.0079 in.)**

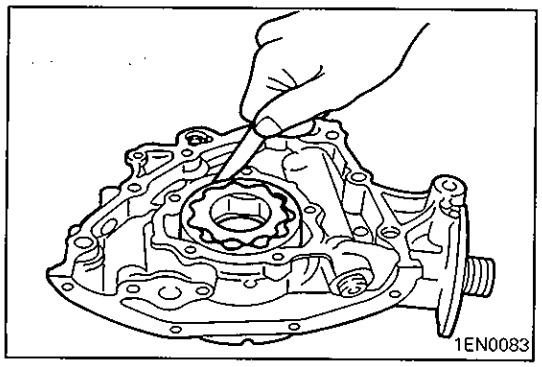


(3) Check the body clearance.

**Standard value: 0.10 – 0.18 mm (0.0039 – 0.0071 in.)**
**Limit: 0.35 mm (0.0138 mm)**

© Mitsubishi Motors Corporation Apr. 1990

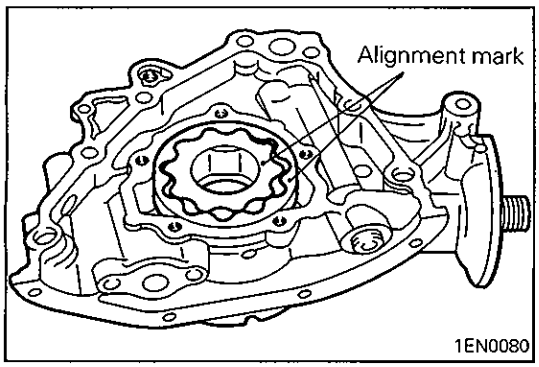


## SERVICE POINTS OF INSTALLATION

### ◆A◆ INSTALLATION OF INNER GEAR / OUTER GEAR / INNER ROTOR / OUTER ROTOR

(1) Install the outer rotor (outer gear) in the same direction as before noting the mark put at the time of removal. Apply engine oil to the entire rotor (or gear) surface.

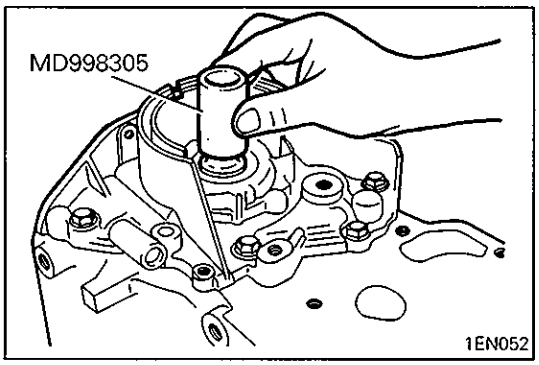


### ◆B◆ INSTALLATION OF CRANKSHAFT FRONT OIL SEAL

(1) Set the special tool on the crankshaft front end and apply engine oil to the outer circumference of it.

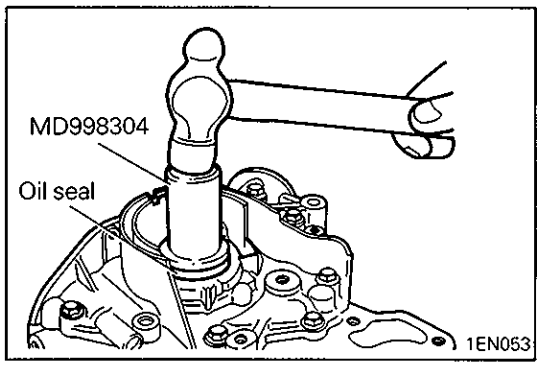


(2) Apply a light coat of engine oil to the oil seal lip and then insert the oil seal along the special tool by hand until it touches to the front case. Install the oil seal in the front case using the special tool.

### ◆C◆ INSTALLATION OF OIL PAN

(1) Clean mating surfaces of both the oil pan and cylinder block.
(2) Apply a 4 mm (0.16 in.) diameter bead of sealant to the entire circumference of the oil pan flange.

**Specified sealant:**
**Mitsubishi Genuine Part No. MD997110 or equivalent**

(3) The oil pan should be installed within 15 minutes after the application of sealant.

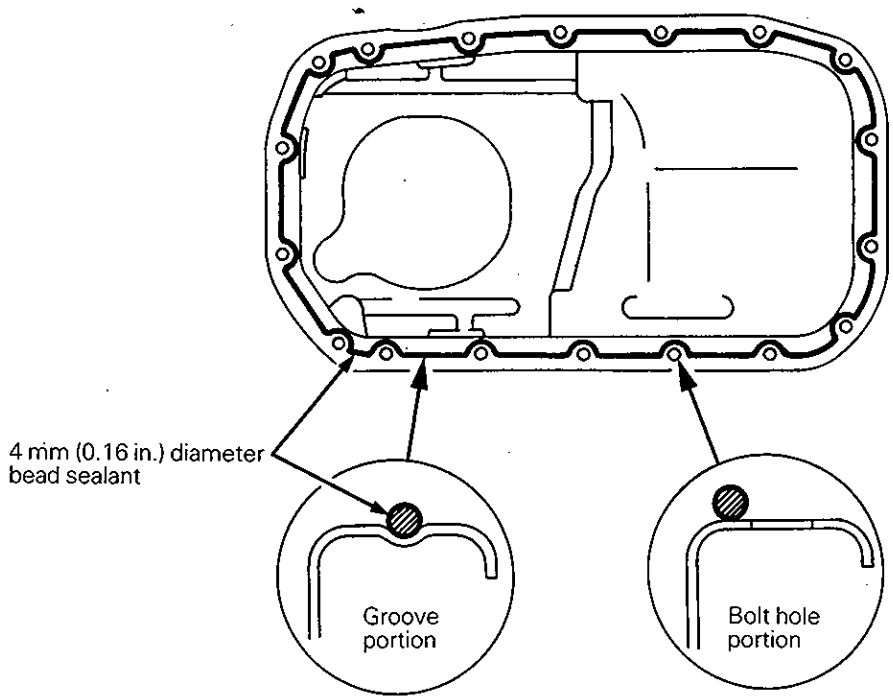


1EN0112

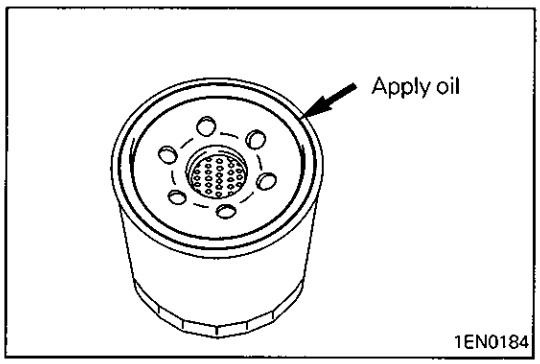


1EN0184

### ◆D◆ INSTALLATION OF OIL FILTER

(1) Clean the installation surface of the filter bracket side.
(2) Apply engine oil to the O-ring of the oil filter.

**12-VALVE ENGINE**

(3) Screw in the oil filter until the O-ring is seated on the flange surface. Then tighten one turn 12 to 16 Nm (1.2 to 1.6 kgm, 9 to 11 ft.lbs.).

NOTE
- Tighten the oil filter using a filter wrench (commercial tool), etc. Tightening by hand can result in insufficient tightening and oil leaks.

**8-VALVE ENGINE**

(3) Tighten the oil filter by hand.

**Caution**
- **Never use a wrench to tighten the oil filter.**

# 11. PISTON AND CONNECTING ROD

## REMOVAL AND INSTALLATION

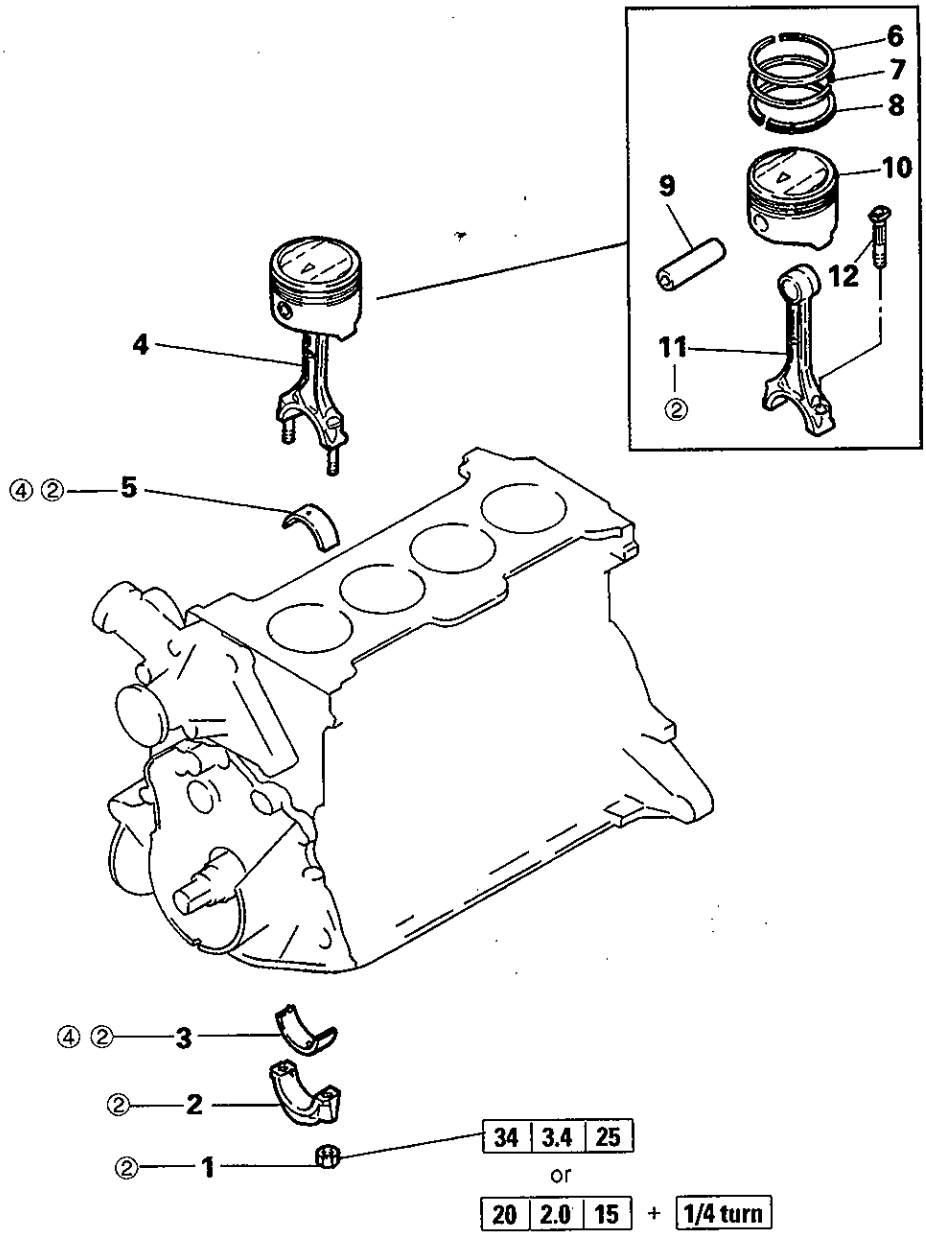


**Disassembly steps**

- ▶F◀ 1. Nut
- ◇A◇ ▶E◀ 2. Connecting rod cap
- ▶G◀ 3. Connecting rod bearing
- ▶D◀ 4. Piston and connecting rod assembly
- 5. Connecting rod bearing
- ▶C◀ 6. Piston ring No. 1
- ▶C◀ 7. Piston ring No. 2
- ▶B◀ 8. Oil ring
- ◇B◇ ▶A◀ 9. Piston pin
- 10. Piston
- 11. Connecting rod
- 12. Bolt

NOTE
②: See "Details of Change" table.
④: See "Details of Change" table.

1EN300

## Details of Change

②

**Connecting rod**

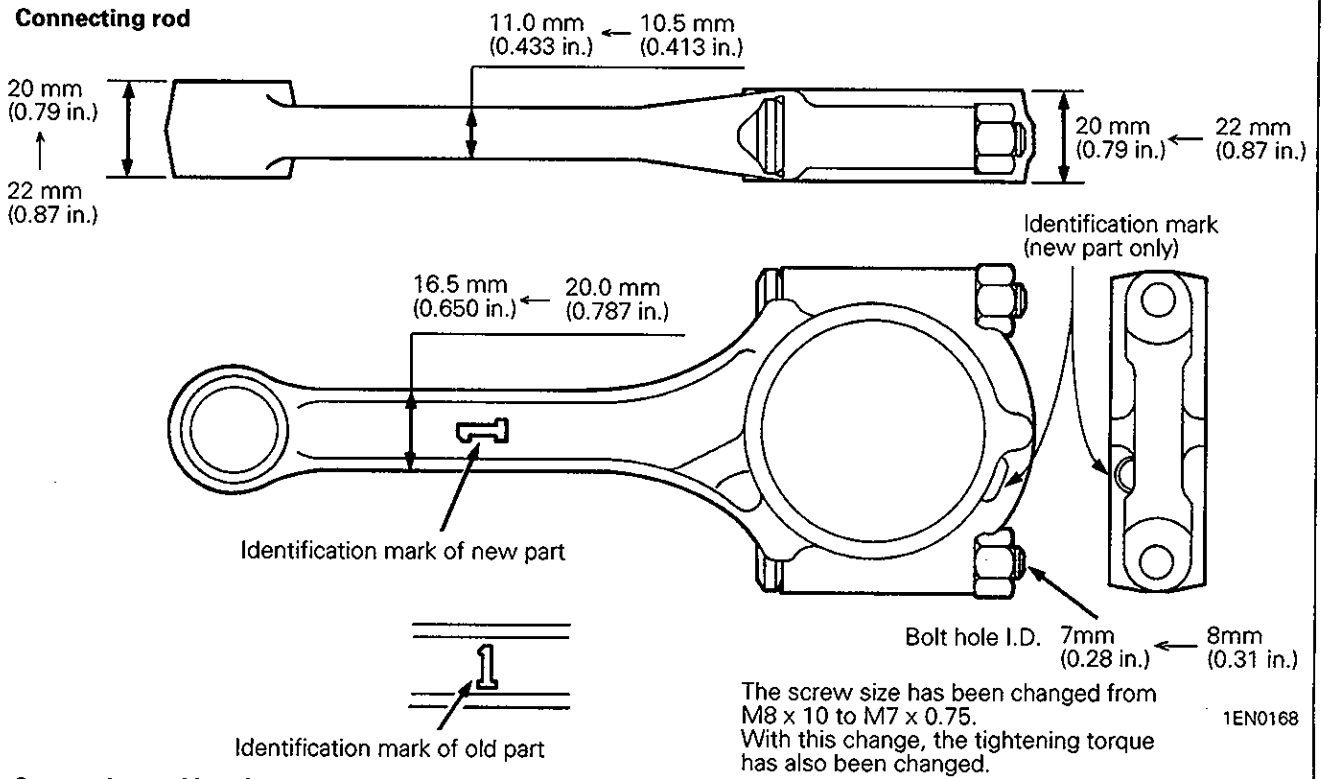


**Connecting rod bearing**

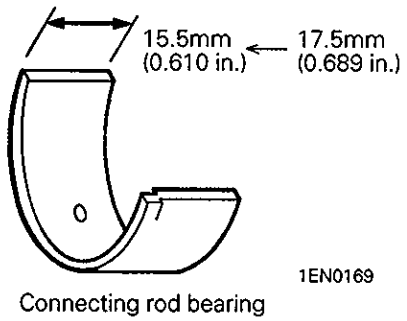

②

**Connecting rod cap nut**

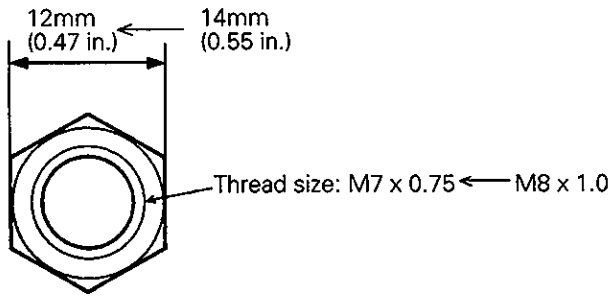


1EN0170

Piston pin installation tool (excluding 12-valve engine)
With the change of the connecting rod small end dimension, a new piston pin guide is made available.
(Used in combination with the base and push rod of piston pin setting tool MD998300.)

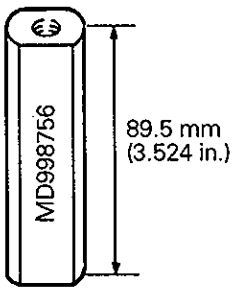


1EN0171

Newly-introduced guide MD998756

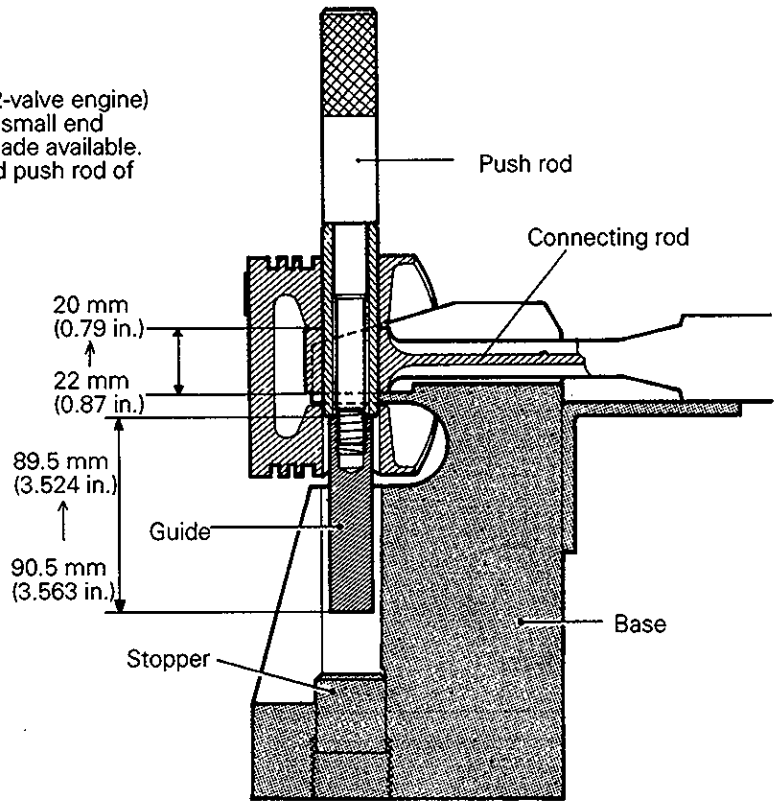


1EN059

④

**Connecting rod bearing**

According to the adoption of the selective connecting rod bearings, the bearing identification mark has been added.

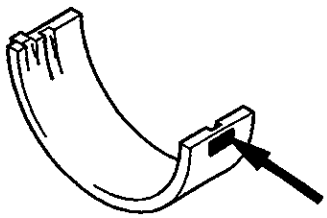

Identification mark position

1EN0402

New

Identification mark and bearing thickness

| Identification mark | Bearing thickness mm (in.) |
|---|---|
| 1 | 1.488 – 1.493 (0.5858 – 0.5878) |
| 2 | 1.493 – 1.498 (0.5878 – 0.5898) |
| 3 | 1.498 – 1.503 (0.5898 – 0.5917) |

Old

| Bearing thickness mm (in.) |
|---|
| 1.488 – 1.493 (0.5858 – 0.5878) |

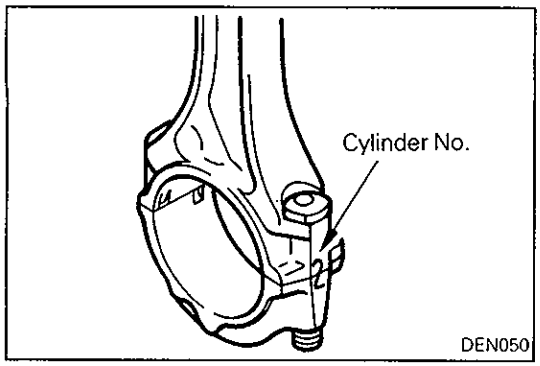


## SERVICE POINTS OF DISASSEMBLY

### ◊A◊ REMOVAL OF CONNECTING ROD CAP

(1) Mark the cylinder number on the side of the connecting rod big end for correct reassembly.

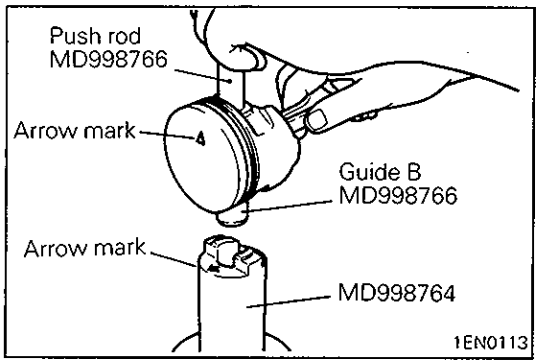


### ◊B◊ REMOVAL OF PISTON PIN – 12-VALVE ENGINE

(1) Insert the push rod (special tool) into the piston from its front arrow mark side and install the guide B.
(2) With the piston front mark facing up, set the piston so that the piston top is on the arrow mark side of the piston pin setting base (special tool).
(3) Using a press, remove the piston pin.

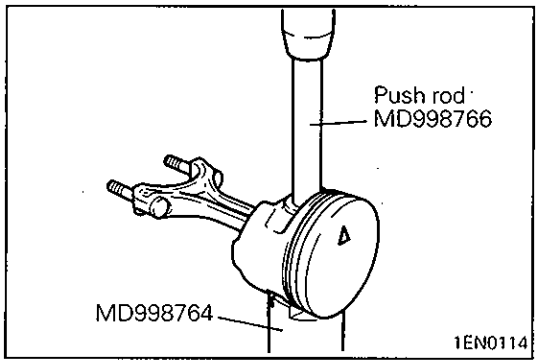


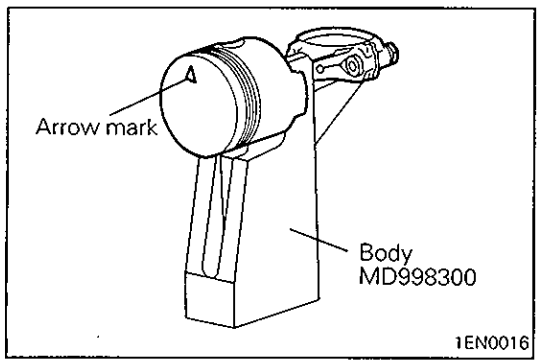


### ◊B◊ REMOVAL OF PISTON PIN – 8-VALVE ENGINE

(1) Place piston and connecting rod assembly into the special tool body with arrow mark toward up.

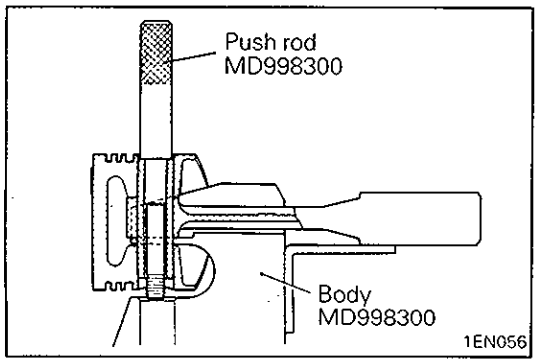


(2) Insert pushrod in piston pin and remove piston pin with press.

© Mitsubishi Motors Corporation Apr. 1990

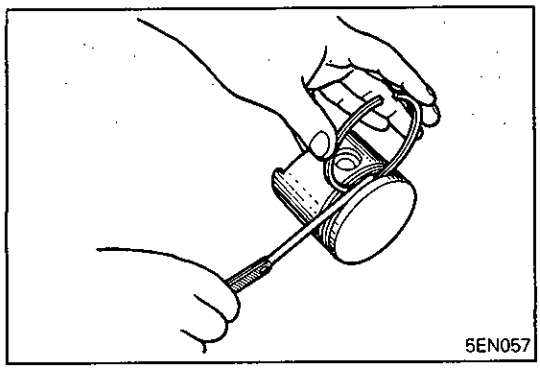


## INSPECTION

### PISTON RING

(1) Check for side clearance.
If the limit is exceeded, replace the ring or piston, or both.

**Standard value:**
**No. 1 ..... 0.03 – 0.07 mm (0.0012 – 0.0028 in.)**
**No. 2 ..... 0.02 – 0.06 mm (0.0008 – 0.0024 in.)**

**Limit: 0.1 mm (0.0039 in.)**

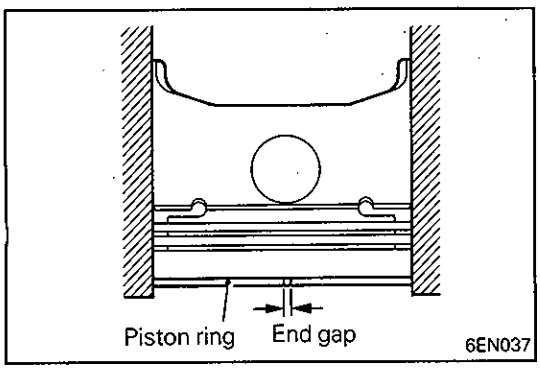


(2) Insert the piston ring into cylinder bore. Force it down with a piston, its crown being in contact with the ring, to correctly position it at right angles to the cylinder wall. Then, measure the end gap with a thickness gauge.
If the end gap is excessive, replace piston ring.

**Standard value:**
**No. 1**
**Other than 12-valve engine ..... 0.20 – 0.35 mm (0.0079 – 0.0138 in.)**
**for Australia**
**12-valve engine for Australia ..... 0.20 – 0.40 mm (0.0079 – 0.0157 in.)**

**No. 2**
**12-valve engine ..... 0.20 – 0.35 mm (0.0079 – 0.0138 in.)**
**G15 and 4G15 8-valve engine ..... 0.20 – 0.35 mm (0.0079 – 0.0138 in.)**
**for Australia**
**G13B, 4G13, 4G15 8-valve engine**
**(excluding those for Australia) ..... 0.20 – 0.40 mm (0.0079 – 0.0157 in.)**
**Oil ..... 0.20 – 0.70 mm (0.0079 – 0.0276 in.)**

**Limit:**
**No. 1, No. 2 ..... 0.8 mm (0.031 in.)**
**Oil ..... 1.0 mm (0.039 in.)**

### CONNECTING ROD BEARING

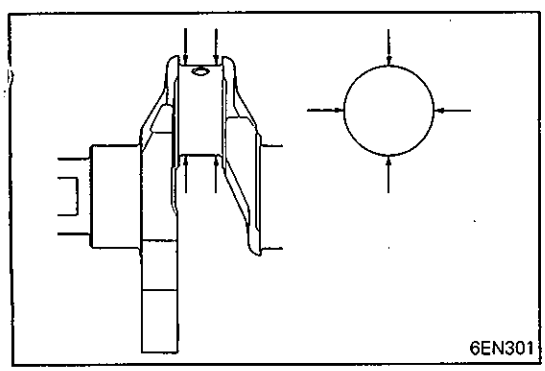


(1) Visually check the bearing surface for uneven contact, streaks, scratches, and seizure. Replace if defects are evident. If streaks and seizure are excessive, check also the crankshaft. If damage is present on the crankshaft, replace crankshaft or regrind to undersize for reuse.
In the case of fillet rolled crankshaft, do not machine the pin and journal to an undersize diameter.
(See "Crankshaft" Section)

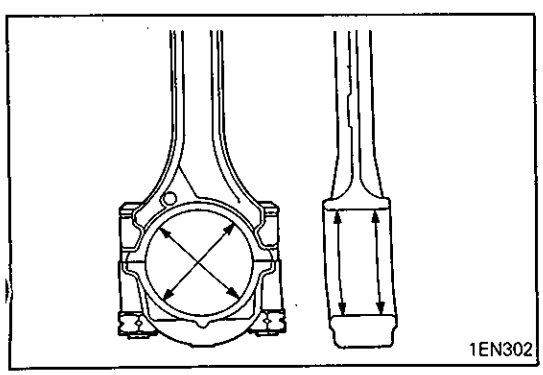


(2) Measure the connecting rod bearing I.D. and crankshaft pin O.D. If the oil clearance exceeds the limit, replace bearing, and crankshaft if necessary.
Or, regrind the crankshaft to an undersize and replace bearing with an undersize one.

**Standard value: 0.02 – 0.06 mm (0.0008 – 0.0024 in.)**
**Limit: 0.15 mm (0.0059 in.)**

© Mitsubishi Motors Corporation Apr. 1990

**Crankshaft pin diameter:**
**0.25 U.S. .... 41.740 – 41.725 mm (1.6236 – 1.6230 in**
**0.50 U.S. .... 41.490 – 41.475 mm (1.6335 – 1.6329 in**
**0.75 U.S. .... 41.240 – 41.225 mm (1.6433 – 1.6427 in**

NOTE
For the oil clearance measuring method using a plasti gauge, refer to the section CRANKSHAFT

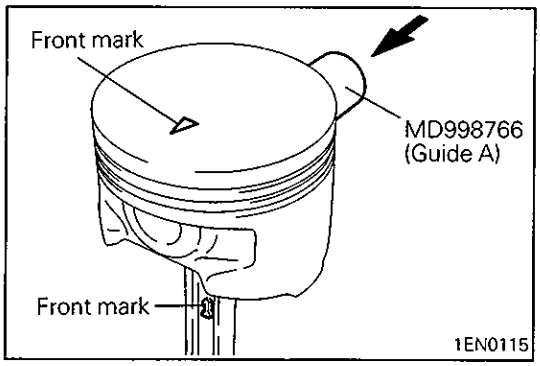


## SERVICE POINTS OF REASSEMBLY

### ▶A◀ INSTALLATION OF PISTON PIN – 12-VALVE EN GINE

(1) Assemble the piston and connecting rod, matching th front marks (arrow mark on the piston and embossed mar "1" on the connecting rod).
(2) Insert the guide A from the side opposite to the fron marked side.

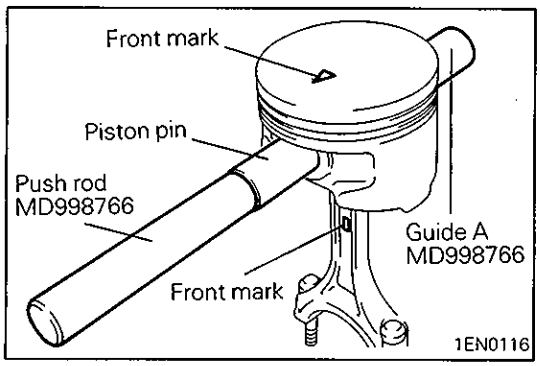


(3) Apply engine oil to the outside of the piston pin.
(4) Combine the piston pin with the push rod (special tool) anc insert them into the piston from the front marked side anc install against guide A.

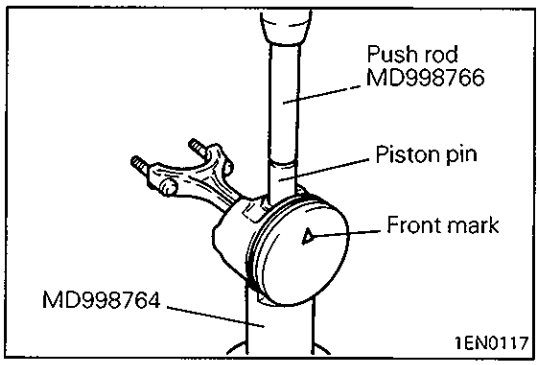


(5) With the piston front mark facing up, set so that the pistor top faces the front (arrow) mark side of the piston pir setting base (special tool).
(6) Using a press, install the piston pin.
If the installation load is smaller than specified, replace the piston pin (piston assembly) and/or the connecting rod.

**Piston pin press-fitting load:**
**5,000 – 15,000 N (500 – 1,500 kg, 1,102 – 3,307 lbs.)**

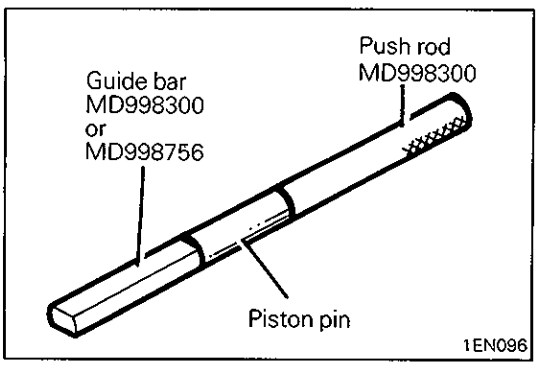


### ▶A◀ INSTALLATION OF PISTON PIN – 8-VALVE ENGINE

(1) Attach the push rod and guide bar of the special tool to the piston pin.

© Mitsubishi Motors Corporation Apr. 1990

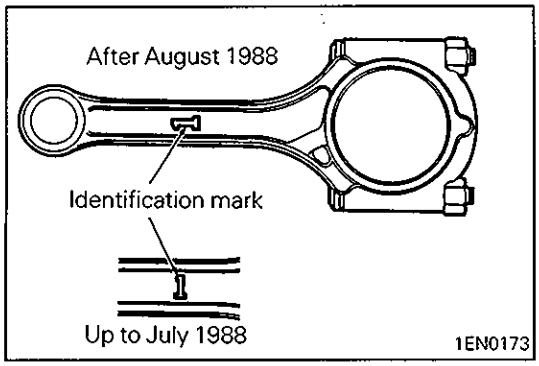


NOTE
Engine produced up to July 1988 and those produced after August 1988 use different connecting rods, and the guide bar (special tool) required differs accordingly.

Up to July 1988 ..... MD998300
After August 1988 ..... MD998756

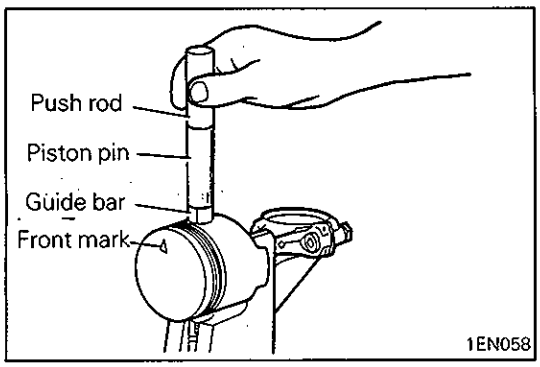


(2) Apply engine oil to the outer circumference of piston pin.
(3) Place the piston and connecting rod on the special tool body with their front marks (arrow mark for piston and embossed mark for connecting rod) facing upward.
(4) Insert the piston pin, guide bar and push rod assembly assembled in step (1) into the piston and connecting rod.

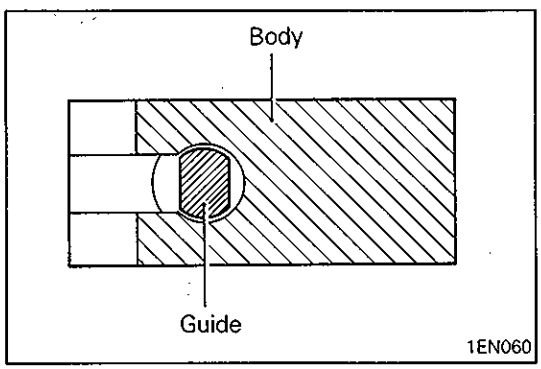


(5) Position the guide so its two surfaces running in parallel to each other are oriented as shown.

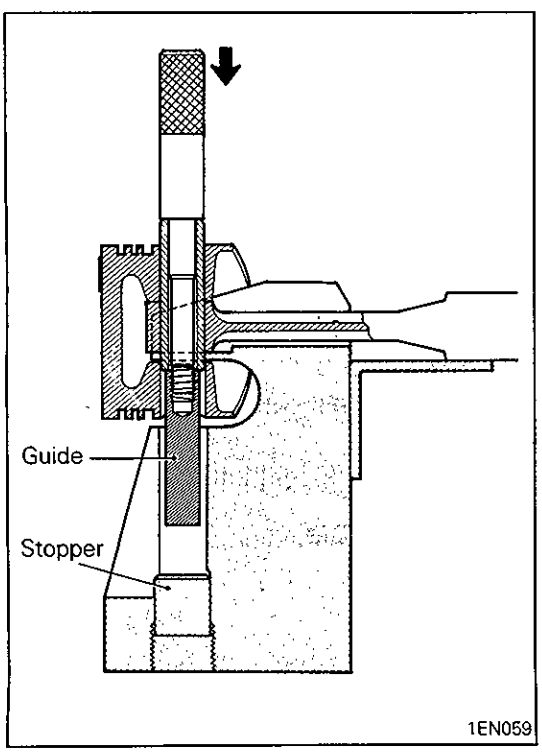


(6) Install the piston pin into connecting rod with a press until the guide reaches to the stopper.
(7) If the press-fitting load is out of specification, replace the piston pin and piston set or connecting rod, or both.

**Piston pin press-fitting load:**
**5,000 – 15,000 N**
**(500 – 1,500 kg, 1,102 – 3,307 lbs.)**

© Mitsubishi Motors Corporation Apr. 1990

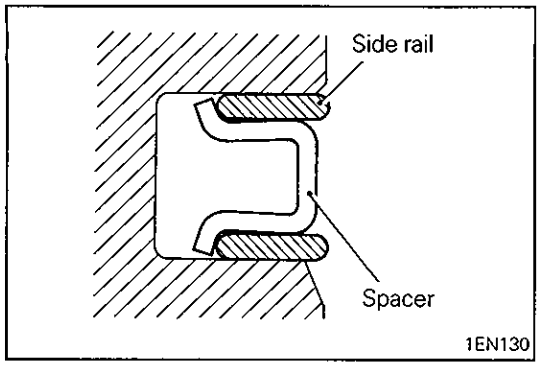


## ◆B◆ INSTALLATION OF OIL RING

(1) Fit the oil ring spacer into the piston ring groove.

NOTE
The side rails and spacer may be installed in either direction

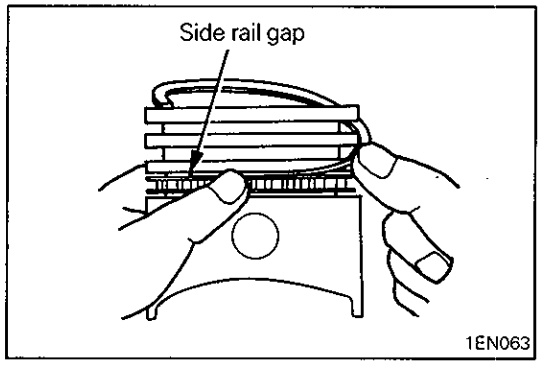


(2) Install the upper side rail.
To install the side rail, first fit one end of the rail into the piston groove, then press the remaining portion into position by finger. See illustration.

**Caution**
- **Do not use piston ring expander when installing side rail.**

(3) Install the lower side rail in the same procedure as described in step (2).
(4) Make sure that the side rails move smoothly in either direction.

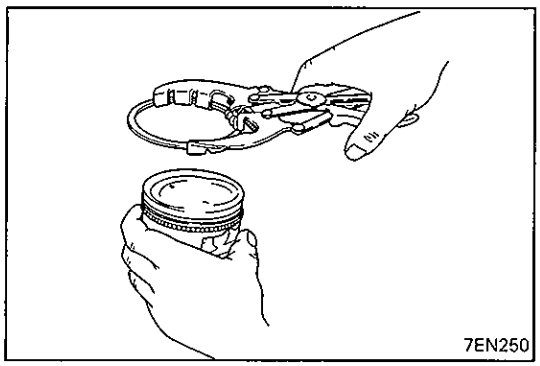


## ◆C◆ INSTALLATION OF PISTON RING No. 2 / PISTON RING NO. 1

(1) Using piston ring expander, fit No. 2 and then No. 1 piston ring into position.

NOTE
(1) Note the difference in shape between No. 1 and No. 2 piston ring.
(2) Install piston rings No. 1 and No. 2 with their side having marks facing up (on the piston crown side).

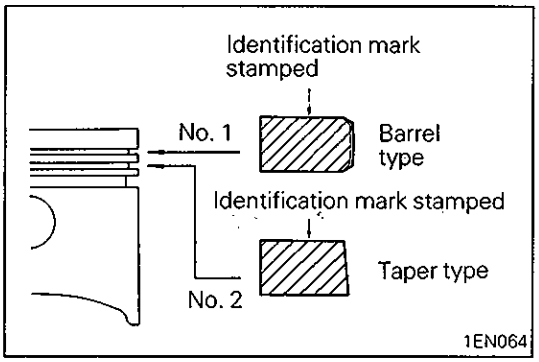


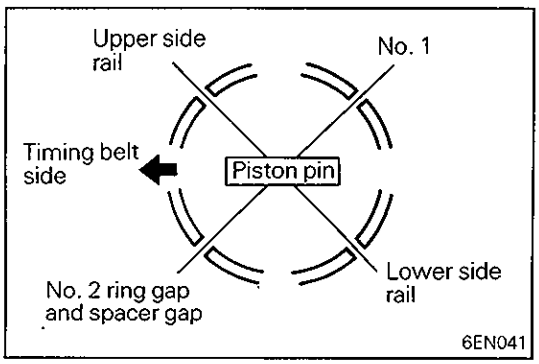


## ◆D◆ INSTALLATION OF PISTON AND CONNECTING ROD ASSEMBLY

(1) Apply engine oil to the piston surface, piston rings, and oil ring.
(2) Align gaps of piston rings and oil ring (side rails and spacer) as shown in the illustration.

© Mitsubishi Motors Corporation Apr. 1990

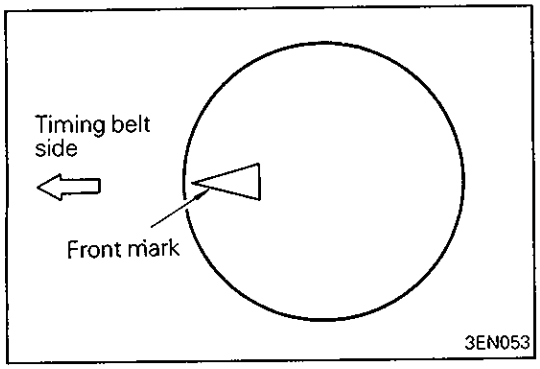


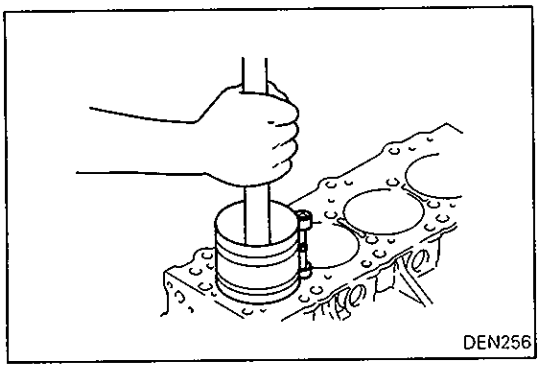


(3) Rotate crankshaft so that the crank pin is on the center of the cylinder bore.
(4) Use suitable thread protectors on the connecting rod bolts before inserting piston and connecting rod assembly into cylinder block.
Care must be taken not to nick crank pin.
(5) Using a suitable piston ring compressor tool, install the piston and connecting rod assembly into the cylinder block.

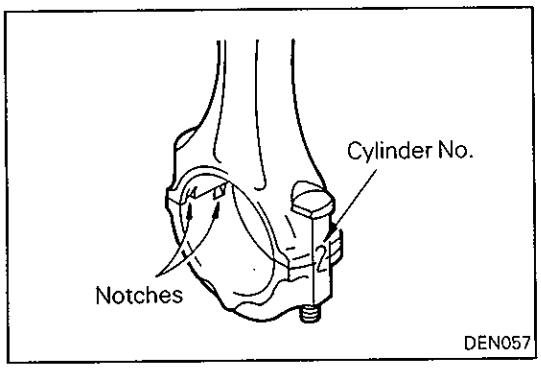


## ◆E◆ INSTALLATION OF CONNECTING ROD CAP

(1) Verifying the mark made during disassembly, install the bearing cap to the connecting rod. If the connecting rod is new with no index mark, make sure that the bearing locking notches come on the same side as shown.

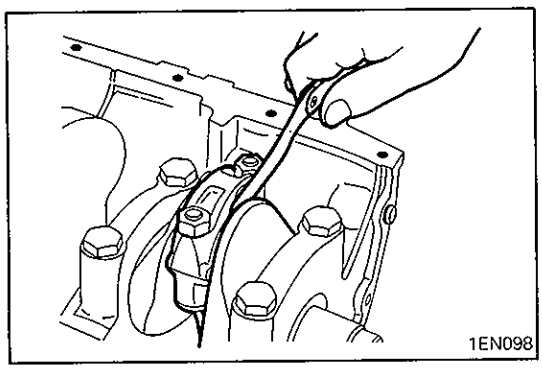


(2) Make sure that connecting rod big end side clearance meets the specification.

**Standard value: 0.10 – 0.25 mm (0.0039 – 0.0098 in.)**
**Limit: 0.4 mm (0.016 in.)**

## ◆F◆ INSTALLATION OF CONNECTING ROD CAP NUT

(Engine produced after August 1988 only)

(1) Before reusing the connecting rod bolts and nuts, check for stretching of the bolt. To check for stretching, screw the nut over the bolt with fingers to the end of the threaded section. If the nut cannot be fitted smoothly all the way, the bolt's threaded section is stretched and the bolt must be replaced.
(2) Before tightening the nut, apply engine oil to the threads.
(3) Tighten the nut to 20 Nm (2.0 kgm, 15 ft.lbs.).
(4) Tighten further 1/4 turn.

© Mitsubishi Motors Corporation Apr. 1990

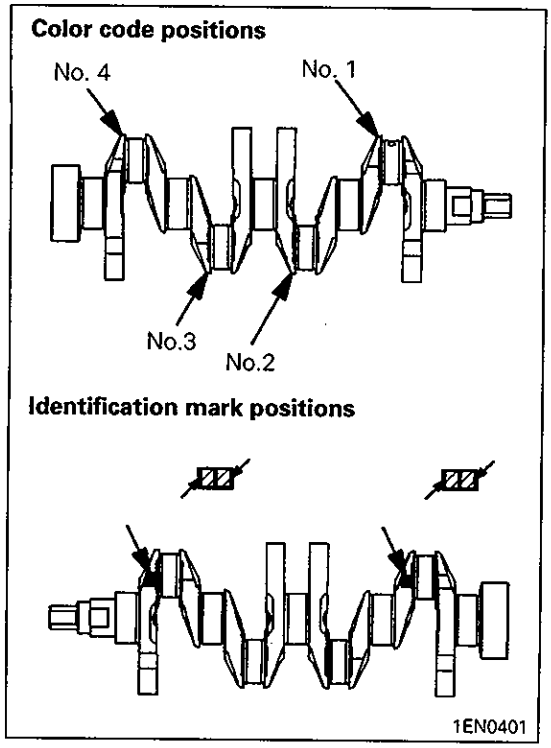


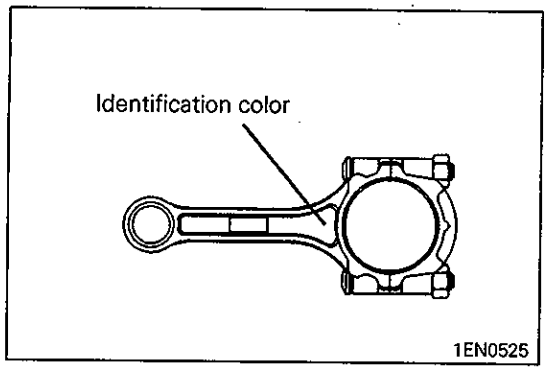


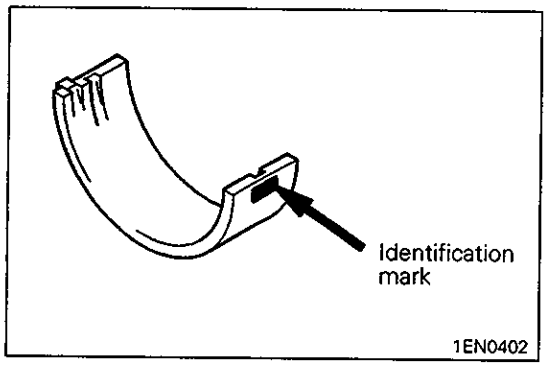


## ◆G◆ CONNECTING ROD BEARING INSTALLATION (SELECTIVE BEARING)

(1) Select bearings according to the crankshaft and connecting rod identification marks or color codes at the positions shown in the illustration, referring to the following table.

| Crankshaft identification mark and color | Connecting rod identification color | Bearing identification mark |
|---|---|---|
| I and yellow | White | 1 |
| | None | 1 |
| | Yellow | 2 |
| II and none | White | 1 |
| | None | 2 |
| | Yellow | 3 |
| III and white | White | 2 |
| | None | 3 |
| | Yellow | 3 |

# 12. CRANKSHAFT, FLYWHEEL AND DRIVE PLATE

## REMOVAL AND INSTALLATION

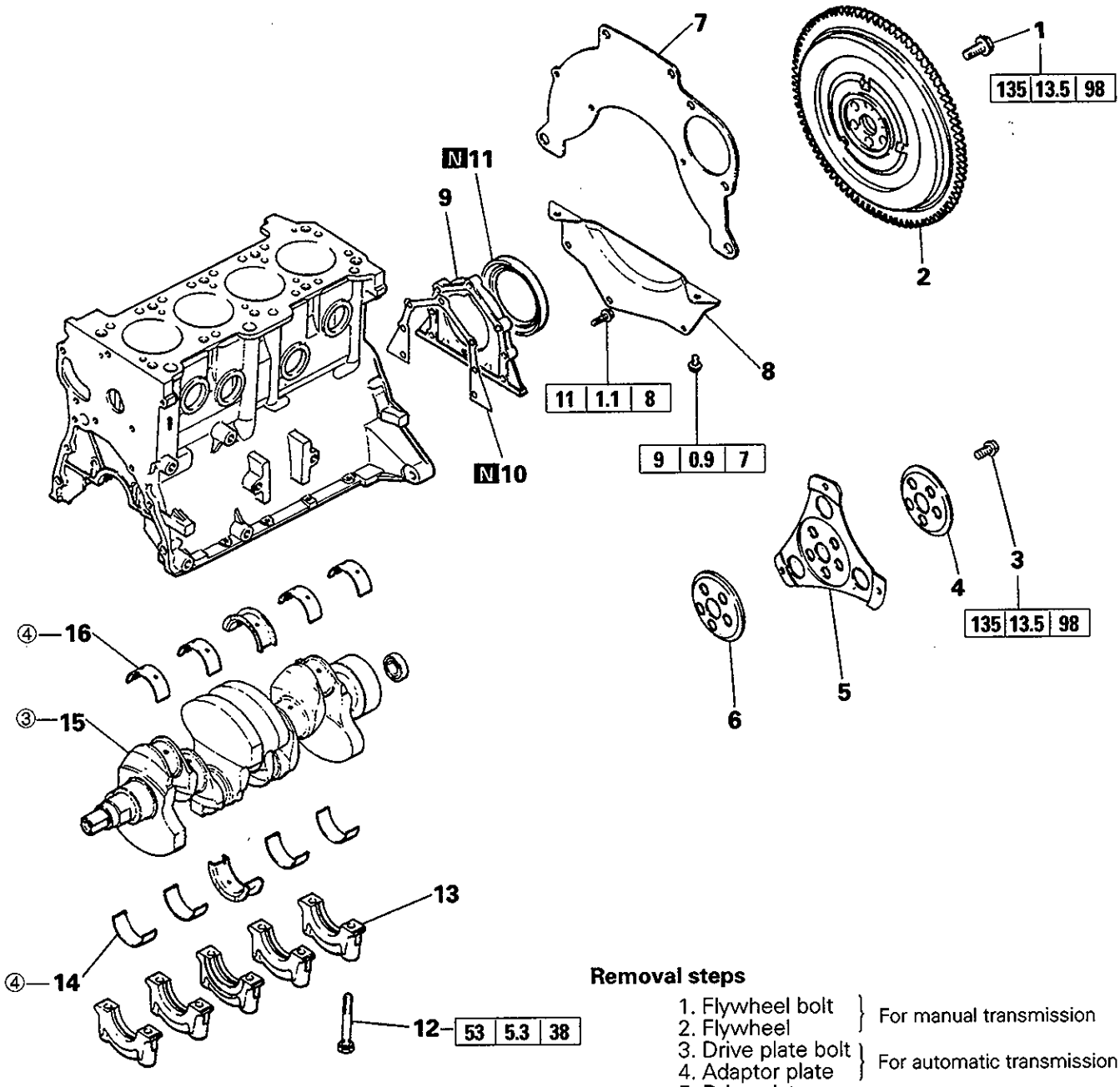


**Removal steps**

1. Flywheel bolt } For manual transmission
2. Flywheel
3. Drive plate bolt } For automatic transmission
4. Adaptor plate
5. Drive plate
6. Adaptor plate
7. Rear plate
8. Bell housing cover
9. Oil seal case
10. Oil seal case gasket
- ◗D◖11. Rear oil seal
12. Bearing cap bolt
- ◗C◖13. Bearing cap
- ◗A◖14. Crankshaft bearing (lower)
15. Crankshaft
- ◗A◖16. Crankshaft bearing (upper)

NOTE
③: See "Details of Change" table.
④: See "Details of Change" table.

1EN304

## Details of Change

②

**Crankshaft**

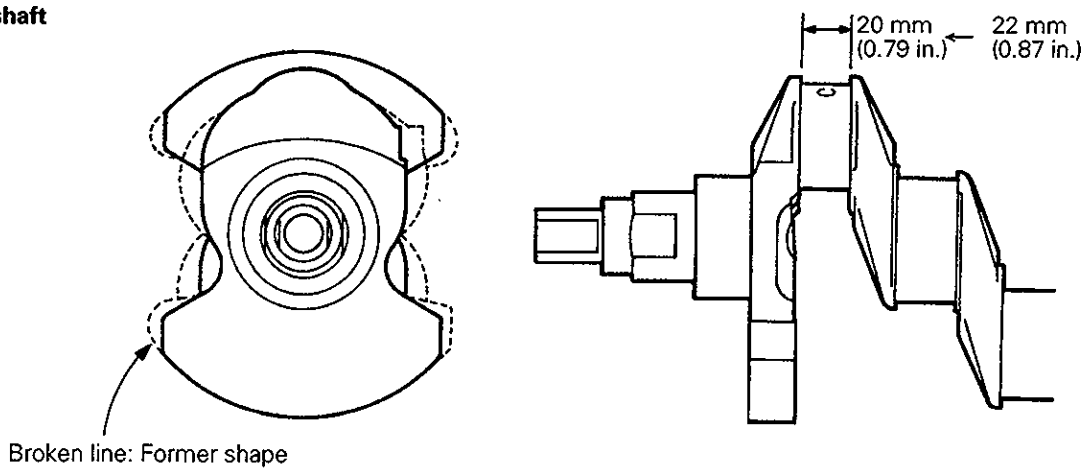


(1) The pin width has been changed.
(2) The counter weight shape has been changed.

1EN0174

③

**Crankshaft**

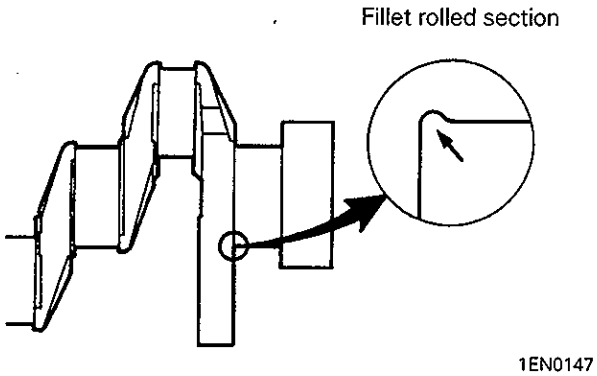


1EN0147

Note:
In the case of fillet rolled crankshaft, do not machine the pin and journal to an undersize diameter.

④

**Crankshaft bearing**

According to the adoption of the selective crankshaft bearings, the bearing identification mark has been added.

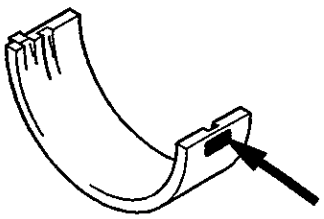

Identification mark position

1EN0402

New

Identification mark and bearing thickness

| Identification mark | Bearing thickness mm (in.) |
|---|---|
| 1 | 1.988 – 1.991 (0.7827 – 0.7839) |
| 2 | 1.991 – 1.994 (0.7839 – 0.7850) |
| 3 | 1.994 – 1.997 (0.7850 – 0.7862) |
| 4 | 1.997 – 2.000 (0.7862 – 0.7874) |
| 5 | 2.000 – 2.003 (0.7874 – 0.7886) |

Old

| Bearing thickness mm (in.) |
|---|
| 1.987 – 1.991 (0.7823 – 0.7839) |

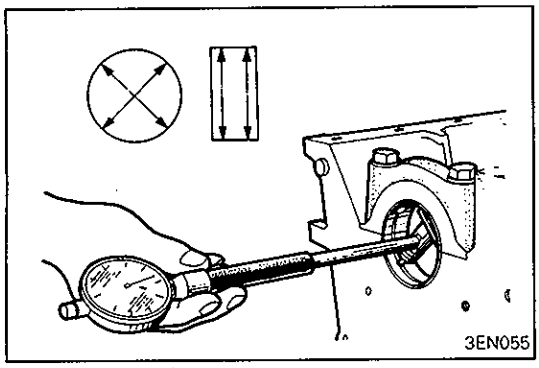


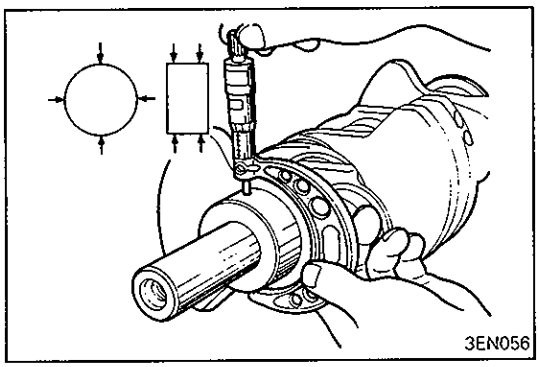


## INSPECTION

### CRANKSHAFT

(1) Measure the outside diameter of journal and inside diameter of crankshaft bearing. If the difference between them (oil clearance) exceeds the limit, replace the crankshaft bearing and, if necessary, crankshaft.
When the crankshaft is to be reused by machining to undersize, the crankshaft bearings should be changed to undersized ones.

**Standard value: 0.02 – 0.07 mm (0.0008 in. – 0.0028 in.)**
**Limit: 0.15 mm (0.0059 in.)**

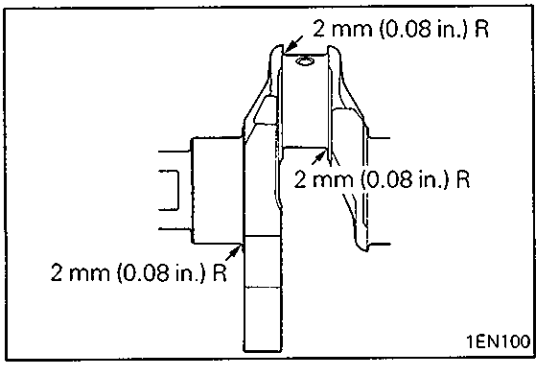


(2) When the crankshaft is machined to undersize, finish the fillets of journals and pins to the specified radius.

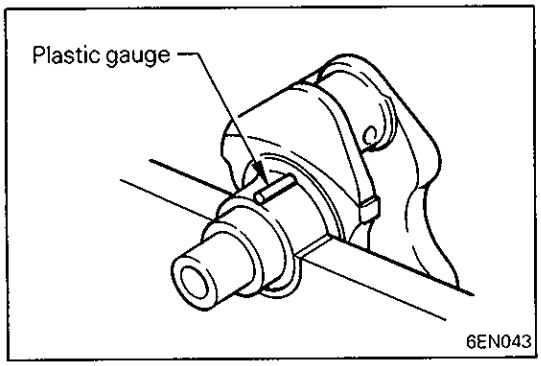


### CRANKSHAFT OIL CLEARANCE (PLASTIC GAUGE METHOD)

The crankshaft oil clearance can be measured easily by using a plastic gauge, as follows:

(1) Remove oil and grease and any other foreign matters from crankshaft journal and bearing inner surface.
(2) Install the crankshaft.
(3) Cut the plastic gauge to the same length as the width of bearing and place it on journal in parallel with its axis.

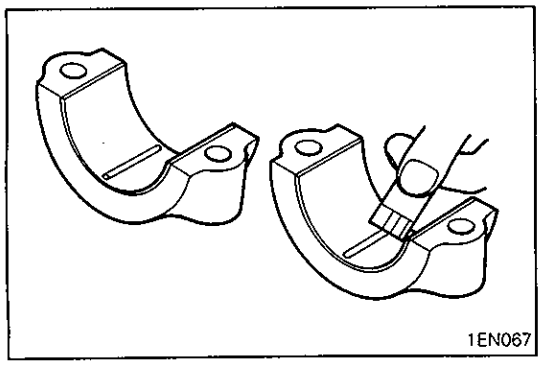


(4) Gently place the crankshaft bearing cap over it and tighten the bolts to the specified torque.
(5) Remove the bolts and gently remove the crankshaft bearing cap.
(6) Measure the width of the smashed plastic gauge at its widest section by using a scale printed on the plastic gauge bag.

© Mitsubishi Motors Corporation Apr. 1990

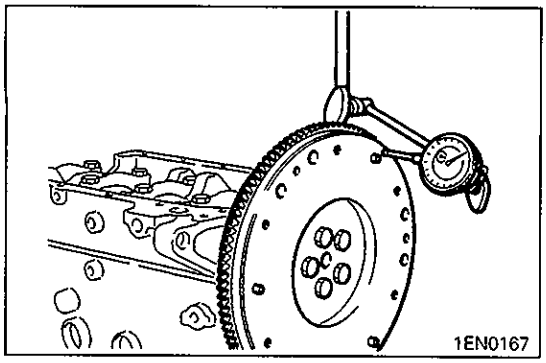


### FLYWHEEL

(1) Check the runout of flywheel.
**Limit: Max. 0.13 mm (0.0051 in.)**

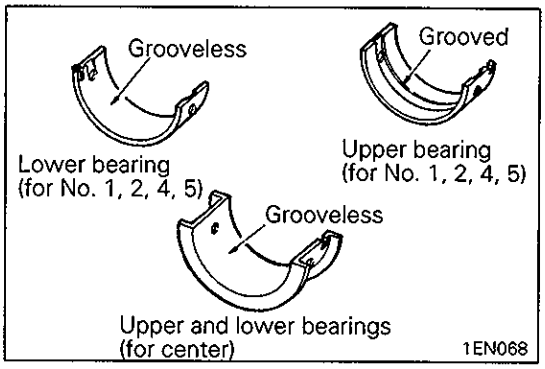


## SERVICE POINTS OF REASSEMBLY

### ▶A◀ INSTALLATION OF CRANKSHAFT BEARING

(1) Except for the center bearing, all the upper bearings are grooved. The center bearings are grooveless and have flanges. The center bearings are the same at the top and bottom.
(2) The lower bearings are all grooveless.

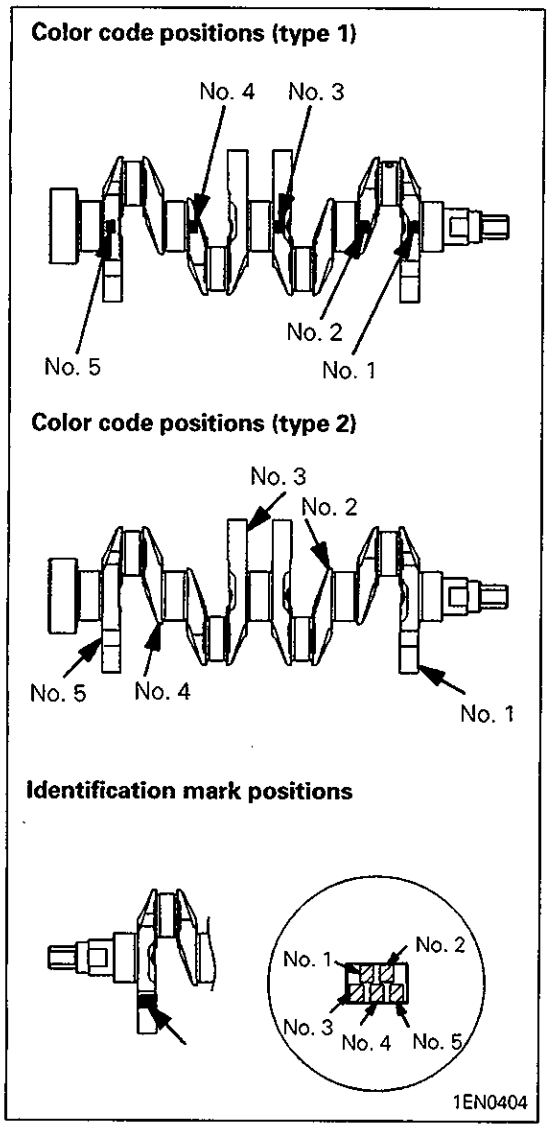


(3) Select bearings according to the crankshaft identification marks or color codes, referring to the following table. If they are not identifiable, measure the crankshaft journals and choose bearings to match the measurements.

| Crankshaft journal | | | | Cylinder block bearing bore diameter | Bearing |
|---|---|---|---|---|---|
| Range | Color code | Identification mark | Journal diameter mm (in.) | Identification mark | Identification mark |
| 1 | Yellow | I | 47.995 –48.000 (1.8896 –1.8898) | 0 | 1 |
| | | | | 1 | 2 |
| | | | | 2 | 3 |
| 2 | None | II | 47.985 –47.995 (1.8892 –1.8896) | 0 | 2 |
| | | | | 1 | 3 |
| | | | | 2 | 4 |
| 3 | White | III | 47.980 –47.985 (1.8890 –1.8892) | 0 | 3 |
| | | | | 1 | 4 |
| | | | | 2 | 5 |

© Mitsubishi Motors Corporation Dec. 1995

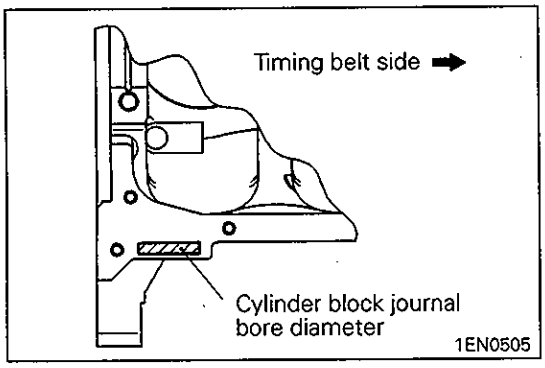


(4) Identification marks showing the cylinder block bearing bore diameter are stamped in the position shown, with No. 1 at the front of the engine. Bearings must be selected and installed in accordance with these identification marks.

(5) Based on the identification markings verified in steps (3) and (4), select bearings from table above. See the following example:
   1. If the measured crankshaft journal diameter is 48.000 mm (1.8898 in.), this corresponds to classification 1 in the above table.
   2. If the identification mark on the cylinder block bearing hole is "1", select a bearing with an identification mark of "2".

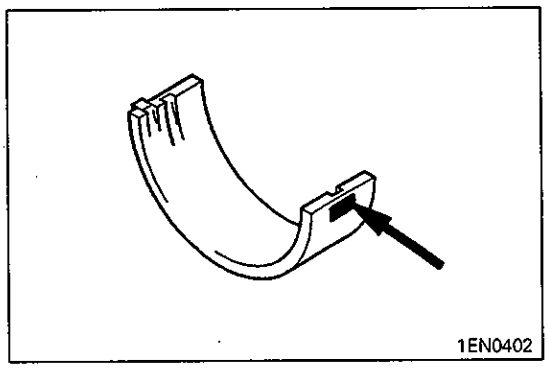


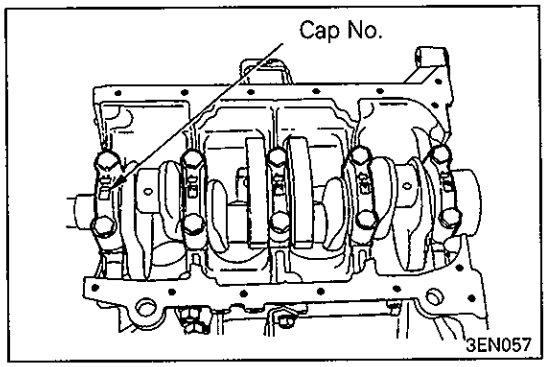


## ◆C◆ INSTALLATION OF BEARING CAP

(1) Install according to the front mark and cap No.

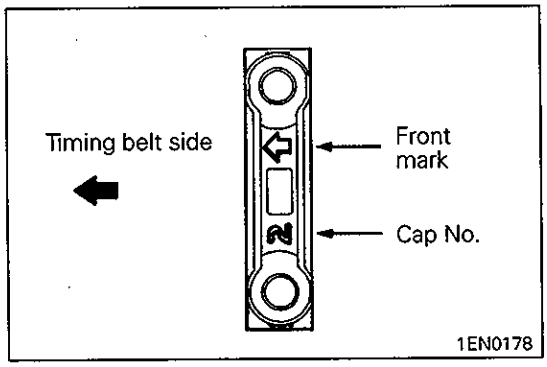


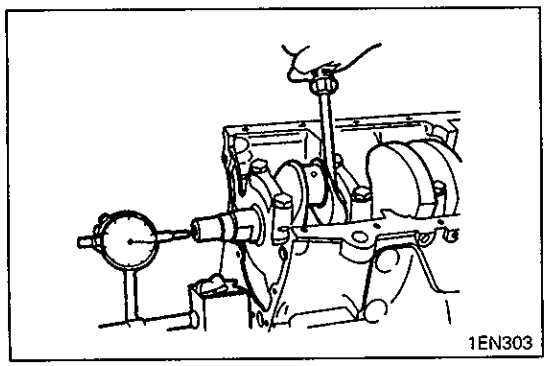


(2) After installing the bearing caps, make sure that the crankshaft turns smoothly and the end play is correct. If the end play exceeds the limit, replace crankshaft bearings.

**Standard value: 0.05 – 0.18 mm (0.0020 – 0.0071 in.)**
**Limit: 0.25 mm (0.0098 in.)**

© Mitsubishi Motors Corporation Dec. 1995

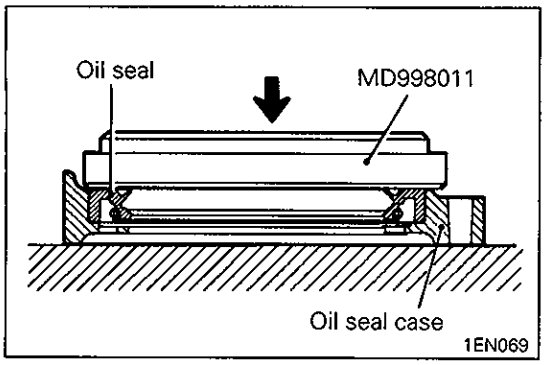


## ◆D◆ INSTALLATION OF OIL SEAL

# 13 CYLINDER BLOCK

## REMOVAL AND INSTALLATION

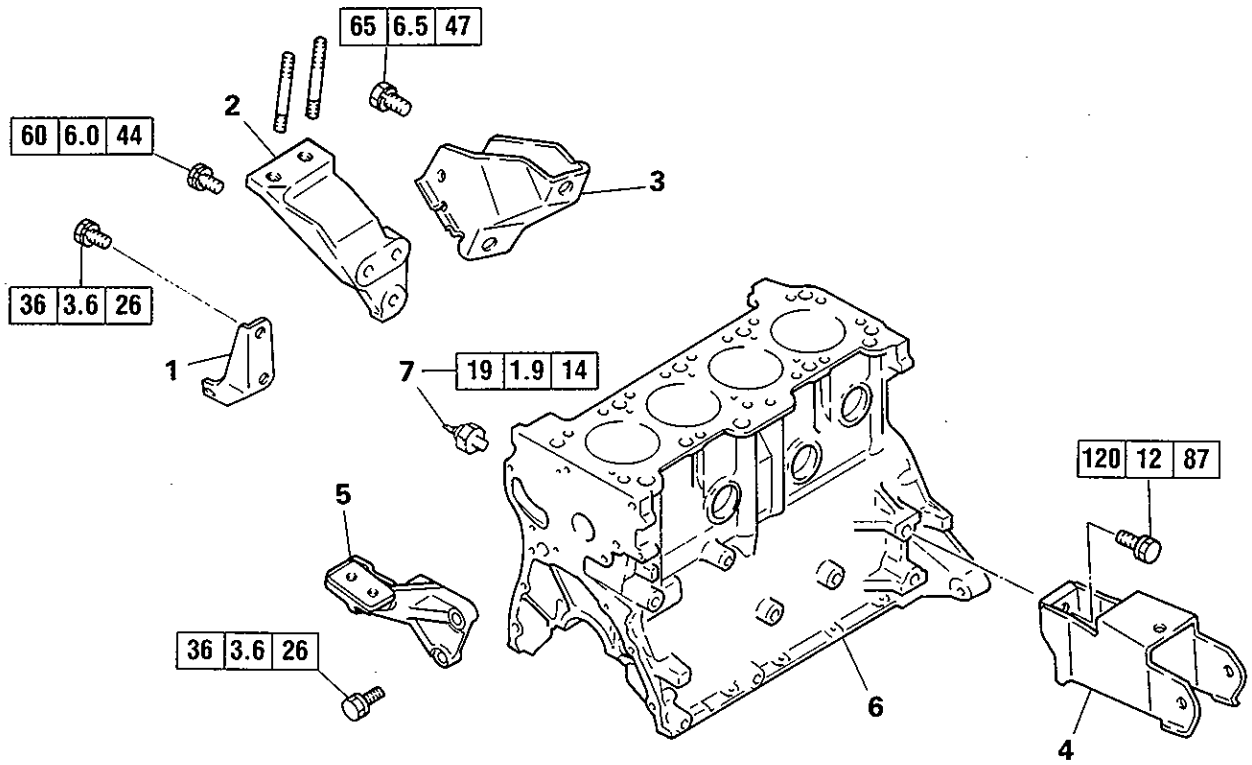


**Removal steps**

1. Exhaust pipe support bracket
2. Engine support bracket, front
3. Roll stopper bracket, front
4. Roll stopper bracket, rear
5. Engine support bracket, left
6. Cylinder block
7. Oil pressure switch

1EN329

© Mitsubishi Motors Corporation Apr. 1990

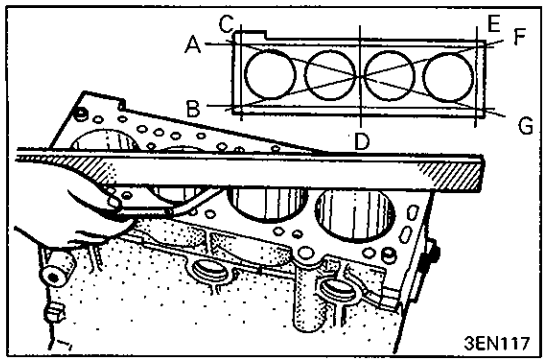


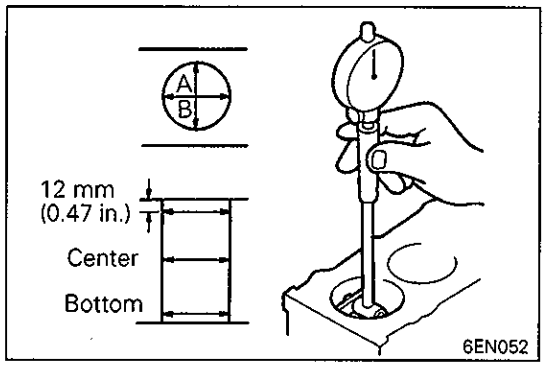


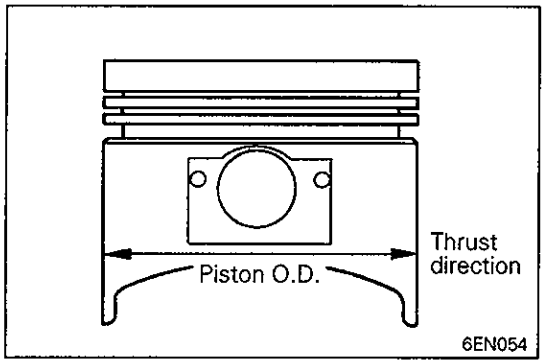


## INSPECTION

(1) Using a straightedge and feeler gauge, check the block top surface for warpage. Make sure that the surface is free from gasket chips and other foreign matters.

**Standard value: 0.05 mm (0.0020 in.)**
**Limit: 0.1 mm (0.0039 in.)**

(2) If the distortion is excessive, correct within the allowable limit or replace.

**Grinding limit: 0.2 mm (0.0079 in.)**
**The total thickness of stock allowed to be removed from cylinder block and mating cylinder head is 0.2 mm (0.0079 in.) at maximum.**
**Cylinder block height (When new):**
**255.9 – 256.1 mm (10.075 – 10.083 in.)**

(3) Check cylinder walls for scratches and seizure. If defects are evident, correct (bored to oversize) or replace.

(4) Using cylinder gauge, measure the cylinder bore and cylindricity. If worn badly, correct cylinder to an oversize and replace piston and piston rings. Measure at the points shown in illustration.

**Standard value: Cylinder I.D.**

| | |
|---|---|
| **4G16** | **68.20 – 68.23 mm (2.6850 – 2.6862 in.)** |
| **4G13, G13B** | **71.00 – 71.03 mm (2.7953 – 2.7965 in.)** |
| **4G15, G15B** | **75.50 – 75.53 mm (2.9724 – 2.9736 in.)** |

**Cylindricity: 0.01 mm (0.0004 in.) or less**

## BORING CYLINDER

(1) Oversize pistons to be used should be determined on the basis of the largest bore cylinder.

**Piston size identification**

**Up to 1993 models**

| Size | Identification mark |
|---|---|
| 0.25 mm (0.01 in.) O.S. | 0.25 |
| 0.50 mm (0.02 in.) O.S. | 0.50 |
| 0.75 mm (0.03 in.) O.S. | 0.75 |
| 1.00 mm (0.04 in.) O.S. | 1.00 |

**From 1994 models**

| Size | Identification mark |
|---|---|
| 0.50 mm (0.02 in.) O.S. | 0.50 |
| 1.00 mm (0.04 in.) O.S. | 1.00 |

NOTE
Size mark is stamped on piston top.

(2) Measure outside diameter of piston to be used. Measure it in thrust direction as shown.

(3) Based on measured piston O.D. calculate boring finish dimension.

**Boring finish dimension = Piston O.D. + (clearance between piston O.D. and cylinder) – 0.02 mm (0.0008 in.) (honing margin)**

(4) Bore all cylinders to calculated boring finish dimension.

**Caution**

- **To prevent distortion that may result from temperature rise during honing, bore cylinders, working from No. 2 to No. 4 to No. 1 to No. 3.**

(5) Hone to final finish dimension [piston O.D. + clearance between piston O.D. and cylinder.]

(6) Check clearance between piston and cylinder.

**Clearance between piston and cylinder:**
**0.02 – 0.04 mm (0.0008 – 0.0016 in.)**

NOTE
When boring cylinders, finish all of four cylinders to same oversize. Do not bore only one cylinder to an oversize.

© Mitsubishi Motors Corporation Apr. 1990

## NOTES

# Service Bulletins

**Click on the applicable bookmark to select the Service Bulletin.**

# SERVICE BULLETIN

MITSUBISHI
MOTORS

QUALITY INFORMATION ANALYSIS
OVERSEAS SERVICE DEPT. MITSUBISHI MOTORS CORPORATION

## 5. Details:

(1) Changes made

- Cylinder head bolt

Bolt head changed from hexagonal one to 12–sided one.

Bolt thread diameter changed from 10 mm to 9 mm.

- Cylinder head

Cylinder head bolt through hole diameter changed from 11 mm to 10 mm.

- Cylinder block

Cylinder head mounting bolt thread changed from M10 to M9.

(2) Operation procedure

- ENGINE 4G1 SERIES Workshop Manual, Page 11A–1–9



## TORQUE SPECIFICATIONS

| | Nm | Torque kgm | ft.lbs. |
|---|---|---|---|
| **Drive belt and timing belt** | | | |
| Water pump pulley bolt | 9 | 0.9 | 7 |
| Crankshaft pulley bolt | 14 | 1.4 | 11 |
| Crankshaft bolt | 85 | 8.5 | 62 |
| Timing belt tensioner bolt | 24 | 2.4 | 18 |
| Camshaft sprocket bolt | 70 | 7.0 | 51 |
| **Intake manifold** | | | |
| Cable bracket bolt | 14 | 1.4 | 11 |
| Coolant temperature gauge unit | 11 | 1.1 | 8 |
| Coolant temperature sensor | 30 | 3.0 | 22 |
| Water outlet fitting bolt | 19 | 1.9 | 14 |
| Thermostat housing bolt and nut | 19 | 1.9 | 14 |
| Intake manifold stay bolt | | | |
| MPI engine | 22 | 2.2 | 16 |
| Carburetor engine | 26 | 2.6 | 19 |
| Intake manifold bolt and nut | 18 | 1.8 | 13 |
| Air intake plenum stay bolt | 18 | 1.8 | 13 |
| Air intake plenum bolt and nut | 18 | 1.8 | 13 |
| **Exhaust manifold and water pump** | | | |
| Exhaust manifold cover "A" bolt | 30 | 3.0 | 22 |
| Exhaust manifold cover "A" and "B" mounting bolt | 9 | 0.9 | 7 |
| Exhaust manifold cover "A" bolt | 24 | 2.4 | 18 |
| Water inlet pipe bolt | 14 | 1.4 | 11 |
| Water pump bolt | 14 | 1.4 | 11 |
| Alternator brace installed portion | 24 | 2.4 | 18 |
| **Rocker arms and camshaft** | | | |
| Rocker cover bolt | 1.8 | 0.18 | 1.3 |
| Rocker arm shaft bolt | | | |
| 12-valve engine | 32 | 3.2 | 24 |
| 8-valve engine | 24 | 2.4 | 18 |
| **Rocker arm lock nut** | | | |
| Intake and exhaust | 15 | 1.5 | 11 |
| Jet valve | 9 | 0.9 | 7 |
| **Cylinder head and valves** | | | |
| Cylinder head bolt <Type A> <Added> | 73 | 7.3 | 53 |
| Jet valve assembly (with engine oil applied to threads and seat surface) | 20 | 2.0 | 15 |
| Cylinder head bolt <Type B> [Tighten to 49 Nm (5.0 kgm, 36 ft.lbs.) and then completely loosen before final tightening with above procedure] | 20+90° turn +90° turn | 2.0+90° turn +90° turn | 14+90° turn +90° turn |

**<Added>**

© Mitsubishi Motors Corporation Apr. 1990 PWEE9001

| Tool | Number | Name | Use |
|---|---|---|---|
| | MD998309 | Jet valve spring pliers | Compression of jet valve spring |
| | MD998310 | Jet valve socket wrench | Removal and installation of jet valve |
| <Type A> <Added> | MD998360 | Cylinder head bolt wrench | Removal and installation of cylinder head bolt <Added> MB991653 <Type B> |
| | MD998615 | Valve seat cutter pilot | Correction of valve seat |
| | MD998715 | Pin | Holding of sprocket when loosening or tightening camshaft sprocket bolt [used with MD990767] |
| | MB998727 | Oil pan remover | Removal of oil pan |
| | MD998735 | Valve spring compressor | Compression of valve spring |

© Mitsubishi Motors Corporation Apr. 1990 PWEE9001

# 8. CYLINDER HEAD AND VALVES

## REMOVAL AND INSTALLATION <12-VALVE ENGINE>

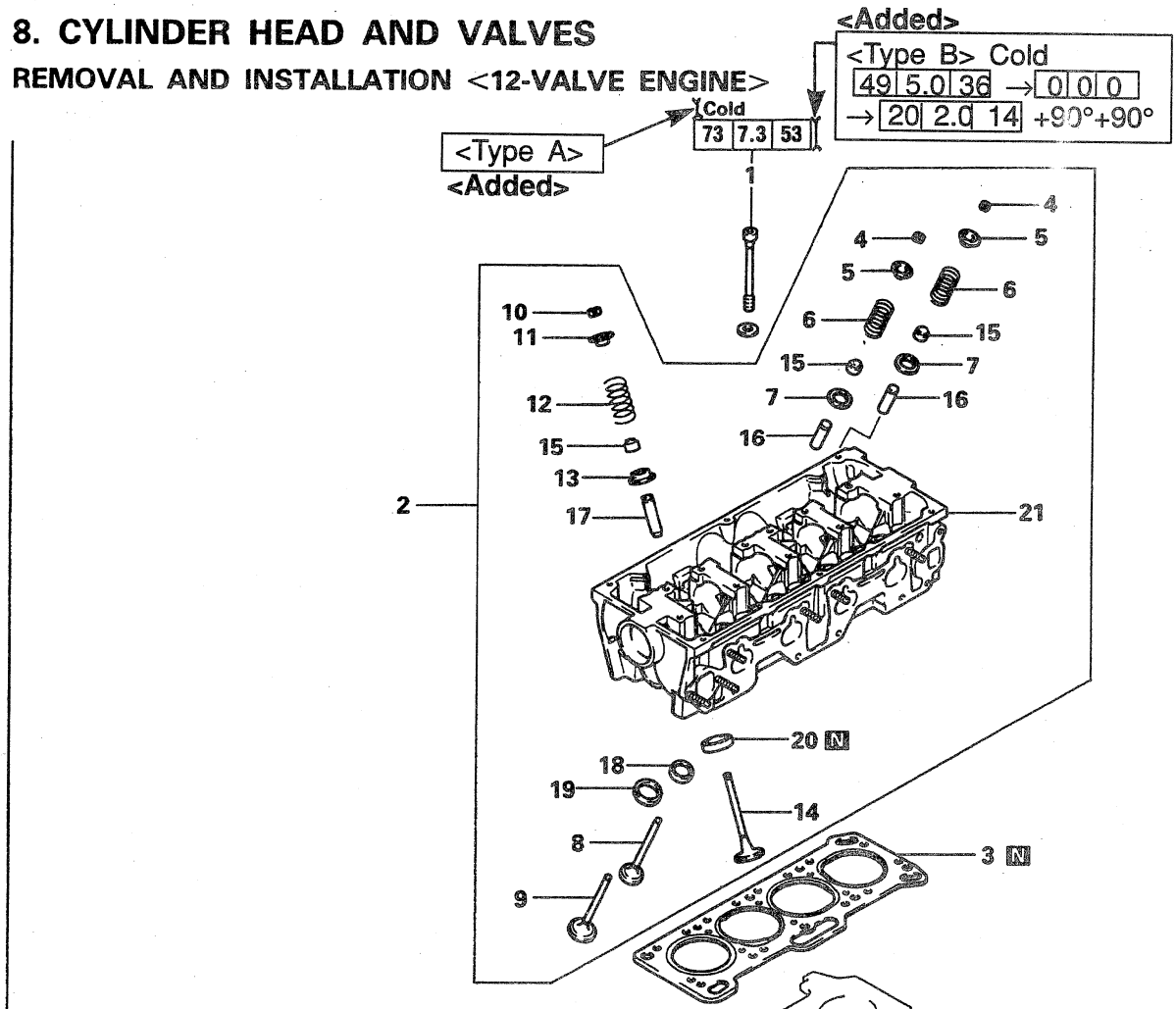


**Removal steps**

◊A◊ ♦E♦ 1. Cylinder head bolt
2. Cylinder head, valve assembly
♦D♦ 3. Cylinder head gasket
◊B◊ ♦C♦ 4. Retainer lock
5. Valve spring retainer
♦B♦ 6. Valve spring
7. Valve spring seat
8. Intake valve (primary)
9. Intake valve (secondary)
◊B◊ ♦C♦ 10. Retainer lock
11. Valve spring retainer
♦B♦ 12. Valve spring
13. Valve spring seat
14. Exhaust valve
◊C◊ ♦A♦ 15. Valve stem seal
16. Intake valve guide
17. Exhaust valve guide
18. Intake valve seat (primary)
19. Intake valve seat (secondary)
20. Exhaust valve seat
21. Cylinder head

1EN0101

© Mitsubishi Motors Corporation Apr. 1990 PWEE9001

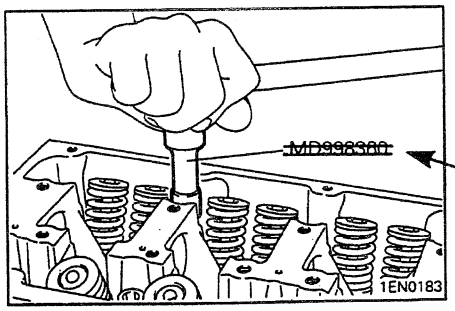


## SERVICE POINTS OF REMOVAL

### ◊A◊ REMOVAL OF CYLINDER HEAD BOLT

(1) Using the special tool, loosen the cylinder head bolts. Loosen evenly little by little.

**<Added>**

MD998360
or MB991653

**<Changed>**

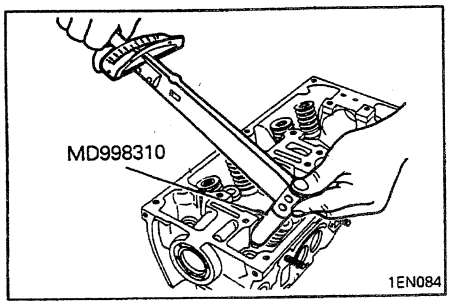


### ◊B◊ REMOVAL OF JET VALVE

(1) When loosening a jet valve, hold the special tool securely so that it is not tilted with respect to the jet valve center line. Also avoid applying force abruptly.

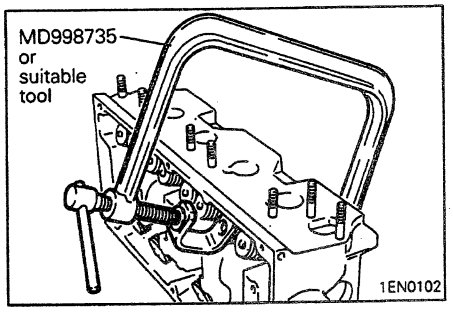


### ◊C◊ REMOVAL OF RETAINER LOCK

(1) Store removed valves, springs and other parts, tagged to indicate their cylinder No. and location for reassembly.

NOTE
The valve spring retainers of the 12-valve engine differ in size between the intake and exhaust sides. Therefore, use the following retainer holders.

**Identification mark:**
**Intake** ..... A
**Exhaust** ..... B

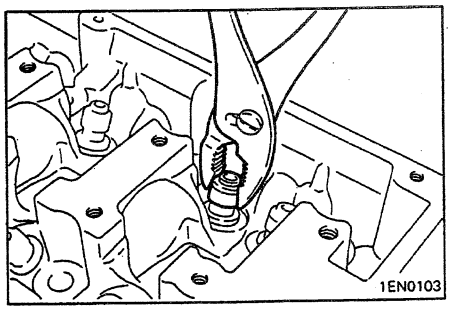


### ◊D◊ REMOVAL OF VALVE STEM SEAL

**Caution**
- **The stem seal is not reusable.**

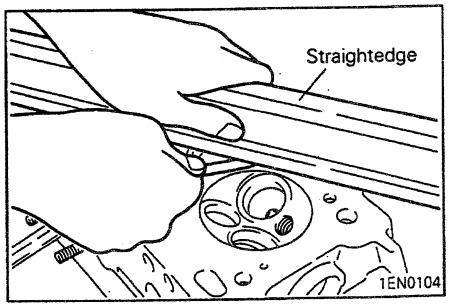


## INSPECTION

### CYLINDER HEAD

(1) Check the cylinder head gasket surface for flatness by using a straightedge and thickness gauge.

**Standard value: 0.05 mm (0.0020 in.)**
**Limit: 0.2 mm (0.008 in.)**

(2) If the service limit is exceeded, correct to meet specification.

**Grinding limit: 0.2 mm (0.008 in.)**

**Caution**
- **The total thickness of the stock allowed to be removed from cylinder head and mating cylinder block is 0.2 mm (0.008 in.) in thickness.**

**Cylinder head height (Specification when new):**
**106.9 – 107.1 mm (4.209 – 4.217 in.)**

© Mitsubishi Motors Corporation Apr. 1990

PWEE9001

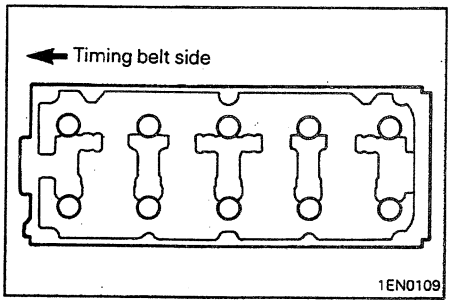


**F INSTALLATION OF CYLINDER HEAD BOLT**

(1) Using the special tool and torque wrench, tighten bolts in the shown sequence.
(2) Repeat the tightening sequence several times, and torque the bolts to specification in the final sequence.

<Type A>
**<Added>**

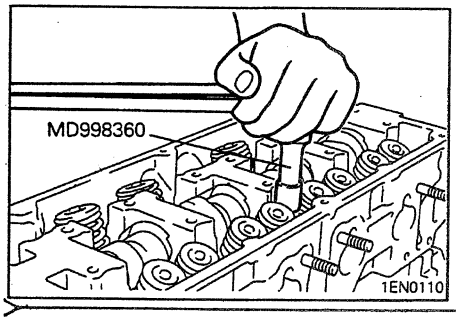


**<Added>**

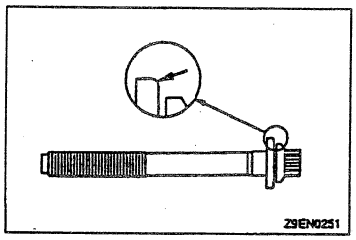


<Type B>
(1) When installing the cylinder head bolts, check that the shank length of each bolt meets the limit. If the limit is exceeded, replace the bolt.
**Limit: Max. 103.2 mm (4.06 in.)**
(2) Install the washers as illustrated.
(3) Apply engine oil to the bolt threads and washers.

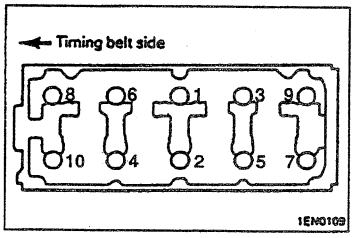


(4) Using the special tool MB991653, tighten the bolts to 49 Nm (5.0 kgm, 36 ft.lbs.) according to the tightening sequence.
(5) Loosen the bolts completely.
(6) Torque the bolts to 20 Nm (2.0 kgm, 14 ft.lbs.).
(7) Make a paint mark across each bolt head and cylinder head.
(8) Give a 90° turn to the bolts in the specified tightening sequence.
(9) Give another 90° turn to the bolts and make sure that the paint mark on the head of each bolt and that on the cylinder head are on the same straight line.

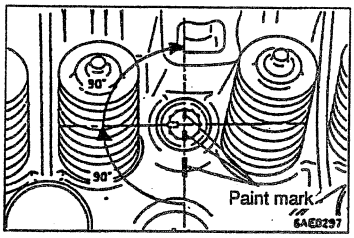


**Caution**
1. **Always make a tightening angle just 90°. If it is less than 90°, the head bolt will be loosened.**
2. **If the bolt is overtightened, loosen the blot completely and then retighten it by repeating the thghtening procedure from step (1).**

© Mitsubishi Motors Corporation Apr. 1990 PWEE9001

# SERVICE BULLETIN

MITSUBISHI MOTORS

**QUALITY INFORMATION ANALYSIS**
**OVERSEAS SERVICE DEPT. MITSUBISHI MOTORS CORPORATION**

| SERVICE BULLETIN | **No.:** MSB-97E11-001 | |
|---|---|---|
| | **Date**: 1998-12-15 | |
| **Subject:** CHANGE TIGHTENING TORQUE OF CRANKSHAFT BOLT | | |
| **Group:** ENGINE | **Draft No.:** 97-EN-527 | |
| **CORRECTION** | **OVERSEAS SERVICE DEPT** | T.NITTA - VICE GENERAL MANAGER QUALITY INFORMATION ANALYSIS |

| <Model> | <M/Y> |
|---|---|
| (EC,EXP) COLT | 97-10 |
| (C50A) | 97-10 |
| (EC,EXP) LANCER | 97-10 |
| (C60A,C70A) | 97-10 |
| (EC,EXP) COLT | 97-10 |
| (CA0A,CC0A) | 97-10 |
| (EC,EXP) LANCER | |
| (CB0A,CD0A) | |
| (EC,EXP) COLT | |
| (CJ0A) | |
| (EC,EXP) LANCER | |
| (CK0A) | |

**1. Description:**

This Service Bulletin informs you of change in tightening torque of the 4G1 engine crankshaft bolt.

**2. Applicable Manuals:**

| Manual | Pub. No. | Language | Page(s) |
|---|---|---|---|
| ENGINE 4G1 SERIES WORKSHOP MANUAL | PWEE9001-A | (English) | 11A-1-9 |
| | PWES9002-A | (Spanish) | 11A-3-1 |
| | PWEF9003-A | (French) | |
| | PWEG9004-A | (German) | |
| | PWED9005-A | (Dutch) | |
| | PWEW9006-A | (Swedish) | |
| ENGINE 4G1 SERIES (E-W) WORKSHOP MANUAL | PWEE9520 | (English) | 11A-1-4 |
| | PWES9521 | (Spanish) | 11A-3-1 |
| | PWEF9522 | (French) | 11A-3-2 |
| | PWEG9523 | (German) | |
| | PWED9524 | (Dutch) | |
| | PWEW9525 | (Swedish) | |

**3. Effective Model:**

From 4A-TE1645

## TORQUE SPECIFICATIONS

| | Torque | | | |
|---|---|---|---|---|
| | Nm | kgm | ft.lbs. | |
| **Drive belt and timing belt** | | | | |
| Water pump pulley bolt | 9 | 0.9 | 7 | |
| Crankshaft pulley bolt | 14 | 1.4 | 11 | <Incorrect> |
| Crankshaft bolt | 105 | 10.5 | 76 | |
| Timing belt tensioner bolt | 24 | 2.4 | 18 | |
| Camshaft sprocket bolt | 70 | 7.0 | 51 | |
| **Intake manifold** | | | | |
| Cable bracket bolt | 14 | 14 | 11 | |
| Coolant temperature gauge unit | 11 | 1.1 | 8 | |
| Coolant temperature sensor | 30 | 3.0 | 22 | |
| Water outlet fitting bolt | 19 | 1.9 | 14 | |
| Thermostat housing bolt and nut | 19 | 1.9 | 14 | |
| Intake manifold stay bolt | | | | |
| MPI engine | 22 | 2.2 | 16 | |
| Carburettor engine | 26 | 2.6 | 19 | |
| Intake manifold bolt and nut | 18 | 1.8 | 13 | |
| Air intake plenum stay bolt | 18 | 1.8 | 13 | |
| Air intake plenum bolt and nut | 18 | 1.8 | 13 | |
| **Exhaust manifold and water pump** | | | | |
| Exhaust manifold cover “A” bolt | 30 | 30 | 22 | |
| Exhaust manifold cover “A” bolt and “B” mounting bolt | 9 | 0.9 | 7 | |
| Exhaust manifold cover “A” bolt | 24 | 2.4 | 18 | |
| Water inlet pipe bolt | 14 | 1.4 | 11 | |
| Water pump bolt | 14 | 1.4 | 11 | |
| Alternator brace installed portion | 24 | 2.4 | 18 | |
| **Rocker arms and camshaft** | | | | |
| Rocker cover bolt | 1.8 | 0.18 | 1.3 | |
| Rocker arm shaft bolt | | | | |
| 12-valve engine | 32 | 3.2 | 24 | |
| 8-valve engine | 24 | 2.4 | 18 | |
| **Rocker arm lock nut** | | | | |
| Intake and exhaust | 15 | 1.5 | 11 | |
| Jet valve | 9 | 0.9 | 7 | |
| **Cylinder head and valves** | | | | |
| Cylinder head bolt | 73 | 7.3 | 53 | |
| Jet valve assembly (with engine oil applied to threads and seat surface) | 20 | 2.0 | 15 | |
| | <Correct> | | | |
| | 125 | 12.8 | 93 | |

## 3. DRIVE BELT AND TIMING BELT
### REMOVAL AND INSTALLATION

Pre-removal/post-installation operations
- Removal/installation of alternator (See Group 16A)

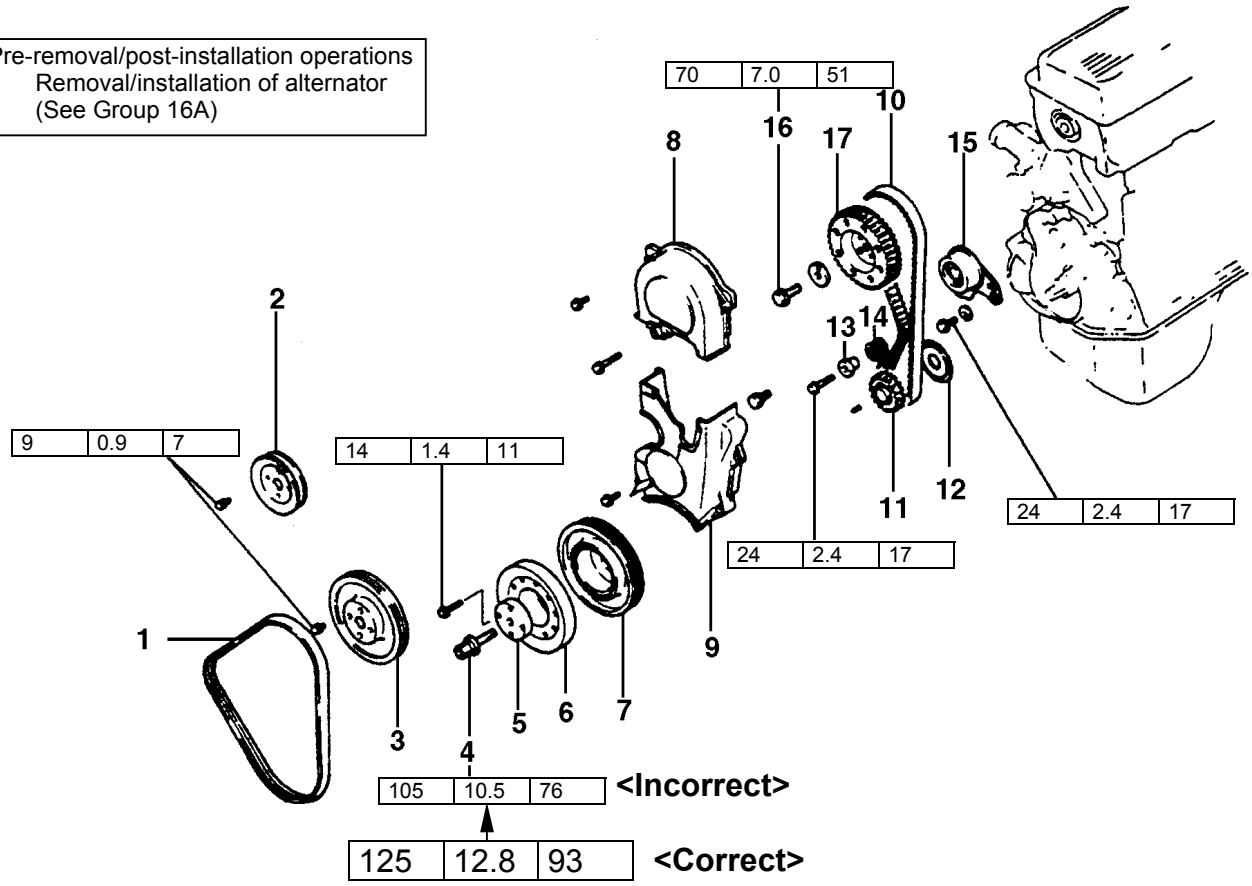


1EN0179

**Removal steps**

| | | |
|---|---|---|
| | ➔E← | 1. Drive belt |
| | | 2. Pulley (for power steering pump drive) |
| | | 3. Water pump pulley |
| | | 4. Crankshaft pulley bolt |
| | | 5. Special washer |
| | | 6. Crankshaft pulley |
| | | 7. Damper pulley |
| | | 8. Timing belt upper cover |
| | | 9. Timing belt lower cover |
| ➔A← | ➔D← | 10. Timing belt |
| | | 11. Crankshaft sprocket |
| | ➔C← | 12. Flange |
| | | 13. Tensioner spacer |
| | | 14. Tensioner spring |
| | ➔B← | 15. Timing belt tensioner |
| ➔B← | ➔A← | 16. Camshaft sprocket bolt |
| | | 17. Camshaft sprocket |