# ENGINE
# F9Q SERIES

## CONTENTS

GENERAL INFORMATION ..... 11A-0-3
1. SPECIFICATIONS ..... 11A-1-1
SERVICE SPECIFICATIONS ..... 11A-1-1
TORQUE SPECIFICATIONS ..... 11A-1-2
2. SPECIAL TOOLS ..... 11A-2-1
3. CRANKSHAFT PULLEY ..... 11A-3-1
4. TIMING BELT ..... 11A-4-1
5. OIL SEPARATOR AND OIL RETURN PIPE ..... 11A-5-1
6. INJECTION PUMP AND FUEL INJECTOR ..... 11A-6-1
7. VACUUM HOSE ..... 11A-7-1
8. INTAKE AND EXHAUST ..... 11A-8-1
9. WATER PUMP AND WATER PIPE ..... 11A-9-1
10. CAMSHAFT AND VACUUM PUMP ..... 11A-10-1
11. CYLINDER HEAD ..... 11A-11-1
12. OIL PAN AND OIL PUMP ..... 11A-12-1
13. PISTON ..... 11A-13-1
14. CYLINDER BLOCK ..... 11A-14-1

© Mitsubishi Motors Corporation 

## NOTES

| Description | | Specification |
|---|---|---|
| Type | | F9Q1, F9Q2 |
| Number and arrangement of cylinders | | 4 in-line |
| Total displacement | | 1870 $cm^3$ |
| Cylinder bore × Stroke | | 83 × 93 |
| Compression ratio | | 19 |
| Valve mechanism | | Single overhead camshaft |
| Number of valve | Intake | 4 |
| | Exhaust | 4 |
| Valve timing | Intake opening | BTDC 3° |
| | Intake closing | ABDC 21° |
| | Exhaust opening | BBDC 46° |
| | Exhaust closing | BTDC 6° |
| Turbocharger | | Exhaust gas turbocharger |
| Fuel injection system | | Direct injection system (common rail fuel injection) |

# 1. SPECIFICATIONS

## SERVICE SPECIFICATIONS

| Item | | Standard | Limit |
|---|---|---|---|
| **Timing belt** | | | |
| Timing belt tension Hz | | 90 ± 15 | – |
| **Camshaft and vacuum pump** | | | |
| End play mm | | 0.05 – 0.13 | – |
| **Cylinder head** | | | |
| Piston protrusion above cylinder block mm | | 0.653 – 0.786 | – |
| Valve stem diameter mm | | 6.98 – 6.99 | – |
| Valve seat angle | | 45° | – |
| Valve projection mm | | –0.03 – 0.21 | – |
| Cylinder head overall height mm | | 161.9 – 162.1 | – |
| Flatness of cylinder head gasket surface mm | | 0.05 | – |
| Valve spring free height mm | | 45.8 | – |
| Valve guide inner diameter mm | | 7.00 – 7.02 | – |
| Valve guide outer diameter mm | | 12.03 – 12.05 | – |
| Valve guide installation height mm | | 80.7 – 81.4 | – |
| Valve seat width mm | | 1.8 | – |
| Valve seat exterior diameter mm | Intake | 36.9 | – |
| | Exhaust | 33.6 | – |
| Tappet height mm | | 34.97 – 34.99 | – |
| Valve clearance mm | Intake | 0.20 | – |
| | Exhaust | 0.40 | – |
| **Piston** | | | |
| Piston outer diameter mm | | 80 | – |
| Piston ring thickness mm | Piston ring No.1 | 2.5 | – |
| | Piston ring No.2 | 2.0 | – |
| | Oil ring | 3.0 | – |
| Connecting rod length mm | | 139 | – |
| Piston protrusion mm | | 0.50 – 0.62 | – |

## TORQUE SPECIFICATIONS

| Item | Nm |
|---|---|
| **Crankshaft pulley** | |
| Bracket bolt | 44 ± 4 |
| Crankshaft pulley bolt | 20 ± 2 + 115° ± 15° |
| **Timing belt** | |
| Timing belt cover bolt | 9 ± 0.9 |
| Tensioner pulley nut | 50 ± 5 |
| Tensioner plate bolt | 10 ± 1 |
| Camshaft sprocket bolt | 60 ± 6 |
| **Oil separator and oil return pipe** | |
| Oil return pipe bolt | 12 ± 1 |
| Turbocharger oil feed pipe nut | 24 ± 10 |
| Turbo nipple | 26 ± 2 |
| **Injection pump and fuel injector** | |
| High pressure pipe nut | 25 ± 2 |
| Pressure sensor | 25 ± 0.2 |
| Injection rail mounting bolt | 25 ± 2 |
| Injection pump sprocket bolt | 15 ± 1 + 60° ± 10° |
| Injection pump bracket bolt | 62 ± 6 |
| Pressure regulator | 35 ± 5 |
| **Intake and exhaust** | |
| Engine hanger bolt | 20 ± 2 |
| Flap box bolt | 8 ± 0.8 |
| EGR valve bolt | 8 ± 0.8 |
| Turbocharger nut | 24 ± 10 |
| Manifold nut | 28 ± 2 |
| **Water pump and water pipe** | |
| Water pump bolt | 10 ± 1 |
| Water inlet pipe bolt | 39 ± 3 |

| Item | Nm |
|---|---|
| **Camshaft and vacuum pump** | |
| Engine hanger bolt | 13 ± 1 |
| Glow plug | 15 ± 1 |
| Camshaft position sensor screw | 8.8 ± 1.5 |
| Rocker cover bolt | 12 ± 1 |
| Beam bearing cap bolt | 20 ± 2 |
| **Cylinder head** | |
| Cylinder head bolt | 30 + 50° ± 4° → Fully loosen<br>→ 25 + 213° ± 7° |
| **Oil pan and oil pump** | |
| Oil pan bolt | 14 ± 1 |
| Oil plate bolt | 15 ± 1 |
| Oil pump bolt | 25 ± 2 |
| Cylinder block front plate bolt | 15 ± 1.5 |
| **Piston** | |
| Connecting rod cap bolt | 50 ± 5 |
| **Cylinder block** | |
| Flywheel bolt | 20 + 70° ± 7° |
| Bearing cap bolt | 65 ± 6 |

# 2. SPECIAL TOOLS

| Tool | Number | Name | Use |
|---|---|---|---|
| 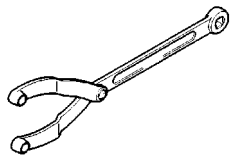 | MB990767 | Camshaft sprocket holder | Removal of camshaft sprocket |
| 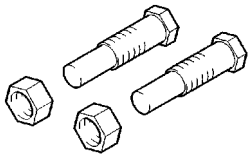 | MD998715 | Pulley holder pin | Retaining the camshaft sprocket (use together with MB990767) |
| 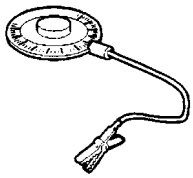 | MB991614 | Angle gauge | Tightening cylinder head bolts |
| 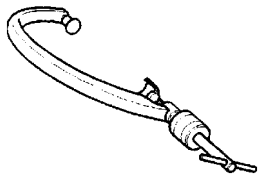 | MB996014 | Valve spring compressor | Removal of valve spring split cones |
| 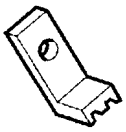 | MB996015 | Flywheel stopper | Locking the flywheel |
| 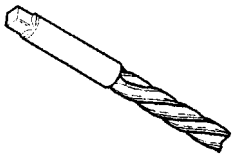 | MB996016 | Reamer | Reaming valve guides |
| 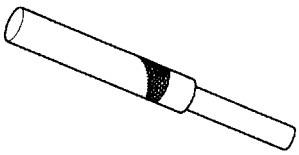 | MB996020 | Valve guide remover | Pressing in valve guides |
| 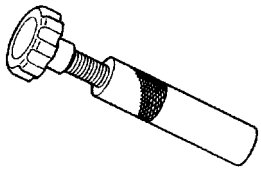 | MB996021 | Valve stem seal remover | Removal of valve guide seal |
| | MB996024 | Reamer | Reaming valve guides |

| | | | |
|---|---|---|---|
| | MB996029 | Valve guide installer | Pressing in valve guides |
| | MB996031 | Valve stem seal installer | Installation of valve guide seal |
| | MB996038 | Oil seal installer | Installation of crankshaft oil seal (flywheel end) |
| | MB996040 | Oil seal installer | Installation of crankshaft oil seal (timing gear end) |
| | MB991502 | MUT-II sub-assembly | • Drive belt tension measurement<br>• Fuel injection timing check and adjustment<br>• Idle speed check |
| | MB991668 | Belt tension meter set | Timing belt tension measurements (Use with MUT-II) |
| | MB996048 | Belt pretensioner | Installation of timing belt |
| | MB996043 | Sprocket stopper | Locking the injection pump sprocket |
| | MH062464 | Gear puller | Removal of fuel injection pump gear |

| Tool | Number | Name | Use |
|---|---|---|---|
| 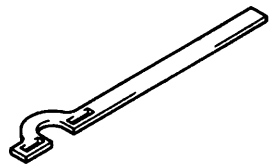 | MB991800 | Pulley holder | Crankshaft pulley holding |
| 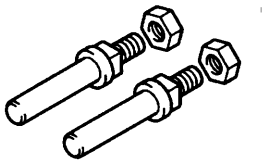 | MB991802 | Pin B | |
| 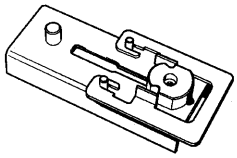 | MB996050 | Connecting rod bearing installer | Installation of connecting rod bearing |
| | MD998304 | Crankshaft front oil seal installer | Installation of crankshaft front oil seal |

# 3. CRANKSHAFT PULLEY

## REMOVAL AND INSTALLATION

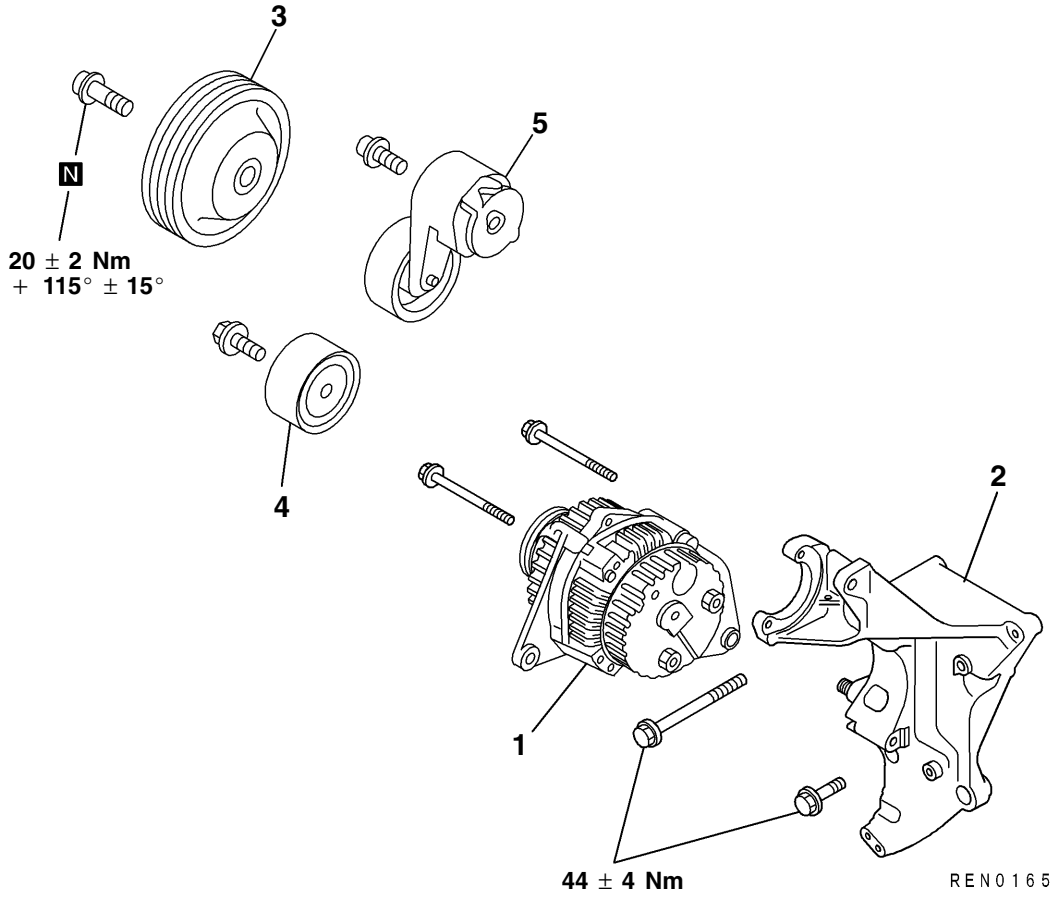


**Removal steps**

1. Alternator
2. Bracket
◀A▶ ▶A◀ 3. Crankshaft pulley
4. Idler pulley
5. Auto tensioner

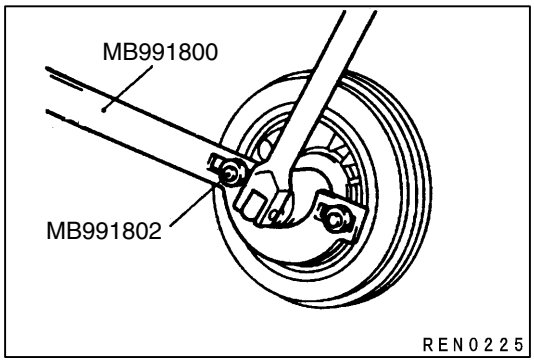


## REMOVAL SERVICE POINT

### ◀A▶ CRANKSHAFT PULLEY REMOVAL

(1) Use special tool MB991800 and MB991802 to hold the crankshaft pulley during removal.

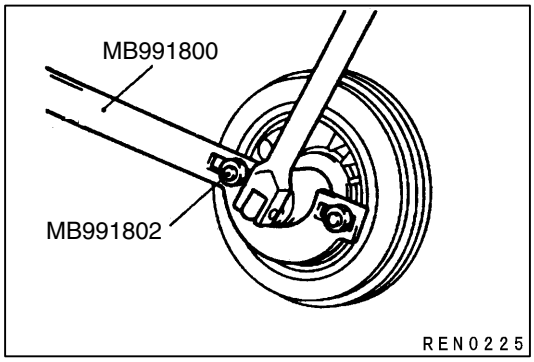


## INSTALLATION SERVICE POINT

### ▶A◀ CRANKSHAFT PULLEY INSTALLATION

**Caution**

- **Do not reuse the crankshaft pulley bolt.**

(1) Use special tool MB991800 and MB991802 to hold the crankshaft pulley during installation.
(2) Apply a coat of locking agent to the screw thread of the bolt.
(3) Retighten the loosened bolt to 20 Nm in the tightening sequence shown.
(4) Tighten the bolt further 115° ± 15° using an angle gauge.

# 4. TIMING BELT

## REMOVAL AND INSTALLATION

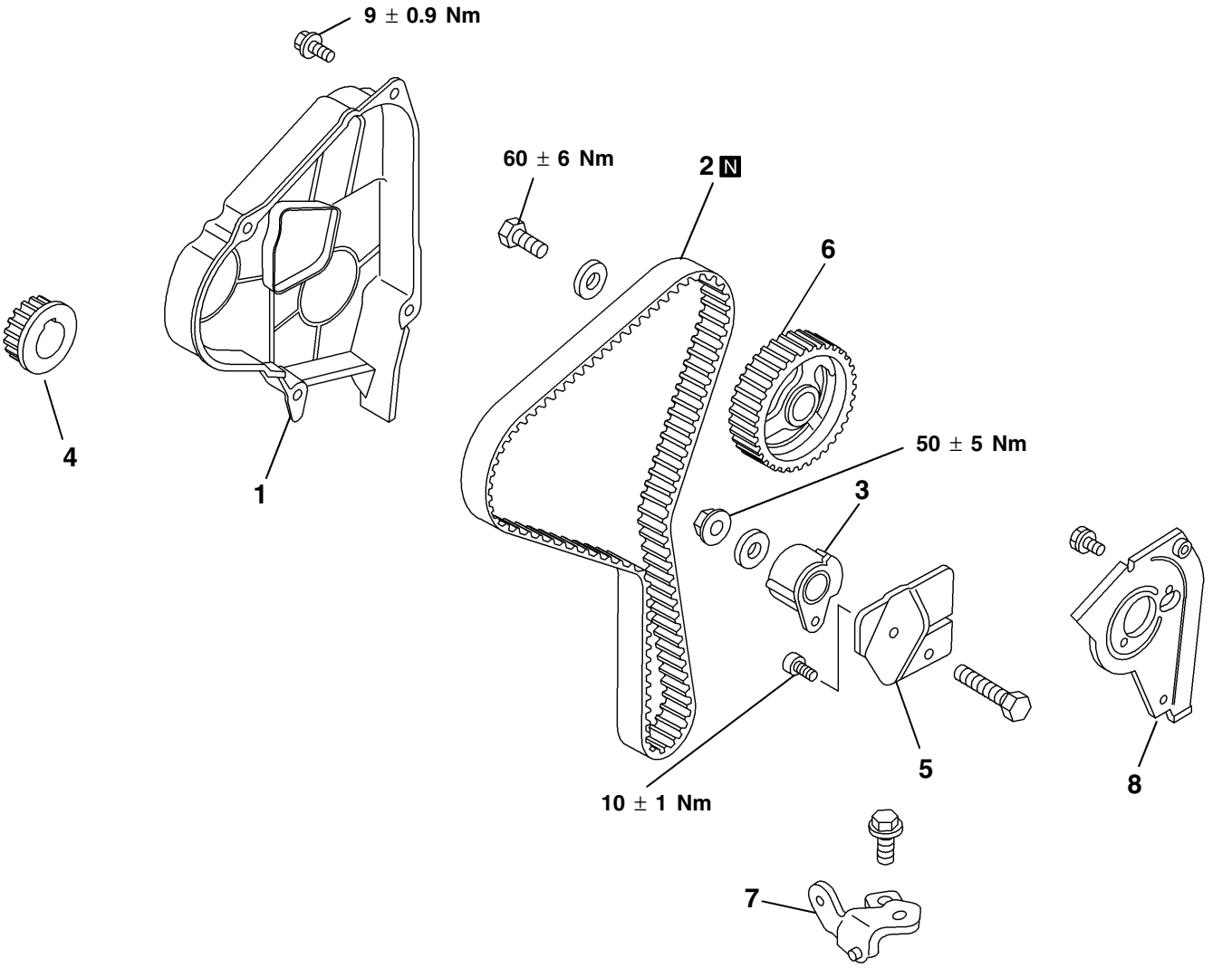


**Removal steps**

1. Timing belt cover, front
◀A▶ ▶B◀ 2. Timing belt
3. Tensioner pulley
4. Crankshaft sprocket
5. Tensioner plate
◀B▶ ▶A◀ 6. Camshaft sprocket
7. Engine cover bracket
8. Timing belt cover, rear

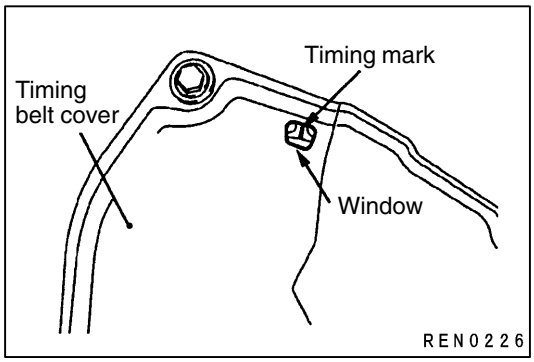


## REMOVAL SERVICE POINTS

### ◀A▶ TIMING BELT REMOVAL

(1) Turn the crankshaft clockwise to align the timing mark of the camshaft sprocket with the center of the window of the timing belt cover.

**Caution**
- **The crankshaft must always be turned clockwise.**

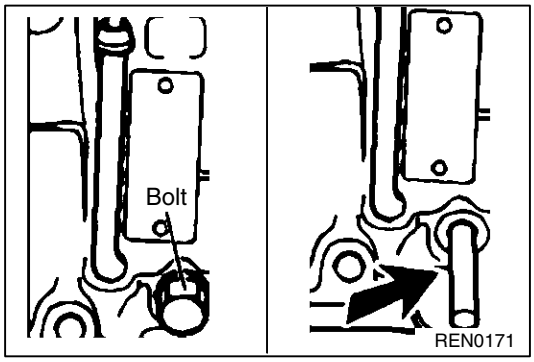


(2) Turn the crankshaft clockwise so that the piston of No. 1 cylinder is in the TDC on the compression stroke.
(3) Remove the bolt at the rear right side of the cylinder block and insert an 8 mm diameter pin into the bolt hole. If the crankshaft is in correct position, the pin is engaged with the recess in the crankshaft web.

**Caution**
- **Do not turn the crankshaft with the pin inserted.**

(4) Slacken the lock nut of the timing belt tensioner. Remove the timing belt.

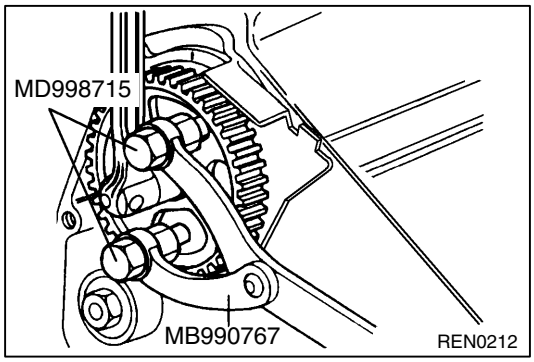


### ◀B▶ CAMSHAFT SPROCKET BOLT REMOVAL

(1) Use special tool MB990767, camshaft sprocket holder with pin MD998715 and remove the retaining bolt.

**Caution**
- **Hold the camshaft sprocket with the special tools taking care not to let them hit against the camshaft position sensor.**

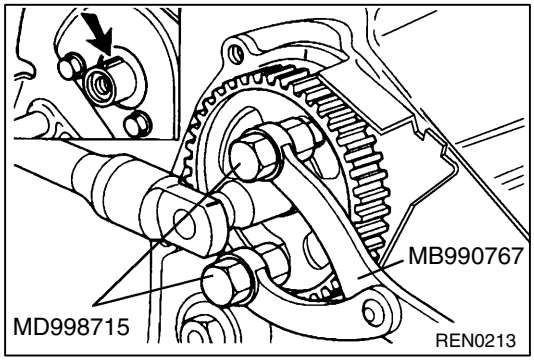


## INSTALLATION SERVICE POINTS

### ▶A◀ CAMSHAFT SPROCKET BOLT INSTALLATION

(1) Smear the retaining bolt with a locking agent.
Use special tool MB990767, camshaft sprocket holder with pin MD998715 to stop the sprocket turning and then tighten the camshaft sprocket retaining bolt to 60 ± 6 Nm.

**Caution**
- **Hold the camshaft sprocket with the special tools taking care not to let them hit against the camshaft position sensor.**

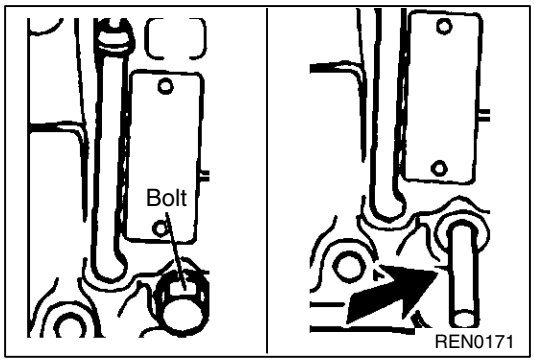


### ▶B◀ TIMING BELT INSTALLATION

(1) Turn the crankshaft to place the piston of No. 1 cylinder in the TDC on the compression stroke.
(2) Remove the bolt at the rear right side of the cylinder block.
(3) Insert an 8 mm diameter pin into the bolt hole. If the crankshaft is in correct position, the pin will engage with the recess in the crankshaft web.

**Caution**
- **Do not turn the crankshaft with the pin inserted.**

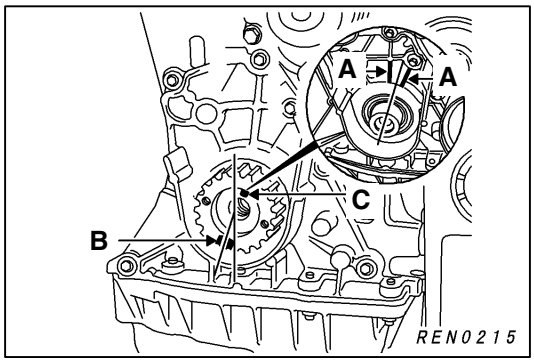


(4) Check that the crankshaft groove C is located at the center between the two ribs A on the cylinder block front plate, and that the portion B of the crankshaft is in the illustrated position.

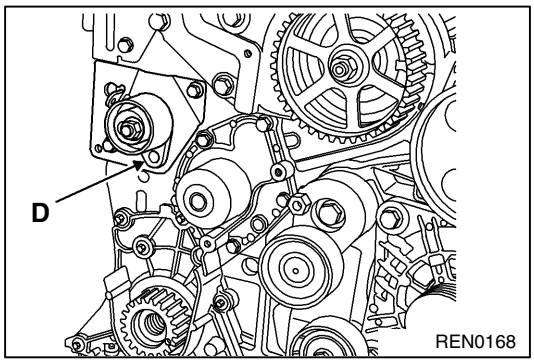


(5) Check that the tensioner is securely positioned on the pin D.
(6) Fit the timing belt, aligning marks on the belt with the marks on the camshaft and crankshaft sprockets. (77 teeth inserted between the two marks on the belt)

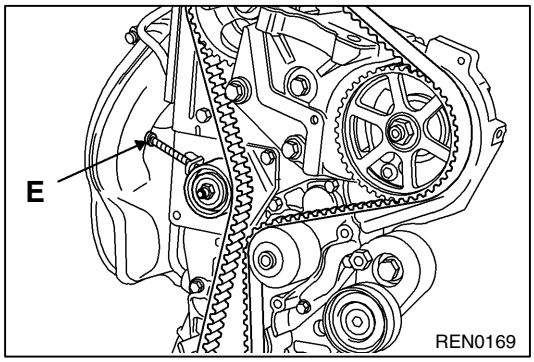


(7) Place the tensioner pulley against the belt by tightening bolt E on the tensioner support.

**Caution**
- **Do not reuse the removed timing belt.**

(8) Remove the pin installed in Step 3.

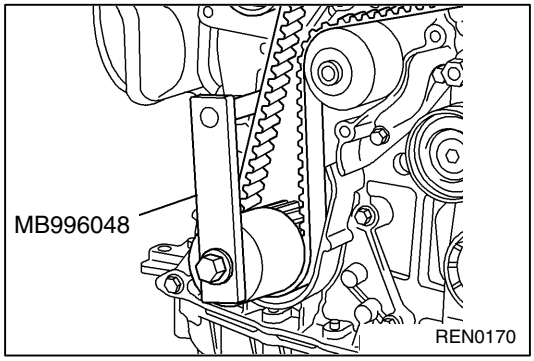


(9) Set the special tools on the crankshaft sprocket.
(10) Tighten the crankshaft to 11 Nm.

(11) Connect the special tool (MB991704) to the MUT-II. Then, connect the MUT-II to the battery.
(12) Connect the MUT-II to the diagnosis connector.
(13) Turn the crankshaft clockwise to set the No. 1 cylinder to top dead center on the compression stroke.
(14) Select “Belt tension measurement” from the MUT-II menu screen.

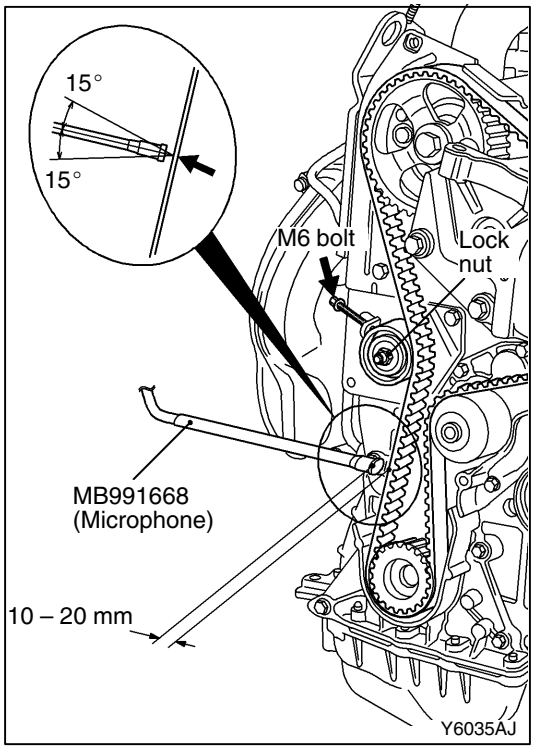


(15) Slacken the lock nut of the timing belt tensioner.
(16) Tension the timing belt with the aid of an M6 bolt.
(17) As shown in the illustration, keep the microphone (MB991668) 10 to 20 mm away from the back side of the belt perpendicularly (within an inclination of ±15 degrees).
(18) With your finger tip, lightly tap on the belt at the centre between the tensioner and crankshaft sprocket in the location shown by the arrow in the illustration to check whether the belt frequency is within the standard value.

**Standard value: 90 ± 15 Hz**

**Caution**
- **Measure when the belt surface temperature is close to room temperature.**
- **Make sure that the water or oil, etc., does not get on the microphone.**
- **If a strong wind blow or noise is made close to the microphone during measurement, the meter will show a value that differs from the actual value.**
- **If the measurement is taken with the microphone touching the belt, the meter will show a value that differs from the actual value.**

(19) Turn the clockwise crankshaft twice.
(20) Insert a pin having a diameter of approx. 8 mm into the bolt hole to block the crankshaft.
(21) Reconfirmation turn the crankshaft clockwise to set the No. 1 cylinder to TDC on the compression stroke.
(22) Remove 8 mm pin.

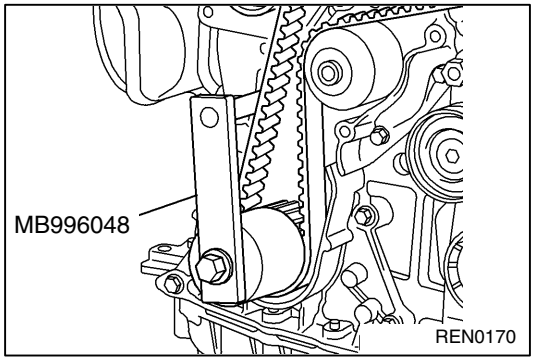


(23) Set the special tool on the crankshaft sprocket.
(24) Give a preload to the belt by a torque of 11 Nm.

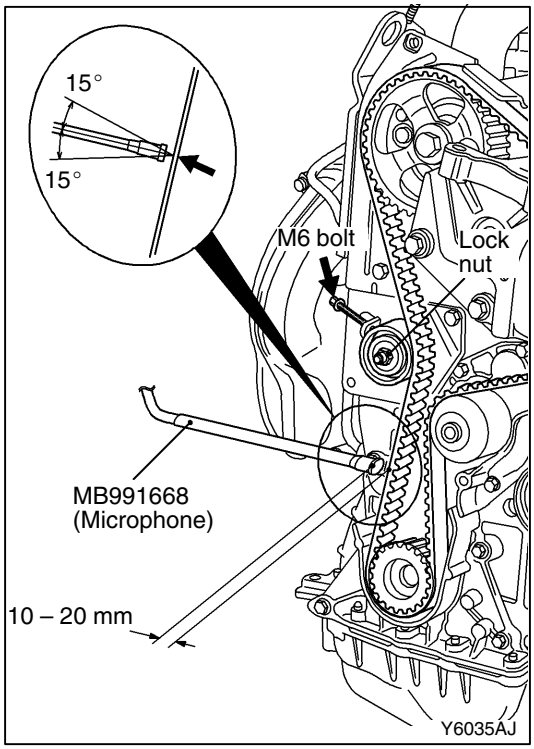


(25) Connect the special tool (MB991704) to the MUT-II and the microphone (MB991668).

(26) Check the belt tension. If the belt tension is otherwise adjust it again.

**Standard value: 90 ± 15 Hz**

(27) Tighten the tension lock nut to a torque of 50 Nm.

NOTE
The tension lock nut must be torque tightened to avoid any slackening which could damage the engine.

(28) Removal tool to MUT-II.

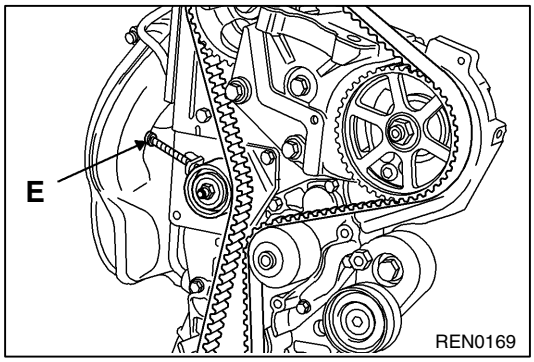


(29) Remove bolt E on the tensioner support.

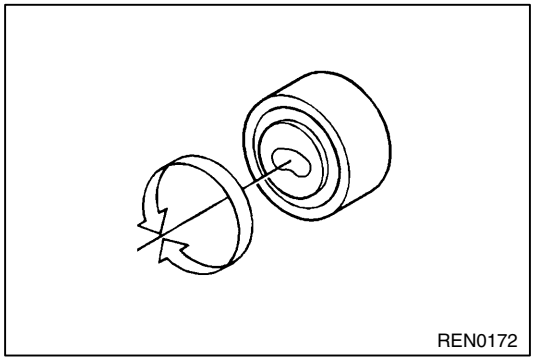


## INSPECTION

### TIMING BELT TENSIONER AND IDLER

(1) Check that the tensioner and idler rotate smoothly without excessive play or abnormal noise. Replace them with new ones if necessary.

# 5. OIL SEPARATOR AND OIL RETURN PIPE

## REMOVAL AND INSTALLATION

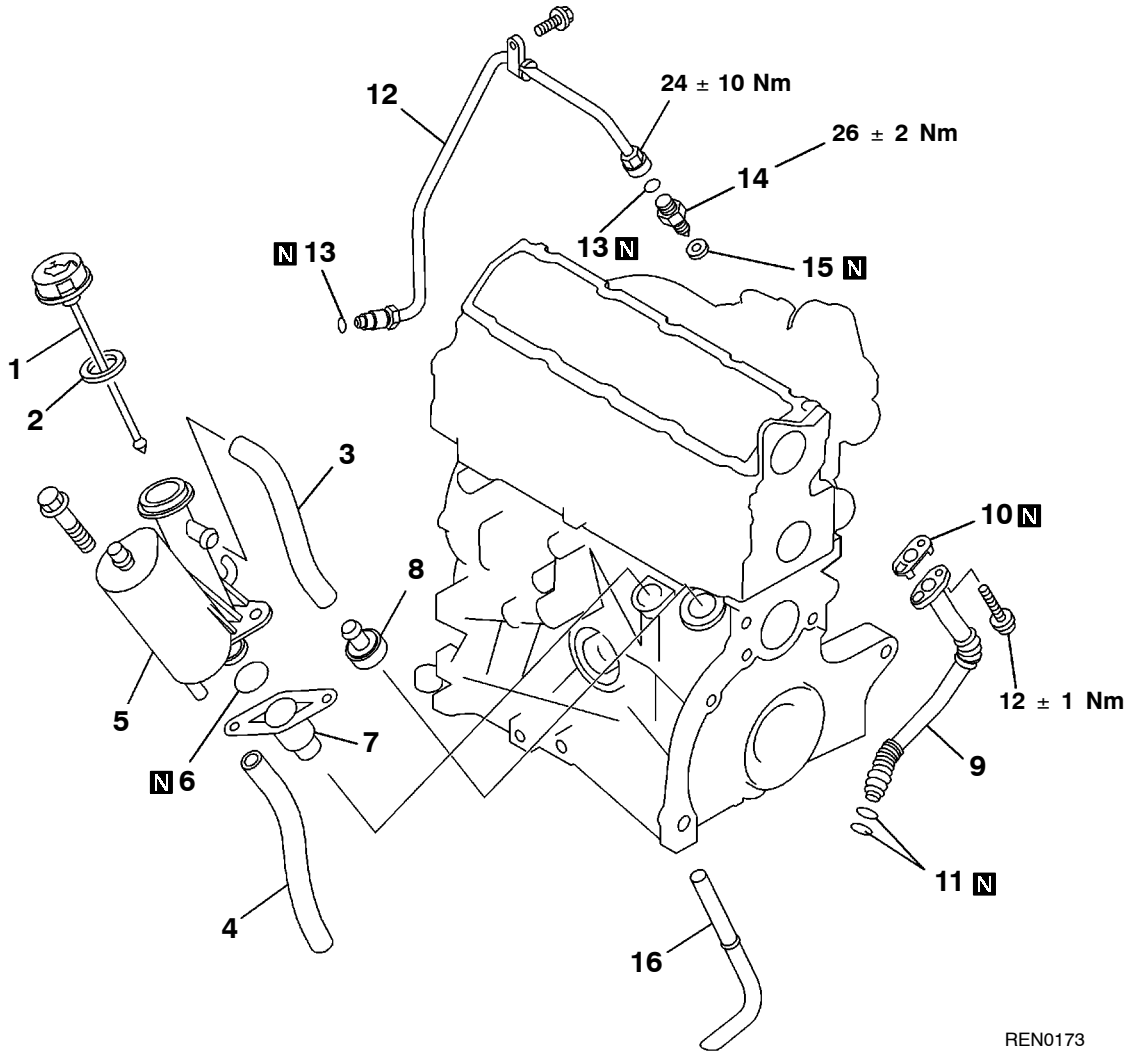


**Removal steps**

1. Oil dipstick
2. Oil dipstick seal
3. Oil separator hose
4. Oil separator return hose
5. Oil separator
6. O-ring
7. Oil separator holding ring
8. Engine breather pipe
9. Oil return pipe
10. Oil return pipe gasket
11. O-ring
12. Turbocharger oil feed pipe
13. O-ring
14. Turbo nipple
15. Gasket
16. Oil separator return pipe

# 6. INJECTION PUMP AND FUEL INJECTOR

## REMOVAL AND INSTALLATION

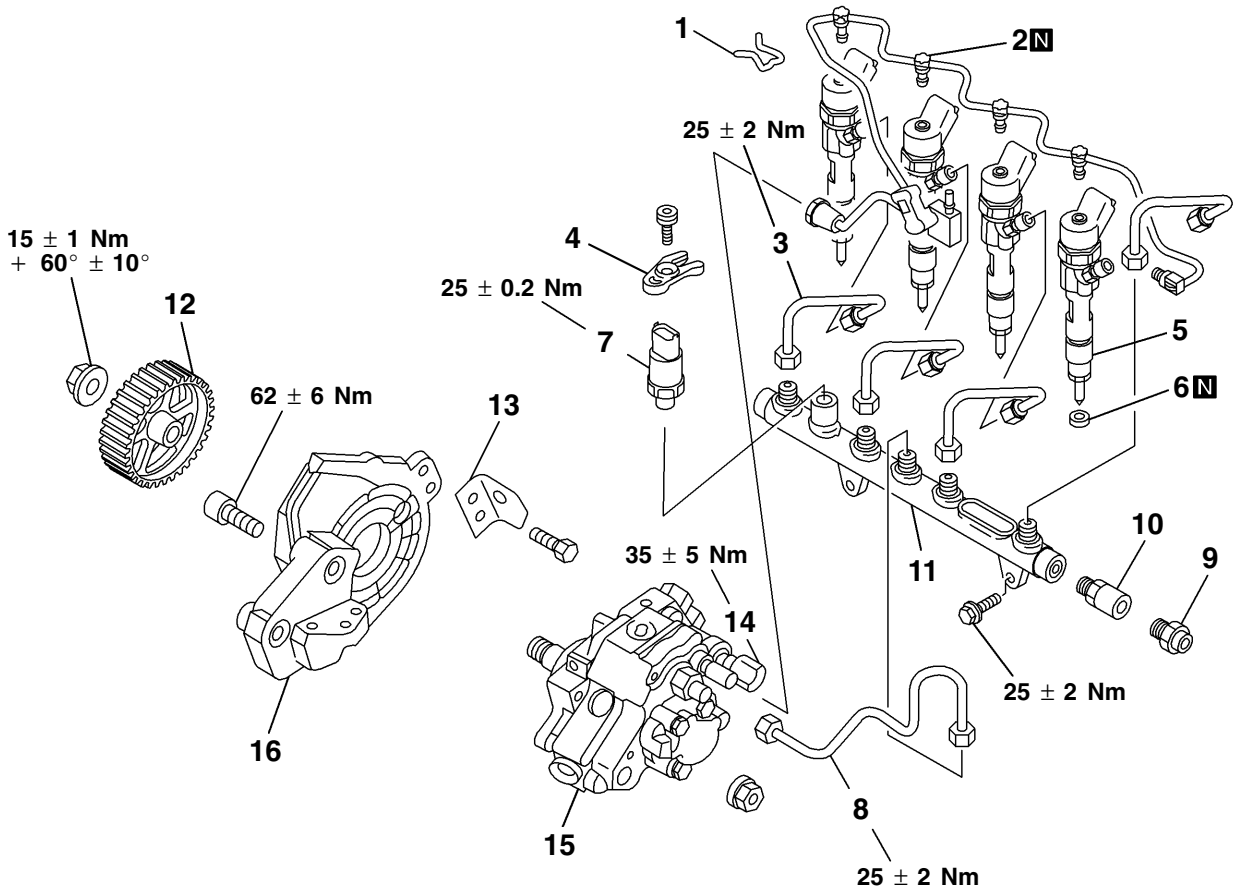


**Removal steps**

1. Clip
2. Fuel return ramp
3. ▶B◀ High pressure pipe
4. Fuel injector flange
5. Fuel injector
6. Adjusting washer
7. Pressure sensor
8. ▶B◀ High pressure pipe
9. Pressure limiter
10. Pressure limiter nipple
11. ▶B◀ Fuel injection rail
12. ◀A▶ ▶A◀ Injection pump sprocket
13. Engine hanger
14. Pressure regulator
15. Injection pump
16. Injection pump bracket

NOTE
When the fuel injectors and fuel injection rail are removed, put caps on their high pressure pipe connecting ports to prevent dust from entering the fuel line. Leave the caps installed until the injectors and fuel injection rail are reinstalled.

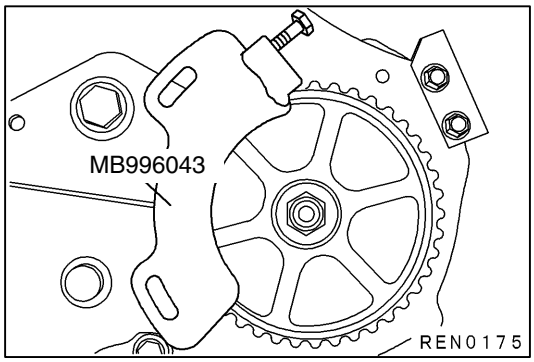


## REMOVAL SERVICE POINT

### ◀A▶ INJECTION PUMP SPROCKET REMOVAL

(1) Set the special tools on the injection pump sprocket.

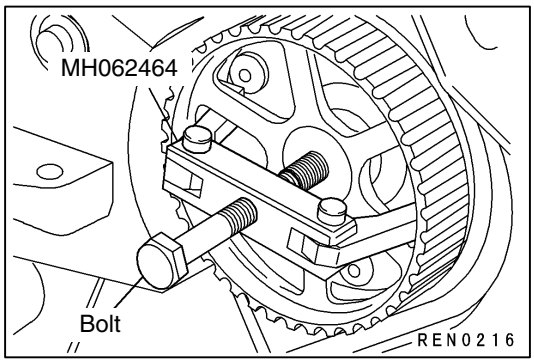


(2) For preparatory work, replace the center bolt of the special tool MH062464 with a sufficiently longer bolt.
(3) Remove the injection pump sprocket using the special tool.

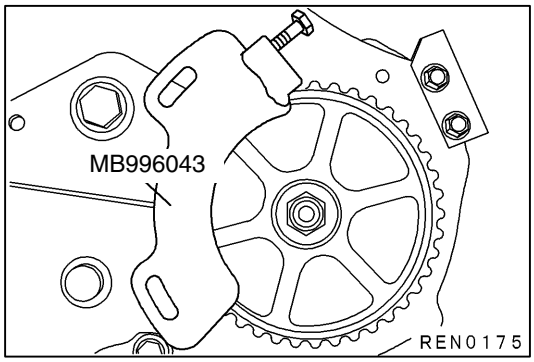


## INSTALLATION SERVICE POINT

### ▶A◀ INJECTION PUMP SPROCKET INSTALLATION

(1) Using the special tools shown in the illustration, lock the injection pump sprocket in position.
(2) Tighten the injection pump sprocket nut to the specified torque.

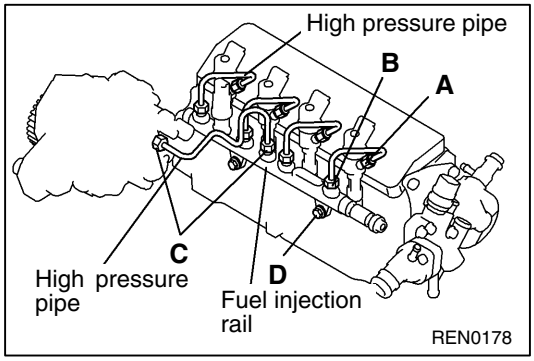


### ▶B◀ HIGH PRESSURE PIPE / FUEL INJECTION RAIL INSTALLATION

(1) Position the fuel injection rail and finger tighten the mounting bolts (the rail should be floating).
(2) Position all the high pressure pipes and finger tighten then.
Tighten all the high pressure injection pipe connection (on the injector side A then on the fuel injection rail side B).
(3) Tighten the high pressure pipe C.
(4) Tighten the fuel injection rail bolts D.

# 7. VACUUM HOSE

## REMOVAL AND INSTALLATION

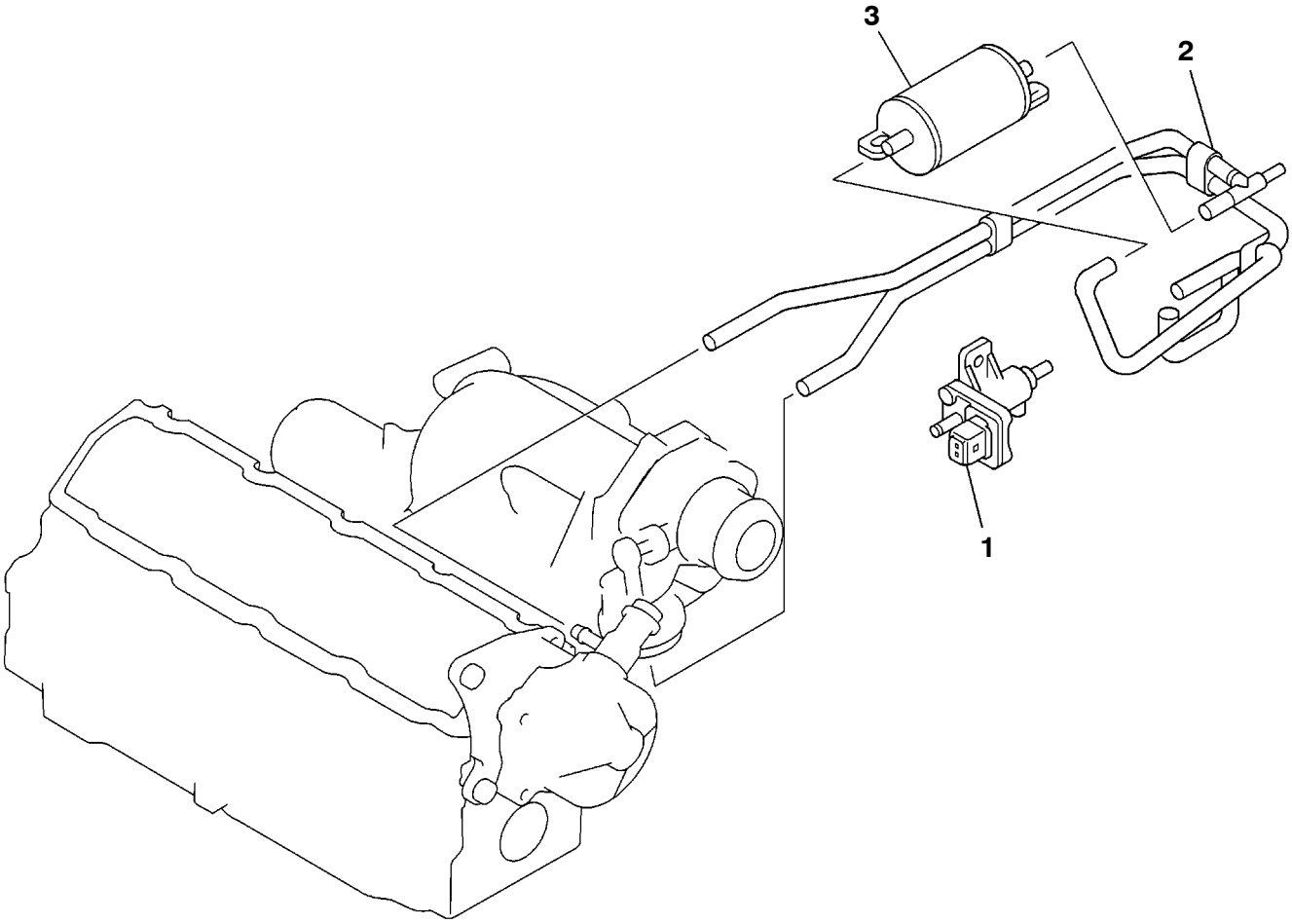


REN0179

**Removal steps**

1. Solenoid valve
2. Vacuum hose
3. Vacuum tank

# 8. INTAKE AND EXHAUST

## REMOVAL AND INSTALLATION

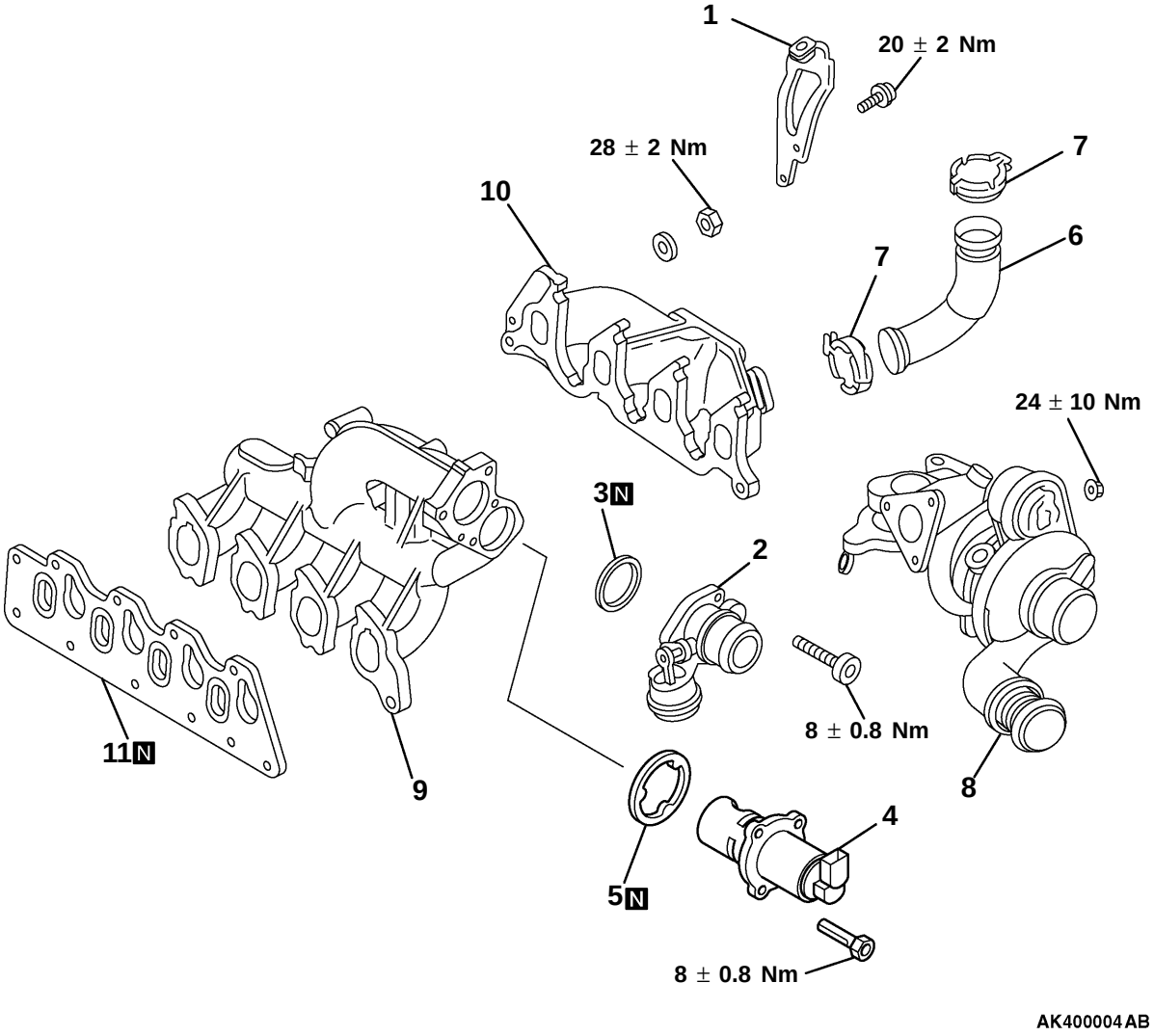


**Removal steps**

1. Engine hanger
2. Flap box
3. Gasket
4. EGR valve
5. EGR valve gasket
6. EGR hose
7. EGR hose clamp
8. Turbocharger
9. Intake manifold
10. Exhaust manifold
11. Manifold gasket

# 9. WATER PUMP AND WATER PIPE

## REMOVAL AND INSTALLATION

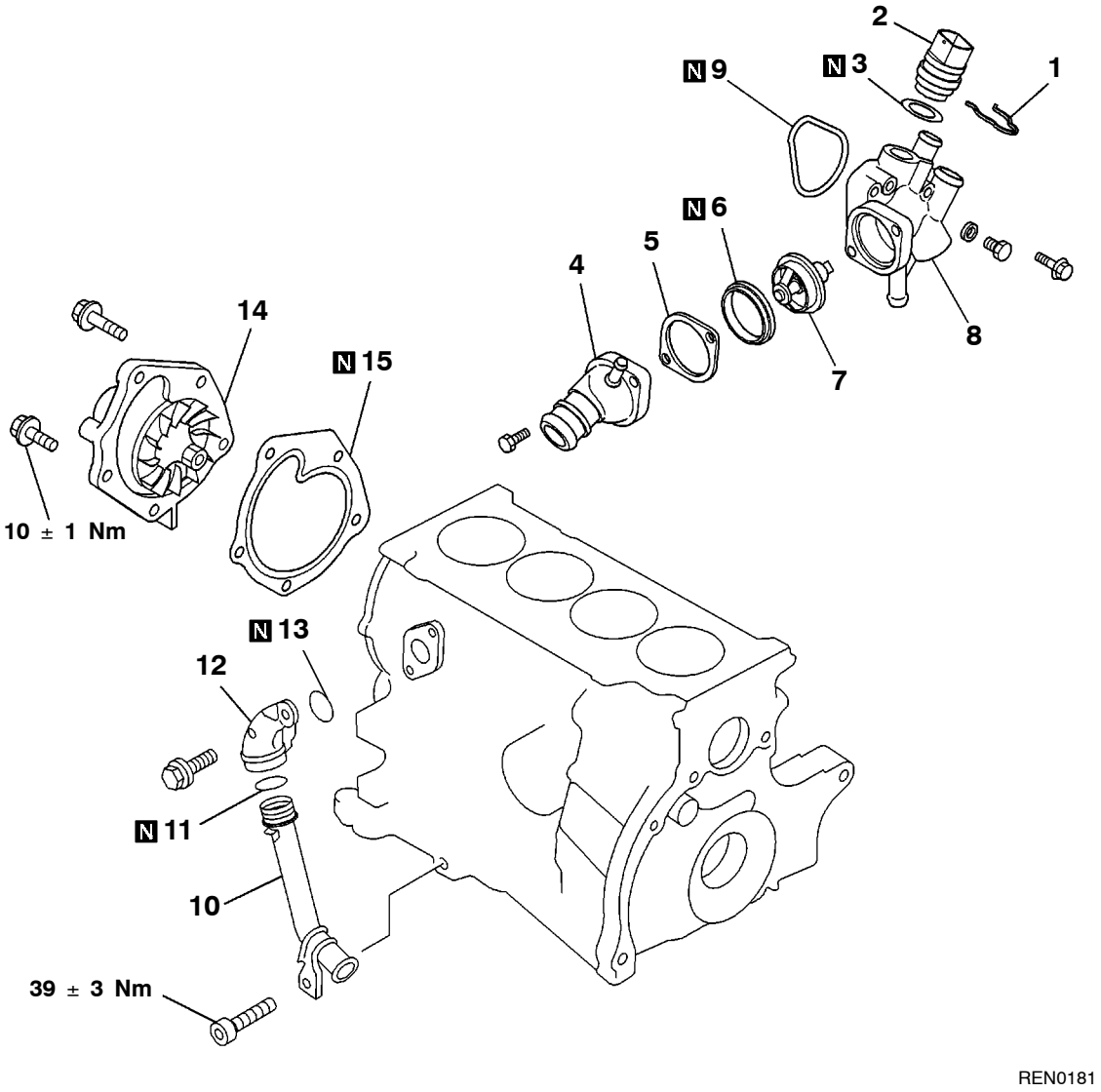


**Removal steps**

1. Clip
2. Engine coolant temperature sensor
3. Gasket
4. Thermostat case cover
5. Reinforcement
6. Thermostat case cover gasket
7. Thermostat
8. Thermostat case
9. Thermostat case gasket
10. Cooling water line pipe
11. O-ring
12. Cooling water line pipe
13. O-ring
14. Water pump
15. Water pump gasket

# 10. CAMSHAFT AND VACUUM PUMP

## REMOVAL AND INSTALLATION

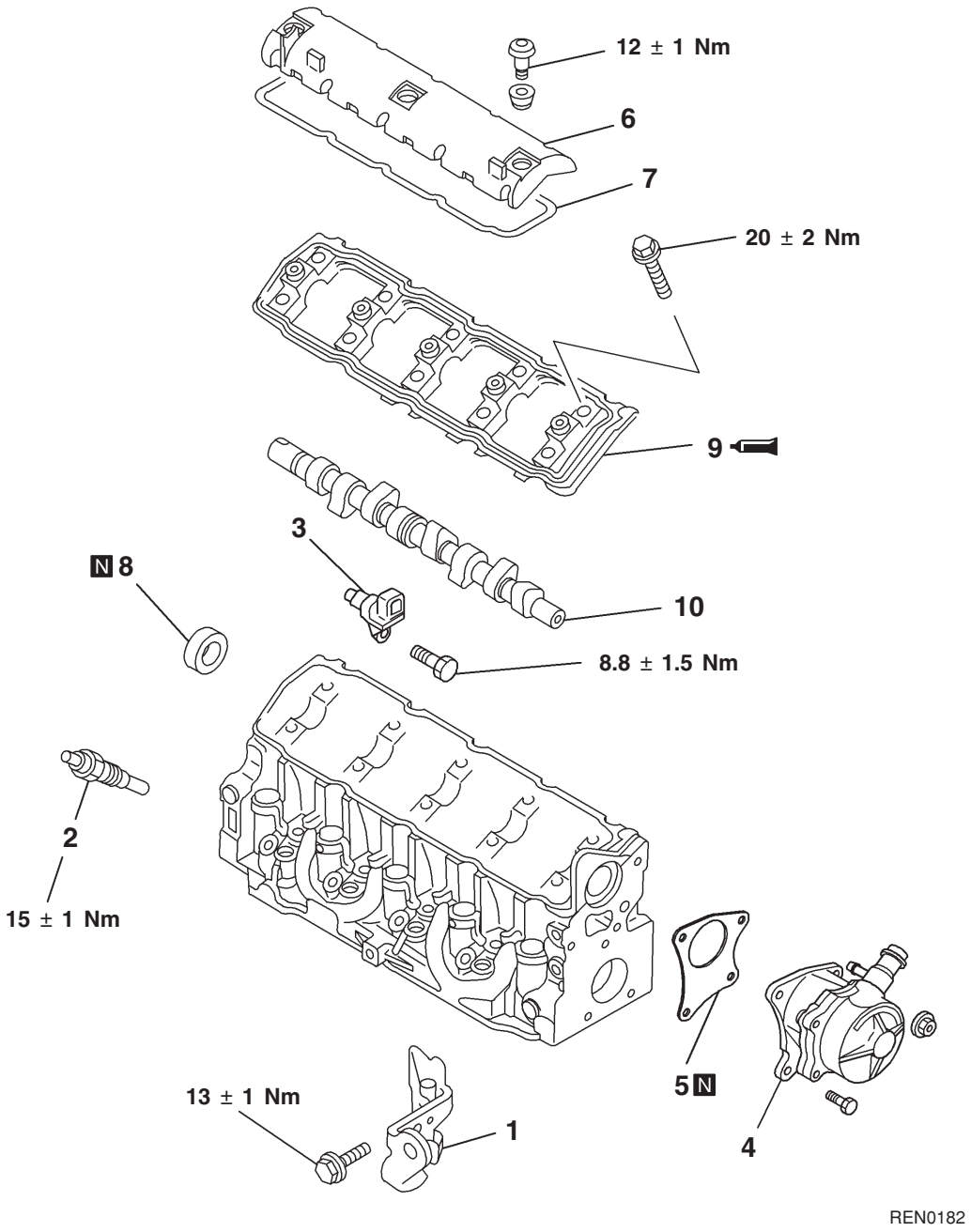


**Removal steps**

1. Engine hanger
2. Glow plug
3. Camshaft position sensor
4. ▶C◀ Vacuum pump
5. Vacuum pump gasket
6. Rocker cover
7. Rocker cover gasket
8. ▶B◀ Oil seal
9. ◀A▶ ▶A◀ Beam bearing cap
10. Camshaft

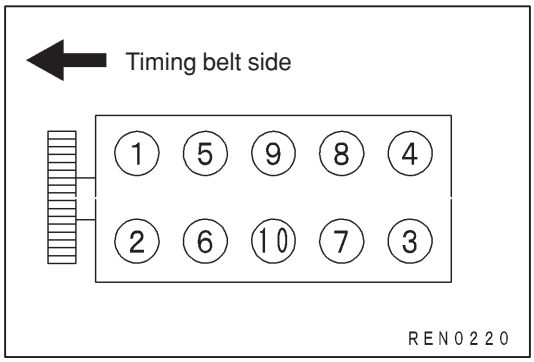


## REMOVAL SERVICE POINT

### ◀A▶ BEAM BEARING CAP REMOVAL

Remove the beam bearing cap bolts by loosening them in two or three steps in the order shown in the illustration.

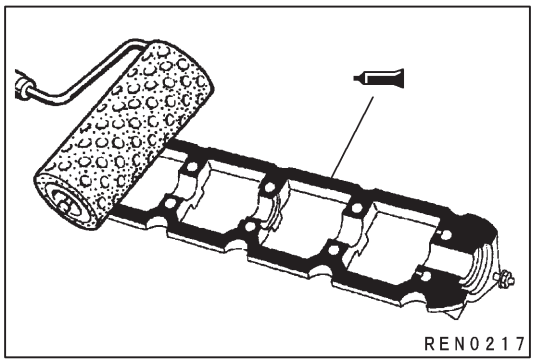


## INSTALLATION SERVICE POINTS

### ▶A◀ BEAM BEARING CAP INSTALLATION

(1) Apply sealant Loctite 518 on the beam bearing cap at a position where it comes in contact with the cylinder head.

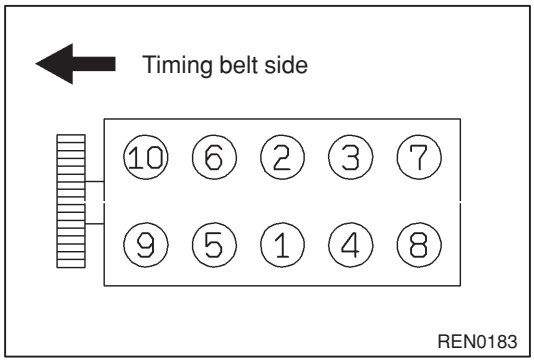


(2) Tighten the beam bearing cap bolts to a torque of 20 ± 2 Nm in the sequence given in the illustration.

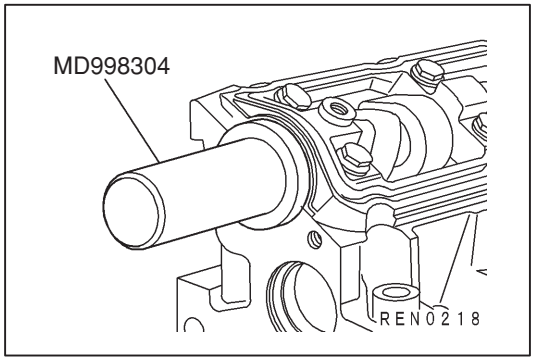


### ▶B◀ OIL SEAL INSTALLATION

Using the special tool, install the oil seal.

### ▶C◀ VACUUM PUMP INSTALLATION

Install the vacuum pump while aligning coupling section with the notch in the camshaft.

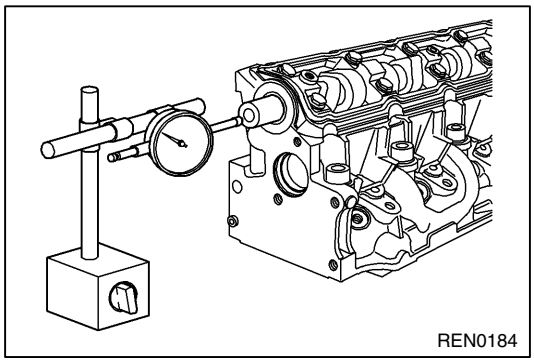


## INSPECTION

### CAMSHAFT

Measure the end play. Replace the camshaft if the measurement does not meet the standard value.

**Standard value: 0.05 – 0.13 mm**

# 11. CYLINDER HEAD

## REMOVAL AND INSTALLATION

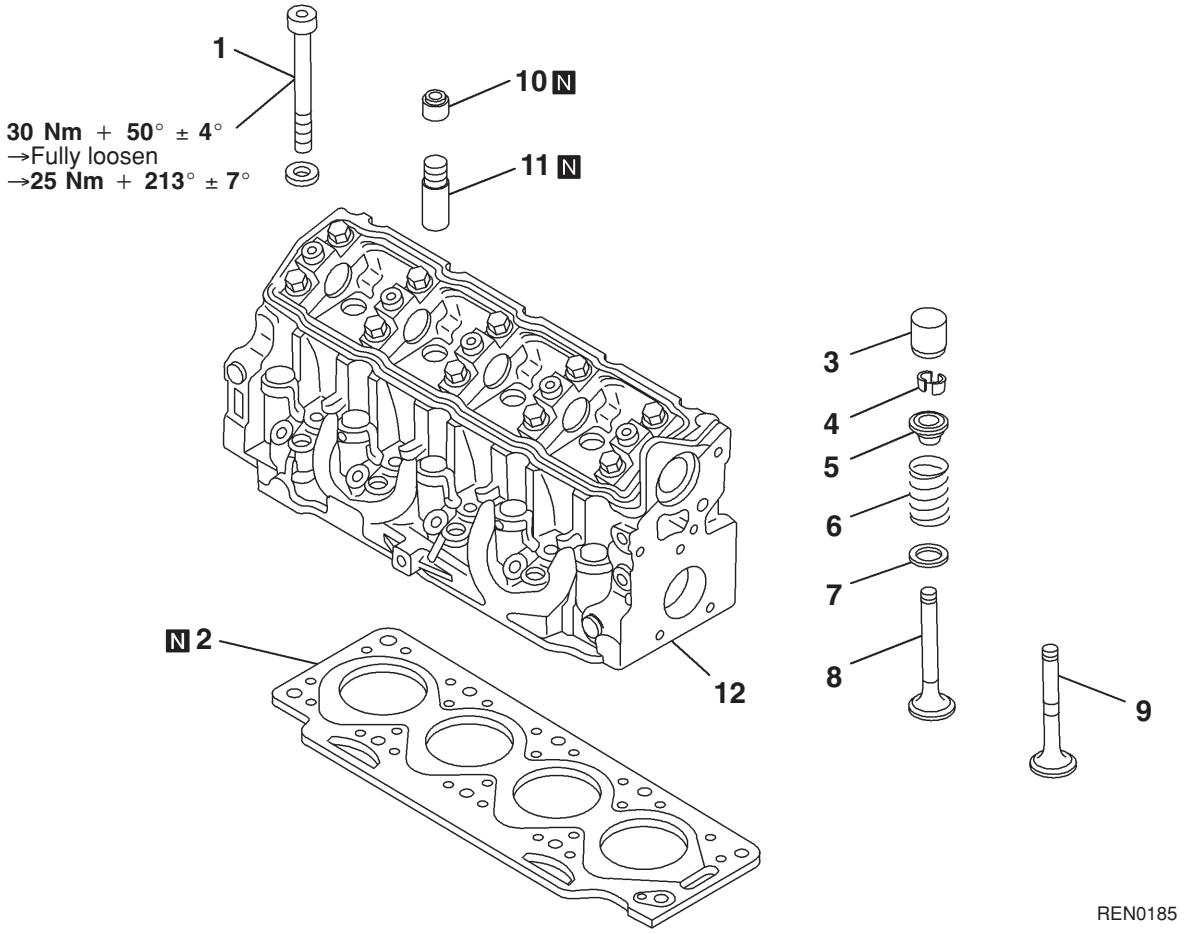


**Removal steps**

- ▶D◀ 1. Cylinder head bolt
- 2. Cylinder head gasket
- 3. Tappet
- ◀A▶ ▶C◀ 4. Retainer locks
- 5. Valve spring retainer
- ◀A▶ ▶C◀ 6. Valve spring
- 7. Valve spring seat
- 8. Intake valve
- 9. Exhaust valve
- ◀B▶ ▶B◀ 10. Valve stem seal
- ◀C▶ ▶A◀ 11. Valve guide
- 12. Cylinder head

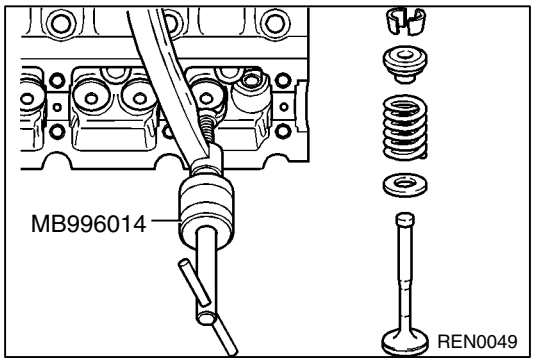


## REMOVAL SERVICE POINTS

### ◀A▶ RETAINER LOCKS REMOVAL

(1) Fit valve spring compressor MB996014 on the cylinder head as shown in the illustration.
(2) Press down the valve spring retainer and remove the retainer locks.

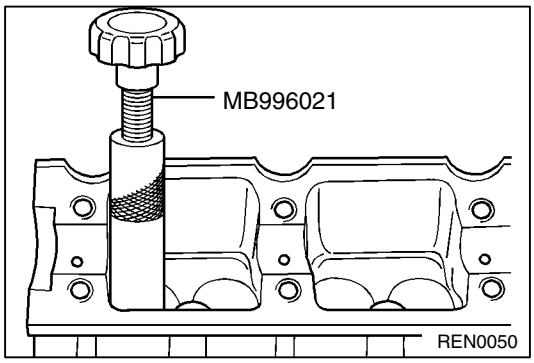


### ◀B▶ VALVE STEM SEAL REMOVAL

Remove the seal with valve stem seal remover MB996021.

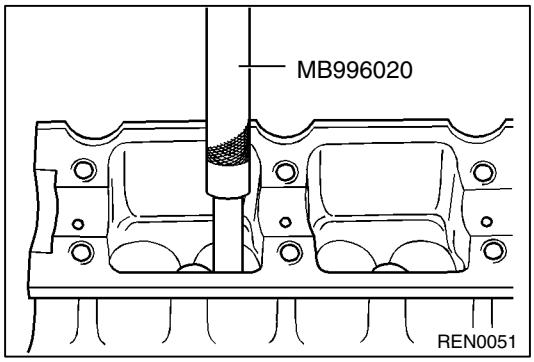


### ◀C▶ VALVE GUIDE REMOVAL

(1) Support the cylinder head.
(2) Press out the valve guides towards the valve seat with valve guide remover MB996020.

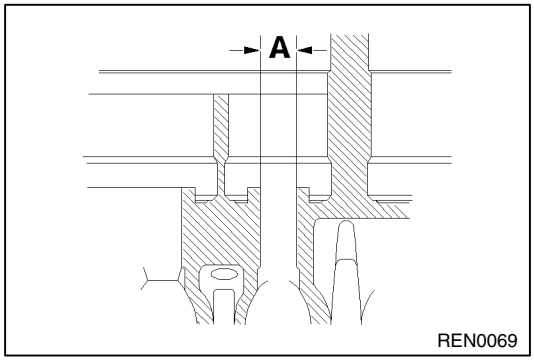


## INSTALLATION SERVICE POINTS

### ▶A◀ VALVE GUIDE INSTALLATION

(1) Measure the diameter of the bores for the valve guides in the cylinder head. If a measured value does not come within the specified tolerance range, select the oversize valve guide.

**Standard value:**
**Diameter of bore (A): 12 mm**

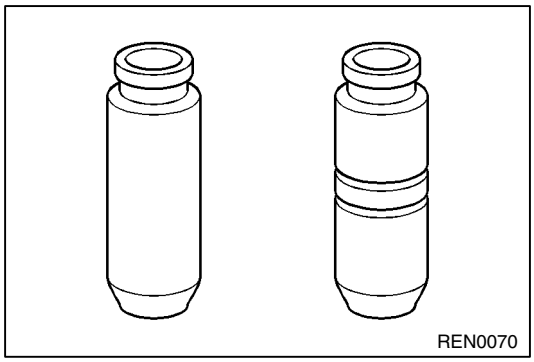


(2) Ream valve guide bore (dimension A) to the outside diameter of the selected oversize valve guides with reamer MB996016.

Oversize valve guide (two grooves) diameter = 12.3 mm

(3) Place the cylinder head on a flat surface.

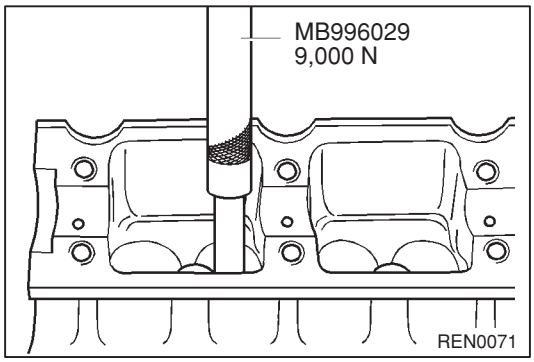


(4) Locate the valve guides with the taper pointing down, on valve guide installer MB996029.
(5) Press in the valve guides until the installer abuts the cylinder head.

**Caution**
- **The pressure exerted on the valve guide must be at least 9,000 N. If the pressure is lower, the valve guide must be removed. Ream the valve guide bore in the cylinder head to the next oversize and press in the corresponding valve guide.**

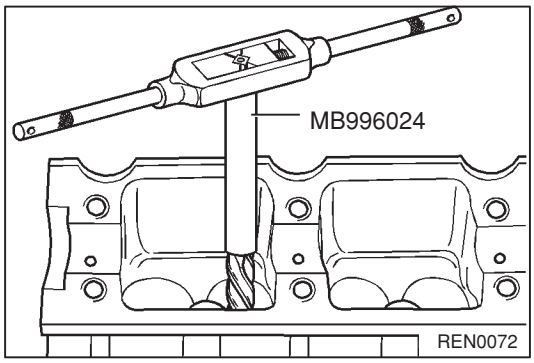


(6) Clean the valve guide inner bores with reamer MB996024.

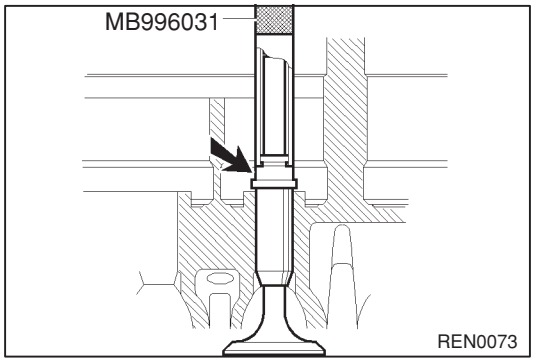


### ▶B◀ VALVE STEM SEAL INSTALLATION

(1) Lubricate the valve guides with engine oil.
Introduce the valves through the valve guides.
Locate the protective plastic cap over the valve stem.
(2) Locate the valve stem oil seal. Press in the valve stem oil seal vertically until it abuts the cylinder head with valve stem seal installer MB996031. Remove the protective cap.

**Caution**
- **To avoid damaging the valve stem oil seal, the valves must not be removed again.**

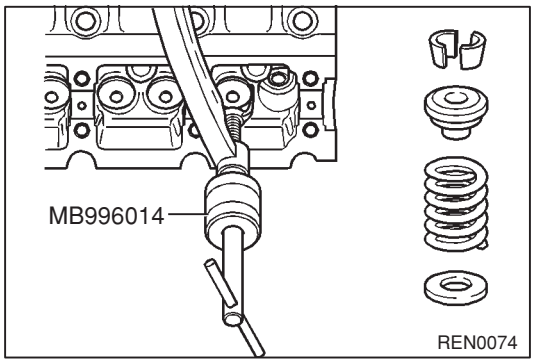


### ▶C◀ RETAINER LOCKS INSTALLATION

(1) Fit valve spring compressor MB996014 on the cylinder head as shown in the illustration.
(2) Press down the valve spring retainer and fit the retainer locks.

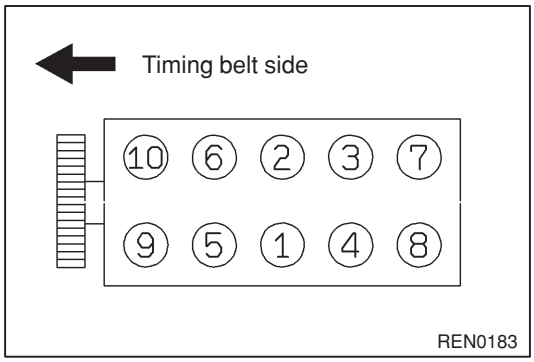


### ▶D◀ CYLINDER HEAD BOLT INSTALLATION

**Caution**
- **Do not reuse the cylinder head bolts once removed.**

(1) Fit the washers.
(2) Tighten all the bolts to 30 Nm, then angle-tighten by 50° ± 4° in the order shown in the illustration at left.
(3) Wait three minutes for gasket to settle.
(4) Slacken bolts 1 – 2 until they are completely free.
(5) Tighten bolts 1 – 2 to 25 Nm, then angle-tighten by 213° ± 7°.
(6) Carry out the same slackening and torque/angle tightening operations on the remaining bolts 3 – 4, 5 – 6, 7 – 8, 9 – 10.

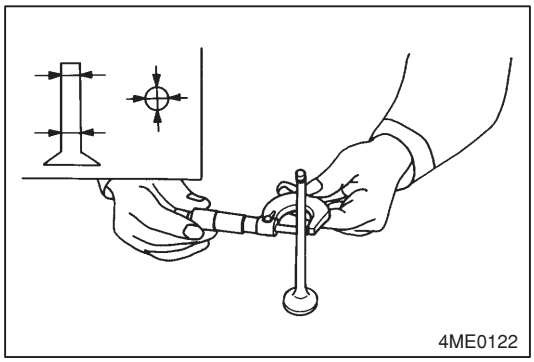


## INSPECTION

### INTAKE AND EXHAUST VALVES

(1) Measure the valve stem diameter and replace the valve if the measurement does not meet the standard value.

**Standard value: 6.98 – 6.99 mm**

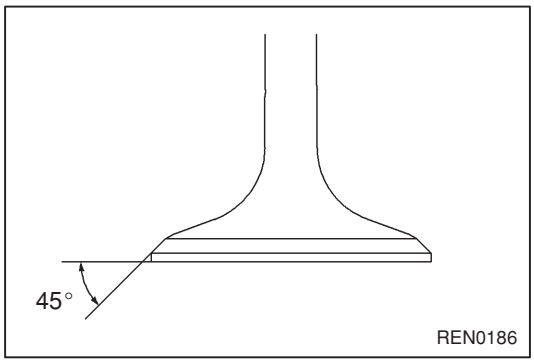


(2) Measure the valve seat angle and correct if it does not meet the standard value.

**Standard value: 45°**

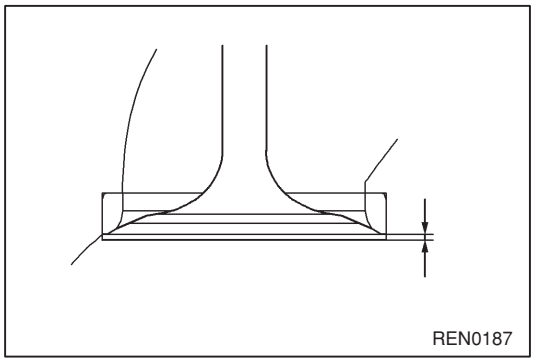


(3) Insert the valve in the cylinder head and measure the valve projection from the cylinder head bottom surface. Replace the valve if the measurement does not meet the standard value.

**Standard value: –0.03 – 0.21 mm**

### CYLINDER HEAD

(1) Check the cylinder head bottom surface for distortion. Replace the cylinder head if the measurement does not meet the standard value.

**Standard value: 0.05 mm**

**Caution**

- **The cylinder head may not be reground.**

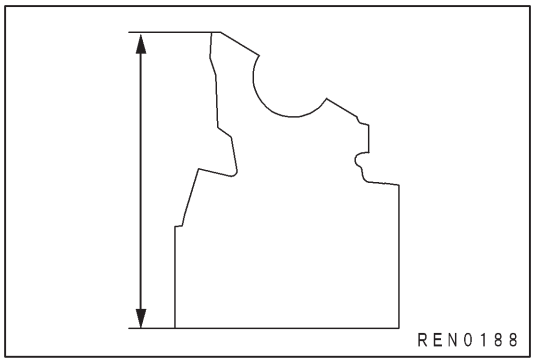


(2) Measure the cylinder head height. Replace the cylinder head if the measurement does not meet the standard value.

**Standard value: 161.9 – 162.1 mm**

**Caution**

- **The cylinder head may not be reground.**

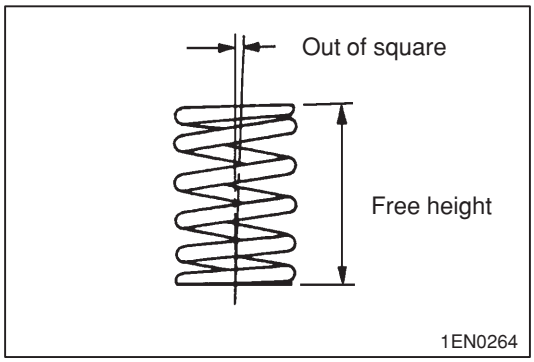


## VALVE SPRING

(1) Measure the valve spring free height. If the measurement does not meet the standard value, replace the valve spring.

**Standard value: 45.8 mm**

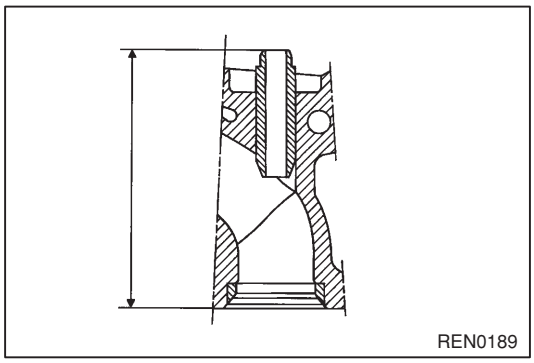


## VALVE GUIDE

(1) Measure the inner and outer diameters of the valve guide to confirm that they are within the standard value range.

**Standard value:**
**Inner diameter 7.00 – 7.02 mm**
**Outer diameter 12.03 – 12.05 mm**

(2) Check that the dimension shown in the illustration meets the standard value when the valve guide is installed in the cylinder head.

**Standard value: 80.7 – 81.4 mm**

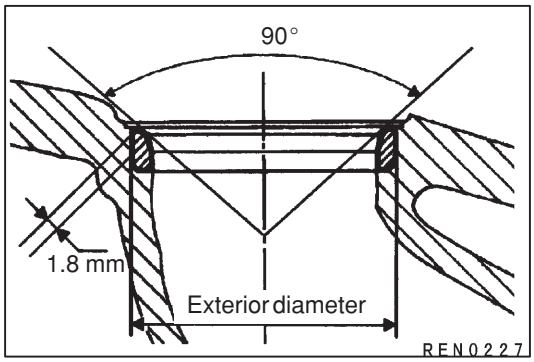


## VALVE SEAT

Measure at the positions shown in the illustration.

**Standard value:**
**Seat angle 90°**
**Seat width 1.8 mm**

**Exterior diameter intake:**
**Intake 36.9 mm**
**Exhaust 33.6 mm**

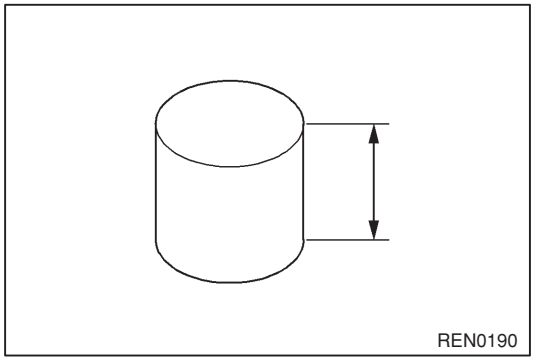


## TAPPET

Measure the tappet height to check that it meets the standard value.

**Standard value: 34.97 – 34.99 mm**

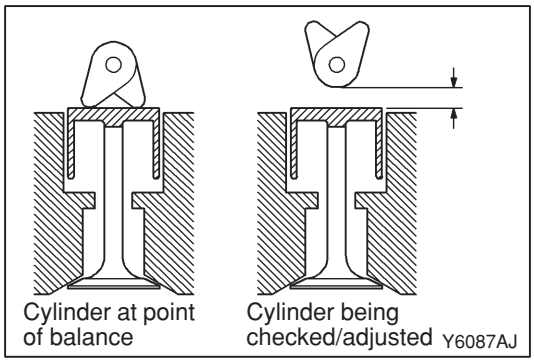


## VALVE CLEARANCE CHECK AND ADJUSTMENT

(1) The valve clearances have to be checked/adjusted in the following sequence.

| Cylinder at point of balance | Cylinder being checked/ adjusted |
|---|---|
| 1 | 4 |
| 2 | 3 |
| 3 | 2 |
| 4 | 1 |

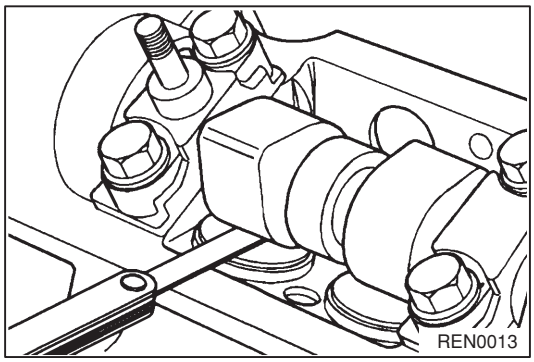


(2) Measure the valve clearance.

**Standard value:**

| Cold engine | Checking | Adjusting |
|---|---|---|
| Intake valve mm | 0.15–0.20 | 0.20 |
| Exhaust valve mm | 0.35–0.45 | 0.40 |

(3) If the valve clearance is outside the standard value, adjust by replacing the tappets using the following procedure.
(4) Take valve clearance measurement again at the cylinder where the valve clearance is not within the tolerance, and record the measured value.

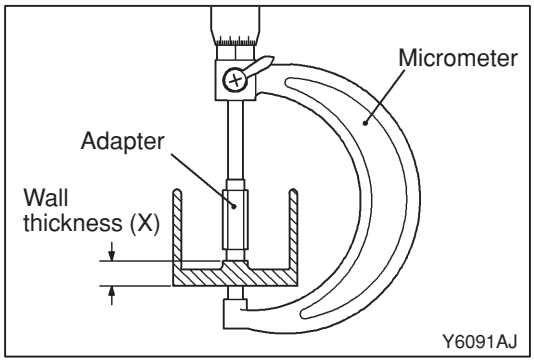


(5) Measure the wall thickness (X) of the tappet using a micrometer, and record the measured value.
(6) Based on the measurements, select a tappet which will bring the valve clearance to the standard value.

**Wall thickness of tappet to be selected =**
**Wall thickness (X) of tappet having been installed at checking + (Measured value – Standard value)**

NOTE
1. Always use new tappets.
2. Tappets are available in thickness from 7.550 mm to 8.150 mm, increasing by increments of 0.025 mm.

(7) Remove the camshaft. Install the selected tappet.
(8) Install the camshaft.
(9) Rotate the camshaft one turn, then check that the valve clearance meets the standard value.

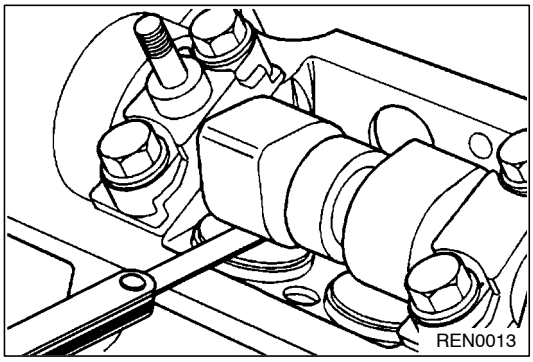


(2) Measure the valve clearance.

**Standard value:**

| Cold engine | Checking | Adjusting |
|---|---|---|
| Intake valve mm | 0.15 - 0.20 | 0.20 |
| Exhaust valve mm | 0.35 - 0.45 | 0.40 |

(3) If the valve clearance is outside the standard value, adjust by replacing the tappets using the following procedure.
(4) Take valve clearance measurement again at the cylinder where the valve clearance is not within the tolerance, and record the measured value.

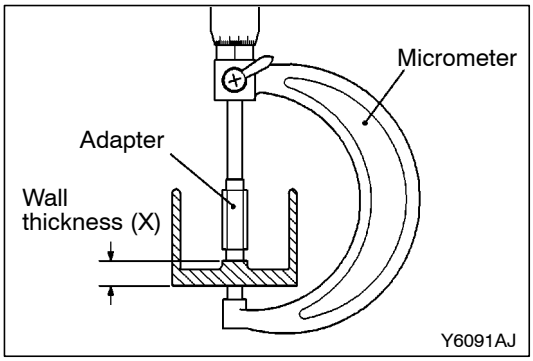


(5) Measure the wall thickness (X) of the tappet using a micrometer, and record the measured value.
(6) Based on the measurements, select a tappet which will bring the valve clearance to the standard value.

**Wall thickness of tappet to be selected =**
**Wall thickness (X) of tappet having been installed at checking + (Measured value - Standard value)**

NOTE
1. Always use new tappets.
2. Tappets are available in thickness from 7.550 mm to 8.150 mm, increasing by increments of 0.025 mm.

(7) Remove the camshaft. Install the selected tappet.
(8) Install the camshaft.
(9) Rotate the camshaft one turn, then check that the valve clearance meets the standard value.

# 12. OIL PAN AND OIL PUMP

## REMOVAL AND INSTALLATION

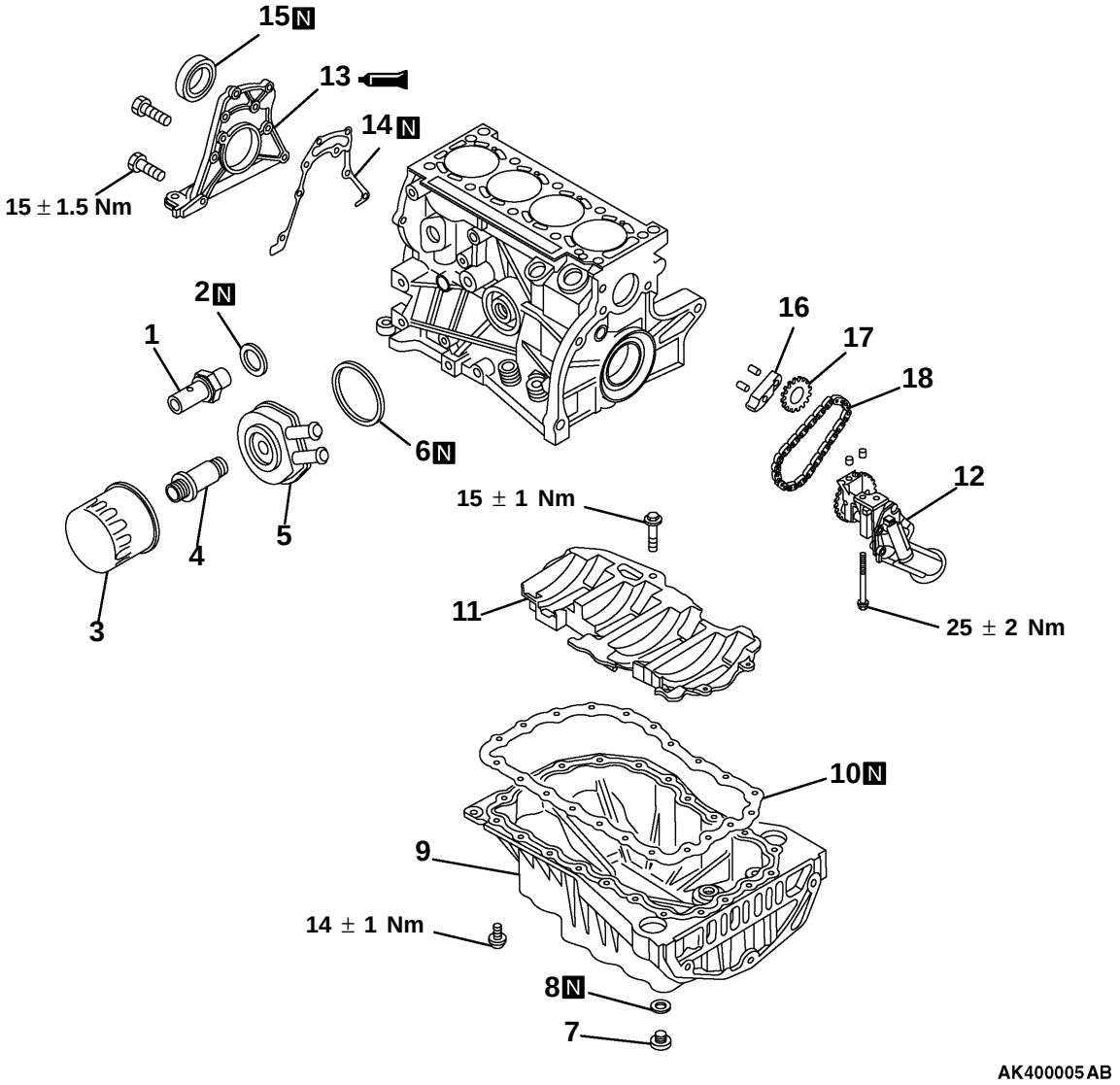


**Removal steps**

1. Oil pressure switch
2. Gasket
3. Oil filter
4. Oil cooler adaptor
5. Oil cooler
6. Gasket
7. Drain plug
8. Drain plug gasket
9. ▶C◀ Oil pan
10. Oil pan gasket
11. ◀A▶ Oil plate
12. Oil pump
13. ◀B▶ ▶A◀ Cylinder block plate, front
14. Gasket
15. ▶B◀ Oil seal
16. ▶A◀ Chain pad
17. Gear
18. Chain

## REMOVAL SERVICE POINT

### ◀A▶ OIL PLATE REMOVAL

(1) Remove the oil plate mounting bolts.
(2) Slide the oil plate toward the flywheel and then lift it off.

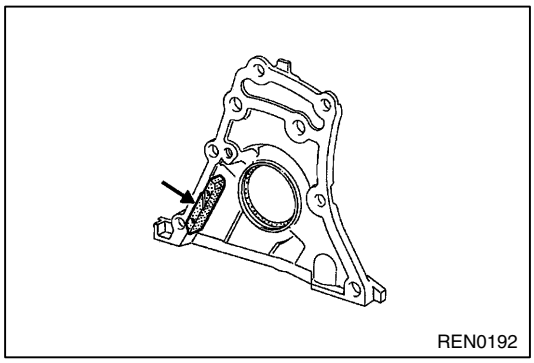


### ◀B▶ CYLINDER BLOCK FRONT PLATE REMOVAL

(1) Remove the cylinder block front plate.

NOTE
Use care not to lose the pad attached on the cylinder block front plate.

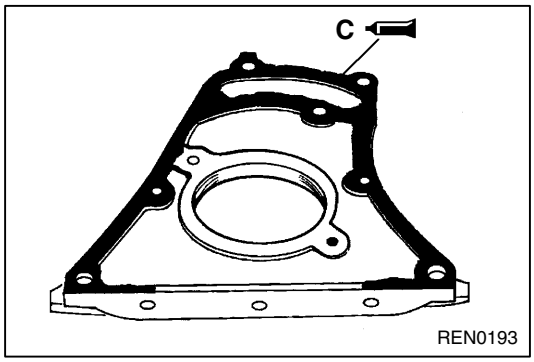


## INSTALLATION SERVICE POINTS

### ▶A◀ CYLINDER BLOCK PLATE, FRONT INSTALLATION

**Caution**
- **If there is a gasket installed between the cylinder block and cylinder block front plate, replace it with a new gasket without using sealant. If there is no gasket, apply sealant as mentioned below.**

(1) Apply sealant to the cylinder block front plate.

**Specified sealant:**
**Rhodorseal 5661 or equivalent**

NOTE
Do not apply too much sealant to avoid the risk of blocking the oilways in zone (C). Remember to fit the chain pad on the cylinder block front plate.

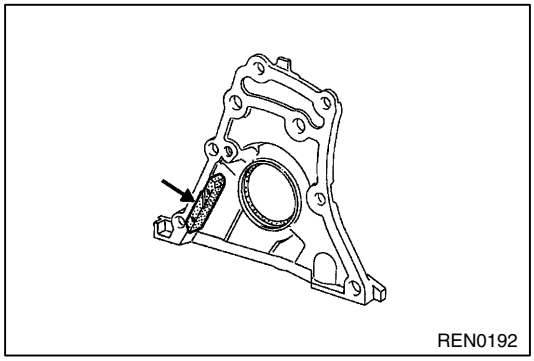


### ▶B◀ CRANKSHAFT FRONT OIL SEAL INSTALLATION

(1) Use the special tool to install the oil seal.

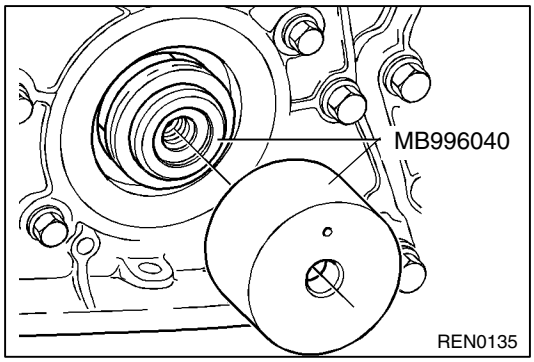

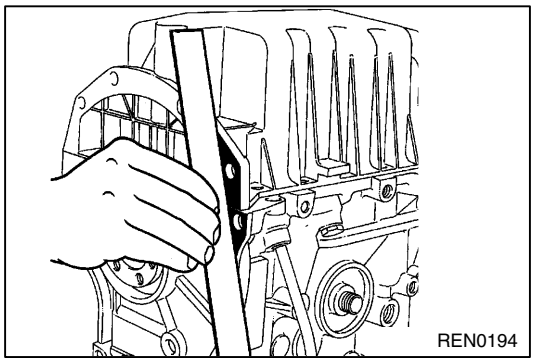


### ▶C◀ OIL PAN INSTALLATION

(1) Fit the oil pan on the cylinder block with a new gasket while aligning their flywheel side edges with each other.

**Caution**

- **Be sure to perform the alignment at the flywheel side. Otherwise, the clutch housing could be damaged when the engine is combined with the transmission.**

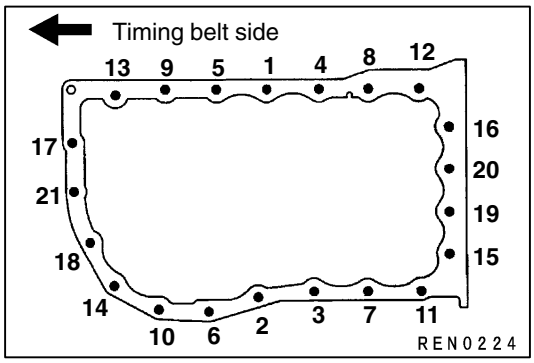


(2) Tighten the oil pan bolts to 8 ± 0.8 Nm in the order shown in the illustration.
(3) Then tighten them to 14 ± 1 Nm in the same order.

# 13. PISTON

## REMOVAL AND INSTALLATION

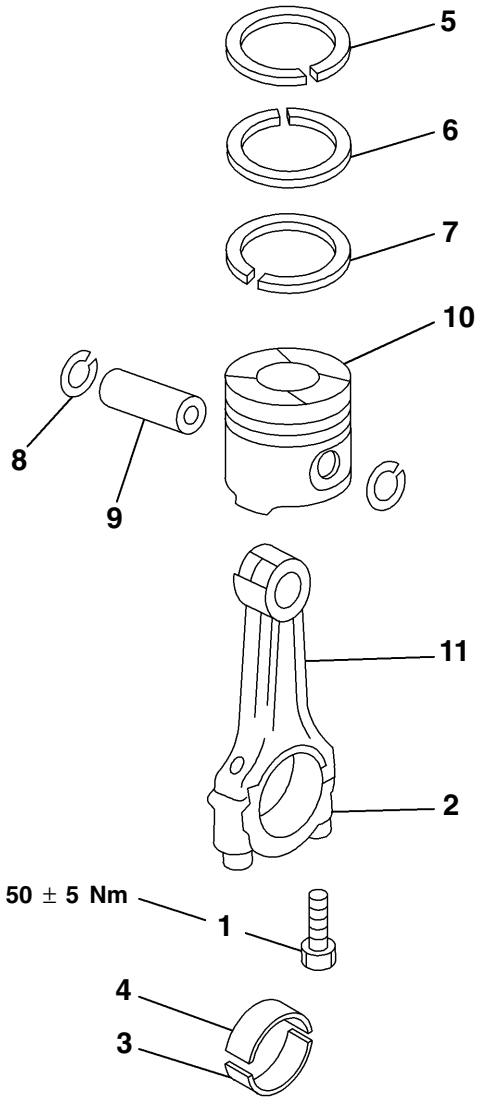


REN0195

**Removal steps**

1. Connecting rod bolt
◀A▶ 2. Connecting rod cap
▶C◀ 3. Connecting rod lower bearing
▶C◀ 4. Connecting rod upper bearing
▶B◀ 5. Piston ring No. 1
▶B◀ 6. Piston ring No. 2
7. Oil ring
◀B▶ ▶A◀ 8. Snap ring
◀B▶ ▶A◀ 9. Piston pin
▶D◀ 10. Piston
▶D◀ 11. Connecting rod

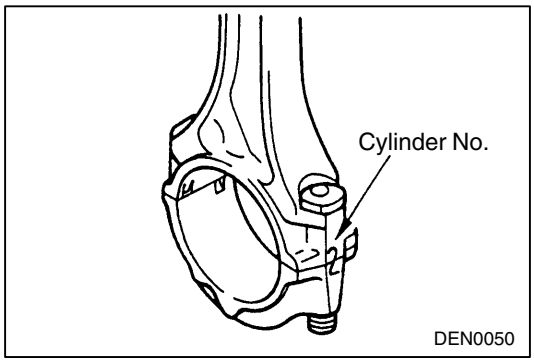


## REMOVAL SERVICE POINTS

### ◀A▶ CONNECTING ROD CAP REMOVAL

(1) Mark the cylinder number on the side of the connecting rod big end for correct reassembly.

**Caution**

- **Do not use a scriber tool for the marking, in order to avoid starting any cracks in the connecting rods.**
  **Use an indelible pencil instead.**

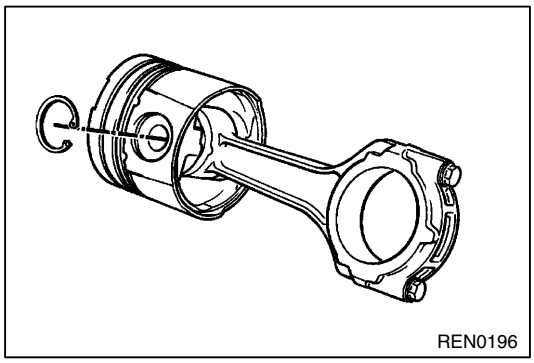


### ◀B▶ PISTON PIN REMOVAL

(1) Remove the snap ring securing the piston pin.

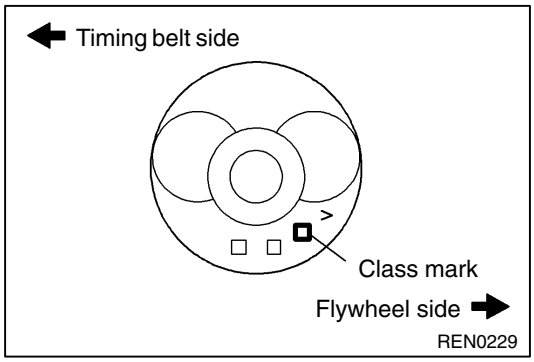


## INSTALLATION SERVICE POINTS

### ▶A◀ PISTON PIN INSTALLATION

When replacing a piston, be sure to use a new piston with the same class mark as that on the existing piston. The class mark is located as shown in the illustration. Also replace the piston pin, piston rings and snap rings with new ones.

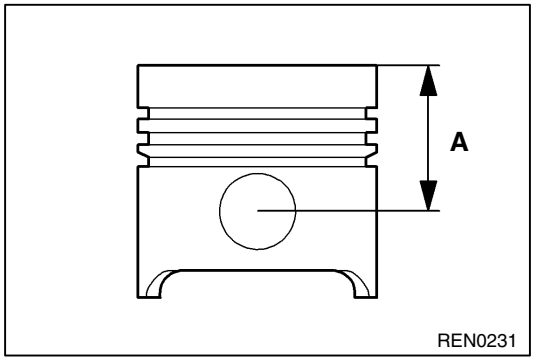


| Class mark | Height (A) (mm) |
|---|---|
| K | 47.046 |
| L | 47.088 |
| M | 47.130 |
| N | 47.172 |
| P | 47.217 |

NOTE
Class “K” and “P” pistons are not available as service parts.

1. If the existing piston is a class “K” piston, install a class “L” piston.
2. If the existing piston is a class “P” piston, install a class “N” piston.

(1) Apply engine oil to the piston pin before inserting it into the piston and connecting rod.

**Caution**

- **Set the connecting rod with its marked side positioned as shown in the illustration.**

(2) Install the snap rings to secure the piston pin.

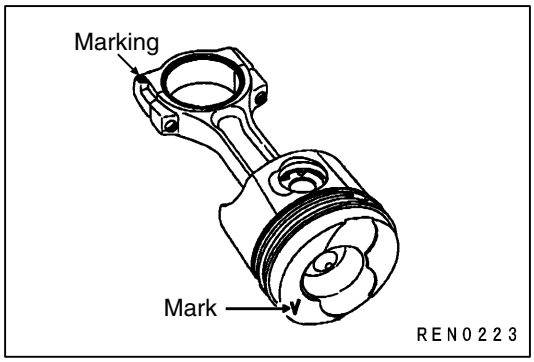

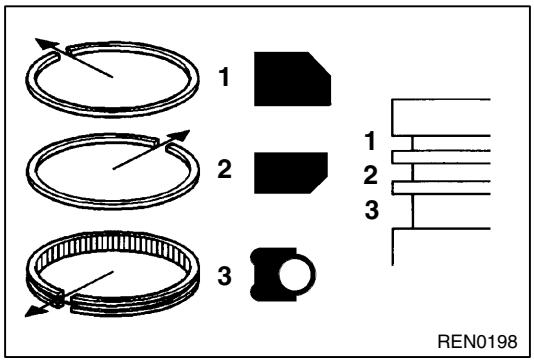


### ▶B◀ PISTON RING INSTALLATION

(1) Install the piston rings with the side having T (top mark) upward.
(2) Arrange the piston ring end gaps as shown in the illustration.

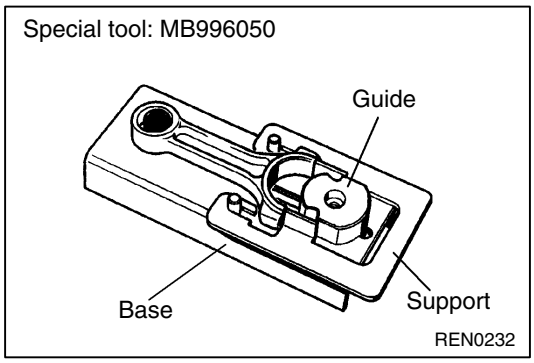


### ▶C◀ CONNECTING ROD BEARING INSTALLATION

(1) Set the special tools and a connecting rod as shown in the illustration.

NOTE
Engage the support with the guide pins on the base snugly to hold the connecting rod securely.

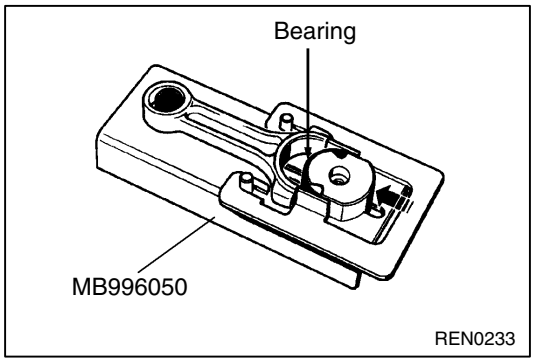


(2) Set a bearing on the guide and slide the guide in the direction of arrow.

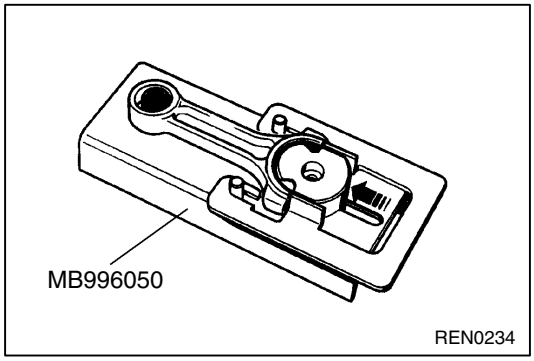


(3) Firmly press the guide against the connecting rod to install the bearing in position in the connecting rod.
(4) Slide back the guide and remove the connecting rod.
(5) Repeat the above procedure for all the remaining connecting rods.

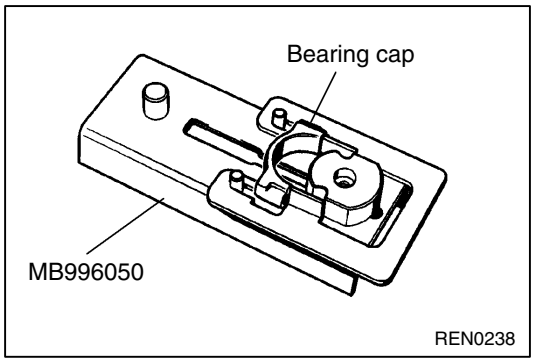


(6) Set a bearing cap on the special tool as shown in the illustration.

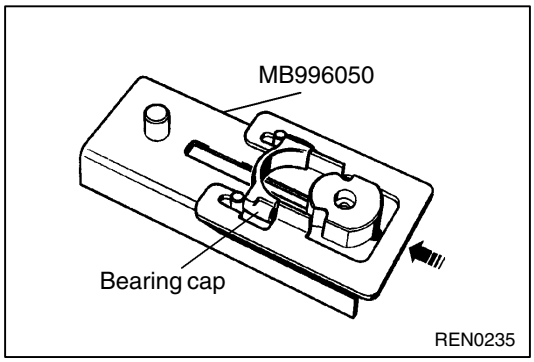


(7) Slide the support until the bearing cap comes in contact with the guide pins on the base.

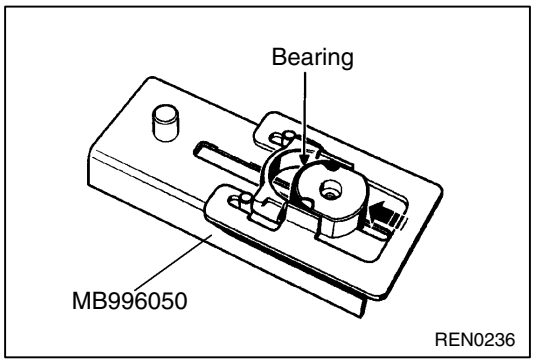


(8) Set a bearing on the guide as shown in the illustration and slide the guide in the direction of arrow.

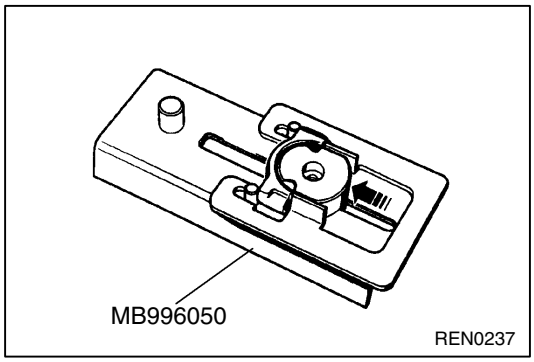


(9) Firmly press the guide against the bearing cap to install the bearing in position in the bearing cap.
(10) Slide back the guide and remove the bearing cap.
(11) Repeat the above procedure for all the remaining bearing caps.

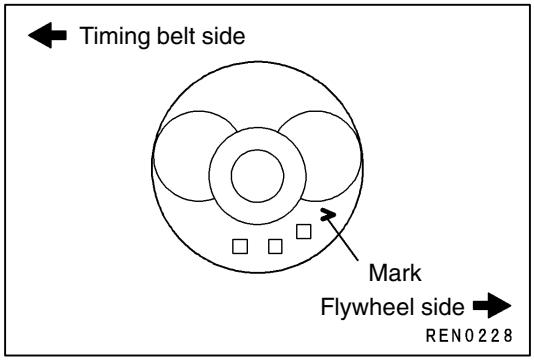


**▶D◀ PISTON AND CONNECTING ROD INSTALLATION**

(1) Fit the connecting rod/piston assemblies into the cylinder block using a bush, taking care to ensure the fitting direction is correct (V towards flywheel).
(2) Fit the connecting rods onto the lubricated crankshaft crankpins.
(3) Fit each connecting rod bearing cap with its marked side located in the same side with the marked side of the connecting rod.

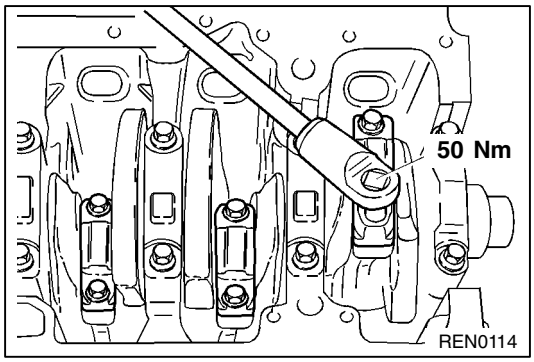


(4) Tighten the new connecting rod bearing cap bolts to a torque of 50 Nm.

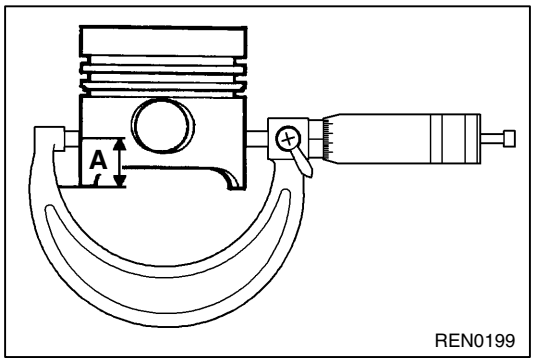


## INSPECTION

### PISTON

(1) Measure the piston diameter at a point where A = 39 mm

**Standard value: 80 mm**

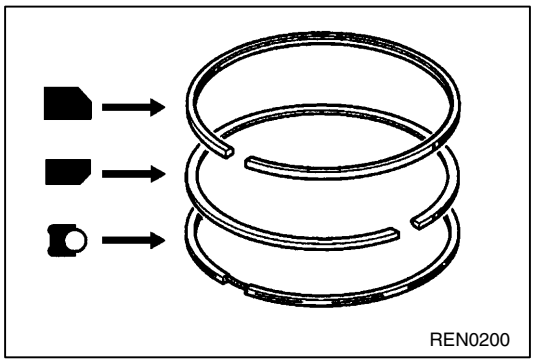


### PISTON RING

(1) Measure the thickness of the piston rings to check for wear.

**Standard value**
**Piston ring No. 1: 2.5 mm**
**Piston ring No. 2: 2.0 mm**
**Oil ring: 3.0 mm**

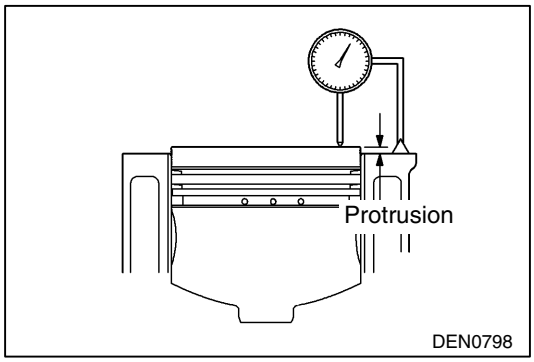


### PISTON PROTRUSION

(1) Clean the piston crown to remove deposits.
(2) Turn the crankshaft in the direction of operation to bring No. 1 piston to TDC.
(3) Measure the protrusion of No. 1 piston using a dial gauge. If the measurement is out of specification, replace the piston with a new one.
If the protrusion is still out of specification, replace the cylinder block.

**Standard value: 0.50 – 0.62 mm**

NOTE
Do not take measurement at valve recess.

(4) Measure the piston protrusion on the remaining cylinders by following the same procedure.

# 14. CYLINDER BLOCK

## REMOVAL AND INSTALLATION

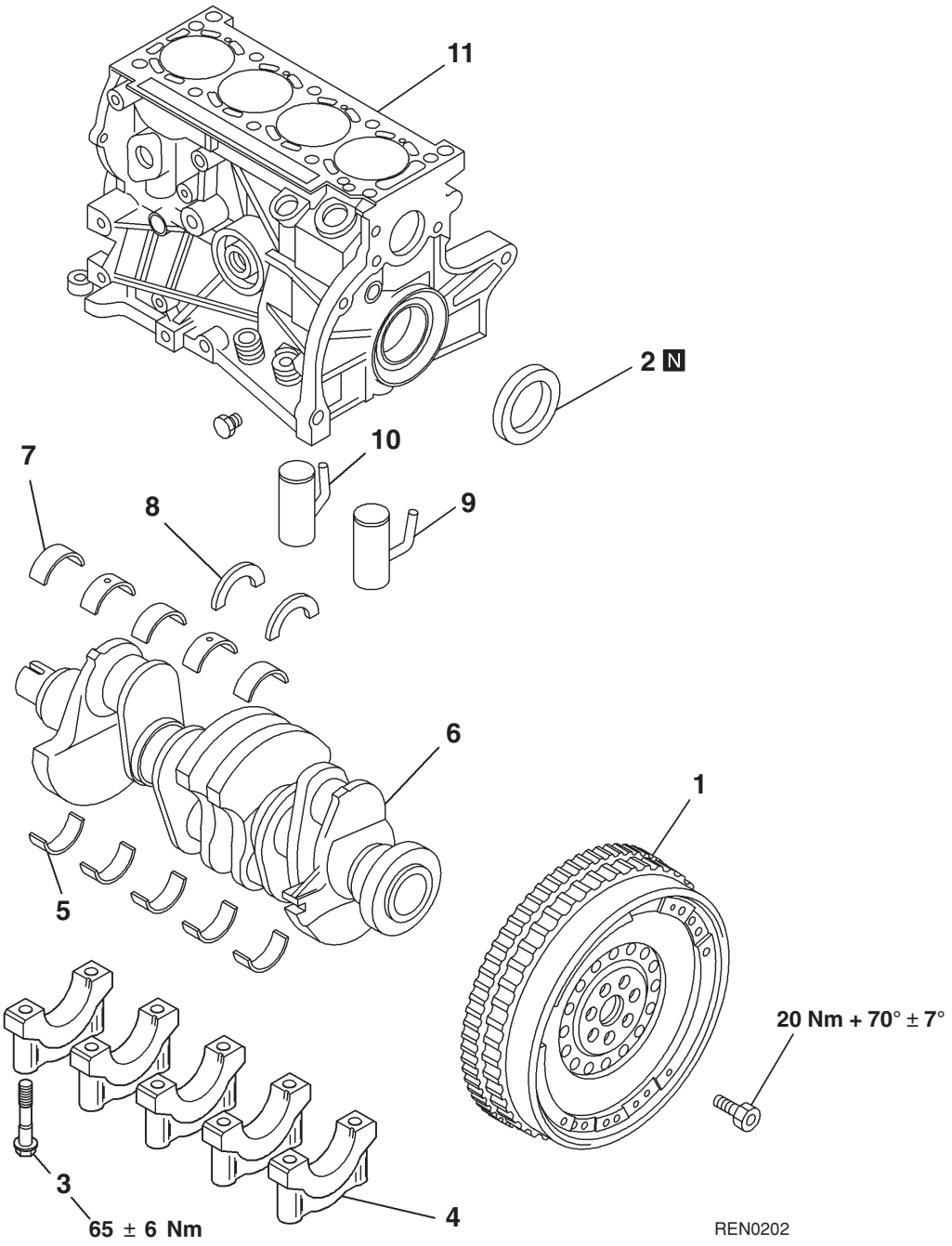


**Removal steps**

◀A▶ ▶D◀ 1. Flywheel
▶C◀ 2. Oil seal
3. Bolt
▶B◀ 4. Bearing cap
▶A◀ 5. Crankshaft bearing, lower
6. Crankshaft
▶A◀ 7. Crankshaft bearing, upper
▶A◀ 8. Thrust bearing
9. Oil jet
10. Oil jet
11. Cylinder block

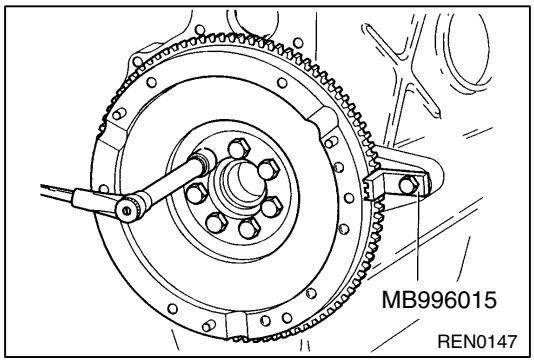


## REMOVAL SERVICE POINT

### ◀A▶ FLYWHEEL REMOVAL

Use special tool MB996015 to hold the flywheel during removal.

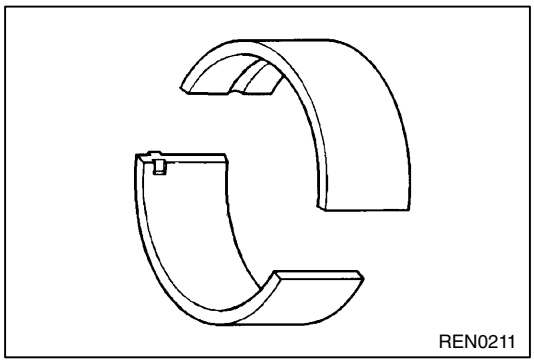


## INSTALLATION SERVICE POINTS

### ▶A◀ CRANKSHAFT BEARING INSTALLATION

(1) Install the bearings having an oil groove to the cylinder block.
(2) Install the bearings having no oil groove on the bearing caps.

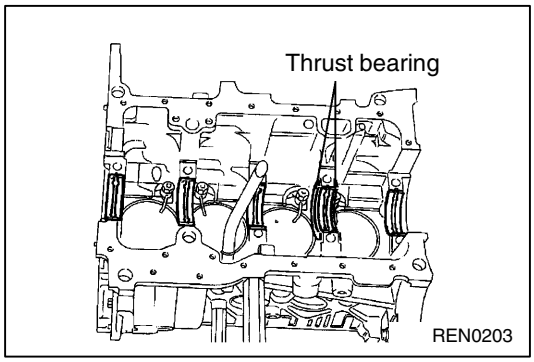


(3) Install the thrust bearings at the No. 2 upper bearing with the grooved side towards the crank web.

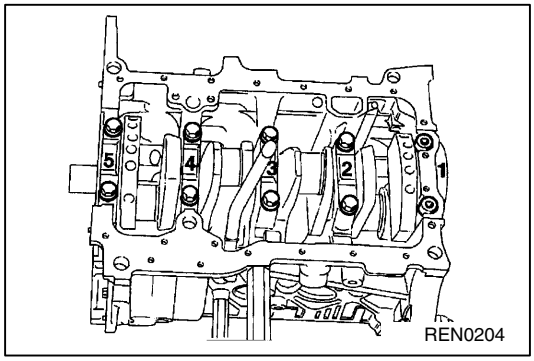


### ▶B◀ BEARING CAP INSTALLATION

(1) Install the bearing caps No. 3, 4 and 5. Each bearing cap is provided with a embossed identification number. Install the bearing caps in the correct positions according to the identification numbers.
(2) Use engine oil to lubricate the threads and under the heads of the mounting bolts for the crankshaft bearing caps. Tighten the bearing cap bolts No.3, 4, 5 to a torque of 65 Nm. Fit the bearing cap No.2 without torque tightening the bolts.
(3) Check the crankshaft side clearance.

**Standard value: 0.07 – 0.23 mm**

NOTE
If the measurement is out of specification, adjust by thrust bearing. Four sizes of thrust bearings are available: 2.30, 2.35, 2.40 and 2.45 mm.

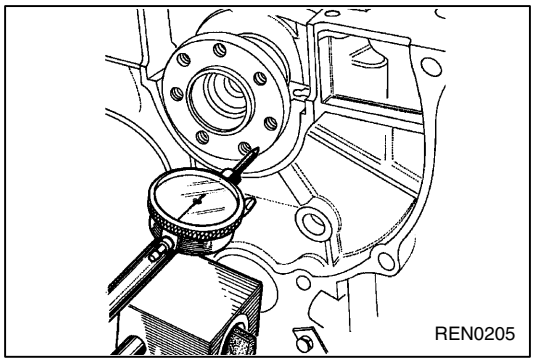


(4) Tighten the bolts of the bearing cap No. 2 to a torque of 65 Nm.

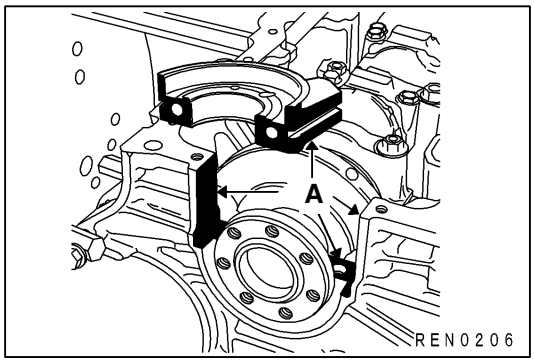


(5) Wipe the portions (shown as (A) in the illustration) on the cylinder block and crankshaft bearing cap with shop towel dampened with solvent.
Wait to dry the cleaned area and then proceed to the next step.

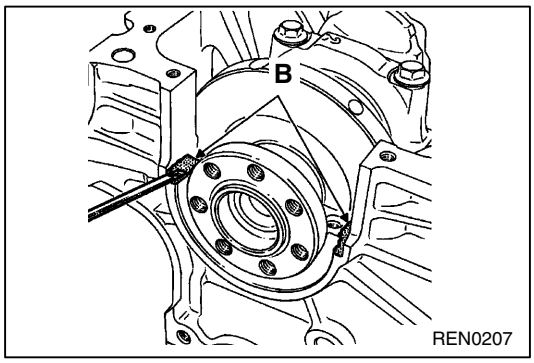


(6) Lightly coat the lower faces of the cylinder block at B with Rhodorseal 5661.
(7) Fit the crankshaft bearing cap No. 1 and torque tighten to 65 Nm.

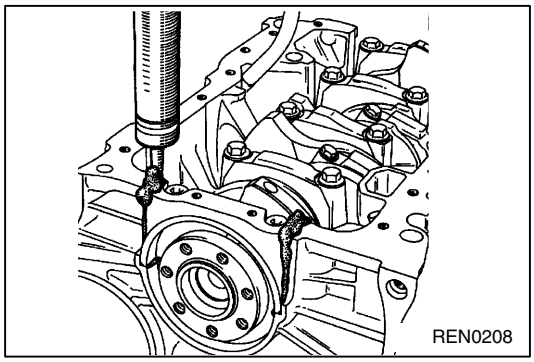


(8) Mix 45 ml of Rhodorseal 5661 (approximately half a 100 grammes tube) with half measure of hardener using a small stick to give a slightly pink coloured, uniform mixture.
(9) Put the mixture into the syringe and inject it into the crankshaft bearing cap grooves.
(10) Allow the mixture to ooze out slightly from either side of the grooves in the crankshaft bearing cap to be sure that the mixture injected has completely filled the sealing groove.
(11) Use a cloth to wipe off any excess mixture, both on the inside and the outside of the cylinder block.

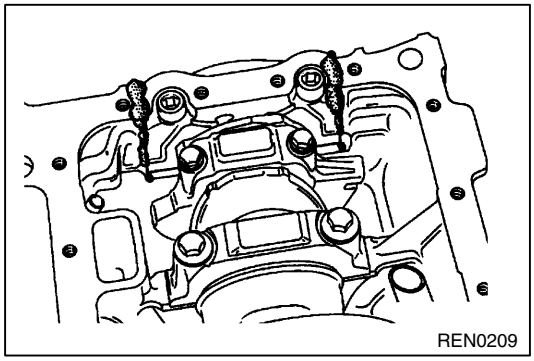


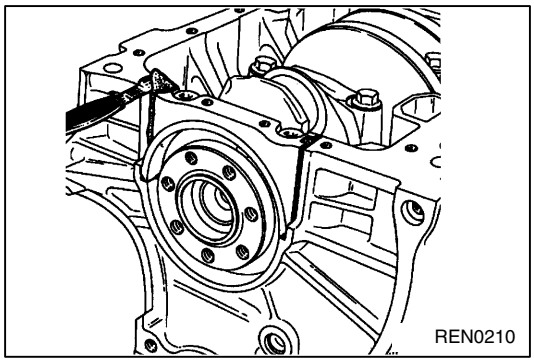


(12) Leave to dry for a few moments then cut the surplus from the sealing face.
(13) Check that the crankshaft turns freely.

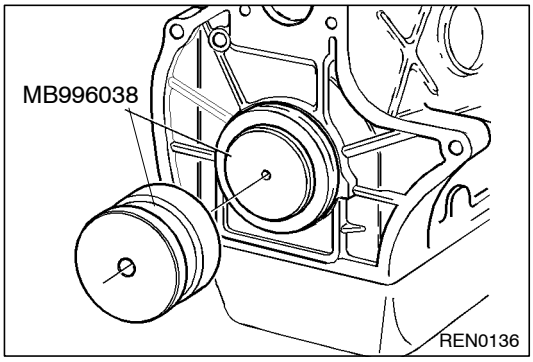


### ▶C◀ OIL SEAL INSTALLATION

(1) Coat the lip of the oil seal with a thin layer of engine oil.
(2) Locate the installer oil seal guide MB996038 over the crankshaft.
(3) Locate the oil seal over the oil seal installer guide.
(4) Fit the oil seal with oil seal installer MB996038.

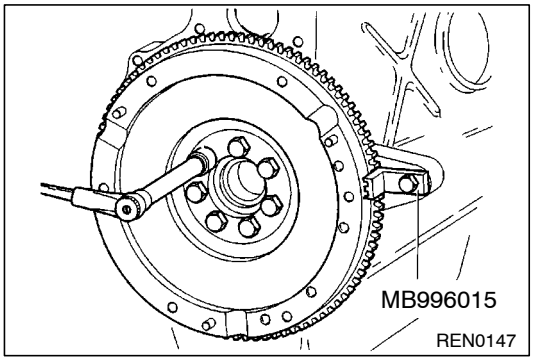


### ▶D◀ FLYWHEEL INSTALLATION

(1) Use special tool MB996015 to hold the flywheel during installation.