01-1

Instrument cluster, On Board Diagnostic (OBD) (through M.Y. 1999)

General information

Instrument cluster technology

The Audi A4 instrument cluster is available in two versions; the low-line version with "mini-check" system and the high-line version with an LCD multi-function display.

The mini-check system monitors the brake system, Engine Coolant Temperature (ECT), fuel level and engine oil pressure.

The multi-function display contains the following functions:

- Auto check system with radio station and telephone displays
- Ambient outside temperature display
- On-board computer display
- Transmission Range (TR) selector lever display for automatic transmission

cardiagn.com

- Navigation

cardiagn.com

01-2

The speedometer contains a LCD display for the odometer, a trip odometer and the Service Reminder Indicator (SRI).

Indicator lamps are integrated in the speedometer and tachometer.

Accessory instruments are integrated into the instrument cluster.

The instrument cluster is controlled by a microprocessor and has extensive On Board Diagnostic (OBD) capabilities. If any component exhibit signs of failure, a Diagnostic Trouble Code (DTC) is stored in the instrument cluster DTC memory. The DTC can then be identified using the VAG1551 or VAG1552 Scan Tool (ST).

cardiagn.com

01-3

Note:

The descriptions in this Repair Manual reference the VAS5051 Diagnostic Operation Center (DOC) and the VAG1551 Scan Tool (ST).

The following Adaptations (adjustments) can be carried out using the tool:

- Adaptation of the fuel sensor characteristics
- Adaptation of the fuel consumption display
- Coding the language versions for the on-board computer and Auto Check system.
- Adaptation of the Service Reminder Indicator (SRI)
- Adaptation of the odometer after instrument cluster replacement.

cardiagn.com

Instrument cluster replacement notes

- Do not disassemble the instrument cluster.
- All warning and indicator bulbs can be replaced separately: m.y. ➢1997 ⇒ Page 90-4 ; 1998 ➢ ⇒ Page 90-15 . All other malfunctions require replacing the complete instrument cluster.
- If necessary, the instrument cluster should be exchanged within the parts exchange program.
- Fill in the Failure Description Form and send it in, together with the instrument cluster.
- The instrument cluster must be sent back in its original packaging.
- When replacing the instrument cluster, set the Odometer display and the Service Reminder Indicator (SRI) using the VAG1551 Scan Tool (ST) ⇒ Page 01-32 .

cardiagn.com

On Board Diagnostic (OBD), initiating program

Special tools, test equipment and auxiliary items

- VAS5051 Diagnostic Operation Center (DOC) and/or VAG1551 Scan Tool (ST).
- VAG1551/3 adapter cable

Test requirements

- Fuses OK

⇒ *Electrical Wiring Diagrams Troubleshooting & Component Locations*

- Instrument cluster coding checked according to coding table ⇒ Page 01-25
- Connect VAS5051 Diagnostic Operation Center (DOC) or
- Connect VAG1551 Scan Tool (ST) ⇒ Page 01-241 .

cardiagn.com

- Ignition switched on

cardiagn.com

01-6

Notes:

- *If the VAG1551 display remains blank, check the power supply.*

⇒ *Electrical Wiring Diagrams Troubleshooting & Component Locations*

- *Press the HELP button for additional operating instructions.*
- *Press the → button to advance through the program sequence.*
- *An incorrect entry can be cancelled by pressing the -C- button.*
- *In "Rapid data transfer" operating mode 1, the "Automatic Test Sequence" (address word 00) can be carried out. This will automatically check the DTC memories of all of the control modules in the vehicle which have OBD capability.*

cardiagn.com

01-7

- Switch ignition on.

- Switch printer on by pressing PRINT button (indicator light in button comes on).

- Press button -1- to select "Rapid data transfer" operating mode 1.

Rapid data transfer HELP
Insert address word XX

Indicated on display

Address word for instrument cluster: 17

- Press buttons -1- and -7-.

Rapid data transfer Q
17 - Instrument Cluster

Indicated on display

- Press -Q- button to confirm input.

8D0919930L B5-Instrument Cluster VDOX16
Coding 00262 WSC 06812

Indicated on display (after approx. 5 seconds) (example)

- 8D0919930L: part number of instrument cluster (see also parts exchange program)
- B5-Instrument Cluster: component designation
- VDO: manufacturer ID (UN4 = Nippon Seiki, VD0 = VDO)
- X16: instrument cluster software version
- Coding 00262: instrument cluster coding
- WSC 06812: dealership number

cardiagn.com

01-8

Note:

Check coding using the coding table ⇒ Page 01-25 .

- Press→ button.

Rapid data transfer **HELP** **Control module does not answer**	- If one of these four messages is displayed, carry out troubleshooting procedures:

⇒ *Electrical Wiring Diagrams Troubleshooting & Component Locations*

Rapid data transfer **HELP** **Error in communication link**	or
Rapid data transfer **HELP** **K wire not switching to Ground**	or
Rapid data transfer **HELP** **K wire not switching to B+**	or
Rapid data transfer **HELP** **Select function XX**	Indicated on display

When the HELP button is pressed, a list of possible functions prints out.

- Press → button to advance through program sequence.

cardiagn.com

On Board Diagnostic (OBD) functions

The following functions are possible:

02 - Check DTC Memory ⇒ Page 01-10

03 - Output Diagnostic Test Mode ⇒ Page 01-15

05 - Erase DTC Memory ⇒ Page 01-20

06 - End Output ⇒ Page 01-22

07 - Code Control Module ⇒ Page 01-23

08 - Read Measuring Value Block ⇒ Page 01-27

10 - Adaptation ⇒ Page 01-32

cardiagn.com

01-10

Check DTC Memory (scan tool function 02)

Note:

The displayed DTC information is updated only when initiating OBD or with "Erase DTC Memory" function 05.

- Switch printer on by pressing PRINT button (indicator light in button comes on).

Rapid data transfer **HELP** **Select function XX**	Indicated on display

- Press buttons -0- and -2- to select "Check DTC Memory" function 02.

Rapid data transfer **Q** **02 - Check DTC Memory**	Indicated on display

- Press -Q- button to confirm input.

X DTC recognized →	The number of stored DTCs appears in the display.

The stored DTCs are displayed and printed out one after the other.

- Check print-out against DTC table (⇒ Page 01-12) and repair all malfunctions as necessary.

cardiagn.com

01-11

No DTC recognized! →

- If "No DTC recognized!" is displayed, the program will return to "Select function XX" prompt after the → button is pressed.

Rapid data transfer	**HELP**
Select function XX	

- Indicated on display

If something different appears on the display:

⇒ *VAG1551 Scan Tool (ST) operating instructions*

- End output (function 06) ⇒ Page 01-22
- Switch ignition off and disconnect scan tool from Data Link Connector (DLC).

cardiagn.com

01-12

Diagnostic Trouble Code (DTC) table for instrument cluster

Notes:

- *The following table lists all possible Diagnostic Trouble Codes (DTCs) which the instrument cluster can recognize and which the VAG1551 scan tool can print.*
- *DTC numbers only appear on the printout.*
- *Before replacing any component shown as malfunctioning, check all related wiring and connections of these components and the Ground (GND) connections ⇒ Electrical Wiring Diagrams Troubleshooting & Component Locations*
- *After the repair has been carried out and the functional system check, re-check and erase the DTC memory using the VAG1551 scan tool.*
- *The DTC memory records all static and sporadic (intermittent) malfunctions. A malfunction is considered static if it exists for at least 2 seconds (exceptions: 60 seconds for outside temperature display and 30 minutes, for engine coolant sensor). If the malfunction is not present after this time, it will be stored as a sporadic DTC and "/SP" will appear on the right side of the scan tool display.*
- *After switching the ignition on, all existing DTCs are set to sporadic. If they are still present after the system check, they will be stored as static DTCs.*
- *If a sporadic malfunction does not reoccur within 50 driving cycles (ignition on for at least 5 minutes and vehicle speed greater than 30 km/h or 18 mph), it will be erased.*

cardiagn.com

DTC	Possible cause	Corrective action
VAG1551 scan tool display		
00667		
Ambient-Temperature Signal ♦ Open/Short circuit to B+ ♦ Short circuit to Ground	Vehicles without air conditioning: ♦ Open circuit or short circuit ♦ Outside air temperature sensor -G17- faulty	Vehicles without air conditioning: - Trace malfunction ⇒Electrical Wiring Diagrams, Troubleshooting & Component Locations - Replace -G17-.
	Vehicles with air conditioning: ♦ Open circuit or short circuit ♦ A/C control head -E87- faulty	Vehicles with air conditioning: - Trace malfunction ⇒Electrical Wiring Diagrams, Troubleshooting & Component Locations - Carry out OBD of air conditioning system ⇒ *Repair Manual, Heating & Air Conditioning, Repair Group 01*
00771		
Fuel Level Sensor-G ♦ Open/Short circuit to B+ ♦ Short circuit to Ground	♦ Open circuit or short circuit between sender for fuel gauge -G- and instrument cluster ♦ Sender for fuel gauge -G- faulty	- Trace malfunction ⇒Electrical Wiring Diagrams, Troubleshooting & Component Locations - Replace -G-.

cardiagn.com

00779		
Outside Air Temperature Sensor-G17 ♦ Open/Short circuit to B+ ♦ Short circuit to Ground	♦ Open circuit or short circuit ♦ Outside air temperature sensor --G17- faulty	- Trace malfunction ⇒Wiring Diagrams, Troubleshooting & Component Locations - Replace -G17-.

cardiagn.com

01039		
ECT Sensor-G2 ♦ Open/Short circuit to B+ ♦ Short circuit to Ground (GND)	♦ Open circuit or short circuit between Engine Coolant Temperature Sensor (ECT) -G2- and instrument cluster ♦ ECT sensor -G2- faulty	- Trace malfunction ⇒Electrical Wiring Diagrams, Troubleshooting & Component Locations - Replace -G2-.
01402		
Data Wire from Navigation ♦ Incorrect signal	♦ Open circuit in clock enable or data wire ♦ Navigation/instrument cluster interface malfunctioning ♦ Malfunction caused by electromagnetic interference inside and outside vehicle	- Check data wire for damage. - Check causes for electromagnetic malfunctions. ⇒ Repair Manual Radio, Telephone, Navigation, Repair Group 97
65535		
Control Module Malfunctioning	♦ Instrument cluster faulty	- Replace instrument cluster ⇒ Page 90-1 .

cardiagn.com

01-15

Output Diagnostic Test Mode (scan tool function 03)

Notes:

- *Output Diagnostic Test Mode may only be carried out on a stationary vehicle with the engine off.*
- *Trace any faults identified by the Output Diagnostic Test Mode, replace the instrument cluster if necessary.*

The function "Output Diagnostic Test Mode" cycles all the control elements in the instrument cluster sequentially, if they are installed and coded.

- Concurrent testing of the display ranges of all the analog indicators (coolant temperature gauge, tachometer, speedometer and fuel gauge).
- Activation of the mini-check indicator lights.
- Activation of the seat belt warning lamp.
- Activation of the chime.

cardiagn.com

- Segment check of the multi-function display and/or the LCD odometer.
- Activation of the instrument cluster lights and dimmer.
- Coolant excess temperature test

cardiagn.com

01-16

Notes:

- *The instrument cluster lighting test can only be carried out with the lights on.*
- *The coolant excess temperature test activates the A/C compressor safety shut-off.*

Initiating Output Diagnostic Test Mode

Note:

The units displayed are country specific.

Rapid data transfer **HELP** **Select function XX**	Indicated on display

- Press buttons -0- and -3- to select "Output Diagnostic Test Mode" function 03.

Rapid data transfer **Q** **03 - Output Diagnostic Test Mode**	Indicated on display

- Press -Q- button to confirm input.

  This will start the Output Diagnostic Test Mode for the analog instruments (displays).

Output Diagnostic Test Mode → **Analog Indicators**	Indicated on display

cardiagn.com

01-17

After pressing the -Q- button, the following tests are run:

- Coolant temperature gauge needle moves over complete range
- Tachometer needle moves over complete range
- Speedometer needle moves over complete range
- Fuel gauge needle moves over complete range

The following preset values are displayed at the end of the test:

Coolant temperature display:	90 ° C (194 ° F)
Tachometer:	3000 RPM
Speedometer:	100 km/h (62 mph)
Fuel level:	1/2

Note:

If the ignition is switched on or off with any gauge

cardiagn.com

needle in motion, its movement will be interrupted.

cardiagn.com

01-18

- Press→ button.

Output Diagnostic Test Mode → **Instrument Cluster Warning Lights Test**	⮜	Indicated on display Activation of mini-check indicator lights

- Press→ button.

Output Diagnostic Test Mode → **Seat Belt Warning Light-K19**	⮜	Indicated on display Activation of seat belt warning light. ***Note:*** *Depending on the model/equipment, the seat belt warning light will be activated via the control module coding. This means that the warning light will be inactive if this test is skipped.*

- Press → button.

Output Diagnostic Test Mode → **Chime**	⮜	Indicated on display The chime is activated and sounds continuously.

- Press → button.

cardiagn.com

01-19

Output Diagnostic Test Mode → **Segment test**	⮜	Indicated on display ***Notes:*** ♦ *All indicators on the multi-function display and/or the LCD odometer are cycled.* ♦ *All segments on the multi-function monitor light up and one bar remains dark.* - Press → button.
Output Diagnostic Test Mode → **Switch and instrument lighting**	⮜	Indicated on display The instrument cluster dimming is tested. - Press → button.
Output Diagnostic Test Mode → **ECT Overheat Test**	⮜	Indicated on display The A/C compressor safety cut-out will be activated within approx. 5 seconds. - Press → button.
Output Diagnostic Test Mode → **END**	⮜	Indicated on display - Press → button to end Output Diagnostic Test Mode. This returns the scan tool to the "Select function XX" prompt.
Rapid data transfer HELP	⮜	Indicated on display

cardiagn.com

Select function XX

cardiagn.com

01-20

Erase DTC Memory (scan tool function 05)

Note:

If the DTC memory cannot be erased, check DTC memory again and repair malfunctions.

Requirements

- DTC memory checked ⇒ Page 01-10
- All malfunctions repaired

After DTC memory has been successfully checked:

Rapid data transfer **HELP** **Select function XX**	Indicated on display

- Press buttons -0- and -5- to select "Erase DTC Memory" function 05.

cardiagn.com

01-21

Rapid data transfer **Q**
05 Erase DTC Memory

Indicated on display

- Press -Q- button to confirm input

Rapid data transfer →
DTC Memory is erased

Indicated on display

DTC memory is now erased.

- Press → button.

Rapid data transfer **HELP**
Select function XX

Indicated on display

Notes:

Attention!
DTC Memory not interrogated

- *This message indicates an error in the test sequence:*

Rapid data transfer →
DTC Memory not interrogated

- *This message indicates an error in the test sequence:*
- *Observe the test sequence exactly: first check DTC memory, if necessary repair malfunctions then erase.*

cardiagn.com

01-22

End Output (scan tool function 06)

Rapid data transfer **HELP** **Select function XX**	Indicated on display - Press buttons -0- and -6- to select "End Output" function 06.
Rapid data transfer **Q** **06 - End Output**	Indicated on display - Press -Q- button to confirm input
Rapid data transfer **HELP** **Insert address word XX**	Indicated on display - Switch ignition off. - Disconnect VAG1551 scan tool.

cardiagn.com

01-23

Code Control Module (scan tool function 07)

This function is used to code the instrument cluster with the following information:

- Optional equipment
- Country specific variations (market versions)
- Number of cylinders
- Engine versions

Notes:

- *Coding sets the various combinations of the on board computer and check package according to the optional equipment, country specific variations, number of cylinders and engine version.*
- *The coding table only contains coding combinations for the Audi A4.*

Initiating instrument cluster coding

Rapid data transfer **HELP** **Select function XX**	Indicated on display

cardiagn.com

- Press buttons -0- and -7- to select "Code Control Module" function 07.
- Press -Q- button to confirm input.

cardiagn.com

01-24

Code control module **Q** **Input code number XXXXX (0-32000)**	Indicated on display - Input code number using Coding table ⇒ Page 01-25 . Example: 00262 00 no optional equipment 2 Country: USA 6 6-cylinders 2 Gasoline engine
Code Control Module **Q** **Input code number 00262 (0-32000)**	- Indicated on display (example). - Press -Q- button to confirm input
8D0919930L B5-INSTRCLUST VDO X16 **Coding 00262** **WSC 06812**	Indicated on display - Press →button to end coding process.
Rapid data transfer **HELP** **Select function XX**	Indicated on display - Press buttons -0- and -6-.
Rapid data transfer **Q** **06 - End Output**	Indicated on display - Press -Q- button to confirm input

cardiagn.com

01-25

Coding table

X				Optional equipment
00				No optional equipment
01				Brake pad wear indicator active
02				Seat belt warning system active
04				Washer fluid level indicator active
16				Navigation (not applicable for USA)
	X			Market version:
	0			Germany (D)
	1			Europe (EU)
	2			USA (US)
	3			Canada (CDN)
	4			Great Britain (GB)
	5			Japan (JP)
	6			Saudi Arabia (SA)
	7			Australia (AUS)

cardiagn.com

		X		Number of cylinders
		4 6		4-cylinders 6-cylinders
			X	Engine versions
			0 2	TDI engine Gasoline engines, 4 and 6 cylinder

cardiagn.com

01-26

Notes:

- *Depending on the vehicle equipment, coding for optional equipment is also possible for various combinations.*
- *If more than one option that can be coded is installed, the coding must be entered as the sum of the individual coding numbers.*

Examples

- Washer fluid level indicator and brake pad wear indicator:

  04 + 01 = 05

- Seat belt warning system and washer fluid level indicator:

  02 + 04 = 06

cardiagn.com

Read Measuring Value Block (scan tool function 08)

Initiating "Read Measuring Value Block" function 08

Rapid data transfer	**HELP**
Select function XX	

Indicated on display

- Press buttons -0- and -8- to select "Read Measuring Value Block" function 08.

Rapid data transfer	**Q**
08 - Read Measuring Value Block	

Indicated on display

- Press -Q- button to confirm input

Read Measuring Value Block	**HELP**
Input display group number XXX	

Indicated on display

- Input display group number from table (⇒ Page 01-28) and press -Q- button to confirm input.

The scan tool will indicate the selected display group.

cardiagn.com

01-28

Display group overview

Display group	**Indicated on display**
001	1 = Vehicle speed (kmh/MPH) 2 = Engine speed (RPM) 3 = Oil pressure switch 2 < min
002	1 = Odometer (km/mi) 2 = Fuel gauge (liters/gal) 3 = Outside temperature (° C/F)
003	1 = Engine coolant temperature (° C/F)
050	1 = Odometer (km/mi) 2 = Engine speed (RPM) 4 = Engine coolant temperature (° C/F)

Notes:

- *The display will always show the actual values from the sensors. Since the instrument panel displays filters the values, they may differ from the actual values.*

cardiagn.com

- *If the actual Engine Coolant Temperature (ECT) is between 80° C (176° F) and 100° C (212° F), the instrument panel will always display 90° C (194° F).*

- *Additional display groups for the instrument cluster are not possible.*

cardiagn.com

01-29

Display group 001

Read Measuring Value Block 1 → ◀ Indicated on display

50 km/h 2400 RPM Oil press 2<min

Time

- Not activated for Audi A4

Oil pressure switch 2

- Oil pressure switch 2 < min
- Oil pressure switch 2 OK.

Engine RPM

- 0 - 9990 RPM

Road speed

- 0 - 300 km/h

cardiagn.com

01-30

Display group 002

Read Measuring Value Block 2 → ◀ Indicated on display

820 km 41 ltr. 19.0 °C

Outside Temperature

- -40 to +70 °C

Fuel level

- 0 - 100 ltr.

Odometer

Display group 003

Read Measuring Value Block 3 → ◀ Indicated on display

85.0 °C

cardiagn.com

Coolant temperature
• 50 to 130 °C

cardiagn.com

01-31

Display group 050

Read Measuring Value Block 50		→	◀ Indicated on display
2390 km	2400 RPM	85.0 °C	
			Coolant temperature • 50 to 130 °C
		Oil temperature • Not activated for Audi A4	
		Engine speed • 0 - 9990 RPM	
	Odometer		

cardiagn.com

Adaptation (scan tool function 10)

Function 10 is used to initiate and store the following changes:

- Adaptation of fuel gauge display
- Correction of the fuel consumption display
- Coding of language versions for Auto Check system
- Adaptation of the Service Reminder Indicator (SRI)
- Setting the odometer after instrument cluster replacement.

Individual functions are called up by entering the appropriate adaptation channel number (see adaptation table ⇒ Page 01-33).

cardiagn.com

Adaptation table

Adaptation channel	Adaptation function
01	Adaptation of fuel gauge display ⇒ Page 01-35
02	Resetting SRI after service ⇒ Page 01-45
03	Adaptation of fuel consumption display ⇒ Page 01-39
04	Language versions of the multi-function display ⇒ Page 01-42
05	SRI - service interval for oil change (distance in km) ⇒ Page 01-48
06	SRI - service interval 1 (IN1) distance in km ⇒ Page 01-51
07	SRI - service interval 1 (IN1) time in days ⇒ Page 01-54
08	SRI - service interval 2 (IN2) time in days ⇒ Page 01-57
09	Adapting odometer reading ⇒ Page 01-60

M.y. 1998 ➤

Adaptation channel	Adaptation function
10	SRI Remaining distance until next oil change service interval after replacing instrument cluster ⇒ Page 01-64
11	SRI Remaining distance until next service interval after replacing instrument cluster ⇒ Page 01-67
12	SRI Remaining time until next service interval after replacing instrument cluster ⇒ Page 01-70
30	Adaptation of fuel gauge sender ⇒ Page 01-73

cardiagn.com

01-34

Initiating "Adaptation" function 10

Rapid data transfer **HELP** **Select function XX**	Indicated on display - Press buttons -1- and -0- to select "Adaptation" function 10.
Read Measuring Value Block **Q** **10 - Adaptation**	Indicated on display - Press -Q- button to confirm input.
Adaptation **Q** **Insert channel number XX**	Indicated on display - Insert desired adaptation channel (⇒ Adaptation table, ⇒ Page 01-33). - Press -Q- button to confirm input.

Note:

After changing an adaptation value or after an adaptation in a specific channel has been completed, "Adaptation" function 10 must be selected again in order to select another adaptation channel.

cardiagn.com

01-35

Adaptation of fuel gauge display

Rapid data transfer	**HELP**
Select function XX	

Indicated on display

- Press buttons -1- and -0- to select "Adaptation" function 10 and press -Q- button to confirm input.

Adaptation	**Q**
Insert channel number XX	

Indicated on display

- Press buttons -0- and -3- to insert channel 03.
- Press -Q- button to confirm input

cardiagn.com

01-36

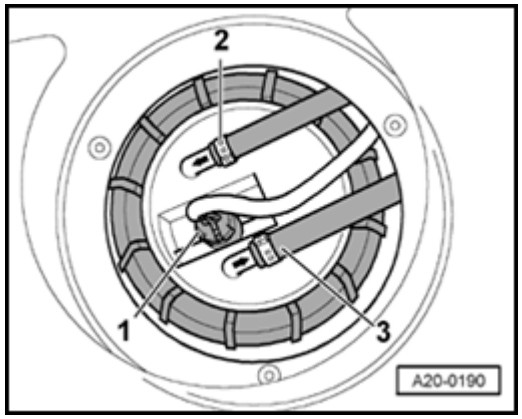

- Disconnect fuel level sensor harness connector (near rear seat back, under trim in trunk), then perform adaptation of fuel level display.
- Switch ignition off.

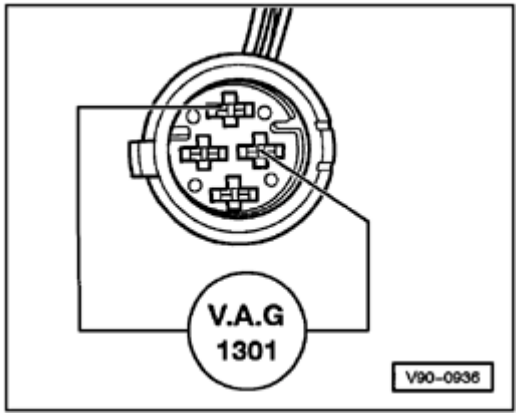

- Using test lead, connect VAG1301 resistance tester to fuel level sensor (see illustration).
- Set VAG1301 to value of 470.
- Wait approx. 4 minutes, switch ignition on and observe fuel gauge.

cardiagn.com

01-37

Note:

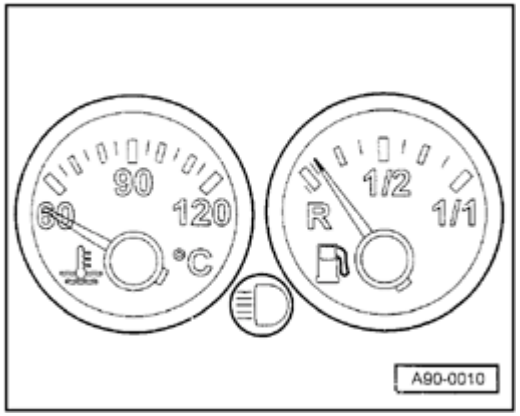

The fuel gauge reading is correct if the needle remains on the red section at the right side of the reserve zone (see illustration).

- Press buttons -0- and -1-.
- Press -Q- button to confirm input

Channel 1 Adaptation 128 →

< - 1 3- >

- Indicated on display

The new adaptation value can be entered in two ways: step-by-step or directly.

Note:

If a value over 255 is entered, the "adaptation" function will be cancelled and the procedure will have to be started again.

cardiagn.com

01-38

Step-by-step method:

- Press button -1- to adjust value downward, down to 0 or press button -3- to adjust value upward, up to 255 (example: 215).

Channel 1 Adaptation 215 **Q**
< - 1 3- >

- Indicated on display
- Press -Q- button to confirm input.

Channel 1 Adaptation 215 **Q**
Store changed value?

- Indicated on display
- Press -Q- button to confirm input

Channel 1 Adaptation 215 **→**
Changed value is stored

- Indicated on display
- Press →button to end fuel gauge adjustment.

Rapid data transfer **HELP**
Insert address word XX

Indicated on display

cardiagn.com

01-39

Adapting fuel consumption display (direct input method)

Rapid data transfer **HELP** **Select function XX**	Indicated on display

- Press buttons -1- and -0- to select "Adaptation" function 10 and press -Q- button to confirm input.

Adaptation **Q** **Insert channel number XX**	Indicated on display

- Press buttons -0- and -3- to insert channel 03.
- Press -Q- button to confirm input

Notes:

- *The value entered must be between 85% and 115%.*
- *Input is in steps of 5%.*

Channel 3 Adaptation 100 → < **-1 3-** >	Indicated on display

- Press → button.

cardiagn.com

01-40

Note:

Correction of the fuel consumption display is only carried out with the direct input method.

Channel 3 Adaptation 100
Input adaptation value XXXXX

Indicated on display

- Input desired correction value using keypad on VAG1551, fill in leading digits with zeroes "0".

Example:

Desired input value: 90%

Keyboard entry: 00090

Channel 3 Adaptation 100 Q
Input adaptation value 00090

Indicated on display

- Press -Q- button to confirm input

Channel 3 Adaptation 90 Q
Store changed value?

Indicated on display

- Press -Q- button to confirm input

Channel 3 Adaptation 90 →
Changed value is stored

Indicated on display

- Press → button to end adaptation.

cardiagn.com

01-41

Rapid data transfer **HELP**

Insert address word XX

Indicated on display

- Press buttons -1- and -0- to select "Adaptation" function 10 and press -Q- button to confirm input.

Note:

If an incorrect entry is made, the VAG1551 will switch to the following display:

Function is unknown →

or cannot be carried out at the moment.

Indicated on display

- Press → button.
- Select "Adaptation" function 10 and adaptation channel 03 again.
- Repeat adaptation of fuel consumption display and press -Q- button to confirm input.

cardiagn.com

01-42

Adapting multi-function display language versions

Note:

Adaptation is only carried out on vehicles equipped with on board computer.

Rapid data transfer **HELP** **Select function XX**	Indicated on display

- Press buttons -1- and -0- to select "Adaptation" function 10 and press -Q- button to confirm input.

Adaptation **Q** **Insert channel number XX**	Indicated on display

- Press buttons -0- and -4-.
- Press -Q- button to confirm input

Channel 4 Adaptation 1 → **< -1 3- >**	Indicated on display

Notes:

- *The display shows only the last digit of the five-digit language code, e.g. 1 for German.*
- *Input of incorrect values will end the adaptation function. "Adaptation" function 10 must be selected again.*
- *When using the VAG1551 keypad, only the direct input method can be used.*

cardiagn.com

01-43

Language version coding table

Code	Language
00001	German
00002	English
00003	French
00004	Italian
00005	Spanish
00006	Portuguese

Step-by-step method:

- Press button -1- to move downward and button -3- to move upward through codes. Example: 2 for English.

Channel 4 Adaptation 2 **Q**
< -1 3- >

Indicated on display

- Press -Q- button to confirm input.

Channel 4 Adaptation 2 **Q**
Store changed value?

Indicated on display

- Press -Q- button to confirm input.

Channel 4 Adaptation 2 →
Changed value is stored

Indicated on display

- Press → button to end language version adaptation.

cardiagn.com

01-44

Direct input method:

Channel 4 Adaptation 1 → < -1 3- >	⮜	Indicated on display - Press → button.
Channel 4 Adaptation 1 Q **Input adaptation value XXXXX**	⮜	Indicated on display - Input desired 5-digit code using keypad ⇒ Page 01-43 . Example: Code: 2 (English) Input value: 00002 - Press -Q- button to confirm input.
Channel 4 Adaptation 1 Q **Input adaptation value 00002**	⮜	Indicated on display - Press -Q- button to confirm input.
Channel 4 Adaptation 2 Q < -1 3- >	⮜	Indicated on display - Press -Q- button to confirm input.
Channel 4 Adaptation 2 Q **Store changed value?**	⮜	Indicated on display - Press -Q- button to confirm input.
		Indicated on display

cardiagn.com

Channel 4 Adaptation 2 →

Changed value is stored

- Press → button to end language version adaptation.

cardiagn.com

01-45

Resetting SRI after servicing

Rapid data transfer	**HELP**
Select function XX	

Indicated on display

- Press buttons -1- and -0- to select "Adaptation" function 10 and press -Q- button to confirm input.

Adaptation	**Q**
Insert channel number XX	

Indicated on display

- Press buttons -0- and -2- to insert channel 02.
- Press -Q- button to confirm input.

Notes:

- *It is possible to reset the SRI without using the VAG1551/1552* ⇒ *Page 01-77* .
- *Adaptation channel 2 can only be used for instrument clusters with data version D05 and newer.*

cardiagn.com

01-46

Channel 2 Adaptation 1 →

< -1 3- >

Indicated on display. (service interval will be displayed, e.g. 1)

1 - indicates that the oil service is due.

10 - indicates that the inspection service is due.

11 - indicates that oil and inspection services are due.

Note:

Reset the SRI using only the direct input method.

- Press → button.

Channel 2 Adaptation 1 →

Input adaptation value XXXXX

Indicated on display

Delete the following service events by using the adaptation values listed below:

Adaptation value	Service Event
00000	Delete OIL and INSP
00010	Delete OIL
00001	Delete INSP

- Using keypad, enter appropriate adaptation value to delete service event, e.g. 00000.
- Press -0- button five times.

cardiagn.com

01-47

Channel 2 Adaptation 1 Q **Input adaptation value 00000**	Indicated on display - Press -Q- button to confirm input.
Channel 2 Adaptation 0 Q **< - 1 3- >**	Indicated on display - Press -Q- button to confirm input.
Channel 2 Adaptation 0 Q **Store changed value?**	Indicated on display - Press -Q- button to confirm input.
Channel 2 Adaptation 0 → **Changed value is stored**	Indicated on display - Press →button to end SRI reset.

cardiagn.com

01-48

Adapting SRI for oil change service interval (distance in km)

This function is used to enter the distance (in km) until the next oil change service is due (see service schedule "Maintenance Service").

Rapid data transfer	**HELP**
Select function XX	

Indicated on display

- Press buttons -1- and -0- to select "Adaptation" function 10 and press -Q- button to confirm input.

Adaptation	**Q**
Insert channel number XX	

Indicated on display

- Press buttons -0- and -5- to insert channel 05.
- Press -Q- button to confirm input.

cardiagn.com

01-49

Channel 5 Adaptation 1 →

< - 1 3- >

Indicated on display

The display shows the number of kilometers remaining until the next oil change service is due (the "1" indicates 1000 km remaining).

Notes:

- *Values can only be entered in increments of 1000 km. Therefore, the distance indicated is in units of 1000.*
- *In countries where speedometers are calibrated in miles, adjustments must still be made in kilometers. Therefore convert miles to kilometers (miles x 1.609 = kilometers) to get the required adaptation value.*
- *If the instrument cluster must be replaced, observe notes ⇒ Page 01-75 .*
- *When using the scan tool keypad, only the direct input method can be used.*
- *If an incorrect value is input, the "adaptation" function 10 will be cancelled and must be initiated again.*

- Press → button.

cardiagn.com

01-50

Channel 5 Adaptation 1 **Input adaptation value XXXXX**	Indicated on display - Input desired interval value using keypad on VAG1551, fill in leading digits with zeroes "0." Example: Specification: 15000 km Input value: 00015
Channel 5 Adaptation 1 **Q** **Input adaptation value 00015**	Indicated on display - Press -Q- button to confirm input.
Channel 5 Adaptation 15 **Q** **< - 1 3- >**	Indicated on display - Press -Q- button to confirm input.
Channel 5 Adaptation 15 **Q** **Store changed value?**	Indicated on display - Press -Q- button to confirm input.
Channel 5 Adaptation 15 → **Changed value is stored**	Indicated on display - Press →button to end SRI adaptation.

cardiagn.com

01-51

Adapting SRI for inspection service Interval-1 (IN1) (distance in km)

This function is used to enter the distance remaining (distance in km) until the next maintenance service is due (see service schedule "Maintenance Service").

Rapid data transfer	**HELP**
Select function XX	

Indicated on display

- Press buttons -1- and -0- to select "Adaptation" function 10 and press -Q- button to confirm input.

Adaptation	**Q**
Insert channel number XX	

Indicated on display

- Press buttons -0- and -6- to insert channel 06.
- Press -Q- button to confirm input.

cardiagn.com

01-52

Channel 6 Adaptation 5

< -1 3- >

Indicated on display

The display shows the number of kilometers remaining until the next maintenance service is due (the "5" indicates 5000 km remaining).

Notes:

- *Values can only be entered in increments of 1000 km. Therefore, the distance indicated is in units of 1000.*
- *In countries where speedometers are calibrated in miles, adjustments must still be made in kilometers. Therefore convert miles to kilometers (miles x 1.609 = kilometers) to get the required adaptation value.*
- *If the instrument cluster must be replaced, observe notes ⇒ Page 01-75 .*
- *When using the scan tool keypad, only the direct input method can be used.*
- *If an incorrect value is input, the "adaptation" function 10 will be cancelled and must be initiated again.*

- Press → button.

cardiagn.com

01-53

Channel 6 Adaptation 11 **Input adaptation value XXXXX**	Indicated on display - Input desired interval value using keypad on VAG1551, fill in leading digits with zeroes "0." Example: Specification: 30000 km Input value: 00030
Channel 6 Adaptation 11 **Q** **Input adaptation value 00030**	Indicated on display - Press -Q- button to confirm input.
Channel 6 Adaptation 30 **Q** **< -1 3- >**	Indicated on display - Press -Q- button to confirm input.
Channel 6 Adaptation 30 **Q** **Store changed value?**	Indicated on display - Press -Q- button to confirm input.
Channel 6 Adaptation 30 **→** **Changed value is stored**	Indicated on display - Press →button to end SRI adaptation.
Rapid data transfer **HELP** **Select function XX**	Indicated on display

cardiagn.com

01-54

Adapting SRI for inspection service Interval-1 (IN1) (time in days)

This function is used to enter the time until the next inspection service 1 is due (see service schedule "Maintenance Service").

Rapid data transfer	**HELP**
Select function XX	

Indicated on display

- Press buttons -1- and -0- to select "Adaptation" function 10 and press -Q- button to confirm input.

Adaptation	**Q**
Insert channel number XX	

Indicated on display

- Press buttons -0- and -7- to insert channel 07.
- Press -Q- button to confirm input.

cardiagn.com

01-55

Channel 7 Adaptation 11 →

< -1 3- >

Indicated on display

The display shows the days remaining until the next inspection service 1 is due (in this example "11" indicates 110 days remaining).

Notes:

- *Values can only be entered in increments of 10 days. Therefore the display shows blocks of 10 days.*
- *If the instrument cluster must be replaced, observe notes* ⇒ *Page 01-75* .
- *When using the scan tool keypad, only the direct input method can be used.*
- *If an incorrect value is input, the "adaptation" function 10 will be cancelled and must be initiated again.*

- Press → button.

cardiagn.com

01-56

Channel 7 Adaptation 11
Input adaptation value XXXXX

Indicated on display

- Input desired interval value using keypad on VAG1551, fill in leading digits with zeroes "0."

Example:

Specification: 360 days

Input value: 00036

Channel 7 Adaptation 11 **Q**
Input adaptation value 00036

Indicated on display

- Press -Q- button to confirm input.

Channel 7 Adaptation 36 **Q**
< - 1 3- >

Indicated on display

- Press -Q- button to confirm input.

Channel 7 Adaptation 36 **Q**
Store changed value?

Indicated on display

- Press -Q- button to confirm input.

Channel 7 Adaptation 36 **→**
Changed value is stored

Indicated on display

- Press →button to end SRI adaptation.

Rapid data transfer **HELP**
Select function XX

Indicated on display

cardiagn.com

01-57

Adapting SRI for inspection service Interval-2 (IN2) (time in days)

This function is used to enter the time until the next inspection service 2 is due (see service schedule "Maintenance Service").

Rapid data transfer	**HELP**
Select function XX	

Indicated on display

- Press buttons -1- and -0- to select "Adaptation" function 10 and press -Q- button to confirm input.

Adaptation	**Q**
Insert channel number XX	

Indicated on display

- Press buttons -0- and -8-.
- Press -Q- button to confirm input.

cardiagn.com

01-58

Channel 8 Adaptation 45 →

< -1 3- >

Indicated on display

The display shows the days remaining until the next inspection service 2 is due (in this example "45" indicates 450 days remaining).

Notes:

- *Values can only be entered in increments of 10 days. Therefore the display shows blocks of 10 days.*
- *If the instrument cluster must be replaced, observe notes* ⇒ *Page 01-75* .
- *When using the scan tool keypad, only the direct input method can be used.*
- *If an incorrect value is input, the "adaptation" function 10 will be cancelled and must be initiated again.*

- Press → button.

cardiagn.com

01-59

Channel 8 Adaptation 45 **Input adaptation value XXXXX**	Indicated on display - Input desired interval value using keypad on VAG1551, fill in leading digits with zeroes "0." Example: Specification: 720 days Input value: 00072
Channel 8 Adaptation 45 **Q** **Input adaptation value 00072**	- Indicated on display - Press -Q- button to confirm input.
Channel 7 Adaptation 72 **Q** **< -1 3- >**	- Indicated on display - Press -Q- button to confirm input.
Channel 7 Adaptation 72 **Q** **Store changed value?**	- Indicated on display - Press -Q- button to confirm input.
Channel 7 Adaptation 72 **→** **Changed value is stored**	- Indicated on display - Press →button to end SRI adaptation.
Rapid data transfer **HELP** **Select function XX**	Indicated on display

cardiagn.com

01-60

Adapting odometer display (km/mi)

This function is used to adapt the odometer reading (in km or miles) after replacing the instrument cluster.

Notes:

- *The adaptation function can only be carried out on an instrument cluster with an odometer reading of not more than 100 kilometers (62 miles).*
- *The adaptation function can only be carried out once for each instrument cluster.*
- *Only a larger adaptation value can be entered, not a lower one.*
- *If an incorrect value is entered and confirmed, no correction is possible. If this is the case, the instrument cluster must be replaced with a new one.*
- *In countries where speedometers are calibrated in miles, adjustments must still be made in kilometers. Therefore convert miles to kilometers (miles x 1.609 = kilometers) to get the required adaptation value.*

cardiagn.com

- *If the instrument cluster must be replaced, observe notes ⇒ Page 01-75 .*

cardiagn.com

01-61

Selecting function:

- Press -C- button.

Rapid data transfer HELP **Select function XX**	Indicated on display

- Press buttons -1- and -1- to select "Login-Procedure" function 11.

Rapid data transfer Q **11 - Login-procedure**	Indicated on display

- Press -Q- button to confirm input.

Login procedure **Enter code number XXXXX**	Indicated on display

- Enter code number 13861.

Login procedure Q **Enter code number 13861**	Indicated on display

- Press -Q- button to confirm input.

Rapid data transfer HELP **Select function XX**	Indicated on display

- Press buttons -1- and -0- to select "Adaptation" function 10.

Rapid data transfer Q **10 - Adaptation**	Indicated on display

- Press -Q- button to confirm input.

Adaptation Q **Insert channel number XX**	Indicated on display

cardiagn.com

01-62

- Press buttons -0- and -9- to select channel number 09.

- Press -Q- button to confirm input

Channel 9 Adaptation 2 →

< -1 3- >

Indicated on display

Note:

When using the VAG1551 keypad, only the direct input method can be used.

- Press → button to advance through program sequence.

Channel 9 Adaptation 2 **Q**

Input adaptation value XXXXX

Indicated on display

- Input adaptation value using keypad.

Example:

Odometer reading = 89627

0 8 9 6 3

X					Hundred thousands: 100000 - 655350 km

cardiagn.com

01-1

Instrument cluster, On Board Diagnostic (OBD) (through M.Y. 1999)

General information

Instrument cluster technology

The Audi A4 instrument cluster is available in two versions; the low-line version with "mini-check" system and the high-line version with an LCD multi-function display.

The mini-check system monitors the brake system, Engine Coolant Temperature (ECT), fuel level and engine oil pressure.

The multi-function display contains the following functions:

- Auto check system with radio station and telephone displays
- Ambient outside temperature display
- On-board computer display
- Transmission Range (TR) selector lever display for automatic transmission

cardiagn.com

- Navigation

cardiagn.com

01-2

The speedometer contains a LCD display for the odometer, a trip odometer and the Service Reminder Indicator (SRI).

Indicator lamps are integrated in the speedometer and tachometer.

Accessory instruments are integrated into the instrument cluster.

The instrument cluster is controlled by a microprocessor and has extensive On Board Diagnostic (OBD) capabilities. If any component exhibit signs of failure, a Diagnostic Trouble Code (DTC) is stored in the instrument cluster DTC memory. The DTC can then be identified using the VAG1551 or VAG1552 Scan Tool (ST).

cardiagn.com

01-3

Note:

The descriptions in this Repair Manual reference the VAS5051 Diagnostic Operation Center (DOC) and the VAG1551 Scan Tool (ST).

The following Adaptations (adjustments) can be carried out using the tool:

- Adaptation of the fuel sensor characteristics
- Adaptation of the fuel consumption display
- Coding the language versions for the on-board computer and Auto Check system.
- Adaptation of the Service Reminder Indicator (SRI)
- Adaptation of the odometer after instrument cluster replacement.

cardiagn.com

Instrument cluster replacement notes

- Do not disassemble the instrument cluster.
- All warning and indicator bulbs can be replaced separately: m.y. ➢1997 ⇒ Page 90-4 ; 1998 ➢ ⇒ Page 90-15 . All other malfunctions require replacing the complete instrument cluster.
- If necessary, the instrument cluster should be exchanged within the parts exchange program.
- Fill in the Failure Description Form and send it in, together with the instrument cluster.
- The instrument cluster must be sent back in its original packaging.
- When replacing the instrument cluster, set the Odometer display and the Service Reminder Indicator (SRI) using the VAG1551 Scan Tool (ST) ⇒ Page 01-32 .

cardiagn.com

On Board Diagnostic (OBD), initiating program

Special tools, test equipment and auxiliary items

- VAS5051 Diagnostic Operation Center (DOC) and/or VAG1551 Scan Tool (ST).
- VAG1551/3 adapter cable

Test requirements

- Fuses OK

⇒ *Electrical Wiring Diagrams Troubleshooting & Component Locations*

- Instrument cluster coding checked according to coding table ⇒ Page 01-25
- Connect VAS5051 Diagnostic Operation Center (DOC) or
- Connect VAG1551 Scan Tool (ST) ⇒ Page 01-241 .

cardiagn.com

- Ignition switched on

cardiagn.com

01-6

Notes:

- *If the VAG1551 display remains blank, check the power supply.*

⇒ *Electrical Wiring Diagrams Troubleshooting & Component Locations*

- *Press the HELP button for additional operating instructions.*
- *Press the → button to advance through the program sequence.*
- *An incorrect entry can be cancelled by pressing the -C- button.*
- *In "Rapid data transfer" operating mode 1, the "Automatic Test Sequence" (address word 00) can be carried out. This will automatically check the DTC memories of all of the control modules in the vehicle which have OBD capability.*

cardiagn.com

01-7

- Switch ignition on.

- Switch printer on by pressing PRINT button (indicator light in button comes on).

- Press button -1- to select "Rapid data transfer" operating mode 1.

Rapid data transfer HELP
Insert address word XX

Indicated on display

Address word for instrument cluster: 17

- Press buttons -1- and -7-.

Rapid data transfer Q
17 - Instrument Cluster

Indicated on display

- Press -Q- button to confirm input.

8D0919930L B5-Instrument Cluster VDOX16
Coding 00262 WSC 06812

Indicated on display (after approx. 5 seconds) (example)

- 8D0919930L: part number of instrument cluster (see also parts exchange program)
- B5-Instrument Cluster: component designation
- VDO: manufacturer ID (UN4 = Nippon Seiki, VD0 = VDO)
- X16: instrument cluster software version
- Coding 00262: instrument cluster coding
- WSC 06812: dealership number

cardiagn.com

01-8

Note:

Check coding using the coding table ⇒ Page 01-25 .

- Press→ button.

Rapid data transfer **HELP** **Control module does not answer**	- If one of these four messages is displayed, carry out troubleshooting procedures:

⇒ *Electrical Wiring Diagrams Troubleshooting & Component Locations*

Rapid data transfer **HELP** **Error in communication link**	or
Rapid data transfer **HELP** **K wire not switching to Ground**	or
Rapid data transfer **HELP** **K wire not switching to B+**	or
Rapid data transfer **HELP** **Select function XX**	Indicated on display

When the HELP button is pressed, a list of possible functions prints out.

- Press → button to advance through program sequence.

cardiagn.com

On Board Diagnostic (OBD) functions

The following functions are possible:

02 - Check DTC Memory ⇒ Page 01-10

03 - Output Diagnostic Test Mode ⇒ Page 01-15

05 - Erase DTC Memory ⇒ Page 01-20

06 - End Output ⇒ Page 01-22

07 - Code Control Module ⇒ Page 01-23

08 - Read Measuring Value Block ⇒ Page 01-27

10 - Adaptation ⇒ Page 01-32

cardiagn.com

01-10

Check DTC Memory (scan tool function 02)

Note:

The displayed DTC information is updated only when initiating OBD or with "Erase DTC Memory" function 05.

- Switch printer on by pressing PRINT button (indicator light in button comes on).

Rapid data transfer **HELP** **Select function XX**	Indicated on display

- Press buttons -0- and -2- to select "Check DTC Memory" function 02.

Rapid data transfer **Q** **02 - Check DTC Memory**	Indicated on display

- Press -Q- button to confirm input.

X DTC recognized →	The number of stored DTCs appears in the display.

The stored DTCs are displayed and printed out one after the other.

- Check print-out against DTC table (⇒ Page 01-12) and repair all malfunctions as necessary.

cardiagn.com

01-11

No DTC recognized! →

- If "No DTC recognized!" is displayed, the program will return to "Select function XX" prompt after the → button is pressed.

Rapid data transfer	**HELP**
Select function XX	

- Indicated on display

If something different appears on the display:

⇒ *VAG1551 Scan Tool (ST) operating instructions*

- End output (function 06) ⇒ Page 01-22
- Switch ignition off and disconnect scan tool from Data Link Connector (DLC).

cardiagn.com

01-12

Diagnostic Trouble Code (DTC) table for instrument cluster

Notes:

- *The following table lists all possible Diagnostic Trouble Codes (DTCs) which the instrument cluster can recognize and which the VAG1551 scan tool can print.*
- *DTC numbers only appear on the printout.*
- *Before replacing any component shown as malfunctioning, check all related wiring and connections of these components and the Ground (GND) connections ⇒ Electrical Wiring Diagrams Troubleshooting & Component Locations*
- *After the repair has been carried out and the functional system check, re-check and erase the DTC memory using the VAG1551 scan tool.*
- *The DTC memory records all static and sporadic (intermittent) malfunctions. A malfunction is considered static if it exists for at least 2 seconds (exceptions: 60 seconds for outside temperature display and 30 minutes, for engine coolant sensor). If the malfunction is not present after this time, it will be stored as a sporadic DTC and "/SP" will appear on the right side of the scan tool display.*
- *After switching the ignition on, all existing DTCs are set to sporadic. If they are still present after the system check, they will be stored as static DTCs.*
- *If a sporadic malfunction does not reoccur within 50 driving cycles (ignition on for at least 5 minutes and vehicle speed greater than 30 km/h or 18 mph), it will be erased.*

cardiagn.com

DTC	Possible cause	Corrective action
VAG1551 scan tool display		
00667		
Ambient-Temperature Signal ♦ Open/Short circuit to B+ ♦ Short circuit to Ground	Vehicles without air conditioning: ♦ Open circuit or short circuit ♦ Outside air temperature sensor -G17- faulty	Vehicles without air conditioning: - Trace malfunction ⇒Electrical Wiring Diagrams, Troubleshooting & Component Locations - Replace -G17-.
	Vehicles with air conditioning: ♦ Open circuit or short circuit ♦ A/C control head -E87- faulty	Vehicles with air conditioning: - Trace malfunction ⇒Electrical Wiring Diagrams, Troubleshooting & Component Locations - Carry out OBD of air conditioning system ⇒ *Repair Manual, Heating & Air Conditioning, Repair Group 01*
00771		
Fuel Level Sensor-G ♦ Open/Short circuit to B+ ♦ Short circuit to Ground	♦ Open circuit or short circuit between sender for fuel gauge -G- and instrument cluster ♦ Sender for fuel gauge -G- faulty	- Trace malfunction ⇒Electrical Wiring Diagrams, Troubleshooting & Component Locations - Replace -G-.

cardiagn.com

00779		
Outside Air Temperature Sensor-G17 ♦ Open/Short circuit to B+ ♦ Short circuit to Ground	♦ Open circuit or short circuit ♦ Outside air temperature sensor --G17- faulty	- Trace malfunction ⇒Wiring Diagrams, Troubleshooting & Component Locations - Replace -G17-.

cardiagn.com

01039		
ECT Sensor-G2 ♦ Open/Short circuit to B+ ♦ Short circuit to Ground (GND)	♦ Open circuit or short circuit between Engine Coolant Temperature Sensor (ECT) -G2- and instrument cluster ♦ ECT sensor -G2- faulty	- Trace malfunction ⇒Electrical Wiring Diagrams, Troubleshooting & Component Locations - Replace -G2-.
01402		
Data Wire from Navigation ♦ Incorrect signal	♦ Open circuit in clock enable or data wire ♦ Navigation/instrument cluster interface malfunctioning ♦ Malfunction caused by electromagnetic interference inside and outside vehicle	- Check data wire for damage. - Check causes for electromagnetic malfunctions. ⇒ Repair Manual Radio, Telephone, Navigation, Repair Group 97
65535		
Control Module Malfunctioning	♦ Instrument cluster faulty	- Replace instrument cluster ⇒ Page 90-1 .

cardiagn.com

01-15

Output Diagnostic Test Mode (scan tool function 03)

Notes:

- *Output Diagnostic Test Mode may only be carried out on a stationary vehicle with the engine off.*
- *Trace any faults identified by the Output Diagnostic Test Mode, replace the instrument cluster if necessary.*

The function "Output Diagnostic Test Mode" cycles all the control elements in the instrument cluster sequentially, if they are installed and coded.

- Concurrent testing of the display ranges of all the analog indicators (coolant temperature gauge, tachometer, speedometer and fuel gauge).
- Activation of the mini-check indicator lights.
- Activation of the seat belt warning lamp.
- Activation of the chime.

cardiagn.com

- Segment check of the multi-function display and/or the LCD odometer.
- Activation of the instrument cluster lights and dimmer.
- Coolant excess temperature test

cardiagn.com

01-16

Notes:

- *The instrument cluster lighting test can only be carried out with the lights on.*
- *The coolant excess temperature test activates the A/C compressor safety shut-off.*

Initiating Output Diagnostic Test Mode

Note:

The units displayed are country specific.

Rapid data transfer **HELP** **Select function XX**	Indicated on display

- Press buttons -0- and -3- to select "Output Diagnostic Test Mode" function 03.

Rapid data transfer **Q** **03 - Output Diagnostic Test Mode**	Indicated on display

- Press -Q- button to confirm input.

  This will start the Output Diagnostic Test Mode for the analog instruments (displays).

Output Diagnostic Test Mode → **Analog Indicators**	Indicated on display

cardiagn.com

01-17

After pressing the -Q- button, the following tests are run:

- Coolant temperature gauge needle moves over complete range
- Tachometer needle moves over complete range
- Speedometer needle moves over complete range
- Fuel gauge needle moves over complete range

The following preset values are displayed at the end of the test:

Coolant temperature display:	90 ° C (194 ° F)
Tachometer:	3000 RPM
Speedometer:	100 km/h (62 mph)
Fuel level:	1/2

Note:

If the ignition is switched on or off with any gauge

cardiagn.com

needle in motion, its movement will be interrupted.

cardiagn.com

01-18

- Press→ button.

Output Diagnostic Test Mode → **Instrument Cluster Warning Lights Test**	⮜	Indicated on display Activation of mini-check indicator lights

- Press→ button.

Output Diagnostic Test Mode → **Seat Belt Warning Light-K19**	⮜	Indicated on display Activation of seat belt warning light. ***Note:*** *Depending on the model/equipment, the seat belt warning light will be activated via the control module coding. This means that the warning light will be inactive if this test is skipped.*

- Press → button.

Output Diagnostic Test Mode → **Chime**	⮜	Indicated on display The chime is activated and sounds continuously.

- Press → button.

cardiagn.com

01-19

Output Diagnostic Test Mode → **Segment test**	⮜	Indicated on display ***Notes:*** ♦ *All indicators on the multi-function display and/or the LCD odometer are cycled.* ♦ *All segments on the multi-function monitor light up and one bar remains dark.* - Press → button.
Output Diagnostic Test Mode → **Switch and instrument lighting**	⮜	Indicated on display The instrument cluster dimming is tested. - Press → button.
Output Diagnostic Test Mode → **ECT Overheat Test**	⮜	Indicated on display The A/C compressor safety cut-out will be activated within approx. 5 seconds. - Press → button.
Output Diagnostic Test Mode → **END**	⮜	Indicated on display - Press → button to end Output Diagnostic Test Mode. This returns the scan tool to the "Select function XX" prompt.
Rapid data transfer HELP	⮜	Indicated on display

cardiagn.com

Select function XX

cardiagn.com

01-20

Erase DTC Memory (scan tool function 05)

Note:

If the DTC memory cannot be erased, check DTC memory again and repair malfunctions.

Requirements

- DTC memory checked ⇒ Page 01-10
- All malfunctions repaired

After DTC memory has been successfully checked:

Rapid data transfer **HELP** **Select function XX**	Indicated on display

- Press buttons -0- and -5- to select "Erase DTC Memory" function 05.

cardiagn.com

01-21

Rapid data transfer **Q**
05 Erase DTC Memory

Indicated on display

- Press -Q- button to confirm input

Rapid data transfer →
DTC Memory is erased

Indicated on display

DTC memory is now erased.

- Press → button.

Rapid data transfer **HELP**
Select function XX

Indicated on display

Notes:

Attention!
DTC Memory not interrogated

- *This message indicates an error in the test sequence:*

Rapid data transfer →
DTC Memory not interrogated

- *This message indicates an error in the test sequence:*
- *Observe the test sequence exactly: first check DTC memory, if necessary repair malfunctions then erase.*

cardiagn.com

01-22

End Output (scan tool function 06)

Rapid data transfer **HELP** **Select function XX**	Indicated on display - Press buttons -0- and -6- to select "End Output" function 06.
Rapid data transfer **Q** **06 - End Output**	Indicated on display - Press -Q- button to confirm input
Rapid data transfer **HELP** **Insert address word XX**	Indicated on display - Switch ignition off. - Disconnect VAG1551 scan tool.

cardiagn.com

01-23

Code Control Module (scan tool function 07)

This function is used to code the instrument cluster with the following information:

- Optional equipment
- Country specific variations (market versions)
- Number of cylinders
- Engine versions

Notes:

- *Coding sets the various combinations of the on board computer and check package according to the optional equipment, country specific variations, number of cylinders and engine version.*
- *The coding table only contains coding combinations for the Audi A4.*

Initiating instrument cluster coding

Rapid data transfer **HELP** **Select function XX**	Indicated on display

cardiagn.com

- Press buttons -0- and -7- to select "Code Control Module" function 07.
- Press -Q- button to confirm input.

cardiagn.com

01-24

Code control module **Q** **Input code number XXXXX (0-32000)**	Indicated on display - Input code number using Coding table ⇒ Page 01-25 . Example: 00262 00 no optional equipment 2 Country: USA 6 6-cylinders 2 Gasoline engine
Code Control Module **Q** **Input code number 00262 (0-32000)**	- Indicated on display (example). - Press -Q- button to confirm input
8D0919930L B5-INSTRCLUST VDO X16 **Coding 00262** **WSC 06812**	Indicated on display - Press →button to end coding process.
Rapid data transfer **HELP** **Select function XX**	Indicated on display - Press buttons -0- and -6-.
Rapid data transfer **Q** **06 - End Output**	Indicated on display - Press -Q- button to confirm input

cardiagn.com

01-25

Coding table

X				Optional equipment
00				No optional equipment
01				Brake pad wear indicator active
02				Seat belt warning system active
04				Washer fluid level indicator active
16				Navigation (not applicable for USA)
	X			Market version:
	0			Germany (D)
	1			Europe (EU)
	2			USA (US)
	3			Canada (CDN)
	4			Great Britain (GB)
	5			Japan (JP)
	6			Saudi Arabia (SA)
	7			Australia (AUS)

cardiagn.com

		X		Number of cylinders
		4 6		4-cylinders 6-cylinders
			X	Engine versions
			0 2	TDI engine Gasoline engines, 4 and 6 cylinder

cardiagn.com

01-26

Notes:

- *Depending on the vehicle equipment, coding for optional equipment is also possible for various combinations.*
- *If more than one option that can be coded is installed, the coding must be entered as the sum of the individual coding numbers.*

Examples

- Washer fluid level indicator and brake pad wear indicator:

  04 + 01 = 05

- Seat belt warning system and washer fluid level indicator:

  02 + 04 = 06

cardiagn.com

Read Measuring Value Block (scan tool function 08)

Initiating "Read Measuring Value Block" function 08

Rapid data transfer	**HELP**
Select function XX	

Indicated on display

- Press buttons -0- and -8- to select "Read Measuring Value Block" function 08.

Rapid data transfer	**Q**
08 - Read Measuring Value Block	

Indicated on display

- Press -Q- button to confirm input

Read Measuring Value Block	**HELP**
Input display group number XXX	

Indicated on display

- Input display group number from table (⇒ Page 01-28) and press -Q- button to confirm input.

The scan tool will indicate the selected display group.

cardiagn.com

01-28

Display group overview

Display group	**Indicated on display**
001	1 = Vehicle speed (kmh/MPH) 2 = Engine speed (RPM) 3 = Oil pressure switch 2 < min
002	1 = Odometer (km/mi) 2 = Fuel gauge (liters/gal) 3 = Outside temperature (° C/F)
003	1 = Engine coolant temperature (° C/F)
050	1 = Odometer (km/mi) 2 = Engine speed (RPM) 4 = Engine coolant temperature (° C/F)

Notes:

- *The display will always show the actual values from the sensors. Since the instrument panel displays filters the values, they may differ from the actual values.*

cardiagn.com

- *If the actual Engine Coolant Temperature (ECT) is between 80° C (176° F) and 100° C (212° F), the instrument panel will always display 90° C (194° F).*

- *Additional display groups for the instrument cluster are not possible.*

cardiagn.com

01-29

Display group 001

Read Measuring Value Block 1 → ◀ Indicated on display

50 km/h 2400 RPM Oil press 2<min

Time

- Not activated for Audi A4

Oil pressure switch 2

- Oil pressure switch 2 < min
- Oil pressure switch 2 OK.

Engine RPM

- 0 - 9990 RPM

Road speed

- 0 - 300 km/h

cardiagn.com

01-30

Display group 002

Read Measuring Value Block 2 → ◀ Indicated on display

820 km 41 ltr. 19.0 °C

Outside Temperature

- -40 to +70 °C

Fuel level

- 0 - 100 ltr.

Odometer

Display group 003

Read Measuring Value Block 3 → ◀ Indicated on display

85.0 °C

cardiagn.com

Coolant temperature
• 50 to 130 °C

cardiagn.com

01-31

Display group 050

Read Measuring Value Block 50		→	◀ Indicated on display
2390 km	2400 RPM	85.0 °C	
			Coolant temperature • 50 to 130 °C
		Oil temperature • Not activated for Audi A4	
		Engine speed • 0 - 9990 RPM	
	Odometer		

cardiagn.com

Adaptation (scan tool function 10)

Function 10 is used to initiate and store the following changes:

- Adaptation of fuel gauge display
- Correction of the fuel consumption display
- Coding of language versions for Auto Check system
- Adaptation of the Service Reminder Indicator (SRI)
- Setting the odometer after instrument cluster replacement.

Individual functions are called up by entering the appropriate adaptation channel number (see adaptation table ⇒ Page 01-33).

cardiagn.com

Adaptation table

Adaptation channel	Adaptation function
01	Adaptation of fuel gauge display ⇒ Page 01-35
02	Resetting SRI after service ⇒ Page 01-45
03	Adaptation of fuel consumption display ⇒ Page 01-39
04	Language versions of the multi-function display ⇒ Page 01-42
05	SRI - service interval for oil change (distance in km) ⇒ Page 01-48
06	SRI - service interval 1 (IN1) distance in km ⇒ Page 01-51
07	SRI - service interval 1 (IN1) time in days ⇒ Page 01-54
08	SRI - service interval 2 (IN2) time in days ⇒ Page 01-57
09	Adapting odometer reading ⇒ Page 01-60

M.y. 1998 ➤

Adaptation channel	Adaptation function
10	SRI Remaining distance until next oil change service interval after replacing instrument cluster ⇒ Page 01-64
11	SRI Remaining distance until next service interval after replacing instrument cluster ⇒ Page 01-67
12	SRI Remaining time until next service interval after replacing instrument cluster ⇒ Page 01-70
30	Adaptation of fuel gauge sender ⇒ Page 01-73

cardiagn.com

01-34

Initiating "Adaptation" function 10

Rapid data transfer **HELP** **Select function XX**	Indicated on display - Press buttons -1- and -0- to select "Adaptation" function 10.
Read Measuring Value Block **Q** **10 - Adaptation**	Indicated on display - Press -Q- button to confirm input.
Adaptation **Q** **Insert channel number XX**	Indicated on display - Insert desired adaptation channel (⇒ Adaptation table, ⇒ Page 01-33). - Press -Q- button to confirm input.

Note:

After changing an adaptation value or after an adaptation in a specific channel has been completed, "Adaptation" function 10 must be selected again in order to select another adaptation channel.

cardiagn.com

01-35

Adaptation of fuel gauge display

Rapid data transfer	**HELP**
Select function XX	

Indicated on display

- Press buttons -1- and -0- to select "Adaptation" function 10 and press -Q- button to confirm input.

Adaptation	**Q**
Insert channel number XX	

Indicated on display

- Press buttons -0- and -3- to insert channel 03.
- Press -Q- button to confirm input

cardiagn.com

01-36

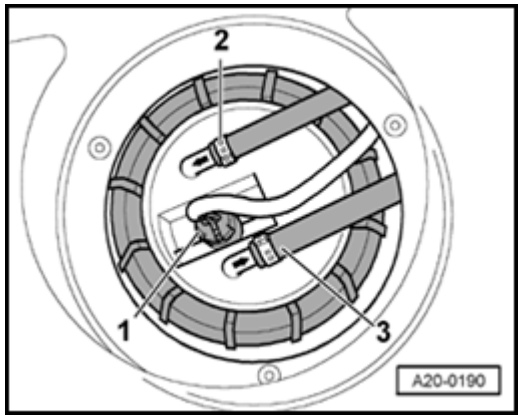

- Disconnect fuel level sensor harness connector (near rear seat back, under trim in trunk), then perform adaptation of fuel level display.
- Switch ignition off.

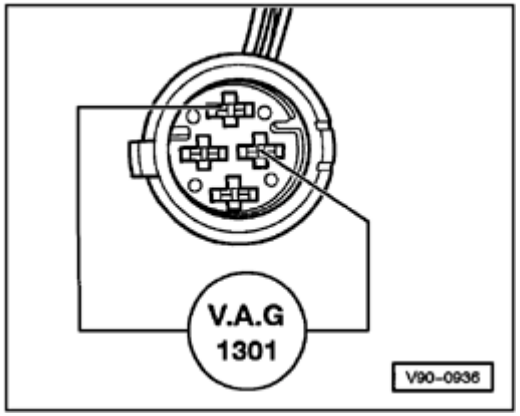

- Using test lead, connect VAG1301 resistance tester to fuel level sensor (see illustration).
- Set VAG1301 to value of 470.
- Wait approx. 4 minutes, switch ignition on and observe fuel gauge.

cardiagn.com

01-37

Note:

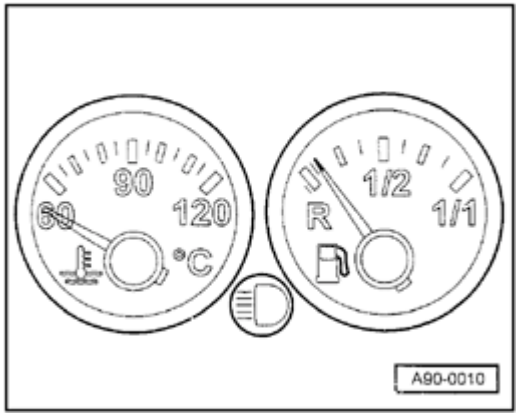

The fuel gauge reading is correct if the needle remains on the red section at the right side of the reserve zone (see illustration).

- Press buttons -0- and -1-.
- Press -Q- button to confirm input

Channel 1 Adaptation 128 →

< - 1 3- >

- Indicated on display

The new adaptation value can be entered in two ways: step-by-step or directly.

Note:

If a value over 255 is entered, the "adaptation" function will be cancelled and the procedure will have to be started again.

cardiagn.com

01-38

Step-by-step method:

- Press button -1- to adjust value downward, down to 0 or press button -3- to adjust value upward, up to 255 (example: 215).

Channel 1 Adaptation 215 **Q**
< - 1 3- >

- Indicated on display
- Press -Q- button to confirm input.

Channel 1 Adaptation 215 **Q**
Store changed value?

- Indicated on display
- Press -Q- button to confirm input

Channel 1 Adaptation 215 **→**
Changed value is stored

- Indicated on display
- Press →button to end fuel gauge adjustment.

Rapid data transfer **HELP**
Insert address word XX

Indicated on display

cardiagn.com

01-39

Adapting fuel consumption display (direct input method)

Rapid data transfer **HELP** **Select function XX**	Indicated on display

- Press buttons -1- and -0- to select "Adaptation" function 10 and press -Q- button to confirm input.

Adaptation **Q** **Insert channel number XX**	Indicated on display

- Press buttons -0- and -3- to insert channel 03.
- Press -Q- button to confirm input

Notes:

- *The value entered must be between 85% and 115%.*
- *Input is in steps of 5%.*

Channel 3 Adaptation 100 → < **-1 3-** >	Indicated on display

- Press → button.

cardiagn.com

01-40

Note:

Correction of the fuel consumption display is only carried out with the direct input method.

Channel 3 Adaptation 100
Input adaptation value XXXXX

Indicated on display

- Input desired correction value using keypad on VAG1551, fill in leading digits with zeroes "0".

Example:

Desired input value: 90%

Keyboard entry: 00090

Channel 3 Adaptation 100 Q
Input adaptation value 00090

Indicated on display

- Press -Q- button to confirm input

Channel 3 Adaptation 90 Q
Store changed value?

Indicated on display

- Press -Q- button to confirm input

Channel 3 Adaptation 90 →
Changed value is stored

Indicated on display

- Press → button to end adaptation.

cardiagn.com

01-41

Rapid data transfer **HELP**

Insert address word XX

Indicated on display

- Press buttons -1- and -0- to select "Adaptation" function 10 and press -Q- button to confirm input.

Note:

If an incorrect entry is made, the VAG1551 will switch to the following display:

Function is unknown →

or cannot be carried out at the moment.

Indicated on display

- Press → button.
- Select "Adaptation" function 10 and adaptation channel 03 again.
- Repeat adaptation of fuel consumption display and press -Q- button to confirm input.

cardiagn.com

01-42

Adapting multi-function display language versions

Note:

Adaptation is only carried out on vehicles equipped with on board computer.

Rapid data transfer **HELP** **Select function XX**	Indicated on display

- Press buttons -1- and -0- to select "Adaptation" function 10 and press -Q- button to confirm input.

Adaptation **Q** **Insert channel number XX**	Indicated on display

- Press buttons -0- and -4-.
- Press -Q- button to confirm input

Channel 4 Adaptation 1 → **< -1 3- >**	Indicated on display

Notes:

- *The display shows only the last digit of the five-digit language code, e.g. 1 for German.*
- *Input of incorrect values will end the adaptation function. "Adaptation" function 10 must be selected again.*
- *When using the VAG1551 keypad, only the direct input method can be used.*

cardiagn.com

01-43

Language version coding table

Code	Language
00001	German
00002	English
00003	French
00004	Italian
00005	Spanish
00006	Portuguese

Step-by-step method:

- Press button -1- to move downward and button -3- to move upward through codes. Example: 2 for English.

Channel 4 Adaptation 2 **Q**
< -1 3- >

Indicated on display

- Press -Q- button to confirm input.

Channel 4 Adaptation 2 **Q**
Store changed value?

Indicated on display

- Press -Q- button to confirm input.

Channel 4 Adaptation 2 →
Changed value is stored

Indicated on display

- Press → button to end language version adaptation.

cardiagn.com

01-44

Direct input method:

Channel 4 Adaptation 1 → < -1 3- >	⮜	Indicated on display - Press → button.
Channel 4 Adaptation 1 Q **Input adaptation value XXXXX**	⮜	Indicated on display - Input desired 5-digit code using keypad ⇒ Page 01-43 . Example: Code: 2 (English) Input value: 00002 - Press -Q- button to confirm input.
Channel 4 Adaptation 1 Q **Input adaptation value 00002**	⮜	Indicated on display - Press -Q- button to confirm input.
Channel 4 Adaptation 2 Q < -1 3- >	⮜	Indicated on display - Press -Q- button to confirm input.
Channel 4 Adaptation 2 Q **Store changed value?**	⮜	Indicated on display - Press -Q- button to confirm input.
		Indicated on display

cardiagn.com

Channel 4 Adaptation 2 →

Changed value is stored

- Press → button to end language version adaptation.

cardiagn.com

01-45

Resetting SRI after servicing

Rapid data transfer	**HELP**
Select function XX	

Indicated on display

- Press buttons -1- and -0- to select "Adaptation" function 10 and press -Q- button to confirm input.

Adaptation	**Q**
Insert channel number XX	

Indicated on display

- Press buttons -0- and -2- to insert channel 02.
- Press -Q- button to confirm input.

Notes:

- *It is possible to reset the SRI without using the VAG1551/1552* ⇒ *Page 01-77* .
- *Adaptation channel 2 can only be used for instrument clusters with data version D05 and newer.*

cardiagn.com

01-46

Channel 2 Adaptation 1 →

< -1 3- >

Indicated on display. (service interval will be displayed, e.g. 1)

1 - indicates that the oil service is due.

10 - indicates that the inspection service is due.

11 - indicates that oil and inspection services are due.

Note:

Reset the SRI using only the direct input method.

- Press → button.

Channel 2 Adaptation 1 →

Input adaptation value XXXXX

Indicated on display

Delete the following service events by using the adaptation values listed below:

Adaptation value	Service Event
00000	Delete OIL and INSP
00010	Delete OIL
00001	Delete INSP

- Using keypad, enter appropriate adaptation value to delete service event, e.g. 00000.
- Press -0- button five times.

cardiagn.com

01-47

Channel 2 Adaptation 1 Q **Input adaptation value 00000**	Indicated on display - Press -Q- button to confirm input.
Channel 2 Adaptation 0 Q **< - 1 3- >**	Indicated on display - Press -Q- button to confirm input.
Channel 2 Adaptation 0 Q **Store changed value?**	Indicated on display - Press -Q- button to confirm input.
Channel 2 Adaptation 0 → **Changed value is stored**	Indicated on display - Press →button to end SRI reset.

cardiagn.com

01-48

Adapting SRI for oil change service interval (distance in km)

This function is used to enter the distance (in km) until the next oil change service is due (see service schedule "Maintenance Service").

Rapid data transfer	**HELP**
Select function XX	

Indicated on display

- Press buttons -1- and -0- to select "Adaptation" function 10 and press -Q- button to confirm input.

Adaptation	**Q**
Insert channel number XX	

Indicated on display

- Press buttons -0- and -5- to insert channel 05.
- Press -Q- button to confirm input.

cardiagn.com

01-49

Channel 5 Adaptation 1 →

< - 1 3- >

Indicated on display

The display shows the number of kilometers remaining until the next oil change service is due (the "1" indicates 1000 km remaining).

Notes:

- *Values can only be entered in increments of 1000 km. Therefore, the distance indicated is in units of 1000.*
- *In countries where speedometers are calibrated in miles, adjustments must still be made in kilometers. Therefore convert miles to kilometers (miles x 1.609 = kilometers) to get the required adaptation value.*
- *If the instrument cluster must be replaced, observe notes ⇒ Page 01-75 .*
- *When using the scan tool keypad, only the direct input method can be used.*
- *If an incorrect value is input, the "adaptation" function 10 will be cancelled and must be initiated again.*

- Press → button.

cardiagn.com

01-50

Channel 5 Adaptation 1 **Input adaptation value XXXXX**	Indicated on display - Input desired interval value using keypad on VAG1551, fill in leading digits with zeroes "0." Example: Specification: 15000 km Input value: 00015
Channel 5 Adaptation 1 **Q** **Input adaptation value 00015**	Indicated on display - Press -Q- button to confirm input.
Channel 5 Adaptation 15 **Q** **< - 1 3- >**	Indicated on display - Press -Q- button to confirm input.
Channel 5 Adaptation 15 **Q** **Store changed value?**	Indicated on display - Press -Q- button to confirm input.
Channel 5 Adaptation 15 → **Changed value is stored**	Indicated on display - Press →button to end SRI adaptation.

cardiagn.com

01-51

Adapting SRI for inspection service Interval-1 (IN1) (distance in km)

This function is used to enter the distance remaining (distance in km) until the next maintenance service is due (see service schedule "Maintenance Service").

Rapid data transfer	**HELP**
Select function XX	

Indicated on display

- Press buttons -1- and -0- to select "Adaptation" function 10 and press -Q- button to confirm input.

Adaptation	**Q**
Insert channel number XX	

Indicated on display

- Press buttons -0- and -6- to insert channel 06.
- Press -Q- button to confirm input.

cardiagn.com

01-52

Channel 6 Adaptation 5

< -1 3- >

Indicated on display

The display shows the number of kilometers remaining until the next maintenance service is due (the "5" indicates 5000 km remaining).

Notes:

- *Values can only be entered in increments of 1000 km. Therefore, the distance indicated is in units of 1000.*
- *In countries where speedometers are calibrated in miles, adjustments must still be made in kilometers. Therefore convert miles to kilometers (miles x 1.609 = kilometers) to get the required adaptation value.*
- *If the instrument cluster must be replaced, observe notes ⇒ Page 01-75 .*
- *When using the scan tool keypad, only the direct input method can be used.*
- *If an incorrect value is input, the "adaptation" function 10 will be cancelled and must be initiated again.*

- Press → button.

cardiagn.com

01-53

Channel 6 Adaptation 11 **Input adaptation value XXXXX**	Indicated on display - Input desired interval value using keypad on VAG1551, fill in leading digits with zeroes "0." Example: Specification: 30000 km Input value: 00030
Channel 6 Adaptation 11 **Q** **Input adaptation value 00030**	Indicated on display - Press -Q- button to confirm input.
Channel 6 Adaptation 30 **Q** **< -1 3- >**	Indicated on display - Press -Q- button to confirm input.
Channel 6 Adaptation 30 **Q** **Store changed value?**	Indicated on display - Press -Q- button to confirm input.
Channel 6 Adaptation 30 **→** **Changed value is stored**	Indicated on display - Press →button to end SRI adaptation.
Rapid data transfer **HELP** **Select function XX**	Indicated on display

cardiagn.com

01-54

Adapting SRI for inspection service Interval-1 (IN1) (time in days)

This function is used to enter the time until the next inspection service 1 is due (see service schedule "Maintenance Service").

Rapid data transfer	**HELP**
Select function XX	

Indicated on display

- Press buttons -1- and -0- to select "Adaptation" function 10 and press -Q- button to confirm input.

Adaptation	**Q**
Insert channel number XX	

Indicated on display

- Press buttons -0- and -7- to insert channel 07.
- Press -Q- button to confirm input.

cardiagn.com

01-55

Channel 7 Adaptation 11 →

< -1 3- >

Indicated on display

The display shows the days remaining until the next inspection service 1 is due (in this example "11" indicates 110 days remaining).

Notes:

- *Values can only be entered in increments of 10 days. Therefore the display shows blocks of 10 days.*
- *If the instrument cluster must be replaced, observe notes* ⇒ *Page 01-75* .
- *When using the scan tool keypad, only the direct input method can be used.*
- *If an incorrect value is input, the "adaptation" function 10 will be cancelled and must be initiated again.*

- Press → button.

cardiagn.com

01-56

Channel 7 Adaptation 11
Input adaptation value XXXXX

Indicated on display

- Input desired interval value using keypad on VAG1551, fill in leading digits with zeroes "0."

Example:

Specification: 360 days

Input value: 00036

Channel 7 Adaptation 11 **Q**
Input adaptation value 00036

Indicated on display

- Press -Q- button to confirm input.

Channel 7 Adaptation 36 **Q**
< - 1 3- >

Indicated on display

- Press -Q- button to confirm input.

Channel 7 Adaptation 36 **Q**
Store changed value?

Indicated on display

- Press -Q- button to confirm input.

Channel 7 Adaptation 36 **→**
Changed value is stored

Indicated on display

- Press →button to end SRI adaptation.

Rapid data transfer **HELP**
Select function XX

Indicated on display

cardiagn.com

01-57

Adapting SRI for inspection service Interval-2 (IN2) (time in days)

This function is used to enter the time until the next inspection service 2 is due (see service schedule "Maintenance Service").

Rapid data transfer	**HELP**
Select function XX	

Indicated on display

- Press buttons -1- and -0- to select "Adaptation" function 10 and press -Q- button to confirm input.

Adaptation	**Q**
Insert channel number XX	

Indicated on display

- Press buttons -0- and -8-.
- Press -Q- button to confirm input.

cardiagn.com

01-58

Channel 8 Adaptation 45 →

< -1 3- >

Indicated on display

The display shows the days remaining until the next inspection service 2 is due (in this example "45" indicates 450 days remaining).

Notes:

- *Values can only be entered in increments of 10 days. Therefore the display shows blocks of 10 days.*
- *If the instrument cluster must be replaced, observe notes* ⇒ *Page 01-75* .
- *When using the scan tool keypad, only the direct input method can be used.*
- *If an incorrect value is input, the "adaptation" function 10 will be cancelled and must be initiated again.*

- Press → button.

cardiagn.com

01-59

Channel 8 Adaptation 45 **Input adaptation value XXXXX**	Indicated on display - Input desired interval value using keypad on VAG1551, fill in leading digits with zeroes "0." Example: Specification: 720 days Input value: 00072
Channel 8 Adaptation 45 **Q** **Input adaptation value 00072**	- Indicated on display - Press -Q- button to confirm input.
Channel 7 Adaptation 72 **Q** **< -1 3- >**	- Indicated on display - Press -Q- button to confirm input.
Channel 7 Adaptation 72 **Q** **Store changed value?**	- Indicated on display - Press -Q- button to confirm input.
Channel 7 Adaptation 72 **→** **Changed value is stored**	- Indicated on display - Press →button to end SRI adaptation.
Rapid data transfer **HELP** **Select function XX**	Indicated on display

cardiagn.com

01-60

Adapting odometer display (km/mi)

This function is used to adapt the odometer reading (in km or miles) after replacing the instrument cluster.

Notes:

- *The adaptation function can only be carried out on an instrument cluster with an odometer reading of not more than 100 kilometers (62 miles).*
- *The adaptation function can only be carried out once for each instrument cluster.*
- *Only a larger adaptation value can be entered, not a lower one.*
- *If an incorrect value is entered and confirmed, no correction is possible. If this is the case, the instrument cluster must be replaced with a new one.*
- *In countries where speedometers are calibrated in miles, adjustments must still be made in kilometers. Therefore convert miles to kilometers (miles x 1.609 = kilometers) to get the required adaptation value.*

cardiagn.com

- *If the instrument cluster must be replaced, observe notes ⇒ Page 01-75 .*

cardiagn.com

01-61

Selecting function:

- Press -C- button.

Rapid data transfer HELP **Select function XX**	Indicated on display

- Press buttons -1- and -1- to select "Login-Procedure" function 11.

Rapid data transfer Q **11 - Login-procedure**	Indicated on display

- Press -Q- button to confirm input.

Login procedure **Enter code number XXXXX**	Indicated on display

- Enter code number 13861.

Login procedure Q **Enter code number 13861**	Indicated on display

- Press -Q- button to confirm input.

Rapid data transfer HELP **Select function XX**	Indicated on display

- Press buttons -1- and -0- to select "Adaptation" function 10.

Rapid data transfer Q **10 - Adaptation**	Indicated on display

- Press -Q- button to confirm input.

Adaptation Q **Insert channel number XX**	Indicated on display

cardiagn.com

01-62

- Press buttons -0- and -9- to select channel number 09.

- Press -Q- button to confirm input

Channel 9 Adaptation 2 →

< -1 3- >

Indicated on display

Note:

When using the VAG1551 keypad, only the direct input method can be used.

- Press → button to advance through program sequence.

Channel 9 Adaptation 2 **Q**

Input adaptation value XXXXX

Indicated on display

- Input adaptation value using keypad.

Example:

Odometer reading = 89627

0 8 9 6 3

X					Hundred thousands: 100000 - 655350 km

cardiagn.com

01-1

Radio, On Board Diagnostic (OBD) (m.y. 1998 >)

General information

Technical features of radio systems

The new generation of the Audi radio system has extensive On Board Diagnostic (OBD) capability.

All radio units have a Diagnostic Trouble Code (DTC) memory. If a malfunction occurs in one of the components or wires which is monitored by the system, a record of the type of malfunction is stored in DTC memory.

cardiagn.com

01-2

Radio On Board Diagnostic (OBD), initiating program

Test requirements

- Fuse OK per wiring diagram

⇒ *Electrical Wiring Diagrams, Troubleshooting & Component Locations*

- VAG1551 Scan Tool (ST) connected ⇒ page 01-108

- Ignition switched on

Notes:

- *If the display remains blank, check the voltage supply of the VAG1551 Scan Tool (ST) according to the wiring diagram.*

- *Additional operating instructions can be printed out by pressing the HELP button.*

- *The → button is used to advance through the program sequence.*

cardiagn.com

- *If an incorrect entry is made, press the -C- button to escape.*

- *In "Rapid data transfer" operating mode 1 the "Automatic Test Sequence" function 00 can be carried out. This checks DTC memory of all vehicle control modules (with OBD capability) automatically.*

cardiagn.com

01-3

- Switch ignition on.

- Switch printer on by pressing PRINT button (indicator lamp in button lights up).

- Press button -1- to select "Rapid data transfer" operating mode 1.

Rapid data transfer	**HELP**
Insert address word XX	

Indicated on display

Address word for radio: 56

- Press buttons -5- and -6- to insert "Radio" address word 56.

Rapid data transfer	**Q**
56 - Radio	

Indicated on display

- Press -Q- button to confirm input.

Note:

While the On Board Diagnostic (OBD) program is running "DIAG" will appear on the radio unit display.

cardiagn.com

01-4

4B0035186A	**Radio**	**D01**	→
Coding 00017		**WSC 06812**	

Indicated on display (after about 5 seconds):

- 4B0035186A: Part No. for radio (⇒ parts catalog)
- Radio: component designation
- D01: software version installed in radio
- Coding 00017: radio coding
- WSC 06812: dealership number

Note:

Check coding against coding table ⇒ *page 01-22* .

- Press → button.

cardiagn.com

01-5

Rapid data transfer	**HELP**
Control module does not answer	

- If display shows one of the following messages, carry out troubleshooting procedure as described in troubleshooting program for diagnostic wiring.

⇒ *Electrical Wiring Diagrams, Troubleshooting & Component Locations*

Rapid data transfer	**HELP**
Error in communication link	

Rapid data transfer	**HELP**
K wire not switching to Ground	

Rapid data transfer	**HELP**
K wire not switching to B+	

cardiagn.com

01-6

Rapid data transfer	**HELP**
Select function XX	

Indicated on display

After the HELP button is pressed, a list of the possible functions is printed out.

- Press → button to advance through program sequence.

On Board Diagnostic (OBD) functions

The following functions are possible:

02 - Check DTC Memory ⇒ page 01-7

03 - Output Diagnostic Test Mode (DTM) ⇒ page 01-14

05 - Erase DTC Memory ⇒ page 01-16

06 - End Output ⇒ page 01-18

07 - Code Control Module ⇒ page 01-19

08 - Read Measuring Value Block ⇒ page 01-25

cardiagn.com

Check DTC Memory (scan tool function 02)

Note:

The displayed malfunction is only updated when the On Board Diagnostic (OBD) program is initiated or when "Erase DTC Memory" function 05 is used.

- Switch on printer by pressing PRINT button (indicator lamp in button lights up).

Rapid data transfer **HELP** **Select function XX**	Indicated on display

- Press buttons -0- and -2- to select "Check DTC Memory" function 02.

Rapid data transfer **Q** **02 - Check DTC Memory**	Indicated on display

- Press -Q- button to confirm input.

X DTC recognized!	Indicated on display (the number of stored DTCs)

Stored DTCs are displayed and printed out one after the other.

- Check printout against DTC table and repair all malfunctions as necessary ⇒ page 01-9 .

cardiagn.com

01-8

No DTC recognized! →

- If "No DTC recognized" is displayed the program will return to the starting point ("Select function XX" prompt) after the → button is pressed.

Rapid data transfer	**HELP**
Select function XX	

- Indicated on display

If anything else is displayed:

⇒ *Scan Tool operating instructions*

- End output (function 06) ⇒ page 01-18 .
- Switch ignition off and disconnect connections from Data Link Connector (DLC).

cardiagn.com

01-9

Diagnostic Trouble Code (DTC) table for radio system

Notes:

- *The following table lists all the malfunctions (stored as Diagnostic Trouble Codes, or DTCs) that can be recognized by the radio system and printed out by the VAG1551 Scan Tool (ST). The DTCs are listed in order according to their 5-digit numbers.*
- *The DTCs only appear on the print-out from the scan tool.*
- *Before replacing a component shown as faulty, check the wiring and connections to the component as well as Ground (GND) connections according to the wiring diagram.*
- *When a repair has been carried out, the DTC memory must always be checked again and then erased using the VAG1551 scan tool.*
- *Static and sporadic malfunctions are stored as DTCs in the DTC memory. If a malfunction occurs and persists for at least 2 seconds, it is identified as a static malfunction. If the malfunction does not occur again it is registered as a sporadic malfunction and "/SP" will appear at the right of the display.*
- *When the ignition is switched on, all existing malfunctions are automatically re-classified as sporadic malfunctions and will only be registered as static malfunctions if they still occur after testing.*
- *Sporadic malfunctions which no longer occur after 50 driving cycles (ignition on for at least 5 minutes, road speed of more than 30 km/h or 19 mph) are erased automatically.*

cardiagn.com

01-10

DTC **VAG1551 Scan Tool display**	**Possible cause**	**Corrective action**
00668 Battery Positive Voltage (B+) Term. 30 ◆ Signal too low	◆ Battery discharged or faulty ◆ Short circuit in vehicle electrical system	- Charge or replace battery. - Repair short circuit in vehicle electrical system.
00849 S Contact on Ignition Starter Switch ◆ Open circuit	◆ Ignition/starter switch -D- faulty ◆ Open circuit in wiring	- Replace ignition/starter switch -D-. - Trace malfunction using wiring diagram. ⇒ *Electrical Wiring Diagrams, Troubleshooting & Component Locations*
00850 Control Output Active, Radio Amplifier ◆ Short circuit to Ground	◆ Wiring damaged ◆ Active amplifier faulty	- Trace malfunction using wiring diagram. ⇒ *Electrical Wiring Diagrams, Troubleshooting & Component Locations* - Replace active amplifier.

cardiagn.com

01-11

DTC **VAG1551 Scan Tool display**	**Possible cause**	**Corrective action**
00852 Loudspeaker front ♦ Short circuit ♦ Open circuit	♦ Wiring damaged ♦ Front loudspeaker faulty ♦ Open circuit in wiring	- Trace malfunction using wiring diagram. ⇒ *Electrical Wiring Diagrams, Troubleshooting & Component Locations* - Replace faulty loudspeaker. - Repair open circuit.
00853 Loudspeaker rear ♦ Short circuit ♦ Open circuit	♦ Wiring damaged ♦ Rear loudspeaker faulty ♦ Open circuit in wiring	- Trace malfunction using wiring diagram. ⇒ *Electrical Wiring Diagrams, Troubleshooting & Component Locations* - Replace faulty loudspeaker. - Repair open circuit.

cardiagn.com

01-12

DTC **VAG1551 Scan Tool display**	**Possible cause**	**Corrective action**
00854 Output Radio Display Dash Panel Insert ♦ No signal	♦ Open circuit in wiring ♦ Instrument cluster combination processor faulty	- Trace malfunction using wiring diagram. ⇒ *Electrical Wiring Diagrams, Troubleshooting & Component Locations* - Replace faulty instrument cluster. ⇒ *Repair Manual, Electrical Equipment, Repair Group 90; removing and installing instrument cluster*
00855 Connection to CD Changer ♦ No signal	♦ Open circuit in wiring ♦ Voltage supply to CD changer unit interrupted ♦ CD changer unit -R41- faulty	- Trace malfunction using wiring diagram. ⇒ *Electrical Wiring Diagrams, Troubleshooting & Component Locations* - Check voltage supply to CD changer unit using wiring diagram. - Replace CD changer unit.

cardiagn.com

01-13

DTC **VAG1551 Scan Tool display**	**Possible cause**	**Corrective action**
00856 Radio Antenna ♦ Short circuit ♦ Open circuit	♦ Open circuit in wiring ♦ Short circuit in antenna wire	- Trace malfunction using wiring diagram. ⇒ *Electrical Wiring Diagrams, Troubleshooting & Component Locations* - Check antenna wire.
01044 Control Module incorrectly coded	♦ Radio not coded to match configuration in vehicle	- Code radio according to vehicle.
65535 Control Module Malfunctioning	♦ Radio faulty	- Replace radio.

cardiagn.com

01-14

Output Diagnostic Test Mode (scan tool function 03)

Notes:

- *The output Diagnostic Test Mode (DTM) may only be carried out with the vehicle stationary and the engine not running.*
- *Any malfunctions identified by the output Diagnostic Test Mode (DTM) must be traced and eliminated.*

The output DTM is used to test the loudspeaker wiring and the secondary display.

Carrying out output DTM

- Press buttons -0- and -3- to select "Output Diagnostic Test Mode" function 03.

Rapid data transfer **Q**
03 - Output Diagnostic Test Mode

Indicated on display

- Press -Q- button to confirm input.

Output Diagnostic Test Mode →
Speaker

Indicated on display

All loudspeakers will receive a brief electrical pulse (inaudible).

cardiagn.com

01-15

Note:

Any malfunctions (e.g. short circuits) that occur will be recorded as DTCs in DTC memory.

- Press → button.

Output Diagnostic Test Mode →

Outlet Radio display instrument panel insert

Indicated on display

"DISPLAY ... TEST" will appear on the secondary display in the instrument cluster.

- Press → button.

Output Diagnostic Test Mode →

End

Indicated on display

- Press → button (returns scan tool to "Select function XX" prompt).

Rapid data transfer **HELP**

Select function XX

Indicated on display

cardiagn.com

01-16

Erase DTC Memory (scan tool function 05)

Note:

DTC memory can be erased only after it has been checked (⇒ page 01-7). If DTC memory cannot be erased, again check DTC memory and repair any malfunctions.

Requirements

- DTC memory checked ⇒ page 01-7
- All malfunctions repaired

When DTC memory has been checked:

Rapid data transfer **HELP** **Select function XX**	Indicated on display

- Press buttons -0- and -5- to select "Erase DTC Memory" function 05.

cardiagn.com

01-17

Rapid data transfer **Q** **05 - Erase DTC Memory**	Indicated on display - Press -Q- button to confirm input.
Rapid data transfer → **DTC Memory is erased!**	Indicated on display DTC memory is now erased. - Press → button.
Rapid data transfer **HELP** **Select function XX**	Indicated on display
Attention! → **DTC Memory is not interrogated**	***Notes:*** ♦ *This message indicates an error in the test sequence.*
Rapid data transfer → **DTC Memory is not interrogated**	♦ *This message indicates an error in the test sequence.* ♦ *Adhere exactly to the test sequence: first check DTC memory, repair malfunctions as necessary, then erase DTC memory.*

cardiagn.com

01-18

End Output (scan tool function 06)

- Press buttons -0- and -6- to select "End Output" function 06.

Rapid data transfer **Q**
06 - End Output

Indicated on display

- Press -Q- button to confirm input.

Rapid data transfer **HELP**
Insert address word XX

Indicated on display

- Switch ignition off.
- Disconnect VAG1551 Scan Tool (ST) from Data Link Connector (DLC).

cardiagn.com

01-19

Code Control Module (scan tool function 07)

This function is used to code the radio for the following:

- Radio configuration
- Sound system
- Number of passive loudspeakers
- Country identification

Notes:

- *The coding procedure is used to set the various radio configuration options.*
- *The coding table only gives the combinations that are available for the Audi A4.*
- *The term "antenna with remote power supply" refers to active antennas (e.g. rear window antennas) which are powered via the HF cable.*
- *The coding must always correspond to the equipment installed in the vehicle.*

cardiagn.com

Coding procedure

Rapid data transfer	HELP
Select function XX	

Indicated on display

- Press buttons -0- and -7- to select "Code Control Module" function 07.

Rapid data transfer	Q
07 - Code Control Module	

Indicated on display

- Press -Q- button to confirm input.

Code Control Module	Q
Input code number XXXXX	06812

Indicated on display

- Input code number per coding table ⇒ page 01-22 .

Coding: 00017 (example)

- Country identification: 0 = standard
- Sound coordination: 0 = standard
- Number of passive loudspeakers: 0 = no passive loudspeakers (BOSE sound system)
- Sound system: 1 = BOSE sound system
- Radio configuration: 7 = radio system with CD changer unit and secondary display

- Press -Q- button to confirm input.

cardiagn.com

01-21

4B0035186A Radio D01 → **Coding 00017 WSC 06812**	Indicated on display (the control module identification and the coding that was input) - Press → button to end coding.
Rapid data transfer HELP **Select function XX**	Indicated on display - Press buttons -0- and -6- to select "End Output" function 06.
Rapid data transfer Q **06 - End Output**	Indicated on display - Press -Q- button to confirm input.

cardiagn.com

01-22

Radio coding table

5	4	3	2	1	← **Decimal places of byte coding on scan tool display**			
				7	**Radio configuration**			
						Antenna with remote power supply	CD changer unit	Secondary display
					1	X	-	-
					3	X	X	-
					5	X	-	X
					7	X	X	X
					X = component installed		- = not installed	

cardiagn.com

Radio coding table (cont'd)

5	4	3	2	1	← Decimal places of byte coding on scan tool display	
			1		**Sound system adjustment**	
						Type of adjustment
					0	Standard (no BOSE sound system)
					1	BOSE sound system
		0			**Number of passive loudspeakers**	
						Number and locations
					0	No passive loudspeakers (BOSE sound system)
					1	1 passive loudspeaker, front-left (BOSE with telephone)
					2	2 passive loudspeakers (front) and 2 active loudspeakers (rear)
					5	2 passive loudspeakers (front) and no active loudspeakers (rear)

cardiagn.com

01-24

Radio coding table (cont'd)

5	4	3	2	1	← Decimal places of byte coding on scan tool display	
	0				**Sound matching**	
					0	Standard
0					**Country identification**	
						Country
					0	Standard

cardiagn.com

Read Measuring Value Block (scan tool function 08)

Carrying out "Read Measuring Value Block" function 08

Rapid data transfer **HELP**	
Select function XX	

Indicated on display

- Press buttons -0- and -8- to select "Read Measuring Value Block" function 08.

Rapid data transfer **Q**	
08 - Read Measuring Value Block	

Indicated on display

- Press -Q- button to confirm input.

Read Measuring Value Block **HELP**	
Input display group number XXX	

Indicated on display

- Input display group number (from table ⇒ page 01-26) and press -Q- button to confirm input.

  The measuring value block which has been selected will appear in the standard format.

cardiagn.com

Summary of display groups

Display group No.	Indicated on display
001	1 = Speed signal from speedometer 2 = Battery Positive Voltage (B+), terminal 30 3 = Radio illumination dimming in % 4 = S-contact status
002	1 = Front loudspeakers 2 = Front loudspeakers status 3 = Rear loudspeakers 4 = Rear loudspeakers status
003	1 = Type of antenna 2 = Antenna 3 = Antenna status
004	1 = Active speaker control output 3 = Telephone

cardiagn.com

	4 = Telephone mute input status
005	1 = CD connection 2 = CD connection status
006	1 = Secondary display (in instrument cluster) 2 = Secondary display status

cardiagn.com

01-27

Display group 001

Read Measuring Value Block 1 → ◀ Indicated on display

0	12.3 V	60 %	ON
			S-contact status • Can be checked while measuring values are being displayed • Ignition key withdrawn: display reads "OFF" • S-contact reactivated: display reads "ON"
			Dimming level of radio illumination in percent (only with light "ON") • 0-99%
		Battery Positive Voltage (B+), terminal 30 (measurement taken after electrical filter)	
	Vehicle speed signal from speedometer • 0 or 1 (4 impulses per wheel revolution)		

cardiagn.com

01-28

Display group 002

Read Measuring Value Block 2 → ◀ Indicated on display

Front speaker	OK	Rear speaker	OK	
				Rear loudspeaker status • OK • Short circuit • Open circuit
			Rear loudspeakers	
		Front loudspeakers status • OK • Short circuit • Open circuit		
	Front loudspeakers			

cardiagn.com

01-29

Display group 003

Read Measuring Value Block 3 → ◀ Indicated on display

active Antenna OK

Antenna status

- OK
- Short circuit
- Open circuit

Antenna

Antenna type

- Passive
- Active (e.g. rear window antenna)

cardiagn.com

01-30

Display group 004

Read Measuring Value Block 4	→	◀ Indicated on display
0	Telephone	ON
		Telephone mute input status • Telephone in use = "ON" • Telephone switched off = "OFF"
		Telephone
Active amplifier control output status • 0 = Status OK • 1 = Short circuit to Ground (GND)		

cardiagn.com

01-31

Display group 005

Read Measuring Value Block 5 → ◀ Indicated on display

CD connection OK

CD connection status

- OK
- Not OK

CD connection

cardiagn.com

01-32

Display group 006

Read Measuring Value Block 6 → ◀ Indicated on display

Ext. Displ.	OK	
		Condition of secondary display • OK • Not OK
	Secondary display (in instrument cluster)	

cardiagn.com

Instrument cluster with long service life, On Board Diagnostic (OBD) (from m.y. 2000)

General information

Technical features of the instrument cluster

The instrument cluster is equipped with a service display which can process flexible data, that is, the instrument cluster evaluates various vehicle based service requirements on input quantities such as driveability or oil consumption.

The long service life is capable of reproducing the functions of the standard SRI, when the limits are set correctly. The limits are variable (in U.S. with set limits ⇒ Table ⇒ Page 01-80).

It is also possible to evaluate the oil temperature sensor. Adaptation channels in the VAG On Board Diagnostic (OBD) make this possible.

cardiagn.com

01-80

In countries where the standard Service Reminder Indicator (SRI) values are still used, such as the USA, the following constant adaptation values must be entered:

Table for Service Reminder Indicator values without long service life

Channel 42 (minimum mileage performance)	8000 miles
Channel 43 (maximum mileage performance)	8000 miles
Channel 44 (maximum time interval until next service)	365 days
Channel 45 (oil quality)	1

cardiagn.com

01-81

The Audi A4 instrument cluster is offered with a Midline version with Minicheck system and the Highline version with Driver Information System (DIS).

The instrument cluster in the Audi S4 is only offered with the Highline version with Driver Information System.

The speedometer contains an LCD display for the odometer and trip odometer.

A LCD display for LCD-clock/date is located in the tachometer.

The service reminder indicator is displayed in the center display.

The warning/ indicator lights are integrated in the speedometer and tachometer.

cardiagn.com

01-82

Details about the instrument cluster

⇒ *Operating instructions Audi A4 or Audi S4*

The instrument cluster is controlled by a microprocessor and has extensive On Board Diagnostic (OBD) capabilities. If malfunctions occur in any of the system components, corresponding Diagnostic Trouble Codes (DTC) are stored in the DTC memory of the instrument cluster. These can then be identified using the VAG1551 or VAG1552 Scan Tool (ST).

Note:

The description in this repair manual only refers to the VAG1551 Scan Tool (ST).

cardiagn.com

Malfunction message "dEF" on trip odometer display

If the control module in the instrument cluster detects a malfunction in its permanent memory, the letters "dEF" will appear on the trip odometer display.

- If "dEF" is indicated on display, replace instrument cluster ⇒ Page 90-27 .

Notes for replacing instrument cluster

- Do not disassemble instrument cluster.
- If necessary, instrument cluster should be replaced through the exchange loop.
- Fill out a damage report form and return together with faulty instrument cluster.
- Faulty units must always be returned in original packaging.
- The odometer and the Service Reminder Indicator (SRI) of the replacement instrument cluster can be adapted using the VAG1551 Scan Tool (ST) ⇒ Page 01-133 .

cardiagn.com

01-84

On Board Diagnostic (OBD), initiating program

Additional information

- Electrical Wiring Diagrams, Troubleshooting & Component Locations
- Service tools handbook
- Parts catalog

cardiagn.com

01-85

Safety precautions

If special testing equipment is required during road test, note the following:

WARNING!

- ***Adhere to the following to avoid risk of accident during measurements while driving and road tests:***

- ***Only use VAS5051 or VAG1551 to read out measuring value blocks. The tester must be secured to the rear seat and operated from there by a second technician.***

To reduce the risk of personal injury and/or damage of electric and electronic components, always observe the following:

- Always switch ignition off before connecting or disconnecting test/measurement tools.

- It is possible that the control module will recognize a malfunction and store a DTC during some tests. After completing all tests and repairs, DTC memory should therefore be checked and erased if necessary.

- Always switch ignition off before disconnecting

cardiagn.com

or connecting battery. Failure to do so may damage a control module.

cardiagn.com

Test requirements:

- Check fuse for function according to wiring diagram.
- Always check coding of instrument cluster according to code table ⇒ Page 01-112 .
- Connect VAS5051 tester or VAG1551 scan tool ⇒ Page 01-241 .
- Switch on ignition.

Notes:

- *If nothing is indicated on display, check voltage supply for VAG 1551 scan tool according to wiring diagram.*
- *Additional instructions can be called up via the HELP button on the scan tool.*
- *The → button is used for advancing through the program sequence.*
- *An incorrect entry can be canceled using the C button.*

cardiagn.com

- *Function 00 "Automatic test sequence" can be performed in operating mode 1 "Rapid data transfer". This automatically checks all control modules installed in the vehicle.*

cardiagn.com

01-87

- Switch on ignition.

- Switch printer on via the PRINT button (indicator lamp in button lights up).

- Press button -1- to select "Rapid data transfer" operating mode 1.

Rapid data transfer **HELP**

Insert address word XX

Indicated on display

Address word: 17

- Press buttons -1- and -7-.

Rapid data transfer **Q**

17 - Instrument cluster

Indicated on display:

- Press -Q- button to confirm input.

cardiagn.com

01-88

8D0920830... B5-INST. Clstr M73 D08 →	
Coding 02242	**WSC 06812**

Indicated on display after approx. 5 seconds:

- 8D0920830...: Part number of instrument cluster (see also parts catalog)
- B5-INSTRUMENT CLUSTER component marking
- VDO: Manufactured by VDO (M73 : Manufactured by Magneti Marelli)
- D08: Software version of instrument cluster
- Coding 02242: Coding of instrument cluster
- WSC 06812: dealership number

Note:

Check code number according to coding table ⇒ *Page 01-112* .

- Press → button.

cardiagn.com

01-89

Rapid data transfer	**HELP**
Control module does not answer	

Rapid data transfer	**HELP**
Malfunction in communication setup	

Rapid data transfer	**HELP**
K-wire does not switch to Ground	

Rapid data transfer	**HELP**
K-wire does not switch to Plus	

If one of these messages is displayed, perform trouble shooting according to troubleshooting diagnostic.

⇒ *Electrical Wiring Diagrams, Troubleshooting & Component Locations*

cardiagn.com

Rapid data transfer	**HELP**
Select function XX	

Indicated on display

- Pressing the HELP button will print out an overview of all of the possible functions.

On Board Diagnostic (OBD) functions

The following functions are possible:

02 - Check DTC Memory ⇒ Page 01-91 .

03 - Output Diagnostic Test Mode ⇒ Page 01-101 .

05 - Erase DTC Memory ⇒ Page 01-107 .

06 - End Output ⇒ Page 01-109 .

07 - Code Control Module ⇒ Page 01-110 .

08 - Read Measuring Value Block ⇒ Page 01-114 .

10 - Adaptation ⇒ Page 01-133 .

cardiagn.com

Check DTC Memory (scan tool function 02)

Note:

The displayed DTC information is updated only when initiating OBD or with "Erase DTC Memory" function 05.

- Switch printer on via the PRINT button (indicator lamp in button lights up).

Rapid data transfer **HELP** **Select function XX**	Indicated on display

- Press buttons -0- and -2-. This selects "Check DTC memory", function 02.

Rapid data transfer **Q** **02 - Check DTC memory**	Indicated on display

- Press -Q- button to confirm input.

X DTC recognized!	The number of stored malfunctions appears in the display.

The stored malfunctions are displayed and printed out one after the other.

- Check print-out against DTC table and repair malfunction ⇒ Page 01-93 .

cardiagn.com

01-92

No DTC recognized! →	
Rapid data transfer **HELP** **Select function XX**	

- If "No DTC recognized!" is displayed, the program will return to "Select function XX" after the →button is pressed.
- Indicated on display

  If something else is displayed:

  ⇒ *Operating instructions of Scan Tool (ST)*

  - End Output (function 06) ⇒ Page 01-109
  - Switch off ignition and disconnect diagnostic connector.

cardiagn.com

01-93

Diagnostic Trouble Code (DTC) table for instrument cluster

Notes:

- *The following table lists all malfunctions that can be recognized by the instrument cluster and printed out by the VAG1551 scan tool. The malfunctions are listed in order according to their 5-digit numbers.*
- *DTC numbers appear only on the print-out.*
- *Before replacing a component shown as faulty, check the wiring and connections to the component as well as the Ground (GND) connections according to wiring diagram.*
- *After repairs and function test of the system, DTC memory must always be checked again using the VAG1551 scan tool and erased.*
- *DTC memory stores all static and sporadic malfunctions: If a malfunction occurs and persists for at least 2 seconds, it is identified as a static malfunction (outside temperature malfunction at least 60 seconds, coolant temperature sensor only after at least 30 minutes with engine running). If a malfunction does not occur again, it is registered as sporadic. "/SP" will appear at right on scan tool display.*
- *When the ignition is switched on, all existing malfunctions are automatically re-classified as sporadic malfunctions and will only register as static malfunctions if they still occur after testing.*
- *Sporadic malfunctions which no longer occur during 50 driving cycles (ignition on at least 5 minutes, vehicle speed 30 km/h) are erased automatically.*

cardiagn.com

VAG 1551 scan tool display	Possible causes	Corrective action
00562 Oil level thermal sensor -G266- ♦ Open circuit/short circuit to B+ ♦ Short circuit to Ground ♦ Implausible signal	♦ Open circuit or short circuit between oil level thermal sensor -G266- and instrument cluster ♦ Oil level thermal sensor -G266- faulty -G266- faulty ♦ Electronic part in sensor faulty	- Locate malfunction using wiring diagram - Repair open circuit - Oil level thermal sensor -G266- faulty Replace -G266-
00667 Outside temperature signal ♦ Open circuit/short circuit to B+ ♦ Short circuit to Ground ♦ implausible signal (is indicated incorrectly and must be disregarded)	♦ Open circuit or short circuit between instrument cluster and A/C control head -E87- ♦ A/C control head -E87- faulty	- Locate malfunction using wiring diagram - Repair open circuit - A/C system OBD ⇒ *Repair Manual, Heating & AirConditioning, Repair Group 01*
00668 Vehicle voltage, terminal 30 ♦ Voltage supply too low	♦ Battery was disconnected ♦ Open circuit or short circuit to a control module or sensor	- Perform automatic test sequence in order to determine the control module responsible for the DTC ⇒check voltage supply of malfunctioning control module - Locate malfunction using wiring diagram

cardiagn.com

		- Repair open circuit - Erase DTC memory and observe vehicle further

cardiagn.com

01-95

VAG 1551 scan tool display	Possible causes	Corrective action
00771 Sender for fuel gauge -G- ♦ Open circuit/short circuit to B+ ♦ Short circuit to Ground	♦ Open circuit or short circuit between sender for fuel gauge -G- (Front Wheel Drive/All Wheel Drive) and instrument cluster ♦ Sender for fuel gauge -G- (Front Wheel Drive/All Wheel Drive) is faulty	- Locate malfunction using wiring diagram - Repair open circuit - - Replace Sender for fuel gauge -G- (Front Wheel Drive/All Wheel Drive)
00779 Outside air temperature sensor -G17- ♦ Open circuit/short circuit to B+ ♦ Short circuit to Ground	♦ Open circuit or short circuit ♦ Outside air temperature sensor -G17- faulty	- Locate malfunction using wiring diagram - Repair open circuit - Replace outside air temperature sensor -G17-
01039 Engine Coolant Temperature (ECT) sensor -G2- ♦ Open circuit/short circuit to B+ ♦ Short circuit to Ground	♦ Open circuit or short circuit between Engine Coolant Temperature (ECT) sensor -G2- and instrument cluster ♦ Engine Coolant Temperature (ECT) sensor -G2- faulty	- Locate malfunction using wiring diagram - Repair open circuit - Replace Engine Coolant Temperature (ECT) sensor -G2-

cardiagn.com

VAG 1551 scan tool display	Possible causes	Corrective action
01300 Control module for navigation with CD mechanism -J401- ♦ no communication	♦ Open circuit or short circuit ♦ Incorrect control module, that is, control module does not support CAN ♦ A control module that supports CAN is not indicated with a "1" in measuring value block ⇒ Page 01-132 If control module for navigation with CD-mechanism -J401- is not displayed with "1" ♦ Adaptation for the instrument cluster was not performed properly	- Locate malfunction using wiring diagram - Repair open circuit - Replace control module with a control module that supports CAN - Select adaptation channel 62 and input the correct adaptation value ⇒ Page 01-190 .
01304 Radio ♦ no communication	♦ Open circuit or short circuit ♦ Incorrect control module, that is, control module does not support CAN ♦ A control module that supports CAN is not indicated with a "1" in measuring value block ⇒ Page 01-132 . ♦ Adaptation for the instrument cluster was not performed properly	- Locate malfunction using wiring diagram - Repair open circuit - Replace control module with a control module that supports CAN - Select adaptation channel 62 and input the correct adaptation value ⇒ Page 01-190 .

cardiagn.com

VAG 1551 scan tool display	Possible causes	Corrective action
01311 Data-BUS information ♦ faulty ♦ in single wire mode	♦ Open circuit or short circuit to a control module in information data-BUS ♦ Incorrect control module in information data-BUS, that is, control module does not support CAN. ♦ A control module that supports CAN is not indicated with a "1" in measuring value block ⇒ Page 01-132 . ♦ During adaptation of the instrument cluster, a control module that supports CAN was not concurrently adapted ♦ Data bus is operating on only one wire (this can cause EMV problems)	- Locate malfunction using wiring diagram - Repair open circuit - Replace control module with a control module that supports CAN - Select adaptation channel 62 and input the correct adaptation value ⇒ Page 01-190 . - Check data exchange ⇒ Page 01-196 .

cardiagn.com

VAG 1551 scan tool display	Possible causes	Corrective action
01312 Powertrain data-BUS ♦ faulty	♦ Open circuit or short circuit to a control module in powertrain data-BUS ♦ A control module in the powertrain data-BUS is incorrect, that is, control module does not support CAN ♦ A control module that supports CAN is not indicated with a "1" in measuring value block ⇒ Page 01-129 . ♦ During adaptation of the instrument cluster, a control module that supports CAN was not concurrently adapted	- Locate malfunction using wiring diagram - Repair open circuit - Replace incorrect control module with a control module that supports CAN - Select adaptation channel 60 and input the correct adaptation value ⇒ Page 01-183 .
01314 Engine Control Module (ECM) ♦ no communication	♦ Open circuit or short circuit ♦ Incorrect control module, that is, control module does not support CAN ♦ A control module that supports CAN is not indicated with a "1" in measuring value block ⇒ Page 01-129 If Engine Control Module (ECM) is not displayed with "1" ♦ Adaptation for the instrument cluster was not performed properly	- Locate malfunction using wiring diagram - Repair open circuit - Replace control module with a control module that supports CAN - Select adaptation channel 60 and input the correct adaptation value ⇒ Page 01-183 .

cardiagn.com

VAG 1551 scan tool display	Possible causes	Corrective action
01315 Transmission Control Module (TCM) ◆ no communication	◆ Open circuit or short circuit ◆ Incorrect control module, that is, control module does not support CAN ◆ A control module that supports CAN is not indicated with a "1" in measuring value block ⇒ Page 01-129 . ◆ Adaptation for the instrument cluster was not performed properly	- Locate malfunction using wiring diagram - Repair open circuit - Replace control module with a control module that supports CAN - Select adaptation channel 60 and input the correct adaptation value ⇒ Page 01-183 .
01320 Climatronic control module -J255- ◆ no communication	◆ Open circuit or short circuit ◆ Incorrect control module, that is, control module does not support CAN ◆ A control module that supports CAN is not indicated with a "1" in measuring value block ⇒ Page 01-130 If climatronic control module -J522- is not displayed with "1" ◆ Adaptation for the instrument cluster was not performed properly	- Locate malfunction using wiring diagram - Repair open circuit - Replace control module with a control module that supports CAN - Select adaptation channel 60 and input the correct adaptation value ⇒ Page 01-183 .

cardiagn.com

VAG 1551 scan tool display	Possible causes	Corrective action
01336 Comfort system data-BUS ♦ faulty ♦ in single wire mode	♦ Open circuit or short circuit to a control module in comfort system data-BUS ♦ A control module in the comfort system data-BUS is incorrect, that is, the control module does not support CAN ♦ A control module that supports CAN is not indicated with a "1" in measuring value block ⇒ Page 01-131 . ♦ During adaptation of the instrument cluster, a control module that supports CAN was not concurrently adapted ♦ Data bus is operating on only one wire (this can cause EMV problems)	- Locate malfunction using wiring diagram - Repair open circuit - Replace control module with a control module that supports CAN - Select adaptation channel 61 and input the correct adaptation value ⇒ Page 01-187 . - Check data exchange ⇒ Page 01-196 .
01402 Data wire from navigation ♦ Unplausible signal	♦ Open circuit in clock, enable or data wire ♦ Problem in interface between navigation and instrument cluster ♦ Disturbance due to electromagnetic radiation inside and outside vehicle	- Check cabling of data wires for damage - Check for cause of electromagnetic disturbance ⇒ *Repair Manual, Radio, Telephone,Navigation, Repair Group 91* - Repair open circuit
65535 Control module	Instrument cluster faulty	- Replace instrument cluster ⇒ Page 90-27 .

cardiagn.com

faulty		

cardiagn.com

01-101

Output Diagnostic Test Mode (scan tool function 03)

Notes:

- Output Diagnostic Test Mode is only possible when vehicle is stationary and engine is not running!
- If malfunctions are found during output Diagnostic Test Mode, determine cause of malfunction and replace instrument cluster if necessary.

During the "output Diagnostic Test Mode" function, all actuators that are installed in the instrument cluster and coded are activated in sequence.

- There is also a simultaneous parallel sweep through the indicator range of all analog display instruments (Engine Coolant Temperature (ECT) gauge, tachometer, speedometer, fuel gauge)
- Activation of warning lamps
- Activation of seat belt warning light

cardiagn.com

- Activation of chime
- Segment test of driver information system, LCD clock/date display, and LCD trip odometer and daily odometer.

cardiagn.com

01-102

- Test of instrument cluster lighting, including dimmer

Note:

Test can only be performed with lights switched on.

Initiating output Diagnostic Test Mode:

Rapid data transfer **HELP**
Select function XX

Indicated on display

- Press buttons -0- and -3-. This selects "output Diagnostic Test Mode (DTM)", function 3.

Rapid data transfer **Q**
03 - Output Diagnostic Test Mode

Indicated on display:

- Press -Q- button to confirm input. Output Diagnostic Test Mode for analog displays is initiated immediately.

Output Diagnostic Test Mode →
Analog displays

Indicated on display:

cardiagn.com

01-103

The following tests are performed simultaneously:

- Sweep of coolant temperature needle through entire display range
- Sweep of tachometer needle through entire display range
- Sweep of speedometer needle through entire display range
- Sweep of fuel gauge needle through entire display range

After sweep of display ranges, the following fixed values are displayed:

Engine Coolant Temperature (ECT) gauge:	$^1/_2$
Tachometer:	3000 RPM
Speedometer:	62 MPH
Fuel gauge:	$^1/_2$

Note:

Switching ignition on and off will stop any needle

cardiagn.com

sweep that has started.

- Press → button.

cardiagn.com

01-104

Output Diagnostic Test Mode →

Warning lamp test for instrument cluster

Indicated on display:

All lamps are switched on that are activated by the processor.

- Press → button.

Output Diagnostic Test Mode →

Seat belt warning light -K19

Indicated on display:

Seat belt warning light is activated.

Note:

Depending on options/versions, the seat belt warning light may be activated by the control module coding, that is, if this actuator test is omitted, the warning light is not active.

- Press → button.

cardiagn.com

01-105

Output Diagnostic Test Mode →

Gong

Indicated on display:

Chime is activated and sounds the entire time.

- Press → button.

Output Diagnostic Test Mode →

Segment test

Indicated on display:

All display points of the driver information display, the LCD clock/date indicator and the LCD odometer and daily odometer are activated.

- Press → button.

cardiagn.com

01-106

Output Diagnostic Test Mode → **Illumination/switch and instruments**	⮜	Indicated on display: Instrument cluster illumination is automatically set twice to bright and dark and then switched to maximum illumination (bright). - Press → button.
Output Diagnostic Test Mode → **END**	⮜	Indicated on display: - Press → button to end output Diagnostic Test Mode. The tester returns to the "Select function" mode.
Rapid data transfer HELP **Select function XX**	⮜	Indicated on display

cardiagn.com

Erase DTC Memory (scan tool function 05)

Note:

If DTC memory cannot be erased, check DTC memory again and repair malfunction.

Requirements

- DTC memory checked ⇒ Page 01-91 .
- All malfunctions repaired.

After successful DTC memory check:

Rapid data transfer **HELP**	
Select function XX	

Indicated on display

- Press buttons -0- and -5-. This selects "Erase DTC memory", function 05.

cardiagn.com

01-108

Rapid data transfer **Q**
05 Erase DTC memory

Indicated on display

- Press -Q- button to confirm input.

Rapid data transfer →
DTC memory is erased!

Indicated on display

DTC memory is erased.

- Press →button.

Rapid data transfer **HELP**
Select function XX

Indicated on display

Notes:

CAUTION!
DTC memory was not checked

- *Test sequence is faulty if this message is displayed.*

Rapid data transfer →
DTC memory was not checked

- *Test sequence is faulty if this message is displayed.*

Follow test sequence exactly: first check DTC memory, repair malfunction (s) if necessary, then erase.

cardiagn.com

01-109

End Output (scan tool function 06)

Rapid data transfer **HELP** **Select function XX**	Indicated on display - Press buttons -0- and -6-. This selects "End Output", function 06.
Rapid data transfer **Q** **06 End output**	Indicated on display - Press -Q- button to confirm input.
Rapid data transfer **HELP** **Input address word XX**	Indicated on display - Switch off ignition. - Disconnect harness connectors for the VAG1551 scan tool

cardiagn.com

01-110

Code Control Module (scan tool function 07)

Using this function, the instrument cluster can be coded as follows:

- Options
- Country versions
- Number of cylinders
- Engine versions

Notes:

- *Coding adjusts the various combination possibilities of the on board computer according to engine type, cylinder count and country version.*
- *Only the appropriate combinations for the Audi A4 or Audi S4 are mentioned in the coding table.*

cardiagn.com

Initiating coding

Rapid data transfer	HELP
Select function XX	

Indicated on display

- Press buttons -0- and -7-. This selects "Code Control Module", function 07.
- Press -Q- button to confirm input.

Rapid data transfer	Q
07 Code control module	

Indicated on display

- Press -Q- button to confirm input.

Code control module	
Input code number XXXXX	(0-32000)

Indicated on display:

- Input code number using coding table ⇒ Page 01-112 . Example: 02242

02	Seat belt warning active
2	Country version US
4	4-cylinder
2	gas engine

Code control module	Q
Input code number 02242	(0-32000)

Indicated on display:

- Press -Q- button to confirm input.

8D0920830... B5-INST. Clstr. M73 D08	→
Coding 02242	WSC 06812

Indicated on display:

- Press → button.

cardiagn.com

01-112

Coding table:

XX				Optional equipment/transmission version
00				No additional equipment
02				Seat belt warning active
16				Navigation I and II
	X			Country version
	0			Germany (D)
	1			RdW Left Hand Drive
	2			USA (US)
	3			Canada (CDN)
	4			Great Britain (GB)
	5			Japan (JP)
	6			Saudi Arabia (SA)
	7			Australia (AUS)
	8			RdW Right Hand Drive
	9			JP Right Hand Drive (RHD) vehicles

cardiagn.com

Note:

Navigation I is the first generation navigation system in center display. Navigation II is the navigation system with the monitor in the center console.

cardiagn.com

01-113

		X		Cylinder count
		4 6		4-cylinder 6-cylinder
			X	Engine versions
			0 2 4	TDI-engine gas engine Turbo-engine

Notes:

- *Coding can be modified to allow for various combinations of optional equipment, depending on what is installed in the vehicle.*
- *If vehicle is equipped with more than one item of optional equipment and/or transmission variant that needs to be coded, the overall coding will be the total of the individual coding numbers.*

Example:

- Seat belt warning active and navigation I 02 + 16 = 18

cardiagn.com

Read Measuring Value Block (scan tool function 08)

Initiating "Read Measuring Value Block"

Rapid data transfer **HELP** **Select function XX**	Indicated on display - Press buttons -0- and -8-. This selects "Read measuring value block", function 08. - Press -Q- button to confirm input.
Rapid data transfer **Q** **08 - Measured value block**	Indicated on display - Press -Q- button to confirm input.
Read measured value block **Input display group number XXX**	Indicated on display: - Enter display group number (from table ⇒ Page 01-115) and press -Q- button to confirm input.

The selected measuring value block is now displayed in standard form.

cardiagn.com

01-115

Display group overview:

Display group number	**Indicated on display**
001	1 = Speed 2 = Engine RPM 3 = Oil pressure switch 4 = Time
002	1 = Trip odometer 2 = Fuel gauge 3 = Tank sensor 4 = Outside air temperature
003	1 = Coolant temperature
010	1 = Channel 30 2 = Adaptation tank sensor 3 = Channel 9 4 = Trip odometer
011	1 = Channel 4

cardiagn.com

	2 = Language version 3 = Channel 3 4 = Consumption display

cardiagn.com

01-116

Display group number	**Indicated on display**
012	1 = Channel 40 2 = distance since service 3 = Channel 41 4 = Time since service
013	1 = Channel 42 2 = Minimum value miles 3 = Channel 43 4 = Maximum value miles
014	1 = Channel 44 2 = Max. time interval 3 = Unassigned 4 = Unassigned
015	1 = Channel 45 2 = Oil quality 3 = Channel 46

cardiagn.com

	4 = Total consumption quantity

cardiagn.com

01-117

Display group number	**Indicated on display**
050	1 = Trip odometer 2 = Engine RPM 3 = Oil temperature 4 = Coolant temperature
125	1 = Engine 2 = Transmission 3 = ABS 4 = ADR
126	1 = A/C
130	1 = Tire pressure 2 = Auxiliary heater 3 = Unassigned 4 = Parking assistance
140	1 = Radio 2 = Telephone 3 = Navigation

cardiagn.com

	4 = Telematic (Tele-data-processing)

cardiagn.com

01-118

Notes:

- *For an instrument cluster replacement, data from display groups 10...15 must be printed out.*
- *Measuring value blocks 125 and 126 indicate the participants in the powertrain data-BUS.*
- *Measuring value block 130 indicates the participants in the comfort system databus.*
- *Measuring value block 140 indicates the participants in the information data-BUS*
- *Display will always indicate the actual values obtained from the sensors. The values which appear on the instrument cluster are filtered and may be different.*
- *If the actual engine coolant temperature is between 80 °C and 100 °C, instrument cluster will always show 90 °C.*

cardiagn.com

01-119

Measuring value block 001

Read Measuring Value Block 1 → ◀Indicated on display:

30 MPH	2400 RPM	Oil p2 <min.	12: 20 h
			Time
		Oil pressure switch 2 • Oil p2 < min. • Oil p2 OK	
		Engine speed (RPM) • 0 - 9990 RPM	
	Speed • 0 - 187 MPH		

cardiagn.com

01-120

Measuring value block 2

Read Measuring Value Block 2 → ◀Indicated on display:

6256 mi 43 l 82 Ohm 23.0 ° C

Outside air temperature

- -40 to +70 ° C

Tank sensor

- approx. 280 Ohm (empty) ... approx. 40 Ohm (full)

Fuel gauge

- 0 - 100 1

Display value of trip odometer

cardiagn.com

01-121

Measuring value block 3

Read Measuring Value Block 3 → ◀Indicated on display:

85.0 ° C

Coolant temperature

• 50 - 130 ° C

cardiagn.com

01-122

Measuring value block 10

Read Measuring Value Block 10 → ◀Indicated on display:

Channel 30	128	Channel 9	626 mi
			Input value for adaptation of odometer
			Adaptation channel for odometer
		Factory adjusted adaptation value	
	Adaptation channel of fuel gauge sender resistance range		

Note:

If the value "128" in display field 2 was changed due to a customer complaint, the changed value must be transferred when replacing instrument cluster.

cardiagn.com

01-123

Measuring value block 11

Read Measuring Value Block 11 → ◀Indicated on display:

Channel 4	2	Channel 3	100
			Factory adjusted adaptation value
		Adaptation channel of fuel gauge	
		Selected language • 1 is German • 2 is English	
	Adaptation channel for language version of driver information display		

Note:

If the value "100" in display field 4 was changed due to a customer complaint, the changed value must be transferred when replacing instrument cluster.

cardiagn.com

01-124

Measuring value block 12

Read Measuring Value Block 12 → ◀Indicated on display:

Channel 40	8	Channel 41	10	
				Time expired • For example, 10 means 10 days
			Adaptation channel for time since service	
		Driven miles • 8 means 800 miles		
	Adaptation channel for distance driven since service			

cardiagn.com

01-125

Measuring value block 13

Read Measuring Value Block 13		→	◀Indicated on display:
Channel 42	8	Channel 43	8
			Maximum mileage • 8 means 8000 miles[1)]
		Adaptation channel for maximum mileage	
	Minimum mileage performance[2)] • 8 means 8000 miles[1)]		
	Adaptation channel for minimum mileage		

Note:

[1)] The currently valid specifications can be found in the "Maintenance" book.

⇒ *Repair Manual, Maintenance*

[2)] For USA-vehicles: For instrument cluster of the manufacturer Marelli, the starting value (first value of remaining distance without calculating) is set to 8000 miles. For instrument clusters of the manufacturer VDO, the starting value is set to 8100 miles. The 100 miles which are displayed in excess, are compensated during driving. For vehicles with 1.8 Liter Turbo engine, the starting value of 5000 is set. For both manufacturers 8000 or 8100 miles is displayed anyway. The damper action also occurs from the actual remaining interval during driving operation.

cardiagn.com

01-126

Measuring value block 14

Read Measuring Value Block 14 → ◀Indicated on display:

Channel 44	365	
		Maximum time interval • 365 means 365 days/1 year[1)]
	Adaptation channel for maximum time interval	

Note:

[1)] The currently valid specifications can be found in the "Maintenance" book.

⇒ *Repair Manual, Maintenance*

cardiagn.com

01-127

Measuring value block 15

Read Measuring Value Block 15		→	◀Indicated on display:
Channel 45	1	Channel 46	300
			Total consumption quantity • 300 means 300 liters
		Adaptation channel for the total consumption quantity (gasoline engines only)	
	Oil quality • Input of 1 to 4 possible [1)] • The "1" is entered in the USA		
	Adaptation channel for oil quality		

Notes:

- *[1)] The currently valid specifications can be found in the "Maintenance" book.*

  ⇒ *Repair Manual, Maintenance*

- *Oil quality must be re-adapted after every service.*

cardiagn.com

01-128

Measuring value block 50

Read Measuring Value Block 50 → ◀Indicated on display:

6256 mi 2400 RPM 99 ° C 85.0 ° C

Coolant temperature

- 50 - 130 ° C

Oil temperature

Engine speed (RPM)

- 0 - 9990 RPM

Display value of trip odometer

cardiagn.com

01-129

Measuring value block 125

Read Measuring Value Block 125 → ◀Indicated on display:

Engine 1 Transmission 1

ADR - Display field for connecting powertrain data-BUS

- 1 - means the ADR control module is a participant in the powertrain data-BUS
- empty display field indicates ADR control module is not a participant in the powertrain data-BUS

ABS - Display field for connecting powertrain data-BUS

- 1 - means the ABS control module is a participant in the powertrain data-BUS
- empty display field indicates ABS control module is not a participant in the powertrain data-BUS

Transmission - Display field for connecting powertrain data-BUS

- 1 - means the Transmission Control Module (TCM) is a participant in the powertrain data-BUS
- empty display field indicates Transmission Control Module (TCM) is not a participant in the powertrain data-BUS

Engine - Display field for connecting powertrain data-BUS

- 1 - means the Engine Control Module (ECM) is a participant in the powertrain data-BUS

cardiagn.com

- empty display field indicates Engine Control Module (ECM) is not a participant in the powertrain data-BUS

cardiagn.com

01-130

Measuring value block 126

Read Measuring Value Block 126	→	◀Indicated on display:
A/C 1		
		A/C - Display field for connecting powertrain data-BUS • 1 - means the A/C control module is a participant in the powertrain data-BUS • empty display field indicates A/C Control Module is not a participant in the powertrain data-BUS

cardiagn.com

01-131

Measuring value block 130

Read Measuring Value Block 130 → ◀Indicated on display:

Parking assistance - display field for connecting comfort system data-BUS.

Connection

- 1- means the parking assistance control module is a participant in the comfort system data-BUS
- empty display field means the parking assistance control module is not a participant in the comfort system data-BUS

Auxiliary heater - display field for connecting the comfort system data-BUS

- 1- means the auxiliary heater control module is a participant in the comfort system data-BUS
- empty display field means the auxiliary heater control module is not a participant in the comfort system data-BUS

Tire pressure - display field for connecting the comfort system data-BUS

- 1- means the tire pressure control module is a participant in the comfort system data-BUS
- empty display field means the tire pressure control module is not a participant in the comfort system data-BUS

cardiagn.com

cardiagn.com

01-132

Measuring value block 140

Read Measuring Value Block 140	→	◀Indicated on display:

Telematic - Display field for connecting information data-BUS

- 1 - means the Telematic control module is a participant in the information data-BUS
- empty display field indicates Telematic control module is not a participant in the information data-BUS

Navigation - Display field for connecting information data-BUS

- 1 - means the navigation control module is a participant in the information data-BUS
- empty display field indicates navigation control module is not a participant in the information data-BUS

Telephone - Display field for connecting information data-BUS

- 1 - means the telephone control module is a participant in the information data-BUS
- empty display field indicates telephone control module is not a participant in the information data-BUS

Radio - Display field for connecting information data-BUS

- 1 - means the radio control module is a participant in the information data-BUS

cardiagn.com

- empty display field indicates radio control module is not a participant in the information data-BUS

cardiagn.com

Adaptation (scan tool function 10)

Individual functions are called up by entering the appropriate adaptation channel numbers (listed in the adaptation table ⇒ Page 01-134).

Notes:

- *Using measuring value blocks 10, 11, 12 and 15, the values that need to be transferred to the new instrument cluster can be read out before replacement.*
- *Adaptation channels 42, 43, and 44 (see measuring value blocks 013 and 014 ⇒ Page 01-125 and ⇒ Page 01-126) must be adapted according to the oil quality (measuring value block 15 ⇒ Page 01-127).*
- *Adaptation channels 60, 61, and 62 are only needed when the instrument cluster communicates with the corresponding BUS system..*
- *Measuring value blocks 125 and 126 ⇒ Page 01-129 and ⇒ Page 01-130 indicate the components that are part of the powertrain data-BUS.*
- *Measuring value block 130 ⇒ Page 01-131*

cardiagn.com

indicates the components that are part of the comfort system data-BUS.

- *Measuring value block 140 ⇒ Page 01-132 indicates the components that are part of the information data-BUS.*

cardiagn.com

Adaptation table:

Adaptation channel	Adaptation function
02	Resetting SRI after service ⇒ Page 01-136
03	Adaptation of fuel gauge ⇒ Page 01-140
04	Language version of driver information display ⇒ Page 01-143
09	Odometer ⇒ Page 01-148
18	Adaptation of auxiliary heater ⇒ Page 01-152
30	Adaptation of fuel gauge sender resistance range ⇒ Page 01-155
35	Adaptation of engine speed threshold ⇒ Page 01-158
40	Adaptation for distance driven since service ⇒ Page 01-161
41	Adaptation for time since service ⇒ Page 01-164
42	Adaptation for minimum mileage performance ⇒ Page 01-167
43	Adaptation for maximum mileage performance ⇒ Page 01-170
44	Adaptation for maximum time interval ⇒ Page 01-173
45	Adaptation for oil quality ⇒ Page 01-176
46	Adaptation for total consumption quantity (only gasoline engines) ⇒ Page 01-179
60	Adaptation powertrain data-BUS ⇒ Page 01-181
61	Adaptation comfort system data-BUS ⇒ Page 01-185
62	Adaptation information data-BUS ⇒ Page 01-188

cardiagn.com

Initiating "Adaptation" function 10

Rapid data transfer **HELP** **Select function XX**	Indicated on display - Press buttons -1- and -0-. This selects "Adaptation", function 10. - Press -Q- button to confirm input.
Rapid data transfer **Q** **10 - Adaptation**	Indicated on display - Press -Q- button to confirm input.
Adaptation **Input channel number XX**	Indicated on display: - Enter desired adaptation channel (adaptation table ⇒ Page 01-134). - Press -Q- button to confirm input.

Note:

After changing an adaptation value or ending an adaptation channel, "Adaptation" function 10 must be performed again before selecting another adaptation channel.

cardiagn.com

01-136

Resetting SRI after service

Rapid data transfer **HELP**	
Select function XX	

Indicated on display

- Press -1- and -0- and confirm by pressing the -Q- button.

Rapid data transfer **Q**	
10 - Adaptation	

Indicated on display

- Press -Q- button to confirm input.

Adaptation	
Input channel number XX	

Indicated on display:

- Press buttons -0- and -2-.
- Press -Q- button to confirm input.

Notes:

- *The Service Reminder Indicator (SRI) is used to remind the driver when a service is necessary. Indication is in center display.*
- *Service reminder appears 1 month or 1200 miles before service limit is reached. Resolution is 100 miles. Example for display: After a total driving distance of 7000 miles, "SERVICE IN 1000 miles" is indicated.*

cardiagn.com

01-137

- *The remaining distance to service can be checked via the menu in center display by pressing the clock set button once.*

- *When a service event arrives, the text information appears in the center display for 5 seconds when ignition is switched on. It is shown after the note for automatic transmission and a target input for navigation (if applicable). Display: "SERVICE".*

- *The currently valid specifications can be found in the "Maintenance" book.*

⇒ *Repair Manual, Maintenance*

- *Data version of instrument cluster* ⇒ *Page 01-88* .

- *Channels 40, 41, and 46, which display the dynamic values of the service event are set to "0" automatically.*

cardiagn.com

01-138

Channel 2 Adaptation 1 →

< - 1 3- >

Indicated on display: Service event is displayed

1 - means service is active, this means that "SERVICE!" is displayed in the instrument cluster.

- Press → button.

Channel 2 Adaptation 1

Input adaptation value XXXXX

Indicated on display:

Service event is reset using the following adaptation values:

Adaptation value	Service event
00000	Reset

- Using the keypad enter the appropriate adaptation value (00000) to erase the service.
- Press -0- button five times.

cardiagn.com

01-139

Channel 2 Adaptation 1 **Q**

Input adaptation value 00000

Indicated on display:

- Press -Q- button to confirm input.

Channel 2 Adaptation 0 **Q**

< - 1 3- >

Indicated on display:

0 - means service is reset, meaning that "SERVICE in 8000 mi (Marelli instrument cluster) or 8100 mi (VDO instrument cluster)" is displayed in instrument cluster after confirming with Q button.

Note:

The display of 8000 or 8100 miles is the starting value for the service display.

- Press -Q- button to confirm input.

Channel 2 Adaptation 0 **Q**

Store changed value?

Indicated on display:

- Press -Q- button to confirm input.

Channel 2 Adaptation 0 **→**

Store changed value?

Indicated on display:

- Press the → button to complete the reset of the SRI.

cardiagn.com

01-140

Adaptation of fuel consumption display

Rapid data transfer **HELP**
Select function XX

Indicated on display

- Press -1- and -0- and confirm by pressing the -Q- button.

Rapid data transfer **Q**
10 - Adaptation

Indicated on display

- Press -Q- button to confirm input.

Adaptation
Input channel number XX

Indicated on display:

- Press buttons -0- and -3-.
- Press -Q- button to confirm input.

Notes:

- *Adaptation only for vehicles with on board computer.*
- *Value entered must be between 85% and 115%.*
- *Value must be entered in steps of 5%.*
- *If the value "100" was changed due to a customer complaint, the changed value must be transferred when replacing instrument cluster.*

Channel 3 Adaptation 100 →
Consumption display < **- 1 3-** >

Indicated on display:

- Press → button.

cardiagn.com

01-141

Note:

Correction of fuel consumption display is only possible via direct input.

Channel 3 Adaptation 100
Input adaptation value XXXXX

Indicated on display:

- Input desired correction value using scan tool keypad, filling initial positions with "0".

Example:

Desired input value: 90%

Keypad input: 00090

Channel 3 Adaptation 100 Q
Input adaptation value 00090

Indicated on display:

- Press -Q- button to confirm input.

Channel 3 Adaptation 90 Q
Consumption display < - 1 3- >

Indicated on display:

- Press -Q- button to confirm input.

Channel 3 Adaptation 90 Q
Store changed value?

Indicated on display:

- Press -Q- button to confirm input.

Channel 3 Adaptation 90 →
Changed value is stored

Indicated on display:

- Conclude adaptation of the fuel consumption display by pressing the →

cardiagn.com

button.

cardiagn.com

01-142

Rapid data transfer **HELP** **Select function XX**	Indicated on display - Press -1- and -0- and confirm by pressing the -Q- button.
Rapid data transfer **Q** **10 - Adaptation**	Indicated on display - Press -Q- button to confirm input. ***Note:*** *If input is incorrect, tester switches to function mode.*
Function is unknown or → **cannot** **be carried out at the moment**	Indicated on display: - Press → button. - Select "Adaptation" function 10 again and select adaptation channel 03. - Perform correction of fuel gauge again.

cardiagn.com

01-143

Language version of driver information display

Rapid data transfer **HELP** **Select function XX**	Indicated on display - Press -1- and -0- and confirm by pressing the -Q- button.
Rapid data transfer **Q** **10 - Adaptation**	Indicated on display - Press -Q- button to confirm input.
Adaptation **Input channel number XX**	Indicated on display: - Press buttons -0- and -4-. - Press -Q- button to confirm input.
Channel 4 Adaptation 1 → **Language** < **- 1 3-** >	Indicated on display: ***Notes:*** ♦ *Display indicates only the last digit of the five digit language version code, for example, 1 for German.* ♦ *If incorrect value is input "Adaptation" function is terminated and "Adaptation" function 10 must be initiated again.* ♦ *Code can now be entered using the scan tool keypad in steps or via direct input.*

cardiagn.com

01-144

Coding table:

Code	Language version
00001	German
00002	English
00003	French
00004	Italian
00005	Spanish
00006	Portuguese

cardiagn.com

01-145

Input in steps:

- Code can be decreased using button 1 and increased using button 3, for example, to 2 for language version English.

Channel 4 Adaptation 2 **Q**

Language < **- 1 3-** >

Indicated on display:

- Press -Q- button to confirm input.

Channel 4 Adaptation 2 **Q**

Store changed value?

Indicated on display:

- Press -Q- button to confirm input.

Channel 4 Adaptation 2 →

Changed value is stored

Indicated on display:

- Conclude adaptation of language version by pressing the → button.

cardiagn.com

01-146

Direct input:

Channel 4 Adaptation 1 →

Language < - 1 3- >

Indicated on display:

- Press → button.

Channel 4 Adaptation 1

Input adaptation value XXXXX

Indicated on display:

- Input desired five digit code ⇒ Page 01-144 Enter using keypad.

Example:

Coding: 2 (English)

Input value: 00002

- Press -Q- button to confirm input.

Channel 4 Adaptation 1 **Q**

Input adaptation value 00002

Indicated on display:

- Press -Q- button to confirm input.

cardiagn.com

01-147

Channel 4 Adaptation 2 Q **Language** < - 1 3- >	➢ Indicated on display: - Press -Q- button to confirm input.
Channel 4 Adaptation 2 Q **Store changed value?**	➢ Indicated on display: - Press -Q- button to confirm input.
Channel 4 Adaptation 2 → **Changed value is stored**	➢ Indicated on display: - Conclude adaptation of language version by pressing the → button.

cardiagn.com

01-148

Odometer display

This function is used to adapt the odometer after the instrument cluster is replaced.

Notes:

- *The adaptation is only possible for an instrument cluster with a maximum mileage of 100 miles.*
- *Adaptation can only be performed once for each instrument cluster.*
- *Only larger adaptation values can be entered (more than 100 miles).*
- *If an incorrect value is entered and confirmed, it cannot be changed. If this happens, the instrument cluster must be replaced.*
- *In countries where speedometers are calibrated in miles, adaptation can be performed in miles.*
- *Observe notes when replacing instrument cluster* ⇒ *Page 01-191* .

cardiagn.com

01-149

Rapid data transfer **HELP** **Select function XX**	Indicated on display: - Press buttons -1- and 1-. This selects "Login Procedure" function 11.
Rapid data transfer **Q** **11 - Login-Procedure**	Indicated on display: - Press -Q- button to confirm input.
Login-Procedure **Input code number XXXXX**	Indicated on display: - Input code number 13861.
Login-Procedure **Q** **Input code number 13861**	Indicated on display: - Press -Q- button to confirm input.
Rapid data transfer **HELP** **Select function XX**	Indicated on display: - Press buttons -1- and -0-.
Rapid data transfer **Q** **10 - Adaptation**	Indicated on display: - Press -Q- button to confirm input.
Adaptation **Input channel number XX**	Indicated on display: - Press buttons -0- and -9-.

cardiagn.com

- Press -Q- button to confirm input.

Channel 9 Adaptation 0 →
Mileage in 10 miles < - 1 3- >

Indicated on display:

Note:

For the VAG1551 scan tool values can only be input via direct input.

- Press the → button to continue program sequence.

Channel 9 Adaptation 0 Q
Input adaptation value XXXXX

Indicated on display:

- Input adaptation value (measuring value block 10 ⇒ Page 01-122) via the keypad.

Example:

Mileage = 89627

0 8 9 6 3

X					Hundred thousands: 100000 - 655350
	X				Ten thousands: 10000 - 90000
		X			Thousands: 1000 - 9000
			X		Hundreds: 100 - 900
				X	Tens: 10 - 90
					Ones: round to nearest ten

cardiagn.com

01-151

Channel 9 Adaptation 0 **Q**
Input adaptation value 08963

- Indicated on display:
  - Press -Q- button to confirm input.

Channel 9 Adaptation 8963 **Q**
Mileage in 10 miles < - 1 3- >

- Indicated on display:
  - Press -Q- button to confirm input.

Channel 9 Adaptation 8963 **Q**
Store changed value?

- Indicated on display:
  - Press -Q- button to confirm input.

Channel 9 Adaptation 8963 →
Changed value is stored

- Indicated on display:
  - End adaptation of odometer by pressing the → button.

cardiagn.com

01-152

Adaptation of auxiliary heater

Rapid data transfer **HELP** **Select function XX**	Indicated on display - Press -1- and -0- and confirm by pressing the -Q- button.
Rapid data transfer **Q** **10 - Adaptation**	Indicated on display - Press -Q- button to confirm input.
Adaptation **Input channel number XX**	Indicated on display: - Press buttons 1- and -8-. - Press -Q- button to confirm input.

cardiagn.com

01-153

Channel 18 Adaptation 0 →

< - 1 3- >

- Indicated on display: Adaptation value is displayed, for example 0.

Notes:

- *Adaptation value "0" is input if auxiliary heater is not installed.*
- *Adaptation value "1" is input if an auxiliary heater is installed that is independent of engine condition (running or not).*
- *Adaptation value "10" is input if an auxiliary heater is installed that switches off when engine is not running.*

- Press → button.

Channel 18 Adaptation 0

Input adaptation value XXXXX

Indicated on display:

- Input adaptation value using keypad, filling initial positions with "0", for example 00001.

Channel 18 Adaptation 0 Q

Input adaptation value 00001

Indicated on display:

- Press -Q- button to confirm input.

cardiagn.com

01-154

Channel 18 Adaptation 1 **Q**

< - 1 3- >

- Indicated on display:

  - Press -Q- button to confirm input.

Channel 18 Adaptation 1 **Q**

Store changed value?

- Indicated on display:

  - Press -Q- button to confirm input.

Channel 18 Adaptation 1 →

Changed value is stored

- Indicated on display:

  - End adaptation of the auxiliary heater by pressing the → button.

cardiagn.com

01-155

Adaptation of fuel gauge sender resistance range

This function is used to adjust the fuel gauge sender resistance range if the fuel gauge display in the instrument cluster does not match the actual amount of fuel in the tank.

Rapid data transfer **HELP** **Select function XX**	Indicated on display - Press -1- and -0- and confirm by pressing the -Q- button.
Rapid data transfer **Q** **10 - Adaptation**	Indicated on display - Press -Q- button to confirm input.
Adaptation **Input channel number XX**	Indicated on display: - Press buttons -3- and -0-. - Press -Q- button to confirm input.

cardiagn.com

01-156

Channel 30 Adaptation 128 →

Tank sender < **- 1 3-** >

Indicated on display: Adaptation value is displayed, for example 128.

Notes:

- *"128" is the adaptation value for the standard resistance range for the fuel gauge sender as set by the factory.*
- *The resistance value for the fuel gauge sender resistance range can be adjusted by ± 8 Ohm to give an adaptation value between 120 and 136.*
- *If the value "128" was changed due to a customer complaint, the changed value must be transferred when replacing instrument cluster.*

- Press → button.

Channel 30 Adaptation 128

Input adaptation value XXXXX

Indicated on display:

- Input desired correction value using scan tool keypad, filling initial positions with "0" and watch how the display responds.

Example:

Desired input value: 132

Keypad input: 00132

Channel 30 Adaptation 128 **Q**

Input adaptation value 00132

Indicated on display:

- Press -Q- button to confirm input.

cardiagn.com

01-157

Channel 30 Adaptation 132 **Q** **Tank sender** < **- 1 3-** >	Indicated on display: - Press -Q- button to confirm input.
Channel 30 Adaptation 132 **Q** **Store changed value?**	Indicated on display: - Press -Q- button to confirm input.
Channel 30 Adaptation 132 → **Changed value is stored**	Indicated on display: - End adaptation of the fuel gauge sender resistance range by pressing the → button.

cardiagn.com

01-158

Adaptation of the engine speed threshold

This function is used to adapt the offset value for the engine speed threshold to the dynamic oil pressure warning.

Rapid data transfer **HELP** **Select function XX**	Indicated on display - Press -1- and -0- and confirm by pressing the -Q- button.
Rapid data transfer **Q** **10 - Adaptation**	Indicated on display - Press -Q- button to confirm input.
Adaptation **Input channel number XX**	Indicated on display: - Press buttons -3- and 5-. - Press -Q- button to confirm input.

cardiagn.com

01-159

Channel 35 Adaptation 0 →

< - 1 3- >

Indicated on display: Adaptation value is displayed, for example 0.

Notes:

- *The adaptation value of 0 corresponds to the value set at the factory for the oil pressure warning if the oil pressure drops below 1.2 bar at 1500 rpm.*
- *The adaptation can be performed in four steps (0-1000).*
- *The adaptation value of "250" changes the engine speed threshold to 1750 rpm.*
- *If the value "0" was changed due to a customer complaint, the changed value must be transferred when replacing instrument cluster.*

- Press → button.

Channel 35 Adaptation 0

Input adaptation value XXXXX

Indicated on display:

- Input adaptation value using keypad, filling initial positions with "0", for example, 00250.

Channel 35 Adaptation 0 Q

Input adaptation value 00250

Indicated on display:

- Press -Q- button to confirm input.

cardiagn.com

01-160

Channel 35 Adaptation 250 **Q**

< - 1 3- >

Indicated on display:

- Press -Q- button to confirm input.

Channel 35 Adaptation 250 **Q**

Store changed value?

Indicated on display:

- Press -Q- button to confirm input.

Channel 35 Adaptation 250 →

Changed value is stored

Indicated on display:

- End adaptation of the engine speed threshold by pressing the → button.

cardiagn.com

01-161

Distance driven since service

This function is used to input the distance in miles since the last service.

Rapid data transfer **HELP**
Select function XX

Indicated on display

- Press -1- and -0- and confirm by pressing the -Q- button.

Rapid data transfer **Q**
10 - Adaptation

Indicated on display

- Press -Q- button to confirm input.

Adaptation
Input channel number XX

Indicated on display:

- Press buttons -4- and -0-.
- Press -Q- button to confirm input.

Channel 40 Adaptation 8 →
Actual value Insp. in 100 Miles < **- 1 3-** >

Indicated on display: The display indicates the number of miles driven since the last service (here for example, 8 indicates 800 miles)

cardiagn.com

01-162

Notes:

- *Input of current specified value is only possible in units of 100 miles, therefore indication in display also changes in 100 mile units.*
- *Observe notes when replacing instrument cluster ⇒ Page 01-191 .*
- *Values can only be input directly using the scan tool keypad.*

cardiagn.com

01-84

Multi-function steering wheel, On Board Diagnostic (OBD)

General notes

Technical features of the multi-function steering wheel

The multi-function steering wheel enables the radio to be operated from the steering wheel (the most important functions) and contains an extensive On Board Diagnostic (OBD).

The control module for the multi-function steering wheel is equipped with a DTC memory. When malfunctions occur in monitored components or wiring, Diagnostic Trouble Codes (DTCs) are stored in DTC memory with a description of the malfunction type.

cardiagn.com

01-85

On Board Diagnostic (OBD), initiating program

Additional information

- Electrical Wiring Diagrams, Troubleshooting & Component Locations binder
- Technical service handbook.
- Parts catalog

cardiagn.com

01-86

Safety precautions

If special testing equipment is required during test drive, note the following:

WARNING!

- ***To reduce the risk of accidents observe the following:***

- ***During a road test in an airbag-equipped vehicle, the VAS5051 tester or the VAG1551 scan tool must always be fastened to and operated from the rear seat by a second technician.***

cardiagn.com

01-87

To reduce the risk of injury to people and or damage to the electrical system and components, observe the following:

- Always switch ignition off before connecting or disconnecting test/measurement tools.
- It is possible that the control module will recognize a malfunction and store a DTC during some tests. Therefore, after completing all tests and repairs, check and if necessary erase the DTC memory.
- Always switch ignition off before disconnecting or connecting the battery. Failure to do so may damage a control module.

cardiagn.com

01-88

Test requirements

- Check fuse for function according to wiring diagram.
- Connect VAS5051 tester or VAG1551 scan tool ⇒ page 01-108 .
- Switch ignition on.

Notes:

- *If nothing is indicated on display, check voltage supply for VAG 1551 scan tool according to wiring diagram.*
- *Additional instructions can be called up via the HELP button on the scan tool.*
- *The → button is used for advancing through the program sequence.*
- *An incorrect entry can be canceled using the C button.*
- *Function 00 "Automatic test sequence" can be performed in operating mode 1 "Rapid data transfer". This automatically checks all control*

cardiagn.com

modules installed in the vehicle.

cardiagn.com

01-89

- Switch ignition on.

- Switch printer on via the PRINT button (indicator lamp in button lights up).

- Press button -1- to select "Rapid data transfer" operating mode 1.

Rapid data transfer **HELP**
Insert address word XX

Indicated on display

Address word for steering wheel electronics: 16

- Press buttons -1- and -6-.

Rapid data transfer **Q**
16 - Steering wheel electronics

Indicated on display

- Press -Q- button to confirm input.

cardiagn.com

01-90

4B0907487E Steering whl. electronics D00 →

Indicated on display after approx. 5 seconds:

- 4B0907487 E: Part number of steering wheel electronics - radio operation (see also parts catalog)
- Steering wheel electronics: component marking
- D00: Software version of control module

- Press → button.

Rapid data transfer HELP
Control module does not answer

If one of these messages is displayed, carry out trouble shooting procedures according to the wiring diagram.

⇒ *Electrical Wiring Diagrams, Troubleshooting & Component Locations*

Rapid data transfer HELP
Error in communication link

Rapid data transfer HELP
K wire not switching to Ground

Rapid data transfer HELP
K wire not switching to B+

cardiagn.com

01-91

Rapid data transfer	**HELP**
Select function XX	

Indicated on display

- Pressing the HELP button will print out an overview of all of the possible functions.
- Press the → button to continue program sequence.

On Board Diagnostic (OBD) functions

The following functions are possible:

01 - Check Control Module Versions ⇒ page 01-92 .

02 - Check DTC Memory ⇒ page 01-93 .

03 - Output Diagnostic Test Mode ⇒ page 01-97 .

05 - Erase DTC Memory ⇒ page 01-100 .

06 - End Output ⇒ page 01-102 .

08 - Read Measuring Value Block ⇒ page 01-103 .

cardiagn.com

01-92

Check Control Module Versions (scan tool function 01)

Rapid data transfer HELP
Select function XX

Indicated on display

- Press buttons -0- and 1-. This selects "Check control module" function 01.

Rapid data transfer Q
01 - Check Control Module Versions

Indicated on display

- Confirm input using the -Q- button.

4B0907487E steering whl. electronics D00 →

Indicated on display after approx. 5 seconds:

- 4B0907487 E: Part number of steering wheel electronics - radio operation (see also parts catalog)
- Steering wheel electronics: component marking
- D00: Software version of control module

- Press → button.

cardiagn.com

Check DTC Memory (scan tool function 02)

Note:

The displayed DTC information is updated only when initiating OBD or with "Erase DTC Memory" function 05.

- Switch printer on via the PRINT button (indicator lamp in button lights up).

Rapid data transfer **HELP** **Select function XX**	Indicated on display

- Press buttons -0- and -2-. This selects "Check DTC memory", function 02.

Rapid data transfer **Q** **02 - Check DTC Memory**	Indicated on display

- Confirm input using the -Q- button.

X DTC recognized	The number of stored malfunctions appears in the display.

The stored malfunctions are displayed and printed out one after the other.

- Check printout against DTC table and repair all malfunctions as necessary ⇒ page 01-95 .

cardiagn.com

01-94

No DTC recognized →	
Rapid data transfer **HELP** **Select function XX**	

- If "No DTC recognized" is displayed, the program will return to "Select function XX" after the → button is pressed.
- Indicated on display

  If something else is displayed:

  ⇒ *Scan Tool operating instructions*

  - End output (Function 06) ⇒ page 01-102
  - Switch off ignition and disconnect diagnostic connector.

cardiagn.com

01-95

Diagnostic Trouble Code (DTC) table

Notes:

- *The following list contains all malfunctions that can be recognized by the multi-function steering wheel and printed out by the VAG1551 scan tool. The malfunctions are listed in order according to their 5-digit numbers.*
- *DTC numbers appear only on the print-out.*
- *Before replacing a component shown as faulty, check the wiring and connections to the component as well as the Ground (GND) connections according to wiring diagram.*
- *After repairs and function test of the system, DTC memory must always be checked again using the VAG1551 scan tool and erased.*
- *DTC memory stores all static and sporadic malfunctions: If a malfunction occurs and persists for at least 2 seconds, it is identified as a static malfunction. If a malfunction does not occur again, it is registered as sporadic. "/SP" will appear at the right of the scan tool display.*
- *When the ignition is switched on, all existing malfunctions are automatically re-classified as sporadic malfunctions and will only register as static malfunctions if they still occur after testing.*
- *Sporadic malfunctions which no longer occur during 50 driving cycles (ignition on at least 5 minutes, vehicle speed 30 km/h) are erased automatically.*
- *The three digit malfunction type number appearing next to the DTC is a data code and can be ignored.*

cardiagn.com

01-96

DTC **VAG1551 scan tool display**	**Possible cause**	**Corrective action**
01426 Control unit in steering wheel -E221 ♦ No communication ♦ Implausible signal	♦ Open circuit in wiring - no connection between interface and steering wheel ♦ Unintelligible messages on CAN-bus (interface and buttons in steering wheel are connected via a CAN-bus)	- Locate malfunction using wiring diagram ⇒ *Electrical Wiring Diagrams, Troubleshooting & Component Locations* - Repair open circuit - Check wires between interface and steering wheel
65535 Control module malfunctioning ♦ Faulty	♦ Control module for multi-function steering wheel -J453- faulty	- Replace control module for multi-function steering wheel -J453-

cardiagn.com

01-97

Output Diagnostic Test Mode (DTM) (scan tool function 03)

Notes:

- Output Diagnostic Test Mode is only possible when vehicle is stationary and engine is not running!
- If malfunctions are found during output Diagnostic Test Mode, determine cause of malfunction and repair if necessary.

In the function " output Diagnostic Test Mode (DTM)" functions of the system are checked

Perform Output Diagnostic Test Mode

- Switch ignition on.
- Switch on radio.
- Press buttons -0- and -3-. This selects "output Diagnostic Test Mode (DTM)", function 3.

Rapid data transfer	**Q**
03 - Output Diagnostic Test Mode	

Indicated on display

- Press -Q- button to confirm input.

cardiagn.com

01-98

- Press the → button.

Output Diagnostic Test Mode →

Radio louder

Indicated on display

The radio volume is increased audibly.

- Press the → button.

Output Diagnostic Test Mode →

Radio quieter

Indicated on display

The radio volume is decreased audibly.

- Press the → button.

Output Diagnostic Test Mode →

Search radio stations upward

Indicated on display

The next station will be searched and displayed in combination center display.

- Press the → button.

cardiagn.com

01-99

Output Diagnostic Test Mode → **Search radio stations downward**	⮜	Indicated on display The previous station will be adjusted again and will be displayed in combination center display. - Press the → button.
Output Diagnostic Test Mode → **End**	⮜	Indicated on display - Press the → button. - The tester returns to the "Select function" mode.
Rapid data transfer **HELP** **Select function XX**	⮜	Indicated on display

cardiagn.com

Erase DTC Memory (scan tool function 05)

Note:

If DTC memory cannot be erased, check DTC memory again and repair malfunction.

Requirements

- DTC memory checked ⇒ page 01-93
- All malfunctions repaired

After successful DTC memory check:

Rapid data transfer	**HELP**
Select function XX	

Indicated on display

- Press buttons -0- and -5-. This selects "Erase DTC memory", function 05.

cardiagn.com

01-101

Rapid data transfer **Q** **05 Erase DTC Memory**	Indicated on display - Confirm input using the -Q- button.
Rapid data transfer → **DTC Memory is erased!**	Indicated on display DTC memory is erased. - Press the → button.
Rapid data transfer **HELP** **Select function XX**	Indicated on display ***Notes:***
Attention! → **DTC Memory was not interrogated**	♦ *This message indicates an error in the test sequence.*
Rapid data transfer → **DTC Memory was not interrogated**	♦ *This message indicates an error in the test sequence.* *Follow test sequence exactly: first check DTC memory, repair malfunction (s) if necessary, then erase.*

cardiagn.com

01-102

End Output (scan tool function 06)

- Press buttons -0- and -6-. This selects "End Output", function 06.

Rapid data transfer	**Q**
06 - End output	

Indicated on display

- Confirm input using the -Q- button.

Rapid data transfer	**HELP**
Insert address word XX	

Indicated on display

- Switch ignition off.
- Disconnect harness connectors for the VAG1551 scan tool

cardiagn.com

Read Measuring Value Block (scan tool function 08)

Initiating "Read Measuring Value Block"

Rapid data transfer **HELP** **Select function XX**	Indicated on display - Press buttons -0- and -8- to select "Read Measuring Value Block" function 08.
Rapid data transfer **Q** **08 - Read Measuring Value Block**	Indicated on display - Confirm input using the -Q- button.
Read Measuring Value Block **Input display group number XXX**	Indicated on display - Input display group number (from table ⇒ page 01-104) and press -Q- button to confirm input.

The selected measuring value block is now displayed in standard form.

cardiagn.com

01-104

Display group overview

Display group number	**Indicated on display**
001	1 = Lower button 2 = Louder button 3 = Memory downward button 4 = Memory upward button
002	1 = Station buttons (preset) backward 2 = Station buttons (preset) forward 3 = Unassigned 4 = Unassigned

cardiagn.com

01-105

Measuring value block 001

Read Measuring Value Block 1 → ◀Indicated on display:

lower	louder	Memory backward	Memory upward	
				Memory upward button • not operated • Memory upward
			Memory downward button • not operated • Memory downward	
		Louder-button (increasing volume) • not operated • louder		
	Lower button (decreasing volume) • not operated • lower			

cardiagn.com

01-106

Measuring value block 002

Read Measuring Value Block 2 → ◀Indicated on display:

activated activated

Station buttons (preset) forward

- not operated
- operated

Station buttons (preset) backward

- not operated
- operated

cardiagn.com

01-107

Multi-function steering wheel button assignment

Radio button assignment

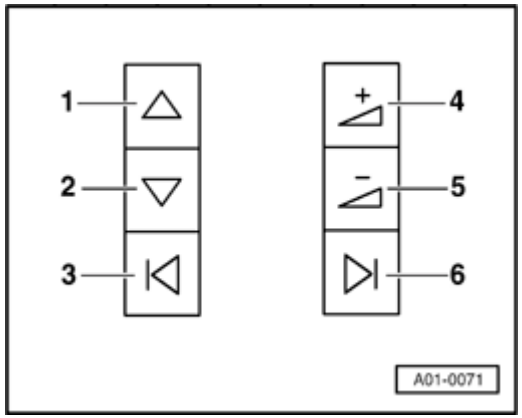

1 - Radio: Forward search function; Cassette: Fast forward; CD: Title forward

2 - Radio: Backward search function; Cassette: Rewind; CD: Title backward

3 - Station buttons (preset) b backward

4 - Increase volume

5 - Decrease volume

6 - Station buttons (preset) forward

cardiagn.com

01-203

Cruise control On Board Diagnostic (OBD)

Special tools, test equipment and auxiliary items

- VAS5051 Diagnostic Operation Center (DOC) and/or VAG1551 Scan Tool (ST).
- VAG1551/3 adapter cable

cardiagn.com

01-204

Gasoline engines with electronically-operated throttle valve only

Testing cruise control system

- Connect VAG1551 scan tool (⇒ Page 01-241) and use "Address word 01" to select engine control module.

  The engine should be idling.

Except for the control lever, there are no system components for the cruise control system. All functions are carried out by the engine control module.

Initiating "Read Measuring Value Block" scan tool function 08

Rapid data transfer	**HELP**
Select function XX	

Indicated on display

- Press buttons -0- and -8- to select "Read Measuring Value Block" function 08.

cardiagn.com

01-205

Rapid data transfer **Q**

08 - Read Measuring Value Block

Indicated on display

- Press -Q- button to confirm input.

Read Measuring Value Block **HELP**

Input display group number XXX

Indicated on display

- Enter display group number 066.

  The engine should be idling.

- Press -Q- button to confirm input.

The measured value block which has been selected will appear in the standard format.

Display group overview

Display group number	Display fields	
066	1 =	Actual vehicle speed km/h
	2 =	Switch positions of brake, clutch and cruise control (open or closed)
	3 =	Desired vehicle speed km/h
	4 =	Control lever switch positions

cardiagn.com

Display group 066

Read Measuring Value Block 66			→	◀ Indicated on display
km/h	X X X X	km/h	X X X X	
				Control lever switch positions 0 0 0 0 = Cruise control off (switch engaged) 0 0 1 1 = Cruise control on 0 0 0 1 = Cruise control off before engagement position 0 1 1 1 = Fix button pushed 1 0 1 1 = Record button pulled
			Desired vehicle speed (speed last saved is displayed until): ♦ Cruise control is switched off at control lever, i.e. switch is engaged on "OFF" or ♦ Engine is stopped.	
		Switch positions for brakes, clutch and cruise control released. 1 0 0 0 = Cruise control released 1 0 1 1 = Brake applied (brake pedal switch) 1 1 0 0 = Clutch applied		
	Actual vehicle speed			

cardiagn.com

01-207

Read Measuring Value Block 66 →			
0 km/h	1 0 0 0	0km/h	0 0 0 0

Read Measuring Value Block 66 →			
0 km/h	1 0 0 0	0km/h	0 0 0 0

Indicated on display

Checking displays in display fields 2 and 4

Display check, display field 2

Test conditions	Display field 2
Cruise control released (activated)	1000
Brake applied (brake pedal switch)	1011
Clutch applied	1100

If the nominal value in display field 2 for "cruise control released" (1000) is not attained:

- Check engine control module identification.

⇒ *Repair Manual, Fuel Injection & Ignition, Repair Group 01*

- If "G" is not displayed after component name, cruise control is not activated. Activate cruise control system ⇒ Page 01-209 .

cardiagn.com

01-208

Read Measuring Value Block 66 →			
0 km/h	1 0 0 0	0km/h	0 0 0 0

Display check, display field 4

Test conditions	Display field 4
Switch -B- in "OFF" (AUS) position	0000
Switch -B- to "ON" (EIN) position	0011
Memory set, switch -B- to "OFF" (AUS) before engaging	0001
Button -A- pressed, "SET" (FIX)	0111
Switch -B- to "RES" (AUFN)	1011

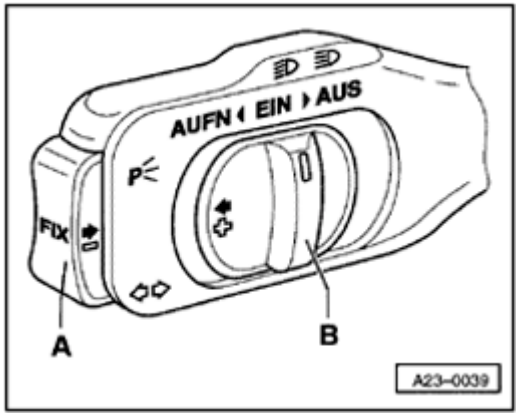

If the nominal values in display field 4 are not attained even though switch -B- is set to "ON" (0011):

- Connect VAG1598/31 breakout box to engine control module harness ⇒ Page 01-210 .

cardiagn.com

01-209

Activating cruise control

- Connect VAG1551 scan tool (VAG1552) ⇒ Page 01-241 .

- Insert "Address word 01" to select engine control module.

Rapid data transfer **HELP** **Select function XX**	Indicated on display

- Press button -1- twice for "Login procedure" function 11 and press -Q- button to confirm input.

Login procedure **HELP** **Input code number XXXXX**	Indicated on display

- Input code 11463 and press -Q- button to confirm input.

Deactivate cruise control

- Connect VAG1551 scan tool (VAG1552) ⇒ Page 01-241 .
- Use "Address word 01" to select engine control module.

Rapid data transfer **HELP** **Select function XX**	Indicated on display

- Press button -1- twice for "Login procedure" function and press -Q- button to confirm input.

Login procedure **HELP** **Input code number XXXXX**	Indicated on display

cardiagn.com

- Input code 16167 and press -Q- button to confirm input.

cardiagn.com

01-210

Testing wiring and components using VAG1598/31 breakout box

Notes:

- *VAG1598/31 breakout box is designed to be connected to the engine control module harness and to the engine control module simultaneously.*
- *The effect of this design is that the electronic engine controls remain fully functional while the breakout box is connected (for e.g. measuring signal strengths while the engine is running).*
- *Look in the respective test descriptions to see if it is necessary to connect the engine control module to the breakout box.*
- *Use multimeter (Fluke 83 or equivalent) or VAG1715 Multimeter in addition to VAG1527B voltage tester.*
- *Always use test leads from VW1594 connector test kit when connecting test equipment to VAG1598/31 breakout box.*
- *Once the engine control module has been reconnected, adapt the engine control module*

cardiagn.com

to the throttle valve control module.

⇒ Repair Manual, Fuel Injection & Ignition, Repair Group 24

CAUTION!

Before connecting the test leads, switch the test equipment to the appropriate measuring range and observe the test requirements to prevent damage to electronic components.

cardiagn.com

01-211

- Switch ignition off.

- Remove control module protective housing cover.

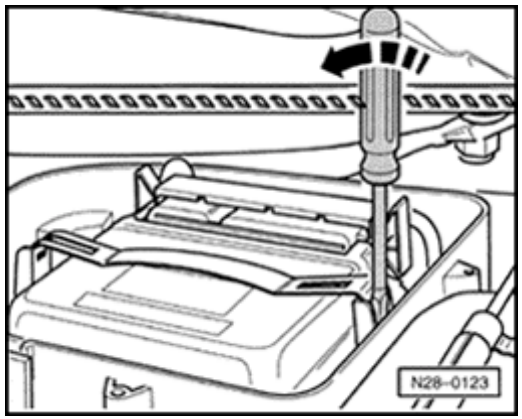

- Using screwdriver, carefully pry off retainer (arrow).
- Release and disconnect harness connectors from control module.

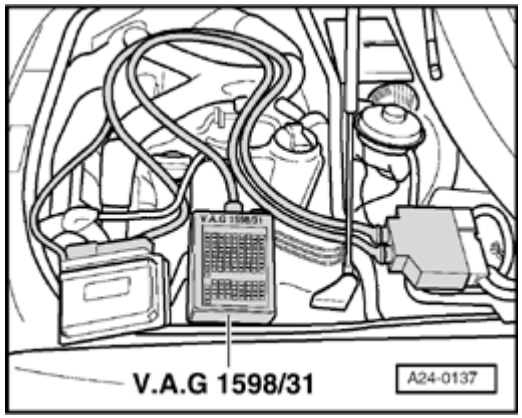

- Connect VAG1598/31 breakout box to harness connector. Connect breakout box Ground clip (not visible in illustration) to battery negative terminal. Check respective test descriptions to see if it is necessary to connect engine control module to breakout box.
- Perform tests as described in respective repair instructions.

cardiagn.com

01-212

- Disconnect 15-pin harness connector for cruise control switch, clutch vacuum vent valve switch -F36- and to brake vacuum vent valve switch -F47- for cruise control.

- Check the following connections for a short to positive, short to Ground (GND) or an open circuit:

Gasoline engine: 2.7 liter/184 kW V6 twin-turbo

Terminals on 15-pin harness connector	VAG1598/31 breakout box, socket
7	76
8	75
9	57
10	38

- If necessary, repair open or short circuit.

cardiagn.com

01-213

Terminals on 15-pin harness connector	VAG1598/31 breakout box, socket
13 to clutch vacuum vent valve switch -F36- (terminal 1)	39
11 to brake vacuum vent valve switch -F47- for cruise control (terminal 2)	56
12 to brake vacuum vent valve switch -F47- for cruise control (terminal 4)	55

- If necessary, repair open or short circuit.

cardiagn.com

27-1

Battery

The battery is one of the most important electrical components in the vehicle. If it functions properly, the battery will make a significant contribution to customer satisfaction. To ensure a long service life, the battery must be checked, serviced and maintained as described in this section.

In addition to starting the engine, the battery has additional functions as a buffer and supplier of electrical power for the entire vehicle electrical system.

cardiagn.com

27-2

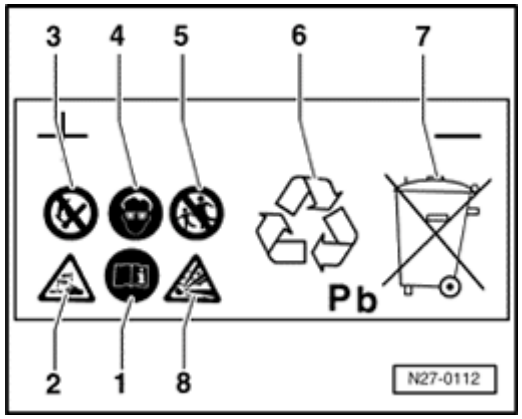

Warnings and safety precautions for lead-acid batteries

1 - Follow the recommendations on the battery, in this Repair Manual and in the Owners Manual.

2 - Danger of acid burns:

Battery acid is extremely caustic, therefore wear protective gloves and eye protection.

Do not tip battery. Acid may escape from battery vents.

3 - Keep open flame, sparks, unenclosed light bulbs and lit smoking materials away from battery.

Guard against creating sparks when working with cables and electrical equipment.

- Avoid short-circuits.

4 - Wear eye protection

5 - Keep children away from acid and batteries.

6 - Proper disposal:

Waste batteries must be brought to appropriate waste disposal site. Dispose of old batteries in compliance with applicable Federal, State and local laws regarding hazardous waste disposal.

7 - Never discard old batteries in the household trash!

8 - Explosive hazard:

Highly explosive gas is produced when batteries are charged.

cardiagn.com

27-3

Battery handling instructions

Notes:

- *Battery terminals should no longer be coated with grease.*
- *To avoid damage to the battery case, place the cable clamps on the terminals by hand without using force.*
- *The battery terminal clamp tightening torque is 6 Nm (53 in. lb).*
- *Once the battery is reconnected, check and activate the vehicle's electrical equipment (radio, clock, comfort and convenience features, etc.) as described in the Repair Manual or the Owner's Manual.*

cardiagn.com

27-4

Battery, removing and installing

CAUTION!

Disconnect the battery Ground (GND) strap before working on the electrical system.

Notes:

- *Before disconnecting the battery, determine the correct coding for the anti-theft radio.*
- *Once the battery is reconnected, check and activate the vehicle's electrical equipment (radio, clock, comfort and convenience features, etc.) as described in the Repair Manual or the Owner's Manual.*

Removing

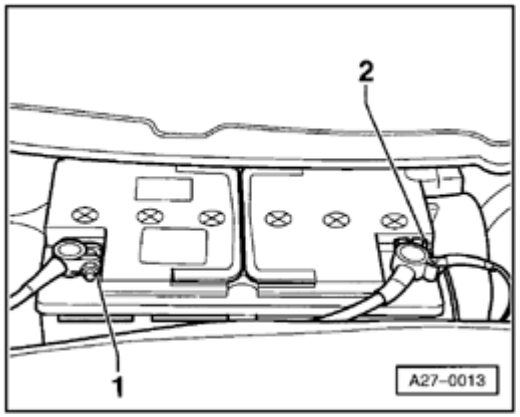

- Disconnect battery Ground (GND) strap from negative terminal by loosening nut -1-.

  Tightening torque: 6 Nm (53 in. lb)

- Disconnect battery positive cable from positive terminal by loosening nut -2-.

  Tightening torque: 6 Nm (53 in. lb)

cardiagn.com

27-5

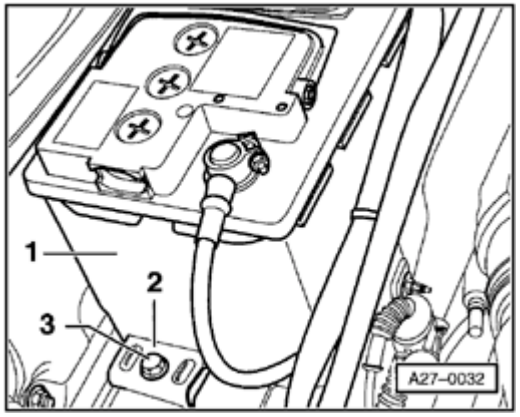

- Remove bolt -3- and remove hold-down clamp -2-.

  Tightening torque: 15 Nm (11 ft lb)

- Lift battery -1- out of battery tray.

Installing

Notes:

- *The newest generation of batteries is equipped with a central gas vent and flame trap by means of a "baffle."*
- *Function: the gas produced during charging escapes at one place through an opening in the top of the cover. The flame trap (which prevents the flammable gas located in the battery from igniting) is also integrated in this unit.*
- *For proper venting of the battery via the diffuser and the hose, it is important that the hose attached to the central gas vent does not become pinched off during installation.*
- *The diffuser consists of a small round glass fiber mat having a diameter of approximately 15 mm and a thickness of 2 mm. It functions similar to a valve, i.e., it allows the gas formed in the battery to flow out.*

cardiagn.com

27-6

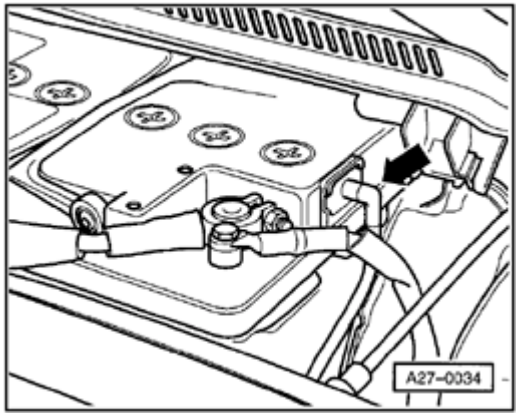

Note:

When installing the battery (if the battery has a central gas vent), make absolutely certain that the hose is not pinched off. This allows the battery be freely vented via the diffuser and the hose. If the battery does not have a hose, make sure that the opening on the top of the battery's cover is not plugged.

- Install in reverse order of removal.

Make sure battery is securely mounted

If the battery is not secured properly, there is a risk that the following might occur:

- Shortened service life due to damage caused by vibration
- Battery cell and plate damage
- Damage to battery case by the hold-down clamp (possible release of electrolyte resulting in costly damage).
- Poor collision safety

cardiagn.com

27-7

Visual inspection

WARNING!

When charging, measuring the voltage or load testing a battery, the cell caps must always be screwed in tightly.

Before performing tests such as no-load voltage, specific gravity or the battery load tests, a visual check should be made of the battery.

The purpose of this check is to determine

- If the case of the battery has been damaged. Damage to the case can cause acid to leak.
- If the terminals have been damaged. Damaged terminals make it impossible to assure a good contact at the terminal. This can lead to a cable fire and damage to the electrical system.

cardiagn.com

27-8

Electrolyte level, checking

CAUTION!

To ensure that the various battery cover systems do not leak, the original cell caps that come with the battery must always be screwed in. If they are lost or damaged, use only genuine cell caps for the same model battery. The cell caps must be equipped with an O-ring seal.

Notes:

- *Maintaining the correct electrolyte level is important for long battery life.*
- *If the battery has visible minimum and maximum lines on the case, the electrolyte level can be checked from outside the battery.*
- *The electrolyte level must be between the minimum and maximum lines.*
- *If the external minimum and maximum lines are hard to see or if it is difficult to see the electrolyte level due to opacity of the battery case, the cell caps will have to be removed. After that it will be possible to visually check the electrolyte level from the interior of the battery.*

cardiagn.com

- *The electrolyte level must reach the internal electrolyte level indicator (lip of plastic flange). This corresponds to the external maximum line on the battery case.*

cardiagn.com

27-9

Electrolyte level too low

Special tools, test equipment and auxiliary items

VAS5045 battery cell filler

Note:

If the electrolyte level is too low, the plates will dry out causing a loss of capacity (power loss) in the battery. If the plates are not surrounded by electrolyte (sulfuric acid), the plates, plate straps and the cell connectors will corrode. The result of this corrosion is that battery function can no longer be assured. The battery is made useless.

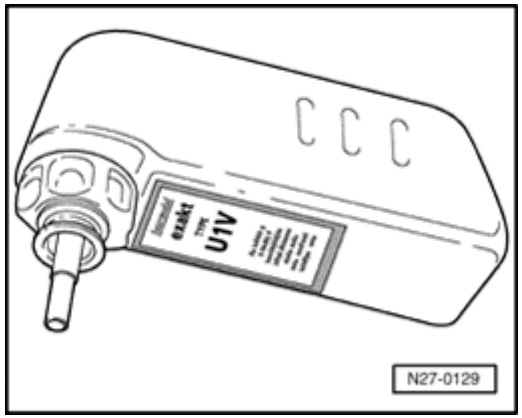

- If electrolyte level is too low, add distilled water up to maximum mark using VAS5045 battery cell filler.

Notes:

- *The design of the filler nozzle of the VAS5045 battery cell filler prevents overfilling the battery cell and loss of battery acid. When the maximum fill level is reached, the flow of distilled water into the battery cell is stopped.*
- *To avoid contaminating the electrolyte, add only distilled water to the battery (contaminated water will lead to increased self-discharge).*

cardiagn.com

27-10

Electrolyte level too high

Special tools, test equipment and auxiliary items

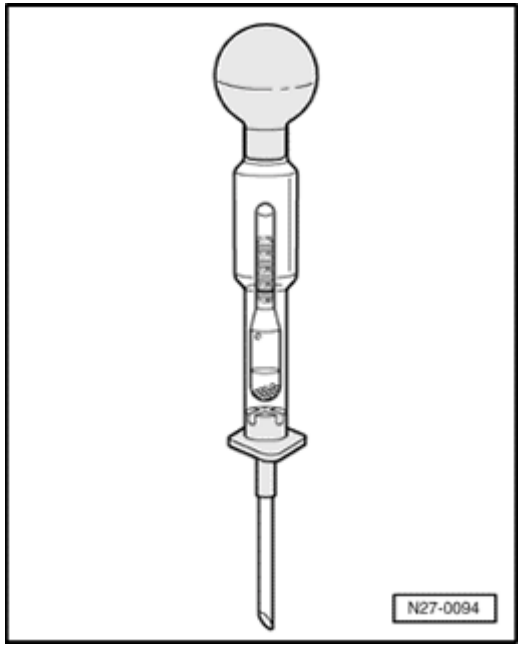

- Commercially available hydrometer

Note:

If the electrolyte level is too high, the sulfuric acid/water mixture will leak to the outside of the battery and damage functional components in the engine compartment.

- If electrolyte level is too high (overfilling), i.e., it is above internal electrolyte level mark (lip of plastic flange) or external maximum line, draw off excess electrolyte using commercially available hydrometer.
- Draw off electrolyte using hydrometer until electrolyte level has reached lip of plastic flange or maximum line.

cardiagn.com

27-11

Batteries with central gas vent

CAUTION!

- ***Make absolutely certain that only batteries of the most recent design with central gas vents are installed.***
- ***Always use the original cell caps. The caps must be equipped with an O-ring seal.***

There are two types of batteries with central gas vents:

- Batteries with a hose on the central gas vent
- Batteries without a hose on the central gas vent

cardiagn.com

27-12

No-load voltage, checking

CAUTION!

- ***Battery cell caps must be screwed in tightly when charging, measuring voltage or performing load tests.***

- ***Always comply with the following instructions otherwise a correct measurement cannot be assured.***

Special tools, test equipment and auxiliary items

- VAG1715 multimeter or

- VAG1362 minitester or

- Multimeter (Fluke 83 or equivalent)

Notes:

- *When testing the no-load voltage of a battery installed in a vehicle, make sure the battery Ground (GND) strap is disconnected.*

- *The battery must not have been under a load*

cardiagn.com

for at least two hours before the test.

- *The battery must not have been charged at least two hours before the test.*

cardiagn.com

27-13

Use the following procedure for testing the voltage of a battery which is not under load:

- Switch ignition off.
- Disconnect battery Ground strap.
- Measure voltage between battery terminals.
  - 12.5 volts or higher: battery OK
  - Below 12.5 volts: recharge battery immediately ⇒ Page 27-21

cardiagn.com

27-14

Specific gravity, checking

Special tools, test equipment and auxiliary items

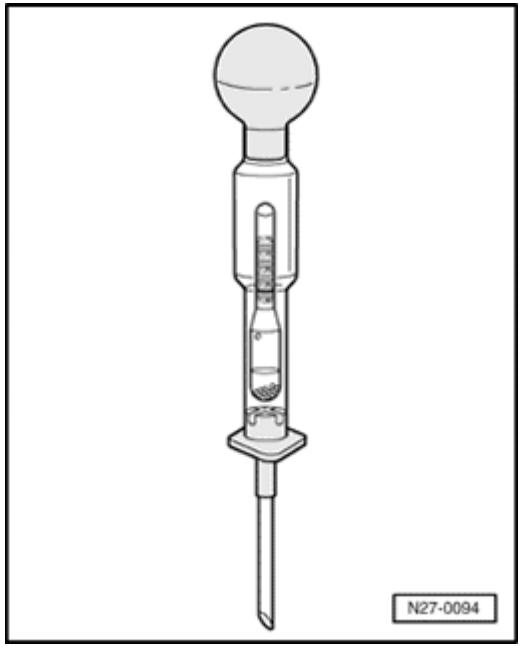

- Commercially available hydrometer
- Shop towel

CAUTION!

- ***When working with battery acid, make sure to follow all "Warnings and safety precautions for lead-acid batteries." Wear suitable protective clothing and eye protection.***
- ***When disposing of batteries, always comply with applicable Federal, State and local laws regarding the disposal of batteries and sulfuric acid.***

Notes:

- *In order to better determine the overall condition of a battery, always perform a specific gravity test in conjunction with the load test.*
- *The temperature of the electrolyte must be at least 10° C (50° F).*

The specific gravity can be tested immediately after charging the battery.

cardiagn.com

27-15

Use the following procedure to test the specific gravity in all of the battery cells:

- Switch ignition off.

- Remove all cell caps.

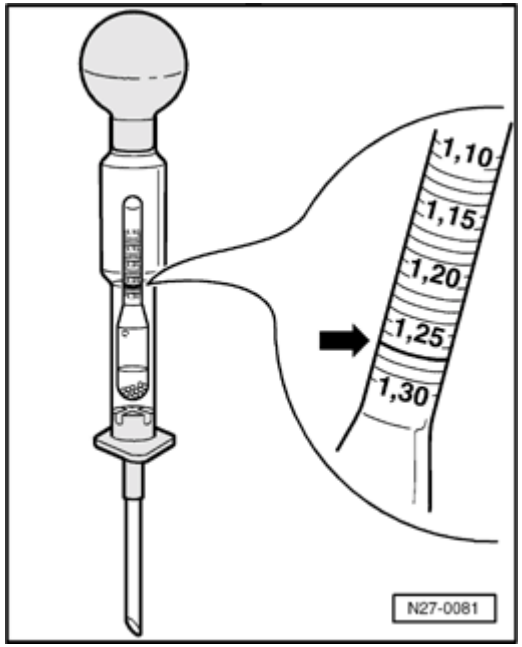

- Immerse tip of hydrometer into battery cell and draw out enough electrolyte to allow indicator to float freely.

The higher the specific gravity of the drawn electrolyte, the higher the indicator will float.

The specific gravity of the electrolyte can be read in kg/dm3 on the hydrometer scale.

- Compare measured value indicated on hydrometer to values indicated in table below:

cardiagn.com

27-16

State of charge in normal climate zones	Specific gravity in kg/dm^3
Discharged	1.12
Half charged	1.20
Good charge	1.28

In normal climate zones, the specific gravity must be at least 1.24 kg/dm^3.

- If specific gravity is too low: charge battery.

- After charging battery, repeat specific gravity test.

Note:

The measured values for the specific gravity of the individual battery cells must not vary by more than 0.03 kg/dm^3.

cardiagn.com

27-17

Examples of unacceptable variations in specific gravity:

Battery cell:	1	2	3	4	5	6
	Specific gravity per cell in kg/dm^3					
Example 1:	1.24	1.25	1.25	1.10	1.24	1.25
Example 2:	1.26	1.26	1.25	1.14	1.18	1.24

Example 1:

The specific gravity in cell 4 is too low.

Example 2:

The specific gravity in cells 4 and 5 is too low (the difference in specific gravity between the cells is greater than 0.03 kg/dm^3).

- If values are not met, replace battery.

- If values are met, reinstall cell caps.

The original cell caps that came with the battery must be reinstalled to help prevent leakage.

cardiagn.com

If the cell caps are lost or damaged, use replacement cell caps of the same manufacture.

The cell caps must be equipped with an O-ring seal.

cardiagn.com

27-18

Load testing

In order to better determine the overall condition of a battery, always perform a load test in conjunction with the specific gravity test.

Special tools, test equipment and auxiliary items

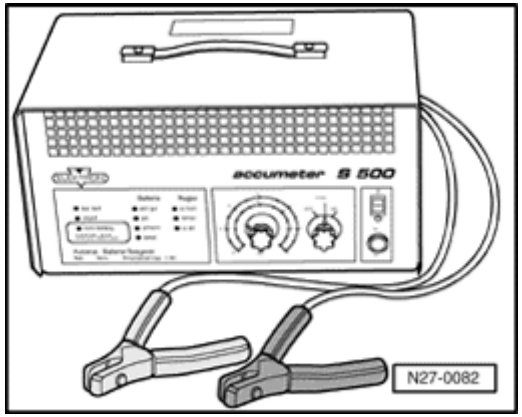

- VAS1979 or VAS5033 battery tester

Note:

When using the VAS1979 or VAS5033 battery tester, it is not necessary to remove the battery or disconnect the battery cables.

- Follow warnings and safety precautions for lead-acid batteries. Wear protective clothing such as face shield and leather gloves.

cardiagn.com

27-19

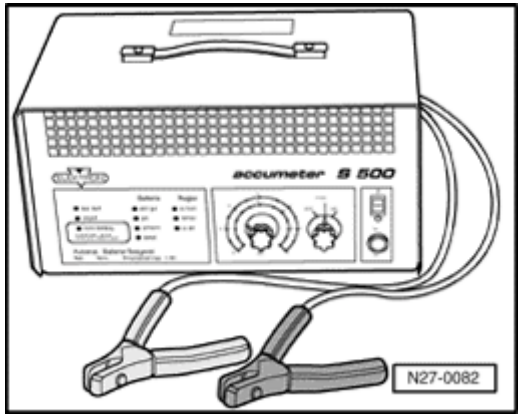

Load test procedure

- Switch ignition off.

- Read battery tester operating instructions.

- Observe carefully:

  Connect the clamps to the battery terminals as required by the tester instruction manual. The clamps must make good contact with the battery terminals.

- Load current varies depending on battery capacity, set load current on tester appropriately.

⇒ *Battery tester operating instructions*

- Obtain load current from table below.
  - ♦ The minimum voltage (the voltage which must be exceeded) varies and can be obtained from the table below.
  - ♦ The load current and minimum voltage vary depending on the capacity of the battery.

Table

Battery capacity	Cold cranking amps	Load current	Minimum voltage (limit)
70 Ah	340 A	200 A	9.5 V

cardiagn.com

27-20

Load test results

- The severe load (ohmic resistance) during this test (high current draw) causes the battery voltage to drop. If the battery is in good condition, the voltage value will only drop to the minimum voltage. The minimum voltage varies and depends on battery capacity and cold cranking amps. Cold cranking amps is understood to be the capacity of the battery in cold weather. Batteries with high cold cranking amps are especially important in vehicles with high compression engines.

- If the battery is faulty or has only a weak charge, the battery voltage will drop off very quickly "voltage collapse" (voltage below 9.0 V). After the test is completed, this low voltage will last for a longer period of time and the voltage will increase only very slowly. Such a battery will no longer reach a usable voltage (no-load voltage) ⇒ Page 27-12 .

- A battery with the faults described above does not have the power reserve of an undamaged battery and must be discarded.

cardiagn.com

27-21

Battery, charging

CAUTION!

- ***Battery cell caps must be screwed in tightly when charging, measuring voltage or performing load tests.***

- ***Do not enter the room in which batteries are being charged with unenclosed light bulbs or when smoking. The reason for this is that an explosive gas is formed in the battery by the charging process.***

Special tools, test equipment and auxiliary items

- Battery charger

- Batteries should be charged using a VAG battery charger such as VAG1471, VAG1648 or VAS1974.

Notes:

- *The temperature of the battery must not be less than 10° C (50° F).*

- *Batteries should not be fast-charged; fast-*

cardiagn.com

charging damages batteries.

- *If totally discharged batteries are fast-charged, either they will not accept any charging current or they will appear to be fully charged too early due to a "surface charge" and will only appear to be OK.*

cardiagn.com

27-22

Battery charging procedure

- Switch off battery charger.
- Switch ignition off.
- First disconnect battery Ground (GND) strap; then disconnect positive cable from battery.
- Connect positive cable of battery charger to positive terminal of battery.
- Connect negative cable of battery charger to negative terminal of battery.
- Adjust charging current on battery charger to battery capacity. It should be equivalent to approximately 10% of battery capacity or about 6 A for 60 Ah battery.
- Switch on battery charger.

cardiagn.com

27-23

Charging totally discharged batteries

Batteries out of operation for extended periods of time, such as in stored vehicles, lose their charge.

A battery is totally discharge if its no-load voltage has dropped to less than 11.6 V. To measure no-load voltage ⇒ Page 27-12

In totally discharged batteries, the electrolyte (sulfuric acid/water mixture) consists almost entirely of water, since the sulfuric acid component has been strongly reduced. At freezing temperatures, the battery can freeze and the case may burst.

Totally discharged batteries sulfate, i.e., the plate surfaces of the batteries harden and the electrolyte is not clear and has a slightly whitish coloration.

If totally discharged batteries are charged again immediately after the deep discharge, the sulfating forms again.

If these batteries are not recharged, the plates harden further and the charging capacity is diminished resulting is a loss of battery power.

cardiagn.com

27-24

Procedure for charging totally discharged, sulfated batteries

Totally discharged, sulfated batteries must be charged with a low charging current as follows:

- Set charging current to approximately 5% of battery capacity, (e.g., for 60 Ah battery, charging current should be about 3 amps).

To charge the battery ⇒ Page 27-22 . The charging voltage must not exceed 14.4 volts.

Never fast-charge totally discharged batteries.

Note:

Once the battery is reconnected, check and activate the vehicle's electrical equipment (radio, clock, comfort and convenience features, etc.) as described in this Repair Manual or the Owners Manual.

cardiagn.com

27-25

Fast-charging/boost starting

Notes:

- *Batteries should be fast-charged (charging current approximately 20% of battery capacity and higher) only under exceptional circumstances.*
- *Batteries are damaged by fast-charging.*
- *Boost starting is also possible using the VAG1472 starter/charger.*
- *The VAS1992 battery-starter provides boost starting for vehicles with totally discharged/weak batteries without connection to line voltage. Depending on the outside temperature and battery capacity, 15-30 starting operations can be completed.*

cardiagn.com

27-26

Generator, removing and installing

CAUTION!

Disconnect the battery Ground (GND) strap before working on the electrical system.

Notes:

- *Before disconnecting the battery, determine the correct coding for the anti-theft radio.*
- *Once the battery is reconnected, check and activate the vehicle's electrical equipment (radio, clock, comfort and convenience features, etc.) as described in this Repair Manual or the Owners Manual.*

cardiagn.com

27-27

Vehicles with 4-cylinder gasoline engines

Removing

1.8 Liter/110 kW, 5V Turbo

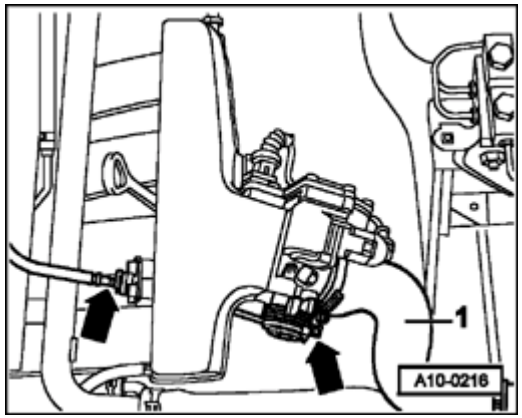

- Disconnect air duct -1- for charge air cooler from throttle valve.

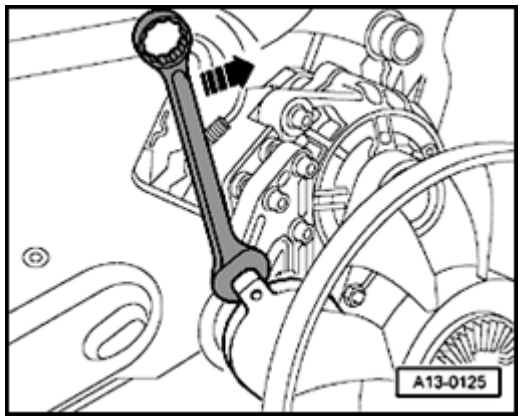

- Pivot ribbed belt tensioner in direction of arrow and remove ribbed belt from generator pulley.
- Slowly release pressure on tensioner.

cardiagn.com

27-28

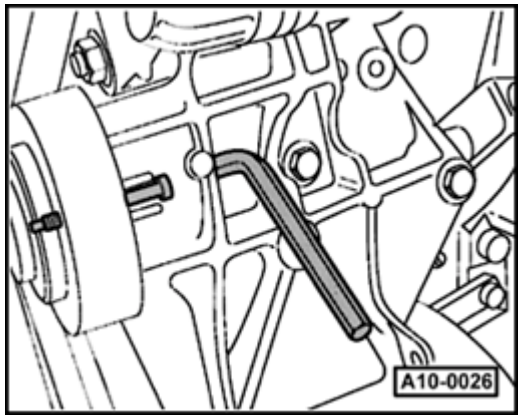

- Secure viscous clutch with 5 x 60 mm bolt and remove mounting bolt for viscous clutch.

  Tightening torque: 45 Nm (33 ft lb)

- Remove viscous clutch.

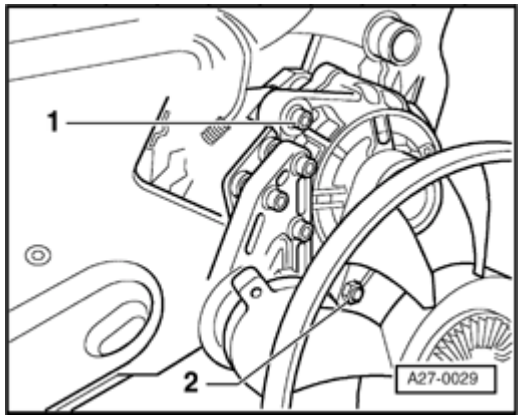

- Remove socket-head bolt -1-.

  Tightening torque: 25 Nm (18 ft lb)

- Remove nut -2- from bolt.

  Tightening torque: 45 Nm (33 ft lb)

- Pivot generator slightly to side and remove bolt from below.

cardiagn.com

27-29

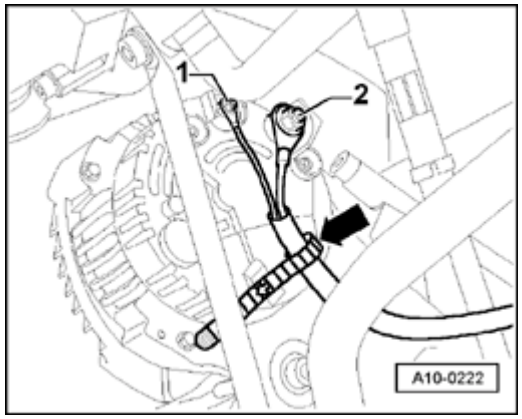

- Release wiring harness from cable tie (arrow).
- Disconnect wire on terminal 30/B+ by removing nut -2-.

  Tightening torque: 16 Nm (12 ft lb)
- Disconnect wire on terminal D+ by removing nut -1-.

  Tightening torque: 4 Nm (35 in. lb)
- Carefully push radiator hose to side and lift generator up and out.

Installing

- To make it easier to install generator onto mount, drive bushing for mounting bolt back approx. 1 mm.
- Install generator in reverse order of removal.

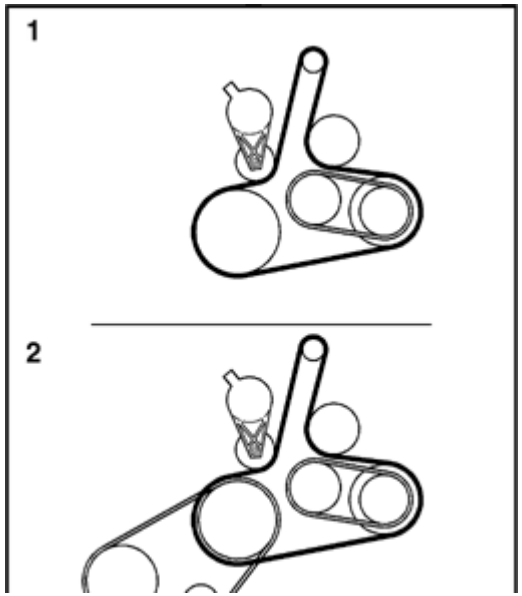

- Make sure ribbed belt is properly seated and correctly routed.

1 - Without air conditioning

2 - With air conditioning

cardiagn.com

27-30

Vehicles with 6-cylinder gasoline engines

Special tools, test equipment and auxiliary items

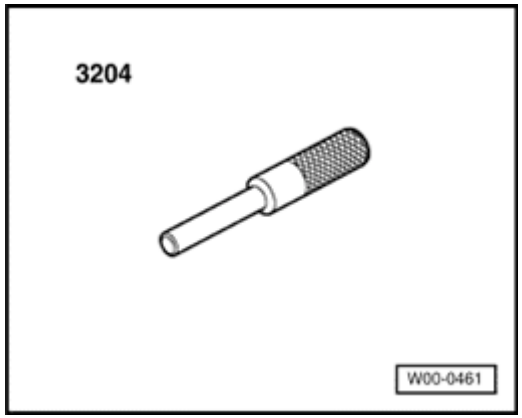

3204 drift

Removing

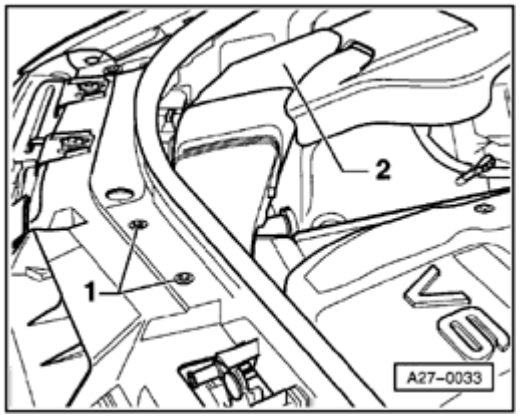

- Remove two bolts -1- on air intake duct and then lift up back portion of air intake duct -2-.

cardiagn.com

27-31

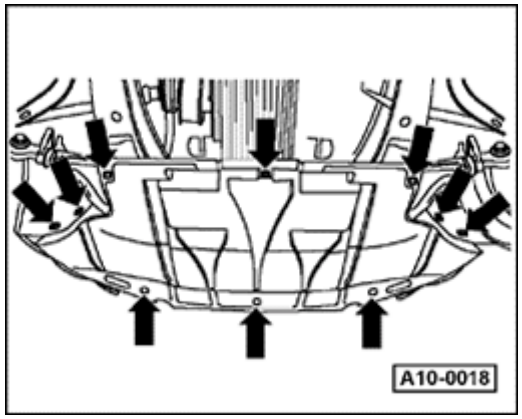

- Remove noise insulation panel (arrows).
- Remove front bumper.

⇒ *Repair Manual, Body Exterior, Repair Group 63*

- Move lock carrier to service position.

⇒ *Repair Manual, Body Exterior, Repair Group 50*

- Remove cover for engine and ribbed belt.

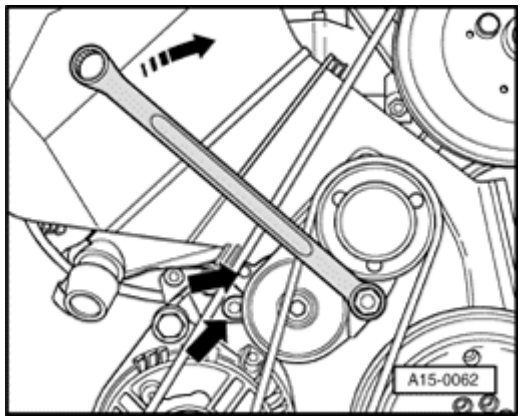

- Rotate tensioner for ribbed belt toward right using box wrench until both holes are in alignment (lower arrows), and secure in place using 3204 drift.
- Remove ribbed belt from generator pulley.

cardiagn.com

27-32

Vehicles with air conditioning

(Except 2.7 Liter/184 kW engine, 5V twin-turbo)

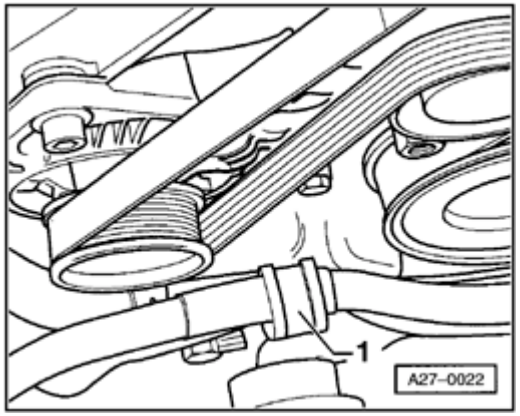

- Remove mounting clamp -1- for refrigerant lines above torque arm.

cardiagn.com

27-33

2.7 Liter/184 kW engine, 5V Twin-turbo only

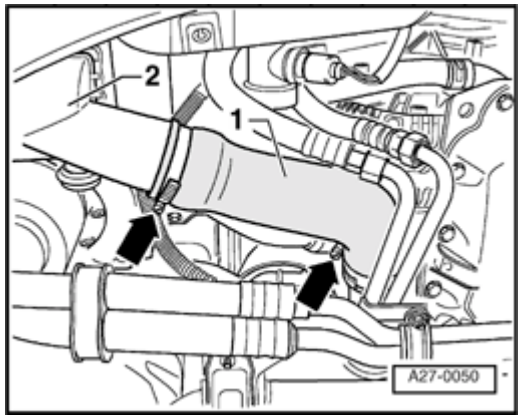

- Remove air duct -1- (arrow).
- Remove charge air cooler on right -2- (loosen hose connection above, mounted on three rubber supports).

All vehicles

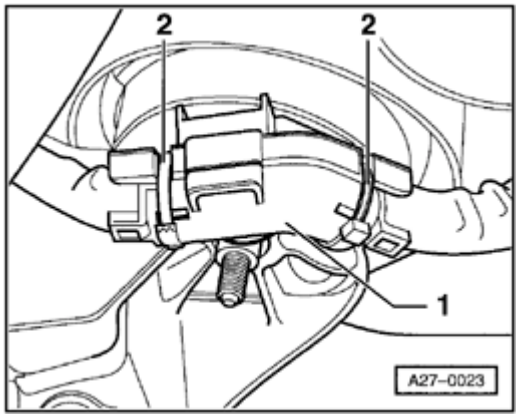

- Detach cable for starter and generator from bracket -1-.

  To do this, cut both tie wraps -2- open and then release the snap catches.

cardiagn.com

27-34

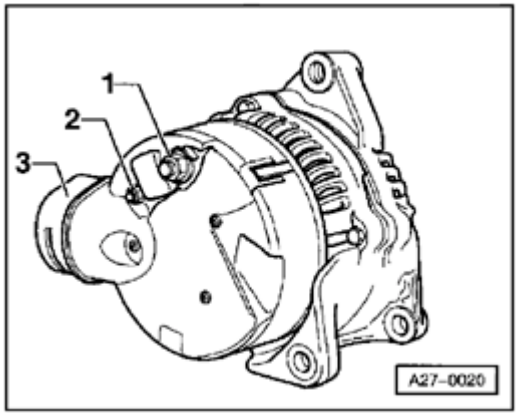

- Disconnect air duct from generator fitting -3-.
- Disconnect wire on terminal 30/B + by removing nut -2-.

  Tightening torque: 16 Nm (12 ft lb)
- Disconnect wire on terminal D+ by removing nut -1-.

  Tightening torque: 4 Nm (35 in. lb)

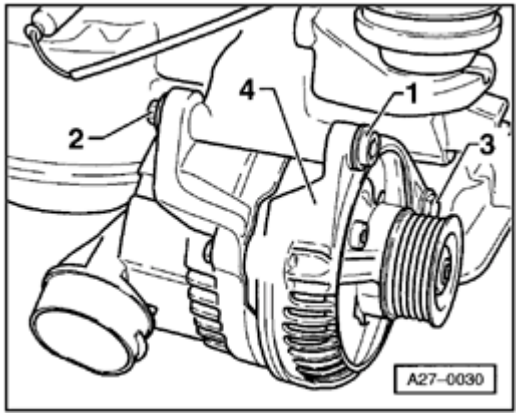

- Remove socket head bolt -1- and lock nut -2-.

  Tightening torque: 45 Nm (33 ft lb)
- Loosen bolt -3-.

  Tightening torque: 22 Nm (16 ft lb)
- Remove generator -4- from below.

CAUTION!

When removing the generator, be careful not to damage the refrigerant lines.

cardiagn.com

27-35

Installing

- To make it easier to install generator onto mount, drive bushing for mounting bolt back approx. 1 mm.

- Install generator in reverse order of removal.

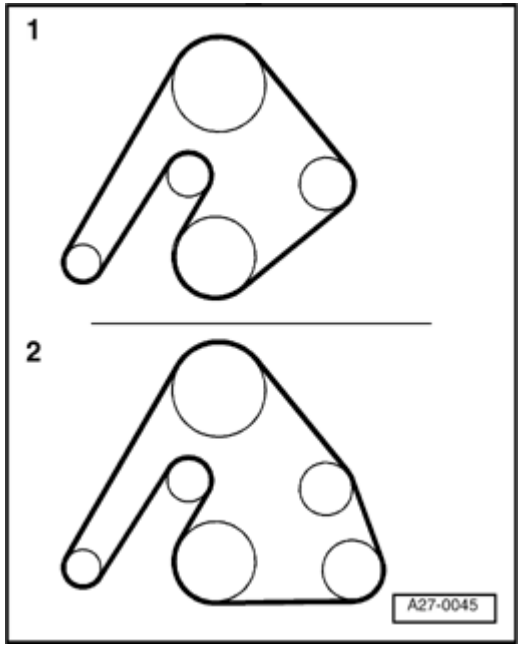

- Make sure ribbed belt is properly seated and correctly routed.

1 - Without air conditioning

2 - With air conditioning

cardiagn.com

27-36

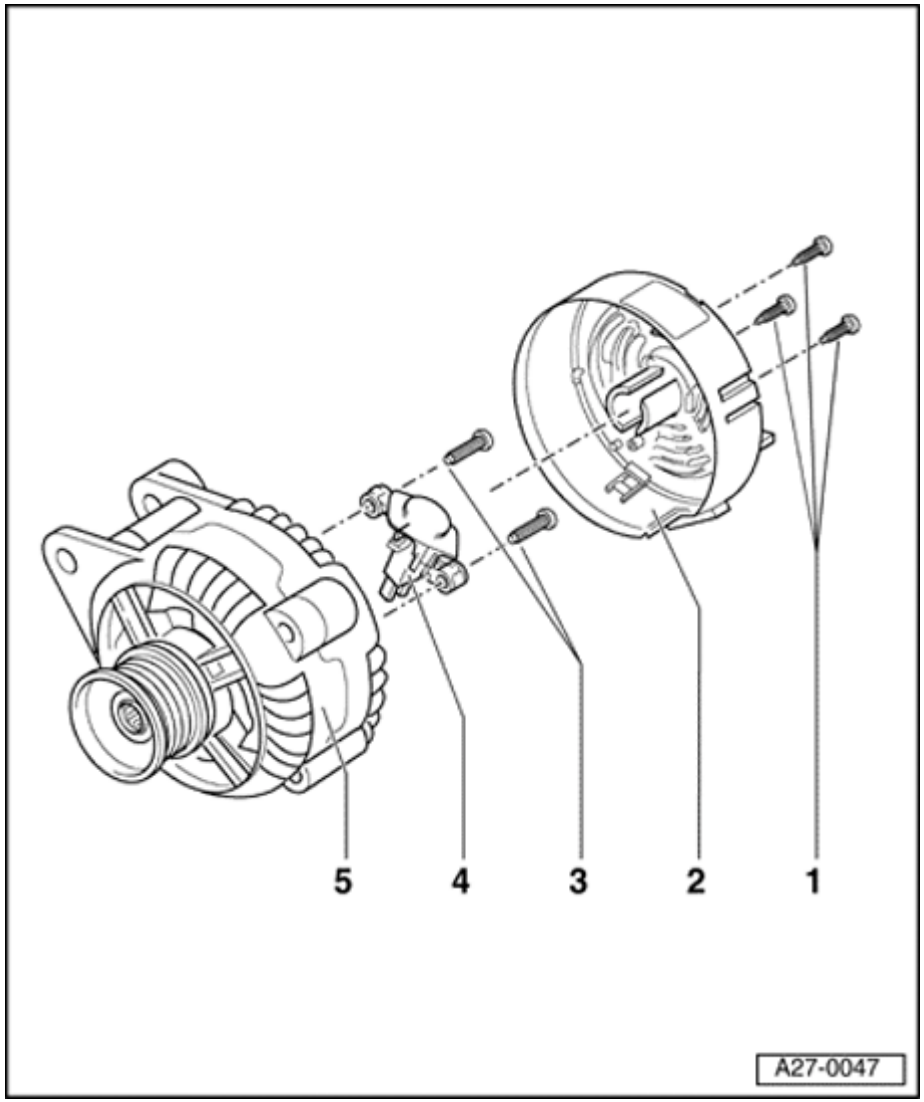

Voltage regulator, replacing

Model: Bosch

1 - Phillips-head screws

- 1 Nm (9 in. lb)

2 - Protective cover

- 3 snap catches

3 - Slotted screws

- M4 = 2 Nm (18 in. lb)

4 - Voltage regulator

- Removing and installing⇒ items - 1 -, - 2 - and - 3 -
- Wear limit for carbon brushes: 5 mm

5 - Generator

cardiagn.com

27-37

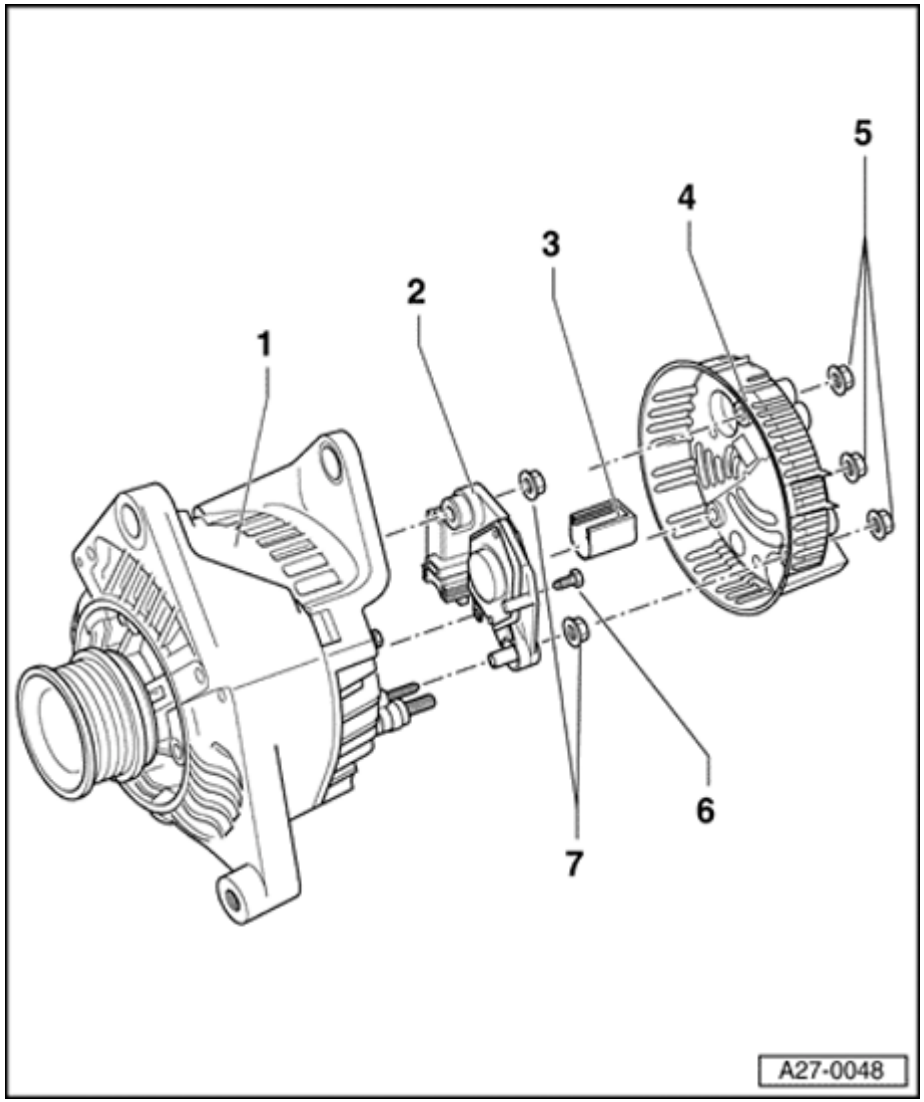

Model: Valeo

1 - Generator

2 - Voltage regulator

- Removing and installing ⇒ items - 4 -, - 5 -, - 6 - and - 7 -
- Wear limit for carbon brushes: 5 mm

3 - Cover

- Push off before mounting voltage regulator; press on after mounting

4 - Protective cover

5 - Flanged nuts

- 2 Nm (18 in. lb)

6 - Screw

- 2 Nm (18 in. lb)

7 - Flanged nuts

- 3.5 Nm (31 in. lb)

cardiagn.com

27-38

Ribbed belt pulley, removing and installing

Special tools, test equipment and auxiliary items

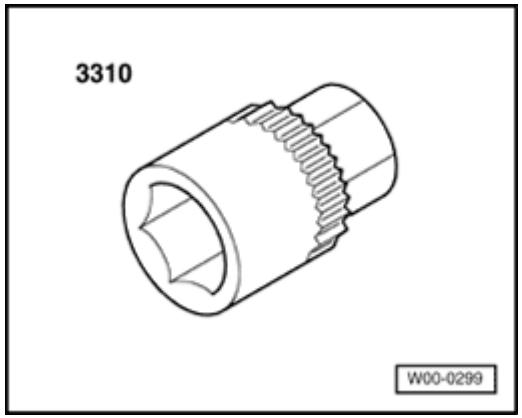

3310 socket

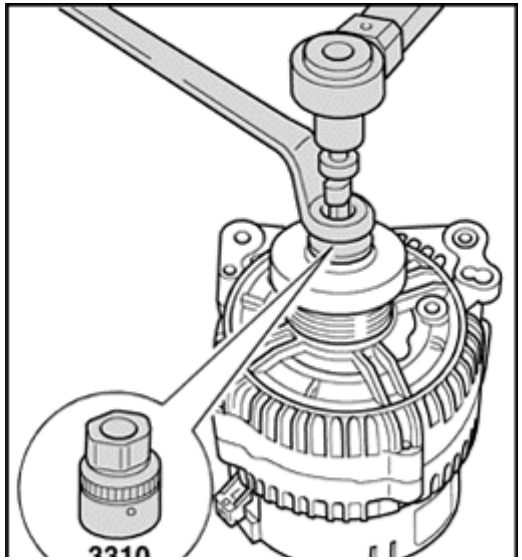

- Counterhold mounting nut using 3310 socket.
  - Removing: rotate generator shaft to right
  - Installing: rotate generator shaft to left
  - Tightening torque: 65 Nm (48 ft lb)

cardiagn.com

27-39

Ribbed belt pulley with freewheel, removing and installing

Special tools, test equipment and auxiliary items

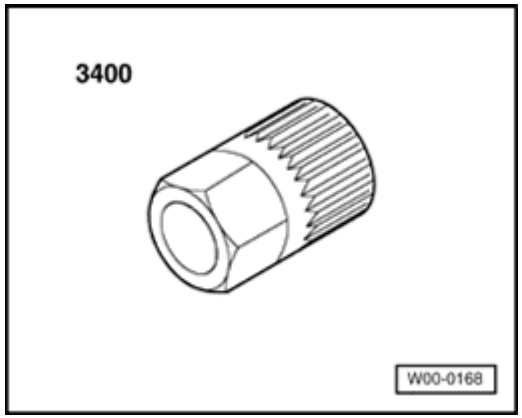

3400 multi-tooth adapter

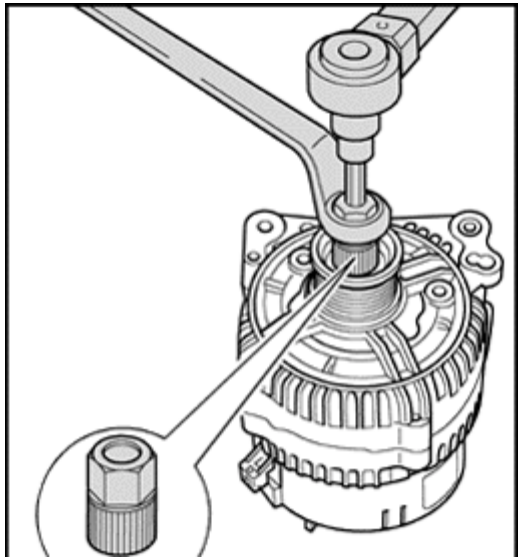

- Counterhold belt pulley using 3400 multi-tooth adapter.
  - Removing: rotate generator shaft to right
  - Installing: rotate generator shaft to left
  - Tightening torque: 80 Nm (59 ft lb)
- Clip protective cover onto freewheel belt pulley.

cardiagn.com

27-40

Starter, removing and installing

CAUTION!

Disconnect the battery Ground (GND) strap before working on the electrical system.

Notes:

- *Before disconnecting the battery, determine the correct coding for the anti-theft radio.*
- *Once the battery is reconnected, check and activate the vehicle's electrical equipment (radio, clock, comfort and convenience features, etc.) as described in this Repair Manual or the Owners Manual.*

cardiagn.com

27-41

Vehicles with 4-cylinder gasoline engines

Removing

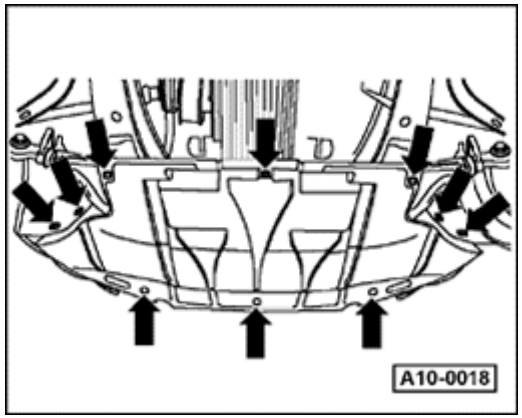

- Remove noise insulation panel (arrows).

Vehicles with air conditioning

- Remove front bumper.

⇒ *Repair Manual Body Exterior, Repair Group 63*

- Move lock carrier into service position.

⇒ *Repair Manual Body Exterior, Repair Group 50*

cardiagn.com

27-42

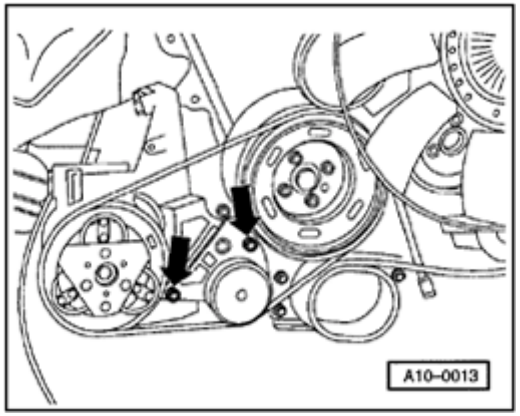

- Loosen mounting bolts for air conditioning compressor belt tensioner (arrows).
- Release tension on ribbed belt and remove.

Note:

Before removing the ribbed belt, mark the direction of travel with chalk or a felt tipped marker. Reversing the direction of travel of an used belt can destroy it. When installing the belt, make sure it is correctly seated in the belt pulleys.

- Unbolt air conditioning compressor.

  Tightening torque: 25 Nm (18 ft lb)
- Hang air conditioning compressor up on chassis with its refrigerant lines attached.

cardiagn.com

27-43

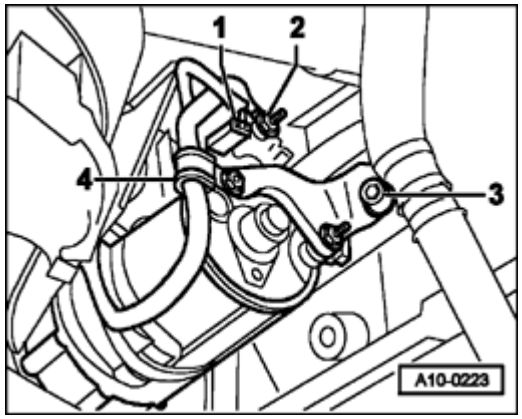

- Disconnect wire from terminal 30/B+ by removing nut -2-.

  Tightening torque: 16 Nm (12 ft lb)
- Disconnect harness connector -1- from terminal 50.
- Remove bolt -3-.

  Tightening torque: 22 Nm (16 ft lb)
- Unbolt wiring clamp -4-.

  Tightening torque: 4 Nm (35 in. lb)

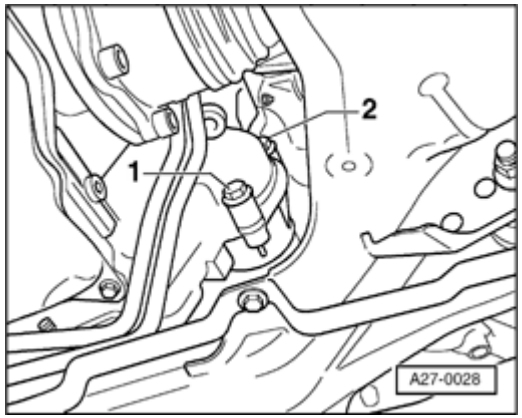

- Remove starter mounting bolts -1- and -2-.

  Tightening torque: 65 Nm (48 ft lb)
- Remove starter toward front.

cardiagn.com

27-44

Installing

Installation is the reverse of removal; noting the following:

Vehicles with air conditioning

- Install ribbed belt for air conditioning compressor.

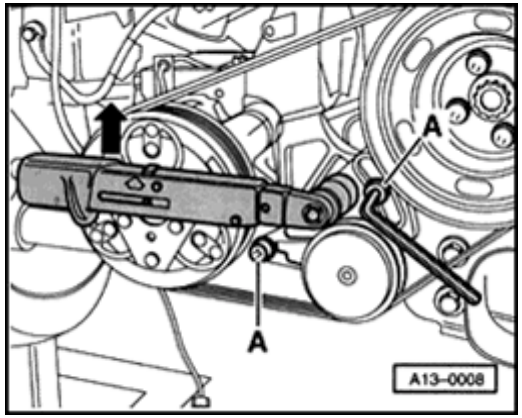

- Place torque wrench on hex head of belt tensioner as shown and tighten to 25 Nm (18 ft lb).
- Maintain torque on belt tensioner and tighten bolt -A- to 20 Nm (15 ft lb).

All vehicles

- Start engine and make sure belt runs properly.

cardiagn.com

27-45

Vehicles with 6-cylinder gasoline engines

Removing

Note:

To remove the starter, it is first necessary to remove the generator ⇒ *Page 27-26* .

2.7 L/184 kW engine, 5V twin-turbo only

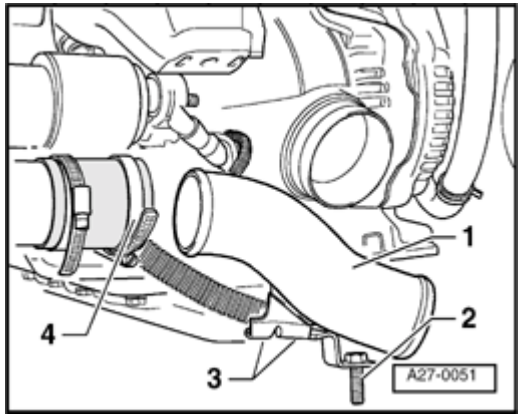

- Remove air duct -1-.

2 - Attachment point for oil and refrigerant lines

3 - Engine block mounting point

4 - Hose clamp (loosen)

All vehicles

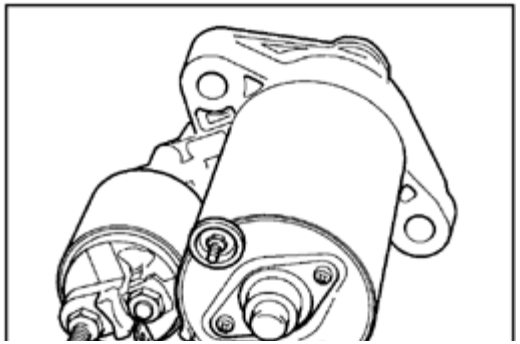

- Disconnect wire from terminal 30/B+ -2- by removing nut. Tightening torque: 16 Nm (12 ft lb)
- Disconnect harness connector from terminal 50 -2-.

cardiagn.com

27-46

Vehicles with manual transmission

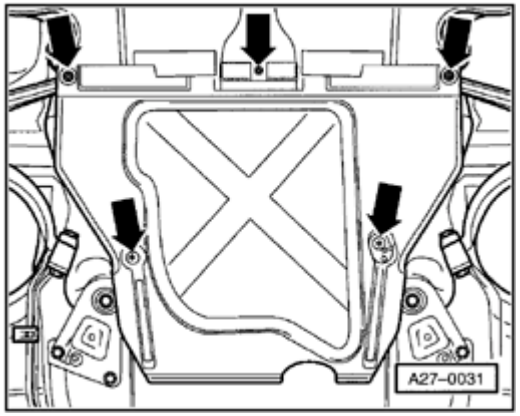

- Remove rear noise insulation panel (arrows).

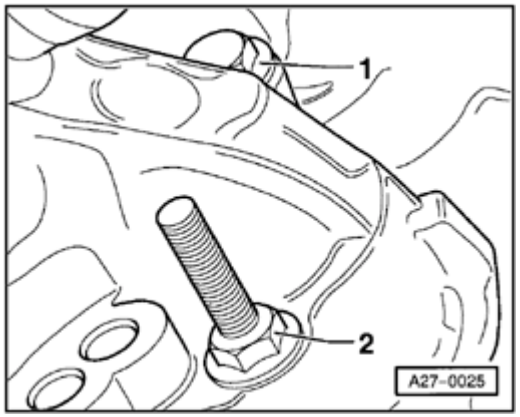

- Remove mounting bolts -1- and -2- for starter.

  Tightening torque: 65 Nm (48 ft lb)
- Remove starter toward front.

cardiagn.com

27-47

Vehicles with automatic transmission

- Remove right-front wheel.

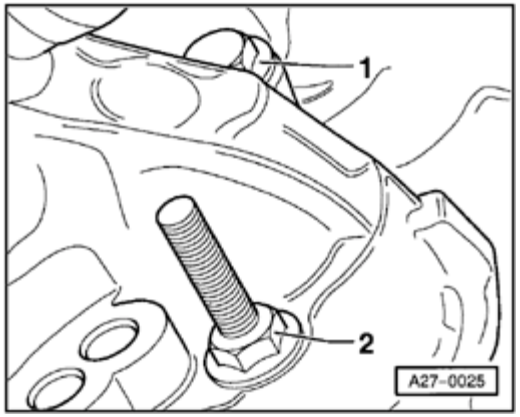

- Upper bolt -1- can be unscrewed from right-front wheel housing.
  Tightening torque: 65 Nm (48 ft lb)
- From engine side, remove lower bolt.
  Tightening torque: 65 Nm (48 ft lb)
- Remove starter toward front.

Installing

- Install starter in reverse order of removal.

cardiagn.com

27-48

Cruise control system, removing and installing

Cruise control system for vehicles with diesel engines

In vehicles with diesel engines, the functions of the cruise control system are controlled by the fuel injection control module.

Aside from the cruise control switch in the turn signal lever, there are no additional components.

cardiagn.com

27-49

Cruise control system for vehicles with 4 and 6-cylinder gasoline engines

CAUTION!

Disconnect the battery Ground (GND) strap before working on the electrical system.

Notes:

- *Before disconnecting the battery, determine the correct coding for the anti-theft radio.*
- *Once the battery is reconnected, check and activate the vehicle's electrical equipment (radio, clock, comfort and convenience features, etc.) as outlined in this Repair Manual or the Owners Manual.*

Vehicles with electronically-operated throttle valve

In vehicles with fuel injection, the functions of the cruise control system are controlled by the fuel injection control module.

Aside from the cruise control switch in the turn signal lever, there are no additional components.

Vehicles with mechanically-operated throttle valve

cardiagn.com

The cruise control, control module -J213- is located behind the airbag unit on the passenger side.

cardiagn.com

27-50

Cruise control, control module -J213-, removing and installing

Follow the sequence of operations below:

- Remove glove box.

⇒ *Repair Manual Body Interior, Repair Group 68*

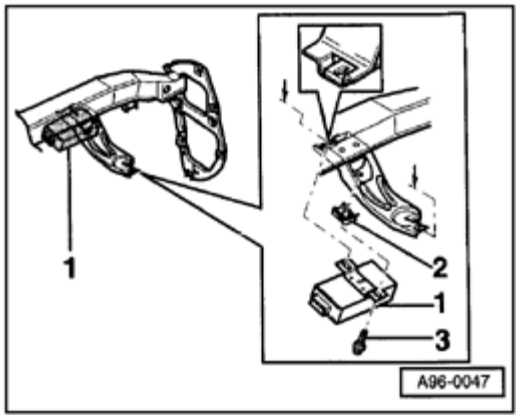

- Detach control module -1- by removing Phillips-head screw -3- from clip nut -2-.

  Tightening torque: 3 Nm (27 in. lb)

- Withdraw control module from mounting bracket and disconnect harness connector.

cardiagn.com

27-51

Actuator linkage, adjusting

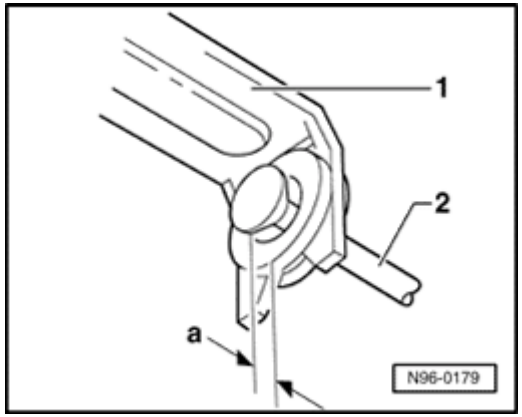

4-cylinder engines

Depending on the engine, only the installation position of the linkage varies in the different 4-cylinder engines.

Follow the sequence of operations below:

- Start engine and allow to idle (throttle valve at idle).
- Screw in linkage -2- up to stop and then turn back one turn (360° ±90°).

The play -a- between linkage -2- and actuator -1- must be 0.5-1.0 mm.

- Secure linkage from moving (locknut).

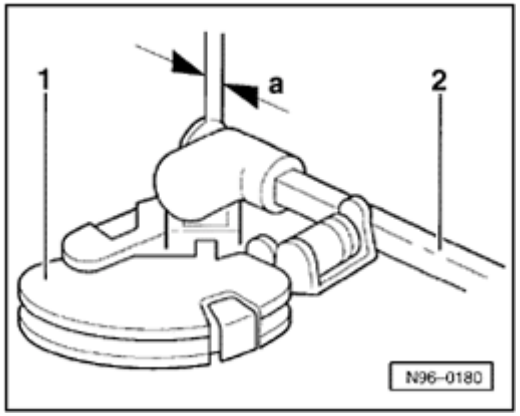

6-cylinder engines

The adjustment is the same as on the 4-cylinder engine.

The play -a- between linkage -2- and the stop plate on cam plate -1- must be 0.5-1.0 mm.

- Secure linkage from moving (locknut).

cardiagn.com

27-52

Actuator, removing and installing

Depending on the engine, the installation position of the individual actuators can vary.

Follow the sequence of operations below:

- Remove vacuum line.
- Unscrew or unclip linkage.
- Disconnect actuator from bracket (arrow).

  Tightening torque: 25 Nm (18 ft lb)

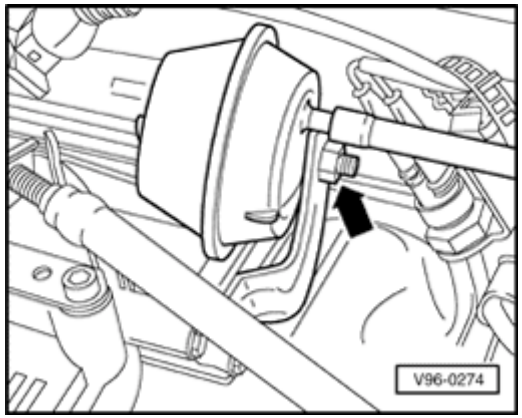

cardiagn.com

27-53

Vacuum pump, removing and installing

The vacuum pump is located under the ABS unit and can be removed after removing the left-front wheel housing liner.

Follow the sequence of operations below:

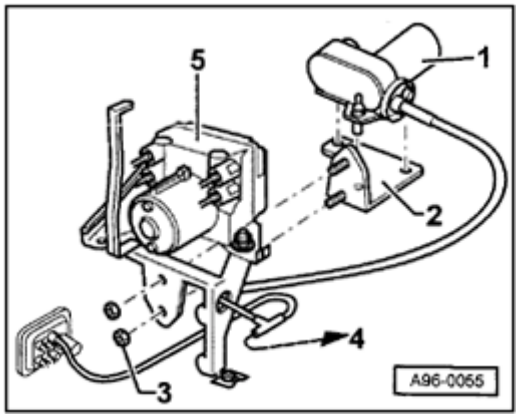

- Remove retaining nuts -3- (5 Nm or 44 in. lb) and remove unit toward left through wheel housing.
- Lift vacuum pump -1- complete with its rubber nubs up and out of bracket -2-.

4 - Vacuum line routing to actuator

cardiagn.com

27-54

Vent valves, removing and installing

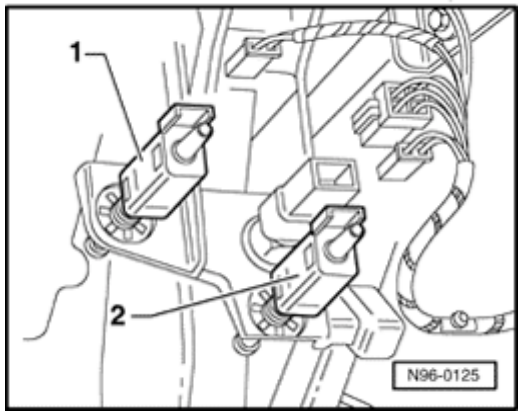

Follow the same procedure for both valves when removing and installing the clutch pedal vent valve -1- and the brake pedal vent valve -2-.

Removing

Follow the sequence of operations below:

- Disconnect harness connector and vacuum line.
- Push or rotate vent valve out of its bracket.

Installing

Note:

To ensure that the valve is seated firmly enough, the valve may only be re-installed once.

- Pedal in released position
- Push vent valve into bracket as far as stop (e.g. using 10 mm box wrench); do not rotate it in.

cardiagn.com

27-55

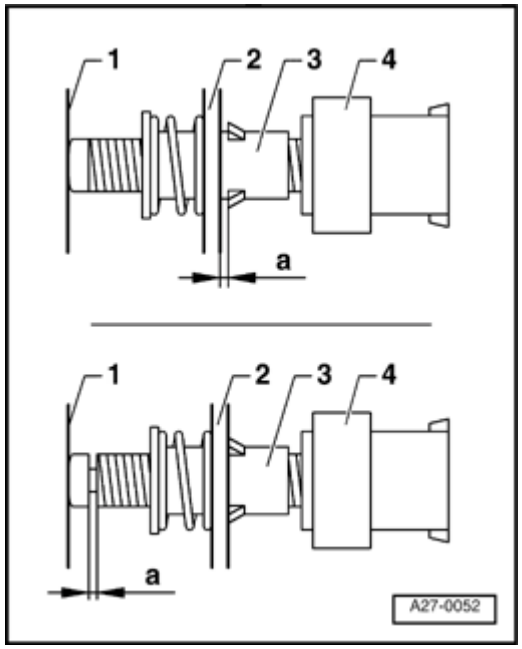

A new bracket is being used as of model year 1998.

After installation, the vent valve must be in the following position:

a - 0 - 0.7 mm

1 - Pedal stop surface

2 - Pedal bracket

3 - Bracket

4 - Vent valve

- Connect harness connector and vacuum line.

cardiagn.com

27-56

Cruise control vacuum system, checking for leaks

Follow the sequence of operations below:

- Remove vacuum line from vacuum pump.
- Push diaphragm on actuator inward.
- Plug removed vacuum line.
  - If actuator diaphragm remains pressed and does not move: system is airtight
  - If actuator diaphragm returns to its original position: system has a leak

Note:

Malfunctions can be caused by incorrectly set vent valves, leaking actuators or by cracks in the vacuum lines.

cardiagn.com

90-1

Instrument cluster (through M.Y. 1999)

Instrument cluster, removing and installing

CAUTION!

Disconnect the battery Ground (GND) strap before working on the electrical system.

Notes:

- *Before disconnecting the battery, determine the correct coding for the anti-theft radio.*
- *Once the battery is reconnected, check and activate the vehicle's electrical equipment (radio, clock, comfort and convenience features, etc.) as outlined in this Repair Manual or the Owner's Manual.*

cardiagn.com

90-2

Notes:

- *Check DTC memory (⇒ Page 01-10) before removing the instrument cluster.*
- *Use the VAG1551 scan tool to check the Service Reminder Indicator (SRI) and odometer readings and record the displayed values ⇒ Page 01-32 .*

Two versions of the instrument cluster are manufactured by various companies:

- *Raised version (Highline) with trip computer.*
- *Standard version (Lowline) with mini-check system.*

- Using steering column adjustment, fully extend steering wheel and move it to its lowest position.

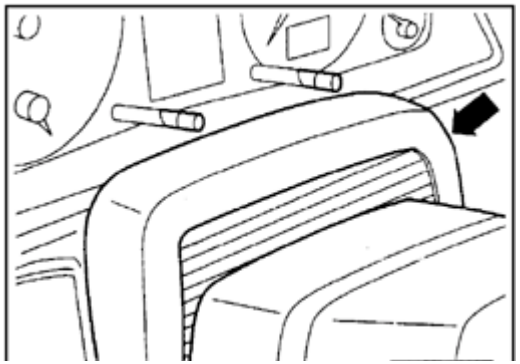

- Pivot top cover toward front and lift off.

cardiagn.com

90-3

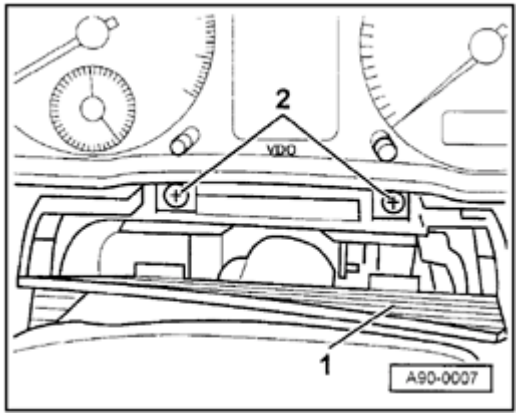

- Pivot cover trim -1- away toward front.
- Remove screws -2-.
- Pull instrument cluster out, toward front.
- Cut open tie wraps on back of instrument cluster.
- Release retaining tabs on harness connectors and disconnect.
- Install in reverse order of removal.
- Check instrument cluster function after installation.
- If instrument cluster is working properly, initiate adaptation of Service Reminder Indicator (SRI) and service interval ⇒ Page 01-32 .

cardiagn.com

90-4

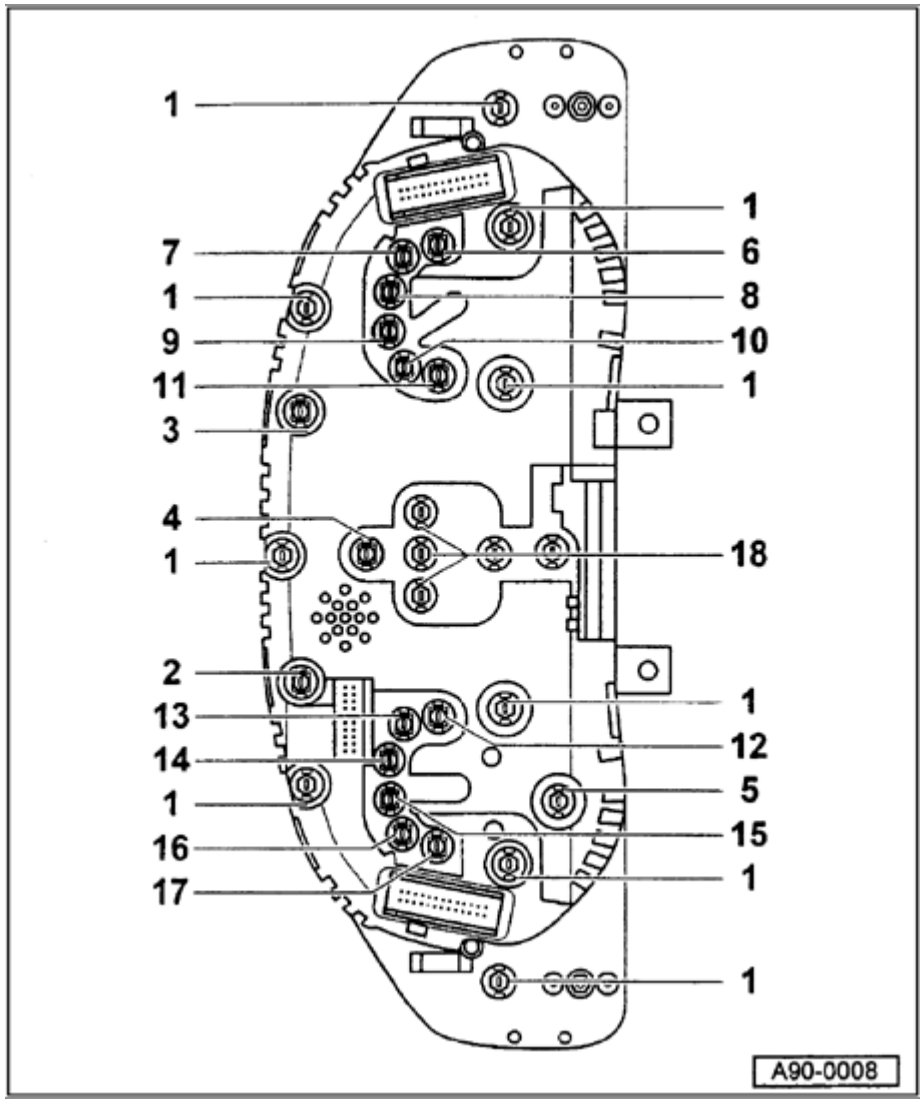

Instrument cluster bulbs, locations (through 1997)

Highline version of instrument cluster with trip computer

1 - Instrument cluster illumination

Note:

When replacing instrument cluster bulbs in instrument clusters manufactured by Nippon Seiki, make sure to use replacement bulbs with red caps.

2 - Right turn signal indicator light

- 1.2 W

3 - Left turn signal indicator light -K65-

- 1.2 W

4 - Headlight high beam indicator light

- 1.2 W

5 - Odometer display illumination

- 1.1 W

cardiagn.com

90-5

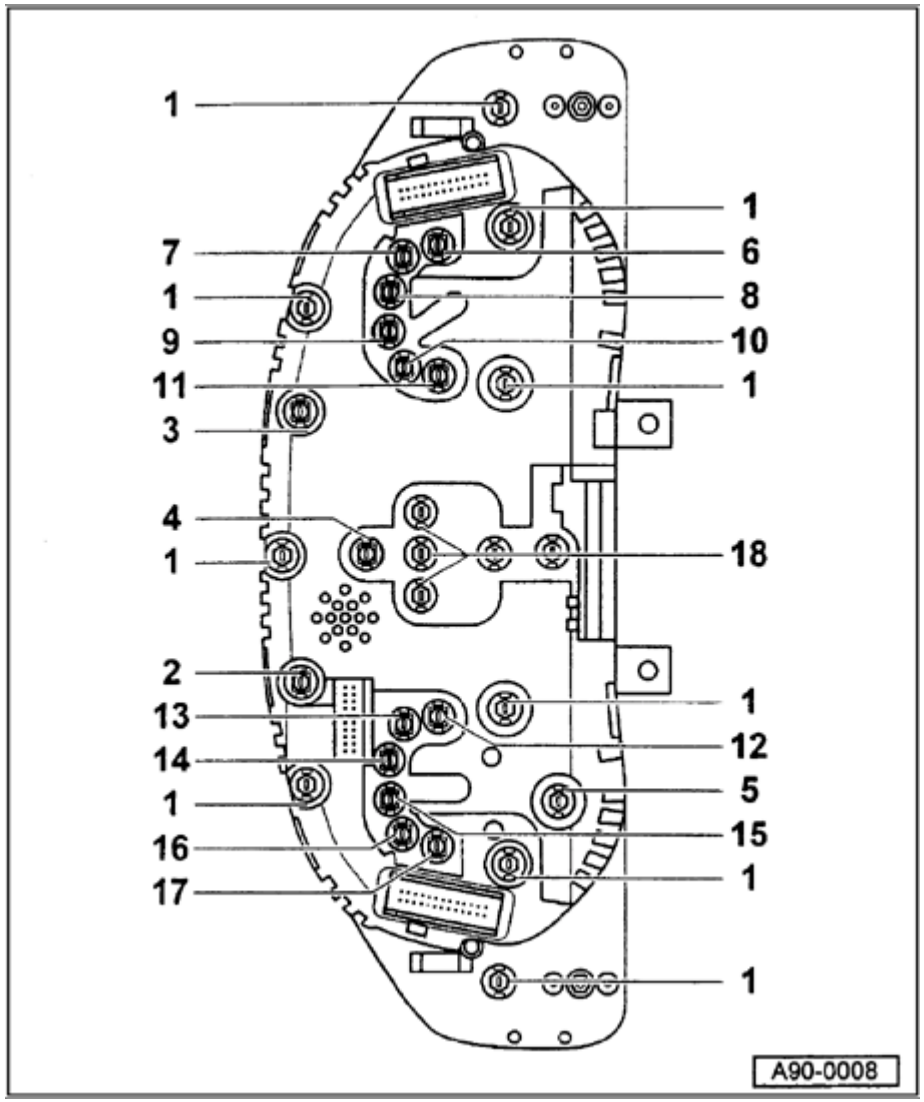

6 - Engine Malfunction Indicator Lamp (MIL)

- 1.2 W

7 - Open

8 - Open

9 - Open

10 - Open

11 - Open

12 - Open

13 - Airbag Malfunction Indicator Lamp (MIL)

- 1.2 W

14 - ABS warning light

- 1.2 W

15 - Parking brake indicator light

- 1.2 W

16 - Generator (GEN) warning light

- 1.2 W

17 - Seat belt warning light

- 1.2 W

18 - Trip computer illumination

- 5 each 1.1 W

cardiagn.com

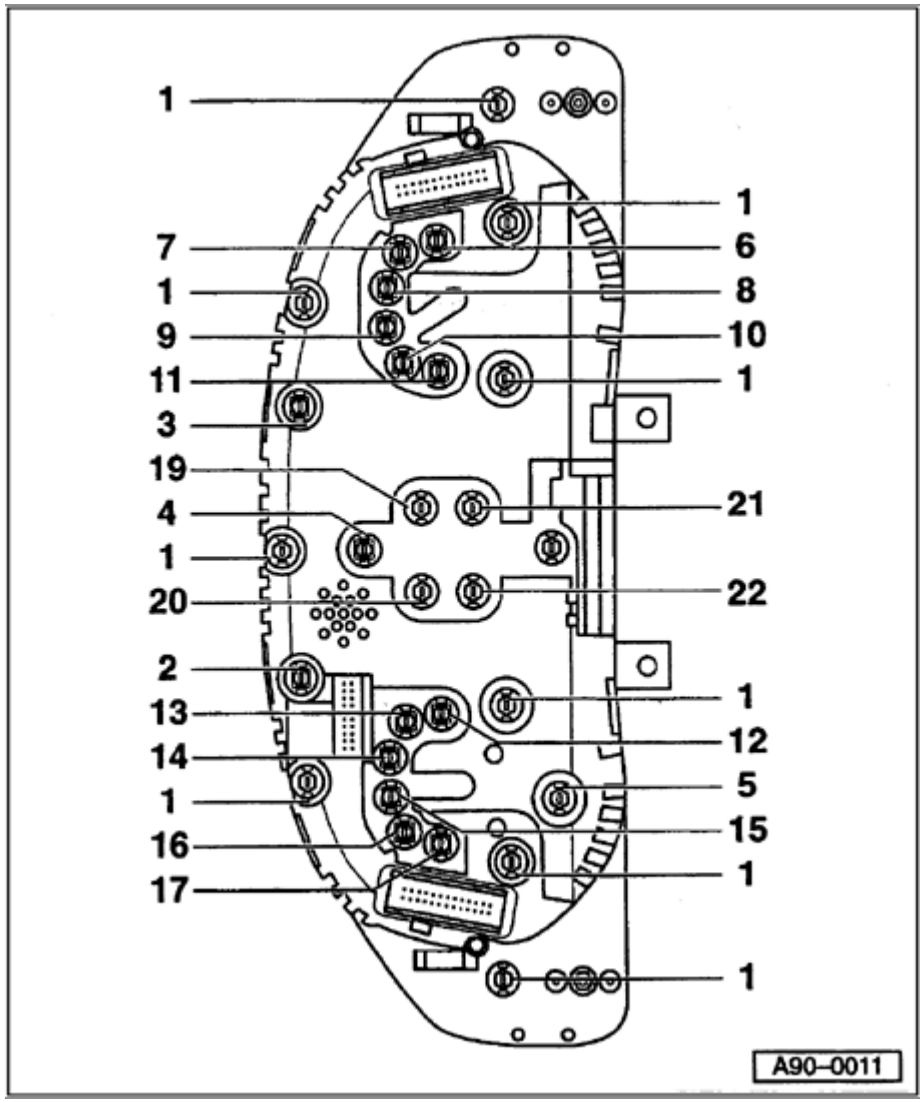

Lowline version instrument cluster with mini-check system

1 - Instrument cluster illumination

Note:

When replacing instrument cluster bulbs in instrument clusters manufactured by Nippon Seiki, make sure to use replacement bulbs with red caps.

2 - Right turn signal indicator light

- 1.2 W

3 - Left turn signal indicator light -K65-

- 1.2 W

4 - Headlight high beam indicator light

- 1.2 W

5 - Odometer display illumination

- 1.1 W

6 - Engine Malfunction Indicator Lamp (MIL)

- 1.2 W

cardiagn.com

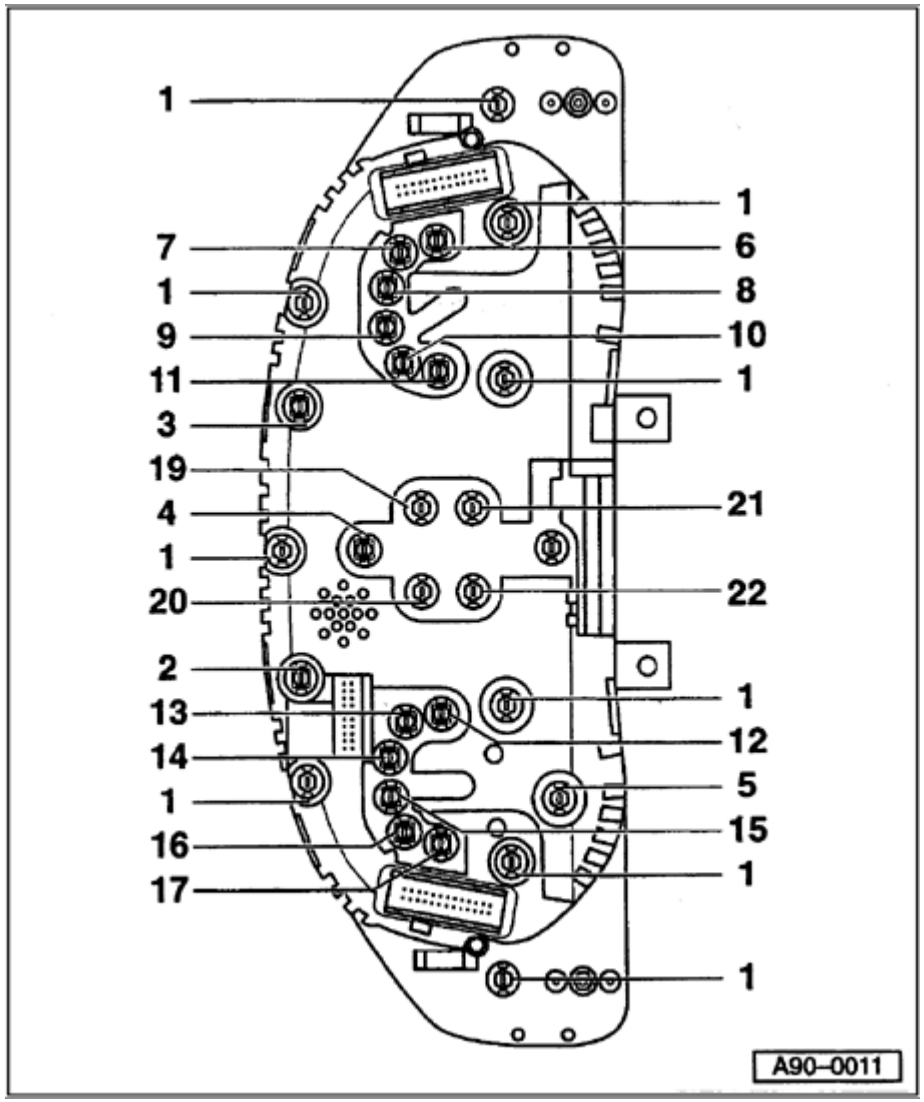

7 - Open

8 - Open

9 - Open

10 - Open

11 - Open

12 - Open

13 - Airbag Malfunction Indicator Lamp (MIL)

- 1.2 W

14 - ABS warning light

- 1.2 W

15 - Parking brake indicator light

- 1.2 W

16 - Generator (GEN) warning light

- 1.2 W

17 - Seat belt warning light

- 1.2 W

cardiagn.com

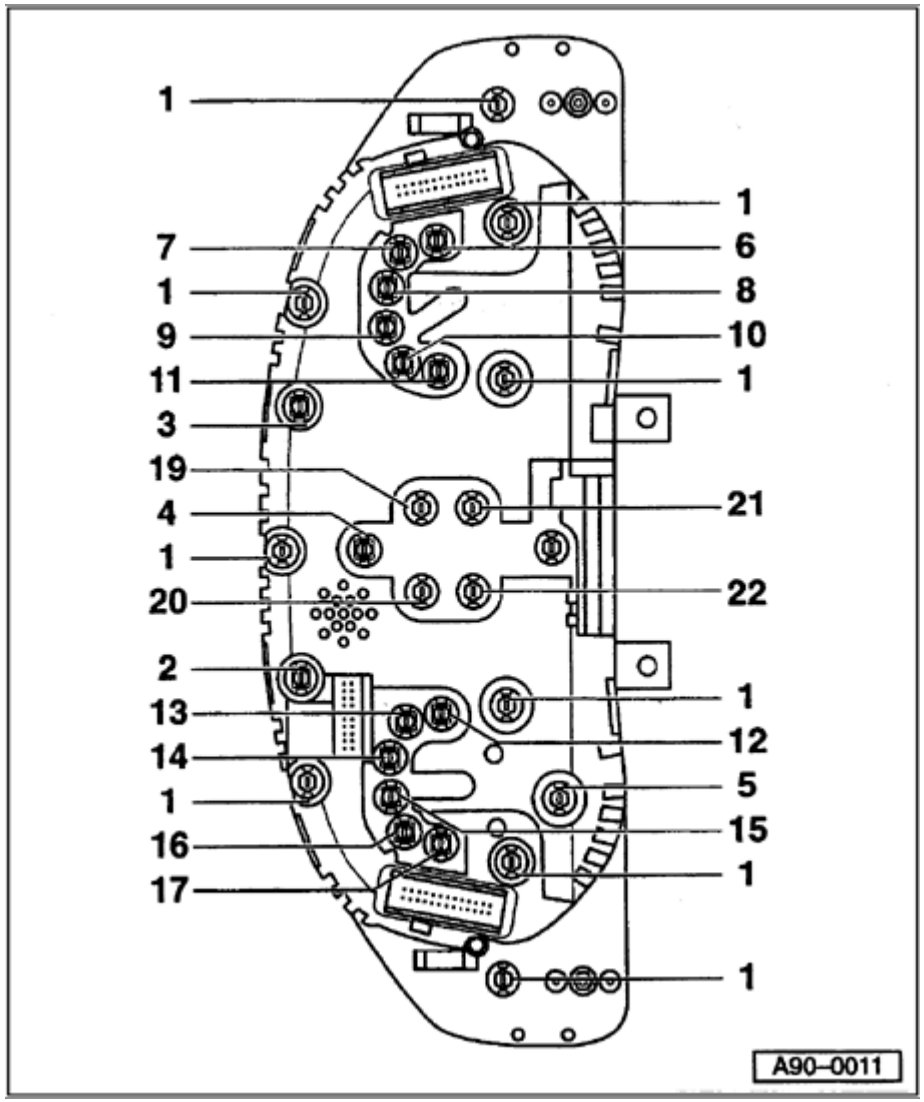

19 - Engine Coolant Temperature (ECT) warning light

- 1.2 W

20 - Oil pressure warning light

- 1.2 W

21 - Brake malfunction indicator light

- 1.2 W

22 - Low fuel level warning light

- 1.2 W

cardiagn.com

Instrument cluster multi-pin connector, terminal assignments (through 1997)

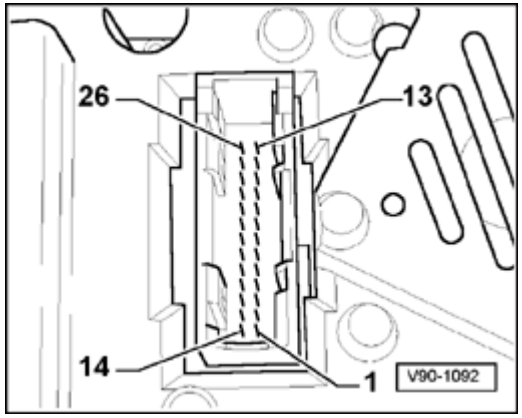

26-pin connector (blue)

Note:

Use VAG1598/4 adapter with VAG1598 test box and appropriate wiring diagram for test measurements at 26-pin harness connectors.

1 - Open

2 - Signal for buzzer

3 - Terminal 15

4 - Terminal 15

5 - Open

6 - Terminal 61

7 - Parking brake/brake system malfunction

8 - ABS (input signal)

9 - Airbag (input signal)

10 - CAT

11 - Open

12 - Open

cardiagn.com

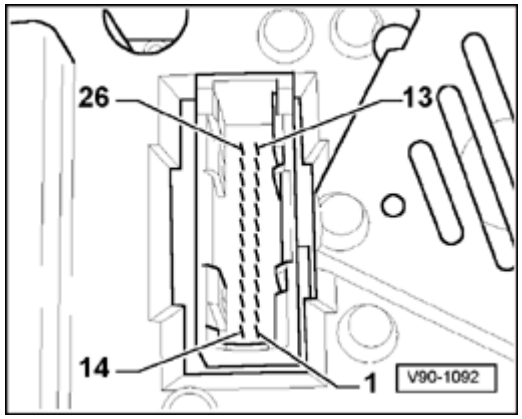

13 - Parking light, right

14 - Ignition switch, S-contact

15 - Chime signal

16 - Open

17 - Open

18 - Oil pressure 1.8 bar

19 - Terminal 58d

20 - Coolant level

21 - Turn signal, right

22 - Headlight high beams

23 - Speedometer Vehicle Speed Sensor (VSS) (checking ⇒ Page 90-22)

24 - Brake fluid

25 - Brake pads

26 - Parking light, left

cardiagn.com

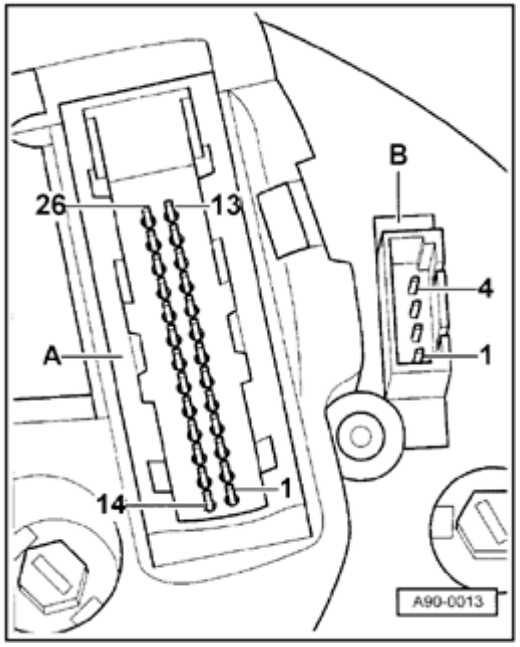

26-pin connector (yellow)

Note:

Use VAG1598/4 adapter with VAG1598 test box and appropriate wiring diagram for test measurements at 26-pin harness connectors.

1 - Terminal 58

2 - Terminal 58

3 - Engine RPM signal

4 - Air conditioner compressor

5 - Clock (output)

6 - Speed signal 1

7 - Speed signal 2

8 - Door contact (driver's door)

9 - Terminal 30

10 - Terminal 30

11 - Open

12 - Fuel tank warning

cardiagn.com

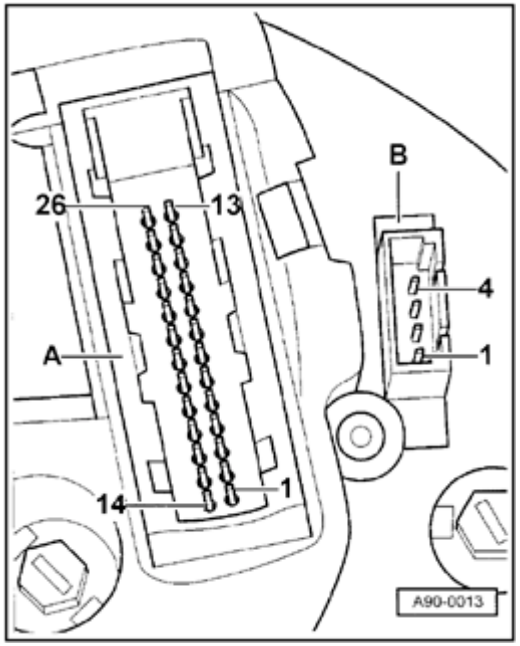

13 - Turn signal, left

14 - Open

15 - Open

16 - Seat belt buckle switch

17 - Open

18 - Terminal 31

19 - Terminal 31

20 - Diagnostic wire

21 - Open

22 - Open

23 - Open

24 - Open

25 - Sender for fuel gauge

Checking ⇒ Page 90-23

26 - Engine coolant temperature sensor

Checking ⇒ Page 90-24

cardiagn.com

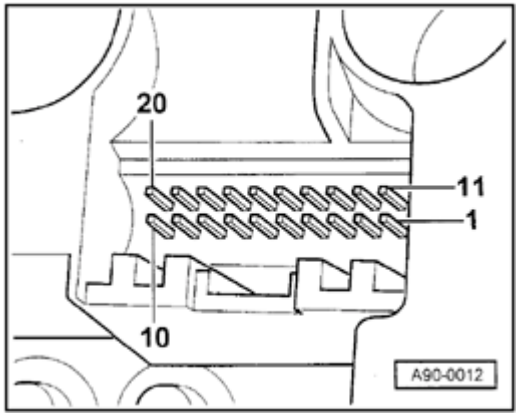

20-pin connector (black)

1 - Fuel consumption signal

2 - Open

3 - Open

4 - Open

5 - Outside air temperature

6 - Selector lever display

7 - Open

8 - Open

9 - Coolant level

10 - Hydraulic pressure

11 - Trip computer - Reset

12 - Radio/Telephone - Clock

13 - Radio/Telephone - Data

14 - Trip computer (forward sequence)

15 - Radio/Telephone - Enable

16 - Rear lights/headlight low beams

17 - Open

18 - Trip computer (reverse sequence)

19 - Brake lights

cardiagn.com

20 - Open

cardiagn.com

90-14

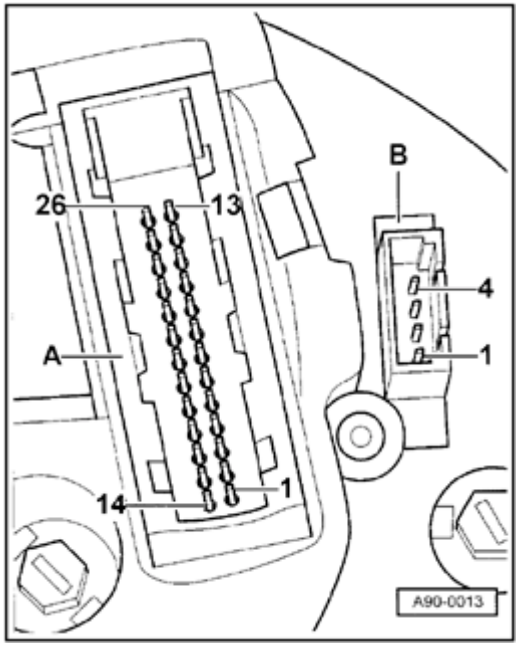

4-pin connector (black)

1 - Oil temperature sensor

2 - Open

3 - Open

4 - Open

cardiagn.com

90-15

Indicator lights in instrument cluster, locations (1998 through 1999)

Note:

With the exception of two indicator lights, all the remaining indicator lights are equipped with Light Emitting Diodes (LEDs). This means that if one LED fails, the instrument cluster must be replaced.

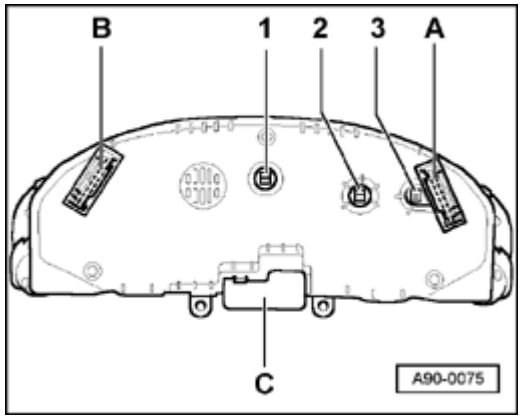

Lowline instrument cluster

1 - High beam indicator lamp - 1.2 W/1.1 W (Nippon Seiki)/ (VDO)

2 - Indicator light for Electronic Stability Program (ESP) - 1.2 W (only if equipped with ESP)

3 - Indicator light for trailer flasher - 1.2 W (only if equipped with trailer hitch)

A - 32-pin connector for basic functions, blue

B - 32-pin connector for additional functions, green

C - Cover for vehicles without outside temperature display

Note:

If the instrument cluster is replaced in vehicles with outside temperature display or if outside temperature display is added later, cover -C- must be removed from the Lowline model.

cardiagn.com

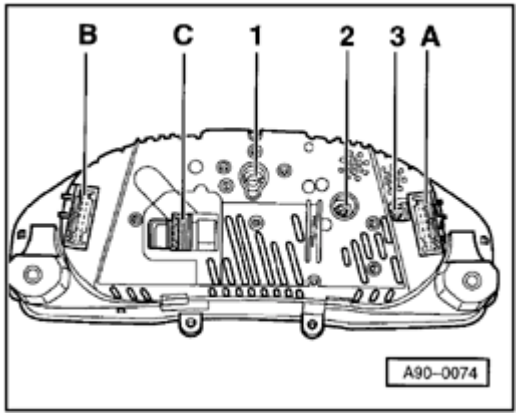

Highline instrument cluster

1 - High beam indicator lamp - 1.2 W/1.1 W (Nippon Seiki)/ (VDO)

2 - Indicator light for Electronic Stability Program (ESP) - 1.2 W (only if equipped with ESP)

3 - Indicator light for trailer flasher - 1.2 W (only if equipped with trailer hitch)

A - 32-pin connector for basic functions, blue

B - 32-pin connector for additional functions, green

C - 20-pin connector for multi-function display

cardiagn.com

Instrument cluster, terminal assignments (1998 through 1999)

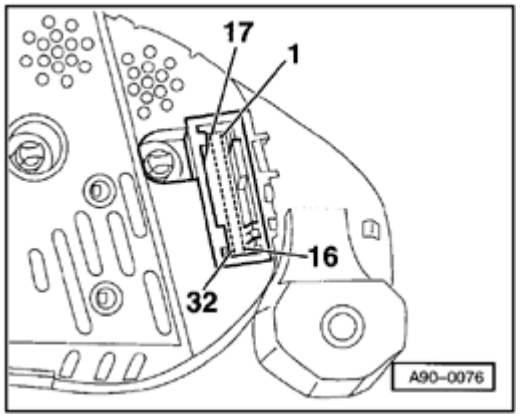

32-pin connector for basic functions, blue

1 - Terminal 15

2 - Turn signal, right

3 - Speedometer output 1

4 - Open

5 - Sender for fuel gauge

6 - Airbag

7 - Terminal 31 sensor Ground (GND)

8 - Coolant temperature

9 - Terminal 31 load Ground (GND)

10 - Oil pressure switch

11 - Engine speed (RPM) signal

12 - Terminal 61

13 - CAT

14 - Self leveling suspension

15 - Terminal 58d

16 - Malfunction Indicator Lamp (MIL)

cardiagn.com

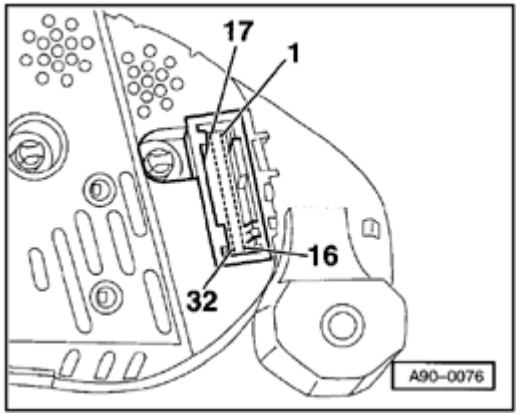

17 - High beam

18 - Turn signal, left

19 - ABS

20 - Terminal 58s

21 - Door contact (driver's door)

22 - Engine coolant low

23 - Terminal 30

24 - Terminal 31 load Ground (GND)

25 - K-wire

26 - Parking light, right

27 - Parking light, left

28 - Speedometer (input)

29 - Brake fluid level/pressure

30 - S-contact

31 - Seat belt buckle

32 - Electronic Stability Program (ESP)

cardiagn.com

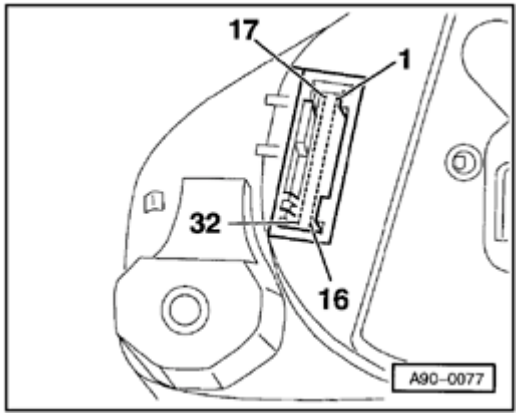

32-pin connector for additional functions, green

1 - Open

2 - Open

3 - Open

4 - Open

5 - W-wire

6 - Tailgate (Lowline model only)

7 - Brake pad (Highline model only)

8 - Input for outside buzzer control (currently not assigned)

9 - Input for outside chime control (currently not assigned)

10 - Low fuel level warning-output signal for Engine Control Module (ECM)

11 - Standing time output

12 - Air conditioning cutout

13 - Parking brake

14 - Electronic throttle

15 - Side marker light

16 - Open

cardiagn.com

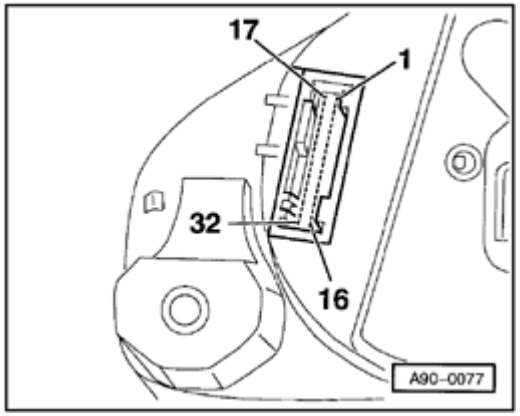

17 - Open

18 - Open

19 - Open

20 - Open

21 - Oil temperature

22 - Open

23 - Open

24 - Open

25 - Open

26 - Open

27 - Open

28 - Open

29 - Open

30 - Speedometer output 2

31 - Open

32 - Open

cardiagn.com

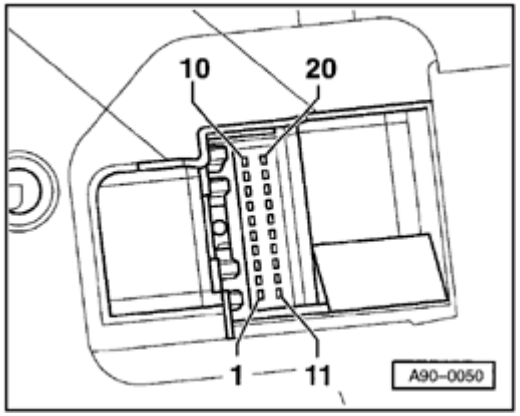

20-pin connector for multi-function display, red

1 - Fuel consumption signal

2 - Open

3 - Open

4 - Open

5 - Outside air temperature

6 - Selector lever display

7 - Open

8 - Open

9 - Washer fluid

10 - Hydraulic pressure

11 - Trip computer reset

12 - Clock signal for radio frequency display

13 - Data signal for radio frequency display

14 - Trip computer (forward sequence)

15 - Enable signal for radio frequency display

16 - Tail lights/headlight low beam (indicator lights)

17 - Open

18 - Trip computer (reverse sequence)

19 - Brake lights

cardiagn.com

20 - Open

cardiagn.com

90-22

Instrument cluster multi-pin connectors, checking

Note:

Use VAG1598 test box and VAG1598/4 (26-pin), VAG1598/25 (32-pin) adapters.

Checking Vehicle Speed Sensor (VSS)

➢ **1997**

- ♦ 26-pin connector (blue), terminal 23

- Roll vehicle back and forth (approx. 1 meter)

Must read:

Voltage must rise from 0 volts to approx. 5 volts and then drop again to 0 volts.

1998 ➢

- ♦ 32-pin connector (blue), terminal 28

- Roll vehicle back and forth (approx. 1 meter)

Must read:

Ohmic resistance must be between

cardiagn.com

approximately 0 ohms (Ω) and ∞ ohms (Ω).

cardiagn.com

90-23

Checking sender for fuel gauge

➢ **1997**

- 26-pin connector (yellow), terminal 25

Fuel tank half full:	approx. 162 ohms (Ω)
Fuel tank full:	approx. 40 ohms
Fuel tank reserve:	approx. 250 ohms(Ω)

1998 ➢

- 32-pin connector (blue), terminal 5

Fuel tank half full:	approx. 162 ohms (Ω)
Fuel tank full:	approx. 40 ohms
Fuel tank reserve:	approx. 250 ohms(Ω)

cardiagn.com

90-24

Checking Engine Coolant Temperature (ECT) sensor

➢ **1997**

- 26-pin connector (yellow), terminal 26

Coolant temperature 90 °C:	approx. 110 ohms (Ω)
Coolant temperature 120 °C:	approx. 50 ohms (Ω)

1998 ➢

- 32-pin connector (blue), terminal 8

Coolant temperature 90 °C:	approx. 110 ohms (Ω)
Coolant temperature 120 °C:	approx. 50 ohms (Ω)

cardiagn.com

90-25

Instrument cluster (from M.Y. 2000)

WARNING!

Disconnect battery Ground (GND) cable before performing work on the electrical system.

Notes:

- *Obtain radio code before disconnecting battery.*
- *Be sure to activate vehicle features (radio, clock, electric window regulator, engine) according to owner's manual when the battery is re-connected.*

cardiagn.com

Malfunction message "dEF" on trip odometer display

If the control module in the instrument cluster detects a malfunction in its permanent memory, the letters "dEF" will appear on the trip odometer display.

- If "dEF" is indicated on display, replace instrument cluster ⇒ Page 90-27 .

cardiagn.com

90-27

Instrument cluster, removing and installing

Notes:

- *Do not disassemble instrument cluster.*
- *Removing the steering wheel is not required. For clarity, the steering wheel does not appear in the following illustrations.*
- *Check DTC memory before removing the instrument cluster ⇒ Page 01-91 .*
- *Also check and write down values of the service display and the odometer reading via the VAG1551 scan tool ⇒ Page 01-133 .*

cardiagn.com

Removing

- Using the adjustment mechanism, move steering wheel fully out and downward.

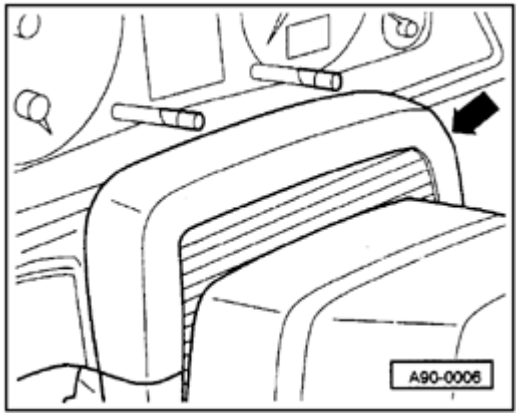

- Tilt upper cover forward an remove upward.

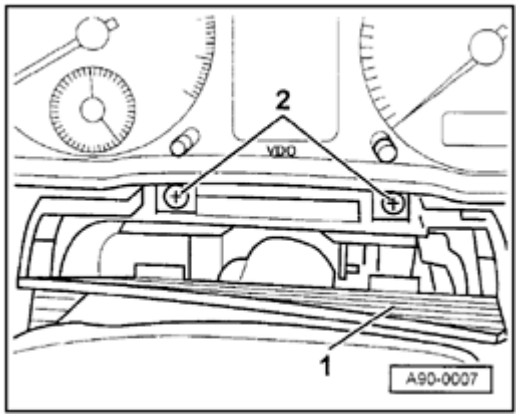

- Flip trim -1- toward front.
- Remove both Phillips-head screws -2-.
- Pull out instrument cluster toward front.
- Cut cable ties at rear of instrument cluster.
- Unclip securing latches of connectors and disconnect connectors.

cardiagn.com

90-29

Installing

- Connect electrical harness connectors and affix wiring harness to rear of instrument cluster with cable ties.

- To install, perform the steps described for removal in reverse order.

- Perform a function test after installation.

- If function test is OK

  observe notes for the replacement of the instrument cluster ⇒ Page 01-191 .

cardiagn.com

90-30

Instrument cluster multi-pin connectors

Note:

On the Audi A4/S4, all control lamps are equipped with LEDs which means that if one control lamp malfunctions the instrument cluster must be replaced.

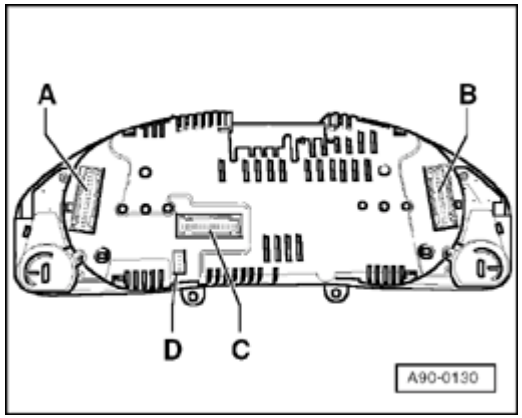

Midline-instrument cluster

A - Green 32-pin multi-pin connector

B - Blue 32-pin multi-pin connector

C - Discontinued

D - Black 4-pin multi-pin connector for remote clock (not connected in US)

cardiagn.com

90-31

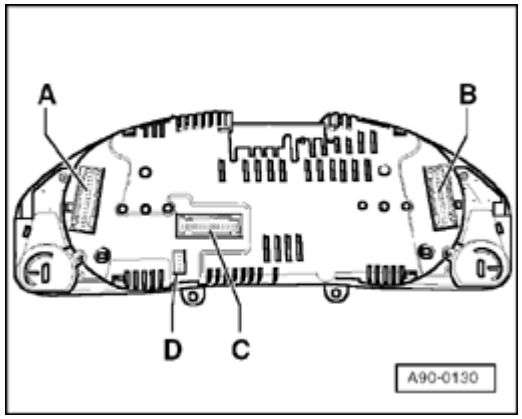

Highline-instrument cluster

A - Green 32-pin multi-pin connector

B - Blue 32-pin multi-pin connector

C - Gray 32-pin multi-pin connector

D - Black 4-pin multi-pin connector for remote clock (not connected in US)

cardiagn.com

Instrument cluster, terminal assignments

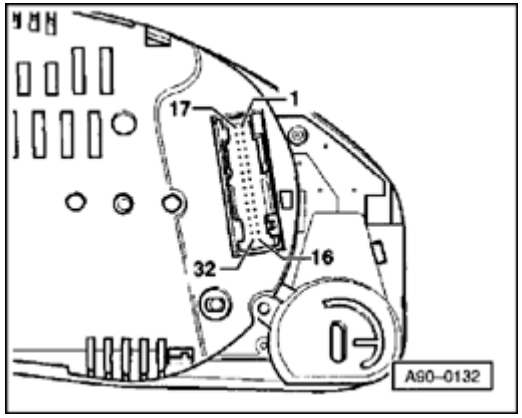

Blue 32-pin multi-pin connector for basic functions

1 - Terminal 15

2 - Brake pad wear

3 - Tachometer output 1

4 - not occupied

5 - Tank sensor

6 - Tank warning OBD 2

7 - Terminal 31 (sensor Ground (GND))

8 - Coolant temperature

9 - Terminal 31 (load Ground (GND))

10 - Oil pressure 2 (high)

11 - RPM signal

12 - A/C shut-off

13 - E-Gas/glow plug control

14 - Level control

15 - Terminal 58d

16 - Trailer turn signal

cardiagn.com

90-33

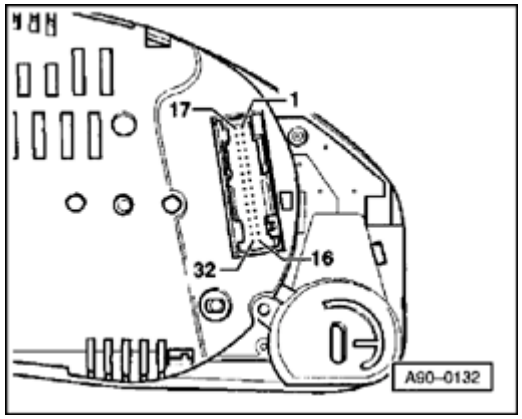

17 - High beam

18 - Left turn signal

19 - not occupied

20 - Terminal 58s

21 - Driver door contact

22 - Low coolant

23 - Terminal 30

24 - Terminal 31 (load Ground (GND))

25 - Consumption signal

26 - Right parking light

27 - Left parking light

28 - Tachometer input

29 - Brake

30 - S-contact

31 - Tachometer output 2

32 - ESP/ASR

cardiagn.com

90-34

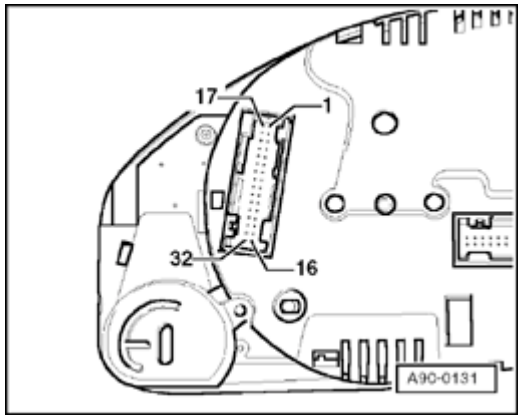

Green 32-pin multi-pin connector for auxiliary functions

1 - Door contact (all doors)

2 - Transponder 1

3 - not occupied

4 - not occupied

5 - W-wire

6 - Tailgate

7 - Right turn signal

8 - External buzzer

9 - External gong

10 - Airbag

11 - Stand-still time output

12 - Terminal 61

13 - Parking brake/BRAKE

14 - CHECK

15 - Oil level/oil temperature

16 - not occupied

cardiagn.com

90-35

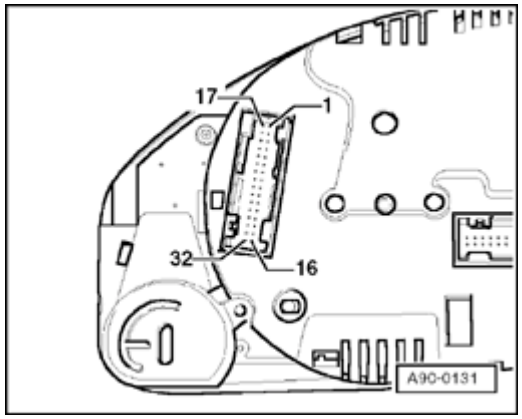

17 - Transponder 2

18 - CAN high speed (powertrain) (high +)

19 - CAN high speed (powertrain) (low -)

20 - CAN high speed (powertrain) (screen)

21 - ABS

22 - CAN low speed (comfort) (high +)

23 - CAN low speed (comfort) (low -)

24 - CAN low speed (comfort) (screen)

25 - Engine lid

26 - not occupied

27 - Belt buckle

28 - K-wire

29 - Outside temperature -input

30 - not occupied

31 - Selector range display

32 - not occupied

cardiagn.com

90-36

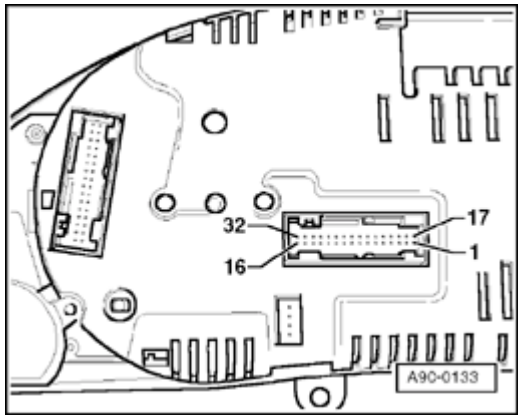

Gray 32-pin multi-pin connector for multi-function display

1 - Menu selection switch (menu)

2 - Menu selection switch (out A)

3 - Menu selection switch (out B)

4 - Menu selection switch (Enter)

5 - CAN high speed display (high +)

6 - CAN high speed display (low -)

7 - CAN high speed display (screen)

8 - Passenger door contact

9 - Right rear door contact

10 - Left rear door contact

11 - Enable

12 - Clock

13 - Data

14 - Brake light

15 - Windshield washer fluid level

16 - Rear lights/low beams

cardiagn.com

90-37

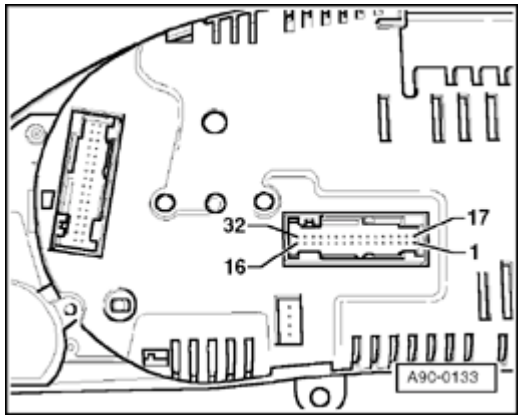

17 - Left board computer

18 - Right board computer

19 - Board computer, reset

20 - not occupied

21 - not occupied

22 - not occupied

23 - Button branch 1 navigation

24 - Button branch 2 navigation

25 - Button branch Telematic

26 - not occupied

27 - not occupied

28 - not occupied

29 - not occupied

30 - not occupied

31 - not occupied

32 - not occupied

cardiagn.com

Engine speed signal, checking

If a malfunction of the RPM display at tachometer is detected, signal at the tachometer must be checked.

- Connect VAS5051 tester or VAG1551 scan tool ⇒ Page 01-241 .
- Read Measuring Value Block ⇒ Page 01-114 .
- Select display group number 001 and perform a road test.

If the speed appears on the VAG1551 Scan Tool display but not via the speedometer in instrument cluster, the instrument cluster is faulty and must be replaced.

If no speed is indicated on the VAG1551 Scan Tool display either, the signal must be checked at multi-function connection at instrument cluster.

- Remove instrument cluster ⇒ Page 90-27 .

cardiagn.com

90-39

- Connect VAG1598 tester with VAG1598/25 adapter to the blue 32-pin connector.

- Perform an acoustic continuity check of the sensor and wire using the VAG1526 multimeter between terminal 28 and socket 9 (load Ground (GND))

Test

The beep signal of the resistance tester must switch on and off several times while the vehicle is rolled slightly forward and backward (approx. 1m)

If the test is not OK, the wire connection to speed sender must be checked.

- Check wire connection according to wiring diagram.

⇒ *Electrical Wiring Diagrams, Troubleshooting & Component Locations*

If the wire connection is OK, the speed sender must be replaced.

cardiagn.com

90-40

Signal from sender for fuel gauge -G-, checking

If a malfunction of the sender for fuel gauge is detected at instrument cluster, check if the signal at the instrument cluster is OK.

- Connect VAS5051 tester or VAG1551 scan tool ⇒ Page 01-241 .
- Read Measuring Value Block ⇒ Page 01-114 .
- Select display group number 2.

If the fuel level appears on the VAG1551 scan tool display but not via the fuel gauge, the instrument cluster is faulty and must be replaced.

If no speed is indicated on the VAG1551 scan tool display either, the signal must be checked at multi-function connection at instrument cluster.

- Remove instrument cluster ⇒ Page 90-27 .
- Connect VAG1598 tester with VAG1598/25 adapter to the blue 32-pin connector.

cardiagn.com

90-41

- Measure resistance (sensor resistance) between terminal 5 and 7 using VAG1526 multimeter.

Specified values:

Fuel tank empty: approx. 280 Ohm (Front Wheel Drive/All Wheel Drive)

Fuel tank full: approx. 40 Ohm (Front Wheel Drive/All Wheel Drive)

- If the specified values are not reached, check wire connection between instrument cluster and the sender for fuel gauge -G- (Front Wheel Drive/All Wheel Drive) according to wiring diagram.

⇒ *Electrical Wiring Diagrams, Troubleshooting & Component Locations*

- If there is neither an open circuit nor a short circuit, check the sender for fuel gauge -G- (Front Wheel Drive/All Wheel Drive)

- Sender for fuel gauge, checking

⇒ *Repair Manual, Fuel Supply System, Repair*

cardiagn.com

Group 20; sensor for fuel gauge, checking

- If the specified values are met, the malfunction is in the instrument cluster, meaning that the instrument cluster must be replaced ⇒ Page 90-27 .

cardiagn.com

Signal from Engine Coolant Temperature (ECT) sensor -G2-, checking

If a malfunction of the Engine Coolant Temperature (ECT) gauge is detected at the instrument cluster, check if the signal at the instrument cluster is OK.

- Connect VAS5051 tester or VAG1551 scan tool ⇒ Page 01-241 .
- Read Measuring Value Block ⇒ Page 01-114 .
- Select display group number 003.

If the Engine Coolant Temperature (ECT) appears on the VAG1551 scan tool display but not by the Engine Coolant Temperature (ECT) gauge, the instrument cluster is faulty and must be replaced.

If no Engine Coolant Temperature (ECT) is indicated on the VAG1551 scan tool display, the signal must be checked at multi-function connection at instrument cluster.

- Remove instrument cluster ⇒ Page 90-27 .

cardiagn.com

- Connect VAG1598 tester with VAG1598/25 adapter to the blue 32-pin connector.

cardiagn.com

90-43

- Measure resistance (sensor resistance) between terminal 8 and 7 using VAG1526 multimeter.

Specified values:

Coolant temperature 90 ° C: approx. 110 Ohm

Coolant temperature 120 ° C: approx. 50 Ohm

If the specified values are not reached, the wire connection to Engine Coolant Temperature (ECT) -G2- must be checked.

- Check wire connection according to wiring diagram.

⇒ *Electrical Wiring Diagrams, Troubleshooting & Component Locations*

If the wire connection is OK, Engine Coolant Temperature (ECT) -G2- must be replaced.

cardiagn.com

Consumption signal, checking

Special tools and equipment

- VAG1526 multimeter
- VAG1598 test box with VAG1598/25 adapter
- VAG1594 connector test kit
- Test box for the individual Engine Control Module (ECM)

- Set display indicator of board computer to current consumption (1/100 km),
- Start engine and perform a road test.
- Observe consumption display in instrument cluster.

cardiagn.com

90-45

What appears in the consumption display?

1. constant 0.0 L/100 km

⇒ Possible short circuit to battery Ground (GND) in the signal wire.

- Switch ignition off.

- Connect corresponding test box to the Engine Control Module (ECM).

⇒ *Repair Manual, Fuel Injection & Ignition, Repair Group 24; additional signals, checking; consumption signal for board computer, checking*

- Remove instrument cluster ⇒ Page 90-27 and disconnect blue 32-pin connector from instrument cluster.

- Connect VAG1598 tester with VAG1598/25 adapter to the blue 32-pin connector.

- Connect (+) adapter lead to VAG1598/25 test box socket 25 using VAG1526 multimeter

cardiagn.com

- Connect (-) adapter lead to the corresponding test box of Engine Control Module (ECM) and the corresponding consumption signal socket of the Engine Control Module (ECM).

cardiagn.com

90-46

- Perform a resistance check.

Specification: Display < 2 Ohm

- Connect (+) adapter lead to to the corresponding test box of the Engine Control Module (ECM) using VAG1526 multimeter

- Connect (-) adapter lead to battery Ground (GND).

- Perform a resistance check.

Specification: Display > 9 M Ohm

- If the specified values are reached, the wire connection is OK.

cardiagn.com

2. constant 51 L/100 km

⇒Possible open circuit in the signal wire.

- Switch ignition off.

- Connect test box to Engine Control Module (ECM).

⇒ *Repair Manual, Fuel Injection & Ignition, Repair Group 24; additional signals, checking; consumption signal for board computer, checking*

- Remove instrument cluster ⇒ Page 90-27 and disconnect blue 32-pin connector from instrument cluster.

- Connect VAG1598 tester with VAG1598/25 adapter to the blue 32-pin connector.

- Connect (+) adapter lead to VAG1598/25 test box socket 25 using VAG1526 multimeter.

- Connect (-) adapter lead to the corresponding test box of Engine Control Module (ECM) and the corresponding consumption signal socket of

cardiagn.com

the Engine Control Module (ECM).

- Perform a resistance check.

Specification: Display < 2 Ohm

cardiagn.com

- Connect (+) adapter lead to to the corresponding test box of the Engine Control Module (ECM) using VAG1526 multimeter

- Connect (-) adapter lead to battery Ground (GND).

- Perform a resistance check.

Specification: Display > 9 M Ohm

- If the specified values are reached, the wire connection is OK.

3. The consumption display has no logical or fluctuating consumption value.

⇒ The consumption display deviates from the actual fuel consumption.

- Perform adaptation of consumption display ⇒ Page 01-140 .

cardiagn.com

91-1

Radio systems

General information

CAUTION!

Before working on the electrical system:

- ***Determine the correct coding for the anti-theft radio.***
- ***Disconnect the battery Ground (GND) strap.***

Note:

After re-connecting the battery, activate the vehicle's electrical equipment (radio, clock, power windows, engine) according to the owner's manual.

cardiagn.com

91-2

Notes:

- *A new generation of the radio is being used for model year 1998. The "Delta" radio will be replaced by the "Concert" radio which has On Board Diagnostic (OBD) capability.*

- *When addressing customer complaints, it is absolutely necessary to know the functions and the operation of the radio system.*

- *For additional information:*

⇒ *Radio operating instructions*

- *When retrofitting, repairing or troubleshooting:*

⇒ *Electrical Wiring Diagrams, Troubleshooting & Component Locations*

⇒ *Radio installation instructions*

- *Repair Manual "Body Interior" contains detailed*

cardiagn.com

installation instructions, e.g. removing and installing trim.

- *All radio systems are equipped with anti-theft coding.*

cardiagn.com

91-3

Retrofitting radio systems

- The connectors on the factory-installed radio wiring harness are designed for genuine Audi radios.

- Radios with different types of connectors must be installed using adapter wires.

CAUTION!

When connecting the vehicle speed sensor signal wire (on radios with the GALA function), take particular care to avoid short circuits, which could result in vehicle malfunctions (e.g. in the engine management system).

- Vehicle malfunctions may also occur if the vehicle speed sensor signal wire is connected to radios supplied by other manufacturers.

- If a non-stock radio is installed ("Concert" m.y. 1998 ➢) it can have a negative effect on the antenna amplifier. The original Audi radio units supply power to the antenna amplifier through the center wire of the HF cable.

Retrofitting CD systems

The wiring for the CD changer is installed in the

cardiagn.com

vehicle during production. The connecting cable can only be used with original Audi CD changers.

cardiagn.com

91-4

Radio system, overview (➢ m.y. 1997)

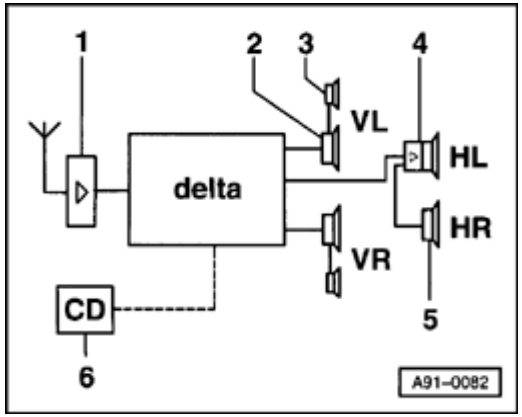

"Delta" radio system

1 - Rear window antenna with antenna amplifier

2 - Bass speaker in front door trim (bottom)

3 - Mid-range/treble speaker in front door trim (top)

4 - Broad-band speaker (active with double amplifier) in parcel shelf (left-rear)

5 - Broad band speaker (passive) in parcel shelf (right-rear)

6 - CD changer (optional) in luggage compartment (left-rear)

Multi-pin connectors I, II, III (on back of radio), terminal assignments

Note:

Terminals which are not listed are vacant/unassigned.

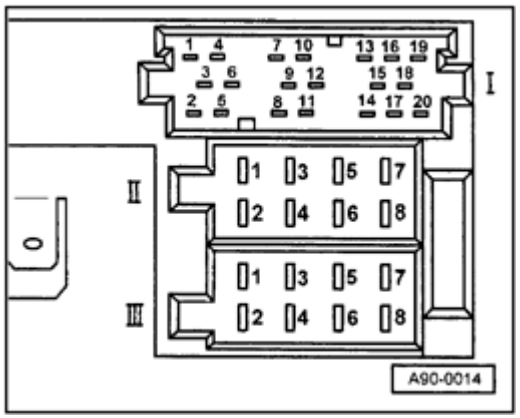

20-pin connector I

1 - Line out, left-rear

2 - Line out, right-rear

3 - Low frequency Ground (GND)

cardiagn.com

91-5

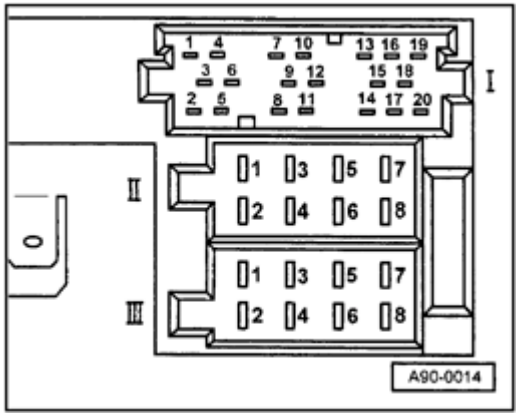

6 - Switched positive supply (B+) for active speaker

8 - Clock signal

9 - Data signal

10 - Enable signal

12 - USA coding

13 - CD bus data (CD changer)

14 - CD bus clock (CD changer)

15 - Ground (GND) for (CD changer)

16 - Power supply (B+) (continuous)

17 - Switched positive supply (B+) for CD changer

18 - Low frequency Ground (GND) for CD changer

19 - Signal wire for left channel (CD low frequency-L)

20 - Signal wire for right channel (CD low frequency-R)

8-pin connector II (brown)

3 - Speaker line, right-front (+)

4 - Speaker line, right-front (-)

5 - Speaker line, left-front (+)

6 - Speaker line, left-front (-)

cardiagn.com

91-6

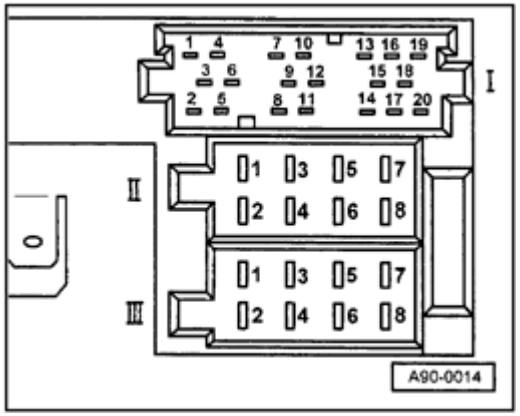

8-pin connector III (black)

1 - Vehicle speed sensor (Gala)

2 - Low frequency mute switch (telephone system)

3 - Terminal 30

4 - Terminal 86s connection for ignition key switched on and off (S-contact)

5 - Switched positive supply (B+) for antenna amplifier

6 - Illumination (terminal 58d)

7 - Terminal 30

8 - Ground (GND) (terminal 31)

cardiagn.com

91-7

"Delta" radio with BOSE sound system

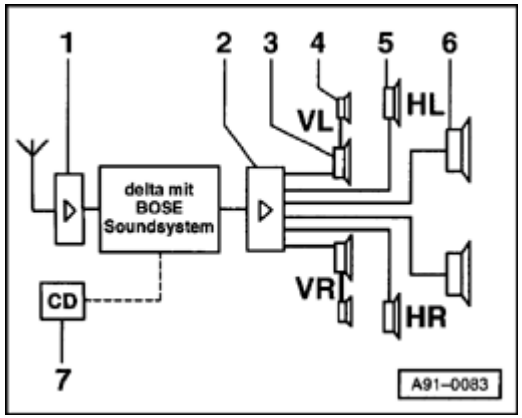

1 - Rear window antenna with antenna amplifier

2 - BOSE amplifier in luggage compartment (left-rear)

3 - Bass speaker in front door trim (bottom)

4 - Mid-range/treble speaker in front door trim (top)

5 - Broad band speaker in rear door trim

6 - Bass speaker in parcel shelf

7 - CD changer (optional) in luggage compartment (left-rear)

Multi-pin connectors I, II, III (on back of radio) terminal assignments

Note:

Terminals which are not listed are vacant/unassigned.

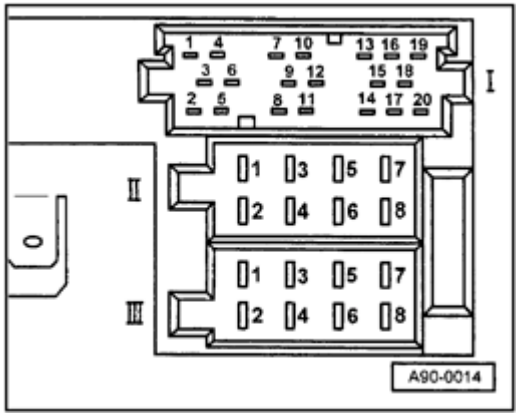

20-pin connector I

1 - Line out, left-rear

2 - Line out, right-rear

3 - Low frequency Ground (GND)

cardiagn.com

91-8

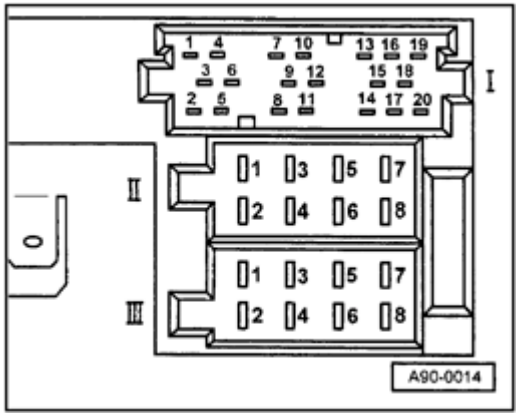

4 - Line out, left-front

5 - Line out, right-front

6 - Switched positive supply (B+) for BOSE amplifier

7 - BOSE coding

8 - Clock signal

9 - Data signal

10 - Enable signal

12 - USA coding

13 - CD bus data (CD changer)

14 - CD bus clock (CD changer)

15 - Ground (GND) (CD changer)

16 - Positive supply (B+) (continuous)

17 - Switched positive supply (B+) for CD changer

18 - Low frequency Ground (GND) for CD changer

19 - Signal wire for left channel (CD low frequency-L)

20 - Signal wire for right channel (CD low frequency-R)

cardiagn.com

91-9

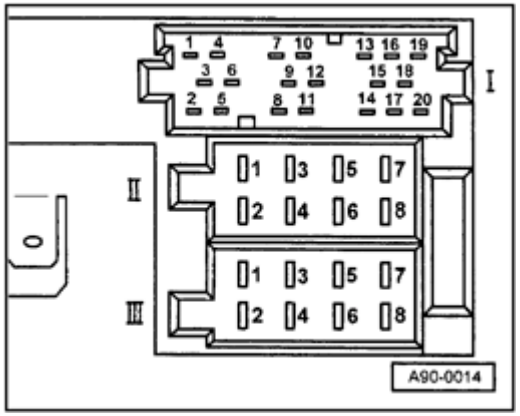

8-pin connector III (black)

1 - Vehicle speed sensor (Gala)

2 - Low frequency mute switch (telephone system)

3 - Terminal 30

4 - Terminal 86s connection for ignition key switched on and off (S-contact)

5 - Switched positive supply (B+) for antenna amplifier

6 - Illumination (terminal 58d)

7 - Terminal 30

8 - Ground (GND) (terminal 31)

cardiagn.com

91-10

Radio system, overview (m.y. 1998 ➢)

"Concert" radio (sedan)

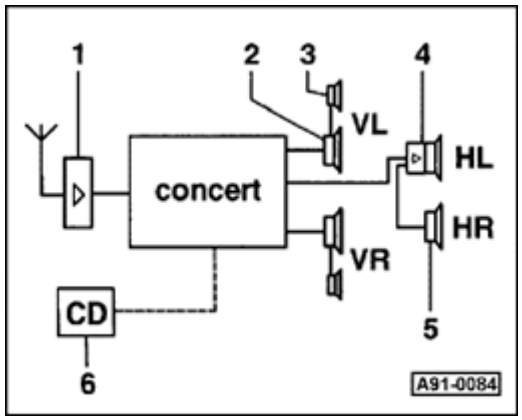

1 - Rear window antenna with antenna amplifier

2 - Bass speaker in front door trim (bottom)

3 - Mid-range/treble speaker in front door trim (top)

4 - Broad band speaker (active with double amplifier) in parcel shelf (left-rear)

5 - Broad band speaker (passive) in parcel shelf (right-rear)

6 - CD changer (optional) in luggage compartment (left-rear)

"Concert" radio (Avant)

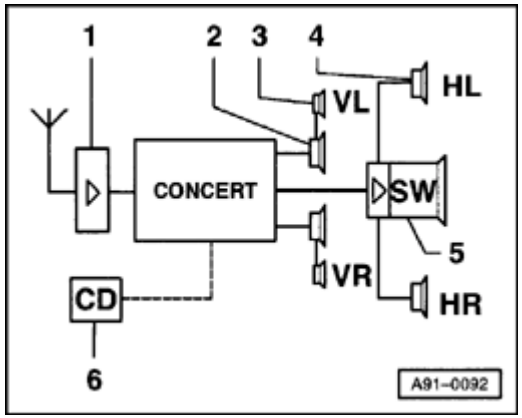

1 - Roof antenna with antenna amplifier

2 - Bass speaker in front door trim (bottom)

3 - Mid-range/treble speaker in front door trim (top)

4 - Broad band speaker (2-way) in rear door trim

5 - Bass speaker (subwoofer) in left-rear of cargo area under side trim

6 - CD changer (optional) in left-rear of cargo area under storage compartment

cardiagn.com

91-11

Multi-pin connectors I, II, III, IV (on back of radio), terminal assignments

Note:

Terminals which are not listed are vacant/unassigned.

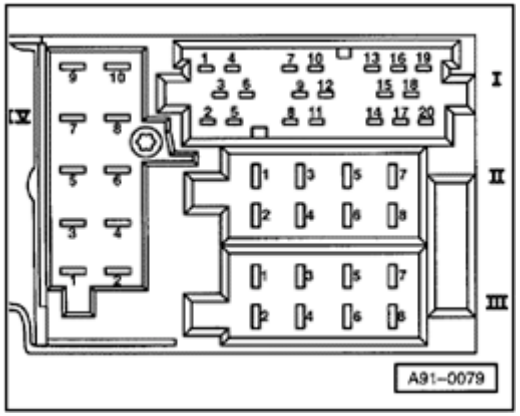

20-pin connector I

1 - Line out, left-rear

2 - Line out, right-rear

3 - Low frequency Ground (GND)

6 - Switched positive supply (B+) for active speaker (sedan) and/or subwoofer (Avant)

8 - Clock signal

9 - Data signal

10 - Enable signal

cardiagn.com

91-12

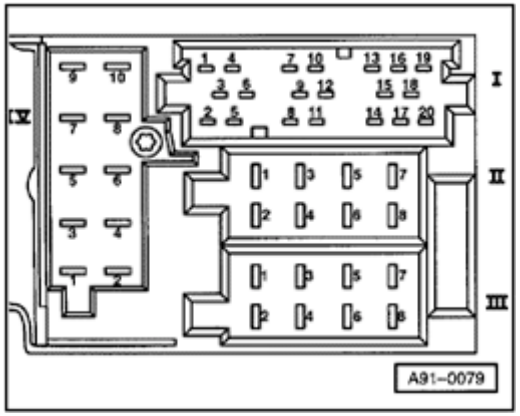

13 - Bus data in (CD changer)

14 - Bus data out (CD changer)

15 - Clock (CD changer)

16 - Continuous positive supply (B+)

17 - Switched positive supply (B+) (CD changer)

18 - Low frequency-Ground (GND) (CD changer)

19 - Signal wire for left channel (CD low frequency-L)

20 - Signal wire for right channel (CD low frequency-R)

8-pin connector II (brown)

3 - Speaker line, right-front (+)

4 - Speaker line, right-front (-)

5 - Speaker line, left-front (+)

6 - Speaker line, left-front (-)

cardiagn.com

91-13

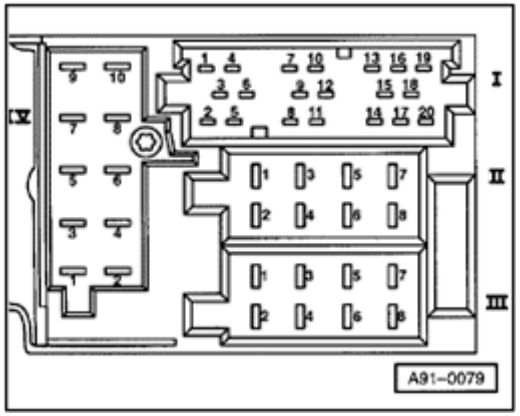

8-pin connector III (black)

1 - Vehicle speed sensor (Gala)

3 - K-diagnosis

4 - Terminal 86s connection for ignition key switched on and off (S-contact)

6 - Illumination (terminal 58d)

7 - Terminal 30

8 - Ground (GND) (terminal 31)

10-pin connector IV (red)

1 - Telephone low frequency mute switch

3 - Telephone (low frequency +)

4 - Telephone (low frequency -)

5 - Navigation (low frequency +) (not applicable US/Canada)

6 - Navigation (low frequency -) (not applicable US/Canada)

7 - Navigation control line not (not applicable US/Canada)

9 - Display illumination (terminal 58d)

10 - CD Ground (GND)

cardiagn.com

91-14

"Concert" radio with BOSE sound system (sedan)

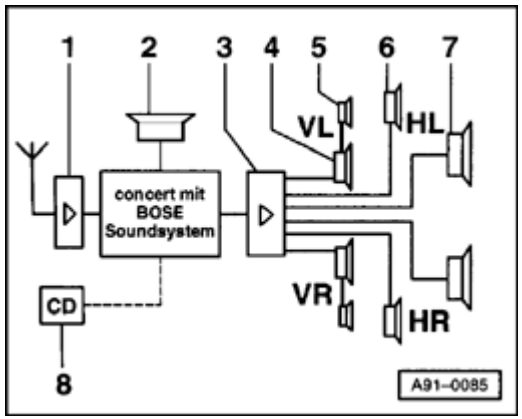

1 - Rear window antenna with antenna amplifier

2 - Telephone speaker

3 - BOSE amplifier in luggage compartment (left-rear)

4 - Bass speaker in front door trim (bottom)

5 - Mid-range/treble speaker in front door trim (top)

6 - Broad band speaker in rear door trim

7 - Bass speaker in parcel shelf

8 - CD changer (optional) in luggage compartment (left-rear)

"Concert" radio with BOSE sound system (Avant)

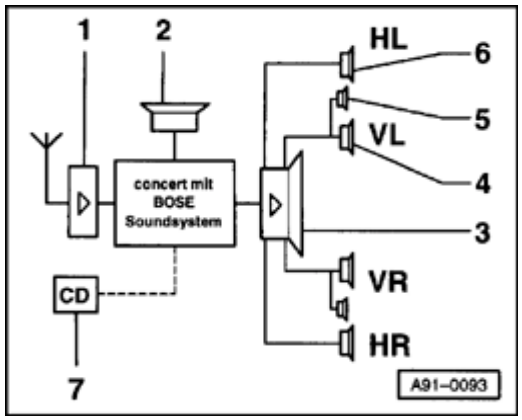

1 - Roof antenna with antenna amplifier

2 - Telephone speaker

3 - BOSE amplifier combined with bass speaker (subwoofer) in cargo area (left-rear) under side trim

4 - Bass speaker in front door trim (bottom)

5 - Mid-range/treble speaker in front door trim (top)

6 - Broad band speaker in rear door trim

7 - CD changer (optional) in cargo area (left-rear) under storage compartment

cardiagn.com

91-15

Multi-pin connectors I, II, III, IV (on back of radio), terminal assignments

Note:

Terminals which are not listed are vacant/unassigned.

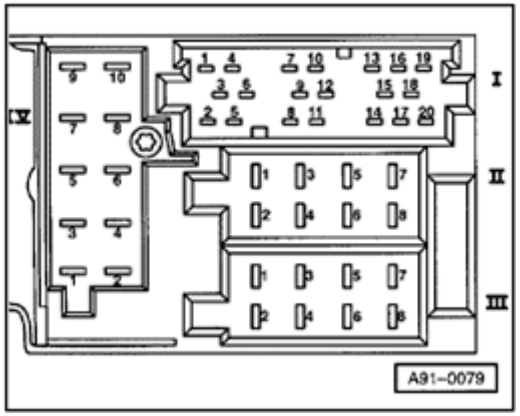

20-pin connector I

1 - Line out, left-rear

2 - Line out, right-rear

3 - Low frequency Ground (GND)

4 - Line out, left-front

5 - Line out, right-front

6 - Switched positive supply (B+) for BOSE amplifier

cardiagn.com

91-16

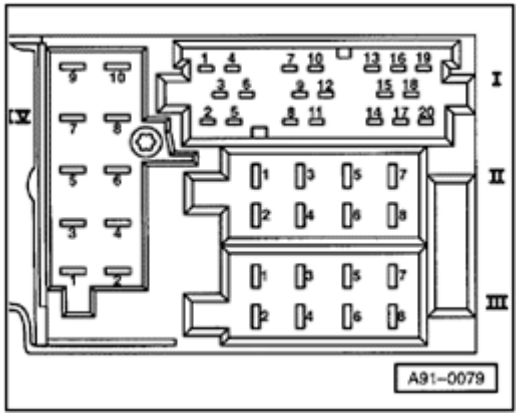

8 - Clock signal

9 - Data signal

10 - Enable signal

13 - Bus data in (CD changer)

14 - Bus data out (CD changer)

15 - Clock (CD changer)

16 - Continuous positive supply (B+)

17 - Switched positive supply (B+) (CD changer)

18 - Low frequency-Ground (GND) (CD changer)

19 - Signal wire left channel (CD low frequency-L)

20 - Signal wire right channel (CD low frequency-R)

8-pin connector II (brown)

5 - Hands-free speaker (+)

6 - Hands-free speaker (-)

cardiagn.com

91-17

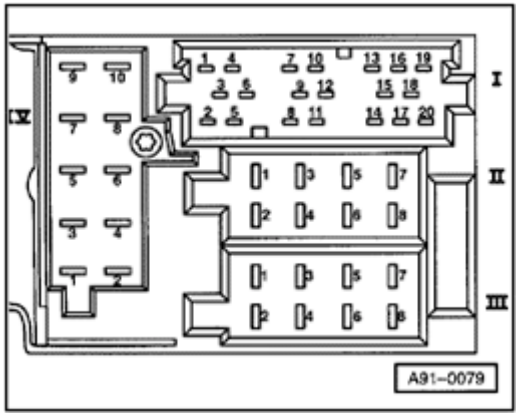

8-pin connector III (black)

1 - Vehicle speed sensor (Gala)

3 - K-Diagnosis

4 - Terminal 86s connection for ignition key switched on and off (S-contact)

6 - Illumination (terminal 58d)

7 - Terminal 30

8 - Ground (GND) (terminal 31)

10-pin connector IV (red)

1 - Telephone mute switch

3 - Telephone (low frequency +)

4 - Telephone (low frequency -)

5 - Navigation (low frequency +) (not applicable US/Canada)

6 - Navigation (low frequency -) (not applicable US/Canada)

7 - Navigation control line not (not applicable US/Canada)

9 - Display illumination (terminal 58d)

10 - CD Ground (GND)

cardiagn.com

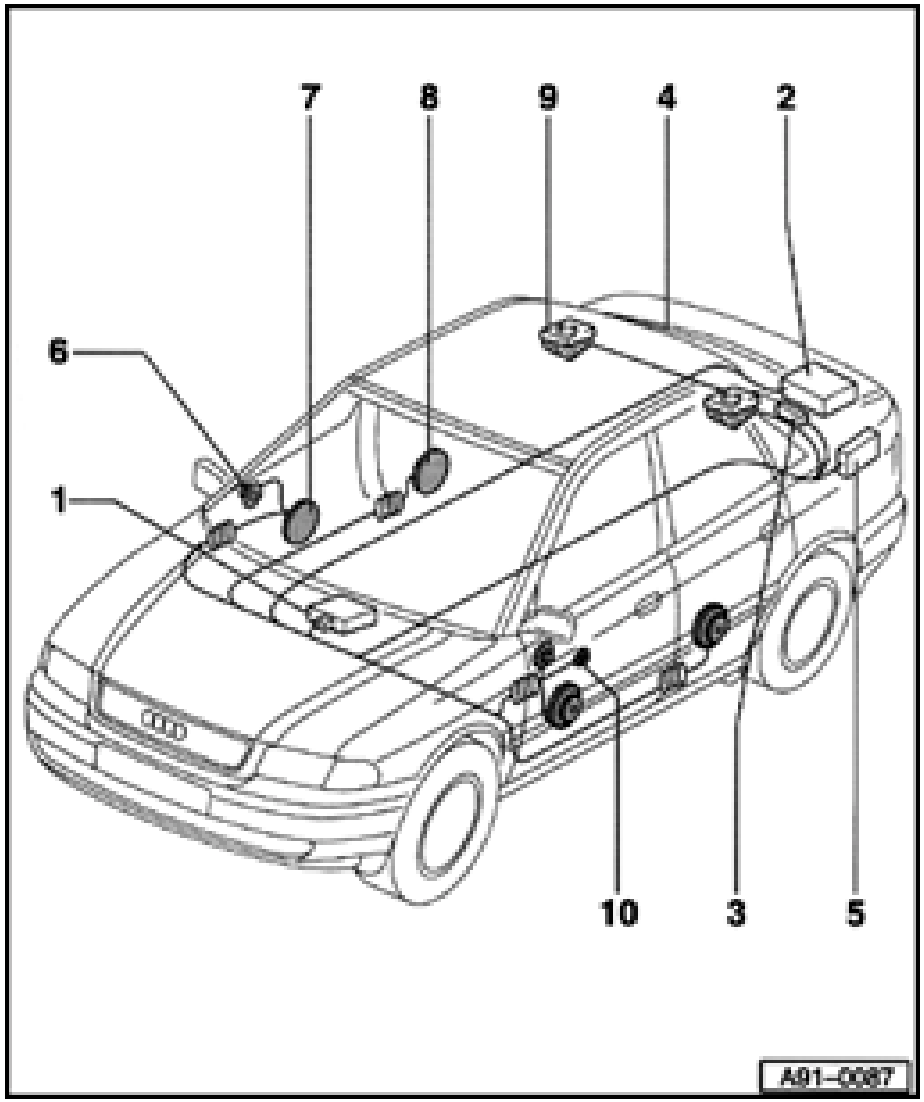

Radio system, overview (sedan)

1 - Radio

- In center console
- Removing and installing ⇒ page 91-23

2 - BOSE amplifier

- In luggage compartment (left-rear) under parcel shelf
- Removing and installing ⇒ page 91-35

3 - Antenna amplifier

- In left D-pillar trim
- Removing and installing ⇒ page 91-39

4 - Rear window antenna

- Upper 3 wires are AM antenna (non-heated)
- Remaining wires are FM antenna (heated)
- Removing and installing ⇒ *Repair Manual, Body Exterior, Repair Group 64*

cardiagn.com

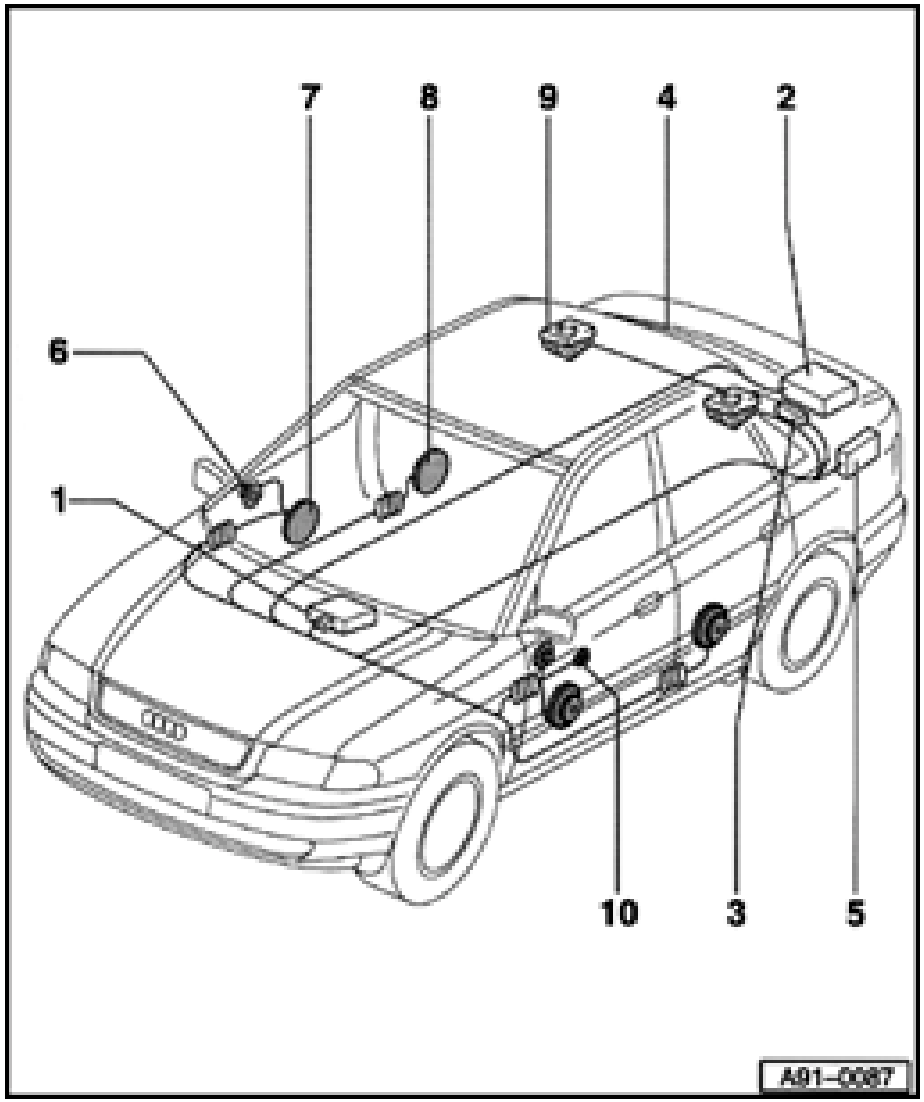

5 - CD changer

- In luggage compartment (lower-left)
- Removing and installing ⇒ page 91-31
- Checking cable ⇒ page 91-34

6 - Mid-range/treble speaker

- In front door trim (top)
- Removing and installing ⇒ page 91-28

7 - Bass speaker

- In front door trim (bottom)
- Removing and installing ⇒ page 91-27

8 - Broad band speaker

- In rear door trim (only with BOSE sound system)
- Removing and installing ⇒ page 91-30

cardiagn.com

91-20

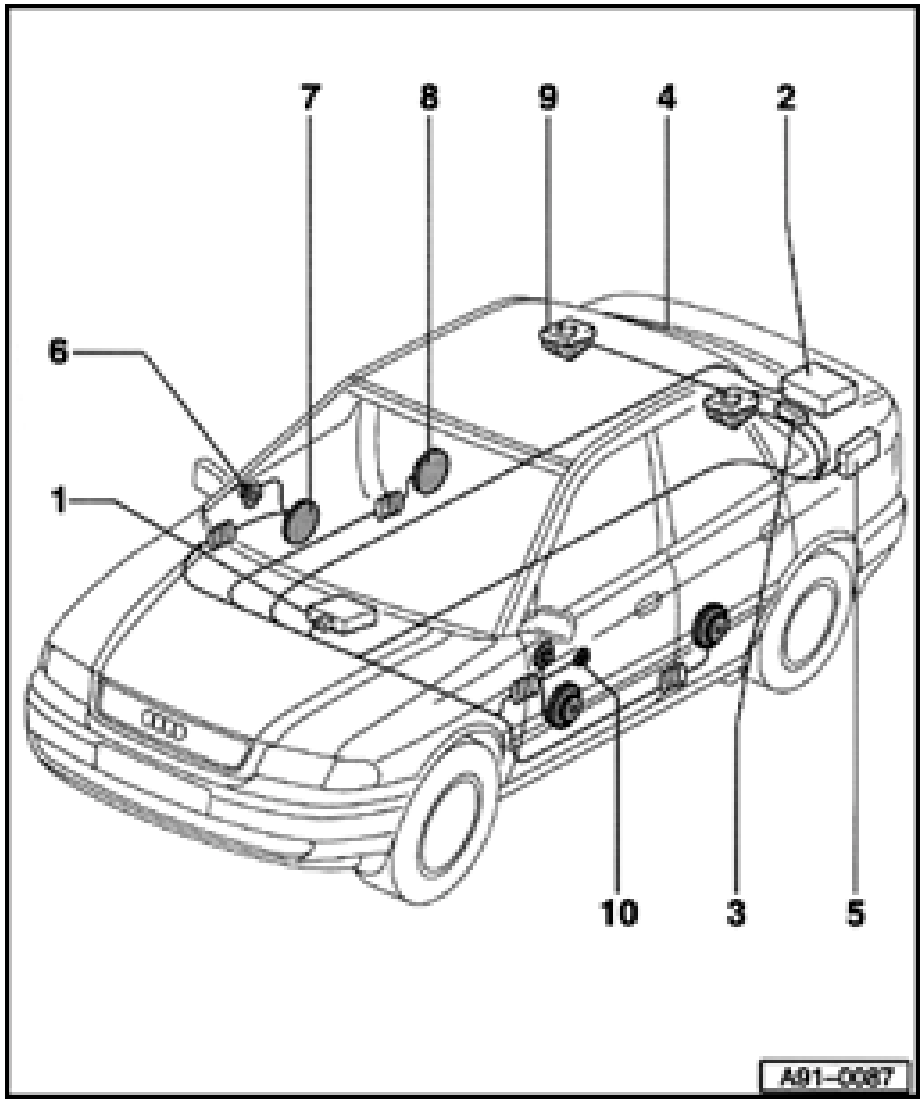

9 - Speaker in parcel shelf

- Broad band speaker
- Removing and installing ⇒ page 91-29
- Bass speaker (only with BOSE sound system)
- Removing and installing ⇒ page 91-29

10 - Telephone speaker

- With standard radio equipment, speakers in front door trim are also used as telephone speakers
- For radios with BOSE sound system, telephone speaker is in front door trim on driver's side

cardiagn.com

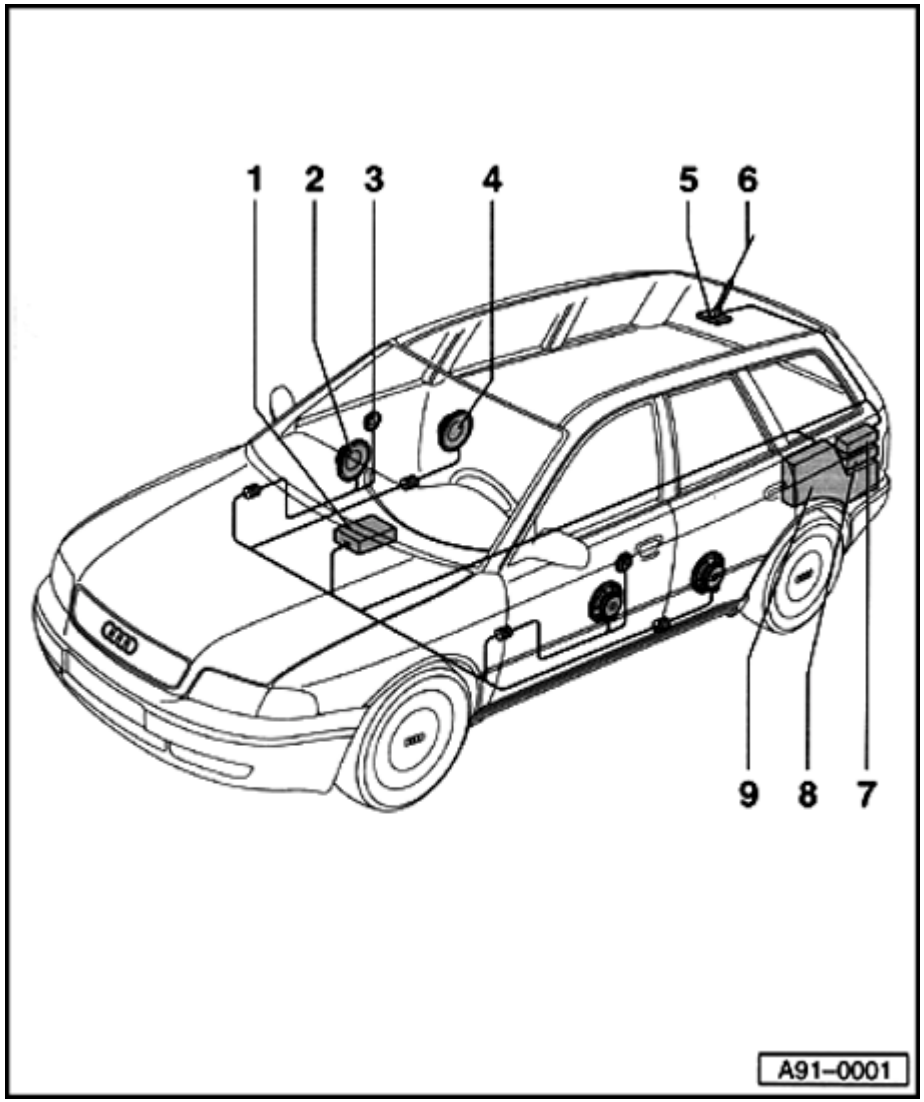

Radio system, overview (Avant)

1 - Radio

- In center console
- Removing and installing ⇒ page 91-23

2 - Bass speaker

- In front door trim (bottom)
- Removing and installing ⇒ page 91-27

3 - Mid-range/treble speaker

- In front door trim (top)
- Removing and installing ⇒ page 91-28

4 - Broad band speaker

- In rear door trim
- Removing and installing ⇒ page 91-30

5 - Antenna base

- With integrated amplifier

6 - Roof antenna

- With radio and telephone system, combination antenna is used
- Removing and installing ⇒ page 91-40

cardiagn.com

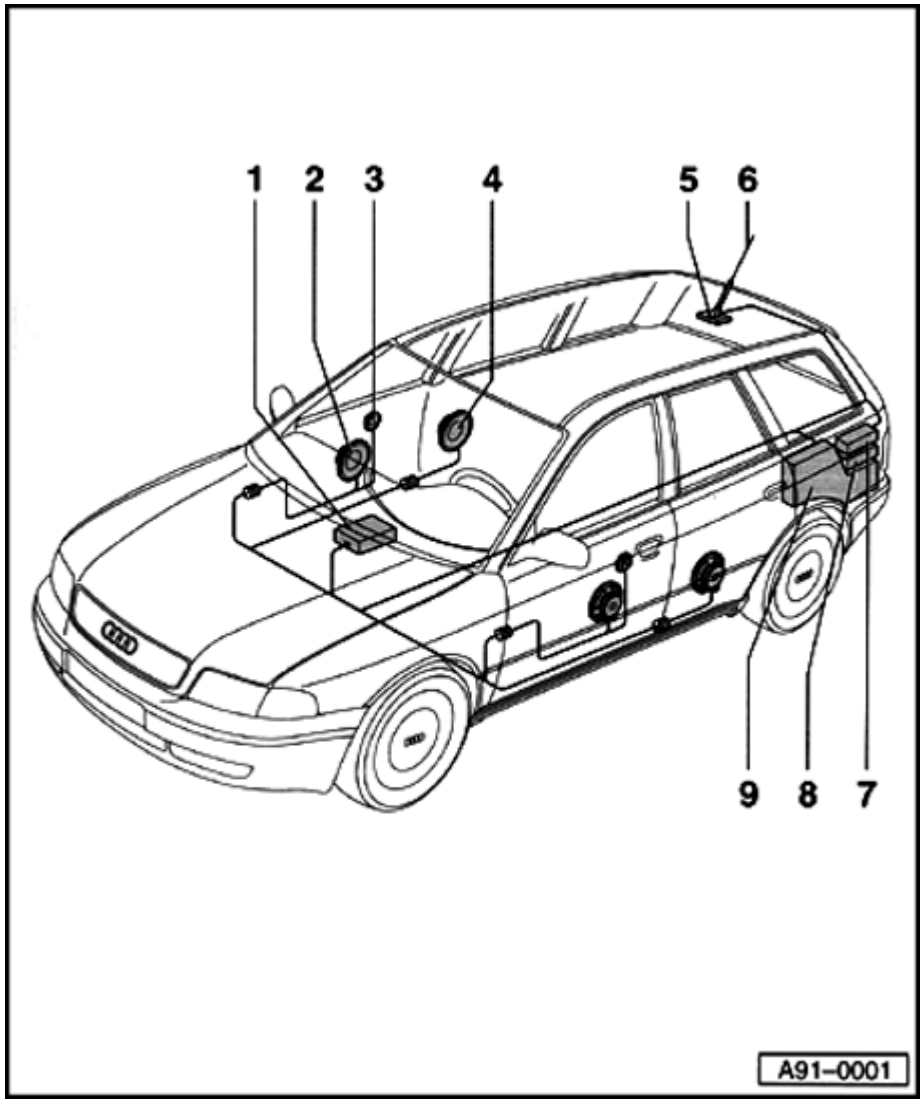

7 - CD changer

- In luggage compartment (left-rear) under cargo area storage bin
- Removing and installing ⇒ page 91-32
- Checking cable between radio and CD changer ⇒ page 91-34

8 - BOSE amplifier combined with bass speaker (subwoofer) only with "Concert with BOSE sound system"

- In cargo area (left-rear) under side trim
- Removing and installing ⇒ page 91-37

9 - Bass speaker (subwoofer) only with "Concert" radio

- In cargo area (left-rear) under side trim
- Removing and installing ⇒ page 91-37

cardiagn.com

91-23

Radio, removing and installing (Concert)

CAUTION!

Obtain the anti-theft radio code before disconnecting the radio.

Special tools and equipment

T10057 radio removal tool

Removing

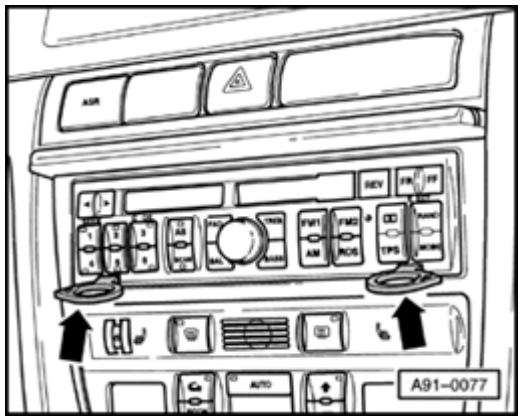

- Insert T10057 radio removal tool into front panel of radio as shown.
  - Top L: upper left
  - Top R: upper right
- Remove radio out of instrument panel together with T10057.
- Disconnect harness connectors and antenna wire.

cardiagn.com

91-24

Installing

- Remove T10057 radio removal tool before installing radio.
- Connect harness connectors and antenna wire.
- Carefully slide radio into instrument panel until radio is fully engaged in frame.
- Enter anti-theft radio code and check operation ⇒ radio owners manual.

cardiagn.com

91-25

Radio, removing and installing (Symphony)

CAUTION!

Obtain the anti-theft radio code before disconnecting the radio.

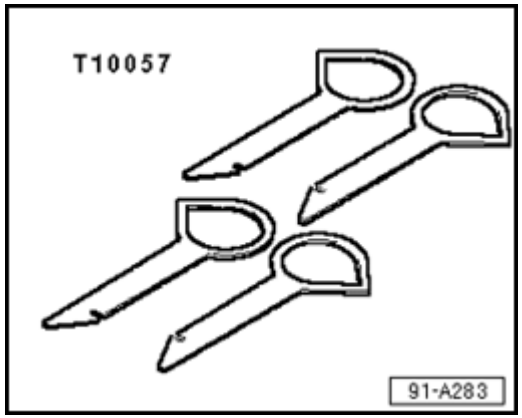

Required special tools and equipment

- T10057 radio removal tool

cardiagn.com

91-26

Removing

Perform the following work sequence:

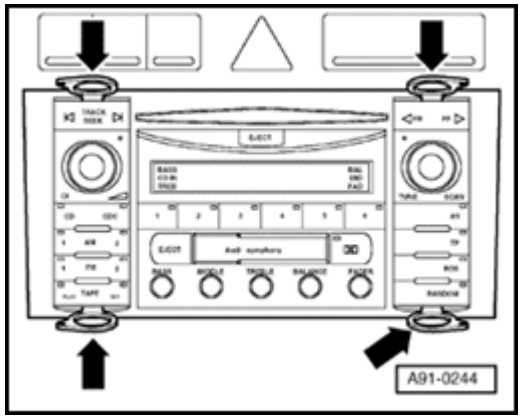

- Insert T10057 radio removal tools into release slots (arrows) as shown until they engage.
  - Top L - top and bottom left
  - Top R - top and bottom right
- Pull radio out of instrument panel using grip rings on release tool.
- Unlock and disconnect harness connectors

Remove radio release tools:

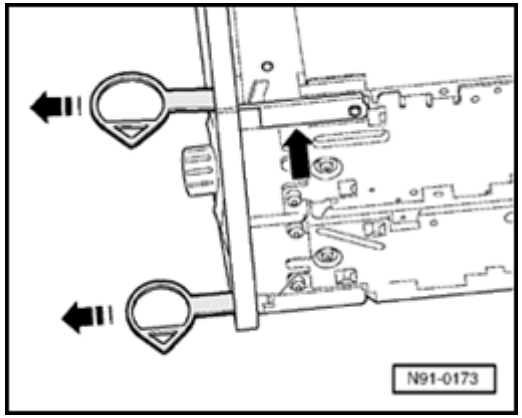

- Press locking latch arrow- and remove radio release tools toward front.

Installing

- Connect harness connectors to radio.
- Slide radio evenly into instrument panel, until it engages in assembly frame.

cardiagn.com

91-27

Speakers, removing and installing

Removing and installing bass speakers in front door trim

Removing

Remove front door trim.

⇒ *Repair Manual, Body Interior, Repair Group 70* .

Carefully loosen insulation in area of bass speaker on back side of door trim.

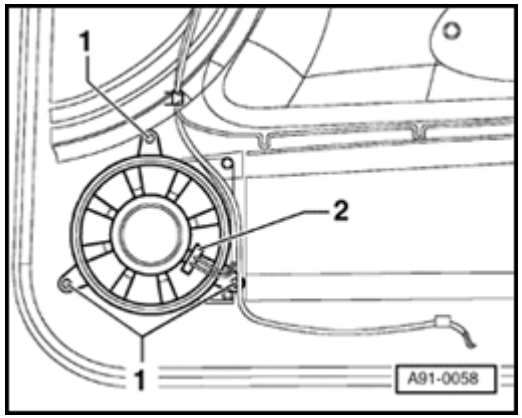

- Disconnect harness connector -2- from speaker.
- Remove screws -1- on speaker and remove speaker from door trim.

Installing

- Install in reverse order of removal.

cardiagn.com

91-28

Removing and installing mid-range/treble speakers in front door trim

Removing

Remove front door trim.

⇒ *Repair Manual, Body Interior, Repair Group 70* .

- Carefully loosen insulation in area of treble speaker on back side of door trim.

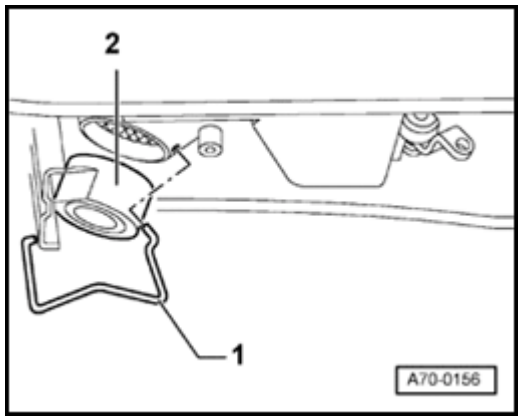

- Using screwdriver, disconnect clip -1-.
- Remove speaker -2- from door trim.

Installing

- Install in reverse order of removal.

cardiagn.com

91-29

Removing and installing speakers in parcel shelf

Notes:

- *Broad band speakers are installed in the parcel shelf for ➢ m.y. 1997 vehicles with the "Delta" radio and ➢ m.y. 1998 vehicles with the "Concert" radio.*

- *Bass speakers are installed in the parcel shelf for ➢ m.y. 1997 with the "Delta" radio with the BOSE sound system and/or m.y. 1998 ➢vehicles with the "Concert" radio with the BOSE sound system.*

Removing

Remove parcel shelf.

⇒ *Repair Manual, Body Interior, Repair Group 70* .

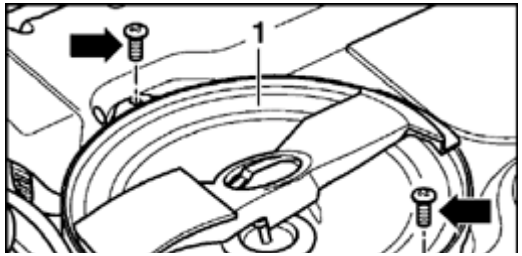

➢

- Remove two mounting screws (arrows) from broad band speaker and/or treble speaker -1- and remove speaker upward out of sheet metal cut-out under parcel shelf.
- Disconnect harness connector.

cardiagn.com

Installing

- Install in reverse order of removal.

cardiagn.com

91-30

Removing and installing broad band speakers in rear door trim

Removing

Remove rear door trim.

⇒ *Repair Manual, Body Interior, Repair Group 70* .

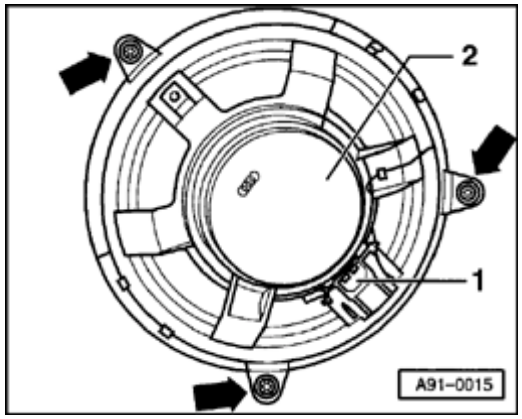

- Carefully loosen insulation from door trim in area of broad band speaker on back of door trim.
- Disconnect harness connector -1-.
- Remove mounting screws (arrows) from broad band speaker -2- and remove speaker from door trim.

Installing

- Install in reverse order of removal.

cardiagn.com

91-31

CD changer, removing and installing (sedan)

Removing

The CD changer is located in the luggage compartment on the left side wall in a holding box. A compartment with the on board tool kit is also integrated here.

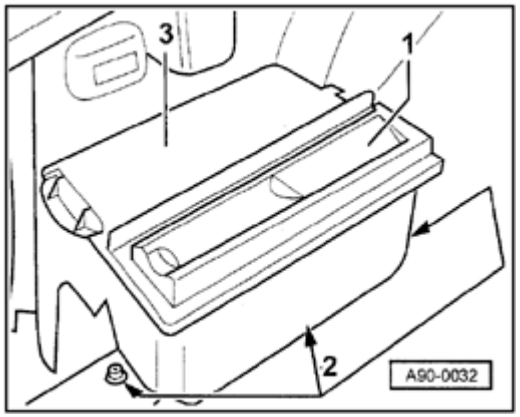

The CD changer -1- is located in a holding box -3- in the left side of the luggage compartment behind the wheel housing.

- Remove three Phillips-head screws -2- and remove holding box -3-.

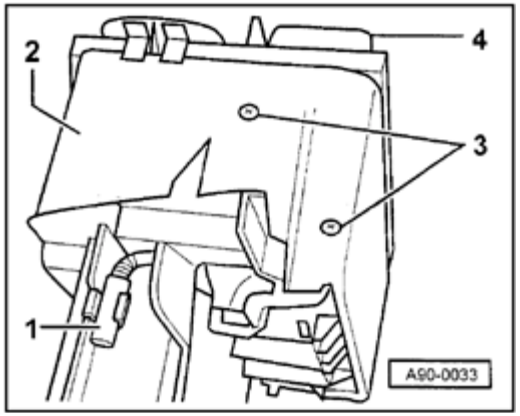

- Disconnect harness connector -1- under holding box -2- and remove holding box from luggage compartment.
- Remove four Phillips-head screws -3- on both sides of holding box -2- and remove CD changer from holding box.

Installing

- Install in reverse order of removal.

cardiagn.com

- After installing CD changer, cable between radio and CD changer must be checked ⇒ page 91-34 .

cardiagn.com

91-32

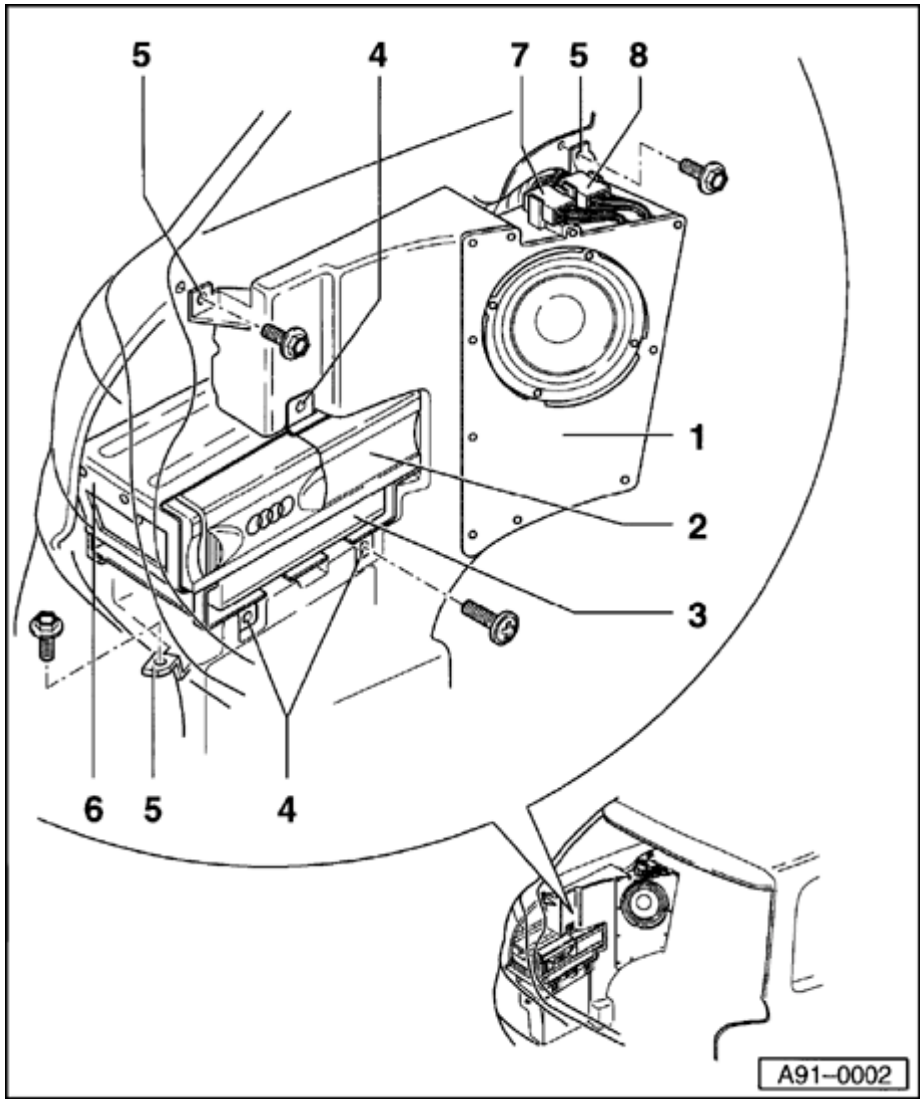

CD changer, removing and installing (Avant)

Overview

1 - Bass speaker (subwoofer)

2 - CD changer

3 - Telephone sending/receiving unit (not applicable for USA/Canada)

4 - Phillips-head screws (3x)

- For mounting frame for CD/telephone

5 - Mounting screws for bass speaker (subwoofer)

6 - Frame for CD changer/telephone

7 - Harness connector for BOSE amplifier

8 - Harness connector for bass speaker (subwoofer)

cardiagn.com

91-33

Removing

The CD changer is in the left rear of the cargo area under the storage bin.

- Open left side cargo area storage bin.

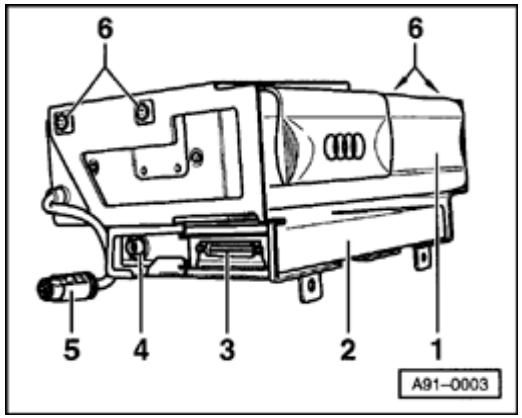

- Remove mounting screws and remove frame from storage bin.
- Disconnect harness connector -5- on CD changer -1-.
- Disconnect harness connector -3-.
- To remove CD changer, remove from side four Phillips-head screws -6- and remove CD changer from frame.

Installing

- Install in reverse order of removal.
- After installing CD changer, cable between radio and CD changer must be checked ⇒ page 91-34 .

cardiagn.com

91-34

Checking cable between radio and CD changer

- Switch radio off.

- Press MODE button on radio while turning radio on.

Do not press the MODE button again.

If the cable connection is OK:

The radio display indicates: "CONNECT" and "CD"

If the cable connection is NOT OK:

The radio display indicates: "NO CDC"

- Check electrical connections on CD changer.

- Repeat check as described above.

If not OK:

- Check wiring connections ⇒ Electrical Wiring Diagrams Troubleshooting & Component Locations

cardiagn.com

91-35

BOSE amplifier, removing and installing (sedan)

Note:

In vehicles from VIN 200000, the Bose amplifier is mounted in the same area as shown below, but in a vertical orientation.

Removing

The BOSE amplifier is located in the luggage compartment on the left side over the wheel housing.

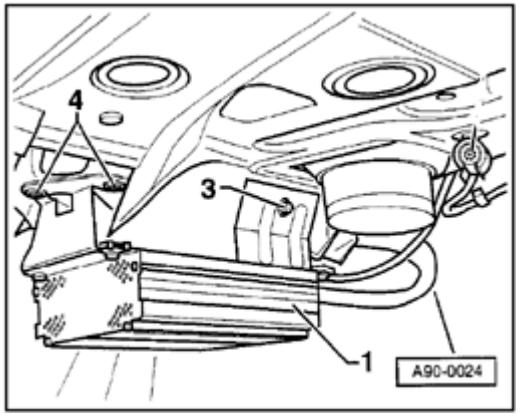

- Remove Phillips-head screws -3- (1x) and -4- (2x) and remove frame for BOSE amplifier -1-.
- Disconnect harness connector on back of amplifier.

Installing

- Install in reverse order of removal.

cardiagn.com

91-36

BOSE amplifier with bass speaker (subwoofer), removing and installing (Avant)

The BOSE amplifier is located in the left side of the cargo area under the cargo area side trim.

Notes:

- *If the vehicle is equipped with a CD changer, it must be removed* ⇒ *page 91-32* .
- *Bass speaker (subwoofer), removing and installing* ⇒ *page 91-37* .

cardiagn.com

91-37

Bass speaker (subwoofer), removing and installing (Avant)

Note:

If the vehicle is equipped with a CD changer, it must be removed ⇒ *page 91-32* .

The bass speaker (subwoofer) is located on the left side of the cargo area under the cargo area side trim.

cardiagn.com

91-38

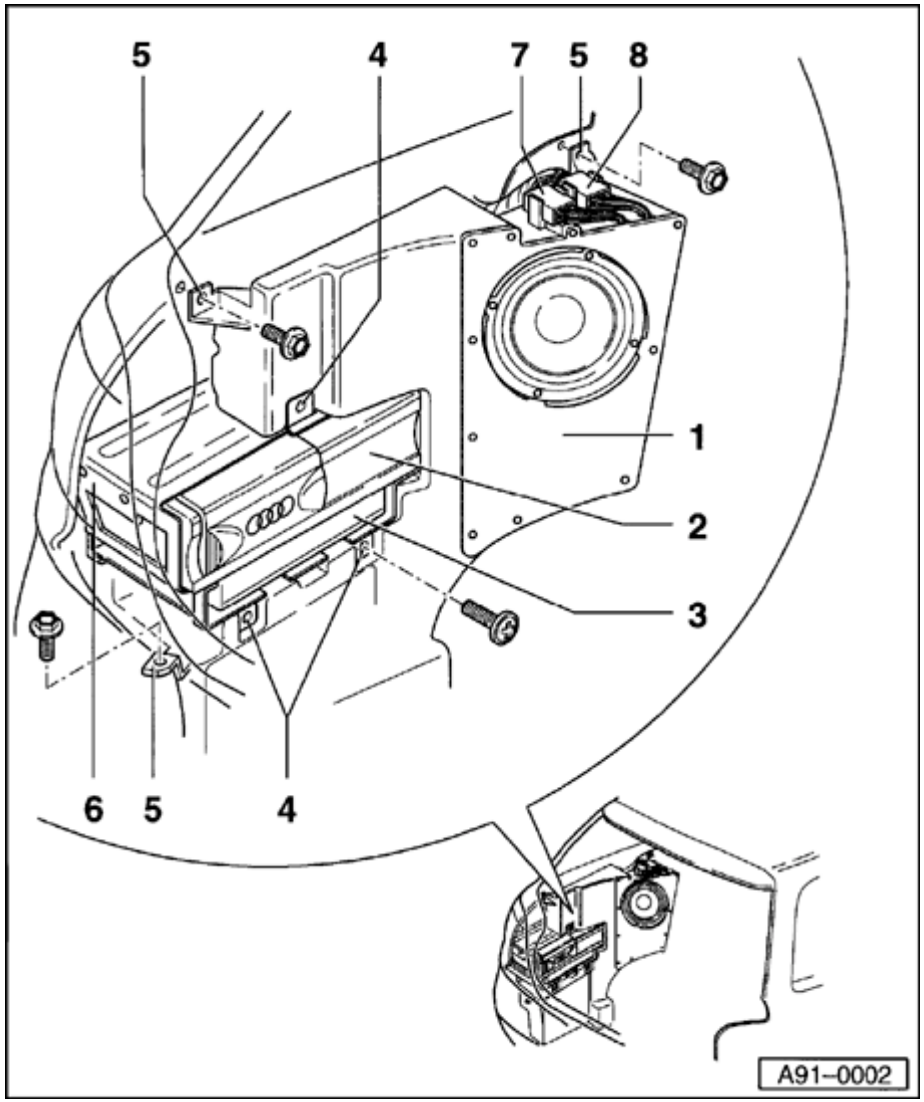

Removing

- Open storage bin at left side of cargo area.
- Remove left side cargo area side trim ⇒ *Repair Manual, Body Interior, Repair Group 70* .
- Disconnect harness connector -8- for bass speaker (if equipped with BOSE sound system, also disconnect harness connector -7-).
- Remove bass speaker (subwoofer) from side part -1-.

Installing

- Install in reverse order of removal.

cardiagn.com

91-39

Antenna amplifier, removing and installing (sedan)

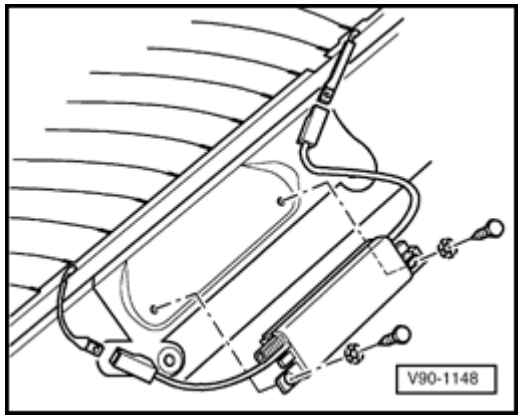

Removing

- Remove D-pillar trim ⇒ *Repair Manual, Body Interior, Repair Group 70* .
- Disconnect antenna wire and disconnect all harness connectors.
- Remove hex screws and remove antenna amplifier.

Installing

- Install in reverse order of removal.

cardiagn.com

91-40

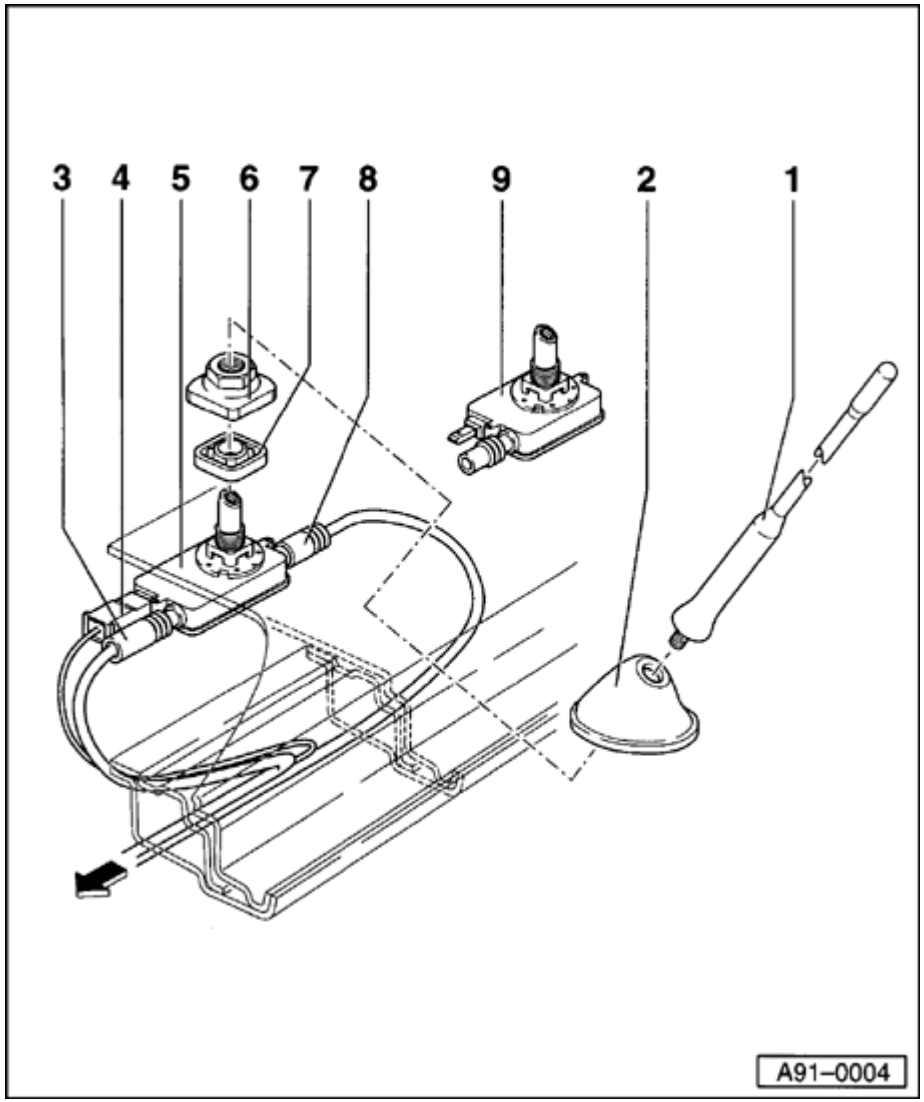

Roof antenna, removing and installing (Avant)

Overview

1 - Antenna

2 - Antenna base cover

3 - Harness connector for radio antenna wire

4 - Harness connector for switched positive supply (B+) (➢ m.y. 1997 only)

5 - Antenna base for radio/telephone combination antenna

6 - Mounting nut

7 - Gasket for antenna base

8 - Harness connector for telephone wire

9 - Antenna base for radio antenna

cardiagn.com

91-41

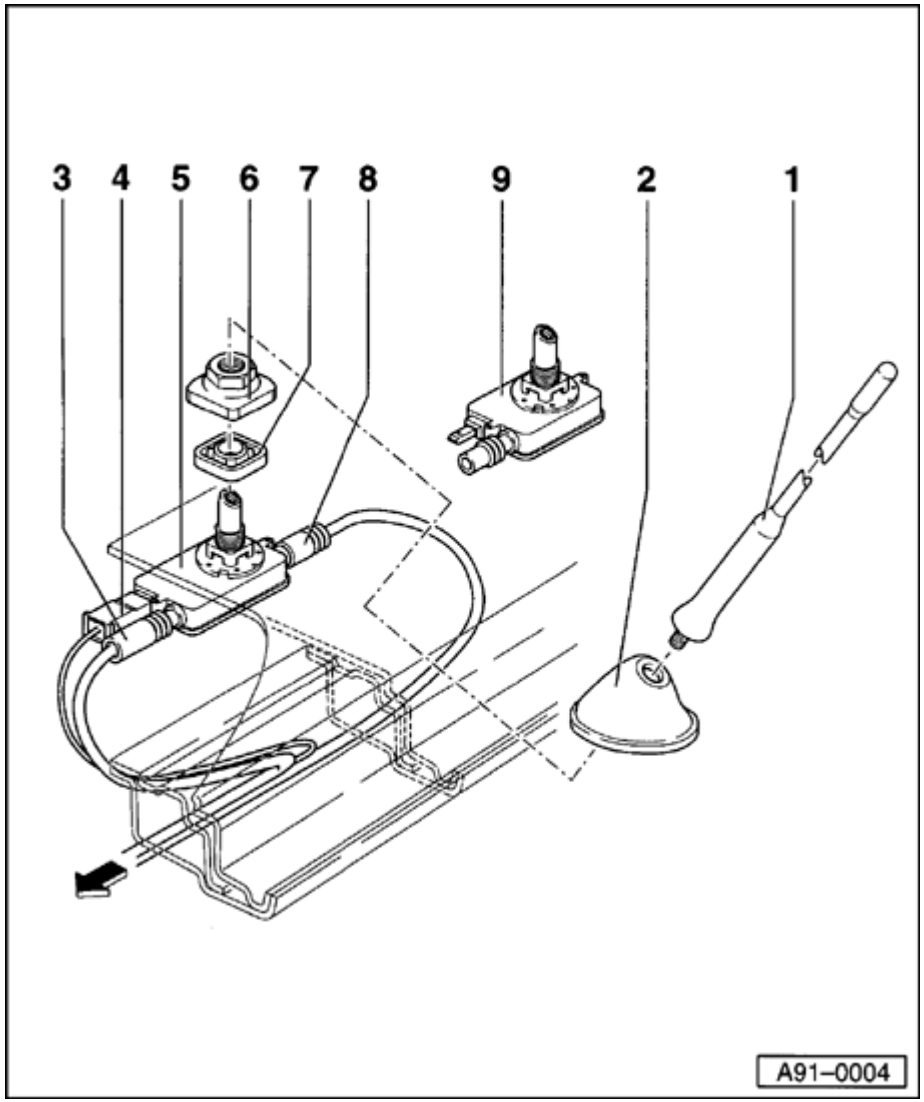

Removing

- Using screwdriver, carefully pry cargo area dome light off of headliner.
- Disconnect antenna - 1 -.
- Pull cover - 2 - upward.
- Remove mounting nut - 6 -.
- Remove antenna base - 5 - or - 9 - toward inside of vehicle through headliner opening.
- Disconnect harness connectors - 3 -, - 4 - and if necessary - 8 -. Push back sliding sleeves - 3 - and - 8 - during disassembly.

Installing

- Install in reverse order of removal.

cardiagn.com

91-69

Multi-function steering wheel

CAUTION!

Before working on the electrical system: Disconnect the battery Ground (GND) strap.

Notes:

- *Obtain radio code before disconnecting battery.*
- *Be sure to activate vehicle features (radio, clock, electric window regulator, engine) according to owner's manual when the battery is re-connected.*

General description

System includes:

- Six illuminated function buttons in steering wheel
- Steering wheel-incorporated wiring
- Steering wheel-incorporated electronics
- Vehicle-incorporated control module

cardiagn.com

- Vehicle-incorporated wiring

cardiagn.com

91-70

Function description:

For better operation of radio and telephone system while driving, six function keys are integrated into the steering wheel. In addition, the multi-function steering wheel is electrically heated.

The electronics in the steering wheel take over the regulation of the steering wheel heating, transmission of the six function buttons to CAN-bus and dimming of the function buttons. The electronics in the steering wheel cannot be replaced individually, the entire steering wheel must be replaced in case of a malfunction.

The control module of the multi-function steering wheel takes over control of the radio (or radio/navigation system), telephone system, instrument cluster, and steering wheel heating.

In the center display of the instrument cluster, the selected station appears during radio operation and the name and telephone number of the dialogue partner from the telephone memory appears during telephone operation. If a cassette is inserted during radio operation, the message "TAPE < >" appears and for CD-operation, CD-number "CD 02" and the respective title (track) "TR 09" appears on the center display.

cardiagn.com

91-71

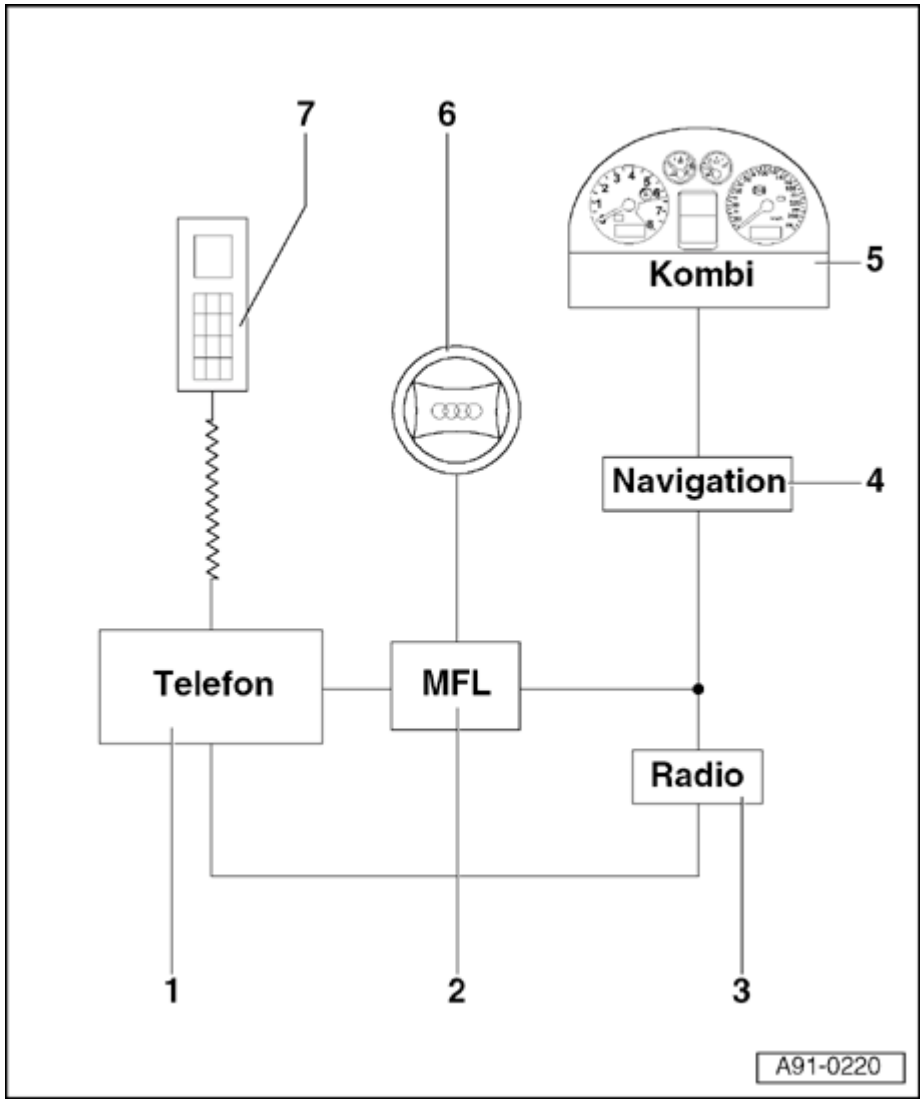

Multi-function steering wheel, overview

1 - Operating electronics and telephone control module -J412- (Handy) or telephone transceiver -R36-

2 - Control module for multi-function steering wheel -J453-

- At 13-pin relay carrier below the driver's side storage compartment
- Removing and installing ⇒ page 91-75

3 - Radio

- Installed in center console

4 - Control module for operating electronics, navigation -J402-

- Installed in center console
- Either a radio system is installed, or a control module for operating electronics and navigation

cardiagn.com

91-72

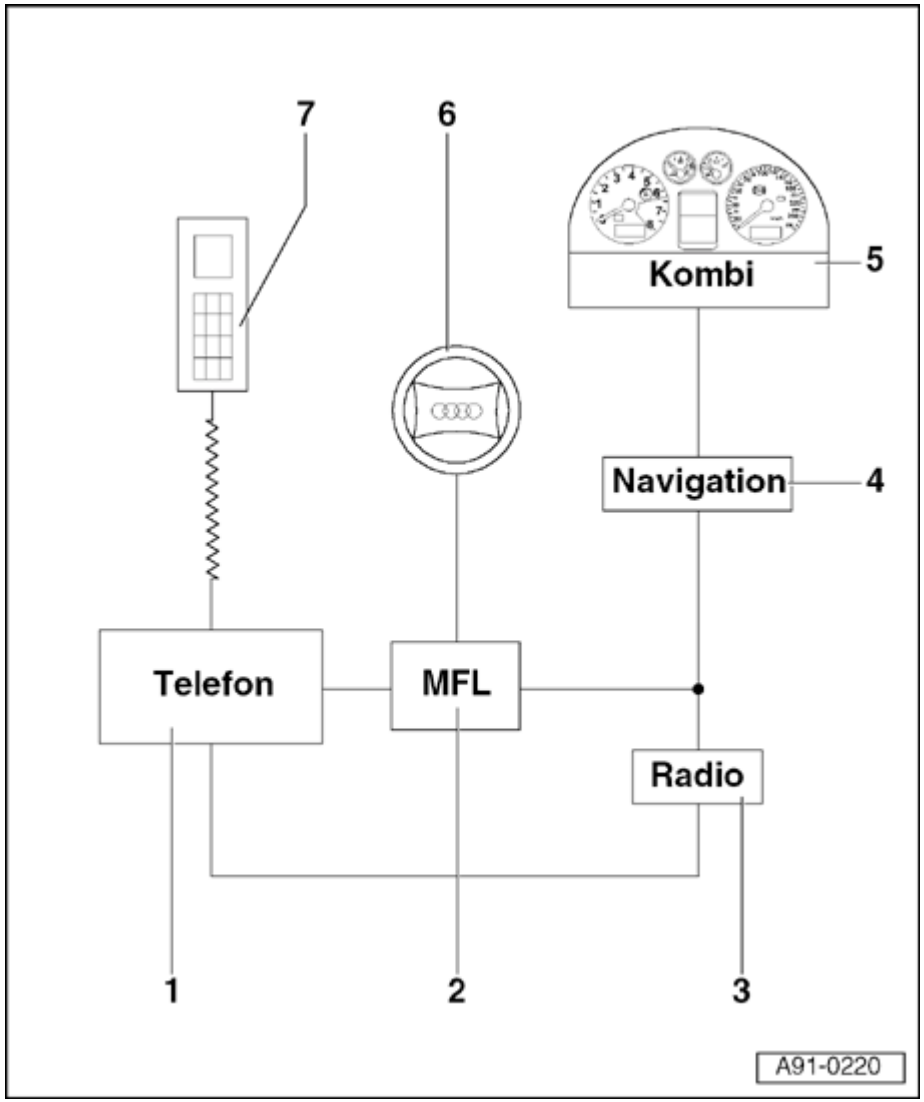

5 - Instrument cluster

- Installed in instrument panel

6 - Multi-function steering wheel

- With integrated operation switches
- With steering wheel-integrated electronics

7 - Handset for telephone or Handy

cardiagn.com

91-73

Operating switch on multi-function steering wheel, removing and installing

Removing

- Disconnect battery ground (GND) strap.

Note:

Always observe airbag safety precautions when working on airbag system components

⇒ *Repair Manual, Body Interior, Repair Group 69; airbag safety precautions*

- Release steering column adjustment. Pull steering wheel as far out and up as possible.

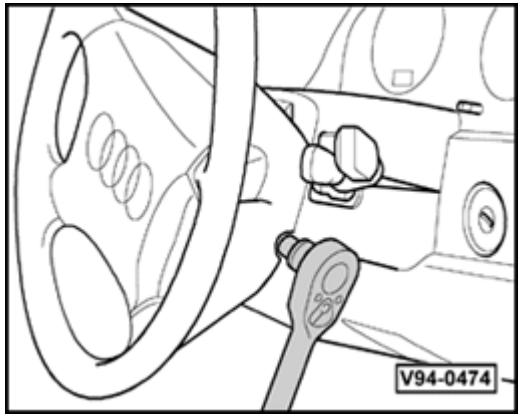

- Remove airbag unit by removing screws at left and right of steering wheel using a T30 TORX bit. Tightening torque: 6 Nm

cardiagn.com

91-74

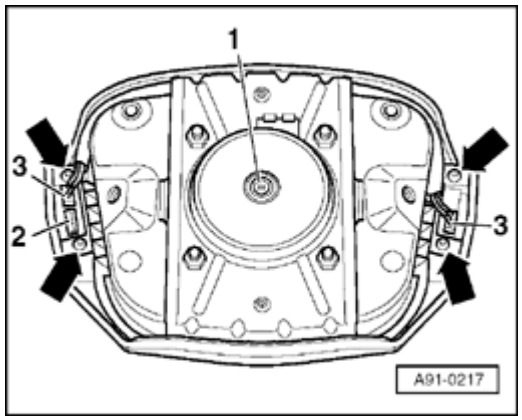

- Carefully flip airbag unit forward.

- Disconnect harness connectors -1- and -2- at airbag unit.
- Remove airbag unit.
- Disconnect harness connector -3- and remove both T10 TORX screws at left or right of operating switch.
- Remove operating switch toward front.

Installing

Note:

During installation, make sure that the wires of connector -3- are in the guides and are not pinched.

- Install in reverse order of removal.

cardiagn.com

91-75

Control module for multi-function steering wheel -J453-, removing and installing

Removing

- Remove driver's side storage compartment

⇒ *Repair Manual, Body Interior, Repair Group 68; storage bin on driver's side, removing*

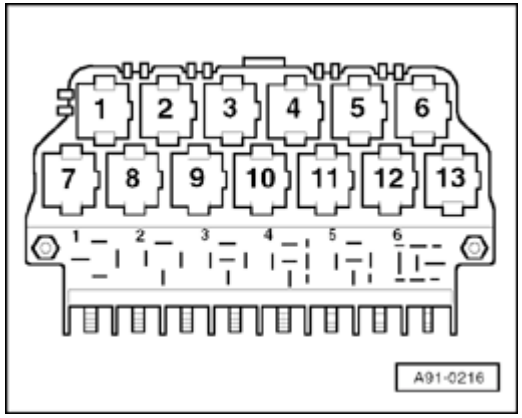

Control module for multi-function steering wheel -J453 is housed in a double-relay box and located in positions -2- and -3- of the 13-pin relay carrier via the central electronics

- Remove control module for multi-function steering wheel from relay socket.

Installing

- Install in reverse order of removal.

cardiagn.com

94-1

Headlights, servicing

Three-way halogen headlights, overview

CAUTION!

Disconnect the battery Ground (GND) strap before working on the electrical system.

Notes:

- *Before disconnecting the battery, determine the correct coding for the anti-theft radio.*
- *After reconnecting the battery, check and activate the vehicle's electrical equipment (radio, clock, comfort and convenience features, etc.) as outlined in this Repair Manual or the Owner's Manual.*

cardiagn.com

94-2

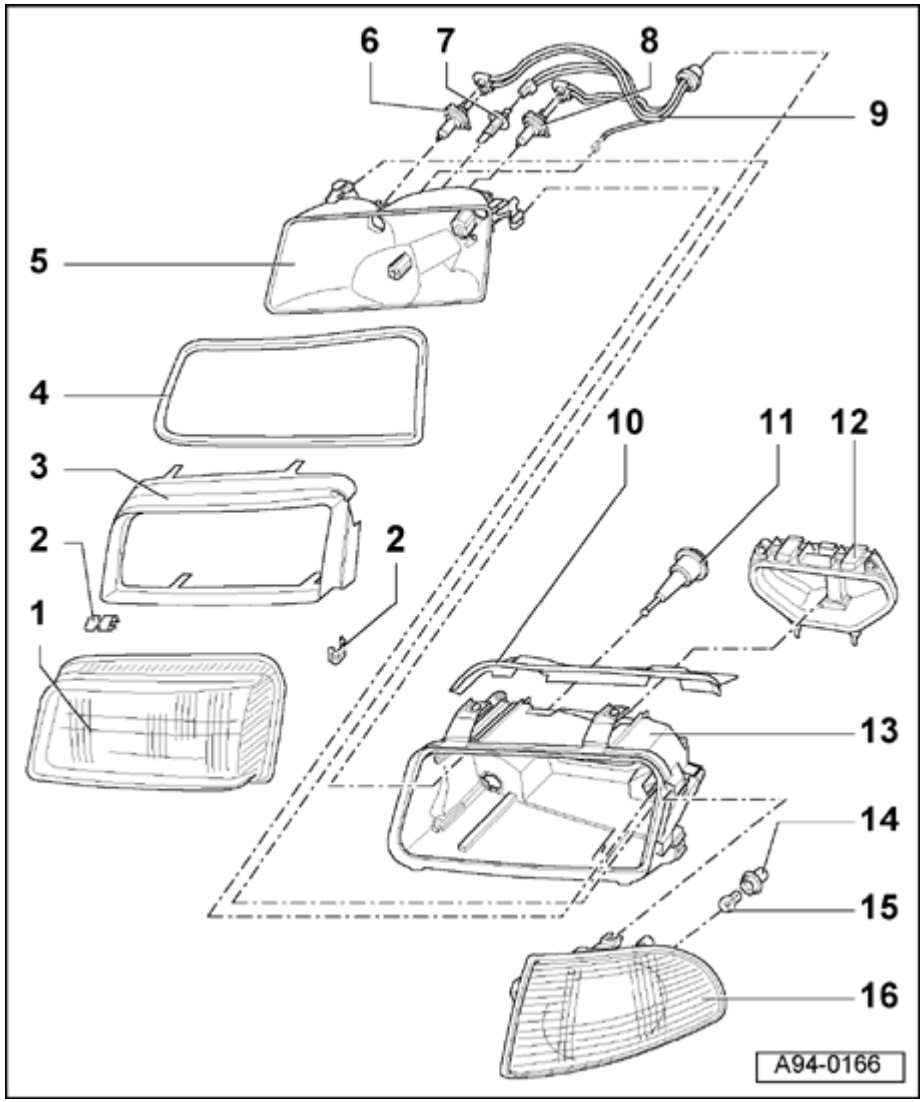

Notes:

- *Some procedures could affect the headlight beam adjustment, requiring that it be reset ⇒ Page 94-8 .*

⇒ Repair Manual, Maintenance

- *Adjusting spray for headlights washer nozzles ⇒ Page 92-17 .*

1 - Diffuser lens

2 - Retaining clamps (7x)

- To remove, carefully pry out using screwdriver
- To install, press in by hand

3 - Headlight frame

- Locked within headlight housing

4 - Seal for lens

- Always replace

5 - Reflector

- To remove, clip out of retaining rings
- To install, carefully press into retaining rings
- Do not touch inside of reflector

cardiagn.com

94-3

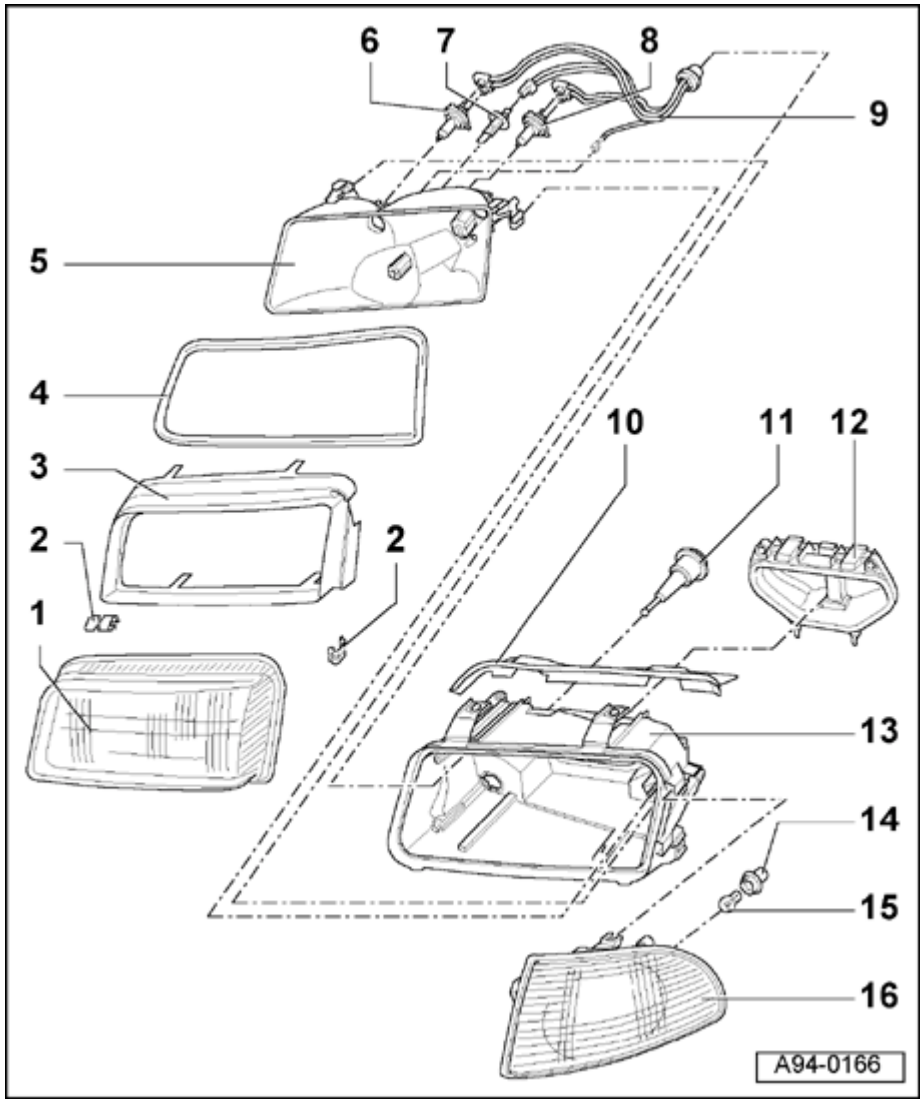

6 - High beam bulb

- 12 V, 55 W (H7)

7 - Front fog light bulb

- 12 V, 55 W (H1)

8 - Low beam bulb

- 12 V, 55 W (H7)

9 - Wiring with harness connector

10 - Trim strip

- Clipped onto headlight housing

11 - Fixed bearing for reflector

- Only on vehicles without headlight automatic vertical aim control

12 - Cover

- Press lock down and remove toward rear

13 - Headlight housing

14 - Bulb socket

15 - Turn signal bulb

- 12 V, 21 W, orange

16 - Turn signal lens

- Removing and installing ⇒ Page 94-21

cardiagn.com

94-4

High intensity gas discharge (Xenon) headlights, overview

CAUTION!

Disconnect the battery Ground (GND) strap before working on the electrical system.

Notes:

- *Before disconnecting the battery, determine the correct coding for the anti-theft radio.*
- *After reconnecting the battery, check and activate the vehicle's electrical equipment (radio, clock, comfort and convenience features, etc.) as outlined in this Repair Manual or the Owner's Manual.*
- *Some procedures could affect the headlight beam adjustment, requiring that it be reset* ⇒ *Page 94-8* .

⇒ *Repair Manual, Maintenance*

- *Adjusting spray for headlights washer nozzles* ⇒ *Page 92-17* .

cardiagn.com

94-5

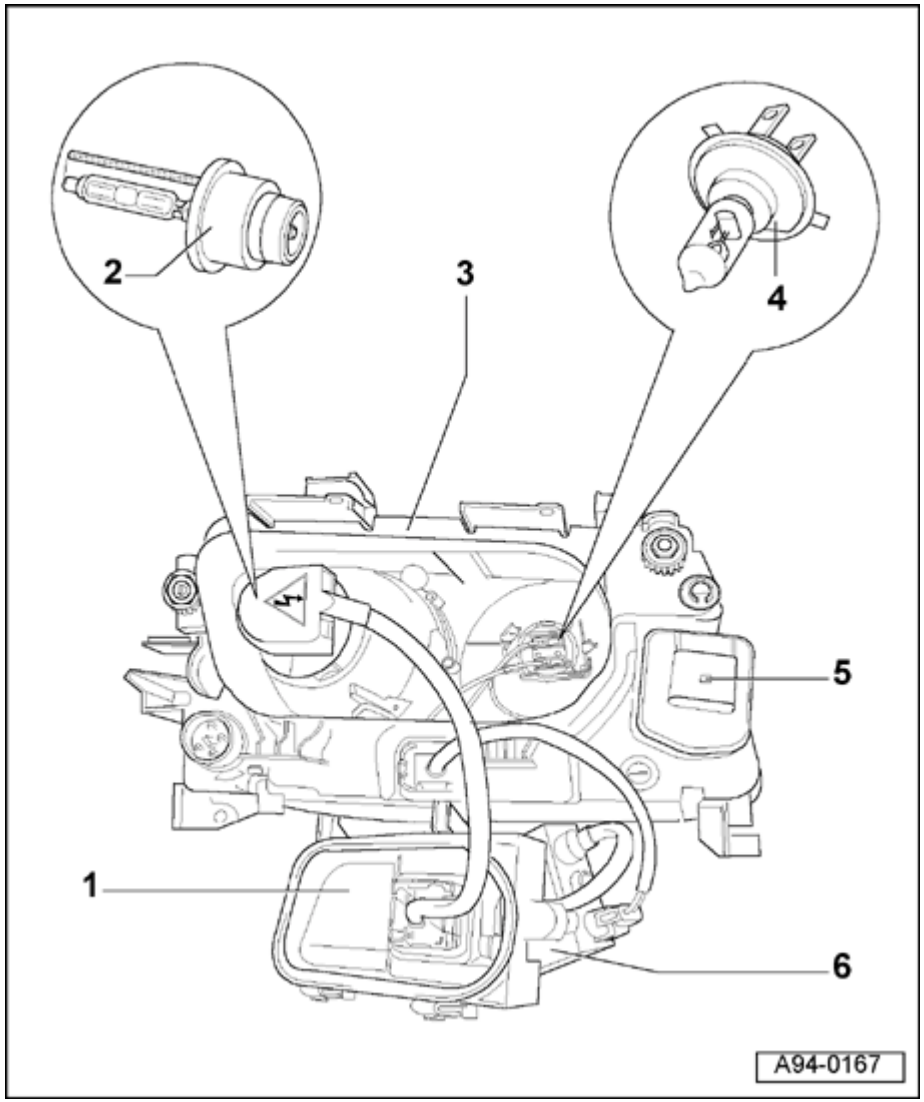

1 - Housing cover

2 - Xenon bulb

- 12 V, 35 W
- Replacing ⇒ Page 94-12

3 - Headlight housing

4 - High beam bulb

- 12 V, 55 W (H7)
- Replacing ⇒ Page 94-14

5 - Headlight beam adjusting motor -V48-/-V49-

- Removing and installing ⇒ Page 94-11

6 - Igniter for gas discharge lamps -N195- (Xenon)

- Removing and installing ⇒ Page 94-15

cardiagn.com

Headlights, removing and installing

Note:

Protect bumper using cloth backed tape in headlight area to prevent damage to paint.

Removing

- Remove turn signal ⇒ Page 94-21 .

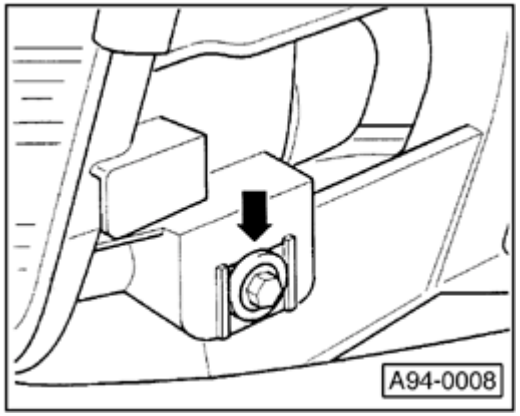

- Remove bolt (arrow) 6 Nm (53 in. lb).

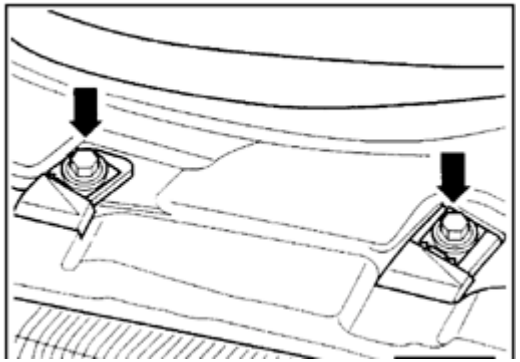

- Remove two bolts (arrows) 6 Nm (53 in. lb).
- Disconnect headlight harness connector.
- Disconnect headlight beam adjusting motor harness connector.

cardiagn.com

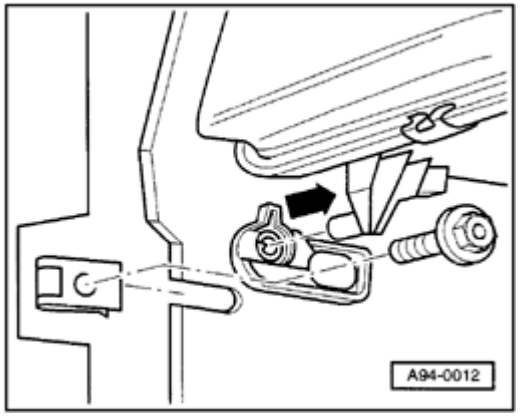

- Pull headlight out from peg mount at side (approx. 15 mm), lift slightly and then lift out carefully toward front, rotating if necessary.

Installing

- Install in reverse order of removal.
- Always align headlights to adjacent body panels (gap clearances) before securing.
- Adjust headlights after assembly ⇒ Page 94-8 .

cardiagn.com

94-8

Headlights, adjusting

Instructions and specifications on headlight adjustment:

⇒ Repair Manual, Maintenance

Notes:

- *For vehicles with high intensity gas discharge (Xenon) headlights, the Diagnostic Trouble Code (DTC) memory must be checked and erased before each manual adjustment of the adjusting screws. The basic adjustment is then carried out.⇒ Headlight automatic vertical aim control On board Diagnostic (OBD), initiating, ⇒ Page 01-217 .*
- *The aimer must be used for the adjustment.*

⇒ Repair Manual, Maintenance

cardiagn.com

94-9

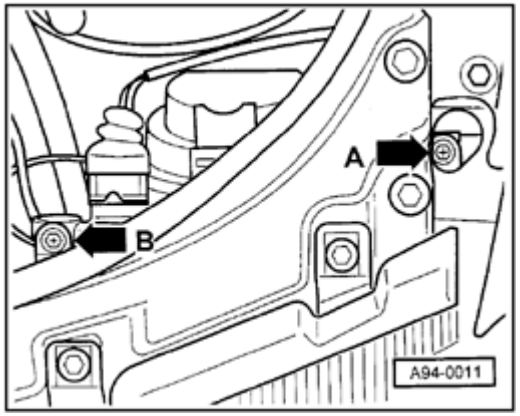

- Change headlight beam adjustment by turning adjusting screws -A- and/or -B- (use Phillips-head screwdriver or hex-wrench).

The illustration shows the left headlight:

Bosch
A - Lateral adjustment B - Height adjustment

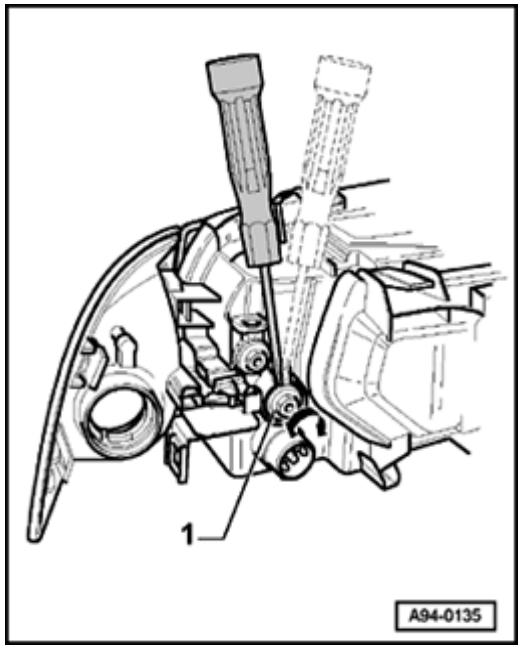

- Use screwdriver for lateral adjustment -1-.

Note:

The lateral adjustment must be set to "0."

cardiagn.com

94-10

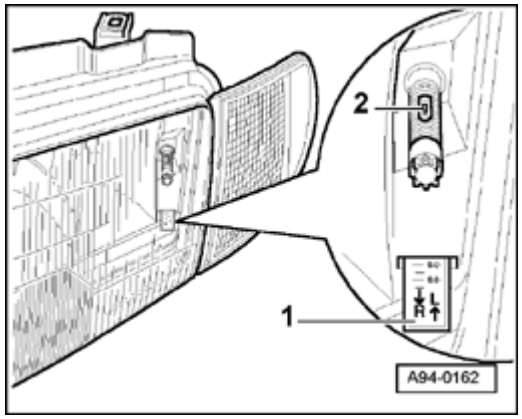

- Checking lateral adjustment

1 - Lateral adjustment indicator

2 - Measuring bubble

cardiagn.com

Headlight beam adjusting motor (high intensity gas discharge -Xenon-headlights), removing and installing

Note:

Always adjust headlights after headlight beam adjusting motors are removed, installed or replaced ⇒ *Page 94-8* .

Removing

- For right headlight, remove back portion of intake air duct.

- Remove cover from headlight housing.

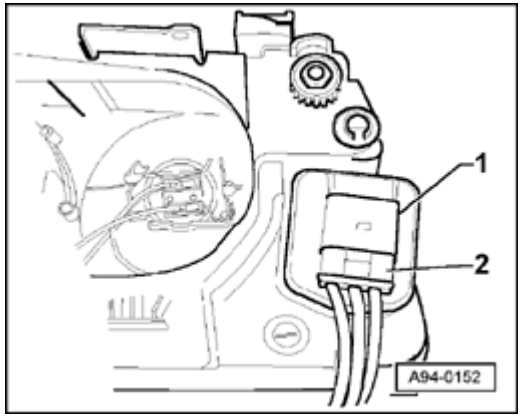

- Release headlight beam adjusting motor -1- on right headlight by rotating clockwise and on left headlight by rotating counterclockwise.
- Release ball joint from its socket by pushing laterally to left on right headlight and push to right on left headlight.
- Disconnect harness connector -2-.

Installing

- Install in reverse order of removal.

cardiagn.com

94-12

High intensity gas discharge (Xenon) headlight bulbs, replacing

Replacing Xenon bulb for low beam

Removing

- Remove cover from headlight housing.

WARNING!

HIGH VOLTAGE!

Disconnect the battery Ground (GND) strap before working on parts of the Xenon headlight which are labeled with the yellow high voltage symbol.

Notes:

- *Before disconnecting the battery, determine the correct coding for the anti-theft radio.*
- *After reconnecting the battery, check and activate the vehicle's electrical equipment (radio, clock, comfort and convenience features, etc.) as outlined in this Repair Manual or the Owner's Manual.*

cardiagn.com

94-13

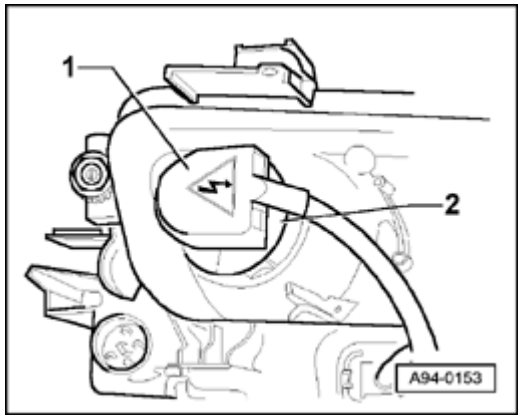

- Remove harness connector -1- on Xenon headlight and retaining ring -2- by rotating counterclockwise.

Installing

- Insert new bulb into housing without touching glass with bare hands.

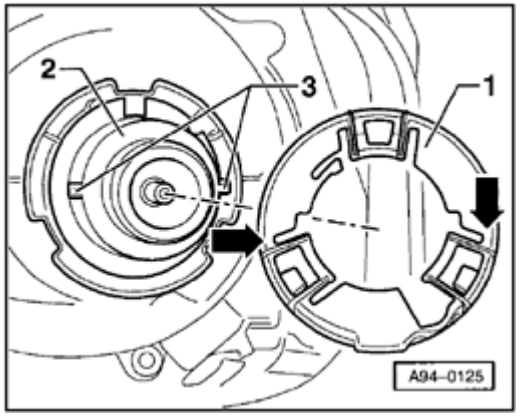

- Place retaining ring -1- on catches -3- of Xenon lamp -2- with two recesses (arrows) and secure by turning clockwise.
- Reconnect harness connector and close housing cover.

cardiagn.com

94-14

Replacing high beam bulbs

Removing

- Remove back portion of intake air duct on right headlight.

- Remove cover from headlight housing.

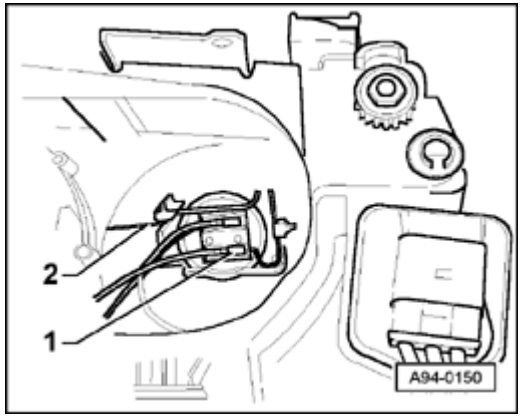

- Disconnect harness connector -1-.
- Release bulb retaining spring -2- and remove from housing.

Installing

- Insert new bulb into housing without touching glass with bare hands.
- Secure bulb with bulb retaining spring.
- Reconnect harness connector and close housing cover.
- Secure housing cover with bulb retaining spring.

cardiagn.com

94-15

Ignitor for gas discharge lamps -N195- (Xenon), removing and installing

WARNING!

HIGH VOLTAGE!

Disconnect the battery Ground (GND) strap before working on parts of the Xenon headlight which are labeled with the yellow high voltage symbol.

Notes:

- *Before disconnecting the battery, determine the correct coding for the anti-theft radio.*
- *After reconnecting the battery, check and activate the vehicle's electrical equipment (radio, clock, comfort and convenience features, etc.) as outlined in this Repair Manual or the Owner's Manual.*

Removing

- Remove cover from headlight housing.

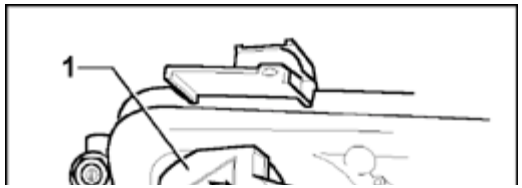

- Remove harness connector -1- on Xenon bulb by rotating counterclockwise.

cardiagn.com

94-16

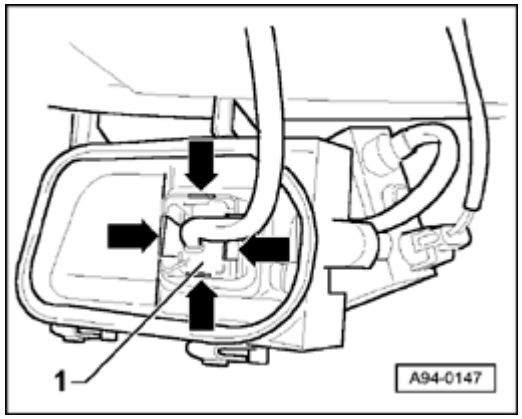

- Remove retainer -1- in housing cover by pressing catches (arrows).
- Guide harness connector for Xenon bulb through opening in cover.

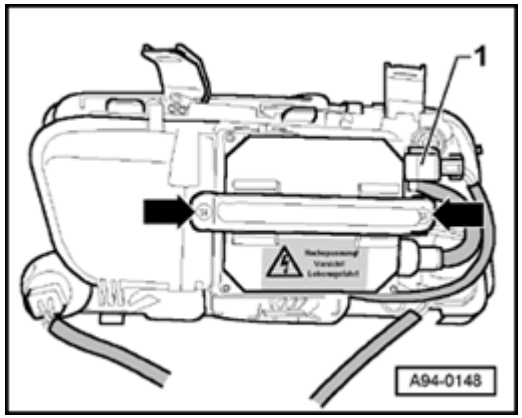

- Disconnect harness connector -1- from ignitor's harness connector.
- Remove locking plate for ignitor by loosening screws (arrows).
- Remove starter from housing.

Installing

- Install in reverse order of removal.

cardiagn.com

94-17

Front fog lights, servicing

Front fog lights, removing and installing

CAUTION!

Disconnect the battery Ground (GND) strap before working on the electrical system.

Notes:

- *Before disconnecting the battery, determine the correct coding for the anti-theft radio.*
- *After reconnecting the battery, check and activate the vehicle's electrical equipment (radio, clock, comfort and convenience features, etc.) as outlined in this Repair Manual or the Owner's Manual.*

cardiagn.com

94-18

- Remove bumper

⇒ *Repair Manual, Body Exterior, Repair Group 63*

Removing

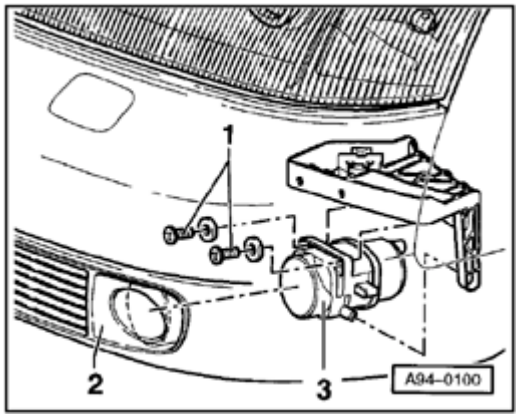

- Pry out plastic cover -2- and towing lug cover (right side) toward front.
- Remove two Torx® screws -1- (later Phillips-head screws).
- Remove headlight insert -3-.
- Disconnect harness connector.

cardiagn.com

94-19

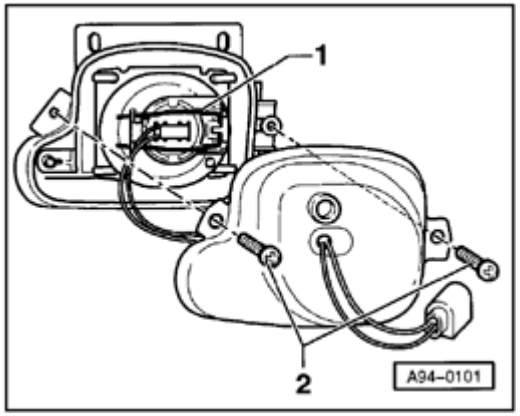

- Remove Phillips-head screws -2- on housing cover.
- Release bulb retaining spring -1- and remove light socket from housing.

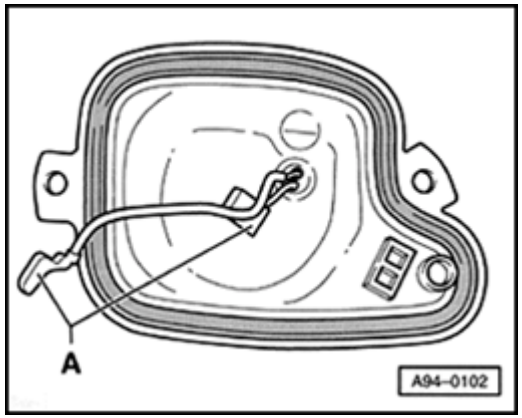

- Remove lamp connector -A- from cable connector in housing cover.

Installing

- Insert new bulb into light socket without touching glass with bare hands.
- Secure light socket with bulb retaining spring.
- Reconnect harness connector and close housing cover.
- Remainder of installation is in reverse order of removal.
- Adjust front fog lights after installing ⇒ Page 94-20 .

cardiagn.com

94-20

Front fog lights, adjusting

For adjustment specifications:

⇒ Repair Manual, Maintenance

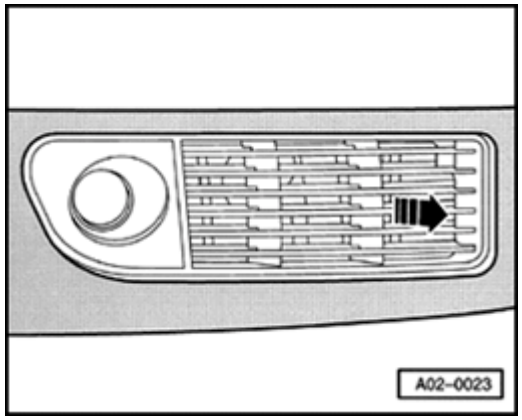

- Pull off covers (arrow) from bottom part of bumper.

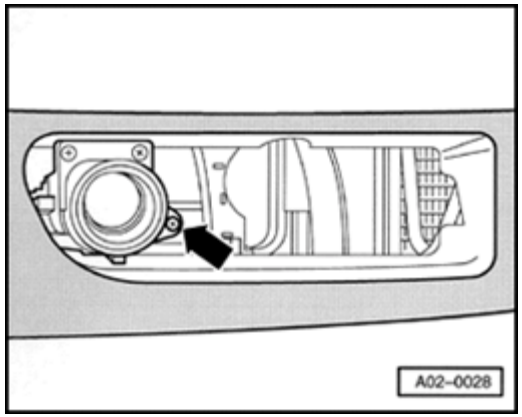

- Turn adjusting screw (arrow) counterclockwise to lower headlight level. No lateral adjustment is provided.

Note:

The illustration shows the right front fog light. For the left front fog light, the adjusting screw is in the mirror-image position.

cardiagn.com

Front turn signals, removing and installing

Note:

Turn signals can be removed with headlight assemblies installed.

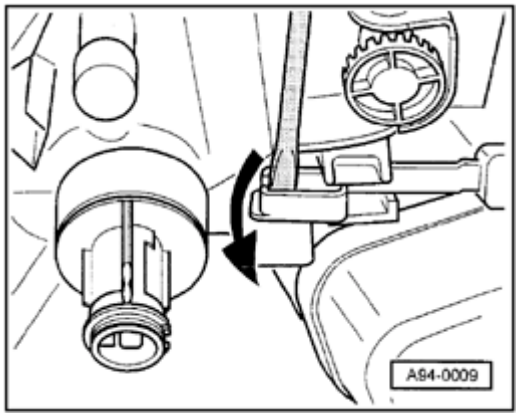

- Carefully press out release lever toward rear using screwdriver.

  The position of the release lever depends on the headlight version:

  - Standard headlights: release lever is attached to headlight housing
  - Three-way headlights: release lever is attached to turn signal

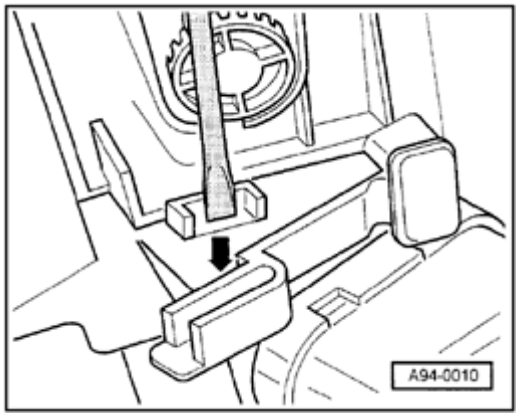

- Press catch (lever) slightly down (arrow) and push turn signal lens out toward front.
- Disconnect harness connector and rotate and remove bulb assembly.

cardiagn.com

94-22

Side-mounted turn signals

Side-mounted turn signals, removing and installing

CAUTION!

Disconnect the battery Ground (GND) strap before working on the electrical system.

Notes:

- *Before disconnecting the battery determine the correct coding for the anti-theft radio.*
- *After reconnecting the battery, check and activate the vehicle's electrical equipment (radio, clock, comfort and convenience features, etc.) as outlined in this Repair Manual or the Owner's Manual.*

Removing

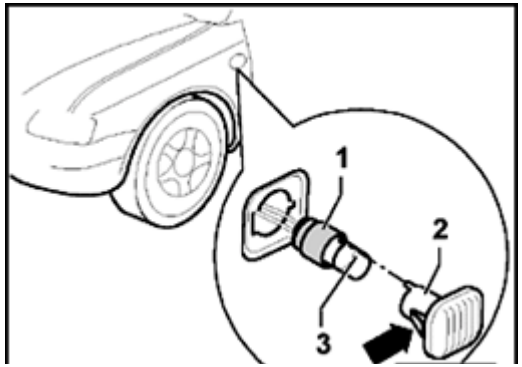

- Press side turn signal lens against retaining tab in direction of arrow and carefully remove from fender opening.
- Carefully pull housing -2- out of rubber socket -1-.
- Bulb -3- can be pulled out of rubber socket -1- for replacement.

Installing

cardiagn.com

- Install in reverse order of removal.

cardiagn.com

94-37

Steering column switch, servicing

CAUTION!

Disconnect the battery Ground (GND) strap before working on the electrical system.

Notes:

- *Before disconnecting the battery, determine the correct coding for the anti-theft radio.*
- *After reconnecting the battery, check and activate the vehicle's electrical equipment (radio, clock, comfort and convenience features, etc.) as outlined in this Repair Manual or the Owner's Manual.*

cardiagn.com

94-38

Steering column switch, terminal assignments

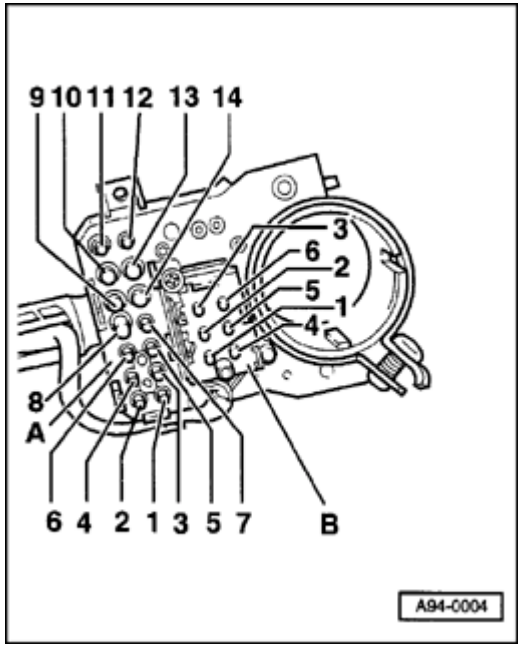

Terminal assignments for light switch, turn signal switch, headlight dimmer switch and flasher, parking light switch and cruise control

A - 14-pin harness connector

1 - Light switch, terminal 58

2 - Switch, terminal 14

3 - Light switch, headlight dimmer switch and flasher, terminal 30

4 - Light switch and headlight dimmer switch and flasher, terminal 30

5 - Switch for parking light, terminal PL

6 - Switch for parking light, terminal P

7 - Switch for parking light, terminal PR

8 - Light switch, terminal 11 (daytime running lights/dimmer lighting)

9 - Headlight dimmer switch and flasher, terminal 56 b

10 - Headlight dimmer switch and flasher, terminal 56 a

11 - Headlight dimmer switch and flasher, terminal 56

12 - Light switch, terminal 1 (daytime running lights/dimmer lighting)

13 - Light switch, terminal X

14 - Light switch, terminal 3 (daytime running lights/dimmer lighting)

cardiagn.com

94-39

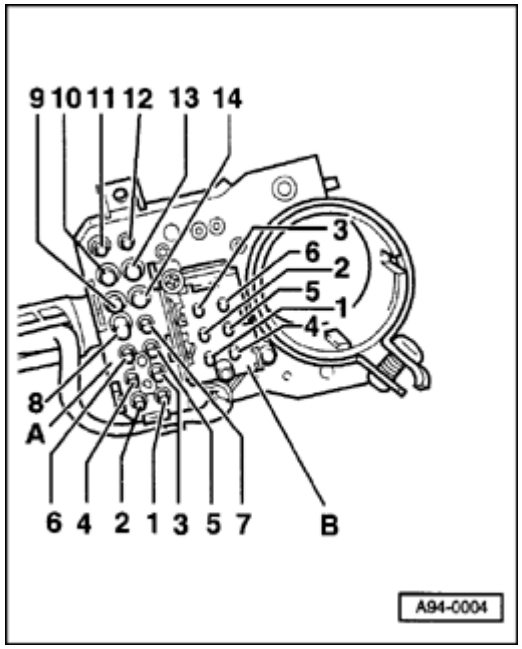

B - 6-pin connector, cruise control system

1 - On and resume

2 - Resume

3 - Set

4 - Terminal 15

5 - On, resume, and off (click stop engaged)

6 - Input from control module, terminal 3

cardiagn.com

94-40

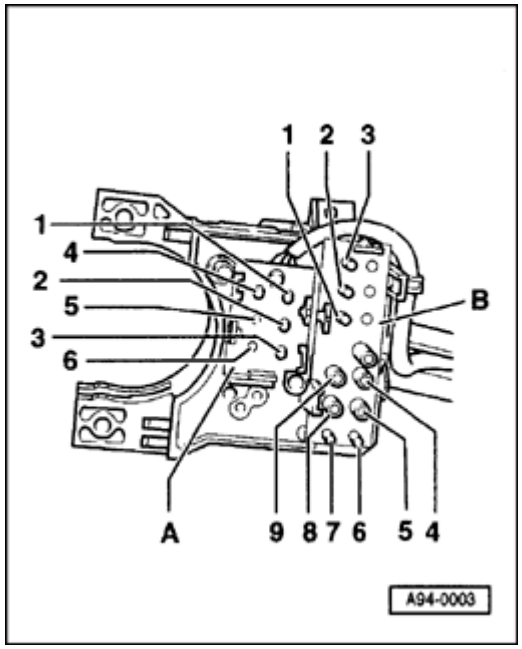

Wiper switch pin assignment

A - 6-pin connector

1 - Board computer, reset

2 - Board computer, Terminal 31

3 - Board computer, right rocker switch

4 - Board computer, left rocker switch

5 - open

6 - open

B - 13-pin harness connector

1 - Wiper switch, terminal J

2 - Wiper switch, terminal 53 c

3 - Emergency light (hazard light) switch, terminal R

4 - Wiper switch, terminal 53 b

5 - Wiper switch, terminal 53 a

6 - Emergency light (hazard light) switch, terminal L

7 - Emergency light (hazard light) switch, terminal 49 a

8 - Wiper switch, terminal 53 e

9 - Wiper switch, terminal 53

cardiagn.com

94-41

Ignition switch lock cylinder, servicing

Steering lock cylinder - ignition switch removing and installing

CAUTION!

Disconnect the battery Ground (GND) strap before working on the electrical system.

Notes:

- *Before disconnecting the battery determine the correct coding for the anti-theft radio.*
- *After reconnecting the battery, check and activate the vehicle's electrical equipment (radio, clock, comfort and convenience features, etc.) as outlined in this Repair Manual or the Owner's Manual.*

Notes:

- *For removing, the lock cylinder, always use the spare key or shop key with the flat plastic handle.*
- *The master key equipped with a light and/or remote control transmitter in its handle is*

cardiagn.com

unsuitable for removal because the keys broad handle covers an access hole in the lock cylinder.

cardiagn.com

Removing

- Remove driver's-side airbag unit and steering wheel.

⇒ *Repair Manual, Body Interior, Repair Group 69*

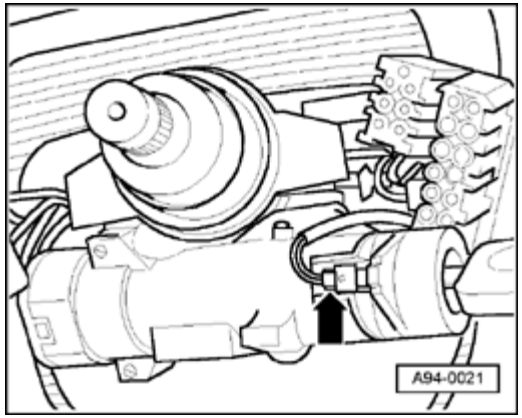

- Remove steering column switches ⇒ Page 94-37 .
- Insert spare or shop key and switch ignition on: access hole will appear in front of switch next to ignition key slot.

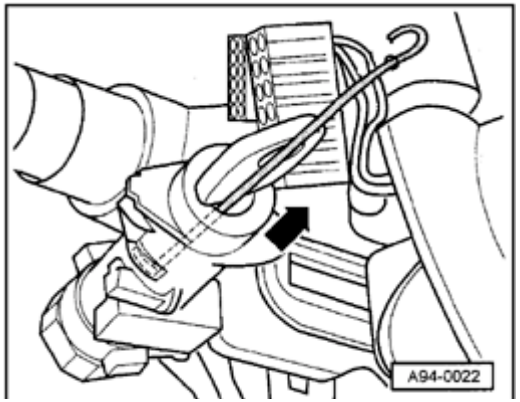

- Insert length of steel wire or small screwdriver (approx. 2 mm dia.) as far as it will go, as illustrated, and pull lock cylinder out of steering lock housing in direction of arrow.

Installing

- Ignition switch must be in "ignition on" position.
- Push lock cylinder with ignition key all way into steering lock housing

cardiagn.com

and press in firmly until catch engages audibly.

- Install steering column switches and steering wheel.

cardiagn.com

94-43

Ignition switch, removing and installing

Removing

Note:

It is not necessary to remove the lock cylinder.

- Disconnect battery Ground (GND) strap.

- Remove driver's-side airbag unit and steering wheel.

⇒ *Repair Manual, Body Interior, Repair Group 69*

- Remove steering column switche ⇒ Page 94-37 .

- Disconnect harness connector from ignition/starter switch.

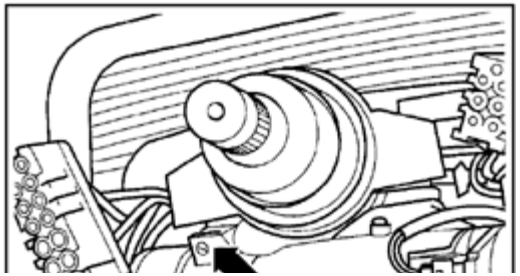

- Remove sealing paint from threads of screws -A-.
- Loosen two screws (arrows -A-) slightly and pull ignition/starter switch out of housing in direction indicated (arrow).

Installing

cardiagn.com

Notes:

- *The ignition switch and lock cylinder must be in the same position, e.g. "Ignition on" when installing.*
- *After installing, seal the screws again with pain.*

- Install in reverse order of removal.

cardiagn.com

94-44

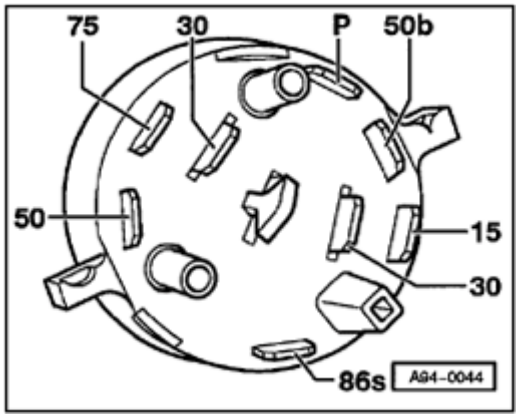

Ignition switch, terminal assignments

15 - Terminal 15

30 - Terminal 30

50 - Terminal 50

50b-Terminal 50b

75 - Terminal 75

86s- Terminal 86s

P - Park

cardiagn.com

96-1

Center console switches, removing and installing

CAUTION!

Disconnect the battery Ground (GND) strap before working on the electrical system.

Notes:

- *Before disconnecting the battery, determine the correct coding for the anti-theft radio.*
- *After reconnecting the battery, check and activate the vehicle's electrical equipment (radio, clock, comfort and convenience features, etc.) as outlined in this Repair Manual or the Owner's Manual.*

cardiagn.com

96-2

Switches, removing and installing

Removing

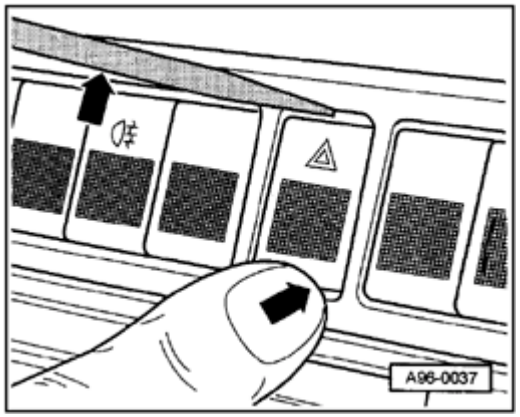

- Insert small screwdriver or flat plastic tool as shown, press against opposite side of switch and pry off switch plate.
- Tape off area above switches or front of radio with masking tape, if necessary.

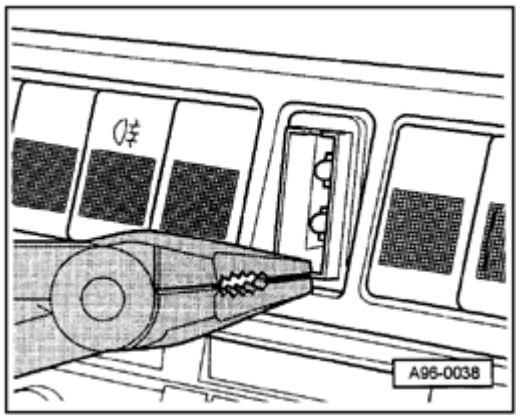

- Pull switch out forward using standard or flat-nose pliers.
- Disconnect harness connector.

Installing

- Press switch plate onto switch so it engages audibly.
- Connect harness connector and press switch in by hand as far as possible.

cardiagn.com

96-3

Emergency flasher relay, location

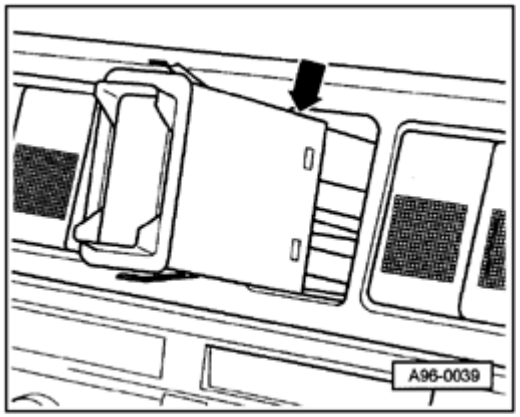

The emergency flasher relay is integrated in the emergency flasher switch.

- Removing and installing ⇒ Page 96-2 .

cardiagn.com

96-4

Interior lights, servicing

CAUTION!

Disconnect the battery Ground (GND) strap before working on the electrical system.

Notes:

- *Before disconnecting the battery, determine the correct coding for the anti-theft radio.*
- *After reconnecting the battery, check and activate the vehicle's electrical equipment (radio, clock, comfort and convenience features, etc.) as outlined in this Repair Manual or the Owner's Manual.*

cardiagn.com

96-5

Front reading/interior lights, removing and installing

Front reading/interior lights with sunroof switch

Notes:

- *To replace the bulb, pry off the lens.*
- *Bulb for interior light -7-: 12 V, 10 W*
- *Bulb for reading lights -6-: 12 V, 5 W*

Removing

- Carefully pry off lens -1- using flat screwdriver.
- Remove both Phillips-head screws -2-.

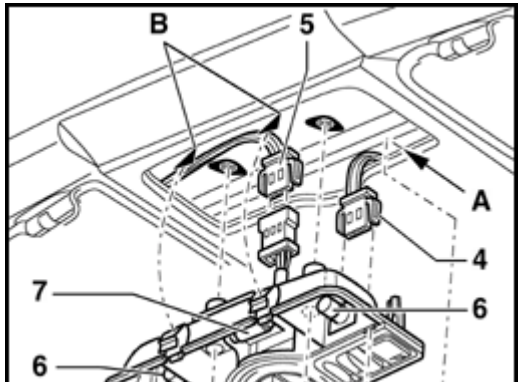

- Pry out hooks at -B- using screwdriver and then remove interior/reading light with sunroof switch -3- from roof.
- Disconnect both harness connectors -4- and -5-.

Installing

- Connect harness connectors -4- and -5-.

cardiagn.com

- Insert interior/reading lights with sunroof switch -3- at -A-, and clip it in on opposite side at -B-.
- Secure with Phillips-head screws -2- and reinstall lens -1-.

cardiagn.com

96-6

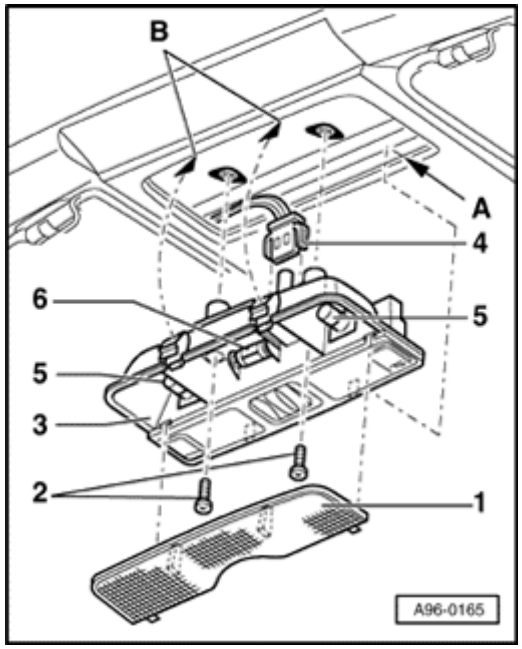

Interior/reading lights without sunroof switch

Notes:

- *To replace the bulb, pry off the lens.*
- *Bulb for interior light -6-: 12 V, 10 W*
- *Bulb for reading lights -5-: 12 V, 5 W*

Removing

- Carefully pry off lens -1- using flat screwdriver.
- Remove both Phillips-head screws -2-.
- Pry out hooks at -B- using screwdriver and then remove interior/reading light -3- from roof.
- Disconnect harness connector -4-.

Installing

- Connect harness connector -4-.
- Insert interior/reading light -3- at -A-, and clip it in on opposite side at -B-.
- Secure with Phillips-head screws -2- and reinstall lens -1-.

cardiagn.com

96-7

Rear interior/reading lights, removing and installing (sedan)

Notes:

- *To change bulbs, remove the rear reading lights.*
- *Bulb for reading light: 12 V, 5 W (2x)*

Removing

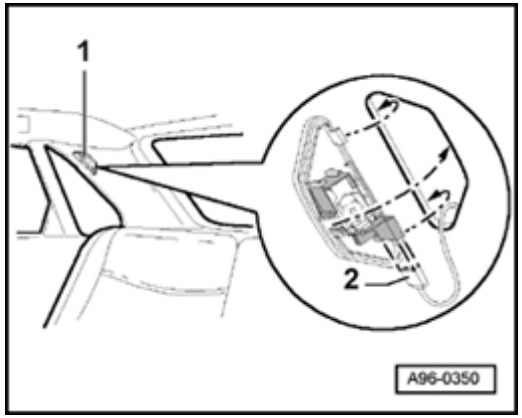

- Carefully pry out interior/reading light -1- using flat screwdriver.
- Disconnect harness connector -2-.

Installing

- Install in reverse order of removal.

cardiagn.com

96-8

Trunk lights, removing and installing

Notes:

- *To change bulbs, remove trunk lights.*
- *Bulb for trunk light: 12 V, 5 W (2x)*

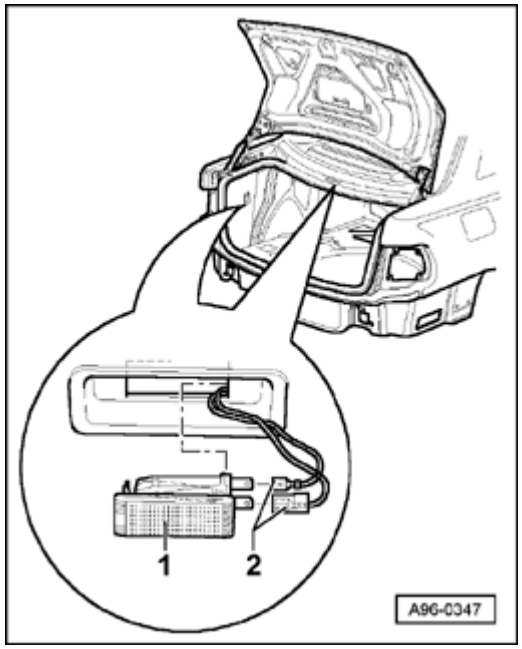

Removing

- Carefully pry out trunk light -1- using flat screwdriver.
- Disconnect harness connector -2-.

Installing

- Install in reverse order of removal.

cardiagn.com

96-9

Glove compartment light, removing and installing

Notes:

- *To change bulbs, remove glove compartment light.*
- *Bulb for glove compartment light: 12 V, 5 W*

Removing

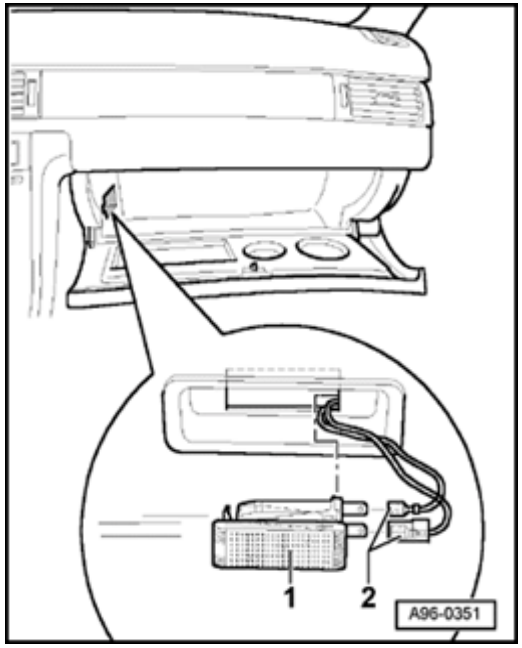

- Carefully pry out glove compartment light -1- using flat screwdriver.
- Disconnect harness connector -2-.

Installing

- Install in reverse order of removal.

cardiagn.com

96-10

Footwell lights, removing and installing

Note:

- *To change bulbs, remove footwell lights.*
- *Bulb for footwell light: 12 V, 5 W (2x)*

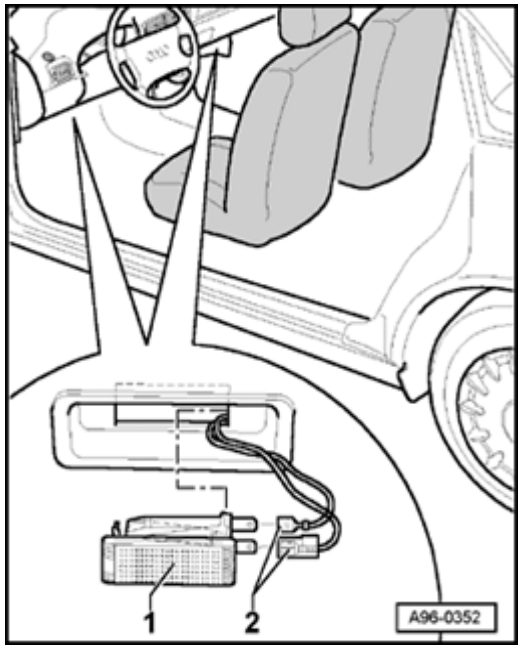

Removing

- Carefully pry out footwell light -1- using flat screwdriver.
- Disconnect harness connector -2-.

Installing

- Install in reverse order of removal.

cardiagn.com

96-11

Vanity mirror light, removing and installing

Note:

The vanity mirror light is integrated into the sun visor. The entire sun visor must be replaced when there is a malfunction.

- Remove sun visor.

⇒ *Repair Manual, Body Interior, Repair Group 70*

cardiagn.com

96-12

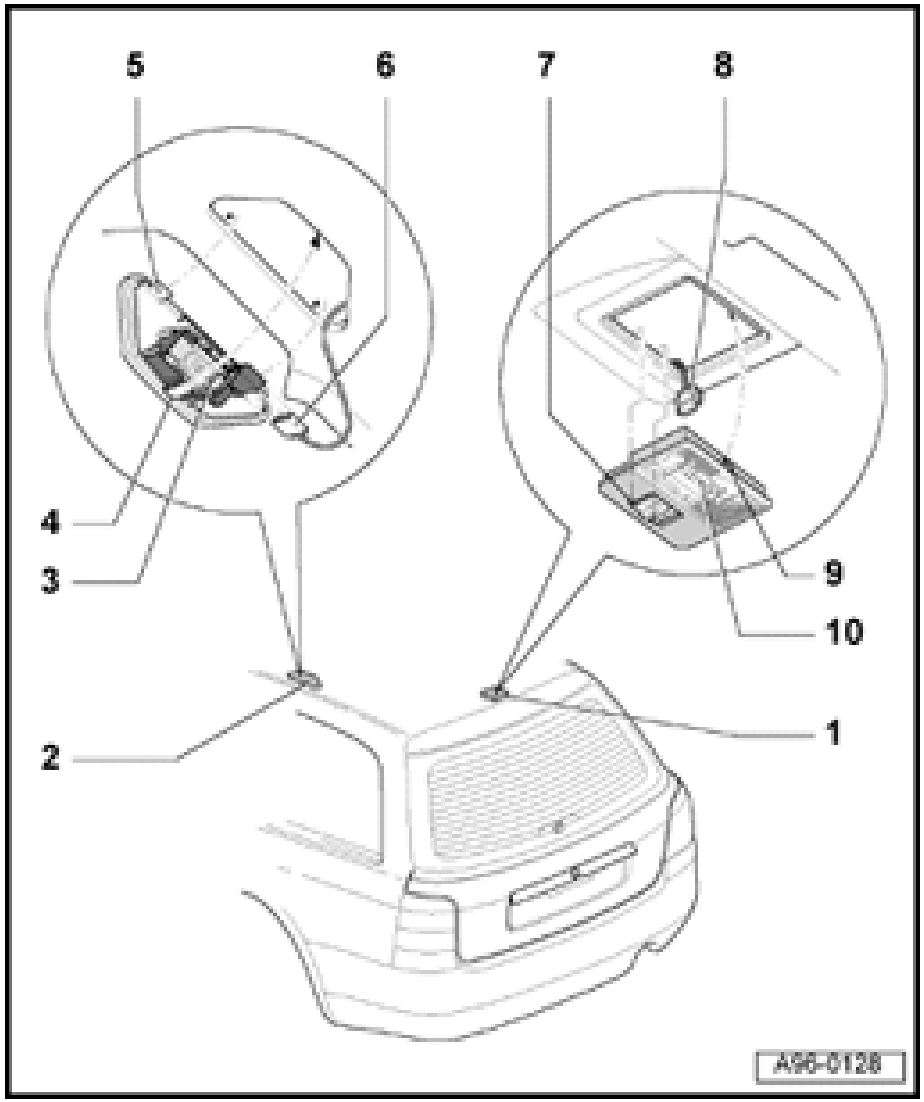

Interior lights, servicing (Avant)

CAUTION!

Disconnect the battery Ground (GND) strap before working on the electrical system.

Notes:

- *Before disconnecting the battery, determine the correct coding for the anti-theft radio.*
- *After reconnecting the battery, check and activate the vehicle's electrical equipment (radio, clock, comfort and convenience features, etc.) as outlined in this Repair Manual or the Owner's Manual.*

cardiagn.com

96-13

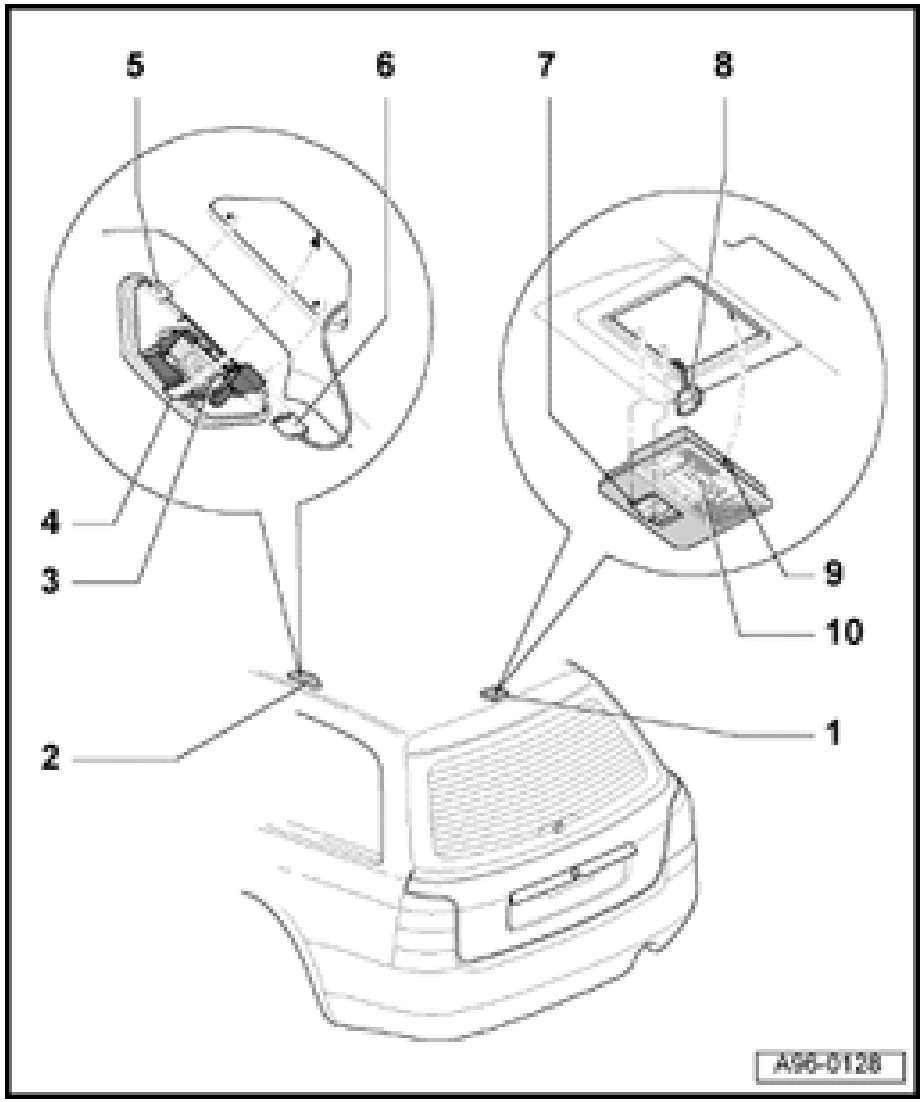

Complete overview

1 - Cargo area light

2 - Rear interior/reading light, right and left sides

3 - Bulb for reading light

- 12 V, 5 W

4 - Catch

5 - Positioning hooks (2x)

6 - Reading light harness connector

7 - Positioning hooks (2x)

8 - Cargo area light harness connector

9 - Catch

10 - Bulb for cargo area light

- 12 V, 10 W

cardiagn.com

96-14

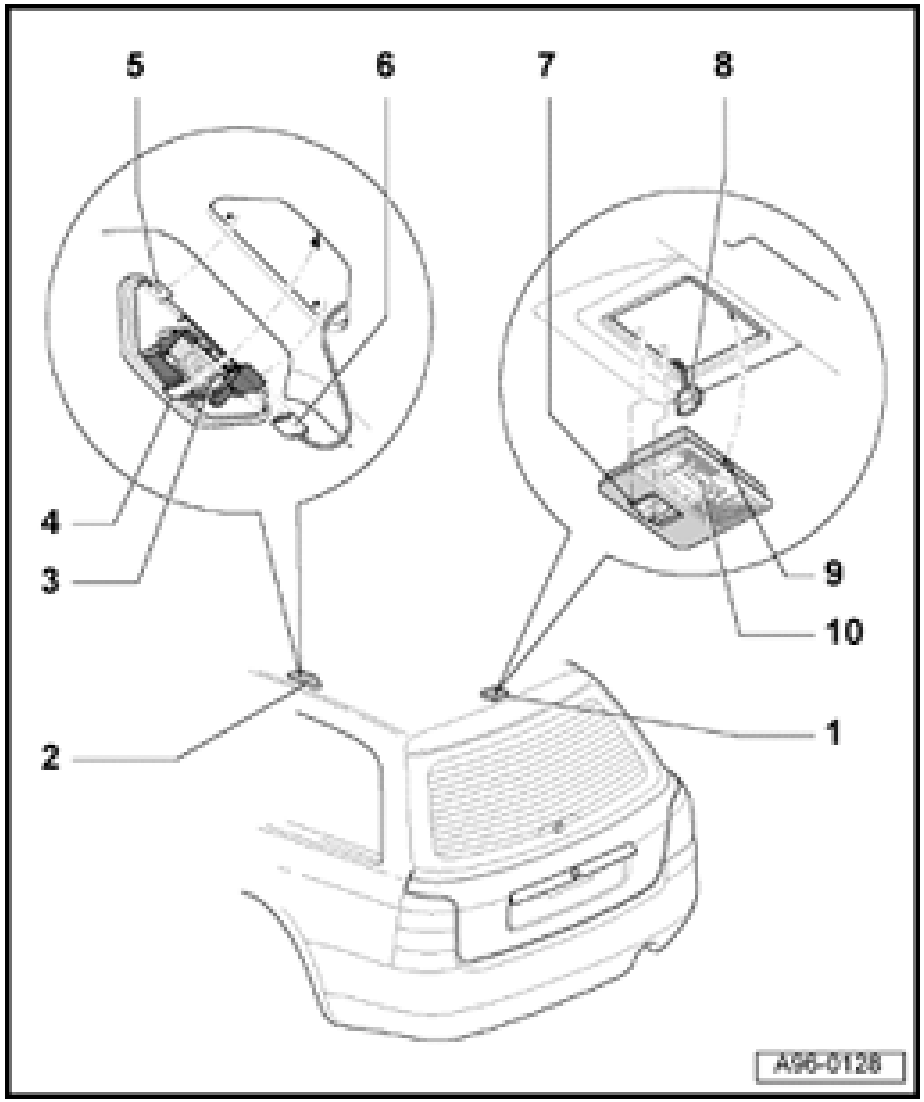

Rear interior/reading lights, removing and installing

Removing

- Using screwdriver, carefully pry out interior/reading light -2- from roof at catch -4-.
- Disconnect harness connector -6-.
- Remove bulb -3- from socket.

Installing

- During installation, insert positioning hooks -5- and, on opposite side, make sure that catch -4- engages audibly.
- Remainder of installation is in reverse order of removal.

cardiagn.com

96-15

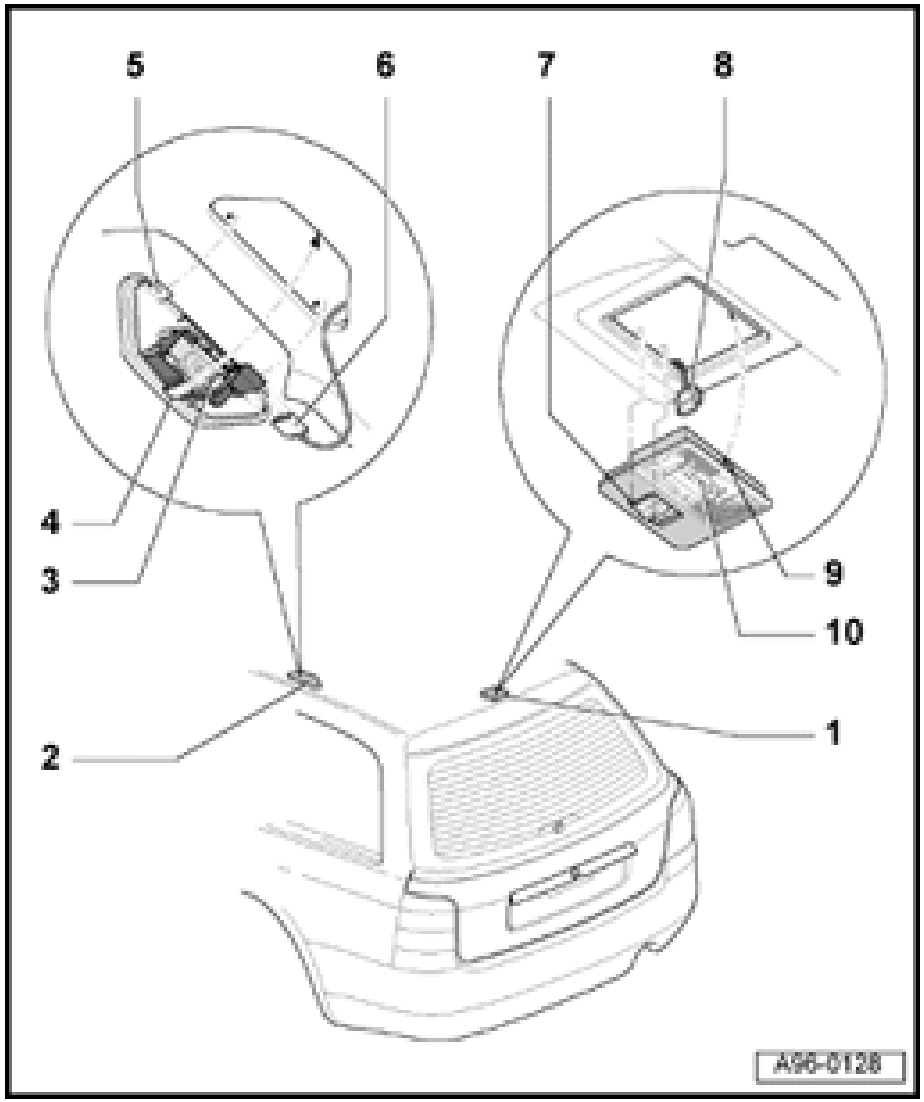

Cargo area light, removing and installing

Removing

- Using screwdriver, carefully pry out cargo area light -1- from roof at catch -9-.
- Disconnect harness connector -8-.
- Remove lens from lamp holder.
- To change bulb, remove bulb from clamp-type socket.

Installing

- During installation, insert positioning hooks -7- and, on opposite side, make sure that catch -9- engages audibly.
- Remainder of installation is in reverse order of removal.

cardiagn.com

96-16

Lock cylinder heating, servicing

CAUTION!

Disconnect the battery Ground (GND) strap before working on the electrical system.

Notes:

- *Before disconnecting the battery, determine correct coding for the anti-theft radio.*
- *After reconnecting the battery, check and activate the vehicle's electrical equipment (radio, clock, comfort and convenience features, etc.) as outlined in this Repair Manual or the Owner's Manual.*

cardiagn.com

96-17

Heated door lock control module, removing and installing

Removing

- Remove door trim.

⇒ *Repair Manual, Body Interior, Repair Group 70*

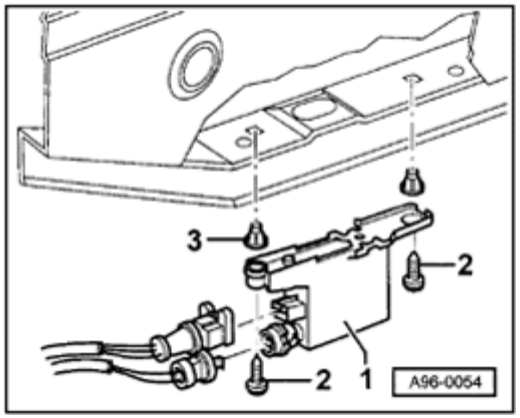

- Remove screws -2- from plastic nuts -3-.
- Disconnect harness connector and remove control module -1-.

Installing

- Install in reverse order of removal.

cardiagn.com

97-1

Relay panel, fuse panel

CAUTION!

Disconnect the battery Ground (GND) strap before working on the electrical system.

Notes:

- *Before disconnecting the battery, determine the correct coding for the anti-theft radio.*
- *After reconnecting the battery, check and activate the vehicle's electrical equipment (radio, clock, comfort and convenience features, etc.) as outlined in this Repair Manual or the Owner's Manual.*

cardiagn.com

97-2

Fuse panel, removing and installing

- Carefully pry off side cover from instrument panel.

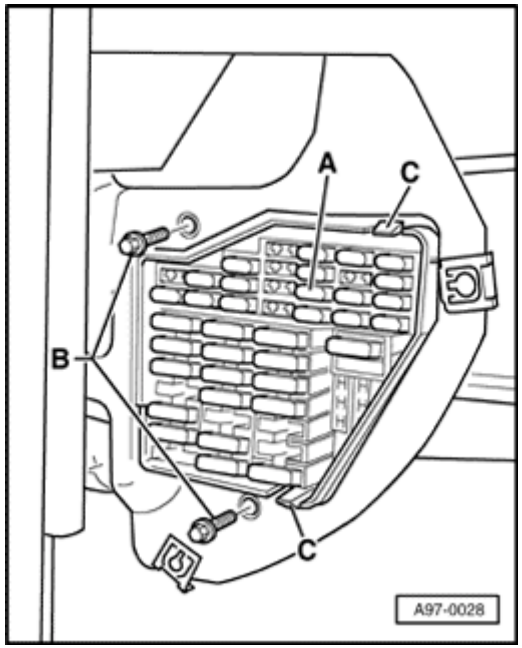

- Remove both mounting bolts -B- (2 Nm or 18 in. lb), then depress tabs -C- and remove fuse panel -A- toward rear.

cardiagn.com

97-3

Central electric unit and relay panel, removing and installing

Note:

The relay panel is only required for certain optional equipment, and is not standard equipment.

- Remove driver's-side knee bar.

⇒ *Repair Manual, Body Interior, Repair Group 68*

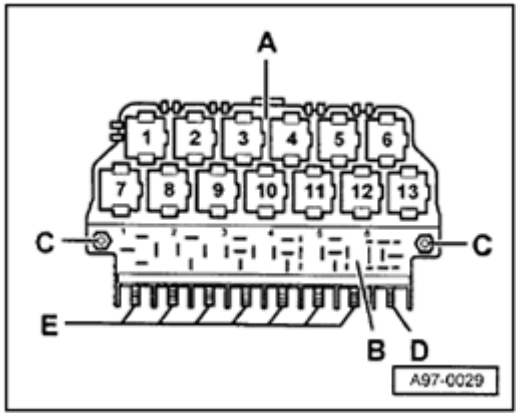

- Remove both mounting bolts -C- (2 Nm or 18 in. lb) and disconnect all screw connections -D- and -E- if necessary.
- Pull out relays and control modules and then unclip relevant relay panel.
- Remove central electric unit -B- and relay panel -A-from bottom.

cardiagn.com

Electronics box (E-box) in plenum chamber, removing and installing

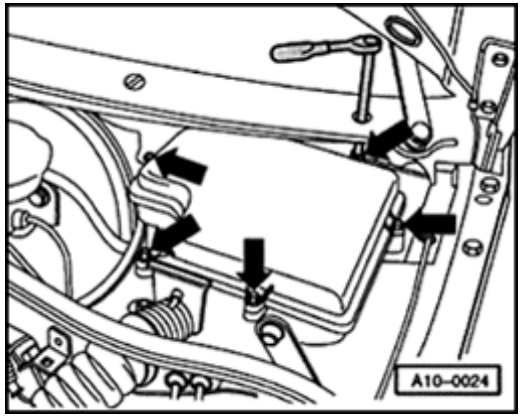

- Remove mounting bolts (arrows) and pull off cover.
- When installing, press cover on by hand and tighten mounting bolts in diagonal sequence. Tightening torque: 4 Nm (35 in. lb) (also see information on cover).
- Remove engine control module and, if necessary, remove auxiliary relay panel/auxiliary fuse panel ⇒ Page 97-5 .
- Disconnect harness connector at connector station.
- Pull out engine wiring harness together with rubber grommet from opening in electronics box.

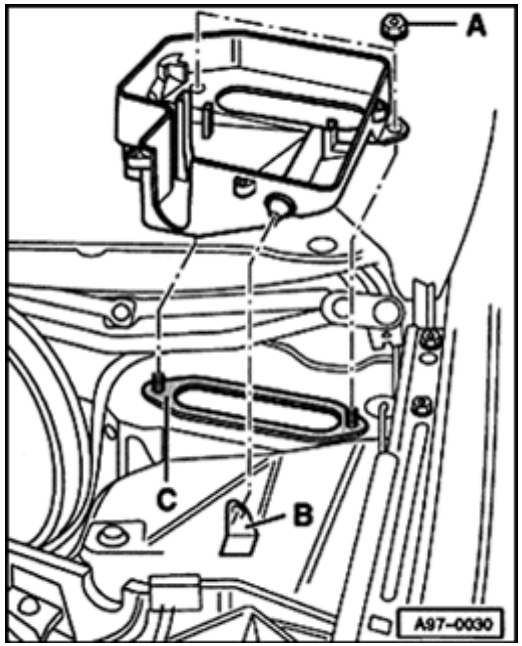

- Remove both nuts -A- (4 Nm or 35 in. lb).
- Lift electronics box off studs at rear and pull out of mount -B-.

Note the following when installing:

- Install in reverse order of removal.
- Always replace seal -C-: seal must not overlap opening in body and edge of sheet metal.

cardiagn.com

97-5

Auxiliary relay panel/auxiliary fuse panel, removing and installing

Location: in footwell, bottom left.

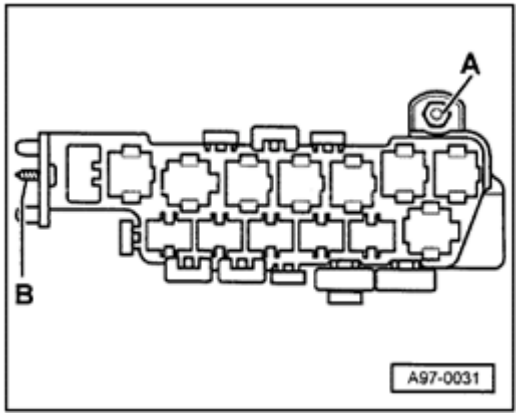

- Remove nut -A- (2 Nm or 18 in. lb) and self-tapping screw -B-.
- Remove relay and control module, unclip relay carrier and, if necessary, unclip auxiliary relay panel.
- Pull out auxiliary relay panel from retainers and remove from below.
- Install in reverse order of removal.

cardiagn.com