CHASSIS ELECTRICAL

CONTENTS

54109000129

BATTERY 4

SERVICE SPECIFICATION 4

ON-VEHICLE SERVICE 4

Fluid Level and Specific Gravity Check 4

Charging 5

Battery Testing Procedure 6

IGNITION SWITCH AND IMMOBILIZER SYSTEM 7

SPECIAL TOOL 7

TROUBLESHOOTING 7

IGNITION SWITCH AND IMMOBILIZER SYSTEM 19

COMBINATION METERS 25

SERVICE SPECIFICATION 25

SEALANT 25

SPECIAL TOOLS 26

TROUBLESHOOTING 27

ON-VEHICLE SERVICE 28

Speedometer Check 28

Tachometer Check 28

Fuel Gauge Simple Check 29

Fuel Gauge Unit Check 29

Engine Coolant Temperature Gauge Simple Check 31

Engine Coolant Temperature Gauge Unit Check 31

COMBINATION METERS 32

CONTINUED ON NEXT PAGE

WARNINGS REGARDING SERVICING OF SUPPLEMENTAL RESTRAINT SYSTEM (SRS) EQUIPPED VEHICLES

WARNING!

(1) Improper service or maintenance of any component of the SRS, or any SRS-related component, can lead to personal injury or death to service personnel (from inadvertent firing of the air bag) or to the driver (from rendering the SRS inoperative).

(2) Service or maintenance of any SRS component or SRS-related component must be performed only at an authorized MITSUBISHI dealer.

(3) MITSUBISHI dealer personnel must thoroughly review this manual, and especially its GROUP 52B – Supplemental Restraint System (SRS) before beginning any service or maintenance of any component of the SRS or any SRS-related component.

NOTE

The SRS includes the following components: impact sensors, SRS diagnosis unit, SRS warning lamp, air bag module, clock spring and interconnecting wiring. Other SRS-related components (that may have to be removed/installed in connection with SRS service or maintenance) are indicated in the table of contents by an asterisk (*).

MULTI-METER 35
TROUBLESHOOTING 35
ON-VEHICLE SERVICE 36
Voltmeter Simple Test 36
MULTI-METER 37
OUTSIDE THERMO SENSOR 38
SERVICE SPECIFICATIONS 38
OUTSIDE THERMO SENSOR 38
HEADLAMP* 39
SERVICE SPECIFICATIONS 39
SPECIAL TOOLS 39
TROUBLESHOOTING 40
ON-VEHICLE SERVICE 46
Headlamp Aiming 46
Intensity Measurement 47
Bulb Replacement 47
HEADLAMP 48
FRONT COMBINATION LAMP* 51
SIDE TURN-SIGNAL LAMP* 52
REAR COMBINATION LAMP* 53
REAR FOG LAMP 54
SPECIAL TOOL 54
REAR FOG LAMP 54
RHEOSTAT 56
SPECIAL TOOL 56
RHEOSTAT 56
HAZARD WARNING LAMP SWITCH 57
SPECIAL TOOL 57
HAZARD WARNING LAMP SWITCH 57
HORN 58
CIGARETTE LIGHTER 59
CLOCK 60
SPECIAL TOOL 60
CLOCK 60
RADIO AND TAPE PLAYER 61
SPECIAL TOOL 61
TROUBLESHOOTING 61
Quick-reference Troubleshooting Chart 61
Chart 62
Radio and Tape Player with Anti-theft System 77
RADIO AND TAPE PLAYER 80
SPEAKER 81
ANTENNA 82
SPECIAL TOOL 82
ANTENNA 82

CONTINUED ON NEXT PAGE

REAR WINDOW DEFOGGER 83

SPECIAL TOOL 83

ON-VEHICLE SERVICE 83

Printed-heater Line Check 83

REAR WINDOW DEFOGGER SWITCH ... 84

RADIATOR FAN MOTOR
..... Refer to GROUP 14

INTERCOOLER (INTERCOOLER FAN MOTOR) ..... Refer to GROUP 15

REAR DIFFERENTIAL LOCK
..... Refer to GROUP 27

SERVICE BRAKES (ABS)
..... Refer to GROUP 35B, 35C

DOOR GLASS AND REGULATOR (POWER WINDOWS)
..... Refer to GROUP 42

DOOR HANDLE AND LATCH (DOOR LOCKING) ..... Refer to GROUP 42

WINDSHIELD WIPER AND WASHER
..... Refer to GROUP 51

HEADLAMP WASHER
..... Refer to GROUP 51

DOOR MIRROR (ELECTRONIC CONTROLLED DOOR MIRROR)
..... Refer to GROUP 51

FRONT SEAT (HEATED SEAT)
..... Refer to GROUP 52A

SRS AIR BAG
..... Refer to GROUP 52B

HEATER ..... Refer to GROUP 55

AIR CONDITIONER
..... Refer to GROUP 55

BATTERY

54100030028

SERVICE SPECIFICATION

Item	Specification
Specific gravity of the battery fluid	1.220 – 1.290 [20°C]

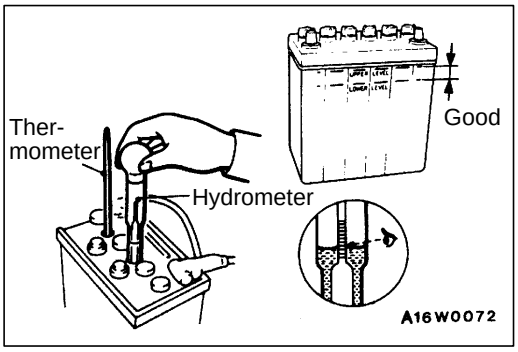

ON-VEHICLE SERVICE

54100090026

FLUID LEVEL AND SPECIFIC GRAVITY CHECK

1. Inspect whether or not the battery fluid is between the UPPER LEVEL and LOWER LEVEL marks.
2. Use a hydrometer and thermometer to check the specific gravity of the battery fluid.

   Standard value: 1.220 – 1.290 [20°C]

   The specific gravity of the battery fluid varies with the temperature, so use the following formula to calculate the specific gravity for 20°C. Use the calculated value to determine whether or not the specific gravity is satisfactory.

   D20=Dt+0.0007 (t – 20)

   D20: Specific gravity of the battery fluid calculated for 20°C.

   Dt: Actually measured specific gravity

   t: Actually measured temperature

CHARGING

54100110029

1. When charging a battery while still installed in the vehicle, disconnect the battery cables to prevent damage to electrical parts.
2. The current normally used for charging a battery should be approximately 1/10th of the battery capacity.
3. When performing a quick-charging due to lack of time, etc., the charging current should never exceed the battery capacity as indicated in amperes.
4. Determining if charging is completed.
   (1) If the specific gravity of the battery fluid reaches 1.250–1.290 and remains constant for at least one hour.
   (2) If the voltage of each cell reaches 2.5–2.8 V and remains constant for at least one hour.

Caution

1. **Be careful since the battery fluid level may rise during charging.**
2. **Keep all sources of fire away while charging because there is a danger of explosion.**
3. **Be careful not to do anything that could generate sparks while charging.**
4. **When charging is completed, replace the battery caps, pour clean water over the battery to remove any sulfuric acid and dry.**

BATTERY TESTING PROCEDURE

54100120107

TEST STEP

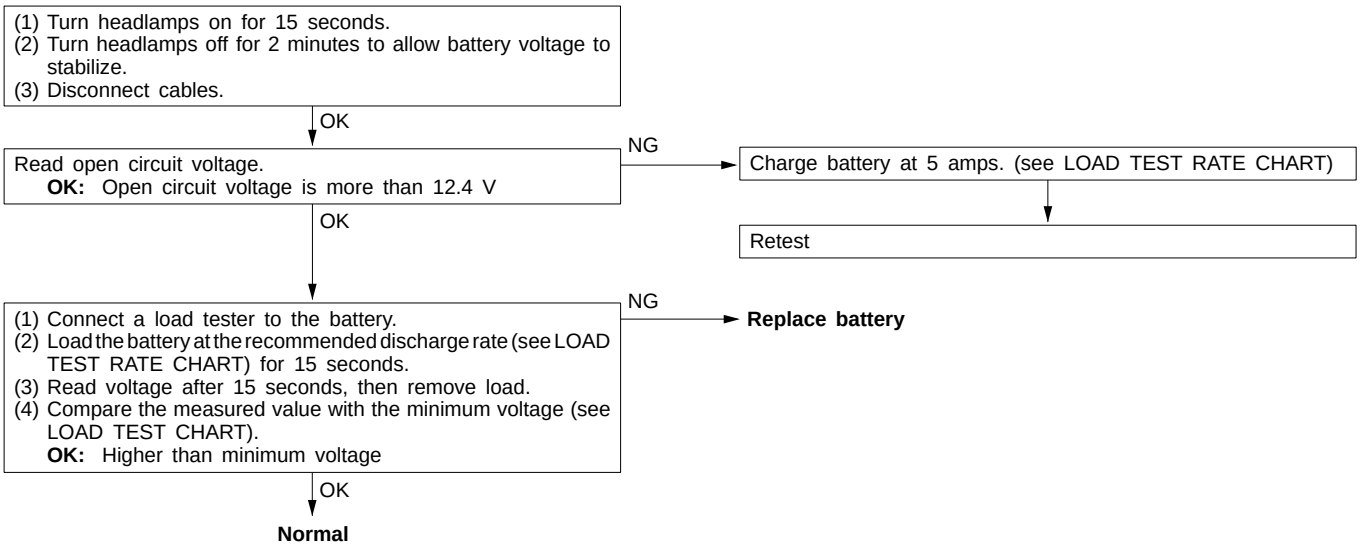

LOAD TEST RATE CHART

Battery type	50B24R	55D23R	55B24R	75D26R	80D26R	95D31R
Charging time when fully discharged h [5-amp rated current charging]	8	10	8	12	12	14
Load test (Amps)	190	170	210	240	290	310

LOAD TEST CHART

Temperature °C	21 and above	16	10	4	–1	–7	–12	–18
Minimum voltage V	9.6	9.5	9.4	9.3	9.1	8.9	8.7	8.5

IGNITION SWITCH AND IMMOBILIZER SYSTEM

54300060238

SPECIAL TOOL

Tool	Number	Name	Use
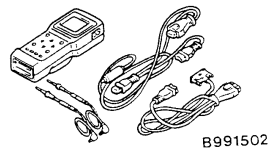	MB991502	MUT-II sub assembly	● ETACS-ECU input signal checking ● Immobilizer system check (Diagnosis display using the MUT-II) ● Registration of the ID code ● Resetting the code to the factory setting <Diesel-powered vehicles> ● Change of the password

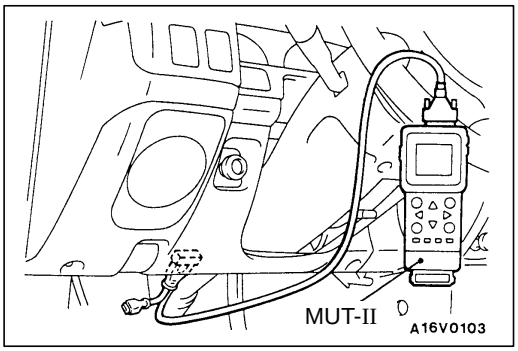

TROUBLESHOOTING
Ignition Switch

54300700109

DIAGNOSIS FUNCTION <VEHICLES WITH ETACS-ECU>

INPUT SIGNAL INSPECTION POINTS

1. Connect the MUT-II to the diagnosis connector.
2. If buzzer of the MUT-II sounds once when a switch is operated (ON/OFF), the ETACS-ECU input signal for that switch circuit system is normal.

INSPECTION CHART FOR TROUBLE SYMPTOMS

54300720235

Trouble symptoms		Inspection procedure	Reference page
Communication with MUT-II is impossible.	Communication with all systems is impossible.	1	54-8
	Communication with one-shot pulse input signal only is impossible.	2	54-8
Ignition key hole illumination lamp system	Even if the driver's side door is opened, the key hole illumination lamp does not illuminate.	3	54-8
	The key hole illumination lamp remains illuminated.	4	54-9

INSPECTION PROCEDURE FOR TROUBLE SYMPTOMS

Inspection Procedure 1

Communication with MUT-II is impossible. (Communication with all systems is impossible.)	Probable cause
The cause is probably a defective power supply system (including earth) for the diagnosis line.	● Malfunction of connector ● Malfunction of harness wire

Refer to GROUP 13A – Troubleshooting.

Inspection Procedure 2

Communication with MUT-II is impossible. (Communication with the one-shot pulse input signal only is impossible.)	Probable cause
The cause is probably a defective one-shot pulse input circuit system of the diagnosis line.	● Malfunction of connector ● Malfunction of harness wire ● Malfunction of ETACS-ECU

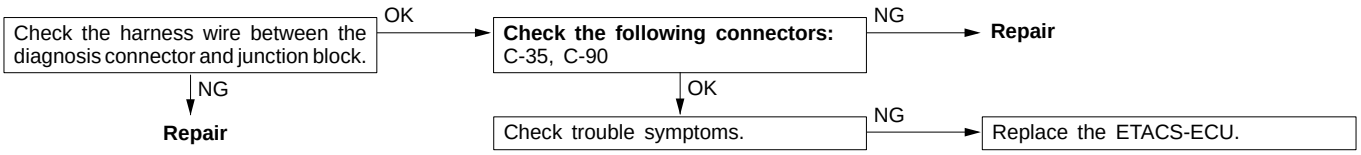

Inspection Procedure 3

Even if the driver's side door is opened, the key hole illumination lamp does not illuminate.	Probable cause
The cause is probably a defective key hole illumination lamp circuit system or a defective driver's side door switch input circuit system.	● Malfunction of driver's side door switch ● Malfunction of key hole illumination lamp ● Malfunction of harness or connector ● Malfunction of ETACS-ECU

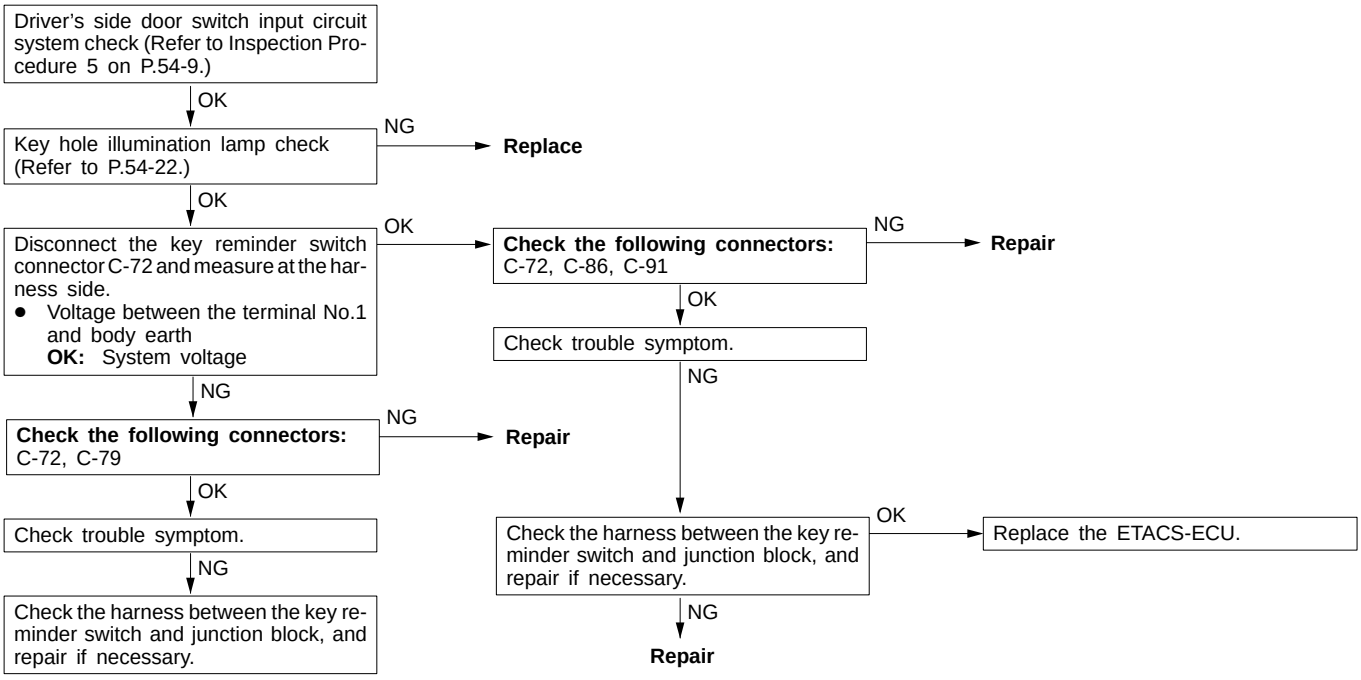

Inspection Procedure 4

Key hole illumination lamp remains illuminated.	Probable cause
The cause is probably a short harness or a defective ETACS-ECU.	● Malfunction of harness ● Malfunction of ETACS-ECU

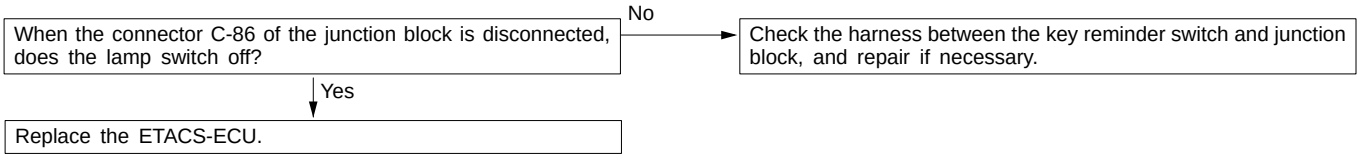

Inspection Procedure 5

Driver's side door switch input circuit system check

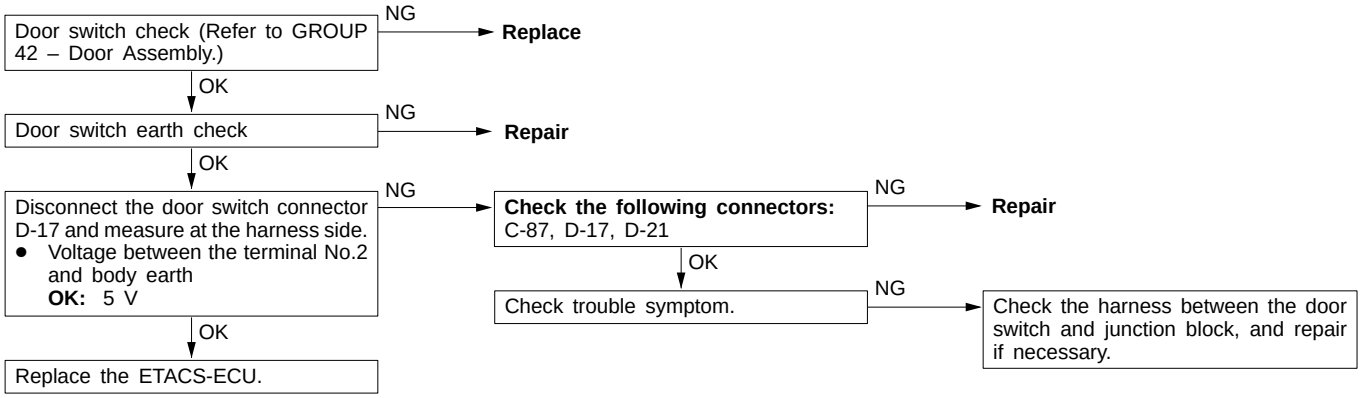

Immobilizer System

Caution

1. **The ID code should always be re-registered when replacing the immobilizer-ECU. <Petrol-powered vehicles>**
2. **If the immobilizer-ECU has been replaced, you will need to re-register the ignition key ID codes and to reset the code for the fuel cut valve controller to the factory setting. <Diesel-powered vehicles>**
3. **If the immobilizer-ECU has been replaced with a new part, the password (vehicle secret code) which has been stored in the immobilizer-ECU for each vehicle will be replaced by the password (secret code) specified by the customer.**

STANDARD FLOW OF DIAGNOSIS TROUBLESHOOTING

54300690024

Refer to GROUP 00 – How To Use Troubleshooting/Inspection Service Points.

DIAGNOSIS FUNCTION

54300700116

DIAGNOSIS CODES CHECK

Refer to GROUP 00 – How To Use Troubleshooting/Inspection Service Points.

ERASING DIAGNOSIS CODES

Refer to GROUP 00 – How To Use Troubleshooting/Inspection Service Points.

Caution

The diagnosis codes which result from disconnecting the battery cables cannot be erased.

INSPECTION CHART FOR DIAGNOSIS CODES <PETROL-POWERED VEHICLES>

54300710027

Diagnosis code No.	Inspection items	Reference page
11	Transponder communication system or radio interference of ID code	54-11
12*	ID code are not the same or are not registered	54-11
21	Communication system between MUT-II and engine-ECU	54-12
31	EEPROM abnormality inside immobilizer-ECU	54-12

NOTE
*: Diagnosis code No. 12 is not recorded.

INSPECTION PROCEDURE FOR DIAGNOSIS CODES <PETROL-POWERED VEHICLES>

Code No.11 Transponder communication system or radio interference of ID code	Probable cause
• The ID code of the transponder is not sent to the immobilizer-ECU immediately after the ignition switch is turned to ON position. • If the engine is started while several ignition keys are in the vicinity, then interference between the different keys may occur, which will cause this code to be generated.	• Radio interference of ID code • Malfunction of transponder • Malfunction of ignition key ring antenna • Malfunction of harness or connector • Malfunction of immobilizer-ECU

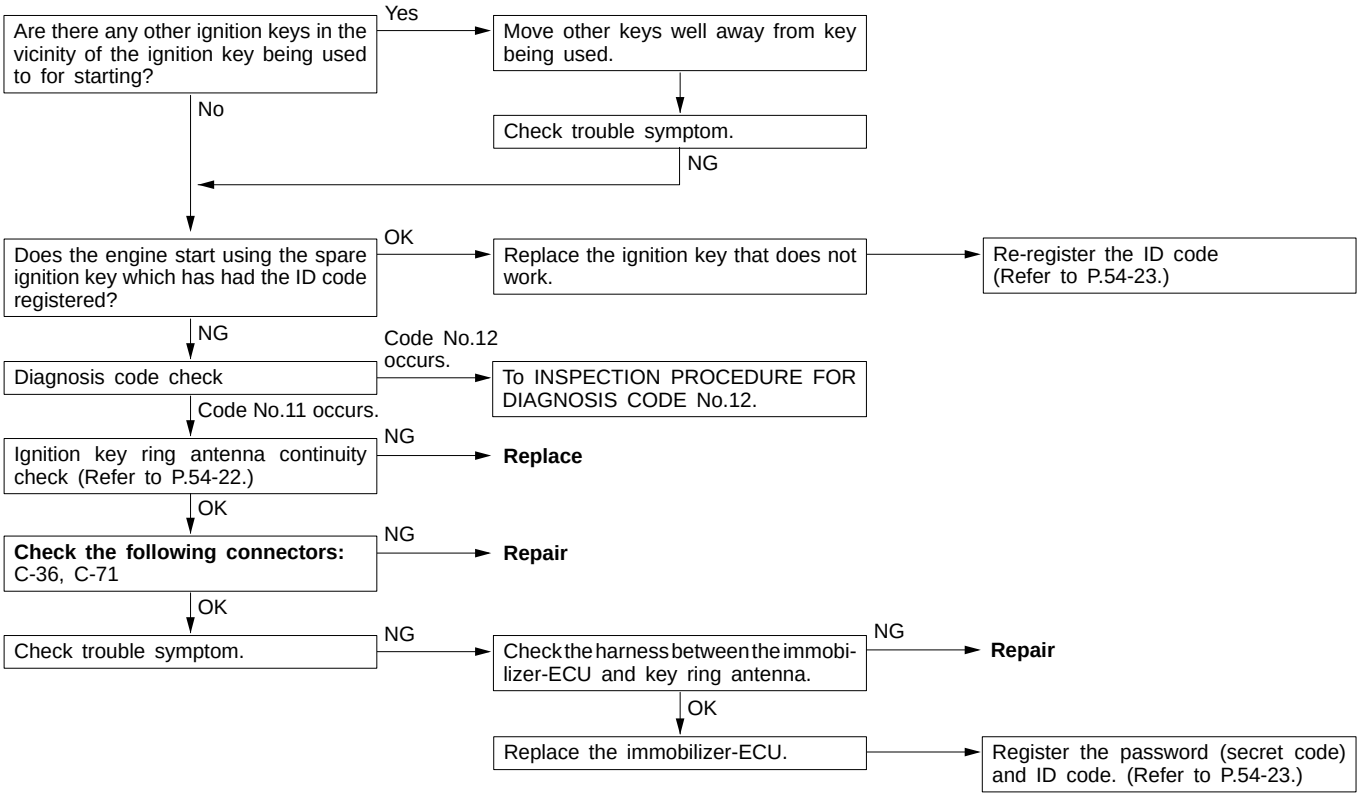

Code No.12 ID codes are not the same or not registered.	Probable cause
The ID code which is sent from the transponder is not the same as the ID code which is registered in the immobilizer-ECU.	• The ID code in the ignition key being used has not been properly registered. • Malfunction of immobilizer-ECU

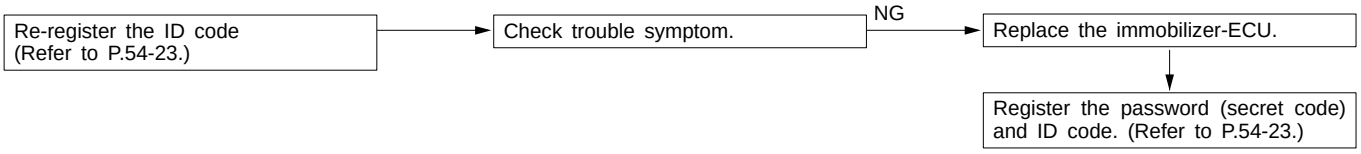

Code No.21 Communication system between MUT-II and engine-ECU	Probable cause
After the ignition switch turned to ON, the confirmation code is not received from the engine-ECU within allowable time, or an abnormal code is received.	● Malfunction of harness or connector ● Malfunction of engine-ECU ● Malfunction of immobilizer-ECU

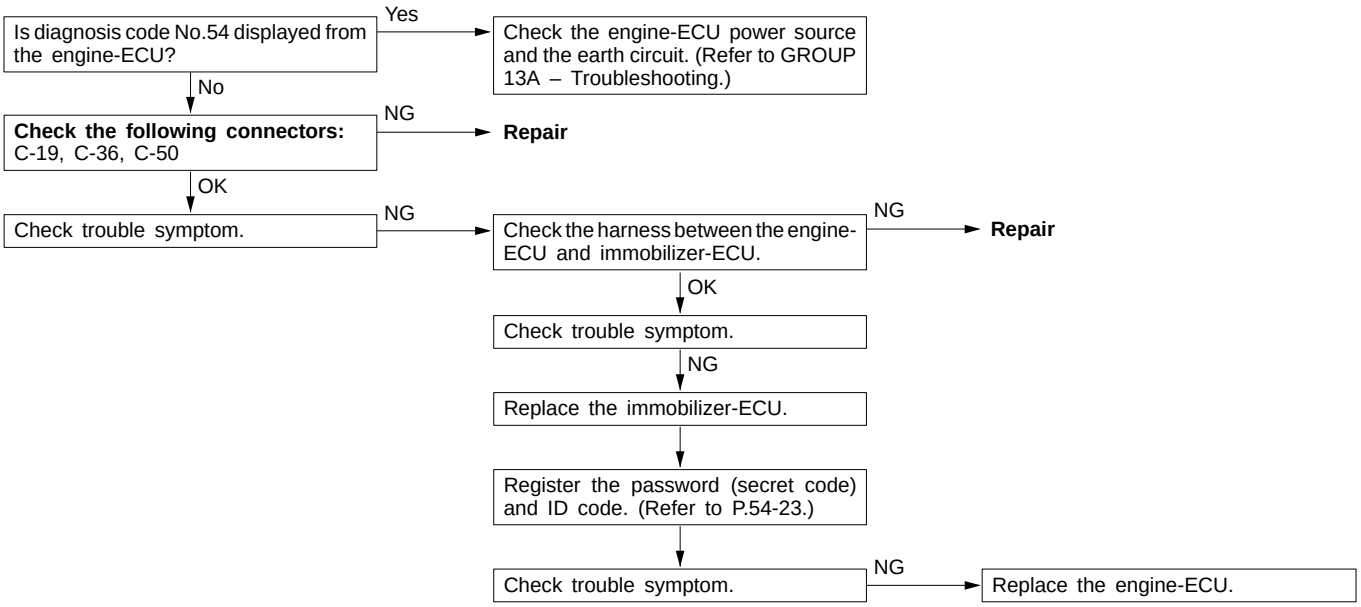

Code No.31 EEPROM abnormality inside immobilizer-ECU	Probable cause
No data has been written to the EEPROM inside the immobilizer-ECU.	● Malfunction of immobilizer-ECU

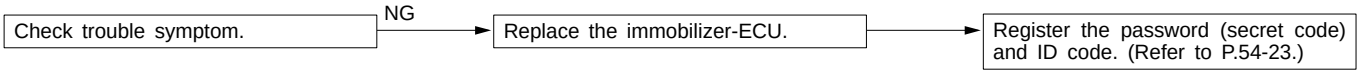

INSPECTION CHART FOR DIAGNOSIS CODES <DIESEL-POWERED VEHICLES>

54300710034

Diagnosis code No.	Inspection items	Reference page
11	Transponder communication system or radio interference of ID code	54-11
12*	ID codes are not the same or not registered	54-11
21	Communication system between fuel cut valve controller and immobilizer-ECU	54-13
22	Malfunction of fuel cut valve controller system	54-14
23	Identification codes are not identical	54-14
31	EEPROM abnormality inside immobilizer-ECU	54-12

NOTE
*: diagnosis code No.12 is recorded.

INSPECTION PROCEDURE FOR DIAGNOSIS CODES <DIESEL-POWERED VEHICLES>

For diagnosis code numbers other than those listed below, refer to “PETROL-POWERED VEHICLES”.

Code No.21 Communication system between fuel cut valve controller and immobilizer-ECU	**Probable cause**
The confirmation code is not sent from the fuel cut valve controller within the specified time after the ignition key is turned to ON or, an incorrect code is sent.	● Malfunction of harness or connector ● Malfunction of fuel cut valve controller ● Malfunction of immobilizer-ECU

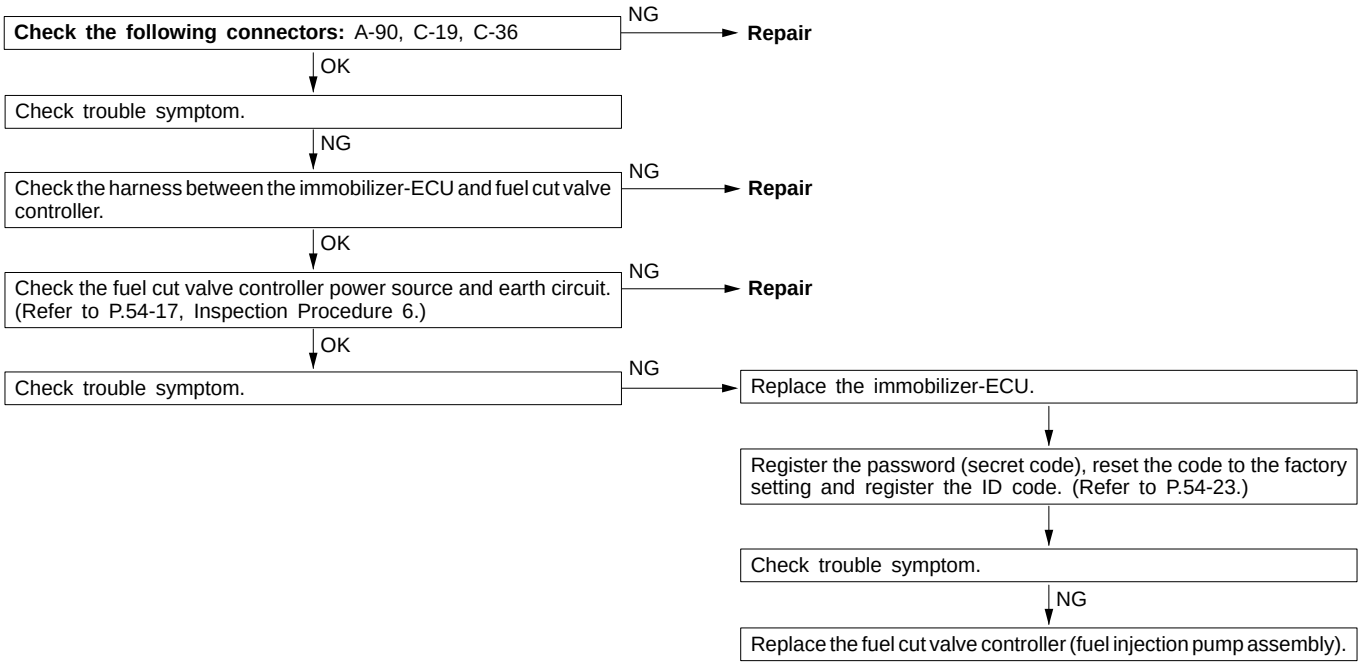

Code No.22 Malfunction of fuel cut valve controller system	Probable cause
The cause is probably a malfunction of the fuel cut valve controller.	● Malfunction of fuel cut valve controller

Check the fuel cut valve controller power source and earth circuit. (Refer to P.54-17, Inspection Procedure 6.)
↓ OK
Check trouble symptom. → NG → Replace the fuel cut valve controller (fuel injection pump assembly).

Code No.23 Identification codes are not identical	Probable cause
The identification code received from the immobilizer-ECU is not identical to the identification code that has been recorded in the fuel cut valve controller.	● Resetting the code to the factory setting is not made using the MUT-II ● Malfunction of fuel cut valve controller

Use the MUT-II to reset the code to the factory setting. (Refer to P.54-23.)
↓
Check trouble symptom. → NG → Replace the fuel cut valve controller (fuel injection pump assembly).
↓
Check trouble symptom.
↓ NG
Replace the immobilizer-ECU.
↓
Register the password (secret code), reset the code to the factory setting and register the ID code. (Refer to P.54-23.)

INSPECTION CHART FOR TROUBLE SYMPTOMS

54300720242

Trouble symptom	Inspection procedure No.	Reference page
Communication with MUT-II is impossible	1	54-15
ID code cannot be registered using the MUT-II	2	54-15
Engine does not start (Cranking but no initial combustion). <Petrol-powered vehicles>	3	54-16
Engine does not start (Cranking but no initial combustion). <Diesel-powered vehicles>	4	54-16
Malfunction of the immobilizer-ECU power source and earth circuit	5	54-17
Malfunction of the fuel cut valve controller power source and earth circuit <Diesel-powered vehicles>	6	54-17

INSPECTION PROCEDURE FOR TROUBLE SYMPTOMS

Inspection Procedure 1

Communication with MUT-II is impossible	Probable cause
The cause is probably that a malfunction of the diagnosis line or the immobilizer-ECU ia not functioning.	● Malfunction of diagnosis line ● Malfunction of harness or connector ● Malfunction of immobilizer

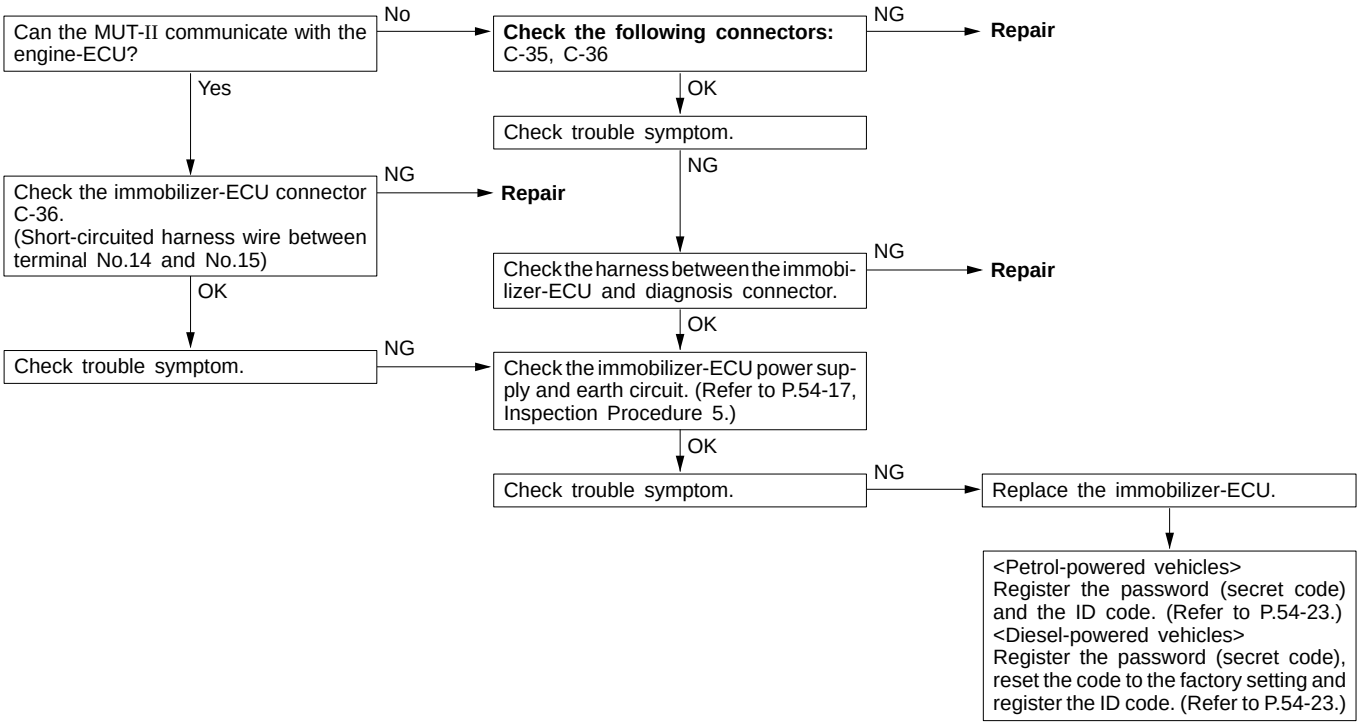

Inspection Procedure 2

ID code cannot be registered using the MUT-II	Probable cause
The cause is probably that there is no ID code registered in the immobilizer-ECU or there is a malfunction of the immobilizer-ECU.	● Malfunction of transponder ● Malfunction of ignition key ring antenna ● Malfunction of harness or connector ● Malfunction of immobilizer-ECU

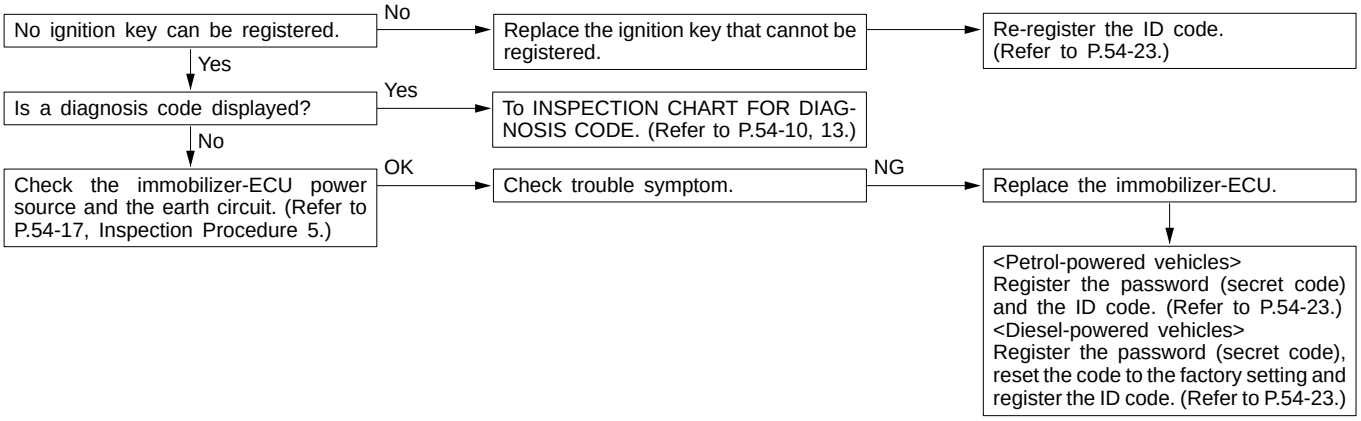

Inspection Procedure 3

Engine does not start (Cranking but no initial combustion). <Petrol-powered vehicles>	Probable cause
If the fuel injectors are not operating, there might be a problem with the MPI system in addition to a malfunction of the immobilizer system. It is normal for this to occur if an attempt is made to start the engine using a key that has not been properly registered.	● Malfunction of MPI system ● Malfunction of immobilizer-ECU

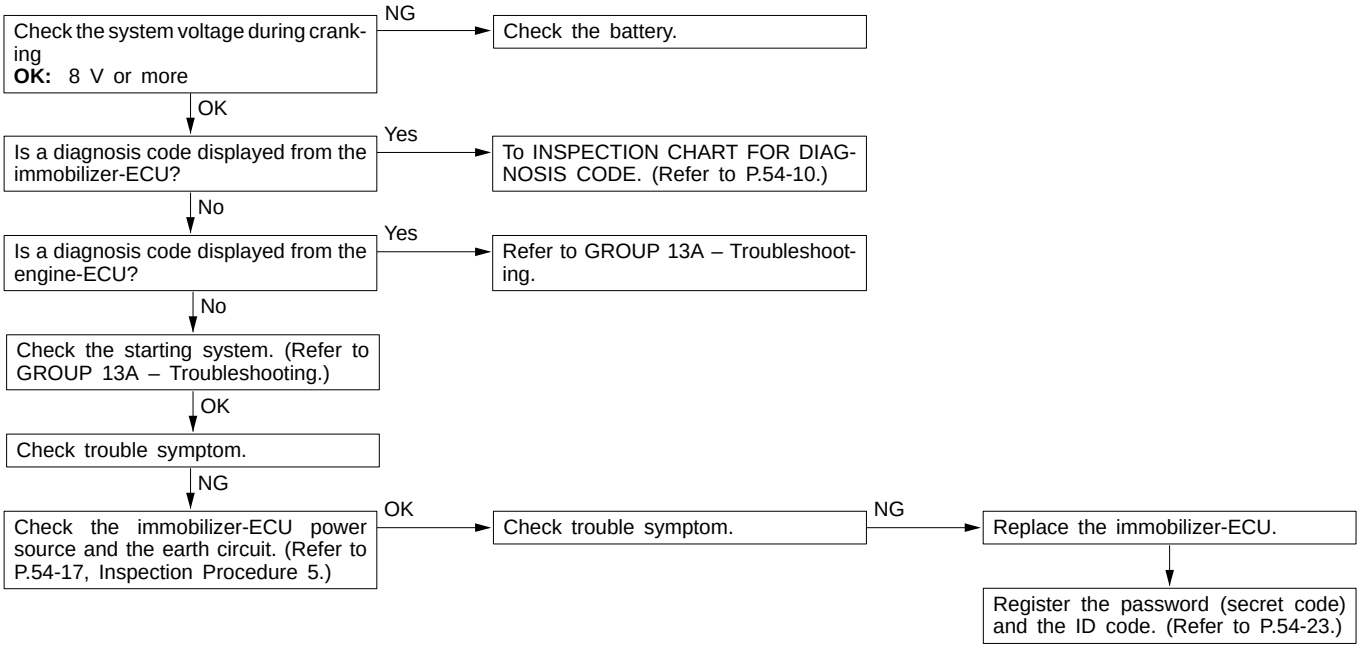

Inspection Procedure 4

Engine does not start (Cranking but no initial combustion). <Diesel-powered vehicles>	Probable cause
If no fuel injection, there might be a problem with the fuel injection system in addition to a malfunction of the immobilizer system. It is normal for this to occur if an attempt is made to start the engine using a key that has not been properly registered.	● Malfunction of diesel fuel injection system ● Malfunction of immobilizer-ECU

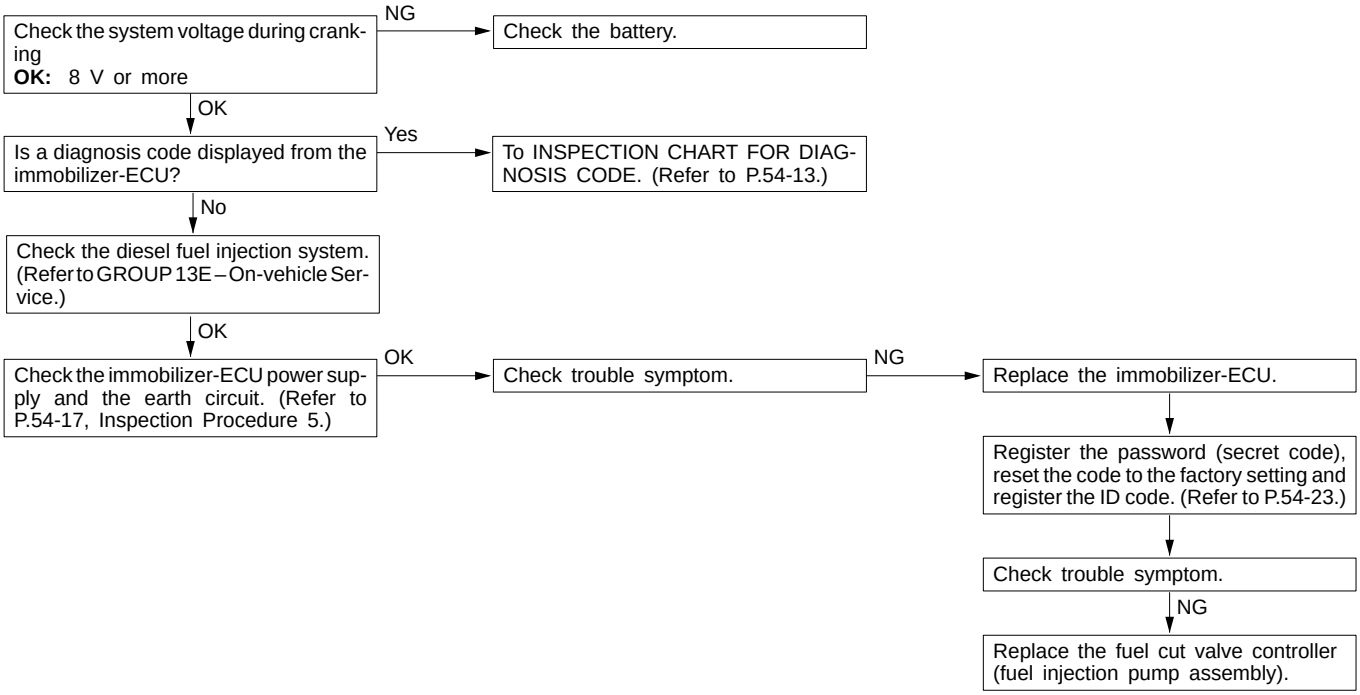

Inspection Procedure 5

Malfunction of the immobilizer-ECU power source and earth circuit

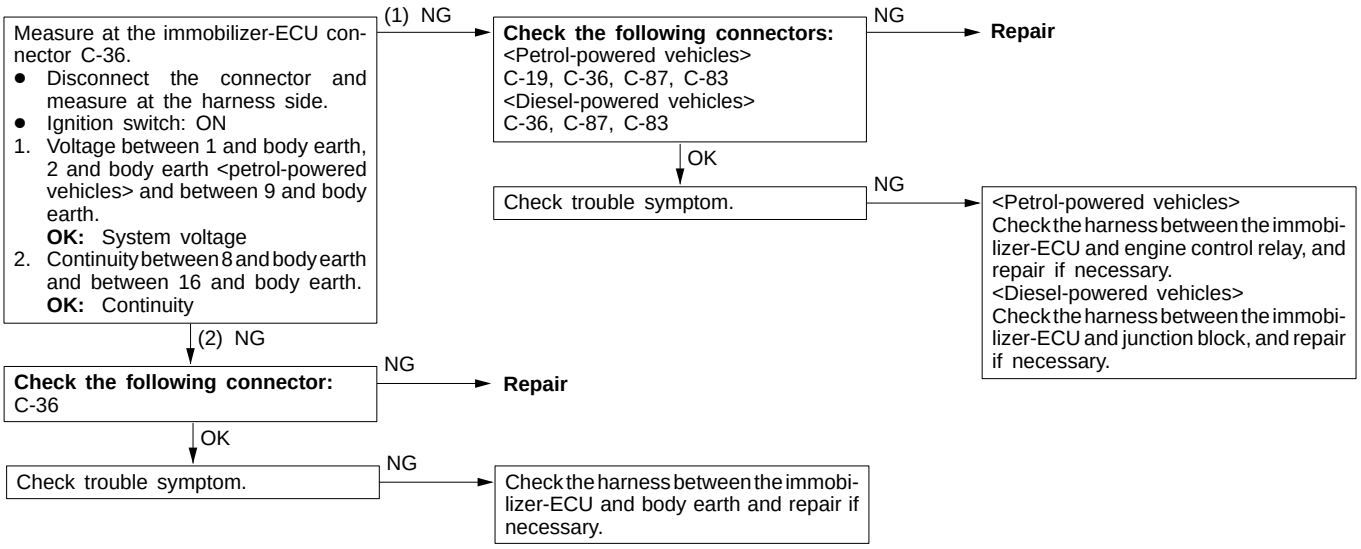

Inspection Procedure 6

Malfunction of the fuel cut valve controller power source and earth circuit <Diesel-powered vehicles>

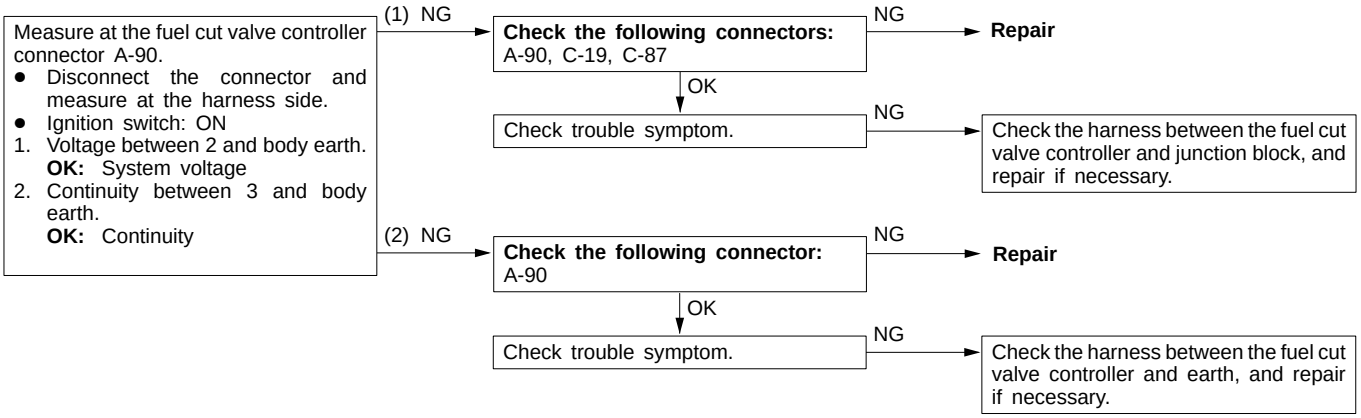

CHECK AT IMMOBILIZER-ECU

54300760022

Terminal Voltage Check Chart

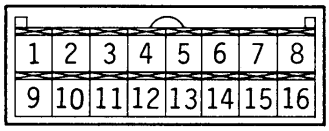

16W0390

Terminal No.	Signal	Checking requirements	Terminal voltage
1	Immobilizer-ECU power supply (Back-up)	Ignition switch: ON	System voltage
2	Ignition switch-IG <Petrol-powered vehicles>	Ignition switch: OFF	0 V
		Ignition switch: ON	System voltage
8	Immobilizer-ECU earth	Always	0 V
9	Immobilizer-ECU power supply	Ignition switch: ON	System voltage
16	Immobilizer-ECU earth	Always	0 V

IGNITION SWITCH AND IMMOBILIZER SYSTEM

54300210138

REMOVAL AND INSTALLATION

Caution: SRS
Before removal of air bag module and clock spring, refer to GROUP 52B – SRS Service Precautions and Air Bag Module and Clock Spring.

<Vehicles without immobilizer system>

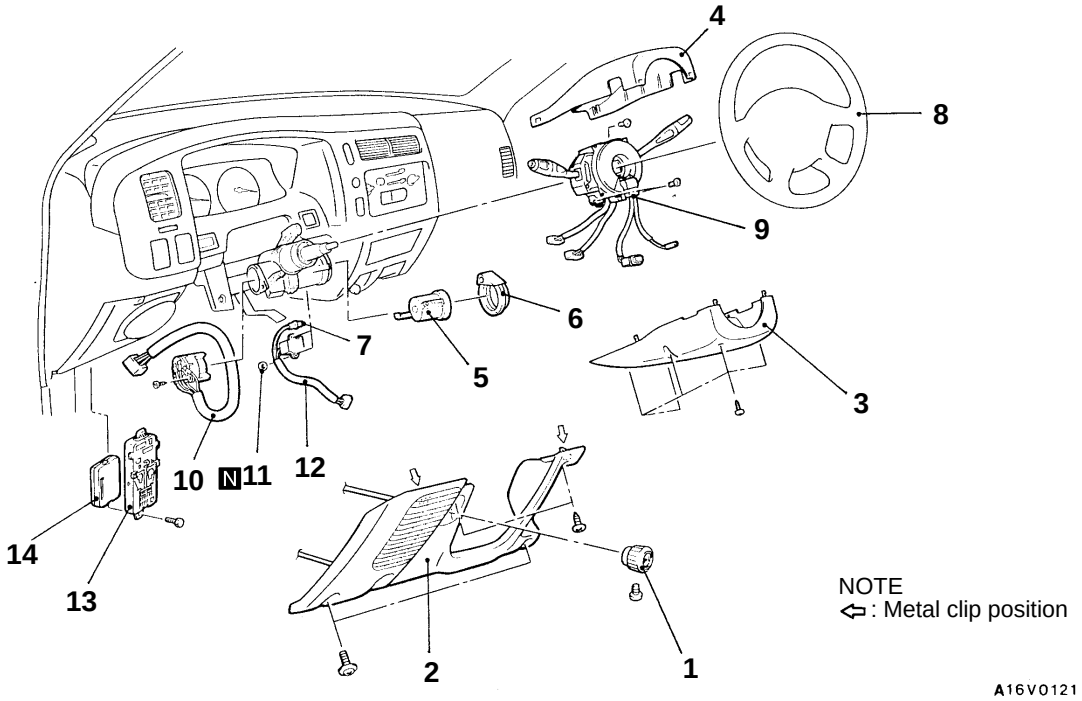

Steering lock cylinder and key hole illumination lamp removal steps

1. Throttle cable knob <Diesel-powered vehicles>
2. Driver's side under cover
3. Column cover, lower
4. Column cover, upper
5. ◀A▶ Steering lock cylinder
6. ◀B▶ Ignition key cylinder illumination ring
7. Key hole illumination lamp

ETACS-ECU or buzzer-ECU removal steps

1. Throttle cable knob <Diesel-powered vehicles>
2. Driver's side under cover
13. Junction block
14. ETACS-ECU or buzzer-ECU

Ignition switch and key reminder switch removal steps

1. Throttle cable knob <Diesel-powered vehicles>
2. Driver's side under cover
3. Column cover, lower
4. Column cover, upper
8. Steering wheel (Refer to GROUP 37A.)
9. ▶A◀ Column switch assembly
10. Ignition switch
11. Push nut
12. Key reminder switch

<Vehicles with immobilizer system>

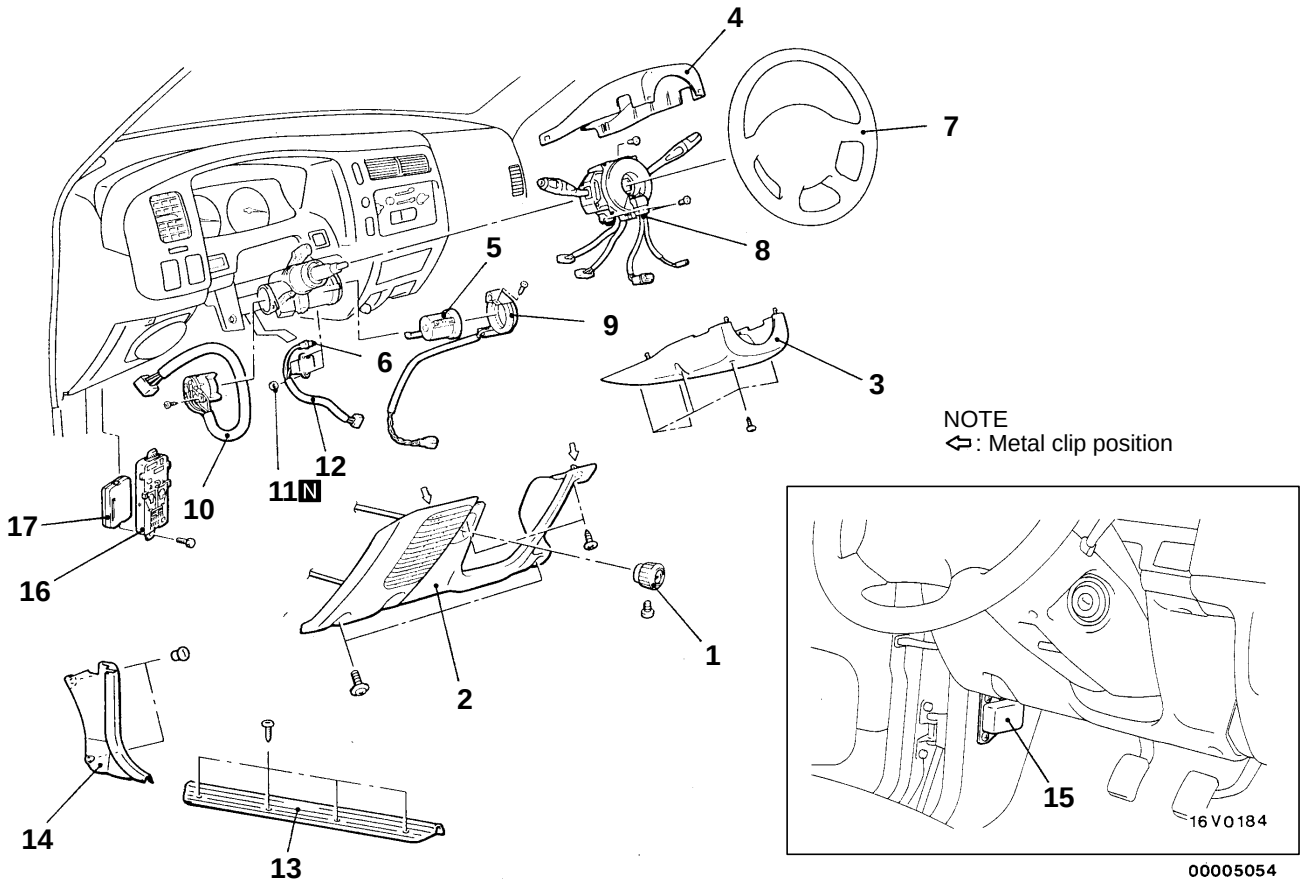

Steering lock cylinder and key hole illumination lamp removal steps

1. Throttle cable knob <Diesel-powered vehicles>
2. Driver's side under cover
3. Column cover, lower
4. Column cover, upper
◀A▶ 5. Steering lock cylinder
6. Key hole illumination lamp

ETACS-ECU or buzzer-ECU removal steps

1. Throttle cable knob <Diesel-powered vehicles>
2. Driver's side under cover
16. Junction block
17. ETACS-ECU or buzzer-ECU

Ignition switch, key reminder switch and ignition key ring antenna removal steps

1. Throttle cable knob <Diesel-powered vehicles>
2. Driver's side under cover
3. Column cover, lower
4. Column cover, upper
7. Steering wheel (Refer to GROUP 37A.)
▶A◀ 8. Column switch assembly
9. Ignition key ring antenna
10. Ignition switch
11. Push nut
12. Key reminder switch

Immobilizer-ECU removal steps

13. Front scuff plate (driver's side)
14. Cowl side trim (driver's side)
15. Immobilizer-ECU

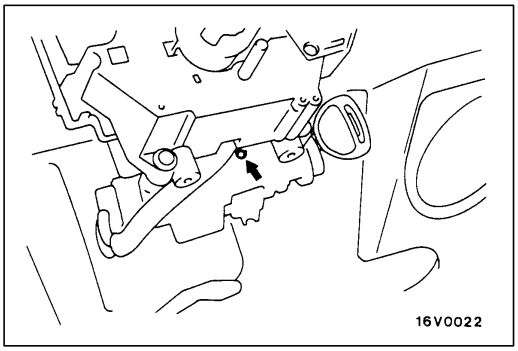

REMOVAL SERVICE POINTS

◀A▶ STEERING LOCK CYLINDER REMOVAL

1. Insert the key in the steering lock cylinder and turn it to the “ACC” position.
2. Using a cross-tip (+) screwdriver (small) or a similar tool, push the lock pin of the steering lock cylinder inward and then pull the steering lock cylinder toward you.

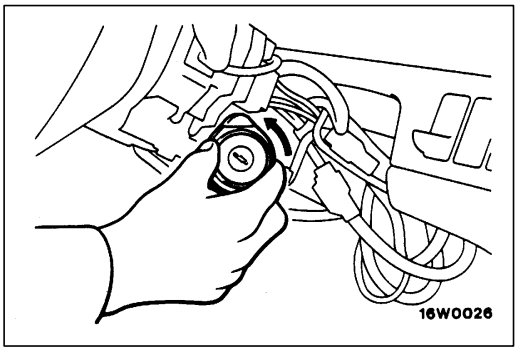

◀B▶ IGNITION KEY CYLINDER ILLUMINATION RING REMOVAL

Turn the ignition key cylinder illumination ring to the left and remove it.

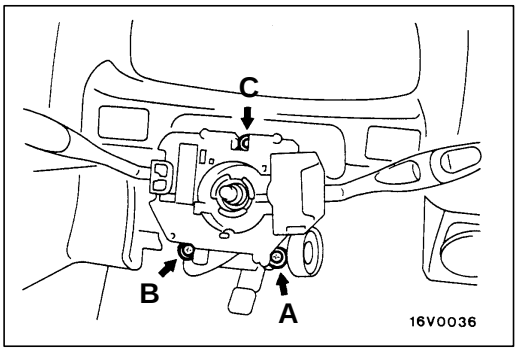

INSTALLATION SERVICE POINT

▶A◀ COLUMN SWITCH ASSEMBLY INSTALLATION

Tighten the column switch assembly mounting screws to the specified torque in the order of A, B and C.

Tightening torque: 25 Nm

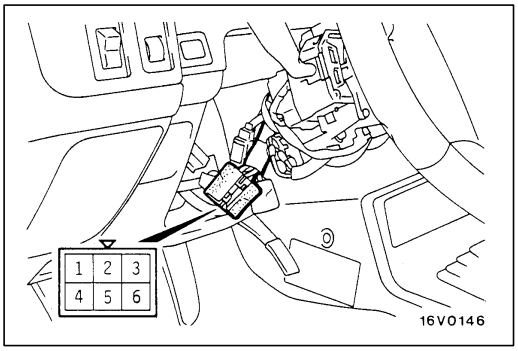

INSPECTION

54300220124

IGNITION SWITCH CONTINUITY CHECK

1. Remove the driver’s side under cover.
2. Remove the column cover lower and upper.
3. Disconnect the wiring connector from the ignition switch.
4. Operate the switch and check the continuity between the terminals.

Ignition key position	Terminal No.				
	1	2	4	5	6
LOCK					
ACC	○				○
ON	○	○	○		○
START	○	○		○	

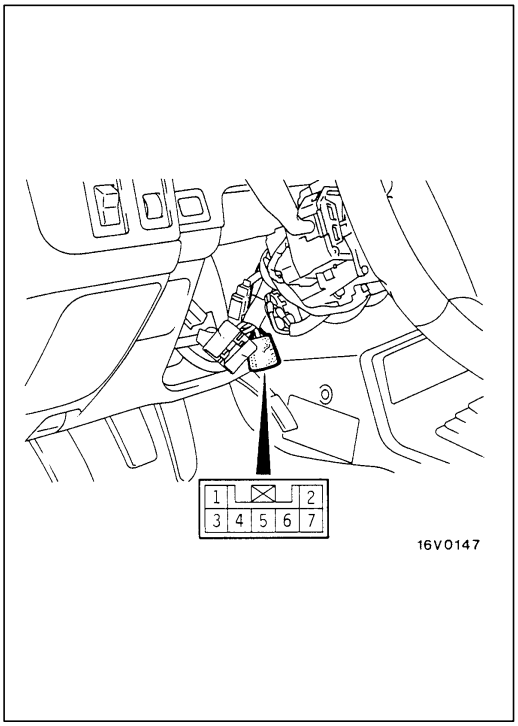

KEY REMINDER SWITCH CONTINUITY CHECK

54300770063

1. Remove the driver's side under cover.
2. Remove the column cover lower and upper.
3. Disconnect the wiring connector from the key reminder switch.
4. Check the continuity between the terminal when the ignition key is pulled out of and inserted into the steering lock cylinder.

Ignition key position	Terminal No.				
	1	*	2	4	6
Pulled out		ILL			
Inserted		ILL			

NOTE
*: Vehicles with key hole illumination lamp

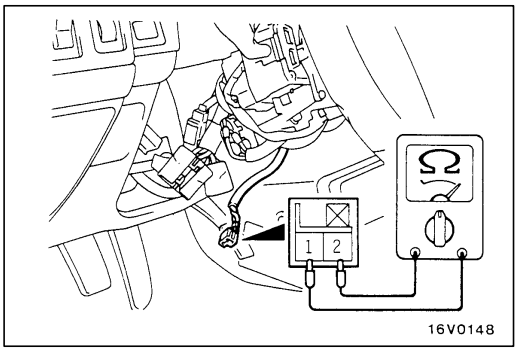

IGNITION KEY RING ANTENNA CONTINUITY CHECK

54300930027

Use a circuit tester to check the continuity between the terminals.

ID CODE REGISTRATION METHOD AND RESETTING THE CODE TO THE FACTORY SETTING

54300810048

Register the ID code in the immobilizer-ECU and then reset the code to the factory setting after parts have been replaced.

Replacement part	Petrol-powered vehicles	Diesel-powered vehicles	
	ID code registration	ID code registration	Resetting the code to the factory setting
Ignition key	Necessary	Necessary	Not necessary
Ignition key ring antenna	Not necessary	Not necessary	Not necessary
Immobilizer-ECU	Necessary	Necessary	Necessary
Engine-ECU <Petrol-powered vehicles>	Not necessary	–	–
Fuel cut valve controller (fuel injection pump) <Diesel-powered vehicles>	–	Not necessary	Not necessary (New part) Necessary (Used part)

ID Code Registration Method

If using an ignition key that has just been newly purchased, or if the immobilizer-ECU has been replaced, you will need to register the ID codes for each ignition key being used into the immobilizer-ECU. (A maximum of eight different ID codes can be registered.)
Moreover, when the immobilizer-ECU has been replaced, you will need to use the MUT-II to input the vehicle secret code and to register the password (secret code) that the user specifies into the immobilizer-ECU. (Refer to the MUT-II instruction manual.)

Caution
Because registering of the ID codes is carried out after all previously-registered codes have been erased, you should have ready all of the ignition keys that have already been registered.

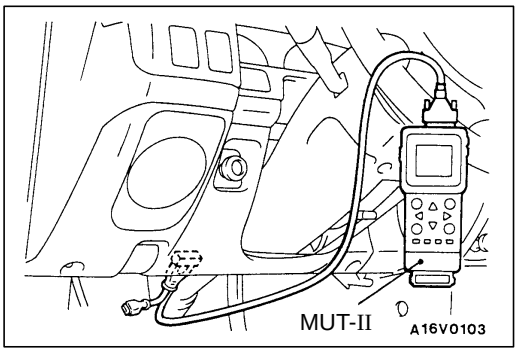

1. Connect the MUT-II to the diagnosis connector.

   Caution
   Turn off the ignition switch before connecting or disconnecting of the MUT-II.

2. Check that the diagnosis code No.54 is not being generated by the engine-ECU. If it is being generated check according to the Troubleshooting Procedures.

3. Use the ignition key that is to be registered to turn on the ignition switch.
4. Use the MUT-II to register the ID code. If you are registering two or more codes, use the next key to the registered to turn on the ignition switch without disconnecting the MUT-II.
5. Disconnect the MUT-II. This complete the registration operation.
6. Check that the engine can be started with each of the ignition keys.
7. Check the diagnosis output from the engine-ECU, and erase code No.54 if it appears.

Resetting the code to the factory setting <Diesel-powered vehicles>

Refer to the MUT-II INSTRUCTION MANUAL on handling the MUT-II.

NOTE
Resetting the code to the factory setting refers to the process of clearing the identification code which has been recorded in the fuel cut valve controller and switching the controller to learning mode. After this resetting is carried out, the identification code in the immobilizer-ECU will be recorded in the controller the next time the ignition switch is turned to the ON.

1. Connect the MUT-II to the diagnosis connector.

   Caution
   Turn off the ignition switch before connecting or disconnecting of the MUT-II.

2. Turn on the ignition switch.
3. Use the MUT-II to reset the code to the factory setting.

   NOTE
   Approximately 16 minutes are required to complete resetting the code to the factory setting.

4. Disconnect the MUT-II

COMBINATION METERS

54300030116

SERVICE SPECIFICATIONS

Items			Standard value
Speedometer indication error km/h (mph)		40 (20)	40 – 48 (20 – 25)
		80 (40)	80 – 92 (40 – 47)
		120 (60)	120 – 136 (60 – 69)
		160 (80)	160 – 180 (80 – 91)
		– (100)	– (100 – 114)
Tachometer indication error r/min	Petrol-powered vehicles	700	±100
		3,000	±150
		5,000	±250
		6,000	±300
	Diesel-powered vehicles	700	±100
		3,000	±150
		4,750	±160
		5,000	±250
Fuel gauge unit resistance Ω	Float point F		1 – 5
	Float point E		103 – 117
Fuel gauge unit float height mm	A (Float point F)		214.1
	B (Float point E)		251.2
Fuel gauge resistance Ω	Power supply and earth		192
	Power supply and fuel gauge		107
	Fuel gauge and earth		85
Engine coolant temperature gauge resistance Ω	Power supply and earth		191
	Power supply and engine coolant temperature gauge		103
	Engine coolant temperature gauge and earth		88
Engine coolant temperature gauge unit resistance (at 70 °C) Ω			104 ± 13.5

SEALANT

54300050075

Items	Specified sealant	Remark
Engine coolant temperature gauge unit threaded portion	3M Adhesive nut locking No. 4171 or equivalent	Drying sealant

SPECIAL TOOLS

54300060245

Tool	Number	Name	Use
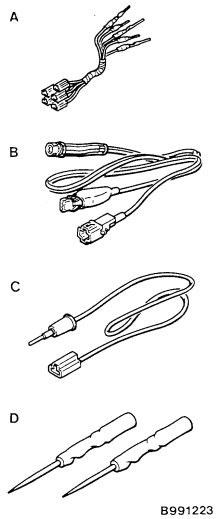	MB991223 A: MB991219 B: MB991220 C: MB991221 D: MB991222	Harness set A: Test harness B: LED harness C: LED harness adapter D: Probe	● Fuel gauge simple check ● Engine coolant temperature gauge simple check <Diesel-powered vehicles> A: Connector pin contact pressure check B, C: Power circuit check D: Commercial tester connection
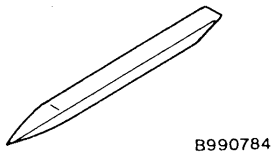	MB990784	Ornament remover	Removal of meter bezel assembly

TROUBLESHOOTING

54300720259

INSPECTION CHART FOR TROUBLE SYMPTOMS

Trouble symptom	Inspection procedure	Reference page
Tachometer does not work.	1	54-27

INSPECTION PROCEDURE FOR TROUBLE SYMPTOMS

Inspection Procedure 1

Tachometer does not work.	Probable cause
The ignition signal may not be input from the engine, or there may be a malfunction in the power supply or earth circuit.	● Malfunction of tachometer ● Malfunction of harness or connector

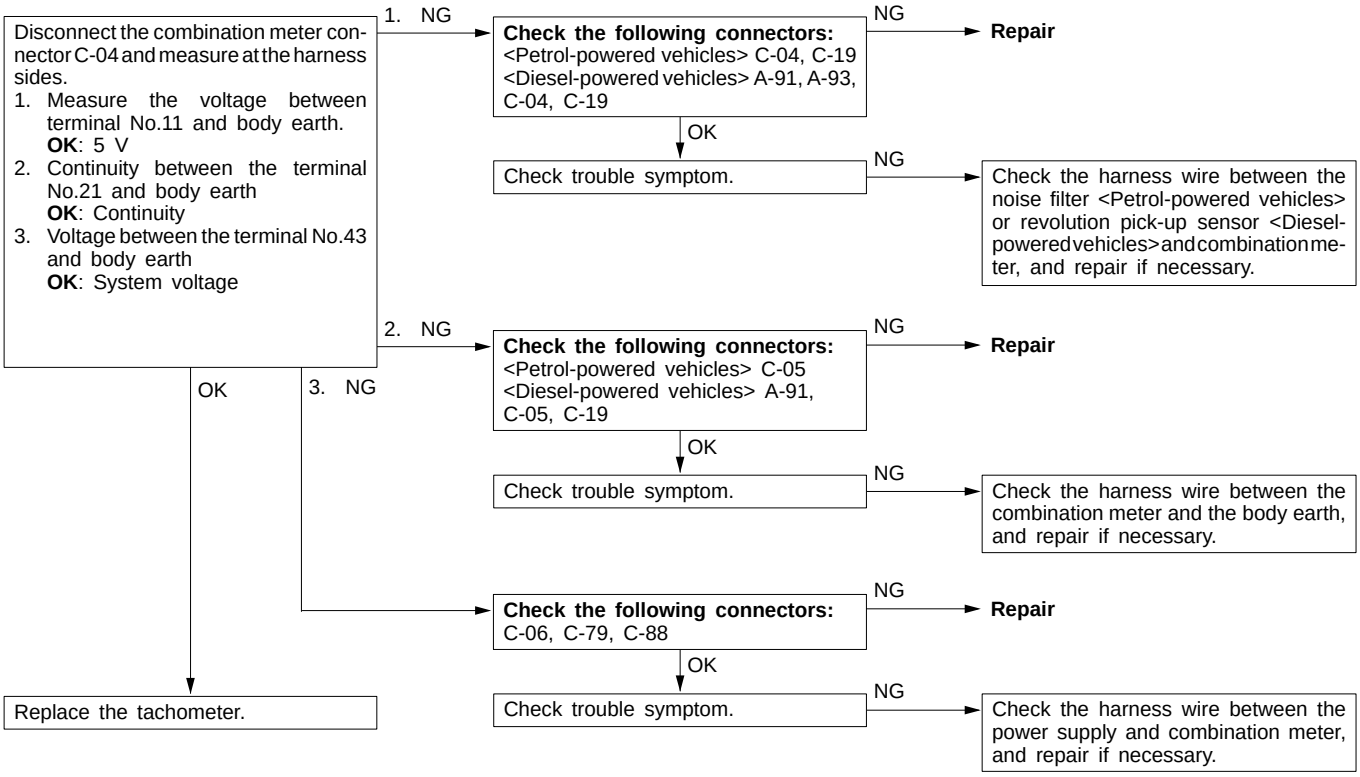

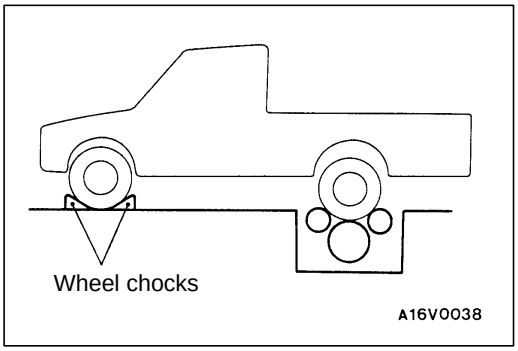

ON-VEHICLE SERVICE

54300090091

SPEEDOMETER CHECK

1. Adjust the pressure of tyres.to the specified level. (Refer to GROUP 31 – On-vehicle Service.)
2. Set the vehicle onto a speedometer tester and use wheel chocks to hold the front wheels.

   Caution
   Place the transfer shift lever to 2H position. <4WD>

3. Check if the speedometer indicator range is within the standard values.

   Caution
   Do not operate the clutch suddenly. Do not increase/decrease speed rapidly while testing.

   Standard value:

Standard indication km/h (mph)	Allowance range km/h (mph)
40 (20)	40 – 48 (20 – 25)
80 (40)	80 – 92 (40 – 47)
120 (60)	120 – 136 (60 – 69)
160 (80)	160 – 180 (80 – 91)
– (100)	– (100 – 114)

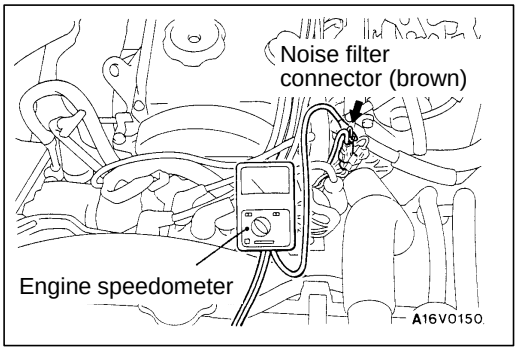

TACHOMETER CHECK

54300100091

<Petrol-powered vehicles>

1. Insert a paper clip in the noise filter connector from the harness side, and attach the engine speedometer.

   NOTE
   For tachometer inspection, use of a fluxmeter-type engine speedometer is recommended. (Because a fluxmeter only needs to be clipped to the high tension cable.)

2. Compare the readings of the engine speedometer and the tachometer at every engine speed, and check if the variation are within the standard values.

   Standard value:
   700 r/min: ±100 r/min
   3,000 r/min: ±150 r/min
   5,000 r/min: ±250 r/min
   6,000 r/min: ±300 r/min

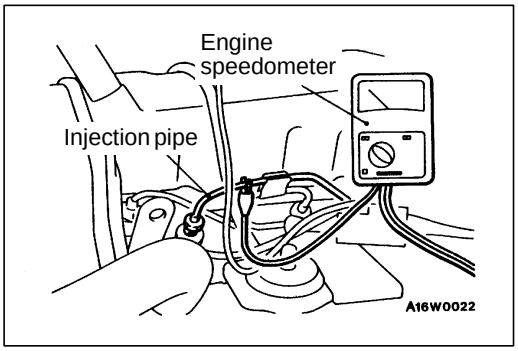

<Diesel-powered vehicles>

1. Connect the engine speedometer to the injection pipe.
2. Compare the readings of the engine speedometer and the tachometer at every engine speed, and check if the variation are within the standard values.

   Standard value:
   700 r/min: ±100 r/min
   3,000 r/min: ±150 r/min
   4,750 r/min: ±160 r/min
   5,000 r/min: ±250 r/min

FUEL GAUGE SIMPLE CHECK

54300110117

Remove the fuel gauge unit connector.
↓
Use the special tool to connect a test lamp (12 V – 3.4 W) to the harness connector. (Refer to Fig.1)
↓
When the ignition switch is turned to ON, the test lamp illuminates.
- OK → The needle of the fuel gauge moves.
  - OK → Replace the fuel gauge unit.
  - NG → Replace the fuel gauge.
- NG → Repair the harness.

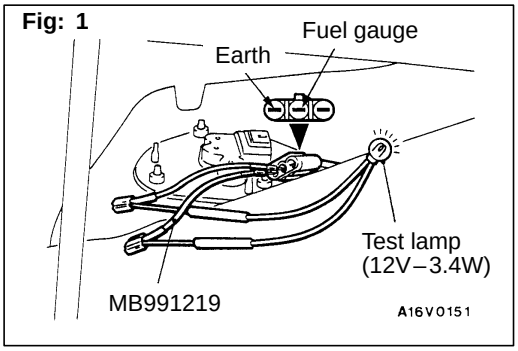

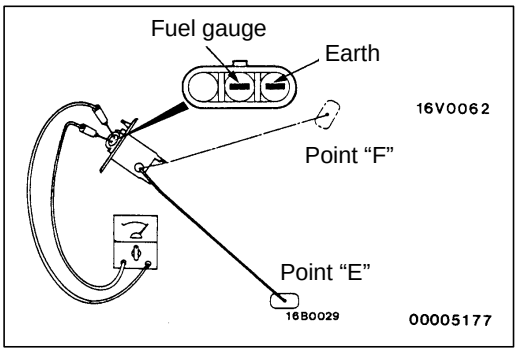

FUEL GAUGE UNIT CHECK

54300120158

Remove the fuel gauge unit from the fuel tank.

FUEL GAUGE UNIT RESISTANCE

1. Check that resistance value between the fuel gauge terminal and earth terminal is at standard value when fuel gauge unit float is at point F (highest) and point E (lowest).

   Standard value:
   Point F: 1 – 5 Ω
   Point E: 103 – 117 Ω

2. Check that resistance value changes smoothly when float moves slowly between point F (highest) and point E (lowest).

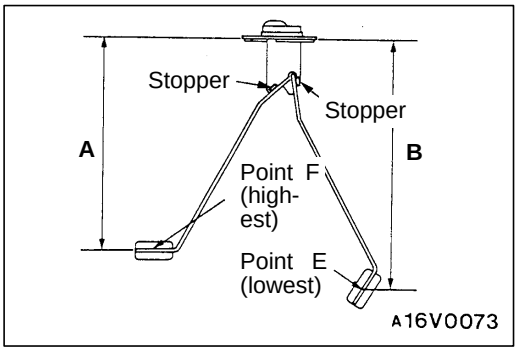

FUEL GAUGE UNIT FLOAT HEIGHT

Move float and measure the height A at point F (highest) and B at point E (lowest) with float arm touching stopper.

Standard value:
A: 214.1 mm
B: 251.2 mm

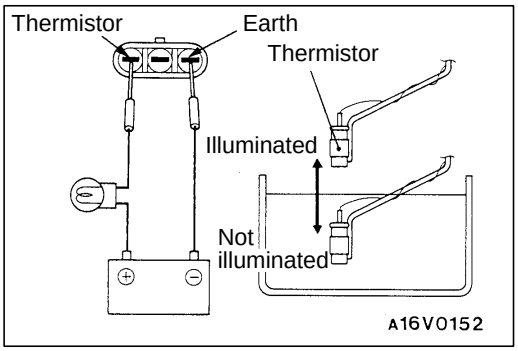

THERMISTOR

1. Connect fuel gauge unit (thermistor) to battery via test lamp (12 V – 3.4 W). Immerse in water.
2. Condition is good if lamp goes off when the thermistor is immersed in water and goes on when it is taken out of water.

Caution
After finishing this test, wipe the unit, dry and install it in the fuel tank.

ENGINE COOLANT TEMPERATURE GAUGE SIMPLE CHECK

54300140123

Remove the engine coolant temperature gauge unit connector.

↓

Connect a test lamp (12 V – 3.4 W) between the harness side connector and the earth.
NOTE
For diesel-powered vehicles, use the special tool to check. (See the illustration below.)

↓

When the ignition switch is turned to ON, the test lamp illuminates.

- NG → Replace the harness.
- OK → The needle of the engine coolant temperature gauge moves.
  - NG → Replace the engine coolant temperature gauge.
  - OK → Replace the engine coolant temperature gauge unit.

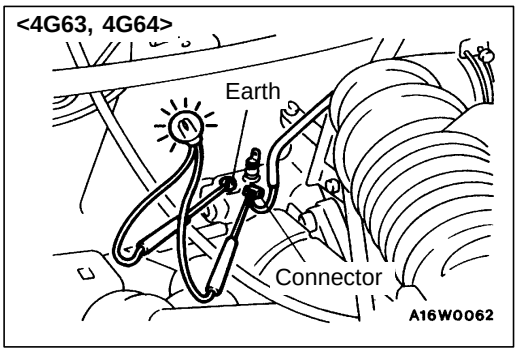

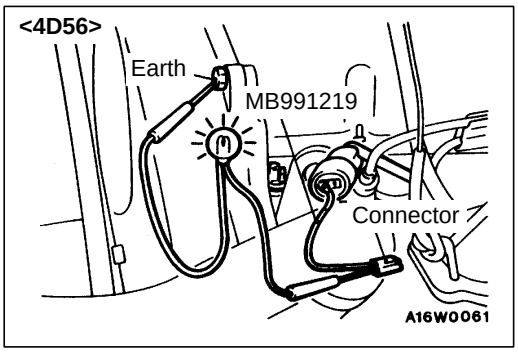

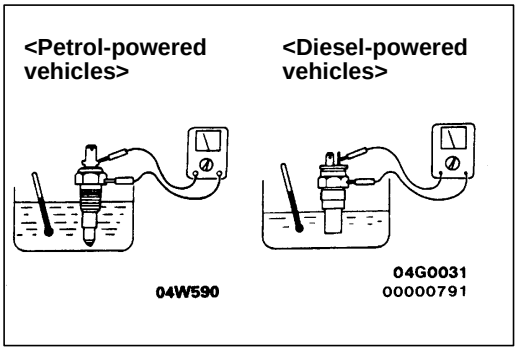

ENGINE COOLANT TEMPERATURE GAUGE UNIT CHECK

54300150157

1. Bleed the engine coolant.
   (Refer to GROUP 14 – On-vehicle Service.)
2. Remove the engine coolant temperature gauge unit.
3. Immerse the unit in 70°C water to measure the resistance.

   Standard value: 104 ± 13.5 Ω

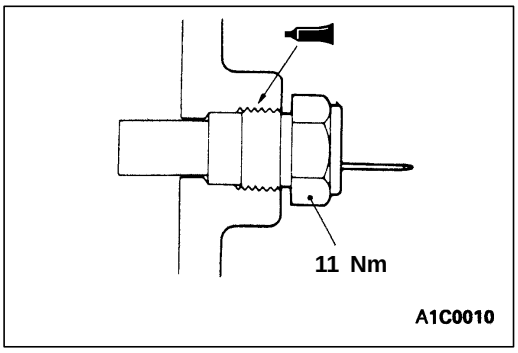

4. After checking, apply the specified adhesive around the thread of engine coolant temperature gauge unit.

   Specified sealant:
   3M Adhesive Nut Locking No. 4171 or equivalent

5. Add engine coolant.
   (Refer to GROUP 14 – On-vehicle Service.)

COMBINATION METERS

54300290125

REMOVAL AND INSTALLATION

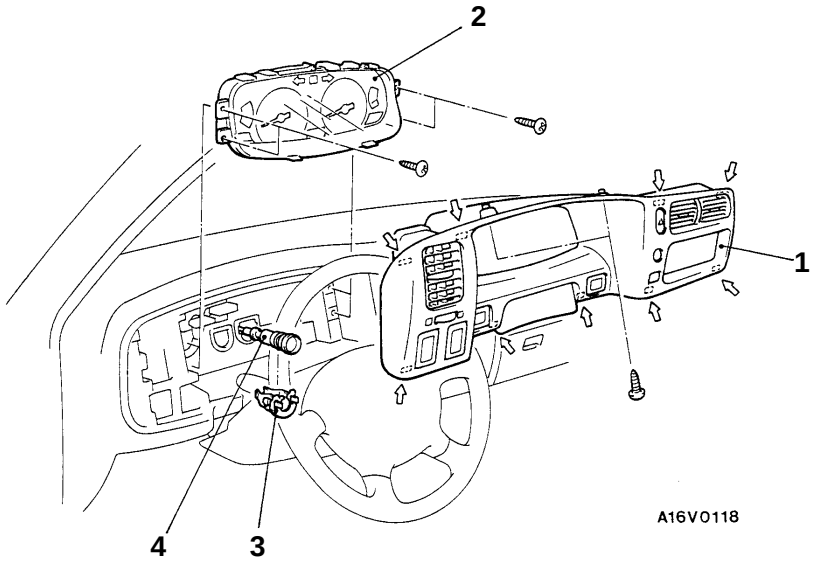

NOTE
⇦: metal clip position

Removal steps

1. Meter bezel assembly
2. Combination meter
3. ◀A▶ Adapter
4. ◀B▶ ▶A◀ Speedometer cable

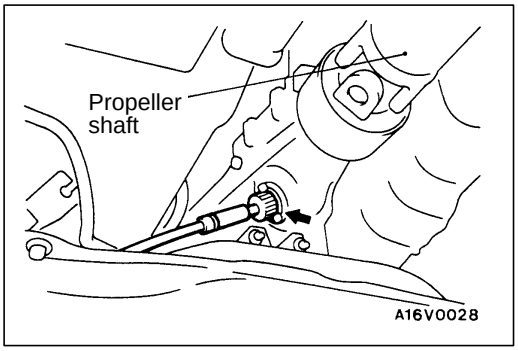

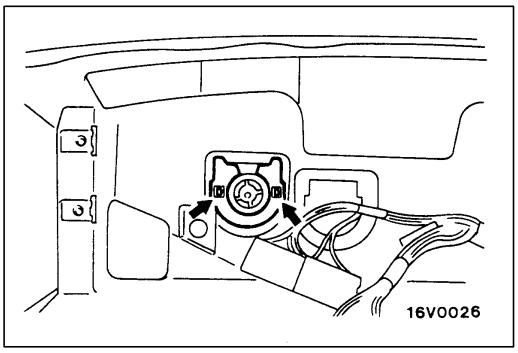

REMOVAL SERVICE POINT

◀A▶ ADAPTER REMOVAL

1. Disconnect the speedometer cable from the transmission.
2. Unlock the adapter and then remove the adapter by pulling it into the passenger compartment along with the speedometer cable.

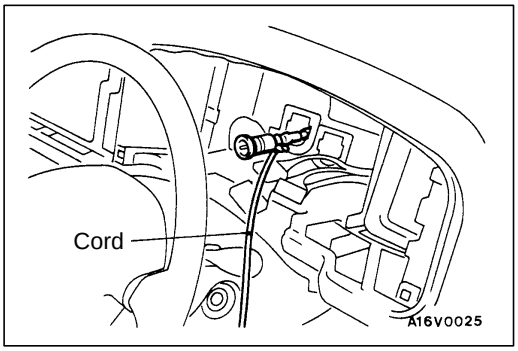

◀B▶ SPEEDOMETER CABLE REMOVAL

After tying a cord to the speedometer cable, remove the grommet and pull the speedometer cable out into the engine compartment.

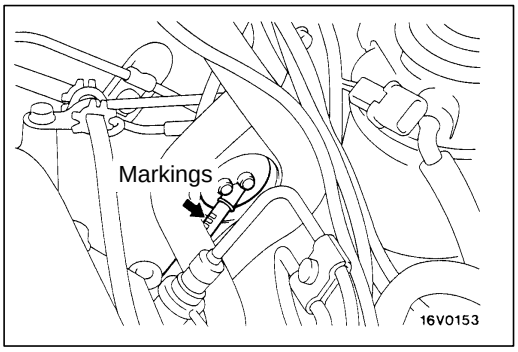

INSTALLATION SERVICE POINT

▶A◀ SPEEDOMETER CABLE INSTALLATION

1. Install the grommet to the toeboard so that the speedometer cable is facing downwards.
2. Pull the speedometer cable until you can see the markings.

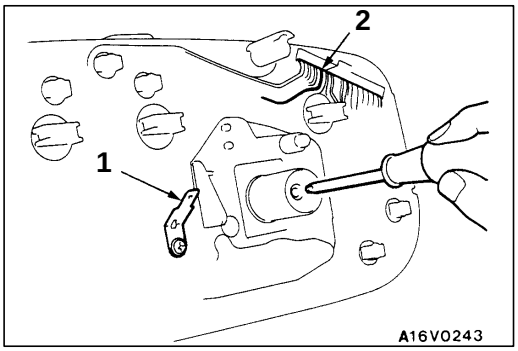

INSPECTION

54300300101

REED SWITCH CONTINUITY CHECK

Using a circuit tester, check that continuity and discontinuity alternates between terminals 1 and 2 four times at every rotation of the shaft of the speedometer cable connection.

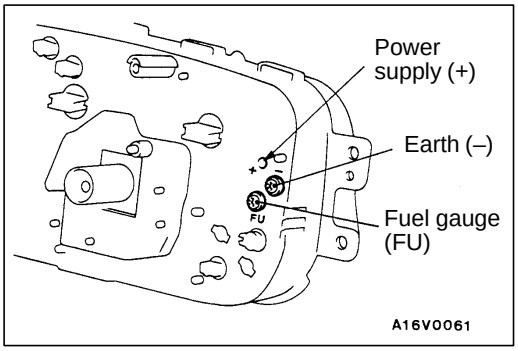

FUEL GAUGE RESISTANCE CHECK

1. Remove the power supply tightening screw.
2. Use a circuit tester to measure the resistance between the terminals.

   NOTE
   The terminal positions are indicated by FU, – and +.

   Standard value:
   Power supply (+) – Earth (–): 192 Ω
   Power supply (+) – Fuel gauge (FU): 107 Ω
   Fuel gauge (FU) – Earth (–): 85 Ω

   Caution
   When inserting the test probe into the power supply terminal, be careful not to touch the printed board.

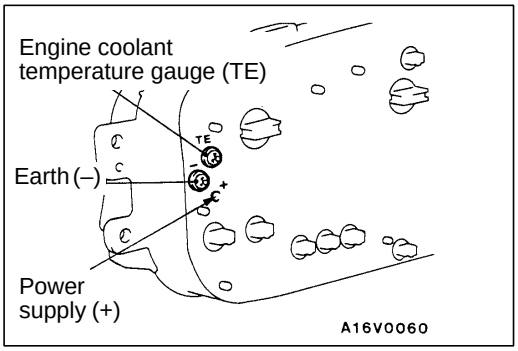

ENGINE COOLANT TEMPERATURE GAUGE RESISTANCE CHECK

1. Remove the power supply tightening screw.
2. Use a circuit tester to measure the resistance between the terminals.

   NOTE
   The terminal positions are indicated by TE, – and +.

   Standard value:
   Power supply (+) – Earth (–): 191 Ω
   Power supply (+) – Engine coolant temperature gauge (TE): 103 Ω
   Engine coolant temperature gauge (TE) – Earth (–): 88 Ω

   Caution
   When inserting the test probe into the power supply terminal, be careful not to touch the printed board.

MULTI-METER

54300720266

TROUBLESHOOTING

INSPECTION CHART FOR TROUBLE SYMPTOMS

Trouble symptom	Inspection procedure No.	Reference page
Actual outside temperature is different from thermometer.	1	54-35
Outside temperature is not displayed.	2	54-36

INSPECTION PROCEDURE FOR TROUBLE SYMPTOMS

Inspection Procedure 1

Actual outside temperature is different from thermometer.	Probable cause
The defective internal resistance of the thermo sensor or thermometer may be present.	● Malfunction of outside thermo sensor ● Malfunction of harness or connector ● Malfunction of thermometer

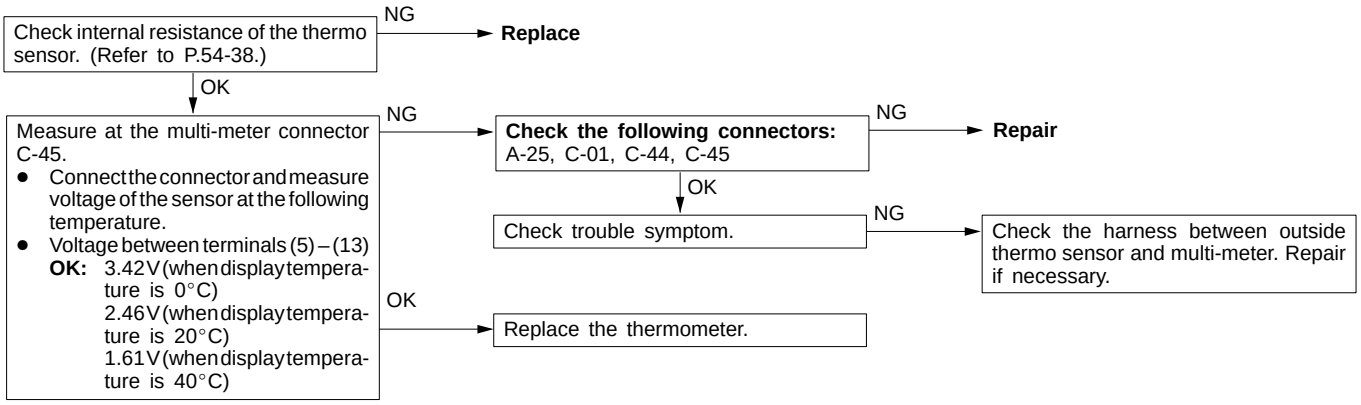

Inspection Procedure 2

Outside temperature is not displayed.	Probable cause
A harness, connector or the thermometer may be defective.	● Malfunction of harness or connector ● Malfunction of thermometer

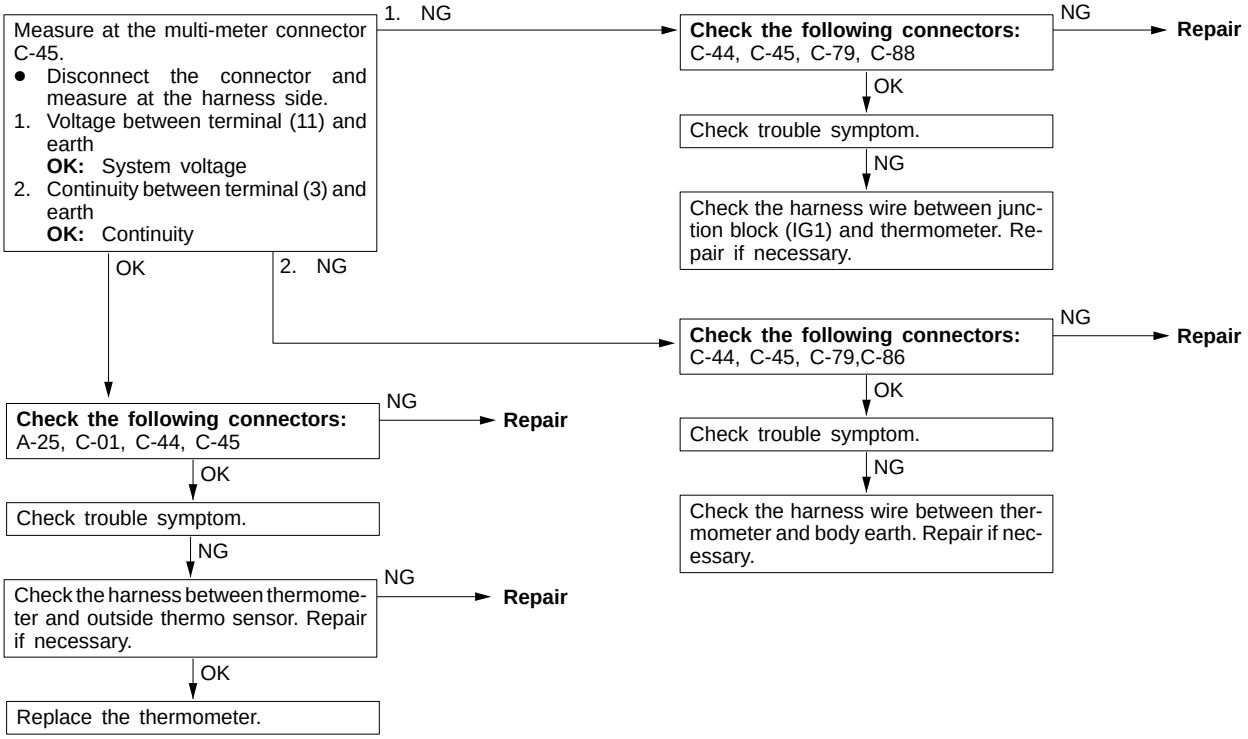

ON-VEHICLE SERVICE

54300170023

VOLTMETER SIMPLE TEST

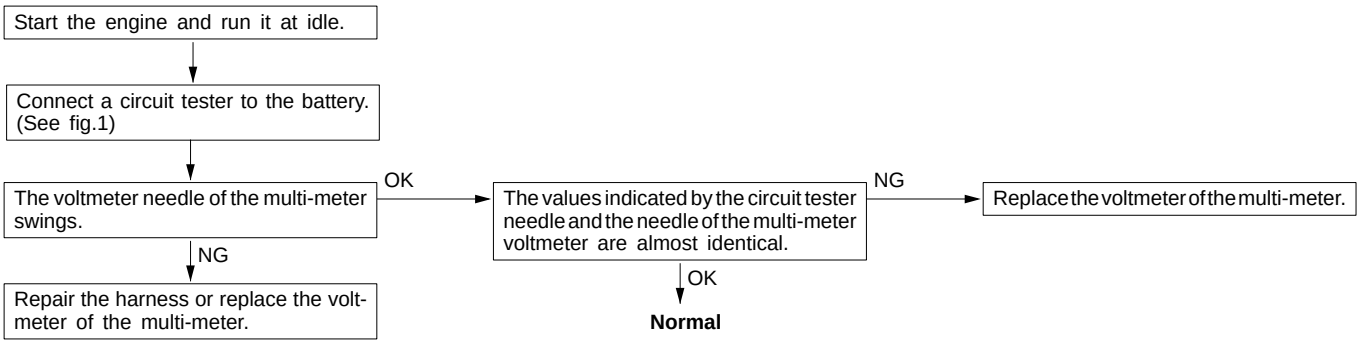

Fig.1

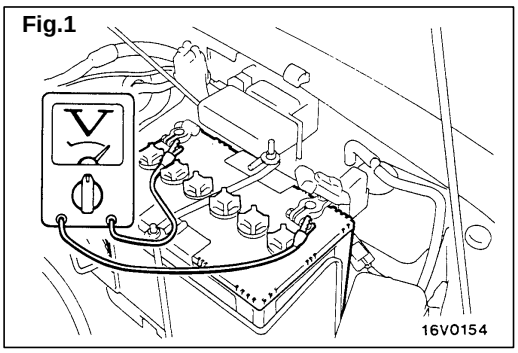

MULTI-METER

54300390023

REMOVAL AND INSTALLATION

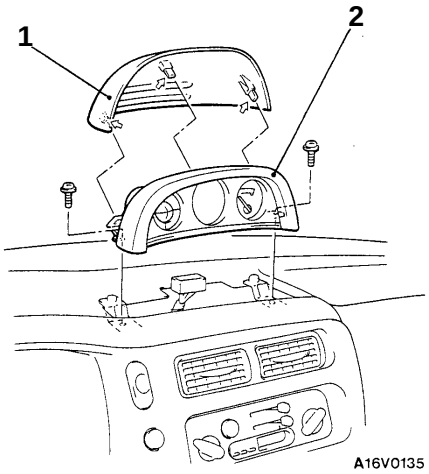

NOTE
⇦: metal clip position

Removal steps

1. Multi-meter panel
2. Multi-meter

DISASSEMBLY AND REASSEMBLY

54300410026

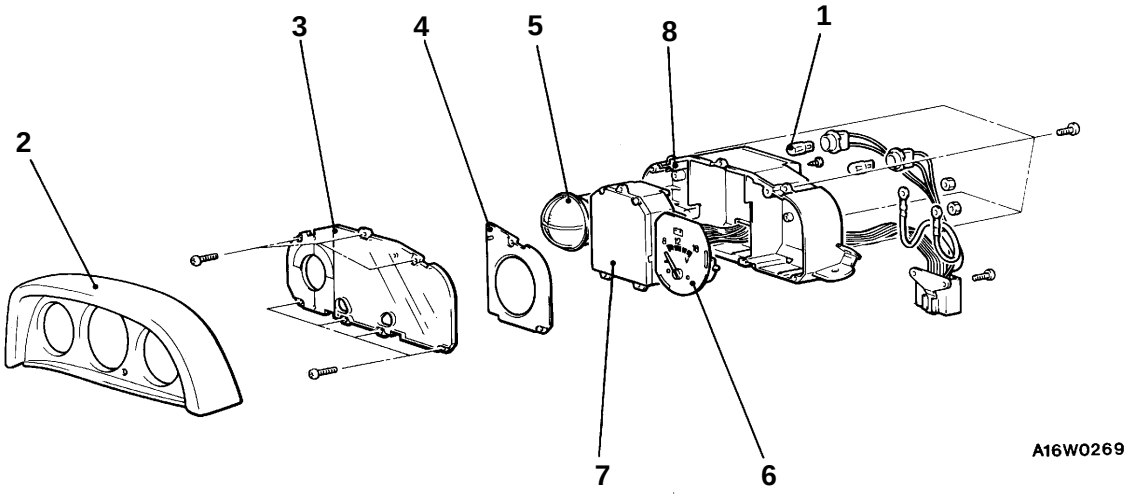

Disassembly steps

1. Bulb
2. Meter garnish
3. Meter glass
4. Window plate
5. Inclinometer
6. Voltmeter
7. Thermometer
8. Meter case

OUTSIDE THERMO SENSOR

54300030123

SERVICE SPECIFICATIONS

Items		Standard value
Internal resistance of outside thermo sensor Ω	At 20°C	Approx. 1,200
	At 40°C	Approx. 500

OUTSIDE THERMO SENSOR

54300950016

REMOVAL AND INSTALLATION

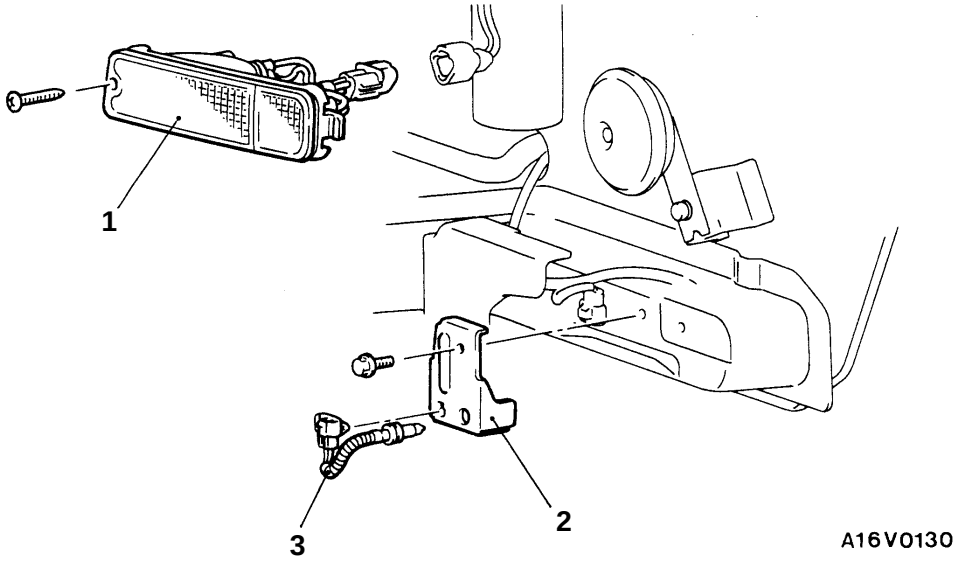

1. Front combination lamp (L.H.)
2. Bracket
3. Outside thermo sensor

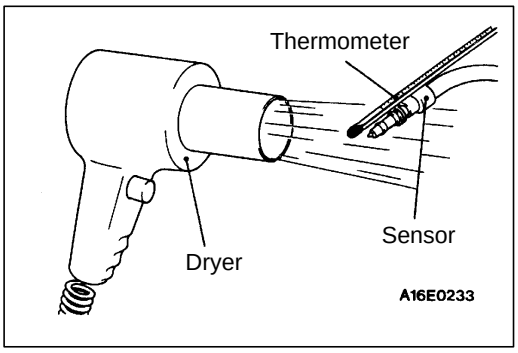

INSPECTION

54300960019

OUTSIDE THERMO SENSOR INTERNAL RESISTANCE CHECK

Check the internal resistance of the outside thermo sensor are at the standard values at temperatures of 20°C and 40°C.

Standard value:

Approx. 1,200 Ω (at 20°C)
Approx. 500 Ω (at 40°C)

HEADLAMP

54200030052

SERVICE SPECIFICATIONS

Items		Standard value	Limit
Headlamp aiming for low beam	Vertical direction	60 mm below horizontal (H)	–
	Horizontal direction	Position where the 15° sloping section intersects the vertical line (V)	–
Headlamp intensity cd		–	30,000 or more

SPECIAL TOOLS

54200060327

Tool	Number	Name	Use
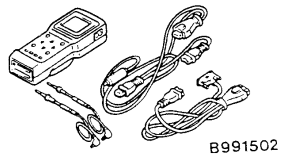	MB991502	MUT-II sub assembly	ETACS-ECU input signal checking
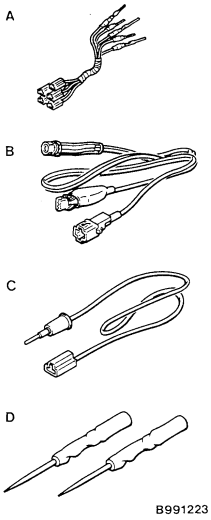	MB991223 A: MB991219 B: MB991220 C: MB991221 D: MB991222	Harness set A: Test harness B: LED harness C: LED harness adapter D: Probe	Making voltage and resistance measurements during troubleshooting A: Connector pin contact pressure inspection B, C: Power circuit inspection D: Commercial tester connection

TROUBLESHOOTING

54200900025

The special tool (MB991223) should always be used to measure voltages and resistances when carrying out troubleshooting.

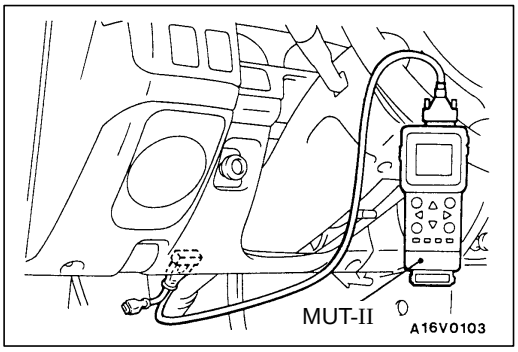

DIAGNOSIS FUNCTION

INPUT SIGNAL INSPECTION POINTS <VEHICLES WITH ETACS-ECU>

1. Connect the MUT-II to the diagnosis connector.
2. If buzzer of the MUT-II sounds once when a switch is operated (ON/OFF), the ETACS-ECU input signal for that switch circuit system is normal.

INSPECTION CHART FOR TROUBLE SYMPTOMS

54200910042

Trouble symptoms		Inspection procedure	Reference page
Communication with MUT-II is impossible. <Vehicles with ETACS-ECU>	Communication with all systems is impossible.	1	54-41
	Communication with one-shot pulse input signal only is impossible.	2	54-41
The lighting monitor buzzer doesn't sound under the following conditions while tail lamps or headlamps illuminate. ● When the ignition switch is turned to OFF and the driver's side door is open.		3	54-41
Headlamp leveling does not occur when the headlamp leveling switch is operated.		5	54-43
The headlamps do not illuminate when the vehicle is in the following condition and the ignition switch is at the ON position. However, the headlamps illuminate when the lighting switch is moved to the HEAD position. <Vehicles with daytime running lamp system> ● Lighting switch: OFF ● Passing switch: OFF		6	54-44
The headlamps do not switch off when the vehicle is in the following condition and the lighting switch is moved to the TAIL position. <Vehicles with daytime running lamp system> ● Ignition switch: OFF ● Passing switch: OFF		7	54-45

INSPECTION PROCEDURE FOR TROUBLE SYMPTOMS

Inspection Procedure 1

Communication with MUT-II is impossible. (Communication with all systems is impossible.)	Probable cause
The cause is probably a defective power supply system (including earth) for the diagnosis line.	● Malfunction of connector ● Malfunction of harness wire

Refer to GROUP 13A – Troubleshooting.

Inspection Procedure 2

Communication with MUT-II is impossible. (Communication with the one-shot pulse input signal only is impossible.)	Probable cause
The cause is probably a defective one-shot pulse input circuit system of the diagnosis line.	● Malfunction of connector ● Malfunction of harness wire ● Malfunction of ETACS-ECU

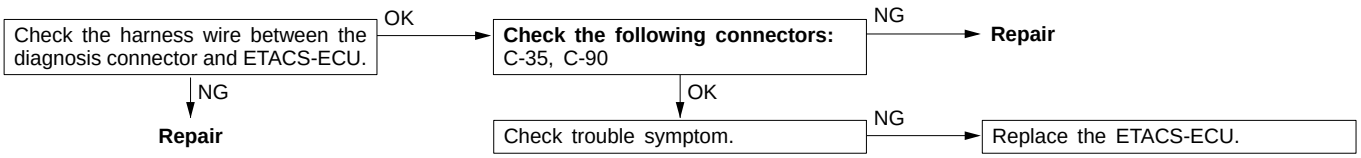

Inspection Procedure 3

The ignition switch is turned to the OFF position and the driver's side door is opened while the tail lamps or headlamps are operating, but the light reminder warning buzzer does not sound.	Probable cause
The cause is probably a defective lighting switch input circuit system or a defective driver's side door switch input circuit system.	● Malfunction of driver's side door switch ● Malfunction of harness or connector ● Malfunction of buzzer-ECU or ETACS-ECU

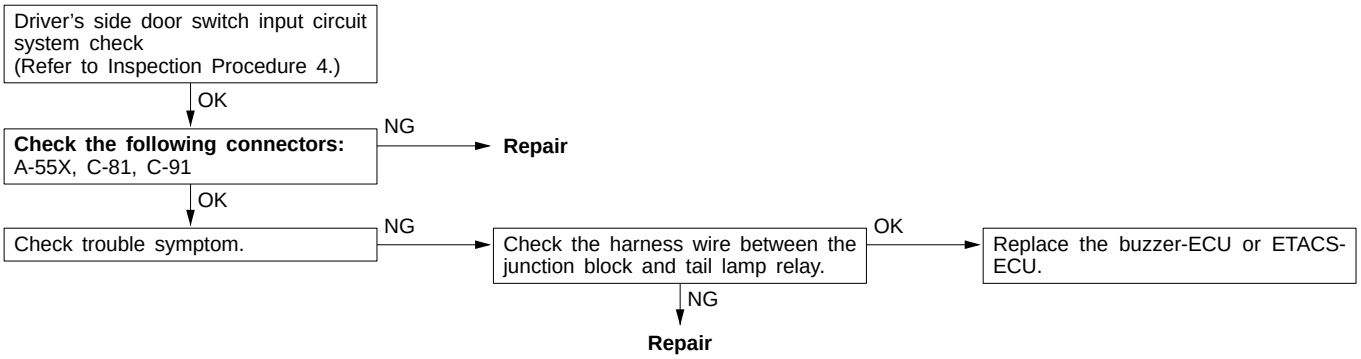

Inspection Procedure 4

Driver's side door switch input circuit system check

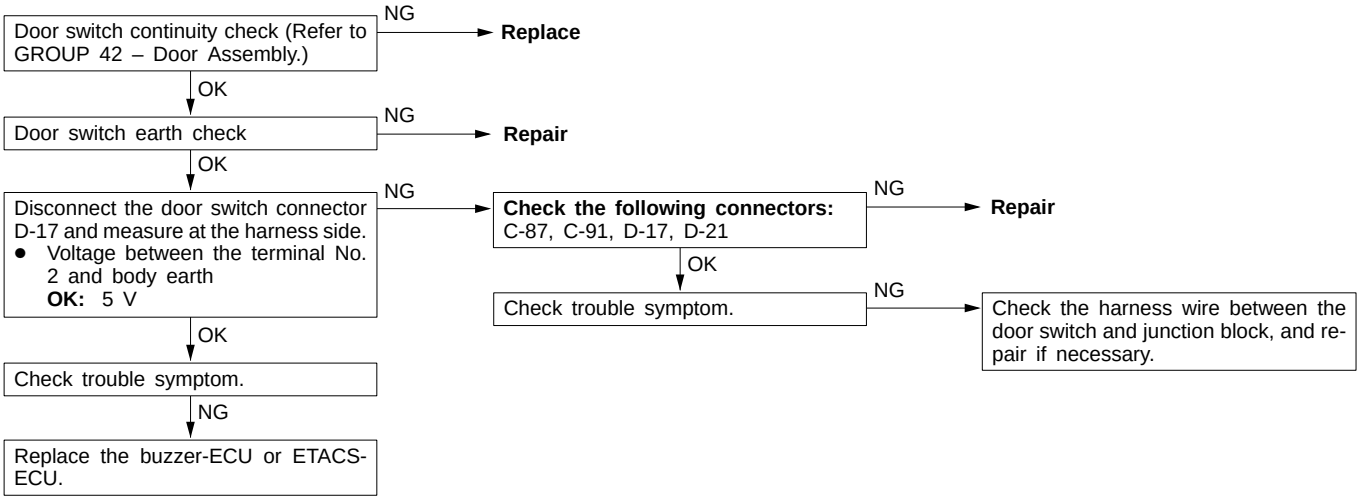

Inspection procedure 5

Headlamp leveling does not occur when the headlamp leveling switch is operated.	Probable cause
The cause is probably a malfunction of the headlamp leveling switch circuit system or a malfunction of the headlamp leveling unit circuit system. If there is a blown fuse, there may also be a short-circuit in a harness.	● Malfunction of fuse ● Malfunction the headlamp leveling switch ● Malfunction of connector ● Malfunction of harness wire ● Malfunction of the headlamp leveling unit

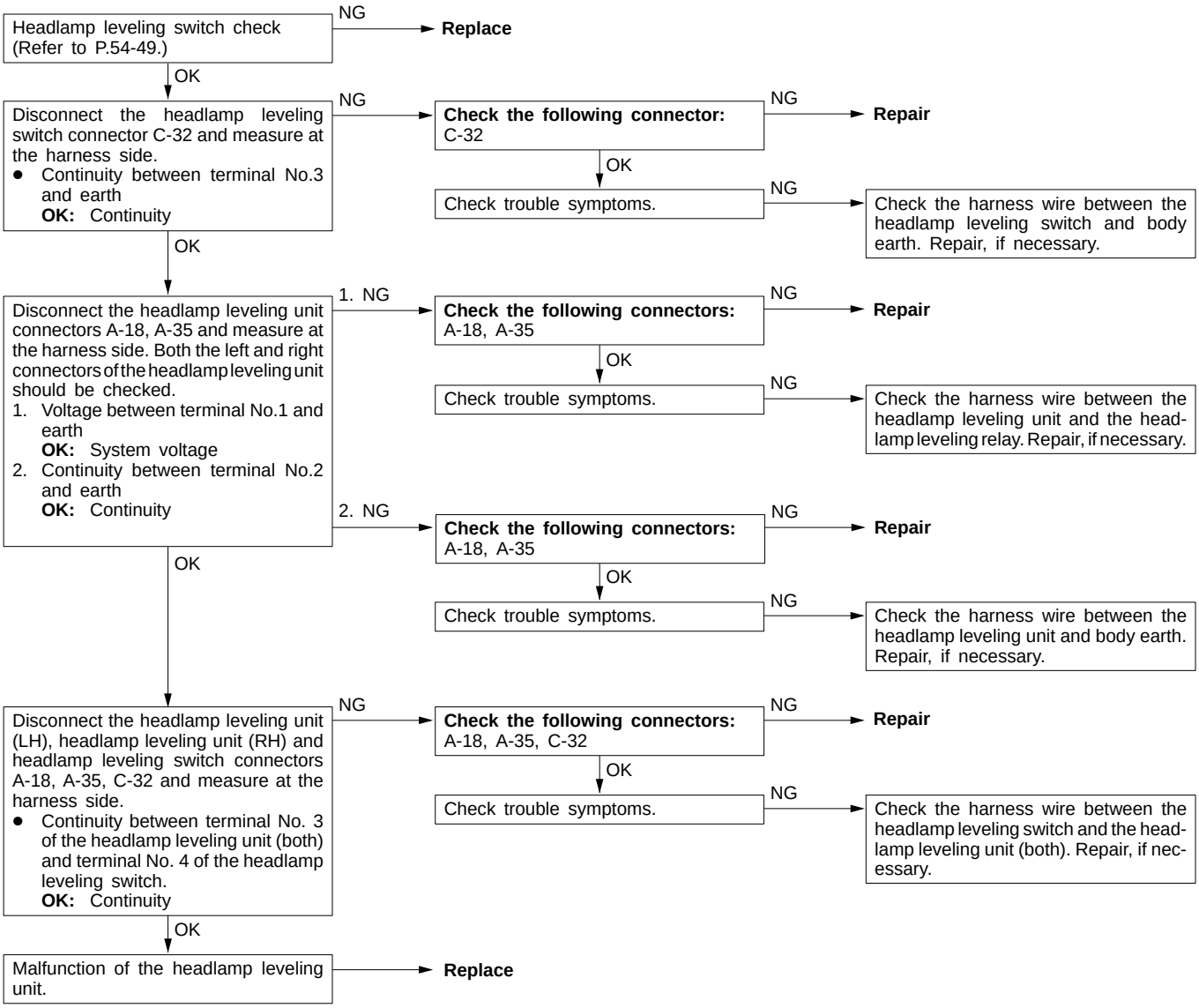

Inspection procedure 6

The headlamps do not illuminate when the vehicle is in the following condition and the ignition switch is moved to the ON position. However, they illuminate when the lighting switch is moved to the HEAD position. **<Vehicles with daytime running lamp>** ● **Lighting switch: OFF** ● **Passing switch: OFF**	**Probable cause**
The cause is probably a malfunction of the daytime running lamp control unit (DRL-ECU) circuit system. If there is a blown fuse, there may also be a short-circuit in a harness.	● Malfunction of fuse ● Malfunction of connector ● Malfunction of harness wire ● Malfunction of the DRL relay (1) ● Malfunction of the DRL-ECU

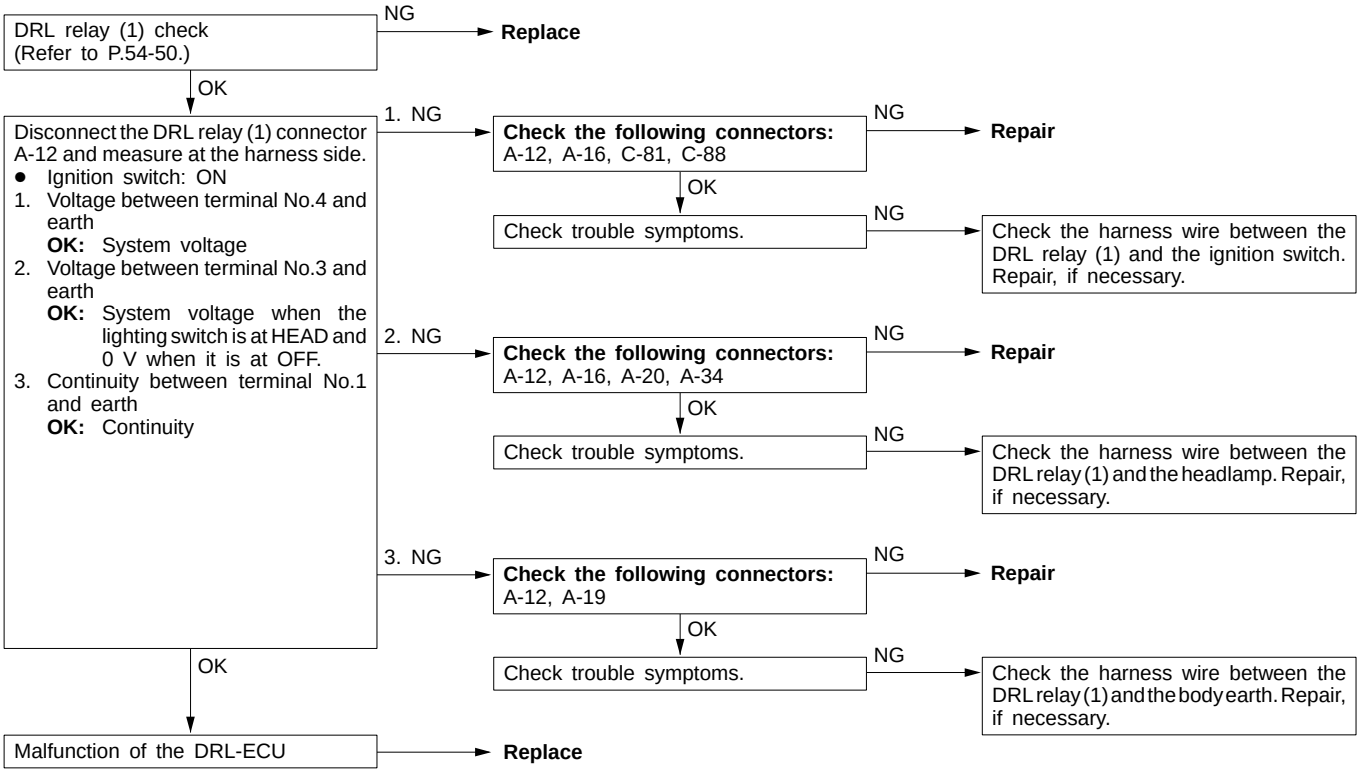

Inspection procedure 7

The headlamps do not switch off when the vehicle is in the following condition and the lighting switch is moved to the TAIL position. <Vehicles with daytime running lamp> ● Ignition switch: OFF ● Passing switch: OFF	Probable cause
The cause is probably a malfunction of the daytime running lamp control unit (DRL-ECU) circuit system. If there is a blown fuse, there may also be a short-circuit in a harness.	● Malfunction of fuse ● Malfunction of connector ● Malfunction of harness wire ● Malfunction of the tail lamp relay ● Malfunction of the DRL-ECU

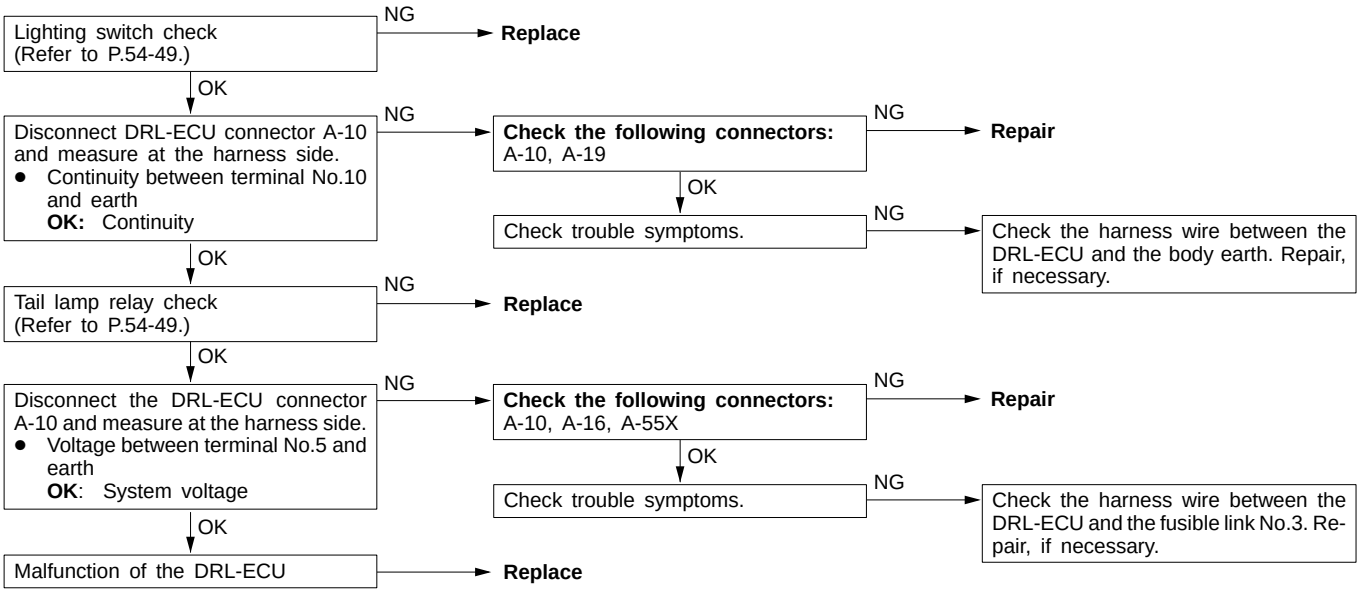

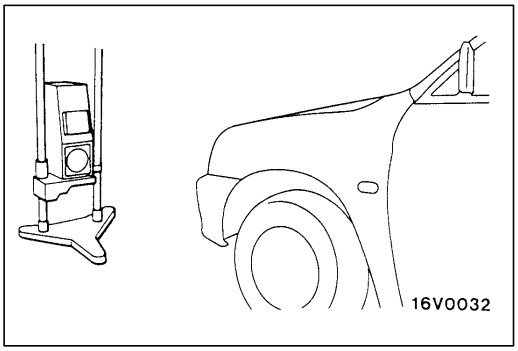

ON-VEHICLE SERVICE

54200090111

HEADLAMP AIMING

<USING A BEAMSETTING EQUIPMENT>

1. The headlamps should be aimed with the proper beamsetting equipment, and in accordance with the equipment manufacture's instructions.

   NOTE
   If there are any regulations pertinent to the aiming of headlamps in the area where the vehicle is to be used, adjust so as to meet those requirements.

2. Alternately turn the adjusting screw to adjust the headlamp aiming.

<USING A SCREEN>

1. Inflate the tyres to the specified pressures and there should be no other load in the vehicles other than driver or substituted weight of approximately 75 kg placed in driver's position.
2. Set the distance between the screen and the centre of the headlamps as shown in the illustration.

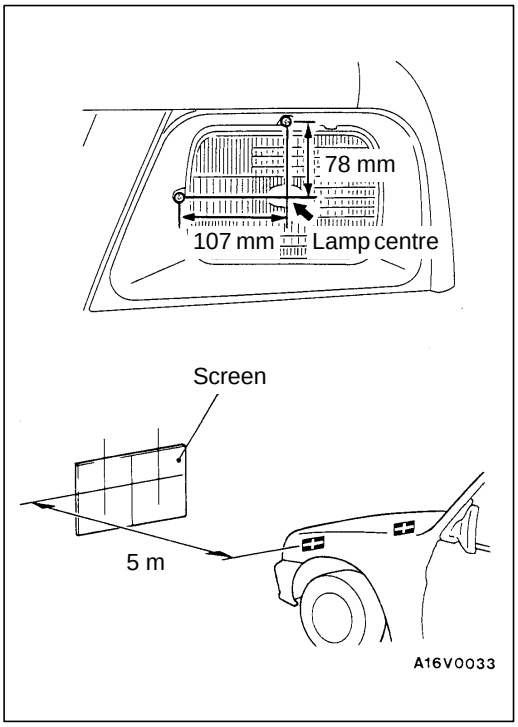

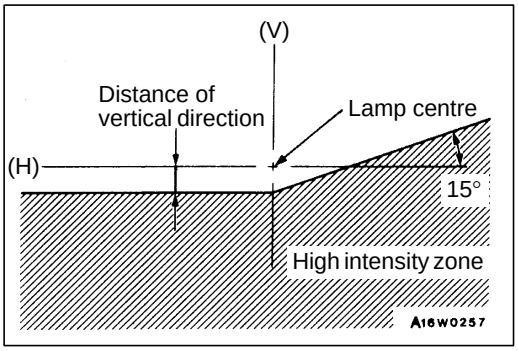

3. Check if the beam shining onto the screen is at the standard value.

   Standard value:
   (Vertical direction)
   60 mm below horizontal (H)

   (Horizontal direction)
   Position where the 15° sloping section intersects the vertical line (V)

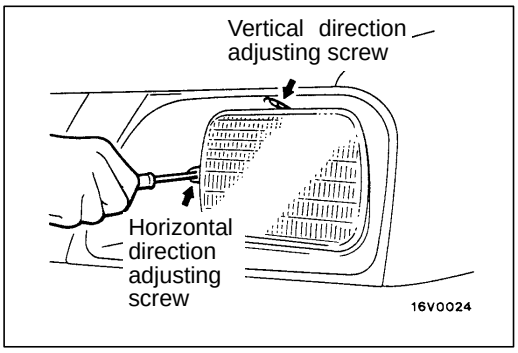

4. Alternately turn the adjusting screw to adjust the headlamp aiming.

   Caution
   Be sure to adjust the aiming adjustment screw in the tightening direction.

INTENSITY MEASUREMENT

54200100074

Using a photometer, and following its manufacture's instruction manual, measure the headlamp intensity and check to be sure that the limit value is satisfied.

Limit: 30,000 cd or more

NOTE

1. When measuring the intensity, maintain an engine speed of 2,000 r/min, with the battery in the charging condition.
2. There may be special local regulations pertaining to headlamp intensity, be sure to make any adjustments necessary to satisfy such regulations.
3. If an illuminometer is used to make the measurements, convert its values to photometer values by using the following formula.

   $I = Er^2$ Where:
   - I = intensity (cd)
   - E = illumination (lux)
   - r = distance (m) from headlamps to illuminometer

BULB REPLACEMENT

54200130141

<Headlamp Bulb>

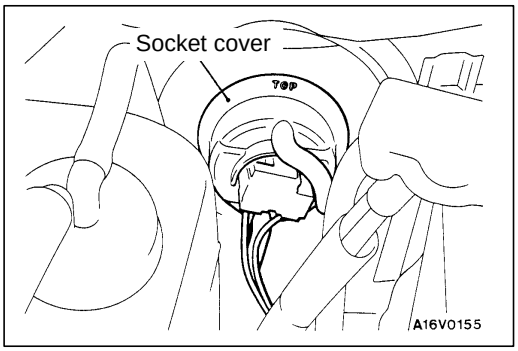

1. Disconnect the connector.
2. Remove the socket cover.

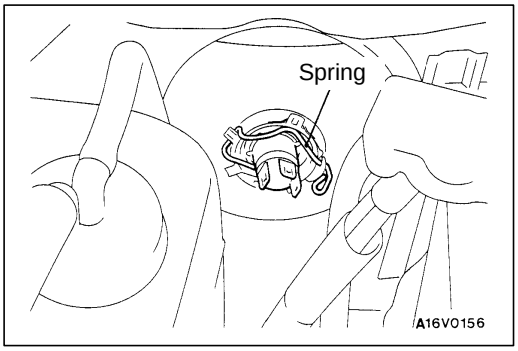

3. Unhook the spring which secures the bulb, and then remove the bulb.

   Caution
   Do not touch the surface of the bulb with hands or dirty gloves. If the surface does become dirty, clean it with alcohol or thinner, and let it dry thoroughly before installing.

HEADLAMP

54200180030

REMOVAL AND INSTALLATION

CAUTION: SRS
Before removal of air bag module and clock spring, refer to GROUP 52B – SRS Service Precautions and Air Bag Module and Clock Spring.

Post-installation Operation
- Headlamp Aiming Adjustment (Refer to P.54-46.)

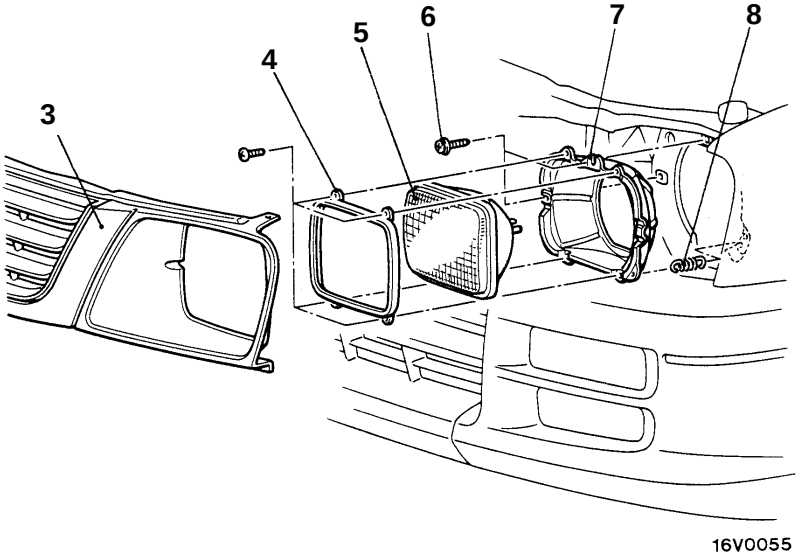

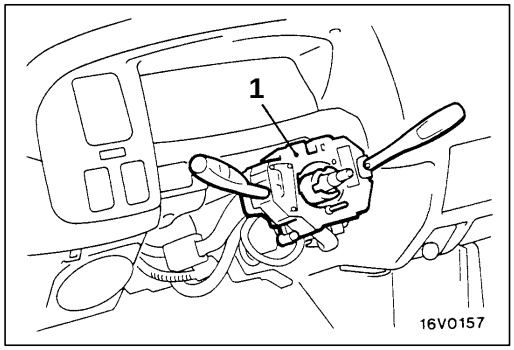

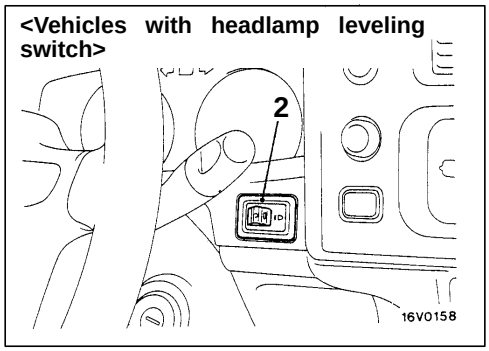

00005055

1. Column switch <Lighting switch and dimmer/passing switch>
   (Refer to GROUP 37A – Steering Wheel and Shaft.)
2. Headlamp leveling switch

Headlamp removal steps

3. Radiator grille (Refer to GROUP 51 – Grille, Moulding, Garnish.)
4. Retaining ring
5. Headlamp
6. Adjusting screw
7. Mounting ring or mounting ring and leveling actuator assembly
8. Extension spring

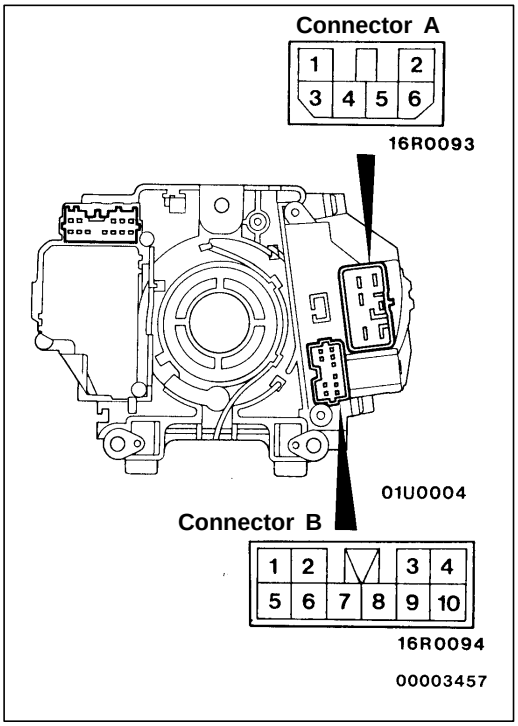

INSPECTION

54200800066

LIGHTING SWITCH AND DIMMER/PASSING SWITCH CONTINUITY CHECK

Switch position		Connector A–terminal No.					Connector B–terminal No.					
		1	2	3	4	6	3	5	6	7	8	9
LIGHTING SWITCH	OFF											
	TAIL							○		○		
	HEAD	○						○	○	○		
DIMMER/ PASSING SWITCH	LOWER			○	○							
	UPPER				○	○						
	PASSING	○	○	○	○ ○	○* ○						

NOTE
* indicates continuity when the dimmer switch in the lower beam position.

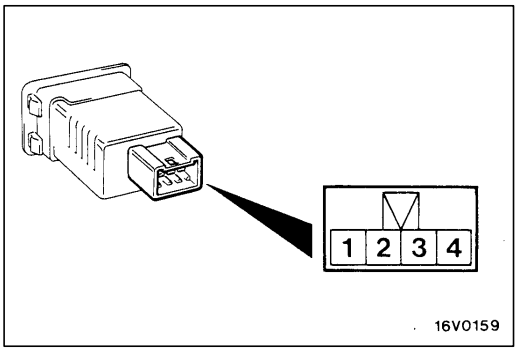

HEADLAMP LEVELING SWITCH CHECK

54200810038

Check the resistance between the terminals when the headlamp leveling switch is operated.

Switch position	0	1	2	3	4
Resistance measurement between terminal No.3 and 4 Ω	120	300	620	1,100	2,000

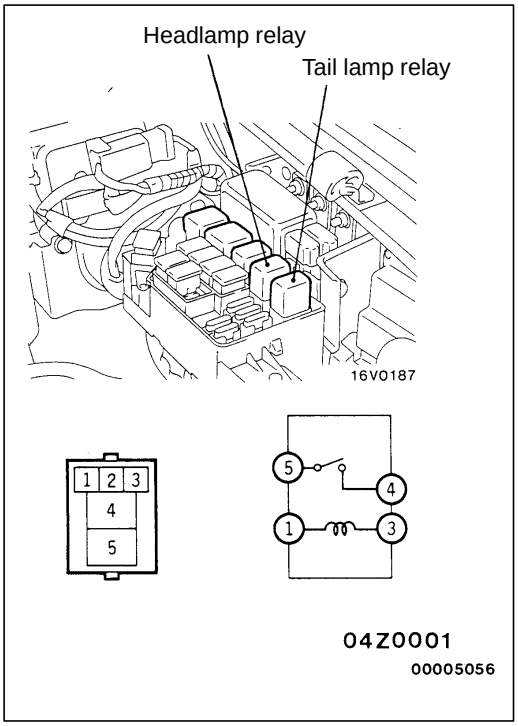

HEADLAMP RELAY AND TAIL LAMP RELAY CONTINUITY CHECK

54200820109

Battery voltage	Terminal No.			
	1	3	4	5
Supplied	⊕	⊖	○	○
Not supplied	○	○		

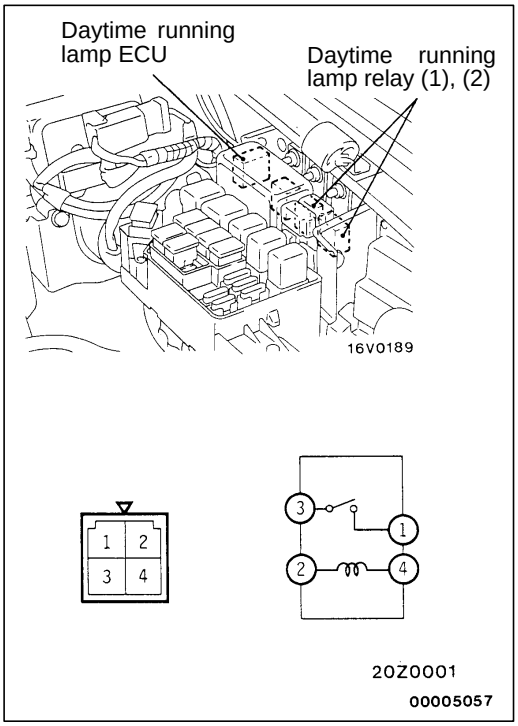

DAYTIME RUNNING LAMP RELAY (1) AND (2) CONTINUITY CHECK <L.H. drive vehicles>

54200830034

Battery voltage	Terminal No.			
	1	2	3	4
Supplied	○	⊕	○	⊖
Not supplied		○		○

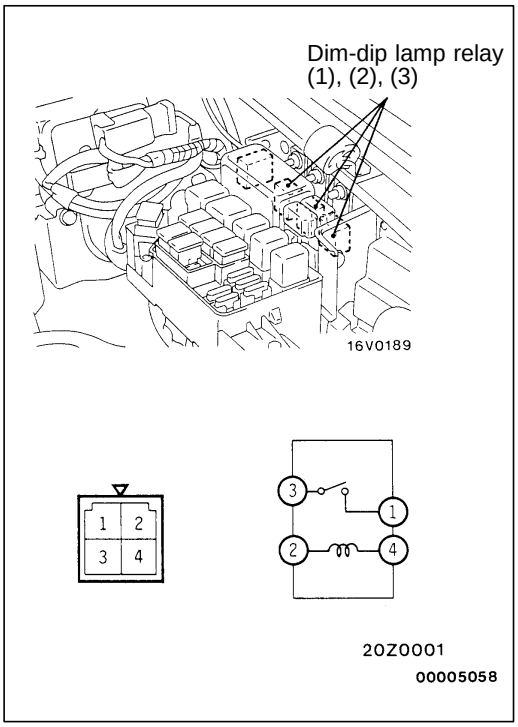

DIM-DIP LAMP RELAY (1), (2) AND (3) CONTINUITY CHECK <R.H. drive vehicles>

54200840020

Battery voltage	Terminal No.			
	1	2	3	4
Supplied	○	⊕	○	⊖
Not supplied		○		○

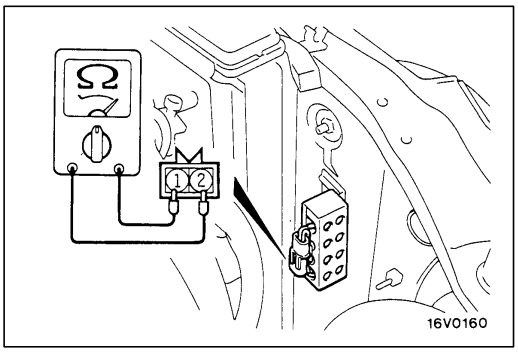

RESISTOR RESISTANCE CHECK <R.H. drive vehicles>

54200850023

Disconnect the resistor connector, and measure the resistance between the terminal No.1 and No.2.

Standard value: Approx. 1 Ω

FRONT COMBINATION LAMP

54200950013

REMOVAL AND INSTALLATION

CAUTION: SRS
Before removal of air bag module and clock spring, refer to GROUP 52B – Service Precautions and Air Bag Module and Clock Spring.

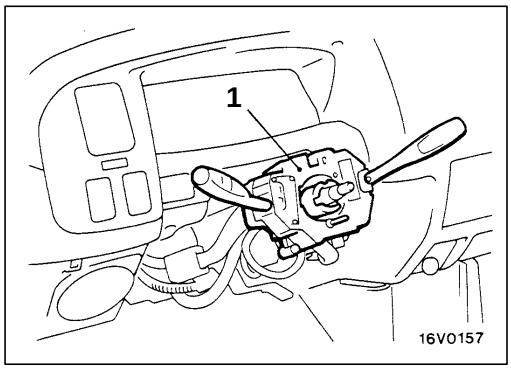

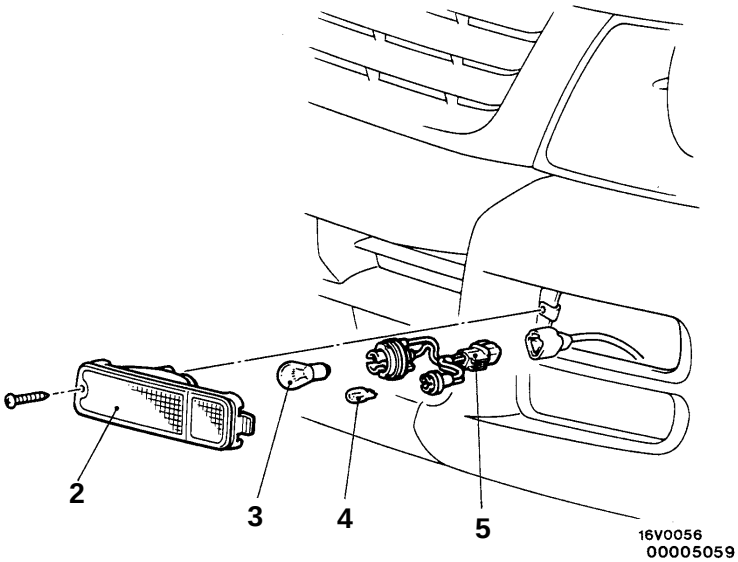

Column switch removal

1. Column switch <Lighting switch and turn-signal lamp switch> (Refer to GROUP 37A – Steering Wheel and Shaft.)

Front combination lamp removal steps

2. Front combination lamp
3. Bulb (For turn-signal lamp)
4. Bulb (For position lamp)
5, Bulb socket assembly

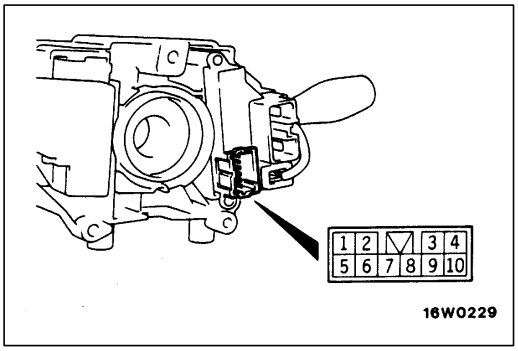

INSPECTION

54200760074

LIGHTING SWITCH AND TURN-SIGNAL LAMP SWITCH CONTINUITY CHECK

Switch position		Terminal No.				
		3	5	7	8	9
LIGHTING SWITCH	OFF					
	TAIL		○	○		
TURN-SIGNAL LAMP SWITCH	R.H.				○	○
	OFF					
	L.H.	○			○	

SIDE TURN-SIGNAL LAMP

54200330053

REMOVAL AND INSTALLATION

CAUTION: SRS
Before removal of air bag module and clock spring, refer to GROUP 52B – Service Precautions and Air Bag Module and Clock Spring.

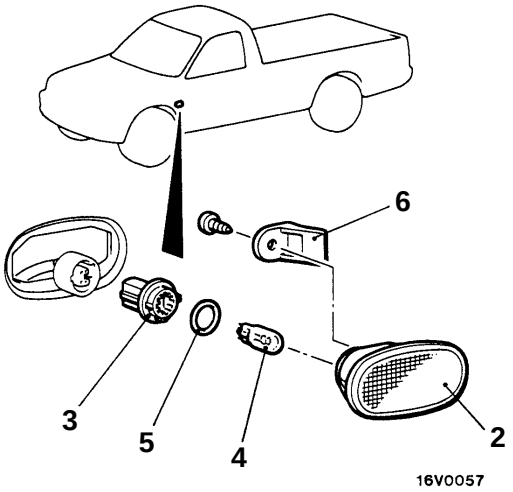

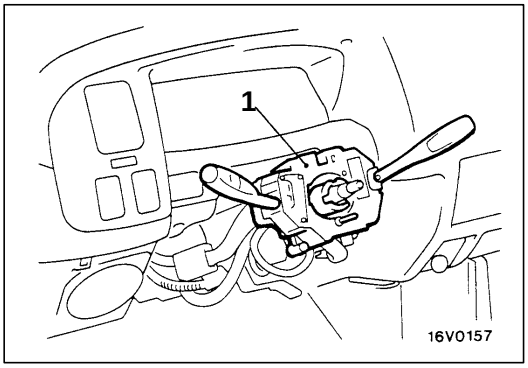

00005060

Column switch removal

1. Column switch <Turn-signal lamp switch> (Refer to GROUP 37A – Steering Wheel and Shaft.)

◀A▶

Side turn-signal lamp removal steps

2. Side turn-signal lamp
3. Bulb socket
4. Bulb
5. Packing
6. Hook

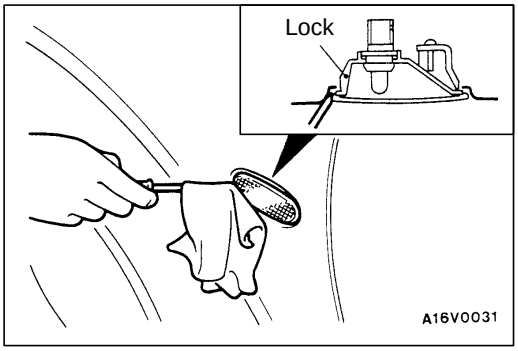

REMOVAL SERVICE POINT

◀A▶ SIDE TURN-SIGNAL LAMP REMOVAL

Use a flat-tipped screw driver or similar tool to remove the lock from the fender panel, and then remove the side turn-signal lamp.

INSPECTION

54200760081

TURN-SIGNAL LAMP SWITCH CONTINUITY CHECK

Refer to P.54-51.

REAR COMBINATION LAMP

54200390075

REMOVAL AND INSTALLATION

Caution: SRS
Before removal of air bag module and clock spring, refer to GROUP 52B – SRS Service Precautions and Air Bag Module and Clock Spring.

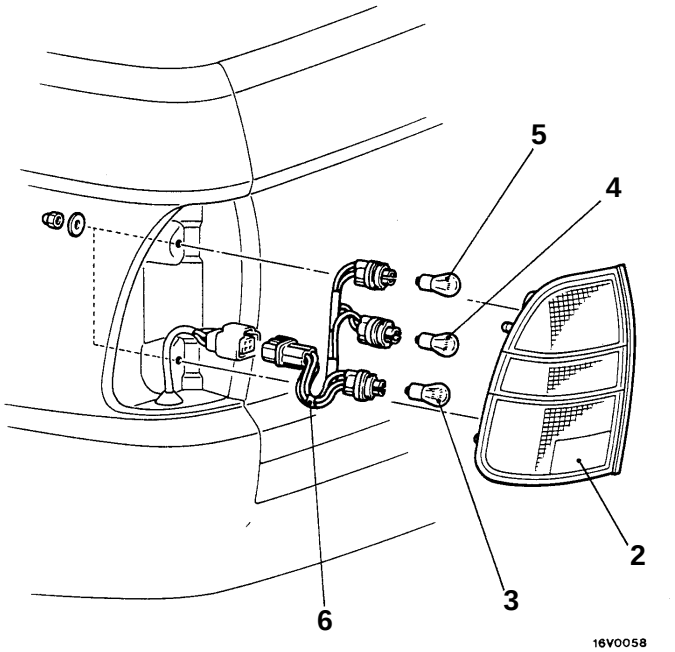

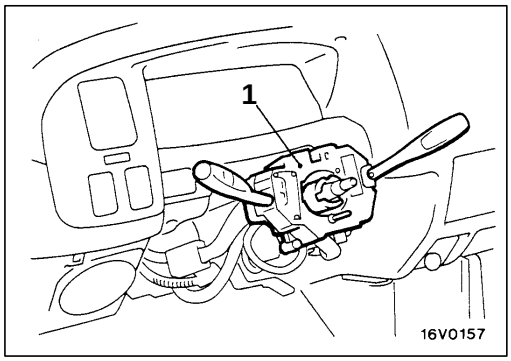

00005061

1. Column switch <Lighting switch and turn-signal lamp switch> (Refer to GROUP 37A – Steering Wheel and Shaft.)

Rear combination lamp removal steps

2. Rear combination lamp
3. Bulb (For tail and stop lamp)
4. Bulb (For back-up lamp)
5. Bulb (For turn-signal lamp)
6. Bulb socket assembly

INSPECTION

54200760098

LIGHTING SWITCH AND TURN-SIGNAL LAMP SWITCH CONTINUITY CHECK

Refer to P.54-51.

TAIL LAMP RELAY CONTINUITY CHECK

54200780094

Refer to P.54-49.

REAR FOG LAMP

54200060334

SPECIAL TOOL

Tool	Number	Name	Use
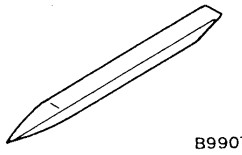	MB990784	Ornament remover	Fog lamp switch removal

REAR FOG LAMP

54200980012

REMOVAL AND INSTALLATION

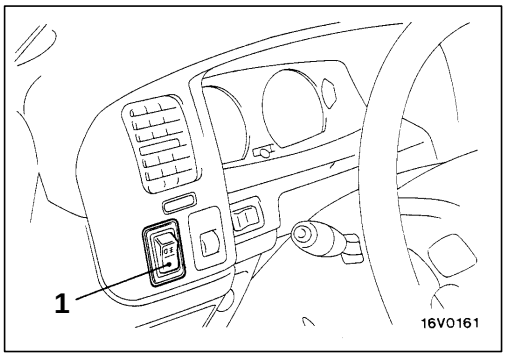

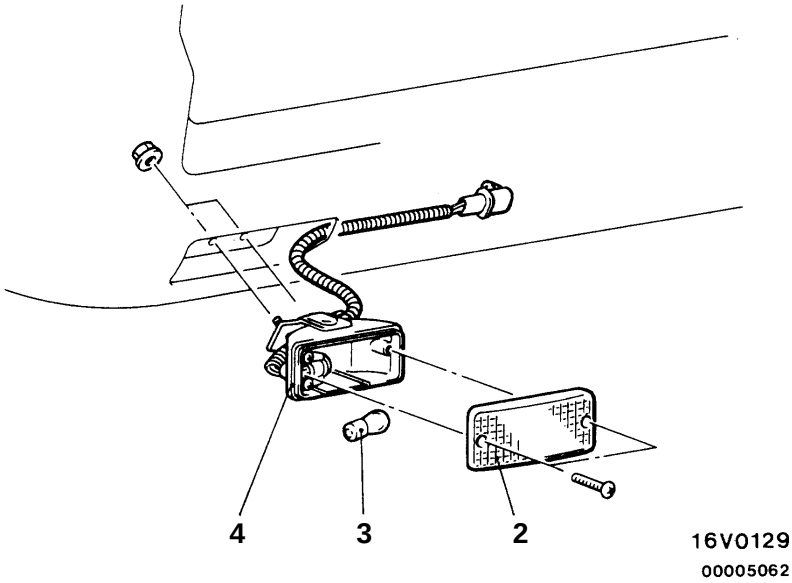

Removal steps

1. Rear fog lamp switch
2. Lens
3. Bulb
4. Rear fog lamp body assembly

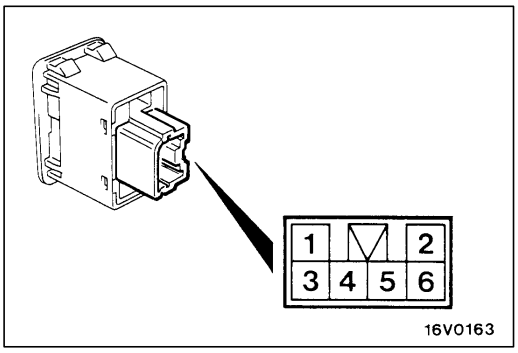

INSPECTION

54200920014

REAR FOG LAMP SWITCH CONTINUITY CHECK

Switch position	Terminal No.				
	1	ILL	2	3	6
OFF	○	⦶		○	
ON	○	⦶	○	○	○

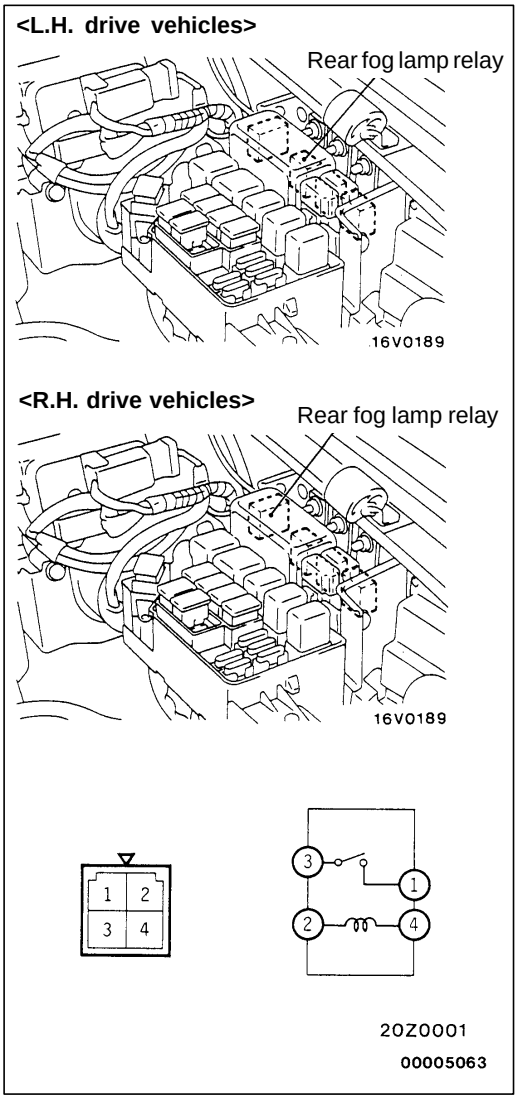

REAR FOG LAMP RELAY CONTINUITY CHECK

54200930017

Battery voltage	Terminal No.			
	1	2	3	4
Supplied	○	⊕	○	⊖
Not supplied		○		○

RHEOSTAT

54200060341

SPECIAL TOOL

Tool	Number	Name	Use
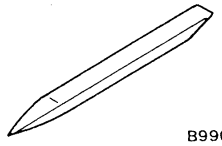 B990784	MB990784	Ornament remover	Rheostat removal

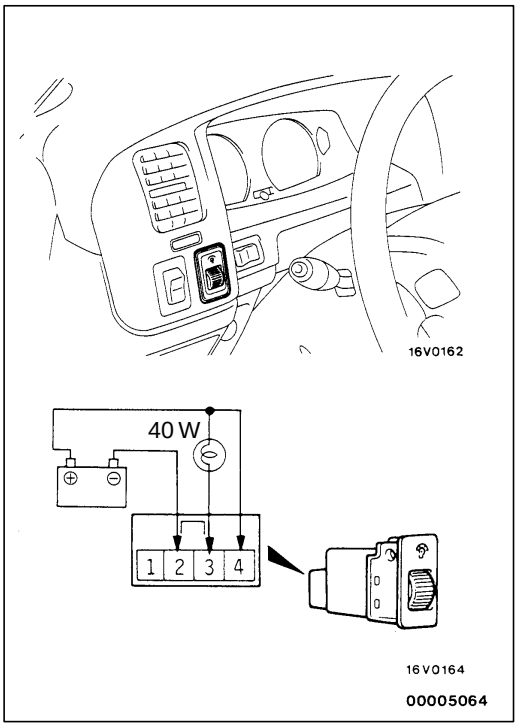

RHEOSTAT

54200610096

INSPECTION

1. Connect the battery and the test lamp (40 W) as shown in the illustration.
2. Operate the rheostat and if the brightness changes smoothly without switching off, then the rheostat function is normal.

HAZARD WARNING LAMP SWITCH

54200060358

SPECIAL TOOL

Tool	Number	Name	Use
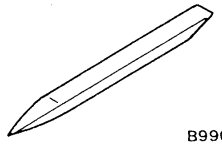 B990784	MB990784	Ornament remover	Meter bezel assembly removal

HAZARD WARNING LAMP SWITCH

54200660084

REMOVAL AND INSTALLATION

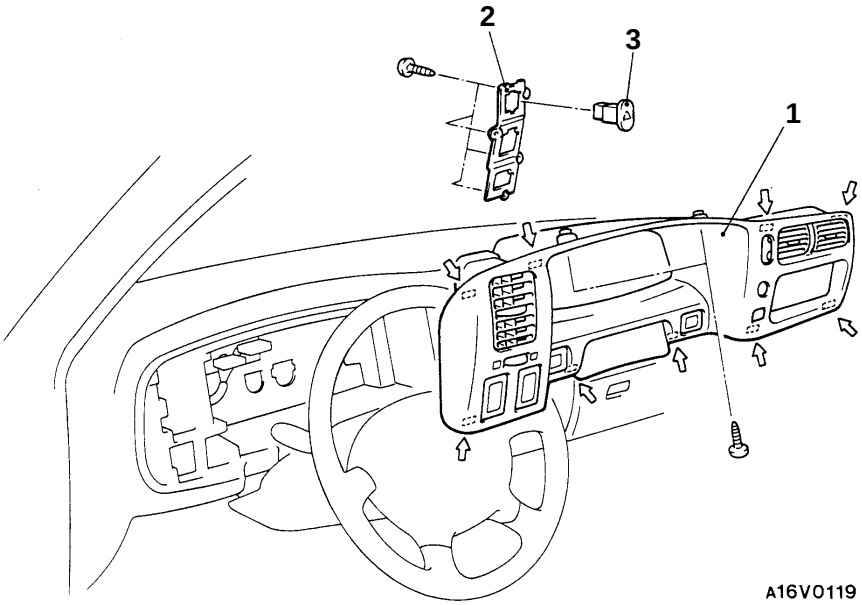

NOTE
⇦ : metal clip position

Removal steps

1. Meter bezel assembly
2. Switch holder
3. Hazard warning lamp switch

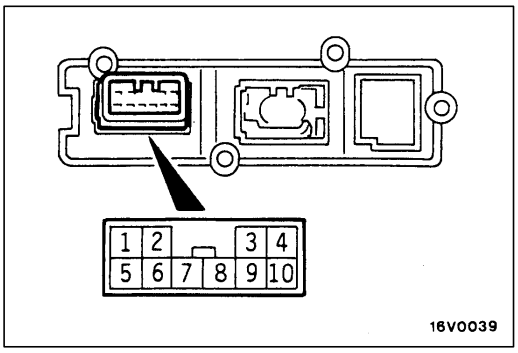

INSPECTION

54200670100

HAZARD WARNING LAMP SWITCH CONTINUITY CHECK

Switch position	Terminal No.								
	1	2	4	5	6	7	9	ILL	10
OFF									
ON				○		○	○	⊘	○
	○	○	○	○	○		○	⊘	○

HORN

54300790038

REMOVAL AND INSTALLATION

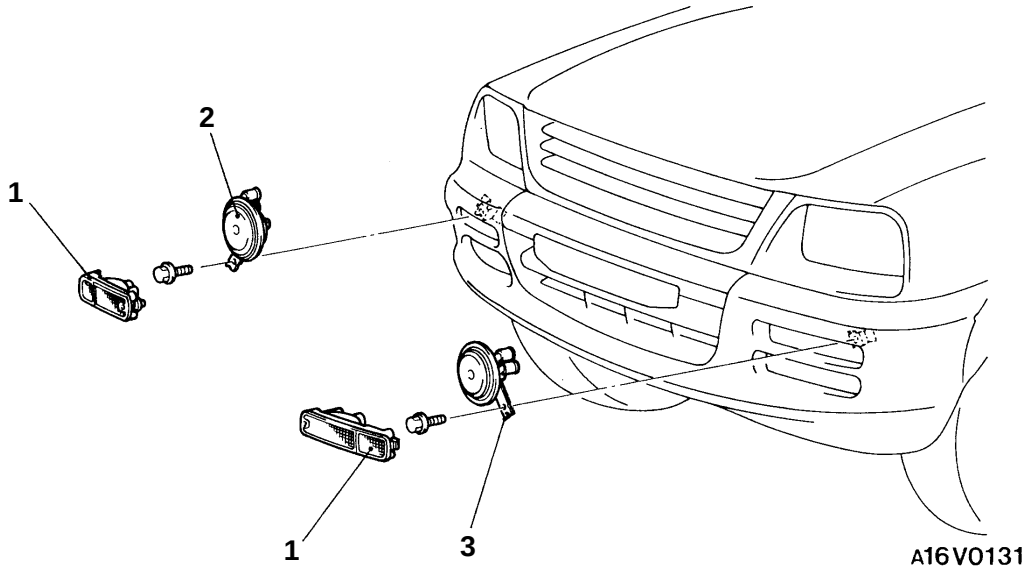

Removal steps

1. Front combination lamp
2. Horn (High sound)
3. Horn (Low sound)

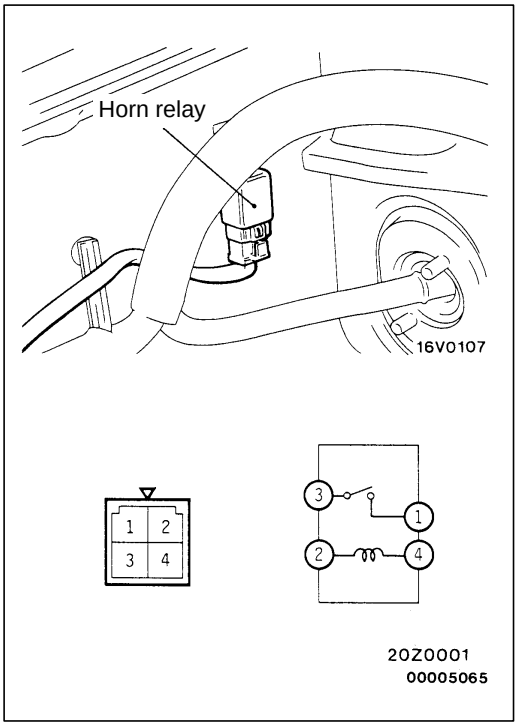

INSPECTION

54200650012

HORN RELAY CONTINUITY CHECK <Vehicles with SRS>

Battery voltage	Terminal No.			
	1	2	3	4
Supplied	○	⊕	○	⊖
Not supplied		○		○

CIGARETTE LIGHTER

54300560097

REMOVAL AND INSTALLATION

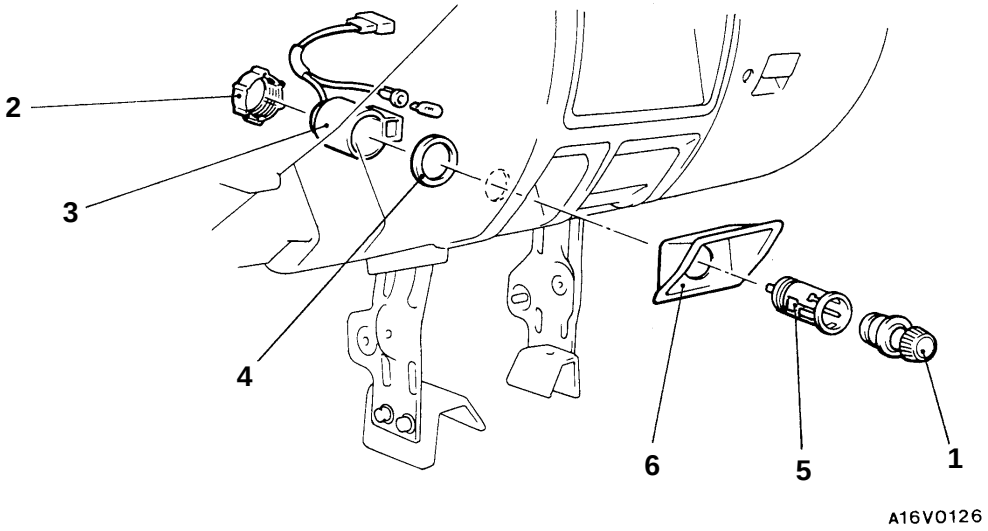

Removal steps

- Front floor console assembly (Refer to GROUP 52A.)

1. Plug
2. Fixing ring
3. Socket case
4. Socket washer
5. Socket
6. Protector

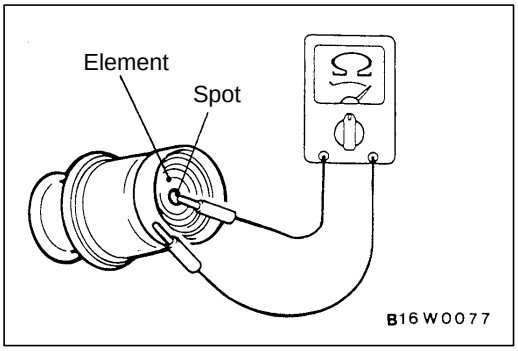

INSPECTION

54300570113

- Take out the plug, and check for a worn edge on the element spot connection, and for shreds of tobacco or other material on the element.
- Using a circuit tester, check the continuity of the element.

CLOCK

54300060252

SPECIAL TOOL

Tool	Number	Name	Use
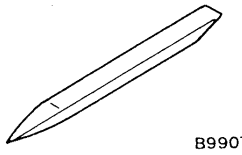	MB990784	Ornament remover	Meter bezel assembly removal

CLOCK

54300590058

REMOVAL AND INSTALLATION

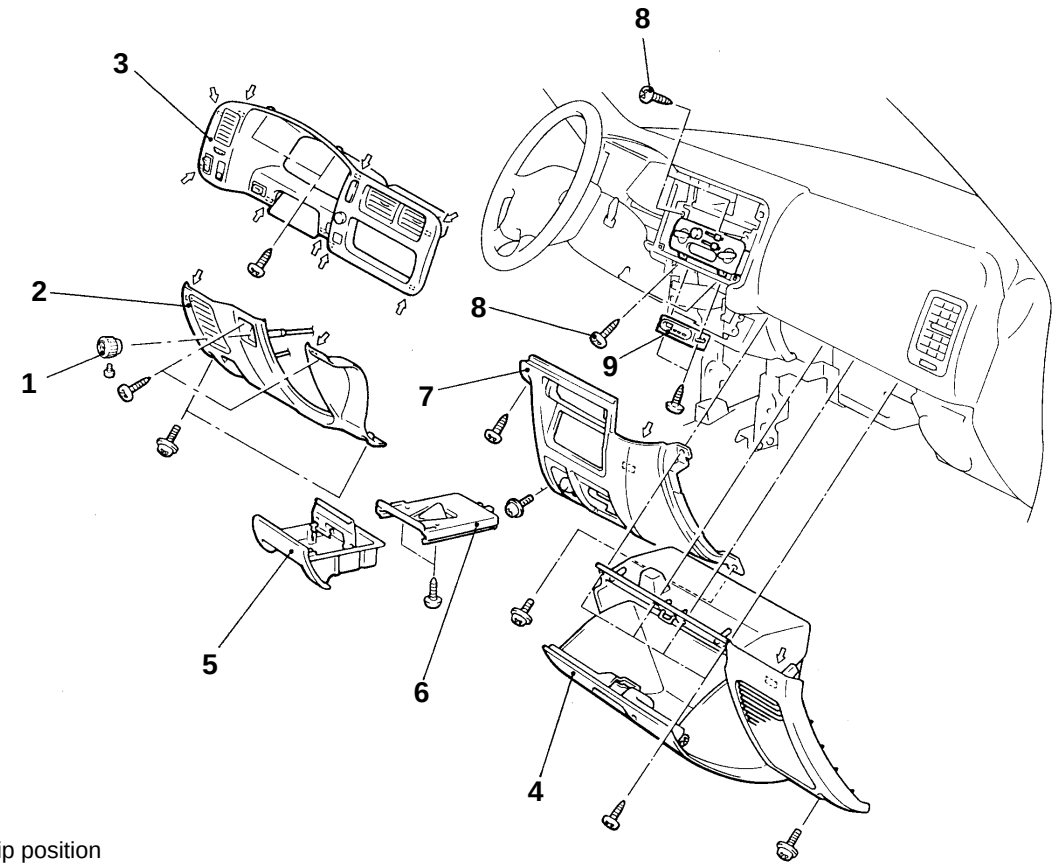

NOTE
⇦: metal clip position

A16V0122

Removal steps

- Front floor console assembly (Refer to GROUP 52A.)
1. Throttle cable knob <Diesel-powered vehicles>
2. Driver's side under cover
3. Meter bezel assembly
4. Glove box assembly
5. Ashtray
6. Ashtray bracket
7. Center under cover
8. Heater control panel assembly mounting screw
9. Clock

RADIO AND TAPE PLAYER

54400060057

SPECIAL TOOL

Tool	Number	Name	Use
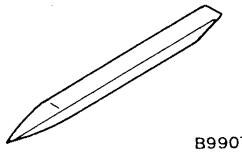	MB990784	Ornament remover	Meter bezel assembly removal

TROUBLESHOOTING

54400070142

QUICK-REFERENCE TROUBLESHOOTING CHART

Items	Problem symptom	Relevant chart
Noise	Noise appears at certain places when travelling (AM).	A-1
	Noise appears at certain places when travelling (FM).	A-2
	Mixed with noise, only at night (AM).	A-3
	Broadcasts can be heard but both AM and FM have a lot of noise.	A-4
	There is more noise either on AM or on FM.	A-5
	There is noise when starting the engine.	A-6
	Some noise appears when there is vibration or shocks during travelling.	A-7
	Noise sometimes appears on FM during travelling.	A-8
	Ever-present noise.	A-9
Radio	When switch is set to ON, no power is available.	B-1
	No sound from one speaker.	B-2
	There is noise but no reception for both AM and FM or no sound from AM, or no sound from FM.	B-3
	Insufficient sensitivity.	B-4
	Distortion on AM or on both AM and FM.	B-5
	Distortion on FM only.	B-6
	Too few automatic select stations.	B-7
	Insufficient memory (preset stations are erased).	B-8

NOTE
Refer to problem symptoms of AM radio for MW radio.

Items	Problem symptom	Relevant chart
Tape player	Cassette tape will not be inserted.	C-1
	No sound.	C-2
	No sound from one speaker.	C-3
	Sound quality is poor, or sound is weak.	C-4
	Cassette tape will not be ejected.	C-5
	Uneven revolution. Tape speed is fast or slow.	C-6
	Faulty auto reverse.	C-7
	Tape gets caught in mechanism.	C-8

CHART

A. NOISE

A-1 Noise appears at certain places when travelling (AM).

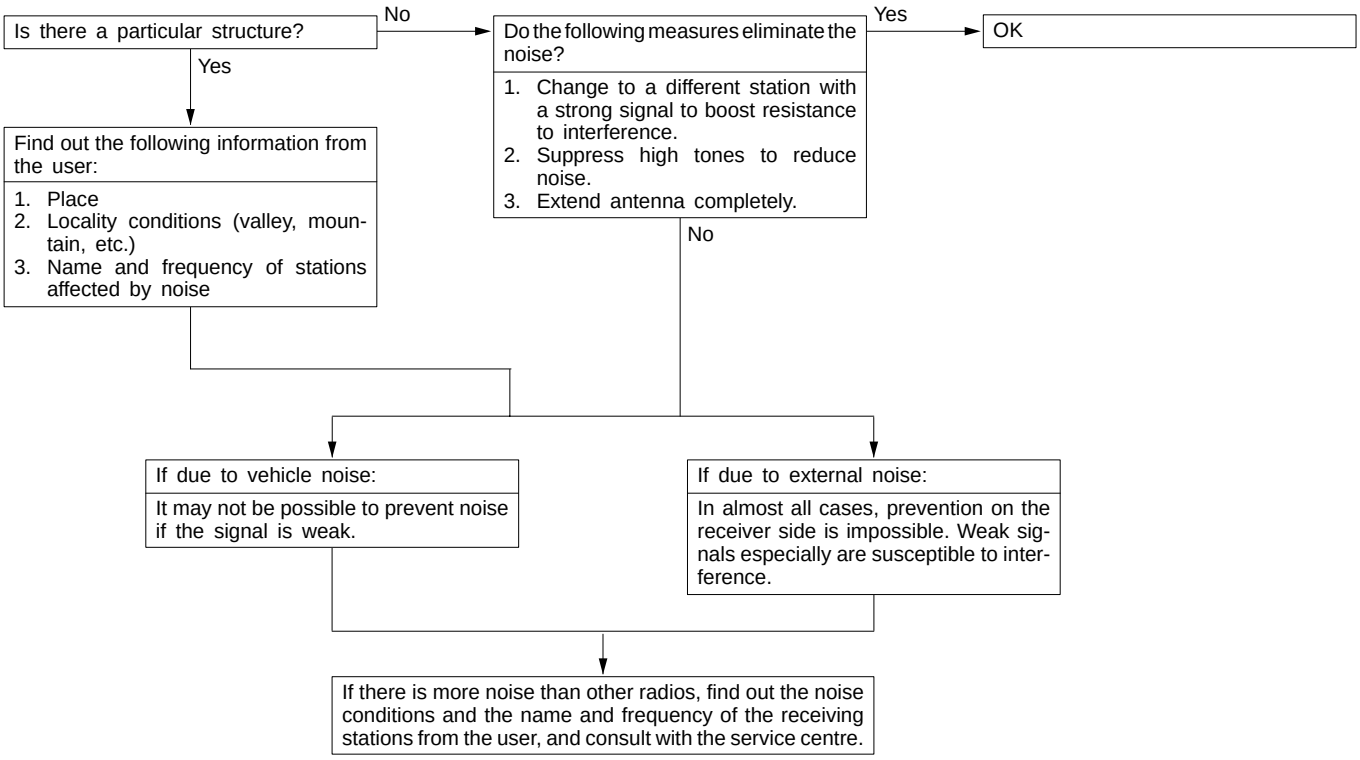

A-2 Noise appears at certain places when travelling (FM).

Do the following measures eliminate the noise?

- Change to a different station with a strong signal to boost resistance to interference.
- Suppress high tones to reduce noise.
- Extend antenna completely.

Yes → OK

No ↓

If there is more noise than other radios, find out the noise conditions and the name and frequency of the receiving stations from the user, and consult with the service centre.

NOTE
About FM waves:
FM waves have the same properties as light, and can be deflected and blocked. Wave reception is not possible in the shadow of obstructions such as buildings or mountains.

1. The signal becomes weak as the distance from the station's transmission antenna increases. Although this may vary according to the signal strength of the transmitting station and intervening geographical formation or buildings, the area of good reception is approx. 20–25 km for stereo reception, and 30–40 km for monaural reception.
2. The signal becomes weak when an area of shadow from the transmitting antenna (places where there are obstructions such as mountains or buildings between the antenna and the car), and noise will appear. <This is called first fading, and gives a steady buzzing noise.>
3. If a direct signal hits the antenna at the same time as a signal reflected by obstructions such as mountains or buildings, interference of the two signals will generate noise. During travelling, noise will appear each time the vehicle's antenna passes through this kind of obstructed area. The strength and interval of the noise varies according to the signal strength and the conditions of deflection. <This is called multipath noise, and is a repetitious buzzing.>
4. Since FM stereo transmission and reception has a weaker field than monaural, it is often accompanied by a hissing noise.

FM Broadcast Good Reception Areas

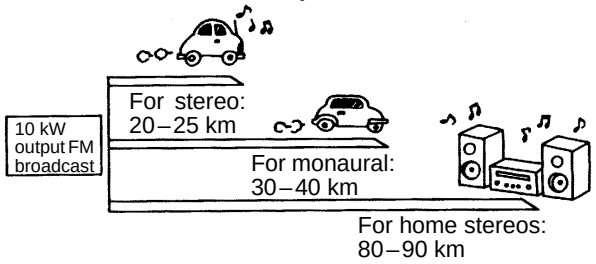

FM Signal Characteristics and Signal Interference

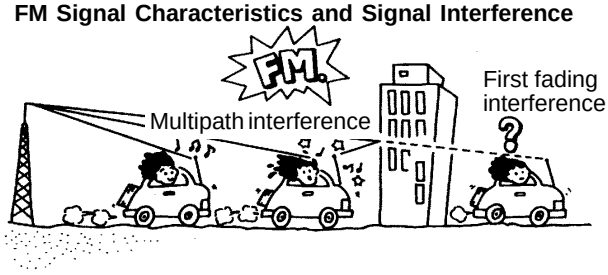

16W0268

A-3 Mixed with noise, only at night (AM).

The following factors can be considered as possible causes of noise appearing at night.

1. Factors due to signal conditions: Due to the fact that long-distance signals are more easily received at night, even stations that are received without problem during the day may experience interference in a general worsening of reception conditions. The weaker a station is the more susceptible it is to interference, and a change to a different station or the appearance of a beating sound* may occur.
   Beat sound*: Two signals close in frequency interfere with each other, creating a repetitious high-pitched sound. This sound is generated not only by sound signals but by electrical waves as well.
2. Factors due to vehicle noise: Alternator noise may be a cause.

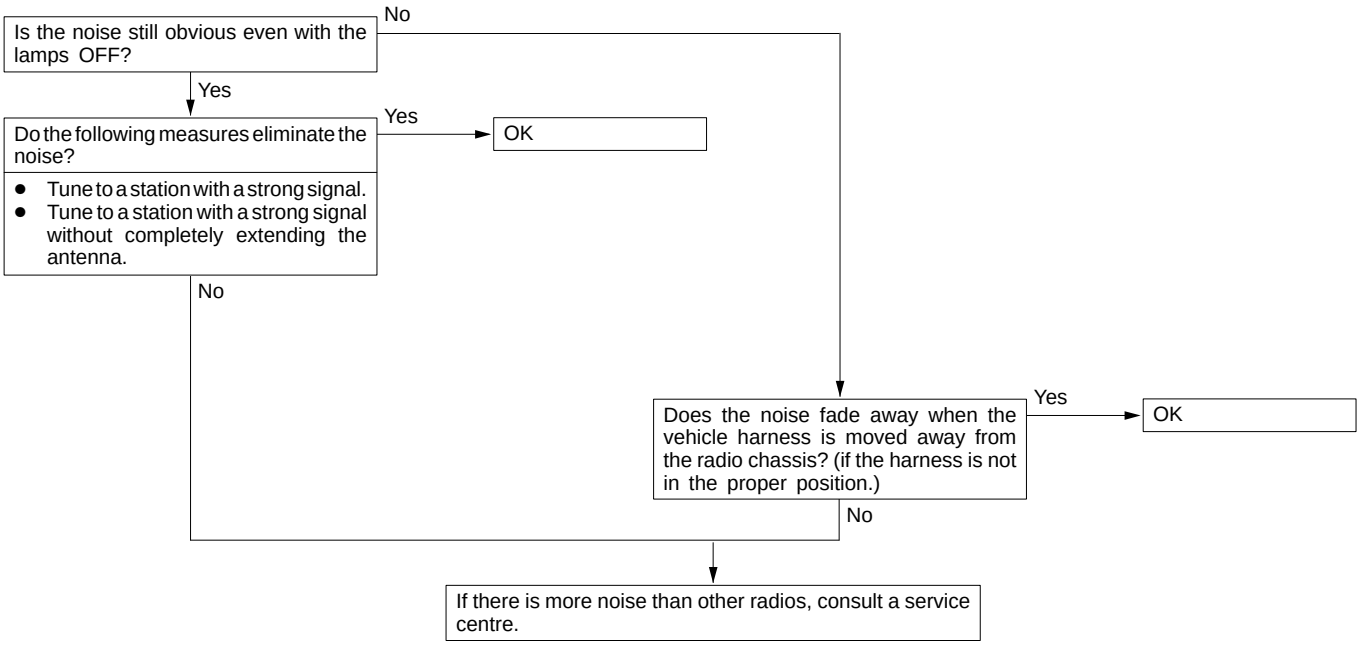

A-4 Broadcasts can be heard but both AM and FM have a lot of noise.

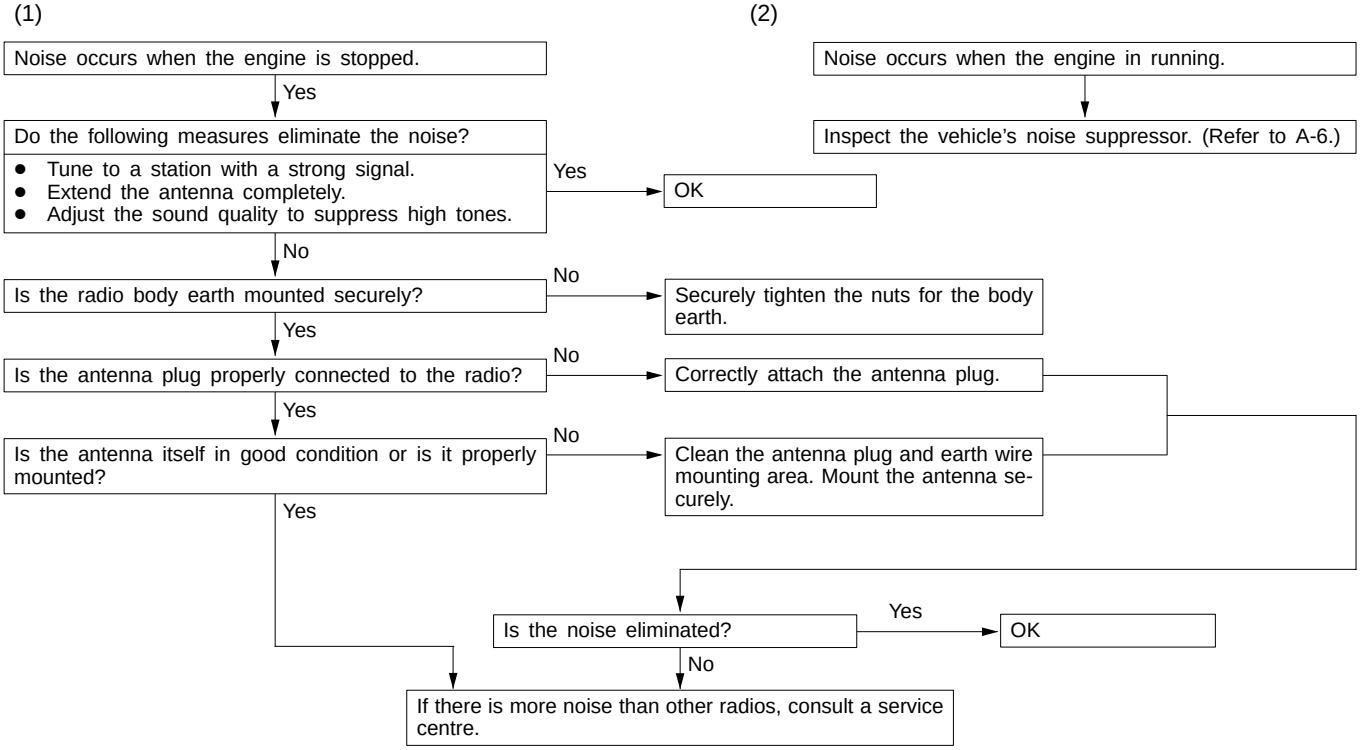

NOTE
About noise encountered during FM reception only. Due to differences in FM and AM systems, FM is not as susceptible as AM to interference from engines, power lines, lightning, etc. On the other hand, there are cases due to the characteristics of FM waves of noise or distortion generated by typical noise interference (first fading and multipath). (Refer to A-2.)
<Noise (hissing) occurs in weak signal areas such as mountainous regions, but this is not due to a problem with the radio.>

A-5 There is more noise either on AM or on FM.

1. There is much noise only on AM.
   Due to differences in AM and FM systems, AM is more susceptible to noise interference.

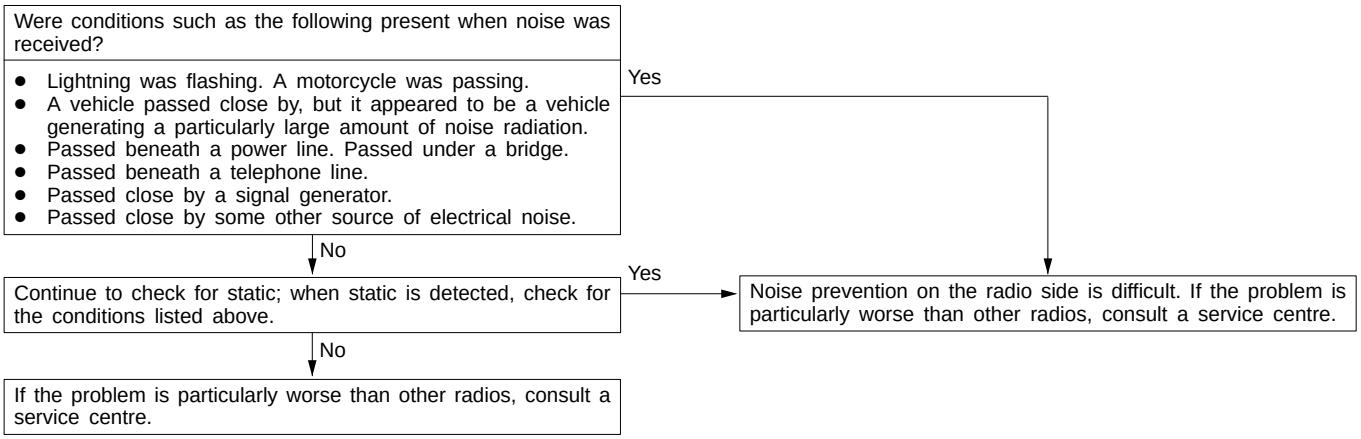

2. There is much noise only on FM.
   Due to differences in FM and AM systems, FM is not as susceptible as AM to interference from engines, power lines, lightning, etc. On the other hand, there are cases due to the characteristics of FM waves of noise or distortion generated by typical noise interference (first fading and multipath). (Refer to A-2) <Noise (hissing) occurs in weak signal areas such as mountainous regions, but this is not due to a problem with the radio.>

A-6 There is noise when starting the engine.

Noise type Sounds are in parentheses ( ).	Conditions	Cause	Remedy
AM, FM: Ignition noise (Popping, snapping, cracking, buzzing)	● Increasing the engine speed causing the popping sound to speed up, and volume decreases. ● Disappears when the ignition switch is turned to ACC.	● Mainly due to the spark plugs. ● Due to the engine noise.	● Check or replace the earth cable. (Refer to Fig. 1, 2, 3 and 4 on P.54-67, 68.) ● Check or replace the noise capacitor. (Refer to Fig. 5 and 6 on P.54-68.)
Other electrical components	–	Noise may appear as electrical components become older.	Repair or replace electrical components.
Static electricity (Cracking, crinkling)	● Disappears when the vehicle is completely stopped. ● Severe when the clutch is engaged.	Occurs when parts or wiring move for some reason and contact metal parts of the body.	Return parts or wiring to their proper position.
	● Various noises are produced depending on the body part of the vehicle.	Due to detachment from the body of the front hood, bumpers, exhaust pipe and muffler, suspension, etc.	Tighten the mounting bolts securely. Cases where the problem is not eliminated by a single response to one area are common, due to several body parts being imperfectly earthed.

Caution

1. **Connecting a high tension cable to the noise filter may destroy the noise filter and should never be done.**
2. **Check that there is no external noise. Since failure caused by this may result in misdiagnosis due to inability to identify the noise source, this operation must be performed.**
3. **Noise prevention should be performed by suppressing strong sources of noise step by step.**

NOTE

1. Capacitor
   The capacitor does not pass D.C. current, but as the number of waves increases when it passes A.C. current, impedance (resistance against A.C.) decreases, and current flow is facilitated. A noise suppressing condenser which takes advantage of this property is inserted between the power line for the noise source and the earth. This suppresses noise by earthing the noise component (A.C. or pulse signal) to the body of the vehicle.
2. Coil
   The coil passes D.C. current, but impedance rises as the number of waves increases relative to the A.C. current. A noise suppressing coil which takes advantage of this property is inserted into the power line for the noise source, and works by preventing the noise component from flowing or radiating out of the line.

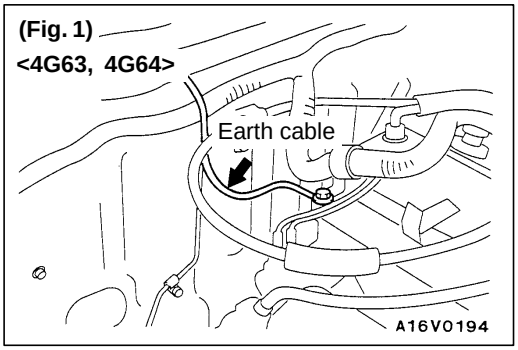

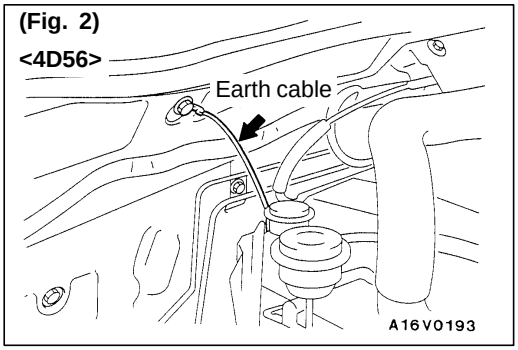

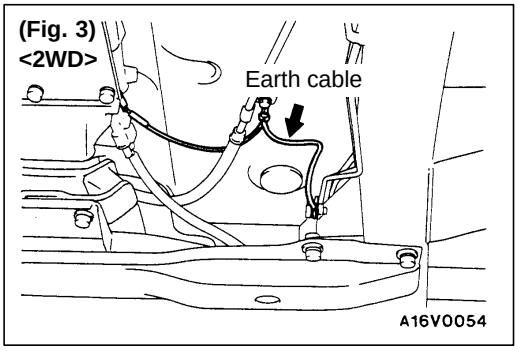

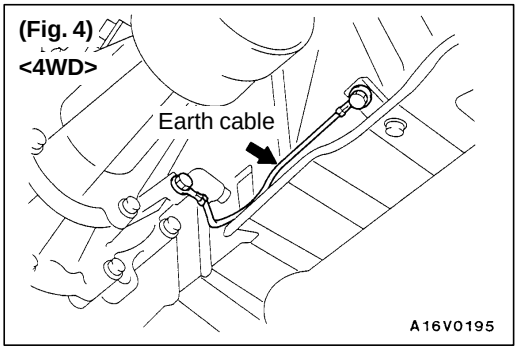

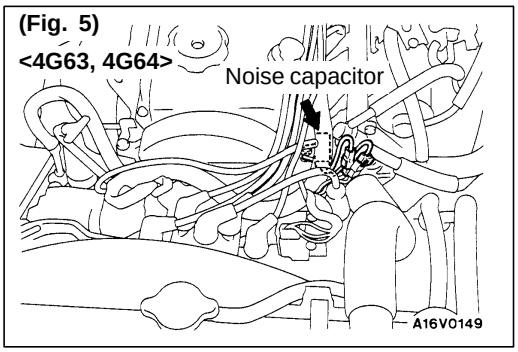

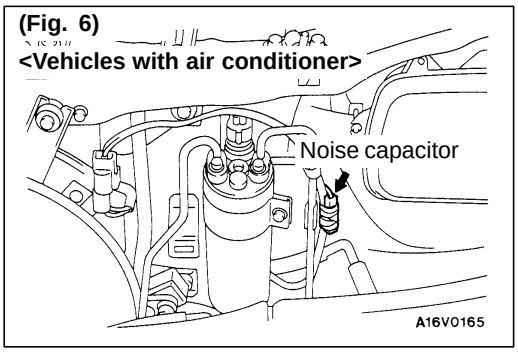

A-7 Some noise appears when there is vibration or shocks during travelling.

- Are connectors properly connected?
  - No → Ensure proper connection.
  - Yes ↓
- Does noise appear when the radio switch is turned on while the vehicle is stopped and the radio is struck while tuned away from a station?
  - No → Static electricity noise: Body static electric from the shock absorber rubber bushings used to prevent vibration, tyres, etc. occurs because of separation from the earth, causing a buzzing noise. Since no measures can be taken on the radio side, other steps should be taken to discharge the static electricity of the vehicle body.
  - Yes ↓
- Is the radio correctly earthed? (Is the mounting screw tightened securely?)
  - No → Tighten the screw securely.
  - Yes ↓
- Is the antenna correctly earthed? (If noise appears when the antenna is moved, this means the earth is not securely connected.)
  - No → If rust is present at the antenna earth screw, clean and tighten the earth securely.
  - Yes ↓
- Repair or replace radio.

A-8 Noise sometimes appears on FM during travelling.

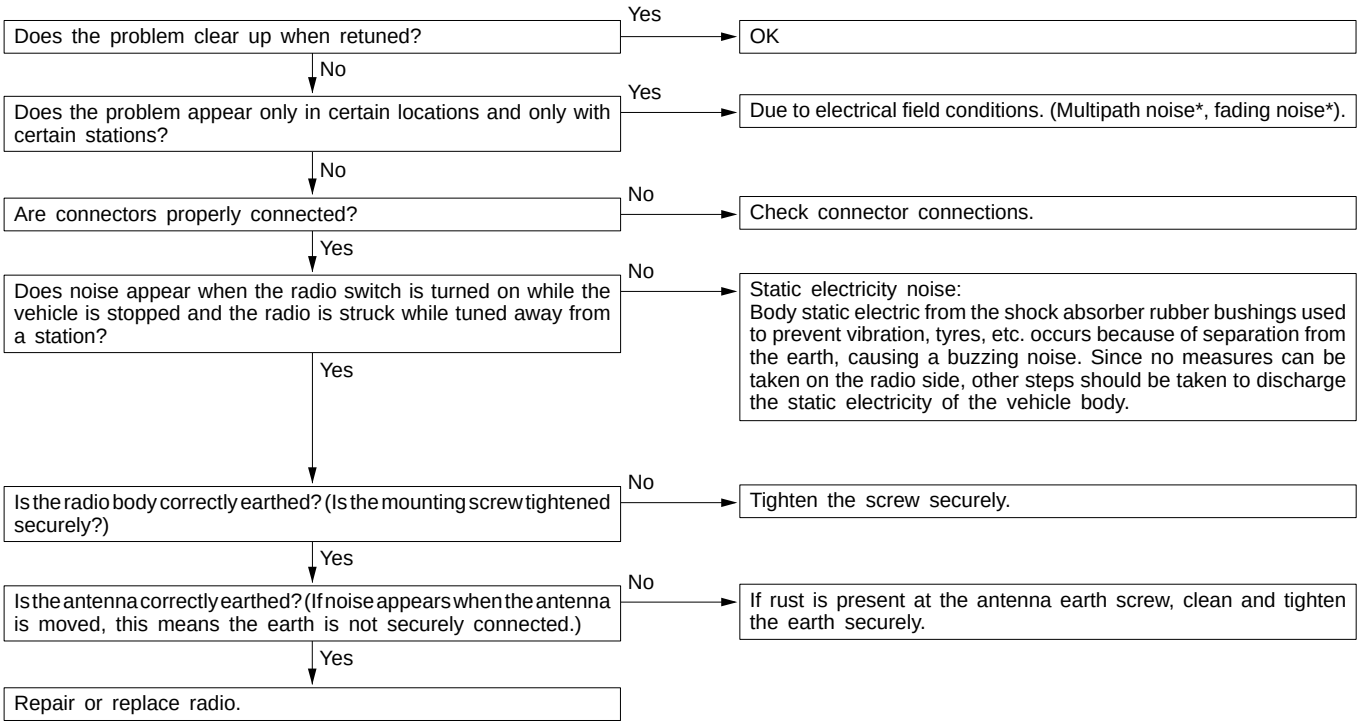

* About multipath noise and fading noise
Because the frequency of FM waves is extremely high, it is highly susceptible to effects from geological formations and buildings. These effects disrupt the broadcast signal and obstruct reception in several ways.

- Multipath noise
  This describes the echo that occurs when the broadcast signal is reflected by a large obstruction and enters the receiver with a slight time delay relative to the direct signal (repetitious buzzing).
- Fading noise
  This is a buzzing noise that occurs when the broadcast beam is disrupted by obstructing objects and the signal strength fluctuates intricately within a narrow range.

A-9 Ever-present noise.

Noise is often created by the following factors, and often the radio is OK when it is checked individually.

- Travelling conditions of the vehicle
- Terrain of area travelled through
- Surrounding buildings
- Signal conditions
- Time period

For this reason, if there are still problems with noise even after the measures described in steps A-1 to A-8 have been taken, get information on the factors listed above as well as determining whether the problem occurs with AM or FM, the station names, frequencies, etc., and contact a service centre.

B. RADIO

B-1 No power is supplied when the switch is set to ON.

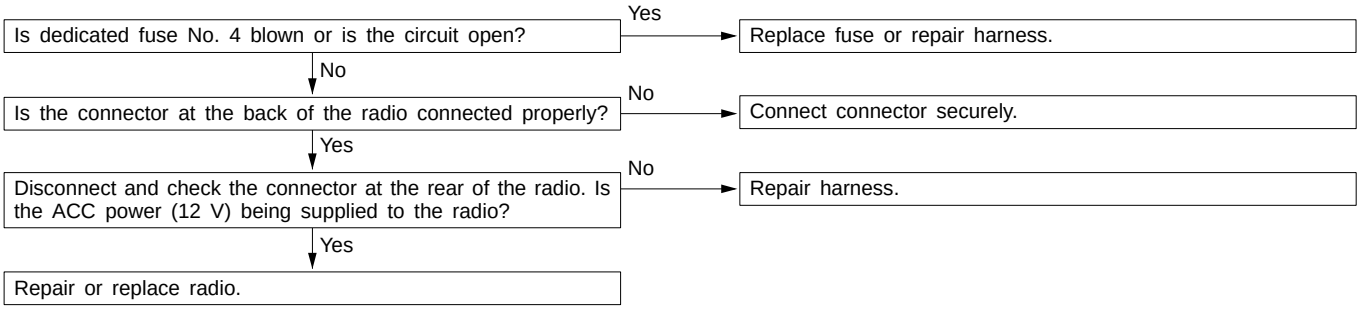

B-2 No sound from one speaker.

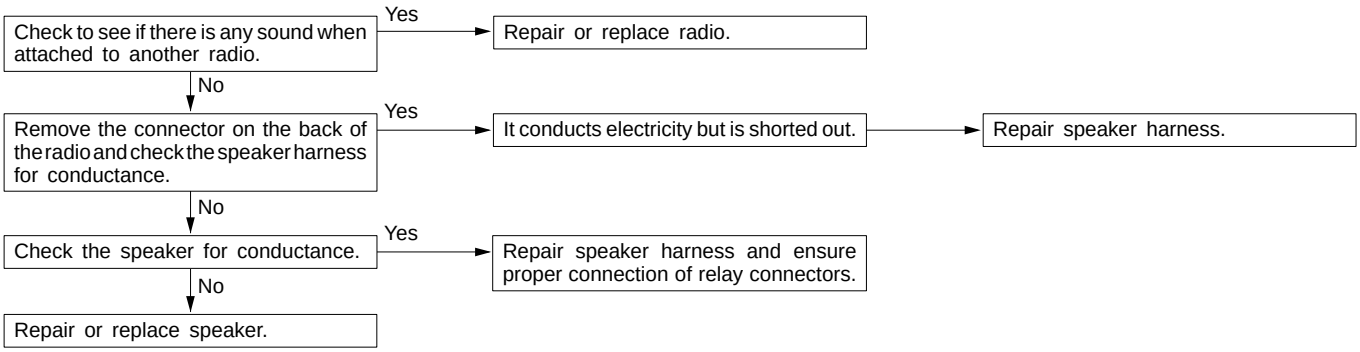

B-3 There is noise but no reception for both AM and FM or no sound from AM, or no sound from FM.

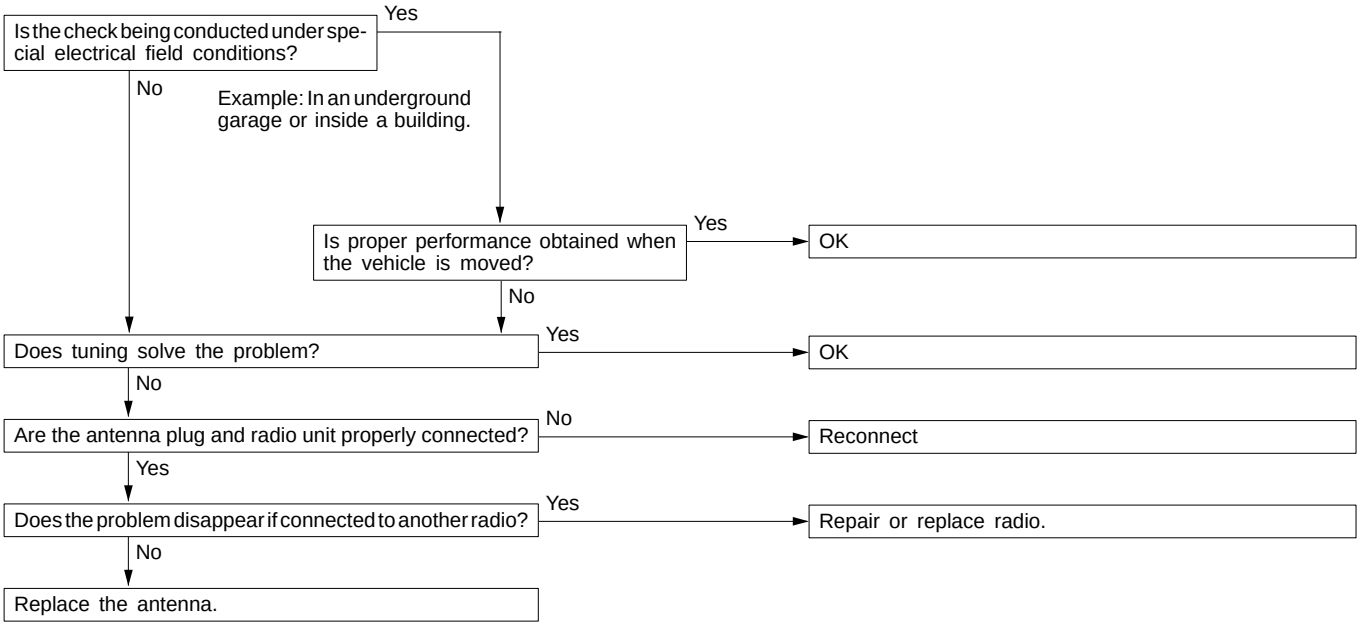

B-4 Insufficient sensitivity.

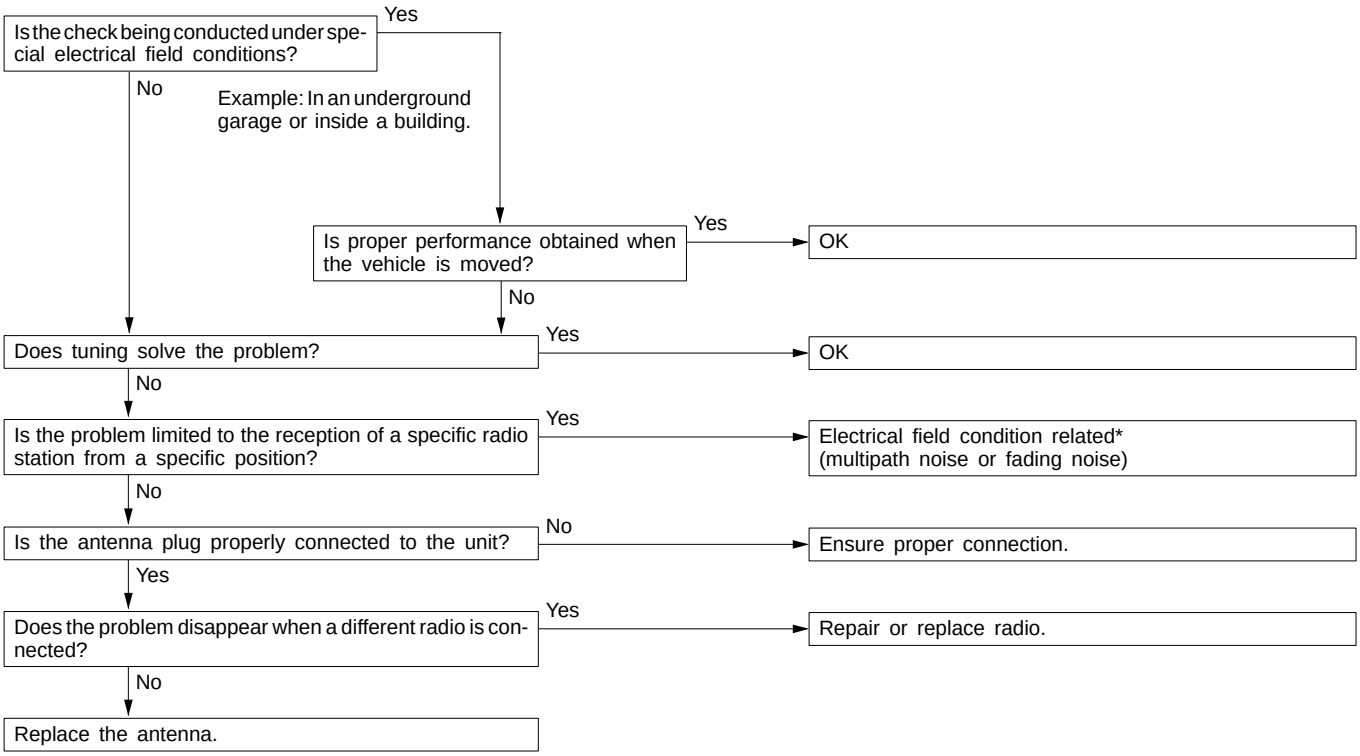

* For multipath noise and fading noise problems, refer to P. 54-69.

B-5 Distortion on AM or on both AM and FM.

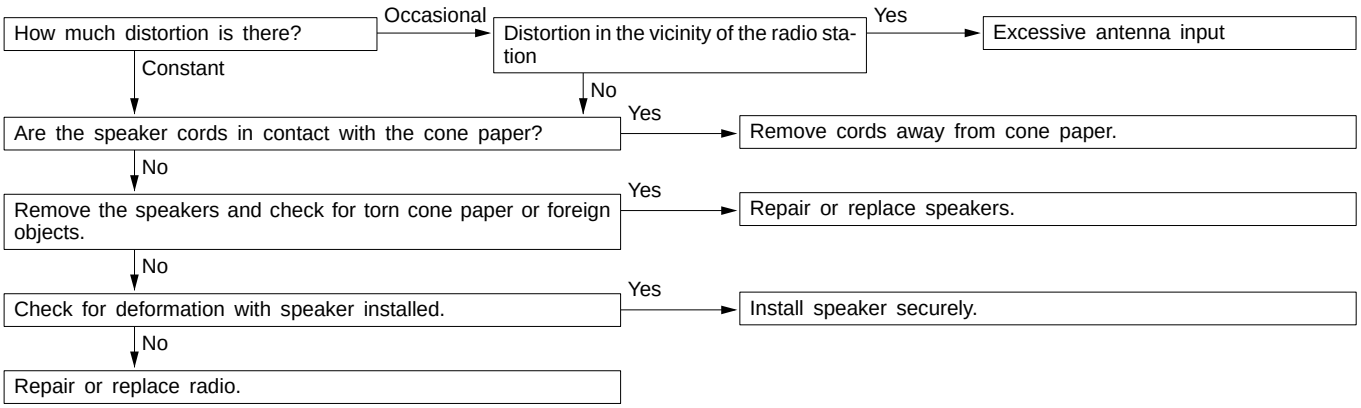

B-6 Distortion on FM only

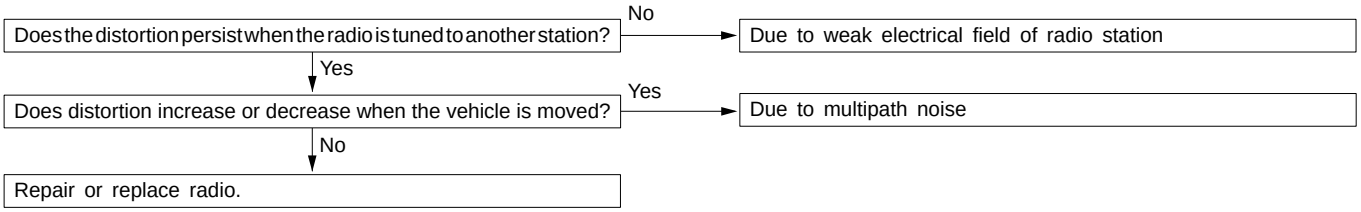

B-7 Too few automatic select stations.

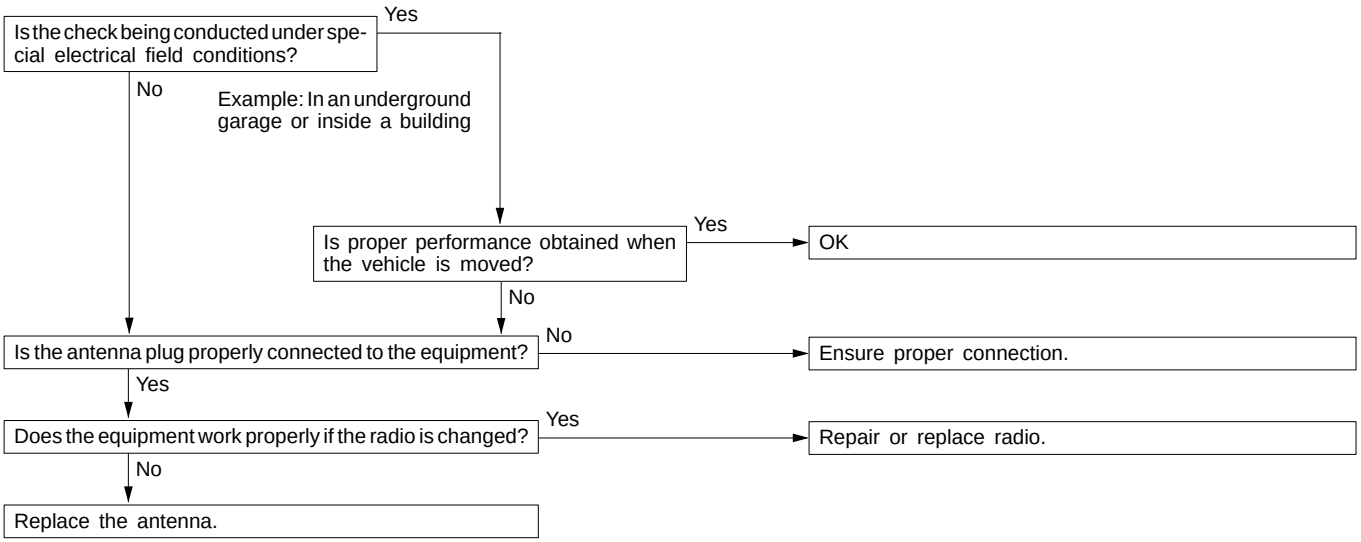

B-8 Insufficient memory (preset stations are erased).

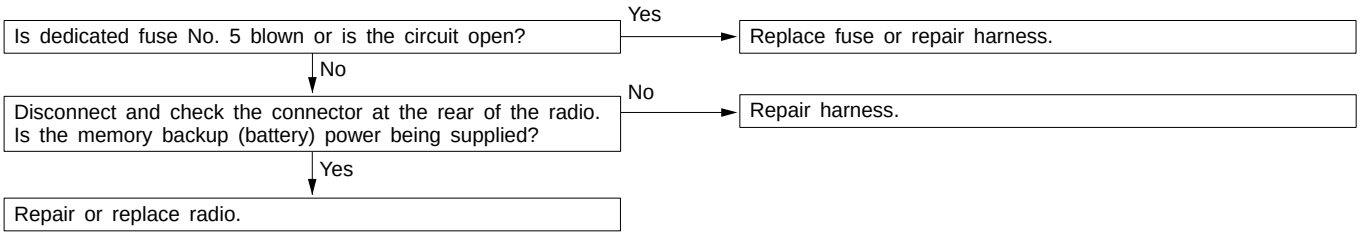

C. TAPE PLAYER

C-1 Cassette tape will not be inserted.

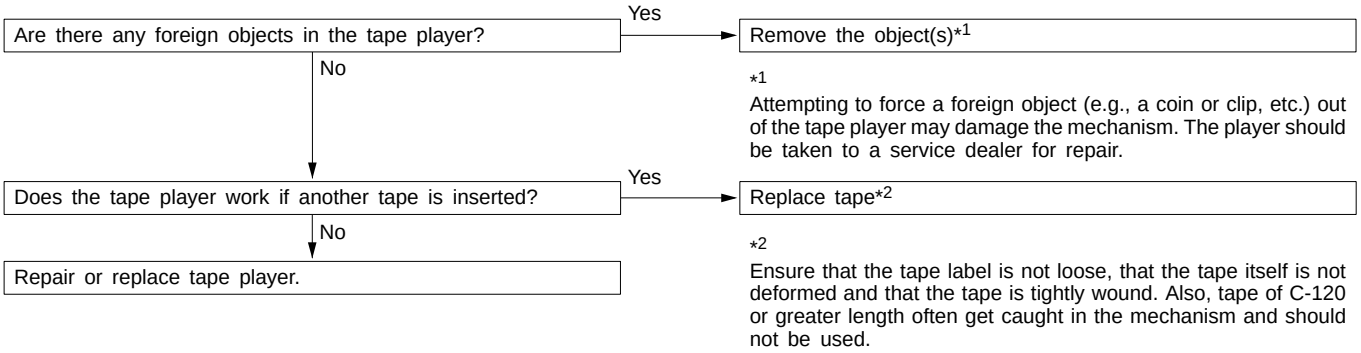

C-2 No sound (even after a tape has been inserted).

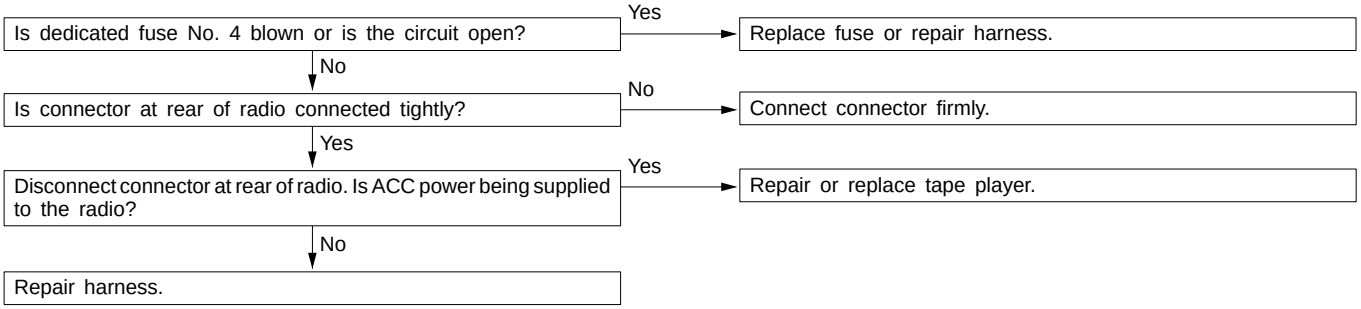

C-3 No sound from one speaker.

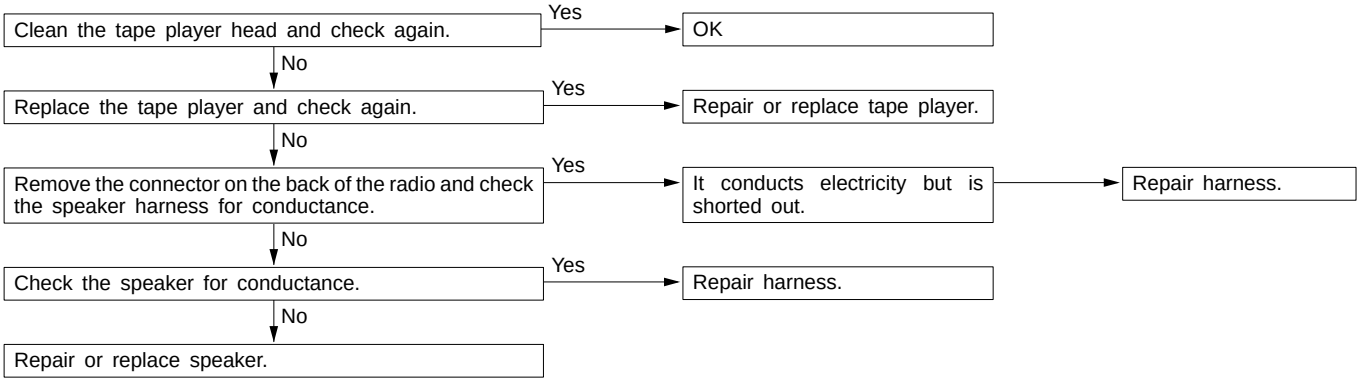

C-4 Sound quality is poor, or sound is weak.

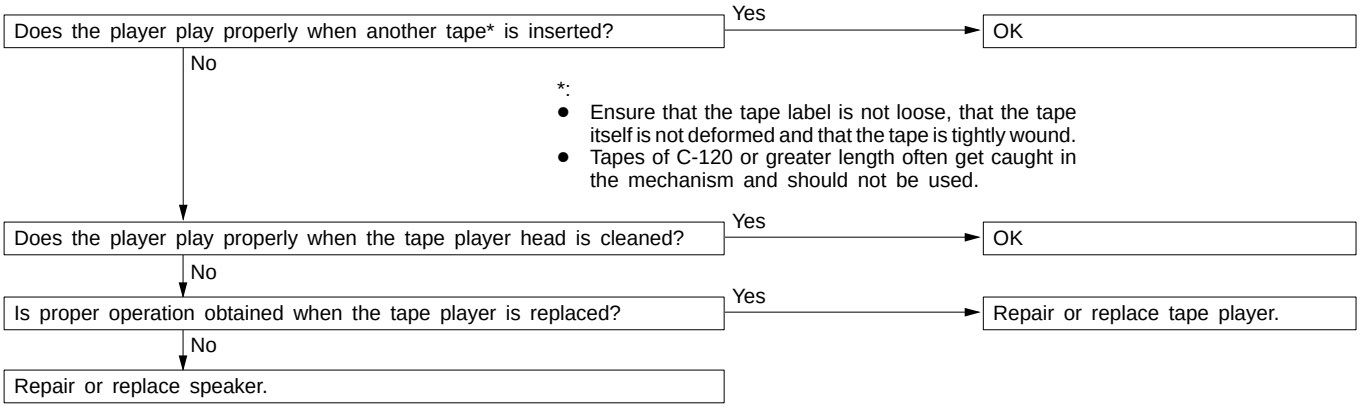

C-5 Cassette tape will not be ejected.

The problems covered here are all the result of the use of a bad tape (deformed or not properly tightened) or of a malfunction of the tape player itself. Malfunctions involving the tape becoming caught in the mechanism and ruining the case are also possible, and attempting to force the tape out of the player can cause damage to the mechanism. The player should be taken to a service dealer for repair.

C-6 Uneven revolution. Tape speed is fast or slow.

Does the player play OK if the tape*1 is changed?
- Yes → OK
- No ↓

*1
Ensure that the tape label is not loose, that the tape itself is not deformed and that the tape is tightly wound. Also, tape of C-120 or greater length often get caught in the mechanism and should not be used.

Are there any foreign objects *2 inside the tape player?
- Yes → Remove foreign object(s).
- No ↓

*2
Attempting to force a foreign object (e.g., a coin or clip, etc.) out of the tape player may damage the mechanism. The player should be taken to a service dealer for repair.

Is the head or capstan roller dirty? (Refer to the illustration below.)
- Yes → Clean.
- No ↓

Repair or replace tape player.

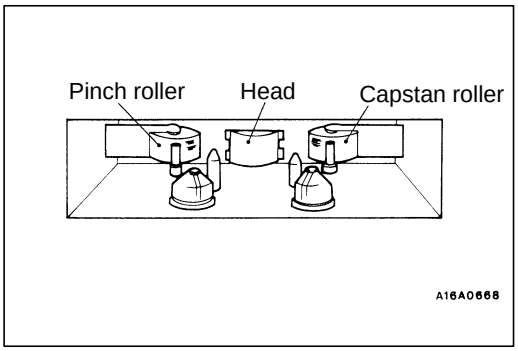

C-7 Faulty auto reverse.

Does the player play OK if the tape* is changed?
- Yes → OK
- No ↓

*:
- Ensure that the tape label is not loose, that the tape itself is not deformed and that the tape is tightly wound.
- Tapes of C-120 or greater length often get caught in the mechanism and should not be used.

Does the problem only occur while the vehicle is being driven?
- No → Repair or replace tape player.
- Yes ↓

Is the tape player properly installed to the vehicle?
- No → Ensure tape player installation.
- Yes ↓

Repair or replace tape player.

C-8 Tape gets caught in mechanism*1.

*1
When the tape is caught in the mechanism, the case may not eject. When this occurs, do not try to force the tape out as this may damage the tape player mechanism. Take the cassette to a service dealer for repair.

Does the player play OK if the tape*2 is changed?

Yes → Tape used is bad.

No ↓

*2
Ensure that the tape label is not loose, that the tape itself is not deformed and that the tape is tightly wound. Also, tapes of C-120 or greater length often get caught in the mechanism and should not be used.

Repair or replace tape player.

RADIO AND TAPE PLAYER WITH ANTI-THEFT SYSTEM

54400430032

- After the power supply to the radio and tape player has been interrupted for an hour or more, the anti-theft system will prevent the radio and tape player from working, even if the power supply is restored. Problem with the anti-theft system can be found using the flow chart below.

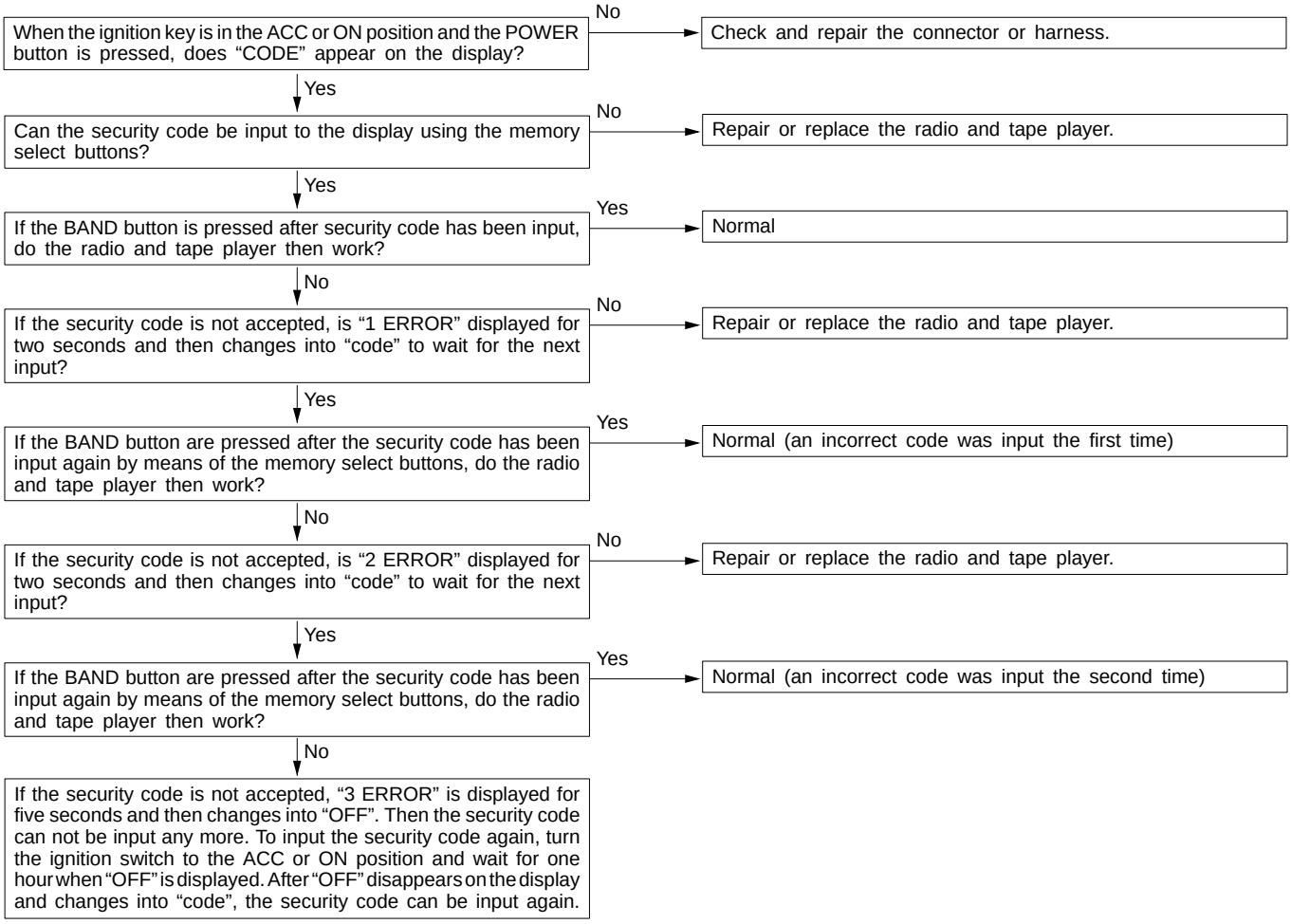

PROCEDURE FOR INPUT OF SECURITY CODE FOR RADIO AND TAPE PLAYER WITH ANTI-THEFT SYSTEM

54400440042

The radio and tape player does not work in the following states.

- Power supply to the radio and tape player has been suspended for more than an hour continuously by removing the cable from the battery terminal for disconnecting the harness connectors.
- The power supply to the radio and tape player has been suspended for more than an hour owing to blown fuse or discharged battery.
- The radio and tape player has been replaced.

If the radio and tape player does not work for these causes, input the security code by the following procedure.

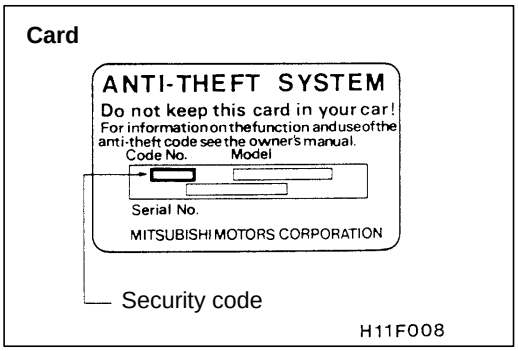

1. Using any of the following methods, confirm the security code.
   (1) Read the security code indicated on the cards retained by the car.

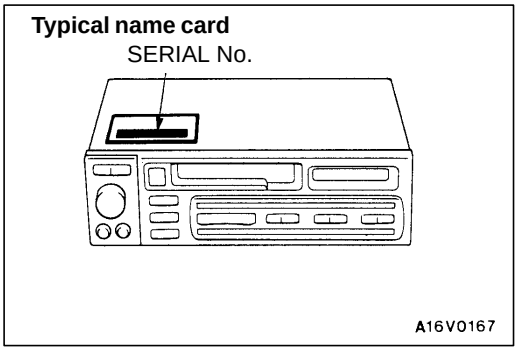

   (2) If the security code is unknown owing to the user's loss of the card:
      a. Remove the radio and tape player, referring to P.54-80.
      b. Read the serial No. stamped on the radio and tape player.
      c. Look up the security code (anti-theft code table) corresponding to the serial number, or ask the authorized Mitsubishi dealer.

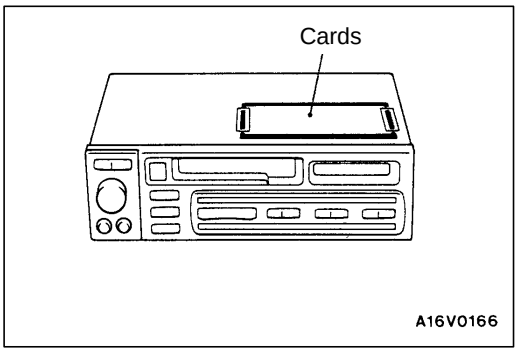

   (3) When the radio and tape player is replaced:
   Read the security code on the cards attached to the upper surface of the replacement radio and tape player.

NOTE
Deliver the two cards to the user.

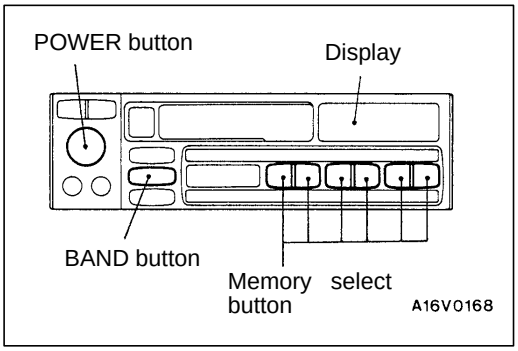

2. Return the power supply from the battery to the normal condition.
3. Turn the ignition key to the “ACC” or “ON” position.
4. Press the POWER button, and “CODE” will be displayed.

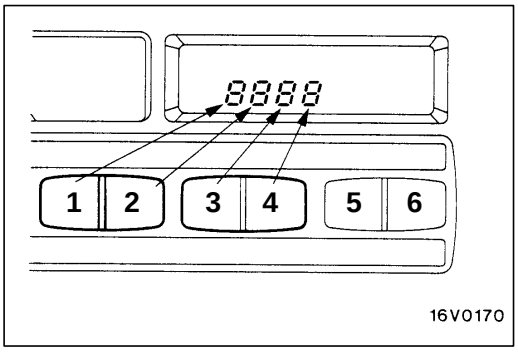

5. Press No.1 through No.4 memory select button to set the four-digit security code shown on the card.
   Every time each digit key is pressed, the figure changes as follows: 0→1→2.....9→0
6. Press the BAND button, and a beep will be heard and the radio and tape player will work.
7. If the security code is not accepted, “1 ERROR” is displayed. In a few minutes, it will change to “CODE”. Then repeat the steps 5 and 6.

   NOTE
   (1) If an incorrect security code is input, the anti-theft system will allow three attempts at most to input the correct code.
   (2) The second error is displayed as “2 ERROR”. When the third error is made, “3 ERROR” is displayed and then the display changes to “OFF”. If this should occur, the unit will not work any more.
   (3) To input the security code again, turn the ignition switch to the ACC or ON position and wait for one hour when “OFF” is displayed. After “OFF” disappears on the display and changes into “CODE”, the security code can be input again.

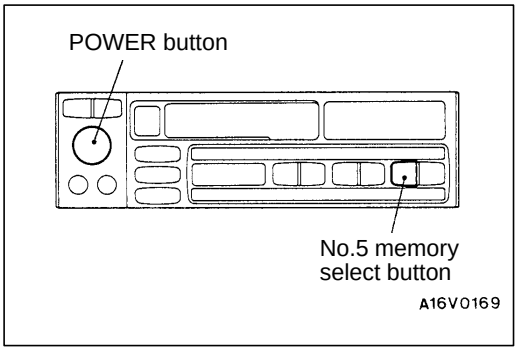

5-minute operation mode

To facilitate replacement or check, the radio and tape player can be operated for five minutes without inputting the security code.

1. Press the POWER button and No.5 memory select button together to operate the radio and tape player.
2. In five minutes the unit will not be able to work, and “CODE” will be displayed to indicate that the security code can be input again.

RADIO AND TAPE PLAYER

54400140072

REMOVAL AND INSTALLATION

Pre-removal and Post-installation Operation
- Front Floor Console Assembly Removal and Installation (Refer to GROUP 52A.)
- Driver's Side Under Cover, Meter Bezel Assembly, Glove Box Assembly, Center Under Cover Removal and Installation (Refer to GROUP 52A – Instrument Panel.)

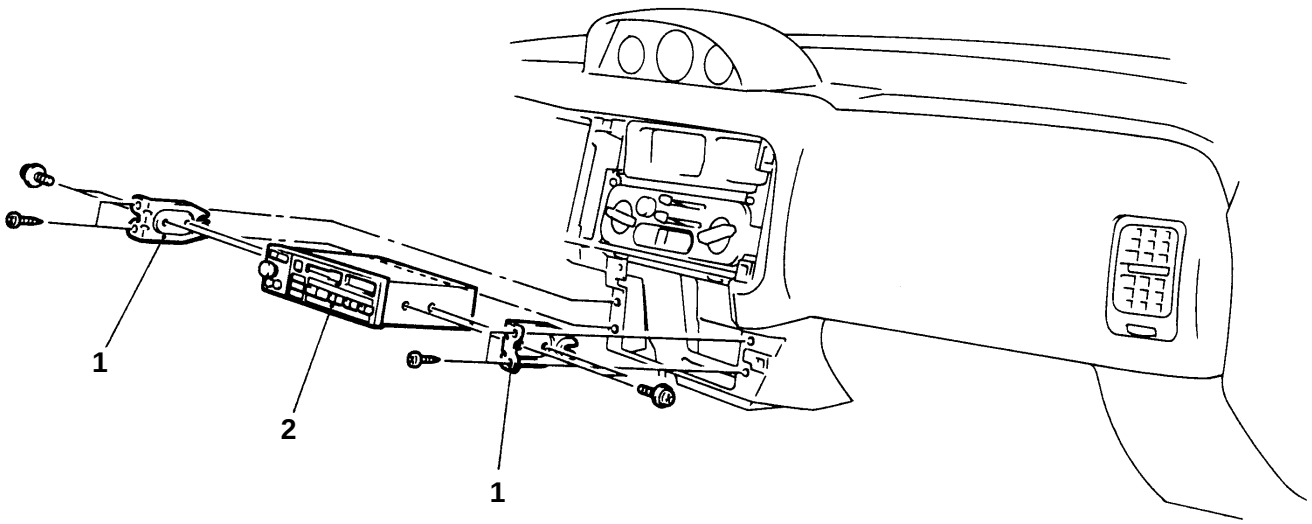

A16V0134

Removal steps

1. Radio bracket
2. Radio and tape player

SPEAKER

54400260167

REMOVAL AND INSTALLATION

<FRONT SPEAKER>

Driver's side

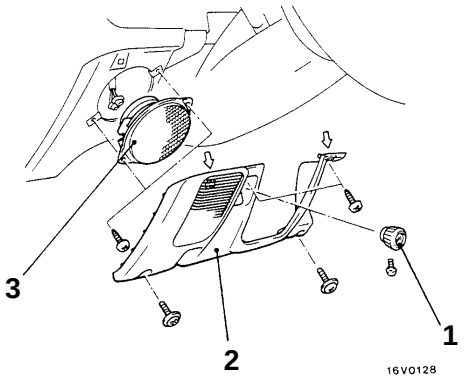

Passenger's side

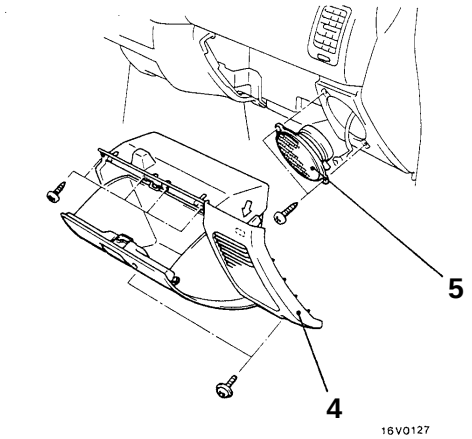

NOTE
⇦ : metal clip position

00005066

Removal steps <Driver's side>

1. Throttle cable knob <Diesel-powered vehicles>
2. Under cover
3. Speaker

<Passenger's side>

4. Glove box assembly
5. Speaker

<REAR SPEAKER>

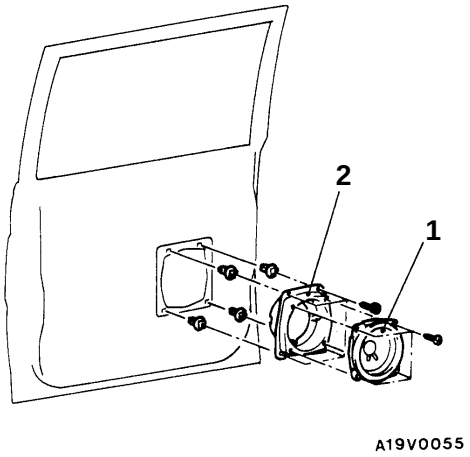

Removal steps

- Rear door trim (Refer to GROUP 42 – Door Trim and Waterproof Film.)

1. Speaker
2. Speaker cover

ANTENNA

54400060064

SPECIAL TOOL

Tool	Number	Name	Use
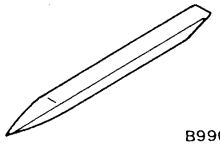	MB990784	Ornament remover	Meter bezel assembly removal

ANTENNA

54400290111

REMOVAL AND INSTALLATION

Pre-removal and Post-installation Operation
- Front Floor Console Assembly Removal and Installation (Refer to GROUP 52A.)
- Driver's Side Under Cover, Meter Bezel Assembly, Glove Box Assembly, Center Under Cover Removal and Installation (Refer to GROUP 52A – Instrument Panel.)

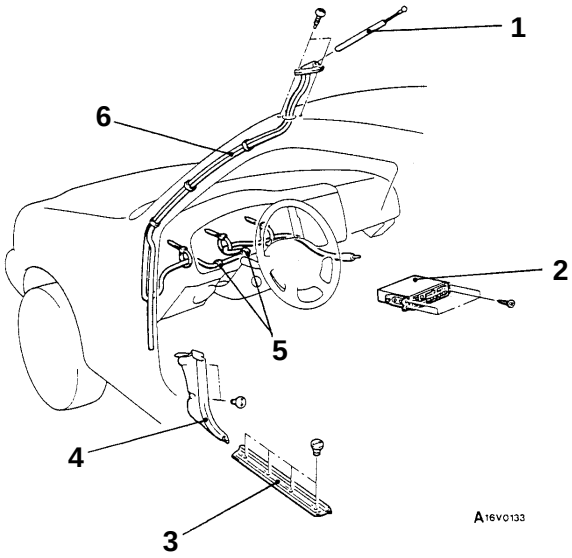

Removal steps

1. Pole
2. Radio and tape player
3. Front scuff plate (driver's side)

◀A▶

4. Cowl side trim (driver's side)
5. Cable clipped portion
6. Antenna base

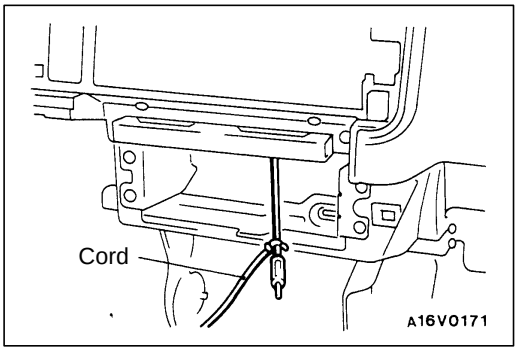

REMOVAL SERVICE POINT

◀A▶ ANTENNA BASE REMOVAL

1. Tie a cord to the end of the feeder cable.

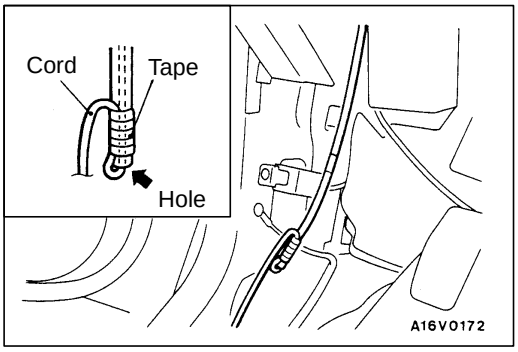

2. Pull out the antenna base until the end of the drain pipe can be seen.
3. Pass the cord through the hole in the end of the drain pipe and wrap it with vinyl tape.

   Caution
   Wrap it securely so that the cord will not come off.
4. Pull out the antenna base little by little to remove it.

REAR WINDOW DEFOGGER

54300060269

SPECIAL TOOL

Tool	Number	Name	Use
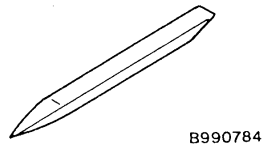 B990784	MB990784	Ornament remover	Meter bezel assembly removal

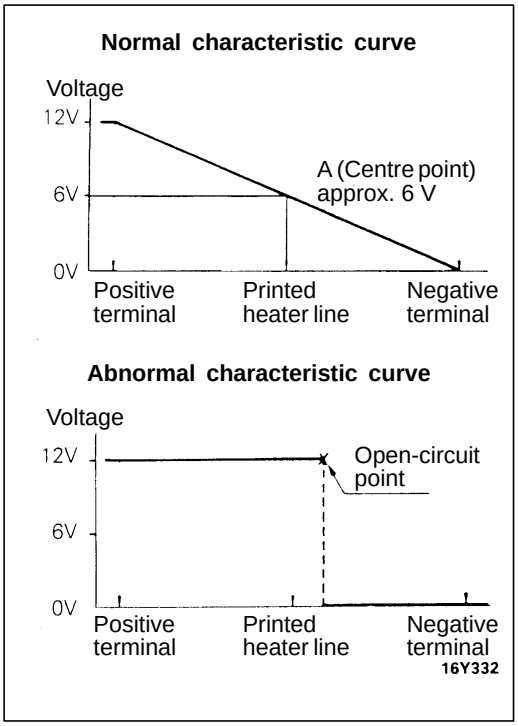

ON-VEHICLE SERVICE

54300180033

PRINTED-HEATER LINE CHECK

1. Run engine at 2,000 r/min. Check heater element with battery at full.
2. Turn ON rear window defogger switch. Measure heater element voltage with circuit tester at rear window glass centre A.
   Condition is good if it indicates about 6V.
3. If 12 V is indicated at A, there is a break in the negative terminals from A.
   Move test bar slowly to negative terminal to detect where voltage changes suddenly (0V).
4. If 0 V is indicated at A, there is a break in the positive terminals from A. Defect where the voltage changes suddenly (12 V) in the same method described above.

REAR WINDOW DEFOGGER SWITCH

54300620085

REMOVAL AND INSTALLATION

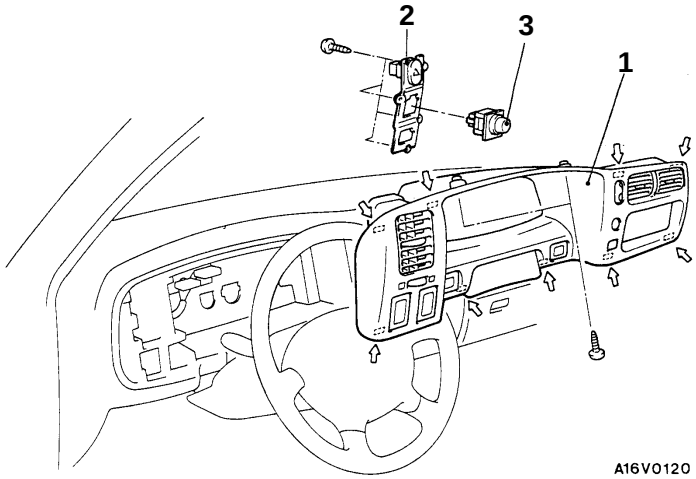

NOTE
⇦: metal clip position

Removal steps

1. Meter bezel assembly
2. Switch holder
3. Rear window defogger switch

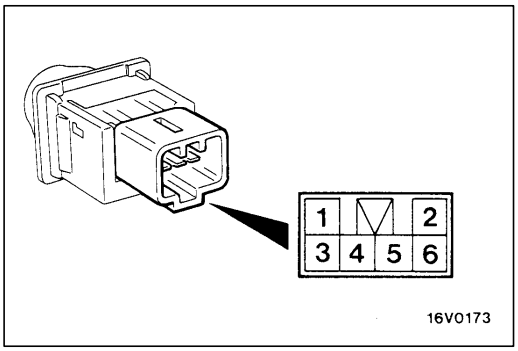

INSPECTION

54300630033

DEFOGGER SWITCH CONTINUITY CHECK

Switch position	Terminal No.							
	1	ILL	5	2	IND	6	3	4
OFF	○	⊘	○	○	⊘	○		
ON	○	⊘	○	○	⊘	○	○	○

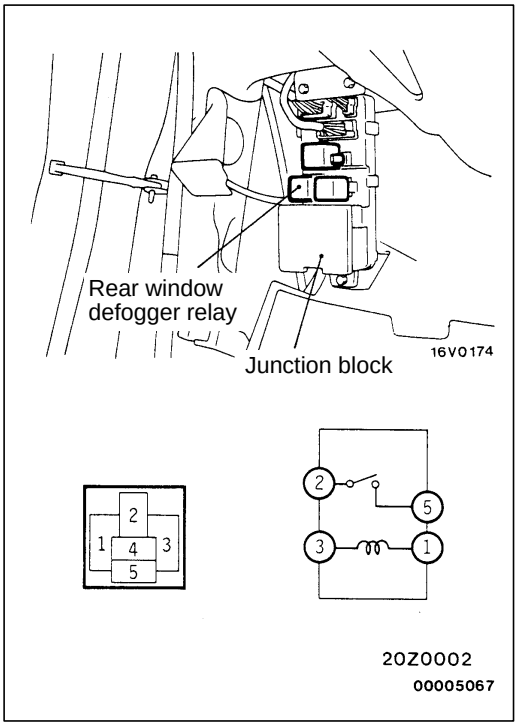

REAR WINDOW DEFOGGER RELAY CONTINUITY CHECK

54300680083

Battery voltage	Terminal No.			
	1	2	3	5
Power is not supplied	○		○	
Power is supplied	⊕	○	⊖	○