REAR AXLE

CONTENTS

27109000109

GENERAL INFORMATION 2

SERVICE SPECIFICATIONS 4

LUBRICANTS 5

SEALANTS 5

SPECIAL TOOLS 6

ON-VEHICLE SERVICE 9

- Rear Axle Total Backlash Check 9
- Axle Shaft Axial Play Check 9
- Axle Shaft Axial Play Adjustment <Vehicles without ABS or rear differential lock> 9
- Gear Oil Level Check 10
- Limited Slip Differential Preload Check 11
- Axle Housing Oil Seal Replacement 11
- Rear Differential Lock Detection Switch Check 12
- Rear Differential Lock System Air Leakage Check 13

AXLE ASSEMBLY 14

AXLE SHAFT 16

REAR DIFFERENTIAL LOCK 26

DIFFERENTIAL CARRIER 29

DIFFERENTIAL CASE ASSEMBLY 47

GENERAL INFORMATION

27100010118

- The rear axle is a banjo-type semi-floating type. The axle shaft bearings are: *Single taper bearings for vehicles without ABS or rear differential lock. *Double-taper bearings for vehicles with ABS or rear differential lock. ABS rotor is press-fitted to the axle shaft retainer ring.
- Differential gear has 4 different types. A torque-responsive mechanical-type limited slip differential has a high performance against driving on unstable surfaces such as muddy roads.
- Driveability on sand or muddy road has been improved, and rear differential lock, which is useful for emergency , has been used.

REAR AXLE

Item		Vehicles without rear differential lock	Vehicles with rear differential lock
Axle housing type		Banjo type	Banjo type
Axle shaft	Support method	Semi-floating type	Semi-floating type
	Shaft O.D. (Bearing part x Centre x Length) mm	40.0 x 34.5 x 744.5	40.0 x 34.5 x 723.5 (LH) 40.0 x 34.5 x 761.0 (RH)
	Bearing type	Single taper (double taper)*	Double taper
	Bearing (O.D. x I.D.) mm	80.0 x 40.0	80.0 x 40.0

NOTE
*: Vehicles with ABS.

DIFFERENTIAL

<2WD>

Item		4G63	4D56
Drive gear type		Hypoid gear	Hypoid gear
Reduction ratio		4.636	4.222
Limited slip differential type		Torque sensitivity type mechanical	Torque sensitivity type mechanical
Differential gear type (type x quantity)	Side gear	Straight bevel gear x 2	Straight bevel gear x 2
	Pinion gear	Straight bevel gear x 2 [Straight bevel gear x 4]	Straight bevel gear x 2 [Straight bevel gear x 4]
Number of teeth	Side gear	51	38
	Drive pinion	11	9
	Side gear	14	14
	Pinion gear	10	10
Bearing (O.D. x I.D.) mm	Side	80.0 x 45.2	80.0 x 45.2
	Front	68.3 x 30.2	68.3 x 30.2
	Rear	76.2 x 36.5	76.2 x 36.5

NOTE
[ ]: Vehicles with limited slip differential

<4WD>

Item		4G64, 4D56 <Vehicles with wide tyre>	4D56 <Vehicles without wide tyre>
Drive gear type		Hypoid gear	Hypoid gear
Reduction ratio		4.875	4.636
Limited slip differential type		Torque sensitivity type mechanical	Torque sensitivity type mechanical
Differential gear type (type x quantity)	Side gear	Straight bevel gear x 2	Straight bevel gear x 2
	Pinion gear	Straight bevel gear x 2 [Straight bevel gear x 4]	Straight bevel gear x 2 [Straight bevel gear x 4]
Number of teeth	Side gear	39	51
	Drive pinion	8	11
	Side gear	19	19
	Pinion gear	10	10
Bearing (O.D. x I.D.) mm	Side	80.0 x 45.2	80.0 x 45.2
	Front	68.3 x 30.2	68.3 x 30.2
	Rear	79.4 x 36.5	79.4 x 36.5

NOTE
[ ]: Vehicles with limited slip differential or rear differential lock.

CONSTRUCTION DIAGRAM

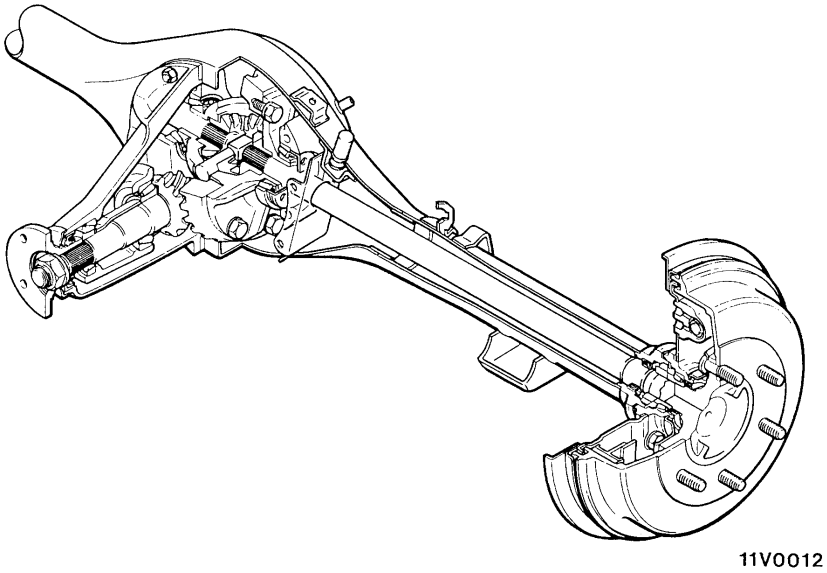

SERVICE SPECIFICATIONS

27100030121

Item			Standard value	Limit
Rear axle total backlash mm			–	5
Axle shaft axial play mm	Vehicles without ABS or rear differential lock		0.05 – 0.20	–
	Vehicles with ABS or rear differential lock		0 – 0.25	–
Limited slip differential preload Nm	Using special tool		13 or more	–
	Without using special tool		25 or more	–
Axle shaft retainer press-fitting force N	Vehicles without ABS or rear differential lock		Initial press-fitting force 49,000 or more	–
			Final press-fitting force 78,000	–
	Vehicles with ABS or rear differential lock		Initial press-fitting force 49,000 or more	–
			Final press-fitting force 98,000 – 108,000	–
Clearance between axle shaft retainer and snap ring mm			0 – 0.166	–
Rear differential lock air pump pressure kPa			25 – 40	–
Drive gear backlash mm	2WD		0.08 – 0.13	–
	4WD		0.13 – 0.18	–
Drive gear runout mm			–	0.05
Differential gear backlash mm	2WD		0 – 0.25	0.2
	4WD		0 – 0.076	0.2
Limited slip differential starting torque Nm	When a new clutch plate is used		39 – 74	–
	When re-installing current clutch plate		25 – 74	–
Drive pinion turning torque Nm	Without oil seal	When replacing (with anti-rust agent)	0.6 – 0.9	–
		When replacing or reusing (with gear oil applied)	0.4 – 0.5	–
	With oil seal	When replacing (with anti-rust agent)	0.8 – 1.1	–
		When replacing or reusing (with gear oil applied)	0.6 – 0.7	–

Item	Standard value	Limit
Horizontal difference between friction plate and friction disc thickness mm	0 – 0.05	–
Clearance between friction plate and friction disc mm	0.06 – 0.20	–
Clearance in side gear axial direction mm	0.05 – 0.20	–
Difference between left and right dimensions from back thrust face of pressure ring to end of thrust washer mm	0 – 0.05	–
Friction plate and friction disc warping (flatness) mm	–	0.08
Friction plate and friction disc wear (difference in the thickness of the friction surface and the projections) mm	–	0.1

LUBRICANTS

27100040049

Item	Specified lubricants	Quantity	
Rear differential gear oil	● Conventional differential: Hypoid gear oil API classification GL-5 or higher SAE viscosity No. 90, 80 W ● Limited slip differential: Hypoid gear oil MITSUBISHI Genuine Gear Oil Part No. 8149630 EX CASTROL HYPOY LS (GL-5, SAE 90), SHELL-LSD (GL-5, SAE 80W-90) or equivalent	2WD	1.6 ℓ
		4WD	2.6 ℓ

SEALANTS

27100050042

Items	Specified sealants	Remarks
Bearing case	3M ATD Part No. 8661 or equivalent	Semi-drying sealant
Dust cover		
Axle housing (differential carrier mounting part)		
Drive gear and differential case mounting part	3M Stud Locking 4170 or equivalent	Anaerobic sealant

SPECIAL TOOLS

27100060113

Tool	Number	Name	Use
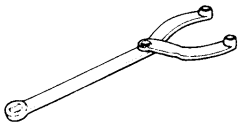	MB990767	End yoke holder	Measurement of the limited slip differential preload
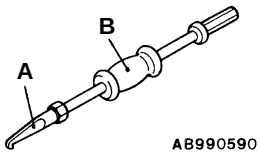	MB990590 A: MB990212 B: MB990211	Rear axle shaft oil seal remover A: Adapter B: Sliding hammer	Removal of axle shaft (Use together with MB990241, MB990211) Removal of axle housing oil seal
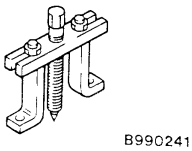	MB990241	Rear axle shaft puller	Removal of axle shaft (Use together with MB990211)
	MB991552	Axle shaft bearing and case remover	Removal of the axle shaft bearing and bearing case
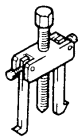	MB990801	Rear axle bearing outer race remover	Removal of bearing case, bearing outer race
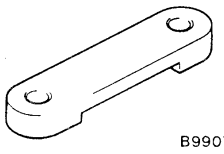	MB990786	Rear axle bearing outer race bridge	
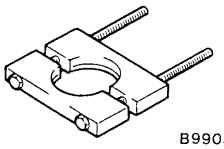	MB990560	Bearing remover	• Removal of bearing inner race • Press-fitting of the axle shaft bearing inner race • Press-fitting of the axle shaft retainer
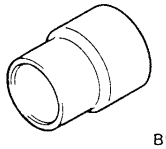	MB990799	Bearing inner race installer	
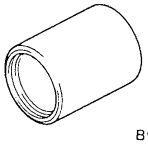	MB990890 or MB990891	Rear suspension bushing base	Installation of bearing outer race

Tool	Number	Name	Use
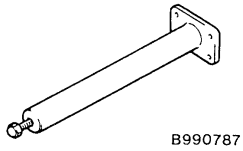 B990787	MB990787	Axle shaft bearing remover	Installation of rotor
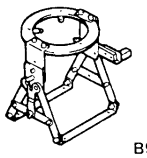 B990909	MB990909	Working base	Supporting of the differential carrier
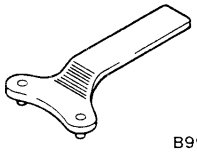 B990201	MB990201	Side bearing adjusting special spanner	Removal and adjustment of the side bearing nut
B990810	MB990810	Side bearing puller	Removal of the side bearing inner race
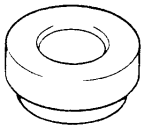 B990811	MB990811	Side bearing cup	
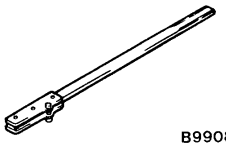 B990850	MB990850	End yoke holder	Removal of the companion flange
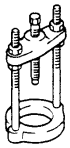 B990339	MB990339	Bearing puller	Removal of the drive pinion rear bearing inner race
	MB990648	Bearing remover	

Tool	Number	Name	Use
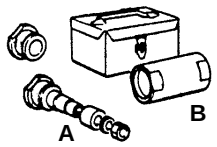	MB991171 A: MB990819 B: MB991170 C: MB991169	Pinion height gauge set A: Drive pinion gauge B: Cylinder gauge C: Drive pinion gauge attachment	Measurement of the pinion height
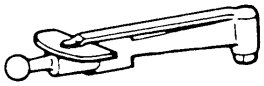	MB990685	Torque wrench	Measurement of the starting torque of drive pinion
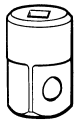	MB990326	Preload socket	
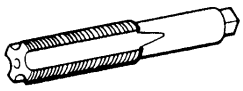	MB990813	Tap	Removal of adhesive
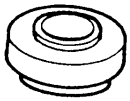	MB990728	Bearing installer	Press-fitting of the drive pinion rear bearing inner race
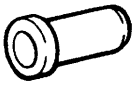	MB990727	Drive pinion oil seal installer	Press-fitting of the drive pinion oil seal
	MB990802	Bearing installer	Press-fitting of the side bearing inner race
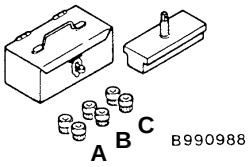	MB990988	Side gear holding tool set	Measurement of the clutch plate preload
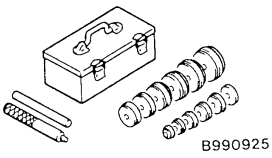	MB990925	Bearing and oil seal installer set	● Press-fitting of oil seal ● Inspection of drive gear tooth contact ● Removal of bearing outer race For details of each installer, refer to GROUP 26 – Special Tools.

MB990988	Tool number		Name	O.D. mm
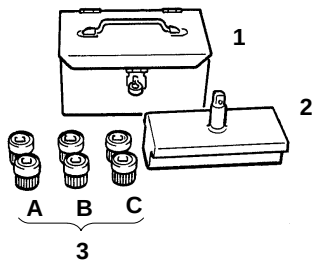	1	MB990551	Box	–
	2	MB990989	Base	–
	3	(MB990990)	Tool A	25
		(MB990991)	Tool B	28
		(MB990992)	Tool C	31

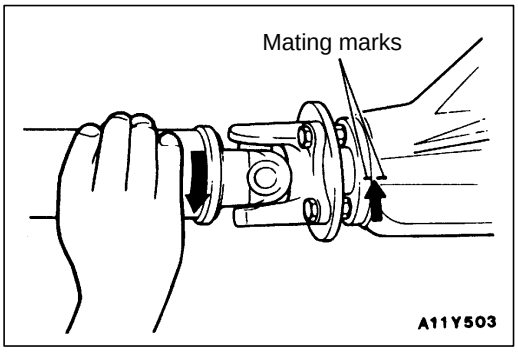

ON-VEHICLE SERVICE

27100120057

REAR AXLE TOTAL BACKLASH CHECK

1. Park the vehicles on a flat, level surface.
2. Place the transmission control lever to the neutral position, and place the transfer control lever to the neutral position. Then pull the parking brake lever and raise the vehicle on a jack.

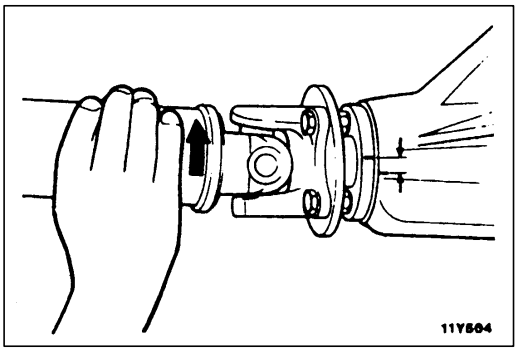

3. Turn the companion flange clockwise as far as it will go. Make the mating mark on the dust cover of the companion flange and on the differential carrier.
4. Turn the companion flange anti-clockwise as far as it will go, and measure the amount of distance through which the mating marks moved.

   Limit: 5 mm
5. If the backlash exceeds the limit value, remove the differential carrier assembly and check the following.
   - Final drive gear backlash (Refer to P.27-30.)
   - Differential gear backlash (Refer to P.27-31.)

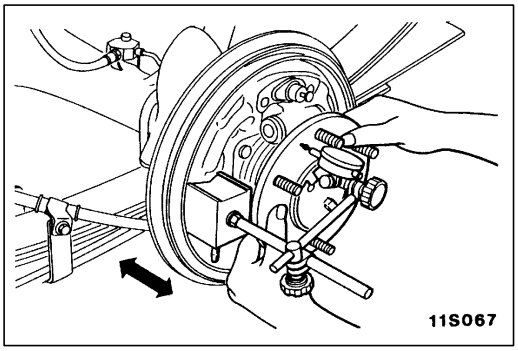

AXLE SHAFT AXIAL PLAY CHECK

27100130029

1. Measure the axle shaft axial play by using a dial indicator.

   Standard value:
   <Vehicles without ABS or rear differential lock>
   0.05 – 0.20 mm
   <Vehicles with ABS or rear differential lock>
   0 – 0.25 mm
2. For vehicles without ABS or rear differential lock, if the play is not within the standard value, replace the shim.

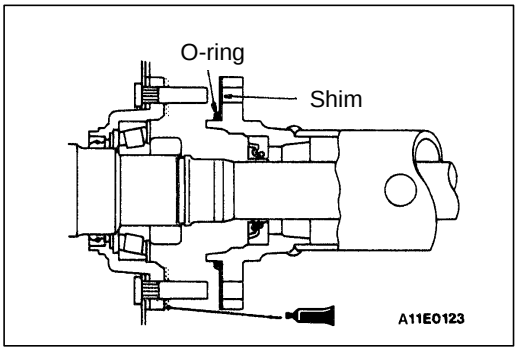

AXLE SHAFT AXIAL PLAY ADJUSTMENT

27100140015

<Vehicles without ABS or rear differential lock>

1. Insert a 1 mm thick shim and O-ring into the left side rear axle housing.
2. Apply the specified sealant to the mating surface of the bearing case, install the left axle shaft into rear axle housing and tighten the nuts 49 – 59 Nm.

   Specified sealant: 3M ATD Part No. 8661 or equivalent

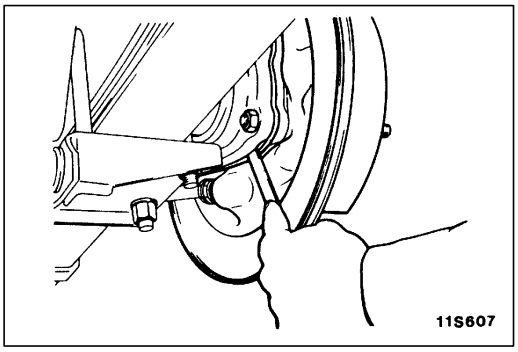

3. Temporarily install the right axle shaft assembly to the rear axle housing without installing the O-ring or shim.
4. Measure the clearance between the bearing case and rear axle housing end with a thickness gauge.

   NOTE
   Confirm that the measurement values no differ in the horizontal and vertical positions.

5. Select shims of the thickness which is equal to the sum of the measured clearance and 0.05 – 0.20 mm.
   Remove the right axle shaft, and install shim(s) and O-ring on the right side rear axle housing end.
6. Apply the specified sealant to the mating surface of bearing case, install the right axle shaft into rear axle housing and tighten the nut 49 – 59 Nm.

   Specified sealant: 3M ATD Part No. 8661 or equivalent

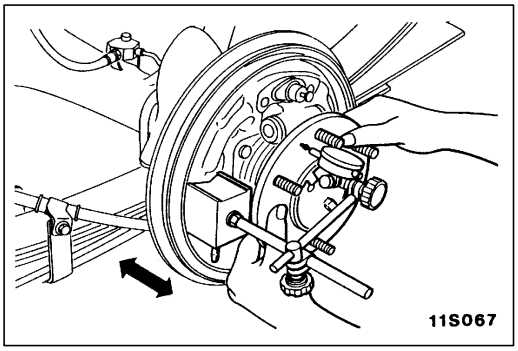

7. Check to assure that the axle shaft axial play is within the standard value.

   Standard value: 0.05 – 0.20 mm

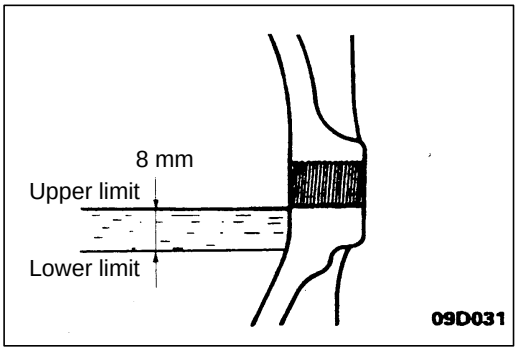

GEAR OIL LEVEL CHECK

27200120043

Check that gear oil level is not 8 mm below the bottom of filler plug hole.

Specified gear oil:

<Conventional differential>
Hypoid gear oil API classification GL-5 or higher SAE viscosity No. 90, 80W

<Limited slip differential>
Hypoid gear oil MITSUBISHI Genuine Gear Oil Part No. 8149630 EX, CASTROL HYPOY LS (GL-5, SAE 90), SHELL-LSD (GL-5, SAE 80W-90) or equivalent
<2WD> 1.6 ℓ
<4WD> 2.6 ℓ

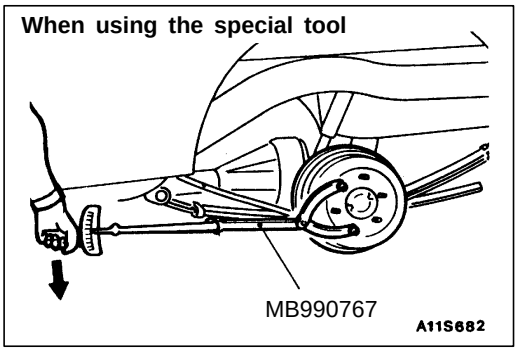

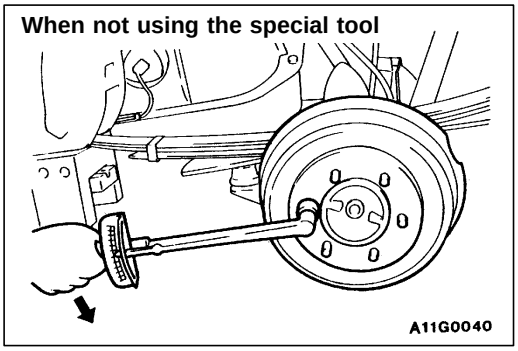

LIMITED SLIP DIFFERENTIAL PRELOAD CHECK

27300090026

1. Place the shift lever in the neutral position and lock the front wheels.
2. Disconnect the propeller shaft from the differential.
3. With the parking brake fully released, jack up one rear wheel so that the other is still on the ground.
4. Measure the differential preload in the forward direction when using the special tool and when not using the special tool.

Standard value:
Using the special tool: 13 Nm or more
Without using the special tool: 25 Nm or more

NOTE
If the differential preload is not within the standard value, disassemble the limited slip differential to check parts.

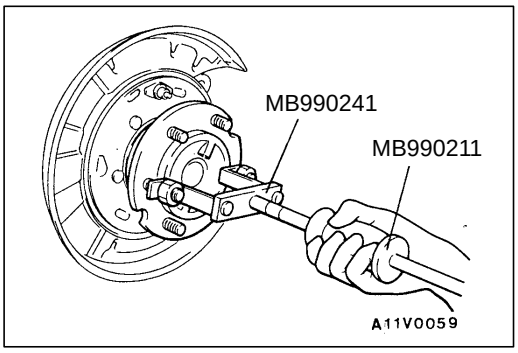

AXLE HOUSING OIL SEAL REPLACEMENT

27100150025

1. Remove the axle shaft assembly (Refer to P.27-16.)

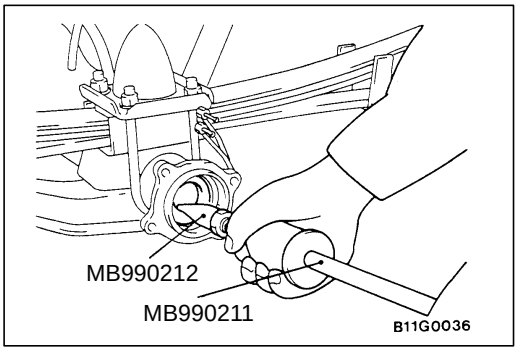

2. Use special tools with hook attached to remove the oil seal.
3. Apply multipurpose grease to the oil seal fitting area of the rear axle housing.

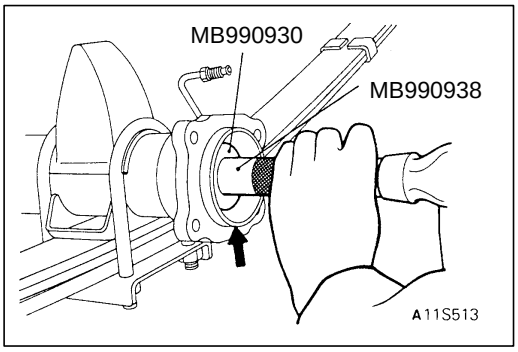

4. Drive the new oil seal into the rear axle housing end by using the special tool.
5. Apply multipurpose grease to the oil seal lip.
6. Install the rear axle shaft.

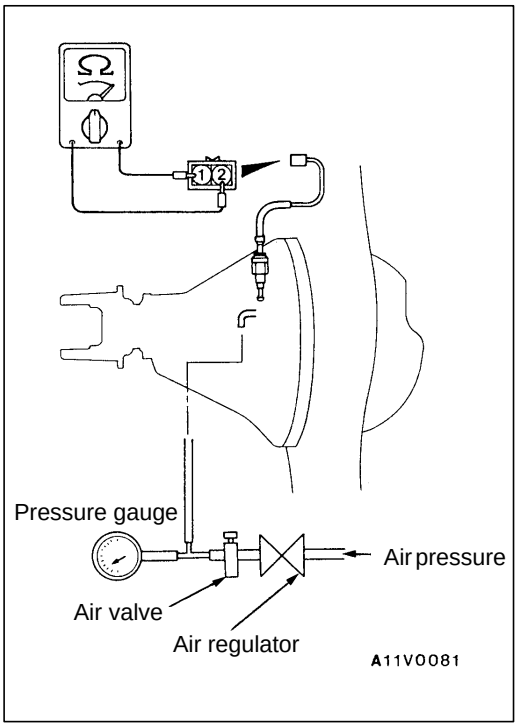

REAR DIFFERENTIAL LOCK DETECTION SWITCH CHECK

27200100047

1. Jack up the vehicle.
2. Remove the air pipe and air hose connection.
3. Connect a pressure gauge and air regulator to the air pipe.
4. Adjust the outside air pressure with the air regulator until the pressure gauge shows approx. 25 kPa.

   Caution
   Do not apply a higher pressure.

5. Lock the wheel on one side of the vehicle, and slowly turn the wheel on the other side.
6. Check for continuity in the rear differential lock detection switch.

When air is supplied	Continuity
When air is released	No continuity

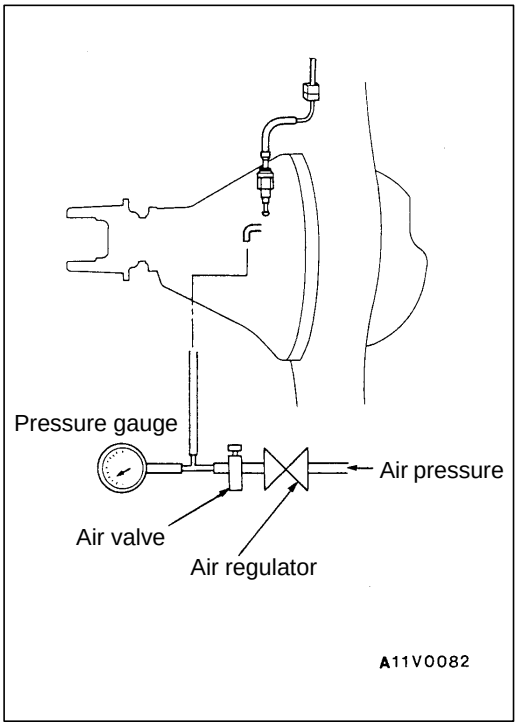

REAR DIFFERENTIAL LOCK SYSTEM AIR LEAKAGE CHECK

27200110033

1. Remove the rear differential lock air pump and remove the air hose from the air pump. (Refer to P.27-26.)
2. Connect a pressure gauge and air regulator to the air hose.
3. Adjust the outside air pressure with the air regulator until the pressure gauge shows approx. 35 kPa.

   Caution
   Do not apply a higher pressure.
4. Shut off the air valve.
5. If the pressure has not dropped more than 10 kPa after 10 minutes have passed, there can be no air leakage from the air hose etc.

AXLE ASSEMBLY

27100170038

REMOVAL AND INSTALLATION

Pre-removal Operation
- Brake Fluid Draining

Post-installation Operation
- Brake Fluid Filling and Air Bleeding (Refer to GROUP 35A – On-vehicle Service.)
- Parking Brake Lever Stroke Adjustment (Refer to GROUP 36 – On-vehicle Service.)

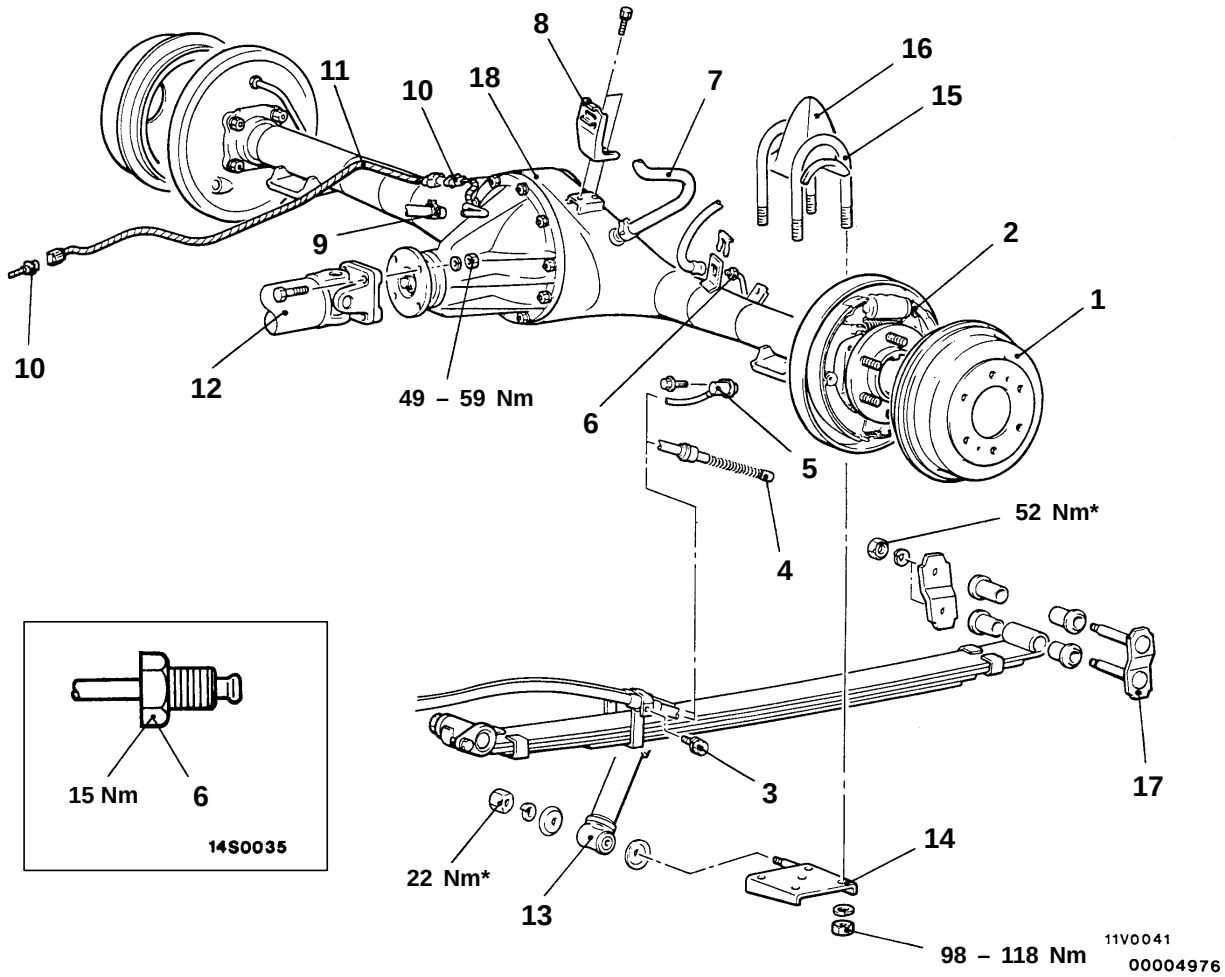

Removal steps

1. Brake drum
2. Shoe-lining assembly (Refer to GROUP 35A – Rear Drum Brake.)
3. Parking brake cable, speed sensor <Vehicles with ABS>, attaching bolt
4. Parking brake cable connection
5. Speed sensor connection <Vehicles with ABS>
6. Brake tube connection
7. Breather hose connection
8. Spring support
9. Hose connection <Vehicles with rear differential lock>
10. Rear differential lock position harness connection
11. Rear differential lock position harness
12. ◀A▶ ▶A◀ Propeller shaft connection
13. ◀B▶ Shock absorber connection
14. U-bolt seat
15. U-bolt
16. Bump stopper
17. Shackle assembly
18. ◀C▶ Axle assembly

Caution

*** Indicates parts which should be temporarily tightened, and then fully tightened with the vehicles on the ground in the unladen condition.**

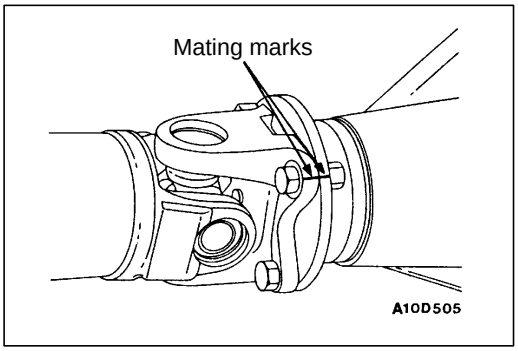

REMOVAL SERVICE POINTS

◀A▶ PROPELLER SHAFT REMOVAL

Place a mating marks on the companion flange and flange yoke, disconnect the propeller shaft from the companion flange.

Caution
Suspend the propeller shaft from the body with wire, etc. to prevent it from falling.

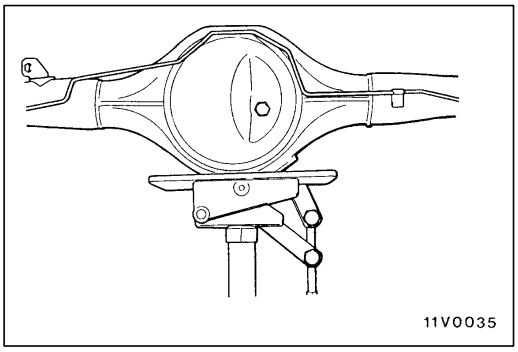

◀B▶ SHOCK ABSORBER REMOVAL

Support the axle housing with a jack before removing the shock absorber lower mounting nut.

◀C▶ AXLE ASSEMBLY REMOVAL

Take out the axle assembly from the rear of the vehicle.

Caution
Be careful not to drop the axle assembly, because it is unstable on the jack.

INSTALLATION SERVICE POINT

▶A◀ PROPELLER SHAFT INSTALLATION

Align the mating marks on the flange yoke and the companion flange to install the propeller shaft.

AXLE SHAFT

27100250039

REMOVAL AND INSTALLATION

Pre-removal Operation
- Brake Fluid Draining

Post-installation Operation
- Brake Fluid Supplying and Air Bleeding (Refer to GROUP 35A – On-vehicle Service.)
- Parking Brake Lever Stroke Adjustment (Refer to GROUP 36 – On-vehicle Service.)

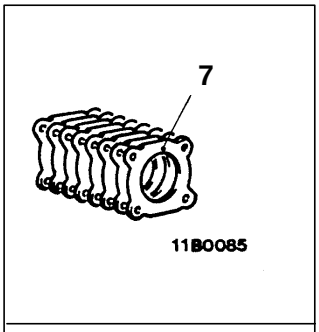

Rear axle shaft shim set

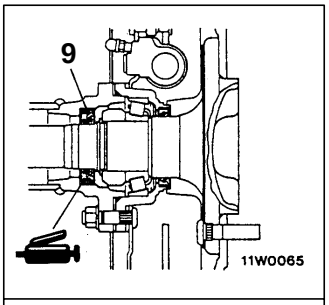

Apply to entire inside diameter of oil seal lip

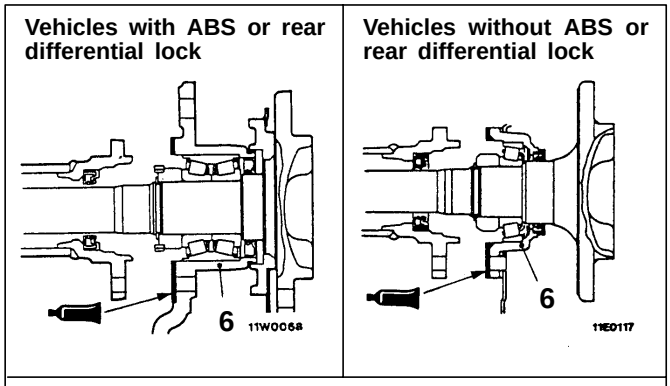

Sealant: 3M ATD Part No. 8661 or equivalent

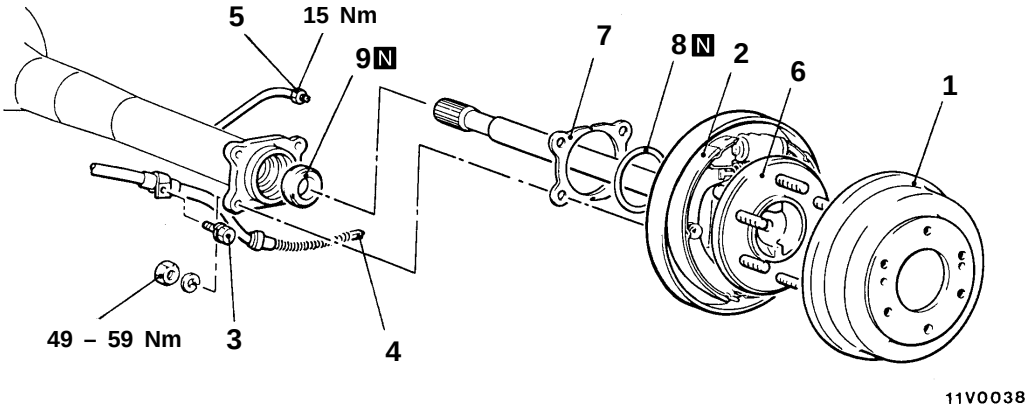

00004977

Removal steps

1. Brake drum
2. Shoe-lining assembly (Refer to Group 35A – Rear Drum Brake.)
3. Parking brake cable, speed sensor cable <Vehicles with ABS> attachment bolt
4. Parking brake cable connection
5. Brake tube connection

◀A▶

◀B▶ ▶A◀

▶B◀ • Axle shaft axial play adjustment <Vehicles without ABS or rear differential lock>

6. Axle shaft assembly
7. Shim <Vehicles without ABS or rear differential lock>
8. O-ring
9. Oil seal

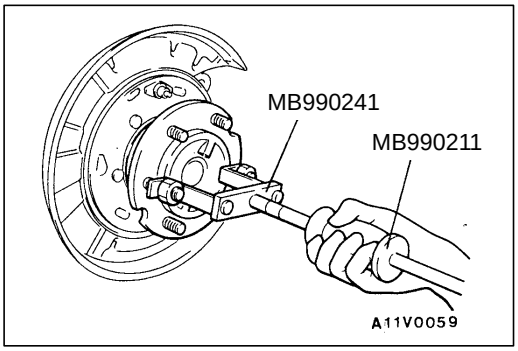

REMOVAL SERVICE POINTS

◀A▶ AXLE SHAFT ASSEMBLY REMOVAL

Caution
Be careful not to damage the oil seal when pulling axle shaft.

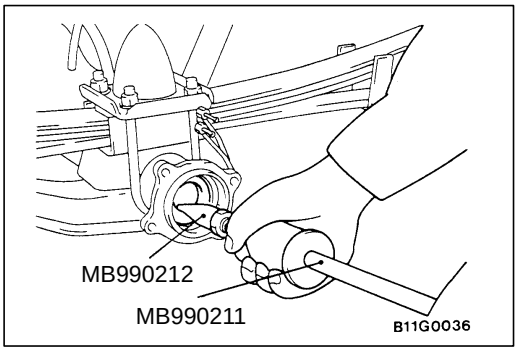

◀B▶ OIL SEAL REMOVAL

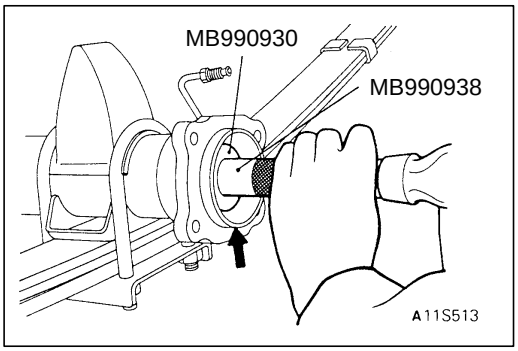

INSTALLATION SERVICE POINTS

▶A◀ OIL SEAL INSTALLATION

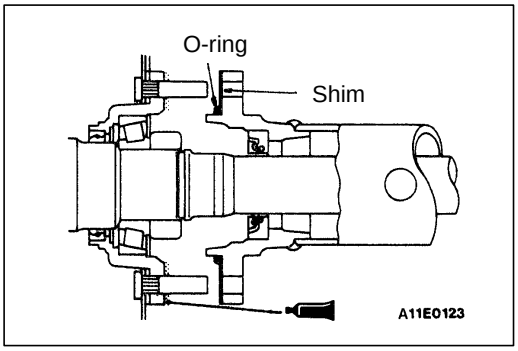

▶B◀ AXLE SHAFT AXIAL PLAY ADJUSTMENT

<VEHICLES WITHOUT ABS OR REAR DIFFERENTIAL LOCK>

When replacing the axle shaft or the wheel bearings, the following adjustment is needed. When removing and reinstalling the axle shaft, it is not needed and the same thickness and number of shims as previously should be used.

1. Insert a 1 mm thick shim and O-ring into the left side rear axle housing.
2. Apply the specified sealant to the mating surface of the bearing case, install the left axle shaft into rear axle housing and tighten the nuts 49 – 59 Nm.

   Specified sealant: 3M ATD Part No. 8661 or equivalent
3. Temporarily install the right axle shaft assembly to the axle housing without installing the O-ring or shim.

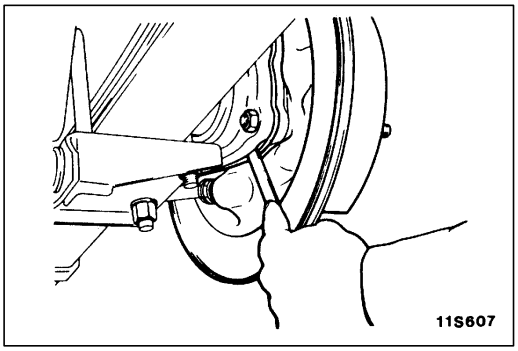

4. Measure the clearance between the bearing case and rear axle housing end with a thickness gauge.

   NOTE
   Confirm that the measurement values no differ in the horizontal and vertical positions.

5. Select shims of the thickness which is equal to the sum of the measured clearance and 0.05 – 0.20 mm.
6. Remove the right axle shaft, and install shim(s) and O-ring on the right side rear axle housing end.
7. Apply the specified sealant to the mating surface of bearing case, install the right axle shaft into rear axle housing and tighten the nut 49 – 59 Nm.

   Specified sealant: 3M ATD Part No. 8661 or equivalent

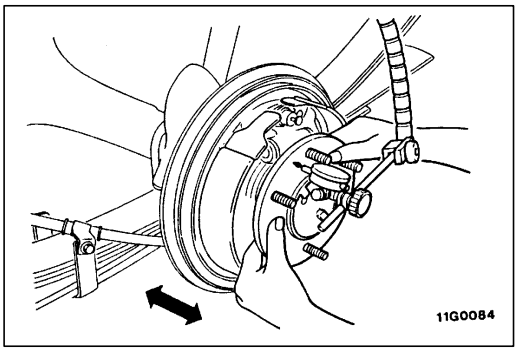

8. Check to assure that the axle shaft axial play is within the standard value.

   Standard value: 0.05 – 0.20 mm

DISASSEMBLY AND REASSEMBLY

27100270011

<VEHICLES WITHOUT ABS OR REAR DIFFERENTIAL LOCK>

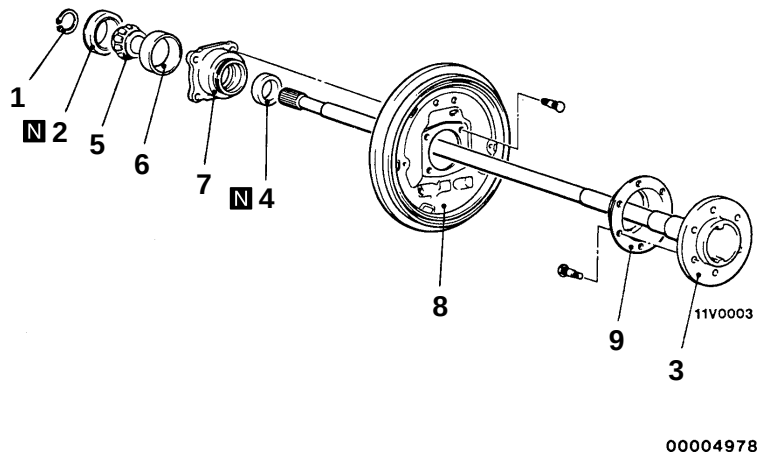

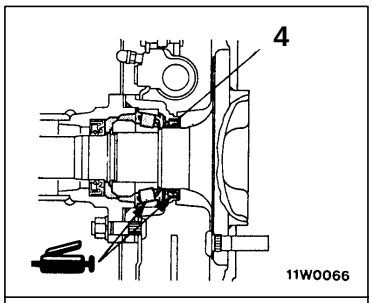

Apply to entire inside diameter of oil seal lip

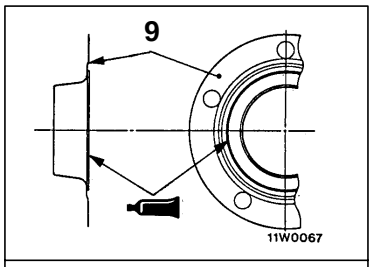

Sealant: 3M ATD Part No. 8661 or equivalent

Disassembly steps

	▶G◀	1. Snap ring
◀A▶	▶E◀	2. Retainer
◀B▶		3. Axle shaft
	▶D◀	4. Oil seal
	▶C◀	5. Bearing inner race
◀D▶	▶A◀	6. Bearing outer race
		7. Bearing case
		8. Backing plate
		9. Dust cover

<VEHICLES WITH ABS OR REAR DIFFERENTIAL LOCK>

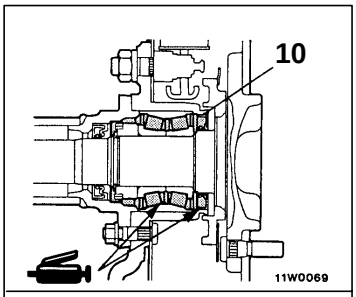

Apply to entire inside diameter of oil seal lip

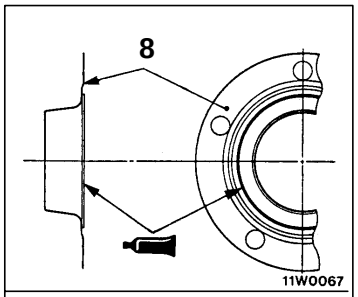

Sealant: 3M ATD Part No. 8661 or equivalent

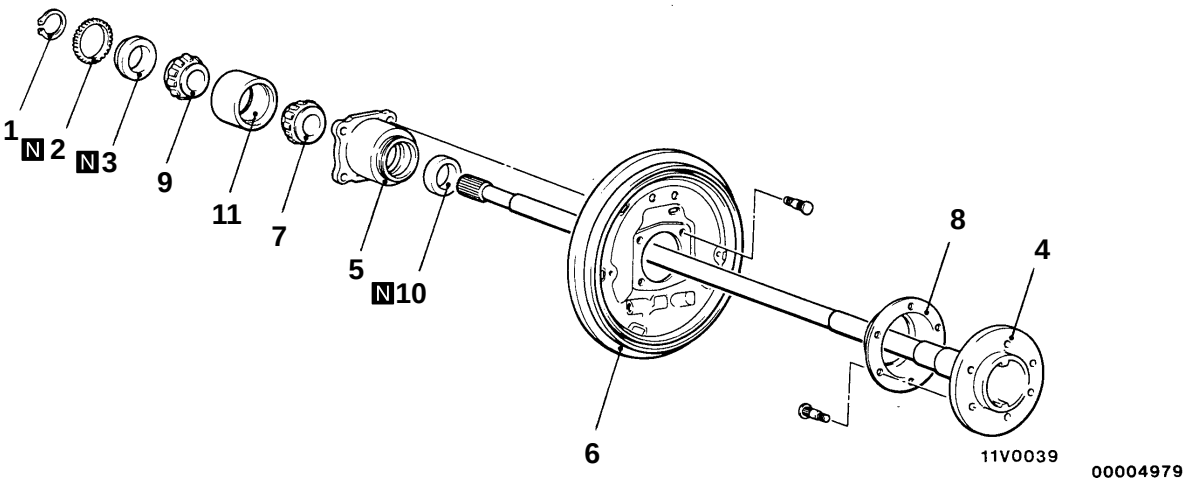

Disassembly steps

1. Snap ring
2. Rotor <Vehicles with ABS>
◀A▶ 3. Retainer
◀B▶ 4. Axle shaft
5. Bearing case
6. Backing plate
◀C▶ 7. Outer bearing inner race
8. Dust cover
9. Inner bearing inner race
10. Oil seal
◀D▶ 11. Bearing outer race

Reassembly steps

▶A◀ 11. Bearing outer race
▶B◀ 9. Inner bearing inner race
▶B◀ 7. Outer bearing inner race
▶D◀ 10. Oil seal
8. Dust cover
6. Backing plate
5. Bearing case
4. Axle shaft
▶E◀ 3. Retainer
▶F◀ 2. Rotor <Vehicles with ABS>
▶G◀ 1. Snap ring

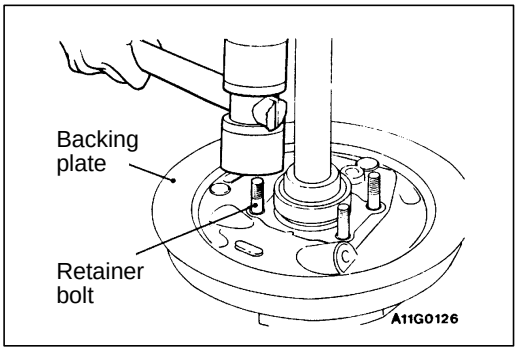

DISASSEMBLY SERVICE POINTS

◀A▶ RETAINER REMOVAL

1. Remove one retainer bolt from the backing plate.

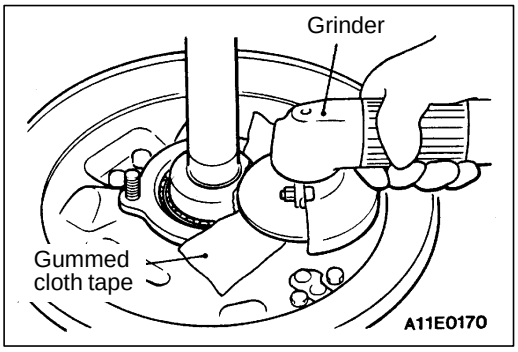

2. Apply gummed cloth tape around the edge of the bearing case for protection.
3. As shown in the figure, fix the axle shaft and shave off with grinder a point of its circumference locally until the wall thickness on the side of axle shaft of retainer and the side of bearing become approximately 1.0 – 1.5 mm and 2.0 mm respectively.

   Caution
   Be careful not to damage the bearing case and the axle shaft.

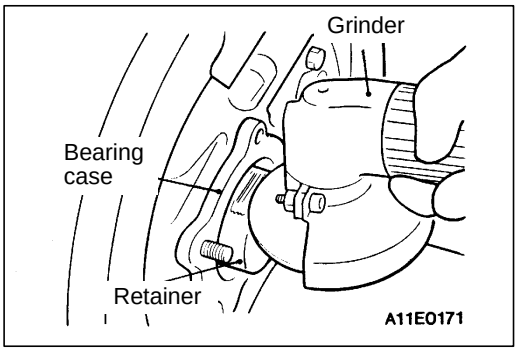

4. Fix the axle shaft and shave off the remaining 2.0 mm on the side of the bearing of the retainer.

   Caution
   Be careful not to damage the bearing case and the axle shaft.

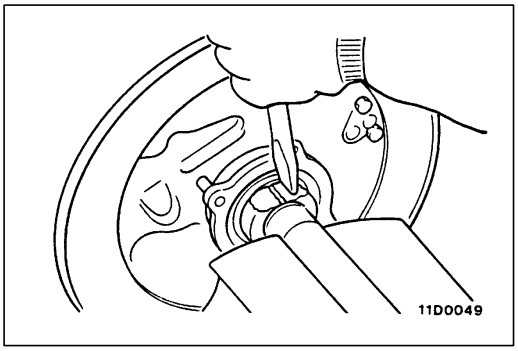

5. Cut in with a chisel the place where the retainer ring has been shaven and remove the retainer ring.

   Caution
   Be careful not to damage the axle shaft.

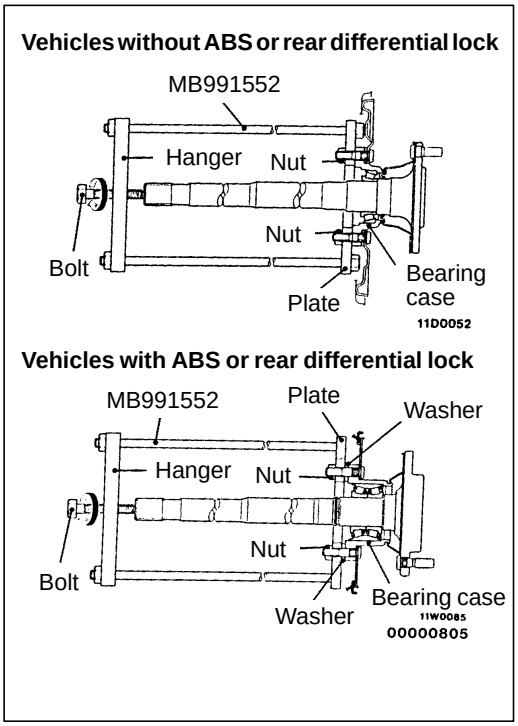

◀B▶ AXLE SHAFT REMOVAL

<VEHICLES WITHOUT ABS OR REAR DIFFERENTIAL LOCK>

1. Set the special tool by fixing its plate to the bearing case as shown in the figure and adjust the height of the hanger.

<VEHICLES WITH ABS OR REAR DIFFERENTIAL LOCK>

1. Secure the special tool to the bearing case bolts with the nuts installing the washers, plate and nuts in that order and adjust the height of the hanger.

   NOTE
   The washers are used to eliminate the difference in height of the bearing case so that the plate and the bearing case are parallel.

2. Place the end of the bolt against the centre of the axle shaft, and then tighten the bolt to remove the axle shaft from the bearing case assembly.

   Caution
   The hanger and plate should be placed so that they are parallel.

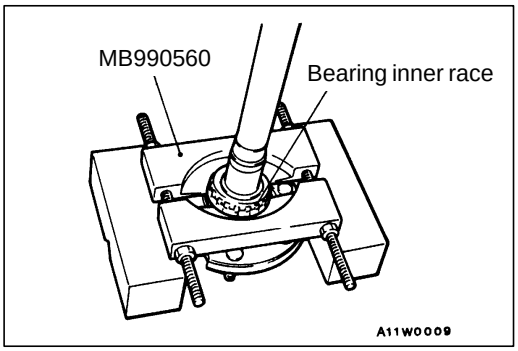

◀C▶ OUTER BEARING INNER RACE REMOVAL

Install the special tool as shown in the illustration, and then use a press to remove the outer bearing inner race from the axle shaft.

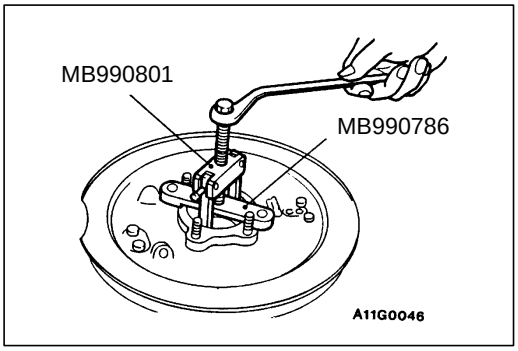

◀D▶ BEARING OUTER RACE REMOVAL

<VEHICLES WITHOUT ABS OR REAR DIFFERENTIAL LOCK>

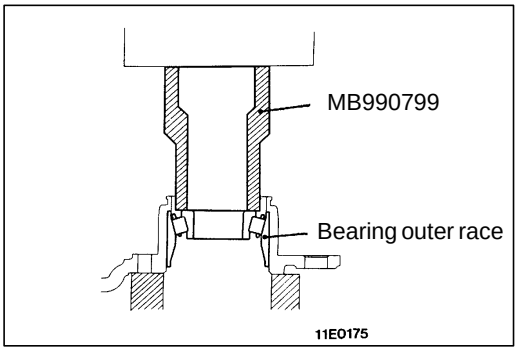

<VEHICLES WITH ABS OR REAR DIFFERENTIAL LOCK>

Reinstall the outer bearing inner race that was removed previously, and then use the special tool and a press to remove the bearing outer race.

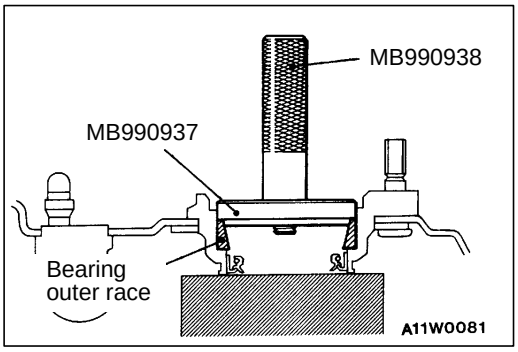

REASSEMBLY SERVICE POINTS

▶A◀ BEARING OUTER RACE INSTALLATION <VEHICLES WITHOUT ABS OR REAR DIFFERENTIAL LOCK>

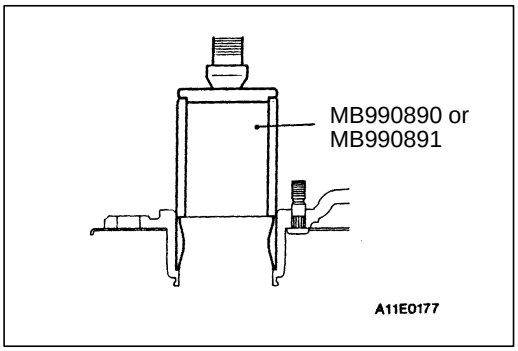

<VEHICLES WITH ABS OR REAR DIFFERENTIAL LOCK>

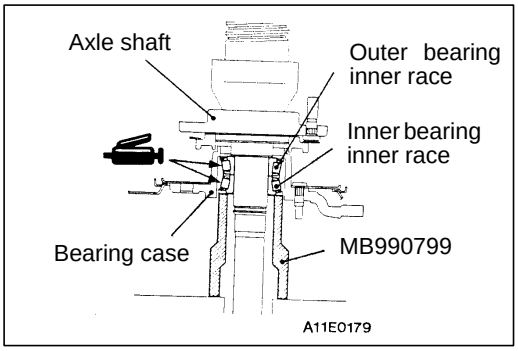

▶B◀ INNER BEARING INNER RACE / OUTER BEARING INNER RACE INSTALLATION

1. Apply multipurpose grease to the roller surface and ends of the bearing.
2. Pass the axle shaft through the bearing case and the inner bearing inner race and outer bearing inner race.
3. Use the special tool to press-fit the inner bearing inner race and outer bearing inner race to the axle shaft.

   Caution
   Both bearing inner race, outer race sets should be press-fitted together.

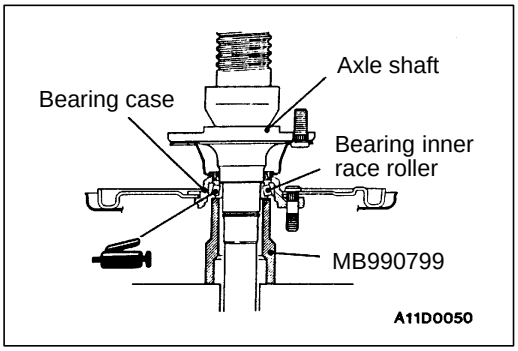

▶C◀ BEARING INNER RACE INSTALLATION

1. Apply multipurpose grease to the roller surface and ends of the bearing.
2. Place the bearing case and the bearing inner race onto the axle shaft in that order.
3. Use the special tool to press-fit the inner bearing inner race and outer bearing inner race to the axle shaft.

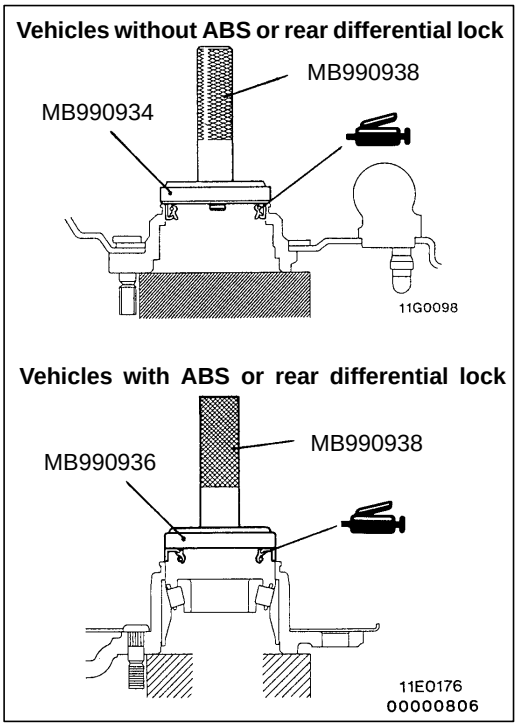

▶D◀ OIL SEAL INSTALLATION

1. Apply the multipurpose grease to the external periphery of the oil seal.
2. Press-fit the oil seal into the bearing case until it is flush with the face of the bearing case by using the special tools.
3. Apply the multipurpose grease to the lips of the oil seal.

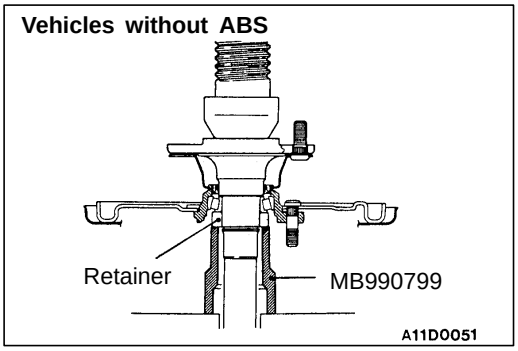

▶E◀ RETAINER INSTALLATION

Use the special tool to press-fit the retainer to the axle shaft, while checking that the press-fitting force is at the standard value.
If the initial press-fitting force is less that the standard value, replace the axle shaft.

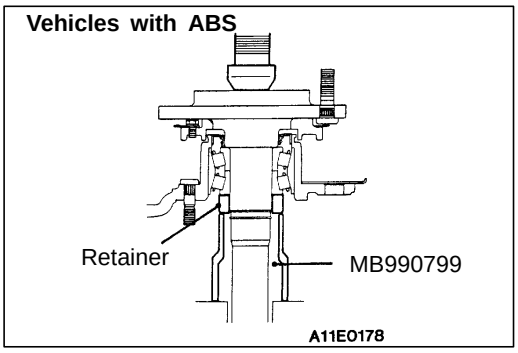

Standard value:

Item	Initial press-fitting force N	Final press-fitting force N
Vehicles without ABS	49,000 or more	78,000
Vehicles with ABS	49,000 or more	98,000 – 108,000

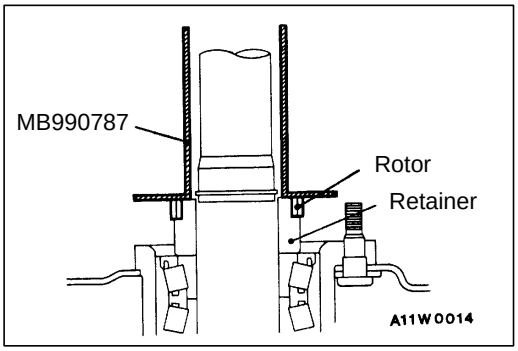

▶F◀ ROTOR INSTALLATION

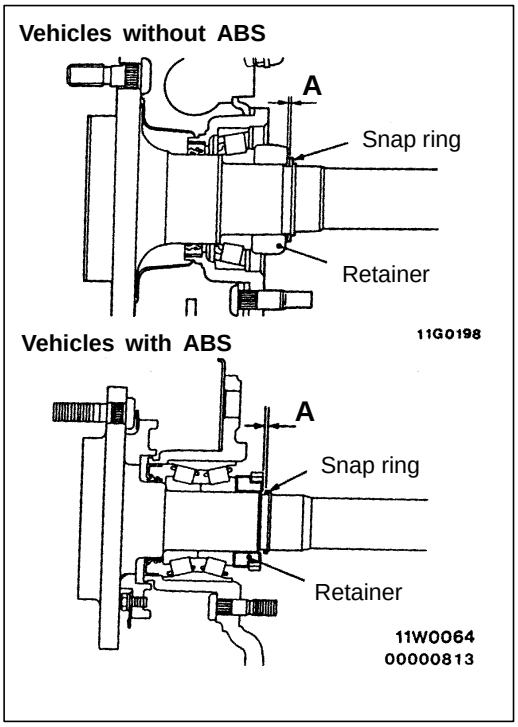

▶G◀ SNAP RING INSTALLATION

1. After installing the snap ring, measure the clearance (A) between the snap ring and the retainer with a thickness gauge, and check that it is within the standard value.

   Standard value (A): 0 – 0.166 mm

2. If the clearance exceeds the standard value, change the snap ring so that the clearance is at the standard value.

Thickness of snap ring mm	Identification colour
2.17	–
2.01	Yellow
1.85	Blue
1.69	Purple
1.53	Red

INSPECTION

27100280014

- Check the dust cover for deformation and damage.
- Check the inner and outer bearings for seizure, discoloration and rough raceway surface.
- Check the axle shaft for cracks, wear and damage.

REAR DIFFERENTIAL LOCK

27200270038

REMOVAL AND INSTALLATION

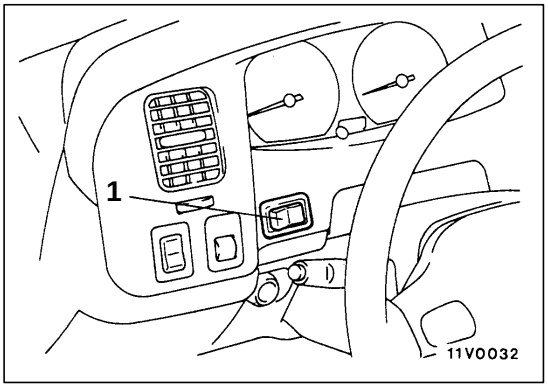

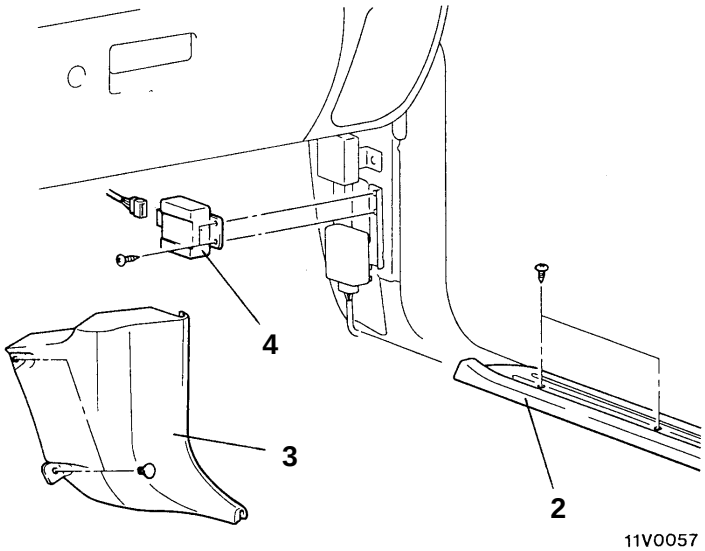

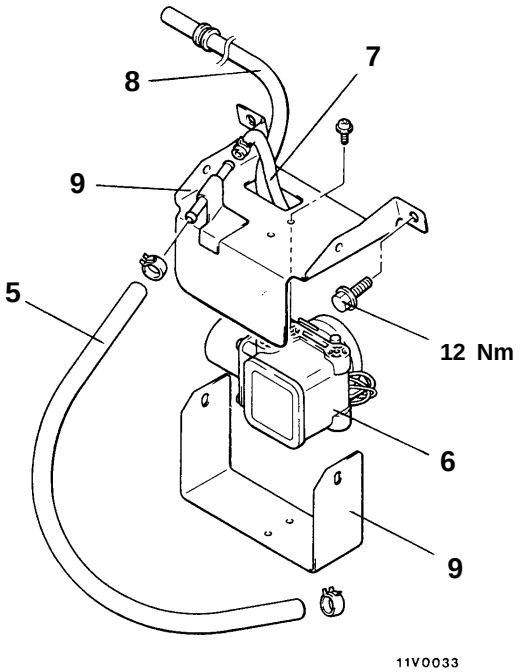

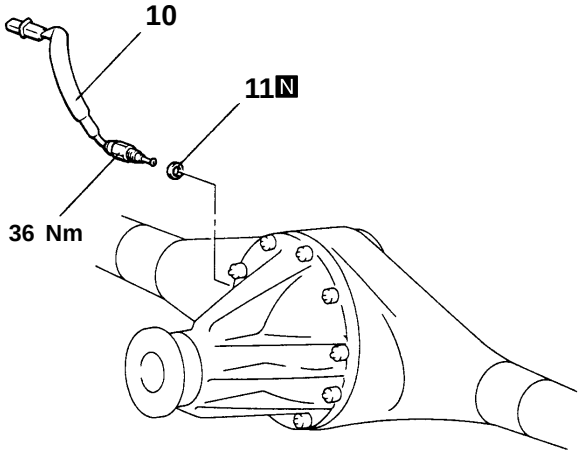

1. Rear differential lock switch

Rear differential lock-ECU removal steps

2. Scuff plate
3. Cowl side trim
4. Rear differential lock-ECU

Rear differential lock air pump removal steps

5. Hose
6. Rear differential lock air pump
7. Hose
8. Vapor hose
9. Bracket

Rear differential lock detection switch removal steps

10. Rear differential lock detection switch
11. Gasket

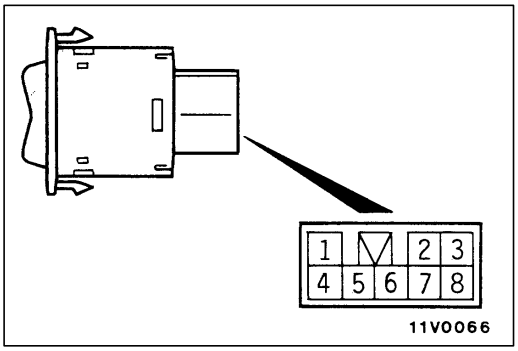

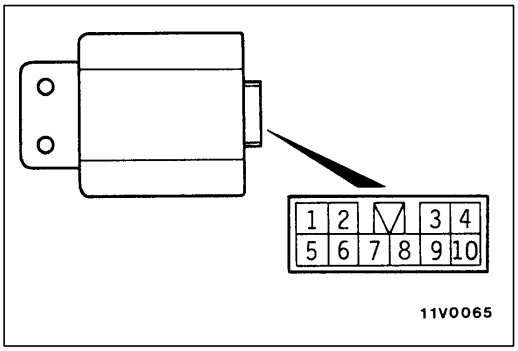

INSPECTION

27200330026

REAR DIFFERENTIAL LOCK SWITCH CHECK

Switch position	Terminal No.						
	1	2	3	4	5	7	8
OFF	○	——	○			ILL ○	○
ON	○	——	○	IND ○	○	ILL ○	○

REAR DIFFERENTIAL LOCK-ECU CHECK

27200320023

1. Measure the terminal voltage under each condition.
2. With the ECU connected to the harness and the probe inserted into rear of the harness connector, measure the voltage between terminal No.6 (earth terminal) and each terminal.

Terminal No.	Inspection item		Condition		Terminal voltage
3	Ignition switch (IG1)		Ignition switch (IG1)	OFF	0 V
				ON	System voltage
9	Rear differential lock switch	ON side	Ignition switch: ON	ON side or OFF side	0 V
1		OFF side		When in neutral	System voltage
10	Rear differential lock indicator lamp		Ignition switch: ON	Rear differential is locked	0 V
				Rear differential is free	System voltage
2	Vehicle speed reed switch		Select “D” or “1” (1st gear) and drive forward slowly		5 V
8	Rear differential lock detection switch		Ignition switch: ON	Rear differential is locked	0 V
				Rear differential is free	System voltage
4	Rear differential lock air pump		Ignition switch: ON	When filling or holding	System voltage
				When releasing	0 V
5	4WD detection switch		Ignition switch: ON	4WD	System voltage
				2WD	0 V

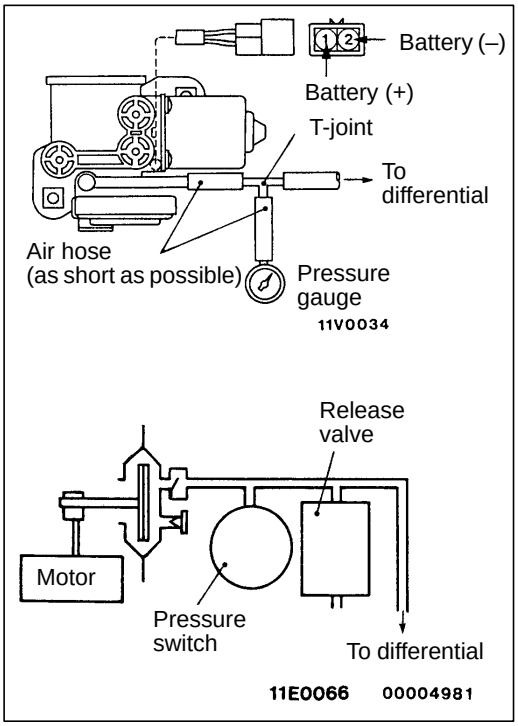

REAR DIFFERENTIAL LOCK AIR PUMP CHECK

27200310020

1. Install air hose to the differential.
2. Connect a pressure gauge to the air pump discharge outlet nozzle, via the air hose and T-joint.
3. Apply battery voltage to the air pump connector.
4. Measure the time when the pump starts and stops operating, and if it stops within 5 seconds, the pressure switch inside the pump is normal.
5. Measure the pressure 10 – 20 seconds after the pump has stopped.

   Standard value: 25 – 40 kPa

   If the pressure is within the standard value, the release valve inside the pump is normal.
6. Check that the pump does not begin operating for 5 minutes after it has stopped.
7. If the inspection for 4 – 6 is normal, then the pump is fully operational.

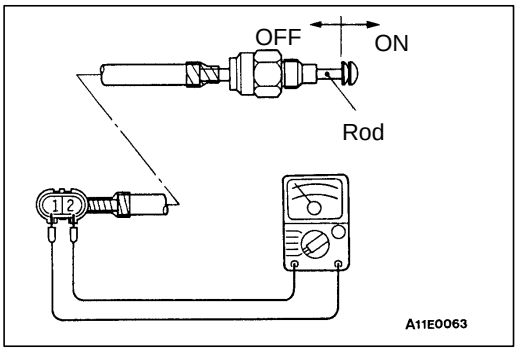

REAR DIFFERENTIAL LOCK DETECTION SWITCH CHECK

27200100030

1. Connect an ohmmeter to the detection switch connector.
2. The rear differential lock switch is in good condition when the rod of the detection switch is pulled, there should be continuity, and when it returned to its normal position, no continuity.

DIFFERENTIAL CARRIER

27200200068

REMOVAL AND INSTALLATION

Pre-removal Operation
- Differential Gear Oil Draining
- Axle Shaft Assembly Removal (Refer to P.27-16.)

Post-installation Operation
- Axle Shaft Assembly Installation (Refer to P.27-16.)
- Differential Gear Oil Filling (Refer to P.27-10.)

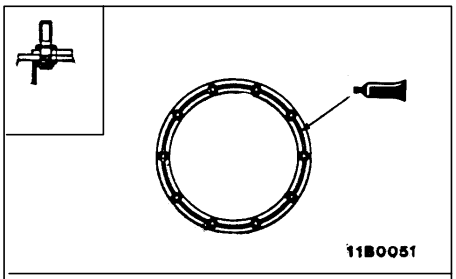

Sealant: 3M ATD Part No.8661 or equivalent

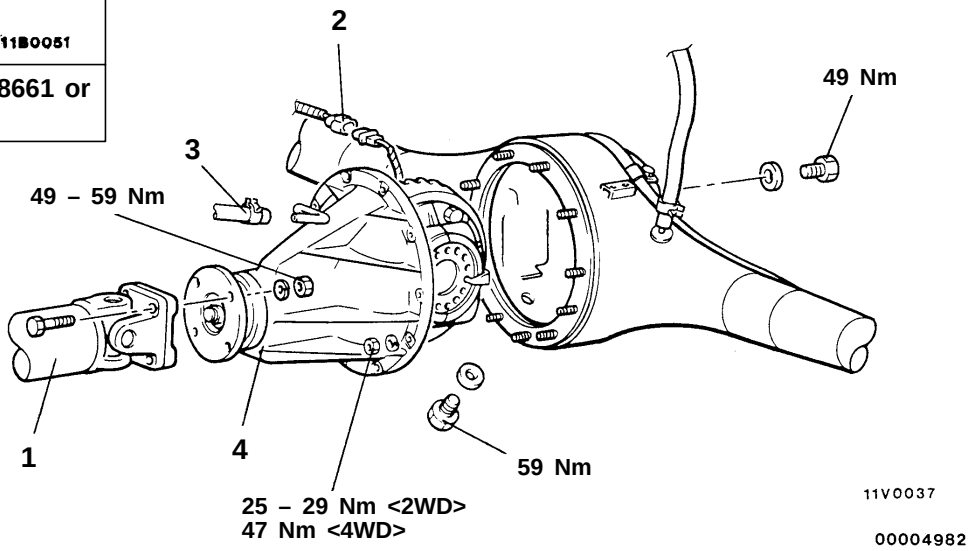

Removal steps

◀A▶ ▶A◀ 1. Propeller shaft connection
2. Rear differential lock detection switch connection
3. Hose connection <Vehicles with rear differential lock>
◀B▶ 4. Differential carrier assembly

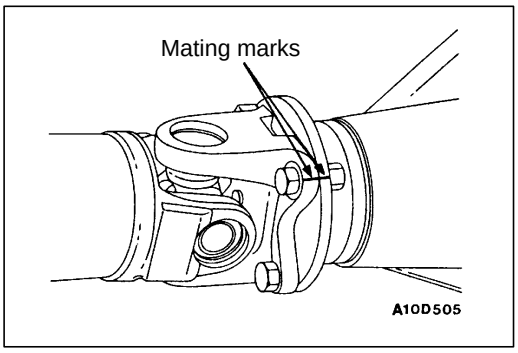

REMOVAL SERVICE POINTS

◀A▶ PROPELLER SHAFT REMOVAL

Make the mating marks on the flange yoke of the propeller shaft and the companion flange of the differential case.

Caution
Suspend the propeller shaft from the body with wire, etc.

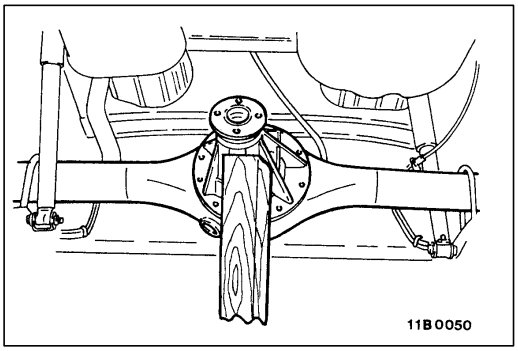

◀B▶ DIFFERENTIAL CARRIER REMOVAL

Remove the attaching nuts and strike the lower part of differential carrier assembly with a piece of timber several times to loosen, then remove the assembly.

Caution
Use care not to strike the companion flange.

INSTALLATION SERVICE POINT

▶A◀ PROPELLER SHAFT INSTALLATION

Align the mating marks on the flange yoke and the companion flange to install the propeller shaft.

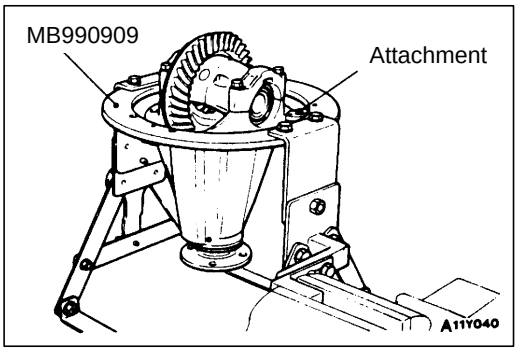

INSPECTION BEFORE DISASSEMBLY 27200290041

Secure the special tool with a vice and install the differential carrier assembly with the attachment. Then carry out the following inspection.

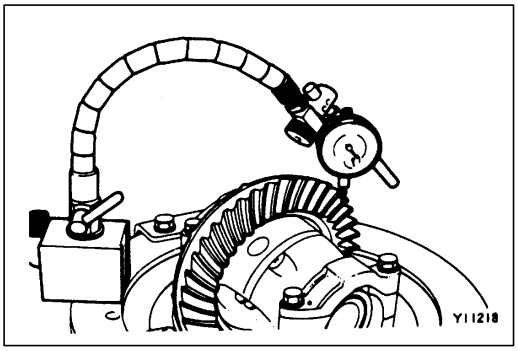

DRIVE GEAR BACKLASH

1. Place a dial gauge against the end of a drive gear tooth and secure the drive pinion. Then turn the drive gear and take measurements at four places or more to check the backlash.

   Standard value:
   <2WD> 0.08 – 0.13 mm
   <4WD> 0.13 – 0.18 mm

2. If the backlash is not within the standard value, replace the side bearing spacer, and then check the drive gear tooth contact.

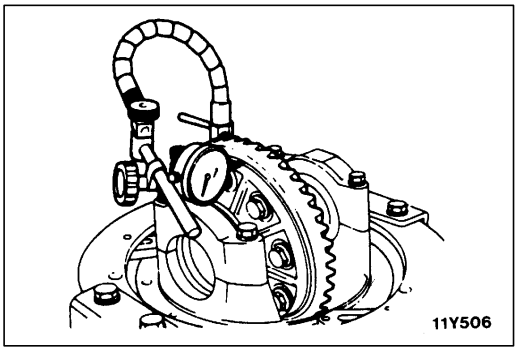

DRIVE GEAR RUNOUT

1. Measure the drive gear runout at the shoulder on the reverse side of the drive gear.

   Limit: 0.05 mm

2. If the runout exceeds the limit value, check that there is no foreign material between the reverse side of the drive gear and the differential case, or that there is no looseness in the drive gear mounting bolt.
3. If step (2) is normal, change the assembly position of the drive gear and differential case, and then take another measurement.
4. If adjustment is impossible, replace the differential case or the drive gear and drive pinion as a set.

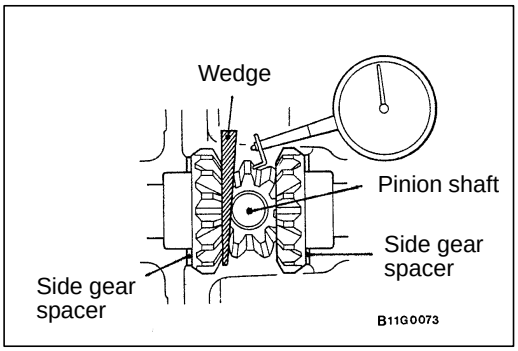

DIFFERENTIAL GEAR BACKLASH

1. Tap in a wooden wedge between the side gear and the pinion shaft and secure one side gear. Then place a dial gauge (with the measuring probe extended) against the pinion gear and measure the backlash.

   Standard value:
   <2WD> 0 – 0.076 mm
   <4WD> 0 – 0.25 mm

   NOTE
   Check the other pinion gear by the same procedure.

   Limit: 0.2 mm

2. If the backlash exceeds the limit, replace the side gear spacers.
3. If adjustment is not possible, replace the side gears and pinion gears as a set.

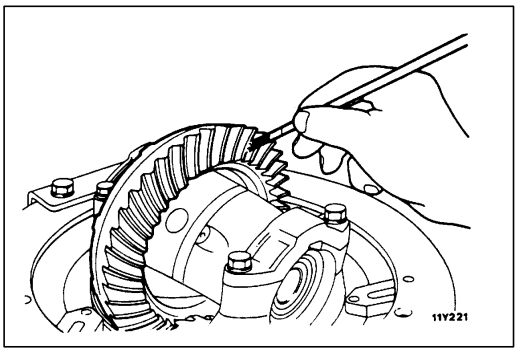

DRIVE GEAR TOOTH CONTACT

Check the drive gear tooth contact by the following steps.

1. Apply a thin, uniform coat of machine blue to both surfaces of the drive gear teeth.

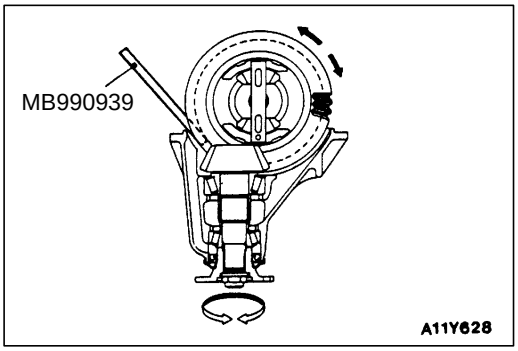

2. Insert a brass rod between the differential carrier and the differential case, and then rotate the companion flange by hand (once in the normal direction, and then once in the reverse direction) while applying a load to the drive gear, so that the revolution torque (approximately 2.5 – 3.0 Nm) is applied to the drive pinion.

   Caution
   If the drive gear is rotated too much, the tooth contact pattern will become unclear and difficult to check.

3. Check the tooth-contact condition of the drive gear and drive pinion.

Standard tooth contact pattern	Problem	Solution
1 Narrow tooth side 2 Drive-side tooth surface (the side applying power during forward movement) 3 Wide tooth side 4 Coast-side tooth surface (the side applying power during reverse movement) 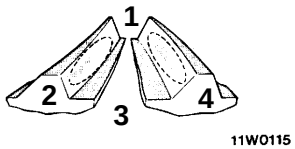 	Tooth contact pattern resulting from excessive pinion height 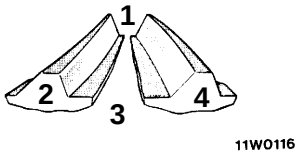 The drive pinion is positioned too far from the centre of the drive gear.	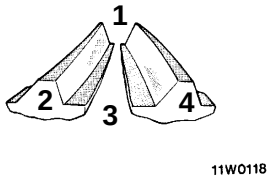 Increase the thickness of the pinion height adjusting shim, and position the drive pinion closer to the centre of the drive gear. Also, for backlash adjustment, position the drive gear farther from the drive pinion.
	Tooth contact pattern resulting from insufficient pinion height 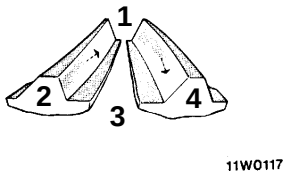 The drive pinion is positioned too close to the centre of the drive gear.	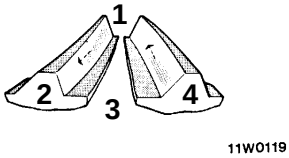 Decrease the thickness of the pinion height adjusting shim, and position the drive pinion farther from the centre of the drive gear. Also, for backlash adjustment, position the drive gear closer to the drive pinion.

NOTE
Checking the tooth contact pattern is the way to confirm that the adjustments of the pinion height and backlash have been done properly. Continue to adjust the pinion height and backlash until the tooth contact pattern resembles the standard pattern.

If, even after adjustments have been made, the correct tooth contact pattern cannot be obtained, it means that the drive gear and the drive pinion have become worn beyond the allowable limit. Replace the gear set.

DISASSEMBLY

27200220040

<VEHICLES WITHOUT REAR DIFFERENTIAL LOCK>

<Conventional differential>

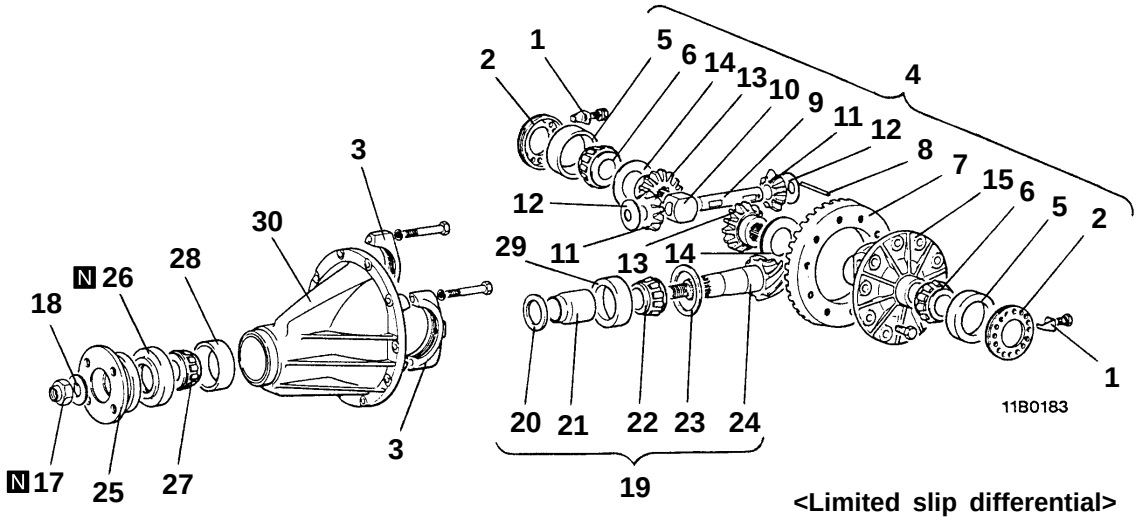

<Limited slip differential>

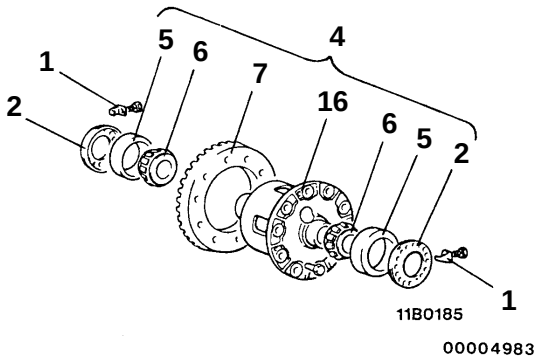

Disassembly steps

- Inspection before disassembly (P.27-30.)

1. Lock plate
2. ◀A▶ Side bearing nut
3. Bearing cap
4. ◀B▶ Differential case assembly
5. Side bearing outer race
6. ◀C▶ Side bearing inner race
7. ◀D▶ Drive gear
8. ◀E▶ Lock pin
9. Pinion shaft
10. Thrust block <Vehicles without ABS>
11. Pinion gear
12. Pinion washer
13. Side gear
14. Side gear thrust spacer
15. Differential case
16. Limited slip differential case assembly
17. ◀F▶ Self-locking nut
18. Washer
19. ◀G▶ Drive pinion assembly
20. Drive pinion front shim (For adjusting preload of drive pinion)
21. Drive pinion spacer
22. ◀H▶ Drive pinion rear bearing inner race
23. Drive pinion rear shim (For adjusting drive pinion height)
24. Drive pinion
25. Companion flange
26. ◀I▶ Oil seal
27. ◀I▶ Drive pinion front bearing inner race
28. ◀I▶ Drive pinion front bearing outer race
29. ◀J▶ Drive pinion rear bearing outer race
30. Differential carrier

<VEHICLES WITH REAR DIFFERENTIAL LOCK>

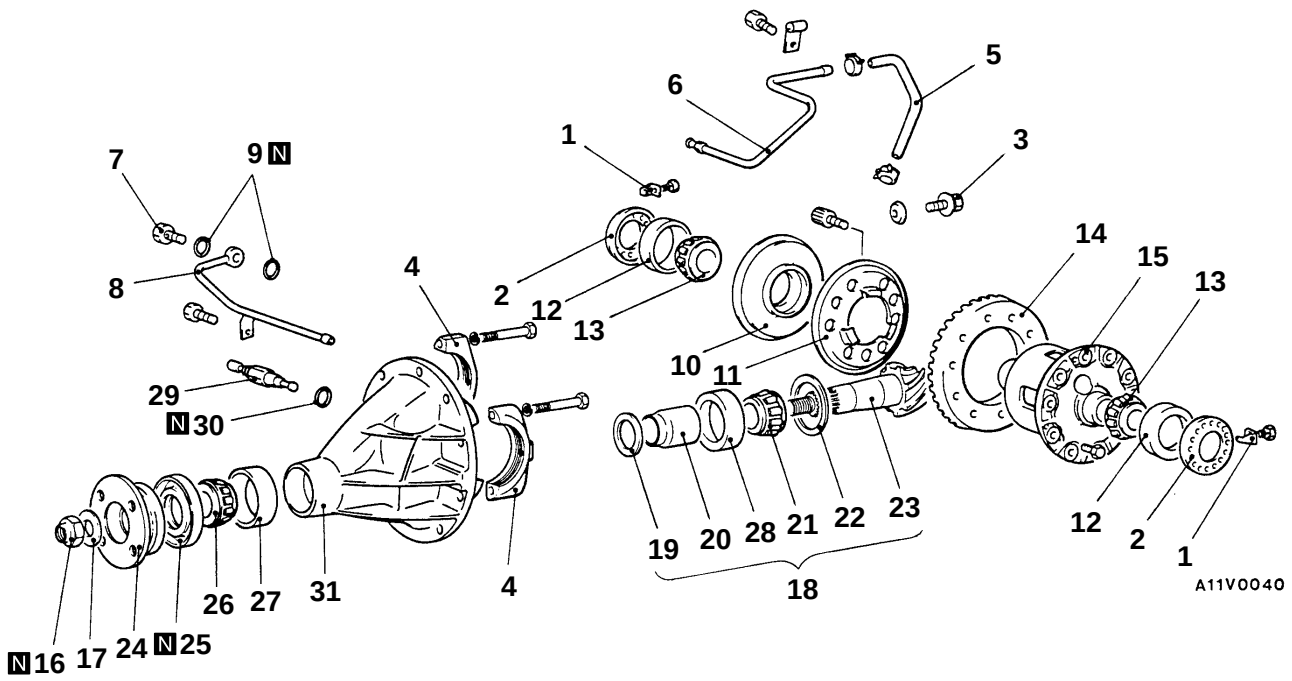

Disassembly steps

- Inspection before disassembly (P.27-30.)

1. Lock plate
◀A▶ 2. Side bearing nut
3. Bolt
4. Bearing cap
5. Hose
6. Air pipe assembly (A)
7. Eye bolt
8. Air pipe assembly (B)
9. Gasket
10. Actuator assembly
11. Pressure plate
12. Side bearing outer race
◀C▶ 13. Side bearing inner race
◀D▶ 14. Drive gear
15. Differential case
◀F▶ 16. Self-locking nut
17. Washer
◀G▶ 18. Drive pinion assembly
19. Drive pinion front shim (For adjusting preload of drive pinion)
20. Drive pinion spacer
◀H▶ 21. Drive pinion rear bearing inner race
22. Drive pinion rear shim (For adjusting drive pinion height)
23. Drive pinion
24. Companion flange
◀I▶ 25. Oil seal
◀I▶ 26. Drive pinion front bearing inner race
◀I▶ 27. Drive pinion front bearing outer race
◀J▶ 28. Drive pinion rear bearing outer race
29. Rear differential lock detection switch
30. Gasket
31. Differential carrier

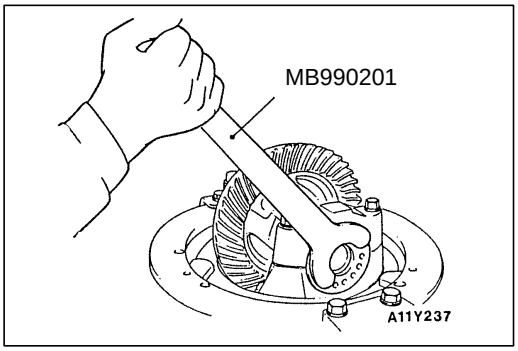

DISASSEMBLY SERVICE POINTS

◀A▶ SIDE BEARING NUT REMOVAL

NOTE
Keep the right and left side bearings and side bearing nuts separate, so that they do not become mixed at the time of reassembly.

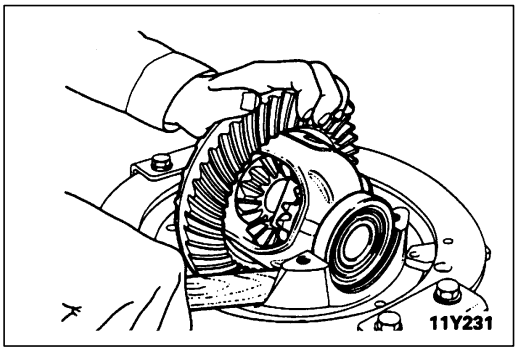

◀B▶ DIFFERENTIAL CASE ASSEMBLY REMOVAL

Use the handle of a hammer to remove the differential case assembly.

NOTE
Keep the right and left side bearings and side bearing nuts separate, so that they do not become mixed at the time of reassembly.

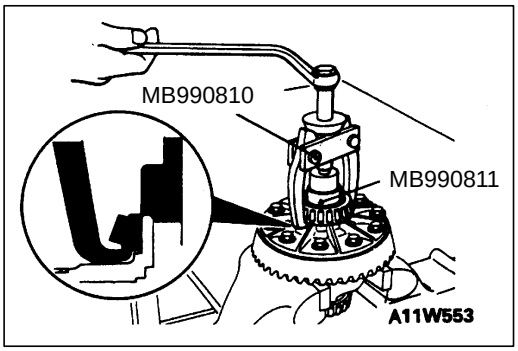

◀C▶ SIDE BEARING INNER RACE REMOVAL

NOTE
Attach the prongs of the special tool to the inner race of the side bearing through the openings in the differential case.

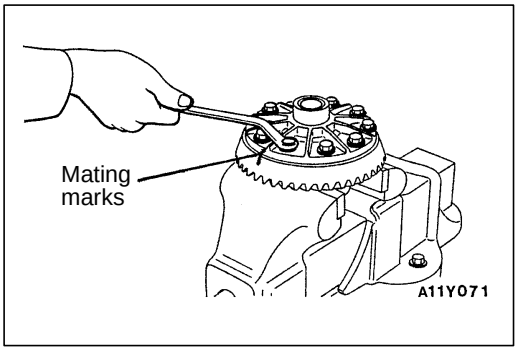

◀D▶ DRIVE GEAR REMOVAL

1. Make the mating marks to the differential case and the drive gear.
2. Loosen the drive gear attaching bolts in diagonal sequence to remove the drive gear.

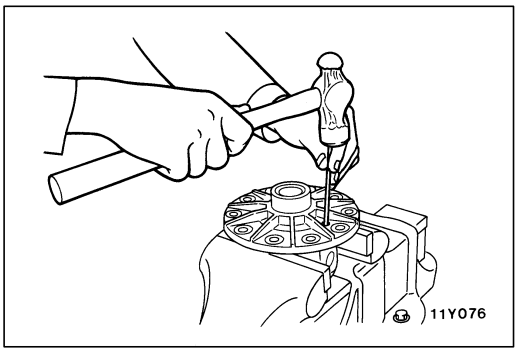

◀E▶ LOCK PIN REMOVAL

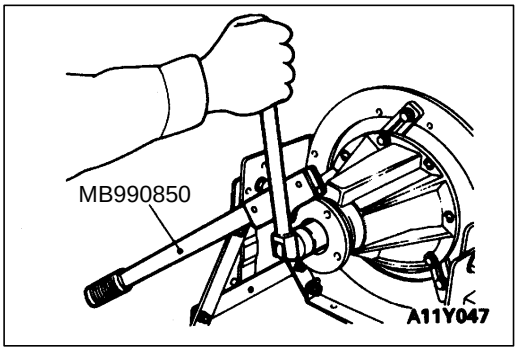

◀F▶ SELF-LOCKING NUT REMOVAL

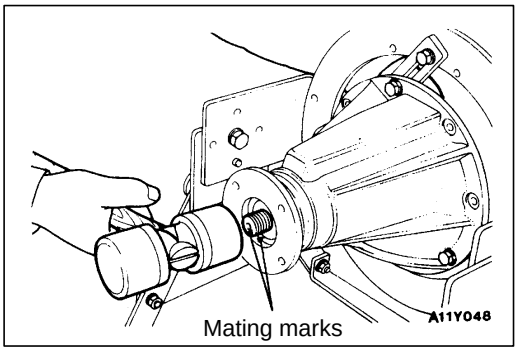

◀G▶ DRIVE PINION ASSEMBLY REMOVAL

1. Make the mating marks to the drive pinion and companion flange.

   Caution
   Do not make mating marks on the contact surfaces of the companion flange and propeller shaft.

2. Drive out the drive pinion together with the drive pinion spacer and drive pinion front shims.

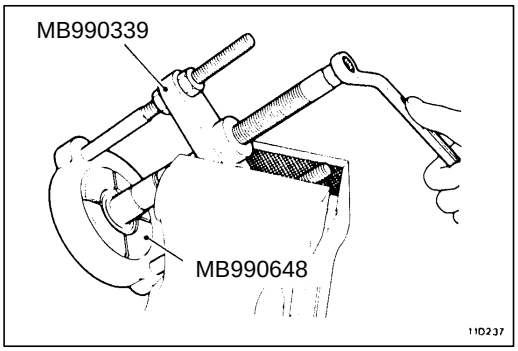

◀H▶ DRIVE PINION REAR BEARING INNER RACE REMOVAL

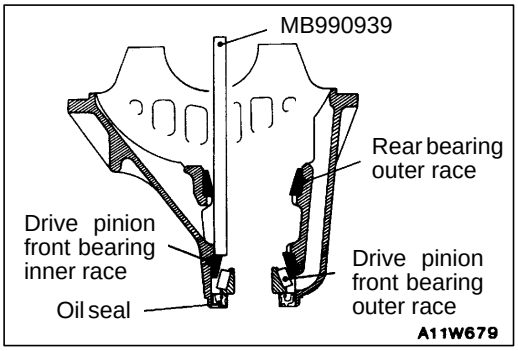

◀I▶ OIL SEAL / DRIVE PINION FRONT BEARING INNER RACE / DRIVE PINION FRONT BEARING OUTER RACE REMOVAL

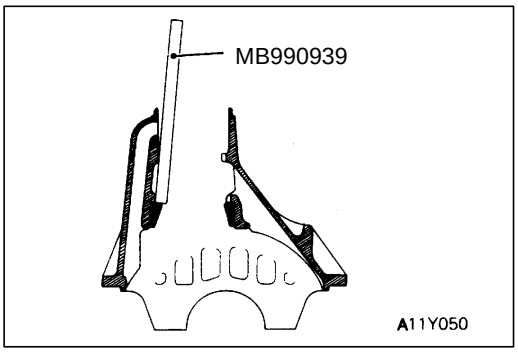

◀J▶ DRIVE PINION REAR BEARING OUTER RACE REMOVAL

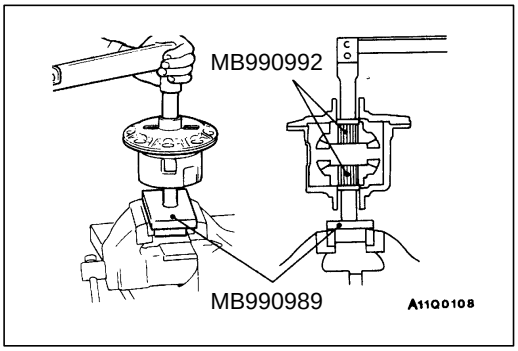

INSPECTION

27200210016

DIFFERENTIAL PRELOAD CHECK

1. Use the special tool to measure the differential preload.

   Standard value:
   <When installing a new clutch plate>
   39 – 74 Nm
   <When reinstalling the current clutch plate>
   25 – 74 Nm

2. If the differential preload is not within the standard value, disassemble the differential case assembly and repair or replace the parts.

REASSEMBLY

27200230043

<VEHICLES WITHOUT REAR DIFFERENTIAL LOCK>

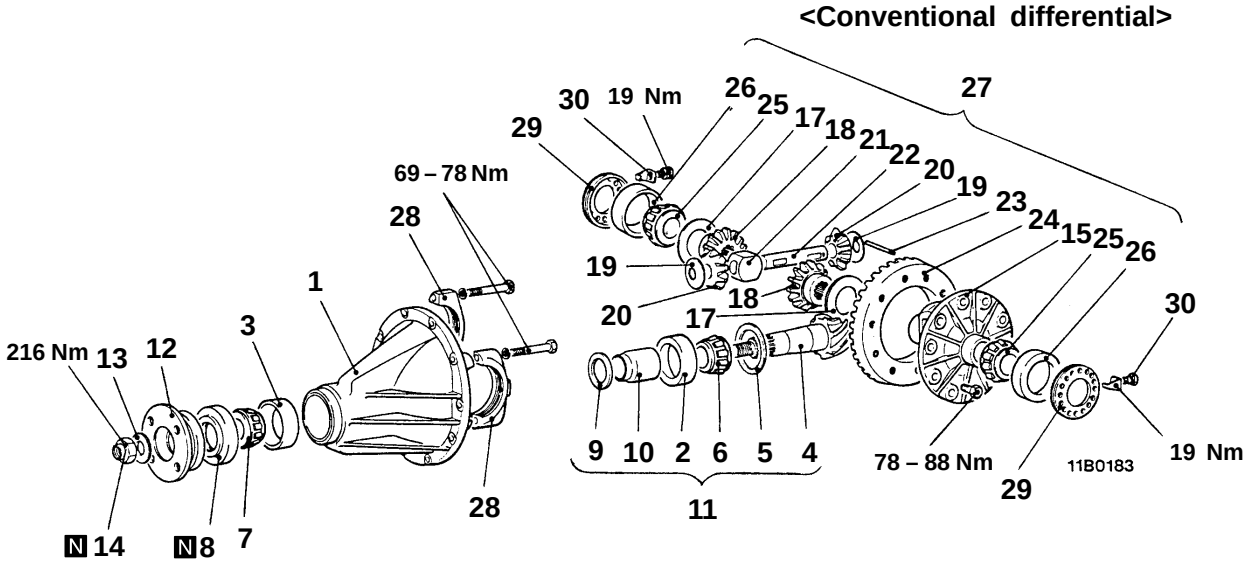

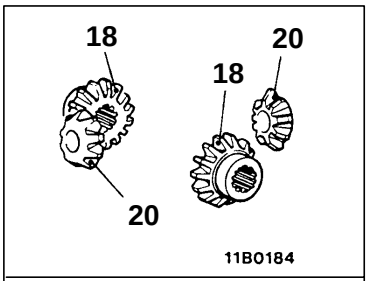

Differential gear set

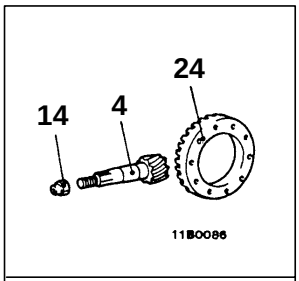

Final drive gear set

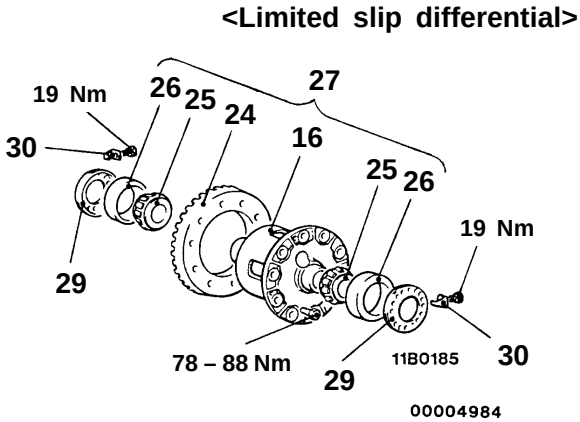

Reassembly steps

1. Differential carrier
▶A◀ 2. Drive pinion rear bearing outer race
▶B◀ 3. Drive pinion front bearing outer race
▶C◀ ● Drive pinion height adjustment
4. Drive pinion
5. Drive pinion rear shim (For adjusting drive pinion height)
6. Drive pinion rear bearing inner race
▶D◀ ● Drive pinion preload adjustment
7. Drive pinion front bearing inner race
8. Oil seal
9. Drive pinion front shim (For adjusting drive pinion preload)
10. Drive pinion spacer
11. Drive pinion assembly
12. Companion flange
13. Washer
14. Self-locking nut
15. Differential case
16. Limited slip differential case
17. Side gear thrust spacer
18. Side gear
19. Pinion washer
20. Pinion gear
▶E◀ ● Differential gear backlash adjustment
21. Thrust block <Vehicles without ABS>
22. Pinion shaft
▶F◀ 23. Lock pin
▶G◀ 24. Drive gear
▶H◀ 25. Side bearing inner race
26. Side bearing outer race
27. Differential case assembly
▶I◀ 28. Bearing cap
▶J◀ ● Drive gear backlash adjustment
29. Side bearing nut
30. Lock plate

<VEHICLES WITH REAR DIFFERENTIAL LOCK>

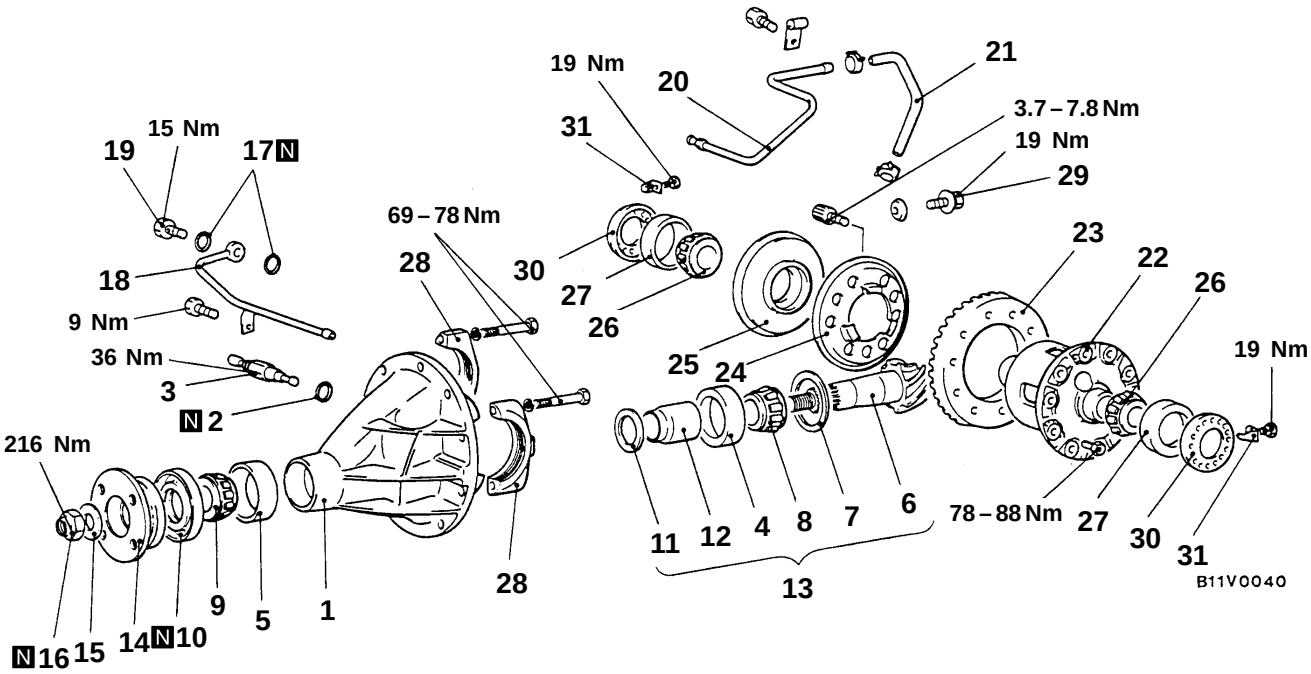

Reassembly steps

1. Differential carrier
2. Gasket
3. Rear differential lock detection switch
▶A◀ 4. Drive pinion rear bearing outer race
▶B◀ 5. Drive pinion front bearing outer race
▶C◀ ● Drive pinion height adjustment
6. Drive pinion
7. Drive pinion rear shim (For adjusting drive pinion height)
8. Drive pinion rear bearing inner race
▶D◀ ● Drive pinion preload adjustment
9. Drive pinion front bearing inner race
10. Oil seal
11. Drive pinion front shim (For adjusting drive pinion preload)
12. Drive pinion spacer
13. Drive pinion assembly
14. Companion flange
15. Washer
16. Self-locking nut
17. Gasket
18. Air pipe assembly (B)
19. Eye bolt
20. Air pipe assembly (B)
21. Hose
22. Differential case
▶G◀ 23. Drive gear
24. Pressure plate
25. Actuator assembly
▶H◀ 26. Side bearing inner race
27. Side bearing outer race
▶I◀ 28. Bearing cap
▶J◀ ● Drive gear backlash adjustment
29. Bolt
30. Side bearing nut
31. Lock plate

Lubrication and Adhesive Points

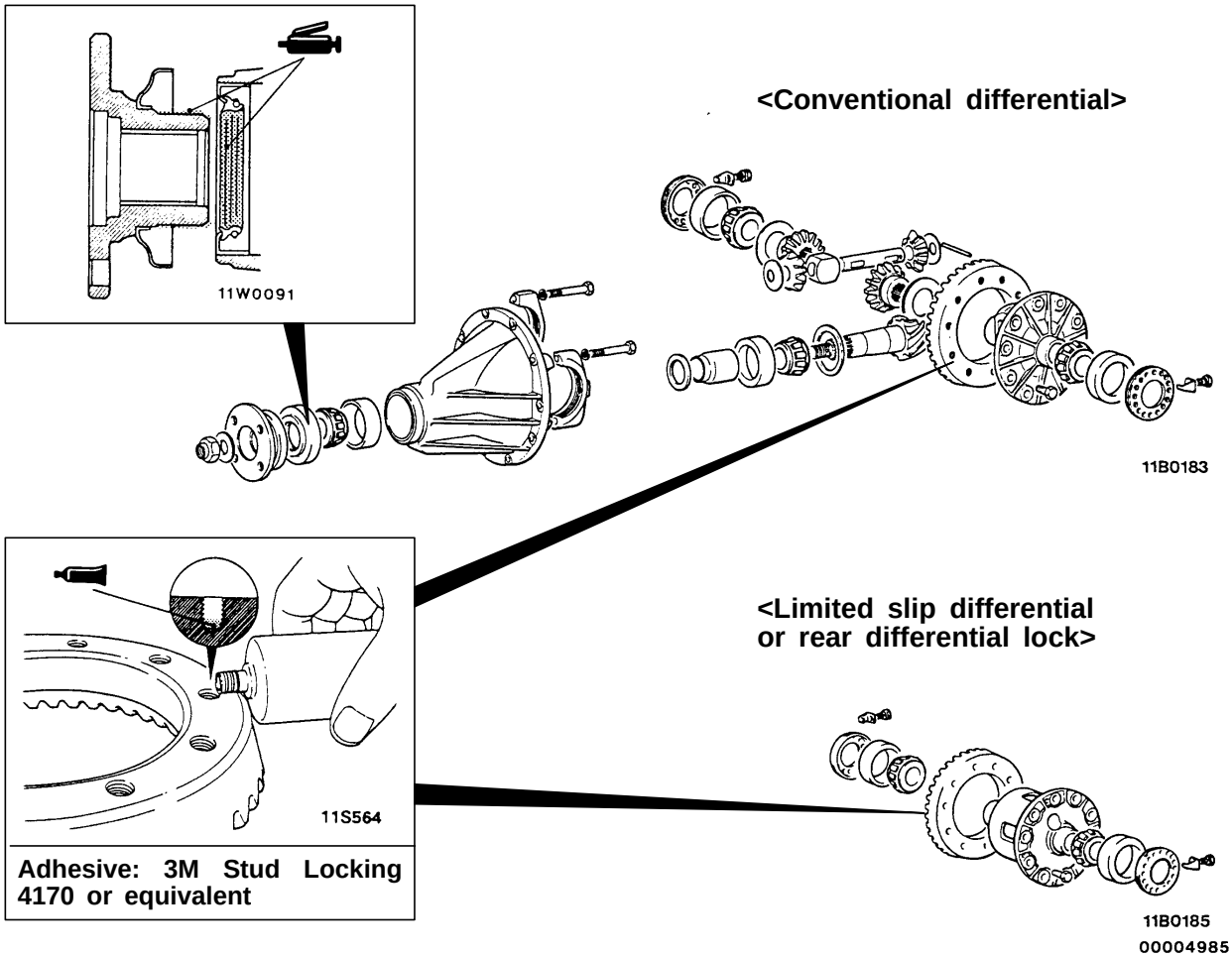

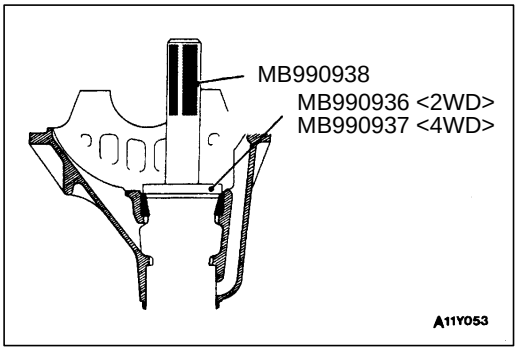

DISASSEMBLY SERVICE POINTS

▶A◀ DRIVE PINION REAR BEARING OUTER RACE PRESS-FITTING

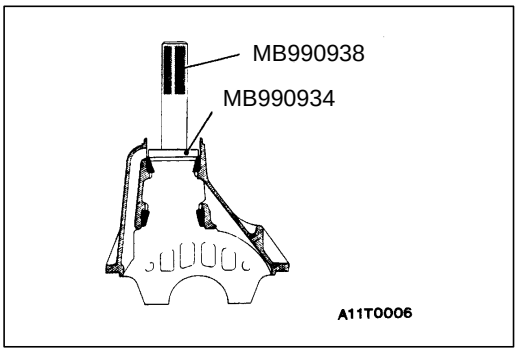

▶B◀ DRIVE PINION FRONT BEARING OUTER RACE PRESS-FITTING

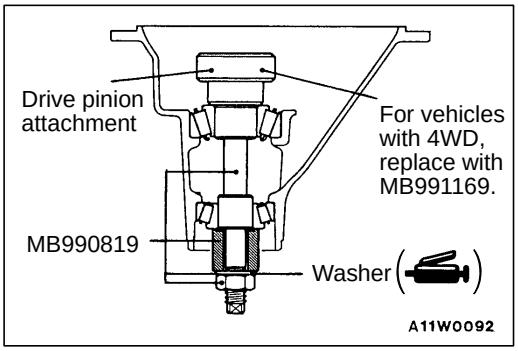

▶C◀ DRIVE PINION HEIGHT ADJUSTMENT

Adjust the drive pinion height by the following procedures:

1. Apply multipurpose grease to the washer of the special tool.
2. Install special tools and drive pinion front and rear bearing inner races to the gear carrier in the sequence shown in the illustration.

   NOTE
   For vehicles with 4WD, replace the drive pinion attachment only with MB991169.

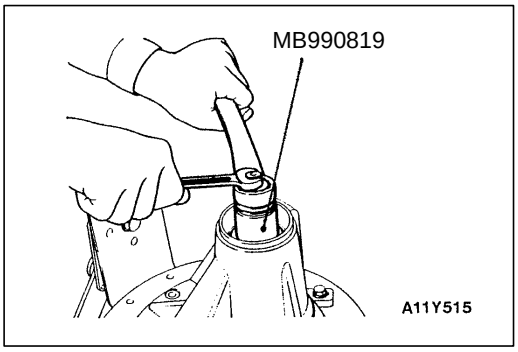

3. Tighten the nut of the special tool step by step while measuring the rotation torque of the drive pinion. Then check the rotation torque is at the standard value.

   Standard value:

Bearing division	Bearing lubrication	Rotation torque
New	None (With anti-rust agent)	0.6 – 0.9 Nm
New or reusing	Gear oil applied	0.4 – 0.5 Nm

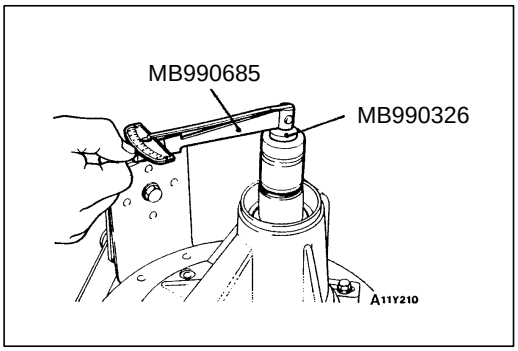

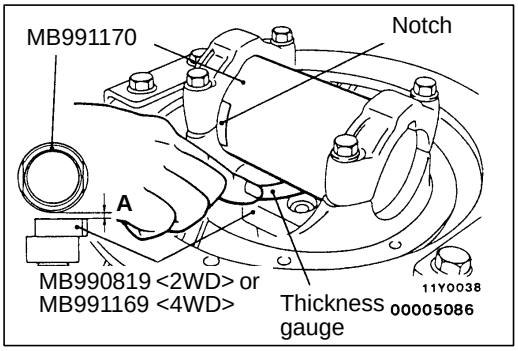

4. Clean the side bearing hub.
5. Place the special tools between the side bearing hub of the gear carrier, and position the notch as shown in the illustration. Then tighten side bearing mounting bolt.
6. Use a thickness gauge to measure the clearance (A) between the special tools.

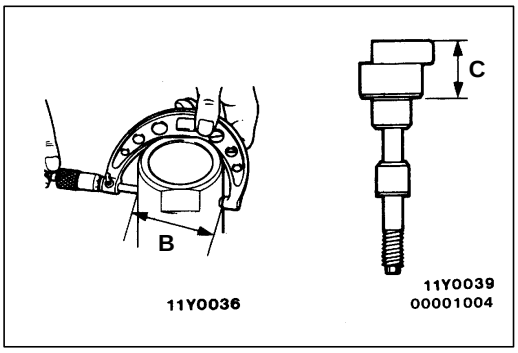

7. Remove the special tools (MB990819, MB991169).
8. Use a micrometer to measure the shown dimensions (B, C) of the special tools.

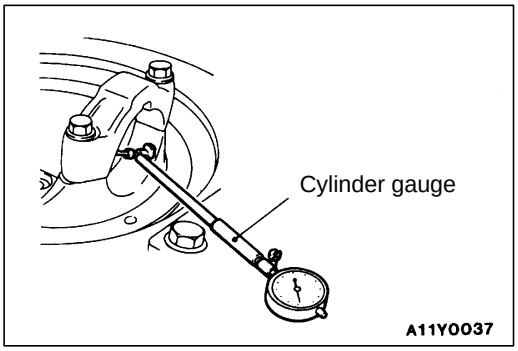

9. Install the bearing cap, and then use a cylinder gauge to measure the inside diameter (D) of the bearing cap.
10. Calculate the thickness (F) of the required drive pinion rear shim by the following formula, and then select a shim which most closely matches this thickness.
    F = A + B + C – 1/2D – E

    E: 100.00 <2WD>
    115.00 <4WD>

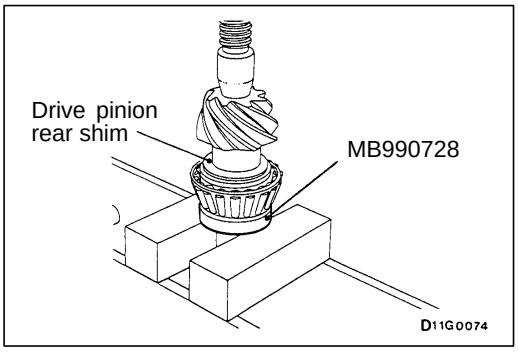

11. Fit the selected drive pinion rear shim(s) to the drive pinion, and press-fit the drive pinion rear bearing inner race by using the special tool.

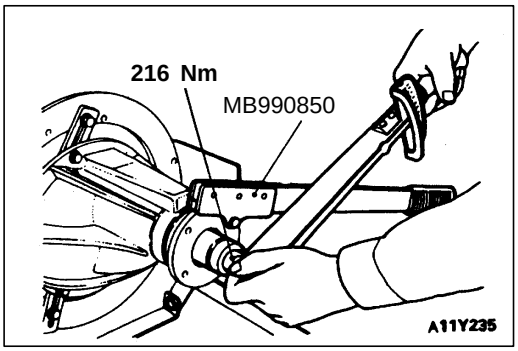

▶D◀ DRIVE PINION PRELOAD ADJUSTMENT

1. Insert the drive pinion into the gear carrier, and then install the following parts in that order from the carrier rear side. Drive pinion spacer, drive pinion front shim and drive pinion front bearing inner race, companion flange.

   NOTE
   Do not install the oil seal.

2. Tighten the companion flange to the specified torque by using the special tools.

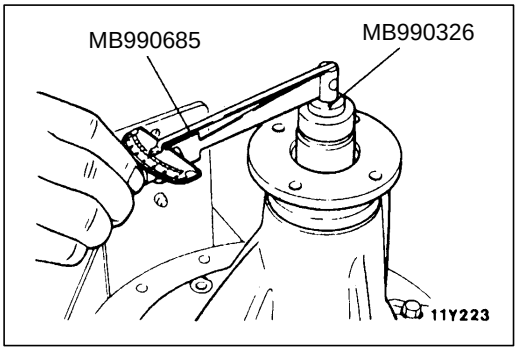

3. Measure the drive pinion turning torque. (without the oil seal)

   Standard value:

Bearing division	Bearing lubrication	Rotation torque
New	None (With anti-rust agent)	0.6 – 0.9 Nm
New or reusing	Gear oil applied	0.4 – 0.5 Nm

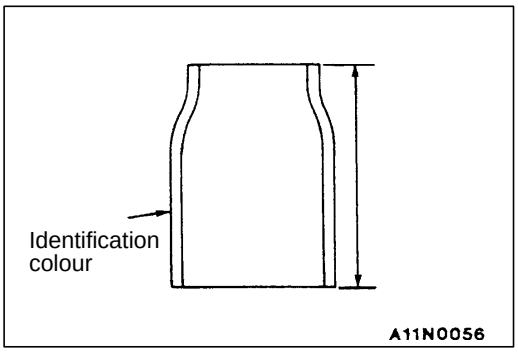

4. If the drive pinion turning torque is not within the range of the standard value, adjust the turning torque by replacing the drive pinion front shim(s) or the drive pinion spacer.

   NOTE
   When selecting the drive pinion front shims, if the number of shims is large, reduce the number of shims to a minimum by selecting the drive pinion spacers.
   Also, select the drive pinion spacer from the following two types.

Height of drive pinion spacer mm	Identification colour
56.67	–
57.01	White

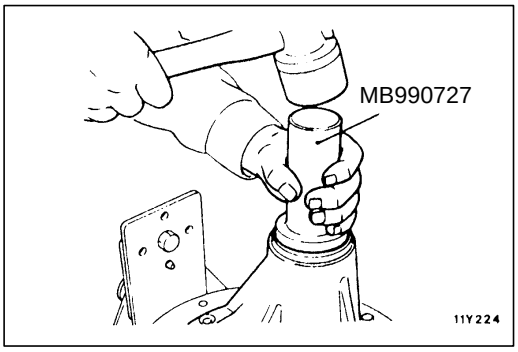

5. Remove the companion flange and drive pinion again. Then insert the drive pinion front bearing inner race into the gear carrier and use the special tool to press-fit the oil seal.

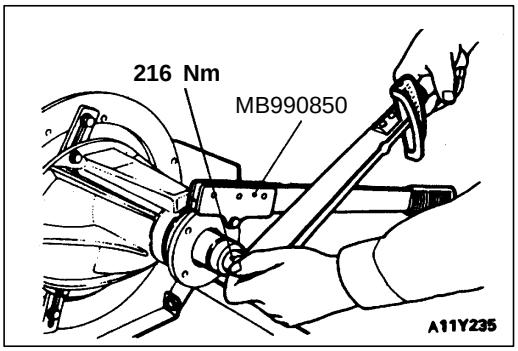

6. Install the drive pinion assembly and companion flange with mating marks properly aligned, and tighten the companion flange self-locking nut to the specified torque by using the special tools.

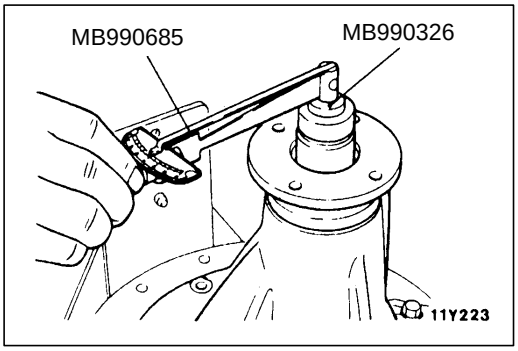

7. Measure the drive pinion turning torque (with oil seal) to verify that the drive pinion turning torque complies with the standard value.

Standard value:

Bearing division	Bearing lubrication	Rotation torque
New	None (With anti-rust agent)	0.8 – 1.1 Nm
New or reusing	Gear oil applied	0.6 – 0.7 Nm

8. If the rotation torque is not within the standard value, check the tightening torque of the companion flange self-locking nut and the installation of the oil seal.

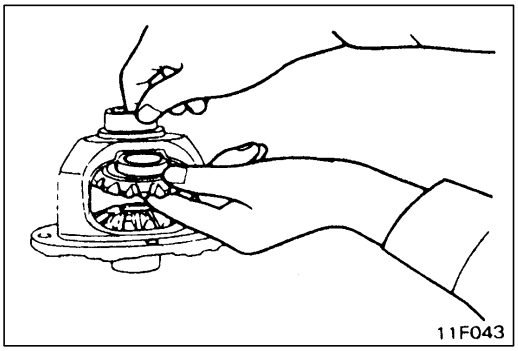

▶E◀ DIFFERENTIAL GEAR BACKLASH ADJUSTMENT

Adjust the differential gear backlash by the following procedure.

1. Assemble the side gears, side gear thrust spacers, pinion gears, and pinion washers into the differential case.
2. Temporarily install the pinion shaft.

   NOTE
   Do not assemble the thrust block and lock pin yet.

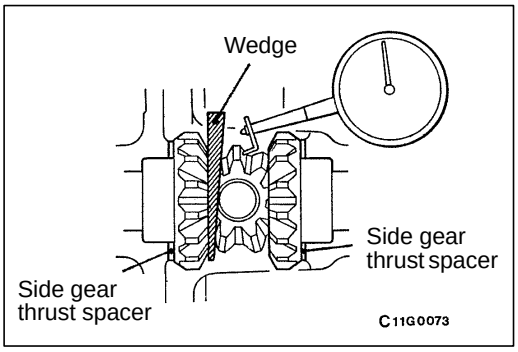

3. Insert a wedge between the side gear and the pinion shaft to lock the side gear.
4. While locking the side gear with the wedge, measure the differential gear backlash with a dial indicator on the pinion gear.

   Standard value:
   <2WD> 0 – 0.25 mm
   <4WD> 0 – 0.076 mm

   NOTE
   Measure by the same procedure for the other pinion gear.

   Limit: 0.2 mm
5. If the backlash exceeds the limit value, replace side bearing adjustment spacers.
6. If adjustment is not possible, replace the side gears and pinion gears as a set.
7. Check that the backlash is within the limit value and that the differential gear turns smoothly.

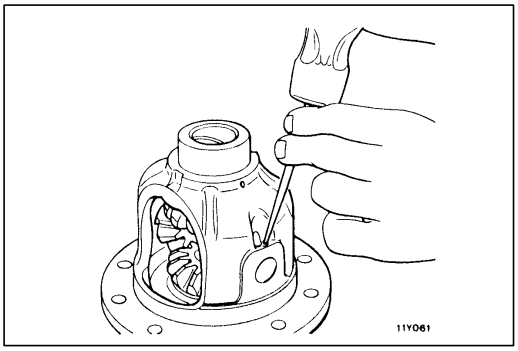

▶F◀ LOCK PIN INSTALLATION

1. Align the pinion shaft lock pin hole with the differential case lock pin hole, and drive in the lock pin.
2. Stake the lock pin with a punch at two points.

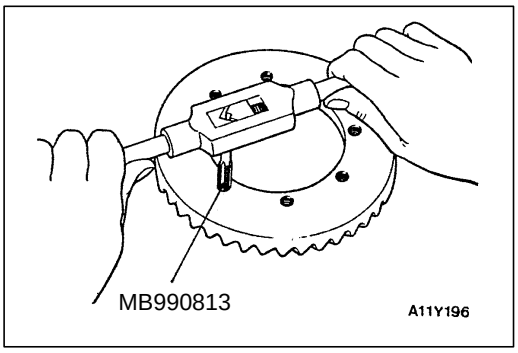

▶G◀ DRIVE GEAR INSTALLATION

1. Clean the drive gear attaching bolts.
2. Remove the adhesive adhered to the threaded holes of the drive gear by turning the special tool (tap M10 x 1.25), and then clean the threaded holes by applying compressed air.

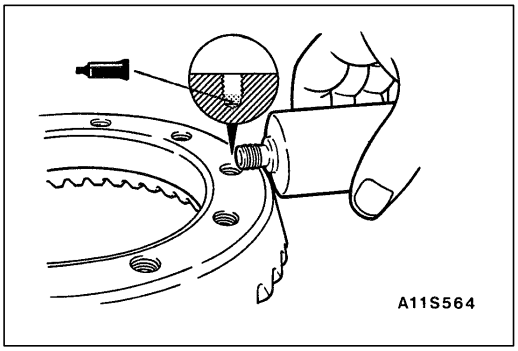

3. Apply the specified adhesive to the threaded holes of the drive gear.

   Specified adhesive:
   3M Stud Locking 4170 or equivalent

4. Install the drive gear onto the differential case with the mating marks properly aligned. Tighten the bolts to the specified torque in a diagonal sequence.

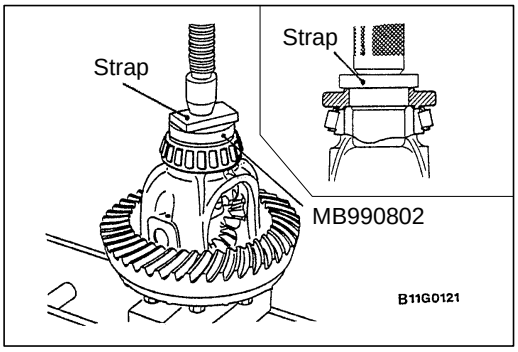

▶H◀ SIDE BEARING INNER RACE INSTALLATION

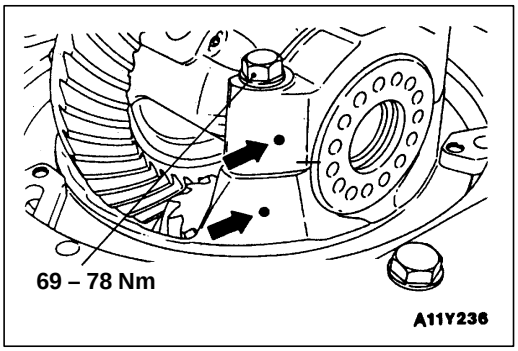

▶I◀ BEARING CAP INSTALLATION

Align the mating marks on the gear carrier and the bearing cap, and then tighten the bearing cap.

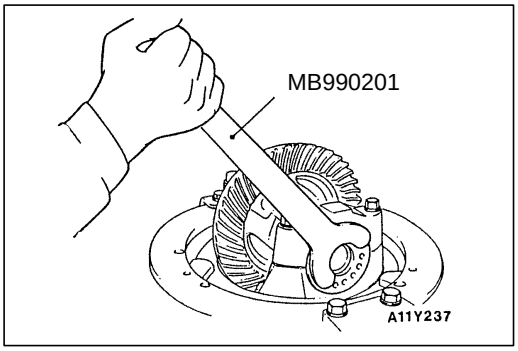

▶J◀ DRIVE GEAR BACKLASH ADJUSTMENT

Adjust drive gear backlash as follows:

1. Using the special tool, temporarily tighten the side bearing nut until it is in the state just before preloading of the side bearing.

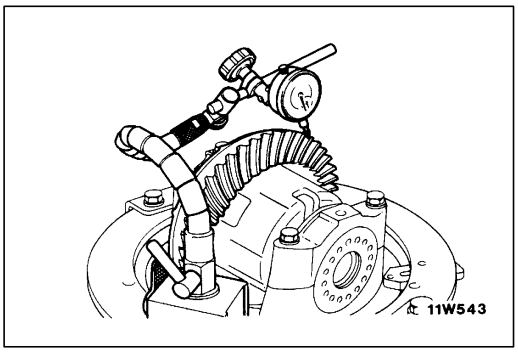

2. Measure the drive gear backlash.

   Standard value:
   <2WD> 0.08 – 0.13 mm
   <4WD> 0.13 – 0.18 mm

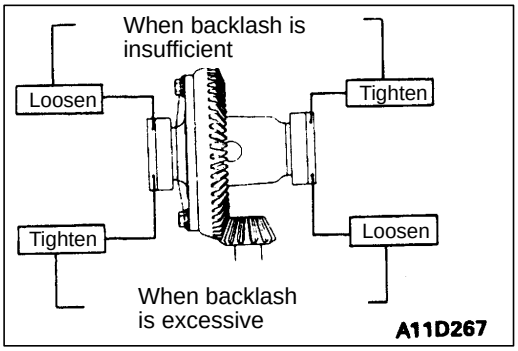

3. Using the special tool (MB990201), adjust the backlash to standard value by moving the side bearing nut as shown.

   NOTE
   First turn the side bearing nut for loosening, and then turn (by the same amount) the side bearing nut for tightening.

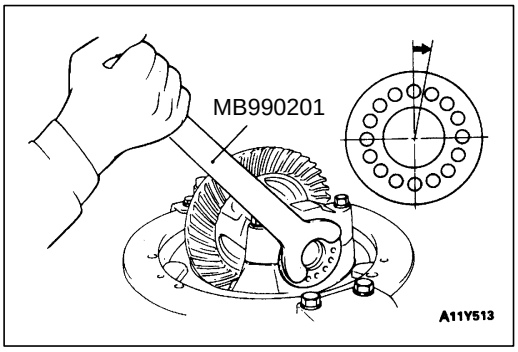

4. Using the special tool, to apply the preload, turn down both right and left side bearing nuts on half the distance between centres of two neighbouring holes.

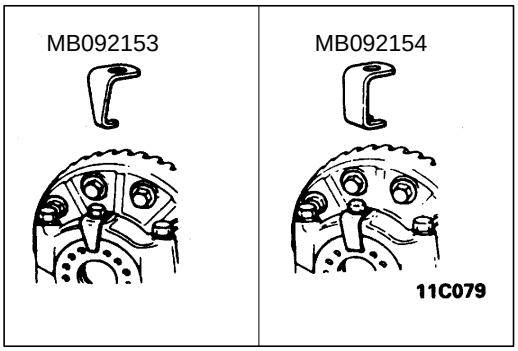

5. Choose and install the lock plate (two kinds).
6. Check the final drive gear tooth contact. If poor contact is evident, make adjustment. (Refer to P. 27-31.)

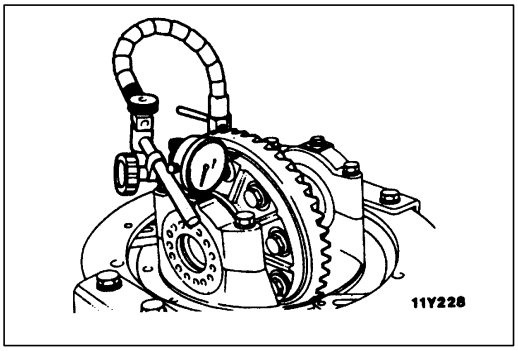

7. Measure the drive gear runout.

   Limit: 0.05 mm

8. When drive gear runout exceeds the limit, remove the differential case and then the drive gears, moving them to different positions and reinstall them.
9. If adjustment is not possible, replace the differential case or drive gear and drive pinion as a set.

DIFFERENTIAL CASE ASSEMBLY

27200240039

DISASSEMBLY AND REASSEMBLY

Gear oil:
MITSUBISHI Genuine Gear Oil Part No. 8149630EX, CASTROL HYPOY LS (GL-5, SAE 90), SHELL-LSD (GL-5, SAE 80W-90) or equivalent

Caution
Apply the specified gear oil to each component especially careful to coat contact surfaces and sliding surfaces.

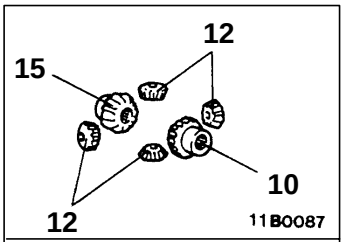

Differential gear set

<Vehicles with limited slip differential>

<Vehicles with rear differential lock>

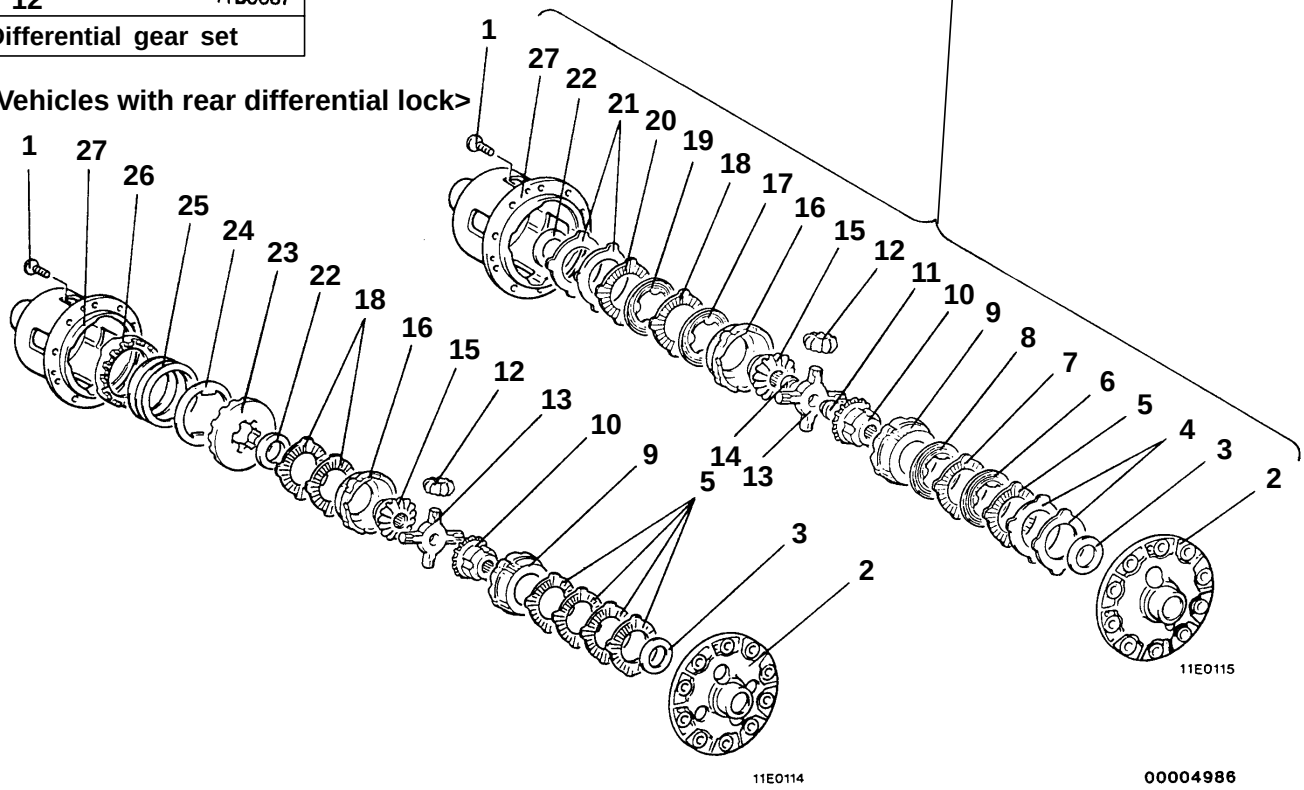

Disassembly steps

▶C◀ ● Differential preload inspection for limited slip differential
◀A▶ ▶B◀ 1. Screw
2. Differential case (A)
3. Thrust washer
4. Spring plate
5. Friction plate
6. Friction disc
7. Friction plate
8. Friction disc
9. Pressure ring
10. Side gear
11. Thrust block
12. Differential pinion gear
13. Differential pinion shaft
14. Thrust block
15. Side gear
16. Pressure ring
17. Friction disc
18. Friction plate
19. Friction disc
20. Friction plate
21. Spring plate
22. Thrust washer
23. Driven cam
24. Spring washer
25. Spring
26. Drive cam
▶A◀ 27. Differential case (B)

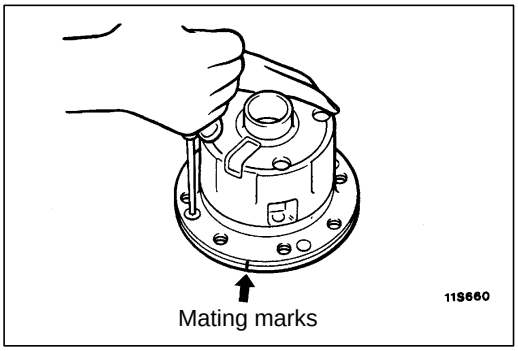

DISASSEMBLY SERVICE POINT

◀A▶ SCREW REMOVAL

1. Check the mating marks.

   NOTE
   The mating marks are represented by one of the following methods.
   (1) Engraving by a punch or electric pen.
   (2) Identical arabic numerals.
2. Loosen the mounting screws for differential case (A) and (B) evenly step by step.
3. Separate differential case (B) and differential case (A), and take out the parts inside. Do not confuse the left and right spring plates, spring discs, friction plates and friction discs for further reassembly.

REASSEMBLY SERVICE POINTS

▶A◀ DIFFERENTIAL CASE (B) INSTALLATION

Before assembly, use the following method to adjust the clearance between the spring plates and differential cases (for adjustment of the clutch plate friction force), and to adjust the end play of the side gear when installing the internal components into the differential case.

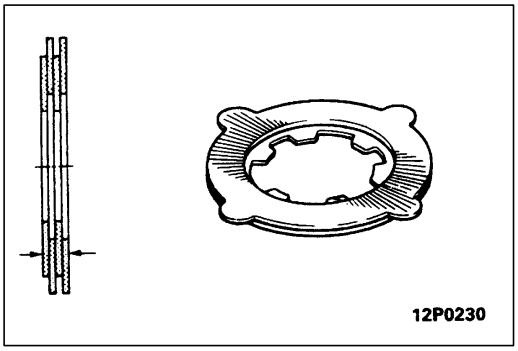

1. Arrange the two (each) friction discs and friction plates for each side, one on top of another, as shown in the figure, combining them so that the difference in thickness between the left and the right is the standard value.

   Standard value: 0 – 0.05 mm

   NOTE
   Two types of replacement parts are available:

   Friction disc (with thicknesses of 1.6 mm and 1.7 mm)

   Friction plate (with thicknesses of 1.75 mm and 1.85 mm)

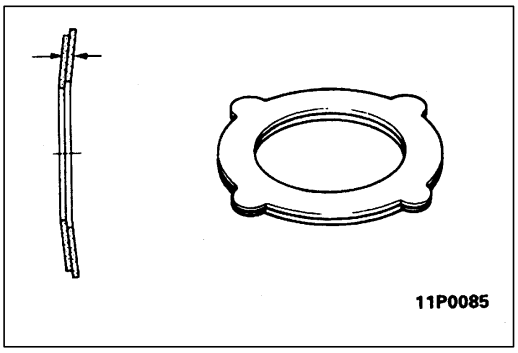

2. Place the spring plates together as shown in the illustration, and use a micrometer to measure the thickness. Place the parts together in the combination that gives the least difference in thickness between the two sets.

   NOTE
   If replacing with new parts, the thickness of the spring plates should be 1.75 mm.

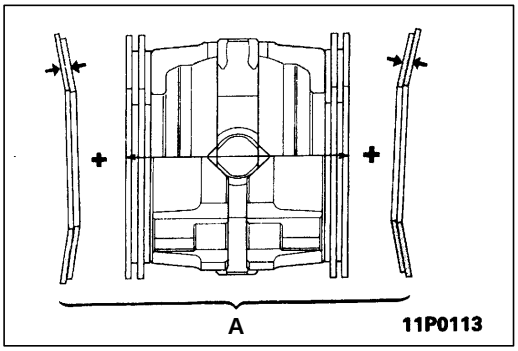

3. Assemble the pressure ring's internal components (differential pinion shaft and pressure ring) and the friction discs and friction plates, and then as shown in the figure, measure the overall width.
4. Calculate the total value (A) of the thickness of the spring plates plus the value measured in (3) above.

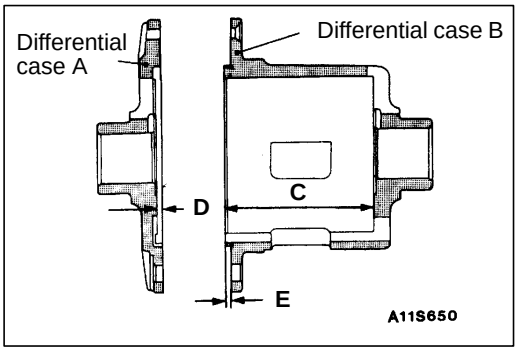

5. Obtain the dimension (B) between the spring plate contact surfaces when differential cases (A) and (B) are combined. (B = C + D – E)
6. Change the thickness of the friction disc so that the clearance (B – A) between the differential case and the spring plate becomes the standard value.

   Standard value: 0.06 – 0.20 mm

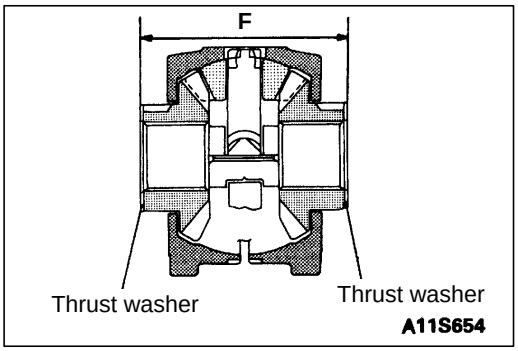

7. Remove the spring plates, friction plates and friction disc.
8. Measure the dimension (F) from the thrust washer end surface to end surface.

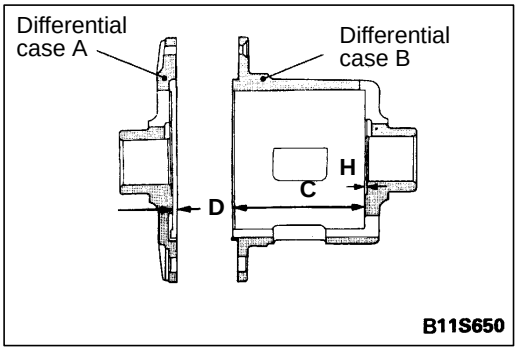

9. Obtain the dimension (G) between the thrust washer contact surfaces when differential cases (A) and (B) are combined.
   (G = C + D + H)

   NOTE
   Dimension (B) is the distance between the spring plate contact surfaces when differential cases (A) and (B) are combined. (Refer to P.27-49.)
10. Check that the clearance (G – F) in the side gear axial direction is within the standard value range.

    Standard value: 0.05 – 0.20 mm
11. If the clearance is not within the standard value range, replace the thrust washers.

    NOTE
    1. Select washers in such as way that the clearances between the left and right pressure rings and the thrust washers remain the same as each other.
    2. Three types of replacement parts are available: 1.50 mm, 1.60 mm and 1.70 mm.

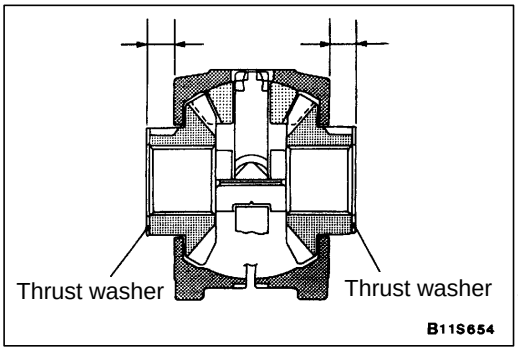

12. Install the thrust washer as shown in the figure, and then select a thrust washer so that the difference between the left and right dimensions from the pressure ring rear face to the thrust washer end face is the standard value.

    Standard value: 0 – 0.05 mm

    NOTE
    Measure the distance while squeezing the V-shaped groove manually.

13. If the distance is not within the standard value, replace the thrust washers.

    NOTE
    Three types of replacement parts are available: 1.50 mm, 1.60 mm and 1.70 mm.

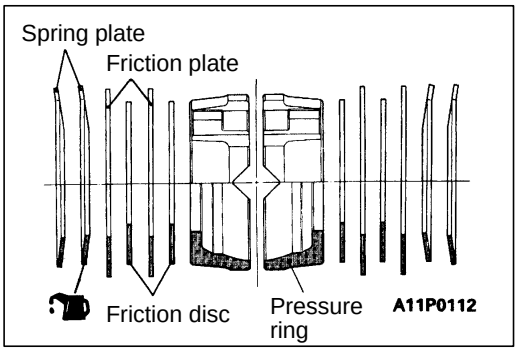

14. Apply specified gear oil to each part, and then insert each part into differential case (B) in the order shown in the illustration.

    Gear oil:
    MITSUBISHI Genuine Gear Oil part No. 8149630EX, CASTROL HYPOY LS (GL-5, SAE 90), SHELL-LSD (GL-5, SAE 80W-90) or equivalent

    NOTE
    Be particularly sure to apply oil to the contact surfaces and sliding surfaces.

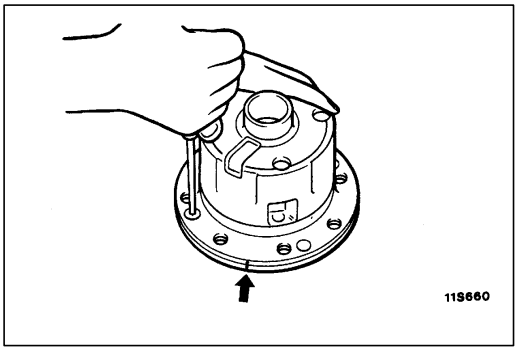

▶B◀ SCREW INSTALLATION

1. Align the mating marks (the same numeral on each case) of differential case (A) and differential case (B).
2. Tighten the screw so that the cases are in close contact.

   NOTE
   If, even though the screw is tightened, the end surfaces of case (A) and case (B) do not come into close contact, probably the thrust washer and spring plate are not fit correctly into the groove, so reassemble.

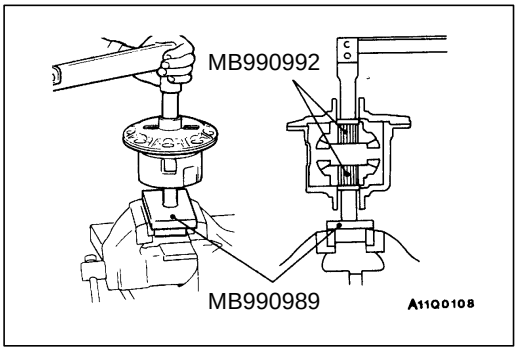

▶C◀ DIFFERENTIAL PRELOAD INSPECTION FOR LIMITED SLIP DIFFERENTIAL

1. After assembly, in order to check the frictional force of the clutch plate, use the special tools to measure the starting torque.

   Standard value:
   <When a new clutch plate is used>
   39 – 74 Nm
   <When the current clutch plate is reused>
   25 – 74 Nm

   NOTE
   Measure the starting torque after rotating slightly. When measuring the torque, do so at the beginning of movement.

2. If the starting torque is not within the standard value, disassemble the differential case assembly and repair or replace the parts.

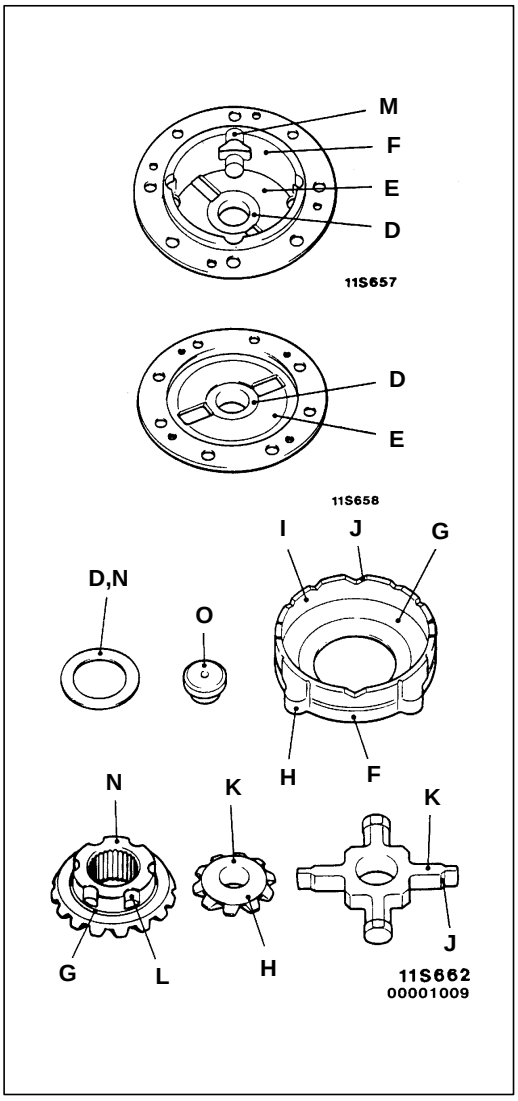

3. Inspect the contact and sliding surfaces listed below, and repair any nicks and burrs by using an oil stone.
   D. The sliding surfaces of the thrust washer and the case.
   E. The spring contacting surface of the differential case and spring plate.
   F. The contact surfaces of the outer circumference of the pressure ring and the inner circumference of the differential case.
   G. The sliding surfaces of the hole in the pressure ring and the outer circumference of the side gear.
   H. The projection on the outer circumference of the pressure ring.
   I. The spherical surface of the differential pinion gear and the inner diameter of the pressure ring.
   J. The V-shaped groove in the pressure ring, and the V-shaped part in the pinion shaft.
   K. The outer diameter of the pinion shaft and the hole of the differential pinion gear.
   L. The outer circumference groove of the side gear.
   M. The inner circumference groove of the differential case.
   N. The sliding surface of the thrust block.
   O. The sliding part of the thrust block.

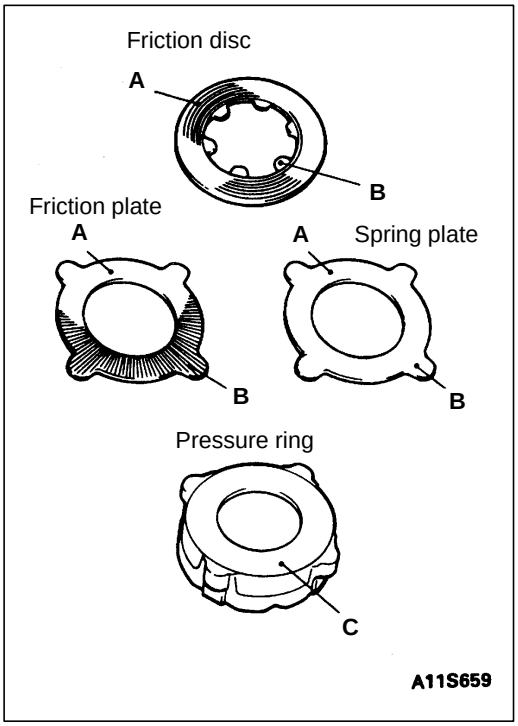

INSPECTION

27200250056

DIFFERENTIAL CASE COMPONENT CONTACT SLIDING SURFACE INSPECTION

1. Clean the disassembled parts with cleaning oil and dry them with compressed air.
2. Check the following items for each plate and disc and for the pressure ring.
   A. The friction surfaces of the friction plate, friction disc, spring plate.If there are any signs of seizure, severe friction, or colour change from the heat, it will adversely affect the locking performance; replace the part with a new one.

      NOTE
      The strong contact on the inner circumference of the friction surfaces is because of the spring plate; this wear is not abnormal.

   B. Inside and outside projections of friction disc, friction plate and spring plate.
      Replace any cracked or damaged parts.
   C. The friction surface of the friction disc and pressure ring. If there are nicks or scratches, repair the part by first grinding with an oil stone and then polishing with rubbing compound on a surface plate.

      NOTE
      The strong contact on the inner circumference of the friction surface is because of the spring plate; this wear is not abnormal.

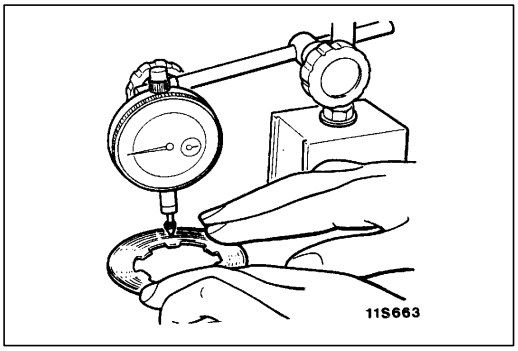

WARPING OF THE FRICTION PLATE AND FRICTION DISC

Using a dial indicator, measure the amount of warping (the flatness) of the friction plate and the friction disc on a surface plate by turning the friction plate or disc.

Limit: Max. 0.08 mm

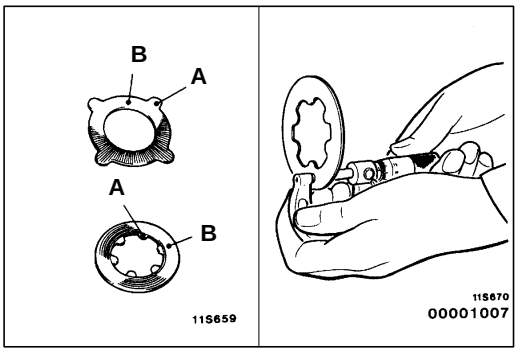

WEAR OF THE FRICTION PLATE SPRING PLATE AND FRICTION DISC

1. Measure the thickness of the friction surfaces (B) and projections (A) of the friction disc and spring plate in several places. Then check that the differences between A and B are within the limit.

   Limit: 0.1 mm

2. If the parts are worn beyond the allowable limit, replace them with new parts.