FRONT AXLE

CONTENTS

26109000102

GENERAL INFORMATION 2

SERVICE SPECIFICATIONS 4

LUBRICANTS 4

SEALANTS 5

SPECIAL TOOLS 5

ON-VEHICLE SERVICE 9

- Wheel Bearing Play Check 9
- Front Axle Total Backlash Check 9
- Front Axle Gear Oil Level Check 10
- Drive Shaft Axial Play Check 10
- Differential Carrier Oil Seal Replacement 10
- Solenoid Valve Operation Check 11

FRONT HUB ASSEMBLY <2WD> 13

FRONT HUB ASSEMBLY <4WD> 16

KNUCKLE <2WD> 20

KNUCKLE <4WD> 22

DRIVE SHAFT 26

INNER SHAFT 36

DIFFERENTIAL CARRIER 40

FREEWHEEL CLUTCH 58

GENERAL INFORMATION

26100010111

2WD

The front hub assembly which uses a double taper roller bearing is mounted on the knuckle spindle.

For vehicles with ABS, a rotor for detecting the wheel speed is press-fitted into the front hub.

4WD

The front axle consists of the hub assembly, drive shaft, inner shaft, front differential, freewheel clutch assembly and actuator. The features are:

- The wheel bearing uses a double taper roller bearing. For vehicles with ABS, a rotor for detecting the wheel speed is bolted to the brake disc.
- Drive shafts of almost identical length reduce torque steer. In addition, a D.O.J.-B.J.-type constant velocity ball joint has high power transmission efficiency and reduces vibration and noise.
- A vacuum-type freewheel clutch has been adopted in the freewheel mechanism. Its solenoid valve and actuator switch powertrain between 2WD and 4WD.
- There are two types of differential gear. The difference between them is gear ratio.

2WD

Item		Specifications
Wheel bearing	Type	Double taper roller bearing
	Inner bearing (O.D. x I.D.) mm	65.1 x 34.9
	Outer bearing (O.D. x I.D.) mm	50.0 x 21.4

4WD

<Bearings>

Item		Specifications
Wheel bearing	Type	Double taper roller bearing
	Inner bearing (O.D. x I.D.) mm	73 x 45
	Outer bearing (O.D. x I.D.) mm	73 x 45
Drive shaft	Joint type	Outer: B.J. Inner: D.O.J.
	Shaft length (joint to joint) mm	Right: 318 Left: 291
Inner shaft	O.D. x length mm	31.5 x 304.2
	Bearing (O.D. x I.D.) mm	62 x 35

<Gears>

Item			4D56 <Vehicles without wide tyre>	4G64, 4D56 <Vehicles with wide tyre>
Reduction gear type			Hypoid gear type	Hypoid gear type
Reduction ratio			4.636	4.875
Differential	Differential gear type (type x piece)	Side gear	Straight bevel gear x 2	Straight bevel gear x 2
		Pinion gear	Straight bevel gear x 2	Straight bevel gear x 2
	Number of teeth	Drive gear	51	39
		Drive pinion	11	8
		Side gear	14	14
		Pinion gear	10	10
	Bearing (O.D. x I.D.) mm	Side	80.0 x 45.2	80.0 x 45.2
		Front	64.3 x 30.2	64.3 x 30.2
		Rear	76.2 x 36.5	76.2 x 36.5

CONSTRUCTION DIAGRAM

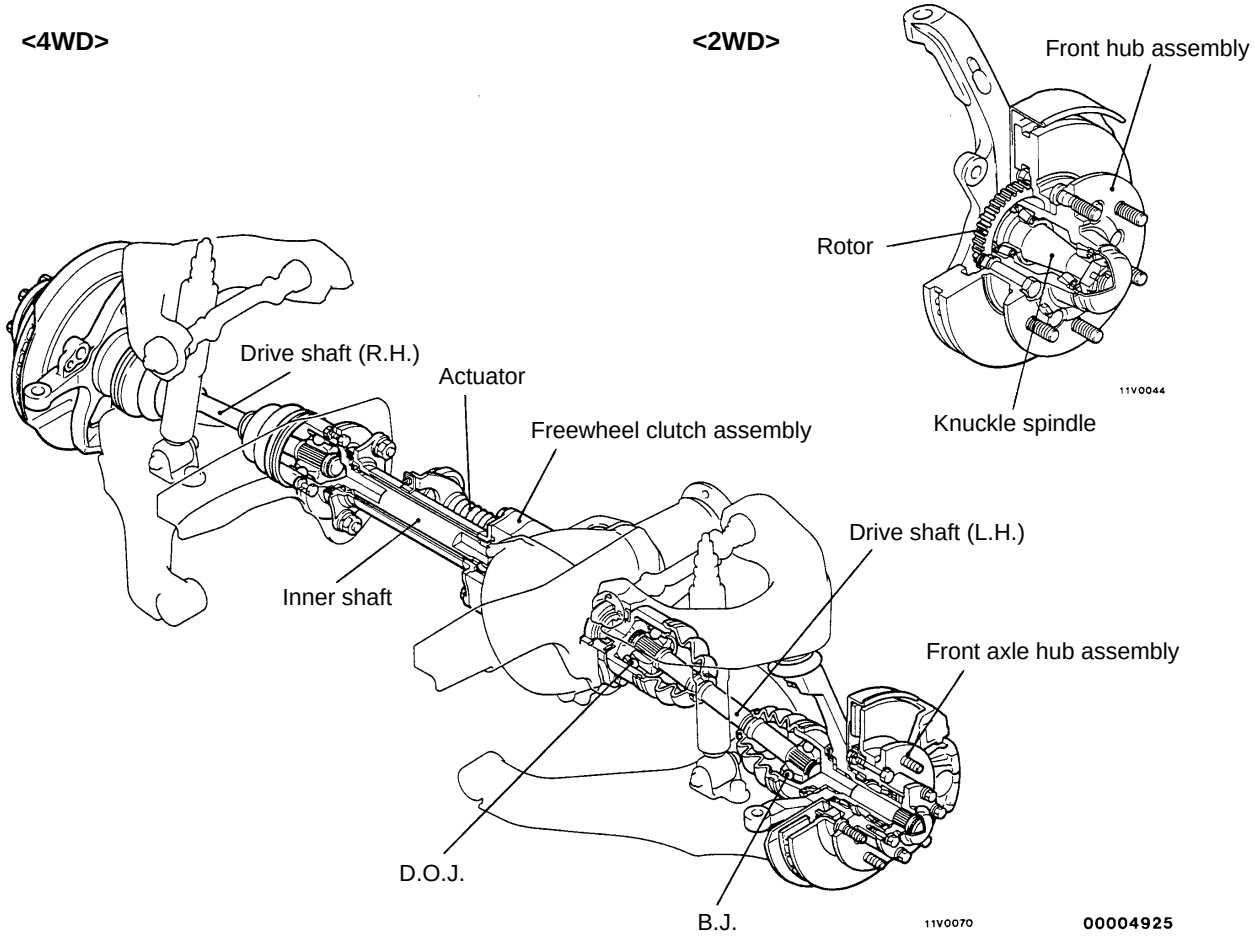

SERVICE SPECIFICATIONS

26100030131

Item		Standard value	Limit
Front axle total backlash mm		–	11
Drive shaft axial play mm		0.4 – 0.7	–
Solenoid valve resistance Ω		36 – 46	–
Hub rotary sliding resistance N		7 – 26	–
(Hub rotation starting torque) Nm		0.5 – 1.8	–
Amount of movement of far the wheel bearing in an axial direction mm		0.05 or less	–
Setting of D.O.J. boot length mm		80 ± 3	–
Clutch gear play (bearing axial play) mm		0.05 – 0.30	–
Drive gear backlash mm		0.11 – 0.16	–
Differential gear backlash mm		0 – 0.076	–
Drive pinion rotation torque Nm	Without oil seal	When replacing (with anti-rust agent) 0.3 – 0.5	–
		When replacing or reusing (with gear oil applied) 0.15 – 0.25	–
	With oil seal	When replacing (with anti-rust agent) 0.5 – 0.7	–
		When replacing or reusing (with gear oil applied) 0.3 – 0.4	–
Drive gear runout mm		–	0.05
Differential gear backlash mm		–	0.2

LUBRICANTS

26100040141

Items	Specified lubricants	Quantity
Front differential gear oil	Hypoid gear oil API classification GL-5 or higher SAE viscosity No. 90, 80W	0.9 ℓ
D.O.J. boot grease	Repair kit grease	100 g

SEALANTS

26100050038

Items	Specified sealants	Remarks
Contact surface of drive flange or freewheel hub and front axle hub	3M ATD Part No. 8661 or equivalent	Semi-drying sealant
Contact surface of hub cap and drive flange		
Contact surface of differential cover and differential carrier		
Vent plug		
Freewheel clutch assembly		
Drive gear threaded hole	3M Stud Locking 4170 or equivalent	Anaerobic sealant

SPECIAL TOOLS

26100060123

Tool	Number	Name	Use
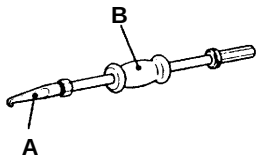	MB990590 A: MB990212 B: MB990211	Rear axle shaft oil seal remover A: Adapter B: Sliding hammer	● Removal of differential carrier oil seal ● Removal and installation of inner shaft (Used together with MB990906)
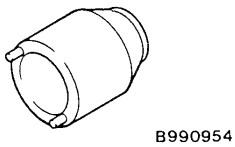	MB990954	Lock nut wrench	Removal and adjustment of lock nut <4WD>
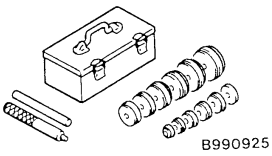	MB990925	Bearing and oil seal installer set	● Press-out and press-fitting of wheel bearing outer race ● Press-fitting of oil seal (front hub) ● Press-fitting of needle bearing (Knuckle) ● Press-fitting of bearing (freewheel clutch) ● Press-fitting of oil seal (freewheel clutch) ● Press-out and press-fitting of drive pinion front bearing outer race ● Press-out and press-fitting of drive pinion rear bearing outer race ● Press-fitting of drive shaft ● Tapping in of side bearing outer race ● Checking of drive gear tooth contact
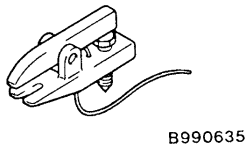	MB991113 or MB990635	Steering linkage puller	● Disconnection of tie rod ● Disconnection of upper ball joint ● Disconnection of lower ball joint
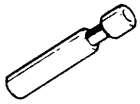	MB990804	Knuckle arm puller	Disconnection of upper, lower ball joint and knuckle <2WD>

Tool	Number	Name	Use
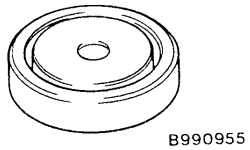	MB990955	Oil seal installer	● Press-fitting of housing tube dust seal ● Press-fitting of front axle hub oil seal (Used together with MB990938) ● Press-fitting of rotor <2WD> (Used together with MB990938)
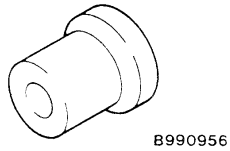	MB990956	Needle bearing installer	Press-fitting of knuckle needle bearing (Used together with MB990938)
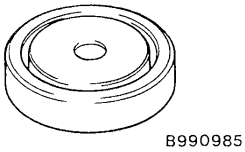	MB990985	Oil seal installer	Press-fitting of knuckle oil seal (Used together with MB990938)
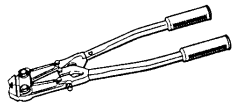	MB991561	Boot band clipping tool	Resin boot band installation
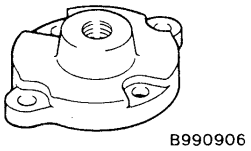	MB990906	Drive shaft attachment	Removal and installation of inner shaft (Used together with MB990211)
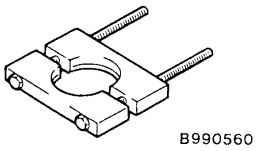	MB990560	Bearing remover	Removal and press-fitting of inner shaft bearing
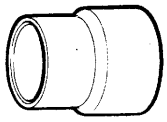	MB990799	Ball joint remover and installer	Installation of freewheel clutch bearing
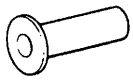	MB991168	Differential oil seal installer	Installation of freewheel clutch oil seal
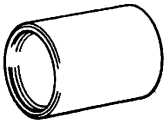	MB990890 or MB990891	Rear suspension bushing base	Installation of freewheel clutch bearing

Tool	Number	Name	Use
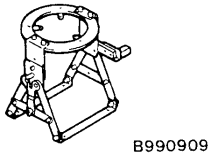	MB990909	Working base	Support of front differential carrier assembly
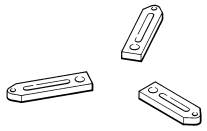	MB991116	Adapter	Support of front differential carrier assembly
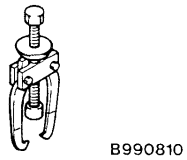	MB990810	Side bearing puller	Removal of side bearing inner race
	MB990811	Differential side bearing cap	
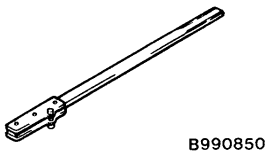	MB990850	End yoke holder	Removal and installation of companion flange
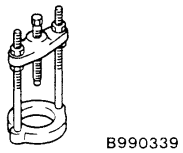	MB990339	Bearing puller	Removal of drive pinion front bearing inner race
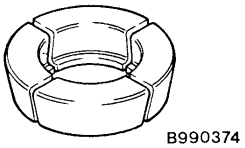	MB990648	Bearing remover	
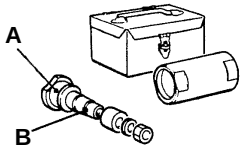	MB990901 A: MB990904 B: MB990552	Pinion height gauge set A: Drive pinion gauge assembly B: Cylinder gauge	• Inspection of drive pinion rotation starting torque • Measurement of drive pinion height
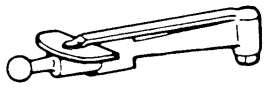	MB990685	Torque wrench	Measurement of drive pinion preload

Tool	Number	Name	Use
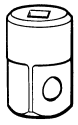	MB990326	Preload socket	
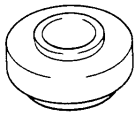	MB990802	Bearing installer	• Press-fitting of drive pinion front bearing inner race • Press-fitting of side bearing inner race
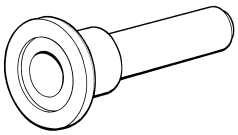	MB990031 or MB990699	Drive pinion oil seal installer	Press-fitting of drive pinion oil seal
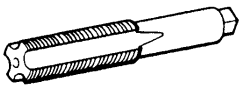	MB990813	Tap	Removal of adhesive

MB990925

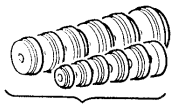

Installer adapter

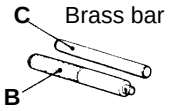

Bar (snap-in type)

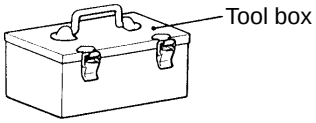

	Contents of tool (MB990925)	O.D. mm		Contents of tool (MB990925)	O.D. mm
A	MB990926	39	A	MB990933	63.5
	MB990927	45		MB990934	67.5
	MB990928	49.5		MB990935	71.5
	MB990929	51		MB990936	75.5
	MB990930	54		MB990937	79
	MB990931	57	B	MB990938	–
	MB990932	61	C	MB990939	–

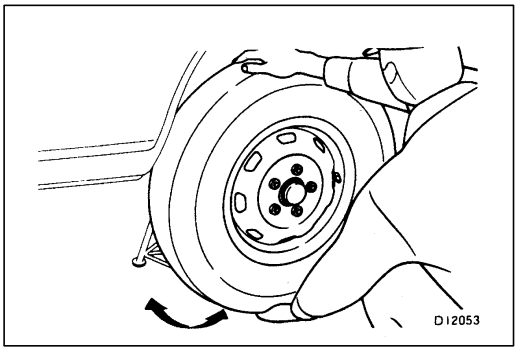

ON-VEHICLE SERVICE

26100110071

<2WD>

WHEEL BEARING PLAY CHECK

1. Check the play of the bearings while the vehicle is jacked up.

   Caution
   Do not confuse this play with the ball joint play.

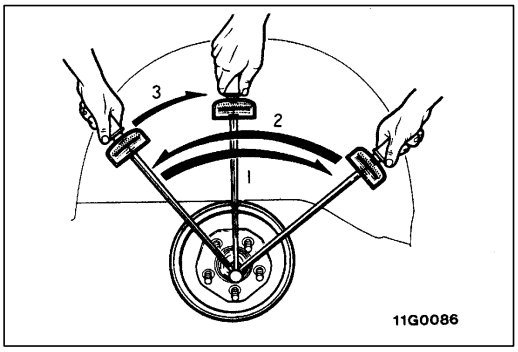

2. If there is some play in the bearings, tighten the wheel bearing nuts to 29 Nm, and then turn the front hub assembly to run in the bearings.
3. Loosen the nuts to 0 Nm.
4. Re-tighten the nuts to 7.8 Nm.
5. If the split pin hole in the wheel bearing nut is not aligned with that in the knuckle, turn the nut back within 30°. Then install the split pin.

<4WD>

FRONT AXLE TOTAL BACKLASH CHECK

26100130022

Observe the following procedure in order to switch powertrain to 4WD.

1. Turn the ignition switch off, and then put the transfer shift lever to the 2H position.

   Caution
   Do not jack up the vehicle.

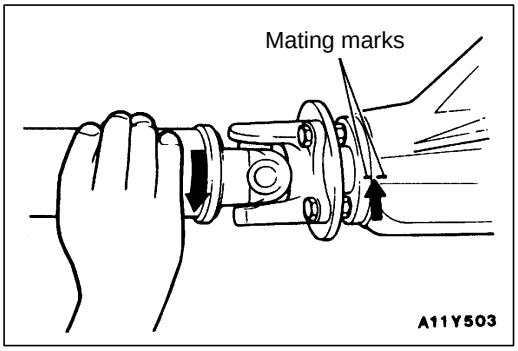

2. Turn the propeller shaft until a click is heard.
3. Turn the companion flange clockwise until all play is removed. Make mating marks on the dust cover of the companion flange with that on the differential carrier.

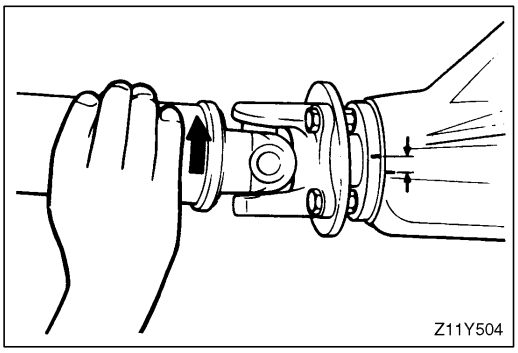

4. Turn the companion flange counterclockwise until all play is removed and measure the amount of distance through which the mating marks moved.

   Limit: 11 mm

5. If the amount of movement exceeds the limit value, check the following.
   (1) Final drive gear backlash
   (2) Differential gear backlash
   (3) Play in the serrations and splines of the side gears, drive shaft, inner shaft and drive flange

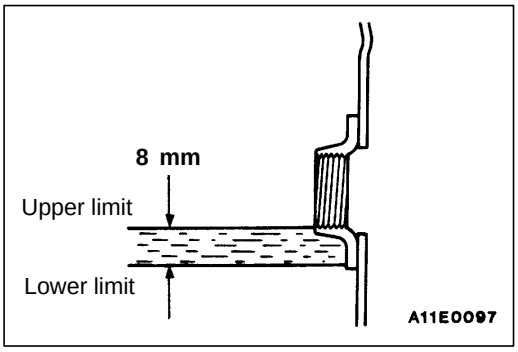

FRONT AXLE GEAR OIL LEVEL CHECK 26200090026

Remove the filler plug, and check the gear oil level. Check that gear oil level is not 8 mm below the bottom of filler plug hole.

Specified gear oil:
Hypoid gear oil API classification GL-5 or higher, SAE viscosity No. 90, 80W [Quantity: 0.9 ℓ]

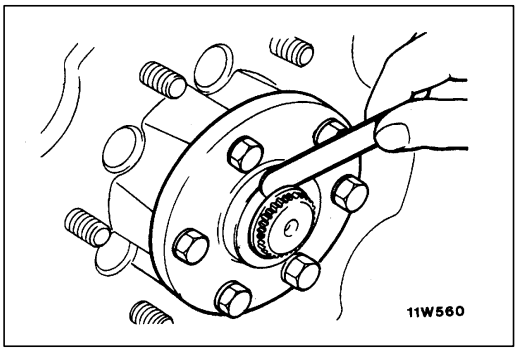

DRIVE SHAFT AXIAL PLAY CHECK 26100140025

1. Jack the vehicle up and remove the front wheels.
2. Remove the hub cap.
3. Manually push the drive shaft in the direction in which it will closely contact the knuckle.
4. As shown in the figure, use a thickness gauge to measure the clearance between the drive flange and snap ring.

   Standard value: 0.4 – 0.7 mm
5. If the play is out of standard value, adjust by adding or removing shims.

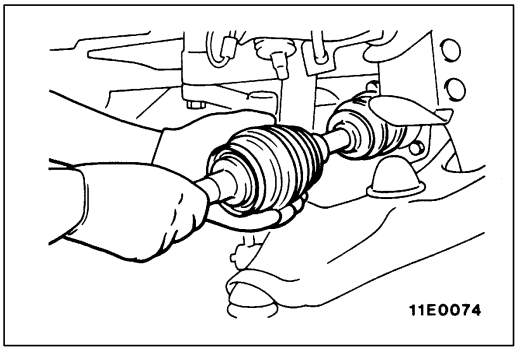

DIFFERENTIAL CARRIER OIL SEAL REPLACEMENT 26200100026

1. Remove the under cover.
2. Remove the shock absorber lower mounting bolts at the right and left.
3. Remove the front hub and knuckle assembly.
4. Remove the left drive shaft.

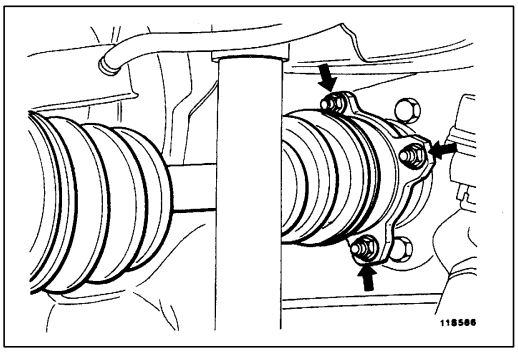

5. Remove the right drive shaft from the inner shaft assembly.
6. Remove the inner shaft.
7. Remove the actuator mounting bolt from the housing tube and remove the harness from the clamp.
8. Remove the differential mounting bracket (R.H.) and housing tube.

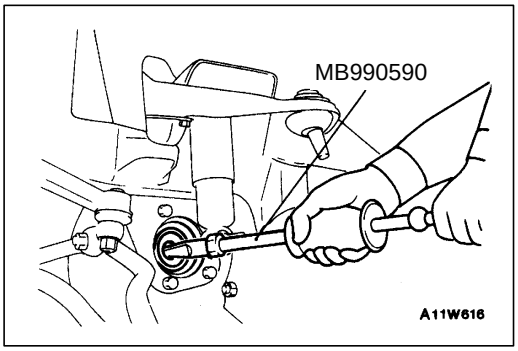

9. Use the special tool to remove the oil seal.

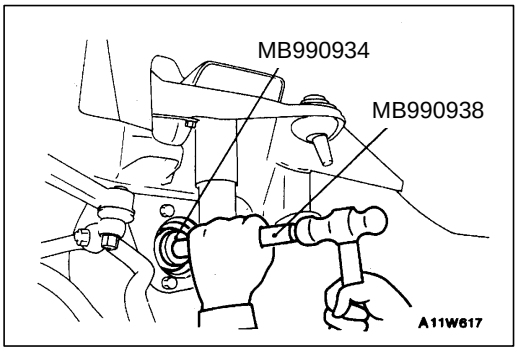

10. Press-fit the oil seal positively by using the special tools.

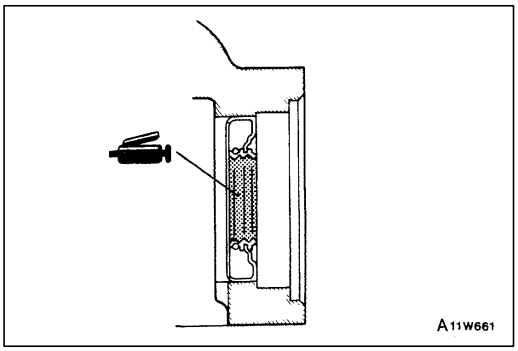

11. Apply multi-purpose grease to the lip of the oil seal and install the drive shaft (L.H.). For the right side, apply multi-purpose grease to the lip of the oil seal and install the housing tube and differential mounting bracket (R.H.).

12. Install the inner shaft and drive shaft (R.H.).

    Caution
    1. **Do not damage the lip of the oil seal.**
    2. **The circlip attached to the B.J. side of the drive shaft should be replaced with a new clip.**

13. Install the actuator and secure the harness with the clamp.
14. Install the shock absorber.
15. Install the hub and knuckle assembly.
16. Install the under cover.

SOLENOID VALVE OPERATION CHECK 26100150028

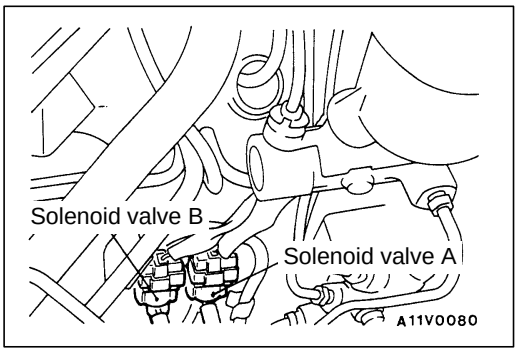

1. Remove the vacuum hoses (blue stripe, yellow stripe) from the solenoid valves.
2. Disconnect the harness connectors.

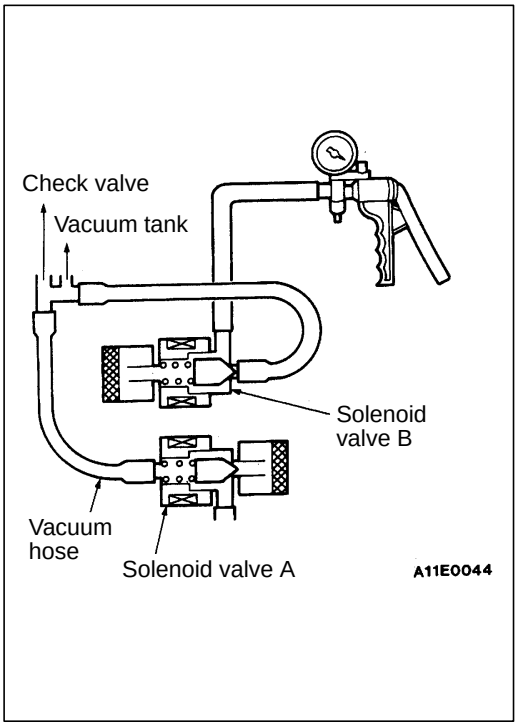

3. Connect a hand vacuum pump to solenoid valve B and carry out the following inspections.
   (1) Even if the hand pump is operated with no other operation, no negative pressure develops.
   (2) Negative pressure does not develop when battery voltage is applied to solenoid valve B. Meanwhile, negative pressure is maintained when the vacuum hose of solenoid valve A is blocked by bending.
   (3) When battery voltage is applied to solenoid valves A and B, negative pressure is maintained.

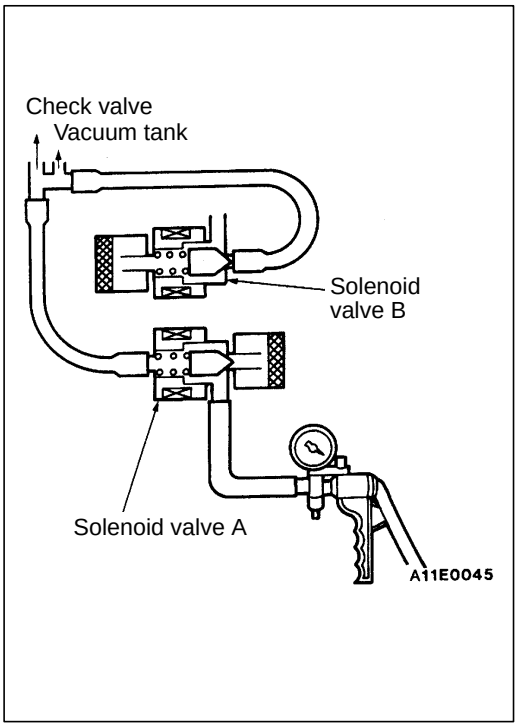

4. Connect the hand vacuum pump to solenoid valve A. Apply negative pressure and carry out the following inspections.
   (1) With no other operation, negative pressure is maintained.
   (2) When battery voltage is applied to solenoid valve B, negative pressure disappears.
   (3) When battery voltage is applied to solenoid valve A, negative pressure disappears.
5. Measure the resistance of the solenoid valves.

   Standard value: 36 – 46 Ω

FRONT HUB ASSEMBLY <2WD>

26100170123

REMOVAL AND INSTALLATION

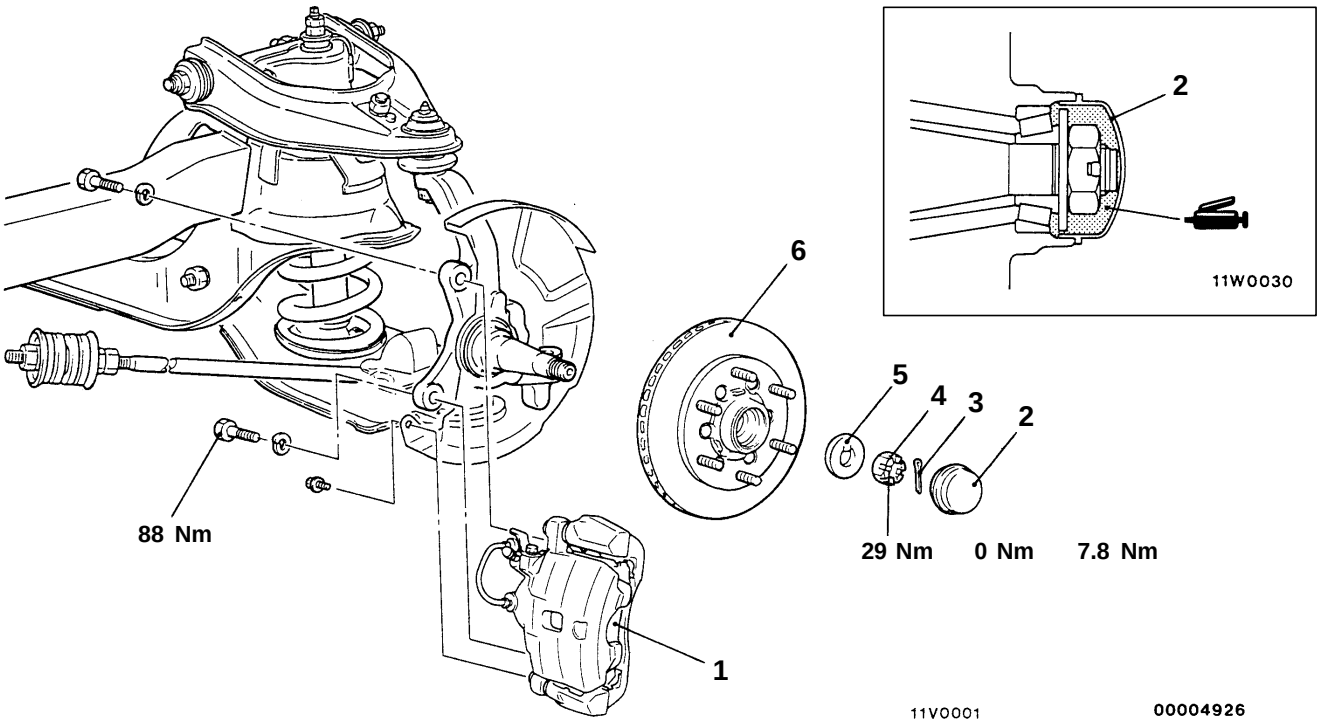

Removal steps

◀A▶ 1. Caliper assembly
2. Hub cap
3. Split pin
▶A◀ 4. Wheel bearing nut
5. Washer
◀B▶ 6. Front hub assembly

REMOVAL SERVICE POINTS

◀A▶ CALIPER ASSEMBLY REMOVAL

Secure the removed caliper assembly with wire so that it does not fall.

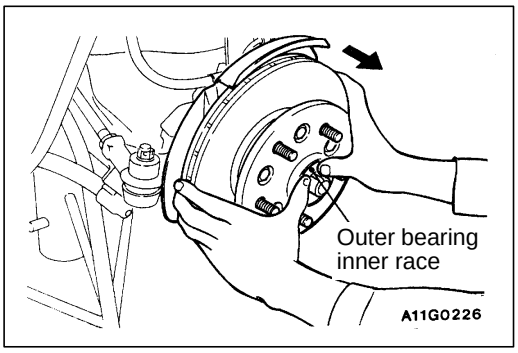

◀B▶ FRONT HUB ASSEMBLY REMOVAL

Do not drop the outer bearing inner race.

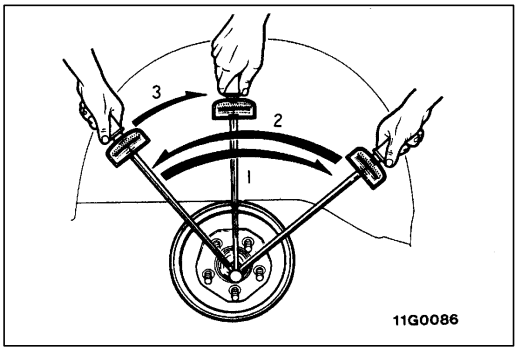

INSTALLATION SERVICE POINT

▶A◀ WHEEL BEARING NUT INSTALLATION

1. Tighten the wheel bearing nuts to 29 Nm, and then turn the front hub assembly to run in the bearings.
2. Loosen the nuts to 0 Nm.
3. Re-tighten the nuts to 7.8 Nm.
4. If the split pin hole in the wheel bearing nut is not aligned with that in the knuckle, turn the nut back within 30°. Then install the split pin.

DISASSEMBLY AND REASSEMBLY

26100190075

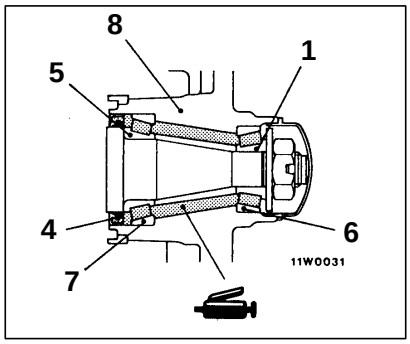

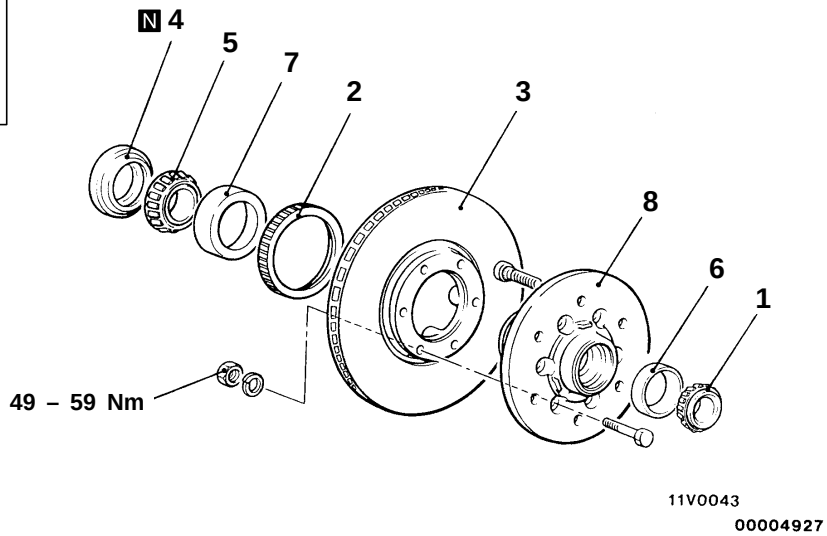

Disassembly steps

1. Outer bearing inner race
2. ▶C◀ Rotor (Vehicles with ABS)
3. ◀A▶ Brake disc
4. ▶B◀ Oil seal
5. Inner bearing inner race
6. ◀B▶ ▶A◀ Outer bearing outer race
7. ◀B▶ ▶A◀ Inner bearing outer race
8. Front hub

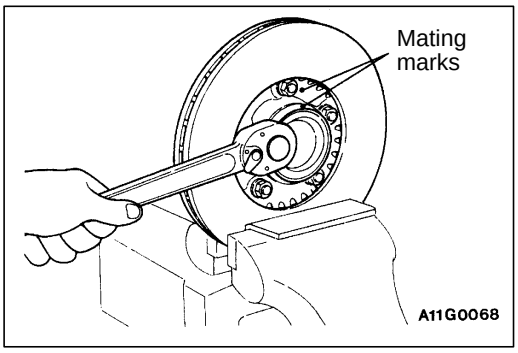

DISASSEMBLY SERVICE POINTS

◀A▶ BRAKE DISC REMOVAL

Make the mating marks on the brake disc and front hub, and then separate the front hub and brake disc, if necessary.

Caution
Lock disc in vise and grip with copper or aluminum board.

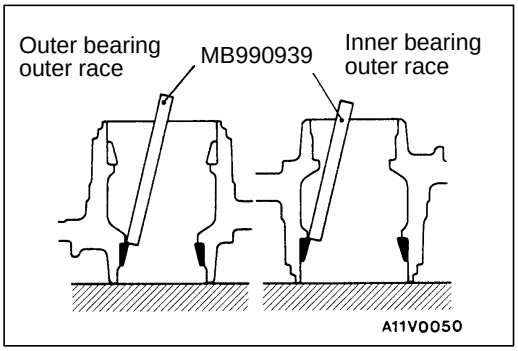

◀B▶ OUTER BEARING OUTER RACE/INNER BEARING OUTER RACE REMOVAL

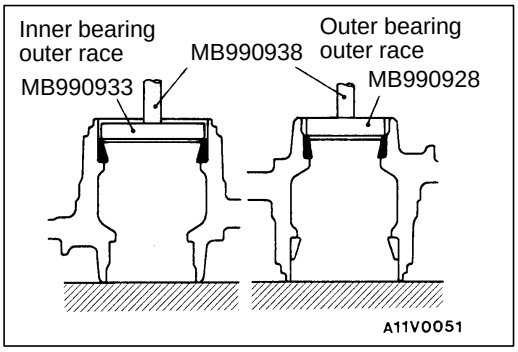

INSTALLATION SERVICE POINTS

▶A◀ INNER BEARING OUTER RACE/OUTER BEARING OUTER RACE INSTALLATION

NOTE
Replace the inner race and outer race assembly as a set.

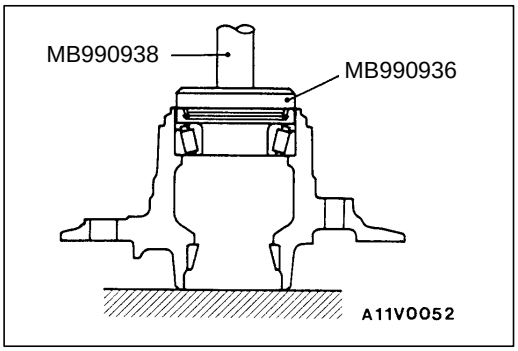

▶B◀ OIL SEAL INSTALLATION

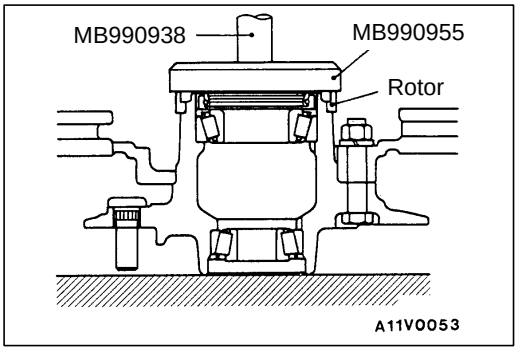

▶C◀ ROTOR INSTALLATION

FRONT HUB ASSEMBLY <4WD>

26100170130

REMOVAL AND INSTALLATION

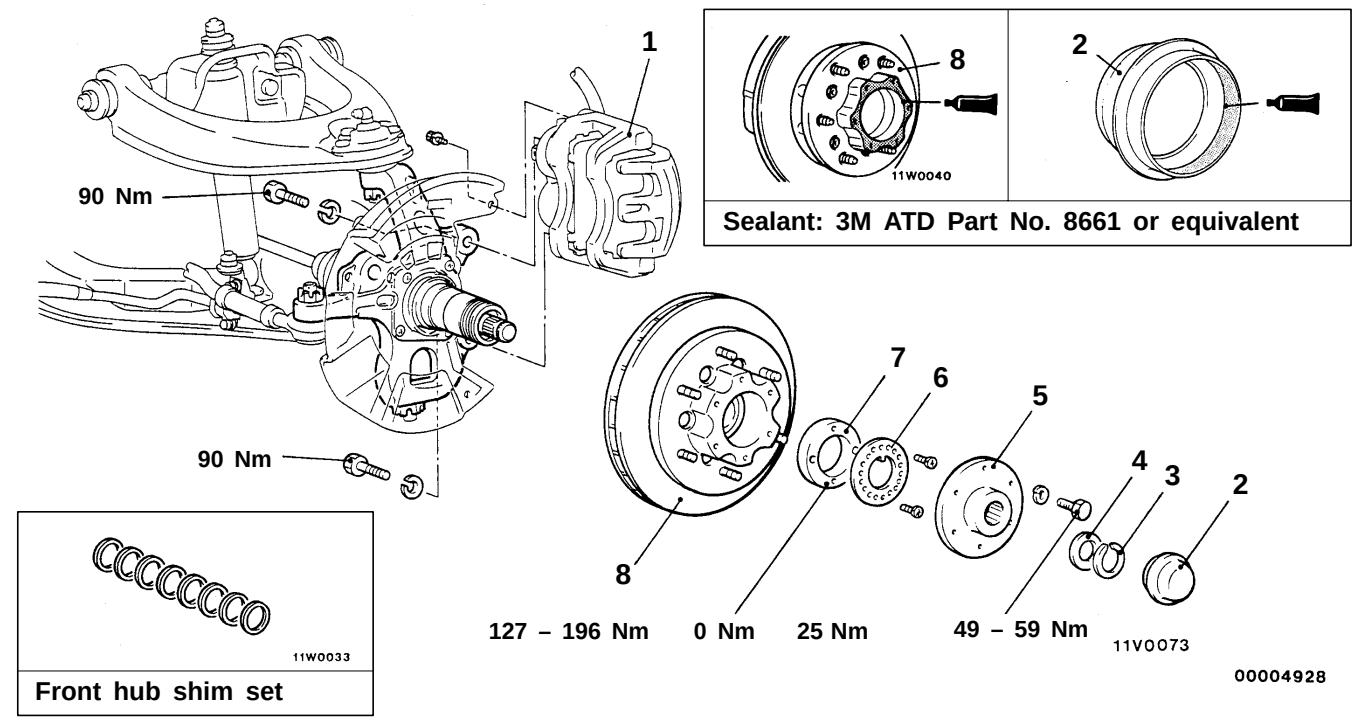

Removal steps

◀A▶ 1. Caliper assembly
2. Hub cap
▶D◀ ● Drive shaft axial play adjustment
3. Snap ring
4. Shim
5. Drive flange
▶C◀ ● Hub rotary sliding resistance and wheel bearing axial movement adjustment
▶B◀ 6. Lock washer
◀B▶ ▶A◀ 7. Lock nut
◀C▶ 8. Front hub assembly

REMOVAL SERVICE POINTS

◀A▶ CALIPER ASSEMBLY REMOVAL

Secure the removed caliper assembly with wire so that it does not fall.

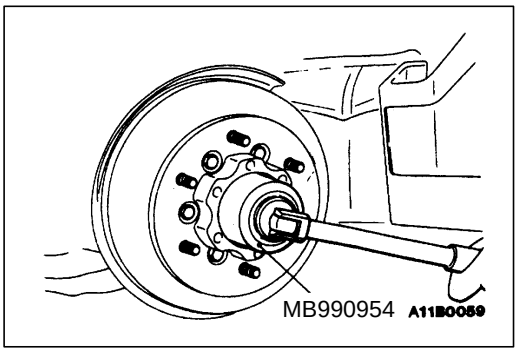

◀B▶ LOCK NUT REMOVAL

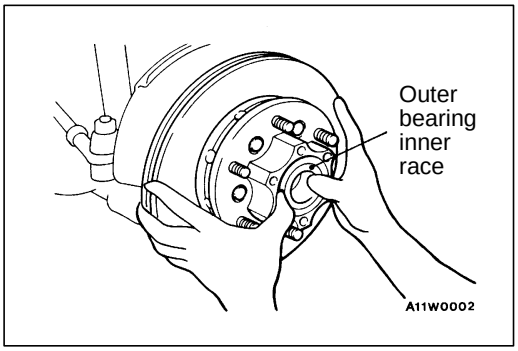

◀C▶ FRONT HUB ASSEMBLY REMOVAL

Do not drop the outer bearing inner race.

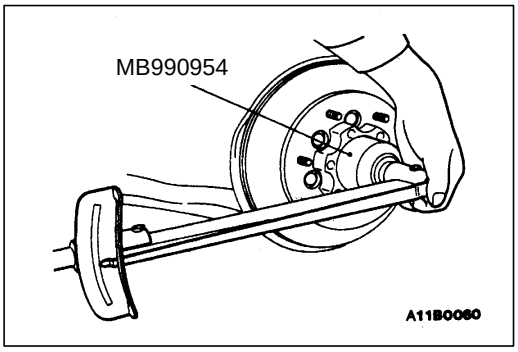

INSTALLATION SERVICE POINTS

▶A◀ LOCK NUT INSTALLATION

Using the special tool, tighten the lock nut by the following procedures.

(1) Tighten the lock nut to 127 – 196 Nm, and then turn the front hub assembly to run in the bearings.
(2) Loosen the nuts to 0 Nm.
(3) After re-tightening to 25 Nm, loosen the lock nuts by approximately 30°.

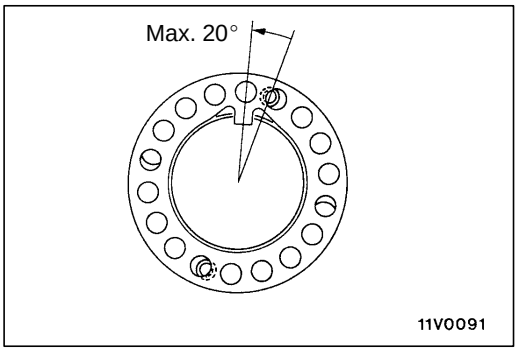

▶B◀ LOCK WASHER INSTALLATION

Install the lock washer. If the hole position is not aligned with the lock nut, move it within a range of not more than 20° until the holes are aligned.

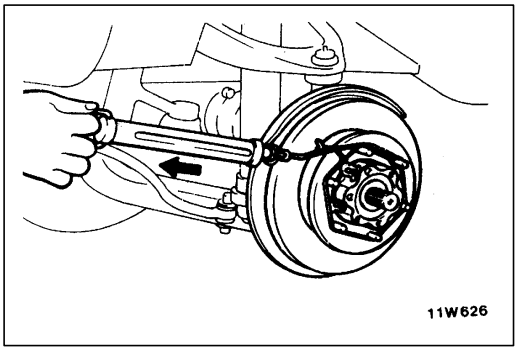

▶C◀ HUB ROTARY SLIDING RESISTANCE AND WHEEL BEARING AXIAL MOVEMENT ADJUSTMENT

1. Use a spring balance to measure the hub rotary sliding resistance (hub rotation starting torque) as shown in the illustration.

   Standard value: 7 – 26 N (0.5 – 1.8 Nm)

2. If the rotary sliding resistance is not within the standard value, remove the lock washer and adjust by the following procedure.
   (1) If the rotary sliding resistance is lower than the standard value, use the special tool (MB990954) to tighten the lock nut.
   (2) If the rotary sliding resistance is higher than the standard value, use the special tool (MB990954) to loosen the lock nut.

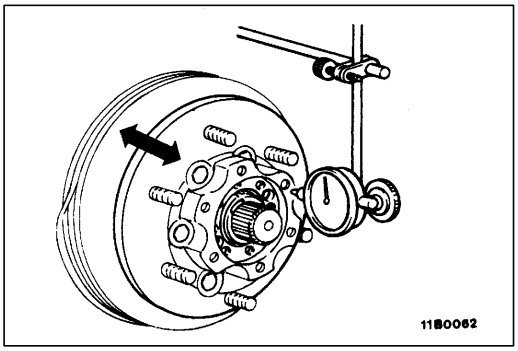

3. Install a dial gauge as shown in the illustration, and then move the hub in the axial direction and measure how far the front wheel bearing moves.

   Standard value: 0.05 mm or less

4. If the distance exceeds the standard value, remove the lock washer and use the special tool (MB990954) to tighten the lock nut.
5. If adjustment is not possible, disassemble the hub and inspect each part.

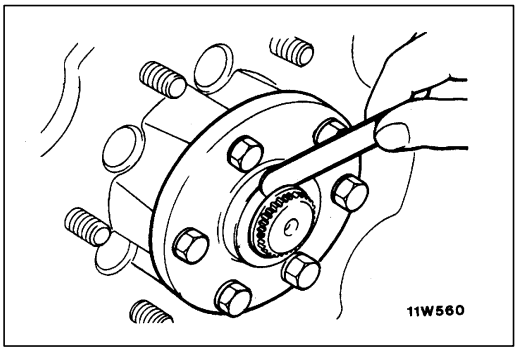

▶D◀ DRIVE SHAFT AXIAL PLAY ADJUSTMENT

1. Push the drive shaft in by hand towards the knuckle until they touch.
2. Measure the clearance between the drive flange and the spacer with a thickness gauge as shown in the illustration.

   Standard value: 0.4 – 0.7 mm

3. If the amount of play is outside the standard value, adjust by selecting a shim that will bring the play to the standard value.

DISASSEMBLY AND REASSEMBLY

26100190082

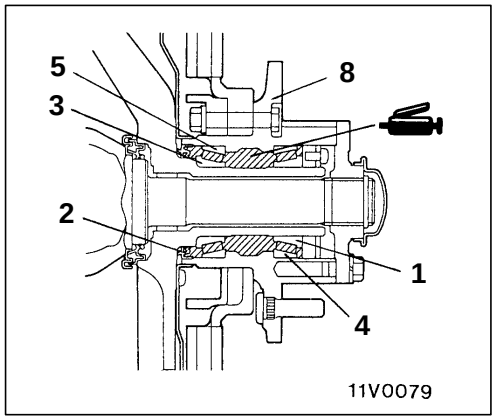

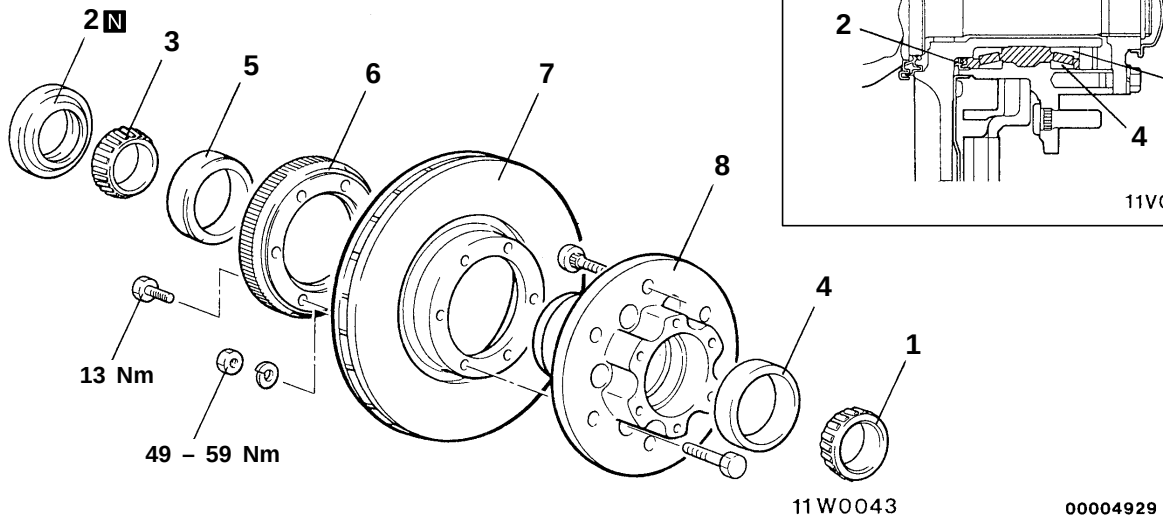

Disassembly steps

1. Outer bearing inner race
2. ▶B◀ Oil seal
3. Inner bearing inner race
4. ◀A▶ ▶A◀ Outer bearing outer race
5. ◀A▶ ▶A◀ Inner bearing outer race
6. Rotor <Vehicles with ABS>
7. ◀B▶ Brake disc
8. Front hub assembly

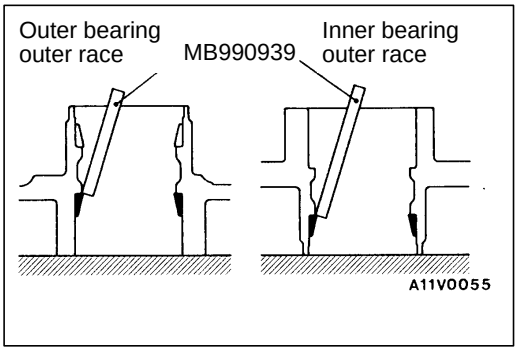

REMOVAL SERVICE POINTS

◀A▶ OUTER BEARING OUTER RACE/INNER BEARING OUTER RACE REMOVAL

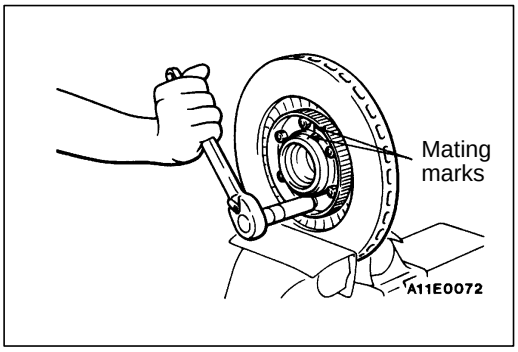

◀B▶ BRAKE DISC REMOVAL

Make the mating marks on the brake disc and front hub, and then separate the front hub and brake disc, if necessary.

Caution
Lock disc in vise and grip with copper or aluminium board.

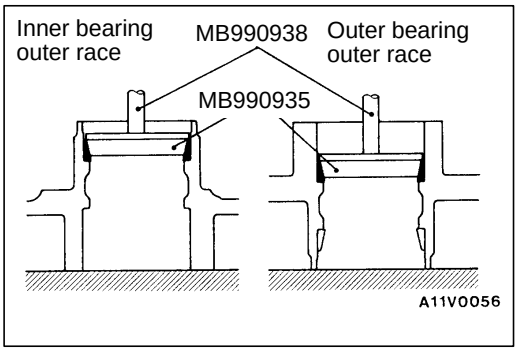

REASSEMBLY SERVICE POINTS

▶A◀ INNER BEARING OUTER RACE/OUTER BEARING OUTER RACE INSTALLATION

NOTE
Replace the inner race and outer race assembly as a set.

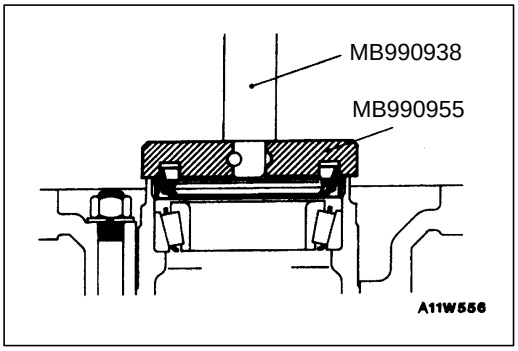

▶B◀ OIL SEAL INSTALLATION

KNUCKLE <2WD>

26100240084

REMOVAL AND INSTALLATION

Pre-removal Operation
- Front Hub Assembly Removal. (Refer to P. 26-13.)

Post-installation Operation
- Front Hub Assembly Installation. (Refer to P. 26-13.)
- Wheel Alignment Check and Adjustment. (Refer to GROUP 33A – On-vehicle Service.)

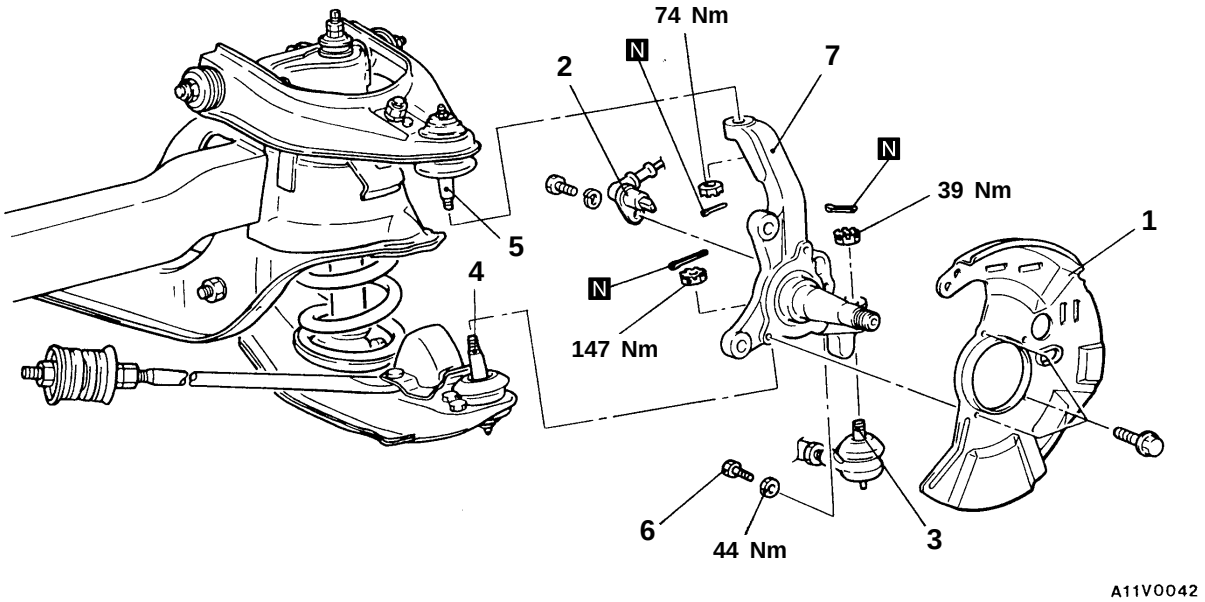

Removal steps

1. Dust cover
2. Front speed sensor <Vehicles with ABS> (Refer to GROUP 35B – Wheel Speed Sensor.>
3. ◀A▶ Tie rod end connection
4. ◀B▶ Lower arm ball joint connection
5. ◀A▶ Upper arm ball joint connection
6. Stopper bolt
7. Knuckle

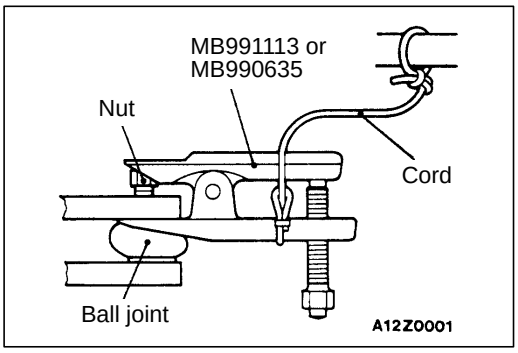

REMOVAL SERVICE POINTS

◀A▶ TIE ROD END /UPPER ARM BALL JOINT DISCONNECTION

Caution

1. **Use the special tool to loosen the nut only; do not remove it from the ball joint.**
2. **Tie the special tool with a cord not to let it fall off.**

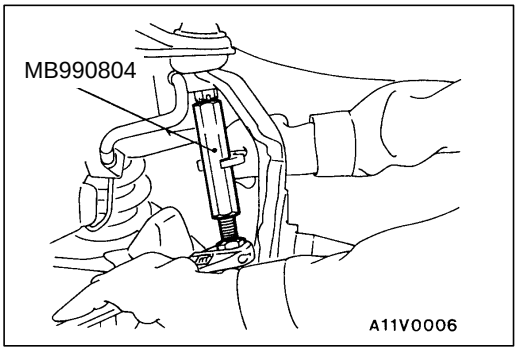

◀B▶ LOWER ARM BALL JOINT DISCONNECTION

Caution
Use the special tool to loosen the nut only; do not remove it from the ball joint.

INSPECTION

26100250049

- Check the knuckle for wear or cracks.

KNUCKLE <4WD>

26100240091

REMOVAL AND INSTALLATION

Pre-removal Operation
- Front Hub Assembly Removal. (Refer to P. 26-16.)

Post-installation Operation
- Front Hub Assembly Installation. (Refer to P. 26-16.)
- Wheel Alignment Check and Adjustment. (Refer to GROUP 33A – On-vehicle Service.)

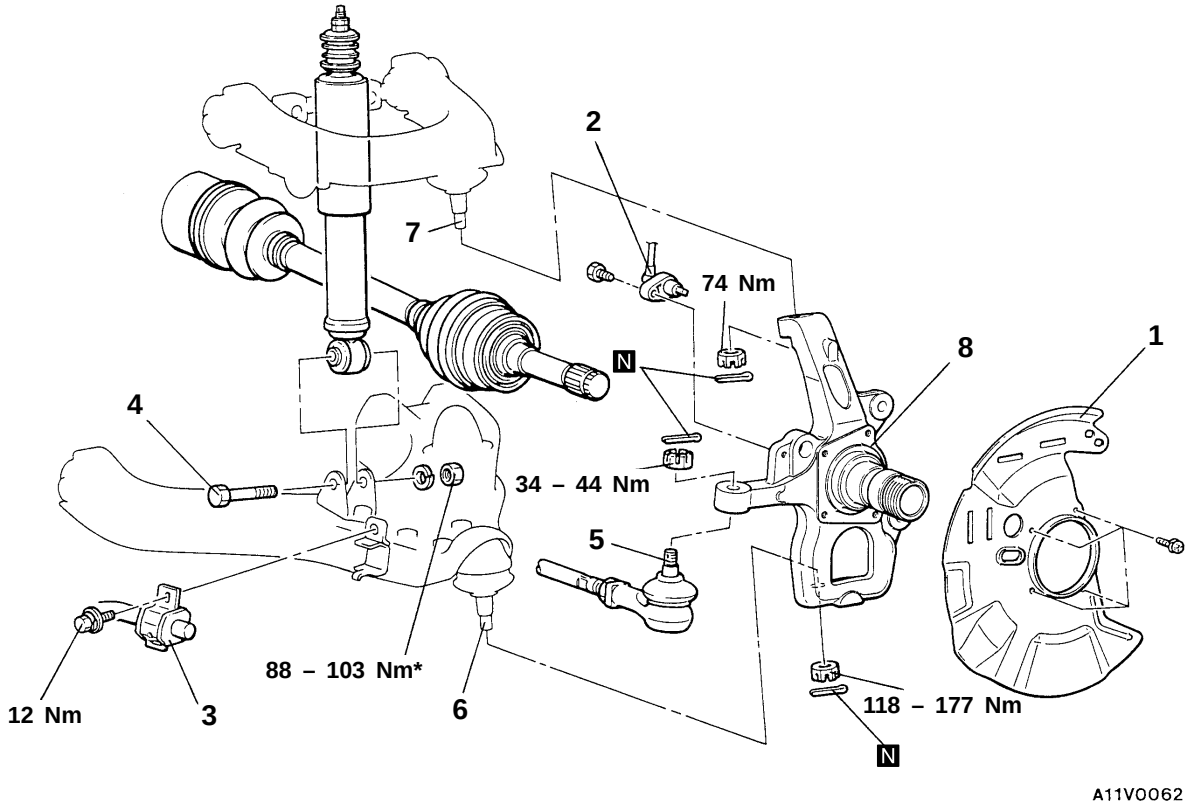

Removal steps

1. Dust cover
2. Front speed sensor <Vehicles with ABS> (Refer to GROUP 35B – Wheel Speed Sensor.>
3. Stabilizer bar connection
4. Shock absorber lower mounting bolt

◀A▶ 5. Tie rod end connection

◀A▶ 6. Lower arm ball joint connection

◀A▶ 7. Upper arm ball joint connection

8. Knuckle

Caution

***: Indicates parts which should be temporarily tightened, and then fully tightened with the vehicle on the ground in the unladen condition.**

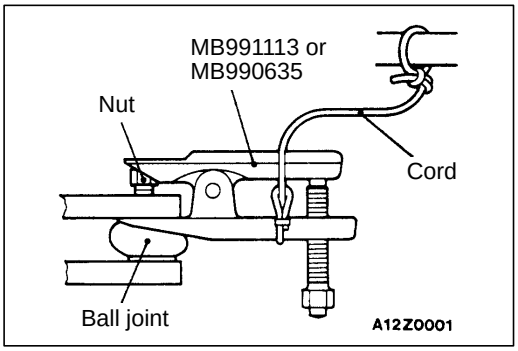

REMOVAL SERVICE POINT

◀A▶ TIE ROD END /LOWER ARM BALL JOINT /UPPER ARM BALL JOINT DISCONNECTION

Caution

1. **Use the special tool to loosen the nut only; do not remove it from the ball joint.**
2. **Tie the special tool with a cord not to let it fall off.**

INSPECTION

26100250056

- Check the knuckle for wear or cracks.

DISASSEMBLY AND REASSEMBLY

26100320023

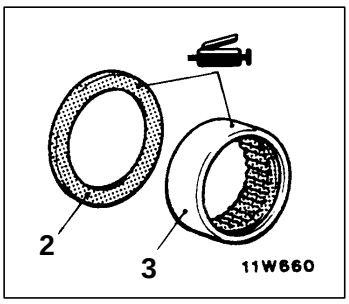

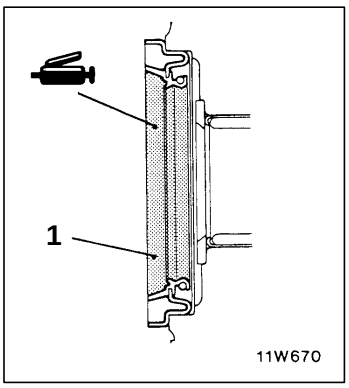

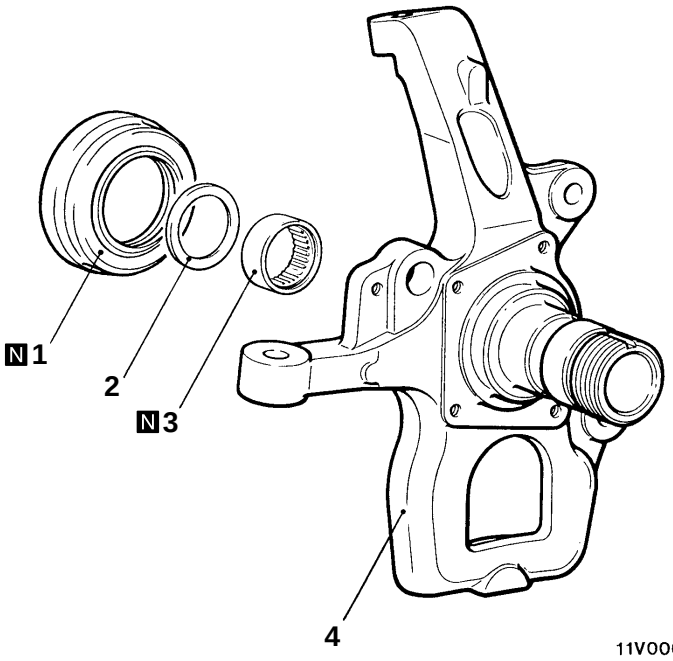

00004930

Disassembly steps

	▶C◀	1. Oil seal
	▶B◀	2. Spacer
◀A▶	▶A◀	3. Needle bearing
		4. Knuckle

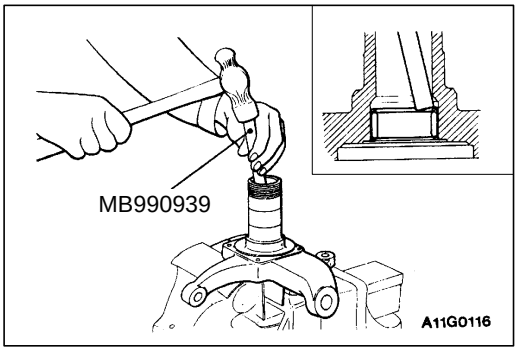

DISASSEMBLY SERVICE POINT

◀A▶ NEEDLE BEARING REMOVAL

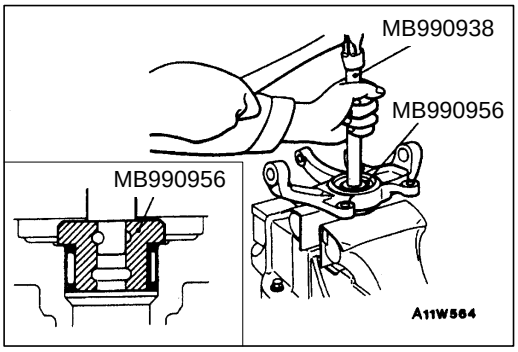

REASSEMBLY SERVICE POINTS

▶A◀ NEEDLE BEARING INSTALLATION

Caution
Use care to prevent driving the needle bearing too far in.

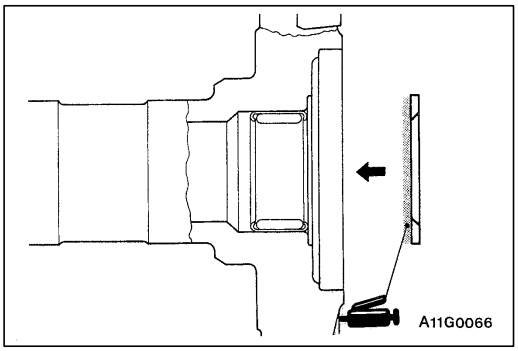

▶B◀ SPACER INSTALLATION

Install the spacer to the knuckle with the chamfered side toward the center of vehicle.

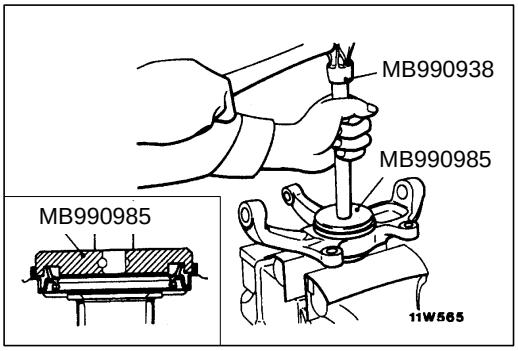

▶C◀ OIL SEAL INSTALLATION

DRIVE SHAFT

26100350152

REMOVAL AND INSTALLATION

Pre-removal Operation
- Front Under Cover Removal
- Gear Oil Draining (Refer to P. 26-10.)

Post-installation Operation
- Gear Oil Supplying (Refer to P. 26-10.)
- Front Under Cover installation
- Wheel Alignment Check and Adjustment. (Refer to GROUP 33A – On-vehicle Service.)

Left-side drive shaft

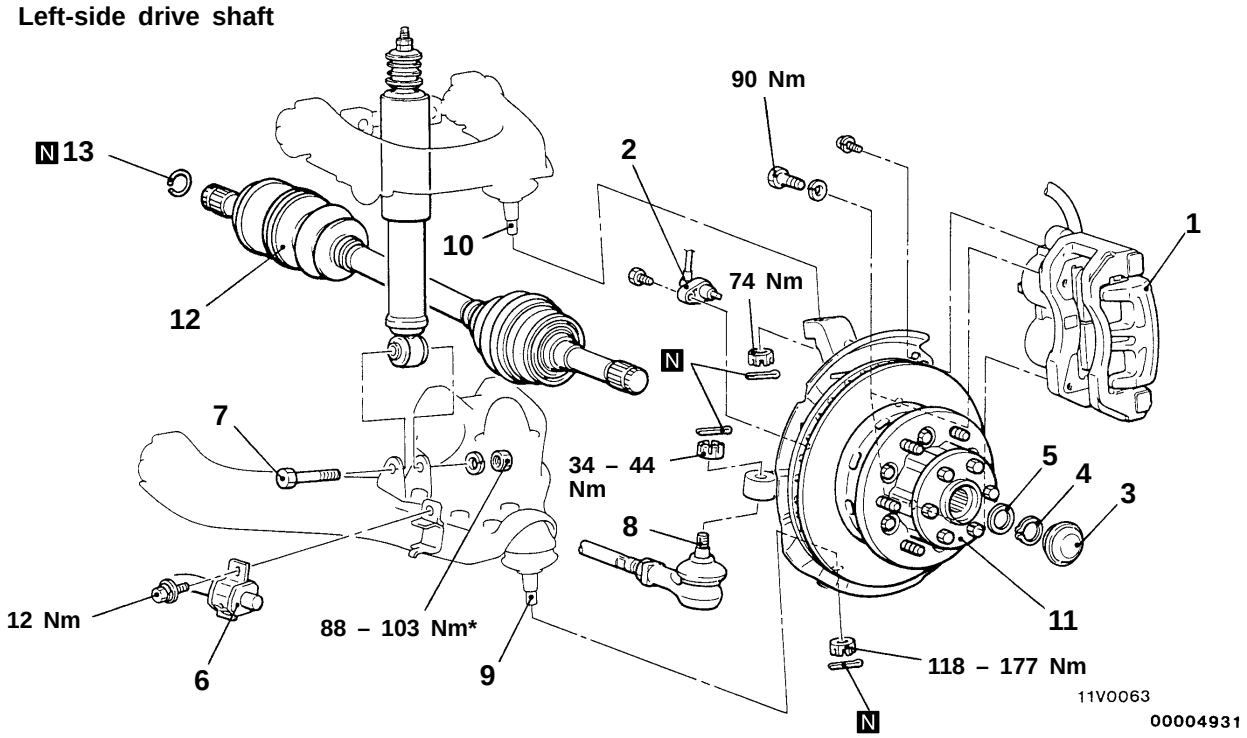

Right-side drive shaft

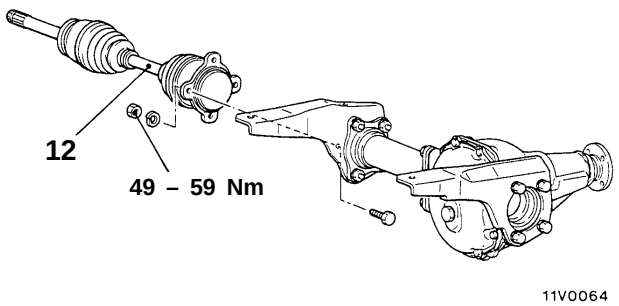

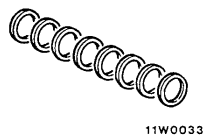	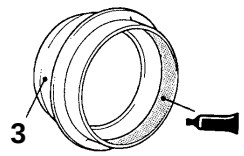
Front hub shim set	**Sealant: 3M ATD Part No. 8661 or equivalent**

Removal steps

◀A▶ 1. Caliper assembly
2. Front speed sensor <Vehicles with ABS> (Refer to GROUP 35B – Wheel Speed Sensor.)
3. Hub cap
▶C◀ ● Drive shaft axial play adjustment
4. Snap ring
5. Shim
6. Stabilizer bar connection
7. Shock absorber lower mounting bolt
◀B▶ 8. Tie rod end connection
◀B▶ 9. Lower arm ball joint connection
◀B▶ 10. Upper arm ball joint mounting bolt
◀C▶ ▶B◀ 11. Knuckle and front hub assembly
◀D▶ ▶A◀ 12. Drive shaft assembly
13. Circlip

Caution

***: Indicates parts which should be temporarily tightened, and then fully tightened with the vehicle on the ground in the unladen condition.**

REMOVAL SERVICE POINTS

◀A▶ CALIPER ASSEMBLY REMOVAL

Secure the removed caliper assembly with wire so that it does not fall.

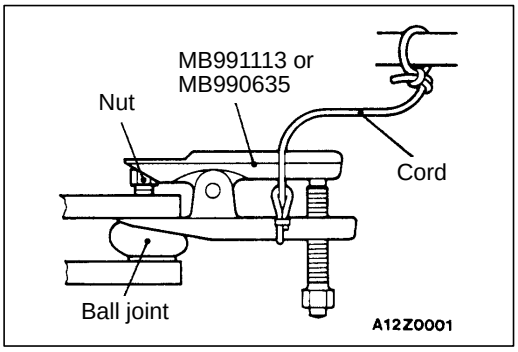

◀B▶ TIE ROD END /LOWER ARM BALL JOINT /UPPER ARM BALL JOINT DISCONNECTION

Caution

1. **Use the special tool to loosen the nut only; do not remove it from the ball joint.**
2. **Tie the special tool with a cord not to let it fall off.**

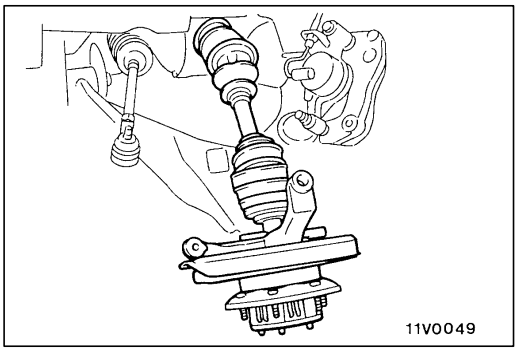

◀C▶ KNUCKLE AND FRONT HUB ASSEMBLY REMOVAL

1. Press down lower arm and remove upper knuckle towards you.

   NOTE
   Pull the D.O.J. side of the drive shaft assembly out slightly from the front differential carrier.

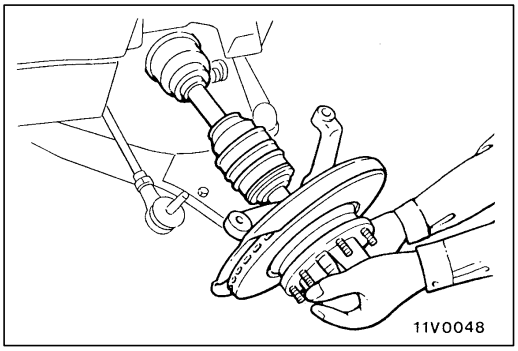

2. Slightly back off drive shaft from knuckle. Remove lower knuckle holding nut from the lower arm ball joint.
3. Disconnect knuckle and lower ball joint.
4. Remove knuckle and front hub assembly from drive shaft assembly.

   Caution
   Do not damage knuckle oil seals with drive shaft spline.

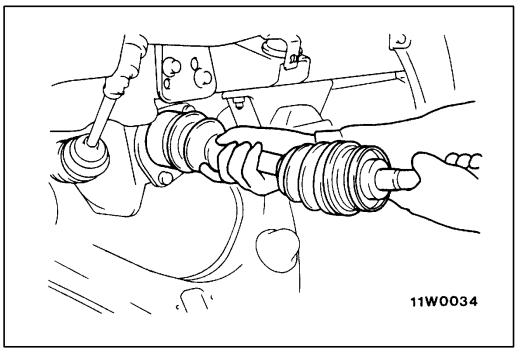

◀D▶ DRIVE SHAFT (LEFT SIDE) REMOVAL

Caution

When pulling the drive shaft out from the differential carrier, be careful that the spline part of the drive shaft does not damage the oil seal.

INSTALLATION SERVICE POINTS

▶A◀ DRIVE SHAFT (LEFT SIDE) INSTALLATION

Caution
Do not damage the oil seal of the differential carrier by the drive shaft splines.

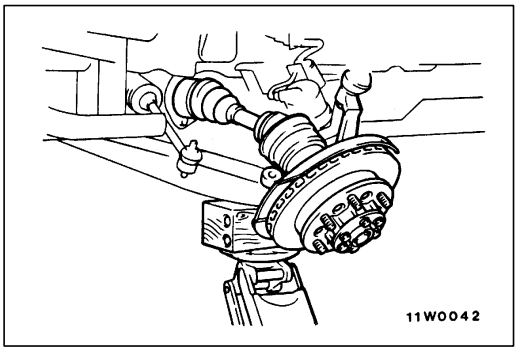

▶B◀ KNUCKLE AND FRONT HUB ASSEMBLY INSTALLATION

1. Insert knuckle and front hub assembly to drive shaft.

   Caution
   Do not damage knuckle oil seal with drive shaft spline.
2. Assemble knuckle and lower ball joint and temporarily tighten slotted nut.
3. Press up lower arm and lock upper ball joint onto upper arm.
4. Tighten lower ball joint mounting nuts to specified torque.

   Tightening torque: 118 – 177 Nm

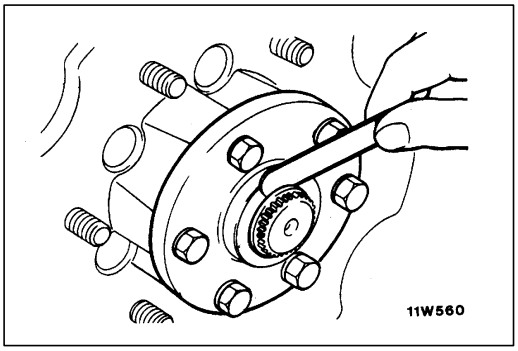

▶C◀ DRIVE SHAFT AXIAL PLAY ADJUSTMENT

1. Push the drive shaft in by hand towards the knuckle until they touch.
2. Measure the clearance between the drive flange and the spacer with a thickness gauge as shown in the illustration.

   Standard value: 0.4 – 0.7 mm
3. If the amount of play is outside the standard value, adjust by selecting a shim that will bring the play to the standard value.

   NOTE
   The shims available range from 0.3 mm thick to 0.6 mm thick in steps of 0.1 mm, and from 0.9 mm thick to 1.8 mm thick in steps of 0.3 mm.

INSPECTION

26100360087

- Check the boot for damage or deterioration.
- Check the ball joint for operating condition and excessive looseness.
- Check the splines for wear or damage.
- Check the differential carrier oil seal (L.H.) for damaged.

DISASSEMBLY AND REASSEMBLY

26100370165

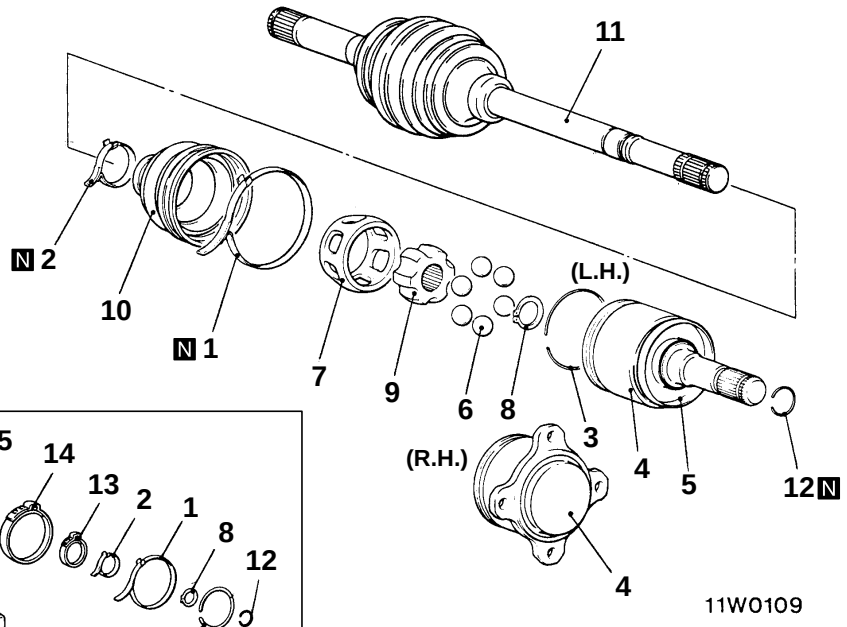

00004932

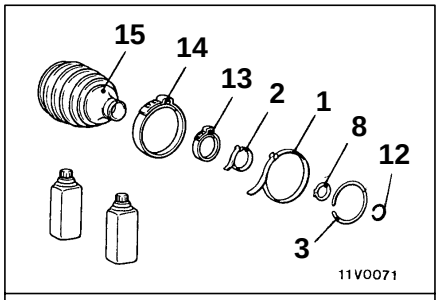

B.J. repair kit (B.J.)

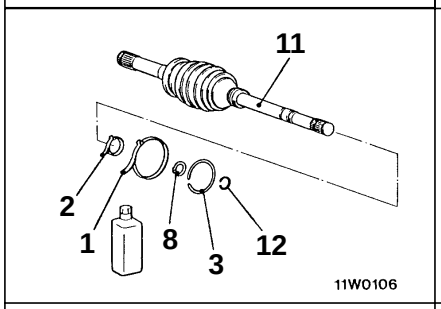

B.J. repair kit L.H.

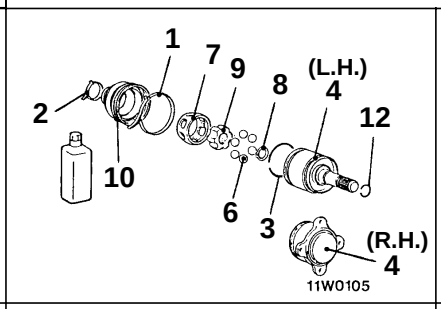

D.O.J. repair kit

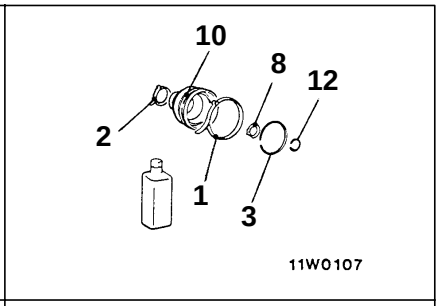

Boot repair kit (D.O.J.)

Disassembly steps

1. D.O.J. boot band (large)
2. D.O.J. boot band (small)
3. Circlip
4. D.O.J. outer race
5. Dust cover
6. ◀A▶ Balls
7. ◀B▶ D.O.J. cage
8. Snap ring
9. D.O.J. inner race
10. ◀C▶ D.O.J. boot
11. B.J. assembly
12. Circlip
13. B.J. boot band (small)
14. B.J. boot band (large)
15. B.J. boot

Reassembly steps

12. Circlip
11. B.J. assembly
9. ▶A◀ D.O.J. inner race
8. ▶A◀ Snap ring
7. ▶A◀ D.O.J. cage
6. ▶A◀ Balls
4. ▶B◀ D.O.J. outer race
5. Dust cover
3. Circlip
10. ▶C◀ D.O.J. boot
2. ▶C◀ D.O.J. boot band (small)
1. ▶C◀ D.O.J. boot band (large)

Caution
Never disassemble the B.J. assembly except when replacing the B.J. boot.

Lubrication Points

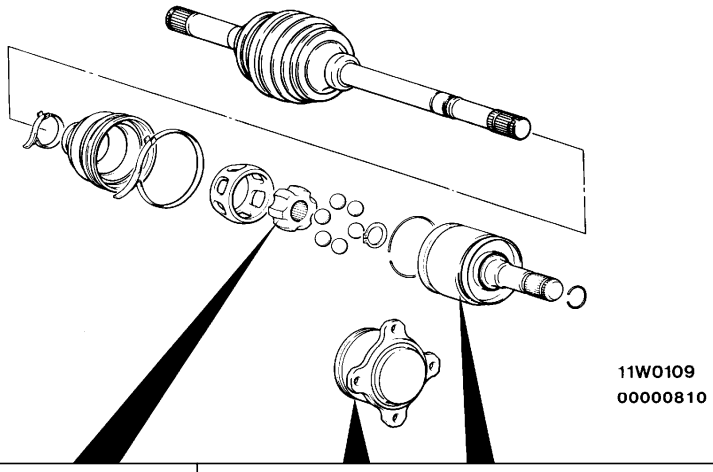

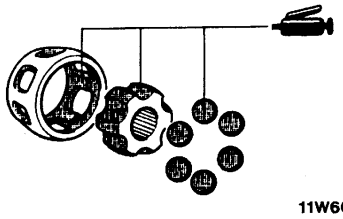	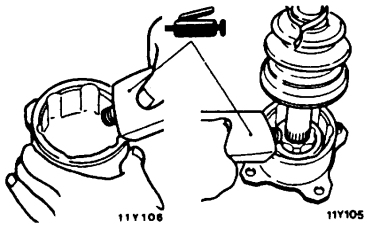
Grease: Repair kit grease	**Grease:** **Repair kit grease 100 g (60 g inside joint, 40 g inside boot)**
Caution **Do not mix old and new or different types of grease, as a special grease is used in the joint.**	

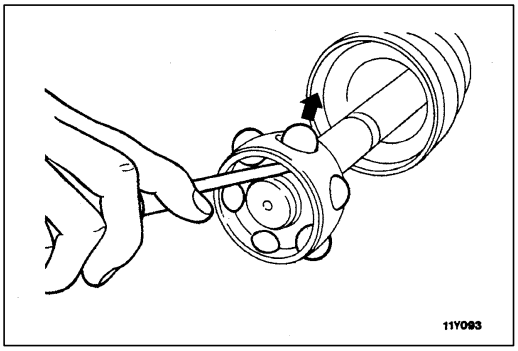

DISASSEMBLY SERVICE POINTS

◀A▶ BALLS REMOVAL

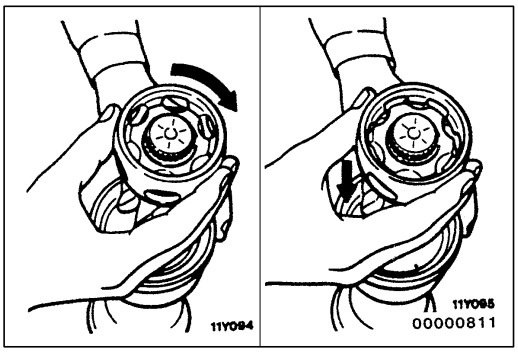

◀B▶ D.O.J. CAGE REMOVAL

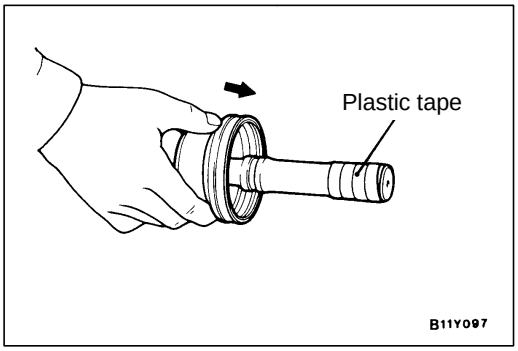

◀C▶ D.O.J. BOOT REMOVAL

Wrap plastic tape around the spline part on the D.O.J. side of the drive shaft so that D.O.J. boot is not damaged when they are removed.

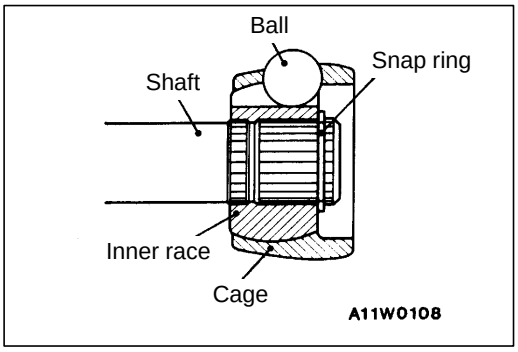

REASSEMBLY SERVICE POINTS

▶A◀ D.O.J. INNER RACE/SNAP RING/D.O.J. CAGE/BALLS INSTALLATION

Install the cage, balls and inner race to the drive shaft, and fit the snap ring securely to the groove in the drive shaft.

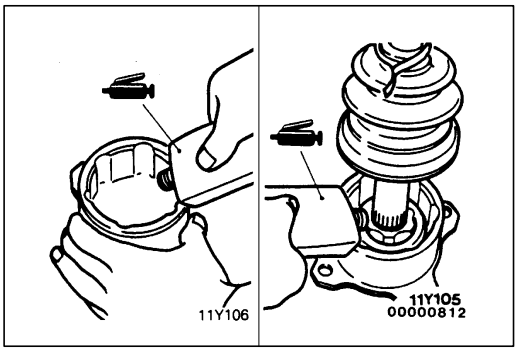

▶B◀ D.O.J. OUTER RACE INSTALLATION

Fill the inside of the D.O.J. outer race and D.O.J. boot with the specified grease.

Specified grease: Repair kit grease 100 g

NOTE
The grease in the repair kit should be divided in half for use, respectively, at the joint and inside the boot.

Caution
The drive shaft joint use special grease. Do not mix old and new or different types of grease.

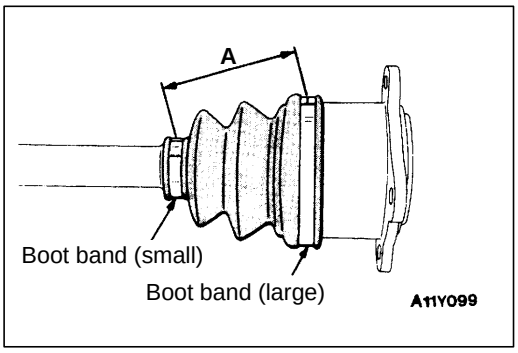

▶C◀ D.O.J. BOOT/D.O.J. BOOT BAND INSTALLATION

1. Position the D.O.J. outer race so that the distance between the boot bands is at the standard value.

   Standard value (A): 80 ± 3 mm

2. Remove part of the D.O.J. boot from the D.O.J. outer race to release the air pressure inside the boot.

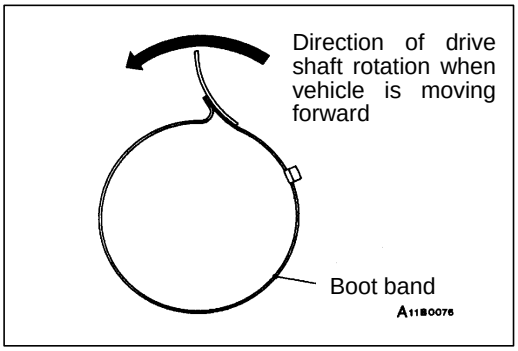

3. Secure the boot band (large) on D.O.J. boot.

   Caution
   Be sure that the installation direction of the boot bands is correct.

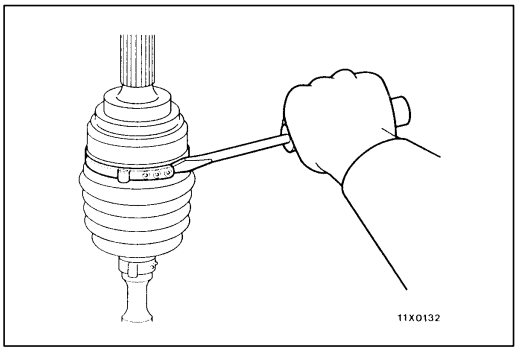

B.J. BOOT (RESIN BOOT) REPLACEMENT

26100520065

1. Remove the boot bands (large and small).

   NOTE
   The B.J. boot bands cannot be re-used.

2. Remove the B.J. boot.

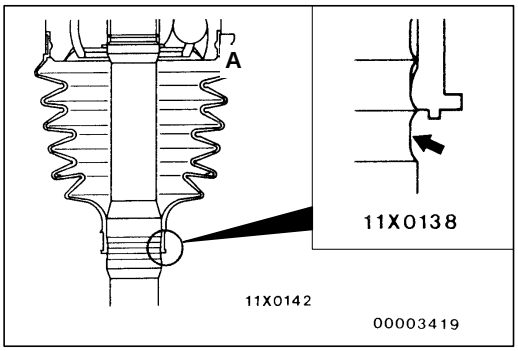

3. Install the B.J. boot with the part with the smallest diameter in a position such that the shaft groove can be seen.

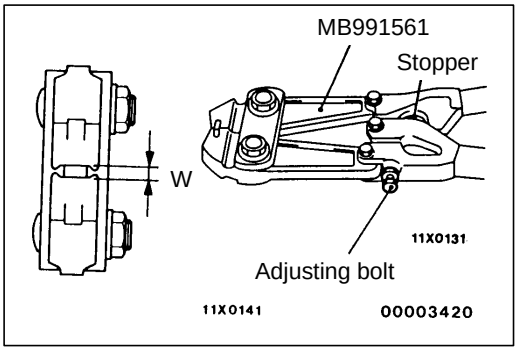

4. Turn the adjusting bolt on the special tool so that the size of the opening (W) is at the standard value.

   Standard value (W): 2.9 mm
   <If it is larger than 2.9 mm>
   Tighten the adjusting bolt.
   <If it is smaller than 2.9 mm>
   Loosen the adjusting bolt.

   NOTE
   (1) The value of W will change by approximately 0.7 mm for each turn of the adjusting bolt.
   (2) The adjusting bolt should not be turned more than once.

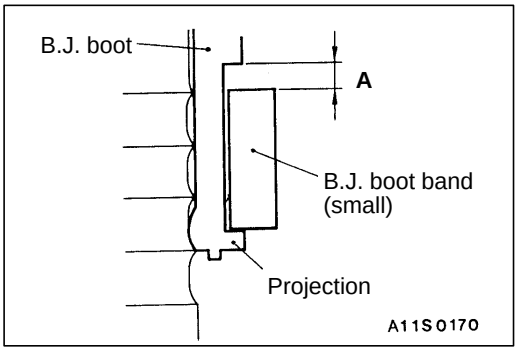

5. Place the B.J. boot band (small) against the projection at the edge of the boot, and then secure it so that there is a clearance left as shown by (A) in the illustration.

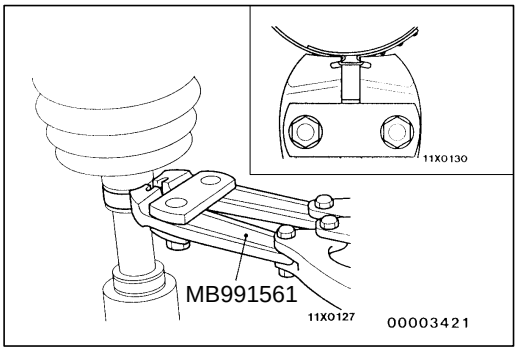

6. Use the special tool to crimp the B.J. boot band (small).

   Caution
   1. **Secure the drive shaft in an upright position and clamp the part of the B.J. boot band to be crimped securely in the jaws of the special tool.**
   2. **Crimp the B.J. boot band until the special tool touches the stopper.**

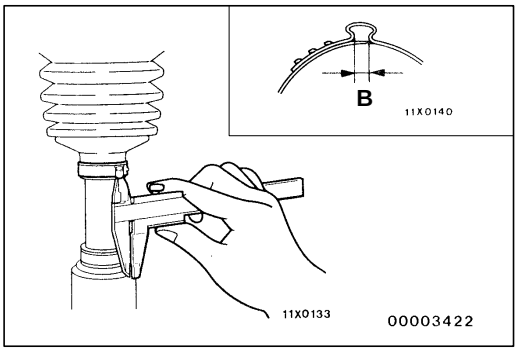

7. Check that crimping amount (B) of the B.J. boot band is at the standard value.

   Standard value (B): 2.4 – 2.8 mm

   <If the crimping amount is larger than 2.8 mm>
   Readjust the value of (W) in step (4) according to the following formula, and then repeat the operation in step (6).
   W = 5.5 mm – B
   Example: If B = 2.9 mm, then W = 2.6 mm.

   <If the crimping amount is smaller than 2.4 mm>
   Remove the B.J. boot band, readjust the value of (W) in step (4) according to the following formula, and then repeat the operations in steps (5) and (6) using a new B.J. boot band.
   W = 5.5 mm – B
   Example: If B = 2.3, then W = 3.2 mm.

8. Check that the B.J. boot band is not sticking out past the place where it has been installed.
   If the B.J. boot band is sticking out, remove it and then repeat the operations in steps (5) to (7) using a new B.J. boot band.
9. Fill the inside of the B.J. boot with the specified amount of the specified grease.

   Specified grease: Repair kit grease

   Amount to use: 125 g

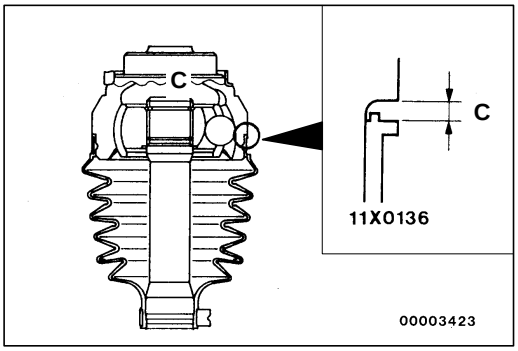

10. Install the B.J. boot band (large) so that there is the clearance (C) between it and the B.J. housing is at the standard value.

    Standard value (C): 0.1 – 1.55 mm

11. Follow the same procedure as in step (4) to adjust the size of the opening (W) on the special tool so that it is at the standard value.

    Standard value (W): 3.2 mm

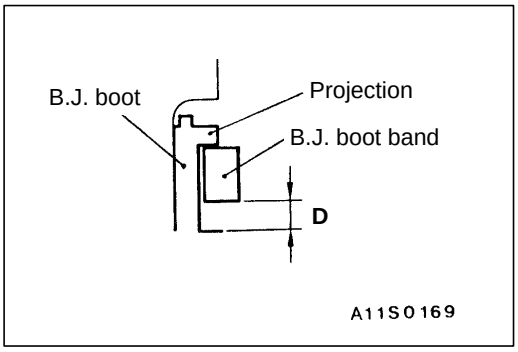

12. Place the B.J. boot band (large) against the projection at the edge of the boot, and then secure it so that there is a clearance left as shown by (D) in the illustration.
13. Use the special tool to crimp the B.J. boot band (large) in the same way as in step (6).

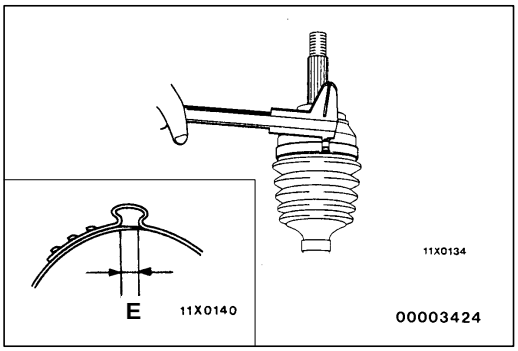

14. Check that the crimping amount (E) of the B.J. boot band is at the standard value.

    Standard value (E): 2.4 – 2.8 mm

    <If the crimping amount is larger than 2.8 mm>
    Readjust the value of (W) in step (11) according to the following formula, and then repeat the operation in step (13).
    W = 5.8 mm – E
    Example: If E = 2.9 mm, then W = 2.9 mm.

    <If the crimping amount is smaller than 2.4 mm>
    Remove the B.J. boot band, readjust the value of (W) in step (11) according to the following formula, and then repeat the operating in steps (12) and (13) using a new B.J. boot band.
    W = 5.8 mm – E
    Example: If E = 2.3 mm, then W = 3.5mm.

15. Check that the B.J. boot band is not sticking out past the place where it has been installed.
    If the B.J. boot band is sticking out, remove it and then repeat the operations in steps (12) to (14) using a new B.J. boot band.

INNER SHAFT

26100400031

REMOVAL AND INSTALLATION

Pre-removal and Post-installation Operation
- Front Under Cover Removal and Installation
- Gear Oil Draining and Supplying (Refer to P. 26-10.)

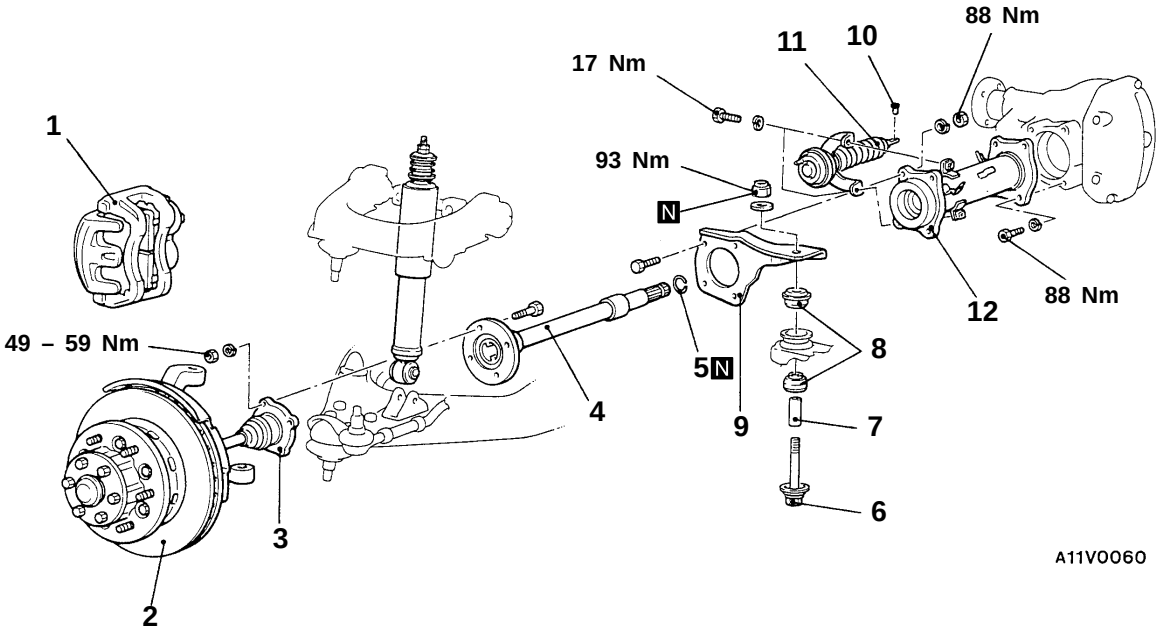

Removal steps

◀A▶ 1. Caliper assembly
2. Hub assembly, knuckle (Refer to P. 26-22.)
3. Drive shaft (R.H.) (Refer to P.26-26.)
◀B▶ ▶A◀ 4. Inner shaft
5. Circlip
6. Pin
7. Spacer
8. Rubber
9. Differential mounting bracket (R.H.)
10. Pin
11. Actuator assembly
12. Housing tube assembly

Caution

***: Indicates parts which should be temporarily tightened, and then fully tightened with the vehicle on the ground in the unladen condition.**

REMOVAL SERVICE POINTS

◀A▶ CALIPER ASSEMBLY REMOVAL

Secure the removed caliper assembly with wire so that it does not fall.

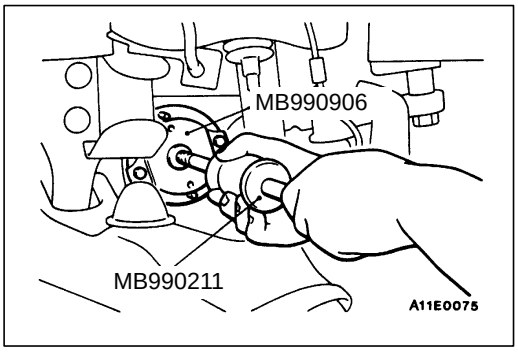

◀B▶ INNER SHAFT REMOVAL

Caution
When pulling the inner shaft out from the front differential carrier, be careful that the spline part of the inner shaft does not damage the oil seal.

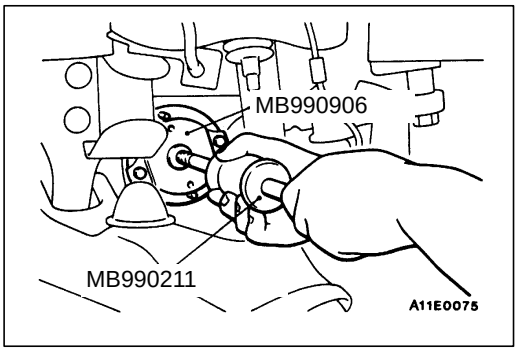

INSTALLATION SERVICE POINT

◀A▶ INNER SHAFT INSTALLATION

Caution
Be careful not to damage the lip of the dust seal and oil seal.

DISASSEMBLY AND REASSEMBLY

26100420020

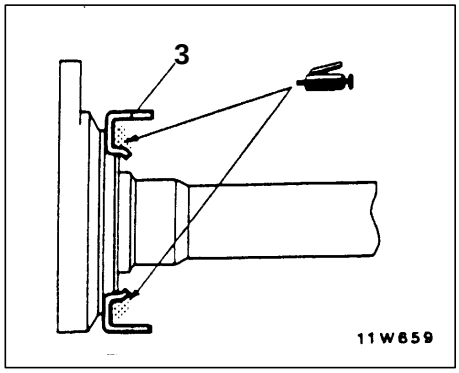

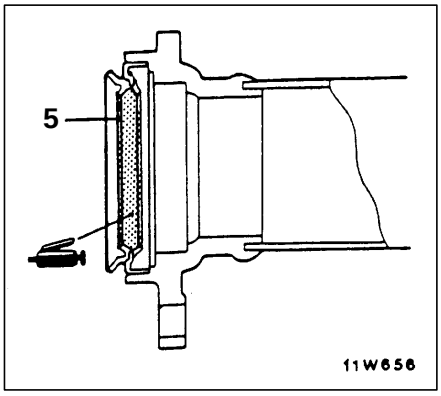

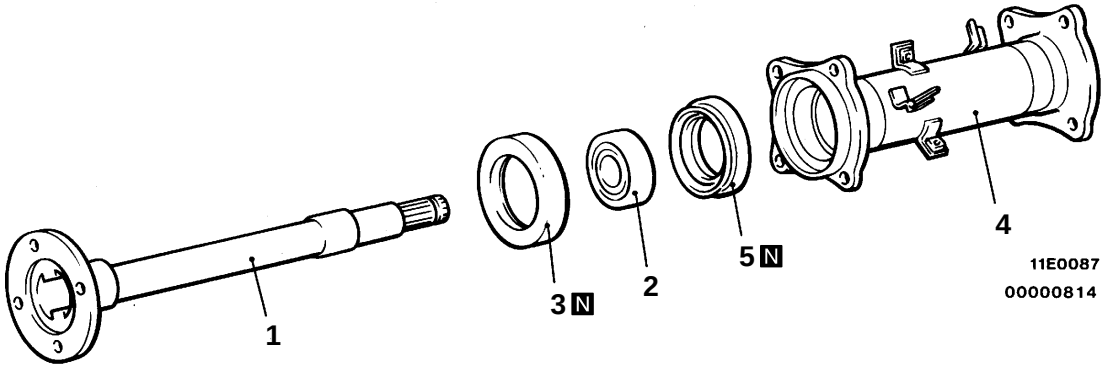

Disassembly steps

◀A▶ 1. Inner shaft
▶C◀ 2. Bearing
▶B◀ 3. Dust cover
4. Housing tube
▶A◀ 5. Dust seal

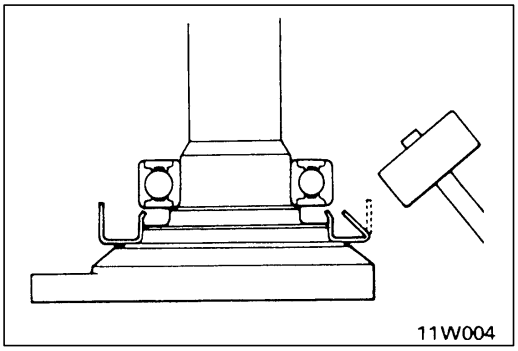

DISASSEMBLY SERVICE POINT

◀A▶ BEARING REMOVAL

1. Bend the outside periphery of dust cover inward with a hammer.

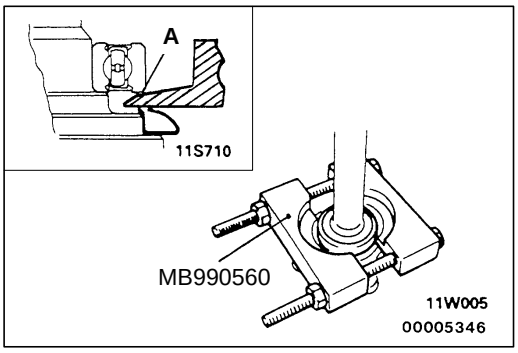

2. After the special tool has been installed as shown, tighten the nut of the special tool until the portion “A” of the special tool touches the bearing outer race.

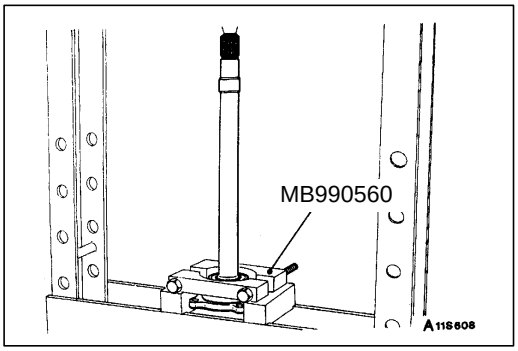

3. Press out the inner shaft from the bearing.

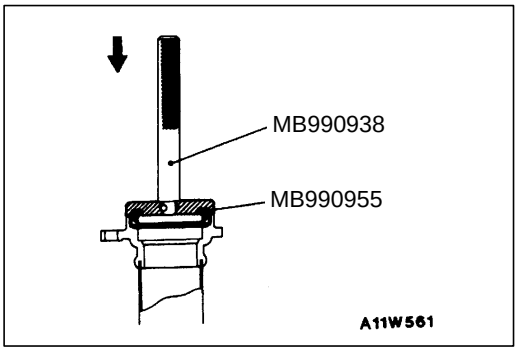

REASSEMBLY SERVICE POINTS

▶A◀ DUST SEAL INSTALLATION

Press-fit the new dust seal into the housing tube by using the special tools, until it is flush with the housing tube end face.

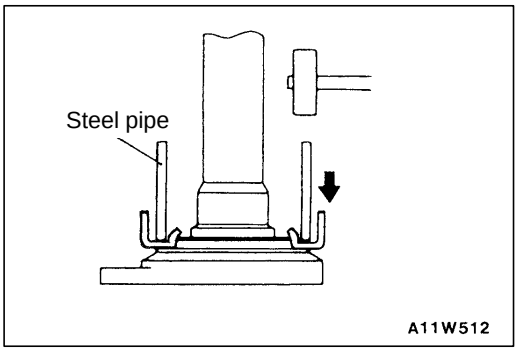

▶B◀ DUST COVER INSTALLATION

Using a steel pipe, force a new dust cover onto the inner shaft.

Steel pipe	mm
Overall length	50
Outside diameter	75
Wall thickness	4

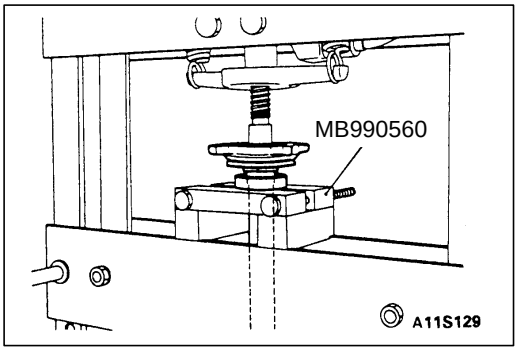

▶C◀ BEARING INSTALLATION

DIFFERENTIAL CARRIER

26200210019

REMOVAL AND INSTALLATION

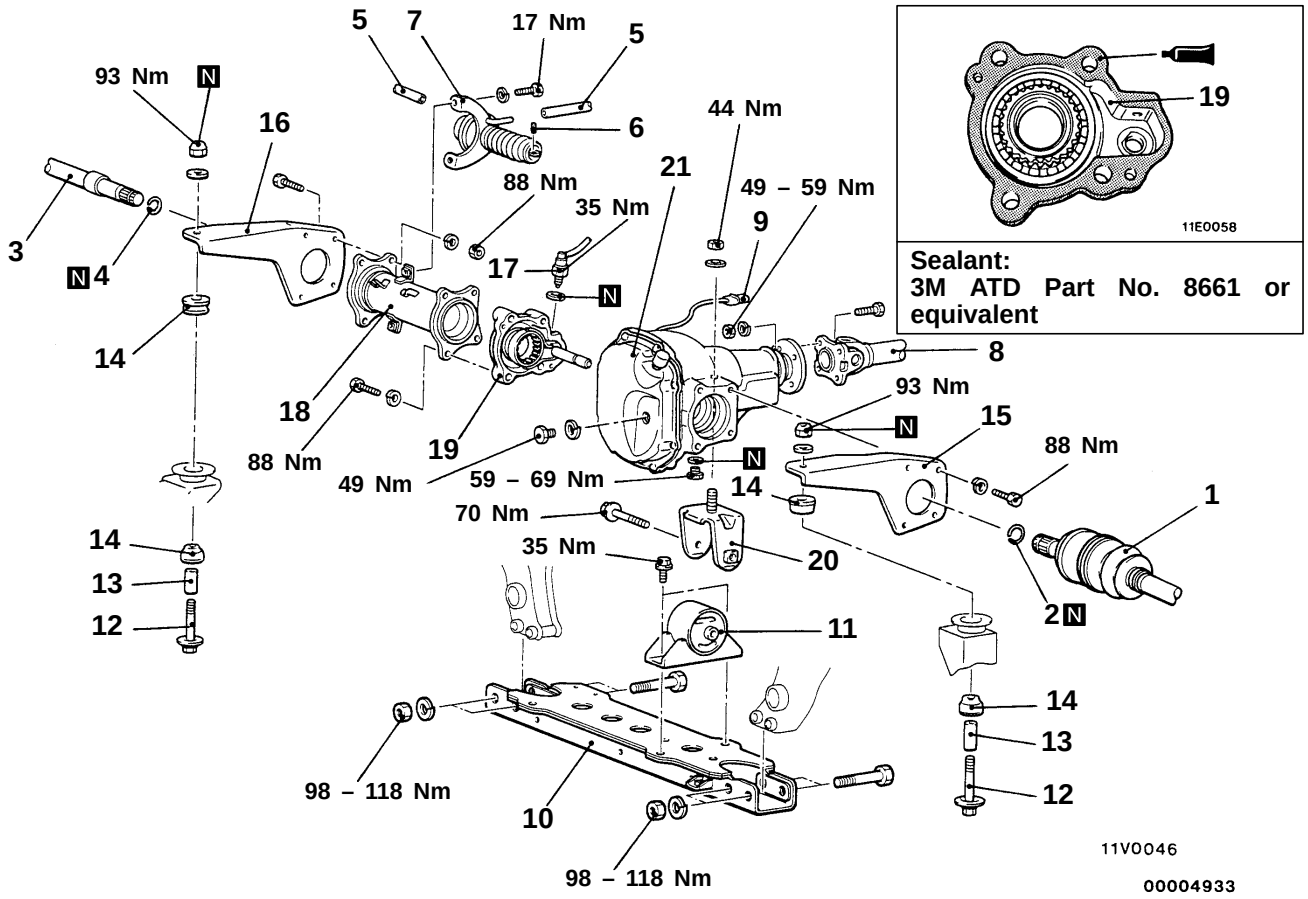

Removal steps

1. Drive shaft (Refer to P. 26-26.)
2. Circlip
3. Inner shaft (Refer to P.26-36.)
4. Circlip

▶C◀ 5. Vacuum hose connection
6. Pin
7. Actuator assembly

◀A▶ ▶B◀ 8. Front propeller shaft connection
9. Freewheel engage switch connector
10. Front suspension crossmember
11. Differential mount insulator assembly
    - Support the differential by a transmission jack.
12. Pin
13. Spacer
14. Rubber
15. Differential mounting bracket (L.H.)
16. Differential mounting bracket (R.H.)
17. Freewheel engage switch
18. Housing tube
19. Freewheel clutch assembly
20. Differential support bracket

▶A◀ • Clutch gear bearing axial play inspection.

21. Front differential carrier assembly

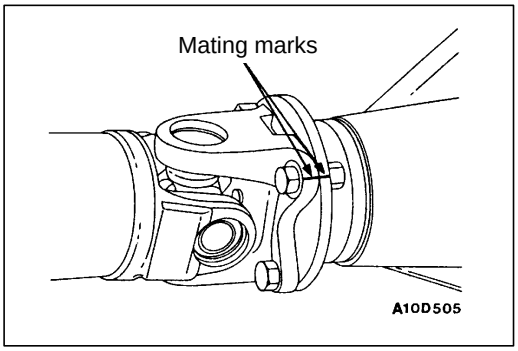

REMOVAL SERVICE POINT

◀A▶ FRONT PROPELLER SHAFT REMOVAL

Make the mating marks on the flange yoke and the differential carrier companion flange and then remove the front propeller shaft.

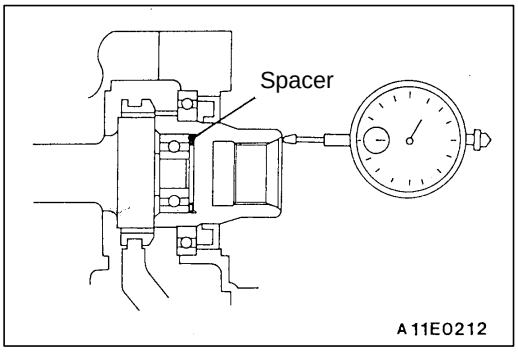

INSTALLATION SERVICE POINTS

▶A◀ CLUTCH GEAR BEARING AXIAL PLAY INSPECTION

Check the axial play of the clutch gear bearing by the following procedure before installing the freewheel clutch assembly.

1. Insert flat washers of the same thickness as the housing tube (9.0 mm) onto the bolt, and then temporarily install the freewheel clutch assembly to the front differential.
2. Place a micrometer against the end of the clutch gear and check the axial play of the clutch gear bearing.

   Standard value: 0.05 – 0.30 mm
3. If the play is not within the standard value, disassemble the bearing and insert a spacer of the appropriate thickness.

   NOTE
   The thicknesses of the spacers vary in steps of 0.25 mm.

▶B◀ FRONT PROPELLER SHAFT INSTALLATION

Install the front propeller shaft so that the mating marks of the flange yoke and the differential carrier companion flange are aligned.

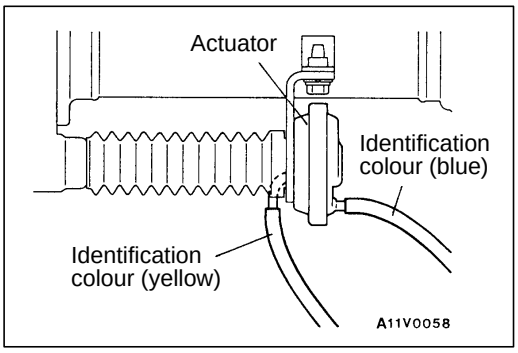

▶C◀ VACUUM HOSE INSTALLATION

Install the vacuum hoses so that they match the identification colours of the actuator assembly nipple.

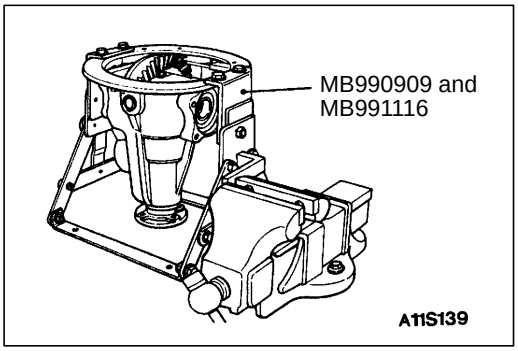

INSPECTION BEFORE DISASSEMBLY 26200430026

1. Remove the cover and gasket.
2. Hold the special tool in a vise, and install the differential carrier assembly to the special tool.

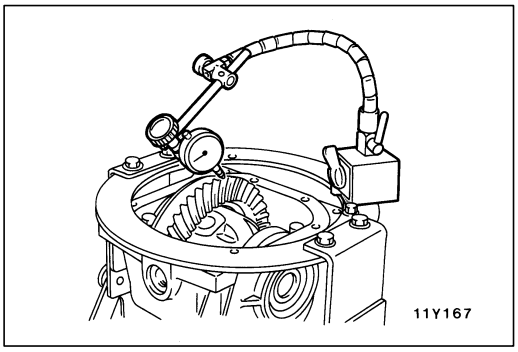

DRIVE GEAR BACKLASH

1. With the drive pinion locked in place, use a dial gauge to measure the drive gear backlash in four or more places on the drive gear.

   Standard value: 0.11 – 0.16 mm

2. If the backlash is not within the standard value, insert side bearing adjustment spacers, and then inspect the drive gear tooth contact.

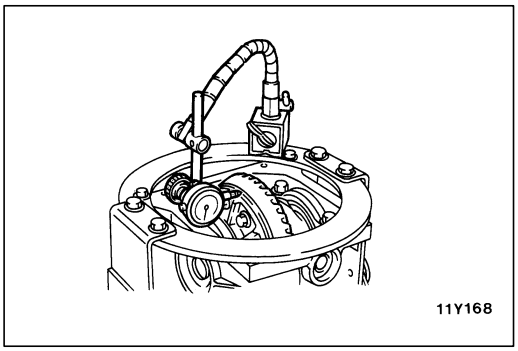

DRIVE GEAR RUNOUT

1. Measure the drive gear runout at the shoulder on the reverse side of the drive gear.

   Limit: 0.05 mm

2. When runout exceeds the limit value, check for foreign object between drive gear rear side and differential case, or for loose drive gear installation bolts.
3. When check (2) gives normal results, reposition drive gear and differential case and remeasure.
4. If adjustment is impossible, replace differential case, or replace drive gear and pinion as a set.

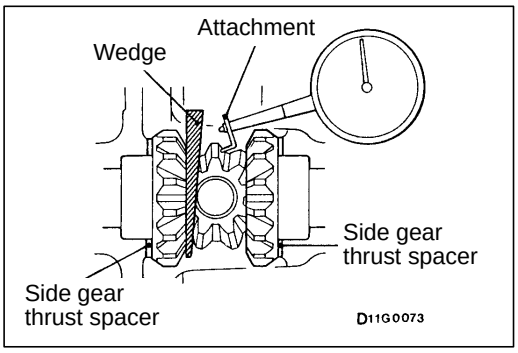

DIFFERENTIAL GEAR BACKLASH

1. While locking the side gear with the wedge, measure the differential gear backlash with a dial indicator on the pinion gear.

   Standard value: 0 – 0.076 mm
   Limit: 0.2 mm

   Repeat the same procedure for both pinion gears.

2. If the backlash exceeds the limit, adjust by using the side gear thrust spacers.
3. If adjustment is impossible, replace the side gear and pinion gear as a set.

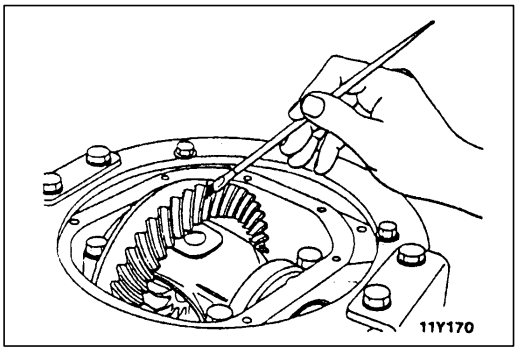

DRIVE GEAR TOOTH CONTACT

Check the tooth contact of drive gear by following the steps below.

1. Apply a thin, uniform coat of machine blue to both surfaces of the drive gear teeth.

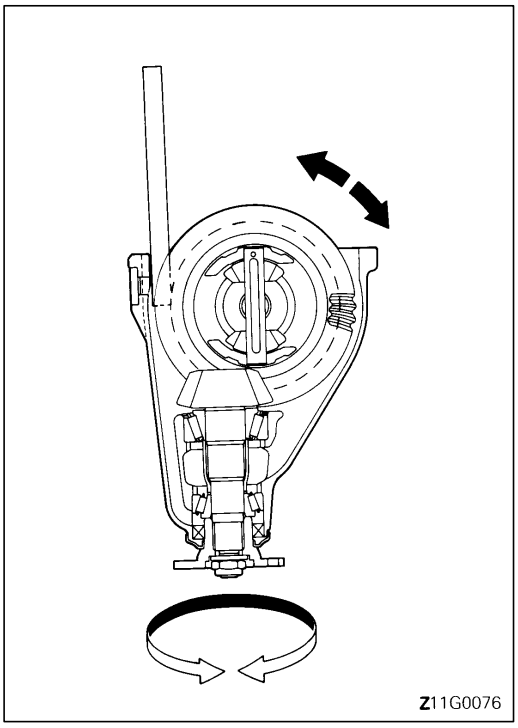

2. Insert the brass between the differential carrier and the differential case, and then rotate the companion flange by hand (once in the normal direction, and then once in the reverse direction) while applying a load to the drive gear so that the revolution torque (approximate 250 – 300 Ncm) is applied to the drive pinion.

   Caution
   If the drive gear is rotated too much, the tooth contact pattern will become unclear and difficult to check.

3. Check the tooth contact condition of the drive gear and drive pinion.

Standard tooth contact pattern	Problem	Solution
1 Narrow tooth side 2 Drive-side tooth surface (the side applying power during forward movement) 3 Wide tooth side 4 Coast-side tooth surface (the side applying power during reverse movement) 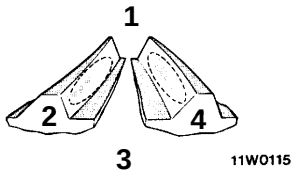	Tooth contact pattern resulting from excessive pinion height 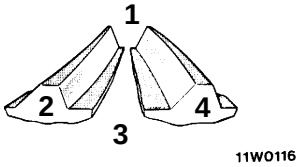 The drive pinion is positioned too far from the centre of the drive gear.	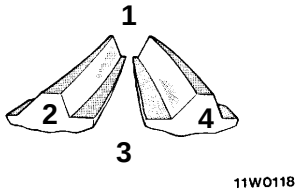 Increase the thickness of the drive pinion rear shim, and position the drive pinion closer to the centre of the drive gear. Also, for backlash adjustment, position the drive gear farther from the drive pinion.
	Tooth contact pattern resulting from insufficient pinion height. 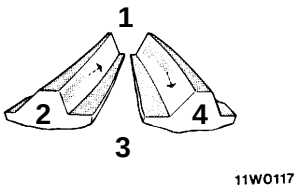 The drive pinion is positioned too close to the centre of the drive gear.	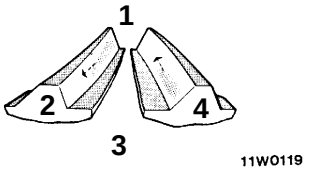 Decrease the thickness of the drive pinion rear shim, and position the drive pinion farther from the centre of the drive gear. Also, for backlash adjustment, position the drive gear closer to the drive pinion.

NOTE
Checking the tooth contact pattern is the way to confirm that the adjustments of the pinion height and backlash have been done properly. Continue to adjust the pinion height and backlash until the tooth contact pattern resembles the standard pattern.

If, even after adjustments have been made, the correct tooth contact pattern cannot be obtained, it means that the drive gear and the drive pinion have become worn beyond the allowable limit. Replace the gear set.

DISASSEMBLY

26200230039

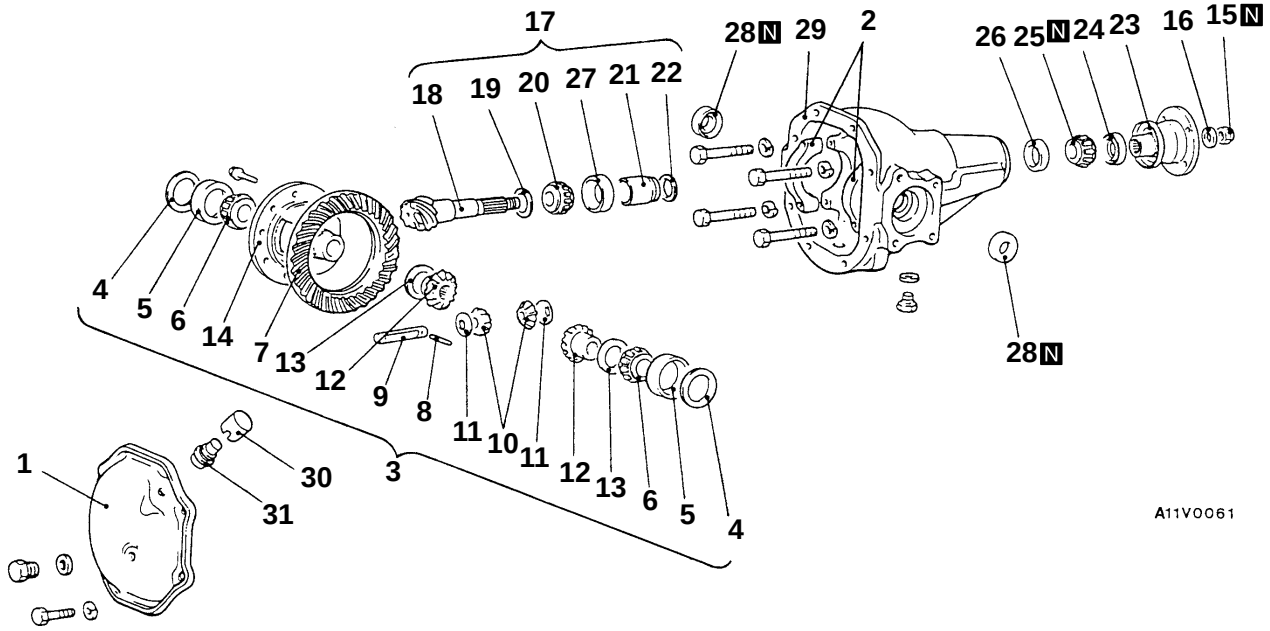

Disassembly steps

- Inspection before disassembly (Refer to P. 26-42.)

1. Cover
2. Bearing cap
3. ◀A▶ Differential case assembly
4. Side bearing spacer
5. Side bearing outer race
6. ◀B▶ Side bearing inner race
7. ◀C▶ Drive gear
8. ◀D▶ Lock pin
9. Pinion shaft
10. Pinion gear
11. Pinion washer
12. Side gear
13. Side gear spacer
14. Differential case
15. ◀E▶ Self-locking nut
16. Washer
17. ◀F▶ Drive pinion assembly
18. Drive pinion
19. Drive pinion front shim (for pinion height adjustment)
20. ◀G▶ Drive pinion front bearing inner race
21. Drive pinion spacer
22. Drive pinion rear shim (for turning torque adjustment)
23. Companion flange
24. Oil seal
25. Drive pinion rear bearing inner race
26. ◀H▶ Drive pinion rear bearing outer race
27. ◀I▶ Drive pinion front bearing outer race
28. Oil seal
29. Gear carrier
30. Plug cover
31. Vent plug

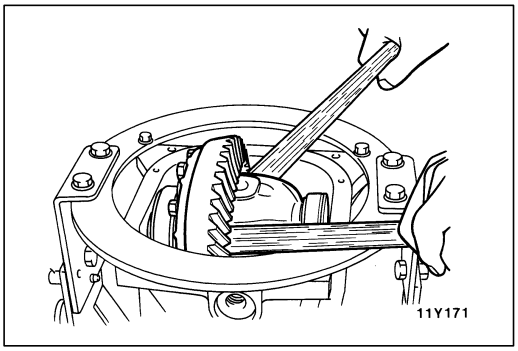

DISASSEMBLY SERVICE POINTS

◀A▶ DIFFERENTIAL CASE ASSEMBLY REMOVAL

Caution

When taking out the differential case assembly, be careful not to drop and damage the side bearing outer races.

NOTE

Keep the right and left side bearings and side bearing adjusting spacers separate, so that they do not become mixed at the time of reassembly.

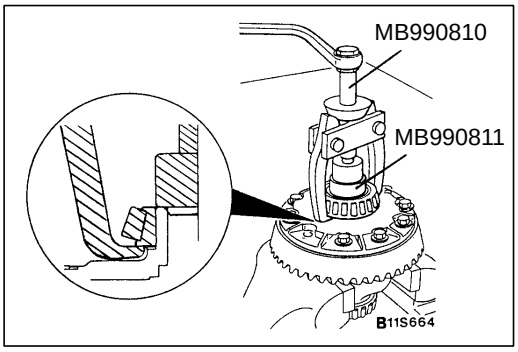

◀B▶ SIDE BEARING INNER RACE REMOVAL

NOTE

There are two notches provided (at the differential case side) for the claw part of the special tool; use the special tool at that position.

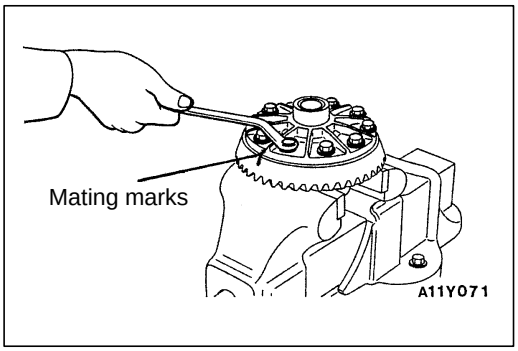

◀C▶ DRIVE GEAR REMOVAL

1. Make the mating marks to the differential case and the drive gear.
2. Loosen the drive gear attaching bolts in diagonal sequence to remove the drive gear.

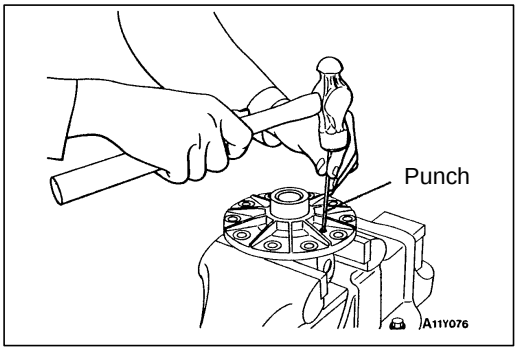

◀D▶ LOCK PIN REMOVAL

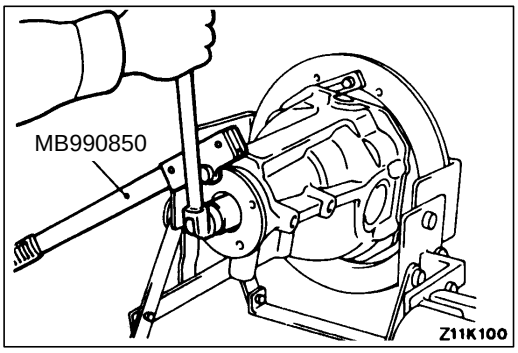

◀E▶ SELF-LOCKING NUT REMOVAL

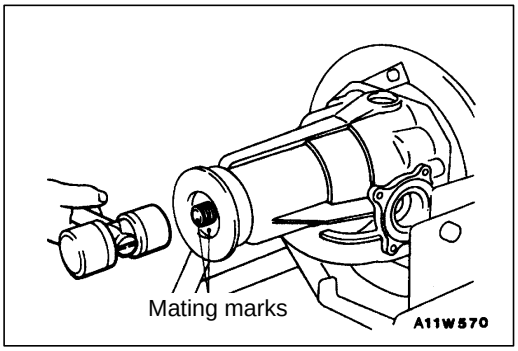

◀F▶ DRIVE PINION ASSEMBLY REMOVAL

1. Make mating marks on the drive pinion and companion flange.

   Caution
   The mating mark made on the companion flange must not be on the coupling surface of the flange yoke and the front propeller shaft.

2. Drive out the drive pinion together with the drive pinion spacer and drive pinion shims.

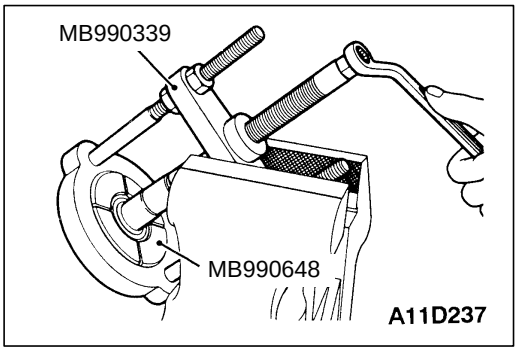

◀G▶ DRIVE PINION FRONT BEARING INNER RACE REMOVAL

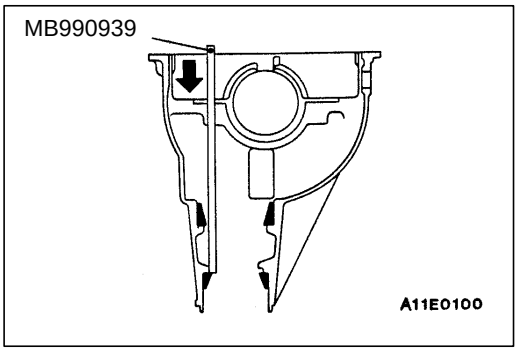

◀H▶ DRIVE PINION REAR BEARING OUTER RACE REMOVAL

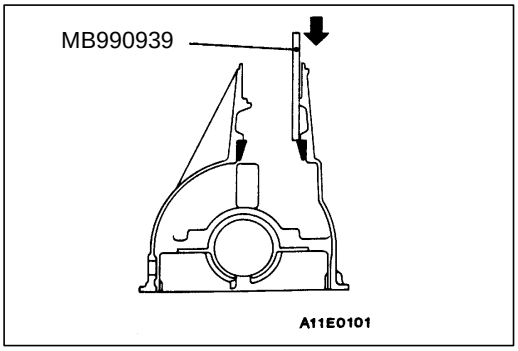

◀I▶ DRIVE PINION FRONT BEARING OUTER RACE REMOVAL

REASSEMBLY

26200250035

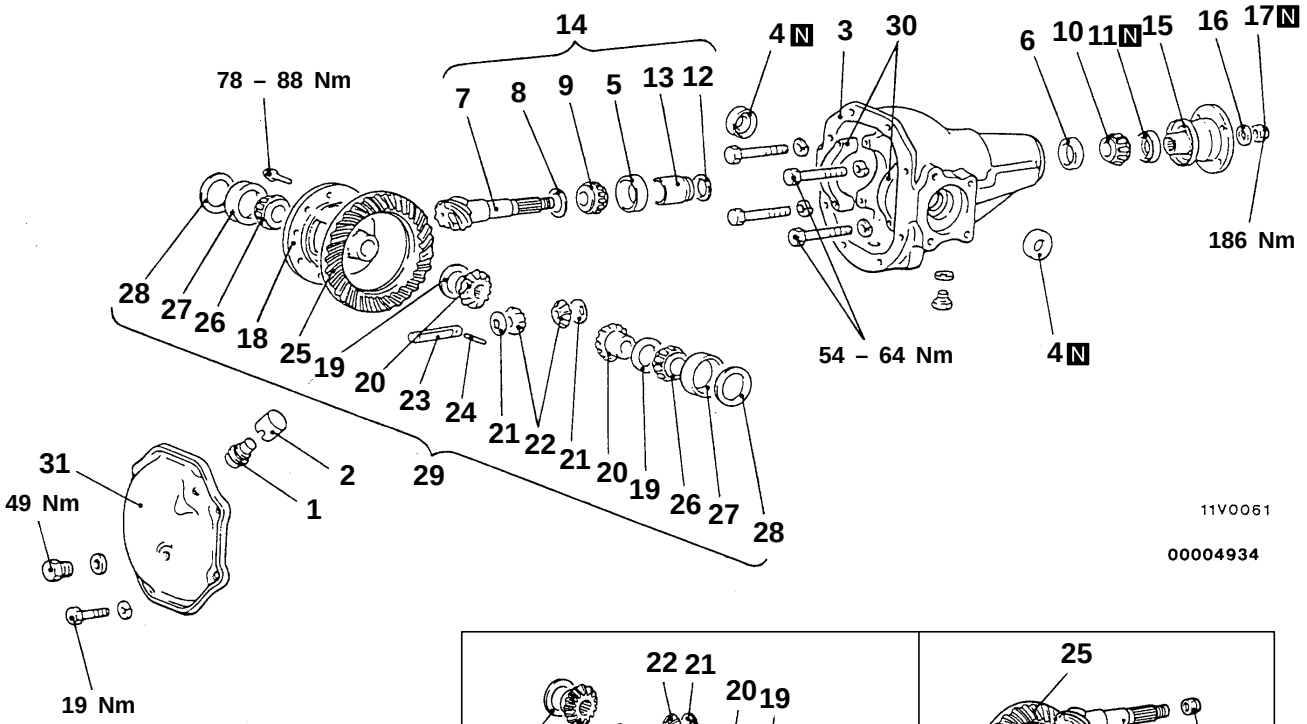

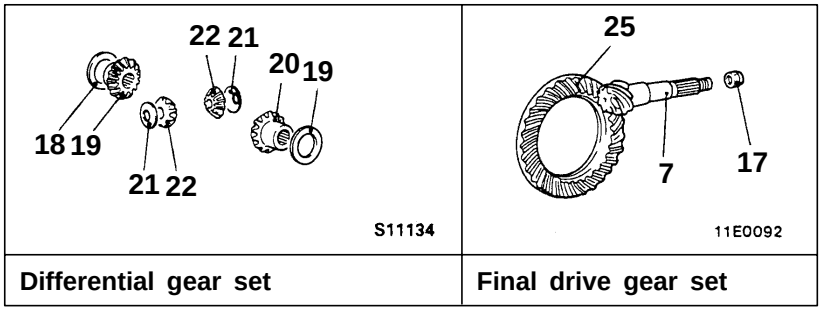

Differential gear set	Final drive gear set

Reassembly steps

1. Vent plug
2. Plug cover
3. Gear carrier
- ▶A◀ 4. Oil seal
- ▶B◀ 5. Drive pinion front bearing outer race
- ▶C◀ 6. Drive pinion rear bearing outer race
- ▶D◀ ● Pinion height adjustment
7. Drive pinion
8. Drive pinion front shim (for pinion height adjustment)
9. Drive pinion front bearing inner race
- ▶E◀ ● Drive pinion turning torque adjustment
10. Drive pinion rear bearing inner race
11. Oil seal
12. Drive pinion rear shim (for turning torque adjustment)
13. Drive pinion spacer
14. Drive pinion assembly
15. Companion flange
16. Washer
17. Self-locking nut
18. Differential case
19. Side gear spacer
20. Side gear
21. Pinion washer
22. Pinion gear
- ▶F◀ ● Differential gear backlash adjustment
23. Pinion shaft
- ▶G◀ 24. Lock pin
- ▶H◀ 25. Drive gear
- ▶I◀ 26. Side bearing inner race
27. Side bearing outer race
28. Side bearing adjusting spacer
- ▶J◀ ● Drive gear backlash adjustment
29. Differential case assembly
30. Bearing cap
31. Cover

Lubrication, Sealing and Adhesive Points

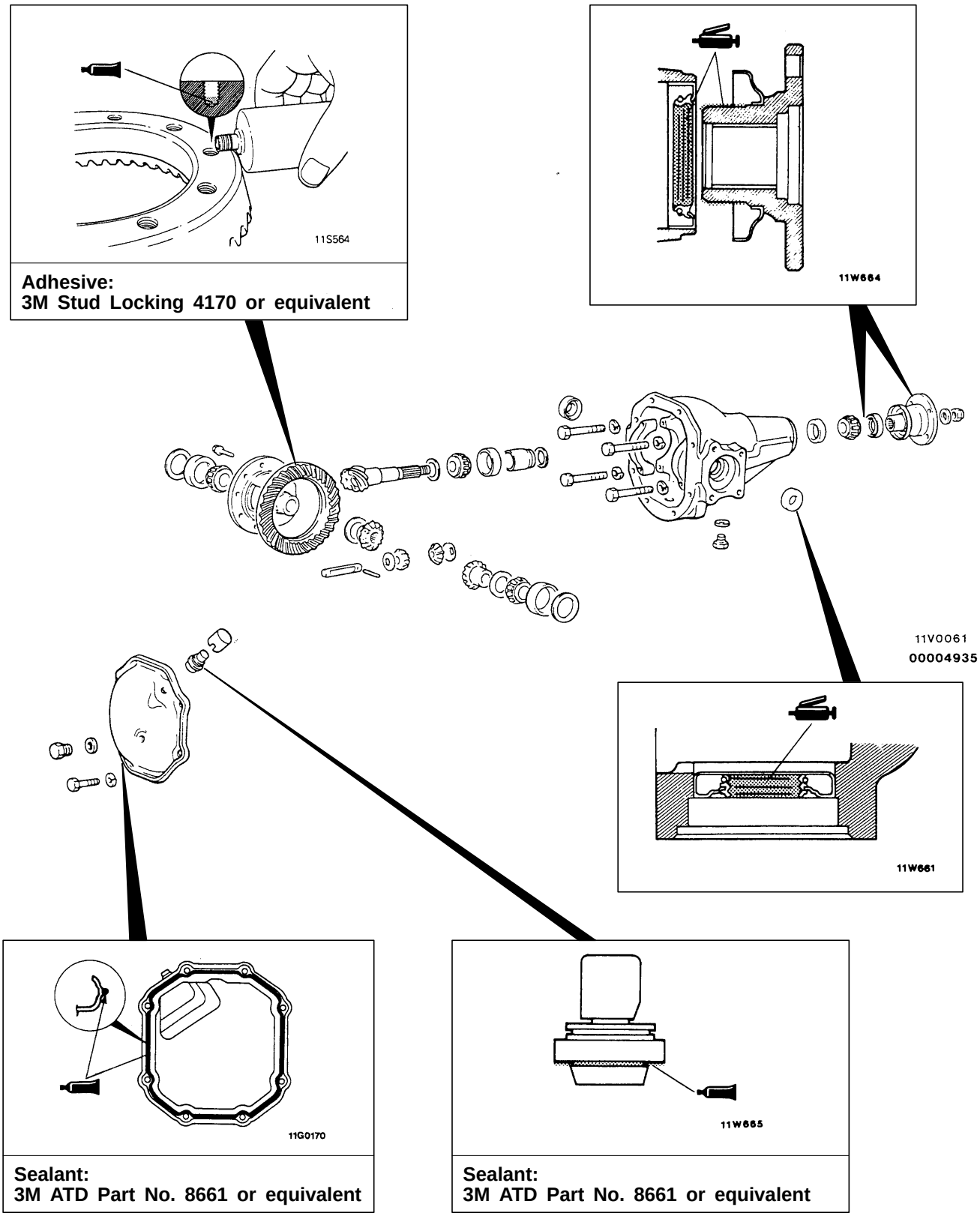

Adhesive:
3M Stud Locking 4170 or equivalent

Sealant:
3M ATD Part No. 8661 or equivalent

Sealant:
3M ATD Part No. 8661 or equivalent

REASSEMBLY SERVICE POINTS

▶A◀ OIL SEAL INSTALLATION

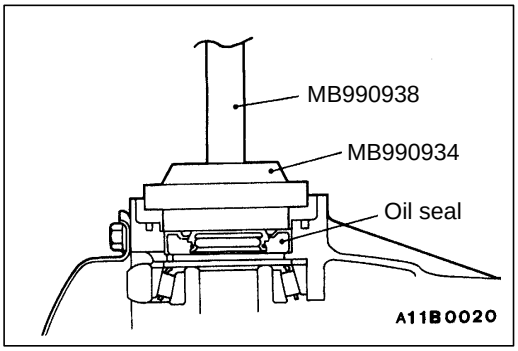

▶B◀ DRIVE PINION FRONT BEARING OUTER RACE INSTALLATION

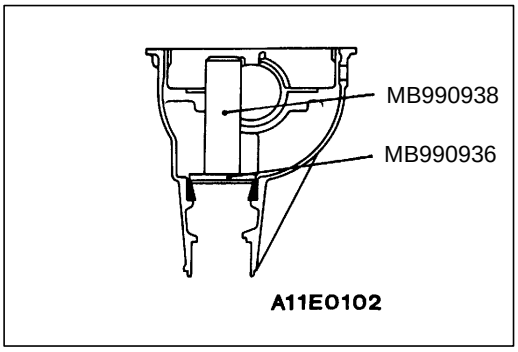

▶C◀ DRIVE PINION REAR BEARING OUTER RACE INSTALLATION

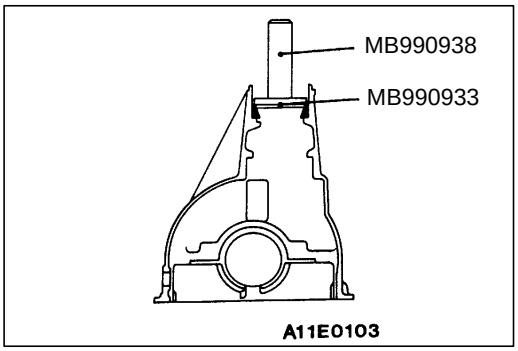

▶D◀ PINION HEIGHT ADJUSTMENT

Adjust the drive pinion height by the following procedure.

1. Apply multipurpose grease to the washer of the special tool.
2. Install the special tool, drive pinion front and rear bearing inner races to the gear carrier.

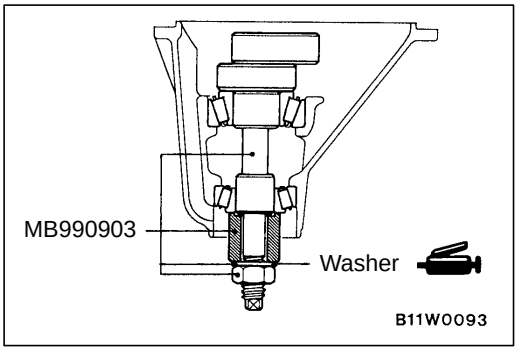

3. Tighten the nut of the special tool while measuring the rotation torque of the drive pinion. Gradually keep tightening the nut of the special tool until the rotation torque of the drive pinion (without oil seal) is at the standard value.

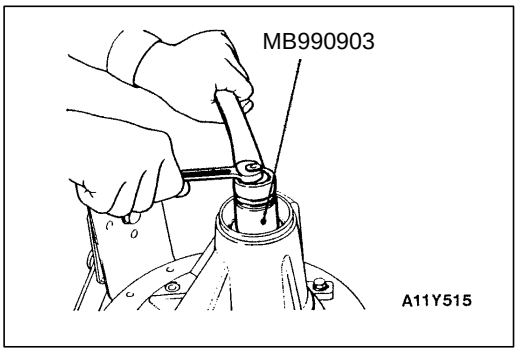

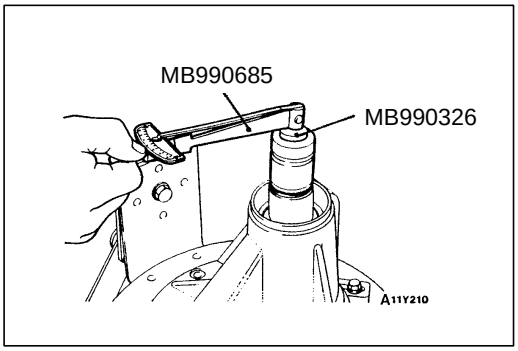

Standard value:

Bearing division	Bearing lubrication	Rotation torque
New	None (With anti-rust agent)	0.5 – 0.7 Nm
New or reusing	Gear oil applied	0.3 – 0.4 Nm

NOTE
The special tool cannot be turned a full revolution, so turn it several times within the range of movement to run in the bearing, and then measure the rotation torque.

4. Clean the side bearing hub.

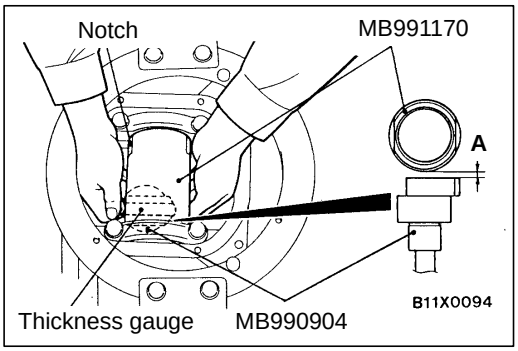

5. Install the special tools to the side bearing hub of the gear carrier, and then install the bearing cap.

   NOTE
   Always check that the notch is in the shown position and that the special tools are touching firmly against the side bearing hub.

6. Use a thickness gauge to measure the clearance (A) between the special tools.

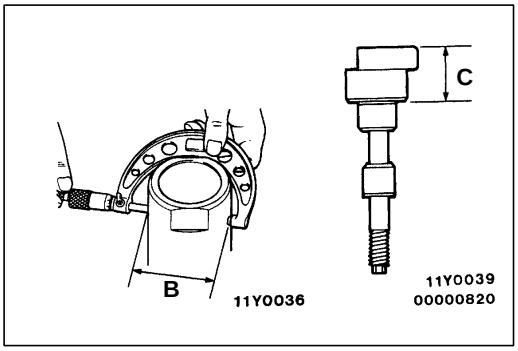

7. Remove the special tools (MB991170, MB990904).
8. Use a micrometer to measure the special tool in the places (B, C) shown in the illustration.

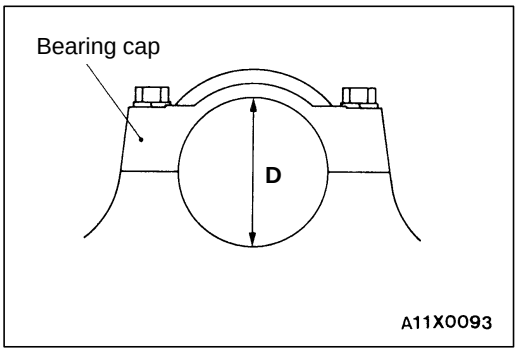

9. Install the bearing cap, and then use a cylinder gauge and micrometer to measure the inside diameter (D) of the bearing cap as shown in the illustration.
10. Calculate the thickness (E) of the required drive pinion front shim by the following formula, and then select a shim which most closely matches this thickness.
    E = A + B + C–1/2D–91.0

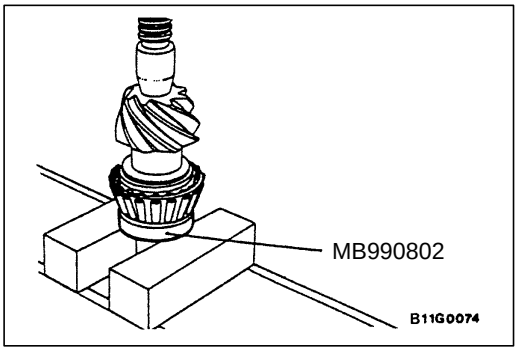

11. Fit the selected drive pinion front shim(s) to the drive pinion, and press-fit the drive pinion front bearing inner race by using the special tool.

▶E◀ DRIVE PINION TURNING TORQUE ADJUSTMENT

Adjust the drive pinion rotation torque by using the following procedure:

Without Oil Seal

1. Insert the drive pinion into the gear carrier, and then install the drive pinion spacer, the drive pinion rear shim, the drive pinion rear bearing inner race, and the companion flange in that order.

   NOTE
   Do not install the oil seal.

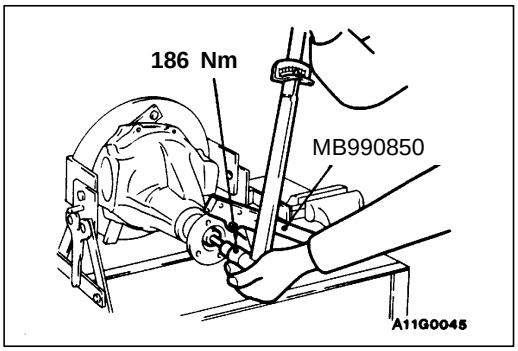

2. Tighten the companion flange to the specified torque by using the special tool.

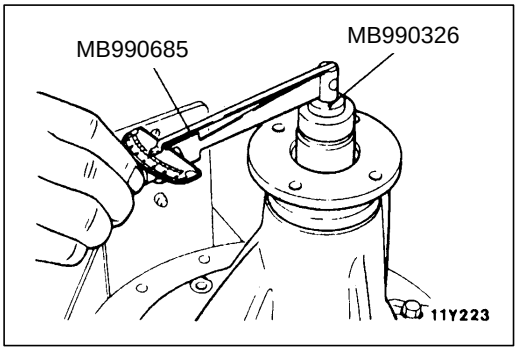

3. Measure the drive pinion rotation torque (without the oil seal) by using the special tools.

   Standard value:

Bearing division	Bearing lubrication	Rotation torque
New	None (With anti-rust agent)	0.3 – 0.5 Nm
New/reusing	Gear oil applied	0.15 – 0.25 Nm

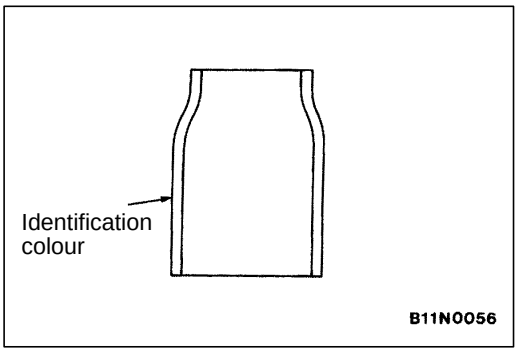

4. If the drive pinion rotation torque is not within the range of the standard value, adjust the preload by replacing the drive pinion rear shim(s) or the drive pinion spacer.

   NOTE
   When selecting the drive pinion rear shims, if the number of shims is large, reduce the number of shims to a minimum by selecting the drive pinion spacers. Also, select the drive pinion spacer from the following two types.

Drive pinion spacer height (mm)	Identification colour
46.67	White
47.01	–

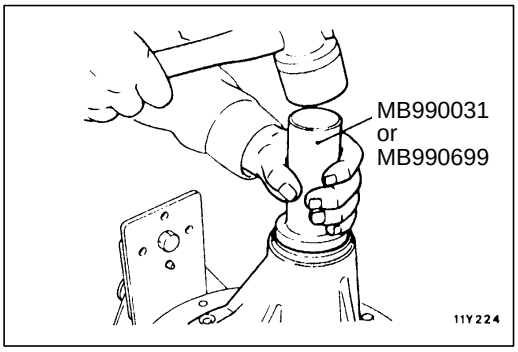

5. Remove the companion flange and drive pinion again. Then, after inserting the drive pinion rear bearing inner race into the gear carrier, use the special tool to press-fit the oil seal.

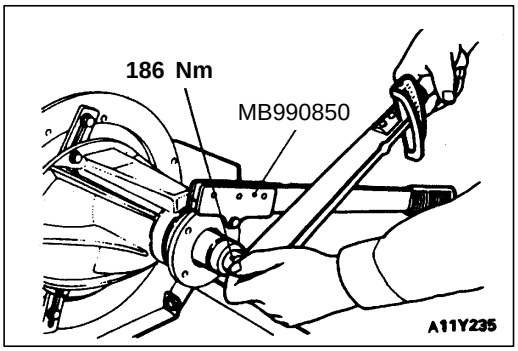

6. Install the drive pinion assembly and companion flange with mating marks properly aligned, and tighten the companion flange self-locking nut to the specified torque by using the special tools.

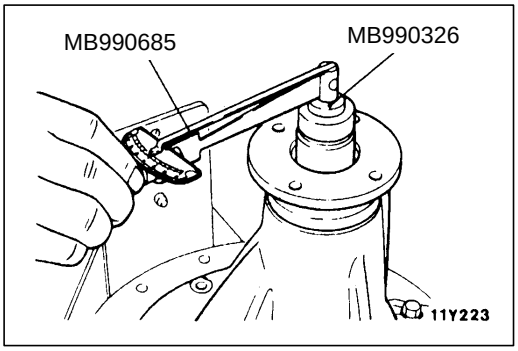

7. Measure the drive pinion rotation torque (with the oil seal) by using the special tools.

Standard value:

Bearing division	Bearing lubrication	Rotation torque
New	None (With anti-rust agent)	0.5 – 0.7 Nm
New/reusing	Gear oil applied	0.3 – 0.4 Nm

8. If the drive pinion rotation torque is not within the standard value, check the tightening torque of the companion flange self-locking nut and the oil seal.

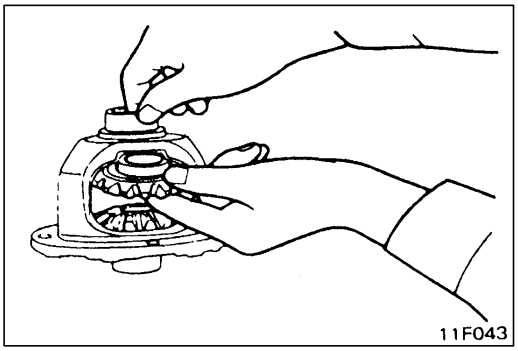

▶F◀ DIFFERENTIAL GEAR BACKLASH ADJUSTMENT

1. Assemble the side gears, side gear spacers, pinion gears and pinion washers into the differential case.
2. Temporarily install the pinion shaft.

   NOTE
   Do not drive in the lock pin yet.

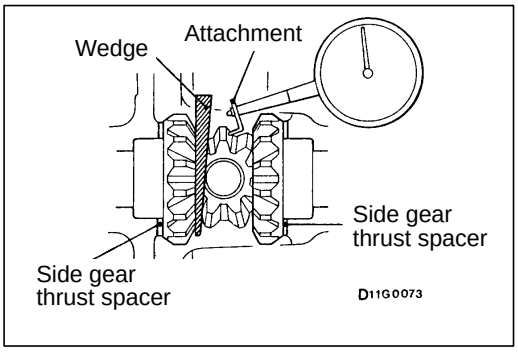

3. Insert a wedge between the side gear and the pinion shaft to lock the side gear.
4. Measure the differential gear backlash with a dial indicator on the pinion gear.

   Standard value: 0 – 0.076 mm

   Limit: 0.2 mm
5. If the differential gear backlash exceeds the limit, adjust the backlash by installing thicker side gear spacers.
6. If adjustment is not possible, replace the side gears and pinion gears as a set.
7. Measure the differential gear backlash once again, and confirm that it is within the limit.

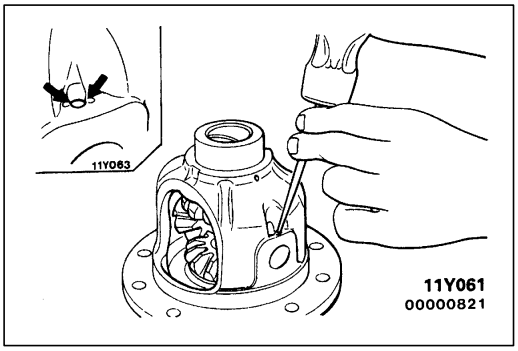

▶G◀ LOCK PIN INSTALLATION

1. Align the pinion shaft lock pin hole with the differential case lock pin hole, and drive in the lock pin.
2. Stake the lock pin with a punch at two points.

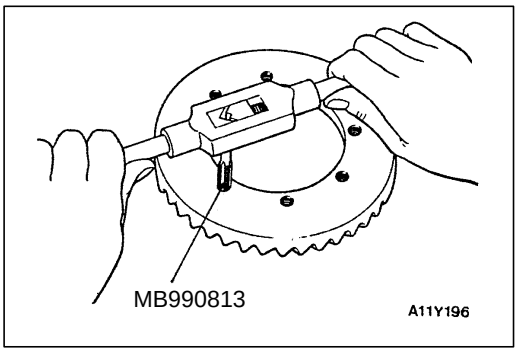

▶H◀ DRIVE GEAR INSTALLATION

1. Clean the drive gear attaching bolts.
2. Remove the adhesive adhered to the threaded holes of the drive gear by turning the special tool (tap M10 x 1.25), and then clean the threaded holes by applying compressed air.

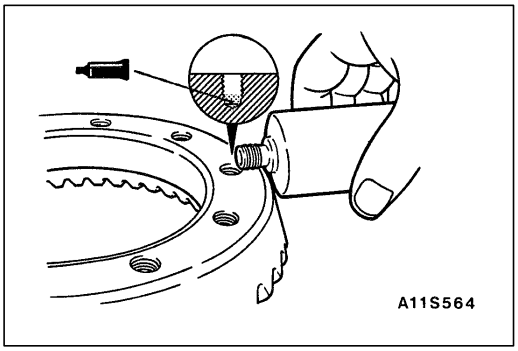

3. Apply the specified adhesive to the threaded holes of the drive gear.

   Specified adhesive:
   3M Stud Locking 4170 or equivalent

4. Install the drive gear onto the differential case with the mating marks properly aligned. Tighten the bolts to the specified torque in a diagonal sequence.

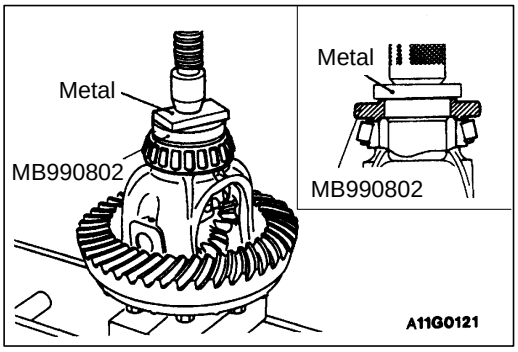

▶I◀ SIDE BEARING INNER RACE INSTALLATION

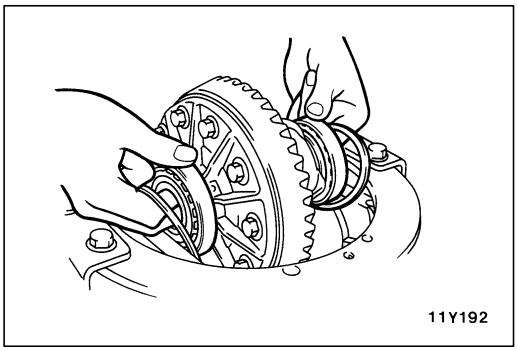

▶J◀ DRIVE GEAR BACKLASH ADJUSTMENT

Adjust the drive gear backlash by the following procedures:

1. Install the side bearing spacers, which are thinner than those removed, to the side bearing outer races, and then mount the differential case assembly into the gear carrier.

   NOTE
   Select side bearing spacers with the same thickness for both the drive pinion side and the drive gear side.

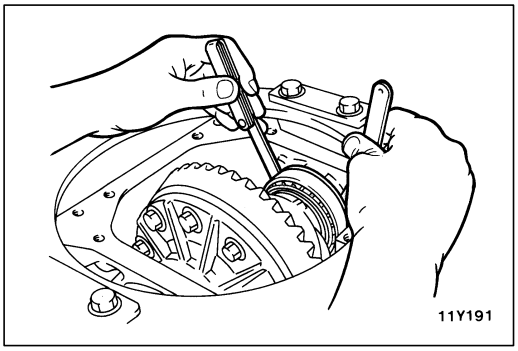

2. Push the differential case assembly to one side, and measure the clearance between the gear carrier and the side bearing adjusting spacer with a thickness gauge.

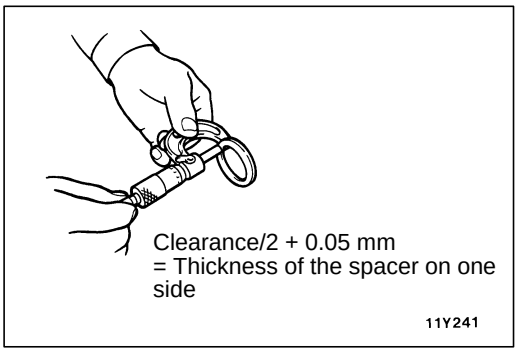

3. Measure the thickness of the side bearing adjusting spacers on one side, select two pairs of spacers which correspond to that thickness plus one half of the clearance plus 0.05 mm, and then install one pair each to the drive pinion side and the drive gear side.

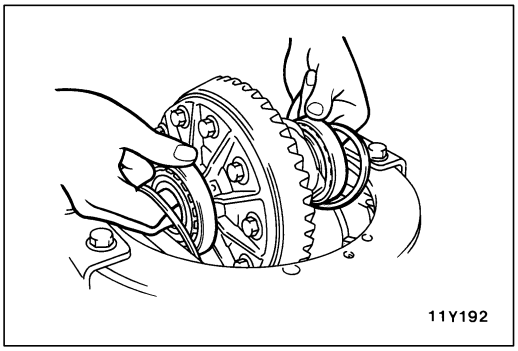

4. Install the side bearing adjusting spacers and differential case assembly, as shown in the illustration, to the gear carrier.

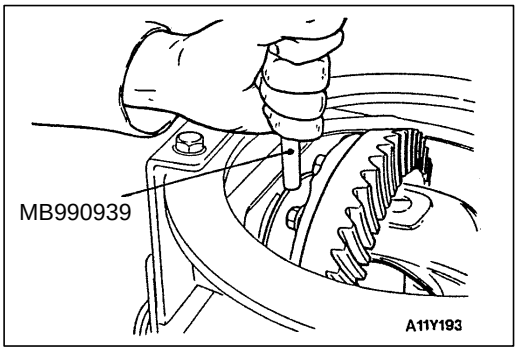

5. Tap the side bearing adjusting spacers with the special tool to fit them to the side bearing outer race.

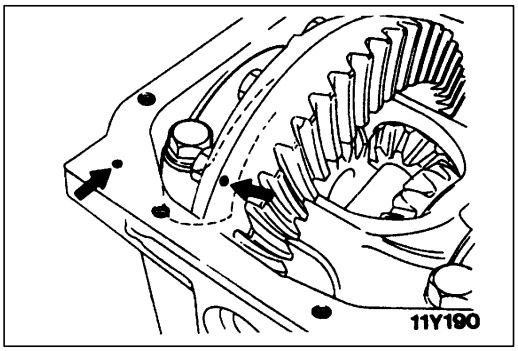

6. Align the mating marks on the gear carrier and the bearing cap, and then tighten the bearing cap.

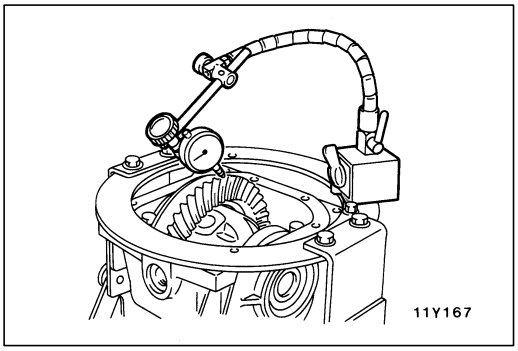

7. With the drive pinion locked in place, measure the drive gear backlash with a dial indicator on the drive gear.

   NOTE
   Measure at four points or more on the circumference of the drive gear.

   Standard value: 0.11 – 0.16 mm

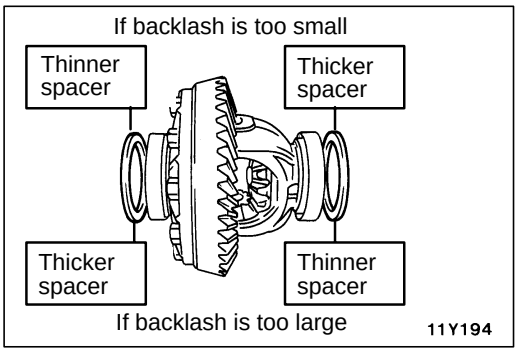

8. Change the side bearing adjusting spacers as illustrated, and then adjust the drive gear backlash between the drive gear and the drive pinion.

   NOTE
   When increasing the number of side bearing adjusting spacers, use the same number for each, and as few as possible.

9. Check the drive gear and drive pinion for tooth contact. If poor contact is evident, make adjustment. (Refer to P. 26-43.)

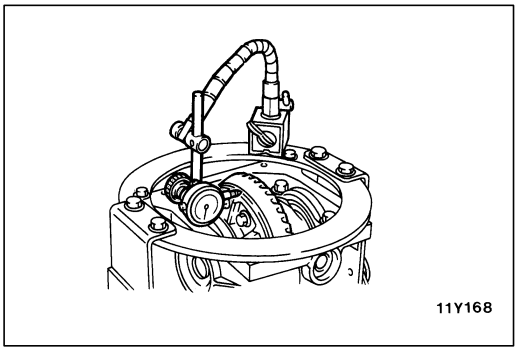

10. Measure the drive gear runout at the shoulder on the reverse side of the drive gear.

    Limit: 0.05 mm

11. If the drive gear runout exceeds the limit, reinstall by changing the phase of the drive gear and differential case, and remeasure.
12. If adjustment is not possible, replace the differential case or replace the drive gear and drive pinion as a set.

FREEWHEEL CLUTCH

26200270017

REMOVAL AND INSTALLATION

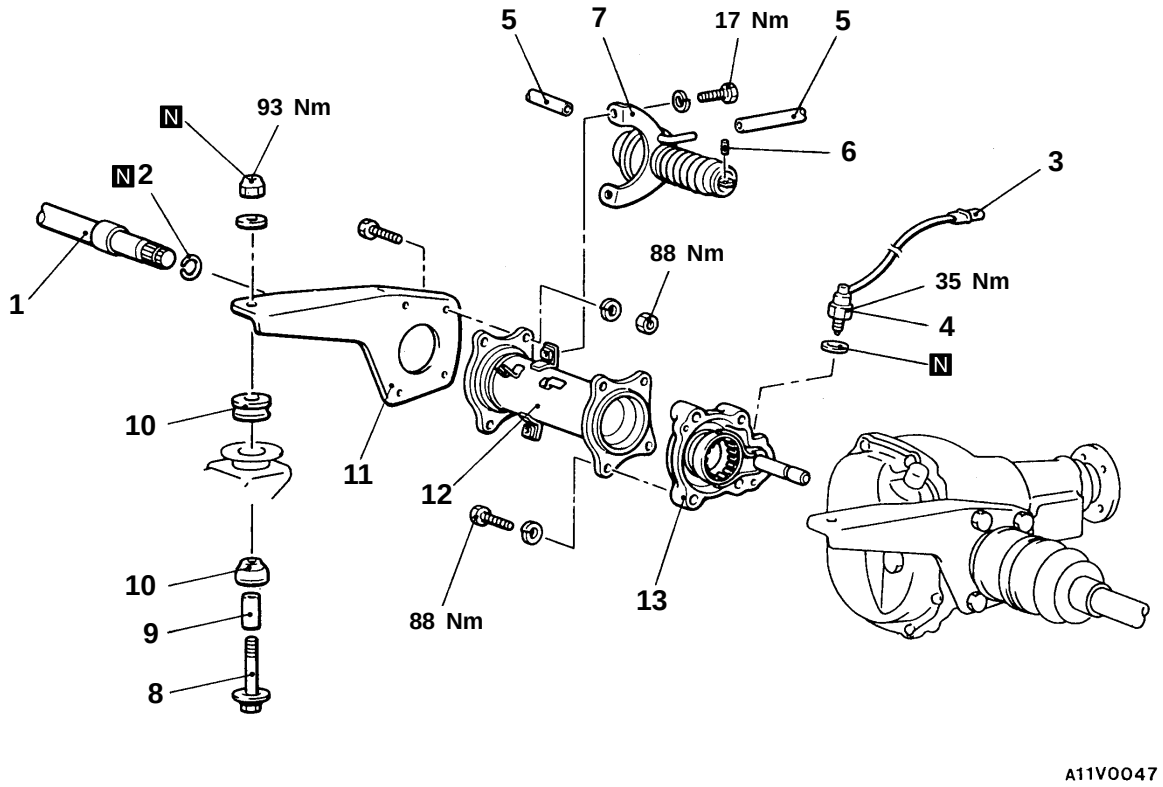

Freewheel clutch removal steps

1. Inner shaft (Refer to P. 26-36.)
2. Circlip
3. Freewheel engage switch connector
4. Freewheel engage switch
5. ▶E◀ Vacuum hose
6. Pin
7. Actuator assembly
   - Support the differential by a transmission jack.
8. Pin
9. Spacer
10. Rubber
11. Differential mounting bracket (R.H.)
12. Housing tube assembly
13. Freewheel clutch assembly
    - ▶D◀ Clutch gear bearing axial play inspection.

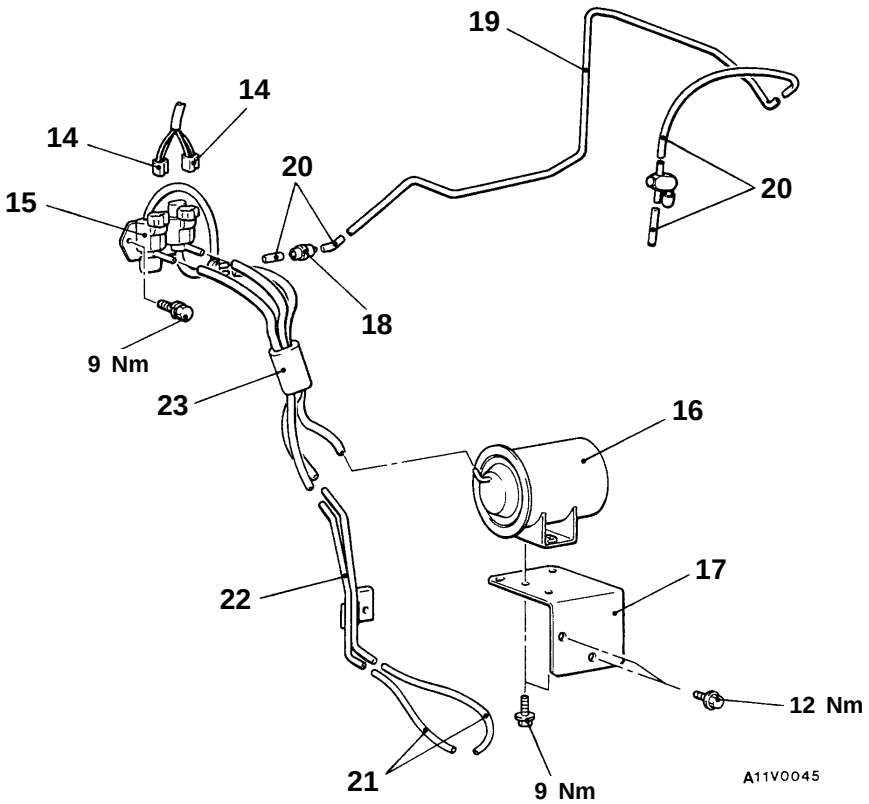

Solenoid valve assembly removal steps

14. Solenoid valve connector
▶C◀ 15. Solenoid valve assembly

Vacuum tank and vacuum hose assembly and vacuum pipe assembly removal steps

16. Vacuum tank
17. Vacuum tank bracket
▶B◀ 18. Check valve
19. Vacuum pipe
20. Vacuum hose
▶A◀ 21. Vacuum hose
▶A◀ 22. Vacuum pipe assembly
▶A◀ 23. Vacuum hose assembly

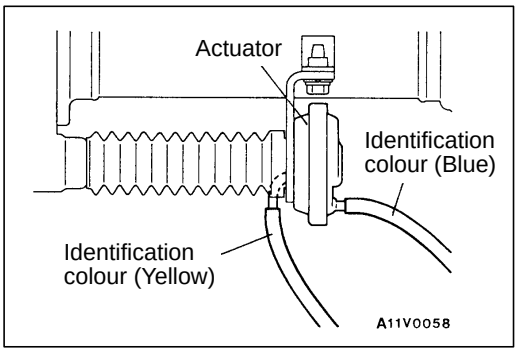

INSTALLATION SERVICE POINTS

▶A◀ VACUUM HOSE ASSEMBLY/VACUUM PIPE ASSEMBLY/VACUUM HOSE INSTALLATION

Install the vacuum hoses so that the identification colours of the vacuum pipe assembly match those of the actuators. Note that there is no identification colour for the vacuum hose which is to be connected to the vacuum tank.

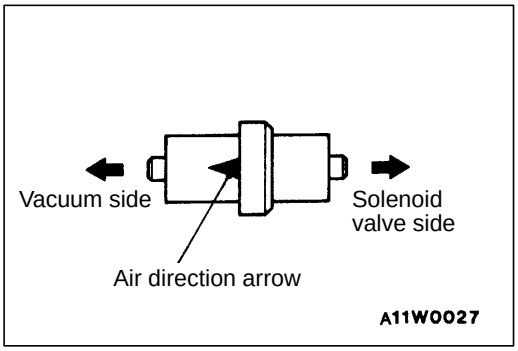

▶B◀ CHECK VALVE INSTALLATION

Install so that air direction arrow points to the vacuum side.

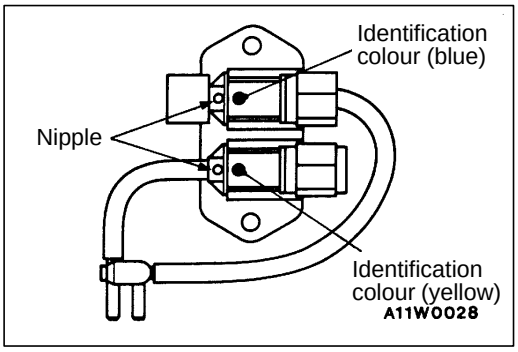

▶C◀ SOLENOID VALVE ASSEMBLY INSTALLATION

Install so that the identification colours of the vacuum hoses match those of the solenoid valve assembly.

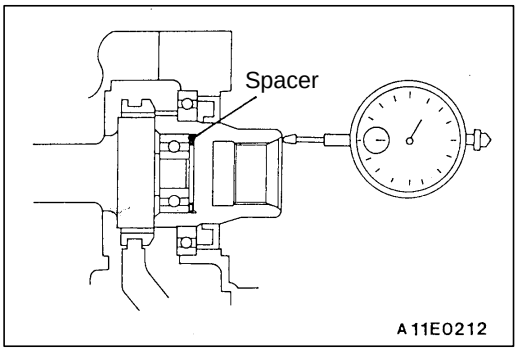

▶D◀ CLUTCH GEAR BEARING AXIAL PLAY INSPECTION

Check the axial play of the clutch gear bearing by the following procedure before installing the freewheel clutch assembly.

1. Insert flat washers of the same thickness as the housing tube (9.0 mm) onto the bolt, and then provisionally install the freewheel clutch assembly to the front differential.
2. Place a micrometer against the end of the clutch gear and check the axial play of the clutch gear bearing.

   Standard value: 0.05 – 0.30 mm
3. If the axial play of the clutch gear bearing is not within the standard value, disassemble the bearing and insert a spacer of the appropriate thickness.

   NOTE
   The thickness of the spacers vary in steps of 0.25 mm.

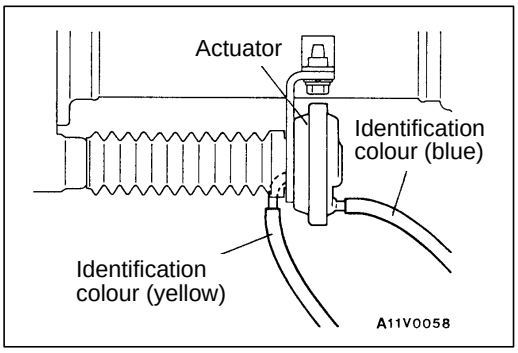

▶E◀ VACUUM HOSE INSTALLATION

Connect the vacuum hoses so that the identification colours match those of the actuator assembly nipples.

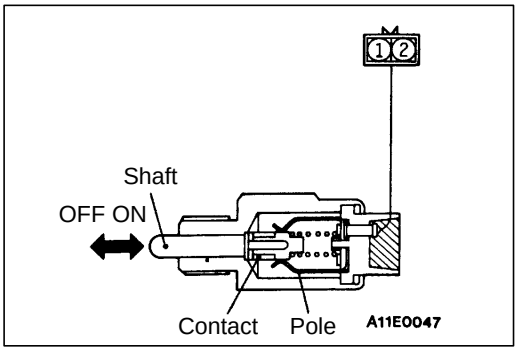

INSPECTION

26200280010

FREEWHEEL ENGAGE SWITCH

Shaft (switch) position	Terminal No. 1	Terminal No. 2
Pressed (ON)		
Released (OFF)	○	○

DISASSEMBLY AND REASSEMBLY

26200290044

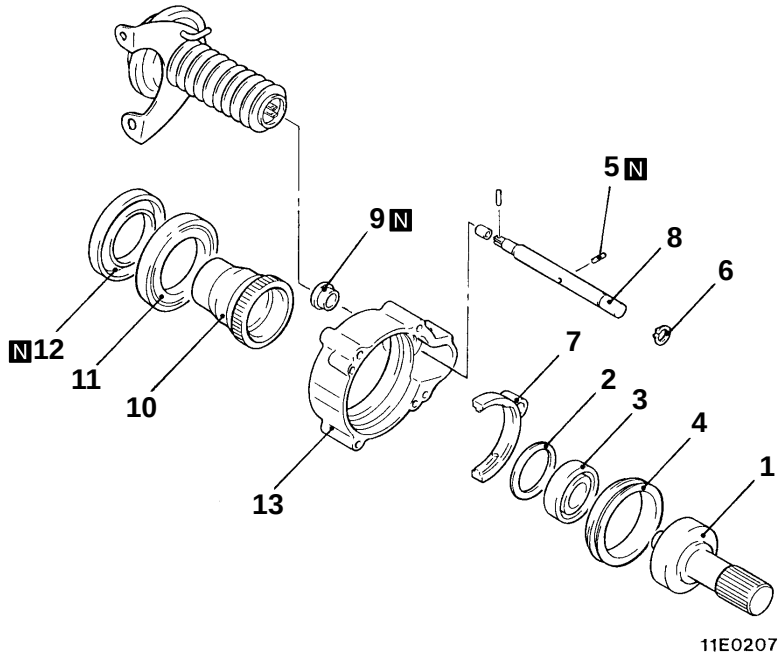

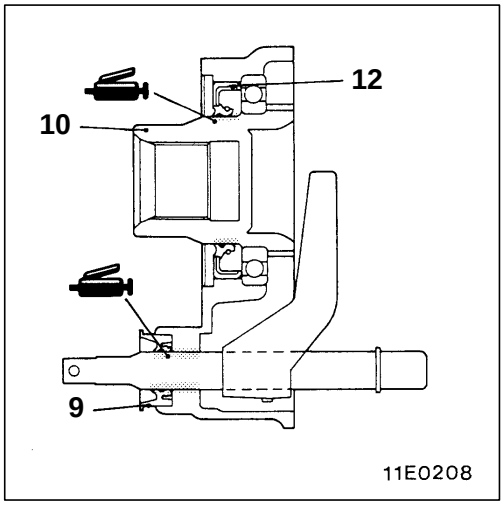

00004936

Removal steps

◀A▶ 1. Main shaft
▶F◀ 2. Spacer
◀A▶ ▶E◀ 3. Bearing
4. Clutch sleeve
▶D◀ 5. Spring pin
6. Snap ring
7. Shift fork
8. Shift rod
▶C◀ 9. Oil seal
◀B▶ ▶B◀ 10. Clutch gear
◀B▶ ▶B◀ 11. Bearing
▶A◀ 12. Oil seal
13. Clutch housing

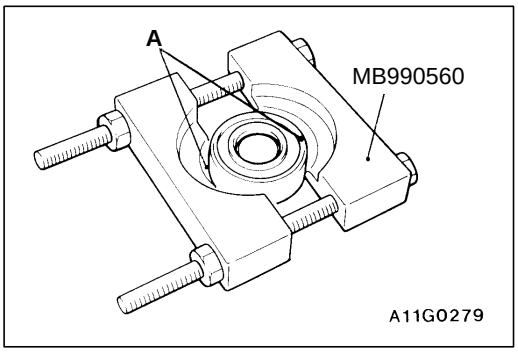

DISASSEMBLY SERVICE POINTS

◀A▶ MAINSHAFT/BEARING REMOVAL

1. After the special tool has been installed as shown, tighten the nut of the special tool until the portion “A” of the special tool touches the bearing outer race.

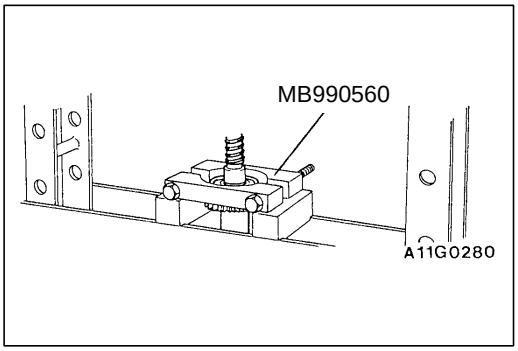

2. Press out the mainshaft from the bearing.

   Caution
   Do not allow the mainshaft to drop.

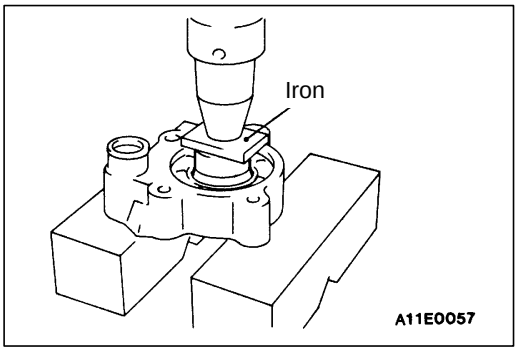

◀B▶ CLUTCH GEAR/BEARING REMOVAL

1. Use a press and steel plate to remove the clutch gear and bearing together.

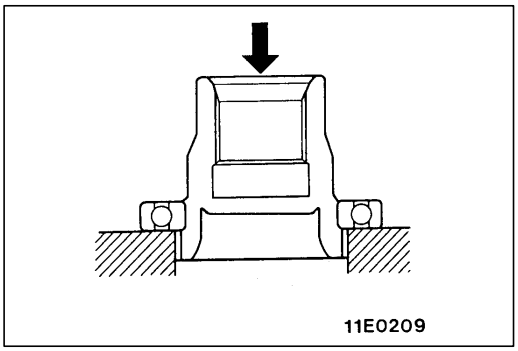

2. Use a press to hold the supports against the bearing inner race, and separate the clutch gear and bearing.

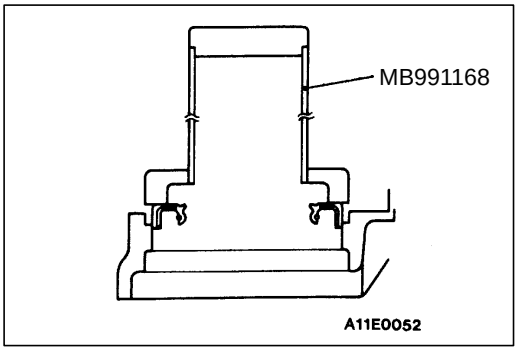

REASSEMBLY SERVICE POINTS

▶A◀ OIL SEAL INSTALLATION

Use the special tool to tap the oil seal until it is flush with the clutch housing.

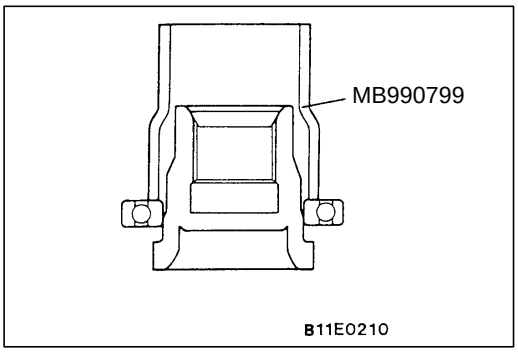

▶B◀ BEARING /CLUTCH GEAR INSTALLATION

1. Use the special tool to press-fit the bearing to the shoulder of the clutch gear.

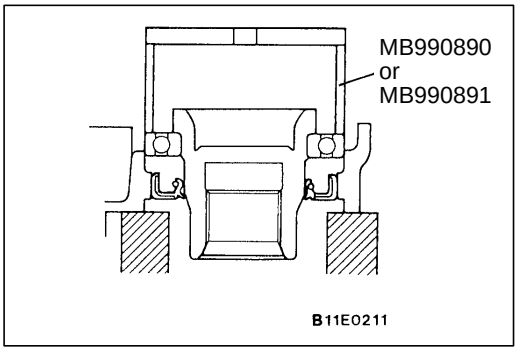

2. Use the special tool to press-fit the bearing to the side of the clutch housing.

   Caution
   Place the special tool against the outer race of the bearing.

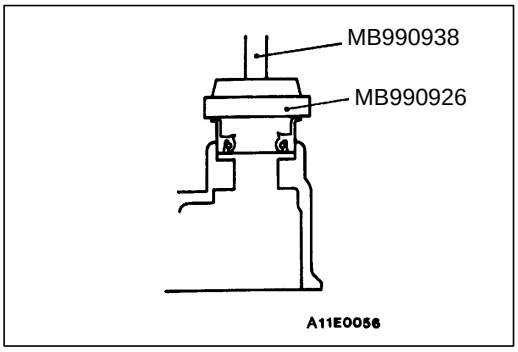

▶C◀ OIL SEAL INSTALLATION

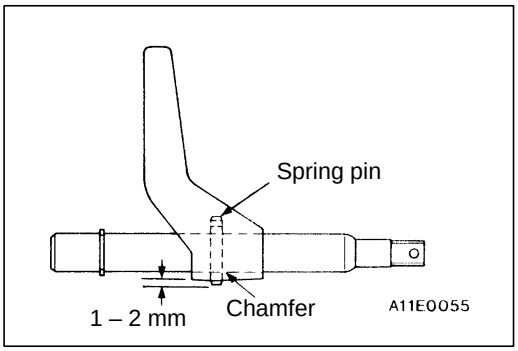

▶D◀ SPRING PIN INSTALLATION

Tap the spring pin from the chamfered side of the shift rod until the projection length becomes length shown in the illustration.

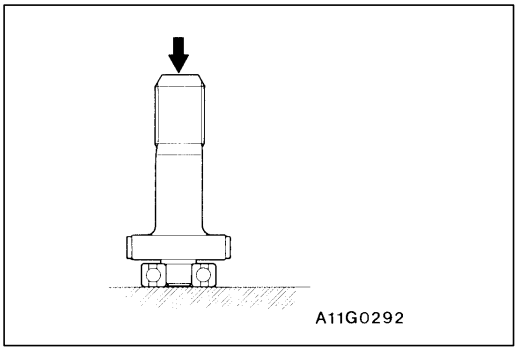

▶E◀ BEARING INSTALLATION

Press-fit the bearing to the shoulder of the mainshaft.

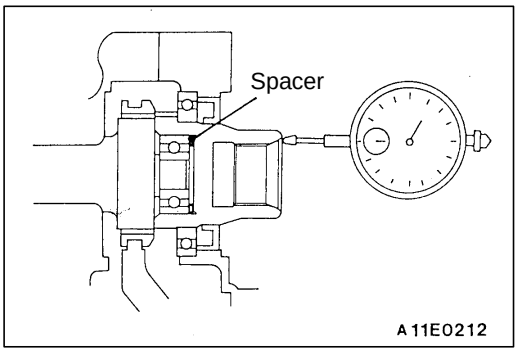

▶F◀ SPACER INSTALLATION

1. After installing the freewheel clutch assembly, select a spacer so that the clutch gear axial play (bearing looseness) is within the standard value.

   Standard value: 0.05 – 0.30 mm

2. If it is outside the standard value, disassemble and select the appropriate spacer again.

   NOTE
   The thickness of the gauge is different 0.25 mm each.

NOTES