ENGINE ELECTRICAL

CONTENTS

16109000134

CHARGING SYSTEM 2
- GENERAL INFORMATION 2
- SERVICE SPECIFICATIONS 3
- SPECIAL TOOL 3
- ON-VEHICLE SERVICE 4
  - Alternator Output Line Voltage Drop Test ... 4
  - Output Current Test 5
  - Regulated Voltage Test 7
  - Waveform Check Using An Analyzer 9
- ALTERNATOR 11

STARTING SYSTEM 18
- GENERAL INFORMATION 18
- SERVICE SPECIFICATIONS 19
- STARTER MOTOR 19

IGNITION SYSTEM 29
- GENERAL INFORMATION 29
- SERVICE SPECIFICATIONS 30
- LUBRICANT 30
- SPECIAL TOOL 30
- ON-VEHICLE SERVICE 31
  - Ignition Coil Check 31
  - Power Transistor Continuity Check 31
  - Resistive Cord Check 31
  - Spark Plug Check and Cleaning 32
  - Crank Angle Sensor, Top Dead Centre Sensor Check 32
  - Waveform Check Using An Analyzer 33
- DISTRIBUTOR 40

GLOW SYSTEM 43
- GENERAL INFORMATION 43
- SERVICE SPECIFICATIONS 44
- SEALANT 44
- ON-VEHICLE SERVICE 45
  - Self-regulating Glow System Check 45
  - Glow Control Unit Check 46
  - Glow Plug Relay Check 48
  - Glow Plug Check 48
  - Engine Coolant Temperature Sensor Check 49
- GLOW PLUG 50

CHARGING SYSTEM

GENERAL INFORMATION

16100010228

The charging system uses the alternator output to keep the battery charged at a constant level under various electrical loads.

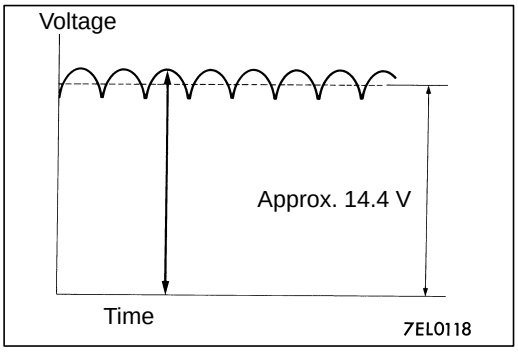

OPERATION

Rotation of the excited field coil generates AC voltage in the stator.
This alternating current is rectified through diodes to DC voltage having a waveform shown in the illustration at left. The average output voltage fluctuates slightly with the alternator load condition.

When the ignition switch is turned on, current flows in the field coil and initial excitation of the field coil occurs.
When the stator coil begins to generate power after the engine is started, the field coil is excited by the output current of the stator coil.
The alternator output voltage rises as the field current increases and it falls as the field current decreases. When the battery voltage (alternator S terminal voltage) reaches a regulated voltage of approx. 14.4 V, the field current is cut off. When the battery voltage drops below the regulated voltage, the voltage regulator regulates the output voltage to a constant level by controlling the field current.
In addition, when the field current is constant, the alternator output voltage rises as the engine speed increases.

SYSTEM DIAGRAM

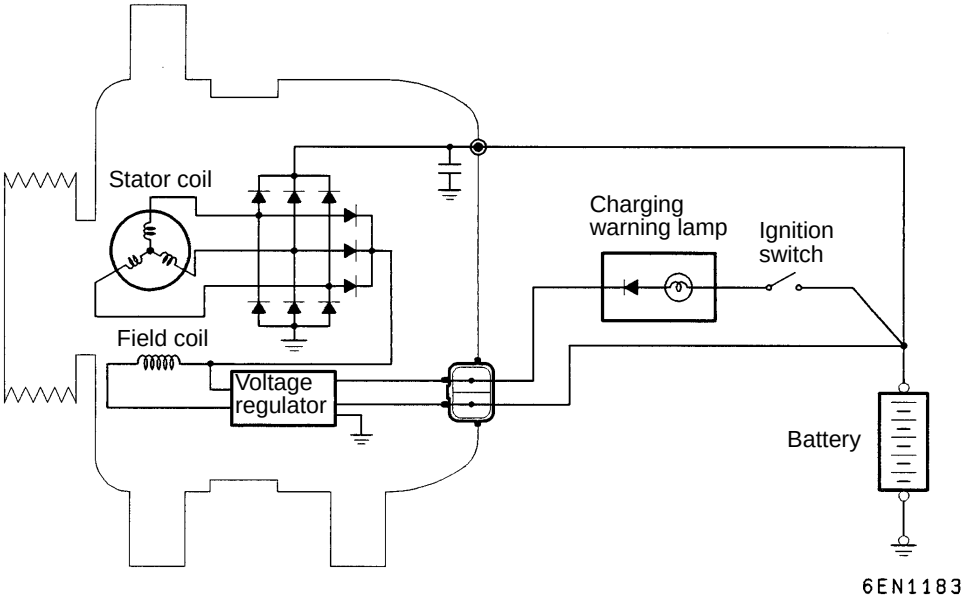

ALTERNATOR SPECIFICATIONS

Items	4G63, 4G64	4D56
Type	Battery voltage sensing	Battery voltage sensing
Rated output V/A	12/60	12/65, 12/75*
Voltage regulator	Electronic built-in type	Electronic built-in type

NOTE
*: Vehicles with over fender

SERVICE SPECIFICATIONS

16100030149

Items		Standard value	Limit
Alternator output line voltage drop (at 30A) V		–	max. 0.3
Regulated voltage ambient temp. at voltage regulator V	–20°C	14.2 – 15.4	–
	20°C	13.9 – 4.9	–
	60°C	13.4 – 14.6	–
	80°C	13.1 – 14.5	–
Output current		–	70% of normal output current
Rotor coil resistance Ω		Approx. 2 – 5	–
Maximum vacuum (at 3,000 r/min) <4D56> kPa		80	–
Protrusion length of brush mm		–	2

SPECIAL TOOL

16100060087

Tool	Number	Name	Use
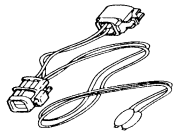	MD998467	Alternator test harness	Checking the alternator (S terminal voltage)

ON-VEHICLE SERVICE

16100090192

ALTERNATOR OUTPUT LINE VOLTAGE DROP TEST

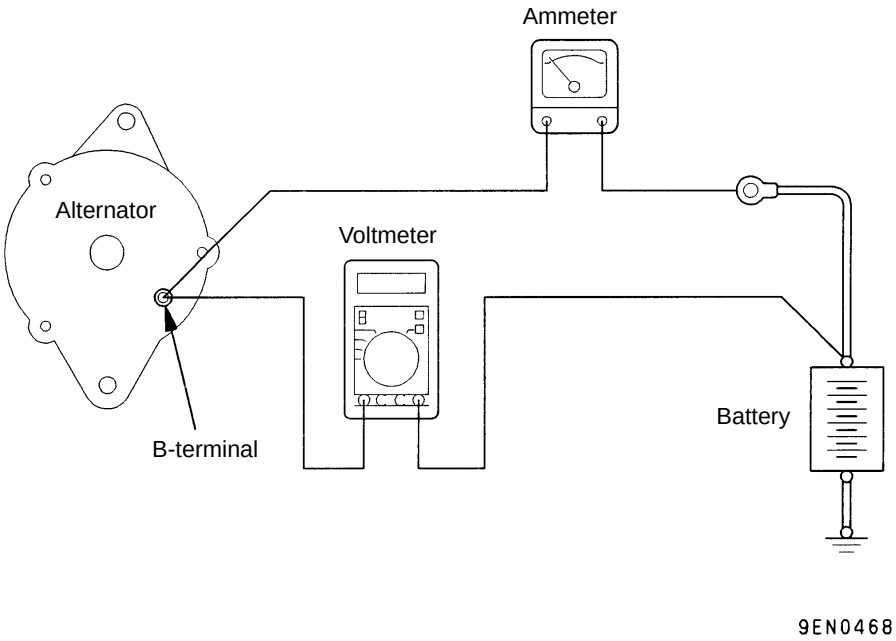

This test determines whether the wiring from the alternator “B” terminal to the battery (+) terminal (including the fusible line) is in a good condition or not.

(1) Always be sure to check the following before the test.
- Alternator installation
- Alternator drive belt tension (Refer to GROUP 11 – On-vehicle Service.)
- Fusible link
- Abnormal noise from the alternator while the engine is running

(2) Turn the ignition switch off.

(3) Disconnect the negative battery cable.

(4) Disconnect the alternator output wire from the alternator “B” terminal and connect a DC test ammeter with a range of 0–100 A in series between the “B” terminal and the disconnected output wire. (Connect the (+) lead of the ammeter to the “B” terminal, and then connect the (–) lead of the ammeter to the disconnected output wire.)

NOTE
An inductive-type ammeter which enables measurements to be taken without disconnecting the alternator output wire should be recommended. Using this equipment will lessen the possibility of a voltage drop caused by a loose “B” terminal connection.

(5) Connect a digital-type voltmeter between the alternator “B” terminal and the battery (+) terminal. (Connect the (+) lead of the voltmeter to the “B” terminal and the connect the (–) lead of the voltmeter to the battery (+) cable.)

(6) Connect a tachometer. (Refer to GROUP 11 – On-vehicle Service.)
(7) Reconnect the negative battery cable.
(8) Leave the hood open.
(9) Start the engine.
(10) With the engine running at 2,500 r/min, turn the headlamps and other lamps on and off to adjust the alternator load so that the value displayed on the ammeter is slightly above 30 A.
Adjust the engine speed by gradually decreasing it until the value displayed on the ammeter is 30 A. Take a reading of the value displayed on the voltmeter at this time.

Limit: max. 0.3 V

NOTE
When the alternator output is high and the value displayed on the ammeter does not decrease until 30 A, set the value to 40 A. Read the value displayed on the voltmeter at this time. When the value range is 40 A, the limit is max. 0.4 V.

(11) If the value displayed on the voltmeter is above the limit value, there is probably a malfunction in the alternator output wire, so check the wiring between the alternator "B" terminal and the battery (+) terminal (including fusible link).
If a terminal is not sufficiently tight or if the harness has become discolored due to overheating, repair and then test again.
(12) After the test, run the engine at idle.
(13) Turn off all lamps and the ignition switch.
(14) Remove the tachometer.
(15) Disconnect the negative batter cable.
(16) Disconnect the ammeter and voltmeter.
(17) Connect the alternator output wire to the alternator "B" terminal.
(18) Connect the negative battery cable.

OUTPUT CURRENT TEST

16100100192

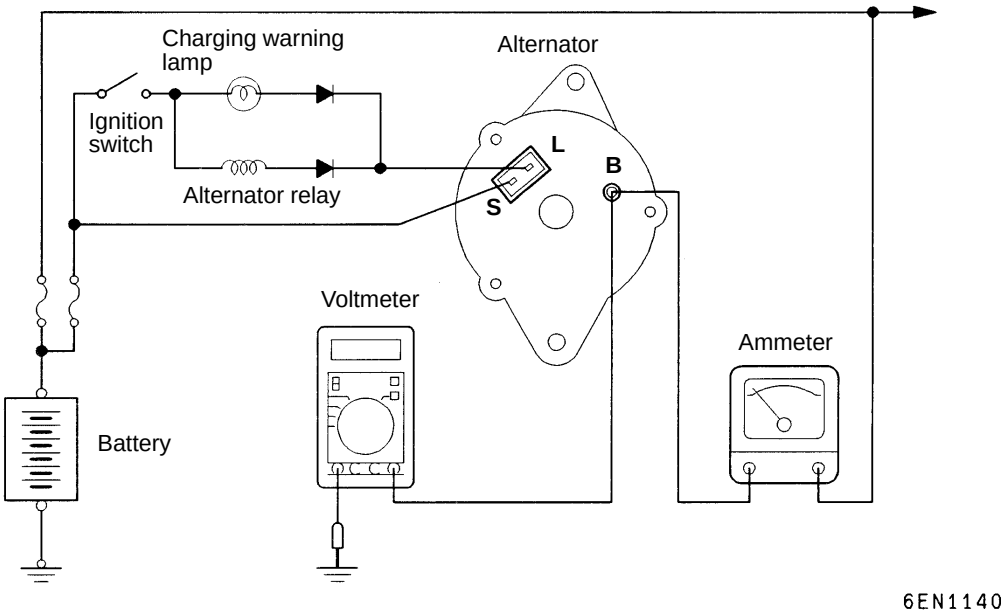

This test determines whether the alternator output current is normal.

(1) Before the test, always be sure to check the following.
- Alternator installation
- Battery (Refer to GROUP 54 – Battery.)

  NOTE
  The battery should be slightly discharged. The load needed by a fully-charged battery is insufficient for an accurate test.
- Alternator drive belt tension (Refer to GROUP 11 – On-vehicle Service.)
- Fusible link
- Abnormal noise from the alternator while the engine is running.

(2) Turn the ignition switch off.
(3) Disconnect the negative battery cable.
(4) Disconnect the alternator output wire from the alternator “B” terminal. Connect a DC test ammeter with a range of 0–100 A in series between the “B” terminal and the disconnected output wire. (Connect the (+) lead of the ammeter to the “B” terminal. Connect the (–) lead of the ammeter to the disconnected output wire.)

  Caution
  Never use clips but tighten bolts and nuts to connect the line. Otherwise loose connections (e.g. using clips) will lead to a serious accident because of high current.

  NOTE
  An inductive-type ammeter which enables measurements to be taken without disconnecting the alternator output wire should be recommended.

(5) Connect a voltmeter with a range of 0–20 V between the alternator “B” terminal and the earth. (Connect the (+) lead of the voltmeter to the “B” terminal, and then connect the (–) lead of the voltmeter to the earth.)
(6) Connect the negative battery cable.
(7) Connect a tachometer. (Refer to GROUP 11 – On-vehicle Service.)
(8) Leave the hood open.
(9) Check that the reading on the voltmeter is equal to the battery voltage.

  NOTE
  If the voltage is 0 V, the cause is probably an open circuit in the wire or fusible link between the alternator “B” terminal and the battery (+) terminal.

(10) Turn the light switch on to turn on headlamps and then start the engine.
(11) Immediately after setting the headlamps to high beam and turning the heater blower switch to the high revolution position, increase the engine speed to 2,500 r/min and read the maximum current output value displayed on the ammeter.

  Limit: 70% of normal current output

  NOTE
- For the nominal current output, refer to the Alternator Specifications.
- Because the current from the battery will soon drop after the engine is started, the above step should be carried out as quickly as possible in order to obtain the maximum current output value.
- The current output value will depend on the electrical load and the temperature of the alternator body.
- If the electrical load is small while testing, the specified level of current may not be output even though the alternator is normal. In such cases, increase the electrical load by leaving the headlamps turned on for some time to discharge the battery or by using the lighting system in another vehicle, and then test again.
- The specified level of current also may not be output if the temperature of the alternator body or the ambient temperature is too high. In such cases, cool the alternator and then test again.

(12) The reading on the ammeter should be above the limit value. If the reading is below the limit value and the alternator output wire is normal, remove the alternator from the engine and check the alternator.
(13) Run the engine at idle after the test.
(14) Turn the ignition switch off.
(15) Remove the tachometer.
(16) Disconnect the negative battery cable.
(17) Disconnect the ammeter and voltmeter.
(18) Connect the alternator output wire to the alternator “B” terminal.
(19) Connect the negative battery cable.

REGULATED VOLTAGE TEST

16100110195

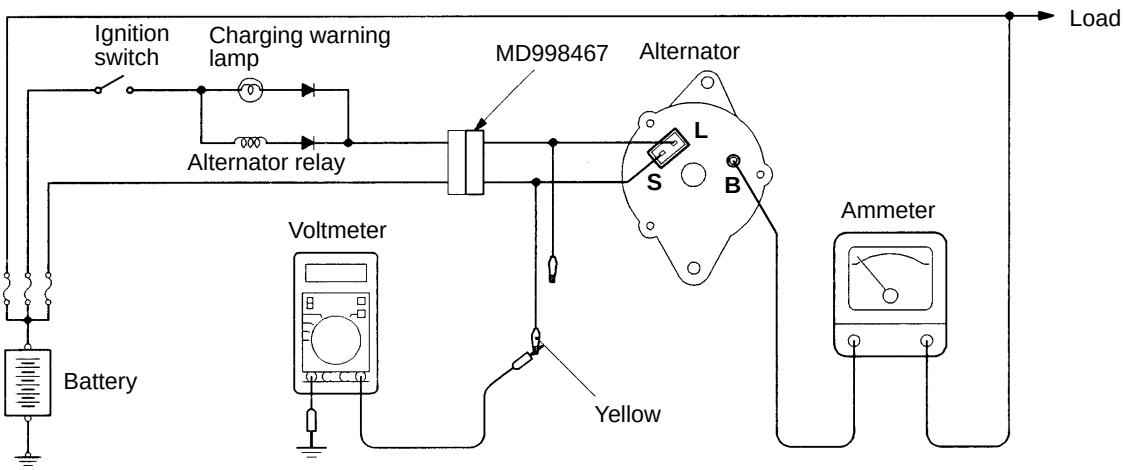

6EN1141

This test determines whether the voltage regulator is correctly controlling the alternator output voltage.

(1) Always be sure to check the following before the test.
- Alternator installation
- Check that the battery installed in the vehicle is fully charged. (Refer to GROUP 54 – Battery.)
- Alternator drive belt tension (Refer to GROUP 11 – On-vehicle Service.)
- Fusible link
- Abnormal noise from the alternator while the engine is running

(2) Turn the ignition switch to the OFF position.
(3) Disconnect the negative battery cable.
(4) Use the special tool to connect a digital voltmeter between the alternator S terminal and earth. (Connect the (+) lead of the voltmeter to the “S” terminal, and then connect the (–) lead of the voltmeter to a secure earth or to the battery (–) terminal.)
(5) Disconnect the alternator output wire from the alternator “B” terminal.
(6) Connect a DC test ammeter with a range of 0–100 A in series between the “B” terminal and the disconnected output wire. (Connect the (+) lead of the ammeter to the “B” terminal. Connect the (–) lead of the ammeter to the disconnected output wire.)
(7) Reconnect the negative battery cable.
(8) Connect a tachometer or the MUT-II. (Refer to GROUP 11 – On-vehicle Service.)
(9) Turn the ignition switch to the ON position and check that the reading on the voltmeter is equal to the battery voltage.

NOTE
If the voltage is 0 V, the cause is probably an open circuit in the wire or fusible link between the alternator “S” terminal and the battery (+) terminal.

(10) Turn all lamps and accessories off.
(11) Start the engine.
(12) Increase the engine speed to 2,500 r/min.
(13) Read the value displayed on the voltmeter when the alternator output current alternator becomes 10 A or less.

(14) If the voltage reading conforms to the value in the voltage regulation, then the voltage regulator is operating normally.
If the voltage is not within the standard value, there is a malfunction of the voltage regulator or of the alternator.
(15) After the test, lower the engine speed to the idle speed.
(16) Turn the ignition switch off.
(17) Remove the tachometer.
(18) Disconnect the negative battery cable.
(19) Disconnect the ammeter and voltmeter.
(20) Connect the alternator output wire to the alternator “B” terminal.
(21) Remove the special tool, and return the connector to the original condition.
(22) Connect the negative battery cable.

Voltage Regulation Table

Standard value:

Inspection terminal	Voltage regulator ambient temperature °C	Voltage V
Terminal “S”	–20	14.2 – 15.4
	20	13.9 – 14.9
	60	13.4 – 14.6
	80	13.1 – 14.5

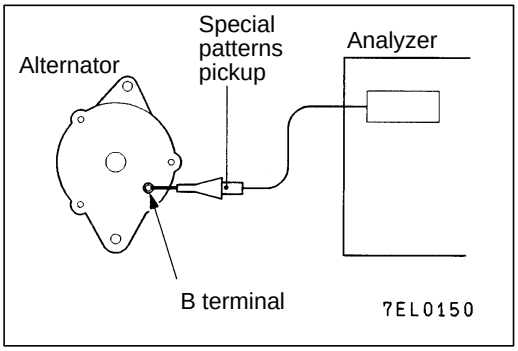

WAVEFORM CHECK USING AN ANALYZER

16100120143

MEASUREMENT METHOD

Connect the analyzer special patterns pick-up to the alternator B terminal.

STANDARD WAVEFORM

Observation Conditions

FUNCTION	SPECIAL PATTERNS
PATTERN HEIGHT	VARIABLE
VARIABLE knob	Adjust while viewing the waveform.
PATTERN SELECTOR	RASTER
Engine speed	Curb idle speed

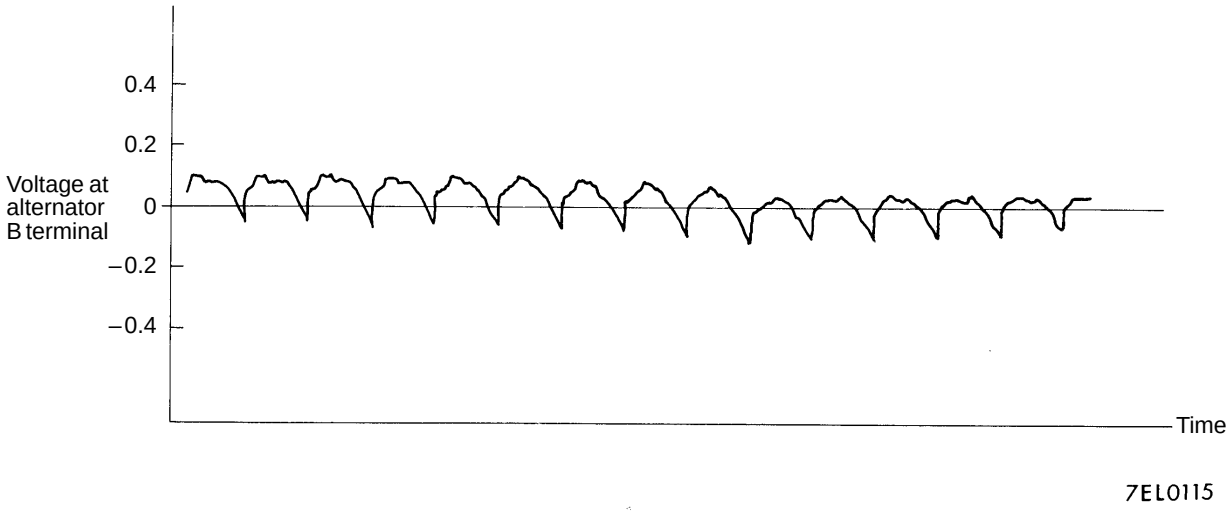

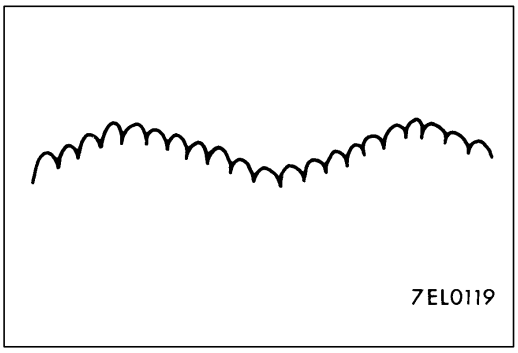

NOTE
The voltage waveform of the alternator B terminal can undulate as shown at left. This waveform is produced when the regulator operates according to fluctuations in the alternator load (current), and is normal for the alternator.
In addition, when the voltage waveform reaches an excessively high value (approx. 2 V or higher at idle), it often indicates an open circuit due to a brown fuse between alternator B terminal and battery, but not a defective alternator.

EXAMPLES OF ABNORMAL WAVEFORMS

NOTE
1. The size of the waveform patterns differs largely, depending on the adjustment of the variable knob on the analyzer.
2. Identification of abnormal waveforms is easier when there is a large output current (regulator is not operating). (Waveforms can be observed when the headlamps are illuminated.)
3. Check the conditions of the charging warning lamp (illuminated/not illuminated). Also, check the charging system totally.

Abnormal waveforms	Problem cause	Abnormal waveforms	Problem cause
Example 1	● Open diode	Example 4	● Short in stator coil
Example 2 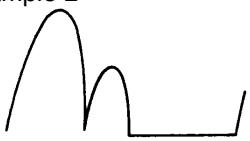	● Short in diode	Example 5 At this time, the charging warning lamp is illuminated.	● Open supple-mentary diode
Example 3	● Broken wire in stator coil	Example 5 At this time, the charging warning lamp is illuminated.	

ALTERNATOR

16100140187

REMOVAL AND INSTALLATION

Pre-removal Operation
- Under Cover Removal

Post-installation Operation
- Drive Belt Tension Adjustment (Refer to GROUP 11 – On-vehicle Service.)
- Under Cover Installation

<4G6>

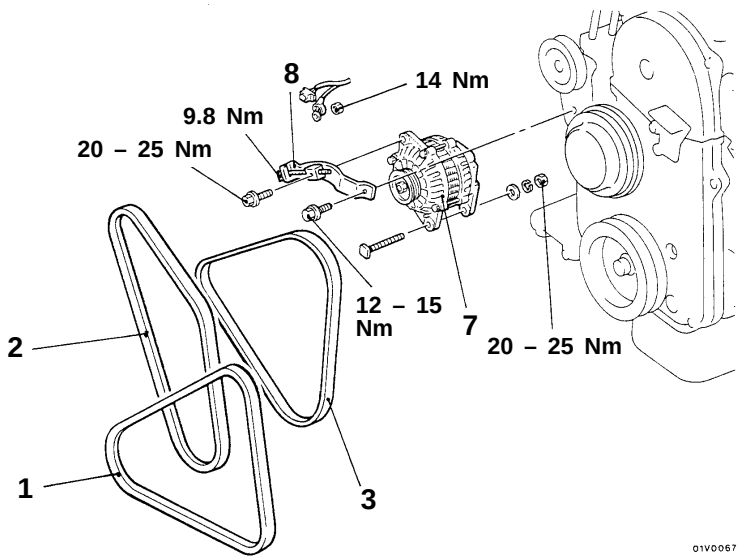

<4D56>

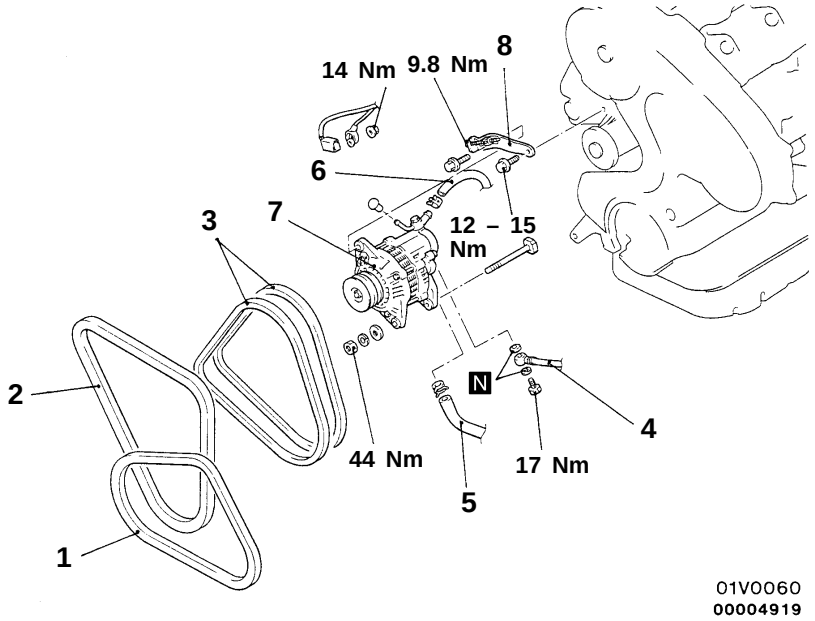

Removal steps

1. Drive bolt (for A/C)
2. Drive belt (for power steering)
3. Drive belt (for alternator)
4. Oil pipe connection
5. Oil return hose connection
6. Vacuum hose connection
7. Alternator
8. Alternator brace assembly

DISASSEMBLY AND REASSEMBLY

16100160169

<4G6>

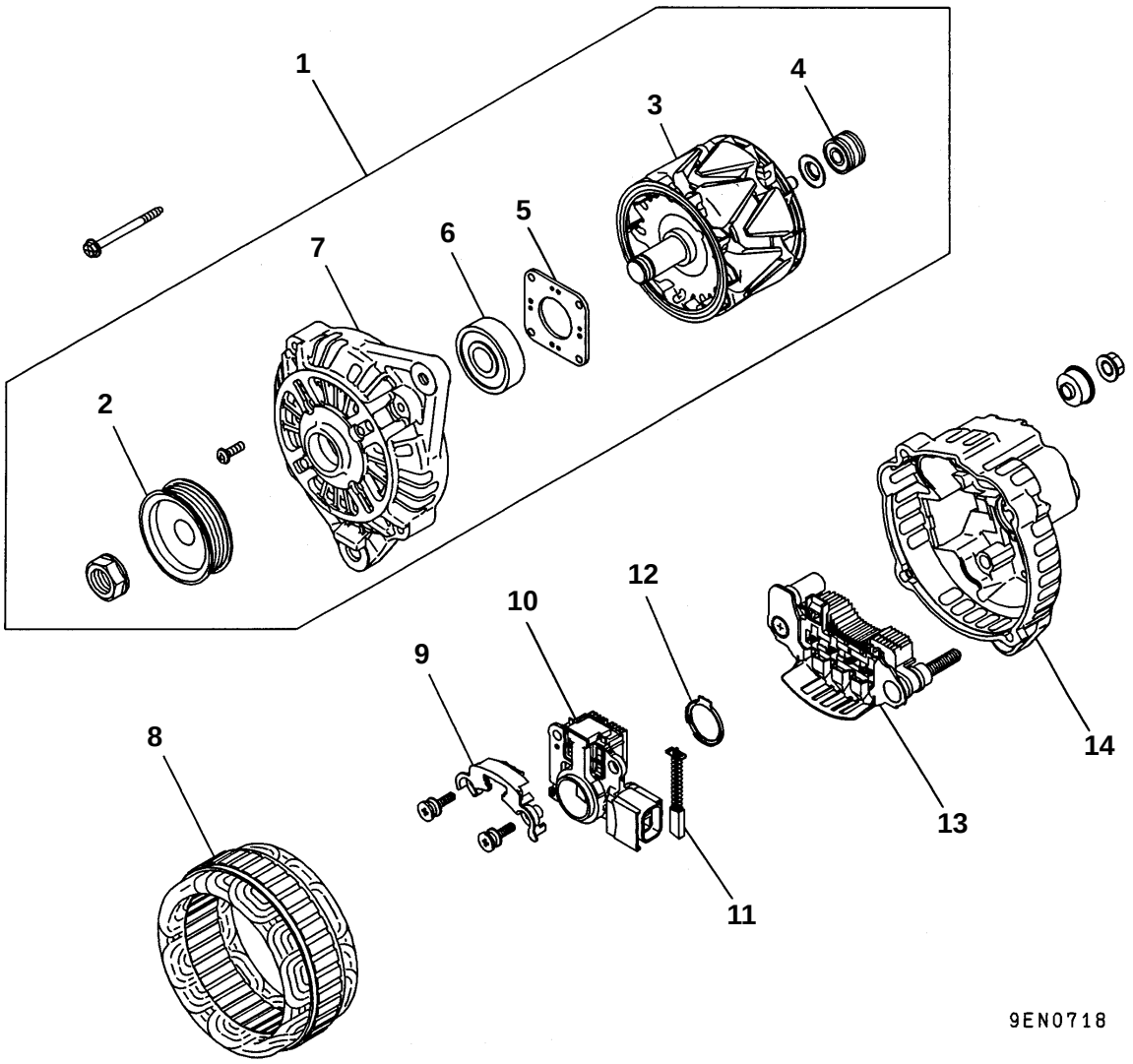

Disassembly steps

◀A▶ 1. Front bracket assembly
◀B▶ 2. Pulley
▶B◀ 3. Rotor
4. Rear bearing
5. Bearing retainer
6. Front bearing
7. Front bracket
◀C▶ 8. Stator
9. Plate
◀C▶ ▶A◀ 10. Regulator assembly
11. Brush
12. Slinger
13. Rectifier assembly
14. Rear bracket

DISASSEMBLY AND REASSEMBLY

<4D56>

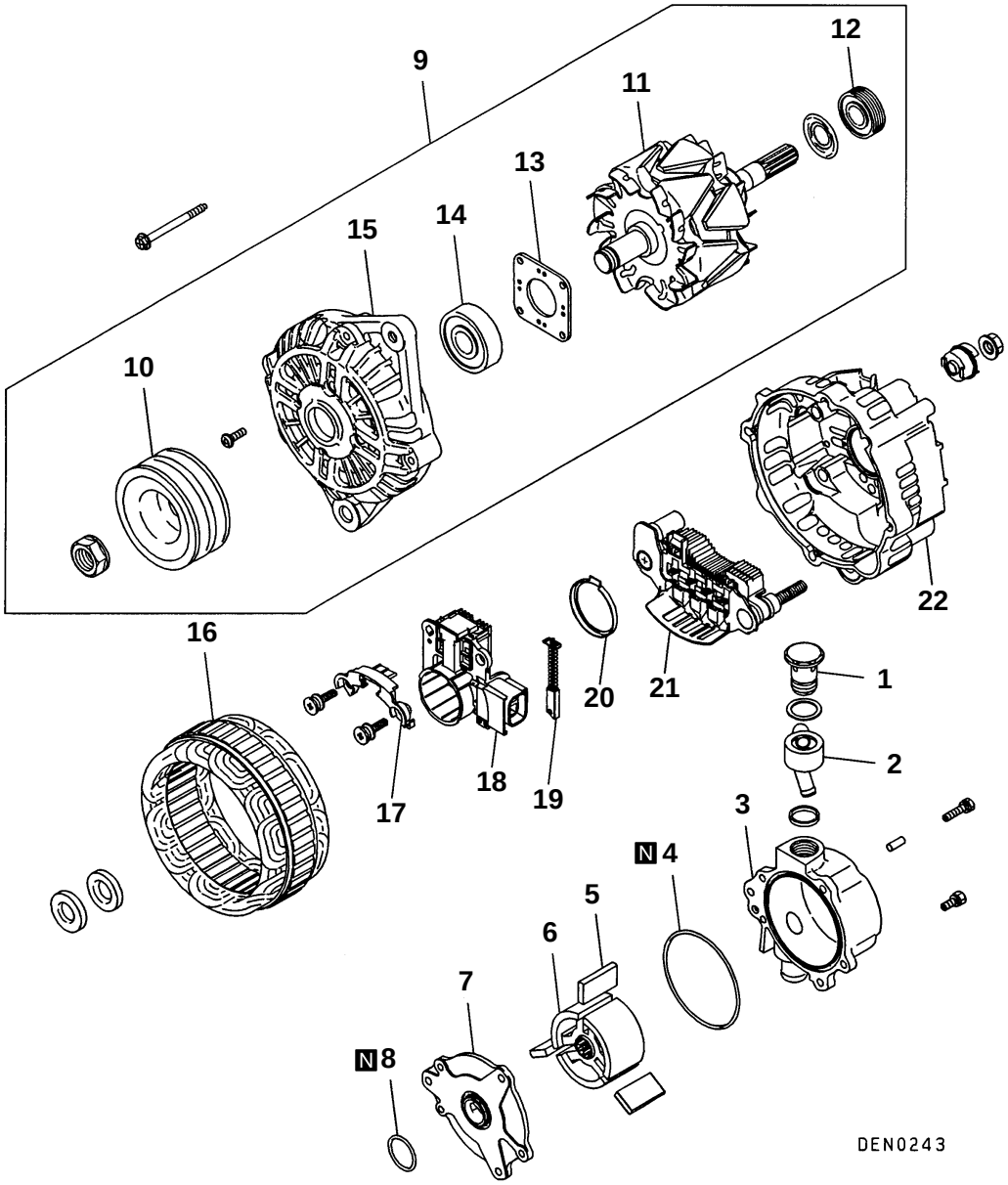

Disassembly steps

1. Check valve
2. Nipple
3. Vacuum pump housing
4. O-ring
5. ▶C◀ Vane
6. ▶C◀ Rotor
7. Vacuum pump plate
8. O-ring
9. ◀A▶ Front bracket assembly
10. ◀B▶ Pulley
11. ▶B◀ Rotor
12. Rear bearing
13. Bearing retainer
14. Front bearing
15. Front bracket
16. ◀C▶ Stator
17. Plate
18. ◀C▶ ▶A◀ Regulator assembly
19. Brush
20. Slinger
21. Rectifier assembly
22. Rear bracket

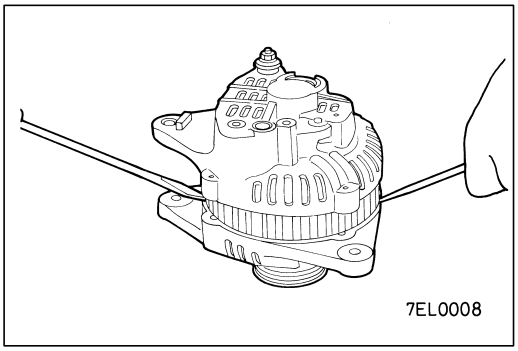

DISASSEMBLY SERVICE POINTS

◀A▶ FRONT BRACKET REMOVAL

1. Remove the bolts.
2. Insert a flat-tipped screwdriver between front bracket and stator core and pry downwards.

   Caution
   Do not insert a screwdriver too deep, as the stator coil will be damaged.

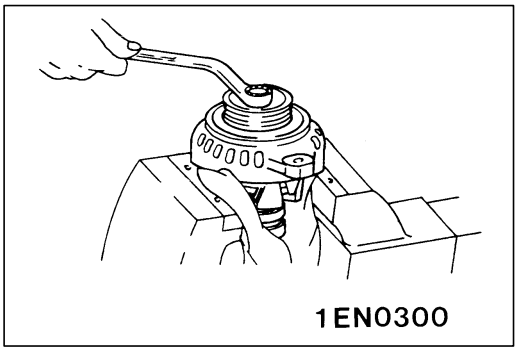

◀B▶ PULLEY REMOVAL

With the pulley side facing up, hold the rotor in a vice and remove the pulley.

Caution
Use care not to damage the rotor.

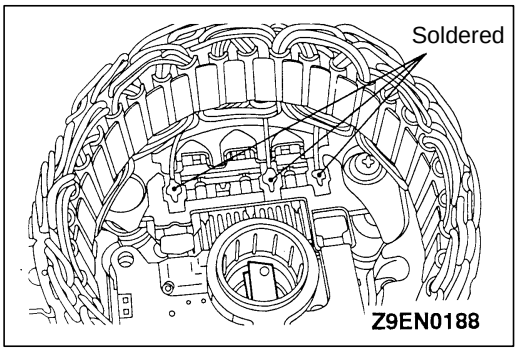

◀C▶ STATOR REMOVAL/REGULATOR ASSEMBLY REMOVAL

1. When removing stator, unsolder three stator leads soldered to main diodes on rectifier.
2. When removing rectifier from brush holder, unsolder two soldered points to rectifier.

   Caution
   1. **When soldering or unsoldering, use care to make sure that heat of soldering iron is not transmitted to diodes for a long period. Finish soldering or unsoldering in as short a time as possible.**
   2. **Use care that no undue force is exerted to leads of diodes.**

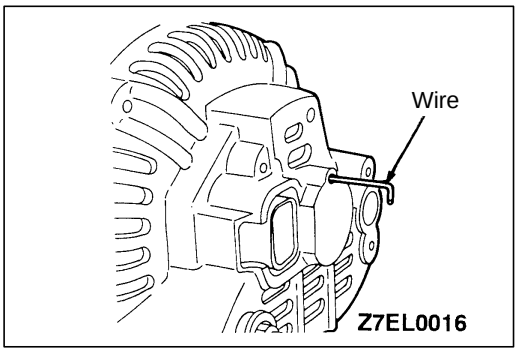

REASSEMBLY SERVICE POINT

▶A◀ REGULATOR ASSEMBLY INSTALLATION

Install the regulator assembly, insert a wire into the rear bracket hole while pushing in the brush, and hold the brush.

NOTE
Inserting a wire holds the brush, so that the rotor can be replaced easily.

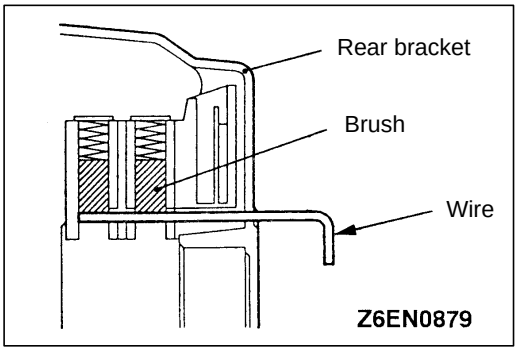

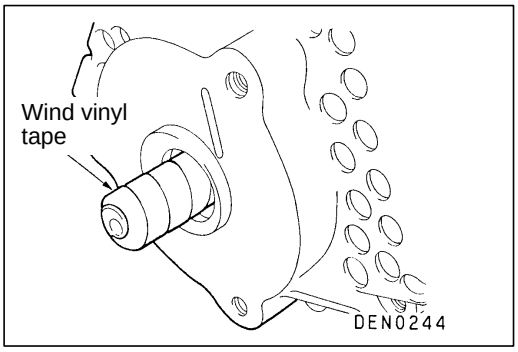

▶B◀ ROTOR INSTALLATION

1. When installing the rotor on the alternator rear bracket, wrap vinyl tape around the splined shaft to prevent damage to the oil seal. <4D56>

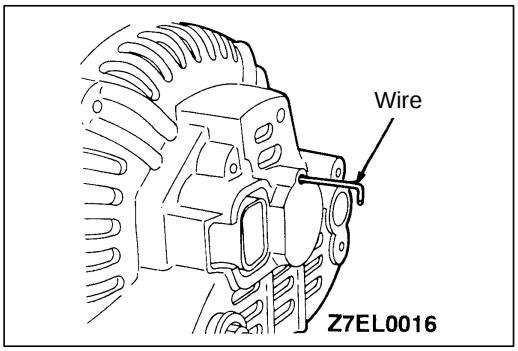

2. After rotor has been installed, remove the wire.

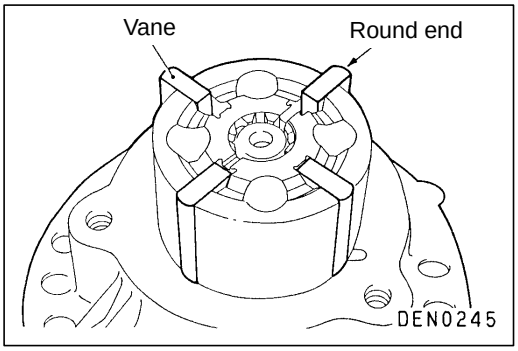

▶C◀ ROTOR/VANES INSTALLATION <4D56>

1. Carefully check the housing, rotor, etc. for chips and foreign matter. Then, apply engine oil and install.
2. Install the vanes with the round end facing outward.
3. Apply grease to the O-ring and fit in the housing groove so that it will not come out from the groove when the bolts are tightened.

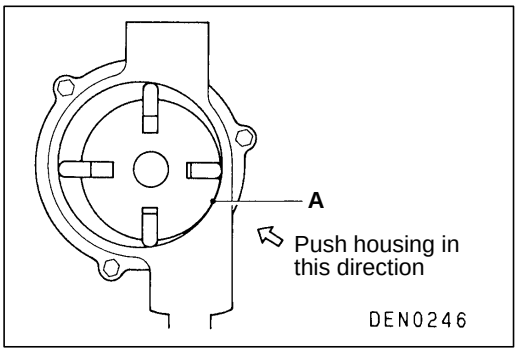

4. When tightening the housing, lightly push it in the direction of arrow so as to minimize the clearance at “A” and tighten the bolts uniformly.

   NOTE
   After assembly, be sure to conduct a performance test to check to see that the maximum vacuum is as specified below.

   Standard value of maximum vacuum:
   80.00 kPa or greater at 3,000 r/min

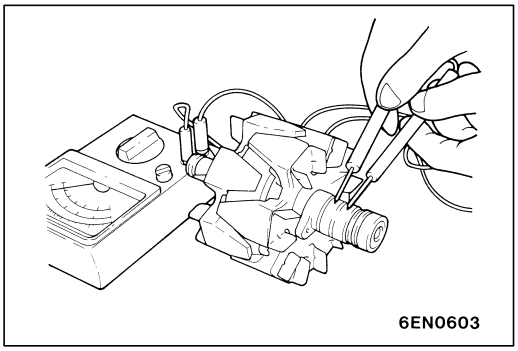

INSPECTION

16100170162

ROTOR

1. Check rotor coil for continuity. Check that there is no continuity between slip rings. If resistance is too small, it means that there is a short circuit. If there is no continuity or if there is a short circuit, replace rotor assembly.

   Resistance value: Approx. 2 – 5 Ω

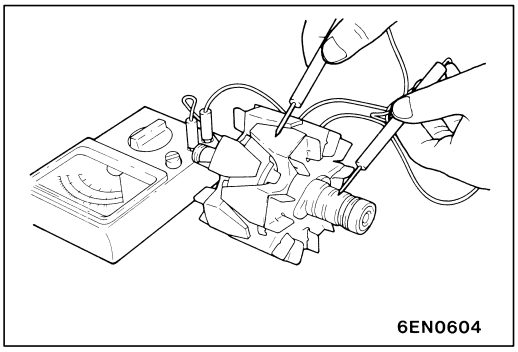

2. Check rotor coil for earthing. Check that there is no continuity between slip ring and core. If there is continuity, replace rotor assembly.

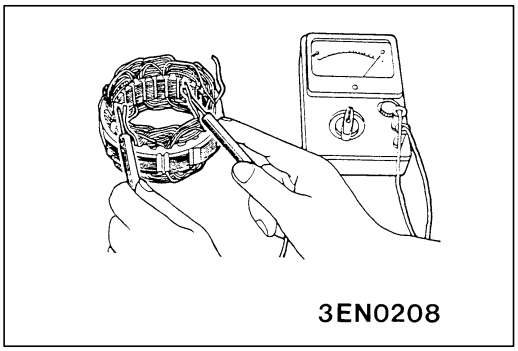

STATOR

1. Make continuity test on stator coil. Check that there is continuity between coil leads. If there is no continuity, replace stator assembly.

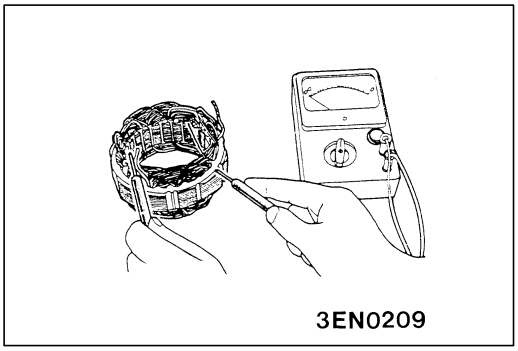

2. Check coil for earthing. Check that there is no continuity between coil and core. If there is continuity, replace stator assembly.

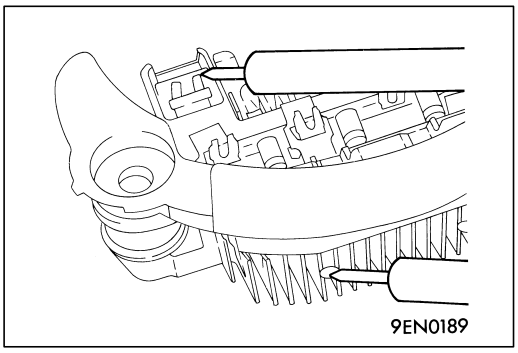

RECTIFIERS

1. Check for continuity between positive rectifier and stator coil lead connection terminal with an ohmmeter. If there is continuity in both directions, diode is shorted. Replace rectifier assembly.

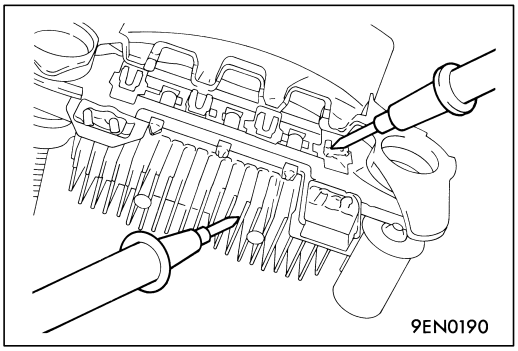

2. Check for continuity between negative rectifier and stator coil lead connection terminal. If there is continuity in both directions, diode is shorted, and rectifier assembly must be replaced.

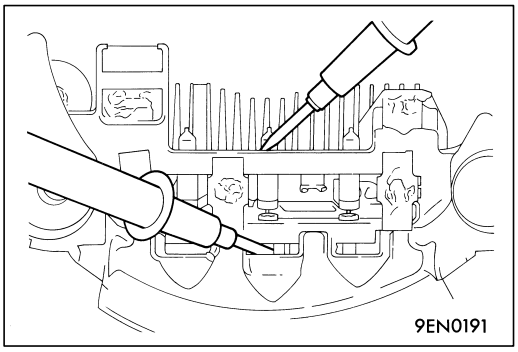

3. Check three diodes for continuity by connecting an ammeter to both ends of each diode. If there is no continuity in both directions, diode is faulty and heatsink assembly must be replaced.

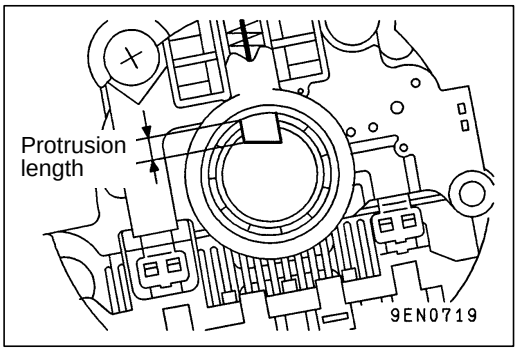

BRUSH

1. Replace the brush if its protrusion length is less than the limit.

   Limit: min. 2 mm

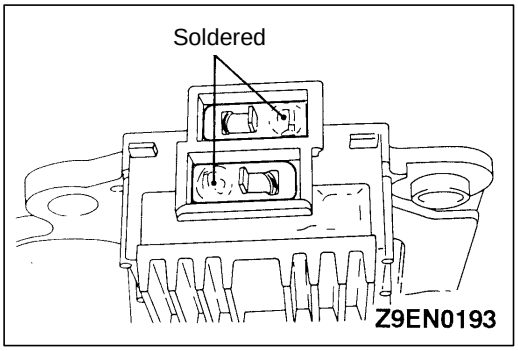

2. Unsolder pigtail and remove old brush and spring.

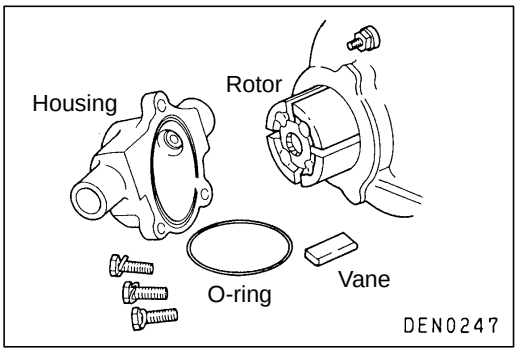

VACUUM PUMP

Check the following and replace if defective.

1. Check the rotor ends for streaks or damage.
2. Check the housing surface in contact with the rotor for streaks or damage.
3. Check the vanes for damage or breaks.

STARTING SYSTEM

16200010191

GENERAL INFORMATION

If the ignition switch is turned to the “START” position, current flows in the pull-in and holding provided inside magnetic switch, attracting the plunger. When the plunger is attracted, the lever connected to the plunger is actuated to engage the starter clutch.
On the other hand, attracting the plunger will turn on the magnetic switch, allowing the B terminal and M terminal to conduct. Thus, current flows to engage the starter motor.
When the ignition switch is returned to the ”ON” position after starting the engine, the starter clutch is disengaged from the ring gear.
An overrunning clutch is provided between the pinion and the armature shaft, to prevent damage to the starter.

SYSTEM DIAGRAM

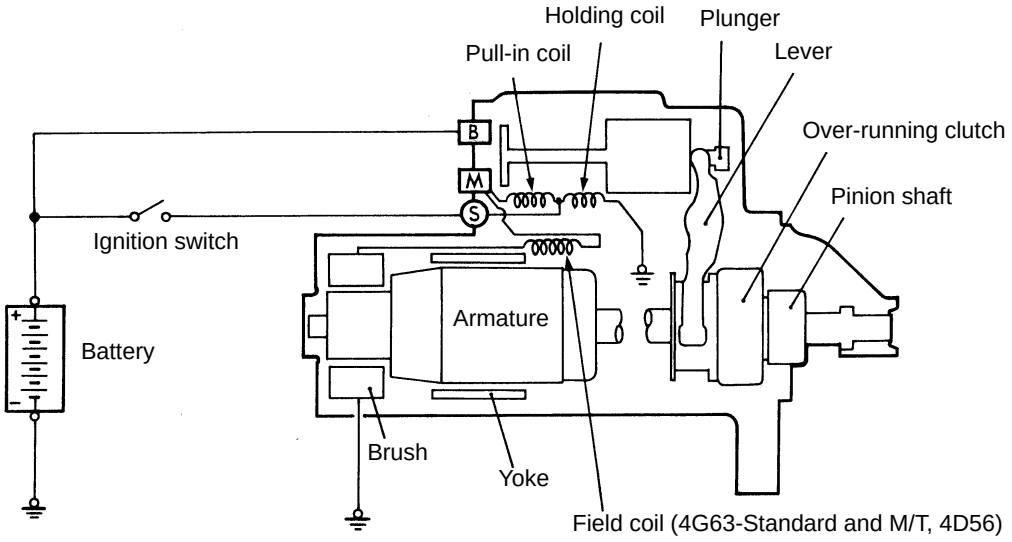

STARTER MOTOR SPECIFICATIONS

<4G63, 4G64>

Items	4G63 – M/T – standard models	4G63 – A/T – models for cold climate, 4G64
Type	Direct drive	Reduction drive with planetary gear
Rated output kW/V	0.9/12	1.2/12
No. of pinion teeth	8	8

<4D56>

Items	Standard and M/T	Cold climate zone and A/T
Type	Reduction drive with planetary gear	Reduction drive with planetary gear
Rated output kw/V	2.0	2.2
No. of pinion teeth	10	10

SERVICE SPECIFICATIONS

Items	Standard value	Limit
Pinion gap mm	0.5 – 2.0	–
Commutator outer diameter mm	32.0	31.0
Commutator runout mm	0.05	0.1
Commutator undercut mm	0.5	–

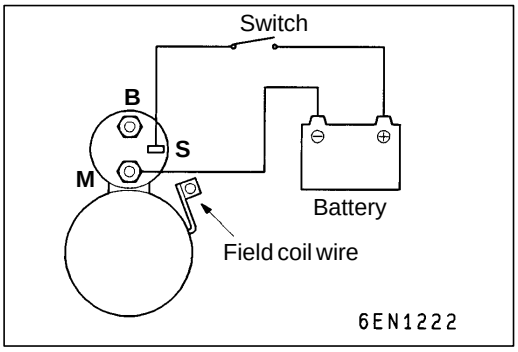

STARTER MOTOR

16200110174

INSPECTION

PINION GAP ADJUSTMENT

1. Disconnect field coil wire from M-terminal of magnetic switch.
2. Connect a 12V battery between S-terminal and M-terminal.
3. Set switch to “ON”, and pinion will move out.

   Caution
   This test must be performed quickly (in less than 10 seconds) to prevent coil from burning.

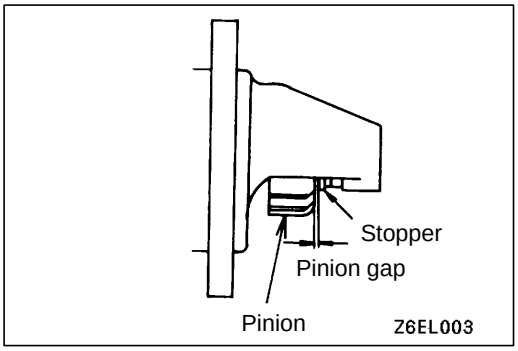

4. Check pinion to stopper clearance (pinion gap) with a thickness gauge.

   Pinion gap: 0.5 – 2.0 mm

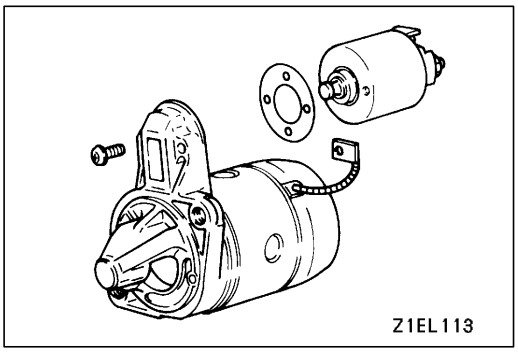

5. If pinion gap is out of specification, adjust by adding or removing gaskets between magnetic switch and front bracket.

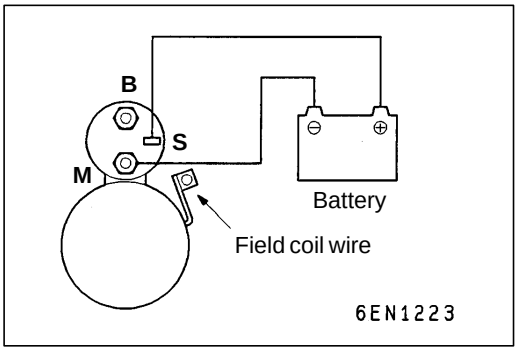

MAGNETIC SWITCH PULL-IN TEST

1. Disconnect field coil wire from M-terminal of magnetic switch.
2. Connect a 12V battery between S-terminal and M-terminal.

   Caution
   This test must be performed quickly (in less than 10 seconds) to prevent coil from burning.

3. If pinion moves out, then pull-in coil is good. If it doesn't, replace magnetic switch.

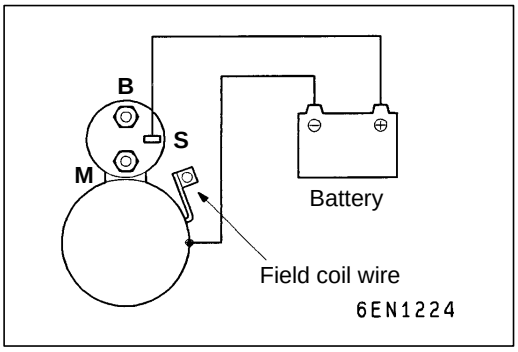

MAGNETIC SWITCH HOLD-IN TEST

1. Disconnect field coil wire from M-terminal of magnetic switch.
2. Connect a 12V battery between S-terminal and body.

   Caution
   This test must be performed quickly (in less than 10 seconds) to prevent coil from burning.

3. Manually pull out the pinion as far as the pinion stopper position.
4. If pinion remains out, everything is in order. If pinion moves in, hold-in circuit is open. Replace magnetic switch.

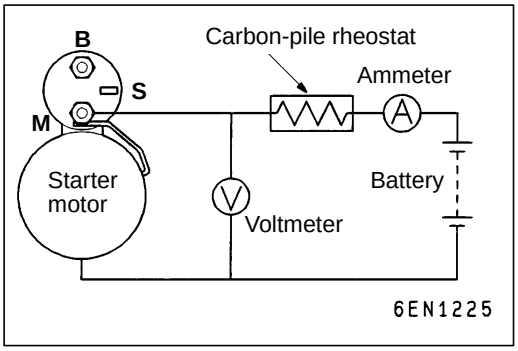

FREE RUNNING TEST

1. Place starter motor in a vise equipped with soft jaws and connect a fully-charged 12-volt battery to starter motor as follows:
2. Connect a test ammeter (100-ampere scale) and carbon pile rheostat in series with battery positive post and starter motor terminal.
3. Connect a voltmeter (15-volt scale) across starter motor.
4. Rotate carbon pile to full-resistance position.
5. Connect battery cable from battery negative post to starter motor body.
6. Adjust the rheostat until the battery voltage shown by the voltmeter is 11.5 V (for the direct drive type) or 11 V (for reduction drive type).
7. Confirm that the maximum amperage is within the specifications and that the starter motor turns smoothly and freely.

   Current:
   max. 60 Amps (Direct drive type)
   max. 90 Amps (Reduction drive type)

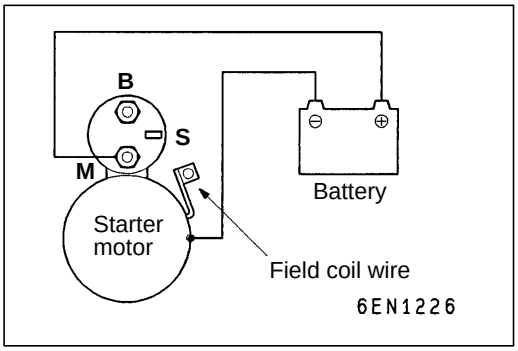

MAGNETIC SWITCH RETURN TEST

1. Disconnect field coil wire from M-terminal of magnetic switch.
2. Connect a 12V battery between M-terminal and body.

   Caution
   This test must be performed quickly (in less than 10 seconds) to prevent coil from burning.

3. Pull pinion out and release. If pinion quickly returns to its original position, everything is in order. If it doesn't, replace magnetic switch.

   Caution
   Be careful not to get your fingers caught when pulling out the pinion.

DISASSEMBLY AND REASSEMBLY <DIRECT DRIVE TYPE>

16200120214

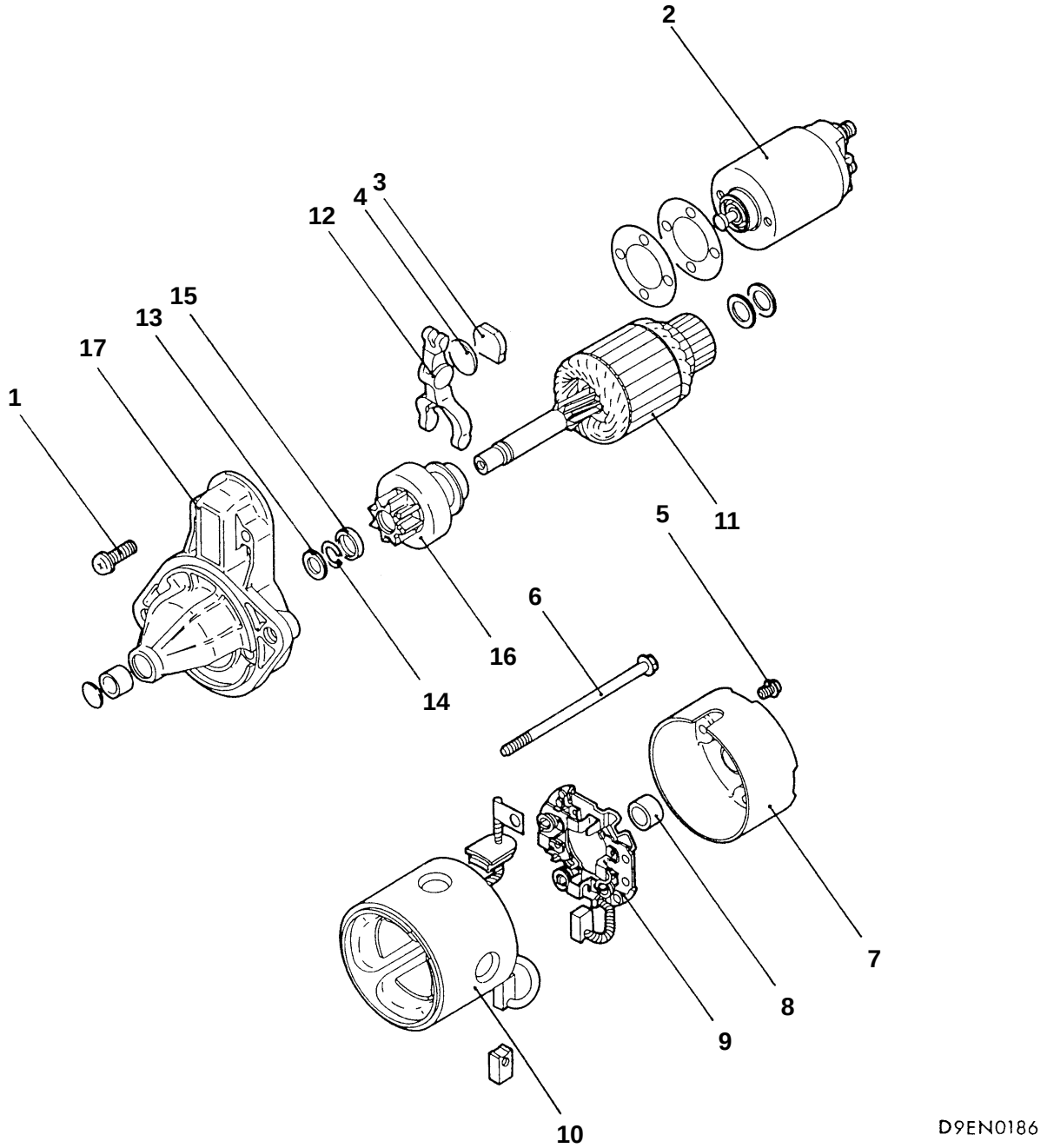

Disassembly steps

1. Screw
◀A▶ 2. Magnetic switch
3. Packing
4. Plate
5. Screw
6. Through bolt
7. Rear bracket
8. Rear bearing
9. Brush holder assembly
10. Yoke assembly
11. Armature
12. Lever
13. Washer
◀C▶ ▶A◀ 14. Snap ring
◀C▶ ▶A◀ 15. Stop ring
16. Overrunning clutch
17. Front bracket

DISASSEMBLY AND REASSEMBLY <REDUCTION DRIVE TYPE – 4G6>

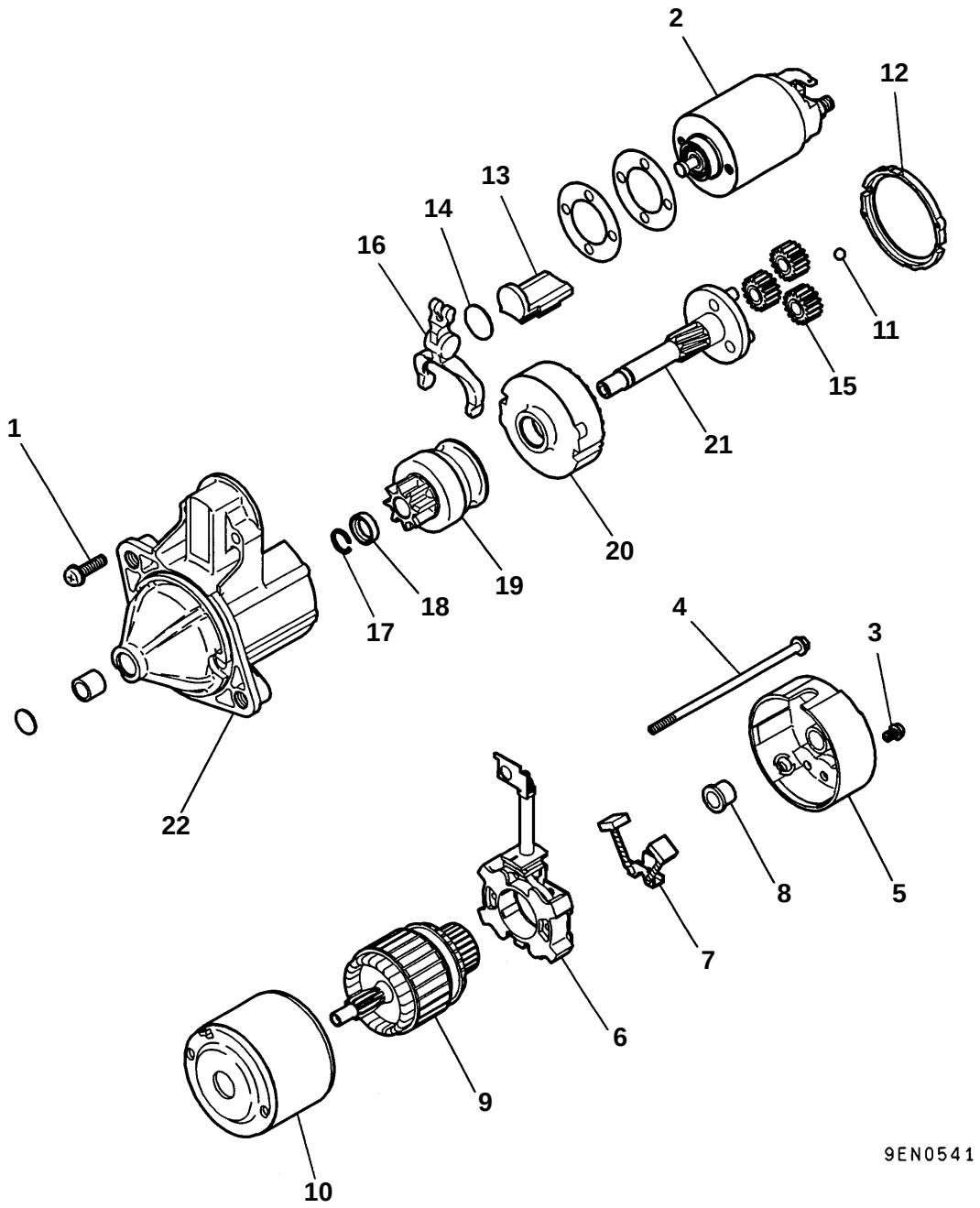

Disassembly steps

1. Screw
◀A▶ 2. Magnetic switch
3. Screw
4. Screw
5. Rear bracket
6. Brush holder
7. Brush
8. Rear bearing
◀A▶ 9. Armature
10. Yoke assembly
◀A▶ 11. Ball
12. Packing A
13. Packing B
14. Plate
15. Planetary gear
16. Lever
◀C▶ ▶A◀ 17. Snap ring
◀C▶ ▶A◀ 18. Stop ring
19. Overrunning clutch
20. Internal gear
21. Planetary gear holder
22. Front bracket

DISASSEMBLY AND REASSEMBLY <REDUCTION DRIVE TYPE – 4D56>

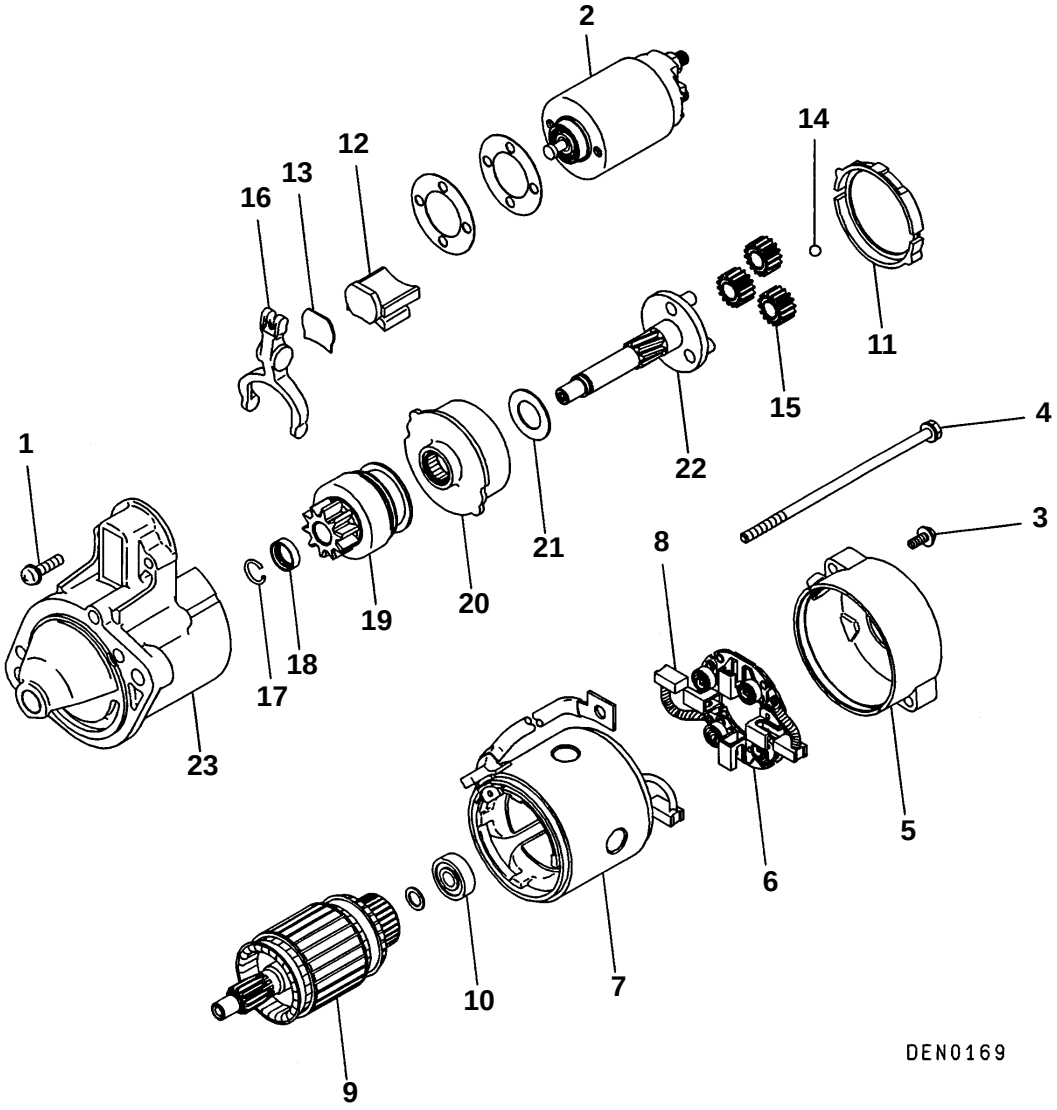

Disassembly steps

1. Screw
◀A▶ 2. Magnetic switch
3. Screw
4. Screw
5. Rear bracket
6. Brush holder
7. Yoke assembly
8. Brush
◀B▶ 9. Armature
10. Bearing
11. Packing A
12. Packing B
13. Plate
◀B▶ 14. Ball
15. Planetary gear
16. Lever
◀C▶ ▶A◀ 17. Snap ring
◀C▶ ▶A◀ 18. Stop ring
19. Overrunning clutch
20. Internal gear
21. Washer
22. Planetary gear holder
23. Front bracket

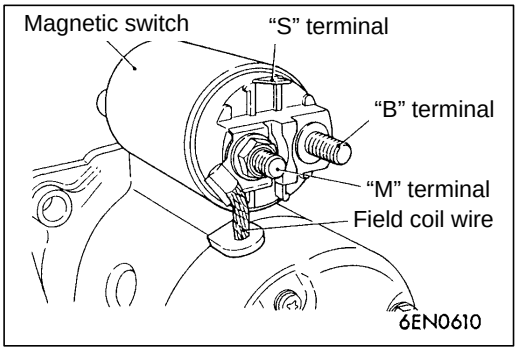

DISASSEMBLY SERVICE POINTS

◀A▶ MAGNETIC SWITCH REMOVAL

Disconnect field coil wire from "M" terminal of magnetic switch.

◀B▶ ARMATURE/BALL REMOVAL

Caution
When removing the armature, take care not to lose the ball (which is used as a bearing) in the armature end.

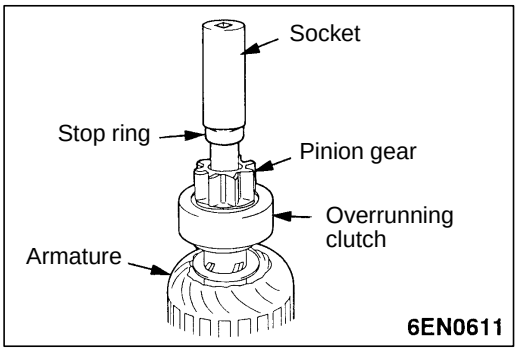

◀C▶ SNAP RING/STOP RING REMOVAL

1. Press stop ring off snap ring with a suitable socket.

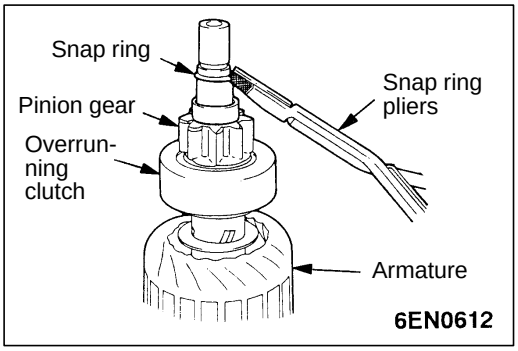

2. Remove snap ring with snap ring pliers and then remove stop ring and overrunning clutch.

STARTER MOTOR PARTS CLEANING

1. Do not immerse parts in cleaning solvent. Immersing the yoke and field coil assembly and/or armature will damage insulation. Wipe motor assembly with a cloth only.
2. Do not immerse drive unit in cleaning solvent. Overrunning clutch is pre-lubricated at the factory and solvent will wash lubrication from clutch.
3. The drive unit may be cleaned with a brush moistened with cleaning solvent and wiped dry with a cloth.

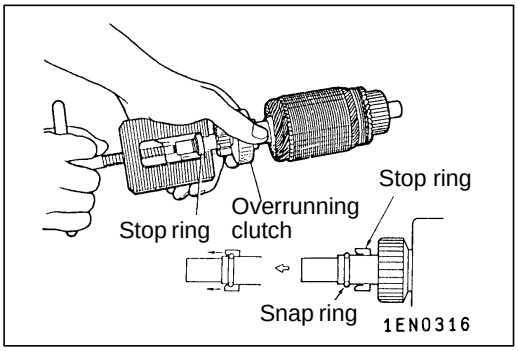

REASSEMBLY SERVICE POINTS

▶A◀ STOP RING/SNAP RING INSTALLATION

Using a suitable pulling tool, pull overrunning clutch stop ring over snap ring.

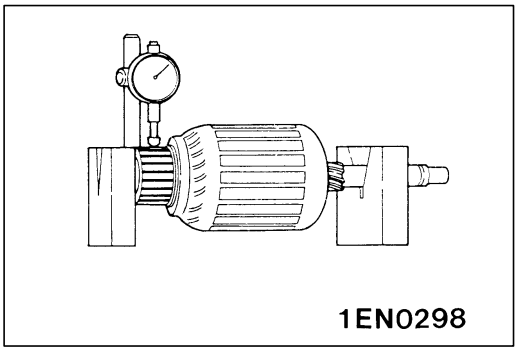

INSPECTION

16200130194

COMMUTATOR CHECK

1. Place the armature in a pair of “V” blocks and check the runout with a dial indicator.

   Standard value: 0.05 mm

   Limit: 0.1 mm

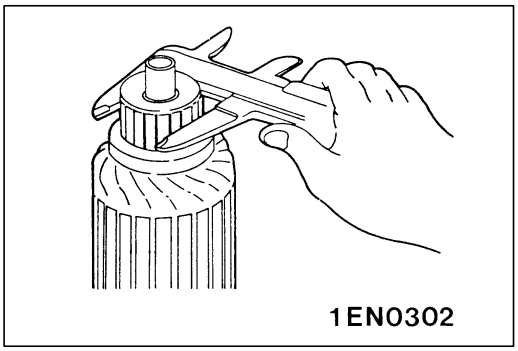

2. Measure the commutator outer diameter.

   Standard value: 32.0 mm

   Limit: 31.0 mm

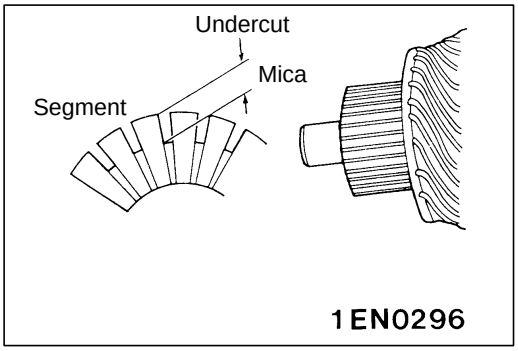

3. Check the undercut depth between segments.

   Standard value: 0.5 mm

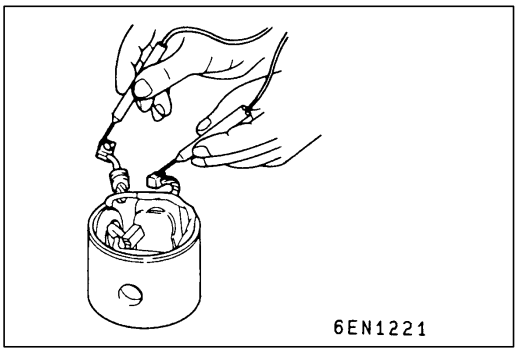

FIELD COIL OPEN-CIRCUIT TEST <DIRECT DRIVE TYPE>, <REDUCTION DRIVE TYPE-4D56>

Check the continuity between field brushes. If there is continuity, the field coil is in order.

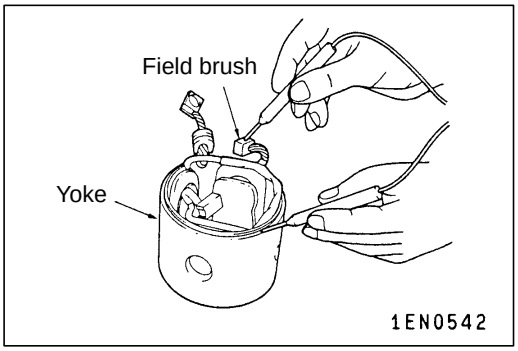

FIELD COIL GROUND TEST <DIRECT DRIVE TYPE>, <REDUCTION DRIVE TYPE-4D56>

Check the continuity between field coil brush and yoke. If there is no continuity, the field coil is free from earth.

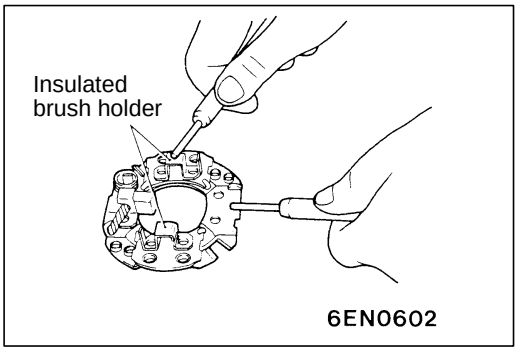

BRUSH HOLDER CHECK

Check the continuity between brush holder plate and brush holder.
If there is no continuity, the brush holder is in order.

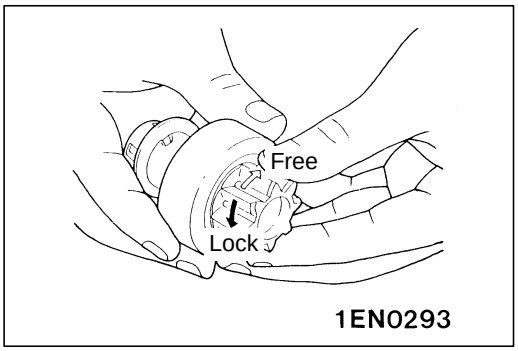

OVERRUNNING CLUTCH CHECK

1. While holding clutch housing, rotate the pinion. Drive pinion should rotate smoothly in one direction, but should not rotate in opposite direction. If clutch does not function properly, replace overrunning clutch assembly.
2. Inspect pinion for wear or burrs. If pinion is worn or burred, replace overrunning clutch assembly. If pinion is damaged, also inspect ring gear for wear or burrs.

FRONT AND REAR BRACKET BUSHING CHECK

Inspect bushing for wear or burrs. If bushing is worn or burred, replace front bracket assembly or rear bracket assembly.

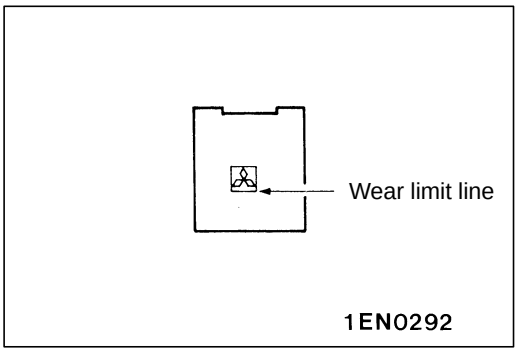

BRUSH AND SPRING REPLACEMENT

<REDUCTION DRIVE TYPE-4G6>

1. Brushes that are worn beyond wear limit line, or oil-soaked, should be replaced.
2. When replacing ground brush, slide the brush from brush holder by prying retaining spring back.

<DIRECT DRIVE TYPE>, <REDUCTION DRIVE TYPE-4D56>

1. Brushes that are worn beyond wear limit line, or are oil-soaked, should be replaced.
2. When replacing field coil brushes, crush worn brush with pliers, taking care not to damage pigtail.

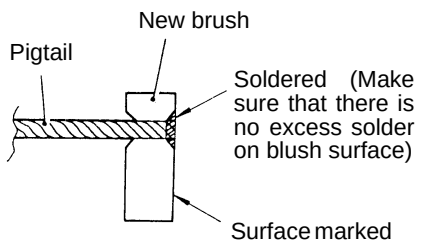

1EN0295

3. Sand pigtail end with sandpaper to ensure good soldering.
4. Insert pigtail into hole provided in new brush and solder it.
   Make sure that pigtail and excess solder do not come out onto brush surface.
5. When replacing ground brush, slide the brush from brush holder by prying retainer spring back.

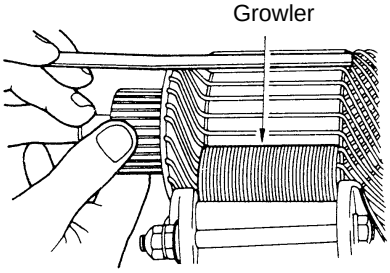

6EN0600

ARMATURE TEST

ARMATURE SHORT-CIRCUIT TEST

1. Place armature in a growler.
2. Hold a thin steel blade parallel and just above while rotating armature slowly in growler. A shorted armature will cause blade to vibrate and be attracted to the core. Replace shorted armature.

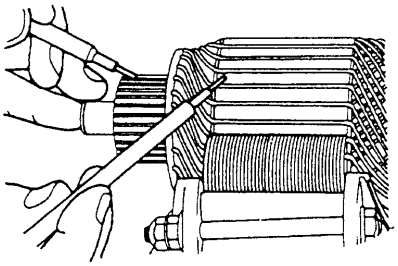
6EN0601

ARMATURE COIL EARTH TEST

Check the insulation between each commutator segment and armature coil core.
If there is no continuity, the insulation is in order.

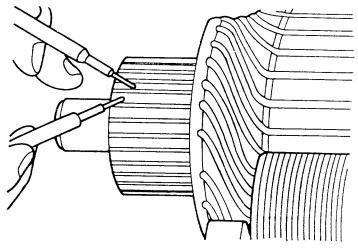
1EN0299

ARMATURE COIL OPEN-CIRCUIT INSPECTION

Check the continuity between segments. If there is continuity, the coil is in order.

IGNITION SYSTEM

16300010194

GENERAL INFORMATION

When the primary current stops suddenly in the ignition coil, high voltage appears in the secondary side of the coil. The distributor supplies the high voltage to the applicable spark plug. The engine firing order is 1-3-4-2 cylinders.
The high voltage ignites the compressed air fuel mixture in the combustion chamber through the spark plugs.
The engine-ECU makes and breaks the primary current of the ignition coil to regulate the ignition timing.
The engine-ECU detects the crankshaft position by the crank angle sensor incorporated in the distributor to provide ignition at the most appropriate timing for the engine operating condition.
When the engine is cold or operated at a high altitude, the ignition timing is slightly advanced to provide optimum performance to the operating condition.

SYSTEM DIAGRAM

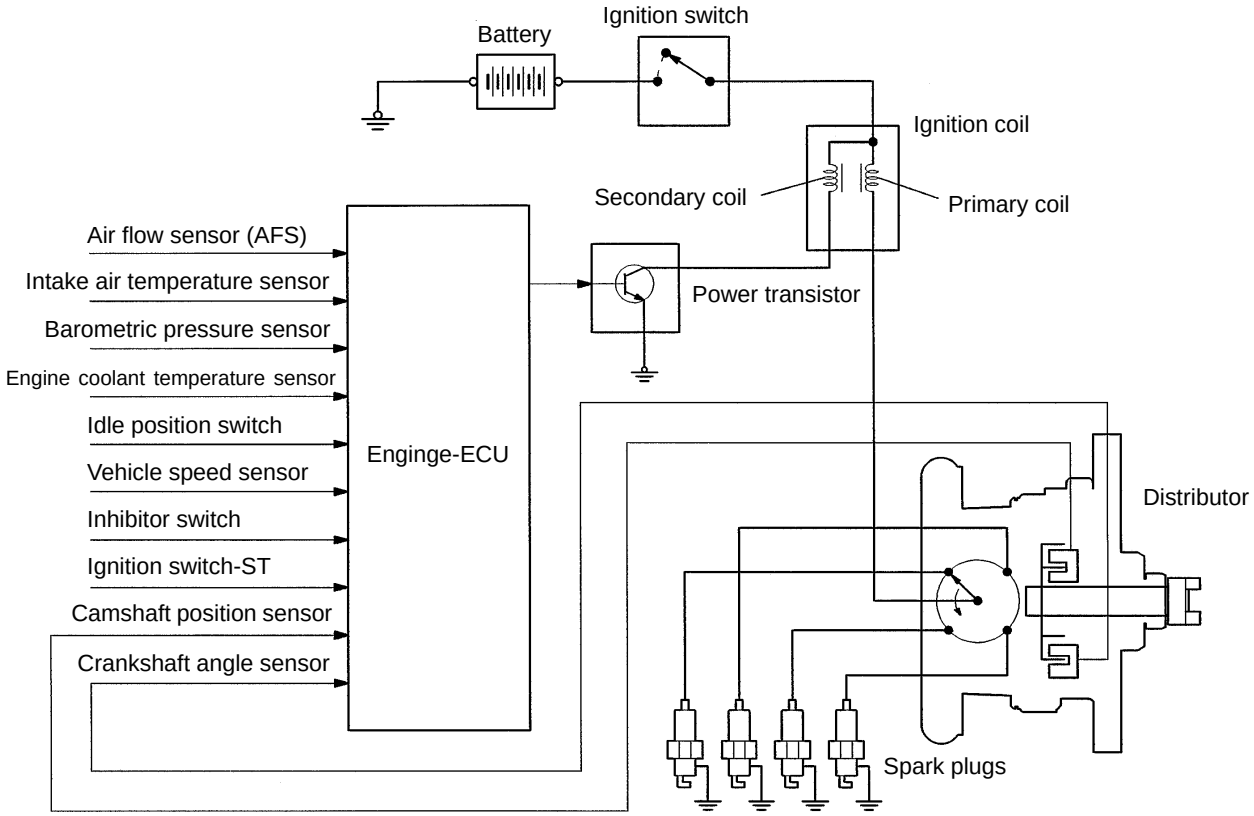

6EN1009

DISTRIBUTOR SPECIFICATIONS

Items	Specifications
Type	Contact pointless
Advance mechanism	Electronic
Firing order	1–3–4–2

IGNITION COIL SPECIFICATIONS

Items	Specifications
Type	Molded single-coil

SPARK PLUG SPECIFICATIONS

Items	Specifications
NGK	BKR5E-11
NIPPON DENSO	K16PR-U11

SERVICE SPECIFICATIONS

16300030190

Items		Standard value	Limit
Ignition coil	Primary coil resistance Ω	0.67 – 0.81	–
	Secondary coil resistance kΩ	11.3 – 15.3	–
Spark plug gap mm		1.0 – 1.1	–
Resistive cord resistance kΩ		–	Max. 22

LUBRICANT

Items	Specified lubricant	Quantity
Distributor cupping	Multipurpose grease SAE J310, NLGI No.3	2 g

SPECIAL TOOL

16300060151

Tool	Number	Name	Use
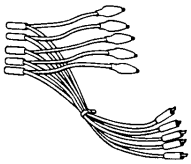	MB991348	Test harness set	Inspection of ignition primary voltage (power transistor connection)

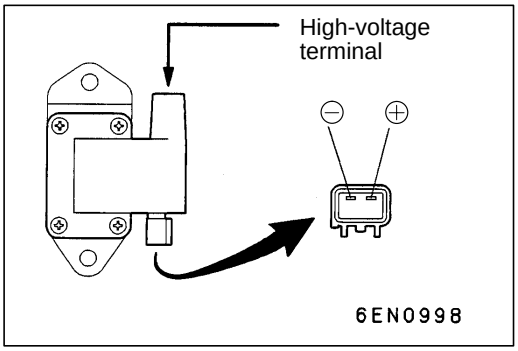

ON-VEHICLE SERVICE

16300120231

IGNITION COIL CHECK

1. Measurement of the primary coil resistance
   Measure the resistance between (+) terminal and (–) terminal.

   Standard value: 0.67 – 0.81 Ω
2. Measurement of secondary coil resistance
   Measure the resistance between the high-voltage terminals and (+) terminal.

   Standard value: 11.3 – 15.3 kΩ

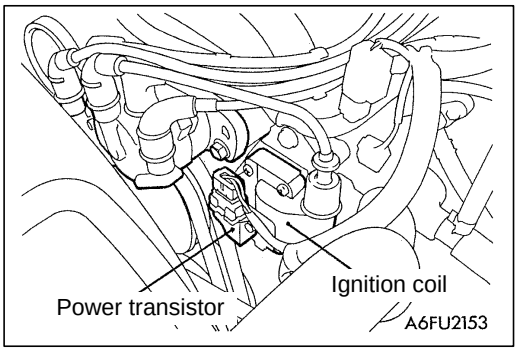

POWER TRANSISTOR CONTINUITY CHECK

16300130159

NOTE
An analogue-type circuit tester should be used.

Voltage: 1.5V	Terminal No.		
	1	2	3
Applied	⊕	⊖	
		○	○
Not applied			

Replace the power transistor if there is a malfunction.

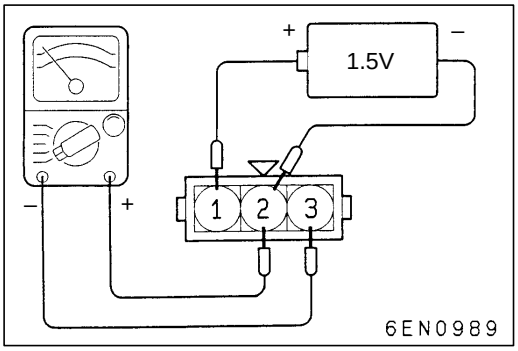

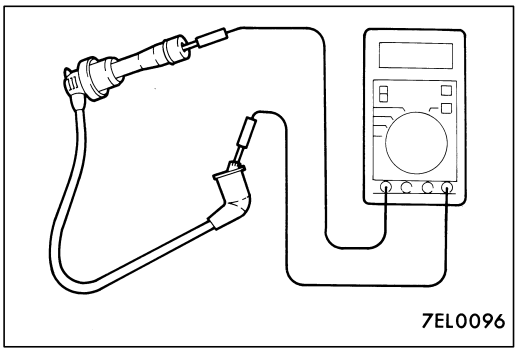

RESISTIVE CORD CHECK

16300140091

Measure the resistance of the all spark plug cables.
1. Check cap and coating for cracks.
2. Measure resistance.

   Limit: Max. 22 kΩ

SPARK PLUG CHECK AND CLEANING 16300150056

1. Remove the spark plug cables.

   Caution
   When pulling off the spark plug cable from the plug always hold the cable cap, not the cable.

2. Remove the spark plugs.
3. Check for burned out electrode or damaged insulator. Check for even burning.
4. Remove carbon deposits with wire brush or plug cleaner. Remove sand from plug screw with compressed air.

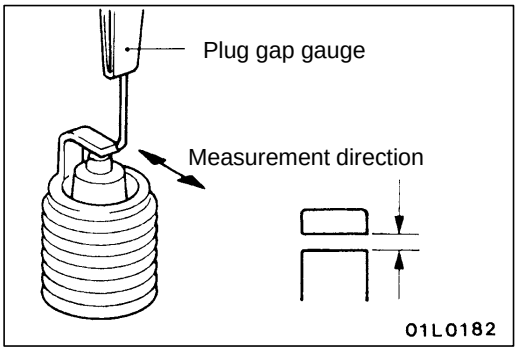

5. Use a plug gap gauge to check that the plug gap is within the standard value range.

   Standard value: 1.0 – 1.1 mm

   If the plug gap is not within the standard value range, adjust by bending the earth electrode.
6. Clean the engine plug holes.

   Caution
   Be careful not to allow foreign matter in cylinders.

7. Install the spark plugs.

CRANK ANGLE SENSOR, TOP DEAD SENSOR CHECK 16300260308

Refer to GROUP 13A – Troubleshooting.

WAVEFORM CHECK USING AN ANALYZER

16300170274

Ignition Secondary Voltage Check

MEASUREMENT METHOD

1. Clamp the high-tension cable with the secondary pickup.
2. Clamp the spark plug cable with the trigger pickup. (Basically, clamp the spark plug cable of the No.1 cylinder.)

   NOTE
   The waveform of the cylinder clamped to the trigger pickup appears at the left edge of the screen.

STANDARD WAVEFORM

Observation Conditions

FUNCTION	SECONDARY
PATTERN HEIGHT	HIGH (or LOW)
PATTERN SELECTOR	RASTER
Engine Speed	Curb idle speed

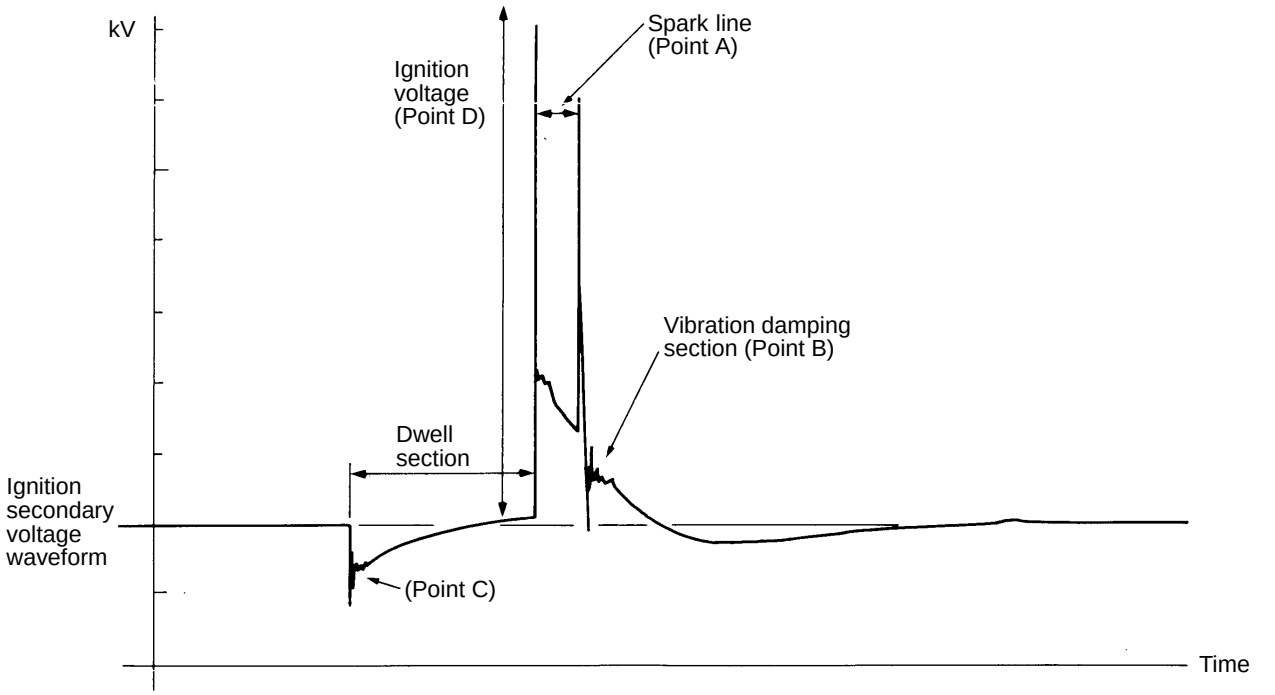

7EL0128

WAVEFORM OBSERVATION POINTS

Point A: The height, length and slope of the spark line show the following trends (Refer to abnormal waveform examples, 1, 2, 3 and 4).

Spark line		Plug gap	Condition of electrode	Compression force	Concentration of air mixture	Ignition timing	Spark plug cable
Length	Long	Small	Normal	Low	Rich	Advanced	Leak
	Short	Large	Large wear	High	Lean	Retarded	High resistance
Height	High	Large	Large wear	High	Lean	Retarded	High resistance
	Low	Small	Normal	Low	Rich	Advanced	Leak
Slope		Large	Plug is fouled	–	–	–	–

Point B: Number of vibration in reduction vibration section (Refer to abnormal waveform example 5)

Number of vibrations	Coil and condenser
Three or more	Normal
Except above	Abnormal

Point C: Number of vibrations at beginning of dwell section (Refer to abnormal waveform example 5)

Number of vibrations	Coil
5–6 or higher	Normal
Except above	Abnormal

Point D: Ignition voltage height (distribution per each cylinder) shows the following trends.

Ignition voltage	Plug gap	Condition of electrode	Compression force	Concentration of air mixture	Ignition timing	Spark plug cable
High	Large	Large wear	High	Lean	Retarded	High resistance
Low	Small	Normal	Low	Rich	Advanced	Leak

EXAMPLES OF ABNORMAL WAVEFORMS

Abnormal waveform	Wave characteristics	Cause of problem
Example 1 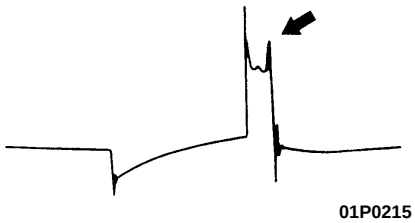 01P0215	Spark line is high and short.	Spark plug gap is too large.
Example 2 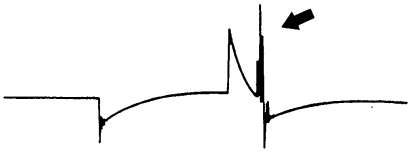 01P0216	Spark line is low and long, and is sloping. Also, the second half of the spark line is distorted. This could be a result of misfiring.	Spark plug gap is too small.
Example 3 01P0217	Spark line is low and long, and is sloping. However, there is almost no spark line distortion.	Spark plug gap is fouled.
Example 4 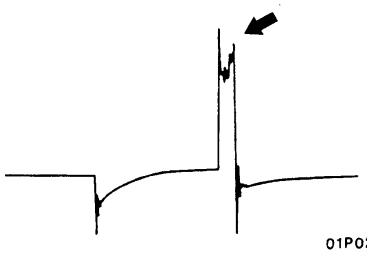 01P0218	Spark line is high and short. Difficult to distinguish between this and abnormal waveform example 1.	Spark plug cable is nearly falling off. (Causing a dual ignition)
Example 5 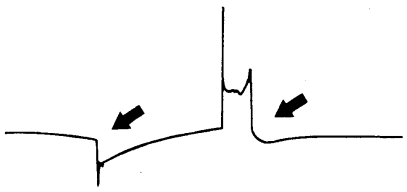 01P0219	No waves in wave damping section.	Layer short in ignition coil

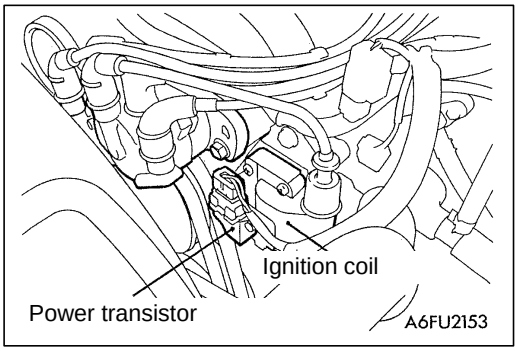

Ignition Primary Voltage Waveform Check

MEASUREMENT METHOD

1. Disconnect the power transistor connector and connect the special tool (test harness: MB991348) in between. (All of the terminals should be connected.)

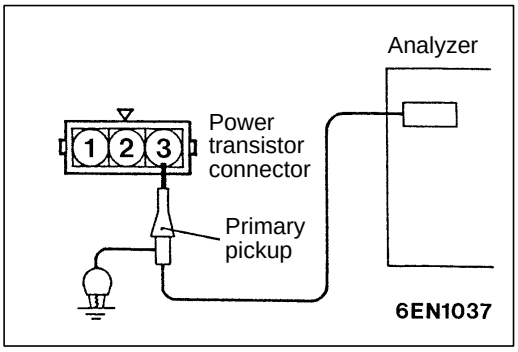

2. Connect the analyzer primary pickup to the power transistor connector terminal 3.
3. Connect the primary pickup earth terminal.
4. Clamp the spark plug cable with the trigger pickup.

   NOTE
   The waveform of the cylinder clamped to the trigger pickup will appear at the left edge of the screen.

STANDARD WAVEFORM

Observation conditions

FUNCTION	SECONDARY
PATTERN HEIGHT	HIGH (or LOW)
PATTERN SELECTOR	RASTER
Engine Speed	Curb idle speed

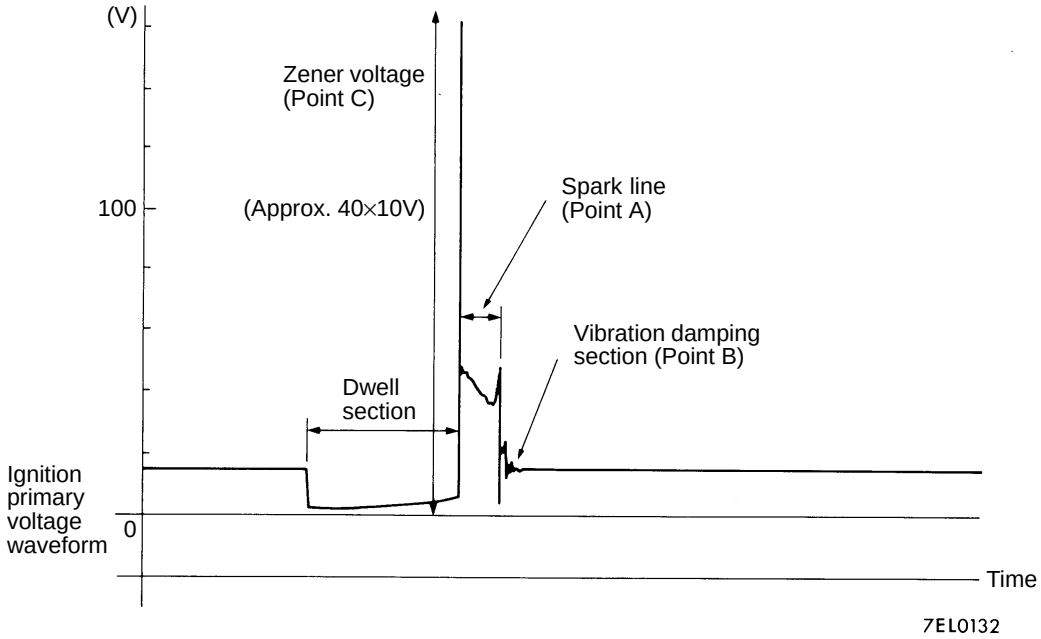

Observation conditions

(Only the pattern selector shown below changes from the previous conditions)

PATTERN SELECTOR	DISPLAY

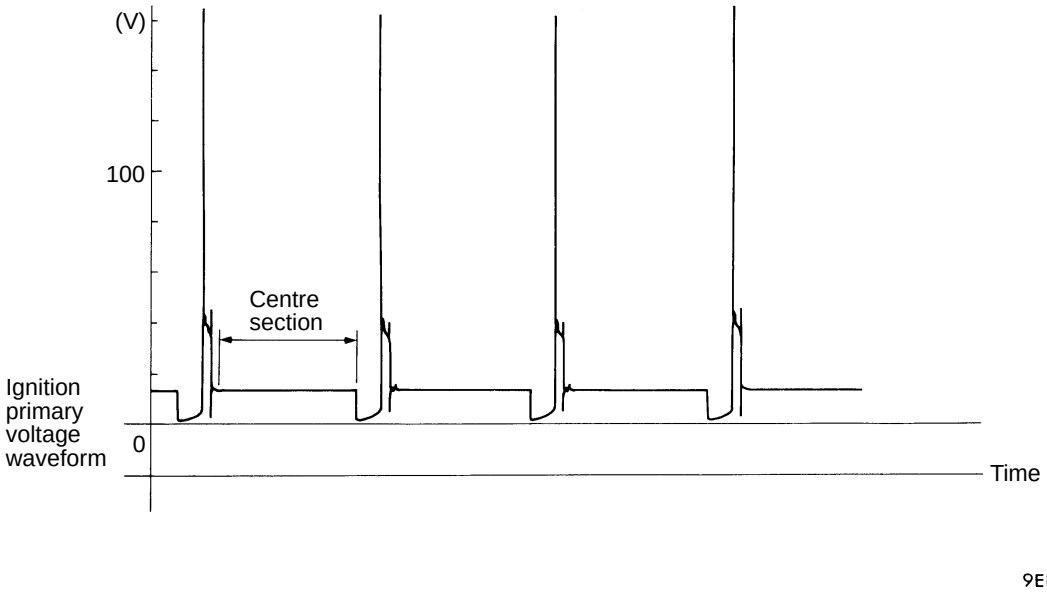

WAVEFORM OBSERVATION POINTS

Point A: The height, length and slope of the spark line (refer to abnormal waveform examples 1, 2, 3 and 4) show the following trends.

Spark line		Plug gap	Condition of electrode	Compression force	Concentration of air mixture	Ignition timing	High tension cable
Length	Long	Small	Normal	Low	Rich	Advanced	Leak
	Short	Large	Large wear	High	Lean	Retarded	High resistance
Height	High	Large	Large wear	High	Lean	Retarded	High resistance
	Low	Small	Normal	Low	Rich	Advanced	Leak
Slope		Large	Plug is fouled	–	–	–	–

Point B: Number of vibration in reduction vibration section (Refer to abnormal waveform example 5)

Number of vibrations	Coil, condenser
3 or higher	Normal
Except above	Abnormal

Point C: Height of Zener voltage

Height of Zener voltage	Probable cause
High	Problem in Zener diode
Low	Abnormal resistance in primary coil circuit

EXAMPLES OF ABNORMAL WAVEFORMS

Abnormal waveform	Wave characteristics	Cause of problem
Example 1 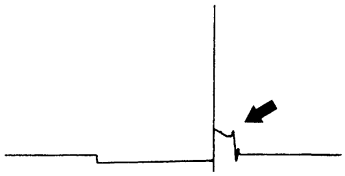 01P0210	Spark line is high and short.	Spark plug gap is too large.
Example 2 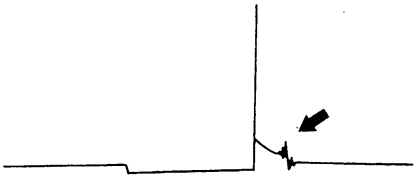 01P0211	Spark line is low and long, and is sloping. Also, the second half of the spark line is distorted. This could be a result of misfiring.	Spark plug gap is too small.
Example 3 01P0212	Spark line is low and long, and is sloping. However, there is almost no spark line distortion.	Spark plug gap is fouled.
Example 4 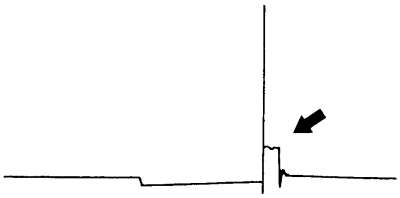 01P0213	Spark line is high and short.	Spark plug cable is nearly falling off. (Causing a dual ignition)
Example 5 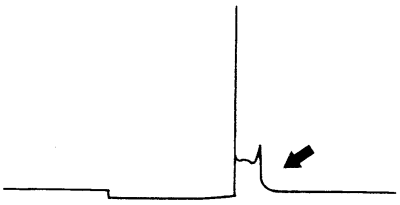 01P0214	No waves in wave damping section	Layer short in ignition coil

DISTRIBUTOR

16300200140

REMOVAL AND INSTALLATION

Post-installation Operation
- Engine Adjustment (Refer to GROUP 11A – On-vehicle Service.)

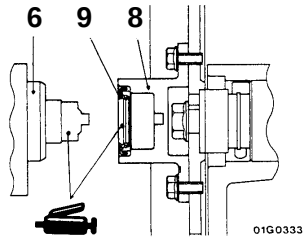

Grease: SAE J310, NLGI No.3

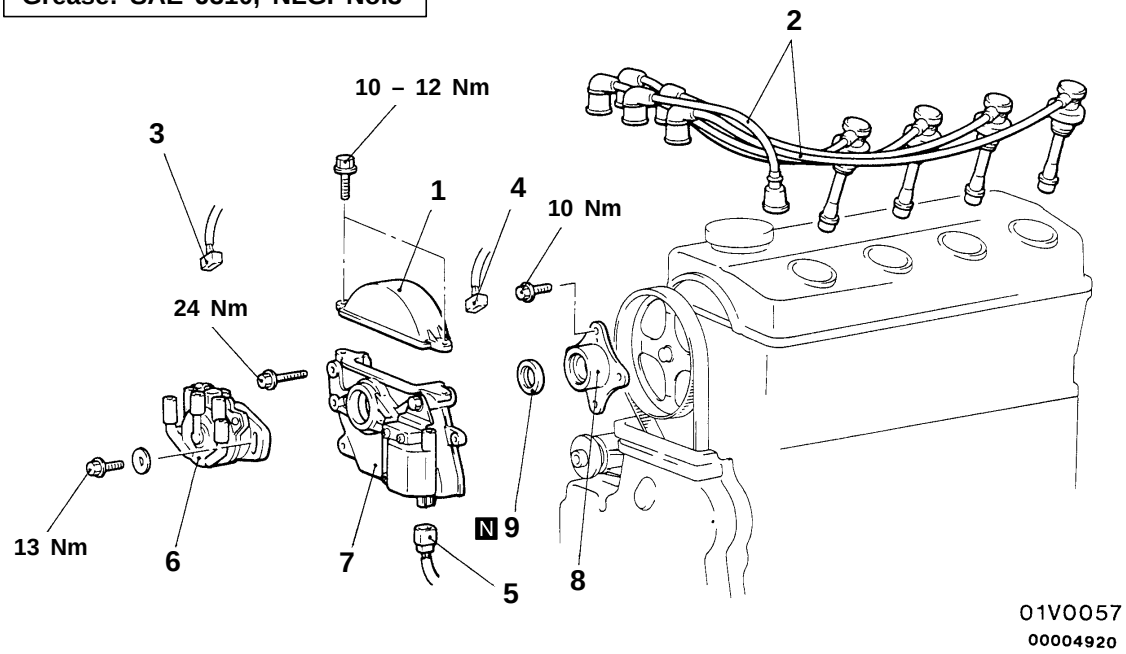

Removal steps

1. Timing belt upper cover
2. Spark plug cable and high tension cable ▶C◀
3. Distributor connector ▶B◀
4. Power transistor connector ▶A◀
5. Ignition coil connector
6. Distributor assembly
7. Distributor bracket
8. Camshaft sprocket spacer
9. Oil seal

INSTALLATION SERVICE POINTS

▶A◀ OIL SEAL INSTALLATION

Tap in the oil seal until it is flush with the camshaft sprocket spacer.

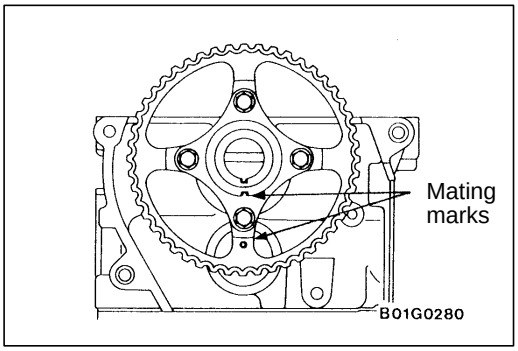

▶B◀ CAMSHAFT SPROCKET SPACER INSTALLATION

Install the camshaft sprocket spacer so that the mating marks on the camshaft sprocket spacer and the camshaft sprocket are aligned.

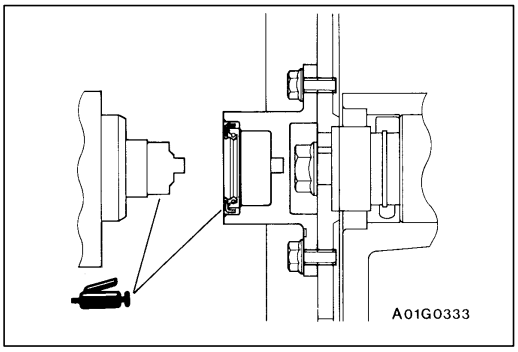

▶C◀ DISTRIBUTOR ASSEMBLY INSTALLATION

1. Apply 2 grams of grease in the places shown in the illustration.

   Specified grease:
   Multipurpose grease SAE J310, NLGI No.3

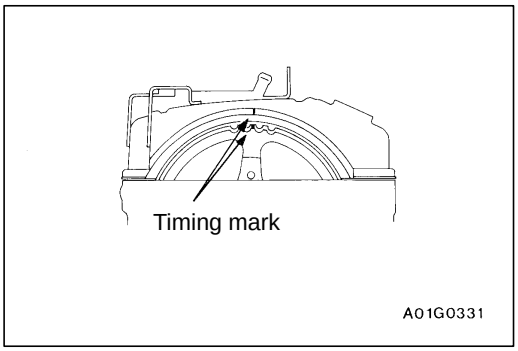

2. Turn the crankshaft clockwise to align the timing marks.

   NOTE
   The No.1 cylinder will be at compression top dead centre if the timing mark on the camshaft sprocket is aligned with the timing mark on the cylinder head.

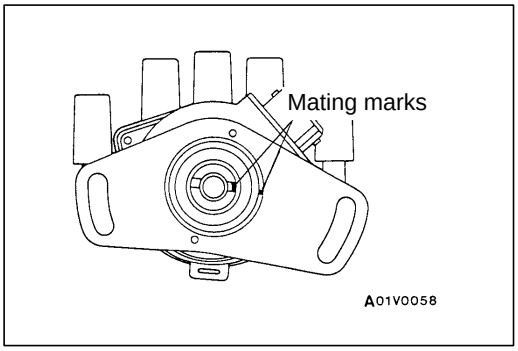

3. Align the mating mark on the distributor housing side with the mating mark on the coupling side.
4. Install the distributor to the engine while aligning the distributor fixing bolt with the oblong hole on the distributor mounting flange.

DISASSEMBLY AND REASSEMBLY

16300220122

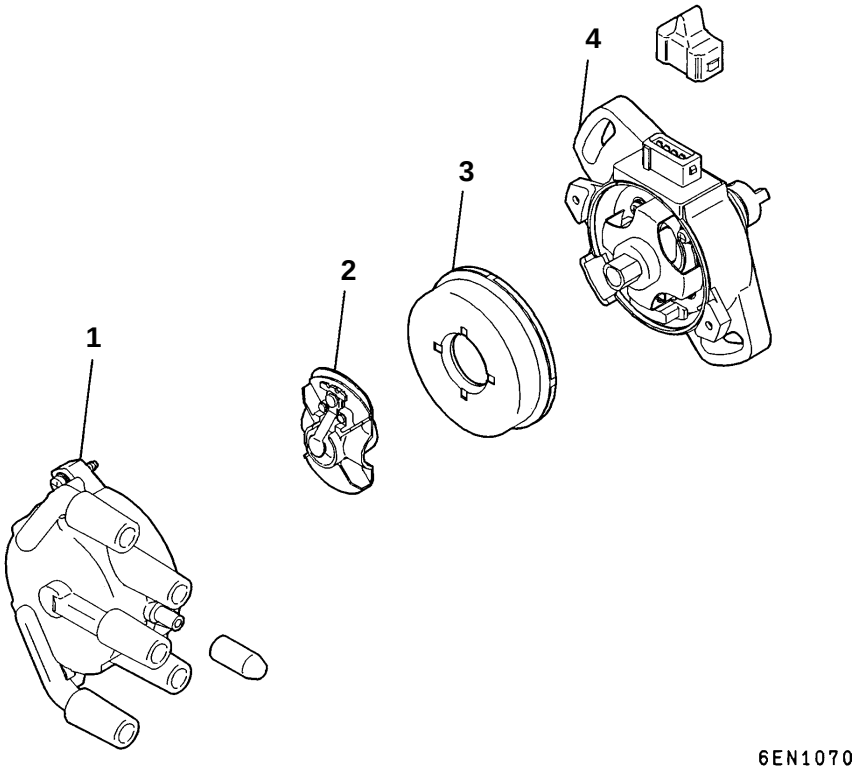

Disassembly steps

1. Distributor cap
2. Rotor
3. Cover
4. Distributor housing

GLOW SYSTEM

16400010029

GENERAL INFORMATION

SELF-REGULATING GLOW SYSTEM

The self-regulating glow system reduces the time required for starting at low temperatures to provide a degree of starting and operation that is identical to petrol-engine vehicles by preheating the glow plugs at super-quick speed.
The glow control unit controls both the time during which current is supplied to the glow plugs after the ignition switch is turned to the ON position and also the glow indicator lamp illumination time in accordance with the engine coolant temperature. The resistances of the heating coils which are built into the glow plugs increase as the glow plug temperatures become higher. As a result of this, the flow of current gradually decreases, thus stabilizing the glow plug temperature at the specified temperature.

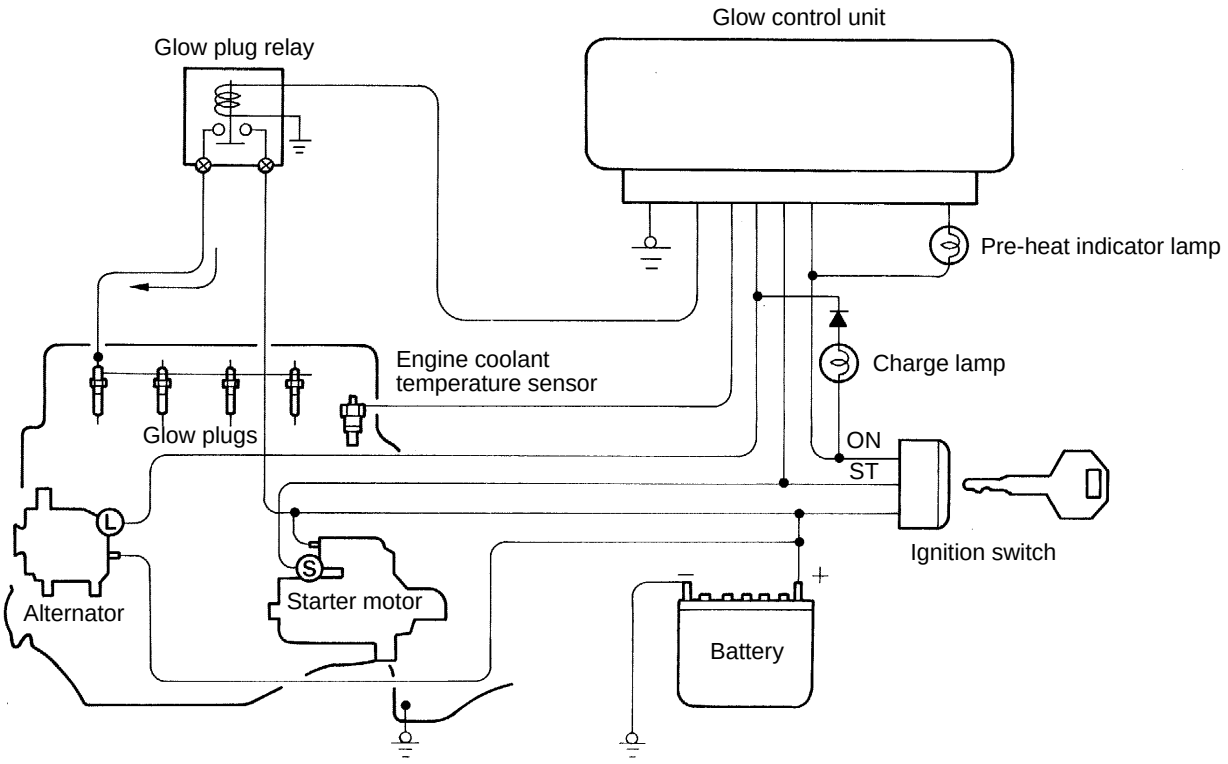

SERVICE SPECIFICATIONS

16400030025

Item		Standard value
Resistance between glow plug plate and glow plug body (parallel resistance for 4 glow plugs) (at 20 °C) Ω		0.10 – 0.15
Voltage between glow plug plate and glow plug body V	Immediately after ignition switch is turned to ON (without starting the engine)	9 – 11 (Drops to 0 V after 4 – 8 seconds have passed)
	While engine is cranking	6 or more
	While engine is warming up	12 – 15 (Drops to 0 V when the engine coolant temperature increases to 60 °C or more or if 180 seconds have passed since the engine was started)
Glow plug resistance (at 20 °C) Ω		0.4 – 0.6

SEALANT

16400050021

Item	Specified sealant	Remark
Engine coolant temperature sensor	3M Nut Locking Part No.4171 or equivalent	Drying sealant

ON-VEHICLE SERVICE

16400100023

SELF-REGULATING GLOW SYSTEM CHECK

1. Check that the battery voltage is 11 – 13 V.
2. Check that the engine coolant temperature is 40 °C or less.

   NOTE
   If the engine coolant temperature is too high, disconnect the engine coolant temperature sensor connector.

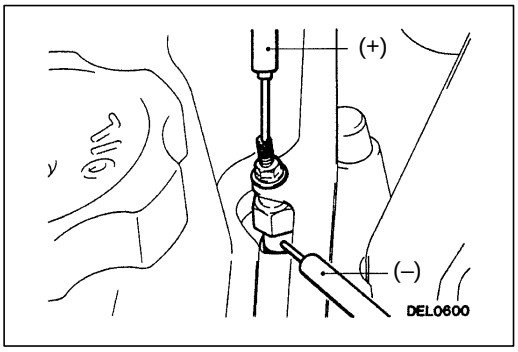

3. Measure the resistance between the glow plug plate and the glow plug body (earth).

   Standard value: 0.10 – 0.15 Ω (at 20 °C)

   NOTE
   The resistance value is the parallel resistance value for the four glow plugs.
4. Connect a voltmeter between the glow plug plate and the glow plug body (earth).
5. Measure the voltage immediately after the ignition switch is turned to ON (without starting the engine).

   Standard value:
   9 – 11 V (Drops to 0 V after 4 – 8 seconds have passed)

   In addition, check to be sure that the glow indicator lamp (red) illuminates immediately after the ignition switch is turned to ON.

   NOTE
   The time during which the voltage appears (energizing time) will depend on the engine coolant temperature.
6. Measure the voltage while the engine is cranking.

   Standard value: 6 V or more
7. Start the engine and measure the voltage while the engine is warming up.
   However, if the engine coolant temperature rises above 60 °C or when 180 seconds have passed since the engine was started, the voltage will always return to 0 V. (Refer to the Glow Plug Energization Timing Chart.)

   Standard value: 12 – 15 V

<Reference>

Glow Plug Energization Timing Chart

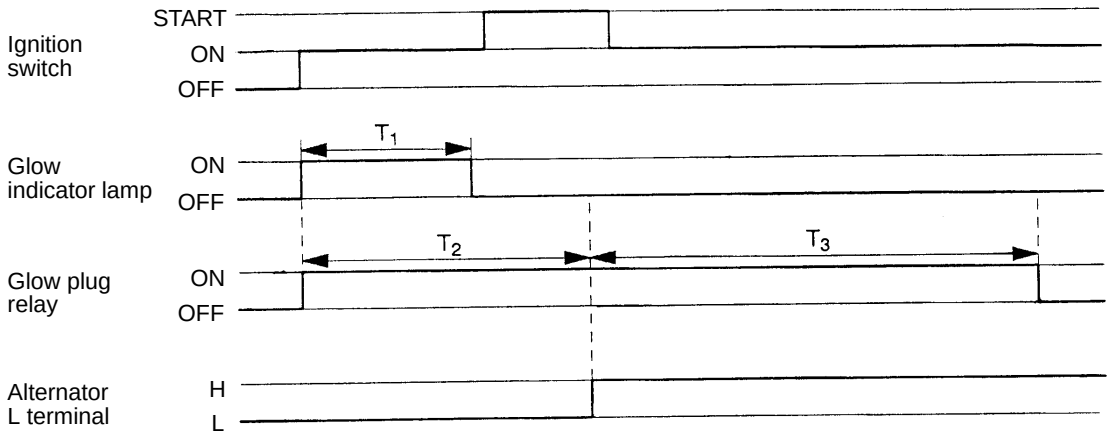

T_1: Glow indicator lamp
T_2: Glow plug relay drive time after ignition switch is turned ON
T_3: Glow plug relay drive time after engine starts (after glow)

DEN0063

NOTE
After glow time T_3 becomes longer as the engine coolant temperature drops.

GLOW CONTROL UNIT CHECK

16400220033

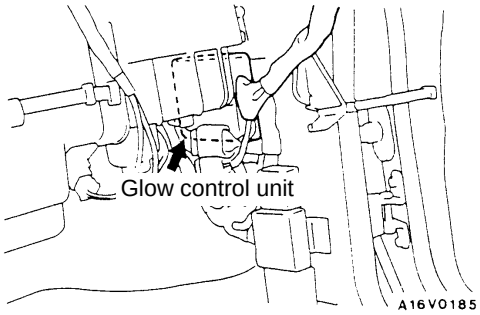

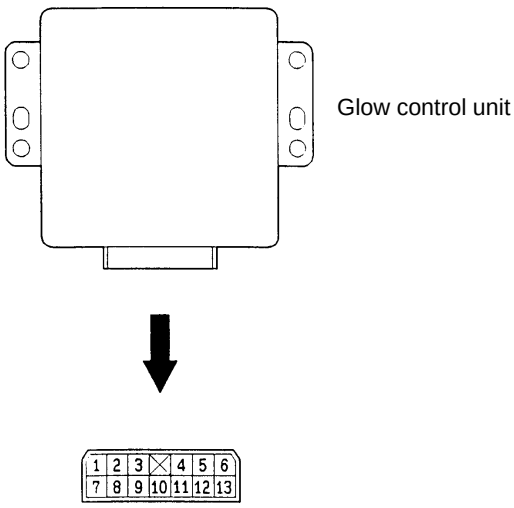

DEN0236
DEN0240

1. Measure the voltage at the control unit terminals.

   NOTE
   1. Inspect with the control unit connector connected.
   2. When measuring the voltage, connect the control unit terminal (10) to the earth.

Terminal Voltage Reference Table

Inspection terminal	Inspection item	Inspection condition		Standard value
13	Engine coolant temperature sensor (Engine coolant temperature detection)	Ignition switch "ON" → "OFF"	Engine coolant temperature: – 20 °C	4.3 – 4.5 V
			Engine coolant temperature: 0 °C	3.7 – 3.9 V
			Engine coolant temperature: 20 °C	2.8 – 3.0 V
			Engine coolant temperature: 40 °C	1.9 – 2.1 V
			Engine coolant temperature: 80 °C	0.5 – 0.7 V
2	Ignition switch (power supply)	Ignition switch "OFF" → "START"		8 V or more
7	Glow plug relay (glow time control)	Ignition switch "OFF" → "ON" Engine coolant temperature: 40 °C or less (Pre-glow function inspection)		9 – 12 V 0 – 0.5 V after approx. 8 sec. (when engine coolant temperature is 20 °C)
3	Glow indicator lamp	Ignition switch "OFF" → "ON" Engine coolant temperature: 40 °C or less		0 – 1 V 11 – 13 V after approx. 1 sec. (when engine coolant temperature is 20 °C)
6	Alternator charging signal ("L" terminal)	Ignition switch "OFF" → "ON"		1 – 4 V
		Engine is idling		11 V or more
10	Earth	–		–

Glow control unit harness-side connector as seen from the terminal side

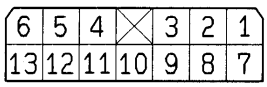

DEN0241

2. Remove the control unit connector and check the continuity between the harness-side connector terminals.

Inspection terminal	Inspection item	Continuity (resistance value)
7 – 10	Glow plug relay	Continuity (approx. 3Ω)

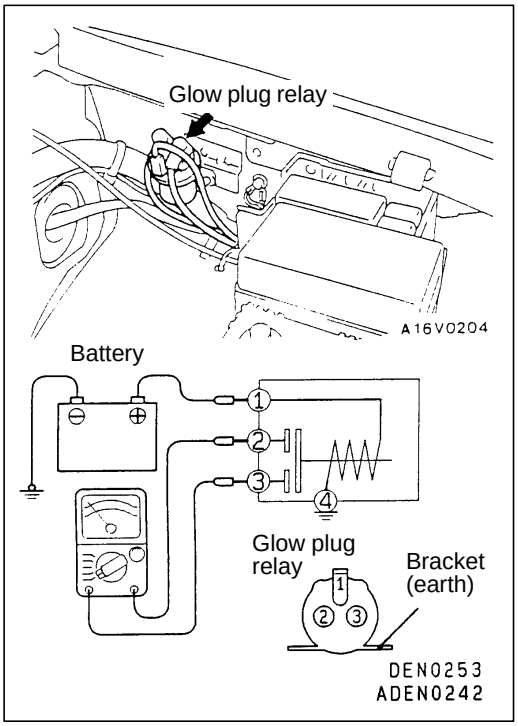

GLOW PLUG RELAY CHECK

16400250032

1. Check to be sure that there is continuity (approx. 3 Ω) between glow plug relay terminal (1) and the bracket (earth).
2. Use jumper cables to connect terminal (1) of the glow plug relay to the battery (+) terminal and the bracket to the battery (–) terminal

   Caution
   (1) Always be sure to disconnect the harnesses connected to glow plug relay terminals (2) and (3) before using the jumper cables.
   (2) The terminals of the disconnected harnesses must not be shorted to earth.
   (3) When connecting the jumper cables, be very careful not to make a mistake in connecting the terminals, as this will cause damage to the relay.
3. Check the continuity between glow plug relay terminals (2) and (3) while disconnecting and connecting the jumper cable at the battery (+) terminal

Jumper cable at battery (+) terminal	Continuity between terminals (2) – (3)
Connected	Continuity (0.01 Ω or less)
Disconnected	No continuity (infinite resistance)

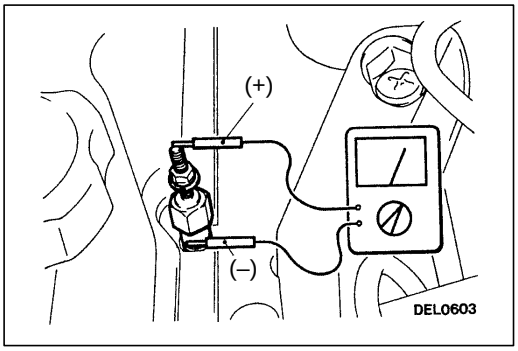

GLOW PLUG CHECK

16400190051

1. Remove the glow plug plate.
2. Measure the resistance between the glow plug terminals and the body.

   Standard value: 0.4 – 0.6 Ω (at 20 °C)

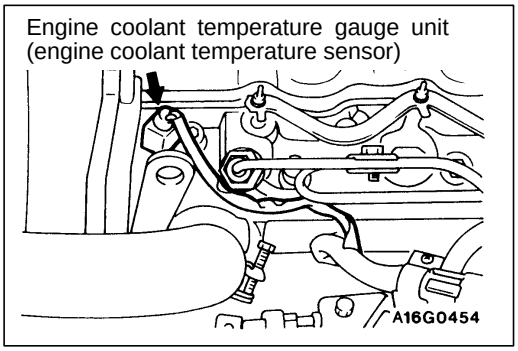

ENGINE COOLANT TEMPERATURE SENSOR CHECK

16400280031

1. Remove the engine coolant temperature sensor.

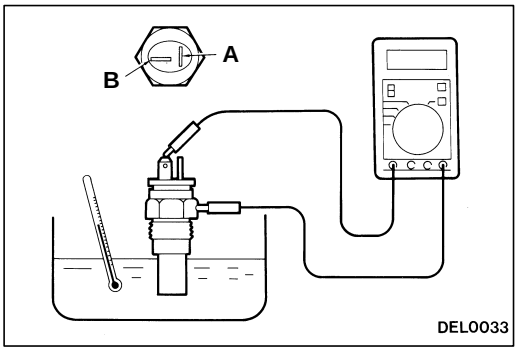

2. While the sensor section of the engine coolant temperature sensor is immersed, measure the resistance between (B) terminal and the body.

Temperature (°C)	Resistance value (kΩ)
0	8.6
20	3.25 ± 0.33
40	1.5
80	0.3

3. After applying specified sealant to the threaded portion, tighten to the specified torque.

   Specified sealant:
   3M Nut Locking Part No. 4171 or equivalent

   Tightening torque: 35 Nm

GLOW PLUG

16400180027

REMOVAL AND INSTALLATION

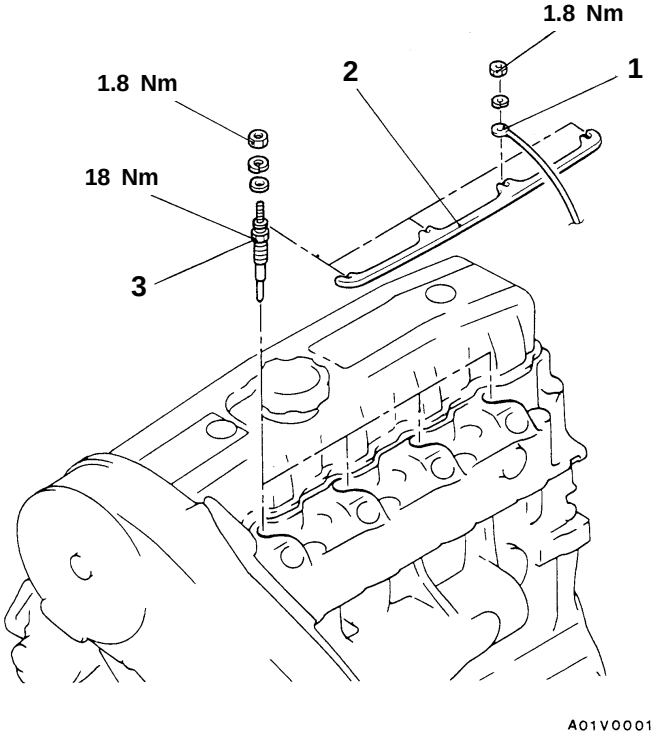

Removal steps

1. Connector connection
2. Glow plug plate
◀A▶ 3. Glow plug

REMOVAL SERVICE POINT

◀A▶ GLOW PLUG REMOVAL

Remove glow plug by hand after loosening with tool as its ceramic part is fragile.

INSPECTION

16400190044

- Check for rust on glow plug plate.
- Check glow plug for damage.

Caution

Do not use a plug that has been dropped from a height of 10 cm or more.