GENERAL

CONTENTS

00109000423

HOW TO USE THIS MANUAL 2

Scope of Maintenance, Repair and Servicing Explanations 2

Definition of Terms 2

Indication of Tightening Torque 2

Model Indications 3

Explanation of Manual Contents 4

HOW TO USE TROUBLESHOOTING/ INSPECTION SERVICE POINTS 6

Troubleshooting Contents 6

Diagnosis Function 7

How to Use the Inspection Procedures 9

Connector Measurement Service Points 10

Connector Inspection 11

Inspection Service Points for a Blown Fuse ... 12

Points to Note for Intermittent Malfunctions ... 12

TREATMENT BEFORE/AFTER THE FORDING OF A STREAM (4WD VEHICLES) 13

Inspection and Service before Fording a Stream 13

Inspection and Service after Fording a Stream 15

VEHICLE IDENTIFICATION 16

Vehicle Information Code Plate 16

Models 17

Model Code 18

Chassis Number 19

Engine Model Number 20

MAJOR SPECIFICATIONS 21

PRECAUTIONS BEFORE SERVICE 25

SUPPLEMENTAL RESTRAINT SYSTEM (SRS) 29

SUPPORT LOCATIONS FOR LIFTING AND JACKING 32

Support Positions for a Garage Jack and Axle Stands 32

Support Positions for a Single-Post Lift or Double-Post Lift and H-BAR Lift 34

STANDARD PARTS-TIGHTENING-TORQUE TABLE 36

HOW TO USE THIS MANUAL

00100010210

SCOPE OF MAINTENANCE, REPAIR AND SERVICING EXPLANATIONS

This manual provides explanations, etc. concerning procedures for the inspection, maintenance, repair and servicing of the subject model. Note, however, that for engine and transmission-related component parts, this manual covers only on-vehicle inspections, adjustments, and the removal and installation procedures for major components.
For detailed information concerning the inspection, checking, adjustment, disassembly and reassembly of the engine, transmission and major components after they have been removed from the vehicle, please refer to separate manuals covering the engine and the transmission.

ON-VEHICLE SERVICE

“On-vehicle Service” is procedures for performing inspections and adjustments of particularly important locations with regard to the construction and for maintenance and servicing, but other inspection (for looseness, play, cracking, damage, etc.) must also be performed.

INSPECTION

Under this title are presented inspection and checking procedures to be performed by using special tools and measuring instruments and by feeling, but, for actual maintenance and servicing procedures, visual inspections should always be performed as well.

DEFINITION OF TERMS

STANDARD VALUE

Indicates the value used as the standard for judging the quality of a part or assembly on inspection or the value to which the part or assembly is corrected and adjusted. It is given by tolerance.

LIMIT

Shows the standard for judging the quality of a part or assembly on inspection and means the maximum or minimum value within which the part or assembly must be kept functionally or in strength. It is a value established outside the range of standard value.

REFERENCE VALUE

Indicates the adjustment value prior to starting the work (presented in order to facilitate assembly and adjustment procedures, and so they can be completed in a shorter time).

CAUTION

Indicates the presentation of information particularly vital to the worker during the performance of maintenance and servicing procedures in order to avoid the possibility of injury to the worker, or damage to component parts, or a reduction of component or vehicle function or performance, etc.

INDICATION OF TIGHTENING TORQUE

The tightening torque shown in this manual is a basic value with a tolerance of ±10% except the following cases when the upper and lower limits of tightening torque are given.
(1) The tolerance of the basic value is within ±10%.
(2) Special bolts or the like are in use.
(3) Special tightening methods are used.

MODEL INDICATIONS

The following abbreviations are used in this manual for classification of model types.

M/T:	Indicates the manual transmission, or models equipped with the manual transmission.
A/T:	Indicates the automatic transmission, or models equipped with the automatic transmission.
SOHC:	Indicates an engine with the single overhead camshaft, or a model equipped with such an engine.
MPI:	Indicates the multi-point injection, or engines equipped with the multi-point injection.
DIESEL:	Indicates a diesel engine, or models equipped with such an engine.
2WD:	Indicates the rear wheel-drive vehicles.
4WD:	Indicates the 4 wheel-drive vehicles.

EXPLANATION OF MANUAL CONTENTS

Indicates procedures to be performed before the work in that section is started, and procedures to be performed after the work in that section is finished.

Component Diagram
A diagram of the component parts is provided near the front of each section in order to give a reader a better understanding of the installed condition of component parts.

Indicates (by symbols) where lubrication is necessary.

Maintenance and Servicing Procedures
The numbers provided within the diagram indicate the sequence for maintenance and servicing procedures.

- Removal steps:
  The part designation number corresponds to the number in the illustration to indicate removal steps.
- Disassembly steps:
  The part designation number corresponds to the number in the illustration to indicate disassembly steps.
- Installation steps:
  Specified in case installation is impossible in reverse order of removal steps. Omitted if installation is possible in reverse order of removal steps.
- Reassembly steps:
  Specified in case reassembly is impossible in reverse order of disassembly steps. Omitted if reassemby is possible in reverse order of disassembly steps.

Classifications of Major Maintenance/Service Points

When there are major points relative to maintenance and servicing procedures (such as essential maintenance and service points, maintenance and service standard values, information regarding the use of special tools, etc.), these are arranged together as major maintenance and service points and explained in detail.

◀A▶ : Indicates that there are essential points for removal or disassembly.
▶A◀ : Indicates that there are essential points for installation or reassembly.

Symbols for Lubrication, Sealants and Adhesives

Information concerning the locations for lubrication and for application of sealants and adhesives is provided, by using symbols, in the diagram of component parts or on the page following the component parts page, and explained.

: Grease
(multipurpose grease unless there is a brand or type specified)

: Sealant or adhesive

: Brake fluid or automatic transmission fluid

: Engine oil, gear oil or air conditioner compressor oil

: Adhesive tape or butyl rubber tape

Indicates the group title.

Indicates the section title.

Indicates the group number.

Indicates the page number.

STEERING – Power Steering Oil Pump 37A-29

POWER STEERING GEAR BOX

120000039

REMOVAL AND INSTALLATION

Pre-removal Operation
(1)Power Steering Fluid Draining (Refer to P. 37A-10.)
(2)Air Cleaner Assembly Removal
(3)Under Cover Removal (Refer to GROUP 42 – Under Cover.)

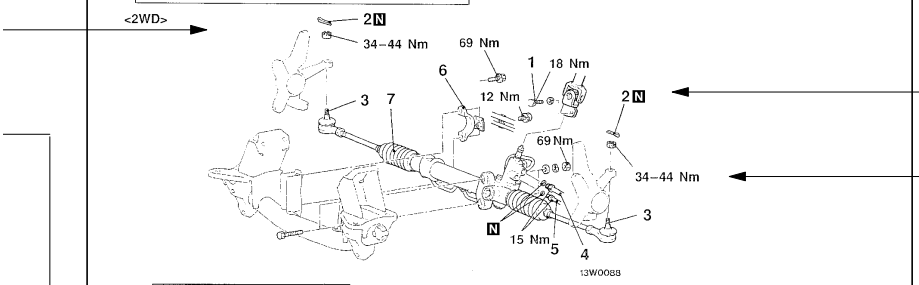

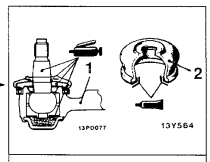

Sealant: 3M ATD Part No. 8661 or equivalent

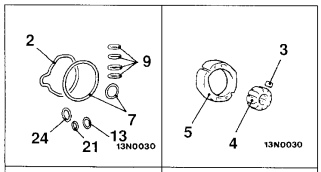

Oil pump seal kit	Oil pump cartridge kit

Removal steps
1. Lower shaft assembly and gear box connecting bolt
2. Split pin
3. Connection for tie-rod end and knuckle
4. Connection for return tube
5. Connection for pressure tube
6. Clamp
7. Gear box assembly

◀A▶ ◀B▶

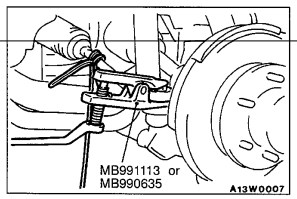

REMOVAL SERVICE POINTS

◀A▶ TIE-ROD END DISCONNECTION

Caution
1. **Using the special tool, loosen the tie rod end mounting nut. Only loosen the nut; do not remove it from the ball joint.**
2. **Support the special tool with a cord, etc. to prevent it from coming off.**

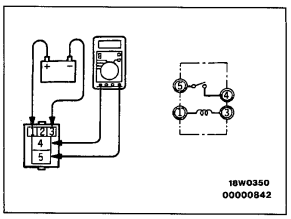

HEADLAMP RELAY CONTINUITY INSPECTION

Battery voltage	Terminal No.			
	1	3	4	5
Power is not supplied	○	○		
Power is supplied	⊕	⊖	○	○

35A-26 BASIC BRAKE SYSTEM – Master Cylinder and Brake Booster

Lubrication and sealing points

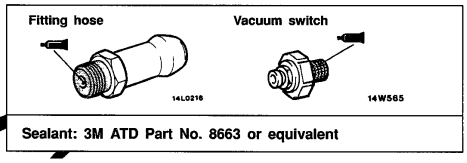

Sealant: 3M ATD Part No. 8663 or equivalent

00002471

Denotes non-reusable part.

Denotes tightening torque.
For bolts and nuts which do not have a tightening torque listed, refer to the "Standard Parts-tightening-torque Table".

Repair kit or set parts are shown. (Only very frequently used parts are shown.)

Operating procedures, cautions, etc. on removal, installation, disassembly and reassembly are described.

○——○ indicates that there is a continuity between the terminals.
⊕——⊖ indicates terminals to which battery voltage is applied.

The title of the page (following the page on which the diagram of component parts is presented) indicating the locations of lubrication and sealing procedures.

HOW TO USE TROUBLESHOOTING/INSPECTION SERVICE POINTS

00100020091

Troubleshooting of electronic control systems for which the MUT-II can be used follows the basic outline described below. Furthermore, even in systems for which the MUT-II cannot be used, part of these systems still follow this outline.

TROUBLESHOOTING CONTENTS

1. STANDARD FLOW OF DIAGNOSIS TROUBLESHOOTING

The troubleshooting sections follow the basic diagnosis flow which is given below. If the diagnosis flow is different from that given below, or if additional explanation is required, the details of such differences or additions will also be listed.

Diagnosis method

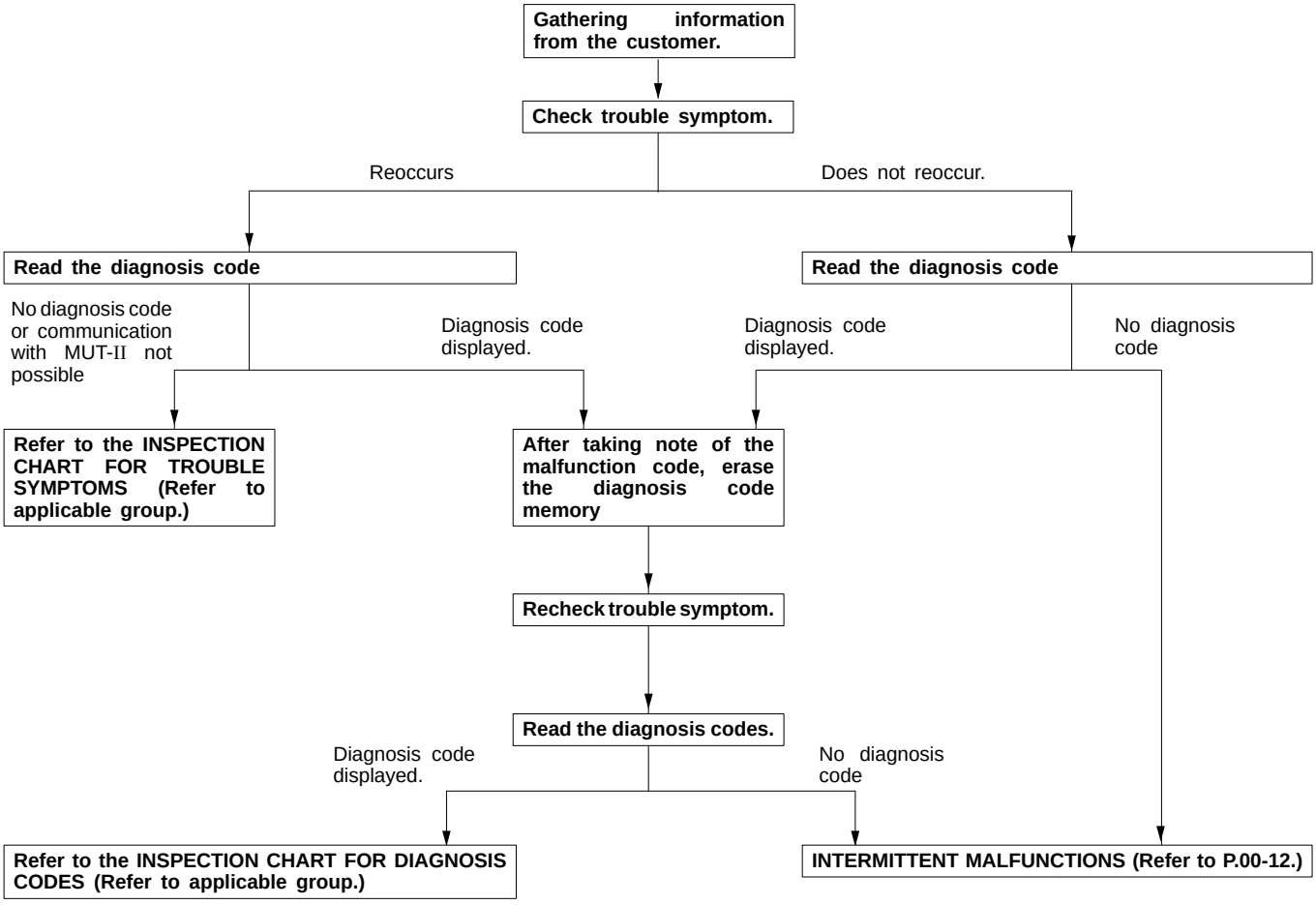

2. SYSTEM OPERATION AND SYMPTOM VERIFICATION TESTS

If verification of the trouble symptoms is difficult, procedures for checking operation and verifying trouble symptoms are shown.

3. DIAGNOSIS FUNCTION

Details which are different from those in the “Diagnosis Function” section on the next page are listed.

4. INSPECTION CHART FOR DIAGNOSIS CODES

5. INSPECTION PROCEDURE FOR DIAGNOSIS CODES

Indicates the inspection procedures corresponding to each diagnosis code. (Refer to P.00-9 for how to read the inspection procedures.)

6. INSPECTION CHART FOR TROUBLE SYMPTOMS

If there are trouble symptoms even though the results of inspection using the MUT-II show that all diagnosis codes are normal, inspection procedures for each trouble symptom will be found by means of this chart.

7. INSPECTION PROCEDURE FOR TROUBLE SYMPTOM

Indicates the inspection procedures corresponding to each trouble symptoms classified in the Inspection Chart for Trouble Symptoms. (Refer to P.00-9 for how to read the inspection procedures.)

8. SERVICE DATA REFERENCE TABLE

Inspection items and normal judgement values have been provided in this chart as reference information.

9. CHECK AT ECU TERMINALS

Terminal numbers for the ECU connectors, inspection items and standard values have been provided in this chart as reference information.

10. INSPECTION PROCEDURES USING AN OSCILLOSCOPE

When there are inspection procedures using an oscilloscope, these are listed here.

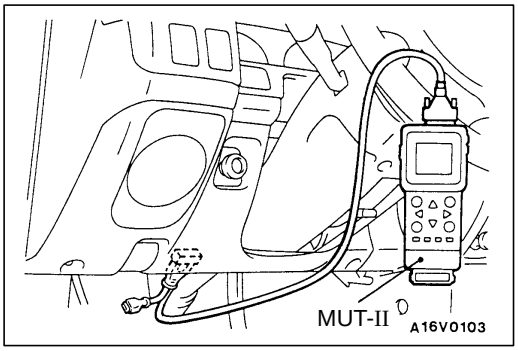

DIAGNOSIS FUNCTION

METHOD OF READING DIAGNOSIS CODES

WHEN USING THE MUT-II

Connect the MUT-II to the diagnosis connector and take a reading of the diagnosis codes.

Caution
Turn off the ignition switch before connecting or disconnecting the MUT-II.

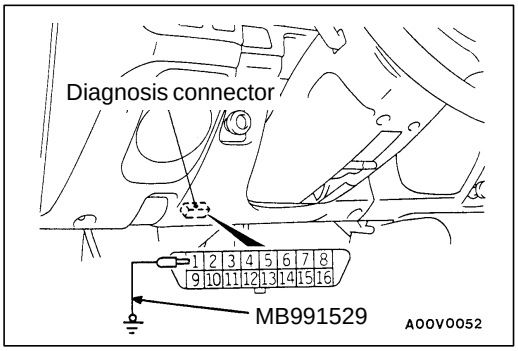

WHEN USING THE WARNING LAMP

1. Use the special tool to earth No.1 terminal (diagnosis control terminal) of the diagnosis connector.
2. To check ABS system, remove the valve relay.

   NOTE
   That is because the valve relay is off and the warning lamp remains illuminated if there is a fault in the ABS system.
3. Turn off the ignition switch.
4. Read out a diagnosis code by observing how the warning lamp flashes.

Applicable systems

System name	Warning lamp name
MPI	Engine warning lamp
ABS	ABS warning lamp

Indication of diagnosis code by warning lamp

When the diagnosis code No.24 is output	When no diagnosis code is output*
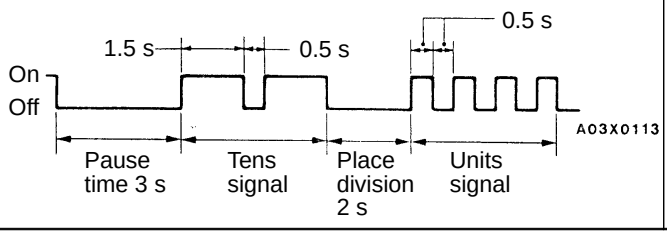	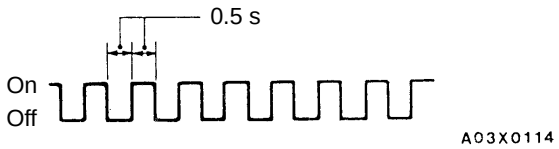

NOTE
*: Even if the ABS system is normal, removing the valve relay causes the diagnosis code No.51 to be output.

METHOD OF ERASING DIAGNOSIS CODES

WHEN USING THE MUT-II

Connect the MUT-II to the diagnosis connector and erase the diagnosis code.

Caution
Turn off the ignition switch before connecting or disconnecting the MUT-II.

WHEN NOT USING THE MUT-II

(1) Turn the ignition switch to OFF.
(2) After disconnecting the battery cable from the battery (–) terminal for 10 seconds or more, reconnect the cable.
(3) After the engine has warmed up, run it at idle for about 15 minutes.

HOW TO USE THE INSPECTION PROCEDURES

The causes of a high frequency of problems occurring in electronic circuitry are generally the connectors, components, the ECU and the harnesses between connectors, in that order. These inspection procedures follow this order, and they first try to discover a problem with a connector or a defective component.

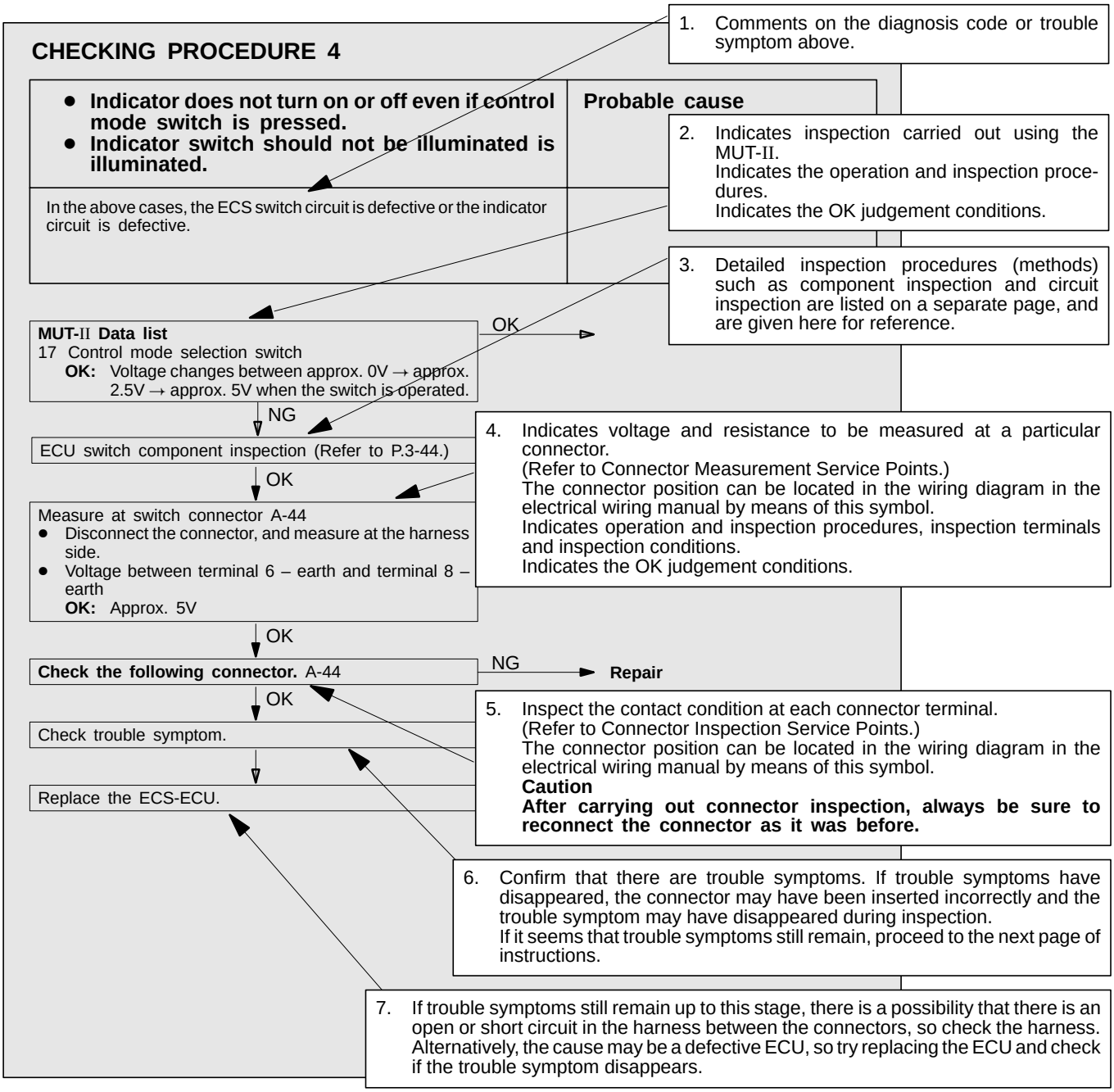

HARNESS INSPECTION

Check for an open or short circuit in the harness between the terminals which were defective according to the connector measurements. Carry out this inspection while referring to the electrical wiring manual. Here, “Check harness between power supply and terminal xx” also includes checking for blown fuses. For inspection service points when there is a blown fuse, refer to “Inspection Service Points for a Blown Fuse.”

MEASURES TO TAKE AFTER REPLACING THE ECU

If the trouble symptoms have not disappeared even after replacing the ECU, repeat the inspection procedure from the beginning.

CONNECTOR MEASUREMENT SERVICE POINTS

Turn the ignition switch to OFF when connecting disconnecting the connectors, and turn the ignition switch to ON when measuring if there are no instructions to be contrary.

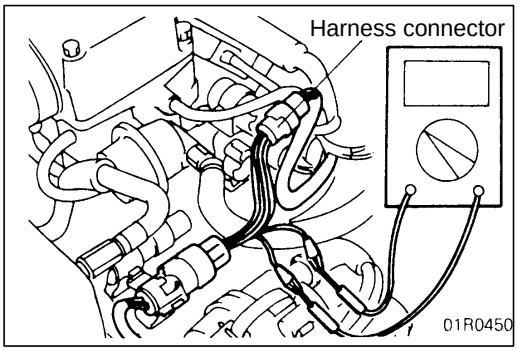

IF INSPECTING WITH THE CONNECTOR CONNECTED (WITH CIRCUIT IN A CONDITION OF CONTINUITY)

Waterproof Connectors

Be sure to use the special tool (harness connector). Never insert a test bar from the harness side, because to do so will reduce the waterproof performance and result in corrosion.

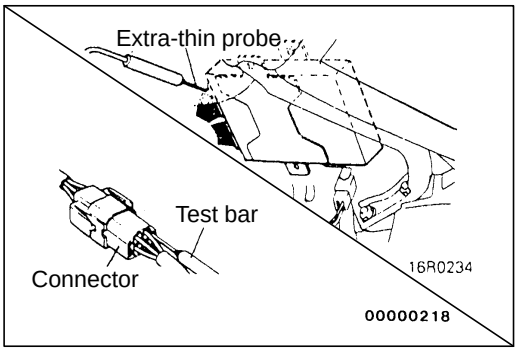

Ordinary (non-waterproof) Connectors

Check by inserting the test bar from the harness side. Note that if the connector (control unit, etc.) is too small to permit insertion of the test bar, it should not be forced; use a special tool (the extra-thin probe in the harness set for checking for this purpose.

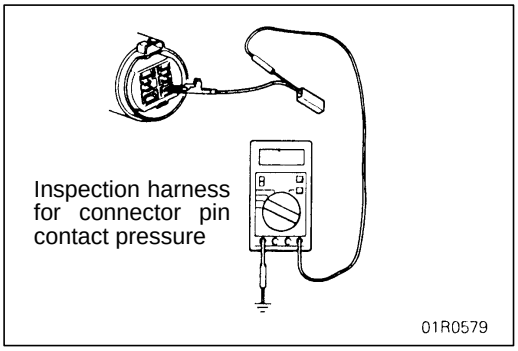

IF INSPECTING WITH THE CONNECTOR DISCONNECTED

<When Inspecting a Female Pin>

Use the special tool (inspection harness for connector pin contact pressure in the harness set for inspection).
The inspection harness for connector pin contact pressure should be used. the test bar should never be forcibly inserted, as it may cause a defective contact.

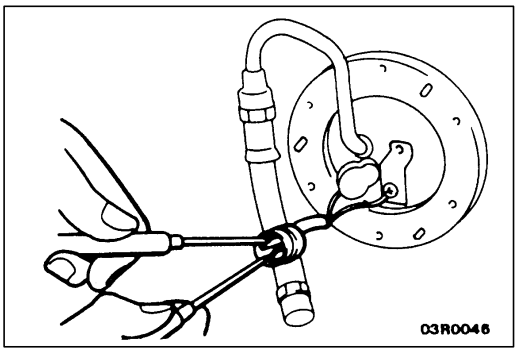

<When Inspecting a Male Pin>

Touch the pin directly with the test bar.

Caution

At this time, be careful not to short the connector pins with the test bars. To do so may damage the circuits inside the ECU.

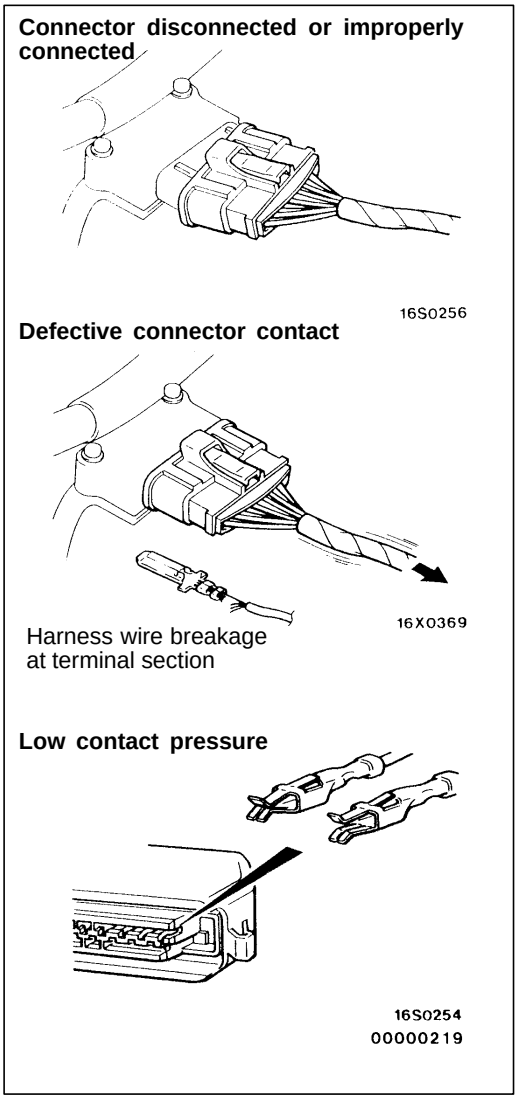

CONNECTOR INSPECTION

VISUAL INSPECTION

- Connector is disconnected or improperly connected
- Connector pins are pulled out
- Due to harness tension at terminal section
- Low contact pressure between male and female terminals
- Low connection pressure due to rusted terminals or foreign matter lodged in terminals

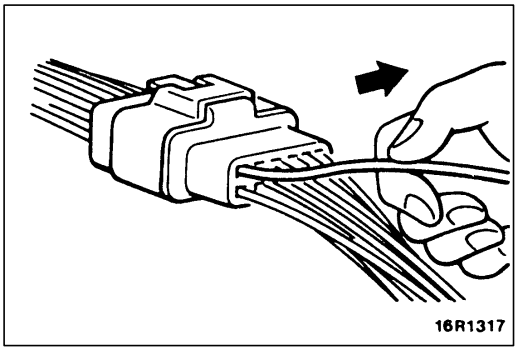

CONNECTOR PIN INSPECTION

If the connector pin stopper is damaged, the terminal connections (male and female pins) will not be perfect even if the connector body is connected, and the pins may pull out of the reverse side of the connector. Therefore, gently pull the harnesses one by one to make sure that no pins pull out of the connector.

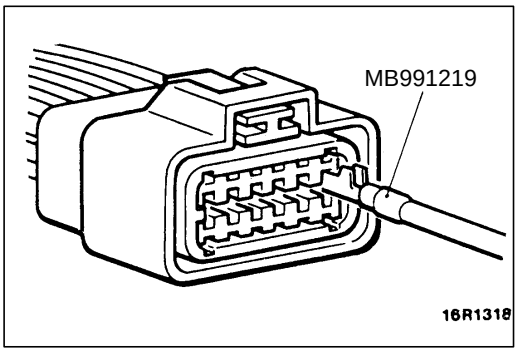

CONNECTOR ENGAGEMENT INSPECTION

Use the special tool (connector pin connection pressure inspection harness of the inspection harness set) to inspect the engagement of the male pins and females pins. (Pin drawing force : 1 N or more)

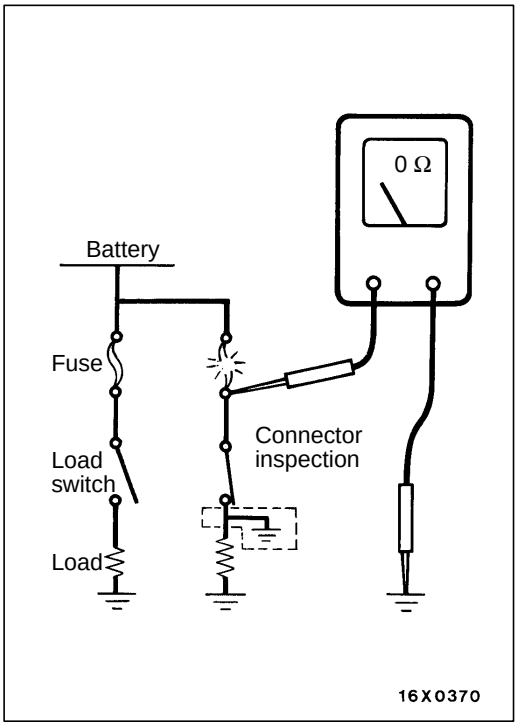

INSPECTION SERVICE POINTS FOR A BLOWN FUSE

Remove the fuse and measure the resistance between the load side of the fuse and the earth. Set the switches of all circuits which are connected to this fuse to a condition of continuity. If the resistance is almost 0 Ω at this time, there is a short somewhere between these switches and the load. If the resistance is not 0 Ω, there is no short at the present time, but a momentary short has probably caused the fuse to blow.

The main causes of a short circuit are the following.

- Harness being clamped by the vehicle body
- Damage to the outer casing of the harness due to wear or heat
- Water getting into the connector or circuitry
- Human error (mistakenly shorting a circuit, etc.)

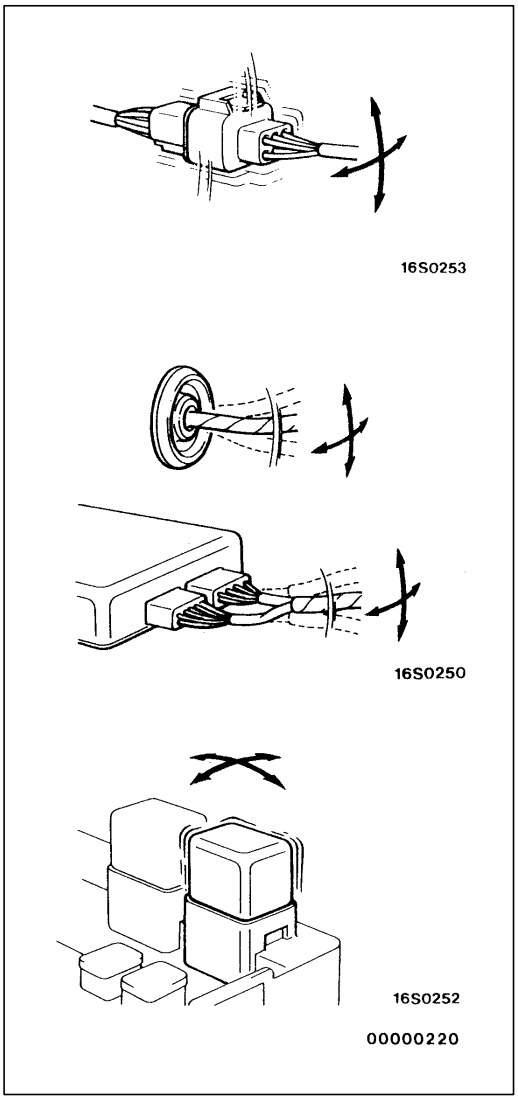

POINTS TO NOTE FOR INTERMITTENT MALFUNCTIONS

Intermittent malfunctions often occur under certain conditions, and if these conditions can be ascertained, determining the cause becomes simple. In order to ascertain the conditions under which an intermittent malfunction occurs, first ask the customer for details about the driving conditions, weather conditions, frequency of occurrence and trouble symptoms, and then try to recreate the trouble symptoms. Next, ascertain whether the reason why the trouble symptom occurred under these conditions is due to vibration, temperature or some other factor. If vibration is thought to be the cause, carry out the following checks with the connectors and components to confirm whether the trouble symptom occurs.
The objects to be checked are connectors and components which are indicated by inspection procedures or given as probable causes (which generates diagnosis codes or trouble symptoms.)

- Gently shake the connector up, down and to the left and right.
- Gently shake the wiring harness up, down and to the left and right.
- Gently rock each sensor and relay, etc. by hand.
- Gently shake the wiring harness at suspensions and other moving parts.

NOTE
If determining the cause is difficult, the flight recorder function of the MUT-II can also be used.

TREATMENT BEFORE/AFTER THE FORDING OF A STREAM (4WD VEHICLES)

00100060031

INSPECTION AND SERVICE BEFORE FORDING A STREAM

Vehicles which are driven through water, or which may possibly be driven through water, should be subjected to the following inspections and maintenance procedures in advance.

- Seal the speedometer cable with a water-resistant grease or tape.
- Inspect the dust boots and breather hose for cracks or damage, and replace them if cracks or damage are found.

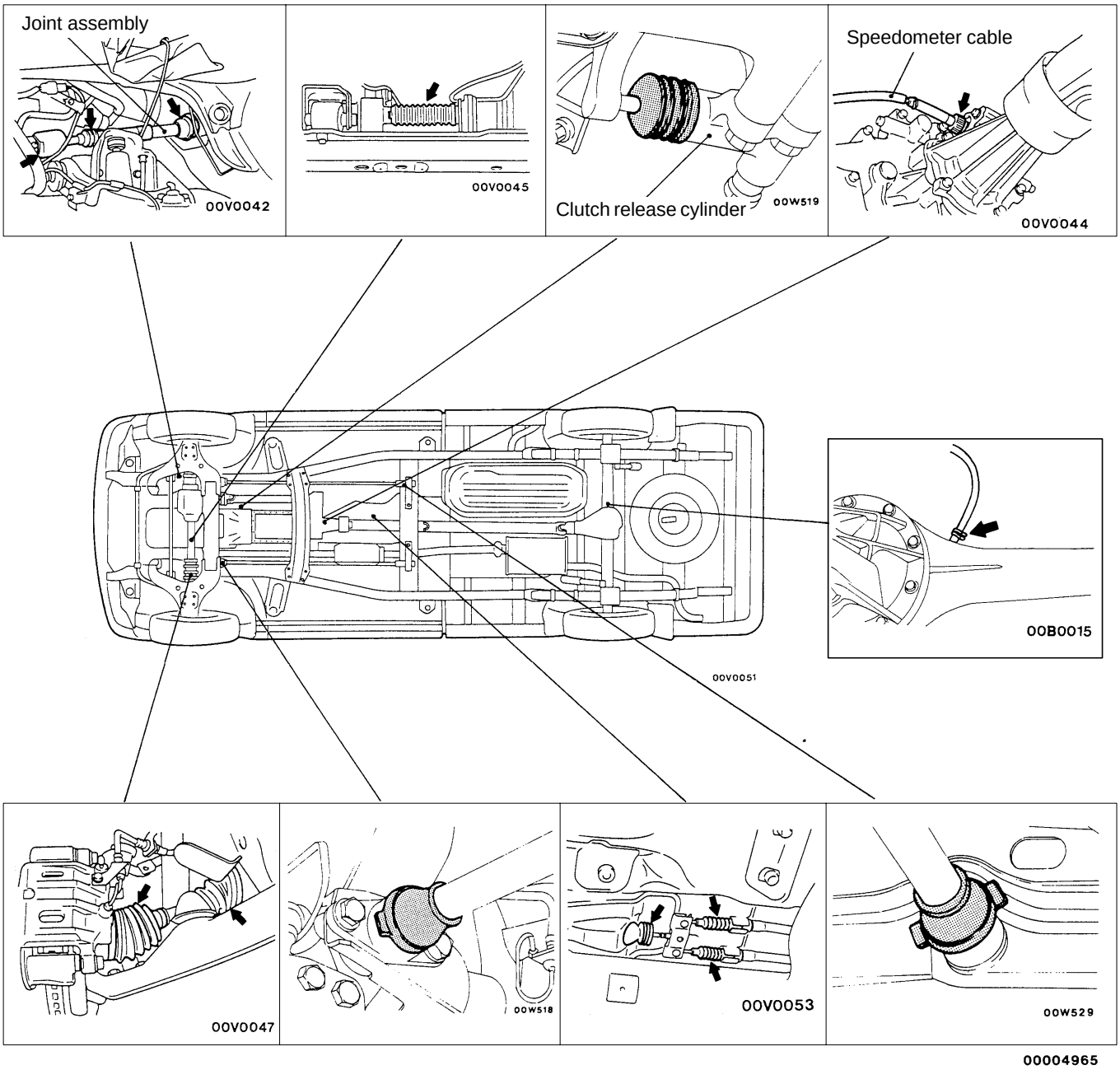

00004965

- Apply grease to the lubricating points of the front suspension, steering linkage and propeller shaft.

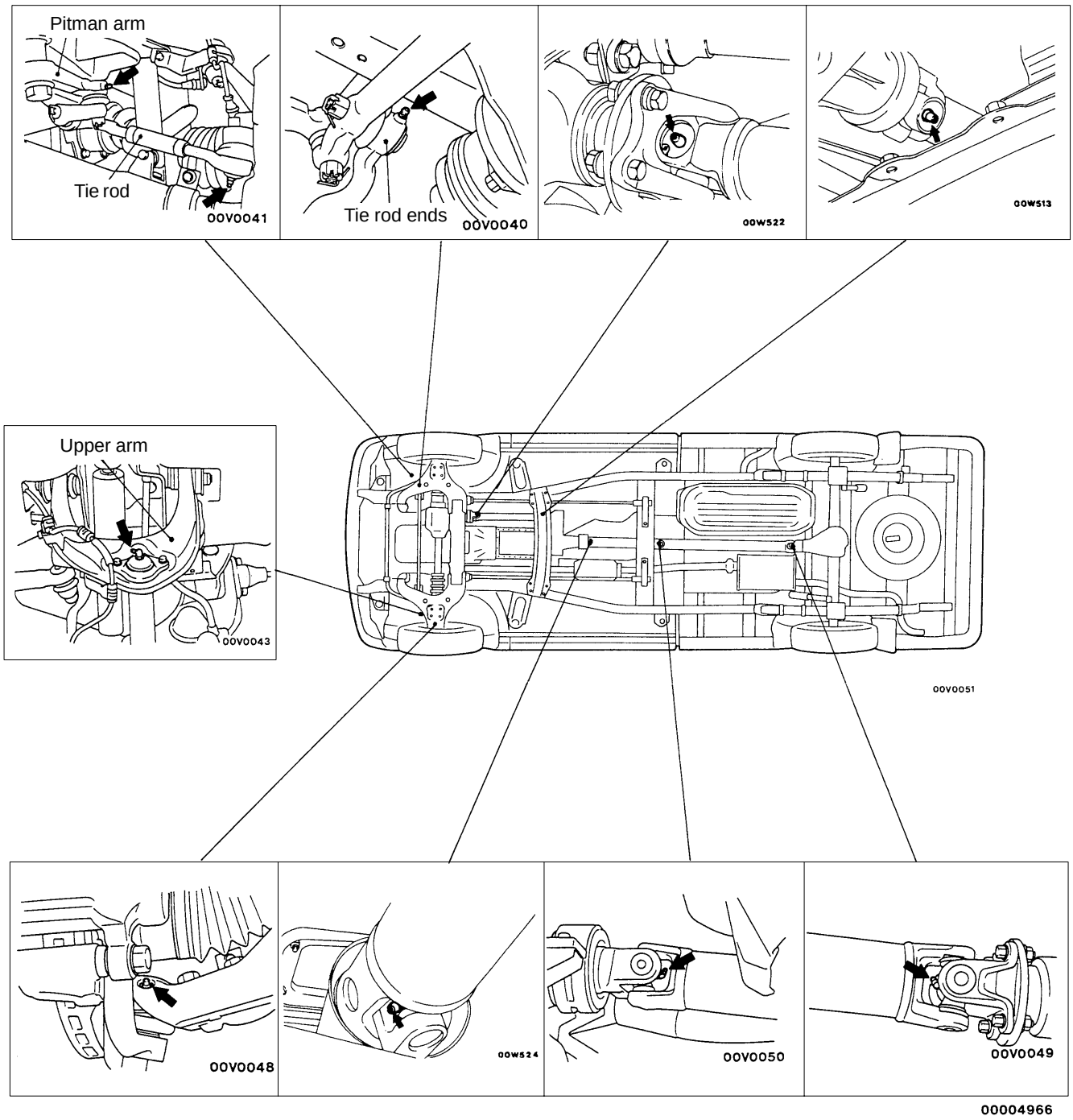

INSPECTION AND SERVICE AFTER FORDING A STREAM

After fording a stream, check the following points. If abnormal condition is evident, clean, replace or lubricate.

- Check for water, mud, sand, etc. in the rear brake drum, clutch housing, starter motor, brake pipe and fuel pipe.
- Check for water in the fluid or oil inside the front differential, rear differential, transmission and transfer.
- Apply grease to the lubricating points of the front suspension, steering linkage and propeller shaft.
- Check all boots and breather hoses for cracks and damage.

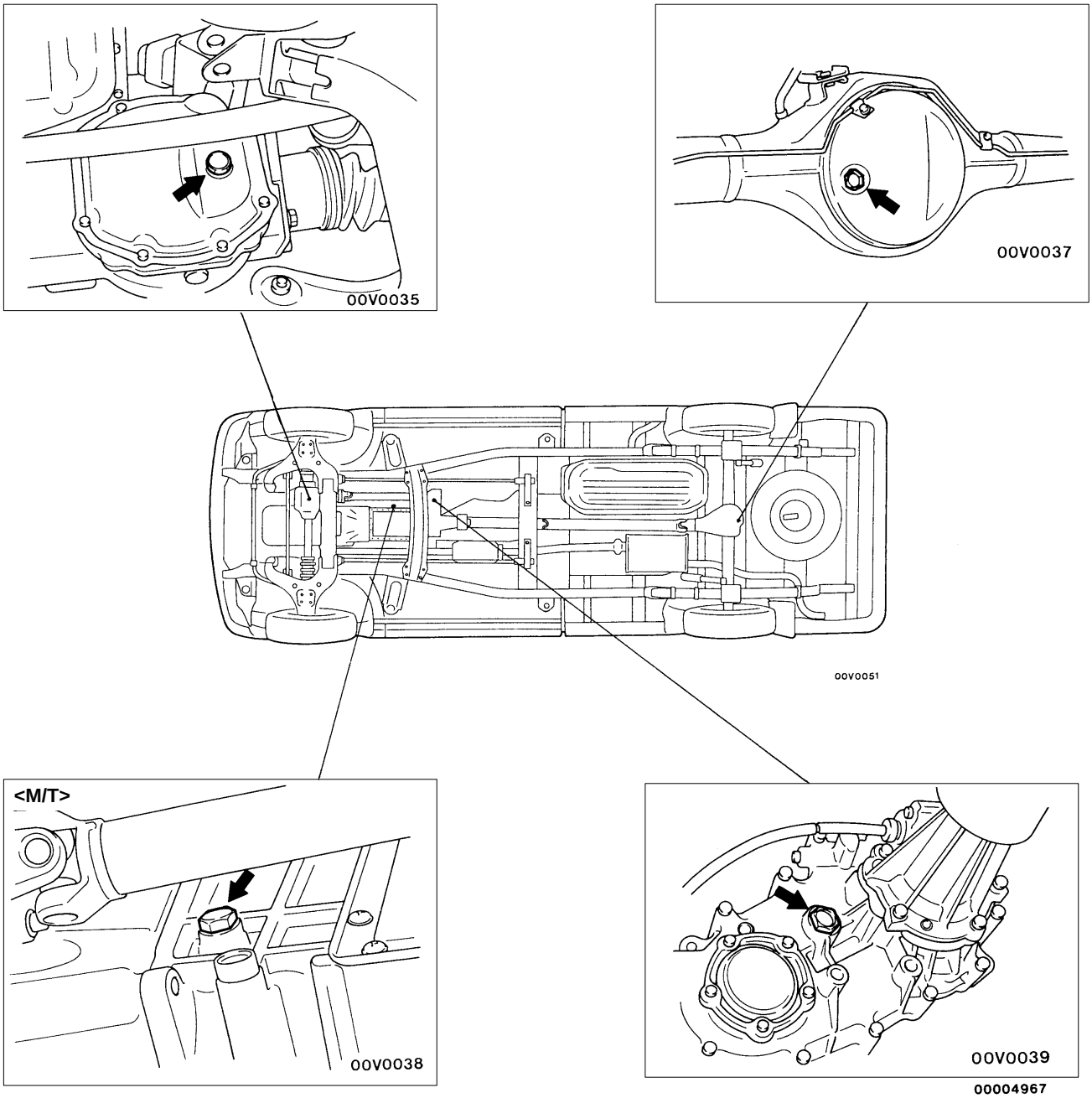

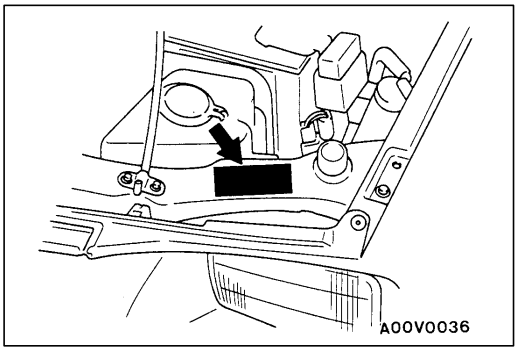

VEHICLE IDENTIFICATION

00100540061

VEHICLE INFORMATION CODE PLATE

LOCATION

Vehicle information code plate is riveted on the upside of the headlamp support panel inside the engine compartment.

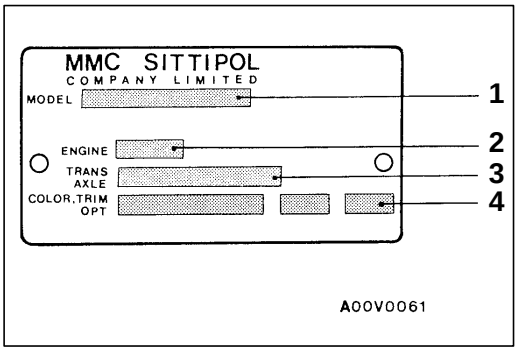

CODE PLATE DESCRIPTION

The plate shows model code, engine model, transmission model, and body colour code.

No.	Item	Contents	
1	MODEL	K62T JERDEL6	K62T: Vehicle model
			JERDEL6: Model series
2	ENGINE	4G63	Engine model
3	TRANS AXLE	R4AW2 4636	R4AW2: Transmission code
			4636: Rear differential reduction
4	COLOR TRIM OPT	B60 41H 03V	B60: Body colour code
			41H: Interior code
			03V: Equipment code

For monotone colour vehicles, the body colour code shall be indicated. For two-tone colour vehicles, each colour code only shall be indicated in series.

MODELS

00100550064

Model Code		Engine model	Transmission model	Fuel supply system
K62T	JERDEL6	4G63-SOHC (1,997 mℓ)	R4AW2 (2WD-4A/T)	MPI
	ENDEL6		R5M21 (2WD-5M/T)	
K64T	YNDL6	4D56 (2,477mℓ)	R5M21 (2WD-5M/T)	Fuel injection
	ZNDL6			
	ENDL6			
	ENDR6			
	CENDL6			
	JENDL6			
K75T	CENDEL6	4G64-SOHC (2,351 mℓ)	V5M21 (4WD-5M/T)	MPI
K74T	YNDFL6	4D56-Turbocharger with intercooler (2,477 mℓ)	V5MT1 (4WD-5M/T)	Fuel injection
	ZNDFL6			
	ENDFR6			
	JERDFL6		V4AW2 (4WD-4A/T)	
	GJENXFL6		V5MT1(4WD-5M/T)	
	CENDFL6			
	JENDFL6			
	JENHFL6			

MODEL CODE

00100040134

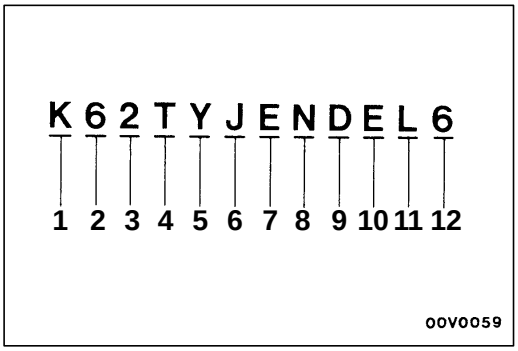

No.	Items	Contents
1	Vehicle line	K: L200
2	Drive system	6: 2WD
		7: 4WD
3	Engine type	2: 1,997 mℓ Petrol engine
		4: 2,477 mℓ Diesel engine
		5: 2,351 mℓ Petrol engine
4	Group	T: Truck
5	Vehicle wide, Cargo bed	None: Standard wide, With cargo bed
		G: Wide fender, with cargo bed
		Y: Without cargo bed (Cab and chassis, Single cab)
		Z: Without cargo bed (Cab and chassis, Double cab)
6	Cabin shape	None: Single cab
		J: Double cab
		C: Club cab
7	Rear body shape	None: Cab and chassis
		E: Smooth surface and low floor
8	Transmission type	N: 5-speed manual transmission (Floor shift)
		R: 4-speed automatic transmission (Floor shift)
9	Vehicle grade	D: GL
		H: GLX
		X: GLS
10	Specified engine feature	None: N/A
		E: MPI
		F: I/C T/C
11	Steering wheel location	L: Left hand
		R: Right hand
12	Destination	6: For Europe

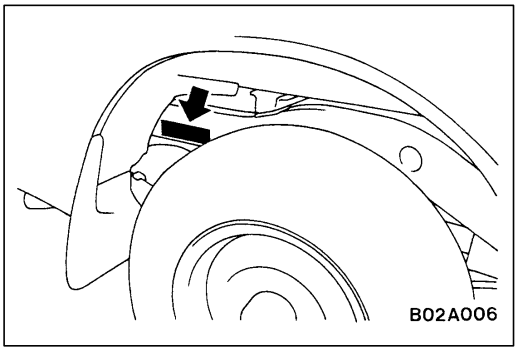

CHASSIS NUMBER

00100560067

The chassis number is stamped on the side wall of the frame near the rear wheel (R.H.).

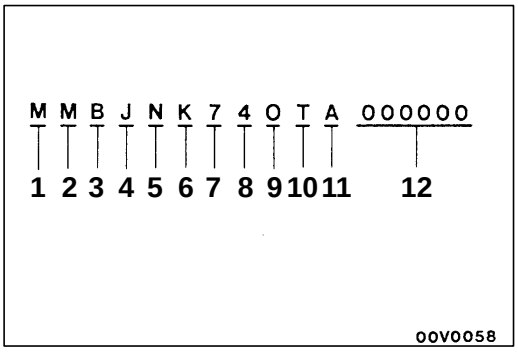

No.	Items		Contents
1	Continent	M	ASIA
2	Country	M	THAILAND
3	Register code	B	Follow register
4	Body shape	C	Club cab
		J	Double cab
		O	Single cab
		Y	Single cab without rear body
		Z	Double cab without rear body
5	Transmission type	N	5-speed manual transmission
		R	4-speed automatic transmission
6	Vehicle line	K	Mitsubushi L200
7	Body type	6	Long wheelbase
		7	4WD, Long wheelbase
8	Engine type	2	4G63: 1,997 mℓ petrol engine
		4	4D56: 2,477 mℓ diesel engine
		5	4G64: 2,351 mℓ petrol engine
9	International production control code	O	A, B, C,... etc. 0 (zero): No meaning
10	Model year	T	1996
11	Plant	A	A, C: LARDKRABANG factory D,F: LAEMCHABANG factory
12	Serial number	–	–

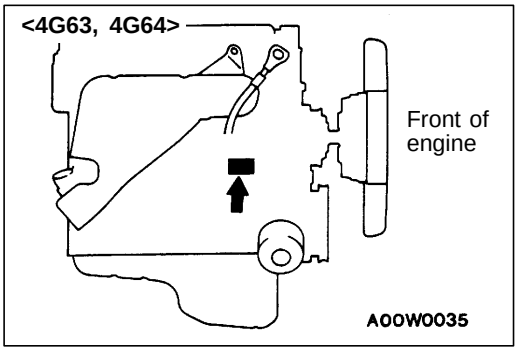

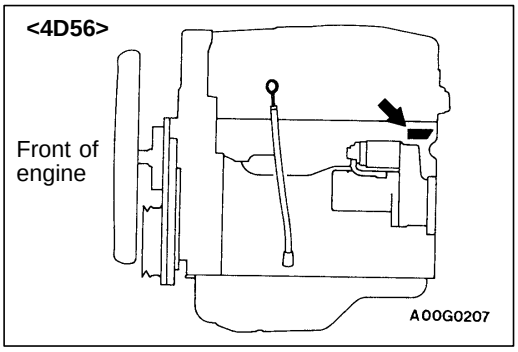

ENGINE MODEL NUMBER

00100570060

1. The engine model number is stamped at the cylinder block as shown in the following.

Engine model	Engine displacement mℓ
4G63	1,997
4G64	2,351
4D56	2,477

2. The engine serial number is stamped near the engine model number.

Engine serial number	AA0201 to YY9999

MAJOR SPECIFICATIONS

00100090146

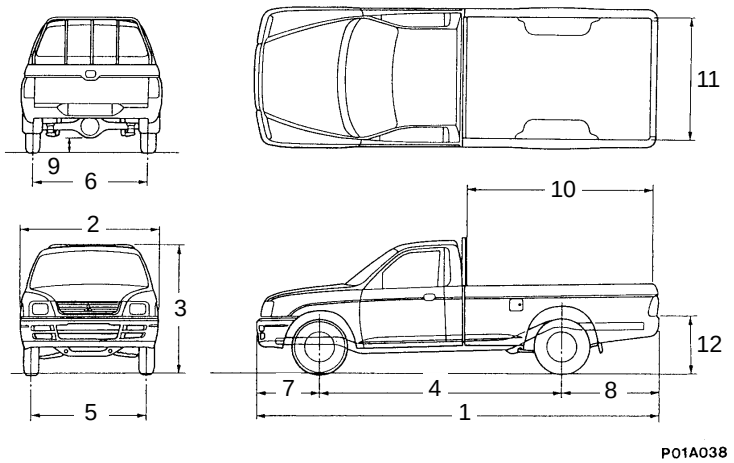

<2WD Single cab>

Items			K62T ENDEL6	K64T ENDL6	K64T YNDL6	K64T ENDR6
Vehicle dimensions mm	Overall length	1	4,935	4,935	4,775	4,935
	Overall width	2	1,695	1,695	1,695	1,695
	Overall height (unladen)	3	1,585	1,585	1,585	1,585
	Wheelbase	4	2,950	2,950	2,950	2,950
	Track-front	5	1,450	1,450	1,450	1,450
	Track-rear	6	1,435	1,435	1,435	1,435
	Overhang-front	7	775	775	775	775
	Overhang-rear	8	1,210	1,210	1,210	1,210
	Ground clearance (unladen)	9	190	190	190	190
	Cargo area length	10	2,245	2,245	–	2,245
	Cargo area width	11	1,470	1,470	–	1,470
	Cargo bed height	12	680	680	–	680
Vehicle weight kg	Kerb weight		1,315	1,365	1,235	1,365
	Max. gross vehicle weight rating		2,520	2,570	2,570	2,570
	Max. axle weight rating-front		1,000	1,000	1,000	1,000
	Max. axle weight rating-rear		1,700	1,700	1,700	1,700
	Max. trailer weight	With brake	1,500	1,500	1,500	1,500
		Without brake	500	500	500	500
	Max. trailer-nose weight		75	75	75	75
Seating capacity			2	2	2	2
Engine	Model No.		4G63	4D56	4D56	4D56
	Total displacement mℓ		1,997	2,477	2,477	2,477
Transmis-sion	Model No.		R5M21	R5M21	R5M21	R5M21
	Type		5-speed manual	5-speed manual	5-speed manual	5-speed manual
Fuel system	Fuel supply system		MPI	Fuel injection	Fuel injection	Fuel injection

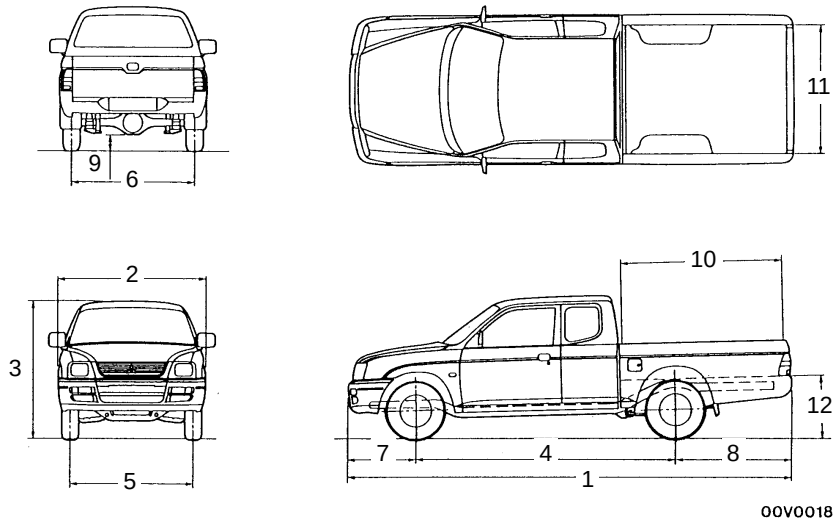

<2WD Double cab, Club cab>

Items				K64T CENDL6	K62T JERDEL6	K64T JENDL6	K64T ZENDL6
Vehicle dimensions mm	Overall length		1	5,050	4,935	4,935	4,775
	Overall width		2	1,695	1,695	1,695	1,695
	Overall height (unladen)		3	1,605	1,610	1,610	1,625
	Wheelbase		4	2,950	2,950	2,950	2,950
	Track-front		5	1,450	1,450	1,450	1,450
	Track-rear		6	1,435	1,435	1,435	1,435
	Overhang-front		7	775	775	775	775
	Overhang-rear		8	1,325	1,210	1,210	1,210
	Ground clearance (unladen)		9	190	190	190	190
	Cargo area length		10	1,830	1,500	1,500	–
	Cargo area width		11	1,470	1,470	1,470	–
	Cargo bed height		12	695	680	680	–
Vehicle weight kg	Kerb weight			1,440	1,435	1,465	1,335
	Max. gross vehicle weight rating			2,570	2,520	2,570	2,570
	Max. axle weight rating-front			1,000	1,000	1,000	1,000
	Max. axle weight rating-rear			1,700	1,700	1,700	1,700
	Max. trailer weight	With brake		1,500	1,500	1,500	1,500
		Without brake		500	500	500	500
	Max. trailer-nose weight			75	75	75	75
Seating capacity				4	5	5	5
Engine	Model No.			4D56	4G63	4D56	4D56
	Total displacement mℓ			2,477	1,997	2,477	2,477
Transmis-sion	Model No.			R5M21	R4AW2	R5M21	R5M21
	Type			5-speed manual	4-speed automatic	5-speed manual	5-speed manual
Fuel system	Fuel supply system			Fuel injection	MPI	Fuel injection	Fuel injection

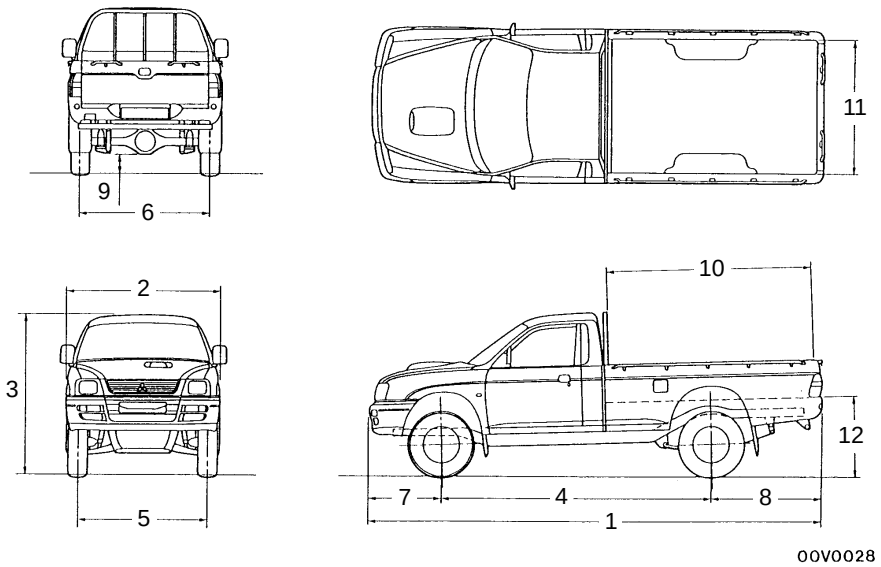

<4WD Single cab, Club cab>

Items				K74T YNDFL6	K74T ENDFR6	K75T CENDEL6	K74T CENDFL6
Vehicle dimensions mm	Overall length		1	4,810	4,935	5,050	5,050
	Overall width		2	1,695	1,695	1,695	1,695
	Overall height (unladen)		3	1,755	1,755	1,775	1,775
	Wheelbase		4	2,960	2,960	2,960	2,960
	Track-front		5	1,420	1,420	1,420	1,420
	Track-rear		6	1,435	1,435	1,435	1,435
	Overhang-front		7	765	765	765	765
	Overhang-rear		8	1,210	1,210	1,325	1,325
	Ground clearance (unladen)		9	215	215	215	215
	Cargo area length		10	–	2,245	1,830	1,830
	Cargo area width		11	–	1,470	1,470	1,470
	Cargo bed height		12	–	860	875	875
Vehicle weight kg	Kerb weight			1,500	1,630	1,615	1,705
	Max. gross vehicle weight rating			2,830	2,830	2,720	2,830
	Max. axle weight rating-front			1,200	1,200	1,200	1,200
	Max. axle weight rating-rear			1,800	1,800	1,800	1,800
	Max. trailer weight	With brake		2,200	2,200	2,200	2,200
		Without brake		500	500	500	500
	Max. trailer-nose weight			100	100	100	100
Seating capacity				2	2	4	4
Engine	Model No.			4D56	4D56	4G64	4D56
	Total displacement mℓ			2,477	2,477	2,351	2,477
Transmis-sion	Model No.			V5MT1	V5MT1	V5M21	V5MT1
	Type			5-speed manual	5-speed manual	5-speed manual	5-speed manual
Fuel system	Fuel supply system			Fuel injection	Fuel injection	MPI	Fuel injection

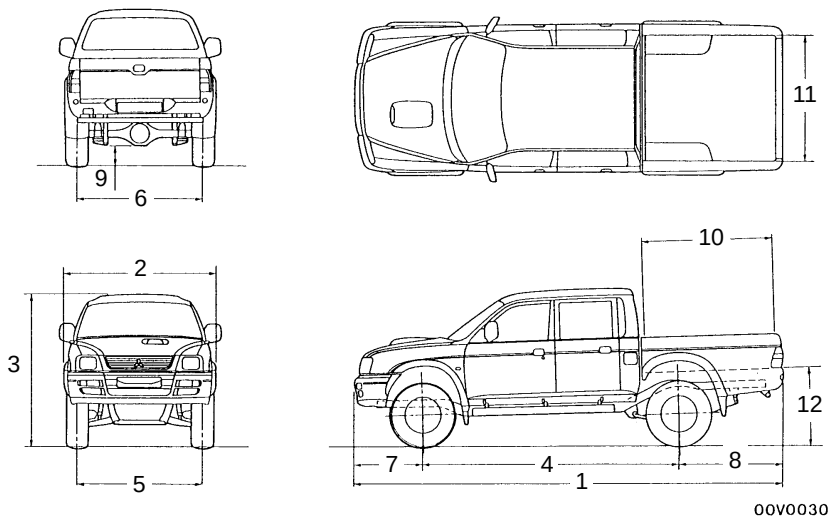

<4WD Double cab>

Items			K74T JENDFL6	K74T ZNDFL6	K74T JERDFL6	K74T JENHFL6	K74T GJENXFL6
Vehicle dimen-sions mm	Overall length	1	4,935	4,810	4,935	4,935	4,935
	Overall width	2	1,695	1,695	1,695	1,695	1,775
	Overall height (unladen)	3	1,780	1,795	1,780	1,780	1,800
	Wheelbase	4	2,960	2,960	2,960	2,960	2,960
	Track-front	5	1,420	1,420	1,420	1,420	1,465
	Track-rear	6	1,435	1,435	1,435	1,435	1,480
	Overhang-front	7	765	765	765	765	765
	Overhang-rear	8	1,210	1,210	1,210	1,210	1,210
	Ground clearance (unladen)	9	215	215	215	215	235
	Cargo area length	10	1,500	–	1,500	1,500	1,500
	Cargo area width	11	1,470	–	1,470	1,470	1,470
	Cargo bed height	12	860	–	860	860	880
Vehicle weight kg	Kerb weight		1,730	1,600	1,735	1,735	1,750
	Max. gross vehicle weight rating		2,830	2,830	2,830	2,830	2,830
	Max. axle weight rating-front		1,200	1,200	1,200	1,200	1,200
	Max. axle weight rating-rear		1,800	1,800	1,800	1,800	1,750
	Max. trailer weight	With brake	2,200	2,200	2,200	2,200	2,200
		Without brake	500	500	500	500	500
	Max. trailer-nose weight		100	100	100	100	100
Seating capacity			5	5	5	5	5
Engine	Model No.		4D56	4D56	4D56	4D56	4D56
	Total displacement mℓ		2,477	2,477	2,477	2,477	2,477
Trans-mission	Model No.		V5MT1	V5MT1	V4AW2	V5MT1	V5MT1
	Type		5-speed manual	5-speed manual	4-speed automatic	5-speed manual	5-speed manual
Fuel system	Fuel supply system		Fuel injection	Fuel injection	Fuel injection	Fuel injection	Fuel injection

PRECAUTIONS BEFORE SERVICE

00100050144

SUPPLEMENTAL RESTRAINT SYSTEM (SRS)

1. Items to follow when servicing SRS
   (1) Be sure to read GROUP 52B – Supplemental Restraint System (SRS).
   For safe operations, please follow the directions and heed all warnings.
   (2) Always use the designated special tools and test equipment.
   (3) Wait at least 60 seconds after disconnecting the battery cable before doing any further work.
   The SRS system is designed to retain enough voltage to deploy the air bag even after the battery has been disconnected. Serious injury may result from unintended air bag deployment if work is done on the SRS system immediately after the battery cable is disconnected.
   (4) Never attempt to disassembly or repair the SRS components, (SRS diagnosis unit, air bag module and clock spring). If faulty, replace it.
   (5) Warning labels must be heeded when servicing or handling SRS components. Warning labels are located in the following locations.
   - Hood
   - Sun visor
   - Glove box
   - SRS diagnosis unit
   - Steering wheel
   - Air bag module
   - Clock spring
   - Frame

   (6) Store components removed from the SRS in a clean and dry place.
   The air bag module should be stored on a flat surface and placed so that the pad surface is facing upward.
   Do not place anything on top of it.
   (7) Be sure to deploy the air bag before disposing of the air bag module or disposing of a vehicle equipped with an air bag. (Refer to GROUP 52B – Air Bag Module Disposal Procedures.)
   (8) Whenever you finish servicing the SRS, check the SRS warning lamp operation to make sure that the system functions properly.
2. Observe the following when carrying out operations on places where SRS components are installed, including operations not directly related to the SRS air bag.
   (1) When removing or installing parts do not allow any impact or shock to the SRS components.
   (2) SRS components should not be subjected to heat over 93°C, so remove the SRS components before drying or baking the vehicle after painting.
   After re-installing them, check the SRS warning lamp operation to make sure that the system functions properly.

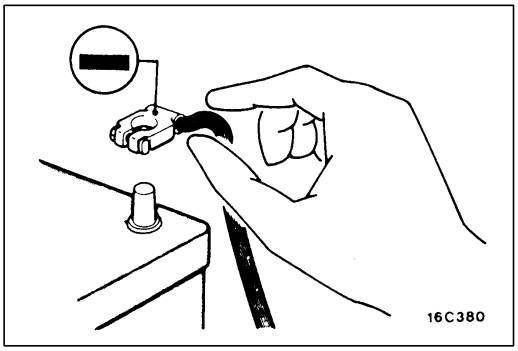

SERVICING THE ELECTRICAL SYSTEM

Before replacing a component related to the electrical system and before undertaking any repair procedures involving the electrical system, be sure to first disconnect the negative (–) cable from the battery in order to avoid damage caused by short-circuiting.

Caution
Before connecting or disconnecting the negative (–) cable, be sure to turn off the ignition switch and the lighting switch.
(If this is not done, there is the possibility of semiconductor parts being damaged.)

APPLICATION OF ANTI-CORROSION AGENTS AND UNDERCOATS

If oil or grease gets onto the oxygen sensor, it will cause a drop in the performance of the sensor.
Cover the oxygen sensor with a protective cover when applying anti-corrosion agents and undercoats.

PRE-INSPECTION CONDITION

"Pre-inspection condition" refers to the condition that the vehicle must be in before proper engine inspection can be carried out. If you see the words "Set the vehicle to the pre-inspection condition." in this manual, it means to set the vehicle to the following condition.

- Engine coolant temperature: 80–90°C
- Lamps, electric cooling fan and all accessories: OFF
- M/T: Neutral
- A/T: P range

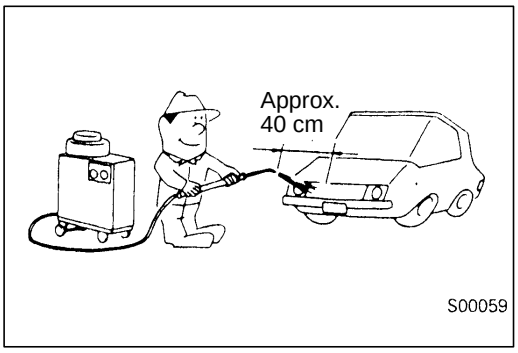

VEHICLE WASHING

If high-pressure car-washing equipment or steam car-washing equipment is used to wash the vehicle, be sure to note the following information in order to avoid damage to plastic components, etc.

- Spray nozzle distance: Approx. 40 cm or more
- Spray pressure: 3,900 kPa or less
- Spray temperature: 82°C or less
- Time of concentrated spray to one point: within 30 sec.

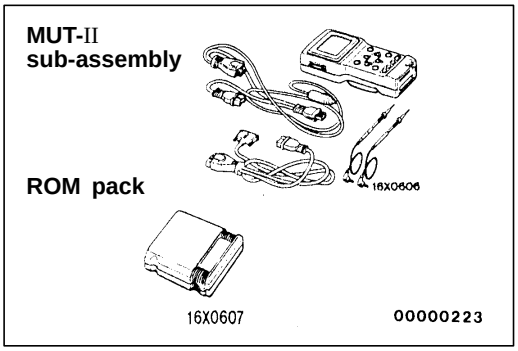

MUT-II

Refer to the MUT-II INSTRUCTION MANUAL for instructions on handling the MUT-II.

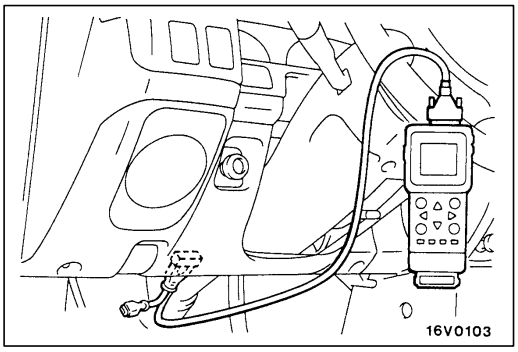

Connect the MUT-II to the diagnosis connector as shown in the illustration.

Caution
Connection and disconnection of the MUT-II should always be made with the ignition switch in the OFF position.

IN ORDER TO PREVENT VEHICLES FROM FIRE

"Improper installation of electrical or fuel related parts could cause a fire. In order to retain the high quality and safety of the vehicle, it is important that any accessories that may be fitted or modifications/repairs that may be carried out which involve the electrical or fuel systems, MUST be carried out in accordance with MMC's information/Instructions".

ENGINE OILS

Health Warning

Prolonged and repeated contact with mineral oil will result in the removal of natural fats from the skin, leading to dryness, irritation and dermatitits. In addition, used engine oil contains potentially harmful contaminants which may cause skin cancer. Adequate means of skin protection and washing facilities must be provided.

Recommended Precautions

The most effective precaution is to adapt working practices which prevent, as far as practicable, the risk of skin contact with mineral oils, for example by using enclosed systems for handling used engine oil and by degreasing components, where practicable, before handling them.

Other precautions:

- Avoid prolonged and repeated contact with oils, particularly used engine oils.
- Wear protective clothing, including impervious gloves where practicable.
- Avoid contaminating clothes, particularly underpants, with oil.
- Do not put oily rags in pockets, the use of overalls without pockets will avoid this.
- Do not wear heavily soiled clothing and oil-impregnated foot-wear. Overalls must be cleaned regularly and kept separately from personal clothing.
- Where there is a risk of eye contact, eye protection should be worn, for example, chemical goggles or face shields; in addition an eye wash facility should be provided.
- Obtain First Aid treatment immediately for open cuts and wounds.
- Wash regularly with soap and water to ensure all oil is removed, especially before meals (skin cleansers and nail brushes will help). After cleaning, the application of preparations containing lanolin to replace the natural skin oils is advised.
- Do not use petrol, kerosine, diesel fuel, gas oil, thinners or solvents for cleaning skin.
- Use barrier creams, applying them before each work period, to help the removal of oil from the skin after work.
- If skin disorders develop, obtain medical advice without delay.

SUPPLEMENTAL RESTRAINT SYSTEM (SRS)

00100590066

GENERAL INFORMATION

To improve safety, the SRS is available as optional part. These system enhance collision safety by restraining the driver in case of an accident.
The SRS consists of an air bag module, SRS diagnosis unit (SDU), SRS warning lamp, two front impact sensors and clock spring. Air bag is located in the center of the steering wheel. Air bag has a folded air bag and an inflator unit. The control unit under the instrument panel, which monitors the system and has a safing G sensor. The warning lamp on the instrument panel indicates the operational status of the SRS. Each front impact sensors are located left and right fender shield panel. The clock spring is installed in the steering column.

Only authorized service personnel should do work on or around the SRS components. Those service personnel should read this manual carefully before starting any such work. Extreme care must be used when servicing the SRS to avoid injury to the service personnel (by inadvertent deployment of the air bag) or the driver (by rendering the SRS inoperative.)

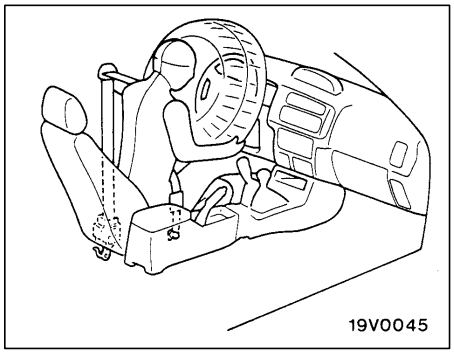

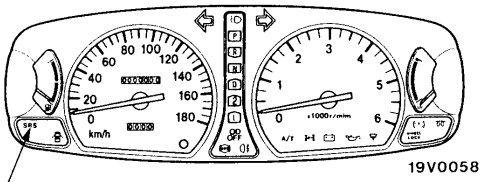

SRS warning lamp

SRS warning lamp

Clock spring

Front impact sensor (L.H.)

Front wiring harness or sensor cable

Air bag module

Body wiring harness

Front impact sensor (R.H.)

Diagnosis connector

SDU

19V0049

00005049

SRS SERVICE PRECAUTIONS

00100600066

1. In order to avoid injury to yourself or others from accidental deployment of the air bag during servicing, read and carefully follow all the precautions and procedures described in this manual.
2. Do not use any electrical test equipment on or near SRS components, except those specified on GROUP 52B.
3. **Never Attempt to Repair the Following Components:**
   - SRS Diagnosis unit (SDU)
   - Clock Spring
   - Air Bag Module
   - Front impact sensor

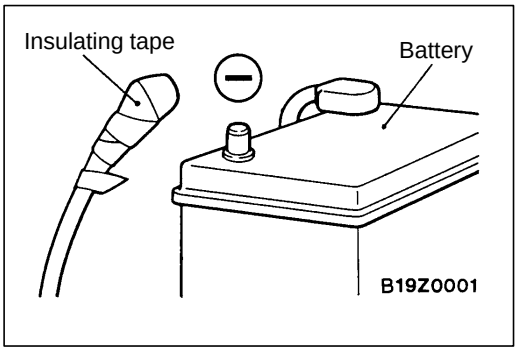

4. **After disconnecting the battery cable, wait 60 seconds or more before proceeding with the following work. The SRS system is designed to retain enough voltage to deploy the air bag for a short time even after the battery has been disconnected, so serious injury may result from unintended air bag deployment if work is done on the SRS system immediately after the battery cables are disconnected. Wind a tape around the disconnected (–) terminal for insulation.**

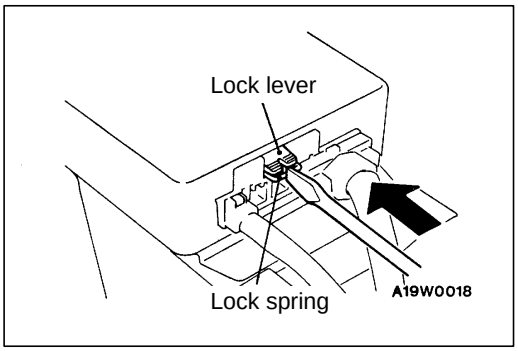

5. To unlock the SDU connector, place a flat-tipped screwdriver against the lock spring at the lock lever notch and push the spring toward the unit. In this case, do not force the lock lever up.

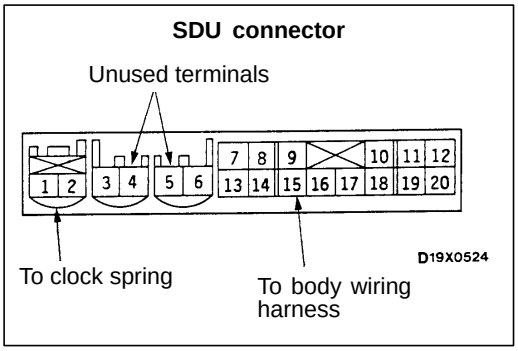

6. Do not attempt to repair the wiring harness connectors of the SRS. If any of the connectors are diagnosed as faulty, replace the wiring harness. If the wires are diagnosed as faulty, replace or repair the wiring harness according to the following table.

Harness connector (No. of terminals, colour)	SDU terminal No.	Destination of harness	Corrective action
2 pins, red	1, 2	Body wiring harness → Clock spring	Replace clock spring
–	3, 4	–	–
–	5, 6	–	–
14 pins, red	7, 8	–	–
	9	Body wiring harness → Diagnosis connector	Correct or replace each wiring harness
	10	Body wiring harness → Front wiring harness → Ignition switch (ST)	
	11	Body wiring harness → Junction block (fuse No. 11)	
	12	Body wiring harness → Junction block (fuse No. 10)	
	13	Body wiring harness → Combination meter (SRS warning lamp)	
	14	–	–
	15	Body wiring harness → Front wiring harness → Front impact sensor (+) (R.H.)	Sensor cable* installa-tion procedures (Refer to GROUP 52B.)
	16	Body wiring harness → Front wiring harness → Front impact sensor (+) (L.H.)	
	17	Body wiring harness → Front wiring harness → Front impact sensor (–) (L.H.)	
	18	Body wiring harness → Front wiring harness → Front impact sensor (–) (R.H.)	
	19, 20	Body wiring harness → Earth	Correct or replace each wiring harness

NOTE
The sensor cable marked with * is available as service part.

7. SRS components should not be subjected to heat over 93°C, so remove the SRS-diagnosis unit, air bag module, clock spring and front impact sensors before drying or braking the vehicle after painting.
8. Whenever you finish servicing the SRS, check warning lamp operation to make sure that the system functions properly. (Refer to GROUP 52B – SRS Maintenance.)
9. Make certain that the ignition switch is OFF when the MUT-II is connected or disconnected.
10. If you have any questions about the SRS, please contact your local distributor.

    NOTE
    SERIOUS INJURY CAN RESULT FROM UNINTENDED AIR BAG DEPLOYMENT, SO USE ONLY THE PROCEDURES AND EQUIPMENT SPECIFIED IN THIS MANUAL.

SUPPORT LOCATIONS FOR LIFTING AND JACKING

00100070058

Caution
Do not support the vehicles at locations other than specified supporting points. If do so, this will cause damage, etc.

SUPPORT POSITIONS FOR A GARAGE JACK AND AXLE STANDS

<2WD>

AXLE STANDS

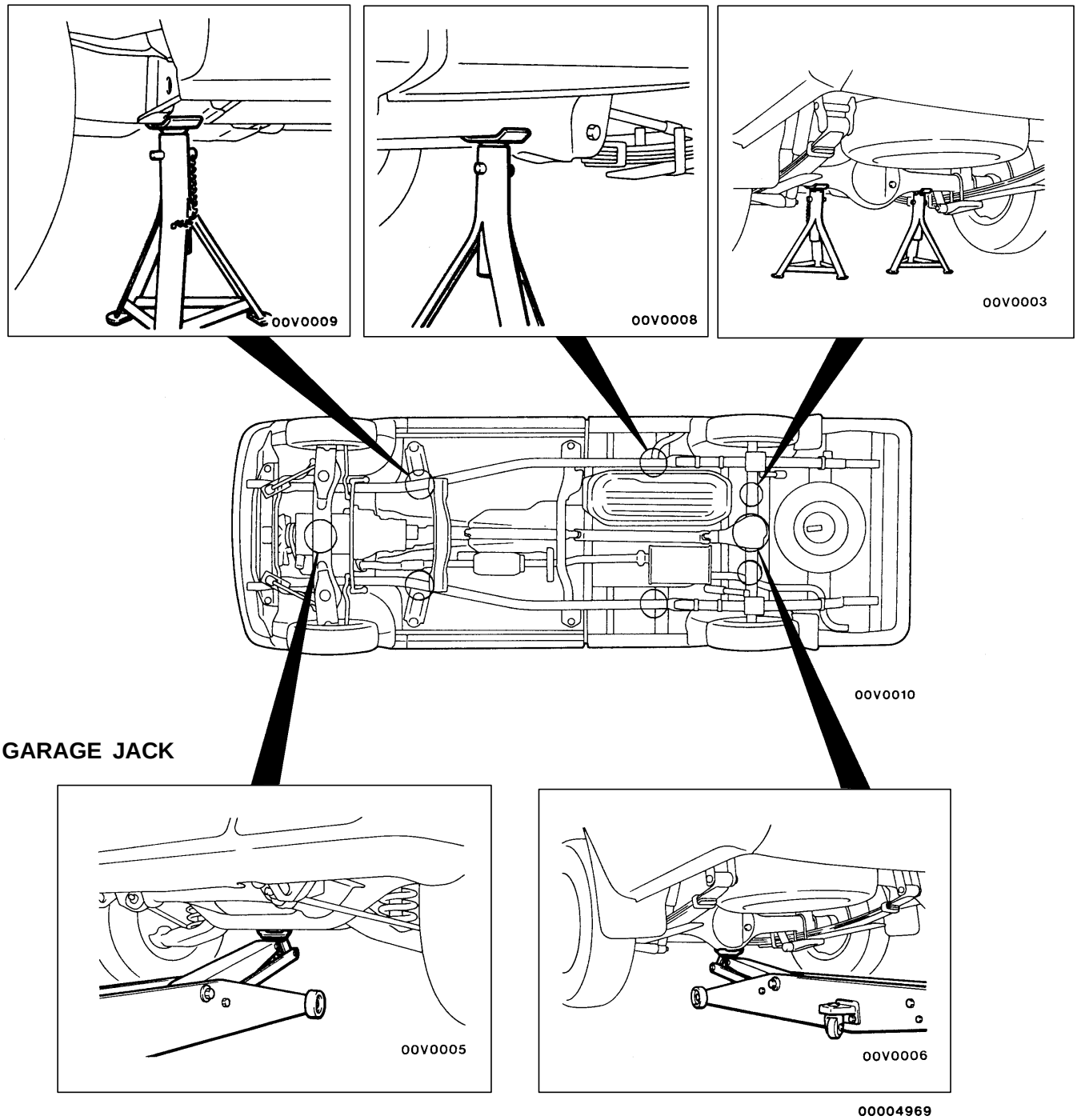

<4WD>

AXLE STANDS

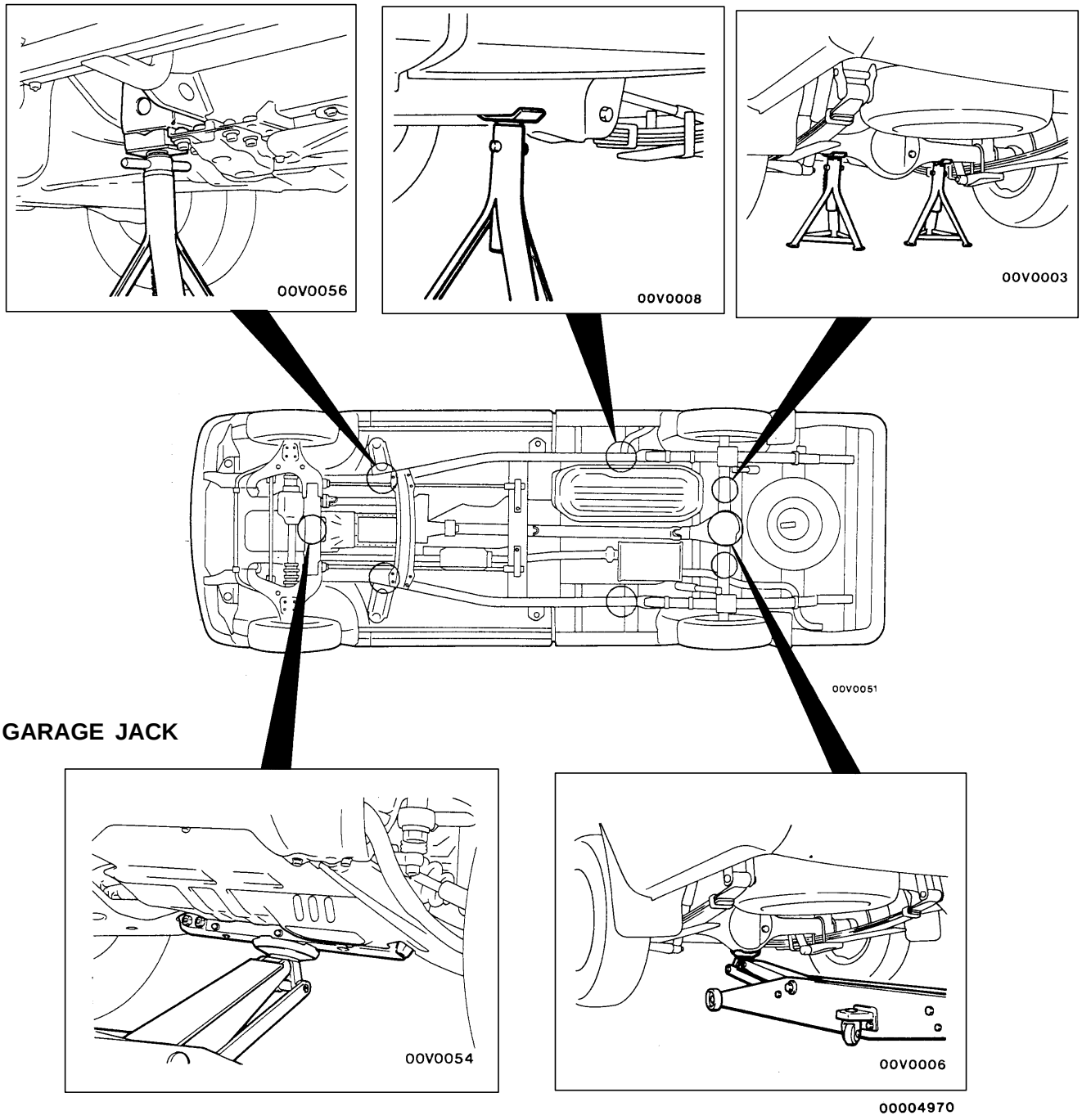

SUPPORT POSITIONS FOR A SINGLE-POST LIFT OR DOUBLE-POST LIFT AND H-BAR LIFT

Caution

When service procedures require removing rear suspension, spare tyre and rear bumper, place additional weight on rear end of vehicle or anchor vehicle to hoist to prevent tipping of centre of gravity changes.

<2WD>

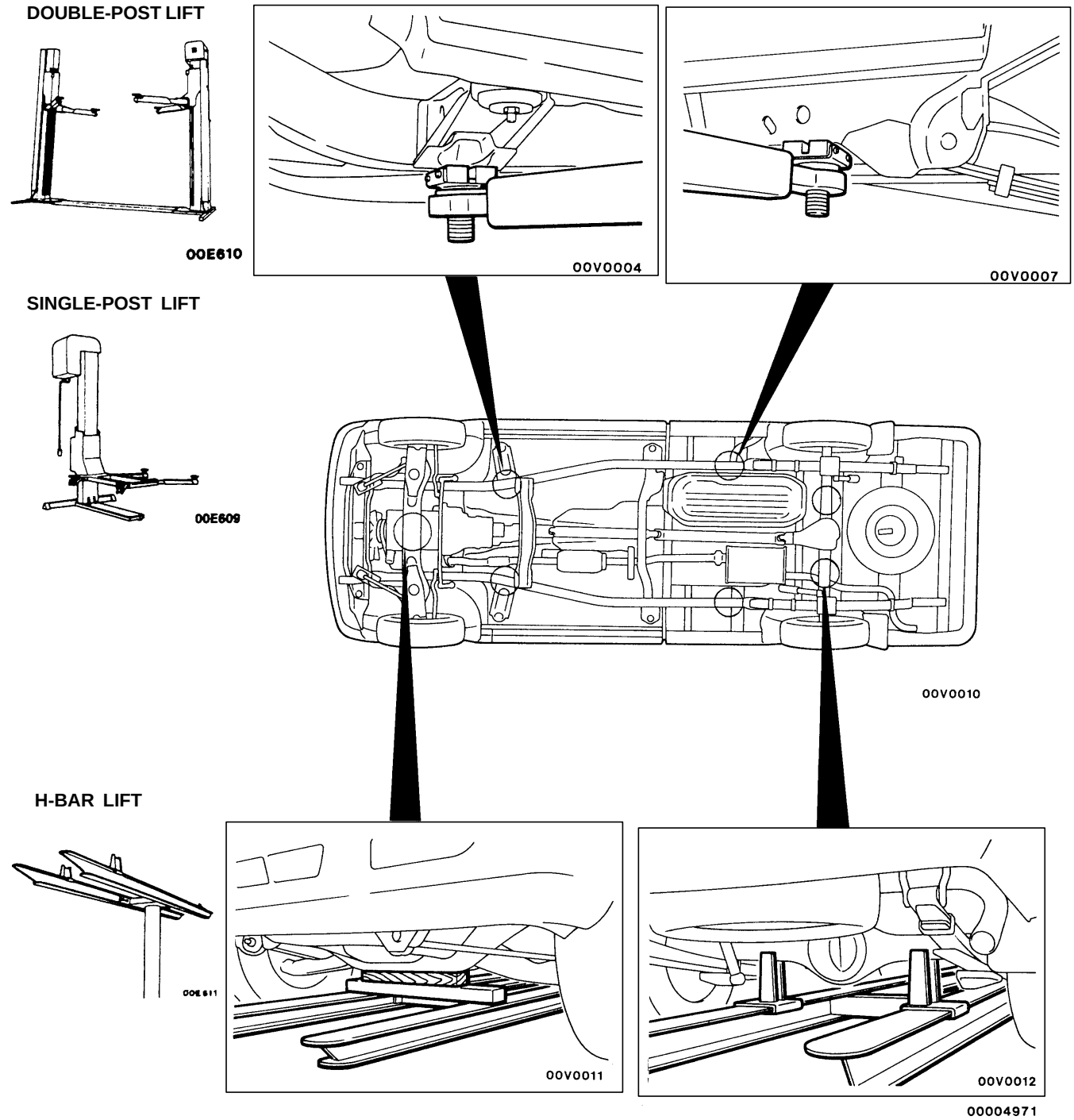

<4WD>

DOUBLE-POST LIFT

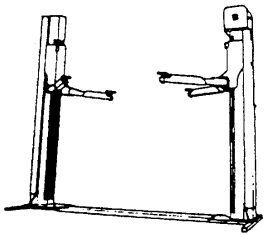

00E610

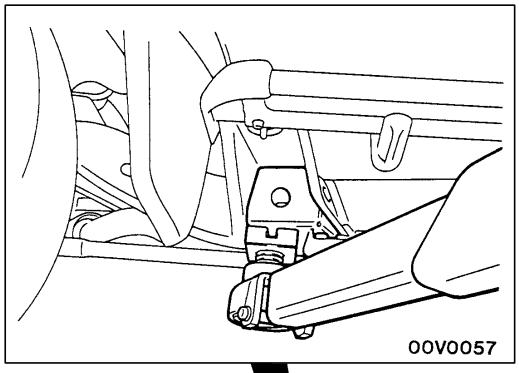

00V0057

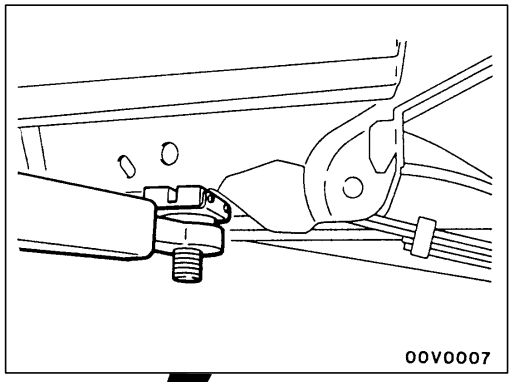

00V0007

SINGLE-POST LIFT

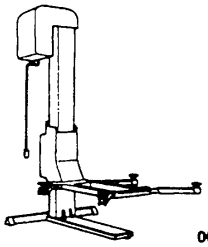

00E609

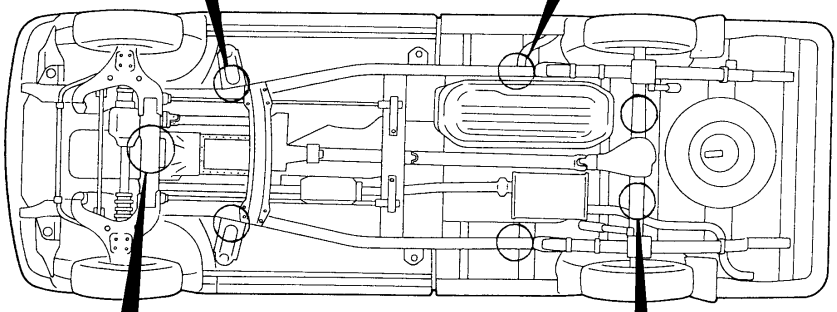

00V0051

H-BAR LIFT

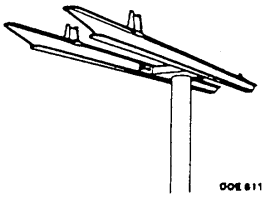

00E611

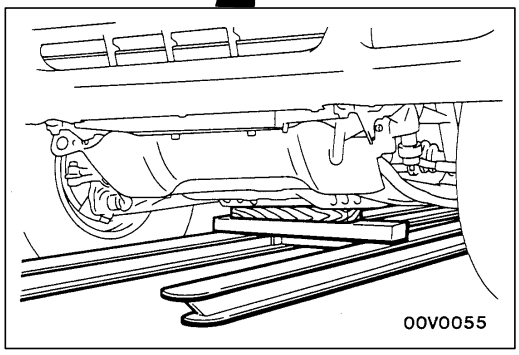

00V0055

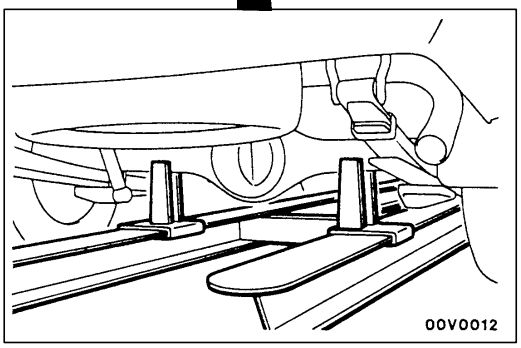

00V0012

00004972

STANDARD PARTS-TIGHTENING-TORQUE TABLE

00100110033

Each torque value in the table is a standard value for tightening under the following conditions.
(1) Bolts, nuts and washers are all made of steel and plated with zinc.
(2) The threads and bearing surface of bolts and nuts are all in dry condition.

The values in the table are not applicable:
(1) If toothed washers are inserted.
(2) If plastic parts are fastened.
(3) If bolts are tightened to plastic or die-cast inserted nuts.
(4) If self-tapping screws or self-locking nuts are used.

Standard bolt and nut tightening torque

Thread size		Torque Nm		
Bolt nominal diameter (mm)	Pitch (mm)	Head mark “4”	Head mark “7”	Head mark “8”
M5	0.8	2.5	4.9	5.9
M6	1.0	4.9	8.8	9.8
M8	1.25	12	22	25
M10	1.25	24	44	52
M12	1.25	41	81	96
M14	1.5	72	137	157
M16	1.5	111	206	235
M18	1.5	167	304	343
M20	1.5	226	412	481
M22	1.5	304	559	647
M24	1.5	392	735	853

Flange bolt and nut tightening torque

Thread size		Torque Nm		
Bolt nominal diameter (mm)	Pitch (mm)	Head mark “4”	Head mark “7”	Head mark “8”
M6	1.0	4.9	9.8	12
M8	1.25	13	24	28
M10	1.25	26	49	57
M10	1.5	24	44	54
M12	1.25	46	93	103
M12	1.75	42	81	96