ACCESSORIES & EQUIPMENT

Wipers and Washers - Escalade, Suburban, Tahoe, Yukon

SPECIFICATIONS

FASTENER SPECIFICATIONS

Application	Specification	
	Metric	English
Rear Window Wiper Arm Nut	9 N.m	80 lb in
Rear Window Wiper Motor Assembly Bolts	9 N.m	80 lb in
Rear Window Wiper Motor Shaft Nut	4.9 N.m	43 lb in
Windshield Washer Solvent Container Bolts	9 N.m	80 lb in
Windshield Wiper Arm Pivot Shaft Nuts	40 N.m	30 lb ft
Windshield Wiper System Module Bolts to Plenum	9 N.m	80 lb in

SCHEMATIC WIRING DIAGRAMS

WIPER/WASHER WIRING SCHEMATICS

Rain Sense

cardiagn.com

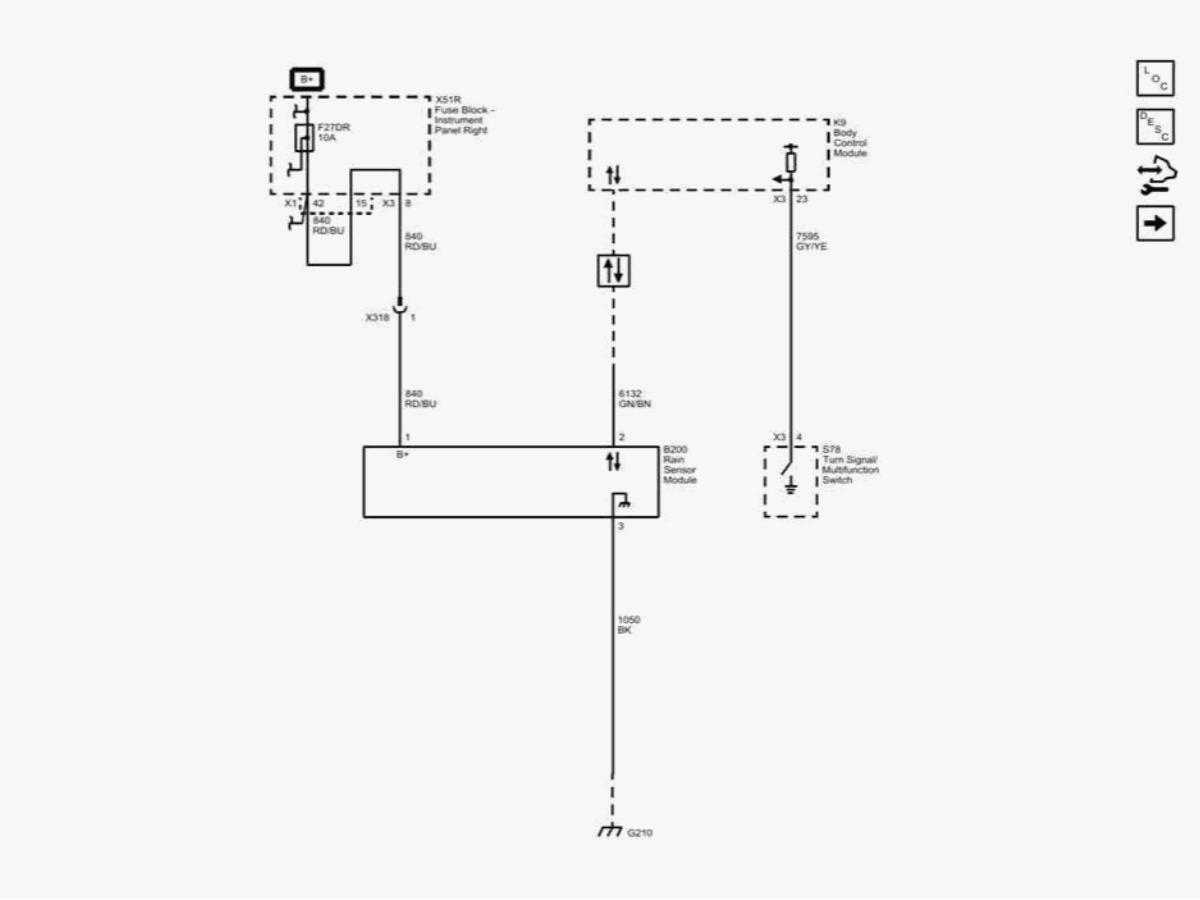

Fig. 1: Rain Sense
Courtesy of GENERAL MOTORS COMPANY

Front Wiper Motor and Washer Pump

cardiagn.com

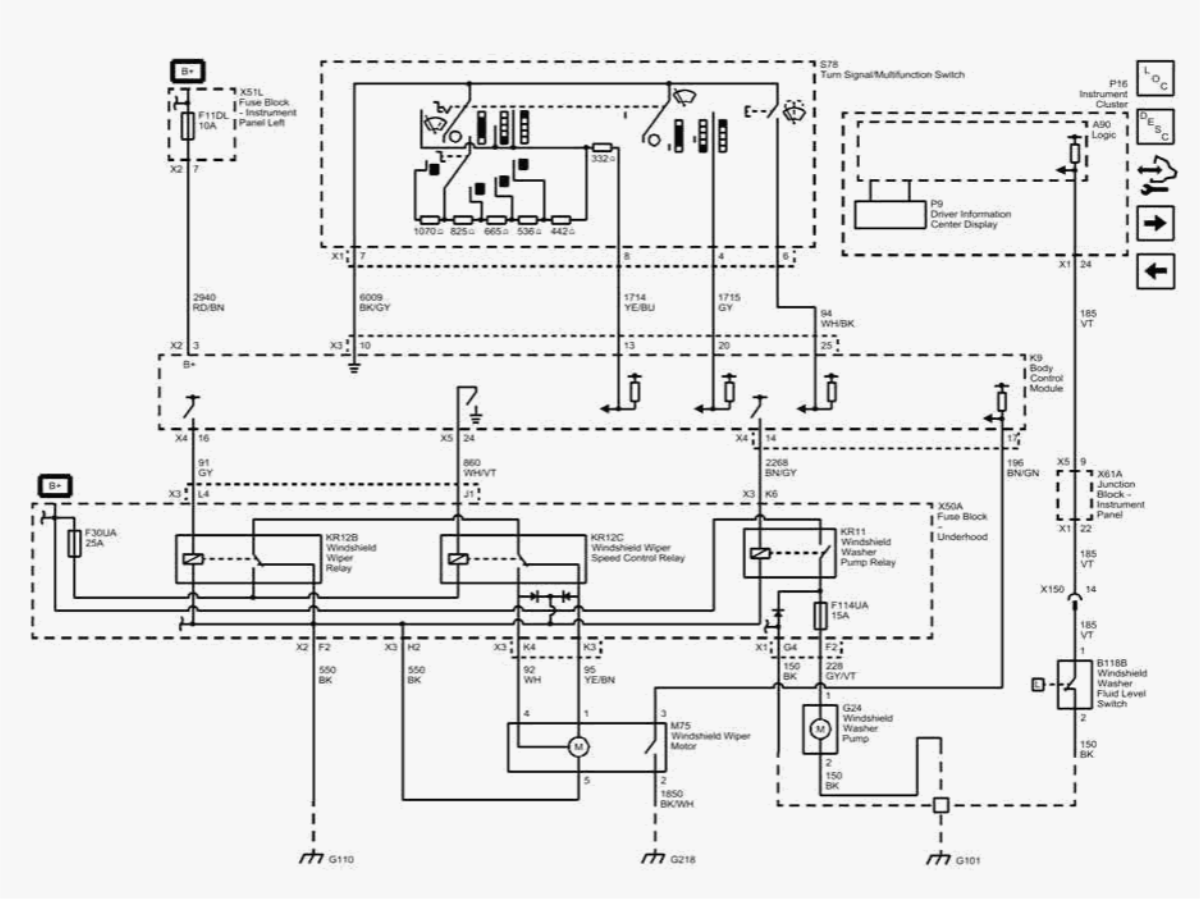

Fig. 2: Front Wiper Motor and Washer Pump
Courtesy of GENERAL MOTORS COMPANY

Rear Wiper Motor and Washer Pump

cardiagn.com

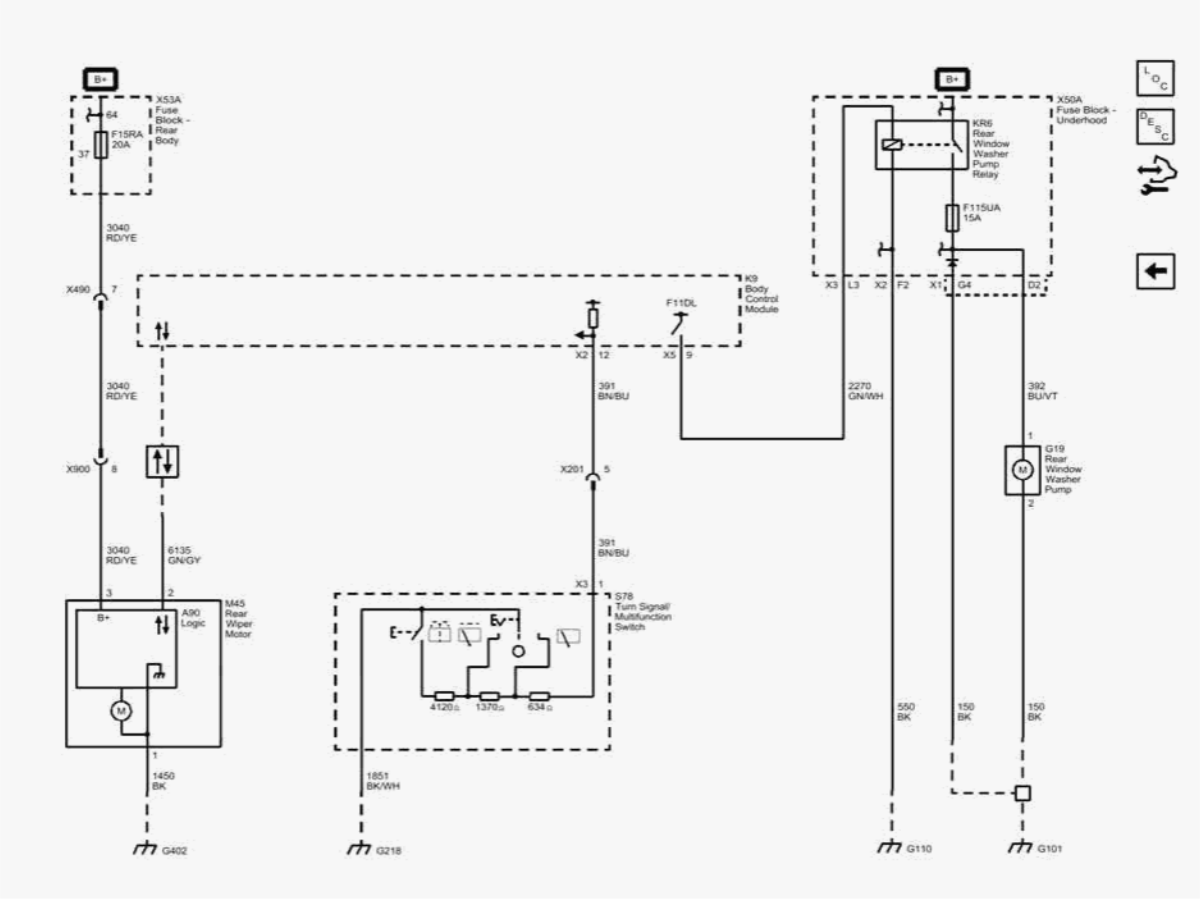

Fig. 3: Rear Wiper Motor and Washer Pump
Courtesy of GENERAL MOTORS COMPANY

DIAGNOSTIC INFORMATION AND PROCEDURES

DTC B370A: RAIN SENSOR

Diagnostic Instructions

- Perform the **Diagnostic System Check - Vehicle** prior to using this diagnostic procedure.
- Review **Strategy Based Diagnosis** for an overview of the diagnostic approach.
- **Diagnostic Procedure Instructions** provides an overview of each diagnostic category.

cardiagn.com

DTC Descriptor

DTC B370A

Rain Sensor

For symptom byte information, refer to **Symptom Byte List** .

Diagnostic Fault Information

Circuit	Short to Ground	Open/High Resistance	Short to Voltage	Signal Performance
B+	1	U151A 00	-	-
Serial Data	U151A 00	U151A 00	U151A 00	-
Auto Wiper On Signal	1	1	-	-
Ground	-	1	-	-
1. Rain Sensor Malfunction				

Circuit/System Description

B+ and ground is supplied at all times to the rain sensor. The rain sensor communicates with the body control module (BCM) via serial data. When the ignition is in the ON or ACCESSORY position and the windshield wiper/washer switch is in the intermittent delay position, the BCM monitors the rain sensor to determine the rain build up on the windshield. As rain builds up on the windshield, the BCM will command the wipers to activate. The sensitivity of the wiper frequency is controlled by the intermittent delay of the windshield wiper/washer switch. As the sensitivity is increased, the BCM will command more frequent wiper activation based on rain build up on the windshield.

The system supports the rain sensor On/Off button. The AUTO switch is located on the turn signal/multifunction switch. Press the auto button to turn the rain sensor On/Off. When rain sensor is turned on and the rain sensor wipe sensitivity positions is adjusted by the front delay switch. The wipers can be adjusted for more or less sensitivity to moisture. When rain sensor turned off, the wipers operate as timed intermittent wipers and can be adjusted for more or less frequent wipes.

If the ignition is in ON/RUN and the front band is in one of the sensitivity settings when auto is turned on or off, a message may display indicating if rain sensor was turned on or off.

If the ignition is in ON/RUN and the front band is not in one of the sensitivity settings when auto is turned on, a message may display indicating that the wiper band must be in one of the sensitivity settings for rain sensor to operate.

cardiagn.com

Conditions for Running the DTC

- Ignition ON.
- The system voltage is between 9-16 V.

Conditions for Setting the DTC

Communication between the BCM and the rain sensor is interrupted, and an interruption in communication is a serial data fault.

Action Taken When the DTC Sets

- If the BCM loses communication with the rain sensor while operating with single wipes, the windshield wiper operation will default to intermittent operation with a fixed dwell time of 4 s.
- If the BCM loses communication with the rain sensor while operating at low speed, the windshield wiper operation will default to low speed.
- If the BCM loses communication with the rain sensor while operating at high speed, the windshield wiper operation will default to high speed.

Conditions for Clearing the DTC

The DTC will clear when communication is established between the BCM and rain sensor.

Reference Information

Schematic Reference

Wiper/Washer Schematics

Connector End View Reference

COMPONENT CONNECTOR END VIEWS - INDEX

Description and Operation

Wiper/Washer System Description and Operation

Electrical Information Reference

- **Circuit Testing**
- **Connector Repairs**

cardiagn.com

- **Testing for Intermittent Conditions and Poor Connections**
- **Wiring Repairs**

Scan Tool Reference

Control Module References for scan tool information

Circuit/System Verification

1. Ignition ON.
2. Verify DTC U151A is not set.
   - **If DTC U151A is set**

     Refer to **DTC U1500-U15FF** .

   - **If DTC U151A is not set**
3. Verify the scan tool Rain Sensor parameter changes between Active and Inactive when pressing the AUTO rain sensor switch ON and OFF.
   - **If the parameter does not change**

     Refer to Circuit/System Testing - Rain Sensor Switch Malfunction.

   - **If the parameter changes**
4. Place the S78 Turn Signal/Multifunction Switch in the intermittent delay setting and spray the outside of the windshield in the area of the B200 Rain Sensor Module with a water bottle. It may be necessary to increase the sensitivity of the intermittent delay to achieve windshield wiper operation.
5. Verify the windshield wipers operate at low speed.
   - **If the wipers are not operating at low speed**

     Refer to Circuit/System Testing - Rain Sensor Module Malfunction.

   - **If the wipers are operating at low speed**
6. All OK.

Circuit/System Testing

Rain Sensor Switch Malfunction

cardiagn.com

1. Ignition OFF, disconnect the X1 and X3 harness connectors at the S78 Turn Signal/Multifunction Switch.
2. Test for less than 10 Ω between the low reference circuit terminal 7 X1 and ground.
    - **If 10 Ω or greater**
    1. Ignition OFF.
    2. Test for less than 2 Ω in the ground circuit end to end.
        - If 2 Ω or greater, repair the open/high resistance in the circuit.
        - If less than 2 Ω, replace the K9 Body Control Module.
    - **If less than 10 Ω**
3. Verify the scan tool Rain Sensor parameter is Inactive.
    - **If not Inactive**
    1. Ignition OFF, disconnect the harness connector at the K9 Body Control Module,
    2. Test for infinite resistance between the signal circuit terminal 4 and ground.
        - If less than infinite resistance, repair the short to ground on the circuit.
        - If infinite resistance, replace the K9 Body Control Module,
    - **If Inactive**
4. Install a 3 A fused jumper wire between the signal circuit terminal 4 X3 and the low reference circuit terminal 7 X1.
5. Verify the scan tool Rain Sensor parameter is Active.
    - **If not Active**
    1. Ignition OFF, remove the jumper wire, disconnect the harness connector at the K9 Body Control Module, ignition ON.
    2. Test for less than 1 V between the signal circuit and ground.
        - If 1 V or greater, repair the short to voltage on the circuit.
        - If less than 1 V
    3. Test for less than 2 Ω in the signal circuit end to end.
        - If 2 Ω or greater, repair the open/high resistance in the circuit.
        - If less than 2 Ω, replace the K9 Body Control Module,
    - **If Active**
6. Test or replace the S78 Turn Signal/Multifunction Switch.

Rain Sensor Module Malfunction

cardiagn.com

1. Ignition OFF, all vehicle systems OFF, disconnect the harness connector at the B200 Rain Sensor Module. It may take up to 2 min for all vehicle systems to power down.
2. Test for less than 10 Ω between the ground circuit terminal 3 and ground.
    - **If 10 Ω or greater**
    1. Ignition OFF.
    2. Test for less than 2 Ω in the ground circuit end to end.
        - If 2 Ω or greater, repair the open/high resistance in the circuit.
        - If less than 2 Ω, repair the open/high resistance in the ground connection.
    - **If less than 10 Ω**
3. Ignition ON.
4. Verify a test lamp illuminates between the B+ circuit terminal 1 and ground.
    - **If the test lamp does not illuminate and the circuit fuse is good**
    1. Ignition OFF, remove the test lamp.
    2. Test for less than 2 Ω in the B+ circuit end to end.
        - If 2 Ω or greater, repair the open/high resistance in the circuit.
        - If less than 2 Ω, verify the fuse is not open and there is voltage at the fuse.
    - **If the test lamp does not illuminate and the circuit fuse is open**
    1. Ignition OFF, remove the test lamp.
    2. Test for infinite resistance between the B+ circuit and ground.
        - If less than infinite resistance, repair the short to ground on the circuit.
        - If infinite resistance, replace the B200 Rain Sensor Module.
    - **If the test lamp illuminates**
5. Test for 5.0-10.0 V between the serial data circuit terminal 2 and ground.
    - **If less than 5.0 V**
    1. Ignition OFF, disconnect the harness connector at the K9 Body Control Module.
    2. Test for infinite resistance between the serial data circuit and ground.
        - If less than infinite resistance, repair the short to ground on the circuit.
        - If infinite resistance
    3. Test for less than 2 Ω in the serial data circuit end to end.

cardiagn.com

- If 2 Ω or greater, repair the open/high resistance in the circuit.
- If less than 2 Ω, replace the K9 Body Control Module.

- **If greater than 10.0 V**

1. Ignition OFF, disconnect the harness connector at the K9 Body Control Module, ignition ON.
2. Test for less than 1 V between the serial data circuit and ground.
    - If 1 V or greater, repair the short to voltage on the circuit.
    - If less than 1 V, replace the K9 Body Control Module.

- **If between 5.0-10.0 V**

6. Test or replace the B200 Rain Sensor Module.

Repair Instructions

Perform the **Diagnostic Repair Verification** after completing the repair.

- **Windshield Outside Moisture/Ambient Light and Humidity Sensor Replacement**
- **Control Module References** for body control module replacement, programming and setup.

DTC B370B: REAR WIPER SWITCH

Diagnostic Instructions

- Perform the **Diagnostic System Check - Vehicle** prior to using this diagnostic procedure.
- Review **Strategy Based Diagnosis** for an overview of the diagnostic approach.
- **Diagnostic Procedure Instructions** provides an overview of each diagnostic category.

Diagnostic Fault Information

Circuit	Short to Ground	Open/High Resistance	Short to Voltage	Signal Performance
Rear Wiper Motor B+	1	1	2	-
M45 Rear Wiper Motor Serial Data	U1548 00, U1549 00, U154A 00, U1515 00	U1548 00, U1549 00, U154A 00	U1548 00, U1549 00, U154A 00	-
Rear Window Wiper Switch Signal	1, U151A 00	1, U151A 00	1, U151A 00	-
Rear Wiper Motor Ground	-	1	-	-
Rear Window Wiper Switch Ground	-	1	-	-

cardiagn.com

Circuit	Short to Ground	Open/High Resistance	Short to Voltage	Signal Performance
1. Wipers Inoperative. 2. Rear Wipers Always ON				

Circuit/System Description

The body control module (BCM) controls the rear wiper motor based on an input from the rear wiper switch, which is part of the turn signal/multifunction switch. The rear wiper switch uses a resistor ladder to determine low speed, intermittent, and rear washer operation. A constant B+ and ground are supplied to the rear wiper motor. When rear wiper operation is requested, the BCM sends serial data messages. When the rear wiper switch is placed in the low speed, intermittent, or rear washer position, the voltage is pulled down through a different resistor in the resistor ladder, reducing the voltage seen at the BCM. The BCM will respond by commanding the specific rear wiper function.

The BCM monitors the liftgate ajar signal circuit, and the BCM will disable the function of the rear wiper motor if the liftgate of liftglass is ajar or open

Diagnostic Aids

The rear liftgate and liftglass must be closed in order for the rear wiper to work. The liftgate ajar switch signal circuit provides information to the rear window wiper module about the status of the liftgate. If the liftgate or liftglass is open the rear wiper operation is not performed.

Conditions for Running the DTC

- Ignition ON
- The system voltage is between 9-16 V.

Conditions for Setting the DTC

B370B 01

A short to voltage is detected in the rear wiper relay control circuit.

B370B 02

A short to ground is detected in the rear wiper relay control circuit.

B370B 04

An open or high resistance is detected in the rear wiper relay control circuit.

cardiagn.com

Action Taken When the DTC Sets

Rear wiper operation is disabled.

Conditions for Clearing the DTC

The DTC will clear when the conditions for setting the DTC are no longer present.

Reference Information

Schematic Reference

Wiper/Washer Schematics

Connector End View Reference

COMPONENT CONNECTOR END VIEWS - INDEX

Description and Operation

Wiper/Washer System Description and Operation

Electrical Information Reference

- **Circuit Testing**
- **Connector Repairs**
- **Testing for Intermittent Conditions and Poor Connections**
- **Wiring Repairs**

Scan Tool Reference

Control Module References for scan tool information

Circuit/System Verification

1. Ignition ON.
2. Verify DTC U151A is not set.
    - **If DTC U151A is set**

cardiagn.com

Please Refer to **DTC U1500-U15FF** .

- **If DTC U151A is not set**

3. Verify the scan tool Rear Closure Ajar Switch parameter changes between Inactive and Active when opening and closing the liftgate.
   - **If the parameter does not change**

     Refer to **Liftgate/Liftgate Window Ajar Indicator Malfunction (Without TB5)** **Liftgate/Liftgate Window Ajar Indicator Malfunction (With TB5)**

   - **If the parameter changes**
4. Verify the scan tool Rear Wiper Switch parameter changes between Off and On when turning the rear wipers ON and OFF.
   - **If the parameter does not change**

     Refer to Circuit/System Testing - Rear Wiper/Washer Switch Malfunction.

   - **If the parameter changes**
5. Verify the M45 Rear Wiper operates between Off and On when turning the rear wipers ON and OFF.
   - **If the M45 Rear Wiper Motor does not operate**

     Refer to Circuit/System Testing - Rear Wiper Motor Malfunction.

   - **If the M45 Rear Wiper Motor operates**
6. All OK.

Circuit/System Testing

Rear Wiper/Washer Switch Malfunction

1. Ignition OFF and all vehicle systems OFF, disconnect the X3 harness connector at the S78 Turn Signal/Multifunction Switch. It may take up to 2 min for all vehicle systems to power down.
2. Test for less than 10 Ω between the ground circuit terminal 2 and ground.
   - **If 10 Ω or greater**

   1. Ignition OFF.
   2. Test for less than 2 Ω in the ground circuit end to end.
      - If 2 Ω or greater, repair the open/high resistance in the circuit.

cardiagn.com

- If less than 2 Ω, repair the open/high resistance in the ground connection.
- **If less than 10 Ω**

3. Ignition ON.
4. Verify the scan tool Rear Wiper Switch parameter is Off.
   - **If not Off**
   1. Ignition OFF, disconnect the X2 harness connector at the K9 Body Control Module.
   2. Test for infinite resistance between the signal circuit terminal 1 and ground.
      - If less than infinite resistance, repair the short to ground on the circuit.
      - If infinite resistance, replace the K9 Body Control Module.
   - **If On**
5. Install a 3 A fused jumper wire between the signal circuit terminal 1 and the ground circuit terminal 2.
6. Verify the scan tool Rear Wiper Switch parameter is On.
   - **If not On**
   1. Ignition OFF, remove the jumper wire, disconnect the harness connector at the K9 Body Control Module, ignition ON.
   2. Test for less than 1 V between the signal circuit and ground.
      - If 1 V or greater, repair the short to voltage on the circuit.
      - If less than 1 V
   3. Test for less than 2 Ω in the signal circuit end to end.
      - If 2 Ω or greater, repair the open/high resistance in the circuit.
      - If less than 2 Ω, replace the K9 Body Control Module.
   - **If On**
7. Test or replace the S78 Turn Signal/Multifunction Switch.

Rear Wiper Motor Malfunction

1. Ignition OFF and all vehicle systems OFF, disconnect the harness connector at the appropriate M45 Rear Wiper Motor. It may take up to 2 min for all vehicle systems to power down.
2. Test for less than 10 Ω between the ground circuit terminal 1 and ground.
   - **If 10 Ω or greater**
   1. Ignition OFF.

cardiagn.com

2. Test for less than 2 Ω in the ground circuit end to end.
    - If 2 Ω or greater, repair the open/high resistance in the circuit.
    - If less than 2 Ω, repair the open/high resistance in the ground connection.
- **If less than 10 Ω**

3. Verify a test lamp illuminates between the B+ circuit terminal 3 and ground.
- **If the test lamp does not illuminate and the circuit fuse is good**

1. Ignition OFF.
2. Test for less than 2 Ω in the B+ circuit end to end.
    - If 2 Ω or greater, repair the open/high resistance in the circuit.
    - If less than 2 Ω, verify the fuse is OK and there is voltage at the fuse.
- **If the test lamp does not illuminate and the circuit fuse is open**

1. Ignition OFF, remove the test lamp.
2. Test for infinite resistance between the B+ circuit and ground.
    - If less than infinite resistance, repair the short to ground on the circuit.
    - If infinite resistance, M45 Rear Wiper Motor
- **If the test lamp illuminates**

4. Ignition ON.
5. Test for 5.0-10.0 V between the serial data circuit terminal 2 and ground.
- **If less than 5.0 V**

1. Ignition OFF, disconnect the harness connector at the K9 Body Control Module.
2. Test for infinite resistance between the serial data circuit and ground.
    - If less than infinite resistance, repair the short to ground on the circuit.
    - If infinite resistance
3. Test for less than 2 Ω in the serial data circuit end to end.
    - If 2 Ω or greater, repair the open/high resistance in the circuit.
    - If less than 2 Ω, replace the K9 Body Control Module.
- **If greater than 10.0 V**

1. Ignition OFF, disconnect the harness connector at the K9 Body Control Module, ignition ON.
2. Test for less than 1 V between the serial data circuit and ground.

cardiagn.com

- If 1 V or greater, repair the short to voltage on the circuit.
- If less than 1 V, replace the K9 Body Control Module.

- **If between 5.0-10.0 V**

6. Test or replace the M45 Rear Wiper Motor.

Repair Instructions

Perform the **Diagnostic Repair Verification** after completing the repair.

- **Turn Signal Switch Replacement (N33, N37)** **Turn Signal Switch Replacement (N38)**
- **Rear Window Wiper Motor Replacement (Chevroler/GMC)Rear Window Wiper Motor Replacement (Cadillac)**
- **Control Module References** for body control module replacement, programming and setup.

DTC B3715 OR B3875: WINDSHIELD WIPER

Diagnostic Instructions

- Perform the **Diagnostic System Check - Vehicle** prior to using this diagnostic procedure.
- Review **Strategy Based Diagnosis** for an overview of the diagnostic approach.
- **Diagnostic Procedure Instructions** provides an overview of each diagnostic category.

DTC Descriptors

DTC B3715

Windshield Wiper Relay Circuit

DTC B3875

Windshield Wiper High Speed Relay Circuit

For symptom byte information, refer to **Symptom Byte List** .

Diagnostic Fault Information

Circuit	Short to Ground	Open/High Resistance	Short to Voltage	Signal Performance

cardiagn.com

Circuit	Short to Ground	Open/High Resistance	Short to Voltage	Signal Performance
Windshield Wiper Relay Control	B3715 02	B3715 04	B3715 01	-
Windshield Wiper Speed Control Relay Control	B3875 02	B3875 04	B3875 01	-

Circuit/System Description

The windshield wiper motor is controlled by the body control module (BCM) through the windshield wiper replay and the windshield wiper speed control relay. When low speed windshield wiper operation is requested, the BCM will apply voltage to the windshield wiper relay control circuit. This will cause the contacts in the windshield wiper relay to close and apply B+ to the windshield wiper motor through the windshield wiper low speed control circuit, enabling low speed wiper operation. When high speed windshield wiper operation is requested, the body control module continues to apply voltage to the windshield wiper relay control circuit and also applies ground to the windshield wiper speed control relay control circuit. This will cause the contacts in the windshield wiper speed control relay to close and apply B+ to the windshield wiper motor through the windshield wiper high speed control circuit, enabling high speed wiper operation. When the windshield wiper request is no longer present, the contacts in the windshield wiper relay and windshield wiper speed control relay will open, removing B+ from the wiper motor control circuits. The windshield wiper motor will continue to operate using a discrete B+ circuit provided by the BCM until the wipers are in the park position.

Conditions for Running the DTC

- A wiper output is actively being requested by the BCM.
- The system voltage is between 9-16 V.

Conditions for Setting the DTC

B3715 01

A short to voltage is detected in the windshield wiper relay control circuit.

B3715 02

A short to ground is detected in the windshield wiper relay control circuit.

B3715 04

An open or high resistance is detected in the windshield wiper relay control circuit.

B3875 01

cardiagn.com

A short to voltage is detected in the windshield wiper high speed relay control circuit.

B3875 02

A short to ground is detected in the windshield wiper high speed relay control circuit.

B3875 04

An open or high resistance is detected in the windshield wiper high speed relay control circuit.

Action Taken When the DTC Sets

The BCM will not activate the wiper output.

Conditions for Clearing the DTC

- A current DTC will clear when the condition for setting the fault is no longer present.
- A history DTC will clear after 50 consecutive ignition cycles without a fault present.

Reference Information

Schematic Reference

Wiper/Washer Schematics

Connector End View Reference

COMPONENT CONNECTOR END VIEWS - INDEX

Description and Operation

Wiper/Washer System Description and Operation

Electrical Information Reference

- **Circuit Testing**
- **Connector Repairs**
- **Testing for Intermittent Conditions and Poor Connections**

cardiagn.com

- **Wiring Repairs**

Scan Tool Reference

Control Module References for scan tool information

Circuit/System Verification

1. Ignition ON.
2. Verify the M75 Windshield Wiper Motor changes between Off, Low, and High when cycling the S78 Turn Signal Multifunction Switch between Off, Low, and High.
   - **If the Windshield Wiper Motor does not cycle between Off, Low, and High**

     Refer to Circuit/System Testing

   - **If the Windshield Wiper Motor cycles between Off, Low, and High**
3. All OK.

Circuit/System Testing

1. Ignition OFF and all vehicle systems OFF, disconnect the X2 harness connector at the X50A Fuse Block - Underhood. It may take up to 10 min for all vehicle systems to power down.
2. Test for less than 10 Ω between the ground circuit terminal F2 and ground.
   - **If 10 Ω or greater**
   1. Ignition OFF.
   2. Test for less than 2 Ω in the ground circuit end to end.
      - If 2 Ω or greater, repair the open/high resistance in the circuit.
      - If less than 2 Ω, repair the open/high resistance in the ground connection.
   - **If less than 10 Ω**
3. Connect the X2 harness connector at the X50A Fuse Block - Underhood, disconnect the harness connector at the M75 Windshield Wiper Motor.
4. Test for less than 10 Ω between the ground circuit terminal 5 and ground.
   - **If 10 Ω or greater**
   1. Ignition OFF and all vehicle systems OFF, disconnect the X3 harness connector at the X50A Fuse Block - Underhood. It may take up to

cardiagn.com

10 min for all vehicle systems to power down.

2. Test for less than 2 Ω in the ground circuit end to end.
    - If 2 Ω or greater, repair the open/high resistance in the circuit.
    - If less than 2 Ω, replace the X50A Fuse Block - Underhood.

- **If less than 10 Ω**

5. Test for less than 10 Ω between the ground circuit terminal 2 and ground.

- **If 10 Ω or greater**

1. Ignition OFF.
2. Test for less than 2 Ω in the ground circuit end to end.
    - If 2 Ω or greater, repair the open/high resistance in the circuit.
    - If less than 2 Ω, repair the open/high resistance in the ground connection.

- **If less than 10 Ω**

6. Ignition ON.
7. Verify the scan tool Windshield Wiper Park Switch parameter is Inactive.

- **If not Inactive**

1. Ignition OFF, disconnect the X4 harness connector at the K9 Body Control Module.
2. Test for infinite resistance between the M75 Windshield Wiper Motor park switch signal circuit terminal 3 and ground.
    - If less than infinite resistance, repair the short to ground on the circuit.
    - If infinite resistance, replace the K9 Body Control Module.

- **If Inactive**

8. Install a 3 A fused jumper wire between the signal circuit terminal 3 and ground circuit terminal 2.
9. Verify the scan tool Windshield Wiper Park Switch parameter is Active.

- **If not Active**

1. Ignition OFF, remove the jumper wire.
2. Disconnect the X4 harness connector at the K9 Body Control Module, ignition ON.
3. Test for less than 1 V between the signal circuit and ground.
    - If 1 V or greater, repair the short to voltage on the circuit.
    - If less than 1 V
4. Test for less than 2 Ω in the signal circuit end to end.

cardiagn.com

- If 2 Ω or greater, repair the open/high resistance in the circuit.
- If less than 2 Ω, replace the K9 Body Control Module.

- **If Active**

10. Connect a test lamp between the following control circuits and ground, ignition ON.
    - Windshield Wiper Motor Low Speed Control Circuit Terminal 1
    - Windshield Wiper Motor High Speed Control Circuit Terminal 4
11. Verify the test lamp does NOT turn ON and OFF when commanding the Windshield Wiper Relay High and Low with a scan tool.
    - **If the test lamp turns ON and OFF for both terminals**

      Test or replace the M75 Windshield Wiper Motor.

    - **If the test lamp does not turn ON and OFF for one or both terminals**
12. Ignition OFF, connect the harness connector at the M75 Windshield Wiper Motor. Disconnect the X3 harness connector at the X50A Fuse Block - Underhood.
13. Connect a 20 A fused jumper wire between the control circuit terminals listed below, one at a time, and B+.
    - Terminal K3
    - Terminal K4
14. Connect 20 A fused jumper wire between the ground circuit terminal H2 X3 and ground.
15. Verify the M75 Windshield Wiper Motor activates.
    - **If the M75 Windshield Wiper Motor does not activate**
    1. Ignition OFF, remove the jumper wire, disconnect the harness connector at the M75 Windshield Wiper Motor.
    2. Test for infinite resistance between the control circuit and ground.
       - If less than Infinite resistance, repair the short to ground on the circuit.
       - If infinite resistance
    3. Test for less than 2 Ω in the control circuit end to end.
       - If 2 Ω or greater, repair the open/high resistance in the circuit.
       - If less than 2 Ω, replace the M75 Windshield Wiper Motor.
    - **If the M75 Windshield Wiper Motor activates**
16. Ignition OFF, connect the X3 harness connector at the X50A Fuse Block - Underhood. Disconnect the X4 harness connector at the K9 Body Control Module, ignition ON.

cardiagn.com

17. Verify the M75 Windshield Wiper Motor low speed is not activated.
    - **If the M75 Windshield Wiper Motor low speed is activated**
    1. Ignition OFF, disconnect the X3 harness connector at the X50A Fuse Block - Underhood, ignition ON.
    2. Test for less than 1 V between the control circuit terminal L4 and ground.
        - If 1 V or greater, repair the short to voltage on the circuit.
        - If less than 1 V, test or replace the replace the X50A Fuse Block - Underhood.
    - **If the M75 Windshield Wiper Motor low speed is not activated**
18. Ignition OFF, disconnect the X5 harness connector at the K9 Body Control Module, ignition ON.
19. Verify the M75 Windshield Wiper Motor High Speed is not activated.
    - **If the M75 Windshield Wiper Motor high speed is activated**
    1. Ignition OFF, disconnect the X3 harness connector at the X50A Fuse Block - Underhood, ignition ON.
    2. Test for infinite resistance between the control circuit terminal J1 and ground.
        - If less than infinite resistance, repair the short to ground on the circuit.
        - If infinite resistance, replace the X50A Fuse Block - Underhood.
    - **If the M75 Windshield Wiper Motor high speed is not activated**
20. Connect a 10 A fused jumper wire between the control circuit terminal 16 X4 and B+.
21. Verify the M75 Windshield Wiper Motor activates.
    - **If the M75 Windshield Wiper Motor does not activate**
    1. Ignition OFF, remove the jumper wire, disconnect the X3 harness connector at the X50A Fuse Block - Underhood.
    2. Test for infinite resistance between the control circuit and ground.
        - If less than infinite resistance, repair the short to ground on the circuit.
        - If less than infinite resistance
    3. Test for less than 2 Ω in the control circuit end to end.
        - If 2 Ω or greater, repair the open/high resistance in the circuit.
        - If less than 2 Ω, test or replace the X50A Fuse Block - Underhood.
    - **If the M75 Windshield Wiper Motor activates**
22. Connect a 10 A fused jumper wire between the control circuit terminal 24 X5 and ground.
23. Verify the M75 Windshield Wiper Motor activates.
    - **If the M75 Windshield Wiper Motor does not activate**

cardiagn.com

1. Ignition OFF, remove the jumper wire, disconnect the X3 harness connector at the X50A Fuse Block - Underhood.
2. Test for less than 1 V between the control circuit and ground.
   - If 1 V or greater, repair the short to voltage on the circuit.
   - If less than 1 V
3. Test for less than 2 Ω in the control circuit end to end.
   - If 2 Ω or greater, repair the open/high resistance in the circuit.
   - If less than 2 Ω, test or replace the X50A Fuse Block - Underhood.

- **If the M75 Windshield Wiper Motor activates**

24. Replace the K9 Body Control Module.

Repair Instructions

Perform the **Diagnostic Repair Verification** after completing the repair.

- **Underhood Electrical Center or Junction Block Bracket Replacement**
- **Control Module References** for body control module replacement, programming and setup.

DTC B3811: REAR WASHER RELAY CIRCUIT

Diagnostic Instructions

- Perform the **Diagnostic System Check - Vehicle** prior to using this diagnostic procedure.
- Review **Strategy Based Diagnosis** for an overview of the diagnostic approach.
- **Diagnostic Procedure Instructions** provides an overview of each diagnostic category.

DTC Descriptor

DTC B3811

Rear Washer Relay Circuit

For symptom byte information, refer to **Symptom Byte List** .

Diagnostic Fault Information

Circuit	Short to Ground	Open/High	Short to Voltage	Signal Performance

cardiagn.com

		Resistance		
Rear Washer Switch Signal	1	1	-	-
Rear Window Washer Pump Relay Control	B3811 02	B3811 04	B3811 01	-
Rear Windshield Washer Pump Control	1	1	2	-
Rear Windshield Washer Pump Ground	-	1	-	-
Fuse Block Underhood Ground	-	1	-	-
1. Rear Washer Inoperative 2. Rear Washer Always ON				

Circuit/System Description

The body control module (BCM) controls the rear washer based on an input from the rear wiper switch, which is part of the turn signal/multifunction switch. The BCM monitors the rear wiper switch through separate signal circuits and a ground circuit. The rear wiper switch uses a resistor ladder to determine low speed, intermittent, and rear washer operation. The BCM monitors applies and monitors voltage on the rear wiper switch signal circuit. When the rear wiper switch is placed in the low speed, intermittent, or rear washer position, the voltage is pulled down through a different resistor in the resistor ladder, reducing the voltage seen at the BCM. The BCM will respond by commanding the specific rear wiper function.

The rear window washer pump is controlled by the body control module (BCM) controls through the rear washer pump relay. When the rear wash switch is pressed, ignition voltage from the body control module (BCM) is applied to the rear washer relay control circuit. The rear washer relay control circuit is used to energize the relay coil and close the rear washer pump control circuit to B+.

Conditions for Running the DTC

- Ignition ON
- The system voltage is between 9-16 V

Conditions for Setting the DTC

A short to ground has been detected on the rear window washer pump relay control circuit

B3811 01

A short to voltage has been detected on the rear window washer pump relay control circuit

B3811 02

A short to ground has been detected on the rear window washer pump relay control circuit

cardiagn.com

B3811 04

A open/high resistance has been detected on the rear window washer pump relay control circuit

Action Taken When the DTC Sets

Rear washer operation is disabled.

Conditions for Clearing the DTC

- A current DTC clears when the diagnostic runs and passes.
- A history DTC will clear after 50 consecutive ignition cycles without a fault present.

Diagnostic Aids

The rear liftgate must be closed in order for the rear wiper to work

Reference Information

Schematic Reference

Wiper/Washer Schematics

Connector End View Reference

COMPONENT CONNECTOR END VIEWS - INDEX

Description and Operation

Wiper/Washer System Description and Operation

Electrical Information Reference

- **Circuit Testing**
- **Connector Repairs**
- **Testing for Intermittent Conditions and Poor Connections**
- **Wiring Repairs**

Scan Tool Reference

cardiagn.com

Control Module References for scan tool information

Circuit/System Verification

1. Ignition ON.
2. Verify the G19 Rear Window Washer Pump turns on and off when commanding the rear washers Inactive and Active with the rear washer switch
   - **If the G19 Rear Window Washer Pump do not turn ON**

     Refer to Circuit/System Testing

   - **If the G19 Rear Window Washer Pump turn ON**
3. All OK.

Circuit/System Testing

1. Ignition OFF, and all vehicle systems OFF. Disconnect the harness connector at the G19 Rear Window Washer Pump. It may take up to 2 min for all vehicle systems to power down.
2. Test for less than 10 Ω between the ground circuit terminal 2 and ground.
   - **If 10 Ω or greater**
   1. Ignition OFF.
   2. Test for less than 2 Ω in the ground circuit end to end.
      - If 2 Ω or greater, repair the open/high resistance in the circuit.
      - If less than 2 Ω, repair the open/high resistance in the ground connection.
   - **If less than 10 Ω**
3. Connect a test lamp between the control circuit terminal 1 and ground, ignition ON.
4. Verify the test lamp does not turn ON and OFF when commanding the Rear Washer Relay Active and Inactive with a scan tool.
   - **If the test lamp turns ON and OFF**

     Test or replace the G19 Rear Window Washer Pump.

   - **If the test lamp does not turn ON and OFF**
5. Ignition OFF, connect the harness connector at the G19 Rear Window Washer Pump. Disconnect the X1 harness connector at the X50A Fuse Block-Underhood, ignition ON.

cardiagn.com

6. Verify the G19 Rear Window Washer Pump is not activated.
   - **If the G19 Rear Window Washer Pump is activated**
   1. Ignition OFF, disconnect the harness connector at the G19 Rear Window Washer Pump, ignition ON.
   2. Test for less than 1 V between the control circuit terminal D2 and ground.
      - If 1 V or greater, repair the short to voltage on the circuit.
      - If less than 1 V, test or replace the G19 Rear Window Washer Pump.
   - **If the G19 Rear Window Washer Pump is not activated**
7. Connect a 15 A fused jumper wire between the control circuit terminal D2 and B+.
8. Verify the G19 Rear Window Washer Pump activates.
   - **If the G19 Rear Window Washer Pump does not activate**
   1. Ignition OFF, remove the jumper wire, disconnect the harness connector at the G19 Rear Window Washer Pump.
   2. Test for infinite resistance between the control circuit and ground.
      - If less than Infinite resistance, repair the short to ground on the circuit.
      - If infinite resistance
   3. Test for less than 2 Ω in the control circuit end to end.
      - If 2 Ω or greater, repair the open/high resistance in the circuit.
      - If less than 2 Ω, test or replace the G19 Rear Window Washer Pump.
   - **If the G19 Rear Window Washer Pump activates**
9. Ignition OFF and all vehicle systems OFF, connect the X1 harness connector at the X50A Fuse Block-Underhood. Disconnect the X2 harness connector at the X50A Fuse Block - Underhood. It may take up to 2 min for all vehicle systems to power down.
10. Test for less than 10 Ω between the ground circuit terminal F2 and ground.
    - **If 10 Ω or greater**
    1. Ignition OFF.
    2. Test for less than 2 Ω in the ground circuit end to end.
       - If 2 Ω or greater, repair the open/high resistance in the circuit.
       - If less than 2 Ω, repair the open/high resistance in the ground connection.
       - **If less than 10 Ω**
11. Ignition OFF, connect the X2 harness connector at the X50A Fuse Block-Underhood. Disconnect the X5 harness connector at the K9 Body Control Module, ignition ON

cardiagn.com

12. Verify the G19 Rear Window Washer Pump is not activated.
    - **If the G19 Rear Window Washer Pump is activated**
    1. Ignition OFF, disconnect the X3 harness connector at the X50A Fuse Block-Underhood.
    2. Test for less than 1 V between the K9 Body Control Module control circuit terminal 9 and ground.
        - If 1 V or greater, repair the short to voltage on the circuit.
        - If less than 1 V, test or replace the X50A Fuse Block-Underhood.
    - **If the G19 Rear Window Washer Pump is not activated**
13. Connect a 3 A fused jumper wire between the control circuit terminal 9 and B+.
14. Verify the G19 Rear Window Washer Pump activates.
    - **If the G19 Rear Window Washer Pump does not activate**
    1. Ignition OFF, remove the jumper wire, disconnect the X3 harness connector at the X50A Fuse Block-Underhood, ignition ON.
    2. Test for infinite resistance between the control circuit and ground.
        - If less than Infinite resistance, repair the short to ground on the circuit.
        - If infinite resistance
    3. Test for less than 2 Ω in the control circuit end to end.
        - If 2 Ω or greater, repair the open/high resistance in the circuit.
        - If less than 2 Ω, test or replace the G19 Rear Window Washer Pump.
    - **If the G19 Rear Window Washer Pump activates**
15. Replace the K9 Body Control Module.

Component Testing

Rear Windshield Washer Pump

1. Install a 15 A fused jumper wire between the B+ terminal 1 and 12 V. Install a jumper wire between the control terminal 2 and ground.
2. Verify the G19 Rear Window Washer Pump activates.
    - **If the G19 Rear Window Washer Pump does not activate.**

      Replace the G19 Rear Window Washer Pump.

    - **If the G19 Rear Window Washer Pump does activate.**

cardiagn.com

3. All OK

Repair Instructions

Perform the **Diagnostic Repair Verification** after completing the repair.

- **Windshield Washer Pump Replacement**
- **Body Wiring Harness Junction Block Replacement**
- **Turn Signal Switch Replacement (N33, N37)** **Turn Signal Switch Replacement (N38)**
- **Control Module References** for body control module replacement, programming and setup.

DTC B3873: FRONT WASHER RELAY CIRCUIT

Diagnostic Instructions

- Perform the **Diagnostic System Check - Vehicle** prior to using this diagnostic procedure.
- Review **Strategy Based Diagnosis** for an overview of the diagnostic approach.
- **Diagnostic Procedure Instructions** provides an overview of each diagnostic category.

DTC Descriptor

DTC B3873

Front Washer Relay Circuit

For symptom byte information refer to: **Symptom Byte List**

Diagnostic Fault Information

Circuit	Short to Ground	Open/High Resistance	Short to Voltage	Signal Performance
Windshield Washer Pump Relay Control	B3873 02	B3873 04	B3873 01	-

Circuit/System Description

The windshield washer function is controlled by the body control module. When the washer switch is pressed, low reference is applied through the switch contacts and the signal circuit to the body control module indicating the wash request. The body control module then applies voltage through the control circuit to the coil side of the windshield washer pump relay energizing the relay. With the relay energized, battery voltage from the fuse is

cardiagn.com

applied through the switch contacts of the relay and the control circuit to the windshield washer fluid pump.

Conditions for Running the DTC

When the output is actively being requested by the body control module.

Conditions for Setting the DTC

B3873 01

The body control module detects a short to B+ in the windshield washer pump relay control circuit

B3873 02

The body control module detects a short to ground in the windshield washer pump relay control circuit

B3873 04

The body control module detects an open or high resistance in the windshield washer pump relay control circuit

Action Taken When the DTC Sets

The body control module will not activate the output.

Conditions for Clearing the DTC

- The current DTC will become history when the request for the output is removed or when the condition for setting the fault is corrected.
- The history DTC will clear after 50 consecutive ignition cycles without a fault present.

Reference Information

Schematic Reference

Wiper/Washer Schematics

Connector End View Reference

COMPONENT CONNECTOR END VIEWS - INDEX

Description and Operation

cardiagn.com

Wiper/Washer System Description and Operation

Electrical Information Reference

- Circuit Testing
- Connector Repairs
- Testing for Intermittent Conditions and Poor Connections
- Wiring Repairs

Scan Tool Reference

Control Module References for scan tool information

Circuit/System Verification

1. Ignition ON.
2. Verify the G24 Windshield Washer Pump activates when commanding the Windshield Washer Relay On and Off with a scan tool.
   - **If the G24 Windshield Washer Pump does not activate**

     Refer to Circuit/System Testing

   - **If the G24 Windshield Washer Pump activates**
3. All OK.

Circuit/System Testing

1. Ignition OFF, disconnect the X4 harness connector at the K9 Body Control Module, ignition ON.
2. Verify the G24 Windshield Washer Pump is not activated.
   - **If the G24 Windshield Washer Pump is activated**
   1. Ignition OFF, disconnect the X3 harness connector at the X50A Fuse Block-Underhood.
   2. Test for less than 1 V between the K9 Body Control Module control circuit terminal 14 X4 and ground.
      - If 1 V or greater, repair the short to voltage on the circuit.
      - If less than 1 V, test or replace the X50A Fuse Block-Underhood.
   - **If the G24 Windshield Washer Pump is not activated**

cardiagn.com

3. Connect a 3 A fused jumper wire between the control circuit terminal 14 and B+.
4. Verify the G24 Windshield Washer Pump activates.
   - **If the G24 Windshield Washer Pump does not activate**
   1. Ignition OFF, remove the jumper wire, disconnect the X3 harness connector at the X50A Fuse Block-Underhood, ignition ON.
   2. Test for infinite resistance between the control circuit and ground.
      - If less than Infinite resistance, repair the short to ground on the circuit.
      - If infinite resistance
   3. Test for less than 2 Ω in the control circuit end to end.
      - If 2 Ω or greater, repair the open/high resistance in the circuit.
      - If less than 2 Ω, test or replace the X50A Fuse Block-Underhood.
   - **If the G24 Windshield Washer Pump activates**
5. Replace the K9 Body Control Module.

Repair Instructions

Perform the **Diagnostic Repair Verification** after completing the repair.

- **Body Wiring Harness Junction Block Replacement**
- **Control Module References** for body control module replacement, programming and setup.

SYMPTOMS - WIPER/WASHER SYSTEMS

NOTE: **The following steps must be completed before using the symptom tables:**

1. Perform **Diagnostic System Check - Vehicle** , in order to verify that all of the following conditions are true:
   - No DTCs are set.
   - The control modules can communicate via the serial data link.
2. Refer to **Wiper/Washer System Description and Operation** in order to familiarize yourself with the system functions.

Visual/Physical Inspection

- Inspect for aftermarket devices which may affect the operation of the windshield wiper/washer system. Refer to **Checking Aftermarket Accessories** .

cardiagn.com

- Inspect the easily accessible or visible system components for obvious damage or conditions which may cause the symptom.
- Inspect the washer fluid reservoir for the proper fluid level.

Intermittent

Faulty electrical connections or wiring may be the cause of intermittent conditions. Refer to **Testing for Intermittent Conditions and Poor Connections** .

Symptom List

Refer to a symptom diagnostic procedure from the following list in order to diagnose the symptom:

- **Windshield Wiper System Malfunction**
- **Washer Malfunction**
- **Low Washer Fluid Indicator Malfunction**
- **Rain Sensor Malfunction**
- **Rear Wiper System Malfunction**
- **Rear Washer System Malfunction**

WINDSHIELD WIPER SYSTEM MALFUNCTION

Diagnostic Instructions

- Perform the **Diagnostic System Check - Vehicle** prior to using this diagnostic procedure.
- Review **Strategy Based Diagnosis** for an overview of the diagnostic approach.
- **Diagnostic Procedure Instructions** provides an overview of each diagnostic category.

Diagnostic Fault Information

Circuit	Short to Ground	Open/High Resistance	Short to Voltage	Signal Performance
Windshield Wiper Switch Signal terminal 3	1	1	1	-
Windshield Wiper Switch Signal terminal 4	4	2	-	-
Windshield Wiper Motor Park Signal	3	3	-	-
Windshield Wiper Motor Relay Coil Supply Voltage Control	B3715 02	B3715 04	B3715 01	-

cardiagn.com

Circuit	Short to Ground	Open/High Resistance	Short to Voltage	Signal Performance
Front Windshield Wiper Switch High Signal	B3875 02	B3875 04	B3875 01, 4	-
Windshield Wiper High Speed Motor Control	2	2	4	-
Front Wiper Low Speed Motor Control	1	1	4	-
Windshield Wiper Switch Low Reference	-	1, 2	-	-
Windshield Wiper Motor Ground	-	1, 2, 3	-	-
Windshield Wiper Relay Ground	-	1	-	-
1. Delay or Low Speed Wipers Inoperative 2. High Speed Wipers Inoperative 3. Wipers Do Not Park 4. Wipers Always On				

Circuit/System Description

The body control module (BCM) controls the windshield wiper motor based on inputs from the windshield wiper/washer switch. The BCM monitors the windshield wiper/washer switch through two separate signal circuits and a low reference circuit. The windshield wiper/washer switch uses a resistor ladder to determine low speed and intermittent operation. The BCM applies and monitors voltage on the windshield wiper switch signal circuit. When the wiper switch is placed in the low speed or intermittent position, the voltage is pulled down through a different resistor in the resistor ladder, reducing the voltage seen at the BCM. The BCM will respond by commanding on the low speed or intermittent wipers. The high speed wipers are controls through a discrete signal circuit. With the windshield wiper/washer switch is in the high speed position, the windshield wiper high speed switch signal circuit is pulled directly to ground. The BCM will respond by commanding on the high speed wipers.

The windshield wiper motor is controlled by the BCM through the windshield wiper replay and the windshield wiper speed control relay. A constant ground is supplied to the rear wiper motor. When low speed windshield wiper operation is requested, the BCM will apply voltage to the windshield wiper relay control circuit. This will cause the contacts in the windshield wiper relay to close and apply B+ to the windshield wiper motor through the windshield wiper low speed control circuit, enabling low speed wiper operation. When high speed windshield wiper operation is requested, the BCM continues to apply voltage to the windshield wiper relay control circuit and also applies ground to the windshield wiper speed control relay control circuit. This will cause the contacts in the windshield wiper speed control relay to close and apply B+ to the windshield wiper motor through the windshield wiper high speed control circuit, enabling high speed wiper operation. When the windshield wiper request is no longer present, the contacts in the windshield wiper relay and windshield wiper speed control relay will open, removing B+ from the wiper motor control circuits. The windshield wiper motor will continue to operate using a discrete B+ circuit provided by the BCM until the wipers are in the park position.

Reference Information

Schematic Reference

cardiagn.com

Wiper/Washer Schematics

Connector End View Reference

COMPONENT CONNECTOR END VIEWS - INDEX

Description and Operation

Wiper/Washer System Description and Operation

Electrical Information Reference

- **Circuit Testing**
- **Connector Repairs**
- **Testing for Intermittent Conditions and Poor Connections**
- **Wiring Repairs**

Scan Tool Reference

Control Module References for scan tool information

Circuit/System Verification

1. Ignition ON.
2. Verify the scan tool Windshield Wiper Switch parameter changes between Off and Low when activating the low speed windshield wipers.
   - **If the parameter does not change**

     Refer to Circuit/System Testing - Windshield Wiper/Washer Switch Malfunction.

   - **If the parameter changes**
3. Verify the scan tool Windshield Wiper Switch parameter changes between Delay 1 and Delay 5 when cycling the intermittent speed windshield wipers.
   - **If the parameter does not change**

     Test or replace the S78 Turn Signal Multifunction Switch.

   - **If the parameter changes**

cardiagn.com

4. Verify the scan tool Windshield Wiper High Speed Switch parameter changes between Active and Inactive when activating the high speed windshield wipers.
   - **If the parameter does not change**

     Refer to Circuit/System Testing - Windshield Wiper/Washer Switch Malfunction.

   - **If the parameter changes**
5. Verify the M75 Windshield Wiper Motor changes between Off, Low, and High when cycling the S78 Turn Signal Multifunction Switch between Off, Low, and High.
   - **If the Windshield Wiper Motor does not cycle between Off, Low, and High**

     Refer to Circuit/System Testing - Windshield Wiper Motor Malfunction

   - **If the Windshield Wiper Motor cycles between Off, Low, and High**
6. Ignition OFF.
7. Verify the scan tool Windshield Wiper Park Switch parameter is Active.
   - **If the parameter does not change**

     Refer to Circuit/System Testing - Windshield Wiper Motor Malfunction.

   - **If the parameter changes**
8. All OK.

Circuit/System Testing

Windshield Wiper/Washer Switch Malfunction

1. Ignition OFF and all vehicle systems OFF, disconnect the X1 harness connector at the S78 Turn Signal/Multifunction Switch. It may take up to 5 min for all vehicle systems to power down.
2. Test for less than 10 Ω between the low reference circuit terminal 7 and ground.
   - **If 10 Ω or greater**
   1. Ignition OFF, disconnect the harness connector at the K9 Body Control Module.
   2. Test for less than 2 Ω in the low reference circuit end to end.
      - If 2 Ω or greater, repair the open/high resistance in the circuit.

cardiagn.com

- If less than 2 Ω, replace the K9 Body Control Module.
- **If less than 10 Ω**

3. Ignition ON.
4. Verify the scan tool Windshield Wiper High Speed Switch parameter is Inactive.
    - **If not Inactive**
    1. Ignition OFF, disconnect the harness connector at the K9 Body Control Module.
    2. Test for infinite resistance between the signal circuit terminal 4 and ground.
        - If less than infinite resistance, repair the short to ground on the circuit.
        - If infinite resistance, replace the K9 Body Control Module.
    - **If Inactive**
5. Install a 3 A fused jumper wire between the signal circuit terminal 4 and the low reference circuit terminal 7.
6. Verify the scan tool Windshield Wiper High Speed Switch parameter is Active.
    - **If not Active**
    1. Ignition OFF, remove the jumper wire, disconnect the harness connector at the K9 Body Control Module, ignition ON.
    2. Test for less than 1 V between the signal circuit and ground.
        - If 1 V or greater, repair the short to voltage on the circuit.
        - If less than 1 V
    3. Test for less than 2 Ω in the signal circuit end to end.
        - If 2 Ω or greater, repair the open/high resistance in the circuit.
        - If less than 2 Ω, replace the K9 Body Control Module.
    - **If Active**
7. Test for 8 V or greater between the signal circuit terminal 8 and ground.
    - **If less than 8 V**
    1. Ignition OFF, disconnect the harness connector at the K9 Body Control Module.
    2. Test for infinite resistance between the signal circuit and ground
        - If less than infinite resistance, repair the short to ground on the circuit.
        - If infinite resistance
    3. Test for less than 2 Ω in the signal circuit end to end.
        - If 2 Ω or greater, repair the open/high resistance in the circuit.

cardiagn.com

- If less than 2 Ω, replace the K9 Body Control Module.
- **If 8 V or greater**

8. Ignition OFF, disconnect the X3 harness connector at the K9 Body Control Module, ignition ON.
9. Test for less than 1 V between the S78 Turn Signal/Multifunction Switch signal circuit terminal 8 and ground.
   - **If 1 V or greater**

     Repair the short to voltage on the circuit.

   - **If less than 1 V**
10. Test or replace the S78 Turn Signal/Multifunction Switch.

Windshield Wiper Motor Malfunction

1. Ignition OFF and all vehicle systems OFF, disconnect the X2 harness connector at the X50A Fuse Block - Underhood. It may take up to 10 min for all vehicle systems to power down.
2. Test for less than 10 Ω between the ground circuit terminal F2 and ground.
   - **If 10 Ω or greater**
   1. Ignition OFF.
   2. Test for less than 2 Ω in the ground circuit end to end.
      - If 2 Ω or greater, repair the open/high resistance in the circuit.
      - If less than 2 Ω, repair the open/high resistance in the ground connection.
   - **If less than 10 Ω**
3. Connect the X2 harness connector at the X50A Fuse Block - Underhood, disconnect the harness connector at the M75 Windshield Wiper Motor.
4. Test for less than 10 Ω between the ground circuit terminal 5 and ground.
   - **If 10 Ω or greater**
   1. Ignition OFF and all vehicle systems OFF, disconnect the X3 harness connector at the X50A Fuse Block - Underhood. It may take up to 10 min for all vehicle systems to power down.
   2. Test for less than 2 Ω in the ground circuit end to end.
      - If 2 Ω or greater, repair the open/high resistance in the circuit.
      - If less than 2 Ω, replace the X50A Fuse Block - Underhood.

cardiagn.com

- **If less than 10 Ω**

5. Test for less than 10 Ω between the ground circuit terminal 2 and ground.
   - **If 10 Ω or greater**
   1. Ignition OFF.
   2. Test for less than 2 Ω in the ground circuit end to end.
      - If 2 Ω or greater, repair the open/high resistance in the circuit.
      - If less than 2 Ω, repair the open/high resistance in the ground connection.
   - **If less than 10 Ω**
6. Ignition ON.
7. Verify the scan tool Windshield Wiper Park Switch parameter is Inactive.
   - **If not Inactive**
   1. Ignition OFF, disconnect the X4 harness connector at the K9 Body Control Module.
   2. Test for infinite resistance between the M75 Windshield Wiper Motor park switch signal circuit terminal 3 and ground.
      - If less than infinite resistance, repair the short to ground on the circuit.
      - If infinite resistance, replace the K9 Body Control Module.
   - **If Inactive**
8. Install a 3 A fused jumper wire between the signal circuit terminal 3 and ground circuit terminal 2.
9. Verify the scan tool Windshield Wiper Park Switch parameter is Active.
   - **If not Active**
   1. Ignition OFF, remove the jumper wire.
   2. Disconnect the X4 harness connector at the K9 Body Control Module, ignition ON.
   3. Test for less than 1 V between the signal circuit and ground.
      - If 1 V or greater, repair the short to voltage on the circuit.
      - If less than 1 V
   4. Test for less than 2 Ω in the signal circuit end to end.
      - If 2 Ω or greater, repair the open/high resistance in the circuit.
      - If less than 2 Ω, replace the K9 Body Control Module.
   - **If Active**
10. Connect a test lamp between the following control circuits and ground, ignition ON.

cardiagn.com

- Windshield Wiper Motor Low Speed Control Circuit Terminal 1
- Windshield Wiper Motor High Speed Control Circuit Terminal 4

11. Verify the test lamp does NOT turn ON and OFF when commanding the Windshield Wiper Relay High and Low with a scan tool.
    - **If the test lamp turns ON and OFF for both terminals**

      Test or replace the M75 Windshield Wiper Motor.

    - **If the test lamp does not turn ON and OFF for one or both terminals**
12. Ignition OFF, connect the harness connector at the M75 Windshield Wiper Motor. Disconnect the X3 harness connector at the X50A Fuse Block - Underhood.
13. Connect a 20 A fused jumper wire between the control circuit terminals listed below, one at a time, and B+.
    - Terminal K3
    - Terminal K4
14. Connect 20 A fused jumper wire between the ground circuit terminal H2 X3 and ground.
15. Verify the M75 Windshield Wiper Motor activates.
    - **If the M75 Windshield Wiper Motor does not activate**
    1. Ignition OFF, remove the jumper wire, disconnect the harness connector at the M75 Windshield Wiper Motor.
    2. Test for infinite resistance between the control circuit and ground.
        - If less than Infinite resistance, repair the short to ground on the circuit.
        - If infinite resistance
    3. Test for less than 2 Ω in the control circuit end to end.
        - If 2 Ω or greater, repair the open/high resistance in the circuit.
        - If less than 2 Ω, replace the M75 Windshield Wiper Motor.
    - **If the M75 Windshield Wiper Motor activates**
16. Ignition OFF, connect the X3 harness connector at the X50A Fuse Block - Underhood. Disconnect the X4 harness connector at the K9 Body Control Module, ignition ON.
17. Verify the M75 Windshield Wiper Motor low speed is not activated.
    - **If the M75 Windshield Wiper Motor low speed is activated**
    1. Ignition OFF, disconnect the X3 harness connector at the X50A Fuse Block - Underhood, ignition ON.
    2. Test for less than 1 V between the control circuit terminal L4 and ground.

cardiagn.com

- If 1 V or greater, repair the short to voltage on the circuit.
- If less than 1 V, test or replace the replace the X50A Fuse Block - Underhood.

- **If the M75 Windshield Wiper Motor low speed is not activated**

18. Ignition OFF, disconnect the X5 harness connector at the K9 Body Control Module, ignition ON.
19. Verify the M75 Windshield Wiper Motor High Speed is not activated.

- **If the M75 Windshield Wiper Motor high speed is activated**

1. Ignition OFF, disconnect the X3 harness connector at the X50A Fuse Block - Underhood, ignition ON.
2. Test for infinite resistance between the control circuit terminal J1 and ground.

- If less than infinite resistance, repair the short to ground on the circuit.
- If infinite resistance, replace the X50A Fuse Block - Underhood.

- **If the M75 Windshield Wiper Motor high speed is not activated**

20. Connect a 10 A fused jumper wire between the control circuit terminal 16 X4 and B+.
21. Verify the M75 Windshield Wiper Motor activates.

- **If the M75 Windshield Wiper Motor does not activate**

1. Ignition OFF, remove the jumper wire, disconnect the X3 harness connector at the X50A Fuse Block - Underhood.
2. Test for infinite resistance between the control circuit and ground.

- If less than infinite resistance, repair the short to ground on the circuit.
- If less than infinite resistance

3. Test for less than 2 Ω in the control circuit end to end.

- If 2 Ω or greater, repair the open/high resistance in the circuit.
- If less than 2 Ω, test or replace the X50A Fuse Block - Underhood.

- **If the M75 Windshield Wiper Motor activates**

22. Connect a 10 A fused jumper wire between the control circuit terminal 24 X5 and ground.
23. Verify the M75 Windshield Wiper Motor activates.

- **If the M75 Windshield Wiper Motor does not activate**

1. Ignition OFF, remove the jumper wire, disconnect the X3 harness connector at the X50A Fuse Block - Underhood.
2. Test for less than 1 V between the control circuit and ground.

- If 1 V or greater, repair the short to voltage on the circuit.
- If less than 1 V

cardiagn.com

3. Test for less than 2 Ω in the control circuit end to end.
    - If 2 Ω or greater, repair the open/high resistance in the circuit.
    - If less than 2 Ω, test or replace the X50A Fuse Block - Underhood.
- **If the M75 Windshield Wiper Motor activates**

24. Replace the K9 Body Control Module.

Component Testing

Windshield Wiper/Washer Switch

1. Ignition OFF, disconnect the harness connector at the S78 Turn Signal/ Multifunction Switch.
2. Test for infinite resistance between the signal terminal 4 and the low reference terminal 7 with the switch in the OFF position.
    - **If less than infinite resistance**

      Replace the S78 Turn Signal/ Multifunction Switch.

    - **If infinite resistance**
3. Test for less than 2 Ω between the signal circuit terminal 4 and the low reference circuit terminal 7 with the switch in the HIGH position.
    - **If 2 Ω or greater**

      Replace the S78 Turn Signal/ Multifunction Switch.

    - **If less than 2 Ω**
4. Test for infinite resistance between the signal terminal 8 and the low reference terminal 7 with the switch in the OFF position.
    - **If less than infinite resistance**

      Replace the S78 Turn Signal/ Multifunction Switch.

    - **If infinite resistance**
5. Verify the resistance readings are within the specified range listed below between the signal circuit terminal 8 and the low reference circuit terminal 7 by cycling the switch in the listed positions below.
    - Delay 1 : 3.75-3.85kΩ
    - Delay 2 : 2.75-2.85kΩ
    - Delay 3 : 1.95-2.05kΩ

cardiagn.com

- Delay 4 : 1.25-1.35kΩ
- Delay 5 : 765-775Ω
- Low : 315-335Ω
- **If not within the specified range**

  Replace the S78 Turn Signal/ Multifunction Switch.

- **If within the specified range**

6. All OK

Repair Instructions

Perform the **Diagnostic Repair Verification** after completing the repair.

- **Windshield Wiper Motor Replacement**
- **Body Wiring Harness Junction Block Replacement**
- **Turn Signal Switch Replacement (N33, N37)** **Turn Signal Switch Replacement (N38)**
- **Control Module References** for body control module replacement, programming and setup.

LOW WASHER FLUID INDICATOR MALFUNCTION

Diagnostic Instructions

- Perform the **Diagnostic System Check - Vehicle** prior to using this diagnostic procedure.
- Review **Strategy Based Diagnosis** for an overview of the diagnostic approach.
- **Diagnostic Procedure Instructions** provides an overview of each diagnostic category.

Diagnostic Fault Information

Circuit	Short to Ground	Open/High Resistance	Short to Voltage	Signal Performance
Signal	2	1	-	-
Ground	-	1	-	-
1. Low washer fluid message always displayed 2. Low washer fluid message never displayed				

cardiagn.com

Circuit/System Description

The CHECK WASHER FLUID message is controlled by the instrument cluster using an input from the washer fluid level switch. The washer fluid level signal circuit is supplied voltage through a resistor then monitored within the instrument cluster. The washer fluid level switch is normally closed so the instrument cluster detects ignition voltage on the washer fluid level signal circuit whenever the washer fluid level is low. When the washer fluid reaches the point where the driver should be informed that the washer fluid is low, the washer fluid level switch opens. When the washer fluid level switch is opened, the washer fluid level signal circuit voltage is pulled high, and the instrument cluster displays the CHECK WASHER FLUID message on the driver information center. In order to prevent the CHECK WASHER FLUID message from being displayed while sloshing is occurring in the washer fluid container, the instrument cluster is programed with a 1 min delay before changing states of the CHECK WASHER FLUID message during an ignition cycle.

Reference Information

Schematic Reference

Instrument Cluster Schematics

Connector End View Reference

COMPONENT CONNECTOR END VIEWS - INDEX

Description and Operation

Wiper/Washer System Description and Operation

Electrical Information Reference

- **Circuit Testing**
- **Connector Repairs**
- **Testing for Intermittent Conditions and Poor Connections**
- **Wiring Repairs**

Scan Tool Reference

Control Module References for Scan Tool Information

Circuit/System Verification

cardiagn.com

1. Ignition ON.
2. Verify the scan tool Washer Fluid Level Switch parameter changes between ON and OFF, when filling and emptying the windshield water bottle.
   - **If the parameter does not change**

     Refer to Circuit/System Testing.

   - **If the parameter changes**
3. All OK.

Circuit/System Testing

1. Ignition OFF and all vehicle systems OFF, disconnect the harness connector at the B118B Windshield Washer Fluid Level Switch. It may take up to 2 min for all vehicle systems to power down.
2. Test for less than 10 Ω between the ground circuit terminal 2 and ground.
   - **If 10 Ω or greater**
   1. Ignition OFF.
   2. Test for less than 2 Ω in the ground circuit end to end.
      - If 2 Ω or greater, repair the open/high resistance in the circuit.
      - If less than 2 Ω, repair the open/high resistance in the ground connection.
   - **If less than 10 Ω**
3. Ignition ON.
4. Verify the scan tool Washer Fluid Level Switch parameter is On
   - **If not On**
   1. Ignition OFF, disconnect the harness connector at the P16 Instrument Cluster.
   2. Test for infinite resistance between the signal circuit terminal 1 and ground.
      - If less than infinite resistance, repair the short to ground on the circuit.
      - If infinite resistance, replace the P16 Instrument Cluster.
   - **If On**
5. Install a 3 A fused jumper wire between the signal circuit terminal 1 and the ground circuit terminal 2.
6. Verify the scan tool Washer Fluid Level Switch parameter is Off.

cardiagn.com

- **If not Off**

1. Ignition OFF, remove the jumper wire, disconnect the harness connector at the P16 Instrument Cluster, ignition ON.
2. Test for less than 1 V between the signal circuit and ground.
    - If 1 V or greater, repair the short to voltage on the circuit.
    - If less than 1 V
3. Test for less than 2 Ω in the signal circuit end to end.
    - If 2 Ω or greater, repair the open/high resistance in the circuit.
    - If less than 2 Ω, replace the P16 Instrument Cluster.

- **If Off**

7. Test or replace the B118B Windshield Washer Fluid Level Switch.

Repair Instructions

Perform the **Diagnostic Repair Verification** after completing the repair.

- **Windshield Washer Solvent Container Replacement (Chevrolet/GMC)Windshield Washer Solvent Container Replacement (Cadillac)**
- **Control Module References** for instrument cluster replacement, programming and setup

WASHER MALFUNCTION

Diagnostic Instructions

- Perform the **Diagnostic System Check - Vehicle** prior to using this diagnostic procedure.
- Review **Strategy Based Diagnosis** for an overview of the diagnostic approach.
- **Diagnostic Procedure Instructions** provides an overview of each diagnostic category.

Diagnostic Fault Information

Circuit	Short to Ground	Open/High Resistance	Short to Voltage	Signal Performance
Windshield Washer Switch Signal	2	1	-	-
Windshield Washer Fluid Pump Control	1	1	2	-
Windshield Washer Relay Control	B3873 02	B3873 04	B3873 01	-
Windshield Washer Switch Low Reference	-	1	-	-

cardiagn.com

Circuit	Short to Ground	Open/High Resistance	Short to Voltage	Signal Performance
Windshield Washer Fluid Pump Ground	-	1	-	-
1. Washer Inoperative 2. Washers Always ON				

Circuit/System Description

The windshield washer function is controlled by the body control module. When the washer switch is pressed, low reference is applied through the switch contacts and the signal circuit to the body control module indicating the wash request. The body control module then applies voltage through the control circuit to the coil side of the windshield washer pump relay energizing the relay. With the relay energized, battery voltage from the fuse is applied through the switch contacts of the relay and the control circuit to the windshield washer fluid pump.

Reference Information

Schematic Reference

Wiper/Washer Schematics

Connector End View Reference

COMPONENT CONNECTOR END VIEWS - INDEX

Description and Operation

Wiper/Washer System Description and Operation

Electrical Information Reference

- **Circuit Testing**
- **Connector Repairs**
- **Testing for Intermittent Conditions and Poor Connections**
- **Wiring Repairs**

Scan Tool Reference

Control Module References for scan tool information

cardiagn.com

Circuit/System Verification

1. Ignition ON.
2. Verify the scan tool Windshield Washer Switch parameter changes between Inactive and Active when pressing the washer switch.
   - **If the parameter does not change**

     Refer to Circuit/System Testing - Windshield Washer Switch Malfunction.

   - **If the parameter changes**
3. Verify the G24 Windshield Washer Pump activates when commanding the Windshield Washer Relay On and Off with a scan tool.
   - **If the G24 Windshield Washer Pump does not activate**

     Refer to Circuit/System Testing - Windshield Washer Pump Malfunction

   - **If the G24 Windshield Washer Pump activates**
4. All OK.

Circuit/System Testing

Windshield Washer Switch Malfunction

1. Ignition OFF, and all vehicle systems OFF. Disconnect the harness connector at the S78 Turn Signal/Multifunction Switch. It may take up to 2 min for all vehicle systems to power down.
2. Test for less than 10 Ω between the low reference circuit terminal 7 and ground.
   - **If 10 Ω or greater**
   1. Ignition OFF.
   2. Test for less than 2 Ω in the ground circuit end to end.
      - If 2 Ω or greater, repair the open/high resistance in the circuit.
      - If less than 2 Ω, replace the K9 Body Control Module.
   - **If less than 10 Ω**
3. Verify the scan tool Windshield Washer Switch parameter is Inactive.
   - **If not Inactive**
   1. Ignition OFF, disconnect the harness connector at the K9 Body Control Module,

cardiagn.com

2. Test for infinite resistance between the signal circuit terminal 6 and ground.
    - If less than infinite resistance, repair the short to ground on the circuit.
    - If infinite resistance, replace the K9 Body Control Module,
- **If Inactive**

4. Install a 3 A fused jumper wire between the signal circuit terminal 6 and the low reference circuit terminal 7.
5. Verify the scan tool Windshield Washer Switch parameter is Active.
    - **If not Active**
    1. Ignition OFF, remove the jumper wire, disconnect the harness connector at the K9 Body Control Module, ignition ON.
    2. Test for less than 1 V between the signal circuit and ground.
        - If 1 V or greater, repair the short to voltage on the circuit.
        - If less than 1 V
    3. Test for less than 2 Ω in the signal circuit end to end.
        - If 2 Ω or greater, repair the open/high resistance in the circuit.
        - If less than 2 Ω, replace the K9 Body Control Module,
    - **If Active**
6. Test or replace the S78 Turn Signal/Multifunction Switch.

Windshield Washer Pump Malfunction

1. Ignition OFF, and all vehicle systems OFF. Disconnect the harness connector at the G24 Windshield Washer Pump. It may take up to 2 min for all vehicle systems to power down.
2. Test for less than 10 Ω between the ground circuit terminal 2 and ground.
    - **If 10 Ω or greater**
    1. Ignition OFF.
    2. Test for less than 2 Ω in the ground circuit end to end.
        - If 2 Ω or greater, repair the open/high resistance in the circuit.
        - If less than 2 Ω, repair the open/high resistance in the ground connection.
    - **If less than 10 Ω**
3. Connect a test lamp between the control circuit terminal 1 and ground, ignition ON.
4. Verify the test lamp does not turn ON and OFF when commanding the Windshield Washer Relay On and Off with a scan tool.

cardiagn.com

- **If the test lamp turns ON and OFF**

  Test or replace the G24 Windshield Washer Pump.

- **If the test lamp does not turn ON and OFF**

5. Ignition OFF, connect the harness connector at the G24 Windshield Washer Pump. Disconnect the X1 harness connector at the X50A Fuse Block-Underhood, ignition ON.
6. Verify the G24 Windshield Washer Pump is not activated.
   - **If the G24 Windshield Washer Pump is activated**
   1. Ignition OFF, disconnect the harness connector at the G24 Windshield Washer Pump, ignition ON.
   2. Test for less than 1 V between the control circuit terminal F2 X1 and ground.
      - If 1 V or greater, repair the short to voltage on the circuit.
      - If less than 1 V, test or replace the G24 Windshield Washer Pump.
   - **If the G24 Windshield Washer Pump is not activated**
7. Connect a 25 A fused jumper wire between the control circuit terminal F2 X1 and B+.
8. Verify the G24 Windshield Washer Pump activates.
   - **If the G24 Windshield Washer Pump does not activate**
   1. Ignition OFF, remove the jumper wire, disconnect the harness connector at the G24 Windshield Washer Pump, ignition ON.
   2. Test for infinite resistance between the control circuit and ground.
      - If less than Infinite resistance, repair the short to ground on the circuit.
      - If infinite resistance
   3. Test for less than 2 Ω in the control circuit end to end.
      - If 2 Ω or greater, repair the open/high resistance in the circuit.
      - If less than 2 Ω, test or replace the G24 Windshield Washer Pump.
   - **If the G24 Windshield Washer Pump activates**
9. Ignition OFF, disconnect the X4 harness connector at the K9 Body Control Module, ignition ON.
10. Verify the G24 Windshield Washer Pump is not activated.
    - **If the G24 Windshield Washer Pump is activated**
    1. Ignition OFF, disconnect the X3 harness connector at the X50A Fuse Block-Underhood.
    2. Test for less than 1 volt between the K9 Body Control Module control circuit terminal 14 X4 and ground.

cardiagn.com

- If 1 V or greater, repair the short to voltage on the circuit.
- If less than 1 V, test or replace the X50A Fuse Block-Underhood.

11. Connect a 3 A fused jumper wire between the control circuit terminal 14 and B+.
12. Verify the G24 Windshield Washer Pump activates.
    - **If the G24 Windshield Washer Pump does not activate**
    1. Ignition OFF, remove the jumper wire, disconnect the X3 harness connector at the X50A Fuse Block-Underhood, ignition ON.
    2. Test for infinite resistance between the control circuit and ground.
        - If less than Infinite resistance, repair the short to ground on the circuit.
        - If infinite resistance
    3. Test for less than 2 Ω in the control circuit end to end.
        - If 2 Ω or greater, repair the open/high resistance in the circuit.
        - If less than 2 Ω, test or replace the X50A Fuse Block-Underhood.
    - **If the G24 Windshield Washer Pump activates**
13. Replace the K9 Body Control Module.

Component Testing

Washer Switch

1. Ignition OFF, disconnect the harness connector at the S78 Turn Signal/ Multifunction Switch.
2. Test for infinite resistance between the signal terminal 6 and the low reference terminal 7 with the switch in the open position.
    - **If less than infinite resistance**

      Replace the S78 Turn Signal/ Multifunction Switch.

    - **If infinite resistance**
3. Test for less than 2 Ω between the signal circuit terminal 6 and the low reference circuit terminal 7 with the switch in the closed position.
    - **If 2 Ω or greater**

      Replace the S78 Turn Signal/ Multifunction Switch.

    - **If less than 2 Ω**
4. All OK

cardiagn.com

Repair Instructions

Perform the **Diagnostic Repair Verification** after completing the repair.

- **Turn Signal Switch Replacement (N33, N37)** **Turn Signal Switch Replacement (N38)**
- **Windshield Washer Pump Replacement**
- **Body Wiring Harness Junction Block Replacement**
- **Control Module References** for body control module replacement, programming and setup.

RAIN SENSOR MALFUNCTION

Diagnostic Instructions

- Perform the **Diagnostic System Check - Vehicle** prior to using this diagnostic procedure.
- Review **Strategy Based Diagnosis** for an overview of the diagnostic approach.
- **Diagnostic Procedure Instructions** provides an overview of each diagnostic category.

Diagnostic Fault Information

Circuit	Short to Ground	Open/High Resistance	Short to Voltage	Signal Performance
B+	1	U151A 00	-	-
Serial Data	U151A 00	U151A 00	U151A 00	-
Auto Wiper On Signal	1	1	-	-
Ground	-	1	-	-
1. Rain Sensor Malfunction				

Circuit/System Description

B+ and ground is supplied at all times to the rain sensor. The rain sensor communicates with the body control module (BCM) via serial data. When the ignition is in the ON or ACCESSORY position and the windshield wiper/washer switch is in the intermittent delay position, the BCM monitors the rain sensor to determine the rain build up on the windshield. As rain builds up on the windshield, the BCM will command the wipers to activate. The sensitivity of the wiper frequency is controlled by the intermittent delay of the windshield wiper/washer switch. As the sensitivity is increased, the BCM will command more frequent wiper activation based on rain build up on the windshield.

The system supports the rain sensor On/Off button. The AUTO switch is located on the turn signal/multifunction switch. Press the auto button to turn

cardiagn.com

the rain sensor On/Off. When rain sensor is turned on and the rain sensor wipe sensitivity positions is adjusted by the front delay switch. The wipers can be adjusted for more or less sensitivity to moisture. When rain sensor turned off, the wipers operate as timed intermittent wipers and can be adjusted for more or less frequent wipes.

If the ignition is in ON/RUN and the front band is in one of the sensitivity settings when auto is turned on or off, a message may display indicating if rain sensor was turned on or off.

If the ignition is in ON/RUN and the front band is not in one of the sensitivity settings when auto is turned on, a message may display indicating that the wiper band must be in one of the sensitivity settings for rain sensor to operate.

Reference Information

Schematic Reference

Wiper/Washer Schematics

Connector End View Reference

COMPONENT CONNECTOR END VIEWS - INDEX

Description and Operation

Wiper/Washer System Description and Operation

Electrical Information Reference

- **Circuit Testing**
- **Connector Repairs**
- **Testing for Intermittent Conditions and Poor Connections**
- **Wiring Repairs**

Scan Tool Reference

Control Module References for scan tool information

Circuit/System Verification

1. Ignition ON.

cardiagn.com

2. Verify DTC U151A is not set.
   - **If DTC U151A is set**

     Refer to **DTC U1500-U15FF** .

   - **If DTC U151A is not set**
3. Verify the scan tool Rain Sensor parameter changes between Active and Inactive when pressing the AUTO rain sensor switch ON and OFF.
   - **If the parameter does not change**

     Refer to Circuit/System Testing - Rain Sensor Switch Malfunction.

   - **If the parameter changes**
4. Place the S78 Turn Signal/Multifunction Switch in the intermittent delay setting and spray the outside of the windshield in the area of the B200 Rain Sensor Module with a water bottle. It may be necessary to increase the sensitivity of the intermittent delay to achieve windshield wiper operation.
5. Verify the windshield wipers operate at low speed.
   - **If the wipers are not operating at low speed**

     Refer to Circuit/System Testing - Rain Sensor Module Malfunction.

   - **If the wipers are operating at low speed**
6. All OK.

Circuit/System Testing

Rain Sensor Switch Malfunction

1. Ignition OFF, disconnect the X1 and X3 harness connectors at the S78 Turn Signal/Multifunction Switch.
2. Test for less than 10 Ω between the low reference circuit terminal 7 X1 and ground.
   - **If 10 Ω or greater**
   1. Ignition OFF.
   2. Test for less than 2 Ω in the ground circuit end to end.
      - If 2 Ω or greater, repair the open/high resistance in the circuit.
      - If less than 2 Ω, replace the K9 Body Control Module.

cardiagn.com

- **If less than 10 Ω**

3. Verify the scan tool Rain Sensor parameter is Inactive.
   - **If not Inactive**
   1. Ignition OFF, disconnect the harness connector at the K9 Body Control Module,
   2. Test for infinite resistance between the signal circuit terminal 4 and ground.
      - If less than infinite resistance, repair the short to ground on the circuit.
      - If infinite resistance, replace the K9 Body Control Module,
   - **If Inactive**
4. Install a 3 A fused jumper wire between the signal circuit terminal 4 X3 and the low reference circuit terminal 7 X1.
5. Verify the scan tool Rain Sensor parameter is Active.
   - **If not Active**
   1. Ignition OFF, remove the jumper wire, disconnect the harness connector at the K9 Body Control Module, ignition ON.
   2. Test for less than 1 V between the signal circuit and ground.
      - If 1 V or greater, repair the short to voltage on the circuit.
      - If less than 1 V
   3. Test for less than 2 Ω in the signal circuit end to end.
      - If 2 Ω or greater, repair the open/high resistance in the circuit.
      - If less than 2 Ω, replace the K9 Body Control Module,
   - **If Active**
6. Test or replace the S78 Turn Signal/Multifunction Switch.

Rain Sensor Module Malfunction

1. Ignition OFF, all vehicle systems OFF, disconnect the harness connector at the B200 Rain Sensor Module. It may take up to 2 min for all vehicle systems to power down.
2. Test for less than 10 Ω between the ground circuit terminal 3 and ground.
   - **If 10 Ω or greater**
   1. Ignition OFF.
   2. Test for less than 2 Ω in the ground circuit end to end.
      - If 2 Ω or greater, repair the open/high resistance in the circuit.

cardiagn.com

- If less than 2 Ω, repair the open/high resistance in the ground connection.

- **If less than 10 Ω**

3. Ignition ON.
4. Verify a test lamp illuminates between the B+ circuit terminal 1 and ground.
    - **If the test lamp does not illuminate and the circuit fuse is good**
    1. Ignition OFF, remove the test lamp.
    2. Test for less than 2 Ω in the B+ circuit end to end.
        - If 2 Ω or greater, repair the open/high resistance in the circuit.
        - If less than 2 Ω, verify the fuse is not open and there is voltage at the fuse.
    - **If the test lamp does not illuminate and the circuit fuse is open**
    1. Ignition OFF, remove the test lamp.
    2. Test for infinite resistance between the B+ circuit and ground.
        - If less than infinite resistance, repair the short to ground on the circuit.
        - If infinite resistance, replace the B200 Rain Sensor Module.
    - **If the test lamp illuminates**
5. Test for 5.0-10.0 V between the serial data circuit terminal 2 and ground.
    - **If less than 5.0 V**
    1. Ignition OFF, disconnect the harness connector at the K9 Body Control Module.
    2. Test for infinite resistance between the serial data circuit and ground.
        - If less than infinite resistance, repair the short to ground on the circuit.
        - If infinite resistance
    3. Test for less than 2 Ω in the serial data circuit end to end.
        - If 2 Ω or greater, repair the open/high resistance in the circuit.
        - If less than 2 Ω, replace the K9 Body Control Module.
    - **If greater than 10.0 V**
    1. Ignition OFF, disconnect the harness connector at the K9 Body Control Module, ignition ON.
    2. Test for less than 1 V between the serial data circuit and ground.
        - If 1 V or greater, repair the short to voltage on the circuit.
        - If less than 1 V, replace the K9 Body Control Module.

cardiagn.com

- **If between 5.0-12.0 V**

6. Test or replace the B200 Rain Sensor Module.

Repair Instructions

Perform the **Diagnostic Repair Verification** after completing the repair.

- **Windshield Outside Moisture/Ambient Light and Humidity Sensor Replacement**
- **Control Module References** for body control module replacement, programming and setup.

REAR WIPER SYSTEM MALFUNCTION

Diagnostic Instructions

- Perform the **Diagnostic System Check - Vehicle** prior to using this diagnostic procedure.
- Review **Strategy Based Diagnosis** for an overview of the diagnostic approach.
- **Diagnostic Procedure Instructions** provides an overview of each diagnostic category.

Diagnostic Fault Information

Circuit	Short to Ground	Open/High Resistance	Short to Voltage	Signal Performance
Rear Wiper Motor B+	1	1	2	-
M45 Rear Wiper Motor Serial Data	U1548 00, U1549 00, U154A 00, U1515 00	U1548 00, U1549 00, U154A 00	U1548 00, U1549 00, U154A 00	-
Rear Window Wiper Switch Signal	1, U151A 00	1, U151A 00	1, U151A 00	-
Rear Wiper Motor Ground	-	1	-	-
Rear Window Wiper Switch Ground	-	1	-	-
1. Wipers Inoperative. 2. Rear Wipers Always ON				

Circuit/System Description

The body control module (BCM) controls the rear wiper motor based on an input from the rear wiper switch, which is part of the turn signal/multifunction switch. The rear wiper switch uses a resistor ladder to determine low speed, intermittent, and rear washer operation. A constant B+ and ground are supplied to the rear wiper motor. When rear wiper operation is requested, the BCM sends serial data messages. When the rear wiper switch is placed in the low speed, intermittent, or rear washer position, the voltage is pulled down through a different resistor in the resistor

cardiagn.com

ladder, reducing the voltage seen at the BCM. The BCM will respond by commanding the specific rear wiper function.

The BCM monitors the liftgate ajar signal circuit, and the BCM will disable the function of the rear wiper motor if the liftgate of liftglass is ajar or open

Diagnostic Aids

The rear liftgate and liftglass must be closed in order for the rear wiper to work. The liftgate ajar switch signal circuit provides information to the rear window wiper module about the status of the liftgate. If the liftgate or liftglass is open the rear wiper operation is not performed.

Reference Information

Schematic Reference

Wiper/Washer Schematics

Connector End View Reference

COMPONENT CONNECTOR END VIEWS - INDEX

Description and Operation

Wiper/Washer System Description and Operation

Electrical Information Reference

- **Circuit Testing**
- **Connector Repairs**
- **Testing for Intermittent Conditions and Poor Connections**
- **Wiring Repairs**

Scan Tool Reference

Control Module References for scan tool information

Circuit/System Verification

1. Ignition ON.

cardiagn.com

2. Verify DTC U151A is not set.
   - **If DTC U151A is set**

     Please Refer to **DTC U1500-U15FF** .

   - **If DTC U151A is not set**
3. Verify the scan tool Rear Closure Ajar Switch parameter changes between Inactive and Active when opening and closing the liftgate.
   - **If the parameter does not change**

     Refer to **Liftgate/Liftgate Window Ajar Indicator Malfunction (Without TB5)** **Liftgate/Liftgate Window Ajar Indicator Malfunction (With TB5)**

   - **If the parameter changes**
4. Verify the scan tool Rear Wiper Switch parameter changes between Off and On when turning the rear wipers ON and OFF.
   - **If the parameter does not change**

     Refer to Circuit/System Testing - Rear Wiper/Washer Switch Malfunction.

   - **If the parameter changes**
5. Verify the M45 Rear Wiper operates between Off and On when turning the rear wipers ON and OFF.
   - **If the M45 Rear Wiper Motor does not operate**

     Refer to Circuit/System Testing - Rear Wiper Motor Malfunction.

   - **If the M45 Rear Wiper Motor operates**
6. All OK.

Circuit/System Testing

Rear Wiper/Washer Switch Malfunction

1. Ignition OFF and all vehicle systems OFF, disconnect the X3 harness connector at the S78 Turn Signal/Multifunction Switch. It may take up to 2 min for all vehicle systems to power down.
2. Test for less than 10 Ω between the ground circuit terminal 2 and ground.
   - **If 10 Ω or greater**

cardiagn.com

1. Ignition OFF.
2. Test for less than 2 Ω in the ground circuit end to end.
    - If 2 Ω or greater, repair the open/high resistance in the circuit.
    - If less than 2 Ω, repair the open/high resistance in the ground connection.
- **If less than 10 Ω**

3. Ignition ON.
4. Verify the scan tool Rear Wiper Switch parameter is Off.
    - **If not Off**

    1. Ignition OFF, disconnect the X2 harness connector at the K9 Body Control Module.
    2. Test for infinite resistance between the signal circuit terminal 1 and ground.
        - If less than infinite resistance, repair the short to ground on the circuit.
        - If infinite resistance, replace the K9 Body Control Module.
    - **If On**

5. Install a 3 A fused jumper wire between the signal circuit terminal 1 and the ground circuit terminal 2.
6. Verify the scan tool Rear Wiper Switch parameter is On.
    - **If not On**

    1. Ignition OFF, remove the jumper wire, disconnect the harness connector at the K9 Body Control Module, ignition ON.
    2. Test for less than 1 V between the signal circuit and ground.
        - If 1 V or greater, repair the short to voltage on the circuit.
        - If less than 1 V
    3. Test for less than 2 Ω in the signal circuit end to end.
        - If 2 Ω or greater, repair the open/high resistance in the circuit.
        - If less than 2 Ω, replace the K9 Body Control Module.
    - **If On**

7. Test or replace the S78 Turn Signal/Multifunction Switch.

Rear Wiper Motor Malfunction

1. Ignition OFF and all vehicle systems OFF, disconnect the harness connector at the appropriate M45 Rear Wiper Motor. It may take up to 2 min for all vehicle systems to power down.

cardiagn.com

2. Test for less than 10 Ω between the ground circuit terminal 1 and ground.
    - **If 10 Ω or greater**
    1. Ignition OFF.
    2. Test for less than 2 Ω in the ground circuit end to end.
        - If 2 Ω or greater, repair the open/high resistance in the circuit.
        - If less than 2 Ω, repair the open/high resistance in the ground connection.
    - **If less than 10 Ω**
3. Verify a test lamp illuminates between the B+ circuit terminal 3 and ground.
    - **If the test lamp does not illuminate and the circuit fuse is good**
    1. Ignition OFF.
    2. Test for less than 2 Ω in the B+ circuit end to end.
        - If 2 Ω or greater, repair the open/high resistance in the circuit.
        - If less than 2 Ω, verify the fuse is OK and there is voltage at the fuse.
    - **If the test lamp does not illuminate and the circuit fuse is open**
    1. Ignition OFF, remove the test lamp.
    2. Test for infinite resistance between the B+ circuit and ground.
        - If less than infinite resistance, repair the short to ground on the circuit.
        - If infinite resistance, M45 Rear Wiper Motor
    - **If the test lamp illuminates**
4. Ignition ON.
5. Test for 5.0-10.0 V between the serial data circuit terminal 2 and ground.
    - **If less than 5.0 V**
    1. Ignition OFF, disconnect the harness connector at the K9 Body Control Module.
    2. Test for infinite resistance between the serial data circuit and ground.
        - If less than infinite resistance, repair the short to ground on the circuit.
        - If infinite resistance
    3. Test for less than 2 Ω in the serial data circuit end to end.
        - If 2 Ω or greater, repair the open/high resistance in the circuit.
        - If less than 2 Ω, replace the K9 Body Control Module.

cardiagn.com

- **If greater than 10.0 V**

1. Ignition OFF, disconnect the harness connector at the K9 Body Control Module, ignition ON.
2. Test for less than 1 V between the serial data circuit and ground.
    - If 1 V or greater, repair the short to voltage on the circuit.
    - If less than 1 V, replace the K9 Body Control Module.

- **If between 5.0-10.0 V**

6. Test or replace the M45 Rear Wiper Motor.

Repair Instructions

Perform the **Diagnostic Repair Verification** after completing the repair.

- **Turn Signal Switch Replacement (N33, N37)** **Turn Signal Switch Replacement (N38)**
- **Rear Window Wiper Motor Replacement (Chevroler/GMC)Rear Window Wiper Motor Replacement (Cadillac)**
- **Control Module References** for body control module replacement, programming and setup.

REAR WASHER SYSTEM MALFUNCTION

Diagnostic Instructions

- Perform the **Diagnostic System Check - Vehicle** prior to using this diagnostic procedure.
- Review **Strategy Based Diagnosis** for an overview of the diagnostic approach.
- **Diagnostic Procedure Instructions** provides an overview of each diagnostic category.

Diagnostic Fault Information

Circuit	Short to Ground	Open/High Resistance	Short to Voltage	Signal Performance
Rear Washer Switch Signal	1	1	-	-
Rear Window Washer Pump Relay Control	1	B3811 04	B3811 01	-
Rear Windshield Washer Pump Control	1	1	2	-
Rear Windshield Washer Pump Ground	-	1	-	-
Fuse Block Underhood Ground	-	1	-	-

cardiagn.com

Circuit	Short to Ground	Open/High Resistance	Short to Voltage	Signal Performance
1. Rear Washer Inoperative 2. Rear Washer Always ON				

Circuit/System Description

The body control module (BCM) controls the rear washer based on an input from the rear wiper switch, which is part of the turn signal/multifunction switch. The BCM monitors the rear wiper switch through separate signal circuits and a ground circuit. The rear wiper switch uses a resistor ladder to determine low speed, intermittent, and rear washer operation. The BCM monitors applies and monitors voltage on the rear wiper switch signal circuit. When the rear wiper switch is placed in the low speed, intermittent, or rear washer position, the voltage is pulled down through a different resistor in the resistor ladder, reducing the voltage seen at the BCM. The BCM will respond by commanding the specific rear wiper function.

The rear window washer pump is controlled by the body control module (BCM) controls through the rear washer pump relay. When the rear wash switch is pressed, ignition voltage from the body control module (BCM) is applied to the rear washer relay control circuit. The rear washer relay control circuit is used to energize the relay coil and close the rear washer pump control circuit to B+.

Reference Information

Schematic Reference

Wiper/Washer Schematics

Connector End View Reference

COMPONENT CONNECTOR END VIEWS - INDEX

Description and Operation

Wiper/Washer System Description and Operation

Electrical Information Reference

- **Circuit Testing**
- **Connector Repairs**
- **Testing for Intermittent Conditions and Poor Connections**
- **Wiring Repairs**

cardiagn.com

Scan Tool Reference

Control Module References for scan tool information

Circuit/System Verification

1. Ignition ON.
2. Verify the scan tool Rear Washer Relay Command parameter changes between Active and Inactive when cycling the rear washer switch ON and OFF.
   - **If the parameter does not change**

     Refer to Circuit/System Testing - Rear Wiper/Washer Switch Malfunction

   - **If the parameter changes**
3. Verify the G19 Rear Window Washer Pump turns on and off when commanding the Rear Washer Relay Inactive and Active with the scan tool
   - **If the G19 Rear Window Washer Pump does not turn ON and OFF**

     Refer to Circuit/System Testing - Rear Washer Pump Malfunction

   - **If the G19 Rear Window Washer Pump turns ON and OFF**
4. All OK.

Circuit/System Testing

Rear Wiper/Washer Switch Malfunction

1. Ignition OFF and all vehicle systems OFF, disconnect the X3 harness connector at the S78 Turn Signal/Multifunction Switch. It may take up to 2 min for all vehicle systems to power down.
2. Test for less than 10 Ω between the low reference circuit terminal 2 and ground.
   - **If 10 Ω or greater**
   1. Ignition OFF.
   2. Test for less than 2 Ω in the low reference circuit end to end.
      - If 2 Ω or greater, repair the open/high resistance in the circuit.
      - If less than 2 Ω, replace the K9 Body Control Module.
   - **If less than 10 Ω**

cardiagn.com

3. Ignition ON.
4. Test for greater than 8 V between the signal circuit terminal 1 and ground.
   - **If less than 8 V**
   1. Ignition OFF, disconnect the harness connector at the K9 Body Control Module.
   2. Test for infinite resistance between the signal circuit and ground
      - If less than infinite resistance, repair the short to ground on the circuit.
      - If infinite resistance
   3. Test for less than 2 Ω in the signal circuit end to end.
      - If 2 Ω or greater, repair the open/high resistance in the circuit.
      - If less than 2 Ω, replace the K9 Body Control Module.
   - **If 8 V or greater**
5. Ignition OFF, disconnect the X2 harness connector at the K9 Body Control Module, ignition ON.
6. Test for less than 1 V between the S78 Turn Signal/Multifunction Switch signal circuit terminal 1 and ground.
   - **If 1 V or greater**

     Repair the short to voltage on the circuit.

   - **If less than 1 V**
7. Test or replace the S78 Turn Signal/Multifunction Switch.

Rear Washer Pump Malfunction

1. Ignition OFF, and all vehicle systems OFF. Disconnect the harness connector at the G19 Rear Window Washer Pump. It may take up to 2 min for all vehicle systems to power down.
2. Test for less than 10 Ω between the ground circuit terminal 2 and ground.
   - **If 10 Ω or greater**
   1. Ignition OFF.
   2. Test for less than 2 Ω in the ground circuit end to end.
      - If 2 Ω or greater, repair the open/high resistance in the circuit.
      - If less than 2 Ω, repair the open/high resistance in the ground connection.
   - **If less than 10 Ω**

cardiagn.com

3. Connect a test lamp between the control circuit terminal 1 and ground, ignition ON.
4. Verify the test lamp does not turn ON and OFF when commanding the Rear Washer Relay Active and Inactive with a scan tool.
   - **If the test lamp turns ON and OFF**

     Test or replace the G19 Rear Window Washer Pump.

   - **If the test lamp does not turn ON and OFF**
5. Ignition OFF, connect the harness connector at the G19 Rear Window Washer Pump. Disconnect the X1 harness connector at the X50A Fuse Block-Underhood, ignition ON.
6. Verify the G19 Rear Window Washer Pump is not activated.
   - **If the G19 Rear Window Washer Pump is activated**
   1. Ignition OFF, disconnect the harness connector at the G19 Rear Window Washer Pump, ignition ON.
   2. Test for less than 1 V between the control circuit terminal D2 and ground.
      - If 1 V or greater, repair the short to voltage on the circuit.
      - If less than 1 V, test or replace the G19 Rear Window Washer Pump.
   - **If the G19 Rear Window Washer Pump is not activated**
7. Connect a 15 A fused jumper wire between the control circuit terminal D2 and B+.
8. Verify the G19 Rear Window Washer Pump activates.
   - **If the G19 Rear Window Washer Pump does not activate**
   1. Ignition OFF, remove the jumper wire, disconnect the harness connector at the G19 Rear Window Washer Pump.
   2. Test for infinite resistance between the control circuit and ground.
      - If less than Infinite resistance, repair the short to ground on the circuit.
      - If infinite resistance
   3. Test for less than 2 Ω in the control circuit end to end.
      - If 2 Ω or greater, repair the open/high resistance in the circuit.
      - If less than 2 Ω, test or replace the G19 Rear Window Washer Pump.
   - **If the G19 Rear Window Washer Pump activates**
9. Ignition OFF and all vehicle systems OFF, connect the X1 harness connector at the X50A Fuse Block-Underhood. Disconnect the X2 harness connector at the X50A Fuse Block - Underhood. It may take up to 2 min for all vehicle systems to power down.
10. Test for less than 10 Ω between the ground circuit terminal F2 and ground.

cardiagn.com

- **If 10 Ω or greater**

1. Ignition OFF.
2. Test for less than 2 Ω in the ground circuit end to end.
    - If 2 Ω or greater, repair the open/high resistance in the circuit.
    - If less than 2 Ω, repair the open/high resistance in the ground connection.
    - **If less than 10 Ω**

11. Ignition OFF, connect the X2 harness connector at the X50A Fuse Block-Underhood. Disconnect the X5 harness connector at the K9 Body Control Module, ignition ON
12. Verify the G19 Rear Window Washer Pump is not activated.
    - **If the G19 Rear Window Washer Pump is activated**

    1. Ignition OFF, disconnect the X3 harness connector at the X50A Fuse Block-Underhood.
    2. Test for less than 1 V between the K9 Body Control Module control circuit terminal 9 and ground.
        - If 1 V or greater, repair the short to voltage on the circuit.
        - If less than 1 V, test or replace the X50A Fuse Block-Underhood.

    - **If the G19 Rear Window Washer Pump is not activated**

13. Connect a 3 A fused jumper wire between the control circuit terminal 9 and B+.
14. Verify the G19 Rear Window Washer Pump activates.
    - **If the G19 Rear Window Washer Pump does not activate**

    1. Ignition OFF, remove the jumper wire, disconnect the X3 harness connector at the X50A Fuse Block-Underhood, ignition ON.
    2. Test for infinite resistance between the control circuit and ground.
        - If less than Infinite resistance, repair the short to ground on the circuit.
        - If infinite resistance
    3. Test for less than 2 Ω in the control circuit end to end.
        - If 2 Ω or greater, repair the open/high resistance in the circuit.
        - If less than 2 Ω, test or replace the G19 Rear Window Washer Pump.

    - **If the G19 Rear Window Washer Pump activates**

15. Replace the K9 Body Control Module.

Component Testing

cardiagn.com

Rear Windshield Washer Pump

1. Install a 15 A fused jumper wire between the B+ terminal 1 and 12 V. Install a jumper wire between the control terminal 2 and ground.
2. Verify the G19 Rear Window Washer Pump activates.
   - **If the G19 Rear Window Washer Pump does not activate.**

     Replace the G19 Rear Window Washer Pump.

   - **If the G19 Rear Window Washer Pump does activate.**
3. All OK

Repair Instructions

Perform the **Diagnostic Repair Verification** after completing the repair.

- **Windshield Washer Pump Replacement**
- **Turn Signal Switch Replacement (N33, N37)** **Turn Signal Switch Replacement (N38)**
- **Body Wiring Harness Junction Block Replacement**
- **Control Module References** for body control module replacement, programming and setup.

REPAIR INSTRUCTIONS

WINDSHIELD WASHER NOZZLE HOSE REPLACEMENT

cardiagn.com

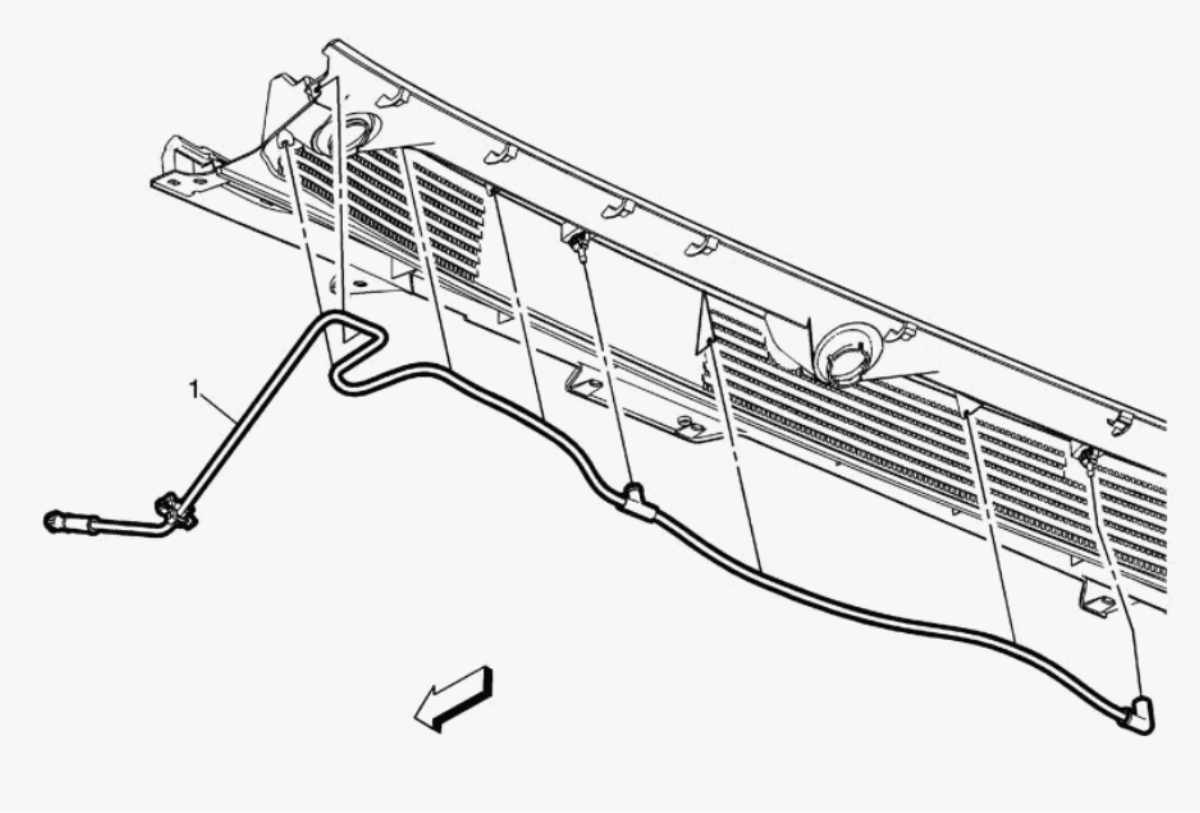

Fig. 4: Windshield Washer Nozzle Hose
Courtesy of GENERAL MOTORS COMPANY

Callout	Component Name
Preliminary Procedure Remove the air inlet grille panel. Refer to **Air Inlet Grille Panel Replacement (Chevrolet/GMC)Air Inlet Grille Panel Replacement (Cadillac)**.	
1	Windshield Washer Nozzle **Procedure** 1. Disconnect the windshield washer hose at both windshield washer nozzle spouts. 2. Remove the windshield washer hose from the air inlet grille panel retainers.

cardiagn.com

WINDSHIELD WASHER NOZZLE REPLACEMENT

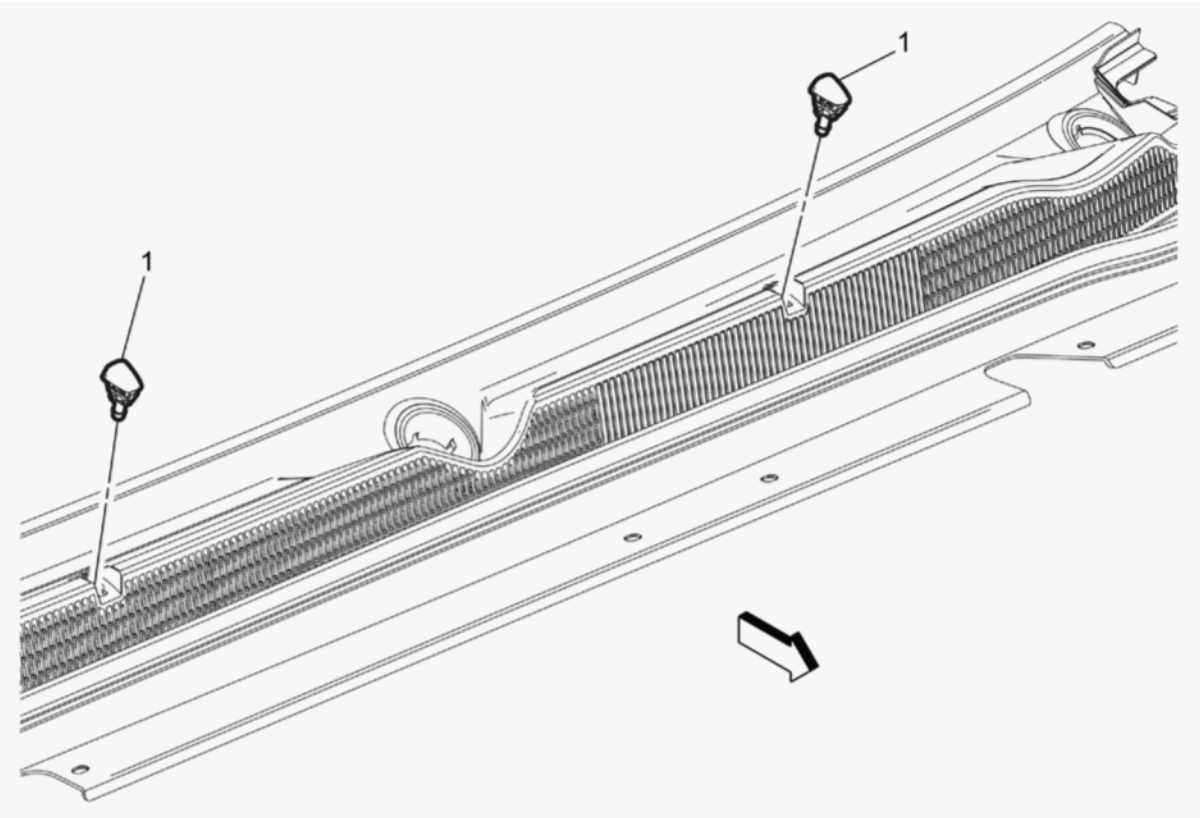

Fig. 5: Windshield Washer Nozzle
Courtesy of GENERAL MOTORS COMPANY

Callout	Component Name
Preliminary Procedure Remove the air inlet grille panel. Refer to **Air Inlet Grille Panel Replacement (Chevrolet/GMC)Air Inlet Grille Panel Replacement (Cadillac)**.	
1	Windshield Washer Nozzle **Procedure** 1. Disconnect the windshield washer hose at the windshield washer nozzle being serviced.

cardiagn.com

Callout	Component Name
	2. Compress the locking tabs on the windshield washer nozzle. 3. Push the windshield washer nozzle outward from the air inlet grille panel. 4. Remove the windshield washer nozzle from the air inlet grille panel.

REAR WINDOW WASHER NOZZLE REPLACEMENT

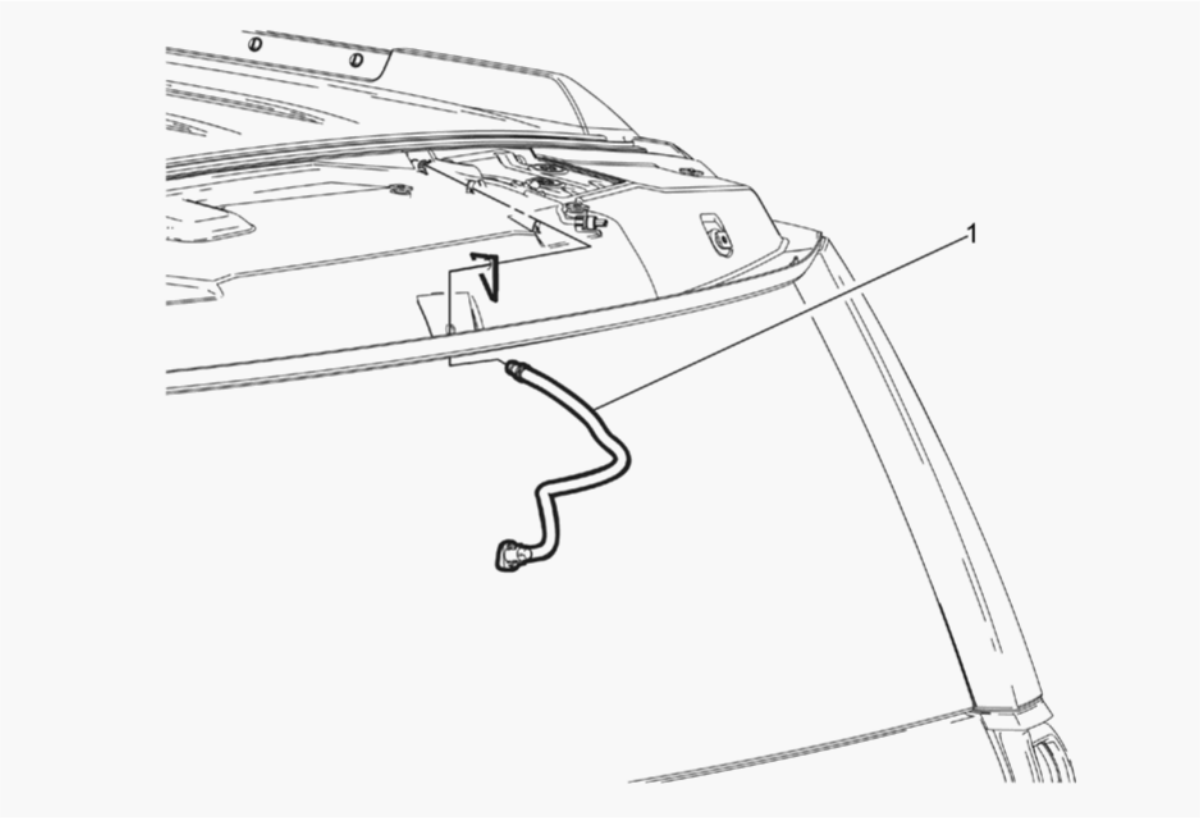

Fig. 6: Rear Window Washer Nozzle
Courtesy of GENERAL MOTORS COMPANY

Callout	Component Name
Preliminary Procedure Remove the rear end spoiler retainer cover. Refer to **Rear End Spoiler Retainer Cover Replacement (Rear End Spoiler)** **Rear End**	

cardiagn.com

Callout	Component Name
Spoiler Retainer Cover Replacement (Liftgate) .	
1	Rear Window Washer Nozzle **Procedure** 1. Disconnect the rear window washer nozzle hose (spoiler) from the rear window washer nozzle hose (D-pillar top). 2. Using a suitable tool depress the two tabs on the nozzle spout and remove the rear washer nozzle from the rear end spoiler retainer cover.

WINDSHIELD WASHER PUMP HOSE REPLACEMENT (CHEVROLET/GMC)

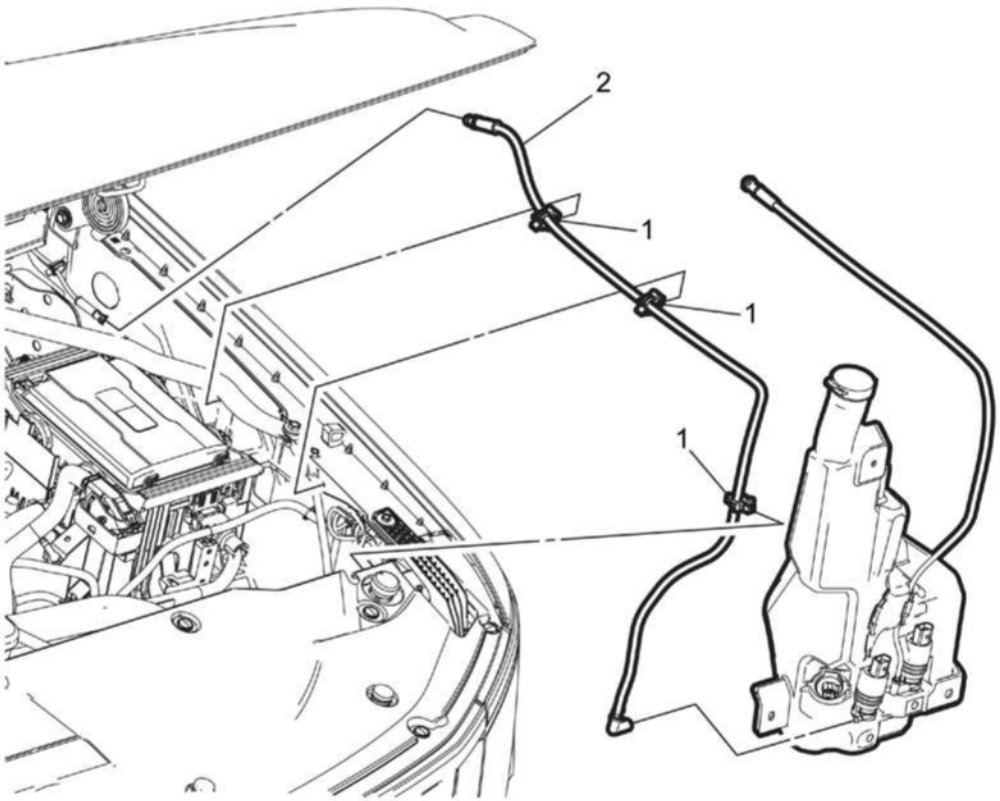

Fig. 7: Windshield Washer Pump Hose (Chevrolet/GMC)

cardiagn.com

Courtesy of GENERAL MOTORS COMPANY

Callout	Component Name
Preliminary Procedures 1. Remove the windshield washer solvent container. Refer to **Windshield Washer Solvent Container Replacement (Chevrolet/GMC)**. 2. Disconnect the windshield washer pump hose connection from the windshield washer nozzle hose. Refer to **Windshield Washer Nozzle Hose Replacement**.	
1	Windshield Washer Pump Hose Retainer (Qty: 3) **Procedure** Open retainers to remove the windshield washer pump hose.
2	Windshield Washer Pump Hose **Procedure** Remove the windshield washer pump hose from the engine compartment.

WINDSHIELD WASHER PUMP HOSE REPLACEMENT (CADILLAC)

cardiagn.com

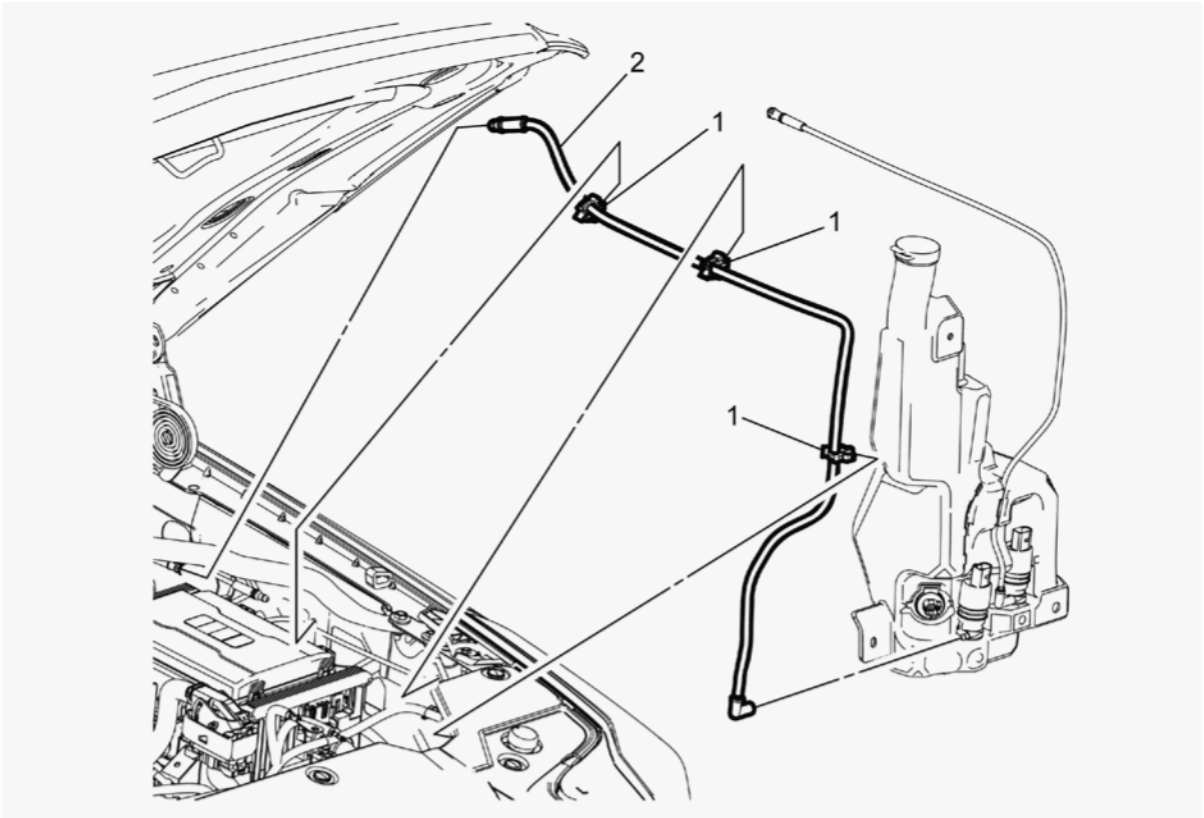

Fig. 8: Windshield Washer Pump Hose (Cadillac)
Courtesy of GENERAL MOTORS COMPANY

Callout	Component Name
Preliminary Procedures 1. Remove the windshield washer solvent container. Refer to **Windshield Washer Solvent Container Replacement (Cadillac)**. 2. Disconnect the windshield washer pump hose connection from the windshield washer nozzle hose. Refer to **Windshield Washer Nozzle Hose Replacement**.	
1	Windshield Washer Pump Hose Retainer (Qty: 3) **Procedure** Open retainers to remove the windshield washer pump hose.

cardiagn.com

Callout	Component Name
2	Windshield Washer Pump Hose **Procedure** Remove the windshield washer pump hose from the engine compartment.

REAR WINDOW WASHER NOZZLE HOSE REPLACEMENT (SPOILER)

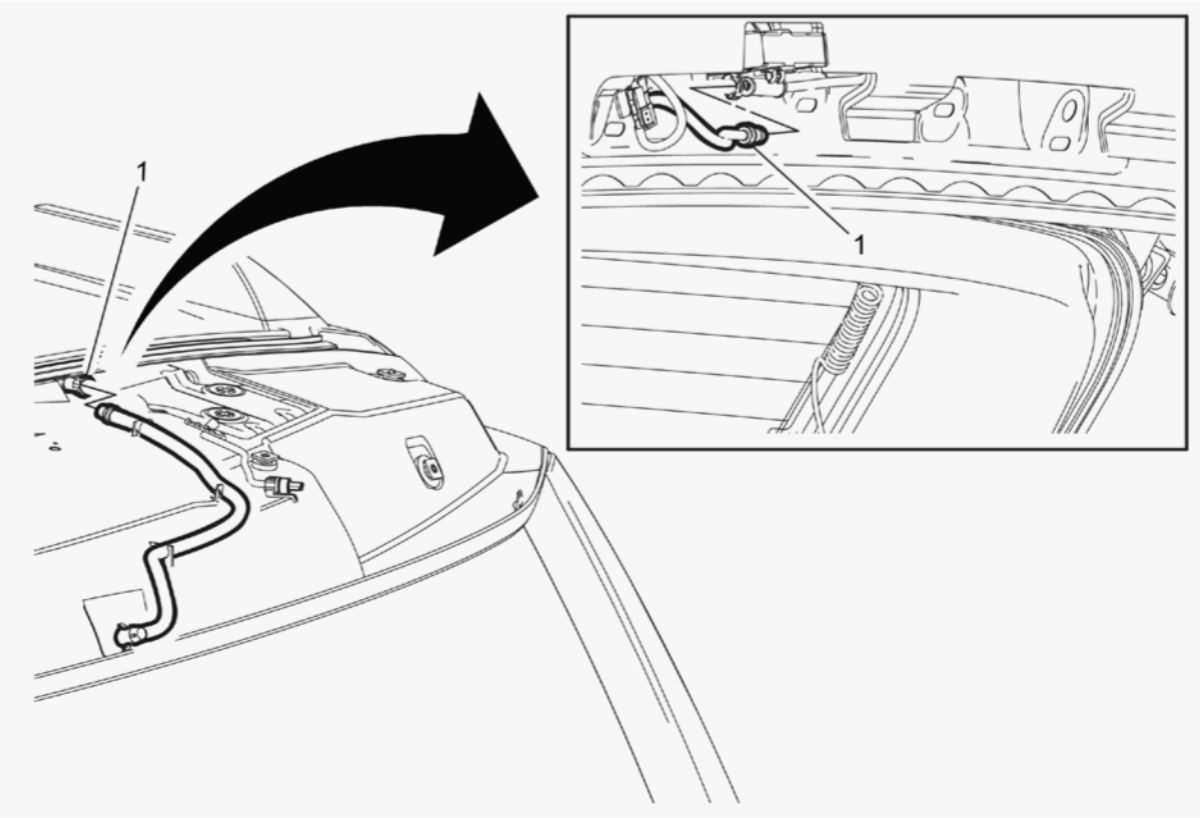

Fig. 9: Rear Window Washer Nozzle Hose (Spoiler)
Courtesy of GENERAL MOTORS COMPANY

Callout	Component Name
Preliminary Procedure Remove the rear end spoiler retainer cover. Refer to **Rear End Spoiler Retainer Cover Replacement (Rear End Spoiler)** .	

cardiagn.com

Callout	Component Name
1	Rear Window Washer Nozzle (Spoiler) **Procedure** 1. Disconnect the rear window washer nozzle hose (spoiler) from the rear window washer nozzle hose (D-pillar top). 2. Cut the tape off of the conduit and separate the hose from the wire harness. 3. Route the new hose in the correct location in the conduit and tape the conduit closed.

REAR WINDOW WASHER NOZZLE HOSE REPLACEMENT (CHEVROLET D-PILLAR TOP)

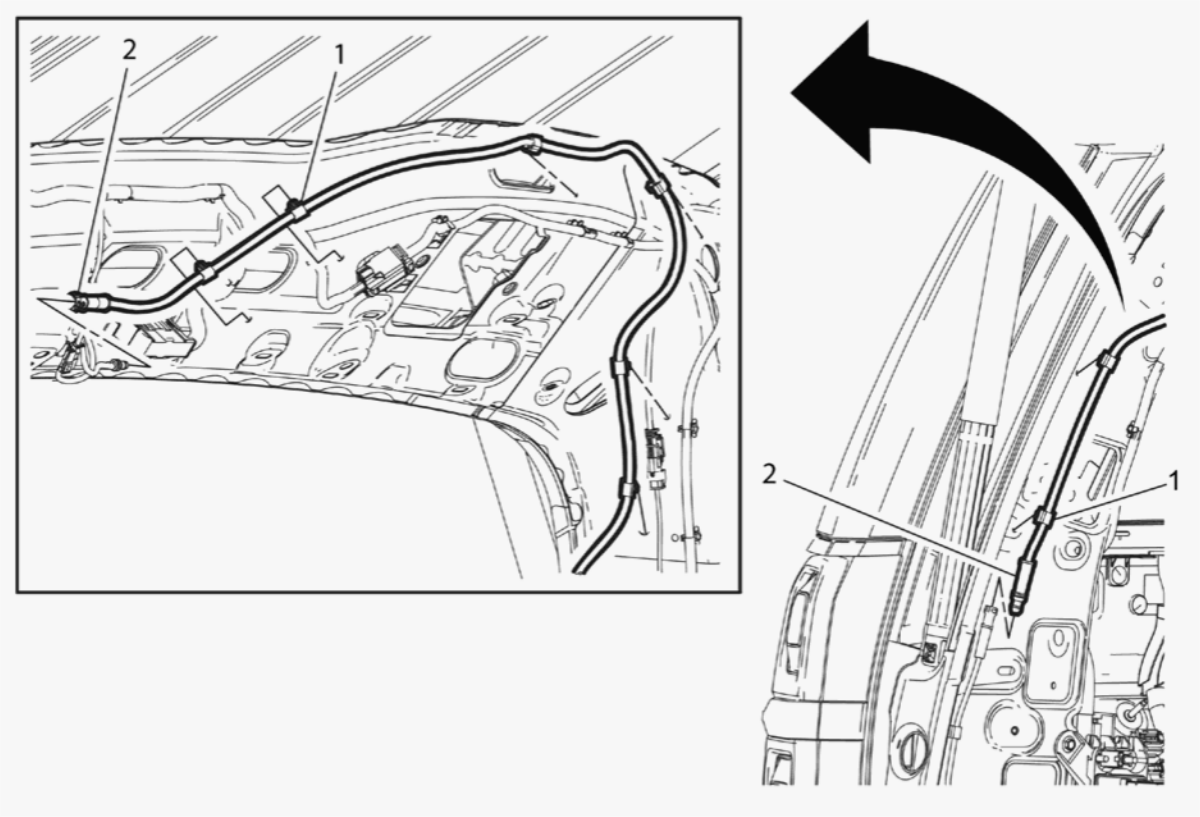

Fig. 10: Rear Window Washer Nozzle Hose (Chevrolet D-Pillar Top)
Courtesy of GENERAL MOTORS COMPANY

cardiagn.com

Callout	Component Name
Preliminary Procedures 1. Lower the headlining rear trim panel enough to gain access to the part. Refer to **Headlining Rear Trim Panel Replacement** . 2. Remove the quarter lower rear trim panel (left side). Refer to **Quarter Lower Rear Trim Panel Replacement (Left Side, Standard Wheelbase)** **Quarter Lower Rear Trim Panel Replacement (Left Side, Extended Wheelbase)** .	
1	Rear Window Washer Nozzle Hose Retainer (Qty: 8)
2	Rear Window Washer Nozzle Hose (D-Pillar Top) **Procedure** 1. Disconnect the rear window washer nozzle hose (D-pillar top) from the rear window washer nozzle hose (spoiler). 2. Disconnect the rear window washer nozzle hose (D-pillar top) from the rear window washer nozzle hose (D-pillar bottom). 3. Remove rear window washer nozzle hose (D-pillar top) from the vehicle.

REAR WINDOW WASHER NOZZLE HOSE REPLACEMENT (CHEVROLET D-PILLAR BOTTOM)

cardiagn.com

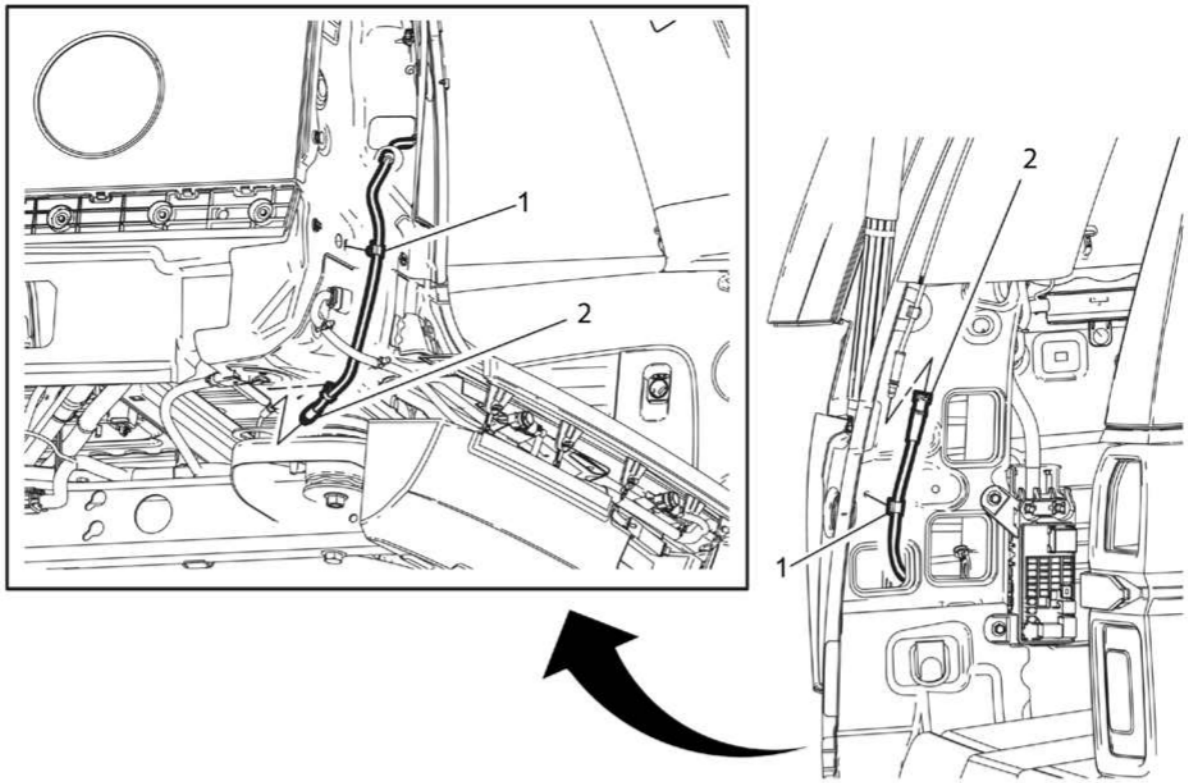

Fig. 11: Rear Window Washer Nozzle Hose (Chevrolet D-Pillar Bottom)
Courtesy of GENERAL MOTORS COMPANY

Callout	Component Name
Preliminary Procedures 1. Remove the quarter lower rear trim panel (left side). Refer to **Quarter Lower Rear Trim Panel Replacement (Left Side, Standard Wheelbase)** **Quarter Lower Rear Trim Panel Replacement (Left Side, Extended Wheelbase)** . 2. Remove the rear body structure stop lamp (Left side). Refer to **Rear Body Structure Stop Lamp Replacement** **Rear Body Structure Stop Lamp Replacement (Escalade)** .	
1	Rear Window Washer Nozzle Hose Retainer (Qty: 3)
2	Rear Window Washer Nozzle Hose (D-pillar Bottom)

cardiagn.com

Callout	Component Name
	Procedure 1. Disconnect the rear window washer nozzle hose (D-pillar bottom) from the rear window washer nozzle hose (D-pillar top). 2. Remove the rear window washer nozzle hose grommet from the body side outer panel filler. 3. From the left rear underside of the vehicle, disconnect rear window washer nozzle (D-pillar bottom) from the underbody washer hose. 4. Remove rear window washer nozzle hose (D-pillar bottom) from the vehicle.

REAR WINDOW WASHER NOZZLE HOSE REPLACEMENT (GMC D-PILLAR TOP)

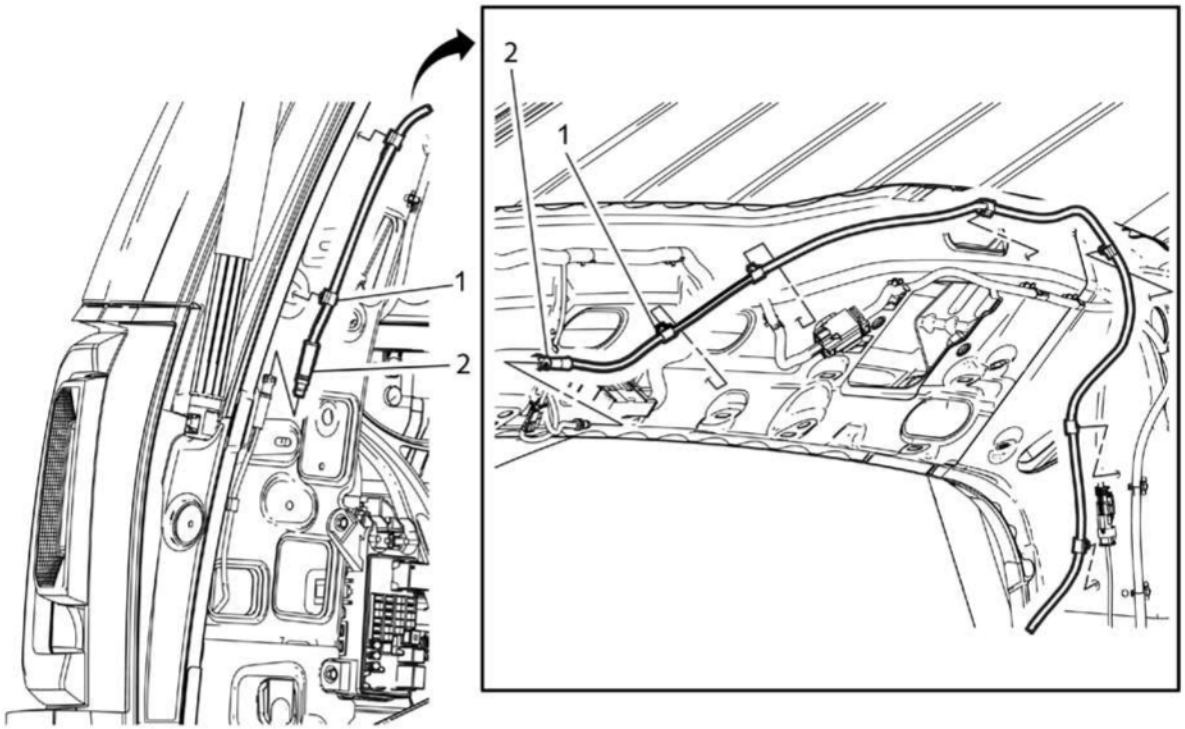

Fig. 12: Rear Window Washer Nozzle Hose (GMC D-Pillar Top)

cardiagn.com

Courtesy of GENERAL MOTORS COMPANY

Callout	Component Name
Preliminary Procedures 1. Lower the headlining rear trim panel enough to gain access to the part. Refer to **Headlining Rear Trim Panel Replacement** . 2. Remove the quarter lower rear trim panel (left side). Refer to **Quarter Lower Rear Trim Panel Replacement (Left Side, Standard Wheelbase)** **Quarter Lower Rear Trim Panel Replacement (Left Side, Extended Wheelbase)** .	
1	Rear Window Washer Nozzle Hose Retainer (Qty: 8)
2	Rear Window Washer Nozzle Hose (D-Pillar Top) **Procedure** 1. Disconnect the rear window washer nozzle hose (D-pillar top) from the rear window washer nozzle hose (spoiler). 2. Disconnect the rear window washer nozzle hose (D-pillar top) from the rear window washer nozzle hose (D-pillar bottom). 3. Remove rear window washer nozzle hose (D-pillar top) from the vehicle.

REAR WINDOW WASHER NOZZLE HOSE REPLACEMENT (GMC D-PILLAR BOTTOM)

cardiagn.com

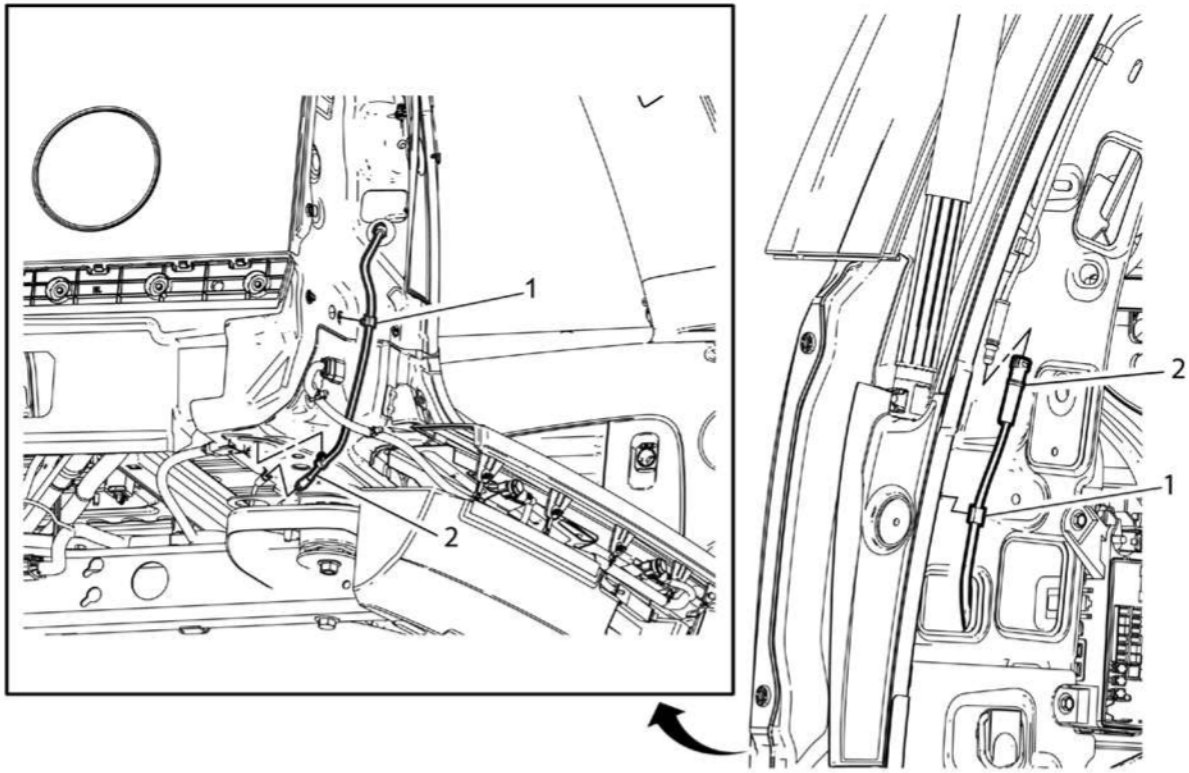

Fig. 13: Rear Window Washer Nozzle Hose (GMC D-Pillar Bottom)
Courtesy of GENERAL MOTORS COMPANY

Callout	Component Name
Preliminary Procedures 1. Remove the quarter lower rear trim panel (left side). Refer to **Quarter Lower Rear Trim Panel Replacement (Left Side, Standard Wheelbase)** **Quarter Lower Rear Trim Panel Replacement (Left Side, Extended Wheelbase)** . 2. Remove the rear body structure stop lamp (Left side). Refer to **Rear Body Structure Stop Lamp Replacement** **Rear Body Structure Stop Lamp Replacement (Escalade)** .	
1	Rear Window Washer Nozzle Hose Retainer (Qty: 3)
2	Rear Window Washer Nozzle Hose (D-pillar Bottom)

cardiagn.com

Callout	Component Name
	Procedure 1. Disconnect the rear window washer nozzle hose (D-pillar bottom) from the rear window washer nozzle hose (D-pillar top). 2. Remove the rear window washer nozzle hose grommet from the body side outer panel filler. 3. From the left rear underside of the vehicle, disconnect rear window washer nozzle hose (D-pillar bottom) from the underbody washer hose. 4. Remove rear window washer nozzle hose (D-pillar bottom) from the vehicle.

REAR WINDOW WASHER NOZZLE HOSE REPLACEMENT (CADILLAC D-PILLAR TOP)

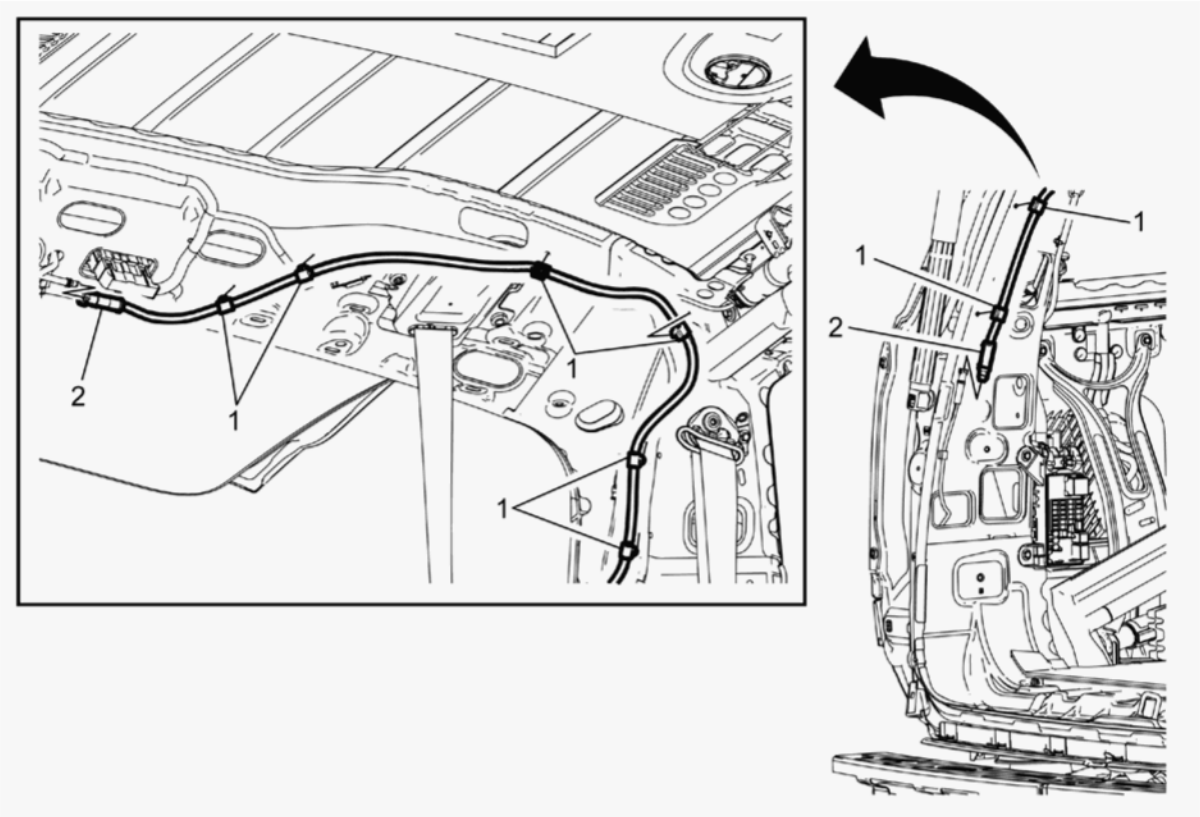

Fig. 14: Rear Window Washer Nozzle Hose (Cadillac D-Pillar Top)

cardiagn.com

Courtesy of GENERAL MOTORS COMPANY

Callout	Component Name
Preliminary Procedures 1. Lower the headlining rear trim panel enough to gain access to the part. Refer to **Headlining Rear Trim Panel Replacement** . 2. Remove the quarter lower rear trim panel (left side). Refer to **Quarter Lower Rear Trim Panel Replacement (Left Side, Standard Wheelbase)** **Quarter Lower Rear Trim Panel Replacement (Right Side, Standard Wheelbase)** **Quarter Lower Rear Trim Panel Replacement (Left Side, Extended Wheelbase)** **Quarter Lower Rear Trim Panel Replacement (Right Side, Extended Wheelbase)** .	
1	Rear Window Washer Nozzle Hose Retainer (Qty: 8)
2	Rear Window Washer Nozzle Hose (D-Pillar Top) **Procedure** 1. Disconnect the rear window washer nozzle hose (D-pillar top) from the rear window washer nozzle hose (spoiler). 2. Disconnect the rear window washer nozzle hose (D-pillar top) from the rear window washer nozzle hose (D-pillar bottom). 3. Remove rear window washer nozzle hose (D-pillar top) from the vehicle.

REAR WINDOW WASHER NOZZLE HOSE REPLACEMENT (CADILLAC D-PILLAR BOTTOM)

cardiagn.com

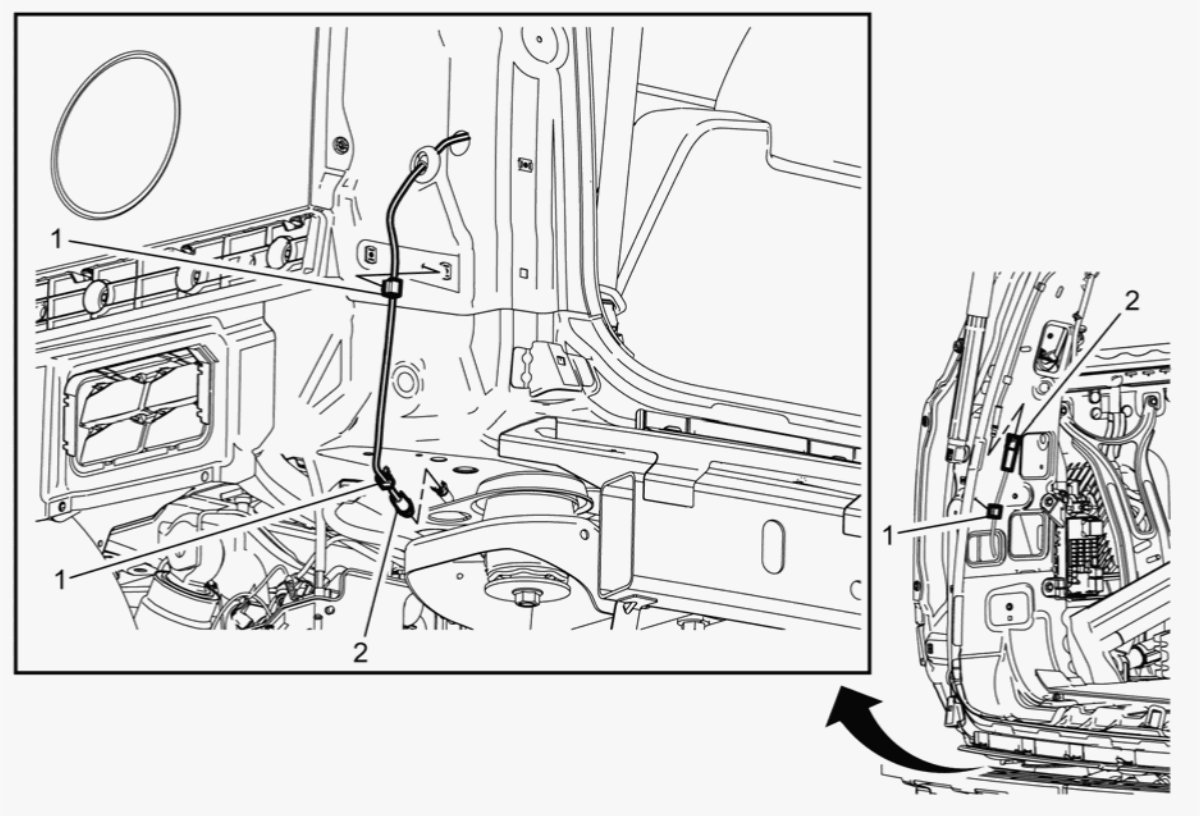

Fig. 15: Rear Window Washer Nozzle Hose (Cadillac D-Pillar Bottom)
Courtesy of GENERAL MOTORS COMPANY

Callout	Component Name
Preliminary Procedures 1. Remove the quarter lower rear trim panel (left side). Refer to **Quarter Lower Rear Trim Panel Replacement (Left Side, Standard Wheelbase)** **Quarter Lower Rear Trim Panel Replacement (Left Side, Extended Wheelbase)** . 2. Remove the rear body structure stop lamp (Left side). Refer to **Rear Body Structure Stop Lamp Replacement** **Rear Body Structure Stop Lamp Replacement (Escalade)** .	
1	Rear Window Washer Nozzle Hose Retainer (Qty: 3)
2	Rear Window Washer Nozzle Hose (D-pillar Bottom)

cardiagn.com

Callout	Component Name
	Procedure 1. Disconnect the rear window washer nozzle hose (D-pillar bottom) from the rear window washer nozzle hose (D-pillar top). 2. Remove the rear window washer nozzle hose grommet from the body side outer panel filler. 3. From the left rear underside of the vehicle, disconnect rear window washer nozzle hose (D-pillar bottom) from the underbody washer hose. 4. Remove rear window washer nozzle hose (D-pillar bottom) from the vehicle.

REAR WINDOW WASHER SOLVENT CONTAINER HOSE REPLACEMENT (CHEVROLET/GMC)

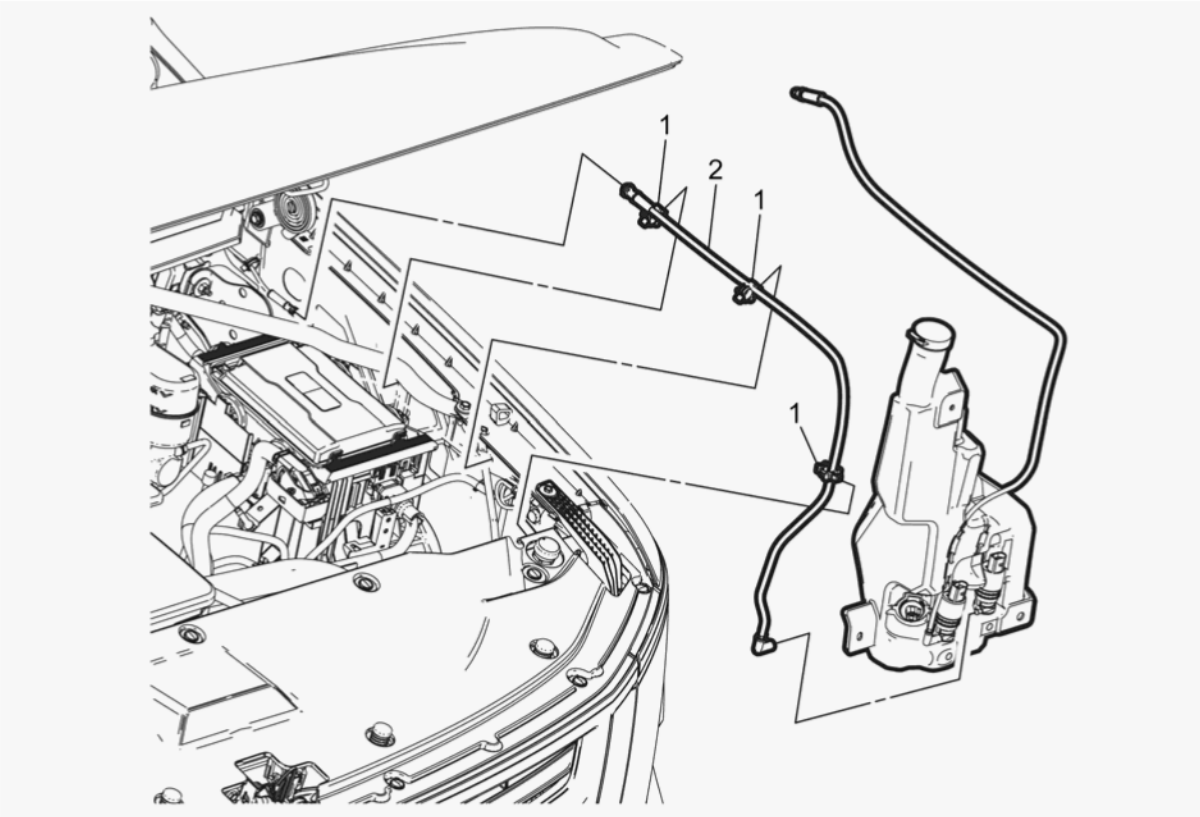

Fig. 16: Rear Window Washer Solvent Container Hose (Chevrolet/GMC)

cardiagn.com

Courtesy of GENERAL MOTORS COMPANY

Callout	Component Name
Preliminary Procedures 1. Remove the windshield washer solvent container. Refer to **Windshield Washer Solvent Container Replacement (Chevrolet/GMC)**. 2. Disconnect the rear window washer solvent hose connection from the underbody washer hose.	
1	Rear Window Washer Solvent Container Hose Retainer (Qty: 3) **Procedure** Open retainers to remove the rear window washer solvent container hose.
2	Rear Window Washer Solvent Container Hose **Procedure** Remove the rear window washer solvent container hose from the engine compartment.

REAR WINDOW WASHER SOLVENT CONTAINER HOSE REPLACEMENT (CADILLAC)

cardiagn.com

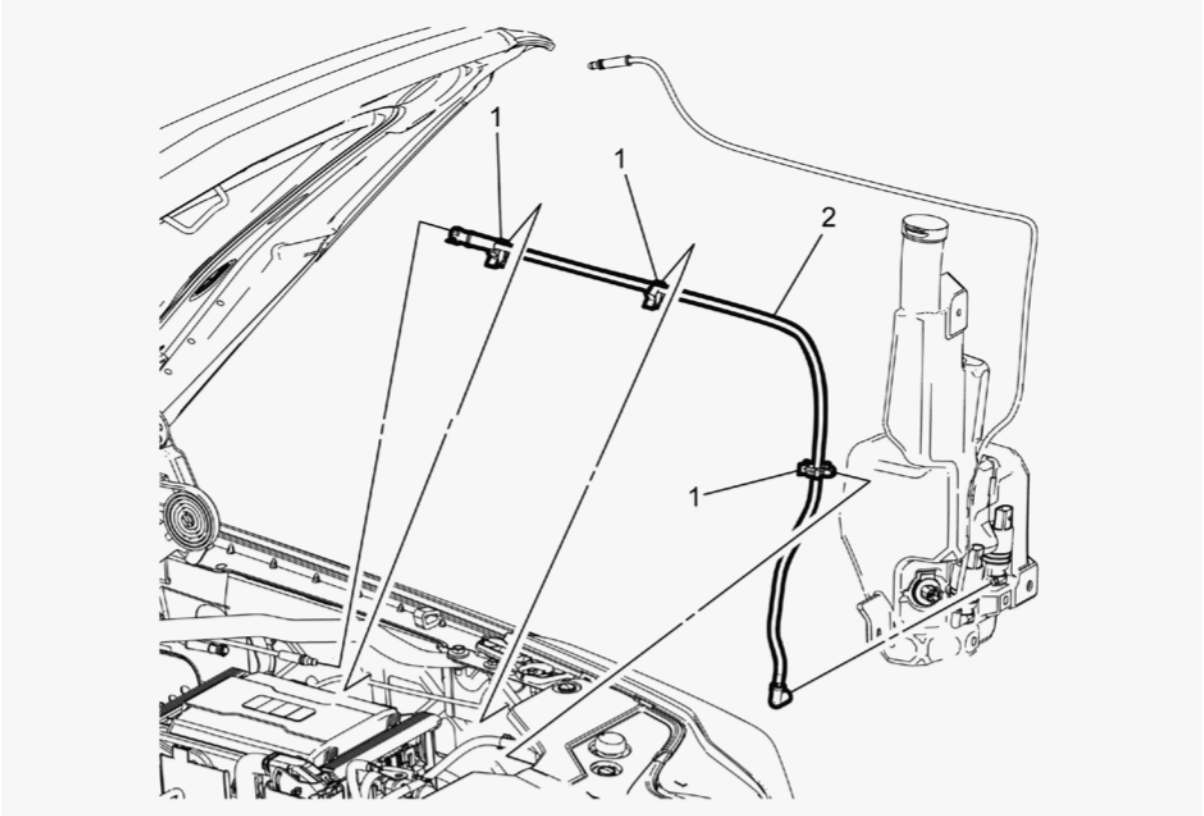

Fig. 17: Rear Window Washer Solvent Container Hose (Cadillac)
Courtesy of GENERAL MOTORS COMPANY

Callout	Component Name
Preliminary Procedures 1. Remove the windshield washer solvent container. Refer to **Windshield Washer Solvent Container Replacement (Cadillac)**. 2. Disconnect the rear window washer solvent hose connection from the underbody washer hose.	
1	Rear Window Washer Solvent Container Hose Retainer (Qty: 3) **Procedure** Open retainers to remove the rear window washer solvent container hose.
2	Rear Window Washer Solvent Container Hose **Procedure**

cardiagn.com

Callout	Component Name
	Remove the rear window washer solvent container hose from the engine compartment.

WINDSHIELD WASHER SOLVENT CONTAINER REPLACEMENT (CHEVROLET/GMC)

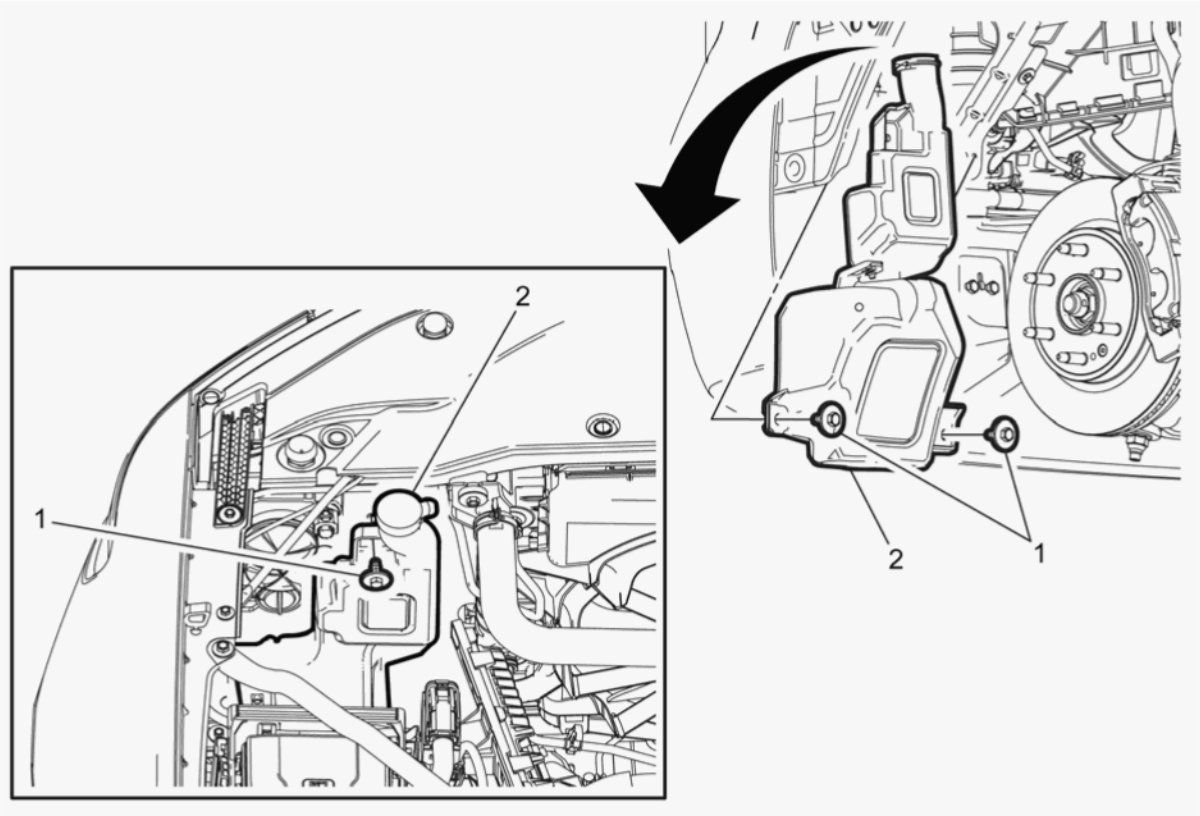

Fig. 18: Windshield Washer Solvent Container (Chevrolet/GMC)
Courtesy of GENERAL MOTORS COMPANY

Callout	Component Name
Preliminary Procedure	
1. Remove the front wheelhouse liner-left side. Refer to **Front Wheelhouse Liner Replacement - Left Side (GMC)** **Front Wheelhouse Liner Replacement - Left Side (Chevrolet)** .	
2. Remove the auxiliary battery tray. Refer to **Auxiliary Battery Tray Replacement (9C1)** .	

cardiagn.com

WINDSHIELD WASHER SOLVENT CONTAINER REPLACEMENT (CADILLAC)

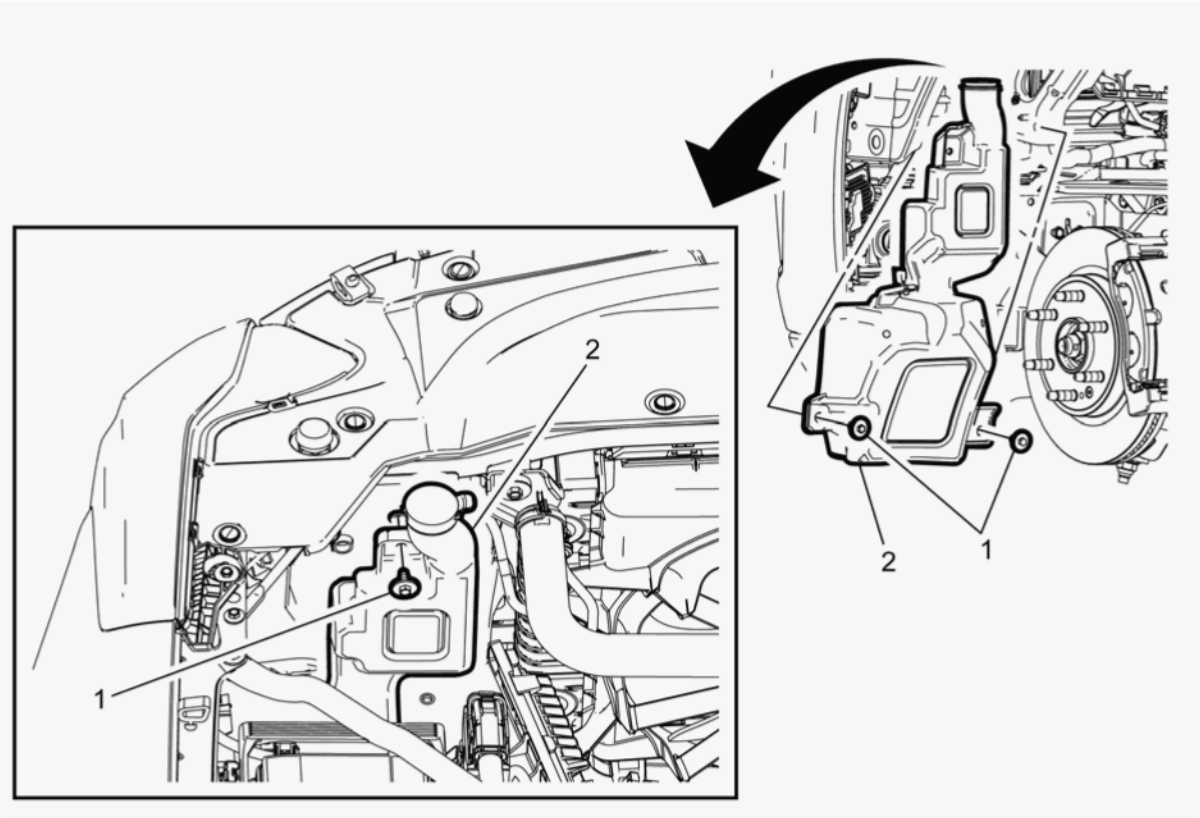

Fig. 19: Windshield Washer Solvent Container (Cadillac)
Courtesy of GENERAL MOTORS COMPANY

Callout	Component Name
Preliminary Procedure 1. Remove the front wheelhouse liner-left side. Refer to **Front Wheelhouse Liner Replacement - Left Side (Cadillac)** . 2. Remove the auxiliary battery tray. Refer to **Auxiliary Battery Tray Replacement (9C1)** .	
1	Windshield Washer Solvent Container Bolt (Qty: 3) **CAUTION:**

cardiagn.com

Callout	Component Name
	Refer to **Fastener Caution** . **Tighten** 9 N.m (80 lb in) **Procedure** Remove the bolt near the top of the windshield washer solvent container prior to raising the vehicle.
2	Windshield Washer Solvent Container **Procedure** 1. Place a clean suitable drain pan under the windshield washer pump area to recover the windshield washer solvent when the windshield washer pump hose and rear window washer solvent container hose are disconnected. 2. Disconnect the windshield washer pump hose from the windshield washer pump and disengage the pump hose from the windshield washer solvent container. 3. Disconnect the rear window washer solvent container hose from the rear window washer pump and disengage the container hose from the windshield washer solvent container. 4. Disconnect the electrical connector from the windshield washer solvent level sensor. 5. Disconnect the electrical connector from the rear window washer pump. 6. Disconnect the electrical connector from the windshield washer pump. 7. Remove the windshield washer solvent container from the vehicle. 8. Empty the windshield washer solvent into a suitable clean container. 9. Transfer parts as needed.

WINDSHIELD WASHER PUMP REPLACEMENT

cardiagn.com

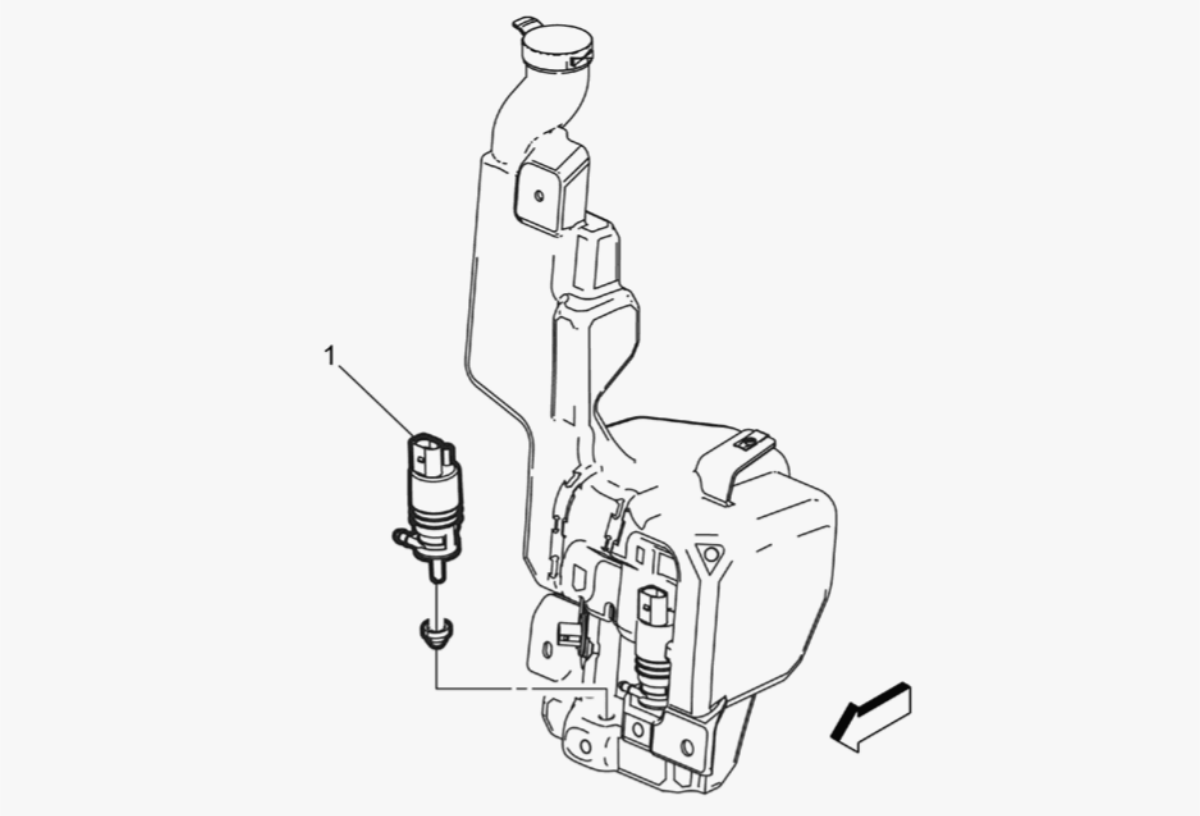

Fig. 20: Windshield Washer Pump
Courtesy of GENERAL MOTORS COMPANY

Callout	Component Name
Preliminary Procedure Remove the windshield washer solvent container. Refer to **Windshield Washer Solvent Container Replacement (Chevrolet/GMC)Windshield Washer Solvent Container Replacement (Cadillac)**.	
1	Windshield Washer Pump **Procedure** 1. Using two flat-bladed tools, place the blades under the windshield washer pump seal on each side of the windshield washer pump. 2. Twist the two flat-bladed tools in opposite directions to lift and disengage the windshield washer pump from the

cardiagn.com

Callout	Component Name
	windshield washer solvent container. 3. Install a new windshield washer pump seal upon replacement of the windshield washer pump.

REAR WINDOW WASHER PUMP REPLACEMENT

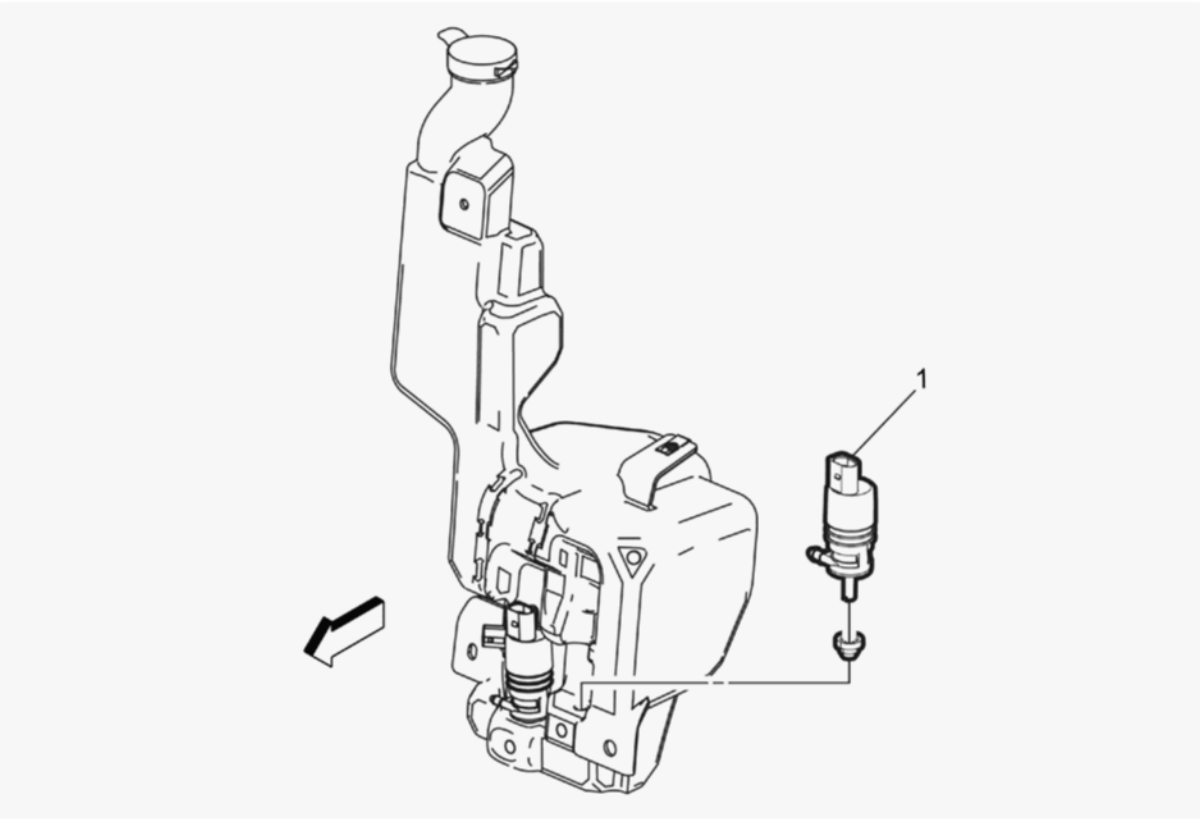

Fig. 21: Rear Window Washer Pump
Courtesy of GENERAL MOTORS COMPANY

Callout	Component Name
Preliminary Procedure Remove the windshield washer solvent container. Refer to **Windshield Washer Solvent Container Replacement (Chevrolet/GMC)Windshield Washer Solvent Container Replacement (Cadillac)**.	

cardiagn.com

Callout	Component Name
1	Rear Window Washer Pump **Procedure** 1. Using two flat-bladed tools, place the blades under the rear window washer pump seal on each side of the rear window washer pump. 2. Twist the two flat-bladed tools in opposite directions to lift and disengage the rear window washer pump from the windshield washer solvent container. 3. Install a new rear window washer pump seal upon replacement of the rear window washer pump.

WINDSHIELD WASHER SOLVENT CONTAINER LEVEL SENSOR REPLACEMENT

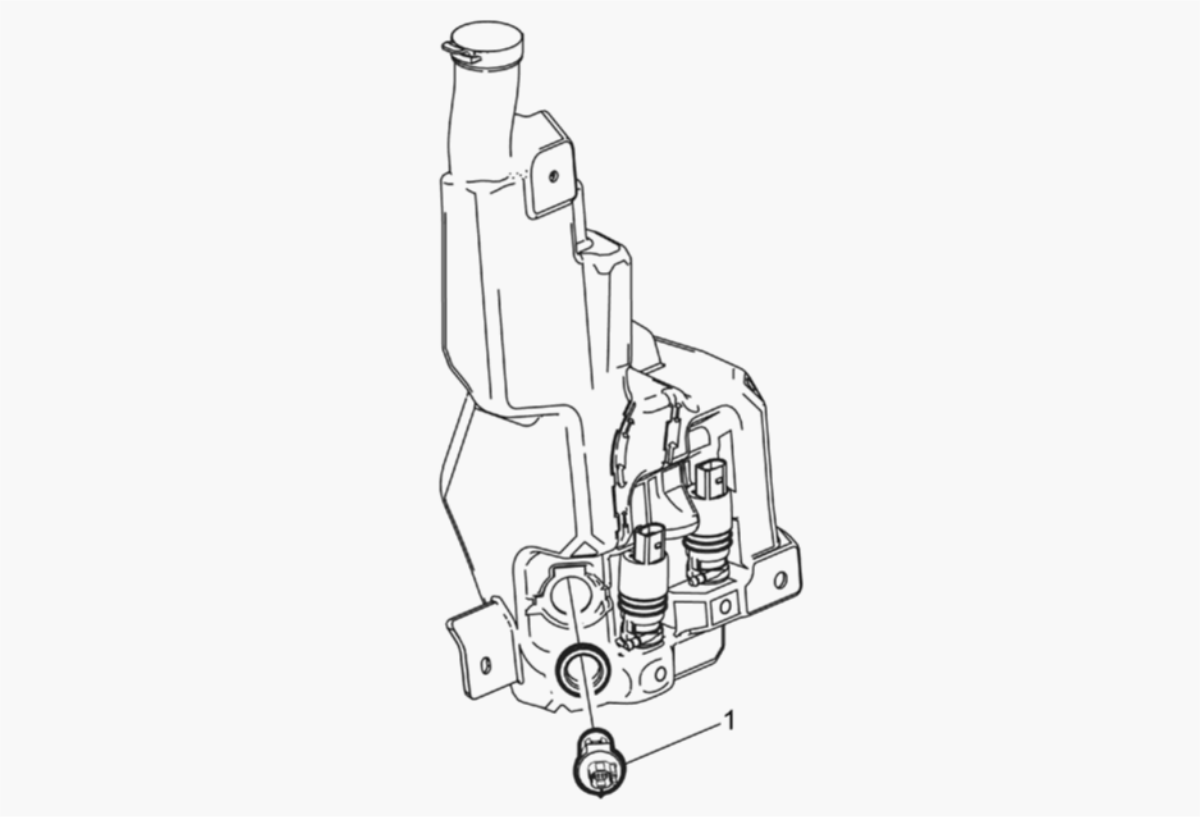

cardiagn.com

Fig. 22: Windshield Washer Solvent Container Level Sensor
Courtesy of GENERAL MOTORS COMPANY

Callout	Component Name
Preliminary Procedure Remove the windshield washer solvent container. Refer to **Windshield Washer Solvent Container Replacement (Chevrolet/GMC)Windshield Washer Solvent Container Replacement (Cadillac)**.	
1	Windshield Washer Solvent Level Sensor **Procedure** 1. Using two flat-bladed tools, place the ends of the flat blades under each side of the windshield washer solvent level sensor grommet. 2. Twisting in opposite directions, pry outward, the level sensor from the washer solvent container. 3. Remove and discard the windshield washer level sensor grommet and replace with new.

AIR INLET GRILLE PANEL REPLACEMENT (CHEVROLET/GMC)

cardiagn.com

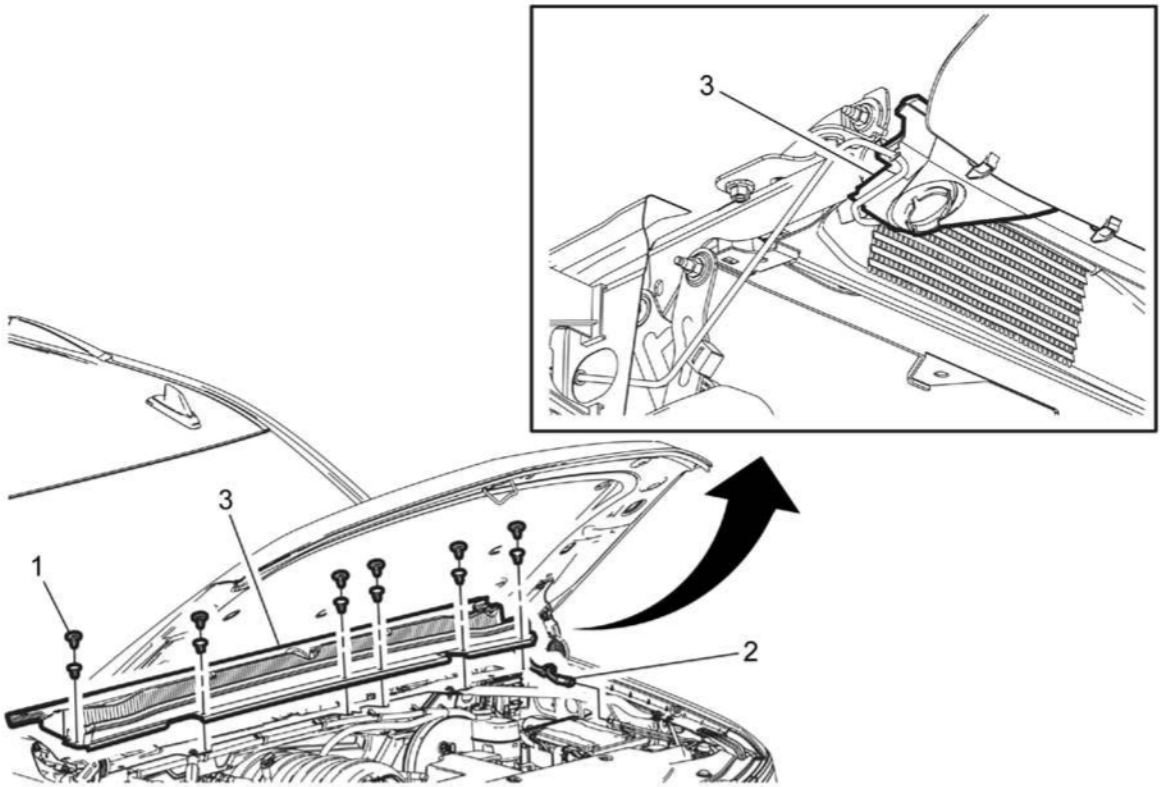

Fig. 23: Air Inlet Grille Panel
Courtesy of GENERAL MOTORS COMPANY

Callout	Component Name
Preliminary Procedure 1. Remove the windshield wiper arms. Refer to **Windshield Wiper Arm Replacement (Chevrolet/GMC)**. 2. Remove the air inlet grille panel extension. Refer to **Air Inlet Grille Panel Extension Replacement**.	
1	Air Inlet Grille Panel Push-Pin Retainer (Qty: 6)
2	Windshield Washer Nozzle Hose **Procedure** Disconnect the windshield washer nozzle hose from the windshield washer pump hose and remove from the hose retainer.

cardiagn.com

Callout	Component Name
3	Air Inlet Grille Panel **Procedure** 1. Use an appropriate tool to remove all 6 push-pins of the air inlet grille panel push-pin retainer. **NOTE:** **Ensure damaged grille push-pin retainers are replaced with correct part. Never substitute grille panel push-pin retainers.** 2. Use an appropriate tool to release the air inlet grille panel from under the hood hinges. 3. Lift the air inlet grille panel over the wiper motor pivot shafts while sliding the grille panel retaining clips off the lower edge of the windshield. **NOTE:** **When installing grille panel, place edge of rubber seal on lower edge of windshield glass then apply slight**

cardiagn.com

Callout	Component Name
	pressure to depress rubber seal while sliding panel clips onto lower edge of the windshield glass. Ensure that all grille panel clips are properly seated on the bottom of the windshield and the panel seal is flush across the lower surface of the windshield glass. NOTE: Use care not to crimp the windshield washer nozzle hose when removing from or

cardiagn.com

Callout	Component Name
	installing behind the hood hinge. Ensure proper routing to avoid damage to the nozzle hose. 4. Remove the windshield washer nozzle hose from behind the hood hinge. **NOTE:** **Replace the air inlet grille panel if the panel retainer clips or windshield rubber seal is damaged.** 5. Transfer parts as needed.

AIR INLET GRILLE PANEL REPLACEMENT (CADILLAC)

cardiagn.com

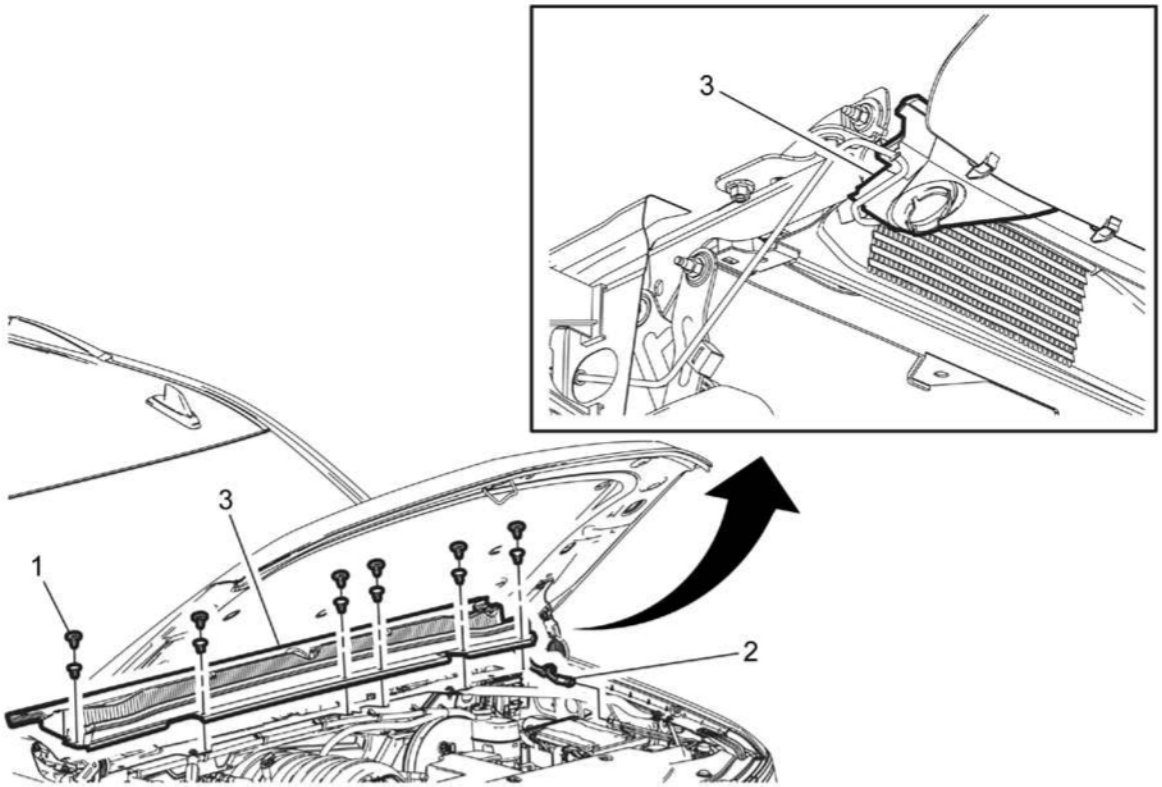

Fig. 24: Air Inlet Grille Panel
Courtesy of GENERAL MOTORS COMPANY

Callout	Component Name
Preliminary Procedure 1. Remove the windshield wiper arms. Refer to **Windshield Wiper Arm Replacement (Cadillac)**. 2. Remove the air inlet grille panel extension. Refer to **Air Inlet Grille Panel Extension Replacement**.	
1	Air Inlet Grille Panel Push-Pin Retainer (Qty: 6)
2	Windshield Washer Nozzle Hose **Procedure** Disconnect the windshield washer nozzle hose from the windshield washer pump hose and remove from the hose retainer.

cardiagn.com

Callout	Component Name
3	Air Inlet Grille Panel **Procedure** 1. Use an appropriate tool to remove all 6 push-pins of the air inlet grille panel push-pin retainer. **NOTE:** **Ensure damaged grille push-pin retainers are replaced with correct part. Never substitute grille panel push-pin retainers.** 2. Use an appropriate tool to release the air inlet grille panel from under the hood hinges. 3. Lift the air inlet grille panel over the wiper motor pivot shafts while sliding the grille panel retaining clips off the lower edge of the windshield. **NOTE:** **When installing grille panel, place edge of rubber seal on lower edge of windshield glass then apply slight**

cardiagn.com

Callout	Component Name
	pressure to depress rubber seal while sliding panel clips onto lower edge of the windshield glass. Ensure that all grille panel clips are properly seated on the bottom of the windshield and the panel seal is flush across the lower surface of the windshield glass. NOTE: Use care not to crimp the windshield washer nozzle hose when removing from or

cardiagn.com

Callout	Component Name
	installing behind the hood hinge. Ensure proper routing to avoid damage to the nozzle hose. 4. Remove the windshield washer nozzle hose from behind the hood hinge. **NOTE:** **Replace the air inlet grille panel if the panel retainer clips or windshield rubber seal is damaged.** 5. Transfer parts as needed.

AIR INLET GRILLE PANEL EXTENSION REPLACEMENT

Removal Procedure

1. Open the hood.

cardiagn.com

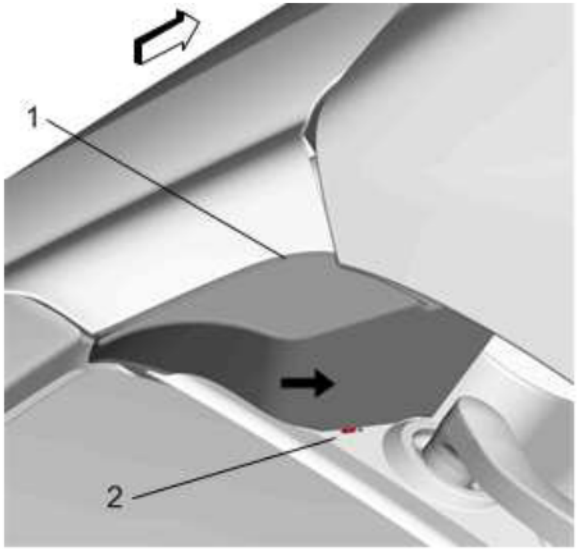

Fig. 25: Inlet Grille Panel Extension
Courtesy of GENERAL MOTORS COMPANY

2. Press inward and lift the inside face of the inlet grille panel extension (1) to remove the extension inside tab from the air inlet grille panel (2).

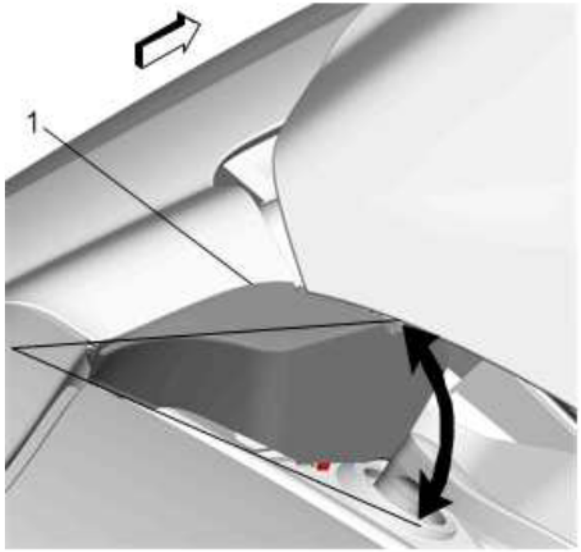

Fig. 26: Inlet Grille Panel Extension
Courtesy of GENERAL MOTORS COMPANY

cardiagn.com

NOTE: **Use care to avoid damaging painted surfaces when removing the air inlet grille panel extension.**

3. Using the appropriate tool and holding the inlet grille panel extension (1) at a upward angle of 15-20 degrees, loosen the extension outside tabs from the front fender slots.

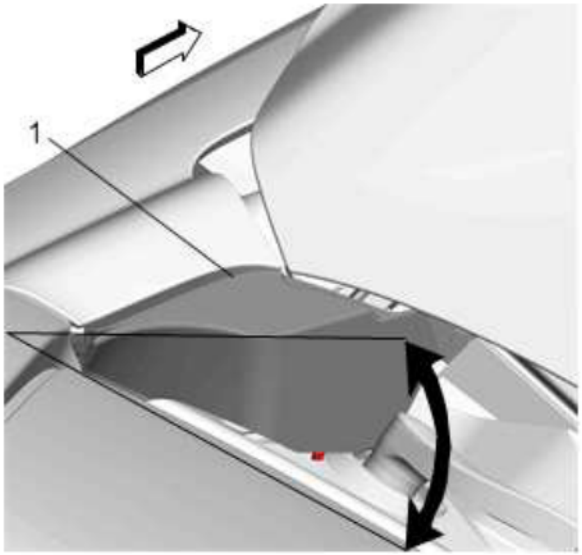

Fig. 27: Inlet Grille Panel Extension
Courtesy of GENERAL MOTORS COMPANY

4. Using the appropriate tool and maintaining the upwards angle of the inlet grille panel extension (1), continue to remove the extension outside tabs from the front fender slots.

cardiagn.com

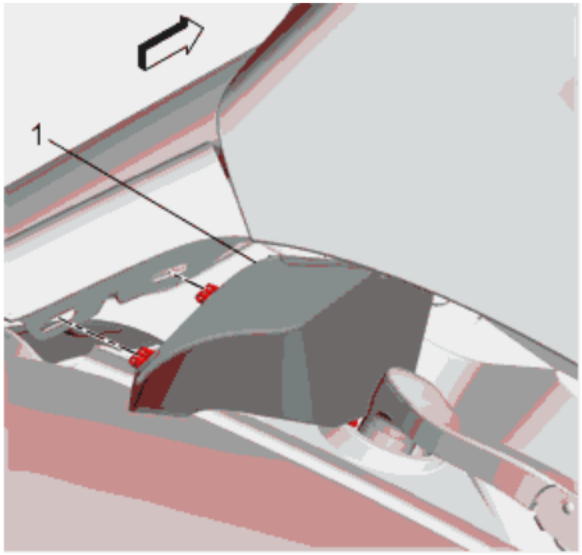

Fig. 28: Air Inlet Grille Panel Extension
Courtesy of GENERAL MOTORS COMPANY

5. Remove the air inlet grille panel extension (1) from the vehicle.

Installation Procedure

1. Open the hood.

cardiagn.com

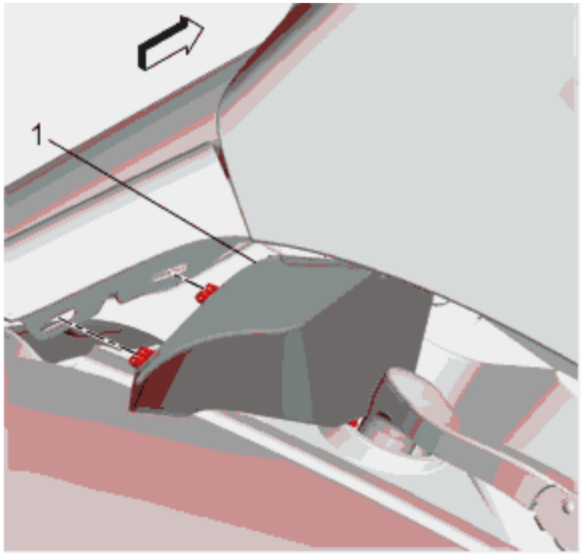

Fig. 29: Air Inlet Grille Panel Extension
Courtesy of GENERAL MOTORS COMPANY

2. Position the air inlet grille panel extension (1) so the extension outside tabs are aligned with the front fender slots.

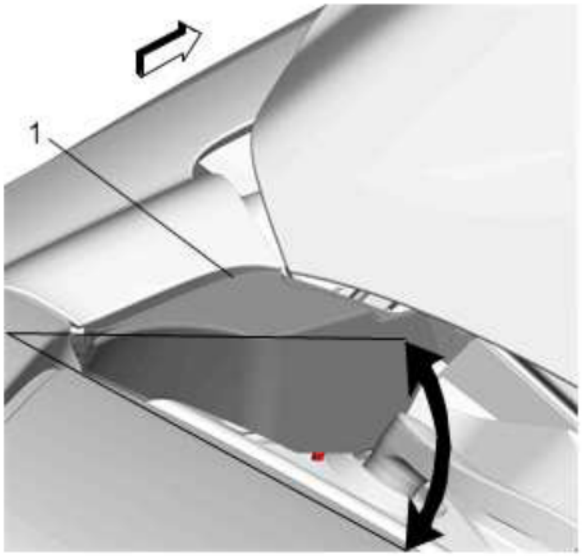

Fig. 30: Inlet Grille Panel Extension
Courtesy of GENERAL MOTORS COMPANY

cardiagn.com

3. While holding the inlet grille panel extension (1) at a upward angle of 15-20 degrees, engage the extension outside tabs in the front fender slots.

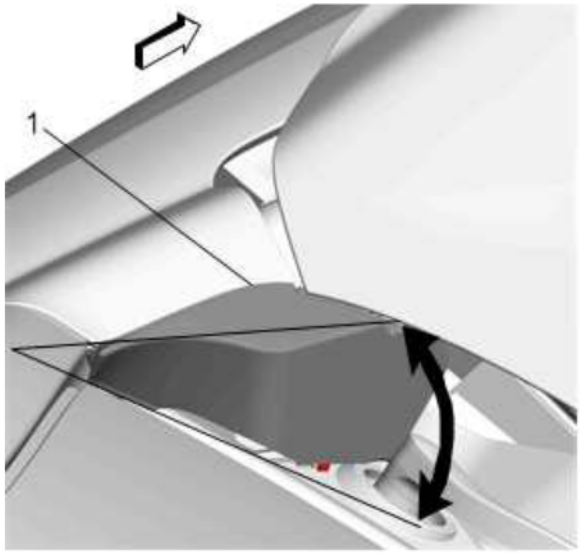

Fig. 31: Inlet Grille Panel Extension
Courtesy of GENERAL MOTORS COMPANY

4. Maintain the upwards angle of inlet grille panel extension (1) until the extension outside tabs are fully inserted in the front fender slots.

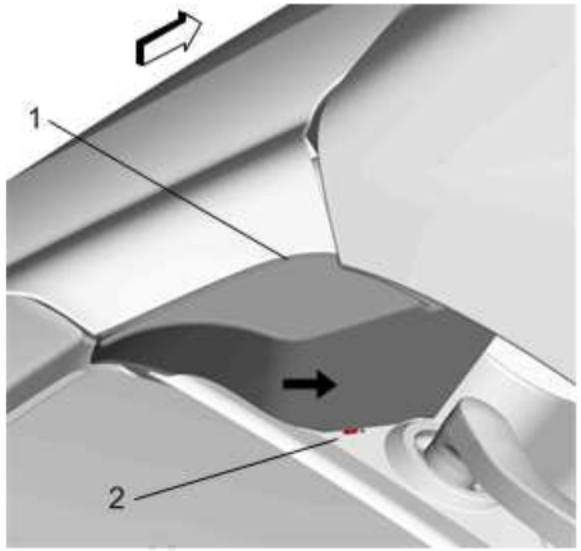

cardiagn.com

Fig. 32: Inlet Grille Panel Extension
Courtesy of GENERAL MOTORS COMPANY

5. Press inward and downward on the inside face of the inlet grille panel extension (1) to fully insert the extension inside tab in air inlet grille panel (2).

WINDSHIELD WIPER ARM REPLACEMENT (CHEVROLET/GMC)

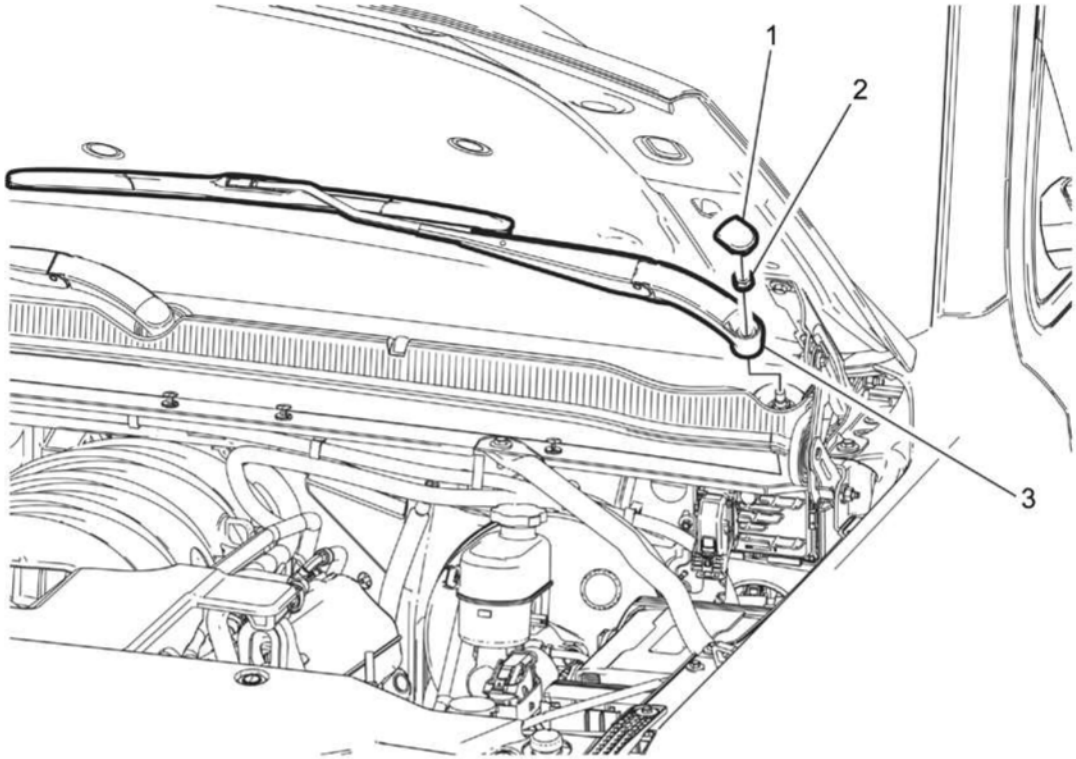

Fig. 33: Windshield Wiper Arm (Chevrolet/GMC)
Courtesy of GENERAL MOTORS COMPANY

Callout	Component Name
Preliminary Procedure Open the hood.	

cardiagn.com

Callout	Component Name
1	Windshield Wiper Arm Nut Cap **NOTE:** **Using a small flat-bladed tool, lift up on rearward end of cap to disengage the finish cap from the wiper arm assembly.**
2	Windshield Wiper Arm Nut **CAUTION:** **Refer to Fastener Caution .** **Tighten** 40 N.m (30 lb ft)
3	Windshield Wiper Arm **Procedure** 1. Grasp the windshield wiper arm near the pivot shaft and gently rock it side to side until the arm releases. 2. If the wiper arm does not release, use a suitable tool, pull and remove the windshield wiper arm from the windshield wiper transmission pivot shaft. 3. Clean the pivot shaft knurls with a soft wire brush before installing a new windshield wiper arm. 4. Transfer all necessary components.

cardiagn.com

Callout	Component Name
	5. Grasp the rear of the wiper arm and place the arm over the pivot shaft. 6. Align the tip of the wiper blade to the small transparent circle in the lower center of the blackout area. 7. Install the windshield wiper arm nut. 8. Hold the wiper arm in position and torque the wiper arm nut as specified above. 9. Cycle the wiper arm with a spray of solvent, PARK the wiper arm and re-check the alignment of the wiper blade tip to the windshield transparent circle.

WINDSHIELD WIPER ARM REPLACEMENT (CADILLAC)

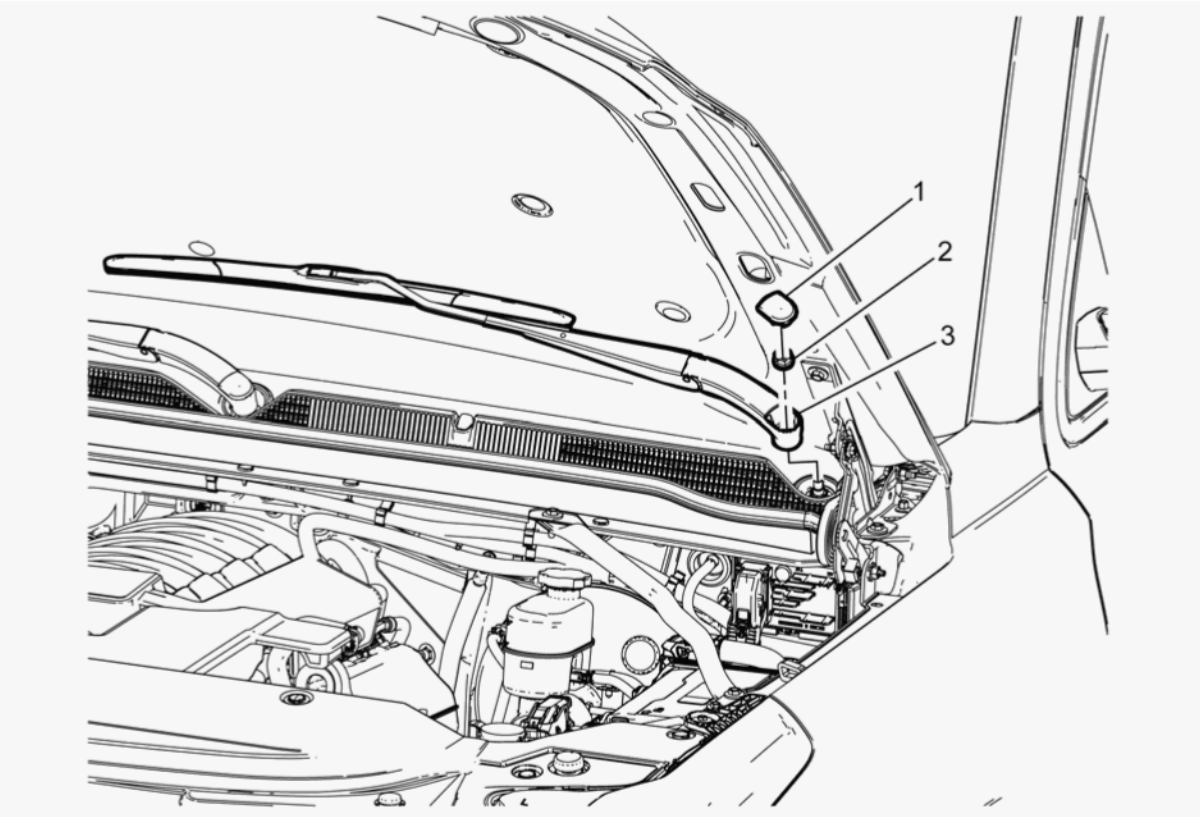

Fig. 34: Windshield Wiper Arm (Cadillac)
Courtesy of GENERAL MOTORS COMPANY

cardiagn.com

Callout	Component Name
Preliminary Procedure Open the hood.	
1	Windshield Wiper Arm Nut Cap **NOTE:** **Using a small flat-bladed tool, lift up on rearward end of cap to disengage the finish cap from the wiper arm assembly.**
2	Windshield Wiper Arm Nut **CAUTION:** **Refer to Fastener Caution .** **Tighten** 40 N.m (30 lb ft)
3	Windshield Wiper Arm **Procedure** 1. Grasp the windshield wiper arm near the pivot shaft and gently rock it side to side until the arm releases. 2. If the wiper arm does not release, use a suitable tool, pull and remove the windshield wiper arm from the windshield wiper transmission pivot shaft. 3. Clean the pivot shaft knurls with a soft wire brush before installing a new windshield wiper arm.

cardiagn.com

Callout	Component Name
	4. Transfer all necessary components. 5. Grasp the rear of the wiper arm and place the arm over the pivot shaft. 6. Align the tip of the wiper blade to the small transparent circle in the lower center of the blackout area. 7. Install the windshield wiper arm nut. 8. Hold the wiper arm in position and torque the wiper arm nut as specified above. 9. Cycle the wiper arm with a spray of solvent, PARK the wiper arm and re-check the alignment of the wiper blade tip to the windshield transparent circle.

REAR WINDOW WIPER ARM REPLACEMENT (CHEVROLET/GMC)

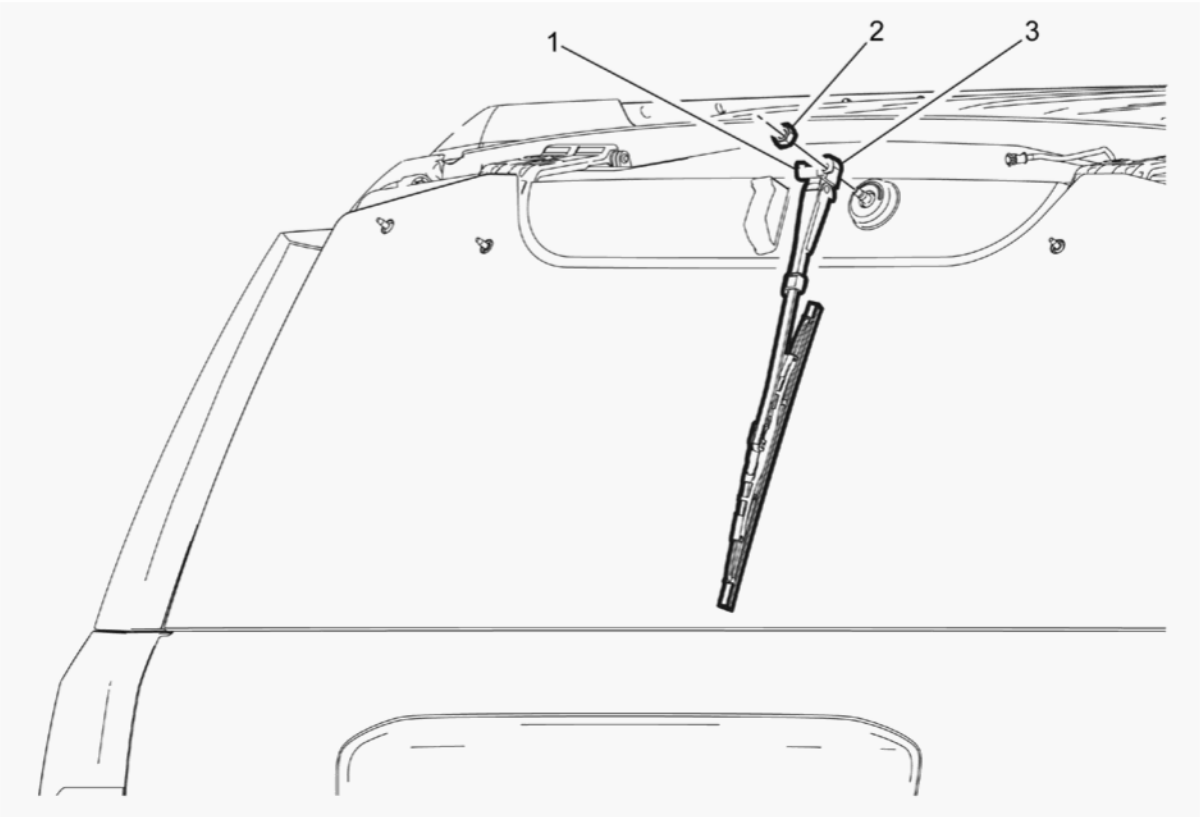

Fig. 35: Rear Window Wiper Arm (Chevrolet/GMC)

cardiagn.com

Courtesy of GENERAL MOTORS COMPANY

Callout	Component Name
Preliminary Procedure Prior to removing the rear window wiper arm nut cap, electrically cycle the wiper arm to the mid-wipe position on the rear window.	
1	Rear Window Wiper Arm Nut Cap **NOTE:** **Using a small flat-bladed tool, release and tilt up the finish cap from the rear wiper arm.**
2	Rear Window Wiper Arm Nut **CAUTION:** **Refer to Fastener Caution .** **CAUTION:** **This vehicle is equipped with torque-to-yield or single use fasteners. Install a NEW torque-to-yield or single use fastener**

cardiagn.com

Callout	Component Name
	when installing this component. Failure to replace the torque-to-yield or single use fastener could cause damage to the vehicle or component. **Tighten** 9 N.m (80 lb in)
3	Rear Window Wiper Arm **Procedure** 1. Using a suitable tool, pull and remove the rear window wiper arm from the rear window wiper motor pivot shaft. 2. Clean the pivot shaft knurls with a soft wire brush before installing the rear window wiper arm. 3. Electrically PARK the rear wiper motor. 4. Place the arm onto the pivot shaft while holding the wiper arm tab firmly into the park ramp pocket. 5. Install the windshield wiper arm nut. 6. Hold the wiper arm in position and torque the wiper arm nut as specified above. 7. Cycle the wiper arm with a spray of solvent, PARK the wiper arm and re-check the alignment of the wiper arm on the park ramp.

REAR WINDOW WIPER ARM REPLACEMENT (CADILLAC)

cardiagn.com

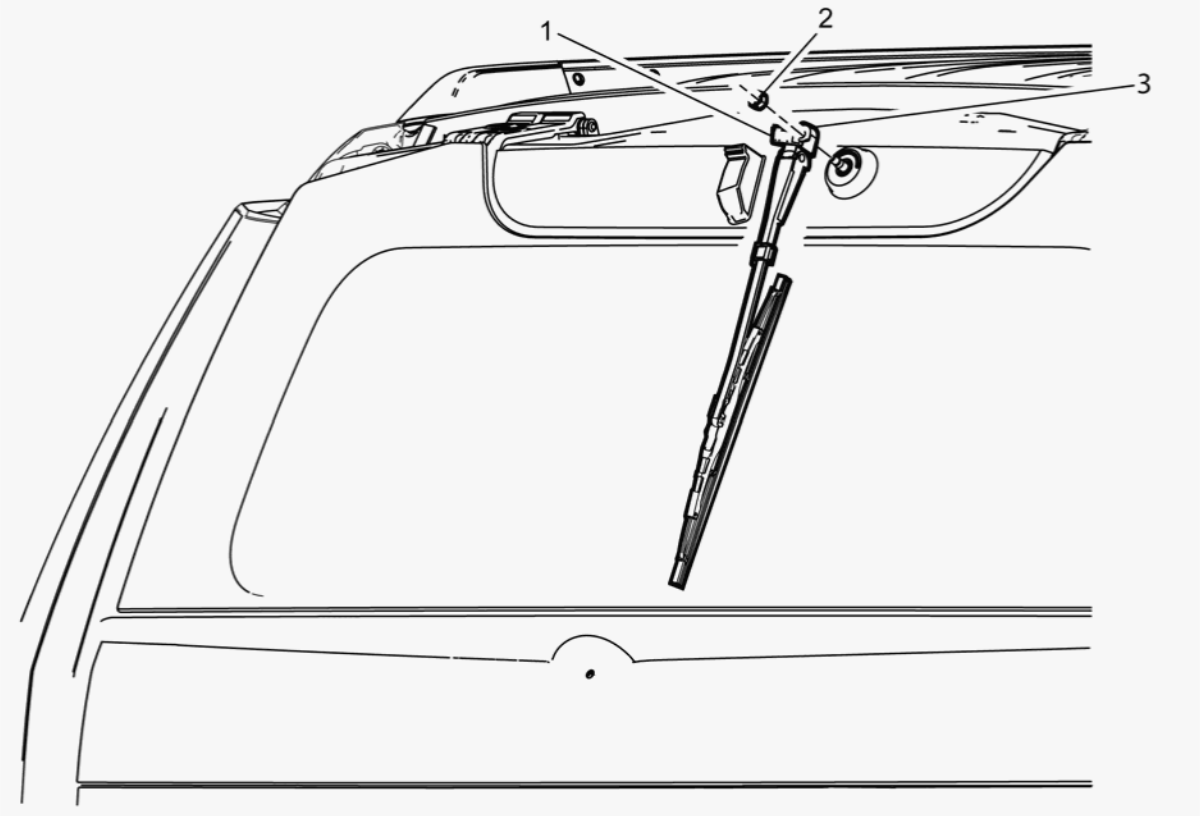

Fig. 36: Rear Window Wiper Arm (Cadillac)
Courtesy of GENERAL MOTORS COMPANY

Callout	Component Name
Preliminary Procedure Prior to removing the rear window wiper arm nut cap, electrically cycle the wiper arm to the mid-wipe position on the rear window.	
1	Rear Window Wiper Arm Nut Cap **NOTE:** **Using a small flat-bladed tool, release and tilt up the**

cardiagn.com

Callout	Component Name
	finish cap from the rear wiper arm.
2	Rear Window Wiper Arm Nut **CAUTION:** **Refer to Fastener Caution .** **CAUTION:** **This vehicle is equipped with torque-to-yield or single use fasteners. Install a NEW torque-to-yield or single use fastener when installing this component. Failure to replace the torque-to-yield or single use fastener could cause damage to**

cardiagn.com

Callout	Component Name
	the vehicle **or** **component.** **Tighten** 9 N.m (80 lb in)
3	Rear Window Wiper Arm **Procedure** 1. Using a suitable tool, pull and remove the rear window wiper arm from the rear window wiper motor pivot shaft. 2. Clean the pivot shaft knurls with a soft wire brush before installing the rear window wiper arm. 3. Electrically PARK the rear wiper motor. 4. Place the arm onto the pivot shaft while holding the wiper arm tab firmly into the park ramp pocket. 5. Install the windshield wiper arm nut. 6. Hold the wiper arm in position and torque the wiper arm nut as specified above. 7. Cycle the wiper arm with a spray of solvent, PARK the wiper arm and re-check the alignment of the wiper arm on the park ramp.

WINDSHIELD WIPER BLADE REPLACEMENT

cardiagn.com

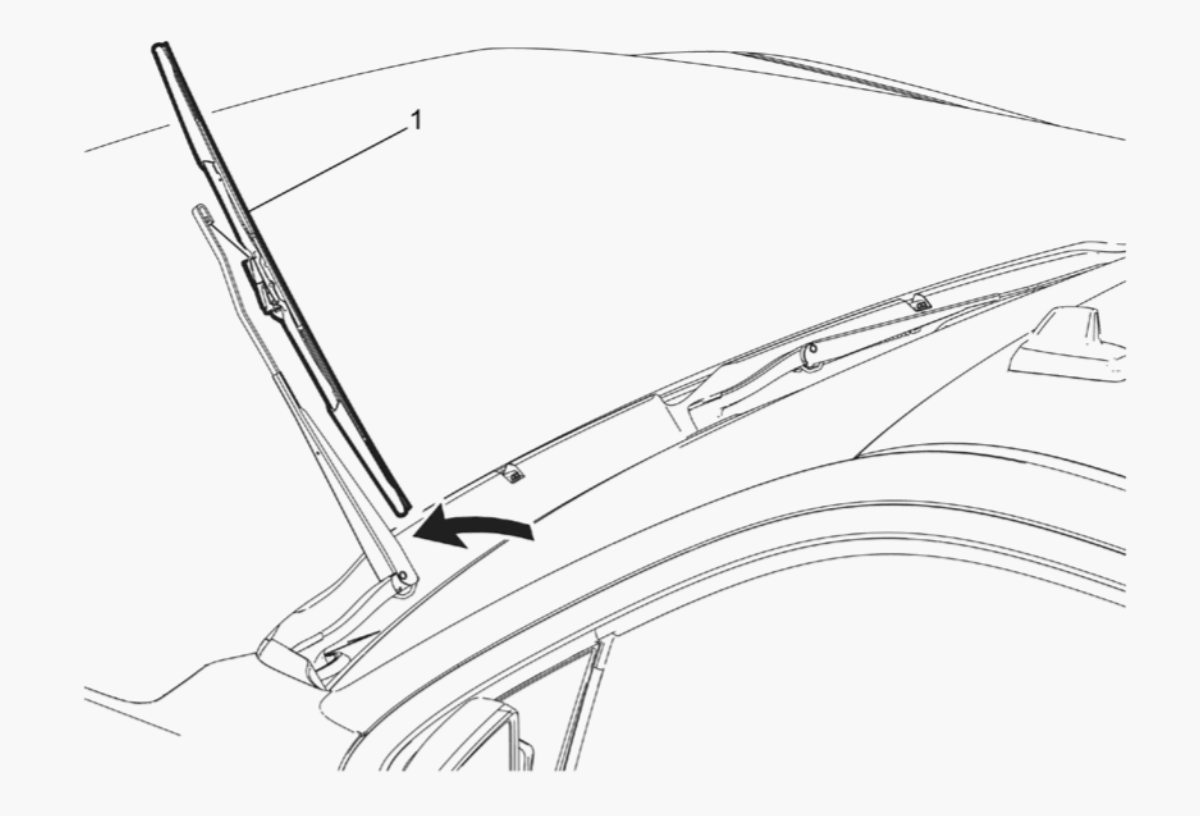

Fig. 37: Windshield Wiper Blade
Courtesy of GENERAL MOTORS COMPANY

Callout	Component Name
Preliminary Procedure Raise the wiper arm to the full up (service up) position.	
1	Windshield Wiper Blade **Procedure** **NOTE:** **Do not let a wiper arm with a removed**

cardiagn.com

Callout	Component Name
	wiper blade, come in contact with the windshield. Release the tab from the front of the shepherd hook and pull the wiper blade rearward from the shepherd hook.

REAR WINDOW WIPER BLADE REPLACEMENT

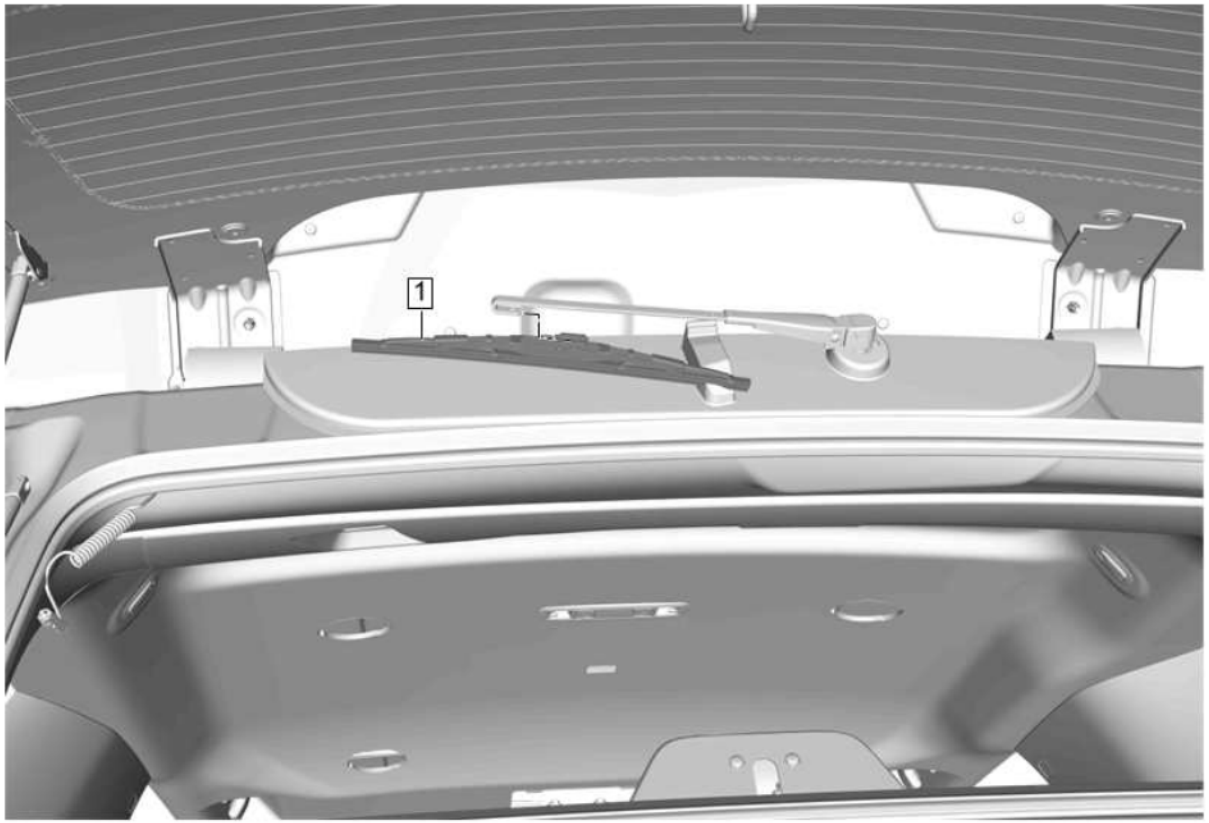

Fig. 38: Rear Window Wiper Blade
Courtesy of GENERAL MOTORS COMPANY

cardiagn.com

Callout	Component Name
1	Rear Window Wiper Blade **Procedure** 1. Open the rear liftgate glass. 2. Lift the rear wiper arm blade off the rear liftgate glass. 3. Depress the unlocking tab while sliding wiper blade off the shepherd's hook. 4. Replace the rear window wiper blade.

WINDSHIELD WIPER MOTOR REPLACEMENT

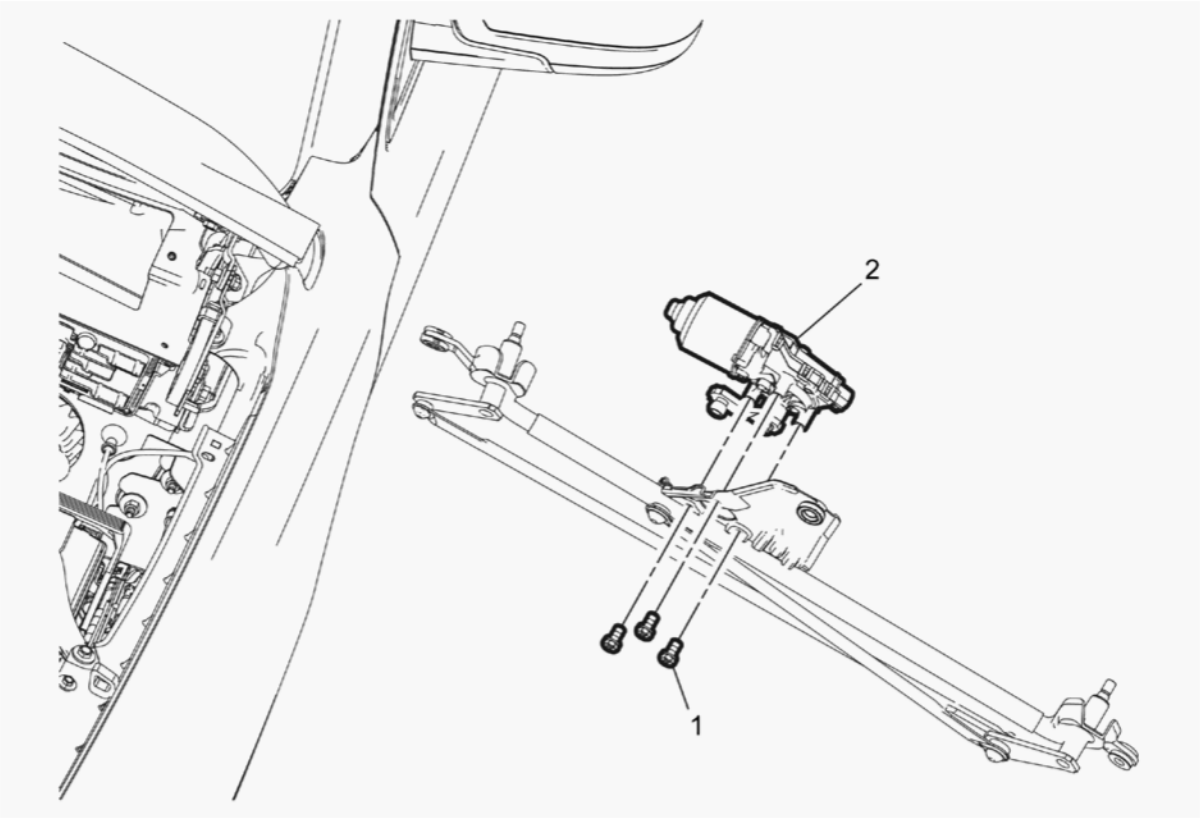

Fig. 39: Windshield Wiper Motor

cardiagn.com

Courtesy of GENERAL MOTORS COMPANY

Callout	Component Name
Preliminary Procedure Remove the windshield wiper transmission. Refer to **Windshield Wiper Transmission Replacement (Chevrolet/GMC)Windshield Wiper Transmission Replacement (Cadillac)**.	
1	Windshield Wiper Motor Bolt (Qty: 3) **CAUTION:** **Refer to** **Fastener** **Caution** .
2	Windshield Wiper Motor **Procedure** 1. Use a suitable tool to separate the windshield wiper motor crank arm from the transmission link. 2. Remove the windshield wiper motor from the windshield wiper transmission. 3. Position the new windshield wiper motor to the windshield wiper transmission. 4. Align the transmission links to the windshield wiper motor crank arm. 5. Use a suitable tool to secure the windshield wiper motor crank arm ball to the transmission link ball socket.

REAR WINDOW WIPER MOTOR REPLACEMENT (CHEVROLER/GMC)

cardiagn.com

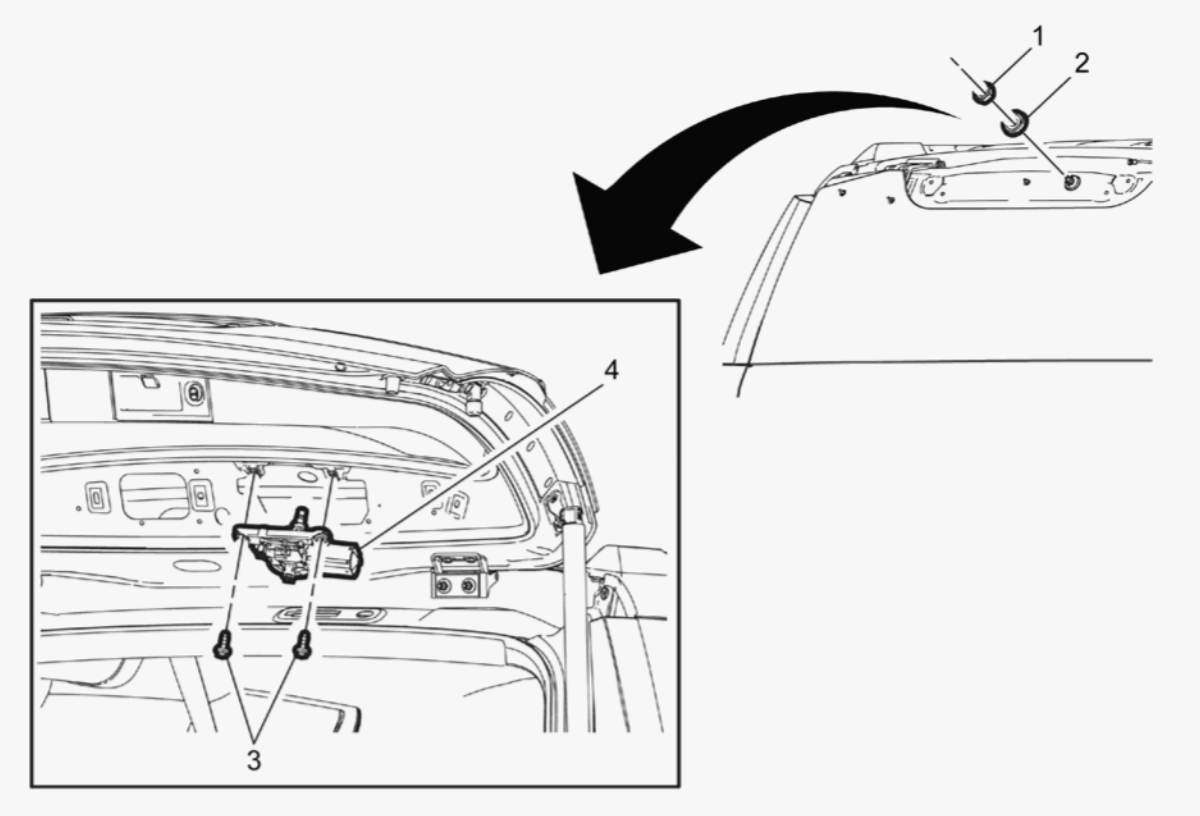

Fig. 40: Rear Window Wiper Motor (Chevrolet/GMC)
Courtesy of GENERAL MOTORS COMPANY

Callout	Component Name
Preliminary Procedures 1. Remove the liftgate upper trim finish panel. Refer to **Liftgate Upper Trim Finish Panel Replacement** . 2. Remove the rear end spoiler retainer cover (liftgate). Refer to **Rear End Spoiler Retainer Cover Replacement (Rear End Spoiler)** **Rear End Spoiler Retainer Cover Replacement (Liftgate)** .	
1	Rear Window Wiper Motor Shaft Nut **CAUTION:**

cardiagn.com

Callout	Component Name
	Refer to **Fastener Caution** . **Tighten** 4.9 N.m (43 lb in)
2	Rear Window Wiper Motor Spacer **Procedure** Remove the rear window wiper motor spacer.
3	Rear Window Wiper Motor Bolts (Qty:2) **CAUTION:** **Refer to** **Fastener Caution** . **Tighten** 9 N.m (80 lb in)
4	Rear Window Wiper Motor **Procedure** 1. Disconnect the electrical connector. 2. Remove the rear wiper motor from the inner liftgate panel.

REAR WINDOW WIPER MOTOR REPLACEMENT (CADILLAC)

cardiagn.com

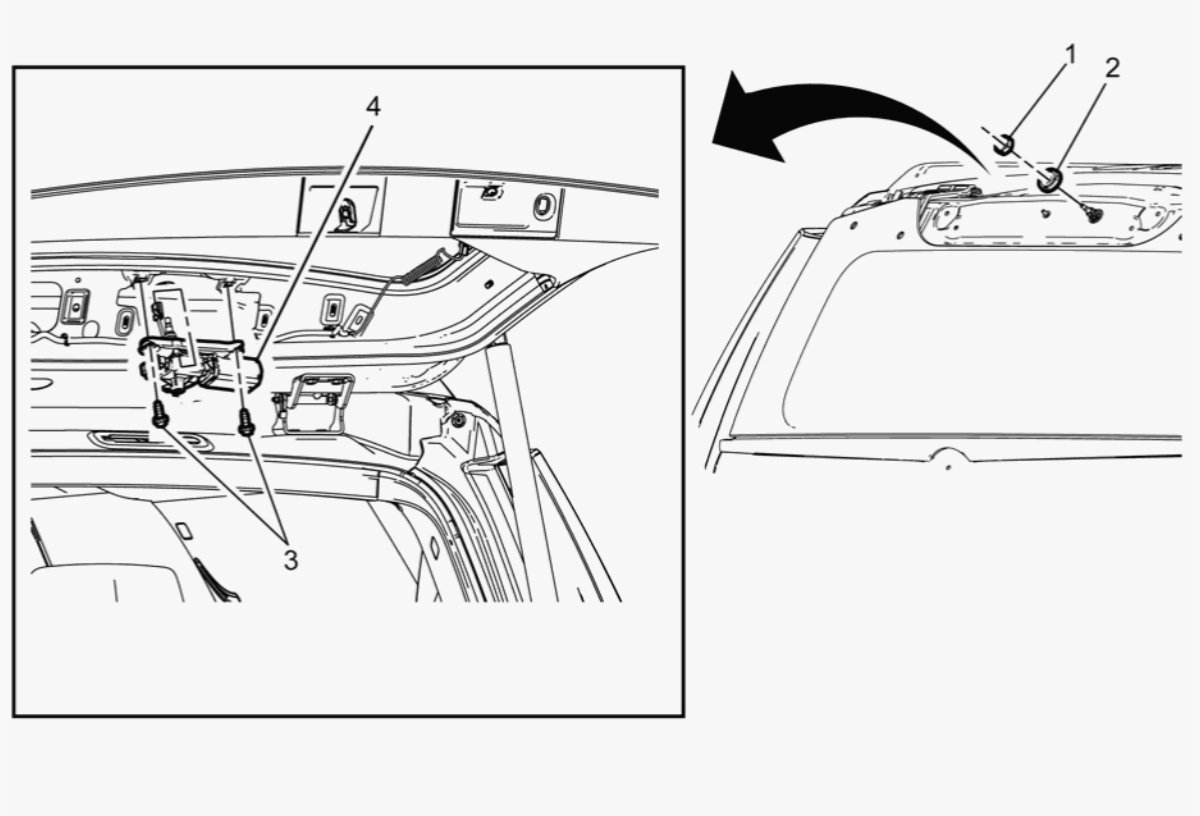

Fig. 41: Rear Window Wiper Motor (Cadillac)
Courtesy of GENERAL MOTORS COMPANY

Callout	Component Name
Preliminary Procedures 1. Remove the liftgate upper trim finish panel. Refer to **Liftgate Upper Trim Finish Panel Replacement** . 2. Remove the rear end spoiler retainer cover (liftgate). Refer to **Rear End Spoiler Retainer Cover Replacement (Rear End Spoiler)** **Rear End Spoiler Retainer Cover Replacement (Liftgate)** .	
1	Rear Window Wiper Motor Shaft Nut **CAUTION:**

cardiagn.com

Callout	Component Name
	Refer to Fastener Caution . **Tighten** 4.9 N.m (43 lb in)
2	Rear Window Wiper Motor Spacer **Procedure** **NOTE:** **To aid installation, observe motor spacer marking and ensure correct orientation.** Remove the rear window wiper motor spacer.
3	Rear Window Wiper Motor Bolts (Qty:2) **CAUTION:** **Refer to Fastener Caution .** **Tighten** 9 N.m (80 lb in)

cardiagn.com

Callout	Component Name
4	Rear Window Wiper Motor **Procedure** 1. Disconnect the electrical connector. 2. Remove the rear wiper motor from the inner liftgate panel.

WINDSHIELD WIPER TRANSMISSION REPLACEMENT (CHEVROLET/GMC)

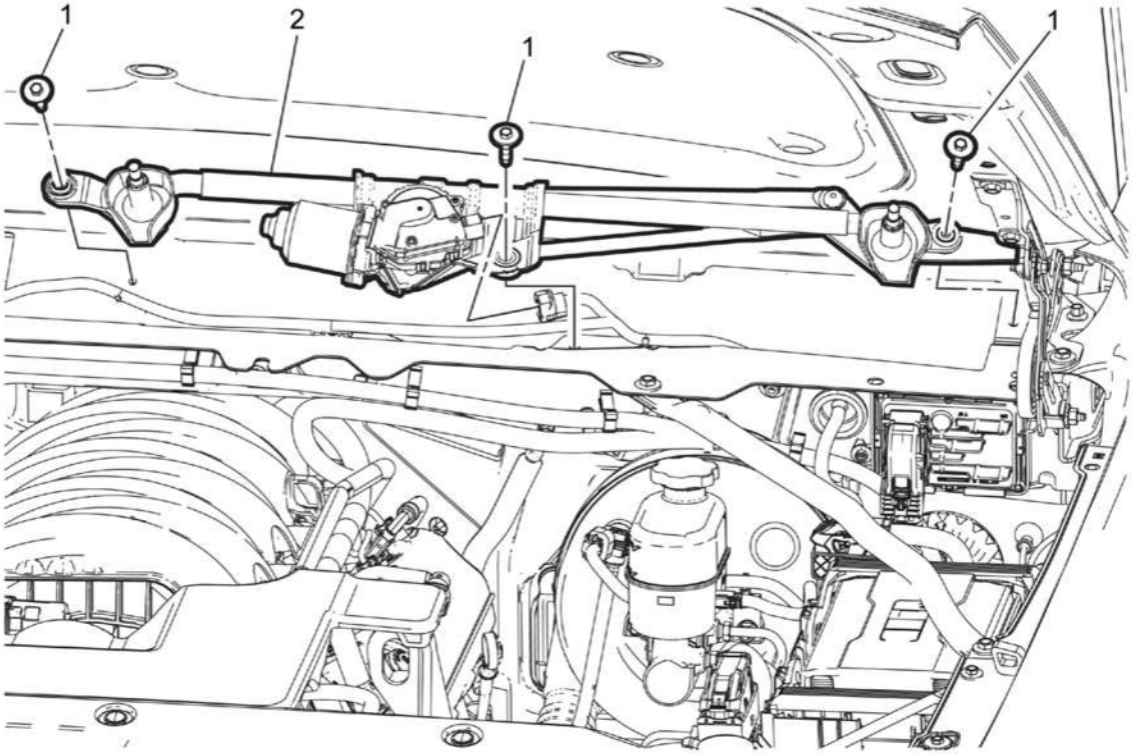

Fig. 42: Windshield Wiper Transmission (Chevrolet/GMC)
Courtesy of GENERAL MOTORS COMPANY

Callout	Component Name

cardiagn.com

Callout	Component Name
Preliminary Procedure Remove the air inlet grille panel. Refer to **Air Inlet Grille Panel Replacement (Chevrolet/GMC)**.	
1	Windshield Wiper Transmission Bolt (Qty: 3) **CAUTION:** **Refer to** **Fastener Caution .** **Tighten** 9 N.m (80 lb in)
2	Windshield Wiper Transmission **Procedure** 1. Disconnect the windshield wiper motor electrical connector. 2. Remove the windshield wiper transmission from the vehicle. 3. Transfer all necessary components.

WINDSHIELD WIPER TRANSMISSION REPLACEMENT (CADILLAC)

cardiagn.com

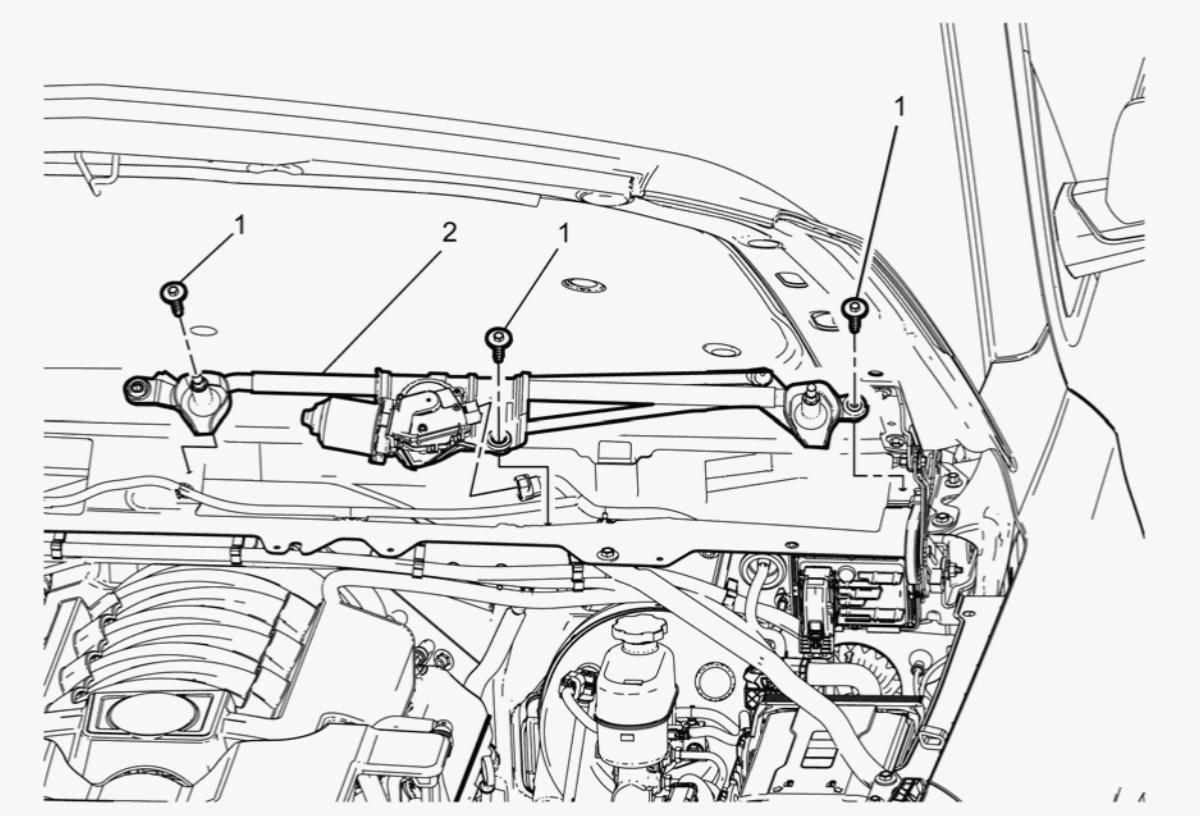

Fig. 43: Windshield Wiper Transmission (Cadillac)
Courtesy of GENERAL MOTORS COMPANY

Callout	Component Name
Preliminary Procedure Remove the air inlet grille panel. Refer to **Air Inlet Grille Panel Replacement (Cadillac)**.	
1	Windshield Wiper Transmission Bolt (Qty: 3) **CAUTION:** **Refer to Fastener Caution .**

cardiagn.com

Callout	Component Name
	Tighten 9 N.m (80 lb in)
2	Windshield Wiper Transmission **Procedure** 1. Disconnect the windshield wiper motor electrical connector. 2. Remove the windshield wiper transmission from the vehicle. 3. Transfer all necessary components.

WINDSHIELD MULTIFUNCTION SENSOR MOUNT BRACKET COVER REPLACEMENT

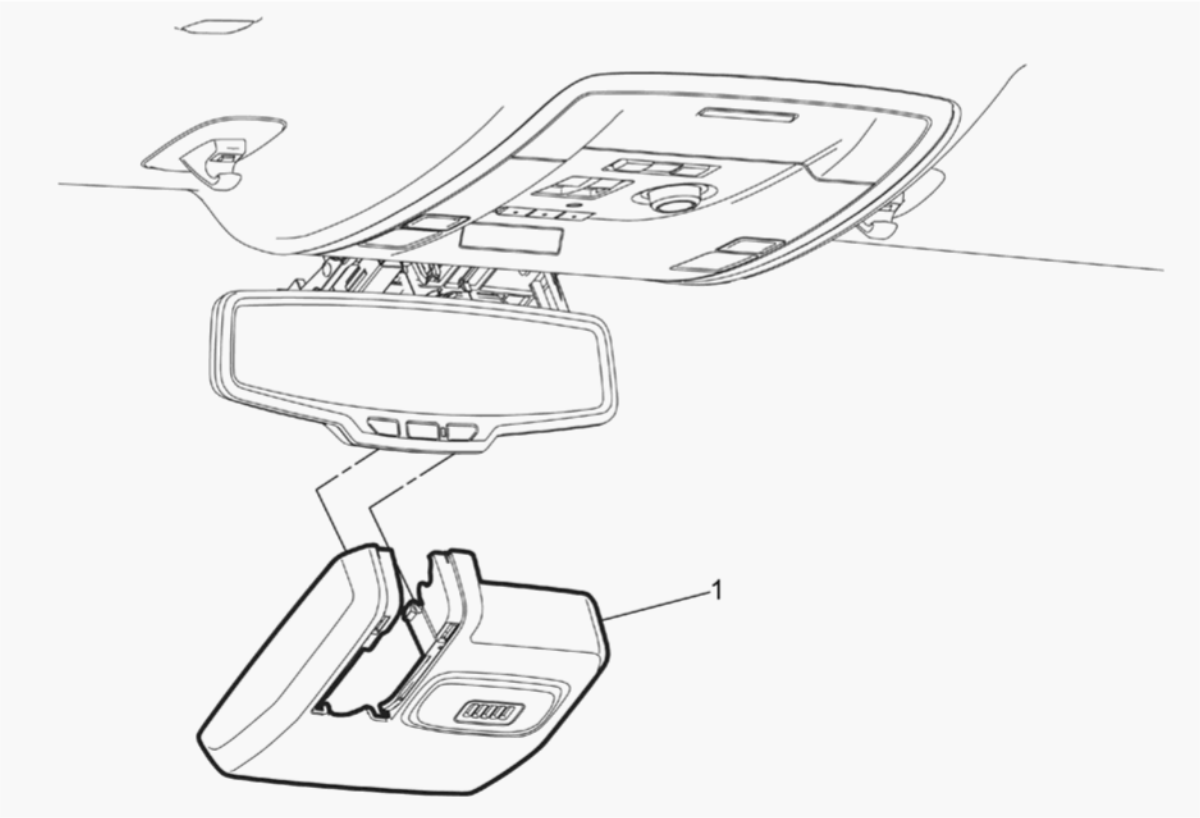

cardiagn.com

Fig. 44: Windshield Multifunction Sensor Mount Bracket Cover
Courtesy of GENERAL MOTORS COMPANY

Callout	Component Name
1	Windshield Multifunction Sensor Mount Bracket Cover **Procedures** 1. Using a plastic trim tool, carefully pry downward on the cover to gain access to the mirror. 2. Remove the windshield multifunction sensor mount bracket cover insert. Refer to **Windshield Multifunction Sensor Mount Bracket Cover Insert Replacement**. 3. Pull downward to completely remove cover from windshield. **NOTE:** **The windshield multifunction sensor mount bracket cover and cover insert has to be removed as a single unit to prevent damage to mirror.**

WINDSHIELD MULTIFUNCTION SENSOR MOUNT BRACKET COVER INSERT REPLACEMENT

cardiagn.com

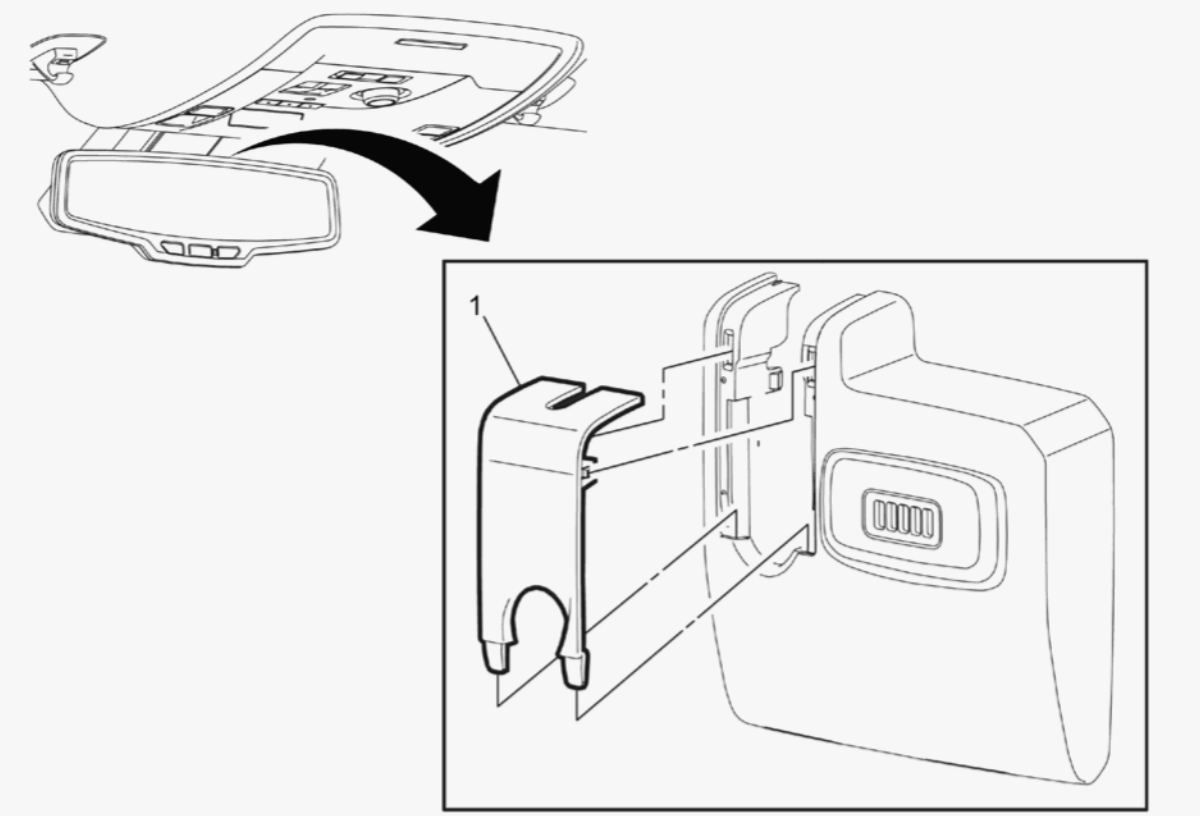

Fig. 45: Windshield Multifunction Sensor Mount Bracket Cover Insert
Courtesy of GENERAL MOTORS COMPANY

Callout	Component Name
1	Windshield Multifunction Sensor Mount Bracket Cover Insert **Procedures** 1. Using a plastic trim tool, carefully pry downward on the cover to release from windshield. 2. Squeeze tabs on insert and pull apart from cover. **NOTE:** **The windshield**

cardiagn.com

Callout	Component Name
	multifunction sensor mount bracket cover and cover insert has to be removed as a single unit to prevent damage to mirror.

WINDSHIELD OUTSIDE MOISTURE/AMBIENT LIGHT AND HUMIDITY SENSOR REPLACEMENT

cardiagn.com

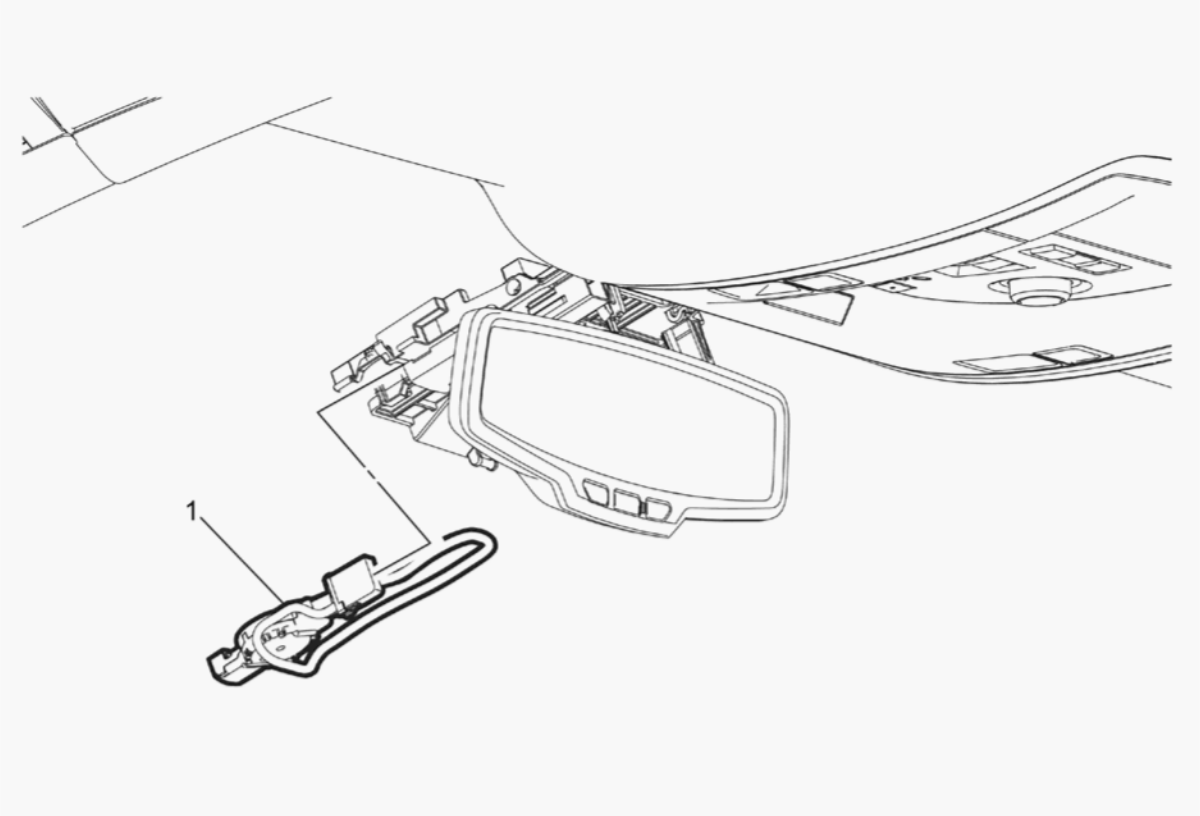

Fig. 46: Windshield Outside Moisture/Ambient Light and Humidity Sensor
Courtesy of GENERAL MOTORS COMPANY

Callout	Component Name
Preliminary Procedure Remove the inside rearview mirror. Refer to **Inside Rearview Mirror Replacement (With UE1)** **Inside Rearview Mirror Replacement (Without UE1)** .	
1	Windshield Outside Moisture/Ambient Light And Humidity Sensor **Procedures** 1. Release the windshield outside moisture/ambient light and humidity sensor retainers from the inside rear view mirror support bracket and pull down and forward. 2. Disconnect the electrical connector.

cardiagn.com

DESCRIPTION AND OPERATION

WIPER/WASHER SYSTEM DESCRIPTION AND OPERATION

Wiper/Washer System Components

The wiper/washer system consists of the following electrical components:

- Windshield Wiper Relay
- Windshield Wiper Speed Control Relay
- Windshield Washer Pump Relay
- Windshield Washer Fluid Pump
- Windshield Wiper Motor
- Window Wiper/Washer Switch
- Windshield Wiper Motor Fuse
- Windshield Washer Fluid Pump Fuse
- Body Control Module
- Rear Window Wiper Motor
- Rear Window Wiper Motor Fuse
- Rear Window Wiper Relay
- Rear Window Washer Pump Relay
- Windshield Washer Fluid Level Switch
- Rain Sensor

Windshield Wiper System

The body control module (BCM) determines the front wipe/wash system mode of operation by monitoring several signals from the front wipe/wash switch as indicated in the wiper switch.

The front wipe/wash switch receives a reference ground signal from the BCM. Each input of the BCM provides a switched battery pull-up for each front wiper/washer switch output signal it receives. All the BCM inputs are recognized as active when the wiper switch provides a path to the referenced ground signal. The first signal received by the BCM is the result of 6 resistors in the front wiper switch configured as a resistor ladder network. This signal is connected to a BCM analog to digital input. Depending on the function selected (High, Low, Intermittent 1 thru 5, Mist, Off), the front wiper control switch connects a different set of resistors into the circuit resulting in different voltages appearing on the BCM A/D input. By

cardiagn.com

monitoring this voltage, the BCM determines how to control the wiper motor On/Off Relay. It should be noted that High, Low, and Mist all have the same value on this signal circuit. The second signal received from the front wiper switch is active only when the front wiper switch is in the high speed wiper position. When the wiper switch is not in the high speed position, the switch is open and the signal circuit is pulled to battery by the BCM. When the wiper switch is in the high speed position, the switch pulls the circuit low. The BCM determines how to control the Wiper high/low speed relay from this input. The third signal received from the front wiper switch is from the momentary windshield wash control switch. When the washer switch is not active the switch is open and the signal circuit is pulled to battery by the BCM. When the washer switch is active, the switch pulls the circuit low. The BCM controls the windshield wash and windshield wash activated wiper operation based on this input.

The BCM controls front wiper motor operation through two output signals and the monitoring of one input signal. The two outputs (one high side drive, one low side drive) are used to control two external wiper motor relays: front wiper motor on/off relay: which provides the wiper motor with battery power when it is activated by the high side drive signal (switched battery) from the BCM. When left deactivated, the normally closed contacts provide a ground to the wiper motor. Wiper high/low speed relay: when activated by a low side drive signal (ground) from the BCM, it switches the power supplied by the wiper motors on/off relay to the motors high speed input. When left deactivated, the normally closed contacts connect the power supplied by the wiper motors on/off relay to the motors low speed input. The input used by the BCM is from the park switch located in the wiper motor assembly. When the wiper blades are not in the park position, the wiper park switch is open and the circuit is pulled up to battery by the BCM. When the wiper blades are in the park position at the bottom of the glass, the wiper park switch closes to ground pulling the park signal circuit low.

To initiate low speed operation, the BCM only energizes the front wiper motor on/off relay. This allows battery voltage from the wiper fuse to be applied through the switched contacts of the wiper motor on/off relay, through the normally closed contacts of the wiper high/low speed relay, to the low speed control circuit of the windshield wiper motor.

Redundant high speed switch pass through. The BCM provides redundant circuitry which places battery power on its wiper motor on/off relay output with activation of its low assertion high speed wiper switch input. The BCM shall be capable of doing this, even if the module has lost all microprocessor control. This redundant circuit shall supply power while in the RUN and CRANK power modes. however; while in the CRANK power mode, the pass through shall only be active if the BCM is NOT in a computer operating properly state.

To initiate high speed operation, the BCM energizes both the front wiper motor on/off relay and the wiper high/low speed relay. This allows battery voltage from the wiper fuse to be applied through the switched contacts of the wiper motor on/off relay, through the switched contacts of the wiper high/low speed relay, to the high speed control circuit of the windshield wiper motor.

Parking the wiper motor. In order to perform an accurate read of the park switch and to ensure the wipers will come to rest while still in the park position, parking of the wipers only occurs while in a low speed wiper mode. This requires that if the wipers are performing a high speed wiper operation at the time they are required to park, the BCM shall transition the Wipers to low speed by deactivating the wiper high/low relay before attempting to park. In order to park the wipers, the BCM monitors the park circuit until the park switch pulls the park circuit to ground. At this time, the BCM will immediately deactivate the wiper motor on/off relay. The relay contacts will switch back to their normally closed position and will apply ground to the wiper motor power inputs through the normally closed contacts of the wiper high/low relay. This deactivates and dynamically

cardiagn.com

brakes the wiper motor in the park position. When the wiper switch is turned to the OFF position while the wiper motor is somewhere in mid-cycle, the BCM will continue to operate the motor until the wipers reach the park position. If the BCM is running the wiper motor and does not see a state transition of the park switch after 8 s, the wipers will stop immediately when the wiper switch is turned to OFF. If the ignition is turned OFF while the wipers are in mid-cycle, the wipers will stop immediately, regardless of position. The BCM will park the wipers next time the ignition is turned ON.

The windshield wiper system MIST operation is identical to LOW speed operation, except that the MIST switch is a press and release type switch. When the wiper switch is moved to the MIST position and released, low speed wiper motor operation is started and will continue until 1 cycle is complete. If the wiper switch is moved to the MIST position and held, the wiper motor will operate in the LOW speed mode until the switch is released.

Windshield wiper intermittent operation is a low speed wiper motor function with a variable delay interval between the wiper motor cycles. The duration of the delay is controlled by the front wiper control switches intermittent 1 thru intermittent 5 settings. The wiper operation is as follows

1. The BCM will initiate a single wipe by activating its front wiper ON/OFF relay output.
2. At the completion of a single wipe, the BCM will park the wipers as described above.
3. The BCM will then pause the wipers in their park position for the time duration associated with intermittent delay switch setting.
4. When the delay time expires repeat Steps 1 and 3 until the system is turned off or taken out of intermittent mode. If the wiper switch is moved from a longer delay interval to a shorter delay interval, the BCM will command an immediate wipe cycle and reset the delay timer to the shorter delay interval.

Intermittent wiper operation may be vehicle speed sensitive. When enabled, the speed compensated intermittent feature causes the intermittent wiper delay intervals to become shorter as a function of increased speed. As vehicle speed is reduced the intervals will become closer to the predetermined

cardiagn.com

Fig. 47: Windshield Wiper System
Courtesy of GENERAL MOTORS COMPANY

Windshield Washer System

The BCM controls the windshield wash operation and windshield wash activated wiper operation. When the BCM detects the activation of the momentary windshield wash control switch, it activates its washer pump relay drive output which supplies battery power to the coil of the washer pump relay. This energizes the relay, which switches battery power to the pump motor. The BCM will also activate continuous low speed windshield wipes as described above. Upon deactivation of the windshield wash control switch, the wiper control module (BCM) shall deactivate the wash motor and will also park the wiper motor as described above unless the drip wipe feature is enabled. On some vehicles the drip wipe feature will be enabled and cause the system to provide additional wiping of the windshield after the switch has been released and fluid is no longer being applied. The front wash feature may attempt to detect a stuck switch. When enabled, activation of the wash feature shall be limited to 10 seconds.

On vehicles with the Rear Wash feature a single reversing wash motor may be utilized for both the front and rear wash operation. In this system the wash motor is operated in one direction to spray fluid on the front windshield and then operated in the reverse direction to spray fluid on the rear

cardiagn.com

window. The BCM Controls the reversing wash motor through two High Side Drive outputs. One controls the Front Wiper Motor Relay and one controls the Rear Wiper Relay.

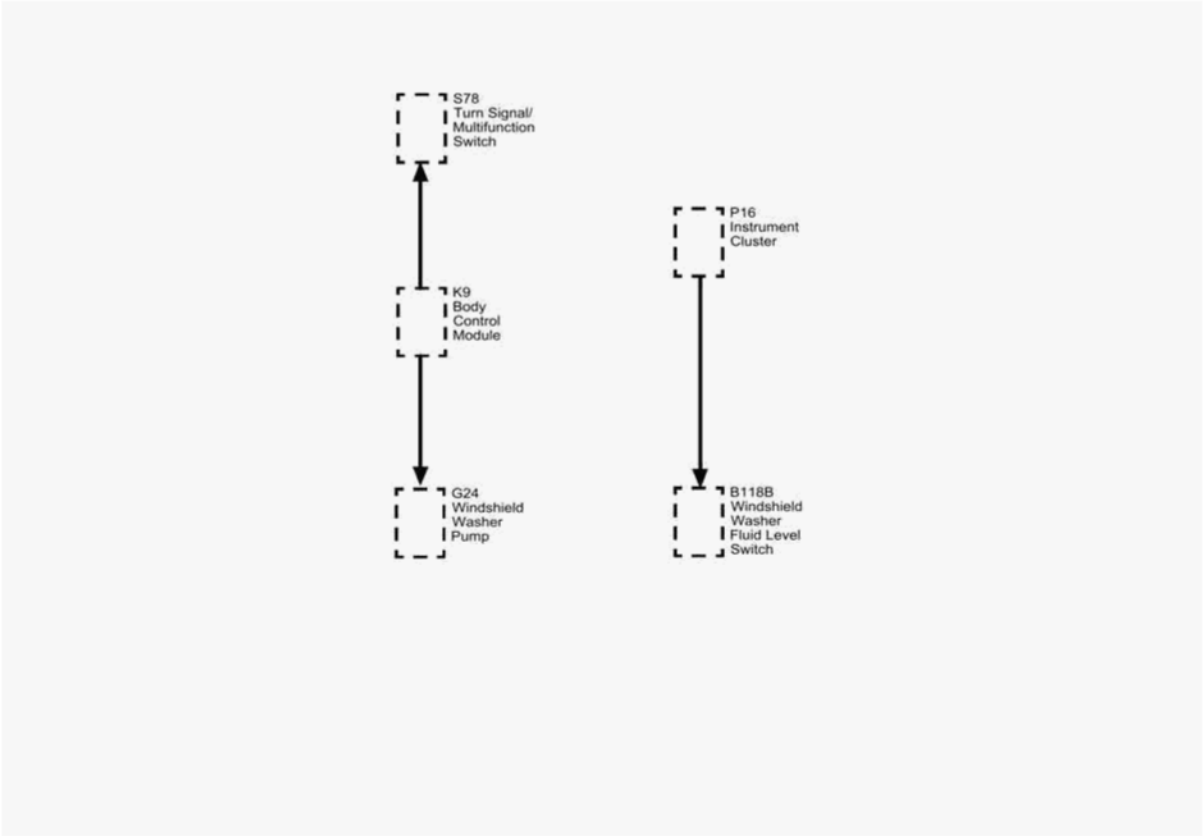

Fig. 48: Wiper/Washer System Description
Courtesy of GENERAL MOTORS COMPANY

Washer Fluid Level Indicator

The check washer fluid message is controlled by the instrument panel using an input from the washer fluid level switch. The washer fluid level signal circuit is supplied ignition voltage through a resistor then monitored within the instrument cluster. The washer fluid level switch is normally open so the instrument cluster detects ignition voltage on the washer fluid level signal circuit whenever the washer fluid level is not low. When the washer fluid reaches the point where the driver should be informed that the washer fluid is low, the washer fluid level switch closes. When the washer fluid level switch is closed the washer fluid level signal circuit voltage is pulled low, and the instrument panel displays the Check Washer Fluid message on the driver information center. In order to prevent the Check Washer Fluid message from being displayed while sloshing is occurring in the washer fluid container, the instrument cluster is programed with a 1 min delay before changing states of the Check Washer Fluid message during an ignition

cardiagn.com

cycle.

Rain Sensor Indicator

B+ voltage is supplied to the Rain Sensor. Whenever the ignition is ON, or accessory positions, the body control module (BCM), sends the turn signal/multifunction switch status by using data communication. When a wipe cycle is needed, the Rain Sensor sends a data communication message to the BCM, requesting the wiper operation. The BCM commands the Windshield Wiper Motor wipe cycles. If at anytime a fault occurs between the Rain Sensor and BCM, the BCM will use the inputs from the turn signal/multifunction switch in the delay positions to operate the Windshield Wiper Motor at continuous variable delay intervals.

The system supports the Rainsense On/Off button. Press to turn the Rainsense On/Off. When turned on and the front is in one of the Rain sensor wipe sensitivity positions, the wipers can be adjusted for more or less sensitivity to moisture. When turned off, the wipers operate as timed intermittent wipers and can be adjusted for more or less frequent wipes.

If the ignition is in ON/RUN and the front band is in one of the sensitivity settings when auto is turned on or off, a message may display indicating if Rain sensor was turned on or off.

If the ignition is in ON/RUN and the front is not in one of the sensitivity settings when auto is turned on, a message may display indicating that the wiper band must be in one of the sensitivity settings for Rain sensor to operate.

cardiagn.com

Fig. 49: Rain Sensor Indicator Block Diagram
Courtesy of GENERAL MOTORS COMPANY

Rear Wiper System

On vehicles equipped with a Rear Wiper, the BCM determines of the Rear Wipe/Wash System Mode of Operation by monitoring the multiplexed output of the Rear Wipe/Wash Switch. The Rear Wipe Wash Switch uses a reference ground signal from the BCM. The BCM provides a switched Battery pull-up for the Rear Wiper/Washer Switch output signal it receives. All the BCM inputs are recognized as active when the Rear Wiper Switch provides a path to the referenced ground signal. The Rear Wiper/Washer signal received by the BCM is the result of 3 resistors in the Rear Wiper Switch configured as a resistor ladder network. This signal is connected to a BCM Analog to Digital Input which also provides a switched Battery pull-up for the circuit. Depending on the function selected (Low, Intermittent, Off, Wash), the Rear Wiper Control Switch connects a different set of resistors into the circuit resulting in different voltages appearing on the BCM A/D input. By monitoring this voltage, the BCM determines how to control the Rear Wiper Motor Relay and the Rear Washer Relay.

The BCM Controls the single speed Rear Wiper Motor by its Active High output to the external Rear Wiper Motor Relay. When the BCM activates

cardiagn.com

its output and applies Battery to the coil of the relay, the relay energizes, allowing Battery voltage from the fuse to be applied through the switched contacts of the Rear Wiper Motor Relay to the Rear Wiper Motor's control input. The motor then operates continuously at low speed. The BCM does not control the parking of the Rear Wiper Motor, it is self parking. When the BCM deactivates its output, the contacts of the Rear Wiper Motor Relay switch back to ground which will be used by the wiper for Dynamic Braking. The Rear Wiper's internal park switch and circuitry will sustain motor operation until the wiper arm has returned to its Park position.

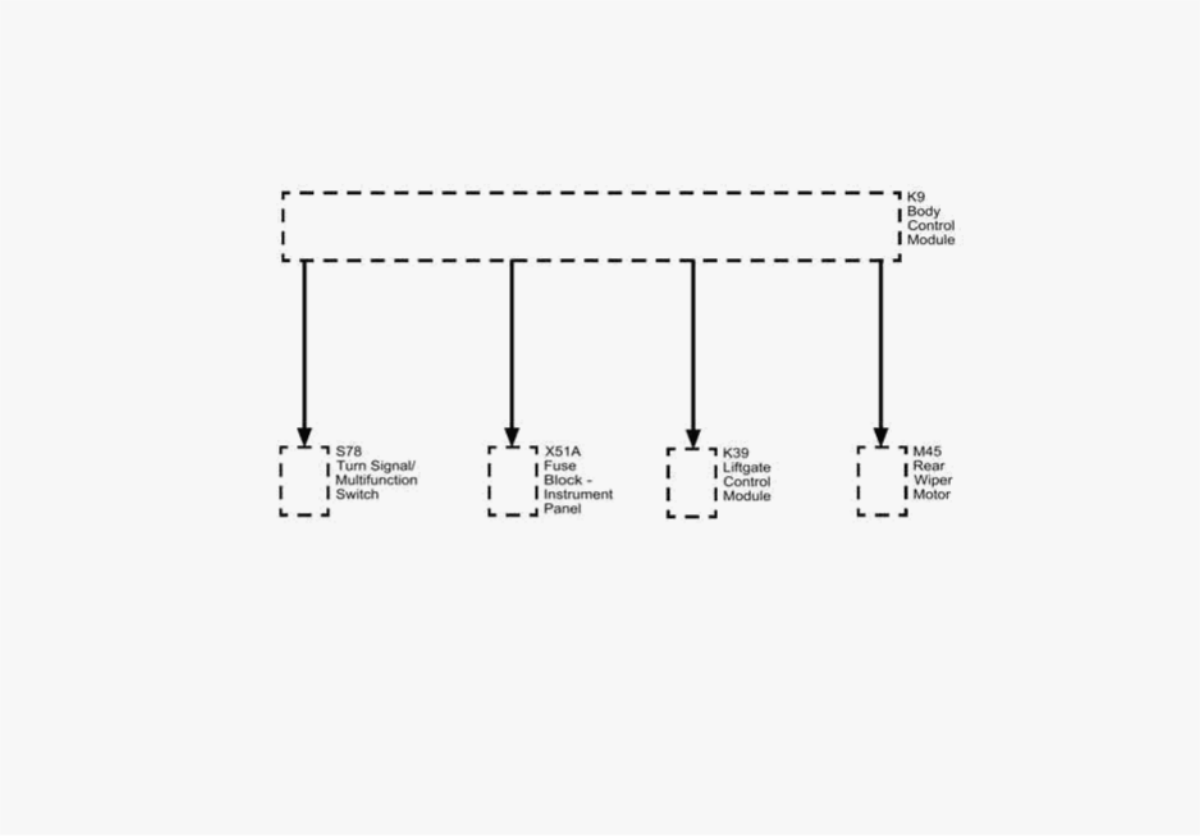

Fig. 50: Rear Wiper System Block Diagram
Courtesy of GENERAL MOTORS COMPANY

Callout	Component Name
K9	K9 Body Control Module
S78	S78 Turn Signal/Multifunction Switch
X51A	X51A Fuse Block - Instrument Panel

cardiagn.com

Callout	Component Name
K39	K39 Liftgate Control Module
M45	M45 Rear Wiper Motor

Rear Wash

When the Body Control Module detects that the Rear wiper/wash switch has activated the momentary Wash switch, it activates a High Side Drive output which supplies Battery to the coil of the Rear Washer Pump Relay. This energizes the Relay, which switches Battery Power to the Washer Pump Motor. The BCM will also activate continuous Low Speed Windshield Wipers as described above. The BCM software will attempt to detect a stuck Rear Wash Switch. A stuck Rear Wash Switch condition is detected if the Rear Wash Motor Relay Output has been continuously active for 10 seconds or more. Upon detecting this the BCM will fail soft the state of the Rear Wash Control to Inactive. This shall cause the System to perform as if the momentary Wash control had been released.

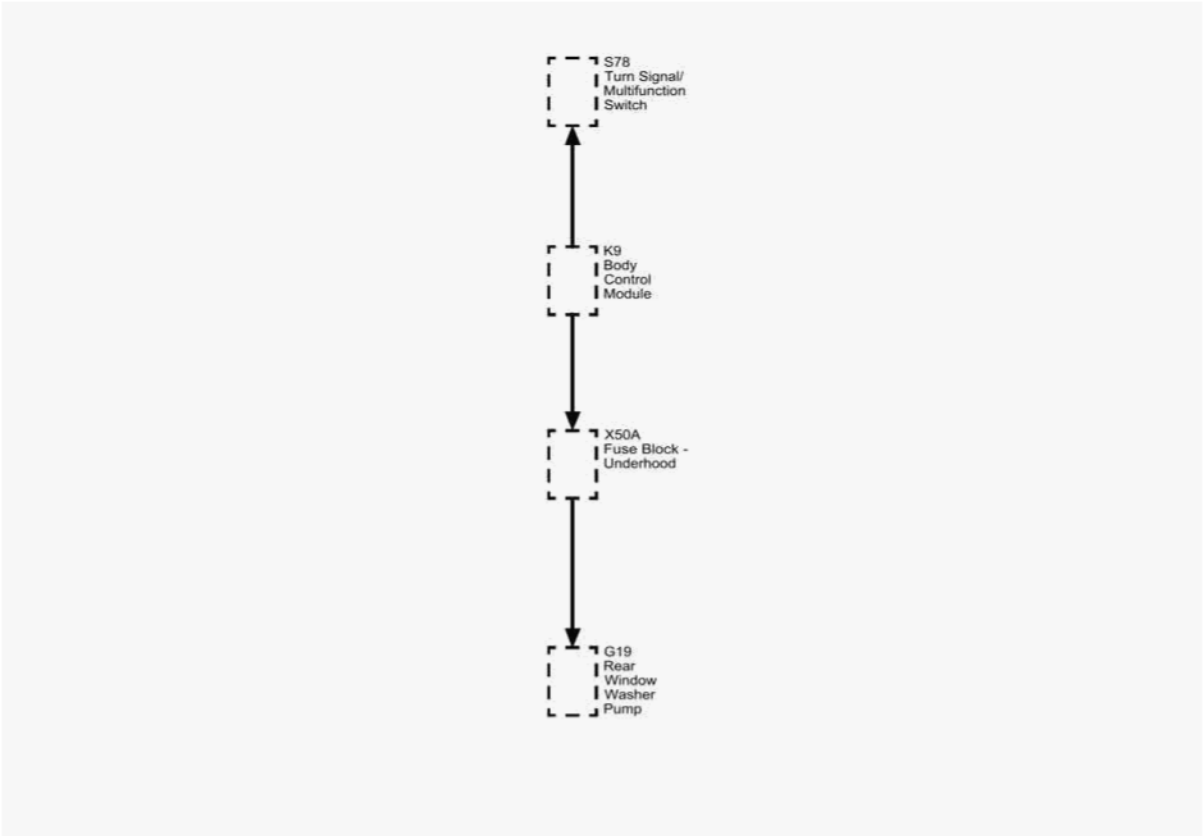

Fig. 51: Rear Wash Block Diagram

cardiagn.com

Courtesy of GENERAL MOTORS COMPANY

Callout	Component Name
S78	S78 Turn Signal/Multifunction Switch
K9	K9 Body Control Module
X50A	X50A Fuse Block - Underhood
G19	G19 Rear Window Washer Pump

cardiagn.com