2014 Cadillac CTS Owner Manual

In Brief 1-1
Instrument Panel 1-2
Initial Drive Information 1-4
Vehicle Features 1-15
Performance and Maintenance 1-20

Keys, Doors, and Windows 2-1
Keys and Locks 2-1
Doors 2-14
Vehicle Security 2-16
Exterior Mirrors 2-19
Interior Mirrors 2-21
Windows 2-21
Roof 2-25

Seats and Restraints 3-1
Head Restraints 3-2
Front Seats 3-3
Rear Seats 3-10
Safety Belts 3-13
Airbag System 3-22
Child Restraints 3-35

Storage 4-1
Storage Compartments 4-1
Additional Storage Features ... 4-3

Instruments and Controls 5-1
Controls 5-2
Warning Lights, Gauges, and Indicators 5-8
Information Displays 5-30
Vehicle Messages 5-36
Vehicle Personalization 5-48
Universal Remote System 5-55

Lighting 6-1
Exterior Lighting 6-1
Interior Lighting 6-6
Lighting Features 6-7

Infotainment System 7-1
Introduction 7-1

Climate Controls 8-1
Climate Control Systems 8-1
Air Vents 8-8
Maintenance 8-9

Driving and Operating 9-1
Driving Information 9-2
Starting and Operating 9-15
Engine Exhaust 9-22
Automatic Transmission 9-23
Drive Systems 9-26
Brakes 9-27
Ride Control Systems 9-30
Cruise Control 9-34
Driver Assistance Systems ... 9-45
Fuel 9-60
Trailer Towing 9-65
Conversions and Add-Ons ... 9-70

2014 Cadillac CTS Owner Manual

Vehicle Care 10-1
General Information 10-2
Vehicle Checks 10-3
Headlamp Aiming 10-29
Bulb Replacement 10-29
Electrical System 10-31
Wheels and Tires 10-40
Jump Starting 10-64
Towing the Vehicle 10-66
Appearance Care 10-69

Service and Maintenance ... 11-1
General Information 11-1
Cadillac Premium Care Maintenance 11-3
Maintenance Schedule 11-3
Special Application Services 11-9
Additional Maintenance and Care 11-10
Recommended Fluids, Lubricants, and Parts 11-13
Maintenance Records 11-16

Technical Data 12-1
Vehicle Identification 12-1
Vehicle Data 12-2

Customer Information 13-1
Customer Information 13-1
Reporting Safety Defects 13-12
Vehicle Data Recording and Privacy 13-13

OnStar 14-1
OnStar Overview 14-1
OnStar Services 14-2
OnStar Additional Information 14-5

Index i-1

The names, logos, emblems, slogans, vehicle model names, and vehicle body designs appearing in this manual including, but not limited to, GM, the GM logo, CADILLAC, the CADILLAC Crest and Wreath, and CTS are trademarks and/or service marks of General Motors LLC, its subsidiaries, affiliates, or licensors.

This manual describes features that may or may not be on your specific vehicle either because they are options that you did not purchase or due to changes subsequent to the printing of this owner manual.

Please refer to the purchase documentation relating to your specific vehicle to confirm each of the features found on your vehicle. For vehicles first sold in Canada, substitute the name “General Motors of Canada Limited” for Cadillac Motor Car Division wherever it appears in this manual.

Keep this manual in the vehicle for quick reference.

Canadian Vehicle Owners

Propriétaires Canadiens

A French language manual can be obtained from your dealer, at www.helminc.com, or from:

On peut obtenir un exemplaire de ce guide en français auprès du concessionnaire ou à l'adresse savant:

Helm, Incorporated
Attention: Customer Service
47911 Halyard Drive
Plymouth, MI 48170

Using this Manual

To quickly locate information about the vehicle, use the Index in the back of the manual. It is an alphabetical list of what is in the manual and the page number where it can be found.

Litho in U.S.A.
Part No. 22800483 C Third Printing

©2014 General Motors LLC. All Rights Reserved.

Danger, Warnings, and Cautions

⚠ Danger

Text marked ⚠ Danger provides information on risk of fatal injury. Disregarding this information may endanger life.

⚠ Warning

Text marked ⚠ Warning provides information on risk of accident or injury. Disregarding this information may lead to injury.

⚠ Caution

Text marked ⚠ Caution provides information that may indicate a hazard that could result in injury or death. It could also result in possible damage to the vehicle.

A circle with a slash through it is a safety symbol which means “Do Not,” “Do not do this,” or “Do not let this happen.”

Symbols

The vehicle has components and labels that use symbols instead of text. Symbols are shown along with the text describing the operation or information relating to a specific component, control, message, gauge, or indicator.

📖 : This symbol is shown when you need to see your owner manual for additional instructions or information.

🔧 : This symbol is shown when you need to see a service manual for additional instructions or information.

Vehicle Symbol Chart

Here are some additional symbols that may be found on the vehicle and what they mean. For more information on the symbol, refer to the Index.

: Airbag Readiness Light

: Air Conditioning

: Antilock Brake System (ABS)

: Audio Steering Wheel Controls or OnStar® (if equipped)

: Brake System Warning Light

: Charging System

: Cruise Control

: Engine Coolant Temperature

: Exterior Lamps

: Fuel Gauge

: Fuses

: Headlamp High/Low-Beam Changer

: Heated Steering Wheel

: LATCH System Child Restraints

: Malfunction Indicator Lamp

: Oil Pressure

: Power

: Remote Vehicle Start

: Safety Belt Reminders

: Tire Pressure Monitor

: Traction Control/StabiliTrak®

: Windshield Washer Fluid

✍ NOTES

In Brief

Instrument Panel
Instrument Panel 1-2

Initial Drive Information
Initial Drive Information 1-4
Starting the Engine 1-4
Remote Keyless Entry (RKE) System 1-4
Remote Vehicle Start 1-5
Door Locks 1-5
Trunk 1-6
Windows 1-6
Seat Adjustment 1-7
Memory Features 1-8
Heated and Ventilated Seats 1-8
Head Restraint Adjustment 1-9
Safety Belts 1-9
Passenger Sensing System 1-10
Mirror Adjustment 1-10
Steering Wheel Adjustment 1-11
Interior Lighting 1-11
Exterior Lighting 1-12
Windshield Wiper/Washer 1-13
Climate Controls 1-14
Transmission 1-15

Vehicle Features
Steering Wheel Controls 1-15
Cruise Control 1-15
Infotainment System 1-16
Driver Information Center (DIC) 1-16
Forward Collision Alert (FCA) System 1-16
Lane Departure Warning (LDW) 1-17
Side Blind Zone Alert (SBZA) 1-17
Rear Vision Camera (RVC) 1-17
Ultrasonic Parking Assist 1-17
Automatic Parking Assist (APA) 1-17
Active Emergency Braking System 1-18
Power Outlets 1-18
Universal Remote System . . . 1-18
Sunroof 1-19

Performance and Maintenance
Traction Control/Electronic Stability Control 1-20
Tire Pressure Monitor 1-20
Engine Oil Life System 1-21
Driving for Better Fuel Economy 1-21
Roadside Service 1-22
OnStar® 1-22

Instrument Panel

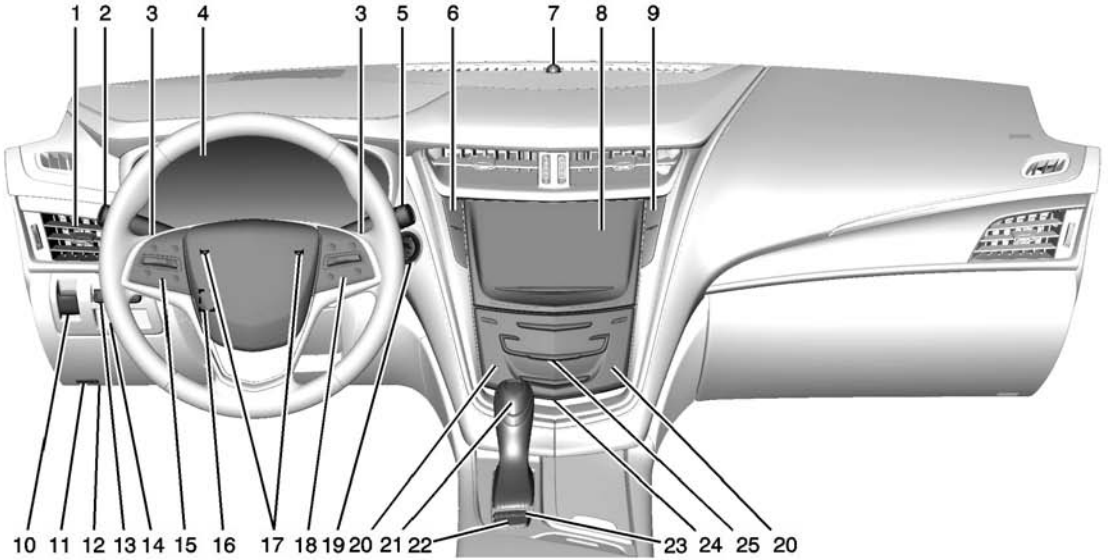

1. *Air Vents on page 8-8*.
2. Turn Signal Lever. See *Turn and Lane-Change Signals on page 6-5*.
3. *Manual Mode on page 9-25* (If Equipped).
4. *Instrument Cluster on page 5-10*.
5. *Windshield Wiper/Washer on page 5-3*.
6. *Hazard Warning Flashers on page 6-5*.

   Lane Departure Warning (LDW) on page 9-58 (If Equipped).
7. Light Sensor (If Equipped). See *Automatic Headlamp System on page 6-4*.

   Solar Sensor. See *Dual Automatic Climate Control System on page 8-1*.
8. *Infotainment on page 7-1*.
9. Glove Box Button. See *Glove Box on page 4-2*.

   Automatic Parking Assist (If Equipped). See *Assistance Systems for Parking or Backing on page 9-46*.

   Parking Assist Button. See *Assistance Systems for Parking or Backing on page 9-46*.
10. Parking Brake Release Switch. See *Electric Parking Brake on page 9-28*.
11. Hood Release. See *Hood on page 10-4*.
12. Data Link Connector (DLC) (Out of View). See *Malfunction Indicator Lamp on page 5-19*.
13. *Head-Up Display (HUD) on page 5-33* (If Equipped).
14. *Instrument Panel Illumination Control on page 6-6*.
15. *Cruise Control on page 9-34* (If Equipped).

    Adaptive Cruise Control on page 9-37 (If Equipped).

    Forward Collision Alert (FCA) System on page 9-52 (If Equipped).

    Heated Steering Wheel on page 5-3 (If Equipped).
16. *Steering Wheel Adjustment on page 5-2*.
17. *Horn on page 5-3*.
18. *Steering Wheel Controls on page 5-3*.

    Driver Information Center (DIC) Controls. See *Driver Information Center (DIC) on page 5-30*.
19. ENGINE START/STOP Button. See *Ignition Positions on page 9-16*.
20. *Heated and Ventilated Front Seats on page 3-8* (If Equipped).

21. Shift Lever. See *Automatic Transmission on page 9-23*.

    Manual Mode Button. See *Automatic Transmission on page 9-23*.

22. MODE Switch. See *Driver Mode Control on page 9-31*.

23. *Traction Control/Electronic Stability Control on page 9-30*.

24. *Instrument Panel Storage on page 4-1*.

25. *Dual Automatic Climate Control System on page 8-1*.

Initial Drive Information

This section provides a brief overview about some of the important features that may or may not be on your specific vehicle.

For more detailed information, refer to each of the features which can be found later in this owner manual.

Starting the Engine

When first starting the vehicle, the engine idle speed will be elevated to allow the catalytic converter, an emissions control device, to quickly reach operating temperature. After approximately 20 seconds, the engine will begin to transition to its normal, quieter idle speed, which can vary depending on the temperature. This is normal operation.

Remote Keyless Entry (RKE) System

The RKE transmitter may work up to 60 m (197 ft) away.

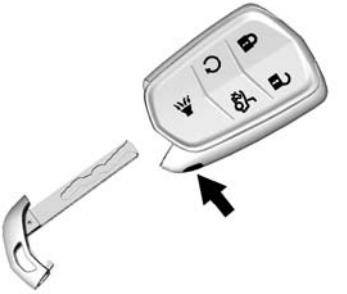

With Remote Start and Remote Trunk Release Shown, Without Similar

Press the button to remove the key. The key can be used for all locks.

Press 🔓 to unlock the driver door or all doors.

Press 🔒 to lock all doors.

Lock and unlock feedback can be personalized. See *Vehicle Personalization on page 5-48*.

Press twice quickly, to release the trunk.

Press and release to initiate vehicle locator.

Press and hold for more than three seconds to sound the panic alarm.

Press again to cancel the panic alarm.

See *Keys on page 2-1* and *Remote Keyless Entry (RKE) System Operation on page 2-3*.

Remote Vehicle Start

If equipped with this feature, the engine can be started from outside of the vehicle.

Starting the Vehicle

1. Press and release on the transmitter.
2. Immediately after completing Step 1, press and hold for at least four seconds or until the turn signal lamps flash.
3. Press the brake pedal and select ON/RUN/START ignition mode to drive the vehicle.

When the vehicle starts, the parking lamps will turn on and remain on as long as the engine is running. The doors will be locked and the climate control system may come on.

The engine will continue to run for 10 minutes. Repeat the steps for a 10-minute time extension. Remote start can be extended only once.

Canceling a Remote Start

To cancel a remote start do any of the following:

- Press and hold until the parking lamps turn off.
- Turn on the hazard warning flashers.
- Turn the vehicle on and then off.

See *Remote Vehicle Start on page 2-9*.

Door Locks

Keyless Access

Press the button on the door handle and pull the handle when the Remote Keyless Entry (RKE) transmitter is within range. See *Remote Keyless Entry (RKE) System Operation on page 2-3*.

Manual Operation

From outside, use the key in the front doors. The key cylinder is covered by a cap. See *Door Locks on page 2-11*.

From the inside rear doors, push down on the door lock knob on top of the door. To unlock a door, pull once on the door handle to unlock it, and again to open it.

Power Door Locks

From outside, press 🔒 or 🔓 on the RKE transmitter. See *Remote Keyless Entry (RKE) System Operation on page 2-3*.

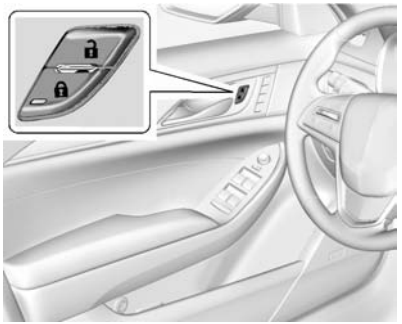

From inside, press 🔒 or 🔓. The indicator light in the switch will illuminate when activated. See *Power Door Locks on page 2-12*.

Trunk

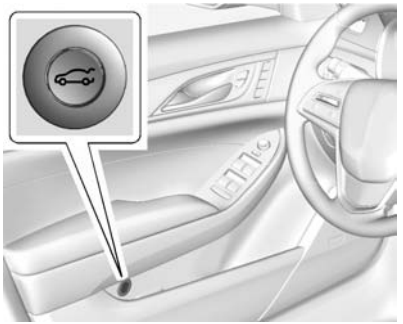

To open the trunk, press 🚗 on the driver door, press 🔓 twice quickly on the Remote Keyless Entry (RKE) transmitter, or press the touch pad on the rear of the vehicle after unlocking all doors.

If equipped with Keyless Access, press the touch pad on the rear of the trunk above the license plate when the RKE transmitter is in range. See *Remote Keyless Entry (RKE) System Operation on page 2-3* and *Trunk on page 2-14*.

Windows

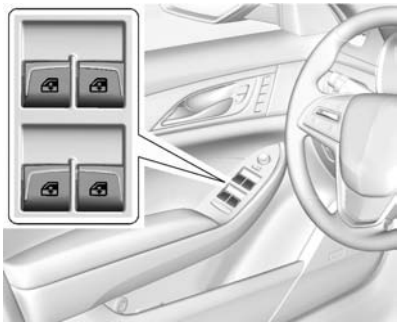

The driver power window switches control all the windows. The passenger switch only controls that window.

Press the switch down to lower the window. Pull the switch up to raise it. See *Power Windows on page 2-21*.

Seat Adjustment

Power Seats

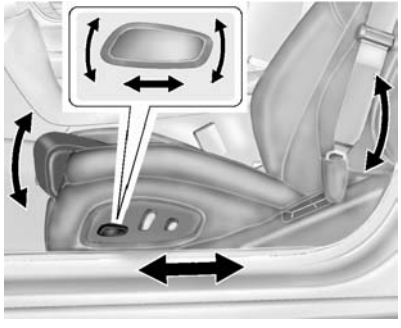

To adjust the seat:

- Move the seat forward or rearward by sliding the control forward or rearward.
- Raise or lower the seat by moving the rear of the control up or down.
- If equipped, raise or lower the front part of the seat cushion by moving the front of the control up or down.

See *Power Seat Adjustment on page 3-3*.

Lumbar Adjustment

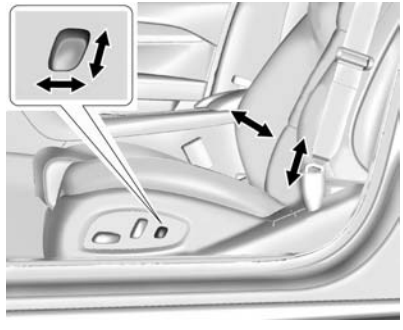

If equipped, to adjust the lumbar support, press and hold the control forward or rearward or up and down.

See *Lumbar Adjustment on page 3-4*.

Bolster Adjustment

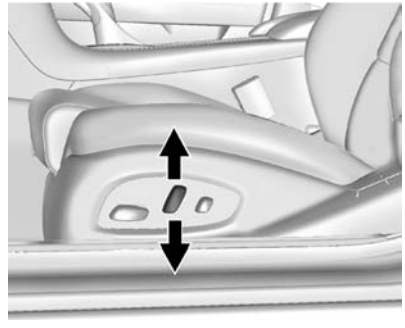

If equipped, to adjust the bolster support, press and hold the recliner control up and down.

See *Lumbar Adjustment on page 3-4*.

Reclining Seatbacks

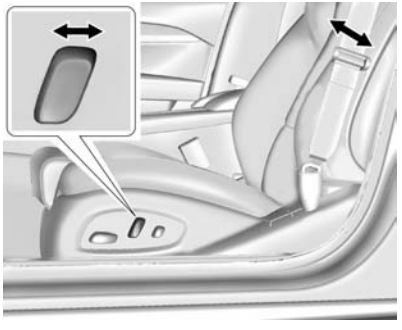

To adjust the seatback:

- Tilt the top of the control rearward to recline.
- Tilt the top of the control forward to raise.

See *Reclining Seatbacks on page 3-5*.

Memory Features

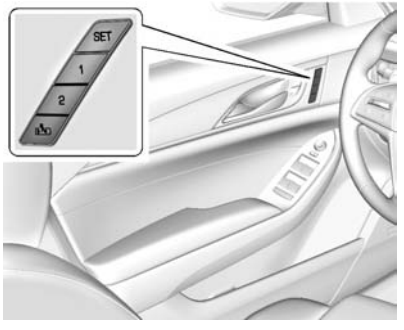

The SET, "1," "2," and (Exit) buttons on the driver door are used to manually save and recall memory settings for the driver seat, outside mirrors, and power tilt and telescoping steering column (if equipped).

See *Memory Seats on page 3-6* and *Vehicle Personalization on page 5-48*.

Heated and Ventilated Seats

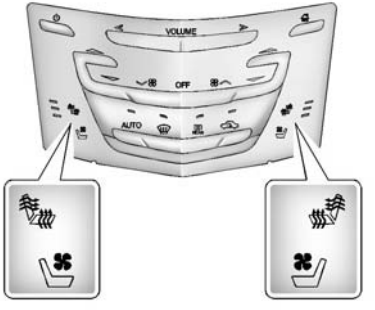

If equipped, the buttons are near the climate controls on the center stack. To operate, the ignition must be in ON/RUN/START.

Press or to heat the driver or passenger seat cushion and seatback.

Press or to ventilate the driver or passenger seat. A ventilated seat has a fan that pulls or pushes air through the seat. The air is not cooled.

Press the button once for the highest setting. With each press of the button, the seat will change to the next lower setting, and then to the off setting. The indicator lights next to the buttons indicate three for the highest setting and one for the lowest. If the front heated seats are on high, the level may automatically be lowered after approximately 30 minutes.

See *Heated and Ventilated Front Seats on page 3-8*.

Head Restraint Adjustment

Do not drive until the head restraints for all occupants are installed and adjusted properly.

To achieve a comfortable seating position, change the seatback recline angle as little as necessary while keeping the seat and the head restraint height in the proper position.

See *Head Restraints on page 3-2* and *Power Seat Adjustment on page 3-3*.

Safety Belts

Refer to the following sections for important information on how to use safety belts properly:

- *Safety Belts on page 3-13*.
- *How to Wear Safety Belts Properly on page 3-14*.
- *Lap-Shoulder Belt on page 3-15*.
- *Lower Anchors and Tethers for Children (LATCH System) on page 3-42*.

Passenger Sensing System

United States

Canada and Mexico

The passenger sensing system will turn off the front outboard passenger frontal airbag and knee airbag under certain conditions. No other airbag is affected by the passenger sensing system. See *Passenger Sensing System on page 3-28*.

The passenger airbag status indicator lights on the overhead console are visible when the vehicle is started. See *Passenger Airbag Status Indicator on page 5-18*.

Mirror Adjustment

Exterior

Controls for the outside power mirrors are on the driver door.

To adjust each mirror:

1. Press (L) or (R) to select the driver or passenger side mirror.
2. Press the arrows on the control pad to move the mirror up, down, right, or left.
3. Adjust each mirror so that a little of the vehicle and the area behind it can be seen.
4. Press ● to deselect the mirror.

See *Power Mirrors on page 2-20*.

Interior

The vehicle has an automatic dimming inside rearview mirror. Automatic dimming reduces the glare of headlamps from behind. The dimming feature comes on when the vehicle is started.

See *Automatic Dimming Rearview Mirror on page 2-21*.

Steering Wheel Adjustment

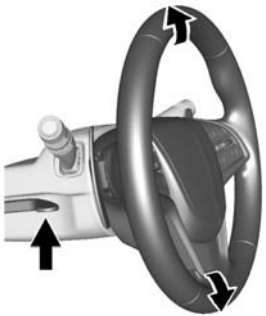

To adjust the steering wheel:

1. Pull the lever down.
2. Move the steering wheel up or down.
3. Pull or push the steering wheel closer or away from you.
4. Pull the lever up to lock the steering wheel in place.

Power Tilt and Telescoping Wheel

If equipped, the control is on the left side of the steering column.

- Push the control up or down to tilt the steering wheel up or down.
- Push the control forward or rearward to move the steering wheel toward the front or rear of the vehicle.

Do not adjust the steering wheel while driving.

To set the power tilt wheel memory position, see *Memory Seats on page 3-6*.

Interior Lighting

Dome Lamps

The dome lamp is in the overhead console.

To change the dome lamp settings, press the following:

OFF: Turns the lamp off, even when a door is open.

DOOR: The lamp comes on when a door is opened.

ON: Turns the lamp on.

Reading Lamps

There are front and rear reading lamps on the overhead console and over the rear passenger doors. These lamps come on when any door is opened.

To manually turn the reading lamps on or off:

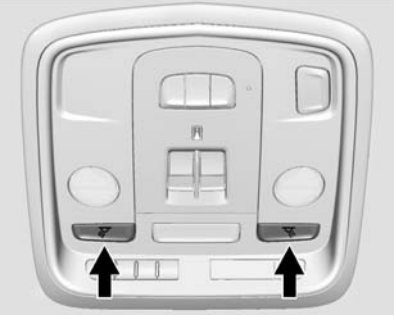

Press ⚟ or ⚞ next to each overhead console reading lamp.

Press the button next to each rear passenger reading lamp.

For more information on interior lighting, see *Instrument Panel Illumination Control on page 6-6*.

Exterior Lighting

The exterior lamp control is on the end of the turn signal lever.

There are four positions:

⏻ **:** Turns off the exterior lamps. The knob returns to the AUTO position after it is released. Turn to ⏻ again to reactivate the AUTO mode. In Canada, the headlamps will automatically reactivate when the vehicle is shifted out of P (Park).

AUTO: Automatically turns the exterior lamps on and off, depending on outside lighting.

: Turns on the parking lamps including all lamps, except the headlamps.

: Turns on the headlamps together with the parking lamps and instrument panel lights.

See *Exterior Lamp Controls on page 6-1* and *Daytime Running Lamps (DRL) on page 6-4*.

Windshield Wiper/Washer

With the ignition in ACC/ACCESSORY or ON/RUN/START, move the lever to select the wiper speed.

HI: Use for fast wipes.

LO: Use for slow wipes.

INT: Move the windshield wiper lever to INT. Turn the INT band on the wiper lever to adjust the sensitivity. To turn the Rainsense feature on or off, see “Rain Sense Wipers” under *Vehicle Personalization on page 5-48*.

OFF: Use to turn the wipers off.

1X : For a single wipe, briefly move the lever down. For several wipes, hold the lever down.

: Pull the lever toward you to spray windshield washer fluid and activate the wipers.

See *Windshield Wiper/Washer on page 5-3*.

Climate Controls

The climate control buttons and the touch screen are used to adjust the heating, cooling, and ventilation.

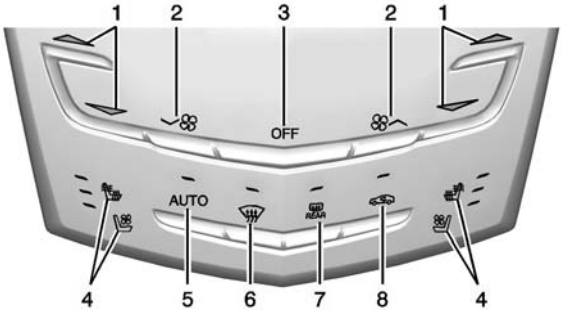

Climate Control Buttons

1. Driver and Passenger Temperature Controls
2. Fan Control
3. OFF (Fan)
4. Driver and Passenger Heated and Ventilated Seats (If Equipped)
5. AUTO (Automatic Operation)
6. Defrost
7. Rear Window Defogger
8. Recirculation

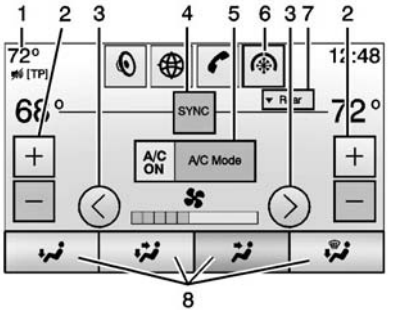

Climate Touch Screen Controls

1. Outside Temperature Display
2. Driver and Passenger Temperature Controls
3. Fan Control
4. SYNC (Synchronized Temperature)
5. A/C Mode (Air Conditioning)
6. Climate Control Selection (Application Tray Button)
7. Rear (Rear Climate Control Touch Screen)
8. Air Delivery Mode Control

See *Dual Automatic Climate Control System on page 8-1* and *Rear Climate Control System on page 8-6* (If Equipped).

Transmission

Tap Shift

Permanent Tap Shift Mode may be entered with the shift lever in D (Drive), by pressing the M (Manual Mode) button on the top of the shift lever.

Temporary Tap Shift Mode may be entered while in D (Drive) using the tap shift controls on the back of the steering wheel.

See *Manual Mode on page 9-25*.

Vehicle Features

Steering Wheel Controls

The infotainment system can be operated by using the steering wheel controls. See "Steering Wheel Controls" in the infotainment manual.

Cruise Control

: Press to turn the system on and off. A white cruise control indicator appears in the instrument cluster when cruise is turned on.

+RES: Press the control up briefly to resume to make the vehicle resume to a previously set speed or press and hold to accelerate.
If cruise control is already active, use to increase vehicle speed. To increase speed by 1 km/h (1 mph), press +RES up to the first detent. To

increase speed to the next 5 km/h (5 mph) mark on the speedometer, press +RES up to the second detent.

SET−: Press the control down briefly to set the speed and activate cruise control. If cruise control is already active, use to decrease vehicle speed. To decrease speed by 1 km/h (1 mph), press SET− down to the first detent. To decrease speed to the next 5 km/h (5 mph) mark on the speedometer, press SET− down to the second detent.

: Press to disengage cruise control without erasing the set speed from memory.

See *Cruise Control on page 9-34* or *Adaptive Cruise Control on page 9-37* (if equipped).

Infotainment System

See the infotainment manual for information on the radio, audio players, phone, navigation system, and voice or speech recognition. It also includes information on settings.

Driver Information Center (DIC)

The DIC display is in the instrument cluster. It shows the status of many vehicle systems.

∧ or ∨ : Press to move up or down in a list.

< or > : Press to move between the interactive display zones in the cluster. Press < to go back to the previous menu.

SEL: Press to open a menu or select a menu item. Press and hold to reset values on certain screens.

See *Driver Information Center (DIC) on page 5-30*.

Forward Collision Alert (FCA) System

If equipped, FCA may help avoid or reduce the harm caused by front-end crashes. FCA provides a green indicator, , when a vehicle is detected ahead. This indicator displays amber if you follow a vehicle much too closely. When approaching a vehicle ahead too quickly, FCA provides a flashing red alert on the windshield and rapidly beeps or pulses the driver seat.

See *Forward Collision Alert (FCA) System on page 9-52*.

Lane Departure Warning (LDW)

If equipped, LDW is intended to help avoid unintentional lane departures at speeds of 56 km/h (35 mph) or greater. LDW uses a camera sensor to detect the lane markings. The LDW indicator, , appears green if a lane marking is detected. If the vehicle departs the lane, the indicator will change to amber and flash. In addition, beeps will sound, or the driver seat will pulse.

See *Lane Departure Warning (LDW) on page 9-58*.

Side Blind Zone Alert (SBZA)

If equipped, SBZA will detect vehicles in the next lane over in the vehicle's side blind zone area. When this happens, the SBZA display will light up in the corresponding outside side mirror and will flash if the turn signal is on.

See *Side Blind Zone Alert (SBZA) on page 9-56*.

Rear Vision Camera (RVC)

If equipped, RVC displays a view of the area behind the vehicle on the center stack display when the vehicle is shifted into R (Reverse).

See *Assistance Systems for Parking or Backing on page 9-46*.

Ultrasonic Parking Assist

If equipped, Ultrasonic Rear Parking Assist (URPA) uses sensors on the rear bumper to assist with parking and avoiding objects while in R (Reverse). It operates at speeds less than 8 km/h (5 mph). URPA may display a warning triangle on the Rear Vision Camera screen and a graphic on the instrument cluster to provide the object distance. In addition, multiple beeps or seat pulses may occur if very close to an object.

The vehicle may also have the Front Parking Assist system, a higher speed Backing Warning System, and the Rear Automatic Braking system.

See *Driver Assistance Systems on page 9-45*.

Automatic Parking Assist (APA)

If equipped, the APA system helps to search for and maneuver the vehicle into parallel parking spots using automatic steering, DIC displays, and beeps. When the vehicle speed is below 30 km/h (18 mph), press the APA button, , to enable the system.

See “Automatic Parking Assist (APA)” under *Assistance Systems for Parking or Backing on page 9-46*.

Active Emergency Braking System

If the vehicle has Adaptive Cruise Control (ACC) it also has the Active Emergency Braking System, which includes Intelligent Brake Assist (IBA) and the Automatic Collision Preparation (ACP) System. These systems can provide a boost to braking or automatically brake the vehicle to help avoid or lessen the severity of crashes while moving forward.

See *Active Emergency Braking System on page 9-54*.

Power Outlets

Accessory power outlets can be used to plug in electrical equipment, such as a cell phone or MP3 player.

The vehicle has three 12-volt accessory power outlets:

- Inside the center console storage in front of the armrest cover.
- Inside the armrest bin behind the cupholders.
- On the rear of the center console, if equipped.

These outlets are powered while the vehicle is in ON/RUN/START or ACC/ACCESSORY mode, or until the driver door is opened within 10 minutes of turning off the vehicle.

Lift the cover to access the accessory power outlet.

See *Power Outlets on page 5-6*.

Universal Remote System

If equipped, this system provides a way to replace up to three remote control transmitters used to activate devices such as garage door openers, security systems, and home automation devices.

Read the instructions completely before attempting to program the Universal Remote system. Because of the steps involved, it may be helpful to have another person

available to assist you with programming the Universal Remote system.

See *Universal Remote System on page 5-55*.

Sunroof

If equipped, the sunroof will only operate when the ignition is in ON/RUN or ACC/ACCESSORY, or when Retained Accessory Power (RAP) is active. See *Ignition Positions on page 9-16* and *Retained Accessory Power (RAP) on page 9-19*.

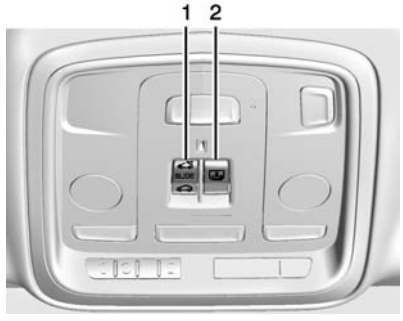

The driver side switch (1) operates the sunroof.

Vent: Press and release the front of the switch (1) to vent the sunroof. The sunshade will automatically open approximately 38 cm (15 in). Press and hold the rear of the switch (1) to close the sunroof vent.

Express Open/Express Close: Press the front of the switch (1) a second time to express open the sunroof. Press the rear of the switch (1) to express close. To stop the sunroof partway, press the switch (1) again.

The passenger side switch (2) operates the sunshade. Press and release the front or rear of the switch (2) to express open or express close the sunshade. To stop the sunshade partway, press the switch (2) again.

See *Sunroof on page 2-25*.

Performance and Maintenance

Traction Control/ Electronic Stability Control

The Traction Control System (TCS) limits wheel spin. The system turns on automatically every time the vehicle is started.

StabiliTrak assists with directional control of the vehicle in difficult driving conditions. The system turns on automatically every time the vehicle is started.

- To turn off TCS, press and release the TCS/StabiliTrak button on the center console. illuminates in the instrument cluster. The appropriate DIC message is displayed. See *Ride Control System Messages on page 5-44*.
- Press the TCS/StabiliTrak button again to turn traction control back on.
- To turn off both TCS and StabiliTrak, press and hold the TCS/StabiliTrak button on the center console until and illuminate in the instrument cluster. The appropriate DIC message displays. See *Ride Control System Messages on page 5-44*.
- Press the TCS/StabiliTrak button again to turn on both systems.

See *Traction Control/Electronic Stability Control on page 9-30.*

Tire Pressure Monitor

This vehicle may have a Tire Pressure Monitor System (TPMS).

The low tire pressure warning light alerts to a significant loss in pressure of one of the vehicle's tires. If the warning light comes on, stop as soon as possible and inflate the tires to the recommended pressure shown on the Tire and Loading Information label. See *Vehicle Load Limits on page 9-11*. The warning light will remain on until the tire pressure is corrected.

The low tire pressure warning light may come on in cool weather when the vehicle is first started, and then turn off as the vehicle is driven. This may be an early indicator that the tire pressures are getting low and the tires need to be inflated to the proper pressure.

The TPMS does not replace normal monthly tire maintenance. Maintain the correct tire pressures.

See *Tire Pressure Monitor System on page 10-50*.

Engine Oil Life System

The engine oil life system calculates engine oil life based on vehicle use and displays the CHANGE ENGINE OIL SOON message when it is time to change the engine oil and filter. The oil life system should be reset to 100% only following an oil change.

Resetting the Oil Life System

1. Using the DIC buttons, display REMAINING OIL LIFE on the DIC. See *Driver Information Center (DIC) on page 5-30* and *Engine Oil Messages on page 5-39*.
2. Press the SEL button and hold to clear the CHANGE ENGINE OIL SOON message and reset the oil life at 100%.

   Be careful not to reset the oil life display accidentally at any time other than after the oil is changed. It cannot be reset accurately until the next oil change.

The oil life system can also be reset as follows:

1. Turn the ignition on with the engine off.
2. Fully press and release the accelerator pedal three times within five seconds.

   If the CHANGE ENGINE OIL SOON message is not on, the system is reset.

See *Engine Oil Life System on page 10-12*.

Driving for Better Fuel Economy

Driving habits can affect fuel mileage. Here are some driving tips to get the best fuel economy possible.

- Avoid fast starts and accelerate smoothly.
- Brake gradually and avoid abrupt stops.
- Avoid idling the engine for long periods of time.
- When road and weather conditions are appropriate, use cruise control.
- Always follow posted speed limits or drive more slowly when conditions require.
- Keep vehicle tires properly inflated.
- Combine several trips into a single trip.

- Replace the vehicle's tires with the same TPC Spec number molded into the tire's sidewall near the size.
- Follow recommended scheduled maintenance.

Roadside Service

U.S.: 1-800-224-1400

Canada: 1-800-882-1112

TTY Users (U.S. Only): 1-888-889-2438

New Cadillac owners are automatically enrolled in the Roadside Service Program.

See *Roadside Service on page 13-5*.

OnStar®

If equipped, this vehicle has a comprehensive, in-vehicle system that can connect to a live Advisor for Emergency, Security, Navigation, Connection, and Diagnostic Services. See *OnStar Overview on page 14-1*.

Keys, Doors, and Windows

Keys and Locks
Keys 2-1
Remote Keyless Entry (RKE) System 2-2
Remote Keyless Entry (RKE) System Operation 2-3
Remote Vehicle Start 2-9
Door Locks 2-11
Power Door Locks 2-12
Delayed Locking 2-13
Automatic Door Locks 2-13
Lockout Protection 2-13
Safety Locks 2-14

Doors
Trunk 2-14

Vehicle Security
Vehicle Security 2-16
Vehicle Alarm System 2-16
Immobilizer 2-18
Immobilizer Operation 2-18

Exterior Mirrors
Convex Mirrors 2-19
Power Mirrors 2-20
Folding Mirrors 2-20
Heated Mirrors 2-20
Reverse Tilt Mirrors 2-20

Interior Mirrors
Interior Rearview Mirrors 2-21
Automatic Dimming Rearview Mirror 2-21

Windows
Windows 2-21
Power Windows 2-21
Sun Visors 2-24
Rear Window Sunshade 2-24

Roof
Sunroof 2-25

Keys and Locks

Keys

⚠ Warning

Leaving children in a vehicle with a Remote Keyless Entry (RKE) transmitter is dangerous and children or others could be seriously injured or killed. They could operate the power windows or other controls or make the vehicle move. The windows will function with the RKE transmitter in the vehicle, and children or others could be caught in the path of a closing window. Do not leave children in a vehicle with an RKE transmitter.

This key, inside the Remote Keyless Entry (RKE) transmitter, is used for the driver door, front passenger door, and rear folding seats.

To remove the key, press the button on the side of the transmitter near the bottom, and pull the key out. Never pull the key out without pressing the button.

See your dealer if a new key is needed.

Contact Roadside Service if locked out of the vehicle. See *Roadside Service on page 13-5*.

With an active OnStar subscription, an OnStar Advisor may remotely unlock the vehicle. See *OnStar Overview on page 14-1*.

Remote Keyless Entry (RKE) System

See *Radio Frequency Statement on page 13-15*.

If there is a decrease in the RKE operating range:

- Check the distance. The transmitter may be too far from the vehicle.
- Check the location. Other vehicles or objects may be blocking the signal.
- Check the transmitter's battery. See “Battery Replacement” later in this section.
- If the transmitter is still not working correctly, see your dealer or a qualified technician for service.

Remote Keyless Entry (RKE) System Operation

The Keyless Access system allows for vehicle entry when the transmitter is within 1 m (3 ft). See “Keyless Access Operation” later in this section.

The RKE transmitter may work up to 60 m (197 ft) away from the vehicle.

Keep in mind that other conditions, such as those previously stated, can impact the performance of the transmitter.

With Remote Start and Remote Trunk Release Shown, Without Similar

(Lock): Press to lock all doors. The turn signal indicators may flash and/or the horn may sound to indicate locking. See “Remote Lock, Unlock, Start” under *Vehicle Personalization on page 5-48*.

If the driver door is open when is pressed and Unlocked Door Anti-Lockout is enabled through the vehicle personalization, all doors will lock and then the driver door will immediately unlock. See “Unlocked Door Anti Lock Out” under *Vehicle Personalization on page 5-48*. If the passenger door is open when is pressed, all doors lock.

Pressing may also arm the theft-deterrent system. See *Vehicle Alarm System on page 2-16*.

(Unlock): Press to unlock the driver door or all doors. When remotely unlocking the vehicle at night, the headlamps and back-up lamps will come on for about 30 seconds to light your approach to the vehicle. The turn signal indicators may flash to indicate unlocking. Memory seat positions may be recalled when unlocking the vehicle.

See “Remote Lock, Unlock, Start” under *Vehicle Personalization on page 5-48*.

Pressing will disarm the theft-deterrent system. See *Vehicle Alarm System on page 2-16*.

Press and hold 🔒 until the windows fully open.

(Remote Start): If equipped, press and release 🔒 and then immediately press and hold for at least four seconds to start the engine from outside the vehicle using the RKE transmitter. See *Remote Vehicle Start on page 2-9*.

(Vehicle Locator/Panic Alarm): Press and release one time to initiate vehicle locator. The exterior lamps flash and the horn chirps three times. Press and hold for more than three seconds to sound the panic alarm. The horn sounds and the turn signal lamps flash for 30 seconds, or until is pressed again or the vehicle is started.

(Remote Trunk Release): Press twice quickly to release the trunk.

Keyless Access Operation

The Keyless Access system lets you lock and unlock the doors and access the trunk without removing the RKE transmitter from your pocket, purse, briefcase, etc. The RKE transmitter must be within 1 m (3 ft) of the door being opened. If equipped, there will be a button on the outside door handles.

The Keyless Access system can be programmed to unlock all doors on the first lock/unlock press from the driver door. See *Vehicle Personalization on page 5-48*.

Keyless Unlocking/Locking from the Driver Door

When the doors are locked and the RKE transmitter is within 1 m (3 ft) of the door handle, pressing the lock/unlock button on the driver door handle will unlock the driver door. If the lock/unlock button is pressed again within five seconds, all passenger doors will unlock.

Driver Door Shown, Passenger Similar

Pressing the lock/unlock button will cause all doors to lock if any of the following occur:

- It has been more than five seconds since the first lock/unlock button press.
- Two lock/unlock button presses were used to unlock all doors.
- Any vehicle door has opened and all doors are now closed.

Keyless Unlocking/Locking from the Passenger Doors

When the doors are locked and the RKE transmitter is within 1 m (3 ft) of the door handle, pressing the lock/unlock button on a passenger door handle will unlock all doors. Pressing the lock/unlock button will cause all doors to lock if any of the following occur:

- The lock/unlock button was used to unlock all doors.
- Any vehicle door has opened and all doors are now closed.

Passive Locking

The Keyless Access system allows for selecting whether the doors automatically lock during normal vehicle exit. When the vehicle is turned off and all doors are closed, the vehicle will determine how many RKE transmitters remain inside the vehicle. If at least one RKE transmitter has been removed from the vehicle, or none remain in the vehicle interior, the doors will lock after several seconds.

Temporary Disable Passive Locking Feature

Temporarily disable the passive locking by pressing and holding 🔓 on the interior door switch with a door open for at least four seconds, or until three chimes are heard. Passive locking will then remain disabled until 🔓 on the interior door is pressed, or until the vehicle is turned on.

To customize the doors to automatically lock when exiting the vehicle, see “Remote Lock, Unlock, Start” under *Vehicle Personalization on page 5-48*.

Keyless Trunk Opening

Press the touch pad on the trunk handle to open the trunk if the RKE transmitter is within 1 m (3 ft).

Programming Transmitters to the Vehicle

Only RKE transmitters programmed to the vehicle will work. If a transmitter is lost or stolen, a replacement can be purchased and programmed through your dealer. The vehicle can be reprogrammed so that lost or stolen transmitters no longer work. Each vehicle can have up to eight transmitters matched to it.

Programming with a Recognized Transmitter

A new transmitter can be programmed to the vehicle when there is one recognized transmitter.

To program, the vehicle must be off and all transmitters, both currently recognized and new, must be with you.

1. Remove the vehicle key from the recognized transmitter.
2. Place the recognized transmitter(s) in the cupholder.

3. Remove the key lock cylinder cap on the driver door handle. See *Door Locks on page 2-11*. Insert the vehicle key into the key lock cylinder on the driver door handle, then turn the key counterclockwise to the unlock position five times within 10 seconds.

   The Driver Information Center (DIC) displays READY FOR REMOTE #2, 3, 4, ETC.

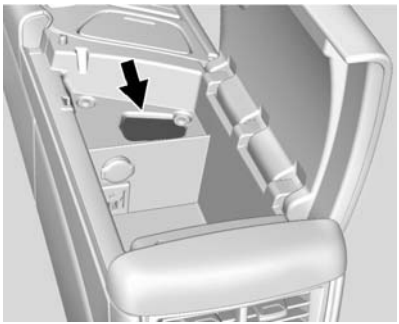

4. Place the new transmitter into the transmitter pocket. The center console storage area will need to be opened and the rubber mat needs to be removed to access the transmitter pocket.
5. Press the ENGINE START/STOP button. When the transmitter is learned, the DIC display will show that it is ready to program the next transmitter.
6. Remove the transmitter from the transmitter pocket and press 🔓 or 🔒 on the transmitter.

   To program additional transmitters, repeat Steps 4–6.

   When all additional transmitters are programmed, press and hold the ENGINE START/STOP button for approximately 12 seconds to exit programming mode.
7. Return the vehicle key back into the transmitter.

Programming without a Recognized Transmitter

If there are no currently recognized transmitters available, follow this procedure to program up to eight transmitters. This feature is not available in Canada. This procedure will take approximately 30 minutes to complete. The vehicle must be off and all transmitters to be programmed must be with you.

1. Remove the vehicle key from the transmitter.
2. Remove the key lock cylinder cap on the driver door handle. See *Door Locks on page 2-11*. Insert the vehicle key into the key lock cylinder on the driver door handle, then turn the key counterclockwise to the unlock position five times within 10 seconds.

   The Driver Information Center (DIC) displays REMOTE LEARN PENDING, PLEASE WAIT.

3. Wait for 10 minutes until the DIC displays PRESS ENGINE START BUTTON TO LEARN and then press the ENGINE START/STOP button.

   The DIC display will again show REMOTE LEARN PENDING, PLEASE WAIT.

4. Repeat Step 3 two additional times. After the third time all previously known transmitters will no longer work with the vehicle. Remaining transmitters can be relearned during the next steps.

   The DIC display should now show READY FOR REMOTE # 1.

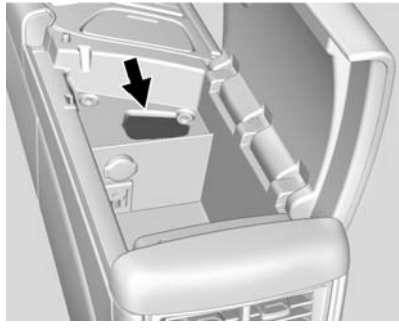

5. Place the new transmitter in the transmitter pocket. The center console storage area will need to be opened and the rubber mat needs to be removed to access the transmitter pocket.

6. Press the ENGINE START/STOP button. When the transmitter is learned, the DIC display will show that it is ready to program the next transmitter.

7. Remove the transmitter from the transmitter pocket and press 🔓 or 🔒 on the transmitter.

   To program additional transmitters, repeat Steps 5–7.

   When all additional transmitters are programmed, press and hold the ENGINE START/STOP button for approximately 12 seconds to exit programming mode.

8. Return the vehicle key back into the transmitter.

Starting the Vehicle with a Low Transmitter Battery

If the transmitter battery is weak or if there is interference with the signal, the DIC may display NO REMOTE DETECTED or NO REMOTE KEY WAS DETECTED PLACE KEY IN TRANSMITTER POCKET THEN START YOUR VEHICLE when starting the vehicle. See *Key and Lock Messages on page 5-40*.

To start the vehicle:

1. Open the center console storage area and remove the rubber mat.

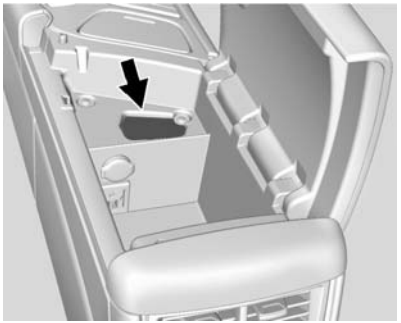

2. Place the transmitter in the transmitter pocket.
3. With the vehicle in P (Park) or N (Neutral) press the brake pedal and the ENGINE START/ STOP button.

   Replace the transmitter battery as soon as possible.

Battery Replacement

⚠ Caution

When replacing the battery, do not touch any of the circuitry on the transmitter. Static from your body could damage the transmitter.

Replace the battery if the REPLACE BATTERY IN REMOTE KEY message displays in the DIC.

1. Press the button on the side of the transmitter near the bottom and pull the key out.

2. Separate the two halves of the transmitter using a flat tool inserted into the bottom center of the transmitter, do not use the key slot.

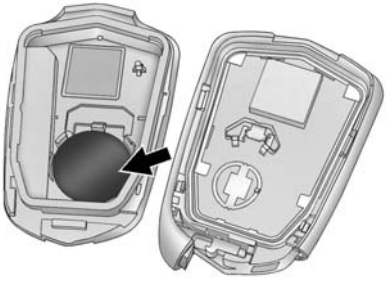

3. Remove the old battery. Do not use a metal object.
4. Insert the new battery on the back housing, positive side facing down. Replace with a CR2032 or equivalent battery.
5. Align the front and back housing then snap the transmitter together.

Remote Vehicle Start

This feature allows the engine to be started from outside the vehicle.

(Remote Vehicle Start): This button will be on the RKE transmitter if the vehicle has remote start.

The climate control system will use the previous settings during a remote start. The rear window defogger may come on during remote start based on cold ambient conditions. The rear defog indicator light does not come on during remote start.

Laws in some local communities may restrict the use of remote starters. For example, some laws may require a person using remote start to have the vehicle in view. Check local regulations for any requirements.

If your vehicle is low on fuel, do not use the remote start feature. The vehicle may run out of fuel.

The RKE transmitter range may be shorter while the vehicle is running.

Other conditions can affect the performance of the transmitter. See *Remote Keyless Entry (RKE) System on page 2-2*.

Starting the Engine Using Remote Start

1. Press and release on the RKE transmitter.
2. Immediately press and hold for at least four seconds or until the turn signal lamps flash. This confirms the request to remote start the vehicle has been received.

   During the remote start, the doors will be locked and the parking lamps will remain on as long as the engine is running.

   The engine will shut off after 10 minutes unless a time extension is done or the ignition is put in ON/RUN/START.
3. Press the brake pedal and select the ON/RUN/START ignition mode to drive the vehicle.

Extending Engine Run Time

The engine run time can also be extended by another 10 minutes, if during the first 10 minutes Steps 1–2 are repeated while the engine is still running. This provides a total of 20 minutes.

The remote start can only be extended once.

When the remote start is extended, the second 10 minute period is added on to the first 10 minutes for a total of 20 minutes.

A maximum of two remote starts, or a remote start with an extension, are allowed between ignition cycles.

The vehicle's ignition must be changed to ON/RUN/START and then back to OFF before the remote start procedure can be used again.

Canceling a Remote Start

To cancel a remote start, do any of the following:

- Press and hold until the parking lamps turn off.
- Turn on the hazard warning flashers.
- Turn the vehicle on and then back off.

Conditions in Which Remote Start Will Not Work

The remote start will not operate if any of the following occur:

- The ignition is in any mode other than OFF.
- The transmitter is in the vehicle.
- The hood is not closed.
- The hazard warning flashers are on.
- There is an emission control system malfunction.
- The engine coolant temperature is too high.
- The oil pressure is low.
- Two remote vehicle starts have already been used.
- The vehicle is not in P (Park).

Door Locks

⚠ Warning

Unlocked doors can be dangerous.

- Passengers, especially children, can easily open the doors and fall out of a moving vehicle. The chance of being thrown out of the vehicle in a crash is increased if the doors are not locked. So, all passengers should wear safety belts properly and the doors should be locked whenever the vehicle is driven.
- Young children who get into unlocked vehicles may be unable to get out. A child can be overcome by extreme heat and can suffer permanent injuries or even death from heat stroke. Always lock the vehicle whenever leaving it.

(Continued)

Warning (Continued)

- Outsiders can easily enter through an unlocked door when slowing or stopping the vehicle. Lock the doors to help prevent this from happening.

Keyless Access

Use the Keyless Access system to lock and unlock the door. When the doors are locked and the Remote Keyless Entry (RKE) transmitter is within 1 m (3 ft) of the driver door handle, press the lock/unlock button. When unlocking from the driver door, the first press unlocks that door; press again within five seconds to unlock all passenger doors. See *Remote Keyless Entry (RKE) System Operation on page 2-3*.

Key Cylinder Access

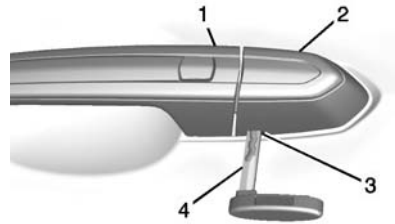

To access the key cylinder:

1. Pull the door handle (1) to the open position.
2. Insert the key (4) into the slot (3) on the bottom of the cap (2) and pry outward.

3. Move the cap (2) rearward and remove.
4. Use the key (4) in the cylinder.

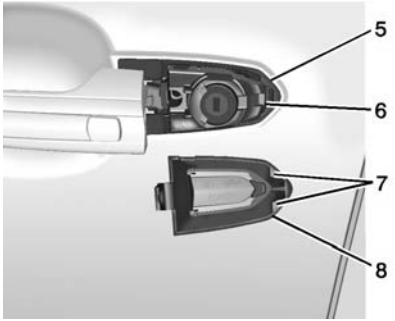

To replace the cap:

1. Pull the door handle to the open position.
2. Insert the two tabs (7) at the back of the cap (8) between the seal (5) and the metal base (6).

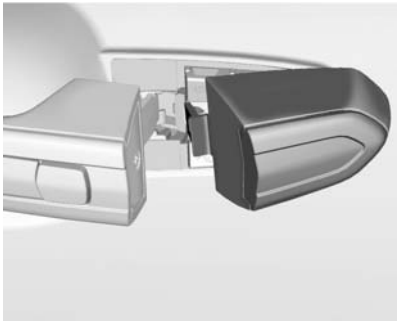

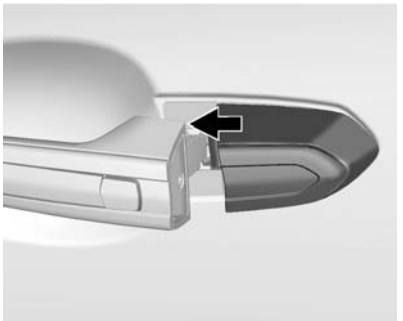

3. Move the cap forward and press to snap the cap in place.
4. Release the door handle.

Inside the Vehicle

On the rear doors, push down on the door lock knob to lock the door manually. Pull once on the door handle to unlock the door and again to open the door.

Press the power door lock switch to lock or unlock all doors automatically. See *Power Door Locks on page 2-12*.

Power Door Locks

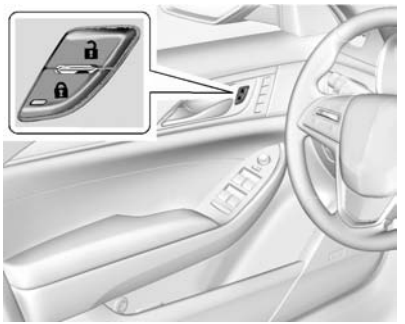

(Lock): Press to lock the doors. The indicator light in the switch will illuminate when activated.

(Unlock): Press to unlock the doors.

Delayed Locking

This feature delays the actual locking of the doors until five seconds after all doors are closed.

Delayed locking can only be turned on when the Unlocked Door Anti-Lockout feature has been turned off.

When is pressed on the power door lock switch with the door open, a chime will sound three times indicating that delayed locking is active.

The doors will then lock automatically five seconds after all doors are closed. If a door is reopened before five seconds have elapsed, the five-second timer will reset once all the doors are closed again.

Press on the door lock switch again, or press on the RKE transmitter, to override this feature and lock the doors immediately.

Delayed locking can be programmed through the Driver Information Center (DIC). See *Vehicle Personalization on page 5-48*.

Automatic Door Locks

The doors will lock automatically when all doors are closed, the ignition is on, and the shift lever is moved out of P (Park).

To unlock the doors:

- Press on a door.
- Shift the transmission into P (Park).

Automatic door unlocking can be programmed through the Driver Information Center (DIC). See *Vehicle Personalization on page 5-48*.

Lockout Protection

If the vehicle is in ACC/ACCESSORY or ON/RUN/START and the power door lock switch is pressed with the driver door open, all the doors will lock and only the driver door will unlock.

If the vehicle is off and locking is requested while a door is open, when all doors are closed the vehicle will check for RKE transmitters inside. If an RKE transmitter is detected and the number of RKE transmitters inside has not reduced, the driver door will unlock.

Lockout Protection can be manually overridden with the driver door open by pressing and holding on the power door lock switch.

If Unlocked Door Anti-Lockout is turned on and the vehicle is off, the driver door is open, and locking is requested, all the doors will lock and only the driver door will unlock. The Unlocked Door Anti-Lockout feature can be turned on or off using the vehicle personalization menus. See *Vehicle Personalization on page 5-48*.

Safety Locks

The rear door safety locks prevent passengers from opening the rear doors from inside the vehicle.

Press to activate the safety locks on the rear doors. The indicator light in the switch will illuminate when activated.

The rear door power windows are also disabled. See *Power Windows on page 2-21*.

Press again to deactivate the lockout switch.

If an inside rear door handle is being pulled at the same time the safety lock is deactivated, that door will remain locked and the indicator light may flash. Release the handle, then press the safety lock twice to deactivate the safety locks.

Doors

Trunk

⚠ Warning

Exhaust gases can enter the vehicle if it is driven with the liftgate or trunk/hatch open, or with any objects that pass through the seal between the body and the trunk/hatch or liftgate. Engine exhaust contains carbon monoxide (CO) which cannot be seen or smelled. It can cause unconsciousness and even death.

If the vehicle must be driven with the liftgate or trunk/hatch open:

- Close all of the windows.
- Fully open the air outlets on or under the instrument panel.

(Continued)

Warning (Continued)

- Adjust the climate control system to a setting that brings in only outside air and set the fan speed to the highest setting. See “Climate Control Systems” in the Index.
- If the vehicle is equipped with a power liftgate, disable the power liftgate function.

See *Engine Exhaust on page 9-22*.

Trunk Release

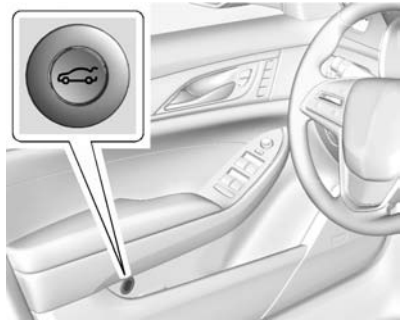

To open the trunk, the vehicle must be off or the shift lever must be in P (Park).

- Press on the driver door.
- Press twice quickly on the Remote Keyless Entry (RKE) transmitter.
- Press the touch pad on the rear of the trunk above the license plate when all doors are unlocked.

The trunk can be opened while the vehicle is locked by pressing the touch pad above the license plate while the RKE transmitter is within 1 m (3 ft) of the rear of the vehicle. See *Remote Keyless Entry (RKE) System Operation on page 2-3*.

Close the trunk by pulling on the handle. Do not use the handle as a tie-down.

Rear Seat Pass-Through

Use the rear seat pass-through door when transporting long items.

To open, pull down the rear seat armrest. Pull the lever all the way down to release the door.

To close, push it up and back into place. Try to open the door without pulling up on the lever to make sure it is locked into place.

Emergency Trunk Release Handle

⚠ Caution

Do not use the emergency trunk release handle as a tie-down or anchor point when securing items in the trunk as it could damage the handle.

There is a glow-in-the-dark emergency trunk release handle on the trunk lid. This handle will glow following exposure to light. Pull the release handle to open the trunk from the inside.

Vehicle Security

This vehicle has theft-deterrent features; however, they do not make the vehicle impossible to steal.

Vehicle Alarm System

This vehicle has an anti-theft alarm system.

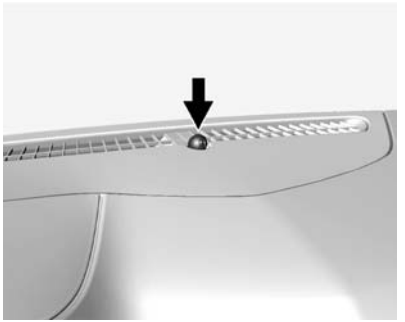

The indicator light, on the instrument panel near the windshield, indicates the status of the system.

Off: Alarm system is disarmed.

On Solid: Vehicle is secured during the delay to arm the system.

Fast Flash: Vehicle is unsecured. A door, the hood, or the trunk is open.

Slow Flash: Alarm system is armed.

Arming the Alarm System

1. Turn off the vehicle.
2. Lock the vehicle in one of three ways:
   - Use the RKE transmitter.
   - Use the Keyless Access system.
   - With a door open, press 🔒 on the interior of the door.
3. After 30 seconds the alarm system will arm, and the indicator light will begin to slowly flash indicating the alarm system is operating. Pressing 🔒 on the RKE transmitter a second time will bypass the 30-second delay and immediately arm the alarm system.

The vehicle alarm system will not arm if the doors are locked with the key.

If the driver door is opened without first unlocking with the RKE transmitter, the horn will chirp and the lights will flash to indicate pre-alarm. If the vehicle is not started, or the door is not unlocked by pressing 🔓 on the RKE transmitter during the 10-second pre-alarm, the alarm will be activated.

The alarm will also be activated if a passenger door, the trunk, or the hood is opened without first disarming the system. When the alarm is activated, the turn signals flash and the horn sounds for about 30 seconds. The alarm system will then re-arm to monitor the next unauthorized event.

Disarming the Alarm System

To disarm the alarm system or turn off the alarm if it has been activated:

- Press 🔓 on the RKE transmitter.
- Unlock the vehicle using the Keyless Access system.
- Start the vehicle.

To avoid setting off the alarm by accident:

- Lock the vehicle after all occupants have left the vehicle and all doors are closed.
- Always unlock a door with the RKE transmitter or use the Keyless Access system.

Unlocking the driver door with the key will not disarm the system or turn off the alarm.

How to Detect a Tamper Condition

If 🔓 is pressed on the transmitter and the horn chirps three times, a previous alarm occurred while the system was armed.

If the alarm has been activated, a message will appear on the DIC. See *Security Messages on page 5-45*.

Power Sounder and Inclination Sensor

In addition to the standard theft-deterrent system features, this system may also have a power sounder and inclination sensor.

The power sounder provides an audible alarm which is distinct from the vehicle's horn. It has its own power source, and can sound an alarm if the vehicle's battery is compromised.

The inclination sensor can set off the alarm if it senses movement of the vehicle, such as a change in vehicle orientation.

Immobilizer

See *Radio Frequency Statement on page 13-15*.

Immobilizer Operation

This vehicle has a passive theft-deterrent system.

The system does not have to be manually armed or disarmed.

The vehicle is automatically immobilized when the vehicle is turned off.

The immobilization system is disarmed when the pushbutton start is activated to enter the ACC/ACCESSORY mode or the ON/RUN/START mode and a valid transmitter is present in the vehicle.

The security light, in the instrument cluster, comes on if there is a problem with arming or disarming the theft-deterrent system.

The system has one or more RKE transmitters matched to an immobilizer control unit in the vehicle. Only a correctly matched RKE transmitter will start the vehicle. If the transmitter is ever damaged, you may not be able to start your vehicle.

When trying to start the vehicle, the security light may come on briefly when the ignition is turned on.

If the engine does not start and the security light stays on, there is a problem with the system. Turn the ignition off and try again.

If the vehicle will not change ignition modes (ACC/ACCESSORY, ON/RUN/START, OFF), and the RKE transmitter appears to be undamaged, try another transmitter. Or, you may try placing the transmitter in the transmitter pocket located in the center console. See *Key and Lock Messages on page 5-40*.

If the ignition modes will not change with the other transmitter, your vehicle needs service. If the ignition does change modes, the first transmitter may be faulty. See your dealer.

It is possible for the immobilizer system to learn new or replacement RKE transmitters. Up to eight transmitters can be programmed for the vehicle. To program additional transmitters, see “Programming Transmitters to the Vehicle” under *Remote Keyless Entry (RKE) System Operation on page 2-3*.

Do not leave the key or device that disarms or deactivates the theft-deterrent system in the vehicle.

Exterior Mirrors

Convex Mirrors

⚠ Caution

A convex mirror can make things, like other vehicles, look farther away than they really are. If you cut too sharply into the right lane, you could hit a vehicle on the right. Check the inside mirror or glance over your shoulder before changing lanes.

The passenger side mirror is convex shaped. A convex mirror's surface is curved so more can be seen from the driver seat.

Power Mirrors

Controls for the outside power mirrors are on the driver door.

To adjust each mirror:

1. Press (L) or (R) to select the driver or passenger side mirror.
2. Press the arrows on the control pad to move the mirror up, down, right, or left.
3. Adjust each mirror so that a little of the vehicle and the area behind it can be seen.
4. Press ● to deselect the mirror.

Memory Mirrors

If equipped, the vehicle may have memory mirrors. See *Memory Seats on page 3-6*.

Automatic Dimming

If equipped, the driver side mirror automatically dims to reduce the glare of the vehicle headlamps from behind. This feature comes on when the vehicle is started.

Folding Mirrors

Manual Folding Mirrors

The mirrors can be folded inward toward the vehicle to prevent damage when going through an automatic car wash. Push the mirror outward to return it to the original position.

Heated Mirrors

(Rear Window Defogger): If equipped, press to heat the mirrors.

See *Dual Automatic Climate Control System on page 8-1*.

Reverse Tilt Mirrors

The passenger and/or driver mirror tilt to a preselected position when the vehicle is in R (Reverse). This feature allows the driver to view the curb when parallel parking. The mirror returns to the original position when the vehicle is shifted out of R (Reverse), the ignition is turned off or to OFF/LOCK, or if the vehicle is driven in reverse above a predetermined speed.

Turn this feature on or off through vehicle personalization. See *Vehicle Personalization on page 5-48*.

Interior Mirrors

Interior Rearview Mirrors

Adjust the rearview mirror for a clear view of the area behind your vehicle.

Do not spray glass cleaner directly on the mirror. Use a soft towel dampened with water.

Automatic Dimming Rearview Mirror

The rearview mirror automatically dims to reduce the glare of the headlamps from behind. This feature comes on when the vehicle is started.

Windows

⚠ Warning

Never leave a child, a helpless adult, or a pet alone in a vehicle, especially with the windows closed in warm or hot weather. They can be overcome by the extreme heat and suffer permanent injuries or even death from heat stroke.

The vehicle aerodynamics are designed to improve fuel economy performance. This may result in a pulsing sound when either rear window is down and the front windows are up. To reduce the sound, open either a front window or the sunroof, if equipped.

Power Windows

⚠ Warning

Children could be seriously injured or killed if caught in the path of a closing window. Never leave keys in a vehicle with children. When there are children in the rear seat, use the window lockout button to prevent operation of the windows. See *Keys on page 2-1*.

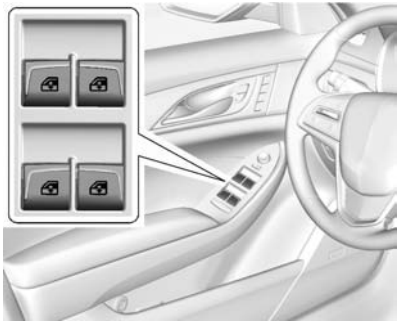

The driver power window switches control all the windows. The passenger switch only controls that window.

Press the switch down to lower the window. Pull the switch up to raise it.

Retained Accessory Power (RAP) allows the use of the power windows after the ignition has been turned off. See *Retained Accessory Power (RAP) on page 9-19*.

Express-Down/Up Windows

The express feature allows the windows to be raised and lowered all the way without holding the switch.

Press or pull the switch fully and release it to activate the express feature.

Cancel the express mode by briefly pressing or pulling the switch.

Express Window Anti-Pinch Feature

If any object is in the path of the window when the express-up is active, the window will stop at the obstruction and auto-reverse to a preset factory position. Weather conditions such as severe icing may also cause the window to auto-reverse. The window will return to normal operation after the obstruction or condition is removed.

Express Window Anti-Pinch Override

⚠ Warning

If express override is activated, the window will not reverse automatically. You or others could be injured and the window could be damaged. Before you use express override, make sure that all people and obstructions are clear of the window path.

To override the anti-pinch feature, hold the window switch all the way up to the second position. The window will rise for as long as the switch is held. Once the switch is released, the express mode is reactivated.

In this mode, the window can close on an object in its path. Use care when using the override mode.

Programming the Power Windows

If the vehicle battery has been recharged or disconnected, or is not working, the front power windows will need to be reprogrammed for the express-up feature to work. Before reprogramming, replace or recharge the vehicle's battery.

To program:

1. With the ignition in ON/RUN or ACC/ACCESSORY, or when Retained Accessory Power (RAP) is active, close all doors.
2. Press and hold the power window switch until the window is fully open.
3. Pull the power window switch up until the window is fully closed.
4. Continue holding the switch up for approximately two seconds after the window is completely closed.

The window is now reprogrammed. Repeat the process for the other windows.

Comfort Open

To open the windows remotely, press and hold on the RKE transmitter until the windows fully open.

Window Lockout

This feature prevents the rear windows from operating except from the driver position.

Press to activate the safety locks on the rear doors. The indicator light in the switch will illuminate when activated.

The rear door power door locks are also disabled. See *Safety Locks on page 2-14*.

Press again to deactivate the lockout switch.

If an inside rear door handle is being pulled at the same time the safety lock is deactivated, that door will remain locked and the indicator light may flash. Release the handle, then press the safety lock twice to deactivate the safety locks.

Sun Visors

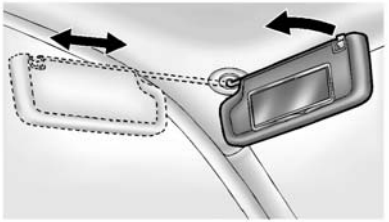

Pull the sun visor down to block glare. If equipped, detach the sun visor from the center mount to pivot to the side window or to extend along the rod.

Rear Window Sunshade

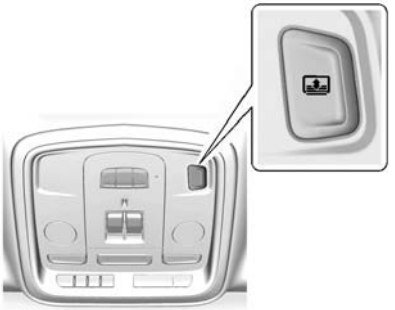

If equipped with a rear window sunshade, the switch is on the overhead console. The sunshade only operates with the ignition in ON/RUN/START.

To open the sunshade, press and release the switch. The sunshade will fully extend. To close the sunshade, press and release the switch again. The sunshade will fully close.

If the vehicle is shifted into R (Reverse) when the sunshade is extended, it will automatically close.

When the vehicle is shifted into D (Drive), the sunshade will not automatically extend. Press and release the switch to extend the sunshade.

Rear Passenger Door Sunshades

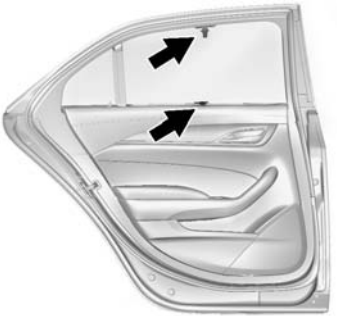

If equipped, use the handle to pull the sunshade up and attach to the holder at the top of the window. There is also a small shade for the rear corner of the window.

To close the sunshade, use the handle to unhook and hold it while it retracts down.

Roof

Sunroof

If equipped, the sunroof will only operate when the ignition is in ON/RUN or ACC/ACCESSORY, or when Retained Accessory Power (RAP) is active. See *Retained Accessory Power (RAP) on page 9-19*.

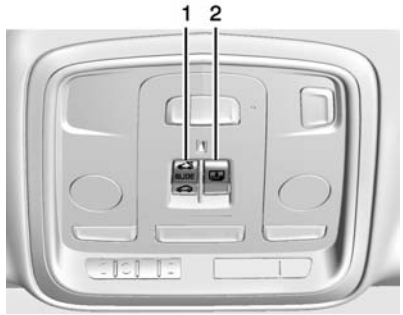

The driver side switch (1) operates the sunroof.

Vent: Press and release the front of the switch (1) to vent the sunroof. The sunshade will automatically open approximately 38 cm (15 in). Press the rear of the switch (1) to close the sunroof vent.

Express Open/Express Close: Press the front of the switch (1) again to express open the sunroof. Press the rear of the switch (1) to express close the sunroof. To stop the sunroof partway, press the switch (1) again.

The passenger side switch (2) operates the sunshade. Press the front or rear of the switch (2) to express open or express close the sunshade. To stop the sunshade partway, press the switch (2) a second time.

Anti-Pinch Feature

If an object is in the path of the sunroof/sunshade when it is closing, the anti-pinch feature will detect the object and stop the sunroof/sunshade from closing at the point of the obstruction. The sunroof/

sunshade will then return to the full-open position. To close the sunroof/sunshade, see “Express Open/Express Close.”

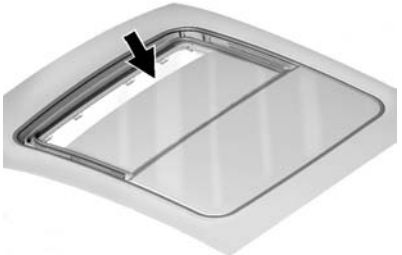

Dirt and debris may collect on the sunroof seal or in the track. This could cause an issue with sunroof operation or noise. It could also plug the water drainage system. Periodically open the sunroof and remove any obstacles or loose debris. Wipe the sunroof seal and roof sealing area using a clean cloth, mild soap, and water. Do not remove grease from the sunroof.

If water is seen dripping into the water drainage system, this is normal.

Seats and Restraints

Head Restraints
Head Restraints 3-2

Front Seats
Power Seat Adjustment 3-3
Lumbar Adjustment 3-4
Thigh Support Adjustment 3-5
Reclining Seatbacks 3-5
Memory Seats 3-6
Heated and Ventilated Front Seats 3-8

Rear Seats
Rear Seats 3-10
Heated Rear Seats 3-12
Rear Seat Pass-Through Door 3-12

Safety Belts
Safety Belts 3-13
How to Wear Safety Belts Properly 3-14
Lap-Shoulder Belt 3-15
Safety Belt Use During Pregnancy 3-20
Safety Belt Extender 3-20
Safety System Check 3-20
Safety Belt Care 3-21
Replacing Safety Belt System Parts after a Crash 3-21

Airbag System
Airbag System 3-22
Where Are the Airbags? 3-24
When Should an Airbag Inflate? 3-25
What Makes an Airbag Inflate? 3-26
How Does an Airbag Restrain? 3-27
What Will You See after an Airbag Inflates? 3-27
Passenger Sensing System 3-28
Servicing the Airbag-Equipped Vehicle 3-33
Adding Equipment to the Airbag-Equipped Vehicle . . . 3-33
Airbag System Check 3-34
Replacing Airbag System Parts after a Crash 3-34

Child Restraints
Older Children 3-35
Infants and Young Children 3-37
Child Restraint Systems 3-39
Where to Put the Restraint . . . 3-41
Lower Anchors and Tethers for Children (LATCH System) 3-42
Replacing LATCH System Parts After a Crash 3-48
Securing Child Restraints (Rear Seat) 3-49
Securing Child Restraints (Front Passenger Seat) 3-51

Head Restraints

⚠ Warning

With head restraints that are not installed and adjusted properly, there is a greater chance that occupants will suffer a neck/spinal injury in a crash. Do not drive until the head restraints for all occupants are installed and adjusted properly.

Adjust the head restraint so that the top of the restraint is at the same height as the top of the occupant's head. This position reduces the chance of a neck injury in a crash.

Front Seats

The vehicle's front seats have adjustable head restraints in the outboard seating positions.

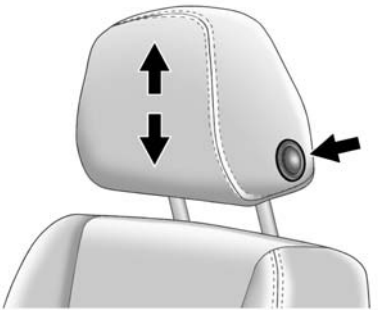

The height of the head restraint can be adjusted. Pull the head restraint up to raise it. Try to move the head restraint to make sure that it is locked in place.

To lower the head restraint, press the button located on the side of the head restraint, push the head restraint down, and release the button. Pull and push on the head restraint after the button is released to make sure that it is locked in place.

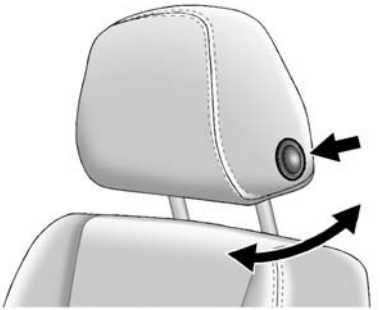

The head restraints can be adjusted forward or rearward. To adjust the head restraint forward, grasp the head restraint and pull it forward to the desired locking position. To adjust the head restraint rearward, press the button located on the side

of the head restraint and move the head restraint rearward until the desired locking position is reached. Try to move the head restraint after the button is released to make sure that it is locked in place.

The front seat outboard head restraints are not designed to be removed.

Rear Seats

The vehicle's rear seats have adjustable head restraints in the outboard seating positions.

The height of the head restraint can be adjusted. Pull the head restraint up to raise it. Try to move the head restraint to make sure that it is locked in place.

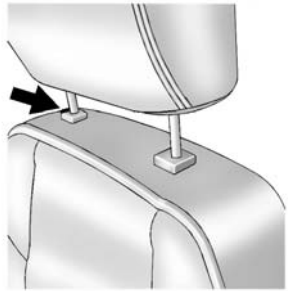

To lower the head restraint, press the button, located on the top of the seatback, and push the head restraint down. Try to move the head restraint after the button is released to make sure that it is locked in place.

Rear outboard head restraints are not designed to be removed.

Front Seats

Power Seat Adjustment

⚠ Warning

You can lose control of the vehicle if you try to adjust a driver seat while the vehicle is moving. Adjust the driver seat only when the vehicle is not moving.

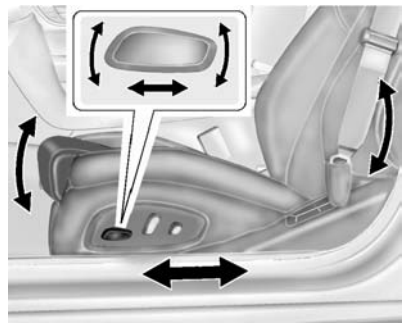

To adjust the seat:

- Move the seat forward or rearward by sliding the control forward or rearward.
- Raise or lower the seat by moving the rear of the control up or down.
- If available, raise or lower the front part of the seat cushion by moving the front of the control up or down.

To adjust the seatback, see *Reclining Seatbacks on page 3-5*.

To adjust the lumbar support, see *Lumbar Adjustment on page 3-4*.

Some vehicles are equipped with a Safety Alert Seat. This feature activates a vibrating pulse alert in the driver seat to help the driver avoid crashes. See *Driver Assistance Systems on page 9-45*.

Lumbar Adjustment

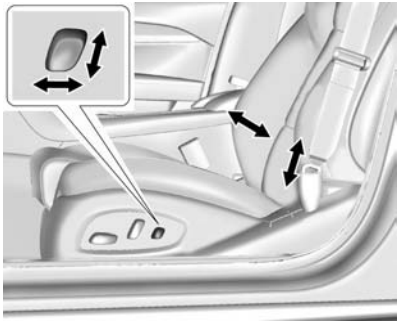

If equipped, to increase or decrease the lumbar support, press and hold the control forward or rearward or up and down.

Bolster Adjustment

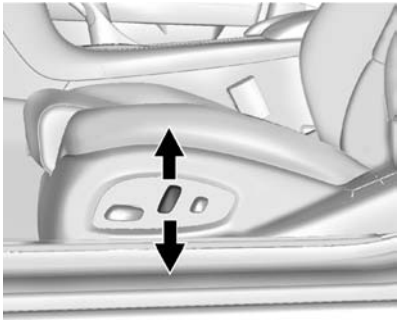

If equipped, to increase or decrease the seatback bolster support, press and hold the recliner control up and down.

Thigh Support Adjustment

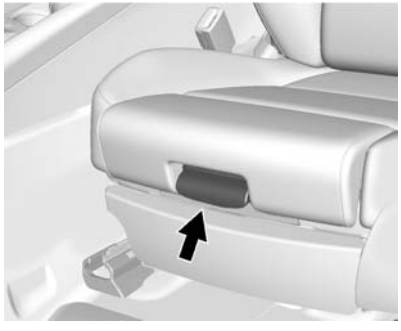

If available, adjust the manual leg cushion extension by pulling up on the lever, and then pulling or pushing on the support to lengthen or shorten it. Release the lever to lock it in place.

Reclining Seatbacks

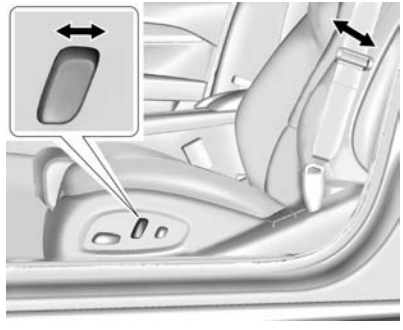

To adjust the seatback:

- Tilt the top of the control rearward to recline.
- Tilt the top of the control forward to raise.

⚠ Warning

Sitting in a reclined position when the vehicle is in motion can be dangerous. Even when buckled up, the safety belts cannot do their job.

The shoulder belt will not be against your body. Instead, it will be in front of you. In a crash, you could go into it, receiving neck or other injuries.

The lap belt could go up over your abdomen. The belt forces would be there, not at your pelvic bones. This could cause serious internal injuries.

For proper protection when the vehicle is in motion, have the seatback upright. Then sit well back in the seat and wear the safety belt properly.

Do not have a seatback reclined if the vehicle is moving.

Memory Seats

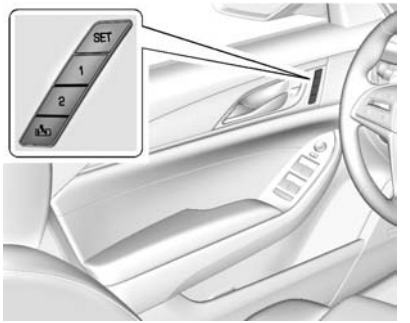

The SET, "1," "2," and (Exit) buttons on the driver door are used to manually save and recall memory settings for the driver seat, outside mirrors, and power tilt and telescoping steering column (if equipped).

Storing Memory Positions

To save positions to the “1” and “2” buttons:

1. Adjust the driver seat, outside mirrors, and the power tilt and telescoping steering column (if equipped) to the desired driving positions.
2. Press and release SET, then immediately press and hold “1” until a beep sounds.
3. Repeat Steps 1 and 2 for a second driver using “2.”

To save positions to the (Exit) button and easy exit features:

1. Adjust the driver seat, power tilt and telescoping steering column (if equipped), and the outside mirrors on some vehicles to the desired positions for getting out of the vehicle.
2. Press and release SET, then immediately press and hold until a beep sounds.

Manually Recalling Memory Positions

If the vehicle is OFF or not in P (Park), press and hold "1," "2," or to manually recall the previously stored memory positions. Releasing "1," "2," or before the stored positions are reached stops the recall.

If the vehicle is ON and in P (Park), press and release "1," "2," or to manually recall the previously stored memory positions. Placing the ignition in OFF before the stored positions are reached stops the recall.

If something has blocked the driver seat and/or power tilt and telescoping steering column (if equipped) while recalling a memory position, the recall may stop. Remove the obstruction; then press and hold the appropriate manual control for the memory item that is not recalling for two seconds. Try recalling the memory position again by pressing the appropriate memory button. If the memory position is still not recalling, see your dealer for service.

Automatically Recalling Memory Positions

The Auto (Automatic) Memory Recall feature automatically recalls the current driver's previously stored "1" or "2" position when entering the vehicle.

Depending upon the Auto Memory Recall feature enabled in the vehicle personalization menu, memory "1" or "2" positions are recalled in the following ways:

To activate the recall when On - Driver Door Open is selected in the vehicle personalization menu:

- Press on the RKE transmitter and open the driver door.
- Press on the RKE transmitter when the driver door is already open.
- Press the lock/unlock button on the outside driver door handle and open the driver door. The RKE transmitter must be present for the recall to activate.

To activate the recall when On - At Ignition On is selected in the vehicle personalization menu:

- Place the ignition in ON/RUN/START.

See *Vehicle Personalization on page 5-48*.

To stop recall movement, press one of the memory, power mirror, or power seat controls; or press the power tilt and telescoping steering column control (if equipped). If On - At Ignition On is selected in the vehicle personalization menu, placing the ignition in OFF also stops the recall.

If something has blocked the driver seat and/or the power tilt and telescoping steering column while recalling a memory position, the recall may stop. Remove the obstruction; then press and hold the

appropriate manual control for the memory item that is not recalling for two seconds. Try recalling the memory position again by opening the driver door and pressing 🔓 on the RKE transmitter. If the memory position is still not recalling, see your dealer for service.

Easy Exit Recall

If programmed on in the vehicle personalization menu, the easy exit feature automatically moves the driver seat, power tilt and telescoping steering column (if equipped), and outside mirrors on some vehicles to the memory positions saved to the (Exit) button. See “Storing Memory Positions” listed previously. See also *Vehicle Personalization on page 5-48*.

Easy Exit recall automatically activates when one of the following occurs:

- The vehicle is turned off and the driver door is opened within a short time.
- The vehicle is turned off with the driver door open.

If something has blocked the driver seat and/or power tilt and telescoping steering column while recalling the exit position, the recall may stop. Remove the obstruction; then press and hold the appropriate manual control for the exit feature not recalling for two seconds. Try recalling the exit position again.
If the exit position is still not recalling, see your dealer for service.

Heated and Ventilated Front Seats

⚠ Warning

If you cannot feel temperature change or pain to the skin, the seat heater may cause burns. To reduce the risk of burns, people with such a condition should use care when using the seat heater, especially for long periods of time. Do not place anything on the seat that insulates against heat, such as a blanket, cushion, cover, or similar item. This may cause the seat heater to overheat. An overheated seat heater may cause a burn or may damage the seat.

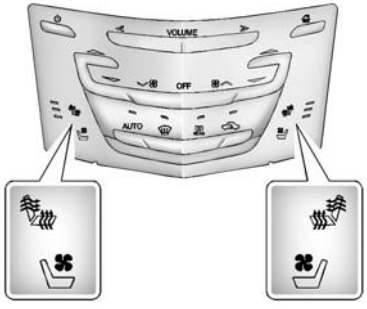

If equipped, the buttons are near the climate controls on the center stack. To operate, the ignition must be in ON/RUN/START.

Press or to heat the driver or passenger seat cushion and seatback.

Press or to ventilate the driver or passenger seat. A ventilated seat has a fan that pulls or pushes air through the seat. The air is not cooled.

When this feature is off, the heated and ventilated seat symbols on the buttons are white. When a heated seat is turned on, the symbol turns red. When a ventilated seat is turned on, the symbol turns blue.

Press the button once for the highest setting. With each press of the button, the seat will change to the next lower setting, and then to the off setting. The indicator lights next to the buttons indicate three for the highest setting and one for the lowest. If the heated seats are on high, the level may automatically be lowered after approximately 30 minutes.

The passenger seat may take longer to heat up.

Remote Start Auto Heated and Ventilated Seats

During a remote start, the heated or ventilated seats, if equipped, can be turned on automatically. When it is cold outside, the heated seats turn on, and when it is hot outside the ventilated seats turn on. The heated or ventilated seats are canceled when the ignition is turned on. Press the heated or ventilated seat button to use the heated or ventilated seats after the vehicle is started.

The heated or ventilated seat indicator lights do not turn on during a remote start.

The temperature performance of an unoccupied seat may be reduced. This is normal.

The heated or ventilated seats will not turn on during a remote start unless they are enabled in the vehicle personalization menu. See *Remote Vehicle Start on page 2-9* and *Vehicle Personalization on page 5-48*.

Rear Seats

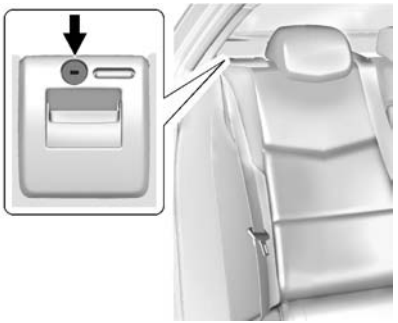

Split fold seats are equipped with a locking latch.

Lock and unlock the seatback using the vehicle key in the cylinder.

The latch will not open when the seatback is locked.

Folding the Seatback

⚠ Caution

Folding a rear seat with the safety belts still fastened may cause damage to the seat or the safety belts. Always unbuckle the safety belts and return them to their normal stowed position before folding a rear seat.

If equipped, either side of the seatback can be folded for more cargo space. Fold a seatback only when the vehicle is not moving.

To fold the seatback:

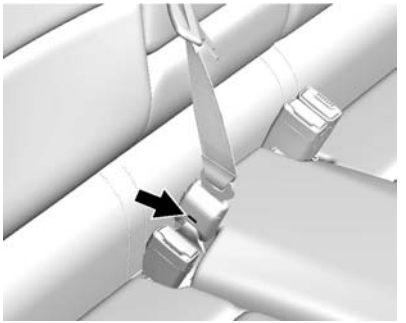

1. Disconnect the rear safety belt mini-latch using a key in the slot on the mini-buckle, and let the belt retract.

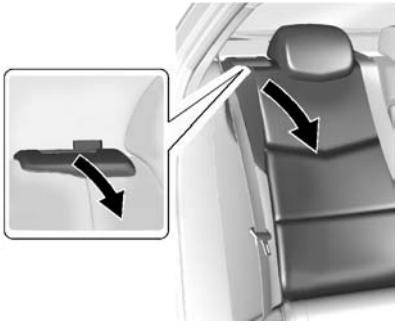

2. Unlock the seatback using the vehicle key in the cylinder.

   Pull the lever on top of the seatback toward you to release the seatback.

   A red tab near the seatback lever raises when the seatback is released.

3. Fold the seatback forward.

   Repeat Steps 2–3 to fold the other seatback, if desired.

Raising the Seatback

⚠ Warning

If either seatback is not locked, it could move forward in a sudden stop or crash. That could cause injury to the person sitting there. Always push and pull on the seatbacks to be sure they are locked.

⚠ Warning

A safety belt that is improperly routed, not properly attached, or twisted will not provide the protection needed in a crash. The person wearing the belt could be seriously injured. After raising the rear seatback, always check to be sure that the safety belts are properly routed and attached, and are not twisted.

To raise a seatback:

1. Lift the seatback up. Make sure the center safety belt and latch do not get trapped behind the seat. Push the seatback rearward to secure it in place.

   A red tab near the seatback lever retracts when the seatback is in place.

2. Push and pull the top of the seatback to be sure it is in position.
3. Lock the seatback using the vehicle key in the cylinder.
4. Reconnect the center safety belt mini-latch to the mini-buckle. Do not let the belt twist.
5. Pull on the center safety belt to make sure the mini-latch is secure.
6. Repeat the steps to raise the other seatback, if necessary.

When the seat is not in use, it should be kept in the upright, locked position.

Heated Rear Seats

⚠ Warning

If you cannot feel temperature change or pain to the skin, the seat heater may cause burns. See the Warning under *Heated and Ventilated Front Seats on page 3-8*.

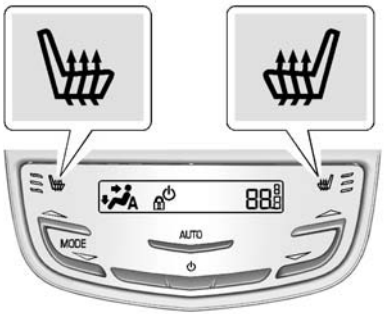

If equipped, the buttons are on the rear of the center console.

With the ignition in ON/RUN/START, press or to heat the left or right outboard seat cushion and seatback. An indicator on the climate control display appears when this feature is on.

Press the button once for the highest setting. With each press of the button, the heated seat changes to the next lower setting, and then the off setting. Three lights indicate the highest setting, and one light indicates the lowest. If the heated seats are on high, the level may automatically be lowered after approximately 30 minutes.

Rear Seat Pass-Through Door

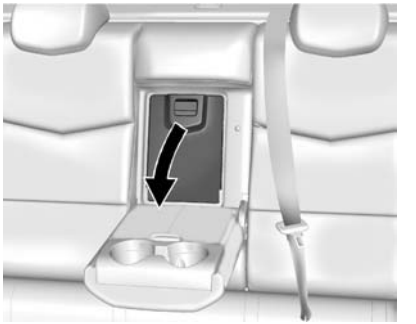

The vehicle has a rear seat pass-through door in the center of the rear seatback. Fold down the center armrest and pull the latch to open the door.

The pass-through door can be locked or unlocked using the knob on the back of the door. Open the trunk to access the lock. Turn the knob toward to lock the door or away from to unlock the door.

Safety Belts

This section of the manual describes how to use safety belts properly. It also describes some things not to do with safety belts.

⚠ Warning

Do not let anyone ride where a safety belt cannot be worn properly. In a crash, if you or your passenger(s) are not wearing safety belts, injuries can be much worse than if you are wearing safety belts. You can be seriously injured or killed by hitting things inside the vehicle harder or by being ejected from the vehicle. In addition, anyone who is not buckled up can strike other passengers in the vehicle.

It is extremely dangerous to ride in a cargo area, inside or outside of a vehicle. In a collision, passengers riding in these areas

(Continued)

Warning (Continued)

are more likely to be seriously injured or killed. Do not allow passengers to ride in any area of the vehicle that is not equipped with seats and safety belts.

Always wear a safety belt, and check that all passenger(s) are restrained properly too.

This vehicle has indicators as a reminder to buckle the safety belts. See *Safety Belt Reminders on page 5-17*.

Why Safety Belts Work

When riding in a vehicle, you travel as fast as the vehicle does. If the vehicle stops suddenly, you keep going until something stops you. It could be the windshield, the instrument panel, or the safety belts!

When you wear a safety belt, you and the vehicle slow down together. There is more time to stop because you stop over a longer distance and, when worn properly, your strongest bones take the forces from the

safety belts. That is why wearing safety belts makes such good sense.

Questions and Answers About Safety Belts

Q: Will I be trapped in the vehicle after a crash if I am wearing a safety belt?

A: You *could* be — whether you are wearing a safety belt or not. Your chance of being conscious during and after a crash, so you *can* unbuckle and get out, is *much* greater if you are belted.

Q: If my vehicle has airbags, why should I have to wear safety belts?

A: Airbags are supplemental systems only; so they work *with* safety belts — not instead of them. Whether or not an airbag is provided, all occupants still have to buckle up to get the most protection.

Also, in nearly all states and in all Canadian provinces, the law requires wearing safety belts.

How to Wear Safety Belts Properly

This section is only for people of adult size.

There are special things to know about safety belts and children. And there are different rules for smaller children and infants. If a child will be riding in the vehicle, see *Older Children on page 3-35* or *Infants and Young Children on page 3-37*. Follow those rules for everyone's protection.

It is very important for all occupants to buckle up. Statistics show that unbelted people are hurt more often in crashes than those who are wearing safety belts.

There are important things to know about wearing a safety belt properly.

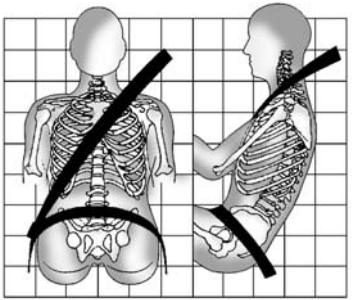

- Sit up straight and always keep your feet on the floor in front of you.
- Always use the correct buckle for your seating position.
- Wear the lap part of the belt low and snug on the hips, just touching the thighs. In a crash, this applies force to the strong pelvic bones and you would be less likely to slide under the lap belt. If you slid under it, the belt would apply force on your abdomen. This could cause serious or even fatal injuries.

- Wear the shoulder belt over the shoulder and across the chest. These parts of the body are best able to take belt restraining forces. The shoulder belt locks if there is a sudden stop or crash.

⚠ Warning

You can be seriously injured, or even killed, by not wearing your safety belt properly.

- Never allow the lap or shoulder belt to become loose or twisted.
- Never wear the shoulder belt under both arms or behind your back.
- Never route the lap or shoulder belt over an armrest.

Lap-Shoulder Belt

All seating positions in the vehicle have a lap-shoulder belt.

If you are using a rear seating position with a detachable safety belt and the safety belt is not attached, see *Rear Seats on page 3-10* for instruction on reconnecting the safety belt to the mini-buckle.

The following instructions explain how to wear a lap-shoulder belt properly.

1. Adjust the seat, if the seat is adjustable, so you can sit up straight. To see how, see “Seats” in the Index.

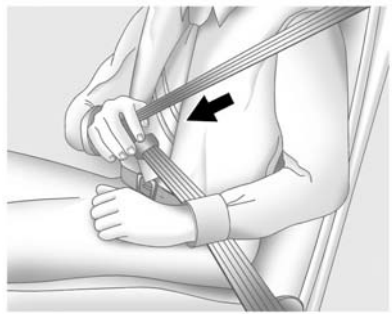

2. Pick up the latch plate and pull the belt across you. Do not let it get twisted.

   The lap-shoulder belt may lock if you pull the belt across you very quickly. If this happens, let the belt go back slightly to unlock it. Then pull the belt across you more slowly.

   If the shoulder portion of a passenger belt is pulled out all the way, the child restraint locking feature may be engaged. If this happens, let the belt go back all the way and start again.

If the webbing locks in the latch plate before it reaches the buckle, tilt the latch plate flat to unlock.

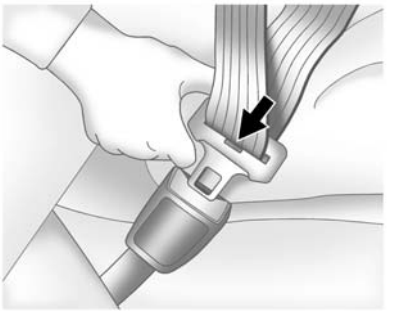

3. Push the latch plate into the buckle until it clicks.

   Pull up on the latch plate to make sure it is secure. If the belt is not long enough, see *Safety Belt Extender on page 3-20*.

   Position the release button on the buckle so that the safety belt could be quickly unbuckled if necessary.

   If equipped with a shoulder belt height adjuster, move it to the height that is right for you. See “Shoulder Belt Height Adjuster” later in this section for instructions on use and important safety information.

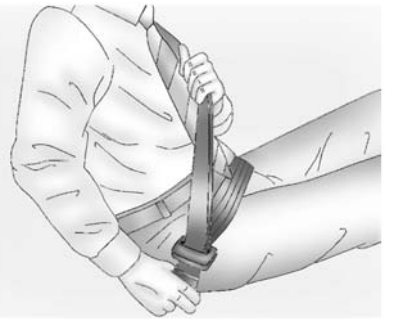

4. To make the lap part tight, pull up on the shoulder belt.

To unlatch the belt, push the button on the buckle. The belt should return to its stowed position.

Before a door is closed, be sure the safety belt is out of the way. If a door is slammed against a safety belt, damage can occur to both the safety belt and the vehicle.

Shoulder Belt Height Adjuster

The vehicle has a shoulder belt height adjuster for the driver and right front passenger seating positions.

Adjust the height so the shoulder portion of the belt is on the shoulder and not falling off of it. The belt should be close to, but not contacting, the neck. Improper shoulder belt height adjustment could reduce the effectiveness of the safety belt in a crash. See *How to Wear Safety Belts Properly on page 3-14*.

Press the release button and move the height adjuster to the desired position. The adjuster can be moved up by pushing the slide/trim up. After the adjuster is set to the desired position, try to move it down without pushing the release button to make sure it has locked into position.

Automatic Safety Belt Tightening System

If the vehicle has Adaptive Cruise Control (ACC), it also has the Automatic Safety Belt Tightening System. See *Adaptive Cruise Control on page 9-37*.

Each time the vehicle is started with the front safety belts buckled, the system activates once to tighten the safety belts when the forward vehicle speed exceeds the threshold for activation.

The system also activates during emergency braking and/or sudden driving maneuvers and releases when driving conditions return to normal.

The system will not activate if the Traction Control/Electronic Stability Control system is not functioning properly. See *Traction Control/*

Electronic Stability Control on page 9-30. If there is a problem with the Automatic Safety Belt Tightening System, a message displays on the Driver Information Center (DIC). See *Safety Belt Messages on page 5-45*. Other safety belt functions are not affected by the Automatic Safety Belt Tightening System.

Safety Belt Pretensioners

This vehicle has safety belt pretensioners for front outboard occupants. Although the safety belt pretensioners cannot be seen, they are part of the safety belt assembly. They can help tighten the safety belts during the early stages of a moderate to severe frontal, near frontal, or rear crash if the threshold conditions for pretensioner activation are met.

And, if the vehicle has side impact airbags and roof-rail airbags, safety belt pretensioners can help tighten the safety belts in a side crash or rollover event.

Pretensioners work only once. If the pretensioners activate in a crash, the pretensioners and probably other parts of the vehicle's safety belt system will need to be replaced. See *Replacing Safety Belt System Parts after a Crash on page 3-21*.

Rear Safety Belt Comfort Guides

This vehicle may have rear shoulder belt comfort guides. If not, they are available through your dealer. The guides may provide added safety belt comfort for older children who have outgrown booster seats and for some adults. When installed and properly adjusted, the comfort guide positions the belt away from the neck and head.

There is one guide for each outside passenger position in the rear seat. Here is how to install a comfort guide to the safety belt:

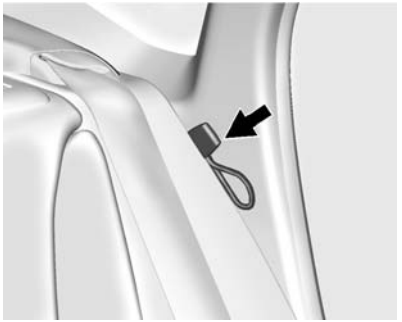

1. Remove the guide from its storage pocket on the side of the seat.

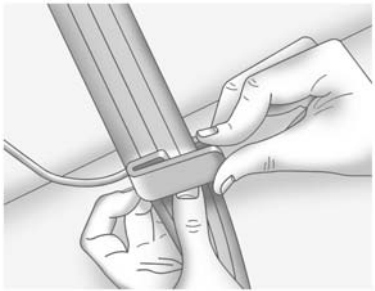

2. Place the guide over the belt, and insert the two edges of the belt into the slots of the guide.

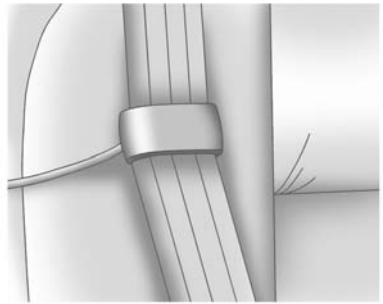

3. Be sure that the belt is not twisted and it lies flat. The elastic cord must be under the belt and the guide on top.

⚠ Warning

A safety belt that is not properly worn may not provide the protection needed in a crash. The person wearing the belt could be seriously injured. The shoulder belt should go over the shoulder

(Continued)

Warning (Continued)

and across the chest. These parts of the body are best able to take belt restraining forces.

4. Buckle, position, and release the safety belt as described previously in this section. Make sure the shoulder portion of the belt is on the shoulder and not falling off of it. The belt should be close to, but not contacting, the neck.

To remove and store the comfort guide, squeeze the belt edges together so that the safety belt can be removed from the guide. Store the guide in its storage pocket on the side of the seatback.

Safety Belt Use During Pregnancy

Safety belts work for everyone, including pregnant women. Like all occupants, they are more likely to be seriously injured if they do not wear safety belts.

A pregnant woman should wear a lap-shoulder belt, and the lap portion should be worn as low as possible, below the rounding, throughout the pregnancy.

The best way to protect the fetus is to protect the mother. When a safety belt is worn properly, it is more likely that the fetus will not be hurt in a crash. For pregnant women, as for anyone, the key to making safety belts effective is wearing them properly.

Safety Belt Extender

If the vehicle's safety belt will fasten around you, you should use it.

But if a safety belt is not long enough, your dealer will order you an extender. When you go in to order it, take the heaviest coat you will wear, so the extender will be long enough for you. To help avoid personal injury, do not let someone else use it, and use it only for the seat it is made to fit. The extender has been designed for adults. Never use it for securing child seats. To wear it, attach it to the regular safety belt. See the instruction sheet that comes with the extender.

Safety System Check

Now and then, check that the safety belt reminder light, safety belts, buckles, latch plates, retractors, and anchorages are all working properly. Look for any other loose or damaged safety belt system parts that might keep a safety belt system from doing its job. See your dealer to have it repaired. Torn or frayed safety belts may not protect you in a crash. They can rip apart under impact forces. If a belt is torn or frayed, get a new one right away.

Make sure the safety belt reminder light is working. See *Safety Belt Reminders on page 5-17*.

Keep safety belts clean and dry. See *Safety Belt Care on page 3-21*.

Safety Belt Care

Keep belts clean and dry.

⚠ Warning

Do not bleach or dye safety belts. It may severely weaken them. In a crash, they might not be able to provide adequate protection. Clean safety belts only with mild soap and lukewarm water.

Replacing Safety Belt System Parts after a Crash

⚠ Warning

A crash can damage the safety belt system in the vehicle. A damaged safety belt system may not properly protect the person using it, resulting in serious injury or even death in a

(Continued)

Warning (Continued)

crash. To help make sure the safety belt systems are working properly after a crash, have them inspected and any necessary replacements made as soon as possible.

After a minor crash, replacement of safety belts may not be necessary. But the safety belt assemblies that were used during any crash may have been stressed or damaged. See your dealer to have the safety belt assemblies inspected or replaced.

New parts and repairs may be necessary even if the safety belt system was not being used at the time of the crash.

Have the safety belt pretensioners checked if the vehicle has been in a crash, or if the airbag readiness light stays on after you start the vehicle or while you are driving. See *Airbag Readiness Light on page 5-17*.

Airbag System

The vehicle has the following airbags:

- A frontal airbag for the driver.
- A frontal airbag for the front outboard passenger.
- A knee airbag for the driver.
- A knee airbag for the front outboard passenger.
- A seat-mounted side impact airbag for the driver.
- A seat-mounted side impact airbag for the front outboard passenger.
- Seat-mounted side impact airbags for the second row outboard passengers.
- A roof-rail airbag for the driver and the passenger seated directly behind the driver.
- A roof-rail airbag for the front outboard passenger and the passenger seated directly behind the front outboard passenger.

All vehicle airbags have the word AIRBAG on the trim or on a label near the deployment opening.

For frontal airbags, the word AIRBAG is on the center of the steering wheel for the driver and on the instrument panel for the front outboard passenger.

For knee airbags, the word AIRBAG is on the lower part of the instrument panel.

For seat-mounted side impact airbags, the word AIRBAG is on the side of the seatback closest to the door.

For roof-rail airbags, the word AIRBAG is on the ceiling or trim.

Airbags are designed to supplement the protection provided by safety belts. Even though today's airbags are also designed to help reduce the risk of injury from the force of an inflating bag, all airbags must inflate very quickly to do their job.

Here are the most important things to know about the airbag system:

⚠ Warning

You can be severely injured or killed in a crash if you are not wearing your safety belt, even with airbags. Airbags are designed to work with safety belts, not replace them. Also, airbags are not designed to inflate in every crash. In some crashes safety belts are the only restraint. See *When Should an Airbag Inflate? on page 3-25*.

Wearing your safety belt during a crash helps reduce the chance of hitting things inside the vehicle or being ejected from it. Airbags are “supplemental restraints” to the safety belts. Everyone in the

(Continued)

Warning (Continued)

vehicle should wear a safety belt properly, whether or not there is an airbag for that person.

⚠ Warning

Because airbags inflate with great force and faster than the blink of an eye, anyone who is up against, or very close to any airbag when it inflates can be seriously injured or killed. Do not sit unnecessarily close to any airbag, as you would be if sitting on the edge of the seat or leaning forward. Safety belts help keep you in position before and during a crash. Always wear a safety belt, even with airbags. The driver should sit as far back as possible while still maintaining control of the vehicle.

(Continued)

Warning (Continued)

Occupants should not lean on or sleep against the door or side windows in seating positions with seat-mounted side impact airbags and/or roof-rail airbags.

⚠ Warning

Children who are up against, or very close to, any airbag when it inflates can be seriously injured or killed. Always secure children properly in the vehicle. To read how, see *Older Children on page 3-35* or *Infants and Young Children on page 3-37*.

There is an airbag readiness light on the instrument cluster, which shows the airbag symbol. The system checks the airbag electrical system for malfunctions. The light tells you if there is an electrical problem. See *Airbag Readiness Light on page 5-17* for more information.

Where Are the Airbags?

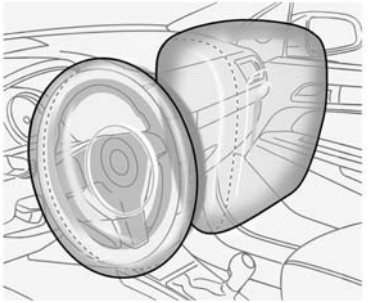

The driver frontal airbag is in the center of the steering wheel.

The front outboard passenger frontal airbag is in the passenger side instrument panel.

The driver knee airbag is below the steering column. The front outboard passenger knee airbag is below the glove box.

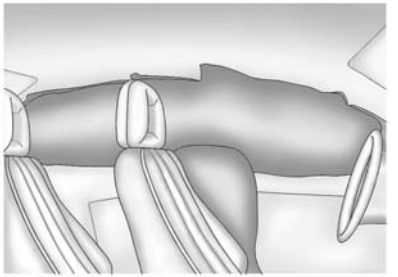

Driver Side Shown, Passenger Side Similar

The seat-mounted side impact airbags for the driver and front outboard passenger are in the side of the seatbacks closest to the door.

The roof-rail airbags for the driver, front outboard passenger, and second row outboard passengers are in the ceiling above the side windows.

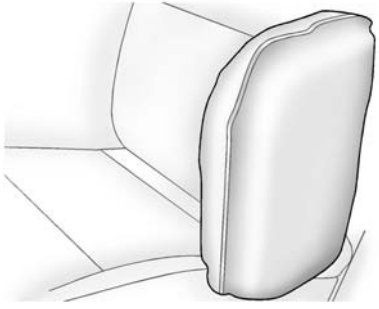

Rear Seat Driver Side Shown, Passenger Side Similar

The second row seat-mounted side impact airbags are in the sides of the rear seatback closest to the door.

⚠ Warning

If something is between an occupant and an airbag, the airbag might not inflate properly or it might force the object into that person causing severe injury

(Continued)

Warning (Continued)

or even death. The path of an inflating airbag must be kept clear. Do not put anything between an occupant and an airbag, and do not attach or put anything on the steering wheel hub or on or near any other airbag covering.

Do not use seat accessories that block the inflation path of a seat-mounted side impact airbag.

Never secure anything to the roof of a vehicle with roof-rail airbags by routing a rope or tie-down through any door or window opening. If you do, the path of an inflating roof-rail airbag will be blocked.

When Should an Airbag Inflate?

This vehicle is equipped with airbags. See *Airbag System on page 3-22*. Airbags are designed to inflate if the impact exceeds the specific airbag system's deployment threshold. Deployment thresholds are used to predict how severe a crash is likely to be in time for the airbags to inflate and help restrain the occupants. The vehicle has electronic sensors that help the airbag system determine the severity of the impact. Deployment thresholds can vary with specific vehicle design.

Frontal airbags are designed to inflate in moderate to severe frontal or near frontal crashes to help reduce the potential for severe injuries, mainly to the driver's or front outboard passenger's head and chest.

Whether the frontal airbags will or should inflate is not based primarily on how fast the vehicle is traveling.

It depends on what is hit, the direction of the impact, and how quickly the vehicle slows down.

Frontal airbags may inflate at different crash speeds depending on whether the vehicle hits an object straight on or at an angle, and whether the object is fixed or moving, rigid or deformable, narrow or wide.

Frontal airbags are not intended to inflate during vehicle rollovers, in rear impacts, or in many side impacts.

In addition, the vehicle has advanced technology frontal airbags. Advanced technology frontal airbags adjust the restraint according to crash severity.

Knee airbags are designed to inflate in moderate to severe frontal or near frontal impacts. Knee airbags are not designed to inflate during vehicle rollovers, in rear impacts, or in many side impacts.

The vehicle also has a seat position sensor that enables the sensing system to monitor the position of the front outboard passenger seat. The passenger seat position sensor and the passenger safety belt buckle provide information that is used to determine if the passenger knee airbag should inflate.

Seat-mounted side impact airbags are designed to inflate in moderate to severe side crashes depending on the location of the impact. Seat-mounted side impact airbags are not designed to inflate in frontal impacts, near frontal impacts, rollovers, or rear impacts.
A seat-mounted side impact airbag is designed to inflate on the side of the vehicle that is struck.

Roof-rail airbags are designed to inflate in moderate to severe side crashes depending on the location of the impact. In addition, these roof-rail airbags are designed to inflate during a rollover or in a severe frontal impact. Roof-rail airbags are not designed to inflate in rear impacts. Both roof-rail airbags will inflate when either side of the vehicle is struck, if the sensing system predicts that the vehicle is about to roll over on its side, or in a severe frontal impact.

In any particular crash, no one can say whether an airbag should have inflated simply because of the vehicle damage or repair costs.

What Makes an Airbag Inflate?

In a deployment event, the sensing system sends an electrical signal triggering a release of gas from the inflator. Gas from the inflator fills the airbag causing the bag to break out of the cover. The inflator, the airbag, and related hardware are all part of the airbag module.

For airbag locations, see *Where Are the Airbags? on page 3-24*.

How Does an Airbag Restrain?

In moderate to severe frontal or near frontal collisions, even belted occupants can contact the steering wheel or the instrument panel. In moderate to severe side collisions, even belted occupants can contact the inside of the vehicle.

Airbags supplement the protection provided by safety belts by distributing the force of the impact more evenly over the occupant's body.

Rollover capable roof-rail airbags are designed to help contain the head and chest of occupants in the outboard seating positions in the first and second rows. The rollover capable roof-rail airbags are designed to help reduce the risk of full or partial ejection in rollover events, although no system can prevent all such ejections.

But airbags would not help in many types of collisions, primarily because the occupant's motion is not toward those airbags. See *When Should an Airbag Inflate? on page 3-25*.

Airbags should never be regarded as anything more than a supplement to safety belts.

What Will You See after an Airbag Inflates?

After the frontal airbags and seat-mounted side impact airbags inflate, they quickly deflate, so quickly that some people may not even realize an airbag inflated. Roof-rail airbags may still be at least partially inflated for some time after they inflate. Some components of the airbag module may be hot for several minutes. For location of the airbags, see *Where Are the Airbags? on page 3-24*.

The parts of the airbag that come into contact with you may be warm, but not too hot to touch. There may be some smoke and dust coming from the vents in the deflated airbags. Airbag inflation does not prevent the driver from seeing out of the windshield or being able to steer the vehicle, nor does it prevent people from leaving the vehicle.

⚠ Warning

When an airbag inflates, there may be dust in the air. This dust could cause breathing problems for people with a history of asthma or other breathing trouble. To avoid this, everyone in the vehicle should get out as soon as it is safe to do so. If you have breathing problems but cannot get out of the vehicle after an airbag inflates, then get fresh air by opening a window or a door. If you experience breathing problems following an airbag deployment, you should seek medical attention.

The vehicle has a feature that may automatically unlock the doors, turn on the interior lamps, turn on the hazard warning flashers, and shut off the fuel system after the airbags inflate. You can lock the doors, turn off the interior lamps, and turn off the hazard warning flashers by using the controls for those features.

⚠ Warning

A crash severe enough to inflate the airbags may have also damaged important functions in the vehicle, such as the fuel system, brake and steering systems, etc. Even if the vehicle appears to be drivable after a moderate crash, there may be concealed damage that could make it difficult to safely operate the vehicle.

Use caution if you should attempt to restart the engine after a crash has occurred.

In many crashes severe enough to inflate the airbag, windshields are broken by vehicle deformation. Additional windshield breakage may also occur from the front outboard passenger airbag.

- Airbags are designed to inflate only once. After an airbag inflates, you will need some new parts for the airbag system. If you do not get them, the airbag system will not be there to help protect you in another crash. A new system will include airbag modules and possibly other parts. The service manual for the vehicle covers the need to replace other parts.
- The vehicle has a crash sensing and diagnostic module which records information after a crash. See *Vehicle Data Recording and Privacy on page 13-13* and *Event Data Recorders on page 13-13*.
- Let only qualified technicians work on the airbag systems. Improper service can mean that an airbag system will not work properly. See your dealer for service.

Passenger Sensing System

The vehicle has a passenger sensing system for the front outboard passenger position. The passenger airbag status indicator will light on the overhead console when the vehicle is started.

United States

Canada and Mexico

The words ON and OFF or the symbol for on and off will be visible during the system check. When the system check is complete, either the word ON or OFF, or the symbol for on and off will be visible. See *Passenger Airbag Status Indicator on page 5-18*.

The passenger sensing system turns off the front outboard passenger frontal airbag and knee airbag, under certain conditions. No other airbag is affected by the passenger sensing system.

The passenger sensing system works with sensors that are part of the front outboard passenger seat. The sensors are designed to detect the presence of a properly seated occupant and determine if the front outboard passenger frontal airbag and knee airbag should be allowed to inflate or not.

According to accident statistics, children are safer when properly secured in a rear seat in a correct child restraint for their weight and size.

Whenever possible, children aged 12 and under should be secured in a rear seating position.

Never put a rear-facing child seat in the front. This is because the risk to the rear-facing child is so great, if the airbag inflates.

⚠ Warning

A child in a rear-facing child restraint can be seriously injured or killed if the front outboard passenger frontal airbag inflates. This is because the back of the rear-facing child restraint would be very close to the inflating airbag. A child in a forward-facing child restraint can be seriously injured or killed if the front outboard passenger frontal airbag inflates and the passenger seat is in a forward position.

Even if the passenger sensing system has turned off the front outboard passenger airbag(s), no system is fail-safe. No one can guarantee that an airbag will not inflate under some unusual circumstance, even though the airbag(s) are off.

(Continued)

Warning (Continued)

Secure rear-facing child restraints in a rear seat, even if the airbag(s) are off. If you secure a forward-facing child restraint in the front outboard passenger seat, always move the seat as far back as it will go. It is better to secure the child restraint in a rear seat.

The passenger sensing system is designed to turn off the front outboard passenger airbag and knee airbag if:

- The front outboard passenger seat is unoccupied.
- The system determines that an infant is present in a child restraint.
- A front outboard passenger takes his/her weight off of the seat for a period of time.
- There is a critical problem with the airbag system or the passenger sensing system.

When the passenger sensing system has turned off the front outboard passenger frontal airbag and knee airbag, the off indicator will light and stay lit to remind you that the airbags are off. See *Passenger Airbag Status Indicator on page 5-18*.

The passenger sensing system is designed to turn on the front outboard passenger frontal airbag and knee airbag anytime the system senses that a person of adult size is sitting properly in the front outboard passenger seat.

When the passenger sensing system has allowed the airbags to be enabled, the on indicator will light and stay lit as a reminder that the airbags are active.

For some children, including children in child restraints, and for very small adults, the passenger sensing system may or may not turn off the front outboard passenger frontal airbag and knee airbag, depending upon the person's seating posture and body build. Everyone in the vehicle who has outgrown child restraints should wear a safety belt properly — whether or not there is an airbag for that person.

⚠ Warning

If the airbag readiness light ever comes on and stays on, it means that something may be wrong with the airbag system. To help avoid injury to yourself or others, have the vehicle serviced right away. See *Airbag Readiness Light on page 5-17* for more information, including important safety information.

If the On Indicator Is Lit for a Child Restraint

The passenger sensing system is designed to turn off the front outboard passenger frontal airbag and knee airbag if the system determines that an infant is present in a child restraint. If a child restraint has been installed and the on indicator is lit:

1. Turn the vehicle off.
2. Remove the child restraint from the vehicle.
3. Remove any additional items from the seat such as blankets, cushions, seat covers, seat heaters, or seat massagers.
4. Reinstall the child restraint following the directions provided by the child restraint manufacturer and refer to *Securing Child Restraints (Rear Seat) on page 3-49* or *Securing Child Restraints (Front Passenger Seat) on page 3-51*.
5. If, after reinstalling the child restraint and restarting the vehicle, the on indicator is still lit, turn the vehicle off. Then slightly recline the vehicle seatback and adjust the seat cushion, if adjustable, to make sure that the vehicle seatback is not pushing the child restraint into the seat cushion.

   Also make sure the child restraint is not trapped under the vehicle head restraint. If this happens, adjust the head restraint. See *Head Restraints on page 3-2*.
6. Restart the vehicle.

   The passenger sensing system may or may not turn off the airbags for a child in a child restraint depending upon the child's size. It is better to secure a child restraint in a rear seat.

If the Off Indicator Is Lit for an Adult-Sized Occupant

If a person of adult size is sitting in the front outboard passenger seat, but the off indicator is lit, it could be because that person is not sitting properly in the seat. Use the following steps to allow the system to detect that person and enable the front outboard passenger frontal airbag and knee airbag:

1. Turn the vehicle off.

2. Remove any additional material from the seat, such as blankets, cushions, seat covers, seat heaters, or seat massagers. Also, remove laptops, or other electronic devices.
3. Place the seatback in the fully upright position.
4. Have the person sit upright in the seat, centered on the seat cushion, with legs comfortably extended.
5. Restart the vehicle and have the person remain in this position for two to three minutes after the on indicator is lit.

⚠ Warning

If the front outboard passenger airbag is turned off for an adult-sized occupant, the airbag will not be able to inflate and help protect that person in a crash, resulting in an increased risk of

(Continued)

Warning (Continued)

serious injury or even death. An adult-sized occupant should not ride in the front outboard passenger seat, if the passenger airbag off indicator is lit.

Additional Factors Affecting System Operation

Safety belts help keep the passenger in position on the seat during vehicle maneuvers and braking, which helps the passenger sensing system maintain the passenger airbag status. See “Safety Belts” and “Child Restraints” in the Index for additional information about the importance of proper restraint use.

A thick layer of additional material, such as a blanket or cushion, or aftermarket equipment such as seat covers, seat heaters, and seat massagers can affect how well the passenger sensing system operates. We recommend that you not use seat covers or other aftermarket equipment except when approved by GM for your specific vehicle. See *Adding Equipment to the Airbag-Equipped Vehicle on page 3-33* for more information about modifications that can affect how the system operates.

A wet seat can affect the performance of the passenger sensing system. Here is how:

- The passenger sensing system may turn off the passenger frontal airbag and passenger knee airbag when liquid is soaked into the seat. If this happens, the off indicator will be lit, and the airbag readiness light on the instrument panel will also be lit.
- Liquid pooled on the seat that has not soaked in may make it more likely that the passenger sensing system will turn on the passenger frontal airbag and passenger knee airbag while a

child restraint or child occupant is on the seat. If the passenger frontal airbag and passenger knee airbag are turned on, the on indicator will be lit.

If the passenger seat gets wet, dry the seat immediately. If the airbag readiness light is lit, do not install a child restraint or allow anyone to occupy the seat. See *Airbag Readiness Light on page 5-17* for important safety information.

The on indicator may be lit if an object, such as a briefcase, handbag, grocery bag, laptop, or other electronic device, is put on an unoccupied seat. If this is not desired, remove the object from the seat.

⚠ Warning

Stowing of articles under the passenger seat or between the passenger seat cushion and

(Continued)

Warning (Continued)

seatback may interfere with the proper operation of the passenger sensing system.

Servicing the Airbag-Equipped Vehicle

Airbags affect how the vehicle should be serviced. There are parts of the airbag system in several places around the vehicle. Your dealer and the service manual have information about servicing the vehicle and the airbag system. To purchase a service manual, see *Service Publications Ordering Information on page 13-11*.

⚠ Warning

For up to 10 seconds after the vehicle is turned off and the battery is disconnected, an airbag

(Continued)

Warning (Continued)

can still inflate during improper service. You can be injured if you are close to an airbag when it inflates. Avoid yellow connectors. They are probably part of the airbag system. Be sure to follow proper service procedures, and make sure the person performing work for you is qualified to do so.

Adding Equipment to the Airbag-Equipped Vehicle

Adding accessories that change the vehicle's frame, bumper system, height, front end, or side sheet metal, may keep the airbag system from working properly. The operation of the airbag system can also be affected by changing or moving any parts of the front seats, safety belts, the airbag sensing and diagnostic module, steering wheel, instrument panel, roof-rail airbag modules, ceiling headliner or pillar

garnish trim, overhead console, front sensors, side impact sensors, or airbag wiring.

Your dealer and the service manual have information about the location of the airbag sensors, sensing and diagnostic module, and airbag wiring.

In addition, the vehicle has a passenger sensing system for the front outboard passenger position, which includes sensors that are part of the passenger seat. The passenger sensing system may not operate properly if the original seat trim is replaced with non-GM covers, upholstery, or trim; or with GM covers, upholstery, or trim designed for a different vehicle. Any object, such as an aftermarket seat heater or a comfort-enhancing pad or device, installed under or on top of the seat fabric, could also interfere with the operation of the passenger sensing system. This could either prevent proper deployment of the passenger airbag(s) or prevent the passenger sensing system from properly turning off the passenger airbag(s). See *Passenger Sensing System on page 3-28*.

If the vehicle has rollover roof-rail airbags, see *Different Size Tires and Wheels on page 10-59* for additional important information.

If you have to modify your vehicle because you have a disability and you have questions about whether the modifications will affect the vehicle's airbag system, or if you have questions about whether the airbag system will be affected if the vehicle is modified for any other reason, call Customer Assistance. See *Customer Assistance Offices on page 13-3*.

Airbag System Check

The airbag system does not need regularly scheduled maintenance or replacement. Make sure the airbag readiness light is working. See *Airbag Readiness Light on page 5-17*.

⚠ Caution

If an airbag covering is damaged, opened, or broken, the airbag may not work properly. Do not open or break the airbag coverings. If there are any opened or broken airbag coverings, have the airbag covering and/or airbag module replaced. For the location of the airbags, see *Where Are the Airbags? on page 3-24*. See your dealer for service.

Replacing Airbag System Parts after a Crash

⚠ Warning

A crash can damage the airbag systems in the vehicle.
A damaged airbag system may not work properly and may not

(Continued)

Warning (Continued)

protect you and your passenger(s) in a crash, resulting in serious injury or even death. To help make sure the airbag systems are working properly after a crash, have them inspected and any necessary replacements made as soon as possible.

If an airbag inflates, you will need to replace airbag system parts. See your dealer for service.

If the airbag readiness light stays on after the vehicle is started or comes on when you are driving, the airbag system may not work properly. Have the vehicle serviced right away. See *Airbag Readiness Light on page 5-17*.

Child Restraints

Older Children

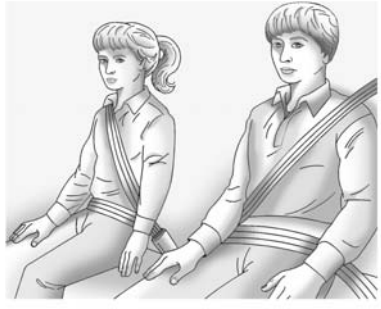

Older children who have outgrown booster seats should wear the vehicle safety belts.

The manufacturer instructions that come with the booster seat state the weight and height limitations for that booster. Use a booster seat with a lap-shoulder belt until the child passes the fit test below:

- Sit all the way back on the seat. Do the knees bend at the seat edge? If yes, continue. If no, return to the booster seat.
- Buckle the lap-shoulder belt. Does the shoulder belt rest on the shoulder? If yes, continue. If no, try using the rear safety belt comfort guide. See “Rear Safety Belt Comfort Guides” under *Lap-Shoulder Belt on page 3-15*. If the shoulder belt still does not rest on the shoulder, then return to the booster seat.
- Does the lap belt fit low and snug on the hips, touching the thighs? If yes, continue. If no, return to the booster seat.

- Can proper safety belt fit be maintained for the length of the trip? If yes, continue. If no, return to the booster seat.

Q: What is the proper way to wear safety belts?

A: An older child should wear a lap-shoulder belt and get the additional restraint a shoulder belt can provide. The shoulder belt should not cross the face or neck. The lap belt should fit snugly below the hips, just touching the top of the thighs. This applies belt force to the child's pelvic bones in a crash. It should never be worn over the abdomen, which could cause severe or even fatal internal injuries in a crash.

Also see “Rear Safety Belt Comfort Guides” under *Lap-Shoulder Belt on page 3-15*.

According to accident statistics, children are safer when properly restrained in a rear seating position. In a crash, children who are not buckled up can strike other people who are buckled up, or can be thrown out of the vehicle. Older children need to use safety belts properly.

⚠ Warning

Never allow more than one child to wear the same safety belt. The safety belt cannot properly spread the impact forces. In a crash, they can be crushed together and seriously injured. A safety belt must be used by only one person at a time.

⚠ Warning

Never allow a child to wear the safety belt with the shoulder belt behind their back. A child can be seriously injured by not wearing the lap-shoulder belt properly. In a crash, the child would not be restrained by the shoulder belt. The child could move too far forward increasing the chance of head and neck injury. The child might also slide under the lap

(Continued)

Warning (Continued)

belt. The belt force would then be applied right on the abdomen. That could cause serious or fatal injuries. The shoulder belt should go over the shoulder and across the chest.

Infants and Young Children

Everyone in a vehicle needs protection! This includes infants and all other children. Neither the distance traveled nor the age and size of the traveler changes the need, for everyone, to use safety restraints. In fact, the law in every state in the United States and in every Canadian province says children up to some age must be restrained while in a vehicle.

⚠ Warning

Children can be seriously injured or strangled if a shoulder belt is wrapped around their neck and the safety belt continues to tighten. Never leave children unattended in a vehicle and never allow children to play with the safety belts.

Every time infants and young children ride in vehicles, they should have the protection provided by appropriate child restraints. Neither the vehicle's safety belt system nor its airbag system is designed for them.

Children who are not restrained properly can strike other people, or can be thrown out of the vehicle.

⚠ Warning

Never hold an infant or a child while riding in a vehicle. Due to crash forces, an infant or a child will become so heavy it is not possible to hold it during a crash. For example, in a crash at only 40 km/h (25 mph), a 5.5 kg (12 lb) infant will suddenly become a 110 kg (240 lb) force on a person's arms. An infant should be secured in an appropriate restraint.

⚠ Warning

Children who are up against, or very close to, any airbag when it inflates can be seriously injured or killed. Never put a rear-facing child restraint in the front outboard seat. Secure a rear-facing child restraint in a rear seat. It is also better to secure a forward-facing child restraint in a rear seat. If you must secure a forward-facing child restraint in

(Continued)

Warning (Continued)

the front outboard seat, always move the front passenger seat as far back as it will go.

Q: What are the different types of add-on child restraints?

A: Add-on child restraints, which are purchased by the vehicle owner, are available in four basic types. Selection of a particular restraint should take into consideration not only the child's weight, height, and age but also whether or not the restraint will be compatible with the motor vehicle in which it will be used.

For most basic types of child restraints, there are many different models available. When purchasing a child restraint, be sure it is designed to be used in a motor vehicle. If it is, the restraint will have a label saying that it meets federal motor vehicle safety standards.

The restraint manufacturer instructions that come with the restraint state the weight and height limitations for a particular child restraint. In addition, there are many kinds of restraints available for children with special needs.

⚠ Warning

To reduce the risk of neck and head injury during a crash, infants need complete support. In a crash, if an infant is in a rear-facing child restraint, the crash forces can be distributed across the strongest part of an infant's body, the back and shoulders. Infants should always be secured in rear-facing child restraints.

⚠ Warning

A young child's hip bones are still so small that the vehicle's regular safety belt may not remain low on the hip bones, as it should. Instead, it may settle up around the child's abdomen. In a crash, the belt would apply force on a body area that is unprotected by

(Continued)

Warning (Continued)

any bony structure. This alone could cause serious or fatal injuries. To reduce the risk of serious or fatal injuries during a crash, young children should always be secured in appropriate child restraints.

Child Restraint Systems

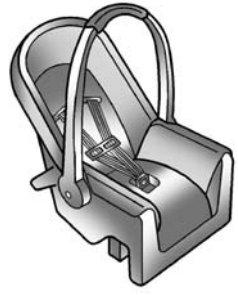

Rear-Facing Infant Seat

A rear-facing infant seat provides restraint with the seating surface against the back of the infant.

The harness system holds the infant in place and, in a crash, acts to keep the infant positioned in the restraint.

Forward-Facing Child Seat

A forward-facing child seat provides restraint for the child's body with the harness.

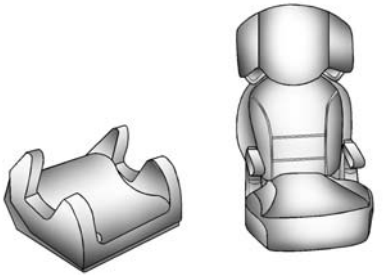

Booster Seats

A booster seat is a child restraint designed to improve the fit of the vehicle's safety belt system.
A booster seat can also help a child to see out the window.

Securing an Add-On Child Restraint in the Vehicle

⚠ Warning

A child can be seriously injured or killed in a crash if the child restraint is not properly secured in the vehicle. Secure the child restraint properly in the vehicle using the vehicle safety belt or LATCH system, following the instructions that came with that child restraint and the instructions in this manual.

To help reduce the chance of injury, the child restraint must be secured in the vehicle. Child restraint systems must be secured in vehicle seats by lap belts or the lap belt portion of a lap-shoulder belt, or by the LATCH system. See *Lower Anchors and Tethers for Children (LATCH System) on page 3-42*.

Children can be endangered in a crash if the child restraint is not properly secured in the vehicle.

When securing an add-on child restraint, refer to the instructions that come with the restraint which may be on the restraint itself or in a booklet, or both, and to this manual. The child restraint instructions are important, so if they are not available, obtain a replacement copy from the manufacturer.

Keep in mind that an unsecured child restraint can move around in a collision or sudden stop and injure people in the vehicle. Be sure to properly secure any child restraint in the vehicle — even when no child is in it.

In some areas of the United States and Canada, Certified Child Passenger Safety Technicians (CPSTs) are available to inspect and demonstrate how to correctly use and install child restraints. In the U.S., refer to the National Highway Traffic Safety Administration (NHTSA) website to locate the nearest child safety seat inspection station. For CPST availability in Canada, check with Transport Canada or the Provincial Ministry of Transportation office.

Securing the Child Within the Child Restraint

⚠ Warning

A child can be seriously injured or killed in a crash if the child is not properly secured in the child restraint. Secure the child properly following the instructions that came with that child restraint.

Where to Put the Restraint

According to accident statistics, children and infants are safer when properly restrained in a child restraint system or infant restraint system secured in a rear seating position.

Whenever possible, children aged 12 and under should be secured in a rear seating position.

Never put a rear-facing child seat in the front. This is because the risk to the rear-facing child is so great if the airbag deploys.

⚠ Warning

A child in a rear-facing child restraint can be seriously injured or killed if the front passenger airbag inflates. This is because the back of the rear-facing child restraint would be very close to the inflating airbag. A child in a forward-facing child restraint can be seriously injured or killed if the front passenger airbag inflates and the passenger seat is in a forward position.

Even if the passenger sensing system has turned off the front passenger frontal airbag, no

(Continued)

Warning (Continued)

system is fail-safe. No one can guarantee that an airbag will not deploy under some unusual circumstance, even though it is turned off.

Secure rear-facing child restraints in a rear seat, even if the airbag is off. If you secure a forward-facing child restraint in the front seat, always move the front passenger seat as far back as it will go. It is better to secure the child restraint in a rear seat.

See *Passenger Sensing System on page 3-28* for additional information.

When securing a child restraint in a rear seating position, study the instructions that came with the child restraint to make sure it is compatible with this vehicle.

Child restraints and booster seats vary considerably in size, and some may fit in certain seating positions better than others. Always make sure the child restraint is properly secured.

Depending on where you place the child restraint and the size of the child restraint, you may not be able to access adjacent safety belt assemblies or LATCH anchors for additional passengers or child restraints. Adjacent seating positions should not be used if the child restraint prevents access to or interferes with the routing of the safety belt.

Wherever a child restraint is installed, be sure to secure the child restraint properly.

Keep in mind that an unsecured child restraint can move around in a collision or sudden stop and injure people in the vehicle. Be sure to properly secure any child restraint in the vehicle — even when no child is in it.

Lower Anchors and Tethers for Children (LATCH System)

The LATCH system secures a child restraint during driving or in a crash. LATCH attachments on the child restraint are used to attach the child restraint to the anchors in the vehicle. The LATCH system is designed to make installation of a child restraint easier.

In order to use the LATCH system in your vehicle, you need a child restraint that has LATCH attachments. LATCH-compatible rear-facing and forward-facing child seats can be properly installed using either the LATCH anchors or the vehicle's safety belts. Do not use both the safety belts and the LATCH anchorage system to secure a rear-facing or forward-facing child seat.

Booster seats use the vehicle's safety belts to secure the child in the booster seat. If the manufacturer

recommends that the booster seat be secured with the LATCH system, this can be done as long as the booster seat can be positioned properly and there is no interference with the proper positioning of the lap-shoulder belt on the child.

Make sure to follow the instructions that came with the child restraint, and also the instructions in this manual.

When installing a child restraint with a top tether, you must also use either the lower anchors or the safety belts to properly secure the child restraint. A child restraint must never be installed using only the top tether and anchor.

The LATCH anchorage system can be used until the combined weight of the child plus the child restraint is 29.5 kg (65 lbs). Use the safety belt alone instead of the LATCH anchorage system once the combined weight is more than 29.5 kg (65 lbs).

The following explains how to attach a child restraint with these attachments in the vehicle.

Not all vehicle seating positions or child restraints have lower anchors and attachments or top tether anchors and attachments.

Lower Anchors

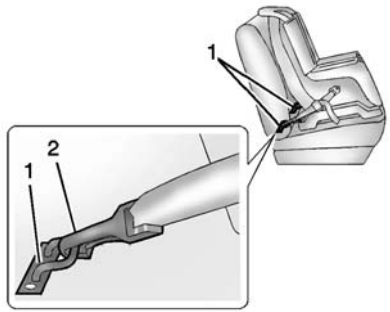

Lower anchors (1) are metal bars built into the vehicle. There are two lower anchors for each LATCH seating position that will accommodate a child restraint with lower attachments (2).

Top Tether Anchor

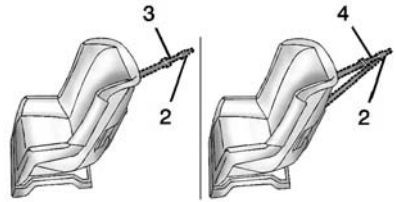

A top tether (3, 4) anchors the top of the child restraint to the vehicle. A top tether anchor is built into the vehicle. The top tether attachment (2) on the child restraint connects to the top tether anchor in the vehicle in order to reduce the forward movement and rotation of the child restraint during driving or in a crash.

The child restraint may have a single tether (3) or a dual tether (4). Either will have a single attachment (2) to secure the top tether to the anchor.

Some child restraints with top tethers are designed for use with or without the top tether being attached. Others require the top tether always to be attached. In Canada, the law requires that forward-facing child restraints have a top tether, and that the tether be attached. Be sure to read and follow the instructions for your child restraint.

Lower Anchor and Top Tether Anchor Locations

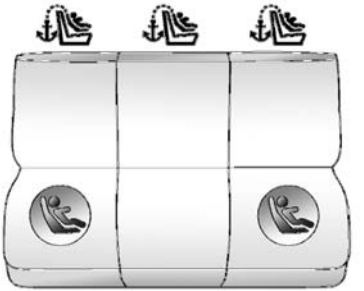

Rear Seat

(Top Tether Anchor): Seating positions with top tether anchors.

(Lower Anchor): Seating positions with two lower anchors.

To assist in locating the lower anchors, each seating position with lower anchors has two labels, near the crease between the seatback and the seat cushion.

To assist in locating the top tether anchors, the top tether anchor symbol is on the cover.

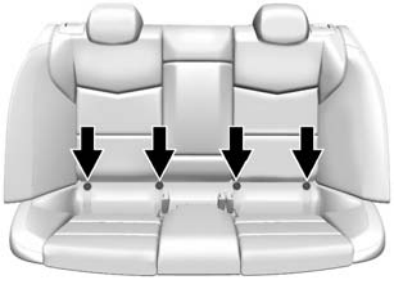

The outboard lower anchors are behind the vertical openings in the seat trim.

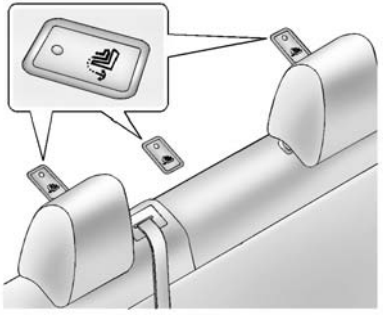

The top tether anchors are behind the rear seat, on the filler panel. Open the covers to access the anchors. Be sure to use an anchor on the same side of the vehicle as the seating position where the child restraint will be placed.

Do not secure a child restraint in a position without a top tether anchor if a national or local law requires that the top tether be attached, or if the instructions that come with the child restraint say that the top tether must be attached.

According to accident statistics, children and infants are safer when properly restrained in a child restraint system or infant restraint system secured in a rear seating position. See *Where to Put the Restraint on page 3-41* for additional information.

Securing a Child Restraint Designed for the LATCH System

⚠ Warning

If a LATCH-type child restraint is not attached to anchors or with the safety belt, the child restraint will not be able to protect the child correctly. In a crash, the child could be seriously injured or killed. Install a LATCH-type child restraint properly using the anchors, or use the vehicle safety belts to secure the restraint,

(Continued)

Warning (Continued)

following the instructions that came with the child restraint and the instructions in this manual.

⚠ Warning

Do not attach more than one child restraint to a single anchor. Attaching more than one child restraint to a single anchor could cause the anchor or attachment to come loose or even break during a crash. A child or others could be injured. To reduce the risk of serious or fatal injuries during a crash, attach only one child restraint per anchor.

⚠ Warning

Children can be seriously injured or strangled if a shoulder belt is wrapped around their neck and the safety belt continues to tighten. Buckle any unused safety belts behind the child restraint so children cannot reach them. Pull the shoulder belt all the way out of the retractor to set the lock, if the vehicle has one, after the child restraint has been installed.

⚠ Caution

Do not let the LATCH attachments rub against the vehicle's safety belts. This may damage these parts. If necessary, move buckled safety belts to avoid rubbing the LATCH attachments.

(Continued)

Caution (Continued)

Do not fold the empty rear seat with a safety belt buckled. This could damage the safety belt or the seat. Unbuckle and return the safety belt to its stowed position, before folding the seat.

If you need to secure more than one child restraint in the rear seat, see *Where to Put the Restraint on page 3-41*.

This system is designed to make the installation of child restraints easier. When using lower anchors, do not use the vehicle's safety belts. Instead, use the vehicle's anchors and child restraint attachments to secure the restraints. Some restraints also use another vehicle anchor to secure a top tether.

1. Attach and tighten the lower attachments to the lower anchors. If the child restraint does not have lower

attachments or the desired seating position does not have lower anchors, secure the child restraint with the top tether and the safety belts. Refer to your child restraint manufacturer instructions and the instructions in this manual.

1.1. Find the lower anchors for the desired seating position.

1.2. Put the child restraint on the seat.

1.3. Attach and tighten the lower attachments on the child restraint to the lower anchors.

2. If the child restraint manufacturer recommends that the top tether be attached, attach and tighten the top tether to the top tether anchor, if equipped. Refer to the child restraint instructions and the following steps:

2.1. Find the top tether anchor.

2.2. Open the top tether anchor cover to expose the anchor.

2.3. Route, attach, and tighten the top tether according to your child restraint instructions and the following instructions:

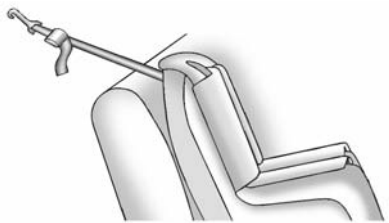

If the position you are using does not have a headrest or head restraint and you are using a single tether, route the tether over the seatback.

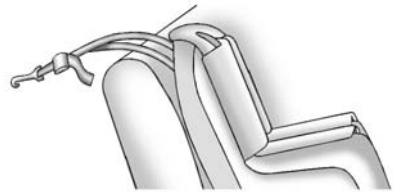

If the position you are using does not have a headrest or head restraint and you are using a dual tether, route the tether over the seatback.

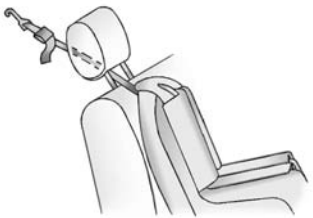

If the position you are using has an adjustable headrest or head restraint and you are using a single tether, raise the headrest or head restraint and route the tether under the headrest or head restraint and in between the headrest or head restraint posts.

If the position you are using has an adjustable headrest or head restraint and you are using a dual tether, raise the headrest or head restraint and route the tether under the headrest or head restraint and around the headrest or head restraint posts.

3. Before placing a child in the child restraint, make sure it is securely held in place. To check, grasp the child restraint at the LATCH path and attempt to move it side to side and back and forth. There should be no more than 2.5 cm (1 in) of movement for proper installation.

Replacing LATCH System Parts After a Crash

⚠ Warning

A crash can damage the LATCH system in the vehicle. A damaged LATCH system may not properly secure the child restraint, resulting in serious injury or even death in a crash. To help make sure the LATCH system is

(Continued)

Warning (Continued)

working properly after a crash, see your dealer to have the system inspected and any necessary replacements made as soon as possible.

If the vehicle has the LATCH system and it was being used during a crash, new LATCH system parts may be needed.

New parts and repairs may be necessary even if the LATCH system was not being used at the time of the crash.

Securing Child Restraints (Rear Seat)

When securing a child restraint in a rear seating position, study the instructions that came with the child restraint to make sure it is compatible with this vehicle.

If the child restraint has the LATCH system, see *Lower Anchors and Tethers for Children (LATCH System) on page 3-42* for how and where to install the child restraint using LATCH. If a child restraint is secured in the vehicle using a safety belt and it uses a top tether, see *Lower Anchors and Tethers for Children (LATCH System) on page 3-42* for top tether anchor locations.

Do not secure a child seat in a position without a top tether anchor if a national or local law requires that the top tether be anchored, or if the instructions that come with the child restraint say that the top strap must be anchored.

In Canada, the law requires that forward-facing child restraints have a top tether, and that the tether be attached.

If the child restraint does not have the LATCH system, you will be using the safety belt to secure the child restraint in this position.

Be sure to follow the instructions that came with the child restraint. Secure the child in the child restraint when and as the instructions say.

If more than one child restraint needs to be installed in the rear seat, be sure to read *Where to Put the Restraint on page 3-41*.

1. Put the child restraint on the seat.
2. Pick up the latch plate, and run the lap and shoulder portions of the vehicle safety belt through or around the restraint. The child restraint instructions will show you how.

3. Push the latch plate into the buckle until it clicks. If the latch plate will not go fully into the buckle, check if the correct buckle is being used.

   Position the release button on the buckle so that the safety belt could be quickly unbuckled if necessary.

4. Pull the shoulder belt all the way out of the retractor to set the lock. When the retractor lock is set, the belt can be tightened but not pulled out of the retractor.

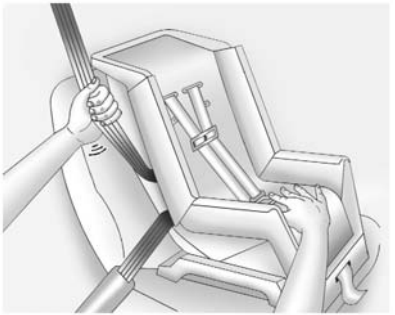

5. To tighten the belt, push down on the child restraint, pull the shoulder portion of the belt to tighten the lap portion of the belt, and feed the shoulder belt back into the retractor. When installing a forward-facing child restraint, it may be helpful to use your knee to push down on the child restraint as you tighten the belt.

   Try to pull the belt out of the retractor to make sure the retractor is locked. If the retractor is not locked, repeat Steps 4 and 5.

6. If the child restraint has a top tether, follow the child restraint manufacturer's instructions regarding the use of the top tether. See *Lower Anchors and Tethers for Children (LATCH System) on page 3-42* for more information.
7. Before placing a child in the child restraint, make sure it is securely held in place. To check, grasp the child restraint at the safety belt path and attempt to move it side to side and back and forth. When the child restraint is properly installed, there should be no more than 2.5 cm (1 in) of movement.

To remove the child restraint, unbuckle the vehicle safety belt and let it return to the stowed position. If the top tether is attached to a top tether anchor, disconnect it.

Securing Child Restraints (Front Passenger Seat)

This vehicle has airbags. A rear seat is a safer place to secure a forward-facing child restraint. See *Where to Put the Restraint on page 3-41*.

In addition, the vehicle has a passenger sensing system which is designed to turn off the front outboard passenger frontal airbag and knee airbag under certain conditions. See *Passenger Sensing System on page 3-28* and *Passenger Airbag Status Indicator on page 5-18*.

Never put a rear-facing child seat in the front. This is because the risk to the rear-facing child is so great, if the airbag deploys.

⚠ Warning

A child in a rear-facing child restraint can be seriously injured or killed if the front outboard passenger frontal airbag inflates. This is because the back of the rear-facing child restraint would be very close to the inflating airbag. A child in a forward-facing child restraint can be seriously injured or killed if the front outboard passenger frontal airbag inflates and the passenger seat is in a forward position.

Even if the passenger sensing system has turned off the front outboard passenger airbag(s), no system is fail-safe. No one can guarantee that an airbag will not inflate under some unusual circumstance, even though the airbag(s) are off.

(Continued)

Warning (Continued)

Secure rear-facing child restraints in a rear seat, even if the airbag(s) are off. If you secure a forward-facing child restraint in the front outboard passenger seat, always move the seat as far back as it will go. It is better to secure the child restraint in a rear seat.

If the child restraint has the LATCH system, see *Lower Anchors and Tethers for Children (LATCH System) on page 3-42* for how and where to install the child restraint using LATCH. If a child restraint is secured using a safety belt and it uses a top tether, see *Lower Anchors and Tethers for Children (LATCH System) on page 3-42* for top tether anchor locations.

Do not secure a child seat in a position without a top tether anchor if a national or local law requires that the top tether be anchored, or if the instructions that come with the child restraint say that the top strap must be anchored.

In Canada, the law requires that forward-facing child restraints have a top tether, and that the tether be attached.

You will be using the lap-shoulder belt to secure the child restraint in this position. Follow the instructions that came with the child restraint.

1. Move the seat rearward as far back as it will go and raise the seat upward as far up as it will go, before securing the forward-facing child restraint.

   When the passenger sensing system has turned off the front outboard passenger frontal airbag and knee airbag, the off indicator on the passenger airbag status indicator should light and stay lit when you start the vehicle. See *Passenger Airbag Status Indicator on page 5-18*.

2. Put the child restraint on the seat.
3. Pick up the latch plate, and run the lap and shoulder portions of the vehicle's safety belt through or around the restraint. The child restraint instructions will show you how.

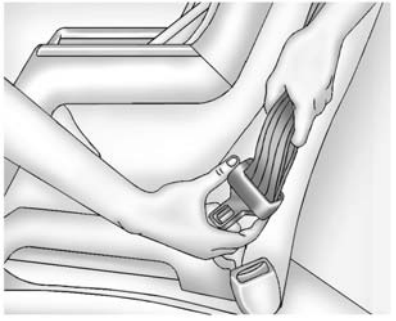

Tilt the latch plate to adjust the belt if needed.

4. Push the latch plate into the buckle until it clicks.

   Position the release button on the buckle so that the safety belt could be quickly unbuckled if necessary.

5. Pull the shoulder belt all the way out of the retractor to set the lock. When the retractor lock is set, the belt can be tightened but not pulled out of the retractor.

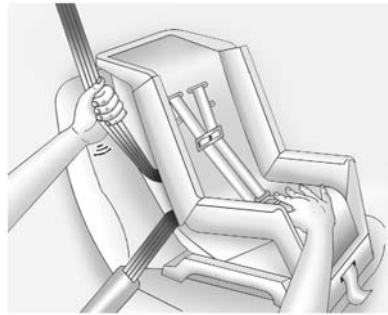

6. To tighten the belt, push down on the child restraint, pull the shoulder portion of the belt to tighten the lap portion of the belt, and feed the shoulder belt back into the retractor. When installing a forward-facing child restraint, it may be helpful to use your knee to push down on the child restraint as you tighten the belt.

   Try to pull the belt out of the retractor to make sure the retractor is locked. If the retractor is not locked, repeat Steps 5 and 6.

7. Before placing a child in the child restraint, make sure it is securely held in place. To check, grasp the child restraint at the safety belt path and attempt to move it side to side and back and forth. When the child restraint is properly installed, there should be no more than 2.5 cm (1 in) of movement.

If the airbags are off, the off indicator in the passenger airbag status indicator will come on and stay on when the vehicle is started.

If a child restraint has been installed and the on indicator is lit, see “If the On Indicator Is Lit for a Child Restraint” under *Passenger Sensing System on page 3-28*.

To remove the child restraint, unbuckle the vehicle safety belt and let it return to the stowed position.

Storage

Storage Compartments
Storage Compartments 4-1
Instrument Panel Storage 4-1
Glove Box 4-2
Cupholders 4-2
Armrest Storage 4-2
Center Console Storage 4-3

Additional Storage Features
Cargo Tie-Downs 4-3
Convenience Net 4-4

Storage Compartments

⚠ Warning

Do not store heavy or sharp objects in storage compartments. In a crash, these objects may cause the cover to open and could result in injury.

Instrument Panel Storage

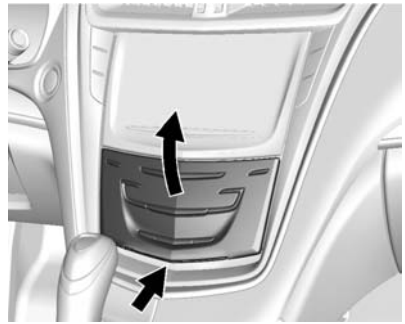

Touch the bottom of the climate control system panel until the door automatically starts to open. The storage area may contain a USB port, SD card reader, and auxiliary jack. See the infotainment manual.

Keep the storage area closed when not in use.

Touch the bottom of the climate control system again until the door automatically starts to close.

Glove Box

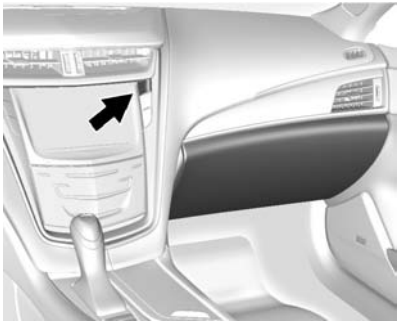

To open, press the button. Close the glove box manually.

Cupholders

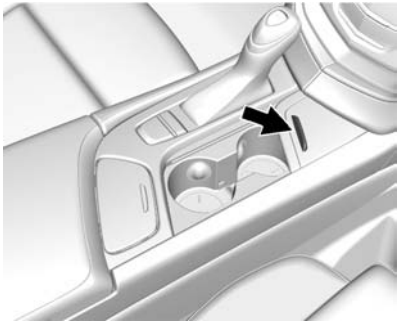

Cupholders in the front center console have a power retractable cover. Push the handle forward to express open. Pull the handle rearward to express close.

The power cover will operate when the vehicle is in ACC, RUN, or Retained Accessory Power (RAP) mode. The cover can be opened or closed manually by pushing or pulling the handle. See *Retained Accessory Power (RAP) on page 9-19*.

Power Retractable Cover Anti-Pinch Feature

If any object is in the path of the power cover when it is active, the cover will stop at the obstruction and auto-reverse to a preset position. The cover will return to normal operation after the obstruction is removed.

Armrest Storage

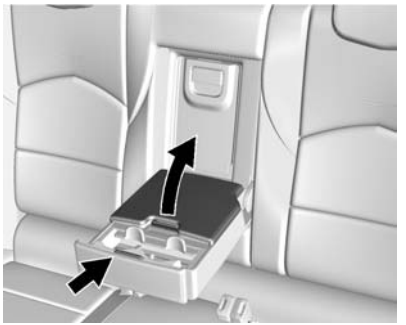

Pull the armrest down to access the rear seat storage area and cupholders.

Press the latch to open the storage area.

Center Console Storage

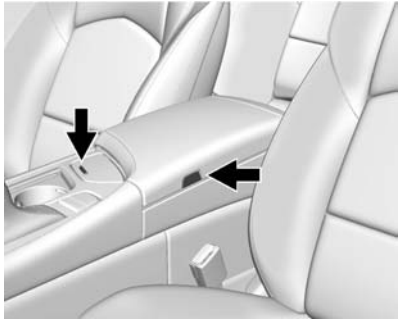

Press the button to access the storage area in front of the armrest cover.

Press the button on the driver side of the cover to access the storage area under the armrest. There are two USB ports, an SD card reader, a power outlet, and an input jack inside.

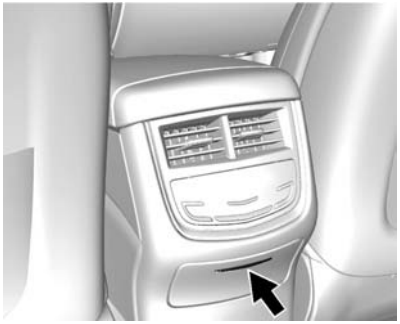

If equipped, press the top of the door to open the storage area on the rear of the center console.
If equipped, there is a power outlet inside.

Additional Storage Features

Cargo Tie-Downs

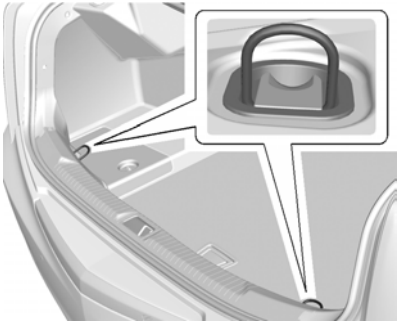

The cargo tie-downs can be used to secure small loads inside the trunk.

Convenience Net

If equipped, the convenience net is in the rear. Put small loads behind the net. It can also be positioned into an envelope style to hold smaller items. The net is not for heavier loads. Store items as far forward as you can.

Instruments and Controls

Controls

Steering Wheel Adjustment . . . 5-2
Steering Wheel Controls 5-3
Heated Steering Wheel 5-3
Horn 5-3
Windshield Wiper/Washer 5-3
Compass 5-5
Clock 5-5
Power Outlets 5-6

Warning Lights, Gauges, and Indicators

Warning Lights, Gauges, and Indicators 5-8
Instrument Cluster 5-10
Speedometer 5-14
Odometer 5-14
Trip Odometer 5-14
Tachometer 5-14
Fuel Gauge 5-15
Engine Coolant Temperature Gauge 5-16
Safety Belt Reminders 5-17
Airbag Readiness Light 5-17
Passenger Airbag Status Indicator 5-18
Charging System Light 5-19
Malfunction Indicator Lamp 5-19
Brake System Warning Light 5-22
Parking Brake Light 5-23
Service Electric Parking Brake Light 5-23
Antilock Brake System (ABS) Warning Light 5-23
Lane Departure Warning (LDW) Light 5-24
Vehicle Ahead Indicator 5-24
Traction Off Light 5-25
StabiliTrak® OFF Light 5-25
Traction Control System (TCS)/StabiliTrak® Light 5-25
Engine Coolant Temperature Warning Light 5-26
Tire Pressure Light 5-26
Engine Oil Pressure Light 5-27
Low Fuel Warning Light 5-27
Security Light 5-28
High-Beam On Light 5-28
Adaptive Forward Lighting (AFL) Light 5-28
Lamps On Reminder 5-29
Cruise Control Light 5-29
Door Ajar Light 5-29

Information Displays

Driver Information Center (DIC) 5-30
Head-Up Display (HUD) 5-33

Vehicle Messages

Vehicle Messages 5-36
Battery Voltage and Charging Messages 5-37
Brake System Messages 5-37
Compass Messages 5-37
Cruise Control Messages 5-38
Door Ajar Messages 5-38
Engine Cooling System Messages 5-39
Engine Oil Messages 5-39
Engine Power Messages 5-40
Fuel System Messages 5-40
Key and Lock Messages 5-40
Lamp Messages 5-41
Object Detection System Messages 5-41
Ride Control System Messages 5-44
Airbag System Messages 5-45

Safety Belt Messages 5-45
Security Messages 5-45
Service Vehicle Messages . . . 5-45
Starting the Vehicle Messages 5-46
Tire Messages 5-46
Transmission Messages 5-47
Vehicle Reminder Messages 5-47
Vehicle Speed Messages 5-47
Washer Fluid Messages 5-47

Vehicle Personalization
Vehicle Personalization 5-48

Universal Remote System
Universal Remote System . . . 5-55
Universal Remote System Programming 5-55
Universal Remote System Operation 5-57

Controls

Steering Wheel Adjustment

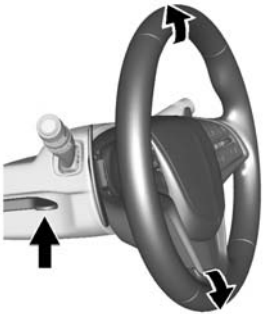

To adjust the steering wheel:

1. Pull the lever down.
2. Move the steering wheel up or down.
3. Pull or push the steering wheel closer or away from you.
4. Pull the lever up to lock the steering wheel in place.

Power Tilt and Telescoping Wheel

If equipped, the control is on the left side of the steering column.

- Push the control up or down to tilt the steering wheel up or down.
- Push the control forward or rearward to move the steering wheel toward the front or rear of the vehicle.

Do not adjust the steering wheel while driving.

To set the power tilt wheel memory position, see *Memory Seats on page 3-6*.

Steering Wheel Controls

The infotainment system can be operated by using the steering wheel controls. See "Steering Wheel Controls" in the infotainment manual.

Heated Steering Wheel

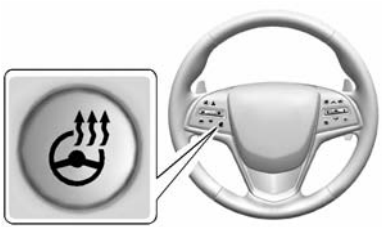

(Heated Steering Wheel, If Equipped): Press to turn the heated steering wheel on or off. A light next to the button displays when the feature is turned on.

The steering wheel takes about three minutes to be fully heated.

Horn

Press on the steering wheel pad to sound the horn.

Windshield Wiper/Washer

With the ignition in ACC/ ACCESSORY or ON/RUN/START, move the windshield wiper lever to select the wiper speed.

HI: Use for fast wipes.

LO: Use for slow wipes.

INT (Intermittent Wipes): Move the lever up to INT for intermittent wipes, then turn the INT band up for more frequent wipes or down for less frequent wipes.

If the windshield wipers are in use for about six seconds while driving, the exterior lamps come on automatically if the exterior lamp control is in AUTO. See “Wiper-Activated Headlamps” later in this section.

OFF: Use to turn the wipers off.

1X (Mist): For a single wipe, briefly move the wiper lever down. For several wipes, hold the wiper lever down.

Clear snow and ice from the wiper blades and windshield before using them. If frozen to the windshield, carefully loosen or thaw them. Damaged blades should be replaced. See *Wiper Blade Replacement on page 10-28*.

Heavy snow or ice can overload the wiper motor. See *Electrical System Overload on page 10-31*.

Wiper Parking

When using intermittent or Rainsense™ wipes, the wipers pause briefly on the windshield. If the wiper lever is moved to OFF or if Rainsense and additional wipes are not required, the wipers may move to the base of the windshield.

If the ignition is put in OFF while the wipers are on LO, HI, or INT, they will immediately stop.

If the windshield wiper lever is then moved to OFF before the driver door is opened or within 10 minutes, the wipers will restart and move to the base of the windshield.

If the ignition is put in OFF while the wipers are performing wipes due to windshield washing or Rainsense wipes, the wipers continue to run until they reach the base of the windshield.

Rainsense

If equipped with Rainsense, a sensor near the top center of the windshield detects the amount of water on the windshield and controls the frequency of the windshield wiper.

Keep this area of the windshield clear of debris to allow for best system performance.

INT (Rainsense Wipe Sensitivity Control): Move the windshield wiper lever to INT. Turn the INT band on the wiper lever to adjust the sensitivity.

- Turn the band up for more sensitivity to moisture.
- Turn the band down for less sensitivity to moisture.
- Move the windshield wiper lever out of the INT position to deactivate Rainsense.

This feature can be changed. See “Comfort and Convenience” under *Vehicle Personalization on page 5-48*.

Wiper Arm Assembly Protection

When using an automatic car wash, move the windshield wiper lever to OFF. This disables the automatic Rainsense windshield wipers.

With Rainsense, if the transmission is in N (Neutral) and the vehicle speed is very slow, the wipers will automatically stop at the base of the windshield.

The wiper operations return to normal when the transmission is no longer in N (Neutral) or the vehicle speed has increased.

↓ **(Windshield Washer):** Pull the windshield wiper lever toward you to spray windshield washer fluid and activate the wipers. The wipers will continue until the lever is released or the maximum wash time is reached. When the windshield wiper lever is released, additional wipes may occur depending on how long the windshield washer had been activated. See *Washer Fluid on page 10-22* for information on filling the windshield washer fluid reservoir.

⚠ Warning

In freezing weather, do not use the washer until the windshield is warmed. Otherwise the washer fluid can form ice on the windshield, blocking your vision.

Wiper-Activated Headlamps

This feature activates the headlamps and parking lamps after the windshield wipers have been in use for about six seconds. For this feature to work, the exterior lamp control must be in AUTO.

The wiper-activated headlamps immediately turn off when the ignition is turned to LOCK/OFF, or the windshield wiper control is turned off.

Compass

The vehicle may have a compass display on the Driver Information Center (DIC). The compass receives its heading and other information from the Global Positioning System (GPS) antenna, StabiliTrak®, and vehicle speed information.

The compass system is designed to operate for a certain number of miles or degrees of turn before needing a signal from the GPS satellites. When the compass display shows CAL, drive the vehicle for a short distance in an open area where it can receive a GPS signal. The compass system will automatically determine when a GPS signal is restored and provide a heading again. See *Compass Messages on page 5-37* for the messages that may be displayed for the compass.

Clock

The infotainment system controls are used to access the time and date settings through the menu system. See “Home Page” in the infotainment manual for information about how to use the menu system.

Setting the Clock

Time

To set the time:

1. From the Home Page, press the SETTINGS screen button, then press Time and Date.
2. Press Set Time, then press + or − to increase or decrease hours or minutes, and change AM or PM.
3. Press 12-24Hr for a 12 or 24 hour clock.
4. Press ❮ Back to go back to the previous menu.

Date

To set the date:

1. Press the SETTINGS screen button and press Time and Date.
2. Press Set Date and press + or − to increase or decrease month, day, or year.
3. Press ❮ Back to go back to the previous menu.

Auto Set

When on, the time and date will automatically update.

To set auto set:

1. Press the SETTINGS screen button, then press Time and Date.
2. Press Set Time or Set Date.
3. Press Auto Set, then select On-Cell Network or Off-Manual to manually set the time and date.
4. Press ❮ Back to go back to the previous menu.

If auto timing is set, the time displayed on the clock may not update immediately when driving into a new time zone.

Clock Display

When on, the digital clock will display on the infotainment screen.

To set the clock display:

1. Press the SETTINGS screen button and press Time and Date.
2. Press Clock Display, then select Off or On.
3. Press ❮ Back to go back to the previous menu.

Power Outlets

Accessory power outlets can be used to plug in electrical equipment, such as a cell phone or MP3 player.

The vehicle has three 12-volt accessory power outlets:

- Inside the center console storage in front of the armrest cover.
- Inside the armrest bin behind the cupholders.
- On the rear of the center console, if equipped.

These outlets are powered while the vehicle is in ON/RUN/START or ACC/ACCESSORY mode, or until the driver door is opened within 10 minutes of turning off the vehicle.

Lift the cover to access the accessory power outlet.

Certain electrical accessories may not be compatible with the accessory power outlet and could overload a vehicle circuit breaker or adapter fuse. If overloaded, the circuit breaker will reset after all devices are disconnected or if Retained Accessory Power (RAP) is turned off and then back on. See *Retained Accessory Power (RAP) on page 9-19*. Wait one minute to allow the circuit breaker to reset before reconnecting devices or turning RAP back on. If the problem continues, the issue could be within your device. Try another known good device to make sure the circuit breaker is operating properly. If this does not resolve your problem, see your dealer.

It is possible to replace the factory power outlet with a cigar lighter receptacle, if desired. This requires the factory installed circuit breaker to be replaced with a standard minifuse by the dealer. A minifuse will not reset and will have to be replace if blown.

⚠ Caution

Failure to replace the circuit breaker with the minifuse could overheat the cigar lighter and damage the vehicle.

When adding electrical equipment, be sure to follow the proper installation instructions included with the equipment. See *Add-On Electrical Equipment on page 9-70*.

⚠ Caution

Hanging heavy equipment from the power outlet can cause damage not covered by the vehicle warranty. The power outlets are designed for accessory power plugs only, such as cell phone charge cords.

Power Outlet 110 Volt Alternating Current

If equipped, this power outlet is inside the center console. It can be used to plug in electrical equipment that uses a maximum limit of 150 watts.

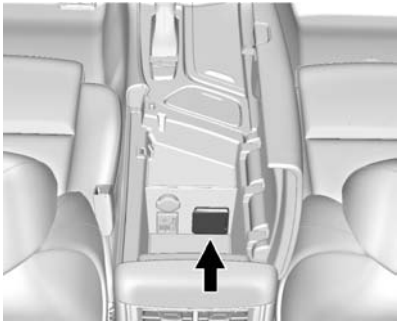

An indicator light on the outlet turns on to show it is in use. The light comes on when the ignition is in ON/RUN, equipment requiring less than 150 watts is plugged into the outlet, and no system fault is detected.

The indicator light does not come on when the ignition is in LOCK/OFF or if the equipment is not fully seated into the outlet.

If equipment is connected using more than 150 watts or a system fault is detected, a protection circuit shuts off the power supply and the indicator light turns off. To reset the circuit, unplug the item and plug it back in or turn the Retained Accessory Power (RAP) off and then back on. See *Retained Accessory Power (RAP) on page 9-19*. The power restarts when equipment using 150 watts or less is plugged into the outlet and a system fault is not detected.

The power outlet is not designed for the following and may not work properly, if this equipment is plugged in:

- Equipment with high initial peak wattage such as: compressor-driven refrigerators and electric power tools.
- Other equipment requiring an extremely stable power supply such as: microcomputer-controlled electric blankets, touch sensor lamps, etc.

Warning Lights, Gauges, and Indicators

Warning lights and gauges can signal that something is wrong before it becomes serious enough to cause an expensive repair or replacement. Paying attention to the warning lights and gauges could prevent injury.

Warning lights come on when there could be a problem with a vehicle function. Some warning lights come on briefly when the engine is started to indicate they are working.

Gauges can indicate when there could be a problem with a vehicle function. Often gauges and warning lights work together to indicate a problem with the vehicle.

When one of the warning lights comes on and stays on while driving, or when one of the gauges shows there may be a problem, check the section that explains what to do. Follow this manual's advice. Waiting to do repairs can be costly and even dangerous.

Instrument Cluster

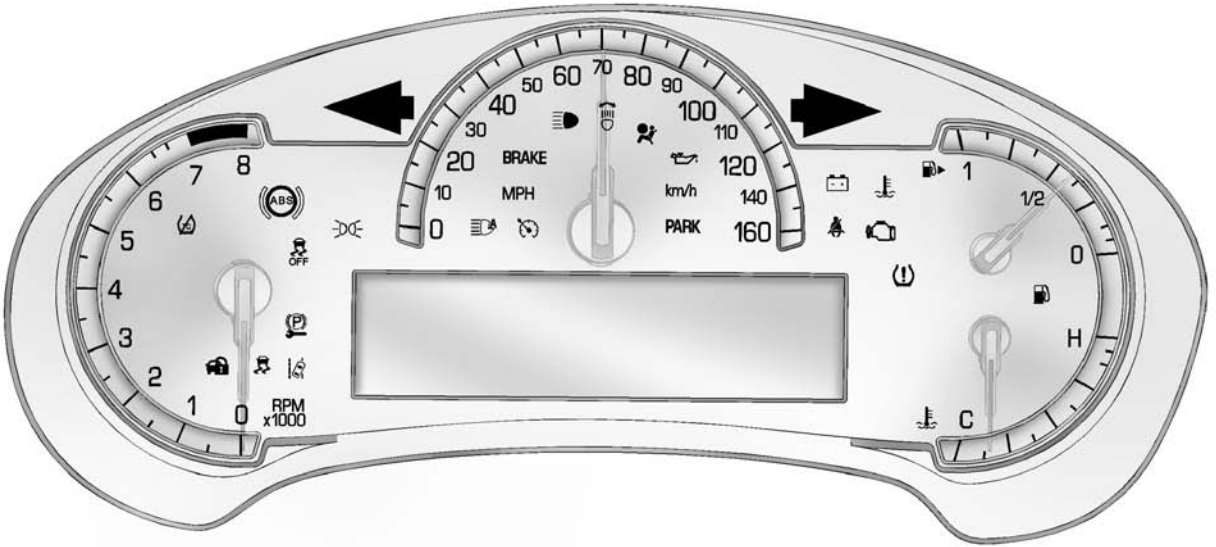

English Base Cluster Shown, Metric Similar

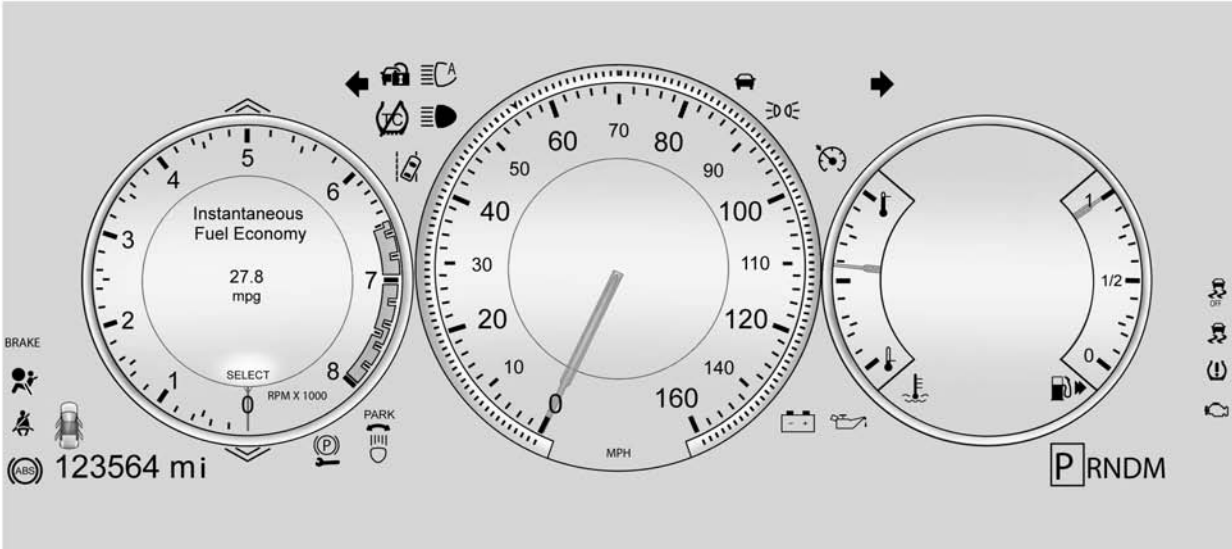

English Uplevel Balanced Cluster Shown, Metric Similar

Reconfigurable Instrument Cluster

There are four uplevel instrument cluster display configurations to choose from: Simple, Performance, Balanced, or Enhanced.

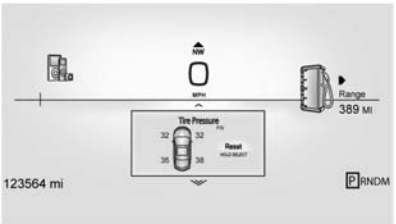

Simple Configuration

The Simple configuration has one interactive display zone in the center.

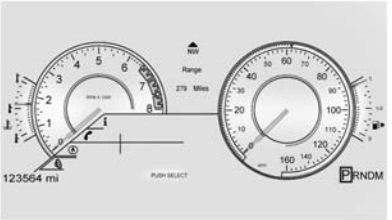

Performance Configuration

The Performance configuration has two interactive display zones: one in the center of the speedometer and one in the lower left of the cluster screen.

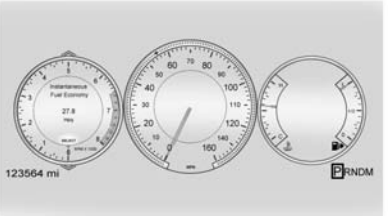

Balanced Configuration

The Balanced configuration has three interactive display zones: one in the center of each of the gauges.

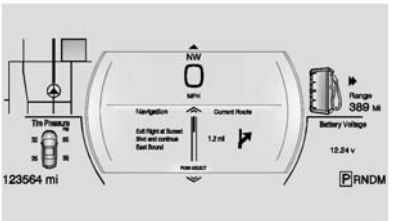

Enhanced Configuration

The Enhanced configuration has three interactive display zones.

Use the five-way control on the right side of the steering wheel to move between the different display zones and scroll through the different displays.

To change the cluster configuration:

1. With the vehicle in P (Park), find the Settings page in one of the interactive display zones on the cluster.
2. Press SEL to enter the Settings menu.
3. Scroll down to highlight Display Layout. Then press SEL to select it.
4. Each layout in the menu is represented by a small preview image of the display layout. Scroll up or down and highlight the selection. Press SEL to select the desired cluster configuration.
5. Exit the Display Layout menu by pressing <.

Cluster Application Displays

The cluster can display information regarding Navigation, Audio, and Phone. On the base cluster, a speedometer can also be displayed in the center zone.

Navigation (If Equipped)

If there is no active route, a compass will be displayed. If there is an active route, press SEL to end route guidance or turn the voice prompts on or off.

Audio

While the Audio application page is displayed, press SEL to enter the Audio menu. In the Audio menu, search for music, select from favorites, or change the audio source

Phone

While the Phone application page is displayed, press SEL to enter the Phone menu. In the Phone menu, if there is no active phone call, view recent calls, select from favorites, or scroll through contacts. If there is an active call, mute the phone or switch to handset operation.

Cluster Settings Menu

To enter the cluster settings menu:

1. Use the five-way control on the right side of the steering wheel to find the Settings page in one of the interactive display zones on the cluster.
2. Press SEL on the center of the five-way control to enter the Settings menu.

Units: Press SEL while Units is highlighted to enter the Unit menu. Choose English or metric units by pressing SEL while the desired item is highlighted. A checkmark will be displayed next to the selected item.

Info Pages: Press SEL while Info Pages is highlighted to select the items to be displayed in the DIC info displays. See *Driver Information Center (DIC) on page 5-30*.

Display Layout: Press SEL while Display Layout is highlighted to change the configuration of the uplevel cluster. See “Reconfigurable Instrument Cluster” earlier in this section.

Open Source Software: Press SEL while Open Source Software is highlighted to display open source software information.

Speedometer

The speedometer shows the vehicle's speed in either kilometers per hour (km/h) or miles per hour (mph).

Odometer

The odometer shows how far the vehicle has been driven, in either kilometers or miles.

This vehicle has a tamper-resistant odometer. If the vehicle needs a new cluster installed, the new odometer is set to the mileage of the old odometer. If this is not possible, it is set at zero and a label is put on the driver door to show the old mileage reading.

Trip Odometer

The trip odometer can show how far the vehicle has been driven since the trip odometer was last reset.

The trip odometer is accessed and reset through the Driver Information Center (DIC). See *Driver Information Center (DIC) on page 5-30*.

Tachometer

The tachometer displays the engine speed in revolutions per minute (rpm).

⚠ Caution

If the engine is operated with the tachometer in the shaded warning area, the vehicle could be damaged, and the damages would not be covered by the vehicle warranty. Do not operate the engine with the tachometer in the shaded warning area.

Fuel Gauge

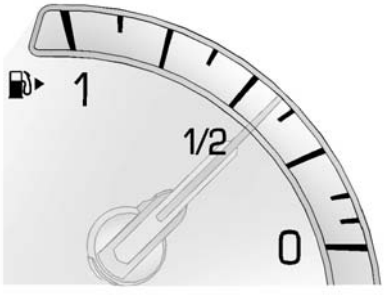

Base Level

Uplevel Balanced Configuration, Performance Similar

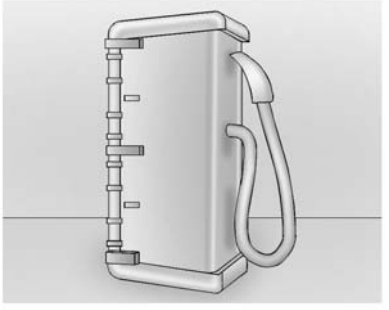

Uplevel Simple and Enhanced Configurations

When the ignition is on, the fuel gauge indicates about how much fuel is left in the tank.

There is an arrow near the fuel gauge pointing to the side of the vehicle the fuel door is on.

When the indicator nears empty, the low fuel light comes on. There still is a little fuel left, but the vehicle should be refueled soon.

Here are four things that some owners ask about. None of these show a problem with the fuel gauge:

- At the service station, the fuel pump shuts off before the gauge reads full.
- It takes a little more or less fuel to fill up than the gauge indicated. For example, the gauge may have indicated the tank was half full, but it actually took a little more or less than half the tank's capacity to fill the tank.
- The gauge moves a little while turning a corner or speeding up.
- The gauge takes a few seconds to stabilize after the ignition is turned on, and goes back to empty when the ignition is turned off.

Engine Coolant Temperature Gauge

Metric Base Level

English Base Level

Uplevel Balanced Configuration

This gauge measures the temperature of the vehicle's engine.

While driving under normal operating conditions, if the needle moves into the red area, the engine is too hot. Pull off the road, stop the vehicle, and turn off the engine as soon as possible.

Safety Belt Reminders

Driver Safety Belt Reminder Light

There is a driver safety belt reminder light on the instrument cluster.

When the vehicle is started, this light flashes and a chime may come on to remind the driver to fasten their safety belt. Then the light stays on solid until the belt is buckled. This cycle may continue several times if the driver remains or becomes unbuckled while the vehicle is moving.

If the driver safety belt is buckled, neither the light nor the chime comes on.

Passenger Safety Belt Reminder Light

There is a passenger safety belt reminder light near the passenger airbag status indicator. See *Passenger Sensing System on page 3-28*.

When the vehicle is started, this light flashes and a chime may come on to remind passengers to fasten their safety belt. Then the light stays on solid until the belt is buckled. This cycle continues several times if the passenger remains or becomes unbuckled while the vehicle is moving.

If the passenger safety belt is buckled, neither the chime nor the light comes on.

The front passenger safety belt warning light and chime may turn on if an object is put on the seat such as a briefcase, handbag, grocery bag, laptop, or other electronic device. To turn off the warning light and/or chime, remove the object from the seat or buckle the safety belt.

Airbag Readiness Light

This light shows if there is an electrical problem with the airbag system. The system check includes the airbag sensor(s), passenger sensing system, the pretensioners, the airbag modules, the wiring, and the crash sensing and diagnostic

module. For more information on the airbag system, see *Airbag System on page 3-22*.

The airbag readiness light comes on for several seconds when the vehicle is started. If the light does not come on then, have it fixed immediately.

⚠ Warning

If the airbag readiness light stays on after the vehicle is started or comes on while driving, it means the airbag system might not be working properly. The airbags in the vehicle might not inflate in a crash, or they could even inflate

(Continued)

Warning (Continued)

without a crash. To help avoid injury, have the vehicle serviced right away.

If there is a problem with the airbag system, a Driver Information Center (DIC) message may also come on. See *Airbag System Messages on page 5-45*.

Passenger Airbag Status Indicator

The vehicle has a passenger sensing system. See *Passenger Sensing System on page 3-28* for important safety information. The passenger airbag status indicator is in the overhead console.

United States

Canada and Mexico

When the vehicle is started, the passenger airbag status indicator will light ON and OFF, or the symbol for on and off for several seconds as a system check. Then, after several more seconds, the status indicator will light either ON or OFF, or the on or off symbol to let you know the status of the front outboard passenger frontal airbag and knee airbag.

If the word ON or the on symbol is lit on the passenger airbag status indicator, it means that the front outboard passenger frontal airbag and knee airbag are allowed to inflate.

If the word OFF or the off symbol is lit on the airbag status indicator, it means that the passenger sensing system has turned off the front outboard passenger frontal airbag and knee airbag.

If, after several seconds, both status indicator lights remain on, or if there are no lights at all, there may be a problem with the lights or the passenger sensing system. See your dealer for service.

⚠ Warning

If the airbag readiness light ever comes on and stays on, it means that something may be wrong with the airbag system. To help avoid injury to yourself or others,

(Continued)

Warning (Continued)

have the vehicle serviced right away. See *Airbag Readiness Light on page 5-17* for more information, including important safety information.

Charging System Light

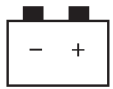

On some vehicles the charging system light comes on briefly when the ignition is turned on, but the engine is not running, as a check to show the light is working. It should go out when the engine is started. For vehicles with a reconfigurable cluster, this light may not come on when the ignition is turned on.

If the light stays on, or comes on while driving, there may be a problem with the electrical charging system. Have it checked by your dealer. Driving while this light is on could drain the battery.

When this light comes on, or is flashing, the Driver Information Center (DIC) also displays a message.

See *Battery Voltage and Charging Messages on page 5-37*.

If a short distance must be driven with the light on, be sure to turn off all accessories, such as the radio and air conditioner.

Malfunction Indicator Lamp

A computer system called OBD II (On-Board Diagnostics-Second Generation) monitors the operation of the vehicle to ensure emissions are at acceptable levels, helping to maintain a clean environment. The malfunction indicator lamp comes

on when the vehicle is placed in Service Only Mode, as a check to show it is working. If it does not, have the vehicle serviced by your dealer. See *Ignition Positions on page 9-16*.

If the malfunction indicator lamp comes on while the engine is running, this indicates that there is an OBD II problem and diagnosis and service might be required.

Malfunctions often are indicated by the system before any problem is apparent. Being aware of the light can prevent more serious damage to the vehicle. This system also assists the service technician in correctly diagnosing any malfunction.

⚠ Caution

If the vehicle is continually driven with this light on, the emission controls might not work as well, the vehicle fuel economy might not be as good, and the engine might not run as smoothly. This could lead to costly repairs that might not be covered by the vehicle warranty.

⚠ Caution

Modifications made to the engine, transmission, exhaust, intake, or fuel system of the vehicle or the replacement of the original tires with other than those of the same Tire Performance Criteria (TPC) can affect the vehicle's emission controls and can cause this light to come on. Modifications to these systems

(Continued)

Caution (Continued)

could lead to costly repairs not covered by the vehicle warranty. This could also result in a failure to pass a required Emission Inspection/Maintenance test. See *Accessories and Modifications on page 10-2*.

This light comes on during a malfunction in one of two ways:

Light Flashing: A misfire condition has been detected. A misfire increases vehicle emissions and could damage the emission control system on the vehicle. Diagnosis and service might be required.

To prevent more serious damage to the vehicle:

- Reduce vehicle speed.
- Avoid hard accelerations.
- Avoid steep uphill grades.

- If towing a trailer, reduce the amount of cargo being hauled as soon as it is possible.

If the light continues to flash, stop and park the vehicle. Turn the vehicle off, wait at least 10 seconds, and restart the engine. If the light is still flashing, follow the previous steps and see your dealer for service as soon as possible.

Light On Steady: An emission control system malfunction has been detected on the vehicle. Diagnosis and service might be required.

The following may correct an emission control system malfunction:

- Make sure the capless funnel adapter is removed, if fuel has been added to the vehicle using the capless funnel adapter. See “Filling the Tank with a Portable Gas Can” under *Filling the Tank on page 9-62*. The diagnostic system can detect if the adapter has been left installed in the vehicle, allowing fuel to evaporate into the atmosphere. A few driving trips with the adapter removed should turn off the light.
- Check that good quality fuel is used. Poor fuel quality causes the engine not to run as efficiently as designed and may cause stalling after start-up, stalling when the vehicle is changed into gear, misfiring, hesitation on acceleration, or stumbling on acceleration. These conditions might go away once the engine is warmed up.

If one or more of these conditions occurs, change the fuel brand used. It may require at least one full tank of the proper fuel to turn the light off.

See *Fuel on page 9-60*.

If none of the above have made the light turn off, your dealer can check the vehicle. The dealer has the proper test equipment and diagnostic tools to fix any mechanical or electrical problems that might have developed.

Emissions Inspection and Maintenance Programs

Depending on where you live, your vehicle may be required to participate in an emission control system inspection and maintenance program. For the inspection, the emission system test equipment will likely connect to the vehicle's Data Link Connector (DLC).

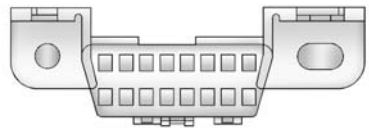

The DLC is under the instrument panel to the left of the steering wheel. See your dealer if assistance is needed.

The vehicle may not pass inspection if:

- The malfunction indicator lamp is on with the engine running, or if the vehicle is placed in Service Only Mode and the malfunction indicator lamp does not come on. See your dealer for assistance in verifying proper operation of the malfunction indicator lamp.
- The OBD II (On-Board Diagnostics) system determines that critical emission control systems have not been completely diagnosed. The vehicle would be considered not ready for inspection. This can happen if the 12-volt battery has recently been replaced or run down. The diagnostic system is designed to evaluate critical emission control systems during normal driving. This can take several days of routine driving. If this has been done and the vehicle still does not pass the inspection for lack of OBD II system readiness, your dealer can prepare the vehicle for inspection.

Brake System Warning Light

The vehicle brake system consists of two hydraulic circuits. If one circuit is not working, the remaining circuit can still work to stop the vehicle. For normal braking performance, both circuits need to be working.

If the warning light comes on, there is a brake problem. Have the brake system inspected right away.

Metric

BRAKE

English

This light comes on briefly when the vehicle is turned on. If it does not come on then, have it fixed so it will be ready to warn if there is a problem.

If the light comes on and stays on, there is a base brake problem.

⚠ Warning

The brake system might not be working properly if the brake system warning light is on. Driving with the brake system warning light on can lead to a crash. If the light is still on after the vehicle has been pulled off the road and carefully stopped, have the vehicle towed for service.

Parking Brake Light

PARK

Metric **English**

This light comes on when the parking brake is applied. If the light continues flashing after the parking brake is released, or while driving, there is a problem with the Electric Parking Brake system or another system. A message may also display in the Driver Information Center (DIC). See *Brake System Messages on page 5-37*.

If the light does not come on, or remains flashing, see your dealer.

Service Electric Parking Brake Light

On some vehicles the service electric parking brake light should come on briefly when the vehicle is in ON/RUN. If it does not come on, have it fixed so it will be ready to warn if there is a problem. For vehicles with the reconfigurable cluster, this light may not come on when the vehicle is in ON/RUN.

If this light stays on, there is a problem with a system on the vehicle that is causing the parking brake system to work at a reduced level. The vehicle can still be driven, but should be taken to a dealer as soon as possible. See *Electric Parking Brake on page 9-28*. If a message displays in the Driver Information Center (DIC), see *Brake System Messages on page 5-37*.

Antilock Brake System (ABS) Warning Light

This light comes on briefly when the engine is started.

If it does not, have the vehicle serviced by your dealer.

If the ABS light stays on, turn the ignition off.

If the light comes on while driving, stop as soon as it is safely possible and turn off the vehicle. Then start the engine again to reset the system. If the ABS light stays on, or comes on again while driving, the

vehicle needs service. A chime may also sound when the light comes on steady.

If the ABS light is the only light on, the vehicle has regular brakes, but the antilock brakes are not functioning.

If both the ABS and the brake system warning light are on, the vehicle's antilock brakes are not functioning and there is a problem with the regular brakes. See your dealer for service.

See *Brake System Warning Light on page 5-22* and *Brake System Messages on page 5-37*.

Lane Departure Warning (LDW) Light

For some vehicles with the Lane Departure Warning (LDW) system, this light briefly comes on amber while starting the vehicle. If it does not, have the vehicle serviced by your dealer. If the system is working normally, the indicator light then turns off. For vehicles with the uplevel cluster, this light may not come on when starting the vehicle.

This light comes on green when the system is on and ready to operate. When the system determines that the vehicle is leaving its lane without using the turn signal, this light will change to amber and flash.

See *Lane Departure Warning (LDW) on page 9-58*.

Vehicle Ahead Indicator

For vehicles with the Forward Collision Alert (FCA) system, this light displays green when a vehicle is detected ahead. This light is located in the Driver Information Center (DIC) on vehicles with a base cluster.

This light will display amber when you are following a vehicle ahead much too closely.

See *Forward Collision Alert (FCA) System on page 9-52*.

Traction Off Light

This light comes on briefly while starting the engine. If it does not, have the vehicle serviced by your dealer. If the system is working normally, the indicator light then turns off. For vehicles with a reconfigurable cluster, this light is in the display area and it may not come on when the ignition is turned on.

The traction off light comes on when the Traction Control System (TCS) has been turned off by pressing and releasing the TCS/StabiliTrak button.

This light and the StabiliTrak OFF light come on when StabiliTrak is turned off.

If the TCS is off, wheel spin is not limited. Adjust driving accordingly.

See *Traction Control/Electronic Stability Control on page 9-30*.

StabiliTrak® OFF Light

This light comes on briefly while starting the engine. If it does not, have the vehicle serviced by your dealer.

This light comes on when the StabiliTrak system is turned off. If StabiliTrak is off, the Traction Control System (TCS) is also off.

If the StabiliTrak and TCS are off, the system does not assist in controlling the vehicle. Turn on the TCS and the StabiliTrak systems and the warning light turns off.

See *Traction Control/Electronic Stability Control on page 9-30*.

Traction Control System (TCS)/StabiliTrak® Light

This light comes on briefly when the engine is started.

If the light does not come on, have the vehicle serviced by your dealer. If the system is working normally, the indicator light turns off.

If the light is on and not flashing, the TCS, and potentially the StabiliTrak system have been disabled. A DIC message may display. Check the DIC messages to determine which feature(s) is no longer functioning and whether the vehicle requires service.

If the indicator/warning light is on and flashing, the TCS and/or the StabiliTrak system is actively working.

See *Traction Control/Electronic Stability Control on page 9-30*.

Engine Coolant Temperature Warning Light

On some vehicles this light comes on briefly while starting the vehicle. If it does not, have the vehicle serviced by the dealer. If the system is working normally the indicator light goes off. For vehicles with the reconfigurable cluster, this light may not come on when starting the vehicle.

⚠ Caution

The engine coolant temperature warning light indicates that the vehicle has overheated. Driving with this light on can damage the engine and it may not be covered by the vehicle warranty. See *Engine Overheating on page 10-21*.

The engine coolant temperature warning light comes on when the engine has overheated.

If this happens pull over and turn off the engine as soon as possible. See *Engine Overheating on page 10-21*.

Tire Pressure Light

For vehicles with the Tire Pressure Monitor System (TPMS), this light comes on briefly when the engine is started. It provides information about tire pressures and the TPMS.

When the Light Is On Steady

This indicates that one or more of the tires are significantly underinflated.

A Driver Information Center (DIC) tire pressure message may also display. See *Tire Messages on page 5-46*. Stop as soon as possible, and inflate the tires to the pressure value shown on the Tire and Loading Information label. See *Tire Pressure on page 10-48*.

When the Light Flashes First and Then Is On Steady

If the light flashes for about a minute and then stays on, there may be a problem with the TPMS. If the problem is not corrected, the light will come on at every ignition cycle. See *Tire Pressure Monitor Operation on page 10-51*.

Engine Oil Pressure Light

⚠ Caution

Lack of proper engine oil maintenance can damage the engine. Driving with the engine oil low can also damage the engine. The repairs would not be covered by the vehicle warranty. Check the oil level as soon as possible. Add oil if required, but if the oil level is within the operating range and the oil pressure is still low, have the vehicle serviced. Always follow the maintenance schedule for changing engine oil.

This light should come on briefly as the engine is started. If it does not come on, have the vehicle serviced by your dealer.

If the light comes on and stays on, it means that oil is not flowing through the engine properly. The vehicle could be low on oil and might have some other system problem. See your dealer.

Low Fuel Warning Light

This light is near the fuel gauge and comes on briefly when the ignition is turned on as a check to show it is working. For vehicles with a reconfigurable cluster, this light is in the display area and may not come on when the ignition is turned on.

It also comes on when the fuel tank is low on fuel. The light turns off when fuel is added. If it does not, have the vehicle serviced.

Security Light

On some vehicles the immobilizer light should come on briefly as the engine is started. If it does not come on, have the vehicle serviced by your dealer. If the system is working normally, the indicator light turns off. For vehicles with the reconfigurable cluster, this light may not come on when the engine is started.

If the light stays on and the engine does not start, there could be a problem with the theft-deterrent system. See *Immobilizer Operation on page 2-18*.

High-Beam On Light

This light comes on when the high-beam headlamps are in use.

See *Headlamp High/Low-Beam Changer on page 6-3*.

IntelliBeam® Light

This light comes on when the IntelliBeam system, if equipped, is enabled.

See *Exterior Lamp Controls on page 6-1*.

Adaptive Forward Lighting (AFL) Light

This light should come on briefly as the vehicle is started. If it does not come on, have the vehicle serviced by your dealer. For vehicles with a reconfigurable cluster, this light is in the display area and may not come on when the ignition is turned on.

This light comes on solid when there is a problem with the AFL system. It flashes when the system is switching between lighting modes. See *Adaptive Forward Lighting (AFL) on page 6-5*.

Lamps On Reminder

This light comes on when the exterior lamps are in use. See *Exterior Lamp Controls on page 6-1*.

Cruise Control Light

The cruise control light is white when the cruise control is on and ready, and turns green when the cruise control is set and active.

See *Cruise Control on page 9-34*.

Adaptive Cruise Control Light

This light is white when the Adaptive Cruise Control (ACC, if equipped) is on and ready, and turns green when the ACC is set and active. See *Adaptive Cruise Control on page 9-37*.

Door Ajar Light

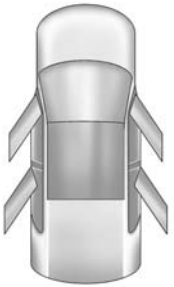

For vehicles equipped with this light, it comes on when a door is open or not securely latched. Before driving, check that all doors are properly closed. See *Door Ajar Messages on page 5-38* for more information.

Information Displays

Driver Information Center (DIC)

The DIC displays are shown in the left and right interactive display zones on the instrument cluster. The displays show the status of many vehicle systems. The controls for the DIC are on the right steering wheel control.

∧ or ∨ : Press to move up or down in a list.

< or >: Press to move between the interactive display zones in the cluster. Press < to go back to the previous menu.

SEL (Select): Press to open a menu or select a menu item. Press and hold to reset values on certain screens.

DIC Information Display Options

The information displays on the DIC can be turned on or off through the Settings menu.

1. Press SEL while viewing the Settings page in the center display zone on the cluster.
2. Scroll to Info Pages and press SEL.
3. Press ∧ or ∨ to move through the list of possible information displays.
4. Press SEL while an item is highlighted to select or deselect that item. When an item is selected, a checkmark will appear next to it.

DIC Information Displays

The following is the list of all possible DIC information displays. Some of the information displays may not be available for your particular vehicle.

Speed: Shows the vehicle speed in either kilometers per hour (km/h) or miles per hour (mph).

Trip 1 and Trip 2 (Base Cluster) / Trip 1 or Trip 2 and Average Fuel Economy (Uplevel Cluster): Shows the current distance traveled, in either kilometers (km) or miles (mi), since the trip odometer was last reset. The trip odometer can be reset by pressing and holding SEL while this display is active.

The average fuel economy shows the approximate average liters per 100 kilometers (L/100 km) or miles per gallon (mpg). This number is calculated based on the number of L/100 km (mpg) recorded since the last time this menu item was reset. The Average Fuel Economy can be reset along with the trip odometer by pressing and holding SEL while this display is active.

Fuel Range: Shows the approximate distance the vehicle can be driven without refueling. LOW will be displayed when the vehicle is low on fuel. The fuel range estimate is based on an average of the vehicle's fuel economy over recent driving history and the amount of fuel remaining in the fuel tank.

Average Fuel Economy (Base Cluster): Shows the approximate average liters per 100 kilometers (L/100 km) or miles per gallon (mpg). This number is calculated based on the number of L/100 km (mpg) recorded since the last time this menu item was reset. The Average Fuel Economy can be reset by pressing and holding SEL while this display is active.

Instantaneous Fuel Economy: Shows the current fuel economy in either liters per 100 kilometers (L/100 km) or miles per gallon (mpg). This number reflects only the fuel economy that the vehicle has right now and changes frequently as driving conditions change.

Average Speed: Shows the average speed of the vehicle in kilometers per hour (km/h) or miles per hour (mph). This average is calculated based on the various vehicle speeds recorded since the last reset of this value. The average speed can be reset by pressing and holding SEL while this display is active.

Timer: This display can be used as a timer. To start the timer, press SEL while this display is active. The display will show the amount of time that has passed since the timer was last reset. To stop the timer, press SEL briefly while this display is active and the timer is running. To reset the timer to zero, press and hold SEL while this display is active.

Compass (Base Cluster): Shows the direction the vehicle is driving.

Turn Arrow: Shows the next maneuver when using route guidance.

Travel Time: Shows the estimated time duration remaining for the current route.

Distance to Destination: Shows the distance to the destination when using route guidance.

Speed Limit: Shows the current speed limit on vehicles with the navigation system. The information for this page comes from a roadway database.

Speed Warning: Allows the driver to set a speed that they do not want to exceed. To set the Speed Warning, press SEL when Speed Warning is displayed. Press ∧ or

∨ to adjust the value. This feature can be turned off by pressing and holding SEL while viewing this page. If the selected speed limit is exceeded, a pop-up warning is displayed and a chime may sound.

Cruise Set Speed: Shows the speed the cruise control or Adaptive Cruise Control (ACC, if equipped) is set to.

Follow Distance Indicator/Gap Setting: The current follow time to the vehicle ahead is displayed as a time value on this page when ACC is not engaged. When ACC has been engaged, the Follow Distance Indicator page switches to the Gap Setting page. This page shows the current gap setting along with the vehicle ahead telltale.

Battery Voltage: Shows the current battery voltage.

Engine Boost: Shows the current amount of boost being added.

Oil Life: Shows an estimate of the oil's remaining useful life.
If REMAINING OIL LIFE 99% is displayed, that means 99% of the current oil life remains.

When the remaining oil life is low, the CHANGE ENGINE OIL SOON message will appear on the display. See *Engine Oil Messages on page 5-39*. The oil should be changed as soon as possible. See *Engine Oil on page 10-10*. In addition to the engine oil life system monitoring the oil life, additional maintenance is recommended in the Maintenance Schedule. See *Maintenance Schedule on page 11-3*.

The Oil Life display must be reset after each oil change. It will not reset itself. Do not to reset the Oil Life display accidentally at any time other than when the oil has just been changed. It cannot be reset accurately until the next oil change. To reset the engine oil life system, press and hold SEL for several seconds while the Oil Life display is active. See *Engine Oil Life System on page 10-12*.

Tire Pressure: Shows the approximate pressures of all four tires. Tire pressure is displayed in either kilopascal (kPa) or in pounds per square inch (psi). If the pressure is low, the value for that tire is shown in amber. See *Tire Pressure Monitor System on page 10-50* and *Tire Pressure Monitor Operation on page 10-51*.

Vehicle Odometer (Base Cluster): Shows the odometer.

Blank Page: The Blank Page display allows for no information to be displayed in the DIC display zone(s).

Head-Up Display (HUD)

⚠ Warning

If the HUD image is too bright or too high in your field of view, it may take you more time to see things you need to see when it is dark outside. Be sure to keep the HUD image dim and placed low in your field of view.

If equipped with HUD, some information concerning the operation of the vehicle is projected onto the windshield. The image is projected through the HUD lens on top of the instrument panel. The information appears as an image focused out toward the front of the vehicle.

⚠ Caution

If you try to use the HUD image as a parking aid, you may misjudge the distance and damage your vehicle. Do not use the HUD image as a parking aid.

The HUD information can be displayed in various languages in some vehicles. The speedometer reading and other numerical values can be displayed in either English or metric units.

The language selection is changed through the radio and the units of measurement is changed through the instrument cluster. See *Vehicle Personalization on page 5-48* and “Cluster Settings Menu” under *Instrument Cluster on page 5-10*.

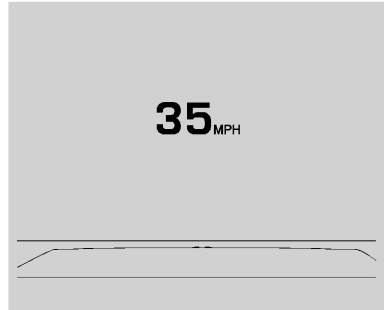

HUD Display on the Vehicle Windshield

The HUD may display some of the following vehicle information and vehicle messages or alerts:

- Speed
- Tachometer
- Audio
- Phone
- Navigation
- Collision Alert
- Cruise Control

- Lane Departure
- Low Fuel

Some vehicle messages or alerts displayed in the HUD may be cleared by using the steering wheel controls. See *Vehicle Messages on page 5-36*.

The HUD control is to the left of the steering wheel.

To adjust the HUD image:

1. Adjust the driver seat.
2. Start the engine.

Use the following settings to adjust the HUD.

HUD **(Image Adjustment):** Press down or lift up to center the HUD image. The HUD image can only be adjusted up and down, not side to side.

INFO **(Display View):** Press to select the display view. Each press will change the display view.

±☼ **(Image Brightness):** Lift up and hold to brighten the display. Press down and hold to dim the display. Hold down to turn the display off.

The HUD image will automatically dim and brighten to compensate for outside lighting. The HUD brightness control can also be adjusted as needed.

The HUD image can temporarily light up depending on the angle and position of the sunlight on the HUD display. This is normal.

Polarized sunglasses could make the HUD image harder to see.

HUD Views

There are four views in the HUD. Some vehicle information and vehicle messages or alerts may be displayed in any view.

Metric

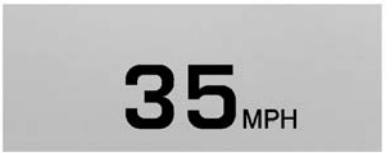

English

Speed View: This display gives the speedometer reading (in English or metric units), speed limit, Adaptive Cruise Control speed, Lane Departure Warning, and Vehicle Ahead indicator. Some information

only appears on vehicles that have these features, and when they are active.

Metric

English

Audio/Phone View: This displays the speed view along with audio/phone information. The current radio station, media type, and incoming calls will be displayed.

All HUD views may briefly display audio information when the driver uses the steering wheel controls to adjust the audio settings appearing in the instrument cluster.

Incoming phone calls appearing in the instrument cluster, may also display in any HUD view.

Metric

English

Navigation View: This display includes the information in the speed view along with Turn-by-Turn Navigation information in some vehicles. The compass heading is displayed when navigation routing is not active.

Navigation Turn-by-Turn Alerts shown in the instrument cluster may also be displayed in any HUD view.

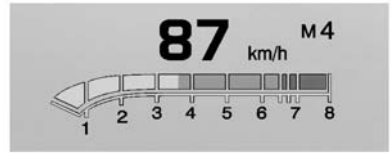

Metric

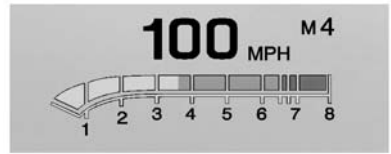

English

Performance View: This displays the speedometer reading, rpm reading, transmission positions, and gear shift indicator.

Care of the HUD

Clean the inside of the windshield to remove any dirt or film that could reduce the sharpness or clarity of the HUD image.

Clean the HUD lens with a soft cloth sprayed with glass cleaner. Wipe the lens gently, then dry it.

HUD Troubleshooting

Check that:

- Nothing is covering the HUD lens.
- HUD brightness setting is not too dim or too bright.
- HUD is adjusted to the proper height.
- Polarized sunglasses are not worn.
- Windshield and HUD lens are clean.

If the HUD image is not correct, contact your dealer.

The windshield is part of the HUD system. If the windshield needs replacing, see *Windshield Replacement on page 10-29*.

Vehicle Messages

Messages displayed on the DIC indicate the status of the vehicle or some action that may be needed to correct a condition. Multiple messages may display one after the other.

The messages that do not require immediate action can be acknowledged and cleared by pressing SEL. The messages that require immediate action cannot be cleared until that action is performed. All messages should be taken seriously and clearing the messages does not correct the problem.

The following are some of the vehicle messages that may be displayed depending on the vehicle content.

Battery Voltage and Charging Messages

BATTERY SAVER ACTIVE

This message displays when the vehicle has detected that the battery voltage is dropping beyond a reasonable point. The battery saver system starts reducing features of the vehicle that may be noticed. At the point that features are disabled, this message displays. Turn off unnecessary accessories to allow the battery to recharge.

LOW BATTERY

This message is displayed when the battery voltage is low. See *Battery on page 10-25*.

SERVICE BATTERY CHARGING SYSTEM

This message is displayed when there is a fault in the battery charging system. Take the vehicle to your dealer for service.

TRANSPORT MODE ON

This message is displayed when the vehicle is in transport mode. Some features can be disabled while in this mode, including Remote Keyless Entry (RKE), remote start, and the vehicle alarm system. Take the vehicle to your dealer for service to turn transport mode off.

Brake System Messages

BRAKE FLUID LOW

This message displays when the brake fluid level is low. See *Brake Fluid on page 10-24*.

RELEASE PARKING BRAKE

This message displays if the electric parking brake is on while the vehicle is in motion. Release it before attempting to drive. See *Electric Parking Brake on page 9-28*.

SERVICE BRAKE ASSIST

This message displays when there is a problem with the brake boost system. When this message displays, the brake pedal may be harder to push and the stopping distance may be longer. Take the vehicle to your dealer for service.

SERVICE PARKING BRAKE

This message displays when there is a problem with the parking brake. Take the vehicle to your dealer for service.

STEP ON BRAKE TO RELEASE PARK BRAKE

This message displays when attempting to release the electric parking brake without the brake pedal applied. See *Electric Parking Brake on page 9-28*.

Compass Messages

Dashes may be displayed if the vehicle temporarily loses communication with the Global Positioning System (GPS).

Cruise Control Messages

ADAPTIVE CRUISE SET TO XXX

This message displays when the Adaptive Cruise Control (ACC) speed is set. See *Adaptive Cruise Control on page 9-37*.

ADAPTIVE CRUISE TEMPORARILY UNAVAILABLE

This message displays when attempting to activate Adaptive Cruise Control (ACC) when it is temporarily unavailable. The ACC system does not need service.

This can occur under the following conditions:

- The radar is not clean. Keep the radar sensors free of mud, dirt, snow, ice, and slush. Clean the entire front and/or rear of the vehicle. For cleaning instructions, see *Exterior Care on page 10-69*.
- Heavy rain or snow is interfering with the radar object detection or camera performance.

CRUISE SET TO XXX

This message displays when the cruise control speed is set. See *Cruise Control on page 9-34*.

NO CRUISE BRAKING GAS PEDAL APPLIED

This message displays when Adaptive Cruise Control (ACC) is active and the driver is pressing the gas pedal. When this occurs, ACC will not brake. See *Adaptive Cruise Control on page 9-37*.

SERVICE ADAPTIVE CRUISE CONTROL

This message displays when the Adaptive Cruise Control (ACC) needs service. Take the vehicle to your dealer.

SHIFT TO PARK BEFORE EXITING

This message may display if Adaptive Cruise Control (ACC) is engaged holding the vehicle at a stop, and the driver attempts to exit the vehicle. Put the vehicle in P (Park) before exiting.

Door Ajar Messages

DOOR OPEN

A door open symbol will be displayed on the DIC showing which door is open. If the vehicle has been shifted out of P (Park), a DOOR OPEN message will also be displayed. The DOOR OPEN message may also be displayed if the vehicle starts to move. Close the door completely.

HOOD OPEN

This message will display along with a hood open symbol when the hood is open. Close the hood completely.

TRUNK OPEN

This message will display along with a symbol when the trunk is open. Close the trunk completely.

Engine Cooling System Messages

A/C OFF ENGINE COOLANT HOT

This message displays when the engine coolant becomes hotter than the normal operating temperature. To avoid added strain on a hot engine, the air conditioning compressor automatically turns off. When the coolant temperature returns to normal, the air conditioning compressor turns back on. The vehicle can continue to be driven.

If this message continues to appear, have the system repaired by your dealer as soon as possible to avoid damage to the engine.

ENGINE OVERHEATED — IDLE ENGINE

This message displays and a chime sounds when the engine coolant temperature is too hot. The engine coolant temperature warning light will also be on. Stop and allow the vehicle to idle until it cools down.

ENGINE OVERHEATED — TURN VEHICLE OFF

This message displays and a continuous chime sounds if the engine cooling system reaches unsafe temperatures for operation. The engine coolant temperature warning light will flash. Stop and turn off the vehicle as soon as it is safe to do so to avoid severe damage. This message clears when the engine has cooled to a safe operating temperature.

Engine Oil Messages

CHANGE ENGINE OIL SOON

This message displays when the engine oil needs to be changed. When you change the engine oil, be sure to reset the oil life system. See *Engine Oil Life System on page 10-12*, *Driver Information Center (DIC) on page 5-30*, *Engine Oil on page 10-10*, and *Maintenance Schedule on page 11-3*.

ENGINE OIL HOT, IDLE ENGINE

This message displays when the engine oil temperature is too hot. Stop and allow the vehicle to idle until it cools down.

ENGINE OIL LOW — ADD OIL

On some vehicles, this message displays when the engine oil level may be too low. Check the oil level before filling to the recommended level. If the oil is not low and this

message remains on, take the vehicle to your dealer for service. See *Engine Oil on page 10-10*.

OIL PRESSURE LOW — STOP ENGINE

This message displays if low oil pressure levels occur. Stop the vehicle as soon as safely possible and do not operate it until the cause of the low oil pressure has been corrected. Check the oil as soon as possible and have the vehicle serviced by your dealer.

Engine Power Messages

ENGINE POWER IS REDUCED

This message displays when the vehicle's engine power is reduced. Reduced engine power can affect the vehicle's ability to accelerate. If this message is on, but there is no reduction in performance, proceed to your destination. The performance may be reduced the next time the vehicle is driven. The vehicle may be driven at a reduced speed while this message is on, but maximum acceleration and speed may be reduced. Anytime this message stays on, the vehicle should be taken to your dealer for service as soon as possible.

Fuel System Messages

FUEL LEVEL LOW

This message displays when the vehicle is low on fuel. Refuel as soon as possible.

Key and Lock Messages

NO REMOTE DETECTED

This message displays when the transmitter battery may be weak. See “Starting the Vehicle with a Low Transmitter Battery” under *Remote Keyless Entry (RKE) System Operation on page 2-3*.

NO REMOTE KEY WAS DETECTED PLACE KEY IN TRANSMITTER POCKET THEN START YOUR VEHICLE

This message displays when trying to start the vehicle if an RKE transmitter is not detected. The transmitter battery may be weak. See “Starting the Vehicle with a Low Transmitter Battery” under *Remote Keyless Entry (RKE) System Operation on page 2-3*.

NO REMOTE PRESS BRAKE TO RESTART

This message displays when attempting to turn off the vehicle and the remote is no longer detected. Restarting is allowed without the remote for five minutes. Press the brake pedal to restart the vehicle.

NUMBER OF KEYS PROGRAMMED

This message displays when programming new keys to the vehicle.

REMOTE LEFT IN VEHICLE

This message displays when leaving the vehicle with the RKE transmitter still inside.

REPLACE BATTERY IN REMOTE KEY

This message displays when the battery in the RKE transmitter needs to be replaced.

Lamp Messages

AFL (ADAPTIVE FORWARD LIGHTING) LAMPS NEED SERVICE

This message displays when the AFL system is disabled and needs service. See your dealer. See *Adaptive Forward Lighting (AFL) on page 6-5*.

AUTOMATIC LIGHT CONTROL ON/OFF

This message is displayed when the exterior lamp control is in AUTO and the lights have turned on or off. See *Automatic Headlamp System on page 6-4*.

XXX TURN INDICATOR FAILURE

When one of the turn signals is out, this message displays to show which bulb needs to be replaced. See *Bulb Replacement on page 10-29* and *Replacement Bulbs on page 10-31*.

TURN SIGNAL ON

This message is displayed if the turn signal has been left on. Turn off the turn signal.

Object Detection System Messages

24 GHz RADARS OFF

This message displays when driving in certain areas where there may be radar interference. Adaptive Cruise Control (ACC), Forward Collision Alert (FCA), and the Active Emergency Braking System may not work or may not work as well. The vehicle does not need service.

AUTOMATIC COLLISION PREP OFF

This message displays when the Active Emergency Braking System has been turned off. See *Active Emergency Braking System on page 9-54*.

AUTOMATIC COLLISION PREP REDUCED

This message displays when the Active Emergency Braking System has been set to the Alert setting. This setting disables most automatic

braking functions of the Auto Collision Preparation feature. Some last-second automatic braking capability is still provided with the Alert setting, but braking is less likely to occur. See *Active Emergency Braking System on page 9-54*.

AUTOMATIC COLLISION PREP UNAVAILABLE

This message displays when the Active Emergency Braking System has been unavailable for some time. The Active Emergency Braking System does not need service.

This can occur under the following conditions:

- The radar is not clean. Keep the radar sensors free of mud, dirt, snow, ice, and slush. Clean the entire front and/or rear of the vehicle. For cleaning instructions, see *Exterior Care on page 10-69*.
- Heavy rain or snow is interfering with the radar object detection or camera performance.

This message may also be displayed if there is a problem with the StabiliTrak system.

FORWARD COLLISION ALERT OFF

This message displays when the Forward Collision Alert has been turned off.

FRONT CAMERA BLOCKED CLEAN WINDSHIELD

This message displays when the camera is blocked. Cleaning the outside of the windshield behind the rearview mirror may correct the issue. The Lane Departure Warning system will not operate. Adaptive Cruise Control (ACC), Forward Collision Alert (FCA), and the Active Emergency Braking System may not work or may not work as well.

LANE DEPARTURE WARNING UNAVAILABLE

This message displays when attempting to activate the Lane Departure Warning (LDW) system when it is temporarily unavailable. The LDW system does not need service.

This message could be due to the camera being blocked. Cleaning the outside of the windshield behind the rearview mirror may correct the issue.

REAR AUTO BRAKE/PARK ASSIST OFF

This message displays when the Parking Assist system has been turned off or when there is a temporary condition causing the system to be disabled.

REAR AUTO BRAKE AND PARK ASSIST UNAVAILABLE

This message displays when attempting to activate the parking and backing features of the Driver

Assistance System when they are temporarily unavailable. The system does not need service.

This can occur under the following conditions:

- The radar is not clean. Keep the radar sensors free of mud, dirt, snow, ice, and slush. Clean the entire front and/or rear of the vehicle. For cleaning instructions, see *Exterior Care on page 10-69*.
- Heavy rain or snow is interfering with the radar object detection or camera performance.

See *Driver Assistance Systems on page 9-45*.

SERVICE AUTOMATIC COLLISION PREP

If this message displays, take the vehicle to your dealer to repair the system.

SERVICE DRIVER ASSIST SYSTEM

If this message displays, take the vehicle to your dealer to repair the system.

Adaptive Cruise Control (ACC), Forward Collision Alert (FCA), Active Emergency Braking System, Assistance Systems for Parking or Backing, and/or Lane Departure Warning (LDW) system may not work. Do not use these systems until the vehicle has been repaired.

SERVICE FRONT CAMERA

If this message remains on after continued driving, the vehicle needs service. Do not use the Lane Departure Warning (LDW) and Forward Collision Alert (FCA) features. Take the vehicle to your dealer.

SERVICE PARK ASSIST

This message displays if there is a problem with the Parking Assist system. Do not use this system to help you park. See your dealer for service.

SERVICE REAR AUTO BRAKE AND PARK ASSIST

This message displays if there is a problem with the parking and backing features of the Driver Assistance System. Do not use this system to help park or back the vehicle. See your dealer for service.

SIDE BLIND ZONE ALERT OFF

This message indicates that the driver has turned the Side Blind Zone Alert (SBZA) system off.

SERVICE SIDE DETECTION SYSTEM

If this message remains on after continued driving, the vehicle needs service. Side Blind Zone Alert

(SBZA) and Rear Cross Traffic Alert (RCTA) features will not work. Take the vehicle to your dealer.

SIDE DETECTION SYSTEM UNAVAILABLE

This message indicates that Side Blind Zone Alert (SBZA) and Rear Cross Traffic Alert (RCTA) are disabled either because the sensor is blocked and cannot detect vehicles in the blind zone, or the vehicle is passing through an open area, such as the desert, where there is insufficient data for operation. This message may also activate during heavy rain or due to road spray. The vehicle does not need service. For cleaning, see "Washing the Vehicle" under *Exterior Care on page 10-69*.

Ride Control System Messages

ALL WHEEL DRIVE OFF

If the vehicle has the All-Wheel-Drive (AWD) system, this message displays when there is a temporary condition making the AWD system unavailable. The vehicle will run in 2WD. This could be caused by:

- Loss of wheel or vehicle speed
- AWD system overheat
- Certain vehicle electrical conditions

This message turns off when the above conditions are no longer present and the warning message is reset.

See *All-Wheel Drive on page 9-26*.

SERVICE ALL WHEEL DRIVE

This message displays if a problem occurs with the All-Wheel-Drive (AWD) system. The vehicle will run in 2WD. This could be caused by:

- An electronics problem
- Worn out or overheated clutch plates
- Various electrical issues

The system may need service. See your dealer.

SERVICE STABILITRAK

This message displays if there is a problem with the StabiliTrak system. See *Traction Control/Electronic Stability Control on page 9-30*.

SERVICE SUSPENSION SYSTEM

This message displays when there is a problem with the MagneRide™ system. See *Driver Mode Control on page 9-31*. Have the vehicle serviced by your dealer.

SERVICE TRACTION CONTROL

This message displays when there is a problem with the Traction Control System (TCS). See *Traction Control/Electronic Stability Control on page 9-30*.

TRACTION CONTROL OFF

This message may display when the Traction Control System (TCS) has been turned off. See *Traction Control/Electronic Stability Control on page 9-30*.

TRACTION CONTROL ON

This message may display when the Traction Control System (TCS) has been turned on. See *Traction Control/Electronic Stability Control on page 9-30*.

Airbag System Messages

SERVICE AIRBAG

This message displays if there is a problem with the airbag system. Take the vehicle to your dealer for service.

Safety Belt Messages

AUTOMATIC SEATBELT TIGHTENING UNAVAILABLE

This message displays when the Automatic Safety Belt Tightening System becomes unavailable. This could be caused by a temporary condition. If the message continues to display, see your dealer.

SERVICE AUTOMATIC SEATBELT TIGHTENING SYSTEM

If this message displays, take the vehicle to your dealer to repair the Automatic Safety Belt Tightening System.

Security Messages

THEFT ATTEMPTED

This message displays if the vehicle detects a tamper condition.

Service Vehicle Messages

SERVICE AC SYSTEM

This message displays if there is a problem with the air conditioning system. Take the vehicle to your dealer for service.

SERVICE POWER STEERING

This message displays if there is a problem with the power steering system. Take the vehicle to your dealer for service.

SERVICE STEERING COLUMN LOCK

This message displays if there is a problem with the steering column lock. Take the vehicle to your dealer for service.

SERVICE VEHICLE SOON

This message displays if there is a problem with the vehicle. Take the vehicle to your dealer for service.

Starting the Vehicle Messages

PRESS BRAKE TO START VEHICLE

This message is displayed when attempting to start the vehicle without first pressing the brake pedal.

SERVICE KEYLESS START SYSTEM

This message is displayed if there is a problem with the pushbutton start system. Take the vehicle to your dealer for service.

TURN STEERING WHEEL START VEHICLE AGAIN

This message may display when you try to start the vehicle, but the column remains locked. Try turning the steering wheel while starting the vehicle to unlock the steering column. If the vehicle still does not start, turn the steering wheel the other way, and try starting the vehicle again.

Tire Messages

SERVICE TIRE MONITOR SYSTEM

This message displays if there is a problem with the Tire Pressure Monitor System (TPMS). See *Tire Pressure Monitor Operation on page 10-51*.

TIRE LEARNING ACTIVE

This message displays when the system is learning new tires. See *Tire Pressure Monitor Operation on page 10-51*.

TIRE LOW ADD AIR TO TIRE

This message displays when the pressure in one or more of the tires is low.

This message also displays LEFT FRONT, RIGHT FRONT, LEFT REAR, or RIGHT REAR to indicate the location of the low tire.

The low tire pressure warning light will also come on. See *Tire Pressure Light on page 5-26*.

If a tire pressure message appears on the DIC, stop as soon as you can. Inflate the tires by adding air until the tire pressure is equal to the values shown on the Tire and Loading Information label. See *Tires on page 10-40*, *Vehicle Load Limits on page 9-11*, and *Tire Pressure on page 10-48*.

You can receive more than one tire pressure message at a time. The DIC also shows the tire pressure values. See *Driver Information Center (DIC) on page 5-30*.

Transmission Messages

SERVICE TRANSMISSION

This message displays if there is a problem with the transmission. See your dealer.

SHIFT DENIED

This message displays when using the Driver Shift Control (DSC) and attempting to shift to a gear not appropriate for the vehicle speed and engine revolutions per minute (rpm). See *Manual Mode on page 9-25*.

SHIFT TO PARK

This message displays when the transmission needs to be shifted to P (Park). This may appear when turning the ignition off if the vehicle is not in P (Park).

TRANSMISSION HOT — IDLE ENGINE

This message displays and a chime sounds if the transmission fluid in the vehicle gets hot. Driving with the transmission fluid temperature high can cause damage to the vehicle. Stop the vehicle and let it idle to allow the transmission to cool. This message clears when the fluid temperature reaches a safe level.

Vehicle Reminder Messages

ICE POSSIBLE DRIVE WITH CARE

This message displays when ice conditions are possible.

Vehicle Speed Messages

SELECTED SPEED LIMIT EXCEEDED

This message is displayed when the vehicle speed is greater than the set speed. See "Speed Warning" under *Driver Information Center (DIC) on page 5-30*.

VEHICLE SPEED LIMITED

This message is displayed under certain conditions when there is a problem and the vehicle's speed is being limited.

Washer Fluid Messages

WASHER FLUID LOW ADD FLUID

This message may display when the washer fluid level is low. See *Washer Fluid on page 10-22*.

Vehicle Personalization

Use the audio system controls to access the personalization menus for customizing vehicle features.

The following are all possible personalization features. Depending on the vehicle, some may not be available.

Infotainment System Audio System Controls

To access the personalization menu:

1. Press SETTINGS on the Home page on the infotainment system display.
2. Press the desired feature to display a list of available options.
3. Press to select the desired feature setting.
4. Press the ❮ Back screen button to return to the previous menu.

Personalization Menus

The following list of menu items may be available:

- Time and Date
- Language [Language]
- Valet Mode
- Radio
- Vehicle
- Bluetooth
- Voice
- Display
- Rear Camera
- Return to Factory Settings
- Software Information

Each menu is detailed in the following information.

Time and Date

Manually set the time and date. See *Clock on page 5-5*.

Language [Language]

Select Language, then select from the available language(s).

The selected language will display on the system, and voice recognition will reflect the selected language.

Valet Mode

This will lock the infotainment system, the infotainment controls, and screen storage location.

To turn Valet Mode on and off, enter a four-digit code on the keypad. Press Enter to go to the confirmation screen. Re-enter the four-digit code. Press LOCK to lock the system. Enter the four-digit code to unlock the system. Press the Back screen button to go back to the previous menu.

Radio

Press to display the Radio menu and the following may display:

- Manage Favorites

- Number of Favorites Shown
- Auto Volume
- Audible Touch Feedback
- Bose Audio Pilot
- Maximum Start Up Volume

Manage Favorites

This allows favorites to be edited. See “Manage Favorites” in “Settings” under “Radio” in the infotainment manual.

Number of Favorites Shown

Press to set the number of favorites to display.

Select the desired number or select Auto and the infotainment system will automatically adjust the number of favorites shown.

Auto Volume

This feature adjusts the volume based on the vehicle speed.

Select Off, Low, Medium-Low, Medium, Medium-High, or High.

Audible Touch Feedback

This allows Audible Touch Feedback to be turned on or off.

Select Off or On.

Bose Audio Pilot

This feature adjusts the volume based on the noise in the vehicle. See “Bose AudioPilot Noise Compensation Technology” under “Infotainment System Settings” in the infotainment manual.

Select Off or On.

Maximum Startup Volume

This feature sets the maximum startup volume. If the vehicle is started and the volume is greater than this level, the volume is adjusted to this level. To set the maximum startup volume, press + or − to increase or decrease.

Vehicle

Select and the following may display:

- Climate and Air Quality
- Collision/Detection Systems
- Comfort and Convenience
- Lighting
- Power Door Locks
- Remote Lock, Unlock, Start

Climate and Air Quality

Select and the following may display:

- Auto Fan Max Speed
- Air Quality Sensor
- Auto Defog

Auto Fan Max Speed

This feature will set the maximum auto fan speed.

Select Low, Medium, or High.

Air Quality Sensor

This allows for selection of air quality sensor operation at high or low sensitivity.

Select Off, Low Sensitivity, or High Sensitivity.

Auto Defog

When set to On, the front defog will automatically react to temperature and humidity conditions that may cause fogging.

Select Off or On.

Collision/Detection Systems

Select the Collision/Detection Systems menu and the following may display:

- Alert Type
- Auto Collision Preparation
- Go Notifier
- Side Blind Zone Alert
- Rear Cross Traffic Alert

Alert Type

This feature will set crash alerts to beeps or seat vibrations. This setting affects all crash alerts including:

- Forward Collision
- Lane Departure Warning
- Adaptive Cruise Control
- Parking Assist
- Backing Warning

Select Beeps or Safety Alert Seat.

Auto Collision Preparation

This feature will turn on or off the Forward Collision Alert feature as well as the Automatic Braking capability of the Auto Collision Preparation feature. With the Alert & Brake setting, both Forward Collision Alert as well as the Automatic Braking capability of the Auto Collision Preparation feature are available. The Alert setting disables most automatic braking functions of the Auto Collision Preparation feature. Some last-second automatic braking capability is still provided with the Alert setting, but it is much less likely to be triggered by most driving conditions. Off disables all Forward Collision Alert and Automatic Braking capabilities of the Auto Collision Preparation feature. See *Active Emergency Braking System on page 9-54*.

Select Off, Alert & Brake, or Alert.

Go Notifier

This feature will give a reminder from Adaptive Cruise Control when it has brought the vehicle to a complete stop behind another stopping vehicle, and then that vehicle drives on. See *Adaptive Cruise Control on page 9-37*.

Select Off or On.

Side Blind Zone Alert

This allows the feature to be turned on or off. See *Side Blind Zone Alert (SBZA) on page 9-56*.

Select Off or On.

Rear Cross Traffic Alert

This allows the Rear Cross Traffic Alert feature to be turned on or off. See *Assistance Systems for Parking or Backing on page 9-46*.

Select Off or On.

Comfort and Convenience

Select and the following may display:

- Auto Memory Recall
- Easy Exit Options
- Chime Volume
- Reverse Tilt Mirror
- Rain Sense Wipers

Auto Memory Recall

This feature automatically recalls the current driver's previously stored 1 or 2 button positions when entering the vehicle. See *Memory Seats on page 3-6*.

Select Off, On - Driver Door Open, or On - At ignition On.

Easy Exit Options

This feature automatically recalls the current driver's previously stored EXIT button position when exiting the vehicle. See *Memory Seats on page 3-6*.

Select Off or On.

Chime Volume

This allows the selection of the chime volume level.

Press + or − to adjust the volume.

Reverse Tilt Mirror

This allows the feature to be turned on or off.

Select Off, On - Driver and Passenger, On - Driver, or On - Passenger.

Rain Sense Wipers

This allows the feature to be turned on or off.

Select Off or On.

Lighting

Select and the following may display:

- Vehicle Locator Lights
- Exit Lighting
- Auto High Beam

Vehicle Locator Lights

This feature will flash the exterior lamps when 🔓 on the Remote Keyless Entry (RKE) transmitter is pressed to locate the vehicle.

Select Off or On.

Exit Lighting

This allows the selection of how long the exterior lamps stay on when leaving the vehicle when it is dark outside.

Select Off, 30 Seconds, 60 Seconds, or 120 Seconds.

Auto High Beam

This allows the feature to be turned on or off.

Select On or Off.

Power Door Locks

Select and the following may display:

- Unlocked Door Anti-Lockout
- Auto Door Lock

- Delayed Door Lock

Unlocked Door Anti-Lockout

When on, this feature will keep the driver door from locking when the door is open. If Off is selected, the Delayed Door Lock menu will be available.

Select Off or On.

Auto Door Lock

When this feature is turned on, the doors will automatically unlock when the vehicle is shifted into P (Park).

Select Off or On.

Delayed Door Lock

When on, this feature will delay the locking of the doors. To override the delay, press the power door lock switch on the door.

Select Off or On.

Remote Lock, Unlock, Start

Select and the following may display:

- Remote Unlock Light Feedback
- Remote Lock Feedback
- Remote Door Unlock
- Remote Start Auto Cool Seats
- Remote Start Auto Heat Seats
- Passive Door Unlock
- Passive Door Lock
- Remote Left in Vehicle Alert

Remote Unlock Light Feedback

When on, the exterior lamps will flash when unlocking the vehicle with the RKE transmitter.

Select Off or Flash Lights.

Remote Lock Feedback

This allows selection of what type of feedback is given when locking the vehicle with the RKE transmitter.

Select Off, Lights and Horn, Lights Only, or Horn Only.

Remote Door Unlock

This allows selection of which doors will unlock when pressing 🔓 on the RKE transmitter.

Select All Doors or Driver Door.

Remote Start Auto Cool Seats

If equipped and turned on, this feature will turn on the ventilated seats when using remote start on warm days.

Select Off or On.

Remote Start Auto Heat Seats

If equipped and turned on, this feature will turn on the heated seats when using remote start on cold days.

Select Off or On.

Passive Door Unlock

This allows the selection of what doors will unlock when using the button on the driver door to unlock the vehicle.

Select All Doors or Driver Door.

Passive Door Lock

This allows passive locking to be turned on or off and selects feedback. See *Remote Keyless Entry (RKE) System Operation on page 2-3*.

Select Off, On with Horn Chirp, or On.

Remote Left in Vehicle Alert

This feature sounds an alert when the RKE transmitter is left in the vehicle.

Select Off or On.

Bluetooth

Select and the following may display:

- Pair New Device
- Device Management
- Ringtones
- Voice Mail Numbers

Pair New Device

Select to pair a new device. See “Pairing” in “Infotainment Controls” under “Bluetooth” in the infotainment manual.

Device Management

Select to connect to a different phone source, disconnect a phone, or delete a phone.

Ringtones

Press to change the ring tone for the specific phone. The phone does not need to be connected to change the ring.

Voice Mail Numbers

This feature displays the voice mail number for all connected phones. The voice mail number may be changed by selecting EDIT or pressing the EDIT button and typing in a new number, then select SAVE or press the SAVE button.

Voice

Select and the following may display:

- Confidence Threshold
- Prompt Length
- Audio Feedback Speed

Confidence Threshold

This feature allows the adjustment of the sensitivity of the speech recognition system.

Select Confirm More or Confirm Less.

Prompt Length

This feature adjusts the voice prompt length.

Select Short or Long.

Audio Feedback Speed

This feature adjusts the audio feedback speed.

Select Slow, Medium, or Fast.

Display

Select and the following may display:

- Mode
- Proximity Sensing
- Calibrate Touchscreen
- Turn Display Off

Mode

Select to change the display screen for day or night driving.

Select Auto, Day, or Night.

Proximity Sensing

When on, certain screen buttons and features will become visible when a hand approaches the screen.

Select Off, On, or On - Map Only.

Calibrate Touchscreen

Select to calibrate the touchscreen, then follow the prompts.

Turn Display Off

Select to turn the display off. Press anywhere on the display area or any faceplate button to turn the display on.

Rear Camera

Select and the following may display:

- Guidance Lines
- Rear Cross Traffic Alert
- Rear Park Assist Symbols

Guidance Lines

Select to turn Off or On. See *Assistance Systems for Parking or Backing on page 9-46*.

Rear Cross Traffic Alert

Select to turn Off or On. See *Assistance Systems for Parking or Backing on page 9-46*.

Rear Park Assist Symbols

Select to turn Off or On. See *Assistance Systems for Parking or Backing on page 9-46*.

Return to Factory Settings

Select and the following may display:

- Restore Vehicle Settings
- Clear All Private Data
- Restore Radio Settings

Restore Vehicle Settings

This allows selection of restoring vehicle settings.

Select Restore or Cancel.

Clear All Private Data

This allows selection to clear all private information from the vehicle.

Select Delete or Cancel.

Restore Radio Settings

This allows selection to restore radio settings.

Select Restore or Cancel.

Software Information

Select to view the infotainment system current software information.

Universal Remote System

See *Radio Frequency Statement on page 13-15*.

Universal Remote System Programming

If equipped, these buttons are in the overhead console.

This system can replace up to three remote control transmitters used to activate devices such as garage door openers, security systems, and home automation devices. These instructions refer to a garage door opener, but can be used for other devices.

Do not use the Universal Remote system with any garage door opener that does not have the stop and reverse feature. This includes any garage door opener model manufactured before April 1, 1982.

Read these instructions completely before programming the Universal Remote system. It may help to have another person assist with the programming process.

Keep the original hand-held transmitter for use in other vehicles as well as for future programming. Erase the programming when vehicle ownership is terminated. See “Erasing Universal Remote System Buttons” later in this section.

To program a garage door opener, park outside directly in line with and facing the garage door opener receiver. Clear all people and objects near the garage door.

Make sure the hand-held transmitter has a new battery for quick and accurate transmission of the radio-frequency signal.

Programming the Universal Remote System

For questions or help programming the Universal Remote system, call 1-800-355-3515 or see www.homelink.com.

Programming involves time-sensitive actions, and may time out causing the procedure to be repeated.

To program up to three devices:

1. Hold the end of the hand-held transmitter about 3 to 8 cm (1 to 3 in) away from the Universal Remote system buttons with the indicator light in view. The

hand-held transmitter was supplied by the manufacturer of the garage door opener receiver.

2. At the same time, press and hold both the hand-held transmitter button and one of the three Universal Remote system buttons to be used to operate the garage door. Do not release either button until the indicator light changes from a slow to a rapid flash. Then release both buttons.

   Some garage door openers may require substitution of Step 2 with the procedure under in “Radio Signals for Canada and Some Gate Operators” later in this section.

3. Press and hold the newly programmed Universal Remote system button for five seconds while watching the indicator light and garage door activation.

   - If the indicator light stays on continuously or the garage door moves when the button is pressed, then programming is complete. There is no need to complete Steps 4–6.
   - If the indicator light does not come on or the garage door does not move, a second button press may be required. For a second time, press and hold the newly programmed button for five seconds. If the light stays on or the garage door moves, programming is complete.
   - If the indicator light blinks rapidly for two seconds, then changes to a solid light and the garage door does not move, continue with programming Steps 4–6.

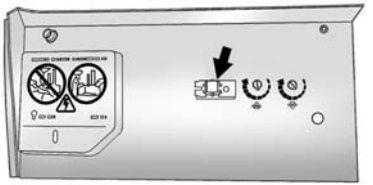

Learn or Smart Button

4. After completing Steps 1–3 , locate the Learn or Smart button inside the garage on the garage door opener receiver. The name and color of the button may vary by manufacturer.
5. Press and release the Learn or Smart button. Step 6 must be completed within 30 seconds of pressing this button.
6. Inside the vehicle, press and hold the newly programmed Universal Remote system button for two seconds and then release it. If the garage door does not move or the lamp on the garage door opener receiver

does not flash, press and hold the same button a second time for two seconds, then release it. Again, if the door does not move or the garage door lamp does not flash, press and hold the same button a third time for two seconds, then release it.

The Universal Remote system should now activate the garage door.

Repeat the process for programming the two remaining buttons.

Radio Signals for Canada and Some Gate Operators

For questions or programming help call 1-800-355-3515 or see www.homelink.com.

Canadian radio-frequency laws and some U.S. gate operators require transmitter signals to time out or quit after several seconds of transmission. This may not be long enough for the Universal Remote system to pick up the signal during programming.

If the programming did not work, replace Step 2 under “Programming the Universal Remote System” with the following:

Press and hold the Universal Remote system button while pressing and releasing the hand-held transmitter button every two seconds until the signal has been successfully accepted by the Universal Remote system. The Universal Remote system indicator light will flash slowly at first and then rapidly. Proceed with Step 3 under “Programming the Universal Remote System” to complete.

Universal Remote System Operation

Using the Universal Remote System

Press and hold the appropriate Universal Remote system button for at least one-half second. The indicator light will come on while the signal is being transmitted.

Erasing Universal Remote System Buttons

Erase all programmed buttons when vehicle ownership is terminated.

To erase:

1. Press and hold the two outside buttons until the indicator light begins to flash. This should take about 10 seconds.
2. Release both buttons.

Reprogramming a Single Universal Remote System Button

To reprogram any of the system buttons:

1. Press and hold any one of the buttons. Do not release the button.
2. The indicator light will begin to flash after 20 seconds. Without releasing the button, proceed with Step 1 under “Programming the Universal Remote System.”

Lighting

Exterior Lighting
Exterior Lamp Controls 6-1
Exterior Lamps Off Reminder 6-3
Headlamp High/Low-Beam Changer 6-3
Flash-to-Pass 6-4
Daytime Running Lamps (DRL) 6-4
Automatic Headlamp System 6-4
Adaptive Forward Lighting (AFL) 6-5
Hazard Warning Flashers 6-5
Turn and Lane-Change Signals 6-5

Interior Lighting
Instrument Panel Illumination Control 6-6
Dome Lamps 6-6
Reading Lamps 6-7

Lighting Features
Entry Lighting 6-7
Exit Lighting 6-7
Battery Load Management 6-8
Battery Power Protection 6-9
Exterior Lighting Battery Saver 6-9

Exterior Lighting

Exterior Lamp Controls

The exterior lamp control is on the turn signal lever.

Turn the control to the following positions:

⏻ **(Off):** Turns off the exterior lamps. The knob returns to the AUTO position after it is released.

Turn to ⏻ again to reactivate the AUTO mode.

In Canada, the headlamps will automatically reactivate when the vehicle is shifted out of P (Park).

AUTO (Automatic): Automatically turns the exterior lamps on and off, depending on outside lighting.

(Parking Lamps): Turns on the parking lamps including all lamps, except the headlamps.

(Headlamps): Turns on the headlamps together with the parking lamps and instrument panel lights.

IntelliBeam® System

If equipped, this system turns the vehicle's high-beam headlamps on and off according to surrounding traffic conditions.

The system turns the high-beam headlamps on when it is dark enough and there is no other traffic present.

This light comes on in the instrument cluster when the IntelliBeam system is enabled.

Turning On and Enabling IntelliBeam

To enable the IntelliBeam system, with the turn signal lever in the neutral position, turn the exterior lamp control to AUTO. The blue high-beam on light appears on the instrument cluster when the high beams are on.

Driving with IntelliBeam

The system only activates the high beams when driving over 40 km/h (25 mph).

There is a sensor near the top center of the windshield, which automatically controls the system. Keep this area of the windshield clear of debris to allow for best system performance.

The high-beam headlamps remain on, under the automatic control, until one of the following situations occurs:

- The system detects an approaching vehicle's headlamps.
- The system detects a preceding vehicle's taillamps.
- The outside light is bright enough that high-beam headlamps are not required.
- The vehicle's speed drops below 20 km/h (12 mph).
- The turn signal lever is moved forward to the high-beam position or the Flash-to-Pass feature is used. See *Headlamp High/Low-Beam Changer on page 6-3* and *Flash-to-Pass on page 6-4*.

- The IntelliBeam system can be disabled by the High/Low-Beam Changer or the Flash-to-Pass feature. If this happens, the High/Low-Beam Changer must be activated two times within five seconds to reactivate the IntelliBeam system. The instrument cluster light will come on to indicate the IntelliBeam is reactivated.

The high beams may not turn off automatically if the system cannot detect other vehicle's lamps because of any of the following:

- The other vehicle's lamp(s) are missing, damaged, obstructed from view, or otherwise undetected.
- The other vehicle's lamp(s) are covered with dirt, snow, and/or road spray.
- The other vehicle's lamp(s) cannot be detected due to dense exhaust, smoke, fog, snow, road spray, mist, or other airborne obstructions.
- Your vehicle's windshield is dirty, cracked, or obstructed by something that blocks the view of the light sensor.
- Your vehicle's windshield is covered with ice, dirt, haze, or other obstructions.
- Your vehicle is loaded such that the front end points upward, causing the light sensor to aim high and not detect headlamps and taillamps.
- You are driving on winding or hilly roads.

You may need to manually disable or cancel the high-beam headlamps by turning the low-beam headlamps on, if any of the above conditions exist.

This feature can be turned on or off. See *Vehicle Personalization on page 5-48*.

Exterior Lamps Off Reminder

A warning chime will sound if the exterior lamp control is left on in either the headlamp or parking lamp position and the driver door is opened with the ignition off.

Headlamp High/ Low-Beam Changer

(Headlamp High/Low-Beam Changer): Push the turn signal lever away from you and release, to turn the high beams on. To return to low beams, push the lever again or pull it toward you and release.

This indicator light turns on in the instrument cluster when the high-beam headlamps are on.

Flash-to-Pass

This feature allows the high-beam headlamps to be used to signal the driver in front of you that you want to pass.

Pull and hold the turn signal lever toward you to use this feature. When this is done the following will occur:

- If the headlamps are off or in low-beam mode, the high-beam headlamps will turn on. They will stay on as long as the lever is held there. Release the lever to turn them off.
- If the headlamps are in high-beam mode, they will go to low beam.

Daytime Running Lamps (DRL)

DRL can make it easier for others to see the front of your vehicle during the day. Fully functional DRL are required on all vehicles first sold in Canada.

The dedicated DRL will come on when all of the following conditions are met:

- The ignition is on.
- The exterior lamp control is in AUTO.
- The light sensor determines it is daytime.
- The parking brake is released or the vehicle is not in P (Park).

The taillamps, instrument panel lights, and other lamps will not be on.

The DRL turn off when the headlamps are turned to ⏻ or the ignition is off.

Automatic Headlamp System

When the exterior lamp control is set to AUTO and it is dark enough outside, the headlamps come on automatically.

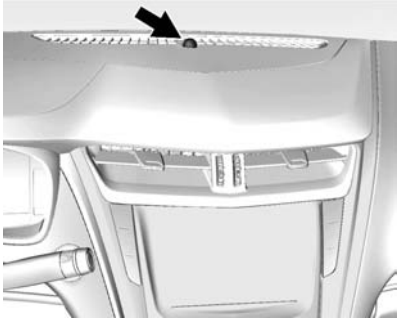

There may be a light sensor on top of the instrument panel or on the windshield near the rearview mirror, if equipped. Do not cover the sensor, otherwise the headlamps will come on when they are not needed.

The system may also turn on the headlamps when driving through a parking garage or tunnel.

When it is bright enough outside, the headlamps will turn off or may change to Daytime Running Lamps (DRL).

The automatic headlamp system turns off when the exterior lamp control is turned to ⏻ or the ignition is off.

Lights On with Wipers

If the windshield wipers are activated in daylight with the engine on, and the exterior lamp control is in AUTO, the headlamps, parking lamps, and other exterior lamps come on. The transition time for the lamps coming on varies based on wiper speed. When the wipers are not operating, these lamps turn off.

Move the exterior lamp control to ⏻ or ≋ to disable this feature.

Adaptive Forward Lighting (AFL)

On vehicles with the AFL system, the headlamps pivot horizontally to provide greater road illumination while turning. To enable AFL, set the exterior lamp control on the turn signal lever to the AUTO position. Moving the control out of the AUTO position will deactivate the system. AFL will operate when the vehicle speed is greater than 3 km/h (2 mph). AFL will not operate when the transmission is in R (Reverse). AFL is not immediately operable after starting the vehicle; driving a short distance is required to calibrate the AFL. See *Exterior Lamp Controls on page 6-1*.

Hazard Warning Flashers

⚠ **(Hazard Warning Flashers):** Press and hold this button for one second on the center stack to make the front and rear turn signal lamps flash on and off. Press again to turn the flashers off.

The hazard warning flashers turn on automatically if the airbags deploy.

Turn and Lane-Change Signals

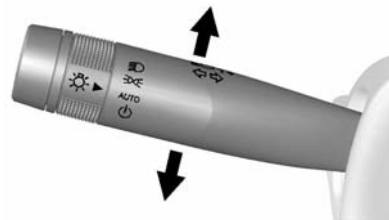

Move the lever all the way up or down to signal a turn.

An arrow on the instrument cluster flashes in the direction of the turn or lane change.

Raise or lower the lever until the arrow starts to flash to signal a lane change. Hold it there until the lane change is completed. If the lever is briefly pressed and released, the turn signal flashes three times.

The turn and lane-change signal can be turned off manually by moving the lever back to its original position.

If after signaling a turn or lane change, the arrow flashes rapidly or does not come on, a signal bulb might be burned out.

Replace any burned out bulbs. If a bulb is not burned out, check the fuse. See *Fuses and Circuit Breakers on page 10-32*.

Interior Lighting

Instrument Panel Illumination Control

The brightness of the instrument panel lighting and steering wheel controls can be adjusted.

(Instrument Panel Illumination): Move the thumbwheel up or down to brighten or dim the lights.

The brightness of the displays automatically adjusts based on outdoor lighting. The instrument panel illumination control will set the lowest level to which the displays will automatically be adjusted.

Dome Lamps

The dome lamp is in the overhead console.

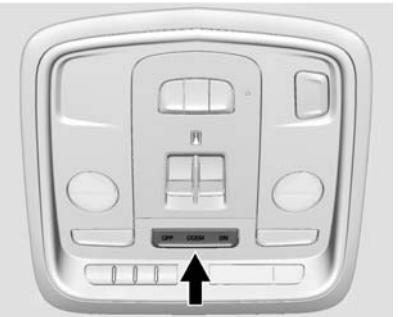

To change the dome lamp settings, press the following:

OFF: Turns the lamp off, even when a door is open.

DOOR: The lamp comes on when a door is opened.

ON: Turns the lamp on.

Reading Lamps

There are front and rear reading lamps on the overhead console and over the rear passenger doors. These lamps come on when any door is opened.

To manually turn the reading lamps on or off:

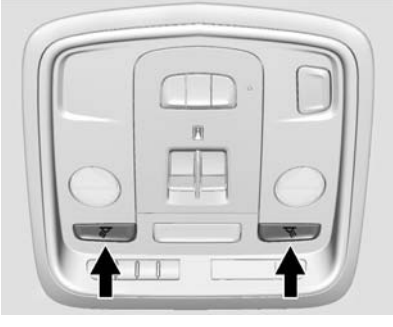

Press ⚟ or ⚞ next to each overhead console reading lamp.

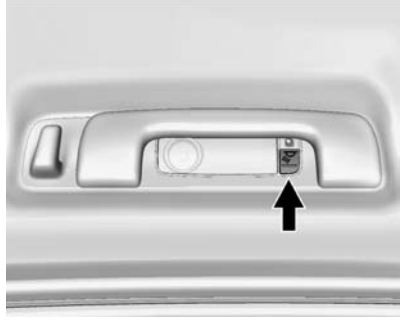

Press the button next to each rear passenger reading lamp.

For more information on interior lighting, see *Instrument Panel Illumination Control on page 6-6*.

Lighting Features

Entry Lighting

The headlamps, taillamps, license plate lamps, dome lamps, and most of the interior lights turn on briefly at night when 🔓 is pressed on the Remote Keyless Entry (RKE) transmitter. See *Ignition Positions on page 9-16*. After about 30 seconds the exterior lamps turn off, then the dome and remaining interior lamps dim to off. Entry lighting can be disabled manually by changing the ignition out of the OFF position, or by pressing 🔒 on the RKE transmitter.

This feature can be changed. See *Vehicle Personalization on page 5-48*.

Exit Lighting

The headlamps, taillamps, parking lamps, and license plate lamps come on at night, or in areas with limited lighting, when the key is

removed from the ignition. The dome lamps also come on when the key is removed from the ignition. The exterior lamps and dome lamps remain on after the door is closed for a set amount of time, then automatically turn off.

If equipped with Keyless Access, the exterior lamps and dome lamps automatically turn on when the driver door is opened after the ignition is turned off. See *Ignition Positions on page 9-16*.

The exterior lamps turn off immediately by turning the exterior lamp control off.

This feature can be changed. See *Vehicle Personalization on page 5-48*.

Battery Load Management

The vehicle has Electric Power Management (EPM), which estimates the battery's temperature and state of charge. It then adjusts the voltage for best performance and extended life of the battery.

When the battery's state of charge is low, the voltage is raised slightly to quickly bring the charge back up. When the state of charge is high, the voltage is lowered slightly to prevent overcharging. If the vehicle has a voltmeter gauge or a voltage display on the Driver Information Center (DIC), you may see the voltage move up or down. This is normal. If there is a problem, an alert will be displayed.

The battery can be discharged at idle if the electrical loads are very high. This is true for all vehicles. This is because the generator (alternator) may not be spinning fast enough at idle to produce all the power that is needed for very high electrical loads.

A high electrical load occurs when several of the following are on, such as: headlamps, high beams, fog lamps, rear window defogger, climate control fan at high speed, heated seats, engine cooling fans, trailer loads, and loads plugged into accessory power outlets.

EPM works to prevent excessive discharge of the battery. It does this by balancing the generator's output and the vehicle's electrical needs. It can increase engine idle speed to generate more power, whenever needed. It can temporarily reduce the power demands of some accessories.

Normally, these actions occur in steps or levels, without being noticeable. In rare cases at the highest levels of corrective action, this action may be noticeable to the driver. If so, a DIC message might be displayed. If a battery message is displayed, it is recommended that the driver reduce the electrical loads as much as possible. See *Driver Information Center (DIC) on page 5-30*.

Battery Power Protection

The battery saver feature is designed to protect the vehicle's battery.

If some interior lamps are left on and the ignition is turned off, the battery rundown protection system automatically turns the lamp off after some time.

Exterior Lighting Battery Saver

The exterior lamps turn off about 10 minutes after the ignition is turned off, if the parking lamps or headlamps have been manually left on. This protects against draining the battery. To restart the 10-minute timer, turn the exterior lamp control to the off position and then back to the parking lamp or headlamp position.

To keep the lamps on for more than 10 minutes, the ignition must be in the ACC/ACCESSORY or ON/RUN position.

✍ NOTES

Infotainment System

Introduction
Infotainment 7-1

Introduction

Infotainment

See the infotainment manual for information on the radio, audio players, phone, navigation system, and voice or speech recognition. It also includes information on settings.

✍ NOTES

Climate Controls

Climate Control Systems
Dual Automatic Climate Control System 8-1
Rear Climate Control System 8-6

Air Vents
Air Vents 8-8

Maintenance
Passenger Compartment Air Filter 8-9
Service 8-9

Climate Control Systems

Dual Automatic Climate Control System

The climate control buttons and the touch screen are used to adjust the heating, cooling, and ventilation.

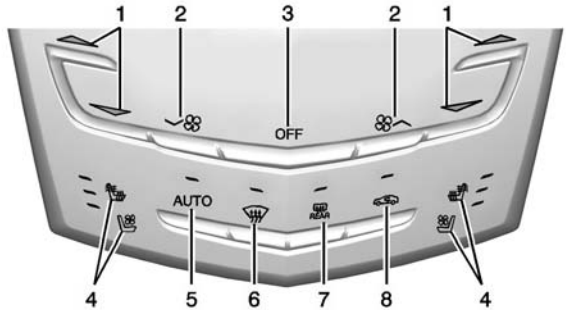

Climate Control Buttons

1. Driver and Passenger Temperature Controls
2. Fan Control
3. OFF (Fan)
4. Driver and Passenger Heated and Ventilated Seats (If Equipped)
5. AUTO (Automatic Operation)
6. Defrost
7. Rear Window Defogger

8. Recirculation

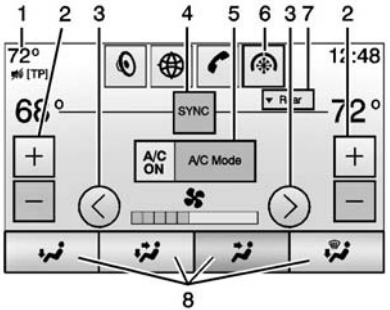

Climate Touch Screen Controls

1. Outside Temperature Display
2. Driver and Passenger Temperature Controls
3. Fan Control
4. SYNC (Synchronized Temperature)
5. A/C Mode (Air Conditioning)
6. Climate Control Selection (Application Tray Button)
7. Rear (Rear Climate Control Touch Screen)
8. Air Delivery Mode Control

Climate Control Touch Screen

The fan, air delivery mode, air conditioning, driver and passenger temperatures and SYNC settings can be controlled by pressing CLIMATE on the infotainment home screen or the climate button in the touch screen application tray.
A selection can then be made on the front climate control page displayed. See the infotainment manual.

Climate Control Status Screen

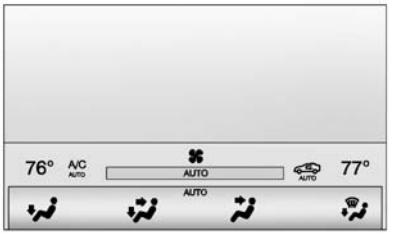

The climate control status screen appears briefly when the climate control buttons on the faceplate are adjusted. The air delivery mode can be adjusted on the climate control status screen.

Automatic Operation

The system automatically controls the fan speed, air delivery, air conditioning, and recirculation in order to heat or cool the vehicle to the desired temperature.

When the indicator light is on or AUTO is displayed on the touch screen, the system is in full automatic operation. If the air delivery mode or fan setting is manually adjusted, the auto indicator turns off and the display will show the selected settings. Auto operation can be turned off individually for climate settings.

For automatic operation:

1. Press AUTO.
2. Set the temperature. Allow the system time to stabilize. Then adjust the temperature as needed for best comfort.

To improve fuel efficiency and to cool the vehicle faster, recirculation may be automatically selected in warm weather. The recirculation light will not come on. Press to select recirculation; press it again to select outside air.

English units can be changed to metric units through the instrument cluster. See “Cluster Settings Menu” under *Instrument Cluster on page 5-10*.

OFF (Fan): Press to turn the fan on or off. The temperature control and air delivery mode can still be adjusted.

△ / ▽ (Driver and Passenger Temperature Controls): The temperature can be adjusted separately for the driver and the passenger. Press to increase or decrease the temperature. Press and hold to rapidly increase or decrease the temperature.

The driver and passenger temperatures can also be adjusted by pressing the controls on the touch screen.

SYNC (Synchronized Temperature): Press SYNC on the touch screen to link all climate zone settings to the driver settings. Adjust the driver side temperature control to change the linked temperature.

When the passenger settings are adjusted, the SYNC button is displayed when the temperatures are unlinked.

Rear (If Equipped): Press this button on the front climate control touch screen to open the rear climate control screen. The rear climate control settings can now be adjusted from the front passenger area.

Manual Operation

∨ ∧ (Fan Control): Press the fan control buttons or the touch screen fan control, to increase or decrease the fan speed. Press and hold the buttons or the touch screen control to adjust speed more quickly. The fan speed setting displays. Pressing either button cancels automatic fan control and the fan can be controlled manually. Press AUTO to return to automatic operation. To turn off the fan and climate control system, press and hold the fan down button or touch screen fan control until it is off.

Air Delivery Mode Control: When the climate information is displayed, press the desired air delivery mode on the touch screen to change the direction of the airflow. The selected air delivery mode button is lit. Pressing any of the air delivery buttons cancels automatic air delivery control and the direction of the airflow can be controlled manually. Press AUTO to return to automatic operation.

To change the current mode, select one of the following:

(Vent): Air is directed to the instrument panel outlets.

(Bi-Level): Air is divided between the instrument panel outlets and the floor outlets.

(Floor): Air is directed to the floor outlets.

(Defog): Clears the windows of fog or moisture. Air is directed to the windshield and floor outlets.

(Defrost): Clears the windshield of fog or frost more quickly. Air is directed to the windshield. Press the button to turn on or off. Changing the air delivery mode also turns the defrost off.

(Air Conditioning): Press the AC Mode touch screen control to turn the automatic air conditioning on or off. If the fan is turned off, the air conditioner will not run. Outside temperatures below freezing may also prevent the air conditioner from running.

Press AUTO to return to automatic operation and the air conditioner runs as needed.

Automatic Air Recirculation: When the AUTO indicator light is on, the air is automatically recirculated as needed to help quickly cool the inside of the vehicle.

The climate control system may have a sensor to detect air pollution. When using automatic air recirculation, the air quality control system may operate. To adjust the sensitivity of the air quality sensor, see “Climate and Air Quality” under *Vehicle Personalization on page 5-48*.

(Recirculation): Press to alternate between recirculating air inside the vehicle or pulling in outside air. The indicator light on the button is lit when recirculation mode is active. This helps to quickly cool the air inside the vehicle or prevent outside air and odors from entering.

Pressing this button cancels automatic recirculation. Press AUTO to return to automatic operation; recirculation runs automatically as needed.

Manual recirculation mode is not available when in Defrost or Defog modes.

Auto Defog: The climate control system may have a sensor to automatically detect high humidity inside the vehicle. When high humidity is detected, the climate control system may adjust to outside air supply and turn on the air conditioner. If the climate control system does not detect possible window fogging, it returns to normal operation. To turn Auto Defog off or on, see “Climate and Air Quality” under *Vehicle Personalization on page 5-48*.

Rear Window Defogger

(Rear Window Defogger): Press to turn the rear window defogger on or off.

The rear window defogger turns off automatically after about 10 minutes. If turned on again, it runs for about five minutes before turning off.

The upper region of gridlines on the rear window are antenna lines and are not intended to heat when the defogger is activated.

The heated outside rearview mirrors turn on when the rear window defogger button is on and help to clear fog or frost from the surface of the mirrors.

⚠ Caution

Do not try to clear frost or other material from the inside of the front windshield and rear window with a razor blade or anything else that is sharp. This may damage the rear window defogger grid and affect the radio's ability to pick up stations clearly. The repairs would not be covered by the vehicle warranty.

Driver and Passenger Heated and Ventilated Seats (If Equipped): Press or to heat the driver or passenger seat cushion and seatback.

Press or to ventilate the driver or passenger seat. See *Heated and Ventilated Seats on page 1-8*.

Remote Start Climate Control Operation: If equipped with the remote start feature, the climate control system may run when the vehicle is started remotely. The system uses the driver’s previous settings to heat or cool the inside of the vehicle. The rear defog may come on during remote start based on cold ambient conditions. The rear defog indicator light does not come on during a remote start.
If equipped with heated or ventilated seats, they may come on during a remote start. See *Remote Vehicle Start on page 2-9* and *Heated and Ventilated Seats on page 1-8*.

Sensor

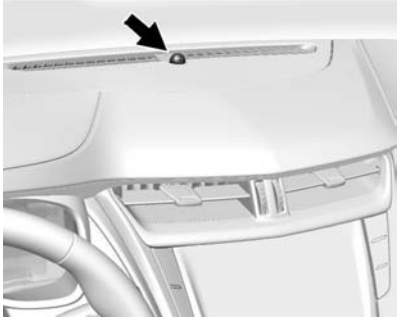

The solar sensor, on top of the instrument panel near the windshield, monitors the solar heat.

The climate control system uses the sensor information to adjust the temperature, fan speed, recirculation, and air delivery mode for best comfort.

If the sensor is covered, the automatic climate control system may not work properly.

Air Quality Sensor

If equipped with an air quality sensor, the climate control system adjusts to limit some exhaust fumes from being pulled inside the vehicle.

Press the AUTO button on the climate control to activate the air quality sensor. The recirculation indicator light comes on when poor quality air is detected. The air quality sensor will not maintain recirculation for an extended period to prevent the air inside the vehicle from becoming too dry or stuffy.

Under certain conditions, the air quality sensor will not activate, such as during cold weather or with extreme odors. Press to activate recirculation.

The air quality sensor system does not protect against carbon monoxide (CO), which you cannot see or smell. See *Engine Exhaust on page 9-22*.

Rear Climate Control System

If equipped with a rear climate control system, the settings can be adjusted with the rear climate control buttons and the touch screen.

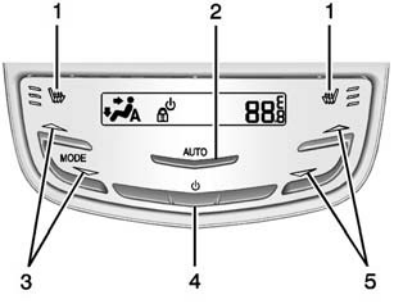

Rear Climate Control Buttons

1. Heated Rear Seats (If Equipped)
2. AUTO (Automatic Operation)
3. MODE (Air Delivery Mode Control)
4. ⏻ (On/Off)

5. Temperature Control

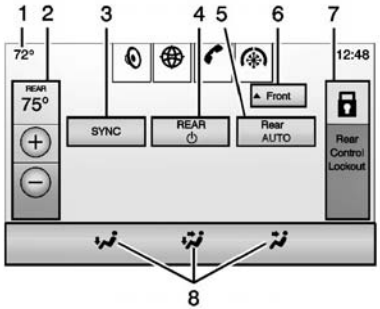

Rear Climate Touch Screen Controls

1. Outside Temperature Display
2. Rear Climate Temperature Control
3. SYNC (Synchronized Temperatures)
4. REAR ⏻ (On/Off)
5. Rear AUTO (Automatic Operation)
6. Front (Front Climate Control Touch Screen)
7. Rear Control Lockout
8. Air Delivery Mode Control

Rear: Press this button on the front climate control touch screen to open the rear climate control screen. The rear climate control settings can now be adjusted from the front passenger area.

⏻ (On/Off): Press the ⏻ button or REAR ⏻ on the touch screen to turn the rear climate control on or off. If the rear climate control is turned off using REAR ⏻ on the touch screen, the ⏻ button on the rear climate control faceplate must be pressed twice to turn the system back on.

SYNC: Press SYNC on the touch screen to match the rear climate control temperature to the front climate control driver temperature. The SYNC button will be lit. Press the TEMP, MODE, or AUTO button twice to unlink the set driver and rear temperatures. The SYNC button turns off.

Rear Control Lockout: Press to lock or unlock control of the rear climate control system from the rear seat passengers. When locked, the rear climate control can only be adjusted from the front seat.

Automatic Operation

Rear AUTO: Press to turn on or off. The air delivery is controlled automatically. The AUTO indicator appears on the display. If any of the climate control settings are manually adjusted, this cancels full automatic operation.

Manual Operation

< ✤ > (Fan Control): Press or press and hold the front climate control buttons or touch screen to increase or decrease the rear climate airflow.

+/− (Temperature Control): Press or press and hold the rear temperature control buttons or touch screen to adjust the rear passenger temperature. Press + for warmer air and press − for cooler air.

/ / (Air Delivery Mode Control): Press the desired mode button on the touch screen or the MODE button on the rear faceplate to change the direction of the airflow in the rear seating area.

or (Heated Rear Seats, If Equipped): Press or to heat the left or right outboard seat cushion and seatback. See *Heated Rear Seats on page 3-12*.

Air Vents

Adjustable air vents are in the center and on the side of the instrument panel.

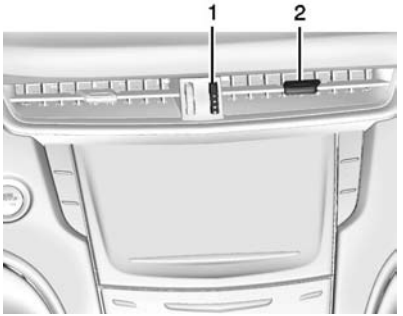

1. Thumbwheel
2. Slider Knob

Use the thumbwheels (1) near the air vents to open or close off the airflow.

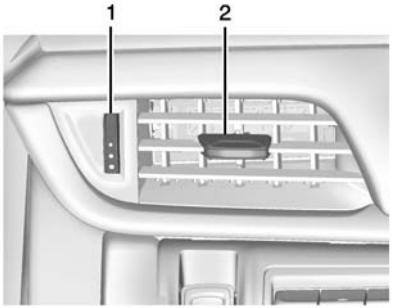

Move the slider knobs (2) to change the direction of the airflow.

Additional air vents are beneath the windshield and the driver and passenger side door windows. These are fixed and cannot be adjusted.

Operation Tips

- Clear away any ice, snow, or leaves from air inlets at the base of the windshield that could block the flow of air into the vehicle.

- Keep the path under the front seats clear of objects to help circulate the air inside of the vehicle more effectively.
- Use of non-GM approved hood deflectors can adversely affect the performance of the system. Check with your dealer before adding equipment to the outside of the vehicle.
- Do not attach any devices to the air vent slats. This restricts airflow and may cause damage to the air vents.

Maintenance

Passenger Compartment Air Filter

The filter removes dust, pollen, and other airborne irritants from outside air that is pulled into the vehicle. The filter should be replaced as part of routine scheduled maintenance. See *Maintenance Schedule on page 11-3*.

See your dealer regarding replacement of the filter.

Service

All vehicles have a label underhood that identifies the refrigerant used in the vehicle. The refrigerant system should only be serviced by trained and certified technicians. The air conditioning evaporator should never be repaired or replaced by one from a salvage vehicle.
It should only be replaced by a new evaporator to ensure proper and safe operation.

During service, all refrigerants should be reclaimed with proper equipment. Venting refrigerants directly to the atmosphere is harmful to the environment and may also create unsafe conditions based on inhalation, combustion, frostbite, or other health-based concerns.

✍ NOTES

Driving and Operating

Driving Information
Distracted Driving 9-2
Defensive Driving 9-3
Drunk Driving 9-3
Control of a Vehicle 9-3
Braking 9-3
Steering 9-4
Off-Road Recovery 9-5
Loss of Control 9-5
Track Events and Competitive Driving 9-6
Driving on Wet Roads 9-7
Highway Hypnosis 9-8
Hill and Mountain Roads 9-8
Winter Driving 9-9
If the Vehicle Is Stuck 9-10
Vehicle Load Limits 9-11

Starting and Operating
New Vehicle Break-In 9-15
Ignition Positions 9-16
Starting the Engine 9-17
Retained Accessory Power (RAP) 9-19
Engine Coolant Heater 9-19
Shifting Into Park 9-20
Shifting out of Park 9-21
Parking over Things That Burn 9-21

Engine Exhaust
Engine Exhaust 9-22
Running the Vehicle While Parked 9-22

Automatic Transmission
Automatic Transmission 9-23
Manual Mode 9-25

Drive Systems
All-Wheel Drive 9-26

Brakes
Antilock Brake System (ABS) 9-27
Electric Parking Brake 9-28
Brake Assist 9-29

Ride Control Systems
Traction Control/Electronic Stability Control 9-30
Driver Mode Control 9-31
Competitive Driving Mode (LF3 Only) 9-33
Limited-Slip Differential (LF3 Only) 9-34

Cruise Control
Cruise Control 9-34
Adaptive Cruise Control 9-37

Driver Assistance Systems
Driver Assistance Systems 9-45
Assistance Systems for Parking or Backing 9-46
Assistance Systems for Driving 9-51
Forward Collision Alert (FCA) System 9-52
Active Emergency Braking System 9-54
Side Blind Zone Alert (SBZA) 9-56
Lane Departure Warning (LDW) 9-58

Fuel
Fuel 9-60
Gasoline Specifications 9-62
California Fuel Requirements 9-62
Fuels in Foreign Countries . . . 9-62
Fuel Additives 9-62
Filling the Tank 9-62
Filling a Portable Fuel Container 9-64

Trailer Towing
General Towing Information 9-65
Driving Characteristics and Towing Tips 9-65
Trailer Towing (With LFX Engine) 9-68
Trailer Towing (With LTG or LF3 Engine) 9-69
Towing Equipment 9-69

Conversions and Add-Ons
Add-On Electrical Equipment 9-70

Driving Information

Distracted Driving

Distraction comes in many forms and can take your focus from the task of driving. Exercise good judgment and do not let other activities divert your attention away from the road. Many local governments have enacted laws regarding driver distraction. Become familiar with the local laws in your area.

To avoid distracted driving, always keep your eyes on the road, hands on the wheel, and mind on the drive.

- Do not use a phone in demanding driving situations. Use a hands-free method to place or receive necessary phone calls.
- Watch the road. Do not read, take notes, or look up information on phones or other electronic devices.
- Designate a front seat passenger to handle potential distractions.
- Become familiar with vehicle features before driving, such as programming favorite radio stations and adjusting climate control and seat settings. Program all trip information into any navigation device prior to driving.
- Wait until the vehicle is parked to retrieve items that have fallen to the floor.
- Stop or park the vehicle to tend to children.
- Keep pets in an appropriate carrier or restraint.
- Avoid stressful conversations while driving, whether with a passenger or on a cell phone.

⚠ Warning

Taking your eyes off the road too long or too often could cause a crash resulting in injury or death. Focus your attention on driving.

See the infotainment manual for information on that system or the navigation system, if equipped, including pairing and using a cell phone.

Defensive Driving

Defensive driving means “always expect the unexpected.” The first step in driving defensively is to wear the safety belt. See *Safety Belts on page 3-13*.

- Assume that other road users (pedestrians, bicyclists, and other drivers) are going to be careless and make mistakes. Anticipate what they might do and be ready.
- Allow enough following distance between you and the driver in front of you.
- Focus on the task of driving.

Drunk Driving

Death and injury associated with drinking and driving is a global tragedy.

⚠ Warning

Drinking and then driving is very dangerous. Your reflexes, perceptions, attentiveness, and judgment can be affected by even a small amount of alcohol. You can have a serious — or even fatal — collision if you drive after drinking.

Do not drink and drive or ride with a driver who has been drinking. Ride home in a cab; or if you are with a group, designate a driver who will not drink.

Control of a Vehicle

Braking, steering, and accelerating are important factors in helping to control a vehicle while driving.

Braking

Braking action involves perception time and reaction time. Deciding to push the brake pedal is perception time. Actually doing it is reaction time.

Average driver reaction time is about three-quarters of a second. In that time, a vehicle moving at 100 km/h (60 mph) travels 20 m (66 ft), which could be a lot of distance in an emergency.

Helpful braking tips to keep in mind include:

- Keep enough distance between you and the vehicle in front of you.
- Avoid needless heavy braking.
- Keep pace with traffic.

If the engine ever stops while the vehicle is being driven, brake normally but do not pump the brakes. Doing so could make the pedal harder to push down. If the engine stops, there will be some power brake assist but it will be used when the brake is applied. Once the power assist is used up, it can take longer to stop and the brake pedal will be harder to push.

Steering

Variable Effort Steering

Some vehicles have a steering system that varies the amount of effort required to steer the vehicle in relation to the speed of the vehicle.

The amount of steering effort required is less at slower speeds to make the vehicle more maneuverable and easier to park. At faster speeds, the steering effort increases to provide a sport-like feel to the steering. This provides maximum control and stability.

If the vehicle seems harder to steer than normal when parking or driving slowly, there may be a problem with the system. You will still have power steering, but steering will be stiffer than normal at slow speeds. See your dealer for service.

Electric Power Steering

The vehicle has electric power steering. It does not have power steering fluid. Regular maintenance is not required.

If power steering assist is lost due to a system malfunction, the vehicle can be steered, but may require increased effort. See your dealer if there is a problem.

If the steering wheel is turned until it reaches the end of its travel and is held against that position for an extended period of time, power steering assist may be reduced.

If steering assist is used for an extended period of time, power assist may be reduced.

Normal use of the power steering assist should return when the system cools down.

See specific vehicle steering messages under *Vehicle Messages on page 5-36*.

See your dealer if there is a problem.

Curve Tips

- Take curves at a reasonable speed.
- Reduce speed before entering a curve.
- Maintain a reasonable steady speed through the curve.
- Wait until the vehicle is out of the curve before accelerating gently into the straightaway.

Steering in Emergencies

- There are some situations when steering around a problem may be more effective than braking.

- Holding both sides of the steering wheel allows you to turn 180 degrees without removing a hand.
- Antilock Brake System (ABS) allows steering while braking.

Off-Road Recovery

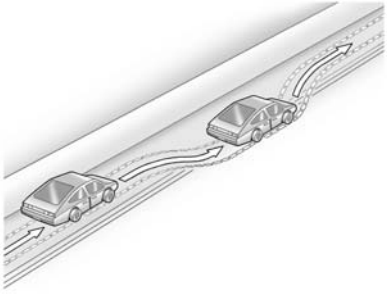

The vehicle's right wheels can drop off the edge of a road onto the shoulder while driving. Follow these tips:

1. Ease off the accelerator and then, if there is nothing in the way, steer the vehicle so that it straddles the edge of the pavement.
2. Turn the steering wheel about one-eighth of a turn, until the right front tire contacts the pavement edge.
3. Turn the steering wheel to go straight down the roadway.

Loss of Control

Skidding

There are three types of skids that correspond to the vehicle's three control systems:

- Braking Skid — wheels are not rolling.
- Steering or Cornering Skid — too much speed or steering in a curve causes tires to slip and lose cornering force.
- Acceleration Skid — too much throttle causes the driving wheels to spin.

Defensive drivers avoid most skids by taking reasonable care suited to existing conditions, and by not overdriving those conditions. But skids are always possible.

If the vehicle starts to slide, follow these suggestions:

- Ease your foot off the accelerator pedal and steer the way you want the vehicle to go. The vehicle may straighten out. Be ready for a second skid if it occurs.
- Slow down and adjust your driving according to weather conditions. Stopping distance can be longer and vehicle control can be affected when traction is reduced by water, snow, ice, gravel, or other

material on the road. Learn to recognize warning clues — such as enough water, ice, or packed snow on the road to make a mirrored surface — and slow down when you have any doubt.

- Try to avoid sudden steering, acceleration, or braking, including reducing vehicle speed by shifting to a lower gear. Any sudden changes could cause the tires to slide.

Remember: Antilock brakes help avoid only the braking skid.

Track Events and Competitive Driving

Track events and competitive driving may affect the vehicle warranty. See the warranty manual before using the vehicle for competitive driving.

⚠ Caution

If the vehicle is used for track events and competitive driving, the engine may use more oil than it would with normal use. Low oil levels can damage the engine. Check the oil level often and at the proper level. See *Engine Oil on page 10-10*.

Because the fluid temperatures may be higher, it is necessary to change the rear axle fluid after a first time track or competitive driving event. After a first time event, the rear axle fluid should be changed every 24 hours of racing or competitive driving. See *Recommended Fluids and Lubricants on page 11-13*.

⚠ Caution

During a first time track or racing event, high rear axle temperatures can occur. Damage could be caused to the rear axle and would not be covered by the vehicle warranty.

Do not drive as long or as fast the first time the vehicle is driven on the track or raced.

The 2.0L (LTG) and 3.6L (LFX) are not available with a track package option and not recommended for track use.

The twin turbo 3.6L engine (LF3) requires premium fuel, and comes standard with a 7 qt sump, integrated oil cooler, and other powertrain and powertrain cooling components in preparation for track use.

For track events and competitive driving, it is recommended that the brake fluid be replaced with a high

performance brake fluid that has a dry boiling point greater than 279°C (534°F). After conversion to the high performance brake fluid, follow the brake fluid service recommendations outlined by the fluid manufacturer. Do not use silicone or DOT-5 brake fluids.

⚠ Caution

Removing the splash shield can degrade wet braking performance, as well as introduce brake pedal pulsation, due to brake disc exposure to road debris. Only remove the front brake disc splash shield and front tire deflector when driving in track events.

Brake cooling can be improved if the front brake disc splash shield and front tire deflector are removed. Removing the shield will require that the suspension bushings visible to the brake disc be protected with insulated thermal wrapping.

Driving on Wet Roads

Rain and wet roads can reduce vehicle traction and affect your ability to stop and accelerate. Always drive slower in these types of driving conditions and avoid driving through large puddles and deep-standing or flowing water.

⚠ Warning

Wet brakes can cause crashes. They might not work as well in a quick stop and could cause pulling to one side. You could lose control of the vehicle.

After driving through a large puddle of water or a car/vehicle wash, lightly apply the brake pedal until the brakes work normally.

Flowing or rushing water creates strong forces. Driving through flowing water could cause the vehicle to be carried away. If this

(Continued)

Warning (Continued)

happens, you and other vehicle occupants could drown. Do not ignore police warnings and be very cautious about trying to drive through flowing water.

Hydroplaning

Hydroplaning is dangerous. Water can build up under the vehicle's tires so they actually ride on the water. This can happen if the road is wet enough and you are going fast enough. When the vehicle is hydroplaning, it has little or no contact with the road.

There is no hard and fast rule about hydroplaning. The best advice is to slow down when the road is wet.

Other Rainy Weather Tips

Besides slowing down, other wet weather driving tips include:

- Allow extra following distance.

- Pass with caution.
- Keep windshield wiping equipment in good shape.
- Keep the windshield washer fluid reservoir filled.
- Have good tires with proper tread depth. See *Tires on page 10-40*.
- Turn off cruise control.

Highway Hypnosis

Always be alert and pay attention to your surroundings while driving. If you become tired or sleepy, find a safe place to park the vehicle and rest.

Other driving tips include:

- Keep the vehicle well ventilated.
- Keep the interior temperature cool.
- Keep your eyes moving — scan the road ahead and to the sides.
- Check the rearview mirror and vehicle instruments often.

Hill and Mountain Roads

Driving on steep hills or through mountains is different than driving on flat or rolling terrain. Tips for driving in these conditions include:

- Keep the vehicle serviced and in good shape.
- Check all fluid levels and brakes, tires, cooling system, and transmission.
- Shift to a lower gear when going down steep or long hills.

⚠ Warning

Using the brakes to slow the vehicle on a long downhill slope can cause brake overheating, can reduce brake performance, and could result in a loss of braking. Shift the transmission to a lower gear to let the engine assist the brakes on a steep downhill slope.

⚠ Warning

Coasting downhill in N (Neutral) or with the ignition off is dangerous. This can cause overheating of the brakes and loss of steering. Always have the engine running and the vehicle in gear.

- Stay in your own lane. Do not swing wide or cut across the center of the road. Drive at speeds that let you stay in your own lane.
- Be alert on top of hills; something could be in your lane (stalled car, accident).
- Pay attention to special road signs (falling rocks area, winding roads, long grades, passing or no-passing zones) and take appropriate action.

Winter Driving

Driving on Snow or Ice

Drive carefully when there is snow or ice between the tires and the road, creating less traction or grip. Wet ice can occur at about 0°C (32° F) when freezing rain begins to fall, resulting in even less traction. Avoid driving on wet ice or in freezing rain until roads can be treated with salt or sand.

Drive with caution, whatever the condition. Accelerate gently so traction is not lost. Accelerating too quickly causes the wheels to spin and makes the surface under the tires slick, so there is even less traction.

Try not to break the fragile traction. If you accelerate too fast, the drive wheels will spin and polish the surface under the tires even more.

The Antilock Brake System (ABS) improves vehicle stability during hard stops on slippery roads, but apply the brakes sooner than when on dry pavement.

Allow greater following distance on any slippery road and watch for slippery spots. Icy patches can occur on otherwise clear roads in shaded areas. The surface of a curve or an overpass can remain icy when the surrounding roads are clear. Avoid sudden steering maneuvers and braking while on ice.

See *Antilock Brake System (ABS) on page 9-27*.

See *Driver Mode Control on page 9-31*

Turn off cruise control on slippery surfaces.

Blizzard Conditions

Being stuck in snow can be a serious situation. Stay with the vehicle unless there is help nearby. If possible, use Roadside Service. See *Roadside Service on page 13-5*. To get help and keep everyone in the vehicle safe:

- Turn on the hazard warning flashers.
- Tie a red cloth to an outside mirror.

⚠ Warning

Snow can trap engine exhaust under the vehicle. This may cause exhaust gases to get inside. Engine exhaust contains carbon monoxide (CO) which cannot be seen or smelled. It can cause unconsciousness and even death.

If the vehicle is stuck in the snow:

(Continued)

Warning (Continued)

- Clear away snow from around the base of your vehicle, especially any that is blocking the exhaust pipe.
- Check again from time to time to be sure snow does not collect there.
- Open a window about 5 cm (2 in) on the side of the vehicle that is away from the wind to bring in fresh air.
- Fully open the air outlets on or under the instrument panel.
- Adjust the climate control system to a setting that circulates the air inside the vehicle and set the fan speed to the highest setting. See "Climate Control Systems".

For more information about carbon monoxide, see *Engine Exhaust on page 9-22*.

To save fuel, run the engine for only short periods as needed to warm the vehicle and then shut the engine off and close the window most of the way to save heat. Repeat this until help arrives but only when you feel really uncomfortable from the cold. Moving about to keep warm also helps.

If it takes some time for help to arrive, now and then when you run the engine, push the accelerator pedal slightly so the engine runs faster than the idle speed. This keeps the battery charged to restart the vehicle and to signal for help with the headlamps. Do this as little as possible to save fuel.

If the Vehicle Is Stuck

Slowly and cautiously spin the wheels to free the vehicle when stuck in sand, mud, ice, or snow.

If stuck too severely for the traction system to free the vehicle, turn the traction system off and use the rocking method. See *Traction Control/Electronic Stability Control on page 9-30*.

⚠ Warning

If the vehicle's tires spin at high speed, they can explode, and you or others could be injured. The vehicle can overheat, causing an engine compartment fire or other damage. Spin the wheels as little as possible and avoid going above 56 km/h (35 mph).

Rocking the Vehicle to Get it Out

Turn the steering wheel left and right to clear the area around the front wheels. Turn off any traction system. Shift back and forth between R (Reverse) and a low forward gear, spinning the wheels as little as possible. To prevent transmission wear, wait until the wheels stop spinning before shifting gears. Release the accelerator

pedal while shifting, and press lightly on the accelerator pedal when the transmission is in gear. Slowly spinning the wheels in the forward and reverse directions causes a rocking motion that could free the vehicle. If that does not get the vehicle out after a few tries, it might need to be towed out. If the vehicle does need to be towed out, see *Towing the Vehicle on page 10-66*.

Vehicle Load Limits

It is very important to know how much weight the vehicle can carry. This weight is called the vehicle capacity weight and includes the weight of all occupants, cargo, and all nonfactory-installed options. Two labels on the vehicle show how much weight it may properly carry, the Tire and Loading Information label and the Certification label.

⚠ Warning

Do not load the vehicle any heavier than the Gross Vehicle Weight Rating (GVWR), or either the maximum front or rear Gross Axle Weight Rating (GAWR). This can cause systems to break and change the way the vehicle handles. This could cause loss of control and a crash. Overloading can also shorten the life of the vehicle.

Tire and Loading Information Label

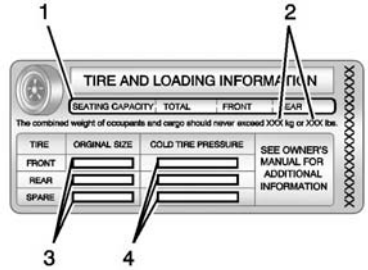

Label Example

1. Number of Occupant Seating Positions
2. Maximum Vehicle Capacity Weight
3. Size of the Original Equipment Tires
4. Recommended Cold Tire Inflation Pressure

A vehicle-specific Tire and Loading Information label is attached to the vehicle's center

pillar (B-pillar). The Tire and Loading Information label shows the number of occupant seating positions (1), and the maximum vehicle capacity weight (2) in kilograms and pounds.

The Tire and Loading Information label also shows the tire size of the original equipment tires (3) and the recommended cold tire inflation pressures (4). For more information on tires and inflation see *Tires on page 10-40* and *Tire Pressure on page 10-48*.

There is also important loading information on the Certification label. It tells you the Gross Vehicle Weight Rating (GVWR) and the Gross Axle Weight Rating (GAWR) for the front and rear axle. See “Certification Label” later in this section.

“Steps for Determining Correct Load Limit–

1. Locate the statement "The combined weight of occupants and cargo should never exceed XXX kg or XXX lbs." on your vehicle’s placard.
2. Determine the combined weight of the driver and passengers that will be riding in your vehicle.
3. Subtract the combined weight of the driver and passengers from XXX kg or XXX lbs.
4. The resulting figure equals the available amount of cargo and luggage load capacity. For example, if the "XXX" amount equals 1400 lbs. and there will be five 150 lb passengers in your vehicle, the amount of available cargo and luggage load capacity is 650 lbs. (1400-750 (5 x 150) = 650 lbs.)
5. Determine the combined weight of luggage and cargo being loaded on the vehicle. That weight may not safely exceed the available cargo and luggage load capacity calculated in Step 4.
6. If your vehicle will be towing a trailer, load from your trailer will be transferred to your vehicle. Consult this manual to determine how this reduces the available cargo and luggage load capacity of your vehicle.”

See *Trailer Towing (With LFX Engine) on page 9-68* or *Trailer Towing (With LTG or LF3 Engine) on page 9-69* for important information on towing a trailer, towing safety rules, and trailering tips.

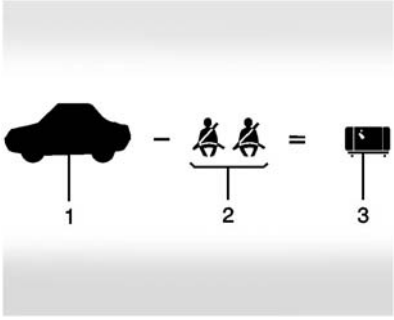

Example 1

1. Vehicle Capacity Weight for Example 1 = 453 kg (1,000 lbs).
2. Subtract Occupant Weight @ 68 kg (150 lbs) × 2 = 136 kg (300 lbs).
3. Available Occupant and Cargo Weight = 317 kg (700 lbs).

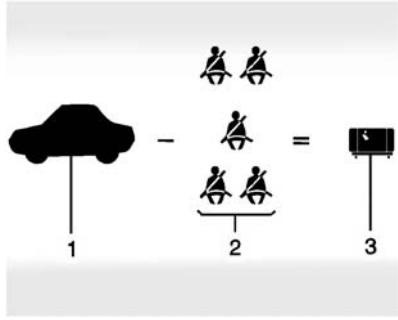

Example 2

1. Vehicle Capacity Weight for Example 2 = 453 kg (1,000 lbs).
2. Subtract Occupant Weight @ 68 kg (150 lbs) × 5 = 340 kg (750 lbs).
3. Available Cargo Weight = 113 kg (250 lbs).

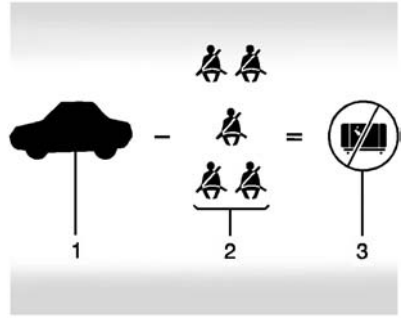

Example 3

1. Vehicle Capacity Weight for Example 3 = 453 kg (1,000 lbs).
2. Subtract Occupant Weight @ 91 kg (200 lbs) × 5 = 453 kg (1,000 lbs).
3. Available Cargo Weight = 0 kg (0 lbs).

Refer to the vehicle's Tire and Loading Information label for specific information about the vehicle's capacity weight and

seating positions. The combined weight of the driver, passengers, and cargo should never exceed the vehicle's capacity weight.

Certification Label

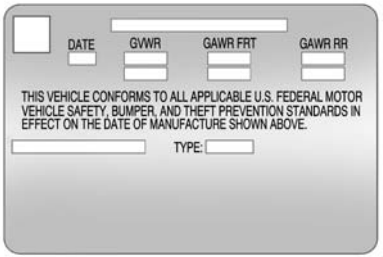

Label Example

A vehicle-specific Certification label is attached to the vehicle's center pillar (B-pillar). The label tells the gross weight capacity of the vehicle, called the Gross Vehicle Weight Rating (GVWR). The GVWR includes the weight of the vehicle, all occupants, fuel, and cargo. Never exceed the GVWR for the vehicle, or the Gross Axle Weight Rating (GAWR) for either the front or rear axle.

And, if there is a heavy load, it should be spread out. See “Steps for Determining Correct Load Limit” earlier in this section.

⚠ Warning

Do not load the vehicle any heavier than the Gross Vehicle Weight Rating (GVWR), or either the maximum front or rear Gross Axle Weight Rating (GAWR). This can cause systems to break and change the way the vehicle handles. This could cause loss of control and a crash. Overloading can also shorten the life of the vehicle.

If you put things inside the vehicle — like suitcases, tools, packages, or anything else — they will go as fast as the vehicle goes. If you have to stop or turn quickly, or if there is a crash, they will keep going.

⚠ Warning

Things inside the vehicle can strike and injure people in a sudden stop or turn, or in a crash.

- Put things in the cargo area of the vehicle. In the cargo area, put them as far forward as possible. Try to spread the weight evenly.

(Continued)

Warning (Continued)

- Never stack heavier things, like suitcases, inside the vehicle so that some of them are above the tops of the seats.
- Do not leave an unsecured child restraint in the vehicle.
- Secure loose items in the vehicle.
- Do not leave a seat folded down unless needed.

Starting and Operating

New Vehicle Break-In

Follow these recommended guidelines during the first 2 414 km (1,500 mi) of driving this vehicle. Parts have a break-in period and performance will be better in the long run.

For the first 2 414 km (1,500 mi):

- Avoid full throttle starts and abrupt stops.
- Do not exceed 4000 engine rpm.
- Avoid driving at any one constant speed, fast or slow.
- Avoid downshifting to brake or slow the vehicle when the engine speed will exceed 4000 rpm.
- Do not let the engine labor. Never lug the engine in high gear at low speeds.
- Do not participate in track events, sport driving schools, or similar activities during this break-in period.
- Check engine oil with every refueling and add if necessary. Oil and fuel consumption may be higher than normal during the first 2 414 km (1,500 mi).
- To break in new tires, drive at moderate speeds and avoid hard cornering for the first 322 km (200 mi). New tires do not have maximum traction and may tend to slip.
- New brake linings also need a break–in period. Avoid making hard stops during the first 322 km (200 mi). This is recommended every time brake linings are replaced.

Ignition Positions

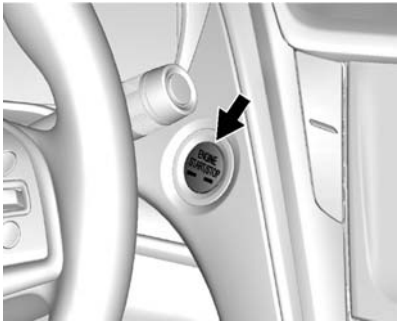

The vehicle has an electronic keyless ignition with pushbutton start.

Pressing the button cycles it through three modes: ACC/ACCESSORY, ON/RUN/START, and Stopping the Engine/OFF.

The Remote Keyless Entry (RKE) transmitter must be in the vehicle for the system to operate. If the pushbutton start is not working, the vehicle may be near a strong radio antenna signal causing interference to the Keyless Access system. See *Remote Keyless Entry (RKE) System Operation on page 2-3*.

To shift out of P (Park), the vehicle must be in ACC/ACCESSORY or ON/RUN, and the brake pedal must be applied.

Stopping the Engine/OFF (No Indicator Lights): When the vehicle is stopped, press the ENGINE START/STOP button once to turn the engine off.

If the vehicle is in P (Park), the ignition will turn off, and Retained Accessory Power (RAP) will remain active. See *Retained Accessory Power (RAP) on page 9-19*.

If the vehicle is not in P (Park), the ignition will return to ACC/ACCESSORY and display a message in the Driver Information Center (DIC). See *Transmission Messages on page 5-47*. When the vehicle is shifted into P (Park), the ignition system will switch to OFF.

The vehicle may have an electric steering column lock. The lock is activated when the vehicle is switched to OFF and the driver door is opened. A sound may be heard as the lock actuates or releases. The steering column lock may not release with the wheels turned off center. If this happens, the vehicle may not start. Move the steering wheel from left to right while attempting to start the vehicle. If this does not work, the vehicle needs service.

Do not turn the engine off when the vehicle is moving. This will cause a loss of power assist in the brake and steering systems and disable the airbags.

If the vehicle must be shut off in an emergency:

1. Brake using a firm and steady pressure. Do not pump the brakes repeatedly. This may deplete power assist, requiring increased brake pedal force.

2. Shift the vehicle to N (Neutral). This can be done while the vehicle is moving. After shifting to N (Neutral), firmly apply the brakes and steer the vehicle to a safe location.
3. Come to a complete stop, shift to P (Park), and turn the ignition to OFF. On vehicles with an automatic transmission, the shift lever must be in P (Park) to turn the ignition switch to the OFF position.
4. Set the parking brake. See *Electric Parking Brake on page 9-28*.

⚠ Warning

Turning off the vehicle while moving may cause loss of power assist in the brake and steering systems and disable the airbags. While driving, only shut the vehicle off in an emergency.

If the vehicle cannot be pulled over, and must be shut off while driving, press and hold the ENGINE START/STOP button for longer than two seconds, or press twice in five seconds.

ACC/ACCESSORY (Amber Indicator Light): This mode allows you to use some electrical accessories when the engine is off.

With the ignition off, pressing the button one time without the brake pedal applied will place the ignition system in ACC/ACCESSORY.

The ignition will switch from ACC/ACCESSORY to OFF after five minutes to prevent battery rundown.

ON/RUN/START (Green Indicator Light): This mode is for driving and starting. With the ignition off, and the brake pedal applied, pressing the button once will place the ignition system in ON/RUN/START. Once engine cranking begins, release the button. Engine cranking will continue until the engine starts. See *Starting the Engine on page 9-17*. The ignition will then remain in ON/RUN.

Service Only Mode

This power mode is available for service and diagnostics, and to verify the proper operation of the malfunction indicator lamp as may be required for emission inspection purposes. With the vehicle off, and the brake pedal not applied, pressing and holding the button for more than five seconds will place the vehicle in Service Only Mode. The instruments and audio systems will operate as they do in ON/RUN, but the vehicle will not be able to be driven. The engine will not start in Service Only Mode. Press the button again to turn the vehicle off.

Starting the Engine

Move the shift lever to P (Park) or N (Neutral). The engine will not start in any other position. To restart the engine when the vehicle is already moving, use N (Neutral) only.

⚠ Caution

Do not try to shift to P (Park) if the vehicle is moving. If you do, you could damage the transmission. Shift to P (Park) only when the vehicle is stopped.

⚠ Caution

If you add electrical parts or accessories, you could change the way the engine operates. Any resulting damage would not be covered by the vehicle warranty. See *Add-On Electrical Equipment on page 9-70*.

Starting Procedure

1. If equipped with the Keyless Access system, the Remote Keyless Entry (RKE) transmitter must be in the vehicle. Put your foot on the brake pedal and press the ENGINE START/STOP button. When the engine begins cranking, let go of the button.

   The idle speed will go down as the engine gets warm. Do not race the engine immediately after starting it. Operate the engine and transmission gently to allow the oil to warm up and lubricate all moving parts.

   If the RKE transmitter is not in the vehicle or something is interfering with the transmitter, the Driver Information Center (DIC) will display a message. See *Key and Lock Messages on page 5-40*.

   If the battery in the RKE transmitter needs replacing, the DIC will display a message. The vehicle can still be driven. See "Starting the Vehicle with a Low Transmitter Battery" in *Remote Keyless Entry (RKE) System Operation on page 2-3*.

   The vehicle has a Computer-Controlled Cranking System. This feature assists in starting the engine and protects components. If the ENGINE START/STOP button is pressed, and then released when the engine begins cranking, the engine will continue cranking for a few seconds or until the vehicle starts. If the engine does not start and the button is pressed for many seconds, cranking will be stopped after 15 seconds to prevent cranking motor damage. To prevent gear damage, this system also prevents cranking if the engine is already running. Engine cranking can be stopped by pressing the ENGINE START/STOP button a second time.

⚠ Caution

Cranking the engine for long periods of time, by returning the ignition to the START position immediately after cranking has ended, can overheat and damage the cranking motor, and drain the battery. Wait at least 15 seconds between each try, to let the cranking motor cool down.

2. If the engine does not start after five to 10 seconds, especially in very cold weather (below −18°C or 0°F), it could be flooded with too much gasoline. Try pushing the accelerator pedal all the way to the floor and holding it there as you press the ENGINE START/STOP button. Wait at least 15 seconds between each try, to allow the cranking motor to cool down. When the engine starts, release the accelerator. If the vehicle starts briefly but then stops again, do the same thing. This clears the extra gasoline from the engine. Do not race the engine immediately after starting it. Operate the engine and transmission gently until the oil warms up and lubricates all moving parts.

Retained Accessory Power (RAP)

These vehicle accessories can be used for up to 10 minutes after the engine is turned off:

- Audio System
- Power Windows
- Sunroof (if equipped)

Power to the audio system will work up to 10 minutes or until the driver door is opened. Power to the windows or sunroof will work up to 10 minutes or until any door is opened.

Engine Coolant Heater

Vehicles with the engine coolant heater can use this option in cold weather conditions at or below −18° C (0°F) for easier starting and better fuel economy during engine warm-up. Plug in the coolant heater at least four hours before starting your vehicle. An internal thermostat in the plug-end of the cord may exist which will prevent engine coolant heater operation at temperatures above −18°C (0°F).

To Use the Engine Coolant Heater

1. Turn off the engine.
2. Open the hood and unwrap the electrical cord. The cord is clipped to the diagonal brace on the passenger side of the engine compartment.
3. Plug it into a normal, grounded 110-volt AC outlet.

⚠ Warning

Plugging the cord into an ungrounded outlet could cause an electrical shock. Also, the wrong kind of extension cord could overheat and cause a fire. You could be seriously injured. Plug the cord into a properly grounded three-prong 110-volt AC outlet. If the cord will not reach, use a heavy-duty three-prong extension cord rated for at least 15 amps.

4. Before starting the engine, be sure to unplug and store the cord as it was before to keep it away from moving engine parts. If you do not, it could be damaged.

Contact your dealer for information on how long to use the heater in your particular area.

Shifting Into Park

Use this procedure to shift into P (Park):

1. Hold the brake pedal down and set the parking brake.

   See *Electric Parking Brake on page 9-28*.

2. Move the shift lever into P (Park) by holding in the button on the shift lever and pushing the lever all the way toward the front of the vehicle.
3. Turn the ignition off.
4. Take the Remote Keyless Entry (RKE) transmitter with you.

Leaving the Vehicle with the Engine Running

⚠ Warning

It can be dangerous to leave the vehicle with the engine running. It could overheat and catch fire.

(Continued)

Warning (Continued)

It is dangerous to get out of the vehicle if the shift lever is not fully in P (Park) with the parking brake firmly set. The vehicle can roll.

Do not leave the vehicle when the engine is running. If you have left the engine running, the vehicle can move suddenly. You or others could be injured. To be sure the vehicle will not move, even when you are on fairly level ground, always set the parking brake and move the shift lever to P (Park). See *Shifting Into Park on page 9-20*. If you are towing a trailer, see *Driving Characteristics and Towing Tips on page 9-65*.

If you have to leave the vehicle with the engine running, the vehicle must be in P (Park) and the parking brake set. After shifting into P (Park), try to move the shift lever out without first pushing the button on the shift lever.

If you can, the shift lever was not fully locked into P (Park).

Torque Lock

Torque lock is when the weight of the vehicle puts too much force on the parking pawl in the transmission. This happens when parking on a hill and shifting the transmission into P (Park) is not done properly and then it is difficult to shift out of P (Park). To prevent torque lock, set the parking brake and then shift into P (Park). To find out how, see "Shifting Into Park" listed previously.

If torque lock does occur, the vehicle may need to be pushed uphill by another vehicle to relieve the parking pawl pressure, so you can shift out of P (Park).

Shifting out of Park

This vehicle is equipped with an electronic shift lock release system. The shift lock release is designed to prevent movement of the shift lever out of P (Park), unless the ignition is in ON/RUN and the brake pedal is applied.

The shift lock release is always functional except in the case of an uncharged or low voltage (less than 9 volt) battery.

If the vehicle has an uncharged battery or a battery with low voltage, try charging or jump starting the battery. See *Jump Starting on page 10-64* for more information.

To shift out of P (Park):

1. Apply the brake pedal.
2. Release the parking brake. See *Electric Parking Brake on page 9-28*.
3. Press the shift lever button.
4. Move the shift lever.

If unable to shift out of P (Park):

1. Fully release the shift lever button.
2. While holding down the brake pedal, press the shift lever button again.
3. Move the shift lever.

If the shift lever will not move from P (Park), consult your dealer or a professional towing service.

Parking over Things That Burn

⚠ Warning

Things that can burn could touch hot exhaust parts under the vehicle and ignite. Do not park over papers, leaves, dry grass, or other things that can burn.

Engine Exhaust

⚠ Warning

Engine exhaust contains carbon monoxide (CO) which cannot be seen or smelled. Exposure to CO can cause unconsciousness and even death.

Exhaust may enter the vehicle if:

- The vehicle idles in areas with poor ventilation (parking garages, tunnels, deep snow that may block underbody airflow or tail pipes).
- The exhaust smells or sounds strange or different.
- The exhaust system leaks due to corrosion or damage.
- The vehicle exhaust system has been modified, damaged, or improperly repaired.

(Continued)

Warning (Continued)

- There are holes or openings in the vehicle body from damage or aftermarket modifications that are not completely sealed.

If unusual fumes are detected or if it is suspected that exhaust is coming into the vehicle:

- Drive it only with the windows completely down.
- Have the vehicle repaired immediately.

Never park the vehicle with the engine running in an enclosed area such as a garage or a building that has no fresh air ventilation.

Running the Vehicle While Parked

It is better not to park with the engine running.

If the vehicle is left with the engine running, follow the proper steps to be sure the vehicle will not move. See *Shifting Into Park on page 9-20* and *Engine Exhaust on page 9-22*.

If parking on a hill and pulling a trailer, see *Driving Characteristics and Towing Tips on page 9-65*.

Automatic Transmission

The vehicle may be equipped with a 6-speed automatic transmission, or an 8-speed automatic transmission.

If the vehicles has engine RPO:

- LTG, it is equipped with a 6-speed automatic transmission with either All-Wheel Drive (AWD) or Rear-Wheel Drive (RWD).
- LFX and AWD, it is equipped with a 6-speed automatic transmission. With LFX and RWD, it is equipped with an 8-speed automatic transmission.
- LF3, it is equipped with an 8-speed automatic transmission.

There are several different positions for the shift lever.

P (Park): This position locks the rear wheels. Use this position when starting the engine because the vehicle cannot move easily.

⚠ Warning

It is dangerous to get out of the vehicle if the shift lever is not fully in P (Park) with the parking brake firmly set. The vehicle can roll.

Do not leave the vehicle when the engine is running unless you have to. If you have left the engine running, the vehicle can move suddenly. You or others

(Continued)

Warning (Continued)

could be injured. To be sure the vehicle will not move, even when you are on fairly level ground, always set the parking brake and move the shift lever to P (Park). See *Shifting Into Park on page 9-20*. If you are pulling a trailer, see *Driving Characteristics and Towing Tips on page 9-65*.

Make sure the shift lever is fully in P (Park) before starting the engine. The vehicle has an electronic shift lock release system. Fully apply the regular brakes first and then press the shift lever button before shifting from P (Park) when the ignition is in ON/RUN. If you cannot shift out of P (Park), ease pressure on the shift lever and push the shift lever all the way into P (Park) as you maintain brake application. Then press the shift lever button and move the shift lever into another gear. See *Shifting out of Park on page 9-21*.

⚠ Caution

Shifting to R (Reverse) while the vehicle is moving forward could damage the transmission. The repairs would not be covered by the vehicle warranty. Shift to R (Reverse) only after the vehicle is stopped.

R (Reverse): Use this gear to back up.

At low vehicle speeds, R (Reverse) can be used to rock the vehicle back and forth to get out of snow, ice, or sand without damaging your transmission. See *If the Vehicle Is Stuck on page 9-10*.

N (Neutral): In this position, the engine does not connect with the wheels. To restart when the vehicle is already moving, use N (Neutral) only. You can also use N (Neutral) when the vehicle is being towed.

⚠ Warning

Shifting into a drive gear while the engine is running at high speed is dangerous. Unless your foot is firmly on the brake pedal, the vehicle could move very rapidly. You could lose control and hit people or objects. Do not shift into a drive gear while the engine is running at high speed.

⚠ Caution

Shifting out of P (Park) or N (Neutral) with the engine running at high speed may damage the transmission. The repairs would not be covered by the vehicle warranty. Be sure the engine is not running at high speed when shifting the vehicle.

D (Drive): This position is for normal driving. It provides the best fuel economy. If you need more power for passing, and you are:

- Going less than 55 km/h (35 mph), push the accelerator pedal about halfway down.
- Going about 55 km/h (35 mph) or more, push the accelerator all the way down.

  The transmission will shift down to a lower gear and have more power.

Downshifting the transmission in slippery road conditions could result in skidding. See “Skidding” under *Loss of Control on page 9-5*.

M (Manual Mode): This mode can be entered with the shift lever in the D (Drive) position by pressing the M (Manual Mode) button on the top of the shift lever. M (Manual Mode) allows the driver to select gears appropriate for current driving conditions. M (Manual Mode) Can

be exited with a second press of the M (Manual Mode) button. See *Manual Mode on page 9-25*.

⚠ Caution

Spinning the tires or holding the vehicle in one place on a hill using only the accelerator pedal may damage the transmission. The repair will not be covered by the vehicle warranty. If you are stuck, do not spin the tires. When stopping on a hill, use the brakes to hold the vehicle in place.

While in Sport Mode, the vehicle monitors driving behavior, and automatically enables Performance Shift Features when spirited driving is detected. These features maintain lower transmission gears to increase available engine braking and improve acceleration response. The vehicle will exit these features and return to normal operation after a short period when no spirited driving is detected. See *Driver Mode Control on page 9-31*.

Manual Mode

Tap Shift

⚠ Caution

Driving with the engine at a high rpm without upshifting while using Tap Shift, could damage the vehicle. Always upshift when necessary while using Tap Shift.

Vehicles with Tap Shift have controls on the back of the steering wheel to manually shift the automatic transmission.

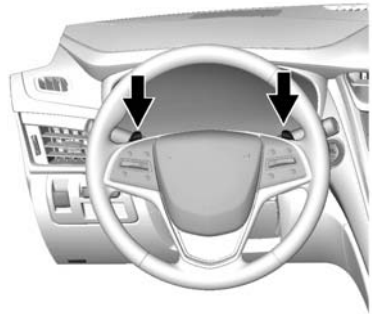

To enter Permanent Tap Shift Mode:

1. With the shift lever in D (Drive), press the M (Manual Mode) button on the top of the shift lever. While in Tap Shift Mode, the M of the PRNDM section of the instrument cluster will become highlighted, and the current gear is indicated.
2. Tap the left control to downshift, and the right control to upshift.
3. To exit, press the M (Manual Mode) button a second time.

With the shift lever in D (Drive) and not in Permanent Tap Shift Mode, the tap shift controls will activate a temporary tap manual shift mode, allowing the transmission to be manually shifted. Automatic shifts return after no manual shifts have been done for seven to 10 seconds. The Temporary Tap Shift Mode can also be deactivated by holding the right upshift control briefly.

While using Tap Shift, the vehicle will have firmer, quicker shifting. You can use this for sport driving or when climbing or descending hills, to stay in gear longer, or to downshift for more power or engine braking.

The transmission will only allow you to shift into gears appropriate for the vehicle speed and engine revolutions per minute (rpm). The transmission will not automatically shift to the next lower gear if the engine rpm is too high, nor to the next higher gear when the maximum engine rpm is reached.

If shifting is prevented for any reason, a SHIFT DENIED message will be displayed in the instrument cluster. See *Transmission Messages on page 5-47*.

When accelerating the vehicle from a stop in snowy and icy conditions, it is suggested to shift into second gear. A higher gear allows the vehicle to gain more traction on slippery surfaces.

Drive Systems

All-Wheel Drive

Vehicles with this feature always send engine power to all four wheels. It is fully automatic, and adjusts itself as needed for road conditions.

Brakes

Antilock Brake System (ABS)

This vehicle has ABS, an advanced electronic braking system that helps prevent a braking skid.

When the vehicle begins to drive away, ABS checks itself.
A momentary motor or clicking noise might be heard while this test is going on, and it might even be noticed that the brake pedal moves a little. This is normal.

If there is a problem with ABS, this warning light stays on. See *Antilock Brake System (ABS) Warning Light on page 5-23*.

If driving safely on a wet road and it becomes necessary to slam on the brakes and continue braking to avoid a sudden obstacle, a computer senses the wheels are slowing down. If one of the wheels is about to stop rolling, the computer will separately work the brakes at each wheel.

ABS can change the brake pressure to each wheel, as required, faster than any driver could. This can help you steer around the obstacle while braking hard.

As the brakes are applied, the computer keeps receiving updates on wheel speed and controls braking pressure accordingly.

Remember: ABS does not change the time needed to get a foot up to the brake pedal or always decrease stopping distance. If you get too close to the vehicle in front of you, there will not be enough time to apply the brakes if that vehicle suddenly slows or stops. Always leave enough room up ahead to stop, even with ABS.

Using ABS

Do not pump the brakes. Just hold the brake pedal down firmly and let ABS work. You may hear the ABS pump or motor operating and feel the brake pedal pulsate. This is normal.

Braking in Emergencies

ABS allows you to steer and brake at the same time. In many emergencies, steering can help more than even the very best braking.

Electric Parking Brake

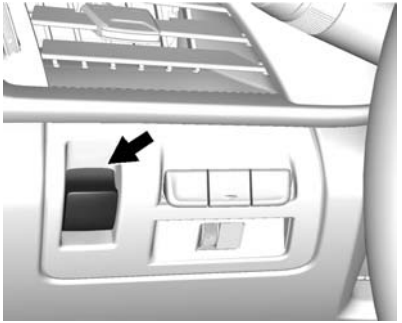

The vehicle has an Electric Parking Brake (EPB). The switch for the EPB is on the instrument panel, to the left of the steering wheel. The EPB can always be activated, even if the ignition is off. To prevent draining the battery, avoid repeated cycles of the EPB system when the engine is not running.

The system has a red parking brake status light and an amber parking brake warning light. See *Parking Brake Light on page 5-23* and *Service Electric Parking Brake Light on page 5-23*. There are also parking brake-related Driver Information Center (DIC) messages. See *Brake System Messages on page 5-37*. In case of insufficient electrical power, the EPB cannot be applied or released.

Before leaving the vehicle, check the red parking brake status light to ensure that the parking brake is applied.

EPB Apply

To apply the EPB:

1. Be sure the vehicle is at a complete stop.
2. Lift up the EPB switch momentarily.

The red parking brake status light will flash and then stay on once the EPB is fully applied. If the red parking brake status light flashes continuously, then the EPB is only partially applied or there is a problem with the EPB. A DIC message will display. Release the EPB and try to apply it again. If the light does not come on, or keeps flashing, have the vehicle serviced. Do not drive the vehicle if the red parking brake status light is flashing. See your dealer. See *Parking Brake Light on page 5-23*.

If the amber parking brake warning light is on, lift up on the EPB switch and hold it up. Continue to hold the switch until the red parking brake status light remains on. If the amber parking brake warning light remains on, see your dealer.

If the EPB is applied while the vehicle is moving, the vehicle will decelerate as long as the switch is held up. If the switch is held up until the vehicle comes to a stop, the EPB will remain applied.

The vehicle may automatically apply the EPB in some situations when the vehicle is not moving. This is normal, and is done to periodically check the correct operation of the EPB system.

If the EPB fails to apply, the rear wheels should be blocked to prevent vehicle movement.

EPB Release

To release the EPB:

1. Place the ignition in the ACC/ ACCESSORY or ON/RUN position.
2. Apply and hold the brake pedal.
3. Push down momentarily on the EPB switch.

The EPB is released when the red parking brake status light is off.

If the amber parking brake warning light is on, release the EPB by pushing down on the EPB switch and holding it down. Continue to hold the switch until the red parking brake status light is off. If either light stays on after release is attempted, see your dealer.

⚠ Caution

Driving with the parking brake on can overheat the brake system and cause premature wear or damage to brake system parts. Make sure that the parking brake is fully released and the brake warning light is off before driving.

Automatic EPB Release

The EPB will automatically release if the vehicle is running, placed into gear, and an attempt is made to drive away. Avoid rapid acceleration when the EPB is applied, to preserve parking brake lining life.

If parking on a hill, or if the vehicle is pulling a trailer, see *Driving Characteristics and Towing Tips on page 9-65*.

Brake Assist

This vehicle has a brake assist feature designed to assist the driver in stopping or decreasing vehicle speed in emergency driving conditions. This feature uses the stability system hydraulic brake control module to supplement the power brake system under conditions where the driver has quickly and forcefully applied the brake pedal in an attempt to quickly stop or slow down the vehicle. The stability system hydraulic brake control module increases brake pressure at each corner of the vehicle until the ABS activates. Minor brake pedal pulsation or pedal movement during this time is normal and the driver should continue to apply the brake pedal as the driving situation dictates. The brake assist feature will automatically disengage when the brake pedal is released or brake pedal pressure is quickly decreased.

Ride Control Systems

Traction Control/ Electronic Stability Control

The vehicle has a Traction Control System (TCS) and StabiliTrak®, an electronic stability control system. These systems help limit wheel slip and assist the driver in maintaining control, especially on slippery road conditions.

TCS activates if it senses that any of the drive wheels are spinning or beginning to lose traction. When this happens, the system brakes the spinning wheel(s) and/or reduces engine power to limit wheel spin.

StabiliTrak activates when the computer senses a difference between the intended path and the direction the vehicle is actually traveling. StabiliTrak selectively applies braking pressure at any one of the vehicle's brakes to help steer the vehicle in the intended direction.

If cruise control is being used and traction control or StabiliTrak begins to limit wheel spin, cruise control will disengage. Cruise control may be turned back on when road conditions allow.

Both systems come on automatically when the vehicle is started and begins to move. The systems may be heard or felt while they are operating or while performing diagnostic checks. This is normal and does not mean there is a problem with the vehicle.

It is recommended to leave both systems on for normal driving conditions, but It may be necessary to turn TCS off if the vehicle gets stuck in sand, mud, ice, or snow. See *If the Vehicle Is Stuck on page 9-10* and “Turning the Systems Off and On” later in this section.

The indicator light for both systems is in the instrument cluster. This light will:

- Flash when TCS is limiting wheel spin.
- Flash when StabiliTrak is activated.
- Turn on and stay on when either system is not working.

If either system fails to turn on or to activate, a message displays in the Driver Information Center (DIC), and comes on and stays on to indicate that the system is inactive and is not assisting the driver in maintaining control. The vehicle is safe to drive, but driving should be adjusted accordingly.

If comes on and stays on:

1. Stop the vehicle.
2. Turn the engine off and wait 15 seconds.
3. Start the engine.

Drive the vehicle. if comes on and stays on, the vehicle may need more time to diagnose the problem. If the condition persists, see your dealer.

Turning the Systems Off and On

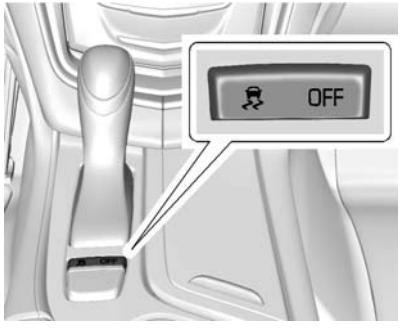

⚠ Caution

Do not repeatedly brake or accelerate heavily when TCS is off. The vehicle driveline could be damaged.

To turn off only TCS, press and release the button. The traction off light displays in the instrument cluster. The appropriate DIC message is displayed. See *Ride Control System Messages on page 5-44*.

To turn TCS on again, press and release the button. The traction off light displayed in the instrument cluster will turn off.

If TCS is limiting wheel spin when the button is pressed, the system will not turn off until the wheels stop spinning.

To turn off both TCS and StabiliTrak, press and hold the button until the traction off light and StabiliTrak OFF light come on and stay on in the instrument cluster. The appropriate DIC message is displayed. See *Ride Control System Messages on page 5-44*.

To turn TCS and StabiliTrak on again, press and release the button. The traction off light and StabiliTrak OFF light in the instrument cluster turn off.

Adding accessories can affect the vehicle's performance. See *Accessories and Modifications on page 10-2*.

Driver Mode Control

Driver Mode Control attempts to add a sportier feel, provide a more comfortable ride, or assist in different weather conditions or terrain. This system simultaneously

changes the software calibration of various sub-systems. Depending on the option package, available features, and mode selected, the suspension, steering, and powertrain will change calibrations to achieve the desired mode characteristics. If the vehicle is equipped with MagneRide™, selecting the various Driver Modes adjusts the ride of the vehicle to enhance the ride performance for the road conditions and the selected mode.

While in the Sport and/or Track Modes, the vehicle monitors driving behavior and automatically enables Performance Shift Features when spirited driving is detected. These features maintain lower transmission gears to increase available engine braking and improve acceleration response. The vehicle will exit these features and return to normal operation after a short period when no spirited driving is detected.

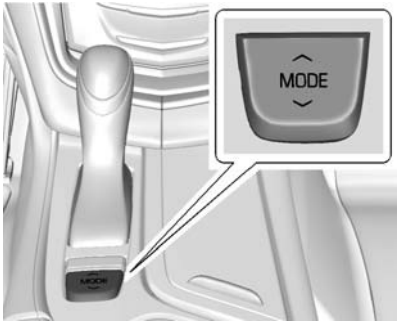

Driver Mode Control Switch

The Driver Mode Control has three or four modes: Tour, Sport, Snow/Ice, and Track. The Track Mode is for LF3 models only. Press ∧ or ∨ on the MODE switch on the center console to make a mode selection. The first press of the switch will show the current mode. Subsequent presses will scroll though the available modes. The Tour and Sport Modes will feel similar on a smooth road. Select a new setting whenever driving conditions change.

Tour Mode

Use for normal city and highway driving to provide a smooth, soft ride.

Sport Mode

Use where road conditions or personal preference demand a more controlled response.

When selected, the Sport Mode indicator will display in the Driver Information Center (DIC).

When in Sport Mode, the vehicle will shift automatically but hold a lower gear longer than it would in the normal driving mode based on braking, throttle input, and vehicle lateral acceleration. See *Automatic Transmission on page 9-23*. The steering will change to provide more precise control. If the vehicle has MagneRide, the suspension will change to provide better cornering performance. Competitive Driving Mode can be accessed through this mode.

Snow/Ice Mode

Use when more traction is needed during slippery conditions. The transmission will use 2 (Second) gear instead of 1 (First) gear when accelerating from a stop. The vehicle will upshift normally when the vehicle is moving. The LF3 models will use a different accelerator pedal map instead of using 2 (Second) gear from stop. The accelerator pedal will reduce engine torque at small pedal inputs. The transmission will also shift differently to assist in maintaining traction.

When selected, the Snow/Ice Mode indicator will display in the DIC.

This feature is not intended for use when the vehicle is stuck in sand, mud, ice, snow, or gravel. If the vehicle becomes stuck, see *If the Vehicle Is Stuck on page 9-10*.

Track Mode (LF3 Only)

Use when maximum vehicle handling is desired.

When selected, the Track Mode indicator will display in the DIC.

When in Track Mode, the automatic transmission and steering will function similar to Sport Mode. The accelerator pedal is adjusted to give maximum control during the highest level of spirited driving. The MagneRide will be set to the optimum level for vehicle responsiveness. Competitive Driving Mode can be accessed through this mode.

Competitive Driving Mode (LF3 Only)

To select this optional handling mode, press the button quickly two times and the DIC will display the appropriate message. While in the Competitive Driving Mode, the traction off light and StabiliTrak OFF light will come on in the instrument cluster. TCS does not limit wheel spin, the Electronic Limited-Slip Differential (ELSD) allows increased vehicle agility, and more effort is required to turn the steering wheel. See “Limited–Slip Differential (LF3 Only)” following. Adjust your driving accordingly.

Press the button again, or turn the ignition to ACC/ACCESSORY and restart the vehicle, to turn TCS back on. The traction off light and StabiliTrak OFF light will go out in the instrument cluster.

⚠ Caution

When traction control is turned off, or Competitive Driving Mode is active, it is possible to lose traction.

Limited-Slip Differential (LF3 Only)

If equipped, the Electronic Limited Slip Differential (ELSD) is automatically activated. ELSD actively monitors vehicle sensors and driver inputs to determine the amount of change for the conditions. With ELSD, the vehicle has:

- Enhanced high-speed control.
- Improved traction through corners, allowing more acceleration.
- More precise steering.
- Increased vehicle agility.
- Integration with StabiliTrak.

Cruise Control

⚠ Warning

Cruise control can be dangerous where you cannot drive safely at a steady speed. Do not use the cruise control on winding roads or in heavy traffic.

Cruise control can be dangerous on slippery roads. On such roads, fast changes in tire traction can cause excessive wheel slip, and you could lose control. Do not use cruise control on slippery roads.

With cruise control, a speed of about 40 km/h (25 mph) or more can be maintained without keeping your foot on the accelerator. Cruise control does not work at speeds below about 40 km/h (25 mph).

If the brakes are applied, the cruise control disengages.

If the StabiliTrak® system begins to limit wheel spin while using cruise control, the cruise control automatically disengages. See *Traction Control/Electronic Stability Control on page 9-30*. If a collision alert occurs when cruise control is activated, cruise control is disengaged. See *Forward Collision Alert (FCA) System on page 9-52*. When road conditions allow the cruise control to be safely used, you can apply the cruise control again.

(On/Off): Press to turn the cruise control on and off. A white cruise control indicator appears in the instrument cluster when cruise is turned on.

+RES (Resume/Accelerate): Press the control up briefly to +RES to make the vehicle resume to a previously set speed or press and hold to accelerate. If cruise control is already active, use to increase vehicle speed. To increase speed by 1 km/h (1 mph), press +RES up to the first detent. To increase speed to the next 5 km/h (5 mph) mark on the speedometer, press +RES up to the second detent.

SET− (Set/Coast): Press the control down briefly to SET− to set the speed and activate cruise control. If cruise control is already active, use to decrease vehicle speed. To decrease speed by 1 km/h (1 mph), press SET− down to the first detent. To decrease speed to the next 5 km/h (5 mph) mark on the speedometer, press SET− down to the second detent.

(Cancel): Press to disengage cruise control without erasing the set speed from memory.

Setting Cruise Control

If the cruise button is on when not in use, it could get bumped and go into cruise when not desired. Keep the cruise control button off when cruise is not being used.

1. Press .
2. Get up to the desired speed.
3. Press and release the SET− control on the steering wheel.
4. Remove foot from the accelerator.

When the cruise control has been set to the desired speed, the cruise control indicator appears green on the instrument cluster and a cruise set speed message appears on the Head-Up Display (HUD), if equipped.

Resuming a Set Speed

If the cruise control is set at a desired speed and then the brakes are applied, the cruise control is disengaged without erasing the set speed from memory.

Once the vehicle speed reaches about 40 km/h (25 mph) or more, press +RES up to the first detent briefly on the steering wheel. The vehicle returns to the previous set speed.

Increasing Speed While Cruise Control is at a Set Speed

If the cruise control system is already activated:

- Press and hold +RES up until the desired speed is reached, then release it.
- To increase vehicle speed in small increments, briefly press +RES up to the first detent. For each press, the vehicle goes about 1 km/h (1 mph) faster.

- To increase vehicle speed in larger increments, briefly press +RES up to the second detent. For each press, the vehicle speed increases to the next 5 km/h (5 mph) mark on the speedometer.

The speedometer reading can be displayed in either English or metric units. See *Instrument Cluster on page 5-10*. The increment value used depends on the units displayed.

Reducing Speed While Cruise Control is at a Set Speed

If the cruise control system is already activated:

- Press and hold SET− down until the desired lower speed is reached, then release it.
- To decrease the vehicle speed in small increments, briefly press SET− down to the first detent. For each press, the vehicle goes about 1 km/h (1 mph) slower.
- To decrease the vehicle speed in larger increments, briefly press SET− down to the second detent. For each press, the vehicle speed decreases to the next 5 km/h (5 mph) mark on the speedometer.

The cruise control system may automatically brake to slow the vehicle down.

The speedometer reading can be displayed in either English or metric units. See *Instrument Cluster on page 5-10*. The increment value used depends on the units displayed.

Passing Another Vehicle While Using Cruise Control

Use the accelerator pedal to increase the vehicle speed. When you take your foot off the pedal, the vehicle will slow down to the previously set cruise speed. While pressing the accelerator pedal or shortly following the release to override cruise control, briefly applying the SET– switch will result in cruise control set to the current vehicle speed.

Using Cruise Control on Hills

How well the cruise control will work on hills depends upon the vehicle speed, load, and the steepness of the hills. When going up steep hills, you might have to step on the accelerator pedal to maintain the vehicle speed. When going downhill, the cruise control system may automatically brake to slow the vehicle down. Also, you may have to brake or shift to a lower gear to keep the vehicle speed down. If the brake is applied, the cruise control disengages.

Ending Cruise Control

There are three ways to end cruise control:

- Step lightly on the brake pedal.
- Press .
- Press .

Erasing Speed Memory

The cruise control set speed is erased from memory if is pressed or if the ignition is turned off.

Adaptive Cruise Control

If equipped with Adaptive Cruise Control (ACC), it allows the driver to select the cruise control set speed and following gap. Read this entire section before using this system. The following gap is the following time between your vehicle and a vehicle detected directly ahead in your path moving in the same direction. If no vehicle is detected in your path, ACC works like regular cruise control. ACC uses camera and radar sensors. See *Radio Frequency Statement on page 13-15*.

If a vehicle is detected in your path, ACC can apply acceleration or limited, moderate braking to maintain the selected following gap. To disengage ACC, apply the brake.

If ACC is controlling your vehicle speed when the Traction Control System (TCS) or electronic stability control system activates, the ACC may automatically disengage. See *Traction Control/Electronic Stability Control on page 9-30*. When road conditions allow ACC to be safely used, the ACC can be turned back on.

ACC will not engage if the TCS or electronic stability control system is disabled.

⚠ Warning

ACC has limited braking ability and may not have time to slow the vehicle down enough to avoid a collision with another vehicle you are following. This can occur when vehicles suddenly slow or stop ahead, or enter your lane. Also see “Alerting the Driver” in this section. Complete attention is always required while driving and

(Continued)

Warning (Continued)

you should be ready to take action and apply the brakes. See *Defensive Driving on page 9-3*.

⚠ Warning

Adaptive Cruise Control will not detect or brake for children, pedestrians, animals, or other objects.

Do not use Adaptive Cruise Control when:

- On winding and hilly roads or when the sensors are blocked by snow, ice, or dirt. The system may not detect a vehicle ahead. Keep the entire front of the vehicle clean.

(Continued)

Warning (Continued)

- Visibility is low, such as in fog, rain, or snow conditions. Adaptive Cruise Control performance is limited under these conditions.
- On slippery roads where fast changes in tire traction can cause excessive wheel slip.

(On/Off): Press to turn the system on or off. A white cruise control indicator comes on.

+RES (Resume/Accelerate): Press the control up briefly to resume the previous set speed or to increase vehicle speed if ACC is already activated. To increase speed by 1 km/h (1 mph), press +RES up to the first detent. To increase speed to the next 5 km/h (5 mph) mark on the speedometer, press +RES up to the second detent.

SET– (Set/Coast): Press the control down briefly to set the speed and activate ACC or to decrease vehicle speed if ACC is already activated. To decrease speed by 1 km/h (1 mph), press SET− down to the first detent. To decrease speed to the next 5 km/h (5 mph) mark on the speedometer, press SET− down to the second detent.

(Cancel): Press to disengage ACC without erasing the set speed from memory.

(Follow Distance Gap): Press to select a following gap time (or distance) setting for ACC of Far, Medium, or Near.

Setting Adaptive Cruise Control

If the cruise control is on when not in use, the cruise on/off control could get pressed and cruise control could become active when not desired. Keep cruise control button off when cruise is not being used.

Select the set speed desired for cruise. This is the vehicle speed when no vehicle is detected in its path.

ACC will not set at a speed less than 25 km/h (16 mph), although it can be resumed when driving at lower speeds.

To set ACC:

1. Press .
2. Get up to the desired speed.
3. Press and release the SET– control on the steering wheel.

4. Remove foot from the accelerator.

After ACC is set, it may immediately apply the brakes if a vehicle ahead is detected closer than the selected following gap.

The ACC indicator displays in the instrument cluster and Head-Up Display (HUD) (if equipped). When the ACC is active, the indicator turns green.

Be mindful of speed limits, surrounding traffic speeds, and weather conditions when selecting the set speed.

Resuming a Set Speed

If the ACC is set at a desired speed and then the brakes are applied, the ACC is disengaged without erasing the set speed from memory.

To begin using ACC again, press +RES up briefly on the steering wheel. The vehicle returns to the previous set speed.

Increasing Speed While ACC is at a Set Speed

If ACC is already activated, do one of the following:

- Use the accelerator to get to the higher speed. Press SET– down. Release the control and the accelerator pedal. The vehicle will now cruise at the higher speed.

  When the accelerator pedal is pressed, ACC will not brake because it is overridden. A warning message will appear on the Driver Information Center (DIC) and the Head-Up Display (HUD) (if equipped). See *Cruise Control Messages on page 5-38*.
- Press and hold +RES up until the desired set speed appears on the display, then release it.
- To increase vehicle speed in small increments, press +RES up to the first detent. For each press, the vehicle goes 1 km/h (1 mph) faster.
- To increase vehicle speed in larger increments, press +RES up to the second detent. For each press, the vehicle speed increases to the next 5 km/h (5 mph) mark on the speedometer.

When it is determined that there is no vehicle ahead or the vehicle ahead is beyond the selected following gap, then the vehicle speed will increase to the set speed.

The speedometer reading can be displayed in either English or metric units. See *Instrument Cluster on page 5-10*. The increment value used depends on the units displayed.

Reducing Speed While ACC is at a Set Speed

If ACC is already activated, do one of the following:

- Use the brake to get to the desired lower speed. Press SET– down and release the accelerator pedal. The vehicle will now cruise at the lower speed.
- Press and hold SET– down until the desired lower speed is reached, then release it.
- To decrease the vehicle speed in smaller increments, press SET− down to the first detent. For each press, the vehicle goes about 1 km/h (1 mph) slower.
- To decrease the vehicle speed in larger increments, press SET− down to the second detent. For each press, the vehicle speed decreases to the next 5 km/h (5 mph) mark on the speedometer.

The speedometer reading can be displayed in either English or metric units. See *Instrument Cluster on page 5-10*. The increment value used depends on the units displayed.

Selecting the Follow Distance

When a slower moving vehicle is detected ahead within the selected following gap, ACC will adjust the vehicle's speed and attempt to maintain the follow distance gap selected.

Press on the steering wheel to adjust the following gap. Each press cycles the gap button through three settings: Far, Medium, or Near.

When pressed, the current gap setting displays briefly on the instrument cluster and HUD, if equipped. Subsequent presses cycle the gap button through three settings: Far, Medium, or Near. The gap setting will be maintained until it is changed.

Since each gap setting corresponds to a following time (Far, Medium, or Near), the following distance will vary based on vehicle speed. The faster the vehicle speed, the further back your vehicle will follow a vehicle detected ahead. Consider traffic and weather conditions when selecting the following gap. The range of selectable gaps may not be appropriate for all drivers and driving conditions.

Changing the gap setting automatically changes the alert timing sensitivity (Far, Medium, or Near) for the Forward Collision Alert (FCA) feature. See *Forward Collision Alert (FCA) System on page 9-52*.

Alerting the Driver

Without Head-Up Display

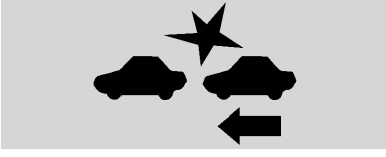

With Head-Up Display

If ACC is engaged, driver action may be required when ACC cannot apply sufficient braking because of approaching a vehicle too rapidly.

When this condition occurs, a series of red lights or the collision alert symbol on the HUD, if equipped, will flash on the windshield. Either eight beeps will sound from the front, or both sides of the Safety Alert Seat will pulse five times. See "Collision/Detection Systems" under *Vehicle Personalization on page 5-48*.

See *Defensive Driving on page 9-3*.

Approaching and Following a Vehicle

The vehicle ahead symbol is in the instrument cluster and HUD display, if equipped.

The vehicle ahead symbol only displays when a vehicle is detected in your vehicle's path moving in the same direction.

If this symbol is not displaying, ACC will not respond to or brake to vehicles ahead.

ACC automatically slows the vehicle down and adjusts vehicle speed to follow the vehicle in front at the selected follow gap. The vehicle speed increases or decreases to follow the vehicle in front of you, but will not exceed the set speed. It may apply limited braking, if necessary. When braking is active, the brake lamps will come on. The automatic braking may feel or sound different than if the brakes were applied manually. This is normal.

Stationary or Very Slow-Moving Objects

⚠ Warning

Adaptive Cruise Control (ACC) may not detect and react to stopped or slow-moving vehicles ahead of you. For example, the system may not brake for a vehicle that it has never detected moving. This can occur in stop-and-go traffic or when a vehicle suddenly appears due to a vehicle ahead changing lanes. Your vehicle may not stop and

(Continued)

Warning (Continued)

could cause a crash. Use caution when using ACC. Your complete attention is always required while driving and you should be ready to take action and apply the brakes.

ACC Automatically Disengages

ACC may automatically disengage and the driver will need to manually apply the brakes to slow the vehicle when:

- The sensors are blocked.
- The Traction Control System (TCS) or electronic stability control system has activated or been disabled.
- No traffic or other objects are being detected.
- There is a fault in the system.

The ACC active symbol will not be displayed when ACC is no longer active.

Notification to Resume ACC

ACC will maintain a follow gap behind a detected vehicle and slow your vehicle to a stop behind that vehicle.

If the stopped vehicle ahead has driven away and ACC has not resumed, the vehicle ahead symbol will flash as a reminder to check traffic before proceeding. In addition, the left and right sides of the Safety Alert Seat will pulse three times, or three beeps will sound. See ”Alert Type” and “Go Notifier” in “Collision/Detection Systems” under *Vehicle Personalization on page 5-48*.

When the vehicle ahead drives away, press RES+ or the accelerator pedal to resume ACC. If stopped for more than two minutes or if the driver door is opened and the driver safety belt is unbuckled, the ACC automatically applies the electric parking brake to hold the vehicle. The electric parking brake status light will turn on. See *Electric Parking Brake on page 9-28*. To release the electric parking brake, press the accelerator pedal.

A DIC warning message may display indicating to shift to P (Park) before exiting the vehicle. See *Vehicle Messages on page 5-36*.

⚠ Warning

If ACC has stopped the vehicle, and if ACC is disengaged, turned off, or canceled, the vehicle will no longer be held at a stop. The vehicle can move. When ACC is holding the vehicle at a stop, always be prepared to manually apply the brakes.

⚠ Warning

Leaving the vehicle without placing it in P (Park) can be dangerous. Do not leave the vehicle while it is being held at a stop by ACC. Always place the vehicle in P (Park) and turn off the ignition before leaving the vehicle.

ACC Override

If using the accelerator pedal while ACC is active, a warning message on the DIC and in the HUD (if equipped) will indicate that automatic braking will not occur. See *Vehicle Messages on page 5-36*. ACC will resume operation when the accelerator pedal is not being pressed.

⚠ Warning

The ACC will not automatically apply the brakes if your foot is resting on the accelerator pedal. You could crash into a vehicle ahead of you.

Curves in the Road

⚠ Warning

On curves, ACC may not detect a vehicle ahead in your lane. You could be startled if the vehicle accelerates up to the set speed, especially when following a vehicle exiting or entering exit ramps. You could lose control of the vehicle or crash. Do not use ACC while driving on an entrance or exit ramp. Always be ready to use the brakes if necessary.

⚠ Warning

On curves, ACC may respond to a vehicle in another lane, or may not have time to react to a vehicle in your lane. You could crash into a vehicle ahead of you, or lose control of your vehicle. Give extra attention in curves and be ready to use the brakes if necessary. Select an appropriate speed while driving in curves.

ACC may operate differently in a sharp curve. It may reduce the vehicle speed if the curve is too sharp.

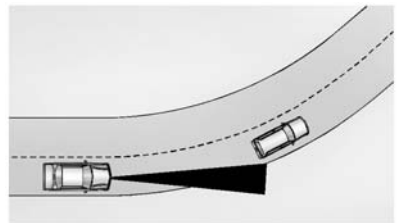

When following a vehicle and entering a curve, ACC may not detect the vehicle ahead and accelerate to the set speed. When this happens the vehicle ahead symbol will not appear.

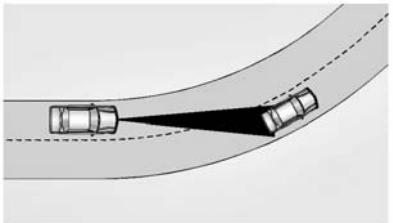

ACC may detect a vehicle that is not in your lane and apply the brakes.

ACC may occasionally provide an alert and/or braking that is considered unnecessary. It could respond to vehicles in different lanes, signs, guardrails, and other stationary objects when entering or exiting a curve. This is normal operation. The vehicle does not need service.

Other Vehicle Lane Changes

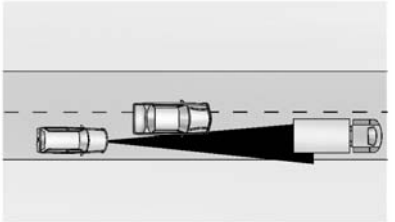

ACC will not detect a vehicle ahead until it is completely in the lane. The brake may need to be manually applied.

Do Not Use ACC on Hills and When Towing a Trailer

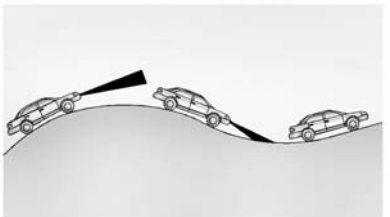

Do not use ACC when driving on steep hills or when towing a trailer. ACC will not detect a vehicle in the lane while driving on steep hills. The driver will often need to take over acceleration and braking on steep hills, especially when towing a trailer. If the brakes are applied, the ACC disengages.

Ending ACC

There are three ways to disengage ACC:

- Step lightly on the brake pedal.
- Press .
- Press .

Erasing Speed Memory

The cruise control set speed is erased from memory if is pressed or if the ignition is turned off.

Cleaning the Sensing System

The camera sensor on the windshield behind the rearview mirror and the radar sensors on the front of the vehicle can become blocked by snow, ice, dirt, or mud. These areas need to be cleaned for ACC to operate properly.

For cleaning instructions, see “Washing the Vehicle” under *Exterior Care on page 10-69*.

System operation may also be limited under snow, heavy rain, or road spray conditions.

Driver Assistance Systems

This vehicle may have features that work together to help avoid crashes or reduce crash damage while driving, backing, and parking. Read this entire section before using these systems.

⚠ Warning

Do not rely on the Driver Assistance Systems. These systems do not replace the need for paying attention and driving safely. You may not hear or feel alerts or warnings provided by these systems. Failure to use proper care when driving may result in injury, death, or vehicle damage. See *Defensive Driving on page 9-3*.

Under many conditions, these systems will not:

(Continued)

Warning (Continued)

- Detect children, pedestrians, bicyclists, or animals.
- Detect vehicles or objects outside the area monitored by the system.
- Work at all driving speeds.
- Warn you or provide you with enough time to avoid a crash.
- Work under poor visibility or bad weather conditions.
- Work if the detection sensor is not cleaned or is covered by ice, snow, mud, or dirt.

Complete attention is always required while driving, and you should be ready to take action and apply the brakes and/or steer the vehicle to avoid crashes.

Audible or Safety Alert Seat

Some driver assistance features alert the driver of obstacles by beeping. To change the volume of the warning chime, see “Comfort and Convenience” under *Vehicle Personalization on page 5-48*.

If equipped with the Safety Alert Seat, the driver seat cushion may provide a vibrating pulse alert instead of beeping. To change this, see “Collision/Detection Systems” under *Vehicle Personalization on page 5-48*.

Assistance Systems for Parking or Backing

When the vehicle is in R (Reverse), the Rear Vision Camera (RVC) and Rear Parking Assist may help the driver to avoid a crash or to reduce crash damage while backing and parking. Some models may also have the Rear Automatic Braking and Backing Warning System, Rear Cross Traffic Alert (RCTA), Automatic Parking Assist (APA), and/or Front Parking Assist.

When the vehicle is shifted into R (Reverse), the RVC displays an image of the area behind the vehicle in the center stack display. When the vehicle is shifted out of R (Reverse), the screen returns to the previous content, after a short delay. To see the previous content sooner, press one of the radio buttons. If the message Service Rear Camera System is displayed, the vehicle may need service.

⚠ Warning

The RVC system does not display children, pedestrians, bicyclists, animals, or any other object located outside the camera's field of view, below the bumper, or under the vehicle. Perceived distances may be different from actual distances. Do not back the

(Continued)

Warning (Continued)

vehicle using only the RVC screen, during longer, higher speed backing maneuvers, or where there could be cross traffic. Failure to use proper care before backing may result in injury, death, or vehicle damage. Always check behind and around the vehicle before backing.

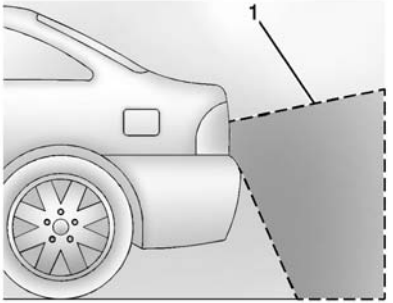

1. View Displayed by the Camera

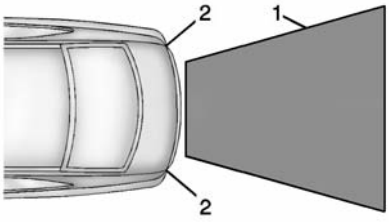

1. View Displayed by the Camera
2. Corners of the Rear Bumper

Displayed images may be farther or closer than they appear. The area displayed is limited and objects that are close to either corner of the bumper or under the bumper do not display.

A warning triangle may display on the RVC screen to show where the Ultrasonic Rear Parking Assist (URPA) has detected an object. This triangle changes from amber to red and increases in size the closer the object.

On vehicles with the Rear Cross Traffic Alert (RCTA), a triangle with an arrow may also display on the RVC screen to warn of traffic coming from either direction. This system detects objects coming from up to 20 m (65 ft) from the left or right side behind the vehicle. When an object is detected, either three beeps sound from the left or right side or three Safety Alert Seat pulses occur on the left or right side, depending on the direction of the detected vehicle.

Use caution while backing up when towing a trailer, as the RCTA detection zones that extend out from the back of the vehicle do not move further back when a trailer is towed.

With Rear Park Assist, and if equipped with Front Park Assist, as the vehicle moves at speeds of less than 8 km/h (5 mph) the sensors on the bumpers detect objects up to 2.5 m (8 ft) behind and 1.2 m (4 ft) in front of the vehicle within a zone 25 cm (10 in) high off the ground and below bumper level. These detection distances may be less during warmer or humid weather.

⚠ Warning

The parking assist system does not detect children, pedestrians, bicyclists, animals, or objects located below the bumper or that are too close or too far from the vehicle. It is not available at speeds greater than 8 km/h (5 mph). To prevent injury, death, or vehicle damage, even with parking assist, always check the area around the vehicle and check all mirrors before moving forward or backing.

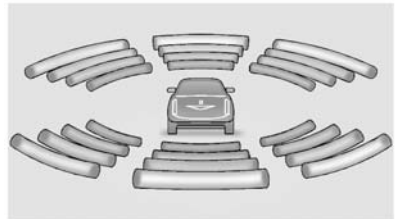

The instrument cluster may have a parking assist display with bars that show “distance to object” and object location information for the Parking Assist system. As the object gets closer, more bars light up and the bars change color from yellow to amber to red. When an object is first detected in the rear, one beep will be heard from the rear, or both sides of the Safety Alert Seat will pulse two times. When an object is very close (<0.6 m (2 ft) in the vehicle rear, or <0.3 m (1 ft) in the vehicle front), five beeps will sound from the rear or front depending where the object is detected, or both sides of the Safety Alert Seat will pulse five times. Beeps for Front Parking Assist are higher pitched than for Rear Parking Assist.

Vehicles with Adaptive Cruise Control (ACC) have the Backing Warning System, which is designed to help avoid backing crashes. The system can warn of rear objects when backing up at speeds greater than 8 km/h (5 mph).

The Backing Warning System will beep once from the rear when a potential object threat is first detected, or pulse twice on both sides of the Safety Alert Seat. When the system detects a potential imminent crash, beeps will be heard from the rear, or five pulses will be felt on both sides of the Safety Alert Seat. There may also be a brief, sharp application of the brakes.

⚠ Warning

The Backing Warning System only operates at speeds greater than 8 km/h (5 mph). It does not detect children, pedestrians, bicyclists, animals, or objects below the bumper or that are too close or too far from the vehicle. In some situations, such as at higher backing speeds, there may not be enough time for the short, sharp application of the vehicle brake system to occur. To prevent

(Continued)

Warning (Continued)

injury, death, or vehicle damage, even with the Backing Warning System, always check the area around the vehicle and check all mirrors before backing.

Vehicles with Adaptive Cruise Control (ACC) also have the Rear Automatic Braking system, which is designed to help avoid or reduce the harm caused by backing crashes. If the system detects the vehicle is backing too fast to avoid a crash with a detected object, it may automatically brake hard to a stop.

⚠ Warning

Rear Automatic Braking may not avoid many types of backing crashes. Do not wait for the automatic braking to apply. This system is not designed to replace

(Continued)

Warning (Continued)

driver braking, but only acts when the vehicle may not stop in time. The system, in some situations or environments, may not brake or may not brake in time to avoid a crash. It does not detect children, pedestrians, bicyclists, animals, or objects below the bumper or that are too close or too far from the vehicle. To prevent injury, death, or vehicle damage, even with Rear Automatic Braking, always check the area around the vehicle before and while backing.

Pressing the brake pedal after the vehicle comes to a stop will release the Rear Automatic Braking. If the brake pedal is not pressed soon after the stop, the electric parking brake may be set. To disengage the electric parking brake, see *Electric Parking Brake on page 9-28*. When it is safe, pressing the accelerator pedal firmly at any time will override the Rear Automatic Braking.

⚠ Warning

There may be instances where unexpected or undesired automatic braking occurs. If this happens, either press the brake pedal or firmly press the accelerator pedal to release the brakes from the Rear Automatic Braking system. Before releasing the brakes, check the RVC screen and check the area around the vehicle to make sure it is safe to proceed.

Turning the Features On or Off

The P button on the center stack is used to turn on or off the Front and Rear Parking Assist, Rear Automatic Braking, and Backing Warning System at the same time. The indicator light next to the button comes on when the features are on and turns off when the features have been disabled.

The parking assist symbols, guidance lines, and Rear Cross Traffic Alert (RCTA) can be turned on or off through the Settings menu on the infotainment system:

1. On the infotainment system, press the Settings screen button, or turn the MENU knob to highlight Settings and press MENU.

2. Select Rear Camera.
3. Press Guidance Lines, Rear Cross Traffic Alert, or Park Assist Symbols, and then select OFF or ON.

Automatic Parking Assist (APA)

If equipped, Automatic Parking Assist (APA) searches for and steers the vehicle into parallel parking spots. When using APA, you must still shift gears, and control the brakes and accelerator. The Driver information Center (DIC) and audible beeps help to guide parking maneuvers.

⚠ Warning

APA does not apply the brakes. APA may not detect objects in the parking space, objects that are soft or narrow, objects high off the ground such as flatbed trucks, or objects below ground level

(Continued)

Warning (Continued)

such as large potholes. Always verify that the parking space is appropriate for parking a vehicle. APA does not respond to changes in the parking space, such as movement of an adjacent vehicle, or a person or object entering the parking space. APA does not detect or avoid traffic that is behind or alongside of the vehicle. Always be prepared to stop the vehicle during the parking maneuver.

The system is available when the vehicle speed is below 30 km/h (18 mph). Press the APA button, P, to enable the system to begin searching for a space that is large enough to park in. The system cannot detect whether it is a legal parking space.

APA searches for parking spaces to the right of the vehicle. To search for a parking space to the left, turn on the left turn signal.

After completely passing a large enough space bordered by two vehicles or other objects, an audible beep occurs and a red symbol displays in the DIC.

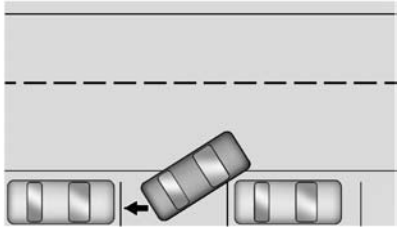

APA will instruct the vehicle to stop once a large enough space is found. Follow the instructions in the DIC. When instructed to drive in reverse, shift to R (Reverse) to engage automatic steering. The steering wheel will briefly vibrate as a reminder to remove hands from the steering wheel. Check surroundings and continue braking or accelerating as needed, and be prepared to stop to avoid vehicles, pedestrians, or objects.

If the vehicle is in R (Reverse), but does not steer into the expected space, this may be because the system is maneuvering the vehicle into a previously detected space. The APA system does not need service.

If the vehicle exceeds 10 km/h (6 mph), APA is automatically disengaged and automatic steering will turn off. A DIC progress arrow displays the status of the parking maneuver. Depending on the space size, additional maneuvers may be required, and there will be additional instructions. When changing gears, allow the automatic steering to complete before continuing the parking maneuver. Upon successful completion of a maneuver, APA will beep and display a PARKING COMPLETE message. Place the vehicle in P (Park).

APA may automatically disengage if:

- The steering wheel is used by the driver.
- The maximum allowed speed is exceeded.
- There is a failure with the APA system.
- Electronic stability control or antilock brakes are activated.
- An important vehicle message is displayed in the DIC.

To cancel APA, press the APA button again.

When the System Does Not Seem to Work Properly

The APA system may require a short period of driving along curves to calibrate.

Assistance Systems for Driving

If equipped, when driving the vehicle forward, Forward Collision Alert (FCA), Lane Departure Warning (LDW), Side Blind Zone Alert (SBZA), and/or the Active Emergency Braking System can help to avoid a crash or reduce crash damage.

Forward Collision Alert (FCA) System

If equipped, the FCA system may help to avoid or reduce the harm caused by front-end crashes. When approaching a vehicle ahead too quickly, FCA provides a flashing red alert on the windshield and rapidly beeps or pulses the Safety Alert Seat. FCA also lights an amber visual alert if following another vehicle much too closely.

FCA detects vehicles within a distance of approximately 60 m (197 ft) and operates at speeds above 40 km/h (25 mph). If the vehicle has Adaptive Cruise Control (ACC), it can detect vehicles to distances of approximately 110 m (360 ft) and operates at all speeds. See *Adaptive Cruise Control on page 9-37*.

⚠ Warning

FCA is a warning system and does not apply the brakes. When approaching a slower-moving or stopped vehicle ahead too rapidly, or when following a vehicle too closely, FCA may not provide a warning with enough time to help avoid a crash. FCA does not warn of pedestrians, animals, signs, guardrails, bridges, construction barrels, or other objects. Be ready to take action and apply the brakes. For more information, see *Defensive Driving on page 9-3*.

FCA can be disabled with the FCA steering wheel control, or if your vehicle is equipped with Adaptive Cruise Control (ACC), through vehicle personalization. See the “Auto Collision Preparation” portion of “Collision/Detection Systems” under *Vehicle Personalization on page 5-48*.

Detecting the Vehicle Ahead

FCA warnings will not occur unless the FCA system detects a vehicle ahead. When a vehicle is detected, the vehicle-ahead indicator will display green. Vehicles may not be detected on curves, highway exit ramps, or hills; or due to poor visibility. FCA will not detect another vehicle ahead until it is completely in the driving lane.

⚠ Warning

FCA does not provide a warning to help avoid a crash, unless it detects a vehicle. FCA may not detect a vehicle ahead if the FCA sensor is blocked by dirt, snow,

(Continued)

Warning (Continued)

or ice, or if the windshield is damaged. It may also not detect a vehicle on winding or hilly roads, or in conditions that can limit visibility such as fog, rain, or snow, or if the headlamps or windshield are not cleaned or in proper condition. Keep the windshield, headlamps, and FCA sensors clean and in good repair.

Collision Alert

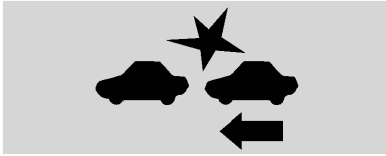

With Head-Up Display

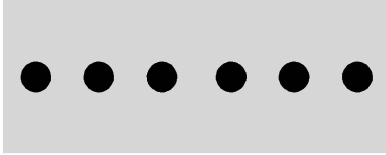

Without Head-Up Display

When your vehicle approaches another detected vehicle too rapidly, the red FCA display will flash on the windshield. Also, eight high-pitched beeps will sound from the front, or both sides of the Safety Alert Seat will pulse five times.

When this Collision Alert occurs, the brake system may prepare for driver braking to occur more rapidly which can cause a brief, mild deceleration. Continue to apply the brake pedal as needed. Cruise control may be disengaged when the Collision Alert occurs.

Tailgating Alert

The vehicle-ahead indicator will display amber when you are following a detected vehicle ahead much too closely.

Selecting the Alert Timing

With Adaptive Cruise Control

Without Adaptive Cruise Control

The Collision Alert control is on the steering wheel. Press or to set the FCA timing to Far, Medium, Near, or on some vehicles, Off. The first button press shows the current setting on the DIC. Additional button presses will change this setting. The chosen setting will remain until it is changed and will affect the timing of both the Collision Alert and the Tailgating Alert features. The timing of both alerts will vary based on vehicle speed. The faster the vehicle speed, the farther away the alert will occur. Consider traffic and weather conditions when selecting the alert timing. The range of selectable alert timing may not be appropriate for all drivers and driving conditions.

If your vehicle is equipped with Adaptive Cruise Control (ACC), changing the FCA timing setting automatically changes the following gap setting (Far, Medium, or Near).

Unnecessary Alerts

FCA may provide unnecessary alerts for turning vehicles, vehicles in other lanes, objects that are not vehicles, or shadows. These alerts are normal operation and the vehicle does not need service.

Cleaning the System

If the FCA system does not seem to operate properly, cleaning the outside of the windshield in front of the camera sensor on the back of the rearview mirror, and cleaning the front of the vehicle where radar sensors are located, may correct the issue.

Active Emergency Braking System

If the vehicle has Adaptive Cruise Control (ACC) it also has the Active Emergency Braking System, which includes Intelligent Brake Assist (IBA) and the Automatic Collision Preparation (ACP) System. These systems can provide a boost

to braking or automatically brake the vehicle to help avoid or lessen the severity of crashes.

Intelligent Brake Assist (IBA)

IBA may activate when the brake pedal is applied quickly by providing a boost to braking based on the speed of approach and distance to a vehicle ahead.

Minor brake pedal pulsations or pedal movement during this time is normal and the brake pedal should continue to be applied as needed. IBA will automatically disengage only when the brake pedal is released.

⚠ Warning

IBA may increase vehicle braking in situations when it may not be necessary. You could block the flow of traffic. If this occurs, take your foot off the brake pedal and then apply the brakes as needed.

Automatic Collision Preparation (ACP) System

ACP may help reduce crash damage by applying the vehicle's brake system and has a detection range of approximately 60 m (197 ft). Braking can only occur if a vehicle is detected ahead in your path. This is shown by the FCA vehicle-ahead indicator being lit. See *Forward Collision Alert (FCA) System on page 9-52*.

⚠ Warning

ACP is an emergency crash preparation feature and is not designed to avoid crashes. Do not rely on ACP to brake the vehicle.

ACP may not:

- Respond to stopped vehicles, pedestrians, or animals.
- Detect a vehicle ahead on winding or hilly roads.

(Continued)

Warning (Continued)

- Detect a stopped or slow-moving vehicle or other object ahead.
- Detect a vehicle when weather limits visibility, such as in fog, rain, or snow. In these situations, ACP sensor performance is limited.

Complete attention is always required while driving, and you should be ready to take action and apply the brakes and/or steer the vehicle to avoid crashes.

Brake Preparation

When quickly approaching a vehicle ahead, Brake Preparation reduces brake response time by having the brake system prepared for driver braking to occur more rapidly.

Automatic Braking

In some imminent front-end crash situations, if the driver has not applied the brakes, Automatic Braking applies the brakes to help reduce crash damage. It may even help avoid some very low speed crashes.

Automatic Braking may slow the vehicle to a complete stop to try to avoid a potential crash. If this happens, Automatic Braking may engage the Electric Parking Brake (EPB) to hold the vehicle at a stop. To release the EPB, press the EPB button. A firm press of the accelerator pedal will also release Automatic Braking and the EPB.

⚠ Warning

Automatic Braking may automatically brake the vehicle in situations where it may be unnecessary. It could respond to a turning vehicle ahead,

(Continued)

Warning (Continued)

guardrails, signs, and other non-moving objects. This could be uncomfortable and startling. To override Automatic Braking, firmly press the accelerator pedal, if it is safe to do so.

Automatic Braking can be disabled or reduced through vehicle personalization. See the “Auto Collision Preparation” portion of “Collision/Detection Systems” under *Vehicle Personalization on page 5-48*.

⚠ Warning

Using the Automatic Collision Preparation System while towing a trailer could cause you to lose control of the vehicle and crash. Turn the system off when towing a trailer.

Side Blind Zone Alert (SBZA)

If equipped, the SBZA system is a lane-changing aid that assists drivers with avoiding crashes that occur with vehicles in the side blind zone (or spot) areas. The SBZA warning display will light up in the corresponding outside side mirror and will flash if the turn signal is on.

⚠ Warning

SBZA does not alert the driver to vehicles rapidly approaching outside of the side blind zones, pedestrians, bicyclists, or animals. It may not provide alerts when changing lanes under all driving conditions. Failure to use proper care when changing lanes may result in injury, death, or vehicle damage. Before making a lane change, always

(Continued)

Warning (Continued)

check mirrors, glance over your shoulder, and use the turn signals.

SBZA Detection Zones

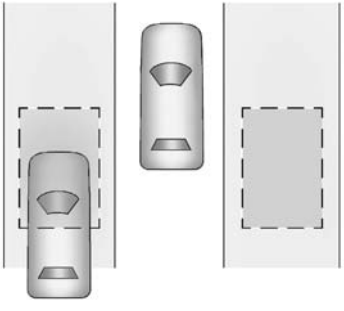

The SBZA sensor covers a zone of approximately one lane over from both sides of the vehicle, or 3.5 m (11 ft). The height of the zone is approximately between 0.5 m (1.5 ft) and 2 m (6 ft) off the ground. This zone starts at approximately the middle of the vehicle and goes back 5 m (16 ft).

How the System Works

The SBZA symbol lights up in the side mirrors when the system detects a vehicle in the next lane over that is in the side blind zone. This indicates it may be unsafe to change lanes. Before making a lane change, check the SBZA display, check mirrors, glance over your shoulder, and use the turn signals.

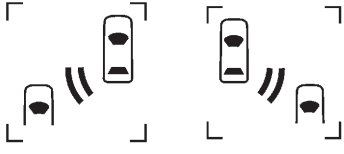

Left Side Mirror Display **Right Side Mirror Display**

When the vehicle is started, both outside mirror SBZA displays will briefly come on to indicate the system is operating. When the vehicle is moving forward, the left- or right-side mirror display will light up if a vehicle is detected in that blind zone. If the turn signal is activated in the same direction of a detected vehicle, this display will flash as an extra warning not to change lanes.

SBZA can be disabled through vehicle personalization. See “Collision/Detection Systems” under *Vehicle Personalization on page 5-48*. If SBZA is disabled by the driver, the SBZA mirror displays will not light up.

When the System Does Not Seem to Work Properly

SBZA displays may not come on when passing a vehicle quickly or when towing a trailer. The SBZA detection zones that extend back from the side of the vehicle do not move further back when a trailer is towed. Use caution while changing lanes when towing a trailer. SBZA may alert to objects attached to the vehicle, such as a trailer, bicycle, or object extending out to either side

of the vehicle. This is normal system operation; the vehicle does not need service.

SBZA may not always alert the driver to vehicles in the side blind zone, especially in wet conditions. The system does not need to be serviced. The system may light up due to guardrails, signs, trees, shrubs, and other non-moving objects. This is normal system operation; the vehicle does not need service.

SBZA may not operate when the SBZA sensors in the left or right corners of the rear bumper are covered with mud, dirt, snow, ice, or slush, or in heavy rainstorms. For cleaning instructions, see "Washing the Vehicle" under *Exterior Care on page 10-69*. If the DIC still displays the system unavailable message after cleaning both sides of the vehicle toward the rear corners of the vehicle, see your dealer.

If the SBZA displays do not light up when vehicles are in the blind zone and the system is clean, the system may need service. Take the vehicle to your dealer.

When SBZA is disabled for any reason other than the driver turning it off, the Side Blind Zone Alert On option will not be available on the personalization menu.

FCC Information

See *Radio Frequency Statement on page 13-15*.

Lane Departure Warning (LDW)

If equipped, LDW may help avoid crashes due to unintentional lane departures. It may provide a warning if the vehicle is crossing a detected lane marker without using a turn signal in the lane departure direction. LDW uses a camera sensor to detect the lane markings. It only operates at speeds of 56 km/h (35 mph) or greater.

When the vehicle crosses a detected lane marking, the LDW indicator will flash and either three beeps will be sounded from the left or right, or three Safety Alert Seat pulses will occur on the left or right side of the seat, depending on the lane departure direction. LDW will not warn if the turn signal is on in the departure direction, or if a sharp maneuver is made.

⚠ Warning

The LDW system is an aid to help the vehicle stay in the driving lane. It does not steer the vehicle. The LDW system may not:

- Provide enough time to avoid a crash.
- Detect lane markings under bad weather conditions or if the windshield is dirty.
- Detect lane markings and will not detect road edges.

(Continued)

Warning (Continued)

- Warn that the vehicle is crossing a lane marking if the system does not detect the lane marking.

If LDW only detects lane markings on one side of the road, it will only warn you when departing the lane on the side where it has detected a lane marker. Even with LDW, always keep your attention on the road and maintain proper vehicle position within the lane, or vehicle damage, injury, or death could occur. Always keep the windshield clean and do not use LDW in bad weather conditions.

How the System Works

The LDW camera sensor is on the windshield ahead of the rearview mirror.

To turn LDW on and off, press on the center stack. The control indicator will light when LDW is on.

When the vehicle is started, the LDW indicator on the instrument cluster may come on briefly.

If LDW is on, the LDW indicator will appear green if the system detects a left or right lane marking while the vehicle is traveling at 56 km/h (35 mph) or greater. If the vehicle crosses a detected lane marking without using the turn signal in the lane departure direction, this indicator will change to amber and flash. In addition, three beeps will be sounded from the left or right side, or the Safety Alert Seat will pulse three times on either the left or right side of the seat, depending on the lane departure direction.

When the System Does Not Seem to Work Properly

If the LDW symbol does not appear when the system is on and the vehicle is traveling at least 56 km/h (35 mph):

- The lane markings on the road may not be seen.
- The camera sensor may be blocked by dirt, snow, or ice.
- The windshield may be damaged.
- The weather may be limiting visibility.

This is normal operation; the vehicle does not need service. Clean the windshield.

Lane markings may not be detected on curves, highway exit ramps, or hills; or due to poor visibility.

If the LDW camera system does not seem to operate properly, cleaning the outside of the windshield in front of the camera sensor may correct the issue.

⚠ Warning

LDW does not provide a warning to help avoid a crash, unless it detects the lane markings. LDW may not detect the lane markings if the camera sensor is blocked by dirt, snow, or ice, or if the windshield is damaged. It may also not detect a lane on winding or hilly roads, or in conditions that can limit visibility such as fog, rain, or snow, or if the headlamps or windshield are not cleaned or in proper condition. Keep the windshield, headlamps, and camera sensors clean and in good repair.

LDW warnings may occur due to tar marks, shadows, cracks in the road, or other road imperfections. This is normal system operation; the vehicle does not need service.

Fuel

Use of the recommended fuel is an important part of the proper maintenance of this vehicle. When driving in the U.S., to help keep the engine clean and maintain optimum vehicle performance, we recommend using TOP TIER Detergent Gasolines. See www.toptiergas.com for a list of TOP TIER Detergent Gasolines.

TOP TIER™ Detergent Gasoline

CATEGORIE SUPERIÉURE™ Essences Détergentes

If the vehicle has the 2.0L L4 LTG turbo engine (VIN Code X), use premium unleaded gasoline with a

posted octane rating of 91 or higher. Regular unleaded gasoline rated at 87 octane or higher can be used, but acceleration could be reduced, and an audible knocking noise may be heard. If the octane is less than 87, a heavy knocking noise may be heard. If this occurs, use a gasoline rated at 87 octane or higher as soon as possible. Otherwise, the engine could be damaged. If heavy knocking is heard when using gasoline with a higher octane rating, the engine needs service.

If the vehicle has the 3.6L V6 LFX engine (VIN Code 3), use regular unleaded gasoline with a posted octane rating of 87 or higher. If the octane rating is less than 87, an audible knocking noise, commonly referred to as spark knock, might be heard when driving. If this occurs, use a gasoline rated at 87 octane or higher as soon as possible. If heavy knocking is heard when using gasoline rated at 87 octane or higher, the engine needs service.

If the vehicle has the 3.6L V6 LF3 twin turbo engine (VIN Code 8), use premium unleaded gasoline with a posted octane rating of 91 or higher. If the octane is less than 91, you could damage the engine and may void your vehicle warranty. If heavy knocking is heard when using gasoline rated at 91 octane or higher, the engine needs service.

Use of Seasonal Fuels

Use summer and winter fuels in the appropriate season. Driving or starting could be affected if the incorrect fuel is used. Drive the vehicle with the engine running until the fuel is a half tank or less, then refuel with the current seasonal fuel.

Prohibited Fuels

Gasolines containing oxygenates, such as ethers and ethanol, as well as reformulated gasolines are available in some cities. If these gasolines comply with the previously described specification, then they are acceptable to use. However, E85 (85% ethanol) and other fuels containing more than 15% ethanol must be used only in flex fuel vehicles.

⚠ Caution

Do not use fuel containing methanol. It can corrode metal parts in the fuel system and also damage plastic and rubber parts. That damage would not be covered under the vehicle warranty.

Some gasolines that are not reformulated for low emissions can contain an octane-enhancing additive called methylcyclopentadienyl manganese tricarbonyl (MMT). Do not use gasolines with MMT as they can reduce spark plug life and affect emission control system performance. The malfunction indicator lamp may turn on. If this occurs, see your dealer for service.

Gasoline Specifications

At a minimum, gasoline should meet ASTM specification D 4814. Some gasolines contain an octane-enhancing additive called methylcyclopentadienyl manganese tricarbonyl (MMT). We recommend against the use of gasolines containing MMT. See “Prohibited Fuels" in *Fuel on page 9-60*.

California Fuel Requirements

If the vehicle is certified to meet California Emissions Standards, it is designed to operate on fuels that meet California specifications. See the underhood emission control label. If this fuel is not available in states adopting California Emissions Standards, the vehicle will operate satisfactorily on fuels meeting federal specifications, but emission control system performance might be affected. The malfunction indicator lamp could turn on and the vehicle may not pass a smog-check test. See *Malfunction Indicator Lamp on page 5-19*. If this occurs, return to your authorized dealer for diagnosis. If it is determined that the condition is caused by the type of fuel used, repairs may not be covered by the vehicle warranty.

Fuels in Foreign Countries

If planning to drive in countries outside the U.S. or Canada, the proper fuel might be hard to find. Check regional auto club or fuel retail brand websites for availability in the country where driving. Never use leaded gasoline, fuel containing methanol or manganese, or any other fuel not recommended. Costly repairs caused by use of improper fuel would not be covered by the vehicle warranty.

Fuel Additives

To keep fuel systems clean, TOP TIER Detergent Gasoline is recommended. See *Fuel on page 9-60*.

If TOP TIER Detergent Gasoline is not available, one bottle of Fuel System Treatment PLUS added to the fuel tank at every engine oil change, can help. Fuel System Treatment PLUS is the only gasoline additive recommended by General Motors. It is available at your dealer.

Filling the Tank

⚠ Warning

Fuel vapors and fuel fires burn violently and can cause injury or death.

(Continued)

Warning (Continued)

- To help avoid injuries to you and others, read and follow all the instructions on the fuel pump island.
- Turn off the engine when refueling.
- Keep sparks, flames, and smoking materials away from fuel.
- Do not leave the fuel pump unattended.
- Do not reenter the vehicle while pumping fuel.
- Keep children away from the fuel pump and never let children pump fuel.
- Fuel can spray out if the refueling nozzle is inserted too quickly. This spray can happen if the tank is nearly full, and is more likely in hot weather. Insert the refueling

(Continued)

Warning (Continued)

nozzle slowly and wait for any hiss noise to stop prior to beginning to flow fuel

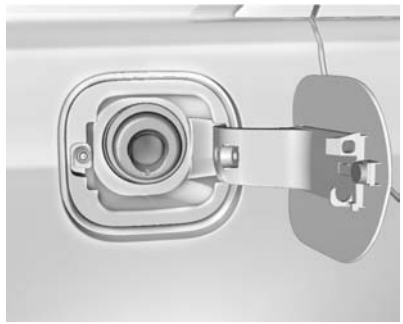

To open the fuel door, push and release the rearward center edge of the door.

The vehicle has a capless refueling system and does not have a fuel cap. The filling nozzle must be fully inserted and latched prior to starting fuel flow.

Be careful not to spill fuel. Do not top off or overfill the tank and wait a few seconds before removing the nozzle. After initial shutoff, do not partially remove the nozzle to add more fuel as this will result in fuel spillage. Clean fuel from painted surfaces as soon as possible. See *Exterior Care on page 10-69*.

⚠ Warning

If a fire starts while you are refueling, do not remove the nozzle. Shut off the flow of fuel by shutting off the pump or by notifying the station attendant. Leave the area immediately.

Filling the Tank with a Portable Gas Can

If the vehicle runs out of fuel and must be filled from a portable gas can:

1. Locate the capless funnel adapter from under the carpet in the trunk.

2. Insert and latch the funnel into the capless fuel system.

⚠ Warning

Attempting to refuel without using the funnel adapter may cause fuel spillage and damage the capless fuel system. This could cause a fire and you or others could be badly burned and the vehicle could be damaged.

3. After filling the tank, remove and clean the funnel adapter and return it to the storage location.

Filling a Portable Fuel Container

⚠ Warning

Filling a portable fuel container while it is in the vehicle can cause fuel vapors that can ignite either by static electricity or other means. You or others could be badly burned and the vehicle could be damaged. Always:

- Use approved fuel containers.
- Remove the container from the vehicle, trunk, or pickup bed before filling.
- Place the container on the ground.
- Place the nozzle inside the fill opening of the container before dispensing fuel, and

(Continued)

Warning (Continued)

keep it in contact with the fill opening until filling is complete.

- Fill the container no more than 95% full to allow for expansion.
- Do not smoke, light matches, or use lighters while pumping fuel.
- Avoid using cell phones or other electronic devices.

Trailer Towing

General Towing Information

Only use towing equipment that has been designed for the vehicle. Contact your dealer or trailering dealer for assistance with preparing the vehicle for towing a trailer. Read the entire section before towing a trailer.

For towing a disabled vehicle, see *Towing the Vehicle on page 10-66*. For towing the vehicle behind another vehicle such as a motor home, see *Recreational Vehicle Towing on page 10-67*.

Driving Characteristics and Towing Tips

Driving with a Trailer

When towing a trailer:

- Become familiar with the state and local laws that apply to trailer towing.
- Do not tow a trailer during the first 2 414 km (1500 mi) to prevent damage to the engine, axle, or other parts.
- Then during the first 800 km (500 mi) of trailer towing, do not drive over 80 km/h (50 mph) and do not make starts at full throttle.
- Vehicles can tow in D (Drive). Shift the transmission to a lower gear if the transmission shifts too often under heavy loads and/or hilly conditions.
- Do not use Adaptive Cruise Control when towing.
- The Automatic Collision Preparation System should be set to Off when towing. See *Active Emergency Braking System on page 9-54*.
- Turn off Parking Assist when towing.

⚠ Warning

When towing a trailer, exhaust gases may collect at the rear of the vehicle and enter if the liftgate, trunk/hatch, or rear-most window is open.

When towing a trailer:

- Do not drive with the liftgate, trunk/hatch, or rear-most window open.
- Fully open the air outlets on or under the instrument panel.
- Also adjust the climate control system to a setting that brings in only outside air. See “Climate Control Systems” in the Index.

For more information about Carbon Monoxide, see *Engine Exhaust on page 9-22*.

Towing a trailer requires a certain amount of experience. The combination you are driving is longer and not as responsive as the vehicle itself. Get acquainted with the handling and braking of the rig before setting out for the open road.

Before starting, check all trailer hitch parts and attachments, safety chains, electrical connectors, lamps, tires, and mirrors. If the trailer has electric brakes, start the combination moving and then apply the trailer brake controller by hand to be sure the brakes work.

During the trip, check occasionally to be sure that the load is secure and the lamps and any trailer brakes still work.

Following Distance

Stay at least twice as far behind the vehicle ahead as you would when driving the vehicle without a trailer. This can help to avoid heavy braking and sudden turns.

Passing

More passing distance is needed when towing a trailer. The combination will not accelerate as quickly and is longer so it is necessary to go much farther beyond the passed vehicle before returning to the lane.

Backing Up

Hold the bottom of the steering wheel with one hand. To move the trailer to the left, move that hand to the left. To move the trailer to the right, move your hand to the right. Always back up slowly and, if possible, have someone guide you.

Making Turns

⚠ Caution

Making very sharp turns while trailering could cause the trailer to come in contact with the vehicle.

(Continued)

Caution (Continued)

The vehicle could be damaged. Avoid making very sharp turns while trailering.

When turning with a trailer, make wider turns than normal. Do this so the trailer will not strike soft shoulders, curbs, road signs, trees, or other objects. Avoid jerky or sudden maneuvers. Signal well in advance.

If the trailer turn signal bulbs burn out, the arrows on the instrument cluster will still flash for turns. It is important to check occasionally to be sure the trailer bulbs are still working.

Driving on Grades

Reduce speed and shift to a lower gear *before* starting down a long or steep downgrade. If the transmission is not shifted down, the brakes might get hot and no longer work well.

Vehicles can tow in D (Drive). Shift the transmission to a lower gear if the transmission shifts too often under heavy loads and/or hilly conditions.

When towing at high altitude on steep uphill grades, consider the following: Engine coolant will boil at a lower temperature than at normal altitudes. If the engine is turned off immediately after towing at high altitude on steep uphill grades, the vehicle may show signs similar to engine overheating. To avoid this, let the engine run while parked, preferably on level ground, with the automatic transmission in P (Park) for a few minutes before turning the engine off. If the overheat warning comes on, see *Engine Overheating on page 10-21*.

Parking on Hills

⚠ Warning

Parking the vehicle on a hill with the trailer attached can be dangerous. If something goes wrong, the rig could start to move. People can be injured, and both the vehicle and the trailer can be damaged. When possible, always park the rig on a flat surface.

If parking the rig on a hill:

1. Press the brake pedal, but do not shift into P (Park) yet. Turn the wheels into the curb if facing downhill or into traffic if facing uphill.
2. Have someone place chocks under the trailer wheels.
3. When the wheel chocks are in place, release the regular brakes until the chocks absorb the load.
4. Reapply the brake pedal. Then apply the parking brake and shift into P (Park).
5. Release the brake pedal.

Leaving After Parking on a Hill

1. Apply and hold the brake pedal.
2. Start the engine.
3. Shift into a gear.
4. Release the parking brake.
5. Let up on the brake pedal.
6. Drive slowly until the trailer is clear of the chocks.
7. Stop and have someone pick up and store the chocks.

Maintenance when Trailer Towing

The vehicle needs service more often when pulling a trailer. See *Maintenance Schedule on page 11-3*. Things that are especially important in trailer operation are automatic transmission fluid, engine oil, axle

lubricant, belts, cooling system, and brake system. It is a good idea to inspect these before and during the trip.

Check periodically to see that all hitch nuts and bolts are tight.

Trailer Towing (With LFX Engine)

Before pulling a trailer, three important considerations have to do with weight:

- Weight of the trailer.
- Weight of the trailer tongue.
- Total weight on your vehicle's tires.

Weight of the Trailer

How heavy can a trailer safely be?

It should never weigh more than 454 kg (1,000 lb). But even that can be too heavy.

It depends on how the rig is used. For example, speed, altitude, road grades, outside temperature, and how much the vehicle is used to pull a trailer are all important. It can depend on any special equipment on the vehicle, and the amount of tongue weight the vehicle can carry. See “Weight of the Trailer Tongue” later in this section.

Maximum trailer weight is calculated assuming only the driver is in the tow vehicle and it has all the required trailering equipment. The weight of additional optional equipment, passengers, and cargo in the tow vehicle must be subtracted from the maximum trailer weight.

Ask your dealer for trailering information or advice, or write us at our Customer Assistance Offices. See *Customer Assistance Offices on page 13-3*.

Weight of the Trailer Tongue

The tongue load (1) of any trailer is an important weight to measure because it affects the total gross weight of the vehicle. The Gross Vehicle Weight (GVW) includes the curb weight of the vehicle, any cargo carried in it, and the people who will be riding in the vehicle. If there are a lot of options, equipment, passengers, or cargo in the vehicle, it will reduce the tongue weight the vehicle can carry, which will also reduce the trailer weight the vehicle can tow. If towing a trailer, the tongue load must be added to the GVW because the vehicle will be carrying that weight, too. See *Vehicle Load Limits on page 9-11*.

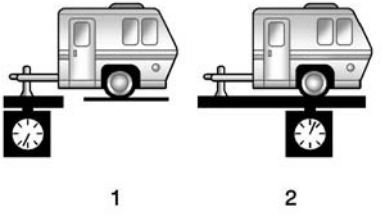

The trailer tongue (1) should weigh 10 % of the total loaded trailer weight (2).

After loading the trailer, weigh the trailer and then the tongue, separately, to see if the weights are proper. If they are not, adjustments might be made by moving some items around in the trailer.

Total Weight on Your Vehicle's Tires

Be sure the vehicle's tires are inflated to the upper limit for cold tires. These numbers can be found on the Tire and Loading Information label. See *Vehicle Load Limits on page 9-11*. Make sure not to go over the GVW limit for the vehicle, including the weight of the trailer tongue.

Trailer Towing (With LTG or LF3 Engine)

The vehicle is neither designed nor intended to tow a trailer.

Towing Equipment

Hitches

Use the correct hitch equipment. See your dealer or a hitch dealer for assistance.

- The rear bumper on the vehicle is not intended for hitches. Do not attach rental hitches or other bumper-type hitches to it. Use only a frame-mounted hitch that does not attach to the bumper.
- Will any holes be made in the body of the vehicle when the trailer hitch is installed? If so, seal the holes when the hitch is removed. If the holes are not sealed, dirt, water, and deadly carbon monoxide (CO) from the exhaust can get into the vehicle. See *Engine Exhaust on page 9-22*.

Safety Chains

Always attach chains between the vehicle and the trailer. Cross the safety chains under the tongue of the trailer to help prevent the tongue from contacting the road if it becomes separated from the hitch. Leave enough slack so the rig can turn. Never allow safety chains to drag on the ground.

Trailer Brakes

Does the trailer have its own brakes? Be sure to read and follow the instructions for the trailer brakes so they are installed, adjusted, and maintained properly.

Because the vehicle has antilock brakes, do not tap into the vehicle's brake system. If this is done, both brake systems will not work well or at all.

Conversions and Add-Ons

Add-On Electrical Equipment

⚠ Caution

Some electrical equipment can damage the vehicle or cause components to not work and would not be covered by the warranty. Always check with your dealer before adding electrical equipment.

Add-on equipment can drain the vehicle's 12-volt battery, even if the vehicle is not operating.

The vehicle has an airbag system. Before attempting to add anything electrical to the vehicle, see *Servicing the Airbag-Equipped Vehicle on page 3-33* and *Adding Equipment to the Airbag-Equipped Vehicle on page 3-33*.

Vehicle Care

General Information

General Information 10-2
California Proposition 65 Warning 10-2
California Perchlorate Materials Requirements 10-2
Accessories and Modifications 10-2

Vehicle Checks

Doing Your Own Service Work 10-3
Hood 10-4
Engine Compartment Overview 10-5
Engine Oil 10-10
Engine Oil Life System 10-12
Automatic Transmission Fluid 10-14
Engine Air Cleaner/Filter 10-14
Cooling System 10-16
Engine Coolant 10-18
Engine Overheating 10-21
Washer Fluid 10-22
Brakes 10-23
Brake Fluid 10-24
Battery 10-25
All-Wheel Drive 10-26
Starter Switch Check 10-27
Automatic Transmission Shift Lock Control Function Check 10-27
Park Brake and P (Park) Mechanism Check 10-28
Wiper Blade Replacement 10-28
Windshield Replacement ... 10-29

Headlamp Aiming

Headlamp Aiming 10-29

Bulb Replacement

Bulb Replacement 10-29
Halogen Bulbs 10-29
High Intensity Discharge (HID) Lighting 10-30
LED Lighting 10-30
License Plate Lamp 10-30
Replacement Bulbs 10-31

Electrical System

Electrical System Overload 10-31
Fuses and Circuit Breakers 10-32
Engine Compartment Fuse Block 10-32
Instrument Panel Fuse Block 10-35
Rear Compartment Fuse Block 10-38

Wheels and Tires

Tires 10-40
All-Season Tires 10-41
Winter Tires 10-42
Run-Flat Tires 10-42
Low-Profile Tires 10-43
Summer Tires 10-43
Tire Sidewall Labeling 10-44
Tire Designations 10-45
Tire Terminology and Definitions 10-46
Tire Pressure 10-48
Tire Pressure for High-Speed Operation 10-50
Tire Pressure Monitor System 10-50
Tire Pressure Monitor Operation 10-51
Tire Inspection 10-55
Tire Rotation 10-55
When It Is Time for New Tires 10-57

Buying New Tires 10-57
Different Size Tires and Wheels 10-59
Uniform Tire Quality Grading 10-59
Wheel Alignment and Tire Balance 10-61
Wheel Replacement 10-61
Tire Chains 10-62
If a Tire Goes Flat 10-63

Jump Starting
Jump Starting 10-64

Towing the Vehicle
Towing the Vehicle 10-66
Recreational Vehicle Towing 10-67

Appearance Care
Exterior Care 10-69
Interior Care 10-74
Floor Mats 10-77

General Information

For service and parts needs, visit your dealer. You will receive genuine GM parts and GM-trained and supported service people.

Genuine GM parts have one of these marks:

California Proposition 65 Warning

Most motor vehicles, including this one, contain and/or emit chemicals known to the State of California to cause cancer and birth defects or other reproductive harm. Engine exhaust, many parts and systems, many fluids, and some component wear by-products contain and/or emit these chemicals.

California Perchlorate Materials Requirements

Certain types of automotive applications, such as airbag initiators, safety belt pretensioners, and lithium batteries contained in Remote Keyless Entry transmitters, may contain perchlorate materials. Special handling may be necessary. For additional information, see www.dtsc.ca.gov/hazardouswaste/perchlorate.

Accessories and Modifications

Adding non-dealer accessories or making modifications to the vehicle can affect vehicle performance and safety, including such things as airbags, braking, stability, ride and

handling, emissions systems, aerodynamics, durability, and electronic systems like antilock brakes, traction control, and stability control. These accessories or modifications could even cause malfunction or damage not covered by the vehicle warranty.

Damage to vehicle components resulting from modifications or the installation or use of non-GM certified parts, including control module or software modifications, is not covered under the terms of the vehicle warranty and may affect remaining warranty coverage for affected parts.

GM Accessories are designed to complement and function with other systems on the vehicle. See your dealer to accessorize the vehicle using genuine GM Accessories installed by a dealer technician.

Also, see *Adding Equipment to the Airbag-Equipped Vehicle on page 3-33*.

Vehicle Checks

Doing Your Own Service Work

⚠ Warning

It can be dangerous to work on your vehicle if you do not have the proper knowledge, service manual, tools, or parts. Always follow owner manual procedures and consult the service manual for your vehicle before doing any service work.

If doing some of your own service work, use the proper service manual. It tells you much more about how to service the vehicle than this manual can. To order the proper service manual, see *Service Publications Ordering Information on page 13-11*.

This vehicle has an airbag system. Before attempting to do your own service work, see *Servicing the Airbag-Equipped Vehicle on page 3-33*.

Keep a record with all parts receipts and list the mileage and the date of any service work performed. See *Maintenance Records on page 11-16*.

⚠ Caution

Even small amounts of contamination can cause damage to vehicle systems. Do not allow contaminants to contact the fluids, reservoir caps, or dipsticks.

Hood

To open the hood:

1. Pull the hood release lever with this symbol on it. It is on the lower left side of the instrument panel.

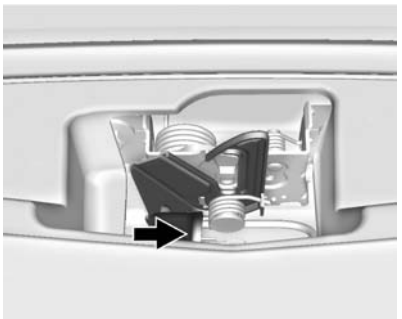

2. Go to the front of the vehicle to find the secondary hood release handle. The handle is under the front edge of the hood near the center. Push the handle to the right and at the same time raise the hood.

To close the hood:

Before closing the hood, be sure all filler caps are on properly. Then, bring the hood from full open to within 152 mm (6 in) of the closed position. Pause, then push the front center of the hood with a swift, firm motion to fully close the hood.

Engine Compartment Overview

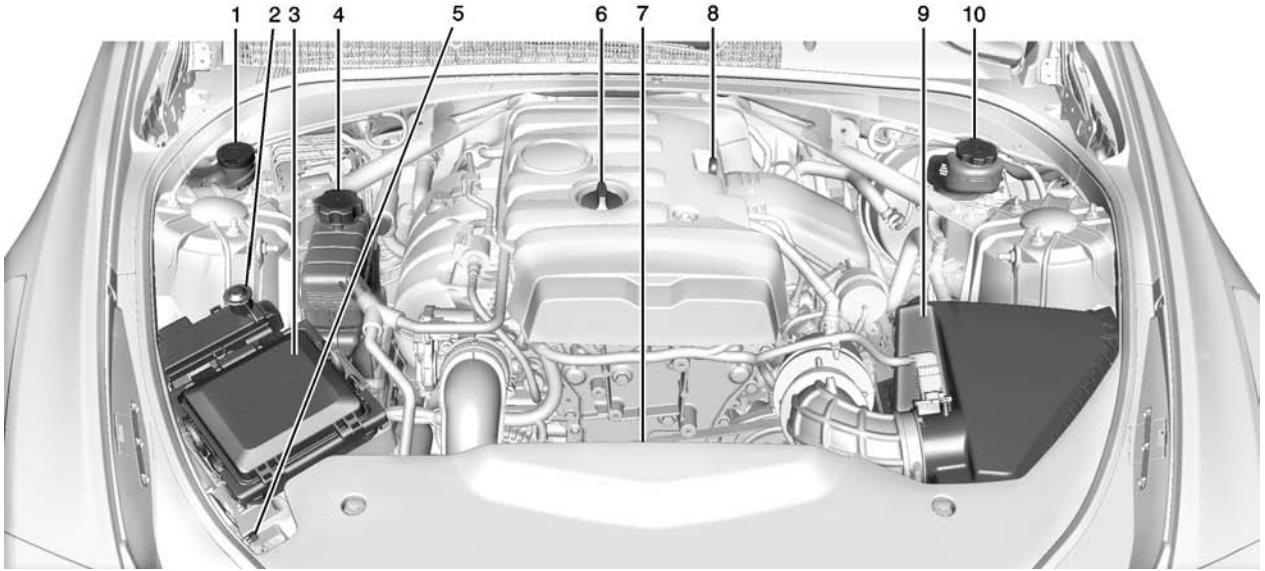

2.0L L4 LTG Engine

1. Windshield Washer Fluid Reservoir. See *Washer Fluid on page 10-22*.
2. Remote Positive (+) Battery Terminal. See *Battery on page 10-25*.
3. *Engine Compartment Fuse Block on page 10-32*.
4. Engine Coolant Surge Tank and Pressure Cap. See *Cooling System on page 10-16*.
5. Remote Negative (-) Battery Terminal. See *Battery on page 10-25*.
6. Engine Oil Fill Cap. See *Engine Oil on page 10-10*.
7. Engine Cooling Fan (Out of View). See *Cooling System on page 10-16*.
8. Engine Oil Dipstick. See *Engine Oil on page 10-10*.
9. *Engine Air Cleaner/Filter on page 10-14*.
10. Brake Fluid Reservoir. See *Brakes on page 10-23*.

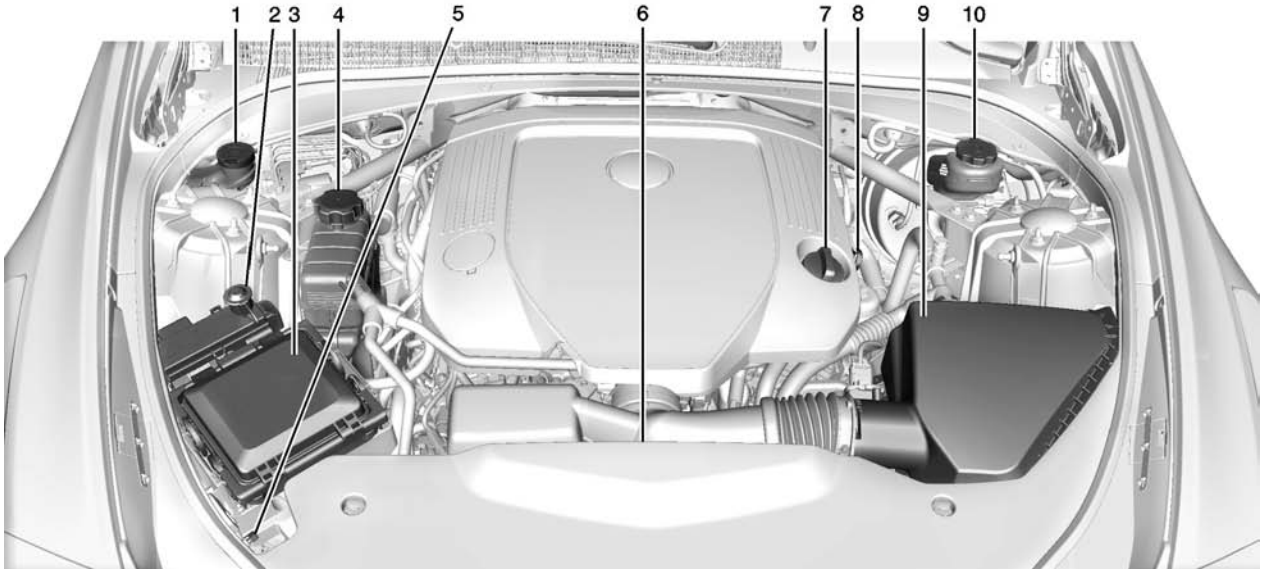

3.6L V6 LFX Engine

1. Windshield Washer Fluid Reservoir. See *Washer Fluid on page 10-22*.
2. Remote Positive (+) Battery Terminal. See *Battery on page 10-25*.
3. *Engine Compartment Fuse Block on page 10-32*.
4. Engine Coolant Surge Tank and Pressure Cap. See *Cooling System on page 10-16*.
5. Remote Negative (-) Battery Terminal. See *Battery on page 10-25*.
6. Engine Cooling Fan (Out of View). See *Cooling System on page 10-16*.
7. Engine Oil Fill Cap. See *Engine Oil on page 10-10*.
8. Engine Oil Dipstick. See *Engine Oil on page 10-10*.
9. *Engine Air Cleaner/Filter on page 10-14*.
10. Brake Fluid Reservoir. See *Brakes on page 10-23*.

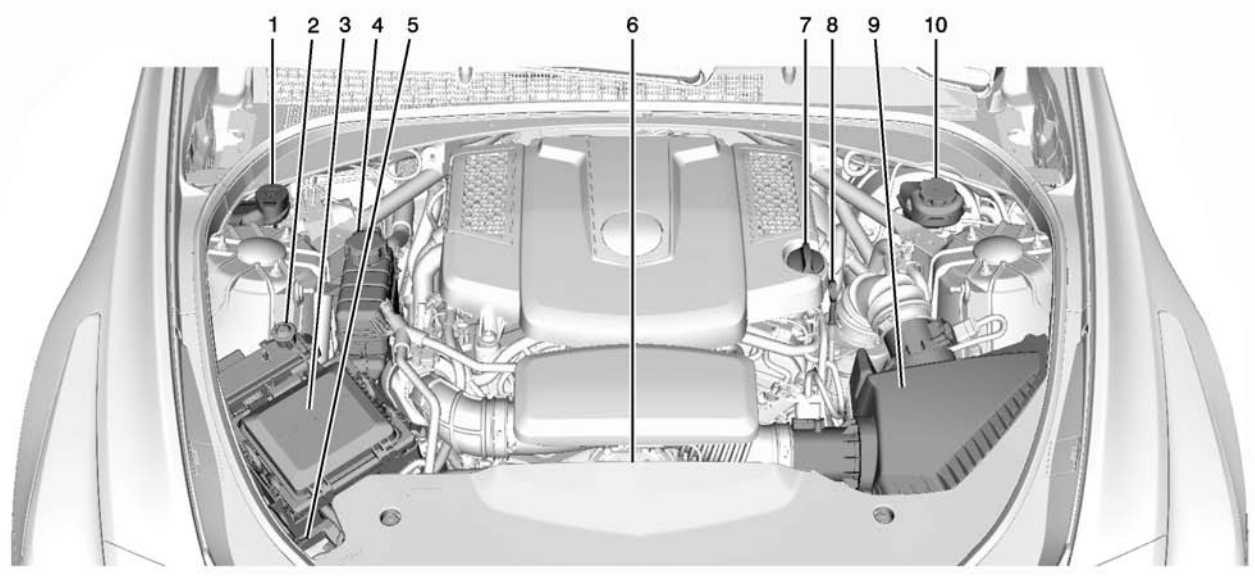

3.6L V6 LF3 Engine

1. Windshield Washer Fluid Reservoir. See *Washer Fluid on page 10-22*.
2. Remote Positive (+) Battery Terminal. See *Battery on page 10-25*.
3. *Engine Compartment Fuse Block on page 10-32*.
4. Engine Coolant Surge Tank and Pressure Cap. See *Cooling System on page 10-16*.
5. Remote Negative (-) Battery Terminal. See *Battery on page 10-25*.
6. Engine Cooling Fan (Out of View). See *Cooling System on page 10-16*.
7. Engine Oil Fill Cap. See *Engine Oil on page 10-10*.
8. Engine Oil Dipstick. See *Engine Oil on page 10-10*.
9. *Engine Air Cleaner/Filter on page 10-14*.
10. Brake Fluid Reservoir. See *Brakes on page 10-23*.

Engine Oil

To ensure proper engine performance and long life, careful attention must be paid to engine oil. Following these simple, but important steps will help protect your investment:

- Always use engine oil approved to the proper specification and of the proper viscosity grade. See “Selecting the Right Engine Oil” in this section.
- Check the engine oil level regularly and maintain the proper oil level. See “Checking Engine Oil” and “When to Add Engine Oil” in this section.
- Change the engine oil at the appropriate time. See *Engine Oil Life System on page 10-12*.
- Always dispose of engine oil properly. See “What to Do with Used Oil” in this section.

Checking Engine Oil

It is a good idea to check the engine oil level at each fuel fill. In order to get an accurate reading, the vehicle must be on level ground. The engine oil dipstick handle is a loop. See *Engine Compartment Overview on page 10-5* for the location of the engine oil dipstick.

1. If the engine has been running recently, turn off the engine and allow several minutes for the oil to drain back into the oil pan. Checking the oil level too soon after engine shutoff will not provide an accurate oil level reading.

⚠ Warning

The engine oil dipstick handle may be hot; it could burn you. Use a towel or glove to touch the dipstick handle.

2. Pull out the dipstick and clean it with a paper towel or cloth, then push it back in all the way. Remove it again, keeping the tip down, and check the level.

When to Add Engine Oil

If the oil is below the cross-hatched area at the tip of the dipstick, add 1 L (1 qt) of the recommended oil and then recheck the level. See "Selecting the Right Engine Oil" in this section for an explanation of what kind of oil to use. For engine oil crankcase capacity, see *Capacities and Specifications on page 12-2*.

⚠ Caution

Do not add too much oil. Oil levels above or below the acceptable operating range shown on the dipstick are harmful to the engine. If you find that you have an oil level above the operating range, i.e., the engine has so much oil that the oil level gets above the cross-hatched area that shows the proper operating range, the engine could be damaged. You should drain out the excess oil or limit driving of the vehicle and seek a service professional to remove the excess amount of oil.

See *Engine Compartment Overview on page 10-5* for the location of the engine oil fill cap.

Add enough oil to put the level somewhere in the proper operating range. Push the dipstick all the way back in when through.

Selecting the Right Engine Oil

Selecting the right engine oil depends on both the proper oil specification and viscosity grade. See *Recommended Fluids and Lubricants on page 11-13*.

Specification

Use and ask for licensed engine oils with the dexos1® approved certification mark. Engine oils meeting the requirements for the vehicle should have the dexos1 approved certification mark. This certification mark indicates that the oil has been approved to the dexos1 specification.

⚠ Caution

Failure to use the recommended engine oil can result in engine damage not covered by the vehicle warranty. Check with your dealer or service provider on whether the oil is approved to the dexos1 specification.

Viscosity Grade

SAE 5W-30 is the best viscosity grade for the vehicle. Do not use other viscosity grade oils such as SAE 10W-30, 10W-40, or 20W-50.

Cold Temperature Operation: In an area of extreme cold, where the temperature falls below −29°C (−20°F), an SAE 0W-30 oil may be used. An oil of this viscosity grade will provide easier cold starting for the engine at extremely low temperatures. When selecting an oil of the appropriate viscosity grade, always select an oil of the correct specification. See “Specification” earlier in this section.

Engine Oil Additives/Engine Oil Flushes

Do not add anything to the oil. The recommended oils with the dexos specification and displaying the dexos certification mark are all that is needed for good performance and engine protection.

Engine oil system flushes are not recommended and could cause engine damage not covered by the vehicle warranty.

What to Do with Used Oil

Used engine oil contains certain elements that can be unhealthy for your skin and could even cause cancer. Do not let used oil stay on your skin for very long. Clean your skin and nails with soap and water, or a good hand cleaner. Wash or properly dispose of clothing or rags containing used engine oil. See the manufacturer's warnings about the use and disposal of oil products.

Used oil can be a threat to the environment. If you change your own oil, be sure to drain all the oil from the filter before disposal. Never dispose of oil by putting it in the trash or pouring it on the ground, into sewers, or into streams or bodies of water. Recycle it by taking it to a place that collects used oil.

Engine Oil Life System

When to Change Engine Oil

This vehicle has a computer system that indicates when to change the engine oil and filter. This is based on a combination of factors which include engine revolutions, engine temperature, and miles driven. Based on driving conditions, the mileage at which an oil change is indicated can vary considerably. For the oil life system to work properly, the system must be reset every time the oil is changed.

When the system has calculated that oil life has been diminished, it indicates that an oil change is necessary. A CHANGE ENGINE OIL SOON message comes on. See *Engine Oil Messages on page 5-39*. Change the oil as soon as possible within the next 1 000 km (600 mi). It is possible that, if driving under the best conditions, the oil life system might indicate that an oil change is not necessary for up to a year. The engine oil and filter must be changed at least once a year and at this time the system must be reset. Your dealer has trained service people who will perform this work and reset the system. It is also important to check the oil regularly over the course of an oil drain interval and keep it at the proper level.

If the system is ever reset accidentally, the oil must be changed at 5 000 km (3,000 mi) since the last oil change. Remember to reset the oil life system whenever the oil is changed.

How to Reset the Engine Oil Life System

Reset the system whenever the engine oil is changed so that the system can calculate the next engine oil change. To reset the system:

1. Using the DIC buttons, display REMAINING OIL LIFE on the DIC. See *Driver Information Center (DIC) on page 5-30* and *Engine Oil Messages on page 5-39*.
2. Press the SEL button and hold to clear the CHANGE ENGINE OIL SOON message and reset the oil life at 100%.

   Be careful not to reset the oil life display accidentally at any time other than after the oil is changed. It cannot be reset accurately until the next oil change.

The oil life system can also be reset as follows:

1. Turn the ignition on with the engine off.
2. Fully press and release the accelerator pedal three times within five seconds.

   If the CHANGE ENGINE OIL SOON message is not on, the system is reset.

The system is reset when the CHANGE ENGINE OIL SOON message is off.

If the CHANGE ENGINE OIL SOON message comes back on when the vehicle is started, the engine oil life system has not been reset. Repeat the procedure.

Automatic Transmission Fluid

How to Check Automatic Transmission Fluid

It is not necessary to check the transmission fluid level.
A transmission fluid leak is the only reason for fluid loss. If a leak occurs, take the vehicle to your dealer and have it repaired as soon as possible.

The vehicle is not equipped with a transmission fluid level dipstick. There is a special procedure for checking and changing the transmission fluid. Because this procedure is difficult, this should be done at the dealer. Contact the dealer for additional information.

Change the fluid and filter at the intervals listed in *Maintenance Schedule on page 11-3*, and be sure to use the fluid listed in *Recommended Fluids and Lubricants on page 11-13*.

Engine Air Cleaner/Filter

The engine air cleaner/filter is in the engine compartment on the driver side of the vehicle. See *Engine Compartment Overview on page 10-5* for location.

When to Inspect the Engine Air Cleaner/Filter

Inspect the air cleaner/filter at the scheduled maintenance intervals. See *Maintenance Schedule on page 11-3*. If you are driving in dusty/dirty conditions, inspect the filter at each engine oil change.

How to Inspect the Engine Air Cleaner/Filter

To inspect the engine air cleaner/filter, remove the filter from the vehicle and lightly shake the filter to release loose dust and dirt. If the filter remains covered with dirt, a new filter is required.

To inspect or replace the air cleaner/filter:

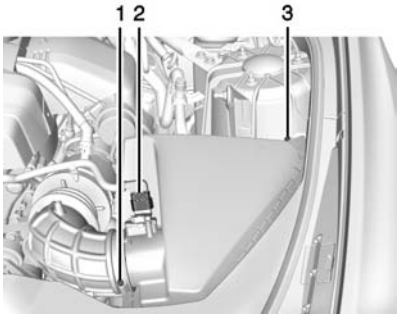

2.0L L4 LTG Engine

1. Air Duct Clamp
2. Electrical Connector
3. Screws

1. Disconnect the outlet duct by loosening the air duct clamp (1).
2. Disconnect the electrical connector (2) and wiring attachment to cover.
3. Remove the screws (3) on top of the cover.

4. Lift the filter cover housing away from the engine.
5. Pull out the filter.
6. Inspect or replace the engine air cleaner/filter.
7. Reverse Steps 1–5 to reinstall the filter cover housing.

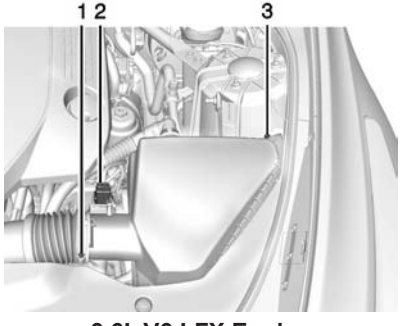

3.6L V6 LFX Engine

1. Air Duct Clamp
2. Electrical Connector
3. Screws

1. Disconnect the outlet duct by loosening the air duct clamp (1).
2. Disconnect the electrical connector (2) and wiring attachment to cover.
3. Remove the screws (3) on top of the cover.
4. Lift the filter cover housing away from the engine.
5. Pull out the filter.
6. Inspect or replace the engine air cleaner/filter.
7. Reverse Steps 1–5 to reinstall the filter cover housing.

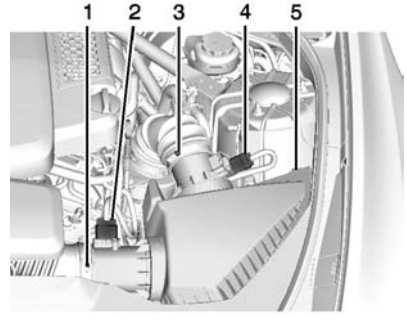

3.6L V6 LF3 Engine

1. Lower Air Duct Clamp
2. Lower Electrical Connector
3. Upper Air Duct Clamp
4. Upper Electrical Connector
5. Screws

1. Disconnect the lower and upper outlet ducts by loosening the lower (1) and upper (3) air duct clamps.
2. Disconnect the lower (2) and upper (4) electrical connectors and wiring attachments to cover.

3. Remove the screws (5) on top of the cover.
4. Lift the filter cover housing away from the engine.
5. Pull out the filter.
6. Inspect or replace the engine air cleaner/filter.
7. Reverse Steps 1–5 to reinstall the filter cover housing.

⚠ Warning

Operating the engine with the air cleaner/filter off can cause you or others to be burned. The air cleaner not only cleans the air; it helps to stop flames if the engine backfires. Use caution when working on the engine and do not drive with the air cleaner/filter off.

⚠ Caution

If the air cleaner/filter is off, dirt can easily get into the engine, which could damage it. Always have the air cleaner/filter in place when you are driving.

Cooling System

The cooling system allows the engine to maintain the correct working temperature.

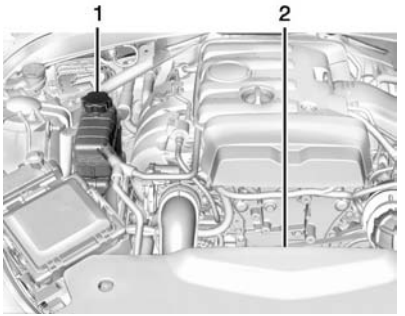

2.0L L4 LTG Engine

1. Engine Coolant Surge Tank and Pressure Cap
2. Engine Cooling Fan (Out of View)

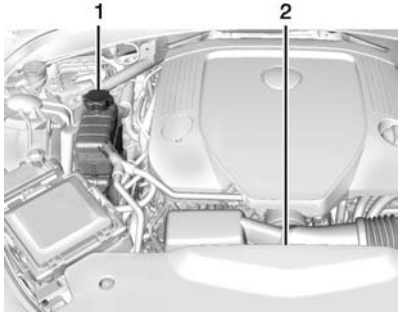

3.6L V6 LFX Engine

1. Engine Coolant Surge Tank and Pressure Cap
2. Engine Cooling Fan (Out of View)

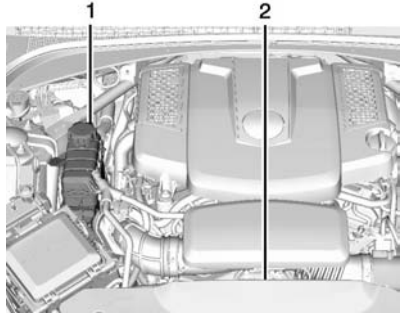

3.6L V6 LF3 Engine

1. Engine Coolant Surge Tank and Pressure Cap
2. Engine Cooling Fan (Out of View)

⚠ Warning

An electric engine cooling fan under the hood can start up even when the engine is not running and can cause injury. Keep hands, clothing, and tools away from any underhood electric fan.

⚠ Warning

Heater and radiator hoses, and other engine parts, can be very hot. Do not touch them. If you do, you can be burned.

Do not run the engine if there is a leak. If you run the engine, it could lose all coolant. That could cause an engine fire, and you could be burned. Get any leak fixed before you drive the vehicle.

⚠ Caution

Using coolant other than DEX-COOL® can cause premature engine, heater core, or radiator corrosion. In addition, the engine coolant could require changing sooner. Any repairs would not be covered by the

(Continued)

Caution (Continued)

vehicle warranty. Always use DEX-COOL (silicate-free) coolant in the vehicle.

Engine Coolant

The cooling system in the vehicle is filled with DEX-COOL engine coolant. See *Maintenance Schedule on page 11-3* and *Recommended Fluids and Lubricants on page 11-13*.

The following explains the cooling system and how to check and add coolant when it is low. If there is a problem with engine overheating, see *Engine Overheating on page 10-21*.

What to Use

⚠ Warning

Adding only plain water or some other liquid to the cooling system can be dangerous. Plain water and other liquids, can boil before the proper coolant mixture will. The coolant warning system is set for the proper coolant mixture. With plain water or the wrong mixture, the engine could get too hot but you would not get the overheat warning. The engine could catch fire and you or others could be burned. Use a 50/50 mixture of clean, drinkable water and DEX-COOL coolant.

Use a 50/50 mixture of clean drinkable water and DEX-COOL coolant. This mixture:

- Gives freezing protection down to −37°C (−34°F), outside temperature.
- Gives boiling protection up to 129°C (265°F), engine temperature.
- Protects against rust and corrosion.
- Will not damage aluminum parts.
- Helps keep the proper engine temperature.

⚠ Caution

If improper coolant mixture, inhibitors, or additives are used in the vehicle cooling system, the engine could overheat and be damaged. Too much water in the mixture can freeze and crack engine cooling parts. The repairs would not be covered by the vehicle warranty. Use only the proper mixture of engine coolant for the cooling system. See *Recommended Fluids and Lubricants on page 11-13*.

Never dispose of engine coolant by putting it in the trash, pouring it on the ground, or into sewers, streams, or bodies of water. Have the coolant changed by an authorized service center, familiar with legal requirements regarding used coolant disposal. This will help protect the environment and your health.

Checking Coolant

The vehicle must be on a level surface when checking the coolant level.

It is normal to see coolant moving in the upper coolant hose return line when the engine is running. It is also normal to see bubbles entering the surge tank through the small hose.

Check to see if coolant is visible in the coolant surge tank. If the coolant inside the coolant surge tank is boiling, do not do anything else until it cools down.

If coolant is visible but the coolant level is not at or above the COLD FILL line, add a 50/50 mixture of clean drinkable water and DEX-COOL coolant.

Be sure the cooling system is cool before this is done.

If no coolant is visible in the coolant surge tank, add coolant as follows:

How to Add Coolant to the Coolant Surge Tank

⚠ Caution

This vehicle has a specific coolant fill procedure. Failure to follow this procedure could cause the engine to overheat and be severely damaged.

If no problem is found, check to see if coolant is visible in the coolant surge tank. If coolant is visible but the coolant level is not at the bottom of the fill neck, add a 50/50 mixture of clean, drinkable water and DEX-COOL coolant at the coolant surge tank, but be sure the cooling system, including the coolant surge tank pressure cap, is cool before you do it.

⚠ Warning

Steam and scalding liquids from a hot cooling system can blow out and burn you badly. Never turn the cap when the cooling system, including the surge tank pressure cap, is hot. Wait for the cooling system and surge tank pressure cap to cool.

⚠ Warning

Adding only plain water or some other liquid to the cooling system can be dangerous. Plain water and other liquids, can boil before the proper coolant mixture will. The coolant warning system is set

(Continued)

Warning (Continued)

for the proper coolant mixture. With plain water or the wrong mixture, the engine could get too hot but you would not get the overheat warning. The engine could catch fire and you or others could be burned. Use a 50/50 mixture of clean, drinkable water and DEX-COOL coolant.

⚠ Caution

In cold weather, water can freeze and crack the engine, radiator, heater core, and other parts. Use the recommended coolant and the proper coolant mixture.

⚠ Warning

You can be burned if you spill coolant on hot engine parts. Coolant contains ethylene glycol and it will burn if the engine parts are hot enough. Do not spill coolant on a hot engine.

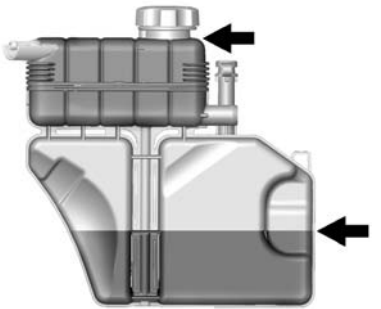

1. Remove the coolant surge tank pressure cap from the top chamber when the cooling system, including the coolant surge tank pressure cap and upper radiator hose, is no longer hot.

   Turn the pressure cap slowly counterclockwise. If you hear a hiss, wait for that to stop. This will allow any pressure still left to be vented out the discharge hose.

2. Keep turning the pressure cap slowly and remove it. Open the surge tank service port cap to the lower chamber. The service port is behind the top chamber.

3. Fill the surge tank top chamber with the proper DEX-COOL coolant mixture to the bottom of the fill neck. The top chamber needs to be completely full. Fill the surge tank bottom chamber through the service port to approximately half.

4. With the coolant surge tank pressure cap off and the surge tank service port cap open, start the engine and let it run until you can feel the upper radiator hose getting hot. Watch out for the engine cooling fan(s).

   By this time, the coolant level inside the coolant surge tank top chamber may be lower. If the level is lower, add more of the proper DEX-COOL coolant mixture to the surge tank top chamber until the level reaches the bottom of the fill neck.

5. Replace the surge tank pressure cap tightly and close the surge tank service port cap.

⚠ Caution

If the pressure cap is not tightly installed, coolant loss and possible engine damage may occur. Be sure the cap is properly and tightly secured.

Check the level in the surge tank top and bottom chambers when the cooling system has cooled down. If the coolant is not at the proper levels, repeat Steps 1–3 and reinstall the pressure cap and close the service port. If the coolant still is not at the proper levels when the system cools down again, see your dealer.

Engine Overheating

The vehicle has an indicator to warn of the engine overheating.

If the decision is made not to lift the hood when this warning appears, get service help right away. See *Roadside Service on page 13-5*.

If the decision is made to lift the hood, make sure the vehicle is parked on a level surface.

Then check to see if the engine cooling fan is running. If the engine is overheating, the fan should be running. If it is not, do not continue to run the engine. Have the vehicle serviced.

⚠ Caution

Running the engine without coolant may cause damage or a fire. Vehicle damage would not be covered by the vehicle warranty.

If Steam Is Coming from the Engine Compartment

⚠ Warning

Steam from an overheated engine can burn you badly, even if you just open the hood. Stay away from the engine if you see or hear steam coming from it. Just turn it off and get everyone away from the vehicle until it cools down. Wait until there is no sign of steam or coolant before you open the hood.

(Continued)

Warning (Continued)

If you keep driving when the engine is overheated, the liquids in it can catch fire. You or others could be badly burned. Stop the engine if it overheats, and get out of the vehicle until the engine is cool.

If No Steam Is Coming from the Engine Compartment

If an engine overheat warning is displayed but no steam can be seen or heard, the problem may not be too serious. Sometimes the engine can get a little too hot when the vehicle:

- Climbs a long hill on a hot day.
- Stops after high-speed driving.
- Idles for long periods in traffic.

If the overheat warning is displayed with no sign of steam:

1. Turn the air conditioning off.
2. Turn the heater on to the highest temperature and to the highest fan speed. Open the windows as necessary.
3. When it is safe to do so, pull off the road, shift to P (Park) or N (Neutral) and let the engine idle.

If the overheat warning no longer displays, the vehicle can be driven. Continue to drive the vehicle slowly for about 10 minutes. Keep a safe vehicle distance from the vehicle in front. If the warning does not come back on, continue to drive normally and have the cooling system checked for proper fill and function.

If the warning continues, pull over, stop, and park the vehicle right away.

If there is no sign of steam, idle the engine for three minutes while parked. If the warning is still displayed, turn off the engine until it cools down.

Washer Fluid

What to Use

When windshield washer fluid is needed, be sure to read the manufacturer's instructions before use. If operating the vehicle in an area where the temperature may fall below freezing, use a fluid that has sufficient protection against freezing.

Adding Washer Fluid

Open the cap with the washer symbol on it. Add washer fluid until the tank is full. See *Engine Compartment Overview on page 10-5* for reservoir location.

⚠ Caution

- Do not use engine coolant (antifreeze) in the windshield washer. It can damage the windshield washer system and paint.
- Do not mix water with ready-to-use washer fluid. Water can cause the solution to freeze and damage the washer fluid tank and other parts of the washer system.
- When using concentrated washer fluid, follow the manufacturer instructions for adding water.
- Fill the washer fluid tank only three-quarters full when it is very cold. This allows for fluid expansion if freezing occurs, which could damage the tank if it is completely full.

Brakes

This vehicle has disc brakes. Disc brake pads have built-in wear indicators that make a high-pitched warning sound when the brake pads are worn and new pads are needed. The sound can come and go or be heard all the time when the vehicle is moving, except when applying the brake pedal firmly.

⚠ Warning

The brake wear warning sound means that soon the brakes will not work well. That could lead to a crash. When the brake wear warning sound is heard, have the vehicle serviced.

⚠ Caution

Continuing to drive with worn-out brake pads could result in costly brake repair.

Some driving conditions or climates can cause a brake squeal when the brakes are first applied or lightly applied. This does not mean something is wrong with the brakes.

Properly torqued wheel nuts are necessary to help prevent brake pulsation. When tires are rotated, inspect brake pads for wear and evenly tighten wheel nuts in the proper sequence to torque specifications. See *Capacities and Specifications on page 12-2*.

Brake pads should be replaced as complete sets.

Brake Pedal Travel

See your dealer if the brake pedal does not return to normal height, or if there is a rapid increase in pedal travel. This could be a sign that brake service might be required.

Brake Adjustment

Every time the brakes are applied, with or without the vehicle moving, the brakes adjust for wear.

Replacing Brake System Parts

The braking system on a vehicle is complex. Its many parts have to be of top quality and work well together if the vehicle is to have really good braking. The vehicle was designed and tested with top-quality brake parts. When parts of the braking system are replaced, be sure to get new, approved replacement parts. If this is not done, the brakes might not work properly. For example, installing disc brake pads that are wrong for the vehicle, can change the balance between the front and rear brakes — for the worse. The braking performance expected can change in many other ways if the wrong replacement brake parts are installed.

Brake Fluid

The brake master cylinder reservoir is filled with DOT 3 brake fluid as indicated on the reservoir cap. See *Engine Compartment Overview on page 10-5* for the location of the reservoir.

There are only two reasons why the brake fluid level in the reservoir might go down:

- The brake fluid level goes down because of normal brake lining wear. When new linings are installed, the fluid level goes back up.
- A fluid leak in the brake hydraulic system can also cause a low fluid level. Have the brake hydraulic system fixed, since a leak means that sooner or later the brakes will not work well.

Do not top off the brake fluid. Adding fluid does not correct a leak. If fluid is added when the linings are worn, there will be too much fluid when new brake linings are installed. Add or remove brake fluid, as necessary, only when work is done on the brake hydraulic system.

⚠ Warning

If too much brake fluid is added, it can spill on the engine and burn, if the engine is hot enough. You or others could be burned, and the vehicle could be damaged. Add brake fluid only when work is done on the brake hydraulic system.

When the brake fluid falls to a low level, the brake warning light comes on. See *Brake System Warning Light on page 5-22*.

What to Add

Use only new DOT 3 brake fluid from a sealed container. See *Recommended Fluids and Lubricants on page 11-13*.

Always clean the brake fluid reservoir cap and the area around the cap before removing it. This helps keep dirt from entering the reservoir.

⚠ Warning

With the wrong kind of fluid in the brake hydraulic system, the brakes might not work well. This could cause a crash. Always use the proper brake fluid.

⚠ Caution

- Using the wrong fluid can badly damage brake hydraulic system parts. For

(Continued)

Caution (Continued)

example, just a few drops of mineral-based oil, such as engine oil, in the brake hydraulic system can damage brake hydraulic system parts so badly that they will have to be replaced. Do not let someone put in the wrong kind of fluid.

- If brake fluid is spilled on the vehicle's painted surfaces, the paint finish can be damaged. Be careful not to spill brake fluid on the vehicle. If you do, wash it off immediately.

Battery

The battery is in the trunk, behind the trim panel, on the driver side of the vehicle. Refer to the replacement number shown on the original battery label when a new battery is needed.

⚠ Warning

Battery posts, terminals, and related accessories contain lead and lead compounds, chemicals known to the State of California to cause cancer and reproductive harm. Wash hands after handling.

After a power loss, such as disconnecting the battery or removing the maxi fuses in the power distribution fuse block, the following steps must be performed to calibrate the electronic throttle control. If this is not done, the engine will not run properly.

1. Turn the ignition on but do not start the engine.
2. Leave the ignition on for at least three minutes so that the electronic throttle control will cycle and relearn its home position.
3. Turn the ignition off.

4. Start and run the engine for at least 30 seconds.

Vehicle Storage

⚠ Warning

Batteries have acid that can burn you and gas that can explode. You can be badly hurt if you are not careful. See *Jump Starting on page 10-64* for tips on working around a battery without getting hurt.

Infrequent Usage: Remove the black, negative (−) cable from the battery to keep the battery from running down.

Extended Storage: Remove the black, negative (−) cable from the battery or use a battery trickle charger.

All-Wheel Drive

If the vehicle is equipped with All-Wheel-Drive (AWD), this is an additional system that needs lubrication.

Transfer Case

When to Check Lubricant

It is not necessary to regularly check the transfer case fluid unless a leak is suspected or an unusual noise is heard. A fluid loss could indicate a problem. Have it inspected and repaired.

How to Check Lubricant

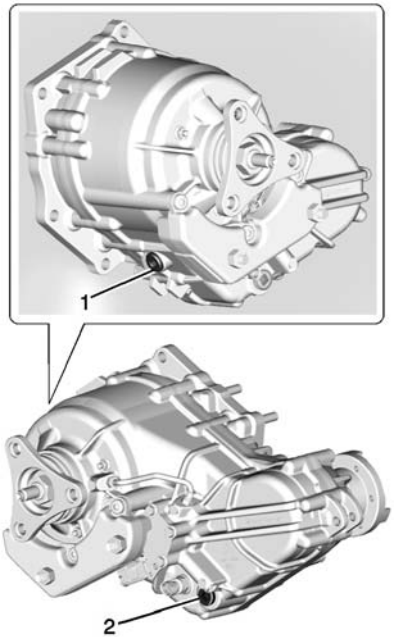

1. Fill Plug

2. Drain Plug

To get an accurate reading, the vehicle should be on a level surface.

If the level is below the bottom of the fill plug hole, on the transfer case, some lubricant will need to be added. Add enough lubricant to raise the level to the bottom of the fill plug hole. Use care not to overtighten the fill plug.

What to Use

Refer to the Maintenance Schedule to determine what kind of lubricant to use. See *Recommended Fluids and Lubricants on page 11-13*.

Starter Switch Check

⚠ Warning

When you are doing this inspection, the vehicle could move suddenly. If the vehicle moves, you or others could be injured.

1. Before starting this check, be sure there is enough room around the vehicle.
2. Firmly apply both the parking brake and the regular brake. See *Electric Parking Brake on page 9-28*.

   Do not use the accelerator pedal, and be ready to turn off the engine immediately if it starts.
3. Try to start the engine in each gear. The vehicle should start only in P (Park) or N (Neutral). If the vehicle starts in any other position, contact your dealer for service.

Automatic Transmission Shift Lock Control Function Check

⚠ Warning

When you are doing this inspection, the vehicle could move suddenly. If the vehicle moves, you or others could be injured.

1. Before starting this check, be sure there is enough room around the vehicle. It should be parked on a level surface.
2. Firmly apply the parking brake. See *Electric Parking Brake on page 9-28*.

   Be ready to apply the regular brake immediately if the vehicle begins to move.
3. With the engine off, turn the ignition on, but do not start the engine. Without applying the regular brake, try to move the

shift lever out of P (Park) with normal effort. If the shift lever moves out of P (Park), contact your dealer for service.

Park Brake and P (Park) Mechanism Check

⚠ Warning

When you are doing this check, the vehicle could begin to move. You or others could be injured and property could be damaged. Make sure there is room in front of the vehicle in case it begins to roll. Be ready to apply the regular brake at once should the vehicle begin to move.

Park on a fairly steep hill, with the vehicle facing downhill. Keeping your foot on the regular brake, set the parking brake.

- To check the parking brake's holding ability: With the engine running and the transmission in N (Neutral), slowly remove foot pressure from the regular brake pedal. Do this until the vehicle is held by the parking brake only.
- To check the P (Park) mechanism's holding ability: With the engine running, shift to P (Park). Then release the parking brake followed by the regular brake.

Contact your dealer if service is required.

Wiper Blade Replacement

Windshield wiper blades should be inspected for wear and cracking.

Replacement blades come in different types and are removed in different ways. For proper type and length, see *Maintenance Replacement Parts on page 11-14*.

⚠ Caution

Allowing the wiper arm to touch the windshield when no wiper blade is installed could damage the windshield. Any damage that occurs would not be covered by your warranty. Do not allow the wiper arm to touch the windshield.

To replace the windshield wiper blade:

1. Pull the windshield wiper assembly away from the windshield. The passenger side wiper arm has limited travel.

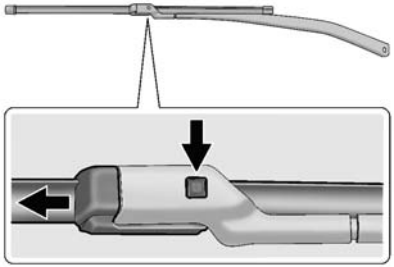

2. Press the button in the middle of the wiper arm connector, and pull the wiper blade away from the arm connector.
3. Remove the wiper blade.
4. Reverse Steps 1–3 for wiper blade replacement.

Windshield Replacement

The windshield is part of the HUD system. If the vehicle has to have the windshield replaced, get one that is designed for HUD or the HUD image may look out of focus.

Headlamp Aiming

Headlamp aim has been preset and should need no further adjustment.

If the vehicle is damaged in a crash, the headlamp aim may be affected. If adjustment to the headlamps is necessary, see your dealer.

Bulb Replacement

For the proper type of replacement bulbs, see *Replacement Bulbs on page 10-31*.

For any bulb-changing procedure not listed in this section, contact your dealer.

Halogen Bulbs

⚠ Warning

Halogen bulbs have pressurized gas inside and can burst if you drop or scratch the bulb. You or others could be injured. Be sure to read and follow the instructions on the bulb package.

High Intensity Discharge (HID) Lighting

⚠ Warning

The high intensity discharge lighting system operates at a very high voltage. If you try to service any of the system components, you could be seriously injured. Have your dealer or a qualified technician service them.

After an HID headlamp bulb has been replaced, the beam might be a slightly different shade than it was originally. This is normal.

LED Lighting

This vehicle has several LED lamps. For replacement of any LED lighting assembly, contact your dealer.

License Plate Lamp

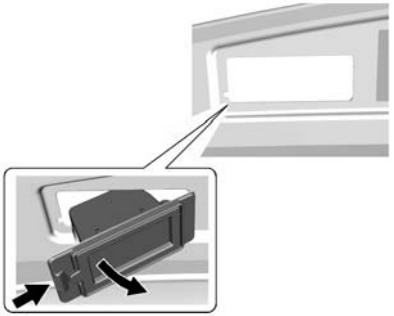

Lamp Assembly

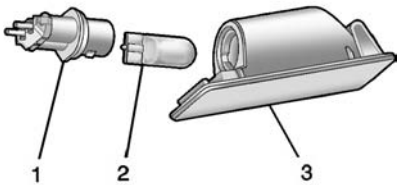

Bulb Assembly

1. Bulb Socket
2. Bulb
3. Lamp Assembly

To replace one of these bulbs:

1. Push the lamp assembly (3) toward the center of the vehicle.
2. Pull the lamp assembly down to remove.
3. Turn the bulb socket (1) counterclockwise to remove it from the lamp assembly (3).
4. Pull the bulb (2) straight out of the bulb socket (1).
5. Push the replacement bulb straight into the bulb socket and turn the bulb socket clockwise to install it into the lamp assembly.
6. Push the lamp assembly back into position until the release tab locks into place.

Replacement Bulbs

Exterior Lamp	Bulb Number
License Plate Lamp	W5W LL

For replacement bulbs not listed here, contact your dealer.

Electrical System

Electrical System Overload

The vehicle has fuses and circuit breakers to protect against an electrical system overload.

When the current electrical load is too heavy, the circuit breaker opens and closes, protecting the circuit until the current load returns to normal or the problem is fixed. This greatly reduces the chance of circuit overload and fire caused by electrical problems.

Fuses and circuit breakers protect power devices in the vehicle.

Replace a bad fuse with a new one of the identical size and rating.

If there is a problem on the road and a fuse needs to be replaced, the same amperage fuse can be borrowed. Choose some feature of the vehicle that is not needed to use and replace it as soon as possible.

Headlamp Wiring

An electrical overload may cause the lamps to go on and off, or in some cases to remain off. Have the headlamp wiring checked right away if the lamps go on and off or remain off.

Windshield Wipers

If the wiper motor overheats due to heavy snow or ice, the windshield wipers will stop. Wiper function is available immediately after the wiper switch is set to off, and back to on.

To protect the wiper motor from overheating, the wipers may slow down when the windshield is dry for a long period of time. If a period of dry operation, or little moisture, exceeds ten minutes, the wipers may switch to intermittent operation, and remain there. When moisture is again detected on the windshield, wiper operation will return to the operator selected speed.

Although the circuit is protected from electrical overload, overload due to heavy snow or ice may cause wiper linkage damage. Always clear ice and heavy snow from the windshield before using the windshield wipers.

If the overload is caused by an electrical problem and not snow or ice, be sure to get it fixed.

Fuses and Circuit Breakers

The wiring circuits in the vehicle are protected from short circuits by a combination of fuses and circuit breakers. This greatly reduces the chance of damage caused by electrical problems.

To check a fuse, look at the silver-colored band inside the fuse. If the band is broken or melted, replace the fuse. Be sure to replace a bad fuse with a new one of the identical size and rating.

Fuses of the same amperage can be temporarily borrowed from another fuse location, if a fuse goes out. Replace the fuse as soon as possible.

To identify and check fuses, circuit breakers, and relays, see *Engine Compartment Fuse Block on page 10-32*, *Instrument Panel Fuse Block on page 10-35*, and *Rear Compartment Fuse Block on page 10-38*.

Engine Compartment Fuse Block

The underhood fuse block is on the passenger side of the engine compartment.

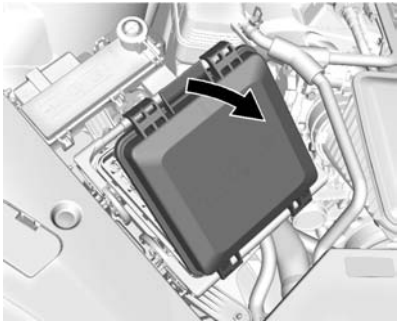

Lift the fuse block cover to access the fuses.

The vehicle may not be equipped with all of the fuses and relays shown.

⚠ Caution

Spilling liquid on any electrical component on the vehicle may damage it. Always keep the covers on any electrical component.

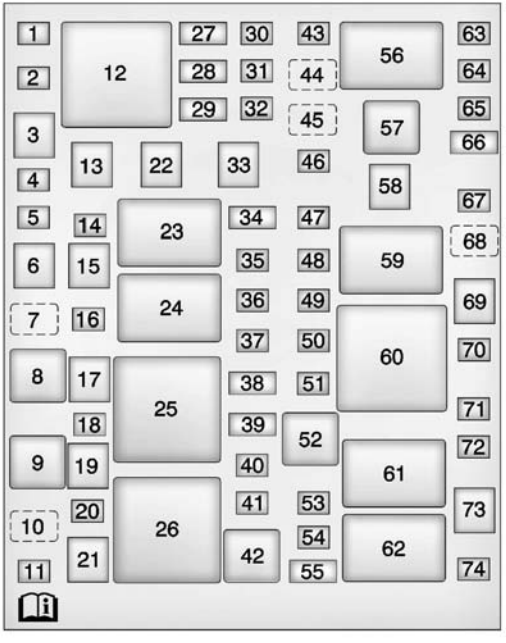

Number	Usage
1	Not Used
2	Not Used
*3	Not Used
4	Body Control Module 6
5	Not Used
6	Driver Power Seat
7	Not Used
*8	Headlamp Washer Relay
9	Not Used
10	Not Used
11	Not Used
12	Not Used
13	Passenger Power Seat
14	Body Control Module 5
15	Front Wiper

Number	Usage
16	Not Used
*17	Headlamp Washer
18	Not Used
19	Antilock Brake System Pump
20	Antilock Brake System Valve
*21	AIR Pump
22	MSB Driver
23	Wiper Control Relay
24	Wiper Speed Relay
25	Engine Control Module Relay
*26	AIR Pump Relay
27	Spare/Heated Seat 2
28	Body Control Module 1/Spare

Number	Usage
*29	AFS AHL/ Pedestrian Protection
30	Passenger Window Switch
31	Body Control Module 7
32	Sunroof
33	Not Used
34	AOS Display/MIL Ignition
35	Rear Electrical Center Ignition
36	Spare PT Fuse
37	Oxygen Sensor
38	Ignition Coils/ Injectors
39	Ignition Coils/ Injectors/Spare
40	Engine Control Module

Number	Usage
41	Fuel Heater
*42	AIR Solenoid Relay
43	Washer
44	Not Used
45	Front Washer Relay
46	Not Used
47	Instrument Panel Body Ignition
48	Fuel System Control Module Ignition
49	Heated Steering Wheel
*50	Steering Column Lock
*51	Coolant Pump
*52	Coolant Pump Relay
53	Air Conditioning Compressor Clutch

Number	Usage
*54	AIR Solenoid
55	Transmission Control Module/ Spare
*56	Headlamp Low Relay
57	Headlamp High Relay
58	Starter
59	Starter Relay
60	Run/Crank Relay
*61	Vacuum Pump Relay
62	Air Conditioning Control Relay
*63	Adaptive Headlamp Leveling
*64	Left High Intensity Discharge Headlamp

Number	Usage
*65	Right High Intensity Discharge Headlamp
66	Headlamp High Left/Right
67	Horn
68	Horn Relay
69	Cooling Fan
70	Aero Shutter
71	Transmission Control Module Ignition
72	Engine Control Module Ignition
*73	Brake Vacuum Pump
74	Not Used

* Optional

Instrument Panel Fuse Block

The instrument panel fuse block is in the end of the driver side of the instrument panel.

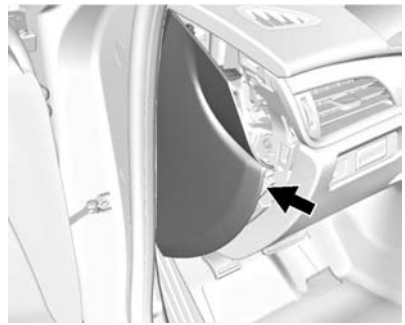

To access the fuses, remove the end panel by gently prying with a plastic tool near each clip, beginning at the point shown.

To install the end cover, insert the tabs on the back of the cover into the slots in the instrument panel at the points shown. Align the clips with the slots in the instrument panel, and press the cover into place.

The vehicle may not be equipped with all of the fuses and relays shown.

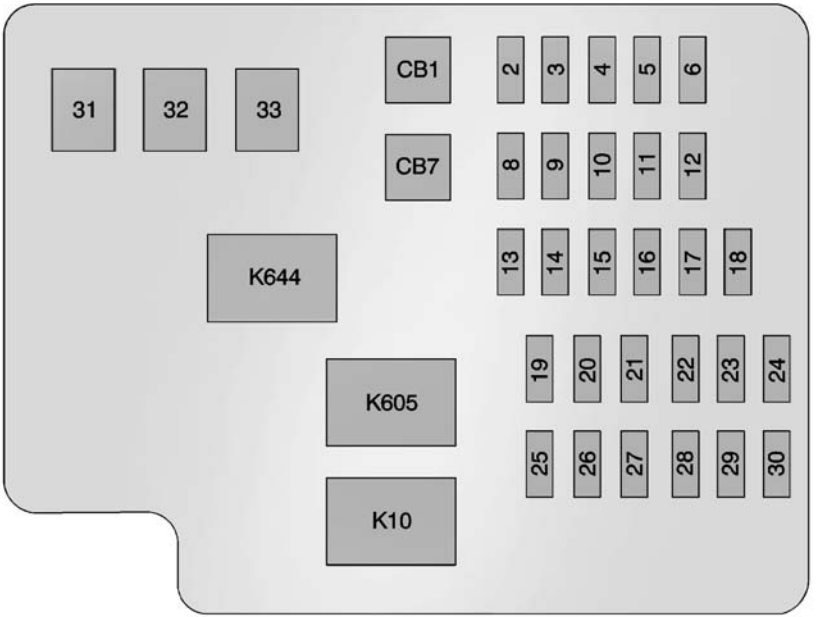

Mini Fuses	Usage
2	Motorized Cupholder
3	Electric Steering Column Lock
4	Data Link Connector
5	Heater, Ventilation, and Air Conditioning Control
6	Tilt and Telescoping Steering Column
8	Spare
9	Glove Box Release
10	Shunt
11	Body Control Module 1
12	Body Control Module 5
13	Spare
14	Spare
15	Spare

Mini Fuses	Usage
16	Spare
17	Spare
18	Spare
19	Spare
20	Spare
21	Spare
22	Sensing Diagnostic Module/Automatic Occupant Sensing
23	Radio/DVD/Heater, Ventilation, and Air Conditioning
24	Display
25	Heated Steering Wheel
26	Wireless Charger
27	Steering Wheel Switches
28	Spare
29	Spare

Mini Fuses	Usage
30	Spare

J Case Fuses	Usage
31	Spare
32	Spare
33	Front Heater, Ventilation, and Air Conditioning Blower

Circuit Breakers	Usage
CB1	Retained Accessory Power/Accessory Power Outlet Power
CB7	Spare

Relays	Usage
K10	Retained Accessory Power/Accessory
K605	Logistics

Relays	Usage
K644	Glove Box Release

Rear Compartment Fuse Block

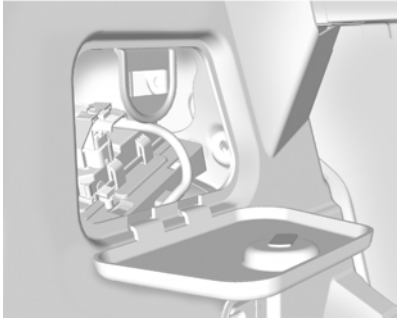

The rear compartment fuse block is behind a cover on the driver side of the rear compartment.

The vehicle may not be equipped with all of the fuses, relays, and features shown.

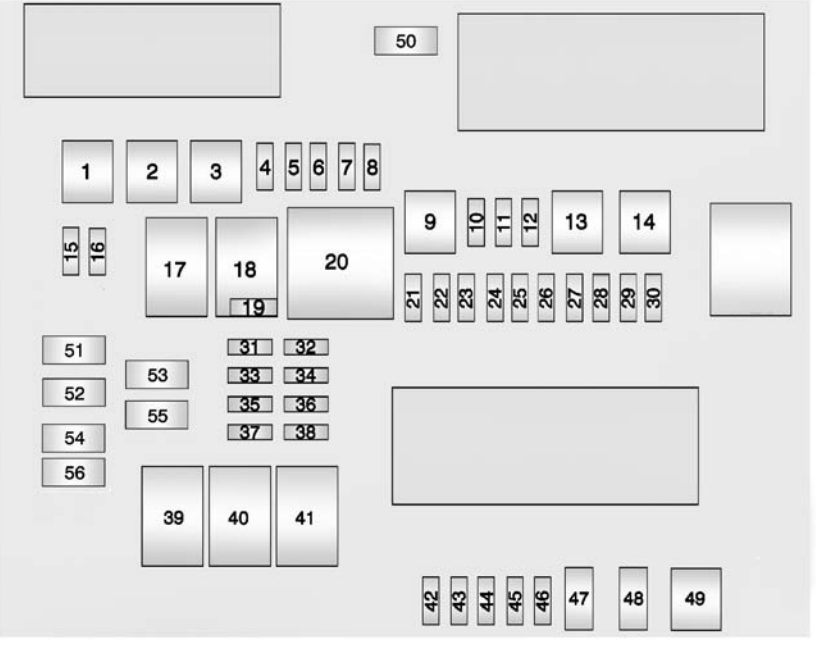

Number	Usage
*1	Electronic Limited Slip Differential/DC DC Transformer
2	Left Window
3	Body Control Module 8
*4	A/C Inverter
5	Passive Entry Passive Start Battery 1
6	Body Control Module 4
7	Heated Mirrors
8	Amplifier
9	Rear Window Defogger
10	Glass Break
*11	Trailer Connector
12	OnStar (If Equipped)
13	Right Window

Number	Usage
14	Electric Parking Brake
15	Not Used
16	Trunk Release
*17	Run Relay
*18	Logistics Relay
*19	Logistics Fuse
20	Rear Window Defogger Relay
21	Mirror Window Module
22	Pedestrian Protection
23	Canister Vent
24	Pedestrian Protection
*25	Rear Vision Camera
*26	Front Ventilated Seats
*27	SBZA/LDW/EOCM

Number	Usage
*28	Trailer/Sunshade
*29	Rear Heated Seats
*30	Semi-Active Damping System
*31	Transfer Case Control Module/ Electronic Limited Slip Differential
32	Theft Module/ Universal Garage Door Opener/Rain Sensor
*33	UPA
*34	Radio/DVD
35	Not Used
*36	Trailer
37	Fuel Pump/Fuel System Control Module
38	Not Used
39	Not Used

Number	Usage
40	Not Used
41	Not Used
*42	Memory Seat Module
43	Body Control Module 3
44	Not Used
45	Battery Regulated Voltage Control
46	Engine Control Module Battery
47	Not Used
48	Not Used
*49	Trailer Module
50	Door Lock Security
51	Rear Closure Release
52	Not Used
53	Not Used
54	Door Lock Security

Number	Usage
55	Not Used
*56	Fuel Door

* Optional

Wheels and Tires

Tires

Every new GM vehicle has high-quality tires made by a leading tire manufacturer. See the warranty manual for information regarding the tire warranty and where to get service. For additional information refer to the tire manufacturer.

⚠ Warning

- Poorly maintained and improperly used tires are dangerous.
- Overloading the tires can cause overheating as a result of too much flexing. There could be a blowout

(Continued)

Warning (Continued)

and a serious crash. See *Vehicle Load Limits on page 9-11*.

- Underinflated tires pose the same danger as overloaded tires. The resulting crash could cause serious injury. Check all tires frequently to maintain the recommended pressure. Tire pressure should be checked when the tires are cold.
- Overinflated tires are more likely to be cut, punctured, or broken by a sudden impact — such as when hitting a pothole. Keep tires at the recommended pressure.

(Continued)

Warning (Continued)

- Worn or old tires can cause a crash. If the tread is badly worn, replace them.
- Replace any tires that have been damaged by impacts with potholes, curbs, etc.
- Improperly repaired tires can cause a crash. Only the dealer or an authorized tire service center should repair, replace, dismount, and mount the tires.
- Do not spin the tires in excess of 56 km/h (35 mph) on slippery surfaces such as snow, mud, ice, etc. Excessive spinning may cause the tires to explode.

See *Tire Pressure for High-Speed Operation on page 10-50* for inflation pressure adjustment for high-speed driving.

All-Season Tires

This vehicle may come with all-season tires. These tires are designed to provide good overall performance on most road surfaces and weather conditions. Original equipment tires designed to GM's specific tire performance criteria have a TPC specification code molded onto the sidewall. Original equipment all-season tires can be identified by the last two characters of this TPC code, which will be “MS.”

Consider installing winter tires on the vehicle if frequent driving on snow or ice-covered roads is expected. All-season tires provide adequate performance for most winter driving conditions, but they may not offer the same level of

traction or performance as winter tires on snow or ice-covered roads. See *Winter Tires on page 10-42*.

Winter Tires

This vehicle was not originally equipped with winter tires. Winter tires are designed for increased traction on snow and ice-covered roads. Consider installing winter tires on the vehicle if frequent driving on ice or snow covered roads is expected. See your dealer for details regarding winter tire availability and proper tire selection. Also, see *Buying New Tires on page 10-57*.

With winter tires, there may be decreased dry road traction, increased road noise, and shorter tread life. After changing to winter tires, be alert for changes in vehicle handling and braking.

If using winter tires:

- Use tires of the same brand and tread type on all four wheel positions.
- Use only radial ply tires of the same size, load range, and speed rating as the original equipment tires.

Winter tires with the same speed rating as the original equipment tires may not be available for H, V, W, Y, and ZR speed rated tires. If winter tires with a lower speed rating are chosen, never exceed the tire's maximum speed capability.

Run-Flat Tires

This vehicle, when new, had run-flat tires. There is no spare tire, no tire changing equipment, and no place to store a tire in the vehicle.

The vehicle also has a Tire Pressure Monitor System (TPMS) that indicates a loss of tire pressure in any of the tires.

⚠ Warning

If the low tire warning light displays on the instrument cluster, the handling capabilities will be reduced during severe maneuvers. Driving too fast could cause loss of control and you or others could be injured. Do not drive over 90 km/h (55 mph) when the low tire warning light is displayed. Drive cautiously and check the tire pressures as soon as possible.

Run-flat tires can be driven on with no air pressure. There is no need to stop on the side of the road to change the tire. Continue driving; however, do not drive too far or too fast. Driving on the tire may not be possible if there is permanent damage. To prevent permanent damage, keep speed below 80 km/h (50 mph). With a light load the vehicle can be driven up to 100 km (60 mi); with a moderate load 80 km

(50 mi); and a heavy load 45 km (25 mi). As soon as possible, contact the nearest authorized GM or run-flat servicing facility for inspection and repair or replacement.

When driving on a deflated run-flat tire, avoid potholes and other road hazards that could damage the tire and/or wheel beyond repair. When a tire has been damaged, or driven any distance while deflated, check with an authorized run-flat tire service center to determine whether the tire can be repaired or should be replaced. To maintain the run-flat feature, all replacement tires must be run-flat tires.

To locate the nearest GM or run-flat servicing facility, call Customer Assistance.

The valve stems on run-flat tires have sensors that are part of the TPMS. See *Tire Pressure Monitor System on page 10-50*. These sensors contain batteries that are designed to last for 10 years under normal driving conditions. See your dealer for wheel or sensor replacement.

⚠ Caution

Using liquid sealants can damage the tire valves and tire pressure monitor sensors in the run-flat tires. This damage is not covered by the vehicle warranty. Do not use liquid sealants in run-flat tires.

Low-Profile Tires

If the vehicle has 255/35R19 size tires, they are classified as low-profile tires.

⚠ Caution

Low-profile tires are more susceptible to damage from road hazards or curb impact than standard profile tires. Tire and/or

(Continued)

Caution (Continued)

wheel assembly damage can occur when coming into contact with road hazards like potholes, or sharp edged objects, or when sliding into a curb. The warranty does not cover this type of damage. Keep tires set to the correct inflation pressure and when possible, avoid contact with curbs, potholes, and other road hazards.

Summer Tires

High Performance Summer Tires

This vehicle may come with 245/40R18 (front) and 275/35R18 (rear) high performance summer tires. These tires have a special tread and compound that are optimized for maximum dry and wet road performance. This special tread and compound will have decreased performance in cold climates, and on ice and snow. We recommend

installing winter tires on the vehicle if frequent driving at temperatures below approximately 5°C (40°F) or on ice or snow covered roads is expected. See *Winter Tires on page 10-42*.

Tire Sidewall Labeling

Useful information about a tire is molded into its sidewall. The examples show a typical passenger tire sidewall.

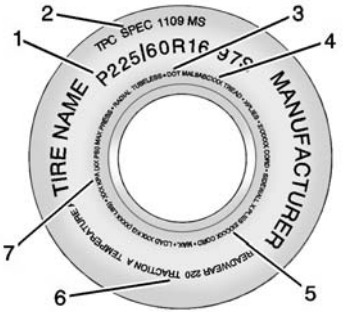

Passenger (P-Metric) Tire Example

(1) Tire Size: The tire size is a combination of letters and numbers used to define a particular tire's width, height, aspect ratio, construction type, and service description. See the “Tire Size” illustration later in this section for more detail.

(2) TPC Spec (Tire Performance Criteria Specification): Original equipment tires designed to GM's specific tire performance criteria have a TPC specification code molded onto the sidewall. GM's TPC specifications meet or exceed all federal safety guidelines.

(3) DOT (Department of Transportation): The Department of Transportation (DOT) code indicates that the tire is in compliance with the U.S. Department of Transportation Motor Vehicle Safety Standards.

DOT Tire Date of Manufacture: The last four digits of the TIN indicate the tire manufactured date. The first two digits represent the week (01-52) and the last two digits, the year. For example, the third week of the year 2010 would have a four-digit DOT date of 0310.

(4) Tire Identification Number (TIN): The letters and numbers following the DOT code are the Tire Identification Number (TIN). The TIN shows the manufacturer and plant code, tire size, and date the tire was manufactured. The TIN is molded onto both sides of the tire, although only one side may have the date of manufacture.

(5) Tire Ply Material: The type of cord and number of plies in the sidewall and under the tread.

(6) Uniform Tire Quality Grading (UTQG): Tire manufacturers are required to grade tires based on three performance factors: treadwear, traction, and temperature resistance. For more information see *Uniform Tire Quality Grading on page 10-59*.

(7) Maximum Cold Inflation Load Limit: Maximum load that can be carried and the maximum pressure needed to support that load.

Tire Designations

Tire Size

The following is an example of a typical passenger vehicle tire size.

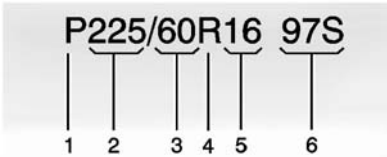

(1) Passenger (P-Metric) Tire: The United States version of a metric tire sizing system. The letter P as the first character in the tire size means a passenger vehicle tire engineered to standards set by the U.S. Tire and Rim Association.

(2) Tire Width: The three-digit number indicates the tire section width in millimeters from sidewall to sidewall.

(3) Aspect Ratio: A two-digit number that indicates the tire height-to-width measurements. For example, if the tire size aspect ratio is 60, as shown in item 3 of the illustration, it would mean that the tire's sidewall is 60 percent as high as it is wide.

(4) Construction Code: A letter code is used to indicate the type of ply construction in the tire. The letter R means radial ply construction; the letter D means diagonal or bias ply construction; and the letter B means belted-bias ply construction.

(5) Rim Diameter: Diameter of the wheel in inches.

(6) Service Description: These characters represent the load index and speed rating of the tire. The load index represents the load carrying capacity a tire is certified to carry. The speed rating is the maximum speed a tire is certified to carry a load.

Tire Terminology and Definitions

Air Pressure: The amount of air inside the tire pressing outward on each square inch of the tire. Air pressure is expressed in kPa (kilopascal) or psi (pounds per square inch).

Accessory Weight: The combined weight of optional accessories. Some examples of optional accessories are automatic transmission, power windows, power seats, and air conditioning.

Aspect Ratio: The relationship of a tire's height to its width.

Belt: A rubber coated layer of cords between the plies and the tread. Cords may be made from steel or other reinforcing materials.

Bead: The tire bead contains steel wires wrapped by steel cords that hold the tire onto the rim.

Bias Ply Tire: A pneumatic tire in which the plies are laid at alternate angles less than 90 degrees to the centerline of the tread.

Cold Tire Pressure: The amount of air pressure in a tire, measured in kPa (kilopascal) or psi (pounds per square inch) before a tire has built up heat from driving. See *Tire Pressure on page 10-48*.

Curb Weight: The weight of a motor vehicle with standard and optional equipment including the maximum capacity of fuel, oil, and coolant, but without passengers and cargo.

DOT Markings: A code molded into the sidewall of a tire signifying that the tire is in compliance with the U.S. Department of Transportation (DOT) Motor Vehicle Safety Standards. The DOT code includes the Tire Identification Number (TIN), an alphanumeric designator which can also identify the tire manufacturer, production plant, brand, and date of production.

GVWR: Gross Vehicle Weight Rating. See *Vehicle Load Limits on page 9-11*.

GAWR FRT: Gross Axle Weight Rating for the front axle. See *Vehicle Load Limits on page 9-11*.

GAWR RR: Gross Axle Weight Rating for the rear axle. See *Vehicle Load Limits on page 9-11*.

Intended Outboard Sidewall: The side of an asymmetrical tire that must always face outward when mounted on a vehicle.

Kilopascal (kPa): The metric unit for air pressure.

Light Truck (LT-Metric) Tire: A tire used on light duty trucks and some multipurpose passenger vehicles.

Load Index: An assigned number ranging from 1 to 279 that corresponds to the load carrying capacity of a tire.

Maximum Inflation Pressure: The maximum air pressure to which a cold tire can be inflated. The maximum air pressure is molded onto the sidewall.

Maximum Load Rating: The load rating for a tire at the maximum permissible inflation pressure for that tire.

Maximum Loaded Vehicle Weight: The sum of curb weight, accessory weight, vehicle capacity weight, and production options weight.

Normal Occupant Weight: The number of occupants a vehicle is designed to seat multiplied by 68 kg (150 lb). See *Vehicle Load Limits on page 9-11*.

Occupant Distribution: Designated seating positions.

Outward Facing Sidewall: The side of an asymmetrical tire that has a particular side that faces outward when mounted on a vehicle. The side of the tire that contains a whitewall, bears white lettering, or bears manufacturer, brand, and/or model name molding that is higher or deeper than the same moldings on the other sidewall of the tire.

Passenger (P-Metric) Tire: A tire used on passenger cars and some light duty trucks and multipurpose vehicles.

Recommended Inflation Pressure: Vehicle manufacturer's recommended tire inflation pressure as shown on the tire placard. See *Tire Pressure on page 10-48* and *Vehicle Load Limits on page 9-11*.

Radial Ply Tire: A pneumatic tire in which the ply cords that extend to the beads are laid at 90 degrees to the centerline of the tread.

Rim: A metal support for a tire and upon which the tire beads are seated.

Sidewall: The portion of a tire between the tread and the bead.

Speed Rating: An alphanumeric code assigned to a tire indicating the maximum speed at which a tire can operate.

Traction: The friction between the tire and the road surface. The amount of grip provided.

Tread: The portion of a tire that comes into contact with the road.

Treadwear Indicators: Narrow bands, sometimes called wear bars, that show across the tread of a tire when only 1.6 mm (1/16 in) of tread remains. See *When It Is Time for New Tires on page 10-57*.

UTQGS (Uniform Tire Quality Grading Standards): A tire information system that provides consumers with ratings for a tire's traction, temperature, and treadwear. Ratings are determined by tire manufacturers using government testing procedures. The ratings are molded into the sidewall of the tire. See *Uniform Tire Quality Grading on page 10-59*.

Vehicle Capacity Weight: The number of designated seating positions multiplied by 68 kg (150 lb) plus the rated cargo load. See *Vehicle Load Limits on page 9-11*.

Vehicle Maximum Load on the Tire: Load on an individual tire due to curb weight, accessory weight, occupant weight, and cargo weight.

Vehicle Placard: A label permanently attached to a vehicle showing the vehicle capacity weight and the original equipment tire size and recommended inflation pressure. See “Tire and Loading Information Label” under *Vehicle Load Limits on page 9-11*.

Tire Pressure

Tires need the correct amount of air pressure to operate effectively.

⚠ Caution

Neither tire underinflation nor overinflation is good. Underinflated tires, or tires that do not have enough air, can result in:

- Tire overloading and overheating which could lead to a blowout.
- Premature or irregular wear.
- Poor handling.
- Reduced fuel economy.

Overinflated tires, or tires that have too much air, can result in:

- Unusual wear.
- Poor handling.
- Rough ride.
- Needless damage from road hazards.

The Tire and Loading Information label on the vehicle indicates the original equipment tires and the correct cold tire inflation pressures. The recommended pressure is the minimum air pressure needed to support the vehicle's maximum load carrying capacity.

For additional information regarding how much weight the vehicle can carry, and an example of the Tire and Loading Information label, see *Vehicle Load Limits on page 9-11*. How the vehicle is loaded affects vehicle handling and ride comfort. Never load the vehicle with more weight than it was designed to carry.

When to Check

Check the tires once a month or more.

How to Check

Use a good quality pocket-type gauge to check the tire pressure. Proper tire inflation cannot be determined by looking at the tire. Check the tire inflation pressure when the tires are cold, meaning the vehicle has not been driven for at least three hours or no more than 1.6 km (1 mi).

Remove the valve cap from the tire valve stem. Press the tire gauge firmly onto the valve to get the pressure measurement. If the cold tire inflation pressure matches the recommended pressure on the Tire and Loading Information label, no further adjustment is necessary.

If the inflation pressure is low, add air until the recommended pressure is reached. If the inflation pressure in high, press on the metal stem in the center

of the tire valve to release air. Re-check the tire pressure with the tire gauge.

Return the valve caps on the valve stems to keep out dirt and moisture and prevent leaks.

Tire Pressure for High-Speed Operation

⚠ Warning

Driving at high speeds, 160 km/h (100 mph) or higher, puts an additional strain on tires. Sustained high-speed driving causes excessive heat buildup and can cause sudden tire failure. You could have a crash and you or others could be killed. Some high-speed rated tires require inflation pressure adjustment for high-speed operation. When speed limits and road conditions are such that a vehicle can be

(Continued)

Warning (Continued)

driven at high speeds, make sure the tires are rated for high-speed operation, in excellent condition, and set to the correct cold tire inflation pressure for the vehicle load.

Vehicles with P245/45R17 95V, P245/40R18 93V, or 255/35R19 96V size tires require inflation pressure adjustment when driving the vehicle at speeds of 160 km/h (100 mph) or higher. Set the cold inflation pressure to 280 kPa (41 psi).

Vehicles with 245/40R18 93Y and 275/35R18 95Y size tires require inflation pressure adjustment when driving the vehicle at speeds of 160 km/h (100 mph) or higher. Set the cold inflation pressure to 300 kPa (44 psi).

Return the tires to the recommended cold tire inflation pressure when high-speed driving has ended. See *Vehicle Load Limits on page 9-11* and *Tire Pressure on page 10-48*.

Tire Pressure Monitor System

The Tire Pressure Monitor System (TPMS) uses radio and sensor technology to check tire pressure levels. The TPMS sensors monitor the air pressure in your tires and transmit tire pressure readings to a receiver located in the vehicle.

Each tire, including the spare (if provided), should be checked monthly when cold and inflated to the inflation pressure recommended by the vehicle manufacturer on the vehicle placard or tire inflation pressure label. (If your vehicle has tires of a different size than the size indicated on the vehicle placard or

tire inflation pressure label, you should determine the proper tire inflation pressure for those tires.)

As an added safety feature, your vehicle has been equipped with a tire pressure monitoring system (TPMS) that illuminates a low tire pressure telltale when one or more of your tires is significantly under-inflated.

Accordingly, when the low tire pressure telltale illuminates, you should stop and check your tires as soon as possible, and inflate them to the proper pressure. Driving on a significantly under-inflated tire causes the tire to overheat and can lead to tire failure. Under-inflation also reduces fuel efficiency and tire tread life, and may affect the vehicle's handling and stopping ability.

Please note that the TPMS is not a substitute for proper tire maintenance, and it is the driver's responsibility to maintain correct tire pressure, even if under-inflation has not reached the level to trigger illumination of the TPMS low tire pressure telltale.

Your vehicle has also been equipped with a TPMS malfunction indicator to indicate when the system is not operating properly. The TPMS malfunction indicator is combined with the low tire pressure telltale. When the system detects a malfunction, the telltale will flash for approximately one minute and then remain continuously illuminated. This sequence will continue upon subsequent vehicle start-ups as long as the malfunction exists.

When the malfunction indicator is illuminated, the system may not be able to detect or signal low tire pressure as intended. TPMS malfunctions may occur for a variety of reasons, including the installation of replacement or alternate tires or wheels on the vehicle that prevent the TPMS from functioning properly. Always check the TPMS malfunction telltale after replacing one or more tires or wheels on your vehicle to ensure that the replacement or alternate tires and wheels allow the TPMS to continue to function properly.

See *Tire Pressure Monitor Operation on page 10-51*.

See *Radio Frequency Statement on page 13-15*.

Tire Pressure Monitor Operation

This vehicle may have a Tire Pressure Monitor System (TPMS). The TPMS is designed to warn the driver when a low tire pressure condition exists. TPMS sensors are mounted onto each tire and wheel assembly, excluding the spare tire and wheel assembly. The TPMS sensors monitor the air pressure in the tires and transmits the tire pressure readings to a receiver located in the vehicle.

When a low tire pressure condition is detected, the TPMS illuminates the low tire pressure warning light on the instrument cluster. If the warning light comes on, stop as soon as possible and inflate the tires to the recommended pressure shown on the Tire and Loading Information label. See *Vehicle Load Limits on page 9-11*.

A message to check the pressure in a specific tire displays in the Driver Information Center (DIC). The low tire pressure warning light and the DIC warning message come on at each ignition cycle until the tires are inflated to the correct inflation pressure. Using the DIC, tire pressure levels can be viewed. For additional information and details about the DIC operation and displays see *Driver Information Center (DIC) on page 5-30*.

The low tire pressure warning light may come on in cool weather when the vehicle is first started, and then turn off as the vehicle is driven. This could be an early indicator that the air pressure is getting low and needs to be inflated to the proper pressure.

A Tire and Loading Information label, attached to your vehicle, shows the size of the original equipment tires and the correct inflation pressure for the tires when they are cold. See *Vehicle Load Limits on page 9-11* for an example of the Tire and Loading Information label and its location. Also see *Tire Pressure on page 10-48*.

The TPMS can warn about a low tire pressure condition but it does not replace normal tire maintenance. See *Tire Inspection on page 10-55*, *Tire Rotation on page 10-55*, and *Tires on page 10-40*.

⚠ Caution

Tire sealant materials are not all the same. A non-approved tire sealant could damage the TPMS sensors. TPMS sensor damage caused by using an incorrect tire sealant is not covered by the vehicle warranty. Always use only the GM approved tire sealant available through your dealer or included in the vehicle.

TPMS Malfunction Light and Message

The TPMS will not function properly if one or more of the TPMS sensors are missing or inoperable. When the system detects a malfunction, the low tire warning light flashes for about one minute and then stays on for the remainder of the ignition cycle. A DIC warning message also displays. The malfunction light and DIC warning message come on at each ignition cycle until the problem is corrected. Some of the conditions that can cause these to come on are:

- One of the road tires has been replaced with the spare tire. The spare tire does not have a TPMS sensor. The malfunction light and DIC message should go off after the road tire is replaced and the sensor matching process is performed successfully. See “TPMS Sensor Matching Process” later in this section.
- The TPMS sensor matching process was not done or not completed successfully after rotating the tires. The malfunction light and the DIC message should go off after successfully completing the sensor matching process. See "TPMS Sensor Matching Process" later in this section.
- One or more TPMS sensors are missing or damaged. The malfunction light and the DIC message should go off when the TPMS sensors are installed and the sensor matching process is performed successfully. See your dealer for service.
- Replacement tires or wheels do not match the original equipment tires or wheels. Tires and wheels other than those recommended could prevent the TPMS from functioning properly. See *Buying New Tires on page 10-57*.
- Operating electronic devices or being near facilities using radio wave frequencies similar to the TPMS could cause the TPMS sensors to malfunction.

If the TPMS is not functioning properly, it cannot detect or signal a low tire condition. See your dealer for service if the TPMS malfunction light and DIC message come on and stay on.

TPMS Sensor Matching Process

Each TPMS sensor has a unique identification code. The identification code needs to be matched to a new tire/wheel position after rotating the vehicle’s tires or replacing one or more of the TPMS sensors. The TPMS sensor matching process should also be performed after replacing a spare tire with a road tire containing the TPMS sensor. The malfunction light and the DIC message should go off at the next ignition cycle. The sensors are matched to the tire/wheel positions,

using a TPMS relearn tool, in the following order: driver side front tire, passenger side front tire, passenger side rear tire, and driver side rear tire. See your dealer for service or to purchase a relearn tool.

There are two minutes to match the first tire/wheel position, and five minutes overall to match all four tire/wheel positions. If it takes longer, the matching process stops and must be restarted.

The TPMS sensor matching process is:

1. Set the parking brake.
2. Place the vehicle power mode in ON/RUN/START. See *Ignition Positions on page 9-16*.
3. Make sure the Tire Pressure info display option is turned on. The info displays on the DIC can be turned on and off through the Settings menu. See *Driver Information Center (DIC) on page 5-30*.
4. Use the five-way DIC control on the right side of the steering wheel to scroll to the Tire Pressure screen under the DIC info page. See *Driver Information Center (DIC) on page 5-30*.
5. Press and hold the SEL button in the center of the five-way DIC control.

   The horn sounds twice to signal the receiver is in relearn mode and the TIRE LEARNING ACTIVE message displays on the DIC screen.
6. Start with the driver side front tire.
7. Place the relearn tool against the tire sidewall, near the valve stem. Then press the button to activate the TPMS sensor. A horn chirp confirms that the sensor identification code has been matched to this tire and wheel position.
8. Proceed to the passenger side front tire, and repeat the procedure in Step 7.
9. Proceed to the passenger side rear tire, and repeat the procedure in Step 7.
10. Proceed to the driver side rear tire, and repeat the procedure in Step 7. The horn sounds two times to indicate the sensor identification code has been matched to the driver side rear tire, and the TPMS sensor matching process is no longer active. The TIRE LEARNING ACTIVE message on the DIC display screen goes off.
11. Press ENGINE START/STOP to turn the ignition off.
12. Set all four tires to the recommended air pressure level as indicated on the Tire and Loading Information label.

Tire Inspection

We recommend that the tires, including the spare tire, if the vehicle has one, be inspected for signs of wear or damage at least once a month.

Replace the tire if:

- The indicators at three or more places around the tire can be seen.
- There is cord or fabric showing through the tire's rubber.
- The tread or sidewall is cracked, cut, or snagged deep enough to show cord or fabric.
- The tire has a bump, bulge, or split.
- The tire has a puncture, cut, or other damage that cannot be repaired well because of the size or location of the damage.

Tire Rotation

If the vehicle has non-directional tires, they should be rotated every 12 000 km/7,500 mi. See *Maintenance Schedule on page 11-3*.

Tires are rotated to achieve a uniform wear for all tires. The first rotation is the most important.

Anytime unusual wear is noticed, rotate the tires as soon as possible, check for proper tire inflation pressure, and check for damaged tires or wheels. If the unusual wear continues after the rotation, check the wheel alignment. See *When It Is Time for New Tires on page 10-57* and *Wheel Replacement on page 10-61*.

Directional tires should not be rotated. Each tire and wheel should be used only in the position it is in. Directional tires will have an arrow on the tire indicating the proper direction of rotation or will have “left” or “right” molded on the sidewall.

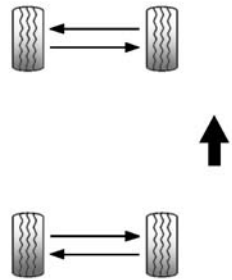

Use this rotation pattern if the vehicle has different size tires on the front and rear and they are non-directional.

Different tire sizes should not be rotated front to rear.

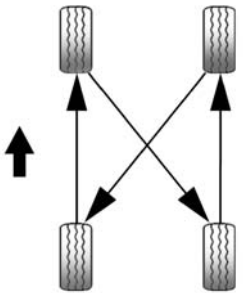

Use this rotation pattern when rotating tires of the same size installed on all four wheel positions.

If the vehicle has a compact spare tire, do not include it in the tire rotation.

Adjust the front and rear tires to the recommended inflation pressure on the Tire and Loading Information label after the tires have been rotated. See *Tire Pressure on page 10-48* and *Vehicle Load Limits on page 9-11*.

Reset the Tire Pressure Monitor System. See *Tire Pressure Monitor Operation on page 10-51*.

Check that all wheel nuts are properly tightened. See “Wheel Nut Torque” under *Capacities and Specifications on page 12-2*.

⚠ Warning

Rust or dirt on a wheel, or on the parts to which it is fastened, can make wheel nuts become loose after time. The wheel could come

(Continued)

Warning (Continued)

off and cause an accident. When changing a wheel, remove any rust or dirt from places where the wheel attaches to the vehicle. In an emergency, a cloth or a paper towel can be used; however, use a scraper or wire brush later to remove all rust or dirt.

Lightly coat the center of the wheel hub with wheel bearing grease after a wheel change or tire rotation to prevent corrosion or rust build-up. Do not get grease on the flat wheel mounting surface or on the wheel nuts or bolts.

When It Is Time for New Tires

Factors such as maintenance, temperatures, driving speeds, vehicle loading, and road conditions affect the wear rate of the tires.

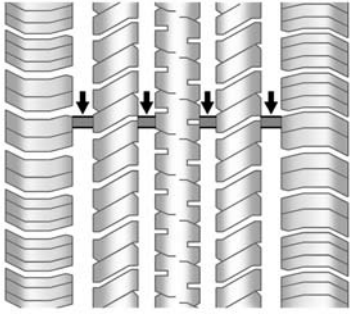

Treadwear indicators are one way to tell when it is time for new tires. Treadwear indicators appear when the tires have only 1.6 mm (1/16 in) or less of tread remaining. See *Tire Inspection on page 10-55* and *Tire Rotation on page 10-55*.

The rubber in tires ages over time. This also applies to the spare tire, if the vehicle has one, even if it is never used. Multiple factors including temperatures, loading conditions, and inflation pressure maintenance affect how fast aging takes place. GM recommends that tires, including the spare if equipped, be replaced after six years, regardless of tread wear. The tire manufacture date is the last four digits of the DOT Tire Identification Number (TIN) which is molded into one side of the tire sidewall. The first two digits represent the week (01–52) and the last two digits, the year. For example, the third week of the year 2010 would have a four-digit DOT date of 0310.

Vehicle Storage

Tires age when stored normally mounted on a parked vehicle. Park a vehicle that will be stored for at least a month in a cool, dry, clean area away from direct sunlight to slow aging. This area should be free of grease, gasoline, or other substances that can deteriorate rubber.

Parking for an extended period can cause flat spots on the tires that may result in vibrations while driving. When storing a vehicle for at least a month, remove the tires or raise the vehicle to reduce the weight from the tires.

Buying New Tires

GM has developed and matched specific tires for the vehicle. The original equipment tires installed were designed to meet General Motors Tire Performance Criteria Specification (TPC Spec) system rating. When replacement tires are needed, GM strongly recommends buying tires with the same TPC Spec rating.

GM's exclusive TPC Spec system considers over a dozen critical specifications that impact

the overall performance of the vehicle, including brake system performance, ride and handling, traction control, and tire pressure monitoring performance. GM's TPC Spec number is molded onto the tire's sidewall near the tire size. If the tires have an all-season tread design, the TPC Spec number will be followed by MS for mud and snow. See *Tire Sidewall Labeling on page 10-44*, for additional information.

GM recommends replacing worn tires in complete sets of four. Uniform tread depth on all tires will help to maintain the performance of the vehicle. Braking and handling performance may be adversely affected if all the tires are not replaced at the same time. If proper rotation and maintenance have been done, all four tires should wear out at about the same time. See *Tire Rotation on page 10-55* for information on proper tire rotation. However, if it is necessary to replace only one axle set of worn tires, place the new tires on the rear axle.

Winter tires with the same speed rating as the original equipment tires may not be available for H, V, W, and ZR speed rated tires. Never exceed the winter tire's maximum speed capability when using winter tires with a lower speed rating.

⚠ Warning

Tires could explode during improper service. Attempting to mount or dismount a tire could cause injury or death. Only your dealer or authorized tire service center should mount or dismount the tires.

⚠ Warning

Mixing tires of different sizes (other than those originally installed on the vehicle), brands, or types may cause loss of control of the vehicle, resulting in a crash or other vehicle damage. Use the correct size, brand, and type of tire on all four wheels.

⚠ Warning

Using bias-ply tires on the vehicle may cause the wheel rim flanges to develop cracks after many miles of driving. A tire and/or wheel could fail suddenly and cause a crash. Use only radial-ply tires with the wheels on the vehicle.

If the vehicle tires must be replaced with a tire that does not have a TPC Spec number, make sure they are the same size, load range, speed rating, and construction (radial) as the original tires.

Vehicles that have a tire pressure monitoring system could give an inaccurate low-pressure warning if non-TPC Spec rated tires are installed. See *Tire Pressure Monitor Operation on page 10-51*.

The Tire and Loading Information label indicates the original equipment tires on the vehicle. See *Vehicle Load Limits on page 9-11*, for the label location and more information about the Tire and Loading Information label.

Different Size Tires and Wheels

If wheels or tires are installed that are a different size than the original equipment wheels and tires, vehicle performance, including its braking, ride and handling characteristics, stability, and resistance to rollover may be affected. If the vehicle has electronic systems such as antilock brakes, rollover airbags, traction control, electronic stability control, or All-Wheel Drive, the performance of these systems can also be affected.

⚠ Warning

If different sized wheels are used, there may not be an acceptable level of performance and safety if tires not recommended for those wheels are selected. This increases the chance of a crash and serious injury. Only use GM

(Continued)

Warning (Continued)

specific wheel and tire systems developed for the vehicle, and have them properly installed by a GM certified technician.

See *Buying New Tires on page 10-57* and *Accessories and Modifications on page 10-2*.

Uniform Tire Quality Grading

Quality grades can be found where applicable on the tire sidewall between tread shoulder and maximum section width. For example:

Treadwear 200 Traction AA Temperature A

The following information relates to the system developed by the United States National Highway Traffic Safety Administration

(NHTSA), which grades tires by treadwear, traction, and temperature performance. This applies only to vehicles sold in the United States. The grades are molded on the sidewalls of most passenger car tires. The Uniform Tire Quality Grading (UTQG) system does not apply to deep tread, winter tires, compact spare tires, tires with nominal rim diameters of 10 to 12 inches (25 to 30 cm), or to some limited-production tires.

While the tires available on General Motors passenger cars and light trucks may vary with respect to these grades, they must also conform to federal safety requirements and additional General Motors Tire Performance Criteria (TPC) standards.

All Passenger Car Tires Must Conform to Federal Safety Requirements In Addition To These Grades.

Treadwear

The treadwear grade is a comparative rating based on the wear rate of the tire when tested under controlled conditions on a specified government test course. For example, a tire graded 150 would wear one and one-half (1½) times as well on the government course as a tire graded 100. The relative performance of tires depends upon the actual conditions of their use, however, and may depart significantly from the norm due to variations in driving habits, service practices and differences in road characteristics and climate.

Traction

The traction grades, from highest to lowest, are AA, A, B, and C. Those grades represent the tire's ability to stop on wet pavement as measured under controlled conditions on specified government test surfaces of asphalt and concrete. A tire marked C may have poor traction performance. Warning: The traction grade assigned to this tire is based on straight-ahead braking traction tests, and does not include acceleration, cornering, hydroplaning, or peak traction characteristics.

Temperature

The temperature grades are A (the highest), B, and C, representing the tire's resistance to the generation of heat and its ability to dissipate heat when tested under controlled

conditions on a specified indoor laboratory test wheel. Sustained high temperature can cause the material of the tire to degenerate and reduce tire life, and excessive temperature can lead to sudden tire failure. The grade C corresponds to a level of performance which all passenger car tires must meet under the Federal Motor Safety Standard No. 109. Grades B and A represent higher levels of performance on the laboratory test wheel than the minimum required by law. Warning: The temperature grade for this tire is established for a tire that is properly inflated and not overloaded. Excessive speed, underinflation, or excessive loading, either separately or in combination, can cause heat buildup and possible tire failure.

Wheel Alignment and Tire Balance

The tires and wheels were aligned and balanced at the factory to provide the longest tire life and best overall performance. Adjustments to wheel alignment and tire balancing are not necessary on a regular basis. Consider an alignment check if there is unusual tire wear or the vehicle is significantly pulling to one side or the other. Some slight pull to the left or right, depending on the crown of the road and/or other road surface variations such as troughs or ruts, is normal. If the vehicle is vibrating when driving on a smooth road, the tires and wheels may need to be rebalanced. See your dealer for proper diagnosis.

Wheel Replacement

Replace any wheel that is bent, cracked, or badly rusted or corroded. If wheel nuts keep coming loose, the wheel, wheel bolts, and wheel nuts should be replaced.

If the wheel leaks air, replace it. Some aluminum wheels can be repaired. See your dealer if any of these conditions exist.

Your dealer will know the kind of wheel that is needed.

Each new wheel should have the same load-carrying capacity, diameter, width, offset, and be mounted the same way as the one it replaces.

Replace wheels, wheel bolts, wheel nuts, or Tire Pressure Monitor System (TPMS) sensors with new GM original equipment parts.

⚠ Warning

Using the wrong replacement wheels, wheel bolts, or wheel nuts can be dangerous. It could affect the braking and handling of the vehicle. Tires can lose air, and cause loss of control, causing

(Continued)

Warning (Continued)

a crash. Always use the correct wheel, wheel bolts, and wheel nuts for replacement.

⚠ Caution

The wrong wheel can also cause problems with bearing life, brake cooling, speedometer or odometer calibration, headlamp aim, bumper height, vehicle ground clearance, and tire or tire chain clearance to the body and chassis.

Used Replacement Wheels

⚠ Warning

Replacing a wheel with a used one is dangerous. How it has been used or how far it has been driven may be unknown. It could fail suddenly and cause a crash. When replacing wheels, use a new GM original equipment wheel.

Tire Chains

⚠ Warning

If the vehicle has P245/40R18, 245/40R18, 275/35R18, or 255/35R19 size tires, do not use tire chains. There is not enough clearance. Tire chains used on a vehicle without the proper amount of clearance can cause damage to the brakes, suspension,

(Continued)

Warning (Continued)

or other vehicle parts. The area damaged by the tire chains could cause loss of control and a crash. Use another type of traction device only if its manufacturer recommends it for the vehicle's tire size combination and road conditions. Follow that manufacturer's instructions. To avoid vehicle damage, drive slow and readjust or remove the traction device if it contacts the vehicle. Do not spin the wheels. If traction devices are used, install them on the rear tires.

⚠ Caution

If the vehicle is equipped with a tire size other than P245/40R18, 245/40R18, 275/35R18, or 255/35R19, use tire chains only where

(Continued)

Caution (Continued)

legal and only when necessary. Use low profile chains that add no more than 12 mm thickness to the tire tread and inner sidewall. Use chains that are the proper size for the tires. Install them on the tires of the rear axle. Don't use chains on the tires of the front axle. Tighten them as tightly as possible with the ends securely fastened. Drive slowly and follow the chain manufacturer's instructions. If the chains contact the vehicle, stop and retighten them. If the contact continues, slow down until it stops. Driving too fast or spinning the wheels with chains on will damage the vehicle.

If a Tire Goes Flat

It is unusual for a tire to blow out while driving, especially if the tires are maintained properly. If air goes out of a tire, it is much more likely to leak out slowly. See *Tires on page 10-40* for additional information. But if there ever is a blowout, here are a few tips about what to expect and what to do:

If a front tire fails, the flat tire creates a drag that pulls the vehicle toward that side. Take your foot off the accelerator pedal and grip the steering wheel firmly. Steer to maintain lane position, and then gently brake to a stop, well off the road, if possible.

A rear blowout, particularly on a curve, acts much like a skid and may require the same correction as used in a skid. Stop pressing the accelerator pedal and steer to straighten the vehicle. It may be very bumpy and noisy. Gently brake to a stop, well off the road, if possible.

The vehicle has no spare tire, no tire changing equipment, and no place to store a tire.

If the vehicle has run-flat tires, there is no need to stop on the side of the road to change a flat tire. See *Run-Flat Tires on page 10-42*.

Jump Starting

For more information about the vehicle battery, see *Battery on page 10-25*.

If the battery has run down, try to use another vehicle and some jumper cables to start your vehicle. Be sure to use the following steps to do it safely.

⚠ Warning

Batteries can hurt you. They can be dangerous because:

- They contain acid that can burn you.
- They contain gas that can explode or ignite.
- They contain enough electricity to burn you.

If you do not follow these steps exactly, some or all of these things can hurt you.

⚠ Caution

Ignoring these steps could result in costly damage to the vehicle that would not be covered by the vehicle warranty. Trying to start the vehicle by pushing or pulling it will not work, and it could damage the vehicle.

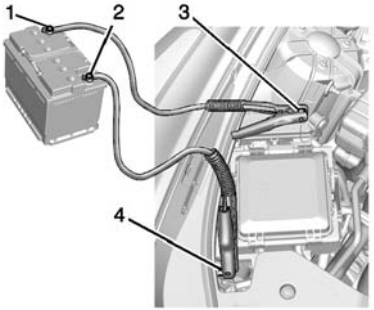

1. Good Battery Positive Terminal
2. Good Battery Negative Terminal
3. Discharged Battery Remote Positive terminal
4. Discharged Battery Remote Negative Ground Terminal

The jump start positive terminal (1) and negative post (2) are on the battery of the vehicle providing the jump start.

The jump start remote positive terminal (3) and the remote negative ground terminal (4) for the discharged battery are on the passenger side of the vehicle.

The positive jump start connection for the discharged battery is under a red cover. Remove the cover to expose the terminal.

1. Check the other vehicle. It must have a 12-volt battery with a negative ground system.

⚠ Caution

If the other vehicle does not have a 12-volt system with a negative ground, both vehicles can be damaged. Only use a vehicle that has a 12-volt system with a negative ground for jump starting.

2. Position the two vehicles so that they are not touching.
3. Set the parking brake firmly and put the shift lever in P (Park) with an automatic transmission, or Neutral with a manual transmission.

⚠ Caution

If any accessories are left on or plugged in during the jump starting procedure, they could be damaged. The repairs would not be covered by the vehicle

(Continued)

Caution (Continued)

warranty. Whenever possible, turn off or unplug all accessories on either vehicle when jump starting.

4. Set the ignition to OFF. Turn off all lights and accessories in both vehicles, except the hazard warning flashers if needed.

⚠ Warning

An electric fan can start up even when the engine is not running and can injure you. Keep hands, clothing and tools away from any underhood electric fan.

⚠ Warning

Using a match near a battery can cause battery gas to explode. People have been hurt doing this,

(Continued)

Warning (Continued)

and some have been blinded. Use a flashlight if you need more light.

Be sure the battery has enough water. You do not need to add water to the battery installed in your new vehicle. But if a battery has filler caps, be sure the right amount of fluid is there. If it is low, add water to take care of that first. If you do not, explosive gas could be present.

Battery fluid contains acid that can burn you. Do not get it on you. If you accidentally get it in your eyes or on your skin, flush the place with water and get medical help immediately.

⚠ Warning

Fans or other moving engine parts can injure you badly. Keep your hands away from moving parts once the engine is running.

5. Connect one end of the red positive (+) cable to the remote positive (+) terminal on the discharged battery.
6. Connect the other end of the red positive (+) cable to the positive (+) terminal of the good battery.
7. Connect one end of the black negative (–) cable to the negative (–) terminal of the good battery.
8. Connect the other end of the black negative (–) cable to the remote negative (–) grounding terminal for the discharged battery.
9. Start the engine in the vehicle with the good battery and run the engine at idle speed for at least four minutes.
10. Try to start the vehicle that had the dead battery. If it will not start after a few tries, it probably needs service.

⚠ Caution

If the jumper cables are connected or removed in the wrong order, electrical shorting may occur and damage the vehicle. The repairs would not be covered by the vehicle warranty. Always connect and remove the jumper cables in the correct order, making sure that the cables do not touch each other or other metal.

Jumper Cable Removal

Reverse the sequence exactly when removing the jumper cables.

Towing the Vehicle

⚠ Caution

Incorrectly towing a disabled vehicle may cause damage. The damage would not be covered by the vehicle warranty. Do not lash or hook to the chassis components — including the front and rear subframes, suspension control arms, and links — during towing and recovery of a disabled vehicle, or when securing the vehicle. Use the proper nylon strap harnesses around the tires to secure the vehicle.

Have the vehicle towed on a flatbed car carrier. A wheel lift tow truck could damage the vehicle.

Consult your dealer or a professional towing service if the disabled vehicle must be towed.

Use the tow eye for towing a disabled vehicle or loading it onto a flatbed car carrier. The tow eye should not be used to recover a vehicle from an off road situation.

⚠ Caution

Improper use of the tow eye can cause vehicle damage. Use caution and low speeds to prevent damage to the vehicle.

Carefully open the cover in the fascia by using the small notch that conceals the tow eye socket.

Install the tow eye into the socket by turning it clockwise until it stops. When the tow eye is removed, reinstall the cover with the notch in the original position.

To tow the vehicle behind another vehicle for recreational purposes, such as behind a motor home, see “Recreational Vehicle Towing” in this section.

Recreational Vehicle Towing

Recreational vehicle towing means towing the vehicle behind another vehicle such as a motor home. The two most common types of recreational vehicle towing are known as dinghy towing and dolly towing. Dinghy towing is towing the vehicle with all four wheels on the ground. Dolly towing is towing the vehicle with two wheels on the ground and two wheels up on a device known as a dolly.

Here are some important things to consider before recreational vehicle towing:

- What is the towing capacity of the towing vehicle? Be sure to read the tow vehicle manufacturer's recommendations.
- What is the distance that will be traveled? Some vehicles have restrictions on how far and how long they can tow.
- Is the proper towing equipment going to be used? See your dealer or trailering professional for additional advice and equipment recommendations.
- Is the vehicle ready to be towed? Just as preparing the vehicle for a long trip, make sure the vehicle is prepared to be towed.

Dinghy Towing

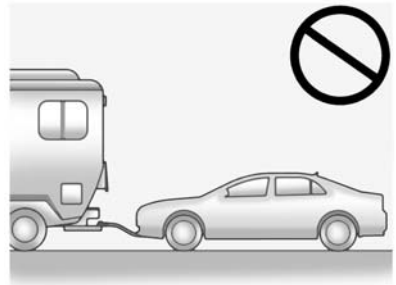

⚠ Caution

If the vehicle is towed with all four wheels on the ground, the drivetrain components could be damaged. The repairs would not be covered by the vehicle warranty. Do not tow the vehicle with all four wheels on the ground.

The vehicle was not designed to be towed with all four wheels on the ground. If the vehicle must be towed, a dolly should be used. See the following information on dolly towing.

Dolly Towing (Rear-Wheel-Drive Vehicles)

Use the following procedure to dolly tow a rear-wheel-drive vehicle from the rear:

1. Attach the dolly to the tow vehicle following the dolly manufacturer instructions.
2. Put the rear wheels on the dolly.
3. Shift the transmission to P (Park).
4. Firmly set the parking brake.
5. Use an adequate clamping device designed for towing to ensure that the front wheels are locked into the straight-ahead position.
6. Secure the vehicle to the dolly following the manufacturer instructions.
7. Release the parking brake only after the vehicle being towed is firmly attached to the towing vehicle.
8. Turn the ignition to OFF.

Dolly Towing (All-Wheel Drive Vehicles)

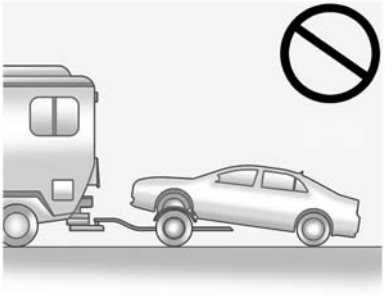

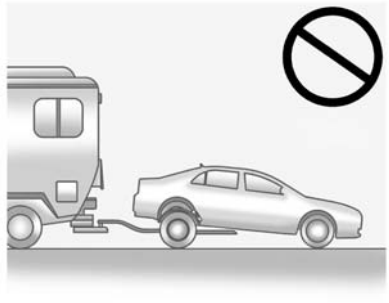

Vehicles with all-wheel drive cannot be dolly towed.

Appearance Care

Exterior Care

Locks

Locks are lubricated at the factory. Use a de-icing agent only when absolutely necessary, and have the locks greased after using. See *Recommended Fluids and Lubricants on page 11-13*.

Washing the Vehicle

To preserve the vehicle's finish, wash it often and out of direct sunlight.

⚠ Caution

Do not use petroleum-based, acidic, or abrasive cleaning agents as they can damage the vehicle's paint, metal, or plastic parts. If damage occurs, it would not be covered by the vehicle warranty. Approved cleaning

(Continued)

Caution (Continued)

products can be obtained from your dealer. Follow all manufacturer directions regarding correct product usage, necessary safety precautions, and appropriate disposal of any vehicle care product.

⚠ Caution

Avoid using high-pressure washes closer than 30 cm (12 in) to the surface of the vehicle. Use of power washers exceeding 8,274 kPa (1,200 psi) can result in damage or removal of paint and decals.

The symbol is on any underhood compartment electrical center that should not be power washed. This could cause damage that would not be covered by the vehicle warranty.

If using an automatic car wash, follow the car wash instructions. The windshield wiper and rear window wiper, if equipped, must be off. Remove any accessories that may be damaged or interfere with the car wash equipment.

Rinse the vehicle well, before washing and after, to remove all cleaning agents completely. If they are allowed to dry on the surface, they could stain.

Dry the finish with a soft, clean chamois or an all-cotton towel to avoid surface scratches and water spotting.

Finish Care

Application of aftermarket clearcoat sealant/wax materials is not recommended. If painted surfaces are damaged, see your dealer to have the damage assessed and repaired. Foreign materials such as calcium chloride and other salts, ice melting agents, road oil and tar, tree sap, bird droppings, chemicals from industrial chimneys, etc., can damage the vehicle's finish if they remain on painted surfaces. Wash the vehicle as soon as possible. If necessary, use non-abrasive cleaners that are marked safe for painted surfaces to remove foreign matter.

Occasional hand waxing or mild polishing should be done to remove residue from the paint finish. See your dealer for approved cleaning products.

Do not apply waxes or polishes to uncoated plastic, vinyl, rubber, decals, simulated wood, or flat paint as damage can occur.

⚠ Caution

Machine compounding or aggressive polishing on a basecoat/clearcoat paint finish

(Continued)

Caution (Continued)

may damage it. Use only non-abrasive waxes and polishes that are made for a basecoat/clearcoat paint finish on the vehicle.

To keep the paint finish looking new, keep the vehicle garaged or covered whenever possible.

Protecting Exterior Bright Metal Moldings

⚠ Caution

Failure to clean and protect the bright metal moldings can result in a hazy white finish or pitting. This damage would not be covered by the vehicle warranty.

The bright metal moldings on the vehicle are aluminum. To prevent damage always follow these cleaning instructions:

- Be sure the molding is cool to the touch before applying any cleaning solution.
- Use a cleaning solution approved for aluminum. Some cleaners are highly acidic or contain alkaline substances and can damage the moldings.
- Always dilute a concentrated cleaner according to the manufacturer’s instructions.
- Do not use chrome cleaners.
- Do not use cleaners that are not intended for automotive use.
- Use a nonabrasive wax on the vehicle after washing to protect and extend the molding finish.

Cleaning Exterior Lamps/Lenses, Emblems, Decals and Stripes

Use only lukewarm or cold water, a soft cloth, and a car washing soap to clean exterior lamps, lenses, emblems, decals and stripes. Follow instructions under "Washing the Vehicle" previously in this section.

Lamp covers are made of plastic, and some have a UV protective coating.

Use only lukewarm water, a soft cloth, and mild car washing soap to clean exterior lamps and lenses. Do not clean or wipe them while they are dry.

Do not use any of the following on lamp covers:

- Abrasive or caustic agents.
- Washer fluids and other cleaning agents in higher concentrations than suggested by the manufacturer.

- Solvents, alcohols, fuels, or other harsh cleaners.
- Ice scrapers or other hard items.
- Aftermarket appearance caps or covers while the lamps are illuminated, due to excessive heat generated.

⚠ Caution

Failure to clean lamps properly can cause damage to the lamp cover that would not be covered by the vehicle warranty.

⚠ Caution

Using wax on low gloss black finish stripes can increase the gloss level and create a non-uniform finish. Clean low gloss stripes with soap and water only.

Air Intakes

Clear debris from the air intakes, between the hood and windshield when washing the vehicle.

Windshield and Wiper Blades

Clean the outside of the windshield with glass cleaner.

Clean rubber blades using a lint-free cloth or paper towel soaked with windshield washer fluid or a mild detergent. Wash the windshield thoroughly when cleaning the blades. Bugs, road grime, sap, and a buildup of vehicle wash/wax treatments may cause wiper streaking.

Replace the wiper blades if they are worn or damaged. Damage can be caused by extreme dusty conditions, sand, salt, heat, sun, snow, and ice.

Weatherstrips

Apply Dielectric silicone grease on weatherstrips to make them last longer, seal better, and not stick or squeak. Lubricate weatherstrips at least once a year. Hot, dry climates may require more frequent application. Black marks from rubber material on painted surfaces can be removed by rubbing with a clean cloth. See *Recommended Fluids and Lubricants on page 11-13*.

Tires

Use a stiff brush with tire cleaner to clean the tires.

⚠ Caution

Using petroleum-based tire dressing products on the vehicle may damage the paint finish and/or tires. When applying a tire dressing, always wipe off any overspray from all painted surfaces on the vehicle.

Wheels and Trim — Aluminum or Chrome

Use a soft, clean cloth with mild soap and water to clean the wheels. After rinsing thoroughly with clean water, dry with a soft, clean towel. A wax may then be applied.

⚠ Caution

Chrome wheels and other chrome trim may be damaged if the vehicle is not washed after driving on roads that have been sprayed with magnesium, calcium, or sodium chloride. These chlorides are used on roads for conditions such as ice and dust. Always wash the chrome with soap and water after exposure.

⚠ Caution

To avoid surface damage, do not use strong soaps, chemicals, abrasive polishes, cleaners, brushes, or cleaners that contain acid on aluminum or chrome-plated wheels. Use only approved cleaners. Also, never drive a vehicle with aluminum or chrome-plated wheels through an automatic car wash that uses silicone carbide tire cleaning brushes. Damage could occur and the repairs would not be covered by the vehicle warranty.

Steering, Suspension, and Chassis Components

Visually inspect steering, suspension, and chassis components for damaged, loose, or missing parts or signs of wear at least once a year.

Inspect power steering for proper hook-up, binding, leaks, cracks, chafing, etc.

Visually check constant velocity joint boots and axle seals for leaks.

Body Component Lubrication

Lubricate all key lock cylinders, hood hinges, liftgate hinges, and the fuel door hinge unless the components are plastic. Applying silicone grease on weatherstrips with a clean cloth will make them last longer, seal better, and not stick or squeak.

Underbody Maintenance

At least twice a year, Spring and Fall, use plain water to flush dirt and debris from the vehicle's underbody. Your dealer or an underbody car washing system can do this. If not removed, rust and corrosion can develop.

Sheet Metal Damage

If the vehicle is damaged and requires sheet metal repair or replacement, make sure the body repair shop applies anti-corrosion material to parts repaired or replaced to restore corrosion protection.

Original manufacturer replacement parts will provide the corrosion protection while maintaining the vehicle warranty.

Finish Damage

Quickly repair minor chips and scratches with touch-up materials available from your dealer to avoid corrosion. Larger areas of finish damage can be corrected in your dealer's body and paint shop.

Chemical Paint Spotting

Airborne pollutants can fall upon and attack painted vehicle surfaces causing blotchy, ring-shaped discolorations, and small, irregular dark spots etched into the paint surface. See “Finish Care” previously in this section.

Interior Care

To prevent dirt particle abrasions, regularly clean the vehicle's interior. Immediately remove any soils. Note that newspapers or dark garments that can transfer color to home furnishings can also permanently transfer color to the vehicle's interior.

Use a soft bristle brush to remove dust from knobs and crevices on the instrument cluster. Using a mild soap solution, immediately remove hand lotions, sunscreen, and insect repellent from all interior surfaces or permanent damage may result.

Your dealer may have products for cleaning the interior. Use cleaners specifically designed for the surfaces being cleaned to prevent permanent damage. Apply all cleaners directly to the cleaning cloth. Do not spray cleaners directly on any switches or controls. Cleaners should be removed quickly. Never allow cleaners to remain on the surface being cleaned for extended periods of time.

Cleaners may contain solvents that can become concentrated in the interior. Before using cleaners, read and adhere to all safety instructions on the label. While cleaning the interior, maintain adequate ventilation by opening the doors and windows.

To prevent damage, do not clean the interior using the following cleaners or techniques:

- Never use a razor or any other sharp object to remove a soil from any interior surface.
- Never use a brush with stiff bristles.
- Never rub any surface aggressively or with excessive pressure.

- Do not use laundry detergents or dishwashing soaps with degreasers. For liquid cleaners, use approximately 20 drops per 3.8 L (1 gal) of water.
  A concentrated soap solution will leave a residue that creates streaks and attracts dirt. Do not use solutions that contain strong or caustic soap.
- Do not heavily saturate the upholstery when cleaning.
- Do not use solvents or cleaners containing solvents.

Interior Glass

To clean, use a terry cloth fabric dampened with water. Wipe droplets left behind with a clean dry cloth. Commercial glass cleaners may be used, if necessary, after cleaning the interior glass with plain water.

⚠ Caution

To prevent scratching, never use abrasive cleaners on automotive glass. Abrasive cleaners or aggressive cleaning may damage the rear window defogger.

Cleaning the windshield with water during the first three to six months of ownership will reduce tendency to fog.

Speaker Covers

Vacuum around a speaker cover gently, so that the speaker will not be damaged. Clean spots with just water and mild soap.

Coated Moldings

Coated moldings should be cleaned.

- When lightly soiled, wipe with a sponge or soft lint-free cloth dampened with water.
- When heavily soiled, use warm soapy water.

Fabric/Carpet/Suede

Start by vacuuming the surface using a soft brush attachment. If a rotating brush attachment is being used during vacuuming, only use it on the floor carpet. Before cleaning, gently remove as much of the soil as possible using one of the following techniques:

- Gently blot liquids with a paper towel. Continue blotting until no more soil can be removed.
- For solid soils, remove as much as possible prior to vacuuming.

To clean:

1. Saturate a clean lint-free colorfast cloth with water. Microfiber cloth is recommended to prevent lint transfer to the fabric or carpet.
2. Remove excess moisture by gently wringing until water does not drip from the cleaning cloth.

3. Start on the outside edge of the soil and gently rub toward the center. Fold the cleaning cloth to a clean area frequently to prevent forcing the soil in to the fabric.
4. Continue gently rubbing the soiled area until there is no longer any color transfer from the soil to the cleaning cloth.
5. If the soil is not completely removed, use a mild soap solution followed only by plain water.

If the soil is not completely removed, it may be necessary to use a commercial upholstery cleaner or spot lifter. Test a small hidden area for colorfastness before using a commercial upholstery cleaner or spot lifter. If ring formation occurs, clean the entire fabric or carpet.

Following the cleaning process, a paper towel can be used to blot excess moisture.

Cleaning High Gloss Surfaces and Vehicle Information and Radio Displays

For vehicles with high gloss surfaces or vehicle displays, use a microfiber cloth to wipe surfaces. Before wiping the surface with the microfiber cloth, use a soft bristle brush to remove dirt that could scratch the surface. Then use the microfiber cloth by gently rubbing to clean. Never use window cleaners or solvents. Periodically hand wash the microfiber cloth separately, using mild soap. Do not use bleach or fabric softener. Rinse thoroughly and air dry before next use.

⚠ Caution

Do not attach a device with a suction cup to the display. This may cause damage and would not be covered by the warranty.

Instrument Panel, Leather, Vinyl, Other Plastic Surfaces, Low Gloss Paint Surfaces and Natural Open Pore Wood Surfaces

Use a soft microfiber cloth dampened with water to remove dust and loose dirt. For a more thorough cleaning, use a soft microfiber cloth dampened with a mild soap solution.

⚠ Caution

Soaking or saturating leather, especially perforated leather, as well as other interior surfaces, may cause permanent damage. Wipe excess moisture from these surfaces after cleaning and allow them to dry naturally. Never use heat, steam, spot lifters, or spot removers. Do not use cleaners that contain silicone or wax-based products. Cleaners containing

(Continued)

Caution (Continued)

these solvents can permanently change the appearance and feel of leather or soft trim and are not recommended.

Do not use cleaners that increase gloss, especially on the instrument panel. Reflected glare can decrease visibility through the windshield under certain conditions.

⚠ Caution

Use of air fresheners may cause permanent damage to plastics and painted surfaces. If an air freshener comes in contact with any plastic or painted surface in the vehicle, blot immediately and clean with a soft cloth dampened with a mild soap solution. Damage caused by air fresheners would not be covered by the vehicle warranty.

Cargo Cover and Convenience Net

Wash with warm water and mild detergent. Do not use chlorine bleach. Rinse with cold water, and then dry completely.

Care of Safety Belts

Keep belts clean and dry.

⚠ Warning

Do not bleach or dye safety belts. It may severely weaken them. In a crash, they might not be able to provide adequate protection. Clean safety belts only with mild soap and lukewarm water.

Floor Mats

⚠ Warning

If a floor mat is the wrong size or is not properly installed, it can interfere with the pedals. Interference with the pedals can cause unintended acceleration and/or increased stopping distance which can cause a crash and injury. Make sure the floor mat does not interfere with the pedals.

Use the following guidelines for proper floor mat usage.

- The original equipment floor mats were designed for your vehicle. If the floor mats need replacing, it is recommended that GM certified floor mats be purchased. Non-GM floor mats may not fit properly and may interfere with the pedals. Always check that the floor mats do not interfere with the pedals.

- Use the floor mat with the correct side up. Do not turn it over.
- Do not place anything on top of the driver side floor mat.
- Use only a single floor mat on the driver side.
- Do not place one floor mat on top of another.

The driver side floor mat is held in place by two button-type retainers.

Removing and Replacing the Floor Mats

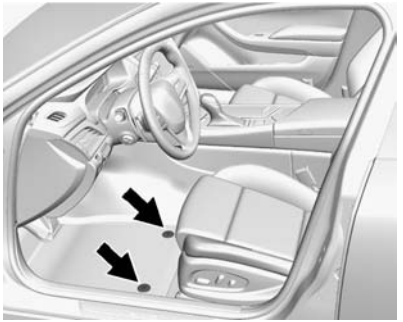

1. Pull up on the rear of the floor mat to unlock the retainers and remove.
2. Reinstall by lining up the floor mat retainer openings over the carpet retainers and snap into position.
3. Make sure the floor mat is properly secured in place.

Service and Maintenance

General Information
General Information 11-1

Cadillac Premium Care Maintenance
Cadillac Premium Care Maintenance 11-3

Maintenance Schedule
Maintenance Schedule 11-3

Special Application Services
Special Application Services 11-9

Additional Maintenance and Care
Additional Maintenance and Care 11-10

Recommended Fluids, Lubricants, and Parts
Recommended Fluids and Lubricants 11-13
Maintenance Replacement Parts 11-14

Maintenance Records
Maintenance Records 11-16

General Information

Your vehicle is an important investment. This section describes the required maintenance for the vehicle. Follow this schedule to help protect against major repair expenses resulting from neglect or inadequate maintenance. It may also help to maintain the value of the vehicle if it is sold. It is the responsibility of the owner to have all required maintenance performed.

Your dealer has trained technicians who can perform required maintenance using genuine replacement parts. They have up-to-date tools and equipment for fast and accurate diagnostics. Many dealers have extended evening and Saturday hours, courtesy transportation, and online scheduling to assist with service needs.

Your dealer recognizes the importance of providing competitively priced maintenance and repair services. With trained

technicians, the dealer is the place for routine maintenance such as oil changes and tire rotations and additional maintenance items like tires, brakes, batteries, and wiper blades.

⚠ Caution

Damage caused by improper maintenance can lead to costly repairs and may not be covered by the vehicle warranty. Maintenance intervals, checks, inspections, recommended fluids, and lubricants are important to keep the vehicle in good working condition.

The Tire Rotation and Required Services are the responsibility of the vehicle owner. It is recommended to have your dealer perform these services every 12 000 km/7,500 mi. Proper vehicle maintenance helps to keep the vehicle in good working condition, improves fuel economy, and reduces vehicle emissions.

Because of the way people use vehicles, maintenance needs vary. There may need to be more frequent checks and services. The Additional Required Services - Normal are for vehicles that:

- Carry passengers and cargo within recommended limits on the Tire and Loading Information label. See *Vehicle Load Limits on page 9-11*.
- Are driven on reasonable road surfaces within legal driving limits.
- Use the recommended fuel. See *Fuel on page 9-60*.

Refer to the information in the Maintenance Schedule Additional Required Services - Normal chart.

The Additional Required Services - Severe are for vehicles that are:

- Mainly driven in heavy city traffic in hot weather.
- Mainly driven in hilly or mountainous terrain.
- Frequently towing a trailer.
- Used for high speed or competitive driving.
- Used for taxi, police, or delivery service.

Refer to the information in the Maintenance Schedule Additional Required Services - Severe chart.

⚠ Warning

Performing maintenance work can be dangerous and can cause serious injury. Perform maintenance work only if the required information, proper tools, and equipment are available.
If they are not, see your dealer to have a trained technician do the work. See *Doing Your Own Service Work on page 10-3*.

Cadillac Premium Care Maintenance

Your vehicle comes with the Cadillac Premium Care Maintenance. It is a maintenance program that covers select maintenance services during the first 4 years or 80 000 km (50,000 mi), whichever comes first.

Cadillac Premium Care Maintenance covers routine maintenance services, when scheduled in accordance with the owner manual, including:

- Oil changes based on the vehicle's oil life monitor system.
- Tire rotation every 12 000 km (7,500 mi).
- Engine air cleaner filter replacement.
- Passenger compartment air filter replacement.
- Multi-point vehicle inspection (MPVI) performed by a qualified technician.

Cadillac requires that all Cadillac Premium Care Maintenance services be performed by a Cadillac authorized service dealer.

Maintenance Schedule

Owner Checks and Services

At Each Fuel Stop

- Check the engine oil level. See *Engine Oil on page 10-10*.

Once a Month

- Check the tire inflation pressures. See *Tire Pressure on page 10-48*.
- Inspect the tires for wear. See *Tire Inspection on page 10-55*.
- Check the windshield washer fluid level. See *Washer Fluid on page 10-22*.

Engine Oil Change

When the CHANGE ENGINE OIL SOON message displays, have the engine oil and filter changed within the next 1 000 km/600 mi. If driven under the best conditions, the engine oil life system might not indicate the need for vehicle service

for more than a year. The engine oil and filter must be changed at least once a year and the oil life system must be reset. Your trained dealer technician can perform this work. If the engine oil life system is reset accidentally, service the vehicle within 5 000 km/3,000 mi since the last service. Reset the oil life system when the oil is changed. See *Engine Oil Life System on page 10-12*.

Tire Rotation and Required Services Every 12 000 km/ 7,500 mi

Rotate the tires, if recommended for the vehicle, and perform the following services. See *Tire Rotation on page 10-55*.

- Check engine oil level and oil life percentage. If needed, change engine oil and filter, and reset oil life system. See *Engine Oil on page 10-10* and *Engine Oil Life System on page 10-12*.
- Check engine coolant level. See *Engine Coolant on page 10-18*.
- Check windshield washer fluid level. See *Washer Fluid on page 10-22*.
- Visually inspect windshield wiper blades for wear, cracking, or contamination. See *Exterior Care on page 10-69*. Replace worn or damaged wiper blades. See *Wiper Blade Replacement on page 10-28*.
- Check tire inflation pressures. See *Tire Pressure on page 10-48*.
- Inspect tire wear. See *Tire Inspection on page 10-55*.
- Visually check for fluid leaks.
- Inspect engine air cleaner filter. See *Engine Air Cleaner/Filter on page 10-14*.
- Inspect brake system.

- Visually inspect steering, suspension, and chassis components for damaged, loose, or missing parts or signs of wear. See *Exterior Care on page 10-69*.
- Check restraint system components. See *Safety System Check on page 3-20*.
- Visually inspect fuel system for damage or leaks.
- Visually inspect exhaust system and nearby heat shields for loose or damaged parts.
- Lubricate body components. See *Exterior Care on page 10-69*.
- Check starter switch. See *Starter Switch Check on page 10-27*.
- Check automatic transmission shift lock control function. See *Automatic Transmission Shift Lock Control Function Check on page 10-27*.
- Check parking brake and automatic transmission park mechanism. See *Park Brake and P (Park) Mechanism Check on page 10-28*.
- Check accelerator pedal for damage, high effort, or binding. Replace if needed.
- Visually inspect gas strut for signs of wear, cracks, or other damage. Check the hold open ability of the strut. See your dealer if service is required.
- Inspect sunroof track and seal, if equipped. See *Sunroof on page 2-25*.

Maintenance Schedule Additional Required Services - Normal	12 000 km/7,500 mi	24 000 km/15,000 mi	36 000 km/22,500 mi	48 000 km/30,000 mi	60 000 km/37,500 mi	72 000 km/45,000 mi	84 000 km/52,500 mi	96 000 km/60,000 mi	108 000 km/67,500 mi	120 000 km/75,000 mi	132 000 km/82,500 mi	144 000 km/90,000 mi	156 000 km/97,500 mi	168 000 km/105,000 mi	180 000 km/112,500 mi	192 000 km/120,000 mi	204 000 km/127,500 mi	216 000 km/135,000 mi	228 000 km/142,500 mi	240 000 km/150,000 mi
Rotate tires, if recommended for the vehicle, and perform Required Services. Check engine oil level and oil life percentage. Change engine oil and filter, if needed. (1)	✓	✓	✓	✓	✓	✓	✓	✓	✓	✓	✓	✓	✓	✓	✓	✓	✓	✓	✓	✓
Replace passenger compartment air filter. (2)			✓			✓			✓			✓			✓			✓		
Inspect evaporative control system. (3)						✓						✓						✓		
Replace engine air cleaner filter. (4)						✓						✓						✓		
Replace spark plugs. Inspect spark plug wires. (2.0L LTG and 3.6L LF3 Turbo Engines)								✓								✓				
Replace spark plugs. Inspect spark plug wires. (3.6L LFX Engine Only)													✓							
Change automatic transmission fluid. Change filter if serviceable.													✓							
Change transfer case fluid, if equipped with AWD. (5)													✓							
Change rear axle fluid, if equipped with electronic limited slip differential. (3.6L V6 Turbo LF3 Engine only)													✓							
Drain and fill engine cooling system. (6)																				✓
Visually inspect accessory drive belts. (7)																				✓
Replace brake fluid. (8)																				✓

Footnotes — Maintenance Schedule Additional Required Services - Normal

(1) Vehicles with different size front and rear tires do not have tire rotation. See *Tire Rotation on page 10-55*.

(2) Or every two years, whichever comes first. More frequent replacement may be needed if the vehicle is driven in areas with heavy traffic, areas with poor air quality, or areas with high dust levels. Replacement may also be needed if there is a reduction in air flow, excessive window fogging, or odors.

(3) Check all fuel and vapor lines and hoses for proper hook-up, routing, and condition.

(4) Or every four years, whichever comes first.

(5) Do not directly power wash the transfer case output seals. High pressure water can overcome the seals and contaminate the transfer case fluid. Contaminated fluid will decrease the life of the transfer case and should be replaced.

(6) Or every five years, whichever comes first. See *Cooling System on page 10-16*.

(7) Or every 10 years, whichever comes first. Inspect for fraying, excessive cracking, or damage; replace, if needed.

(8) Or every 10 years, whichever comes first.

Maintenance Schedule Additional Required Services - Severe	12 000 km/7,500 mi	24 000 km/15,000 mi	36 000 km/22,500 mi	48 000 km/30,000 mi	60 000 km/37,500 mi	72 000 km/45,000 mi	84 000 km/52,500 mi	96 000 km/60,000 mi	108 000 km/67,500 mi	120 000 km/75,000 mi	132 000 km/82,500 mi	144 000 km/90,000 mi	156 000 km/97,500 mi	168 000 km/105,000 mi	180 000 km/112,500 mi	192 000 km/120,000 mi	204 000 km/127,500 mi	216 000 km/135,000 mi	228 000 km/142,500 mi	240 000 km/150,000 mi
Rotate tires, if recommended for the vehicle, and perform Required Services. Check engine oil level and oil life percentage. Change engine oil and filter, if needed. (1)	✓	✓	✓	✓	✓	✓	✓	✓	✓	✓	✓	✓	✓	✓	✓	✓	✓	✓	✓	✓
Replace passenger compartment air filter. (2)			✓			✓			✓			✓			✓			✓		
Inspect evaporative control system. (3)						✓						✓						✓		
Replace engine air cleaner filter. (4)						✓						✓						✓		
2.0L LTG and 3.6L LF3 Engines: Replace spark plugs. Inspect spark plug wires.								✓								✓				
3.6L LFX Engine Only: Replace spark plugs. Inspect spark plug wires.													✓							
Change automatic transmission fluid. Change filter if serviceable.						✓						✓						✓		
Change transfer case fluid, if equipped with AWD. (5)						✓						✓						✓		
Change rear axle fluid, if equipped with electronic limited slip differential. (3.6L V6 Turbo LF3 Engine only)							✓							✓						
Drain and fill engine cooling system. (6)																				✓
Visually inspect accessory drive belts. (7)																				✓
Replace brake fluid. (8)																				✓

Footnotes — Maintenance Schedule Additional Required Services - Severe

(1) Vehicles with different size front and rear tires do not have tire rotation. See *Tire Rotation on page 10-55*.

(2) Or every two years, whichever comes first. More frequent replacement may be needed if the vehicle is driven in areas with heavy traffic, areas with poor air quality, or areas with high dust levels. Replacement may also be needed if there is a reduction in air flow, excessive window fogging, or odors.

(3) Check all fuel and vapor lines and hoses for proper hook-up, routing, and condition.

(4) Or every four years, whichever comes first.

(5) Do not directly power wash the transfer case output seals. High pressure water can overcome the seals and contaminate the transfer case fluid. Contaminated fluid will decrease the life of the transfer case and should be replaced.

(6) Or every five years, whichever comes first. See *Cooling System on page 10-16*.

(7) Or every 10 years, whichever comes first. Inspect for fraying, excessive cracking, or damage; replace, if needed.

(8) Or every 10 years, whichever comes first.

Special Application Services

- Severe Commercial Use Vehicles Only: Lubricate chassis components every 5 000 km/ 3,000 mi.
- Have underbody flushing service performed. See "Underbody Maintenance" in *Exterior Care on page 10-69*.

Additional Maintenance and Care

Your vehicle is an important investment and caring for it properly may help to avoid future costly repairs. To maintain vehicle performance, additional maintenance services may be required.

It is recommended that your dealer perform these services — their trained dealer technicians know your vehicle best. Your dealer can also perform a thorough assessment with a multi-point inspection to recommend when your vehicle may need attention.

The following list is intended to explain the services and conditions to look for that may indicate services are required.

Battery

The battery supplies power to start the engine and operate any additional electrical accessories.

- To avoid break-down or failure to start the vehicle, maintain a battery with full cranking power.
- Trained dealer technicians have the diagnostic equipment to test the battery and ensure that the connections and cables are corrosion-free.

Belts

- Belts may need replacing if they squeak or show signs of cracking or splitting.
- Trained dealer technicians have access to tools and equipment to inspect the belts and recommend adjustment or replacement when necessary.

Brakes

Brakes stop the vehicle and are crucial to safe driving.

- Signs of brake wear may include chirping, grinding, or squealing noises, or difficulty stopping.
- Trained dealer technicians have access to tools and equipment to inspect the brakes and recommend quality parts engineered for the vehicle.

Fluids

Proper fluid levels and approved fluids protect the vehicle's systems and components. See *Recommended Fluids and Lubricants on page 11-13* for GM approved fluids.

- Engine oil and windshield washer fluid levels should be checked at every fuel fill.
- Instrument cluster lights may come on to indicate that fluids may be low and need to be filled.

Hoses

Hoses transport fluids and should be regularly inspected to ensure that there are no cracks or leaks. With a multi-point inspection, your dealer can inspect the hoses and advise if replacement is needed.

Lamps

Properly working headlamps, taillamps, and brake lamps are important to see and be seen on the road.

- Signs that the headlamps need attention include dimming, failure to light, cracking, or damage. The brake lamps need to be checked periodically to ensure that they light when braking.
- With a multi-point inspection, your dealer can check the lamps and note any concerns.

Shocks and Struts

Shocks and struts help aid in control for a smoother ride.

- Signs of wear may include steering wheel vibration, bounce/sway while braking, longer stopping distance, or uneven tire wear.
- As part of the multi-point inspection, trained dealer technicians can visually inspect the shocks and struts for signs of leaking, blown seals, or damage, and can advise when service is needed.

Tires

Tires need to be properly inflated, rotated, and balanced. Maintaining the tires can save money and fuel, and can reduce the risk of tire failure.

- Signs that the tires need to be replaced include three or more visible treadwear indicators; cord or fabric showing through the rubber; cracks or cuts in the tread or sidewall; or a bulge or split in the tire.
- Trained dealer technicians can inspect and recommend the right tires. Your dealer can also provide tire/wheel balancing services to ensure smooth vehicle operation at all speeds. Your dealer sells and services name brand tires.

Vehicle Care

To help keep the vehicle looking like new, vehicle care products are available from your dealer. For information on how to clean and protect the vehicle's interior and exterior, see *Interior Care on page 10-74* and *Exterior Care on page 10-69*.

Wheel Alignment

Wheel alignment is critical for ensuring that the tires deliver optimal wear and performance.

- Signs that the alignment may need to be adjusted include pulling, improper vehicle handling, or unusual tire wear.
- Your dealer has the required equipment to ensure proper wheel alignment.

Windshield

For safety, appearance, and the best viewing, keep the windshield clean and clear.

- Signs of damage include scratches, cracks, and chips.
- Trained dealer technicians can inspect the windshield and recommend proper replacement if needed.

Wiper Blades

Wiper blades need to be cleaned and kept in good condition to provide a clear view.

- Signs of wear include streaking, skipping across the windshield, and worn or split rubber.
- Trained dealer technicians can check the wiper blades and replace them when needed.

Recommended Fluids, Lubricants, and Parts

Recommended Fluids and Lubricants

Usage	Fluid/Lubricant
Engine Oil	Use only engine oil licensed to the dexos1® specification, of the proper SAE viscosity grade. ACDelco dexos1 Synthetic Blend is recommended. See *Engine Oil on page 10-10*.
Engine Coolant	50/50 mixture of clean, drinkable water and use only DEX-COOL® Coolant. See *Engine Coolant on page 10-18*.
Hydraulic Brake System	DOT 3 Hydraulic Brake Fluid (GM Part No. 19299818, in Canada 19299819).
Windshield Washer	Automotive windshield washer fluid that meets regional freeze protection requirements.
6-Speed Automatic Transmission (w/ 2.0L L4 and 3.6L LFX AWD Engines)	DEXRON®-VI Automatic Transmission Fluid.
8-Speed Automatic Transmission (w/ 3.6L LFX RWD and 3.6L LF3 Engines)	ATF-WS Automatic Transmission Fluid (GM Part No. 88863400, in Canada 88863401).
Transfer Case (All-Wheel Drive)	Transfer Case Fluid (GM Part No. 88861950, in Canada 88861951).
Rear Axle	SAE 75W-90 Synthetic Axle Lubricant (GM Part No. 88863089, in Canada 88863090) meeting GM Specification 9986285.

Usage	Fluid/Lubricant
Rear Axle (Limited-Slip Differential)	SAE 75W-90 Synthetic Axle Lubricant (GM Part No. 88862624, in Canada 88862625) meeting GM Specification 9986290.
Key Lock Cylinders	Multi-Purpose Lubricant, Superlube (GM Part No. 12346241, in Canada 10953474).
Hood Latch Assembly, Secondary Latch, Pivots, Spring Anchor, and Release Pawl	Lubriplate Lubricant Aerosol (GM Part No. 89021668, in Canada 89021674) or lubricant meeting requirements of NLGI #2, Category LB or GC-LB.
Hood and Door Hinges	Multi-Purpose Lubricant, Superlube (GM Part No. 12346241, in Canada 10953474).
Weatherstrip Conditioning	Weatherstrip Lubricant (GM Part No. 3634770, in Canada 10953518) or Dielectric Silicone Grease (GM Part No. 12345579, in Canada 10953481).

Maintenance Replacement Parts

Replacement parts identified below by name, part number, or specification can be obtained from your dealer.

Part	GM Part Number	ACDelco Part Number
Engine Air Cleaner/Filter		
2.0L L4 Engine	20857930	A3178C
3.6L V6 Engine (LFX)	20857930	A3178C

Part	GM Part Number	ACDelco Part Number
3.6L V6 Engine (LF3)	22844634	A3185C
Engine Oil Filter		
2.0L L4 Engine	12640445	PF64
3.6L V6 Engine (LFX)	25177917	PF2129
3.6L V6 Engine (LF3)	89017525	PF63
Passenger Compartment Air Filter	13356916	CF185
Spark Plugs		
2.0L L4 Engine	12647827	41-125
3.6L V6 Engine (LFX)	12622561	41-109
3.6L V6 Engine (LF3)	12642791	41-118
Wiper Blades		
Driver Side – 60 cm (23.6 in)	23144358	—
Passenger Side – 45 cm (17.7 in)	23144359	—

Maintenance Records

After the scheduled services are performed, record the date, odometer reading, who performed the service, and the type of services performed in the boxes provided. Retain all maintenance receipts.

Date	Odometer Reading	Serviced By	Maintenance Stamp	Services Performed

Date	Odometer Reading	Serviced By	Maintenance Stamp	Services Performed

✍ NOTES

Technical Data

Vehicle Identification
Vehicle Identification Number (VIN) 12-1
Service Parts Identification Label 12-1

Vehicle Data
Capacities and Specifications 12-2
Engine Drive Belt Routing . . . 12-4

Vehicle Identification

Vehicle Identification Number (VIN)

This legal identifier is in the front corner of the instrument panel, on the left side of the vehicle. It can be seen through the windshield from outside. The VIN also appears on the Vehicle Certification and Service Parts labels and certificates of title and registration.

Engine Identification

The eighth character in the VIN is the engine code. This code identifies the vehicle's engine, specifications, and replacement parts. See “Engine Specifications” under *Capacities and Specifications on page 12-2* for the vehicle's engine code.

Service Parts Identification Label

This label, on the spare tire cover, has the following information:

- Vehicle Identification Number (VIN).
- Model designation.
- Paint information.
- Production options and special equipment.

Do not remove this label from the vehicle.

Vehicle Data

Capacities and Specifications

The following approximate capacities are given in metric and English conversions. See *Recommended Fluids and Lubricants on page 11-13* for more information.

Application	Capacities	
	Metric	English
Air Conditioning Refrigerant	For the air conditioning system refrigerant type and charge amount, see the refrigerant label under the hood. See your dealer for more information.	
Cooling System– Engine		
2.0L L4 Engine	8.5 L	9.0 qt
3.6L V6 Engine (LFX)	11.3 L	11.9 qt
3.6L V6 Engine (LF3)	12.8 L	13.5 qt
Engine Oil with Filter		
2.0L L4 Engine RWD	4.7 L	5.0 qt
2.0L L4 Engine AWD	5.7 L	6.0 qt
3.6L V6 Engine (LFX)	5.7 L	6.0 qt
3.6L V6 Engine (LF3)	6.6 L	7.0 qt
Fuel Tank	72 L	19 gal

Application	Capacities	
	Metric	English
Transfer Case – AWD	0.8 L	0.8 qt
Rear Axle (with limited slip)	1.2 L	1.3 qt
Wheel Nut Torque	150 N•m	110 lb ft
All capacities are approximate. When adding, be sure to fill to the approximate level, as recommended in this manual. Recheck fluid level after filling.		

Engine Specifications

Engine	VIN Code	Transmission	Spark Plug Gap
2.0L L4 Engine (LTG)	X	Automatic	0.75–0.90 mm (0.030–0.035 in)
3.6L V6 Engine (LFX)	3	Automatic	0.95–1.10 mm (0.037–0.043 in)
3.6L V6 Engine (LF3)	8	Automatic	0.75–0.90 mm (0.030–0.035 in)

Engine Drive Belt Routing

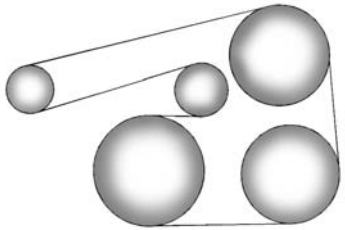

2.0L L4 Engine

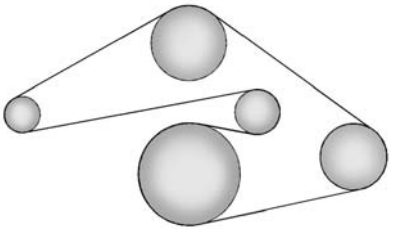

3.6L V6 Engine

Customer Information

Customer Information
Customer Satisfaction Procedure 13-1
Customer Assistance Offices 13-3
Customer Assistance for Text Telephone (TTY) Users 13-4
Online Owner Center 13-4
Roadside Service 13-5
Scheduling Service Appointments 13-7
Courtesy Transportation Program 13-7
Collision Damage Repair 13-9
Service Publications Ordering Information 13-11

Reporting Safety Defects
Reporting Safety Defects to the United States Government 13-12
Reporting Safety Defects to the Canadian Government 13-12
Reporting Safety Defects to General Motors 13-12

Vehicle Data Recording and Privacy
Vehicle Data Recording and Privacy 13-13
Event Data Recorders 13-13
OnStar® 13-14
Infotainment System 13-15
Radio Frequency Identification (RFID) 13-15
Radio Frequency Statement 13-15

Customer Information

Customer Satisfaction Procedure

Your satisfaction and goodwill are important to your dealer and to Cadillac. Normally, any concerns with the sales transaction or the operation of the vehicle will be resolved by your dealer's sales or service departments. Sometimes, however, despite the best intentions of all concerned, misunderstandings can occur. If your concern has not been resolved to your satisfaction, the following steps should be taken:

STEP ONE: Discuss your concern with a member of dealership management. Normally, concerns can be quickly resolved at that level. If the matter has already been reviewed with the sales, service or parts manager, contact the owner of your dealership or the general manager.

STEP TWO: If after contacting a member of dealership management, it appears your concern cannot be resolved by your dealership without further help, in the U.S., call the Cadillac Customer Assistance Center at 1-800–458–8006. In Canada, call the Canadian Cadillac Customer Care Centre at 1-888-446-2000.

We encourage you to call the toll-free number in order to give your inquiry prompt attention. Have the following information available to give the Customer Assistance representative:

- Vehicle Identification Number (VIN). This is available from the vehicle registration or title, or the plate at the top left of the instrument panel and visible through the windshield.
- Dealership name and location.
- Vehicle delivery date and present mileage.

When contacting Cadillac, remember that your concern will likely be resolved at a dealer's facility. That is why we suggest following Step One first.

STEP THREE — U.S. Owners: Both General Motors and your dealer are committed to making sure you are completely satisfied with the new vehicle. However, if you continue to remain unsatisfied after following the procedure outlined in Steps One and Two, you can file with the Better Business Bureau (BBB) Auto Line® Program to enforce your rights.

The BBB Auto Line Program is an out-of-court program administered by the Council of Better Business Bureaus to settle automotive disputes regarding vehicle repairs or the interpretation of the New Vehicle Limited Warranty. Although you may be required to resort to this informal dispute resolution program prior to filing a court action, use of the program is free of charge and your case will generally be heard within 40 days. If you do not agree with the decision given in your case, you may reject it and proceed with any other venue for relief available to you.

You may contact the BBB Auto Line Program using the toll-free telephone number or write them at the following address:

BBB Auto Line Program
Council of Better Business Bureaus, Inc.
4200 Wilson Boulevard
Suite 800
Arlington, VA 22203-1838

Telephone: 1-800-955-5100
www.dr.bbb.org/goauto

This program is available in all 50 states and the District of Columbia. Eligibility is limited by vehicle age, mileage, and other factors. General Motors reserves the right to change eligibility limitations and/or discontinue its participation in this program.

STEP THREE — Canadian Owners: In the event that you do not feel your concerns have been addressed after following the procedure outlined in Steps One and Two, General Motors of Canada Limited wants you to be aware of its participation in a no-charge mediation/arbitration program. General Motors of Canada Limited has committed to binding arbitration of owner disputes involving factory-related vehicle service claims. The program provides for the review of the facts involved by an impartial third party arbiter, and may include an informal hearing before the arbiter. The program is designed so that the entire dispute settlement process, from the time you file your complaint to the final decision, should be completed in approximately 70 days. We believe our impartial program offers advantages over courts in most jurisdictions because it is informal, quick, and free of charge.

For further information concerning eligibility in the Canadian Motor Vehicle Arbitration Plan (CAMVAP), call toll-free 1-800-207-0685, or call the General Motors Customer Care Centre, 1-888-446-2000 (English), 1-800-263-7854 (French), or write to:

Mediation/Arbitration Program
c/o Customer Care Centre
General Motors of Canada Limited
Mail Code: CA1-163-005
1908 Colonel Sam Drive
Oshawa, Ontario L1H 8P7

The inquiry should be accompanied by the Vehicle Identification Number (VIN).

Customer Assistance Offices

Cadillac encourages customers to call the toll-free number for assistance. However, if a customer wishes to write or e-mail Cadillac, the letter should be addressed to:

United States and Puerto Rico

Cadillac Customer Assistance Center
Cadillac Motor Car Division
P.O. Box 33169
Detroit, MI 48232-5169
www.Cadillac.com

1-800-458-8006
1-800-833-2622 (For Text Telephone devices (TTYs))
Roadside Service: 1-800-224-1400

From U.S. Virgin Islands:

1-800-496-9994

Canada

General Motors of Canada Limited
Canadian Cadillac Customer Care Centre, Mail Code: CA1-163-005
1908 Colonel Sam Drive
Oshawa, Ontario L1H 8P7
www.gm.ca

1-888-446-2000 (English)
1-800-263-7854 (French)
Roadside Service: 1-800-882-1112

Overseas

Contact the local General Motors Business Unit.

Customer Assistance for Text Telephone (TTY) Users

To assist customers who are deaf, hard of hearing, or speech-impaired and who use Text Telephones (TTYs), Cadillac has TTY equipment available at its Customer Assistance Center. Any TTY user can communicate with Cadillac by dialing: 1-800-833-2622. TTY users in Canada can dial 1-800-263-3830.

Online Owner Center

Online Owner Experience (U.S.) my.cadillac.com

The Cadillac online owner experience is a one-stop resource that allows interaction with Cadillac and keeps important vehicle-specific information in one place.

Membership Benefits

(Vehicle Information): Download owner manuals and view vehicle-specific how-to videos.

(Maintenance Information): View maintenance schedules, required alerts, OnStar onboard vehicle diagnostic information, and schedule service appointments.

(Service History): View printable dealer-recorded service records and self-recorded service records.

(Preferred Dealer Information): Select a preferred dealer and view dealer location, maps, phone numbers, and hours.

(Warranty Tracking Information): Track the vehicle's warranty information.

(Recall Information): View active recalls or search by Vehicle Identification Number (VIN). See *Vehicle Identification Number (VIN) on page 12-1*.

(Other Account Information): View GM Card, SiriusXM Satellite radio, and OnStar account information.

(Live Chat Support): Chat live with online help representatives.

Visit my.cadillac.com to register your vehicle.

Cadillac Owner Centre (Canada) cadillacowner.ca

Take a trip to the Cadillac Owner Centre:

- Chat live with online help representatives.
- Locate owner resources such as lease-end, financing, and warranty information.
- Retrieve favorite articles, quizzes, tips, and multimedia galleries organized into the Features and Auto Care Sections.
- Download owner manuals.
- Find Cadillac-recommended maintenance services.

Roadside Service

U.S.: 1-800-224-1400.

Canada: 1-800-882-1112.

Text Telephone (TTY) Users (U.S. Only): 1-888-889-2438.

Service is available 24 hours a day, 365 days a year.

Calling for Service

When calling Roadside Service, have the following information ready:

- Your name, home address, and home telephone number.
- Telephone number of your location.
- Location of the vehicle.
- Model, year, color, and license plate number of the vehicle.
- Odometer reading, Vehicle Identification Number (VIN), and delivery date of the vehicle.
- Description of the problem.

Coverage

Services are provided up to 6 years/ 110 000 km (70,000 mi), whichever comes first.

In the U.S., anyone driving the vehicle is covered. In Canada, a person driving the vehicle without permission from the owner is not covered.

Roadside Service is not a part of the New Vehicle Limited Warranty. General Motors North America and Cadillac reserve the right to make any changes or discontinue the Roadside Service program at any time without notification.

General Motors North America and Cadillac reserve the right to limit services or payment to an owner or driver if they decide the claims are made too often, or the same type of claim is made many times.

Cadillac Owner Privileges™

- **Emergency Fuel Delivery:** Delivery of enough fuel for the vehicle to get to the nearest service station.
- **Lock-Out Service:** Service to unlock the vehicle if you are locked out. A remote unlock may

be available if you have OnStar. For security reasons, the driver must present identification before this service is given.

- **Emergency Tow from a Public Road or Highway:** Tow to the nearest Cadillac dealer for warranty service, or if the vehicle was in a crash and cannot be driven. Assistance is also given when the vehicle is stuck in the sand, mud, or snow.
- **Flat Tire Change:** Service to change a flat tire with a spare tire. The spare tire, if equipped, must be in good condition and properly inflated. It is your responsibility for the repair or replacement of the tire if it is not covered by the warranty.
- **Battery Jump Start:** Service to jump start a dead battery.
- **Trip Interruption Benefits and Service:** If your trip is interrupted due to a warranty failure, incidental expenses may be reimbursed during the 6 years/110 000 km (70,000 mi) Powertrain warranty period. Items considered are hotel, meals, and rental car.

Cadillac Technician Roadside Service (U.S. Only)

Cadillac's exceptional Roadside Service is more than an auto club or towing service. It provides every Cadillac owner in the United States with the advantage of contacting a Cadillac advisor and, where available, a Cadillac trained dealer technician who can provide on-site service.

A dealer technician will travel to your location within a 30-mile radius of a participating Cadillac dealership. If beyond this radius, we will arrange to have your car towed to the nearest Cadillac dealership. Each technician travels with a specially equipped service vehicle complete with the necessary Cadillac parts and tools required to handle most roadside repairs.

Services Not Included in Roadside Service

- Impound towing caused by violation of any laws.
- Legal fines.
- Mounting, dismounting, or changing of snow tires, chains, or other traction devices.
- Towing or services for vehicles driven on a non-public road or highway.

Services Specific to Canadian-Purchased Vehicles

- **Fuel delivery:** Reimbursement is up to 7 liters. Diesel fuel delivery may be restricted. Propane and other fuels are not provided through this service.
- **Lock-Out Service:** Vehicle registration is required.
- **Trip Interruption Benefits and Service:** Pre-authorization, original detailed receipts, and a copy of the repair orders are required. Once authorization has

been received, the Roadside Service advisor will help you make arrangements and explain how to receive payment.

- **Alternative Service:** If assistance cannot be provided right away, the Roadside Service advisor may give you permission to get local emergency road service. You will receive payment, up to $100, after sending the original receipt to Roadside Service. Mechanical failures may be covered, however any cost for parts and labor for repairs not covered by the warranty are the owner responsibility.

Scheduling Service Appointments

When the vehicle requires warranty service, contact your dealer and request an appointment. By scheduling a service appointment and advising the service consultant of your transportation needs, your dealer can help minimize your inconvenience.

If the vehicle cannot be scheduled into the service department immediately, keep driving it until it can be scheduled for service, unless, of course, the problem is safety related. If it is, please call your dealership, let them know this, and ask for instructions.

If your dealer requests you to bring the vehicle for service, you are urged to do so as early in the work day as possible to allow for same-day repair.

Courtesy Transportation Program

To enhance your ownership experience, we and our participating dealers are proud to offer Courtesy Transportation, a customer support program for vehicles with the Bumper-to-Bumper (Base Warranty Coverage period in Canada), extended powertrain, and/or hybrid-specific warranties in both the U.S. and Canada.

Several Courtesy Transportation options are available to assist in reducing inconvenience when warranty repairs are required.

Courtesy Transportation is not a part of the New Vehicle Limited Warranty. A separate booklet entitled “Limited Warranty and Owner Assistance Information” furnished with each new vehicle provides detailed warranty coverage information.

Transportation Options

Warranty service can generally be completed while you wait. However, if you are unable to wait, GM helps to minimize inconvenience by providing several transportation options. Depending on the circumstances, your dealer can offer one of the following:

Shuttle Service

Shuttle service is the preferred means of offering Courtesy Transportation. Dealers may provide shuttle service to get you to your destination with minimal interruption of your daily schedule. This includes one-way or round-trip shuttle service within reasonable time and distance parameters of your dealer's area.

Public Transportation or Fuel Reimbursement

If the vehicle requires overnight warranty repairs, and public transportation is used instead of your dealer's shuttle service, the expense must be supported by original receipts and can only be up to the maximum amount allowed by GM for shuttle service. In addition, for U.S. customers, should you arrange transportation through a friend or relative, limited reimbursement for reasonable fuel expenses may be available. Claim amounts should reflect actual costs and be supported by original receipts. See your dealer for information regarding the allowance amounts for reimbursement of fuel or other transportation costs.

Courtesy Rental Vehicle

Your dealer may arrange to provide you with a courtesy rental vehicle or reimburse you for a rental vehicle that you obtain if the vehicle is kept for an overnight warranty repair. Rental reimbursement will be limited and must be supported by original receipts. This requires that you sign and complete a rental agreement and meet state/provincial, local, and rental vehicle provider requirements. Requirements vary and may include minimum age requirements, insurance coverage, credit card, etc. You are responsible for fuel usage charges and may also be responsible for taxes, levies, usage fees, excessive mileage, or rental usage beyond the completion of the repair.

It may not be possible to provide a like vehicle as a courtesy rental.

Additional Program Information

All program options, such as shuttle service, may not be available at every dealer. Please contact your dealer for specific information about availability. All Courtesy Transportation arrangements will be administered by appropriate dealer personnel.

General Motors reserves the right to unilaterally modify, change, or discontinue Courtesy Transportation at any time and to resolve all questions of claim eligibility pursuant to the terms and conditions described herein at its sole discretion.

Collision Damage Repair

If the vehicle is involved in a collision and it is damaged, have the damage repaired by a qualified technician using the proper equipment and quality replacement parts. Poorly performed collision repairs diminish the vehicle resale value, and safety performance can be compromised in subsequent collisions.

Collision Parts

Genuine GM Collision parts are new parts made with the same materials and construction methods as the parts with which the vehicle was originally built. Genuine GM Collision parts are the best choice to ensure that the vehicle's designed appearance, durability, and safety are preserved. The use of Genuine GM parts can help maintain the GM New Vehicle Limited Warranty.

Recycled original equipment parts may also be used for repair. These parts are typically removed from vehicles that were total losses in prior crashes. In most cases, the parts being recycled are from undamaged sections of the vehicle. A recycled original equipment GM part may be an acceptable choice to maintain the vehicle's originally designed appearance and safety performance; however, the history of these parts is not known. Such parts are not covered by the GM New Vehicle Limited Warranty, and any related failures are not covered by that warranty.

Aftermarket collision parts are also available. These are made by companies other than GM and may not have been tested for the vehicle. As a result, these parts may fit poorly, exhibit premature durability/corrosion problems, and may not perform properly in subsequent collisions. Aftermarket parts are not covered by the GM New Vehicle Limited Warranty, and any vehicle failure related to such parts is not covered by that warranty.

Repair Facility

GM also recommends that you choose a collision repair facility that meets your needs before you ever need collision repairs. Your dealer may have a collision repair center with GM-trained technicians and state-of-the-art equipment, or be able to recommend a collision repair center that has GM-trained technicians and comparable equipment.

Insuring the Vehicle

Protect your investment in the GM vehicle with comprehensive and collision insurance coverage. There are significant differences in the quality of coverage afforded by various insurance policy terms. Many insurance policies provide reduced protection to the GM vehicle by limiting compensation for damage repairs by using aftermarket collision parts. Some insurance companies will not specify aftermarket collision parts. When purchasing insurance, we

recommend that you ensure that the vehicle will be repaired with GM original equipment collision parts. If such insurance coverage is not available from your current insurance carrier, consider switching to another insurance carrier.

If the vehicle is leased, the leasing company may require you to have insurance that ensures repairs with Genuine GM Original Equipment Manufacturer (OEM) parts or Genuine Manufacturer replacement parts. Read the lease carefully, as you may be charged at the end of the lease for poor quality repairs.

If a Crash Occurs

If there has been an injury, call emergency services for help. Do not leave the scene of a crash until all matters have been taken care of. Move the vehicle only if its position puts you in danger, or you are instructed to move it by a police officer.

Give only the necessary information to police and other parties involved in the crash.

For emergency towing see *Roadside Service on page 13-5*.

Gather the following information:

- Driver name, address, and telephone number.
- Driver license number.
- Owner name, address, and telephone number.
- Vehicle license plate number.
- Vehicle make, model, and model year.
- Vehicle Identification Number (VIN).
- Insurance company and policy number.
- General description of the damage to the other vehicle.

Choose a reputable repair facility that uses quality replacement parts. See “Collision Parts” earlier in this section.

If the airbag has inflated, see *What Will You See after an Airbag Inflates? on page 3-27*.

Managing the Vehicle Damage Repair Process

In the event that the vehicle requires damage repairs, GM recommends that you take an active role in its repair. If you have a pre-determined repair facility of choice, take the vehicle there, or have it towed there. Specify to the facility that any required replacement collision parts be original equipment parts, either new Genuine GM parts or recycled original GM parts. Remember, recycled parts will not be covered by the GM vehicle warranty.

Insurance pays the bill for the repair, but you must live with the repair. Depending on your policy limits, your insurance company may initially value the repair using aftermarket parts. Discuss this with the repair professional, and insist on Genuine GM parts. Remember, if the vehicle is leased, you may be

obligated to have the vehicle repaired with Genuine GM parts, even if your insurance coverage does not pay the full cost.

If another party's insurance company is paying for the repairs, you are not obligated to accept a repair valuation based on that insurance company's collision policy repair limits, as you have no contractual limits with that company. In such cases, you can have control of the repair and parts choices as long as the cost stays within reasonable limits.

Service Publications Ordering Information

Service Manuals

Service Manuals have the diagnosis and repair information on the engines, transmission, axle, suspension, brakes, electrical, steering, body, etc.

Service Bulletins

Service Bulletins give additional technical service information needed to knowledgeably service General Motors cars and trucks. Each bulletin contains instructions to assist in the diagnosis and service of the vehicle.

Owner Information

Owner publications are written specifically for owners and intended to provide basic operational information about the vehicle. The Owner Manual includes the Maintenance Schedule for all models.

In-Portfolio: Includes a Portfolio, Owner Manual, and Warranty Manual.

RETAIL SELL PRICE:
$35.00 (U.S.) plus handling and shipping fees.

Without Portfolio: Owner Manual only.

RETAIL SELL PRICE:
$25.00 (U.S.) plus handling and shipping fees.

Current and Past Models

Technical Service Bulletins and Manuals are available for current and past model GM vehicles.

ORDER TOLL FREE:
1-800-551-4123 Monday – Friday 8:00 AM – 6:00 PM Eastern Time

For Credit Card Orders Only (VISA-MasterCard-Discover), see Helm, Inc. at: www.helminc.com.

Or write to:

Helm, Incorporated
Attention: Customer Service
47911 Halyard Drive
Plymouth, MI 48170

Prices are subject to change without notice and without incurring obligation. Allow ample time for delivery.

All listed prices are quoted in U.S. funds. Make checks payable in U.S. funds.

Reporting Safety Defects

Reporting Safety Defects to the United States Government

If you believe that your vehicle has a defect which could cause a crash or could cause injury or death, you should immediately inform the National Highway Traffic Safety Administration (NHTSA) in addition to notifying General Motors.

If NHTSA receives similar complaints, it may open an investigation, and if it finds that a safety defect exists in a group of vehicles, it may order a recall and remedy campaign. However, NHTSA cannot become involved in individual problems between you, your dealer, or General Motors.

To contact NHTSA, you may call the Vehicle Safety Hotline toll-free at 1-888-327-4236 (TTY: 1-800-424-9153); go to *http://www.safercar.gov;* or write to:

Administrator, NHTSA
1200 New Jersey Avenue, S.E.
Washington, D.C. 20590

You can also obtain other information about motor vehicle safety from *http://www.safercar.gov*.

Reporting Safety Defects to the Canadian Government

If you live in Canada, and you believe that the vehicle has a safety defect, notify Transport Canada immediately, and notify General Motors of Canada Limited. Call Transport Canada at 1-800-333-0510 or write to:

Transport Canada
Road Safety Branch
80 rue Noel
Gatineau , QC J8Z 0A1

Reporting Safety Defects to General Motors

In addition to notifying NHTSA (or Transport Canada) in a situation like this, notify General Motors.

Call 1-800-458-8006, or write:

Cadillac Customer Assistance Center
Cadillac Motor Car Division
P.O. Box 33169
Detroit , MI 48232-5169

In Canada, call 1-888-446-2000, or write:

Canadian Cadillac Customer Care Centre, Mail Code: CA1-163-005
General Motors of Canada Limited
1908 Colonel Sam Drive
Oshawa , Ontario L1H 8P7

Vehicle Data Recording and Privacy

The vehicle has a number of computers that record information about the vehicle's performance and how it is driven. For example, the vehicle uses computer modules to monitor and control engine and transmission performance, to monitor the conditions for airbag deployment and deploy them in a crash, and, if equipped, to provide antilock braking to help the driver control the vehicle. These modules may store data to help the dealer technician service the vehicle. Some modules may also store data about how the vehicle is operated, such as rate of fuel consumption or average speed. These modules may retain personal preferences, such as radio presets, seat positions, and temperature settings.

Event Data Recorders

This vehicle is equipped with an event data recorder (EDR). The main purpose of an EDR is to record, in certain crash or near crash-like situations, such as an air bag deployment or hitting a road obstacle, data that will assist in understanding how a vehicle's systems performed. The EDR is designed to record data related to vehicle dynamics and safety systems for a short period of time, typically 30 seconds or less. The EDR in this vehicle is designed to record such data as:

- How various systems in your vehicle were operating;
- Whether or not the driver and passenger safety belts were buckled/fastened;
- How far (if at all) the driver was depressing the accelerator and/or brake pedal; and,
- How fast the vehicle was traveling.

These data can help provide a better understanding of the circumstances in which crashes and injuries occur. NOTE: EDR data are recorded by your vehicle only if a non-trivial crash situation occurs; no data are recorded by the EDR under normal driving conditions and no personal data (e.g., name, gender, age, and crash location) are recorded. However, other parties, such as law enforcement, could combine the EDR data with the type of personally identifying data routinely acquired during a crash investigation.

To read data recorded by an EDR, special equipment is required, and access to the vehicle or the EDR is needed. In addition to the vehicle manufacturer, other parties, such as law enforcement, that have the special equipment, can read the information if they have access to the vehicle or the EDR.

GM will not access this data or share it with others except: with the consent of the vehicle owner or, if the vehicle is leased, with the consent of the lessee; in response to an official request by police or similar government office; as part of GM's defense of litigation through the discovery process; or, as required by law. Data that GM collects or receives may also be used for GM research needs or may be made available to others for research purposes, where a need is shown and the data is not tied to a specific vehicle or vehicle owner.

OnStar®

If the vehicle is equipped with OnStar® and has an active subscription, additional data may be collected through the OnStar system. This includes information about the vehicle's operation; collisions involving the vehicle; the use of the vehicle and its features; and, in certain situations, the location and approximate GPS speed of the vehicle. Refer to the OnStar Terms and Conditions and Privacy Statement on the OnStar website.

Infotainment System

If the vehicle is equipped with a navigation system as part of the infotainment system, use of the system may result in the storage of destinations, addresses, telephone numbers, and other trip information. See the infotainment manual for information on stored data and for deletion instructions.

Radio Frequency Identification (RFID)

RFID technology is used in some vehicles for functions such as tire pressure monitoring and ignition system security, as well as in connection with conveniences such as Remote Keyless Entry (RKE) transmitters for remote door locking/unlocking and starting, and in-vehicle transmitters for garage door openers. RFID technology in GM vehicles does not use or record personal information or link with any other GM system containing personal information.

Radio Frequency Statement

This vehicle has systems that operate on a radio frequency that comply with Part 15 of the Federal Communications Commission (FCC) rules and with Industry Canada Standards RSS-GEN/210/220/310.

Operation is subject to the following two conditions:

1. The device may not cause harmful interference.
2. The device must accept any interference received, including interference that may cause undesired operation of the device.

Changes or modifications to any of these systems by other than an authorized service facility could void authorization to use this equipment.

✍ NOTES

OnStar

OnStar Overview
OnStar Overview 14-1

OnStar Services
Emergency 14-2
Security 14-2
Navigation 14-2
Connections 14-3
Vehicle Diagnostics 14-5

OnStar Additional Information
OnStar Additional Information 14-5

OnStar Overview

If equipped, this vehicle has a comprehensive, in-vehicle system that can connect to a live Advisor for Emergency, Security, Navigation, Connection, and Diagnostic Services.

The OnStar system status light is next to the OnStar buttons. If the status light is:

- Solid Green: System is ready.
- Flashing Green: On a call.
- Red: Indicates a problem.

Press On or call 1-888-4-ONSTAR (1-888-466-7827) to speak to an Advisor.

Press to:

- Make a call, end a call, or answer an incoming call.
- Give OnStar Hands-Free Calling voice commands.
- Give OnStar Turn-by-Turn Navigation voice commands. Requires the available Directions and Connections service plan.

Press On to connect to a live Advisor to:

- Verify account information or update contact information.
- Get driving directions. Requires the available Directions and Connections service plan.
- Receive On-Demand Diagnostics for a check of the vehicle's key operating systems.
- Receive Roadside Assistance.

Press the OnStar Emergency button SOS to get a priority connection to an Emergency Advisor available 24/7 to:

- Get help for an emergency.
- Be a Good Samaritan or respond to an AMBER Alert.
- Get assistance in severe weather or other crisis and evacuation routes.

OnStar Services

Emergency

With Automatic Crash Response, the built-in system can automatically connect to help in most crashes, even if help cannot be requested.

Press SOS to connect to an Emergency Advisor. GPS technology is used to identify the vehicle location and can provide critical information to emergency personnel. The Advisor is also trained to offer critical assistance in emergency situations.

Security

OnStar provides services like Stolen Vehicle Assistance, Remote Ignition Block, and Roadside Assistance, if equipped. OnStar can unlock the vehicle doors remotely, if equipped with automatic door locks, and can help police locate the vehicle if it is stolen.

Navigation

OnStar navigation requires the Directions and Connections service plan.

Press On to receive directions or have them sent to the vehicle navigation screen, if equipped. Destinations can also be forwarded to the vehicle from MapQuest.com. The OnStar mapping database is continuously updated. For coverage maps, see www.onstar.com (U.S.) or www.onstar.ca (Canada).

Turn-by-Turn Navigation

1. Press On to connect to a live Advisor.
2. Request directions.
3. Directions are downloaded to the vehicle.
4. Follow the voice-guided commands.

Using Voice Commands During a Planned Route

Cancel Route

1. Press . System responds: “OnStar ready,” then a tone. Say “Cancel route.” System responds: “Do you want to cancel directions?”
2. Say “Yes.” System responds: “OK, request completed, thank you, goodbye.”

Route Preview

1. Press . System responds: “OnStar ready,” then a tone.
2. Say “Route preview.” System responds with the next three maneuvers.

Repeat

1. Press . System responds: “OnStar ready,” then a tone.
2. Say “Repeat.” System responds with the last direction given, then responds with “OnStar ready,” then a tone.

Get My Destination

1. Press . System responds: “OnStar ready,” then a tone.
2. Say “Get my destination.” System responds with the address and the distance to the destination, then responds with “OnStar ready,” then a tone.

Other Navigation Services Available from OnStar

OnStar eNav: Allows subscribers to send destinations from MapQuest.com to their Turn-by-Turn Navigation or screen-based navigation system. When ready, the directions will be downloaded to the vehicle.

Destination Download: Press , then request the Advisor to download directions to the navigation system in the vehicle.

After the call ends, press the “Go” button on the navigation screen to begin driving directions.

If directions are downloaded to the navigation system, the route can only be canceled through the navigation system.

Destinations can also be downloaded on the go. For information about eNav, Destination Download, and coverage maps see www.onstar.com (U.S.) or www.onstar.ca (Canada).

Connections

OnStar Hands-Free Calling allows calls to be made and received from the vehicle. The vehicle can also be controlled through the OnStar RemoteLink® mobile app. For coverage maps, see www.onstar.com (U.S.) or www.onstar.ca (Canada).

OnStar Mobile App

Download the OnStar RemoteLink mobile app to select Apple®, Android™, and BlackBerry® devices to check vehicle fuel level, oil life, or tire pressure; to start the vehicle (if equipped) or unlock it; or to connect to an OnStar Advisor. For OnStar RemoteLink information and compatibility, see www.onstar.com (U.S.) or www.onstar.ca (Canada).

Hands-Free Calling

1. Press . System responds: “OnStar ready.”
2. Say “Call.” System responds: “Please say the name or number to call.”
3. Say the entire number without pausing, including a “1” and the area code. System responds: “OK calling.”

Calling 911 Emergency

1. Press . System responds: “OnStar ready,” followed by a tone.
2. Say “Call.” System responds: “Please say the name or number to call.”
3. Say “911” without pausing. System responds: “911.”
4. Say “Call.” System responds: “OK, dialing 911.”

Retrieve My Number

1. Press . System responds: “OnStar ready.”
2. Say “My number.” System responds: “Your OnStar Hands-Free Calling number is,” then says the number.

End a Call

Press . System responds: “Call ended.”

Store a Name Tag for Speed Dialing

1. Press . System responds: “OnStar ready.”
2. Say “Store.” System responds: “Please say the number you would like to store.”
3. Say the entire number without pausing. System responds: “Please say the name tag.”
4. Pick a name tag. System responds: “About to store <name tag>. Does that sound OK?”
5. Say “Yes” or say “No” to try again. System responds: “OK, storing <name tag>.”

Place a Call Using a Stored Number

1. Press . System responds: “OnStar ready.”
2. Say “Call <name tag>.” System responds: “OK, calling <name tag>.”

Verify Minutes and Expiration

Press and say “Minutes” then “Verify” to check how many minutes remain and their expiration date.

Vehicle Diagnostics

OnStar Vehicle Diagnostics will perform a vehicle check every month. It will check the engine, transmission, antilock brakes, and major vehicle systems. It also checks the tire pressures, if the vehicle is equipped with the Tire Pressure Monitoring System. If an On-Demand Diagnostics check is needed between e-mails, press , and an Advisor can run a check.

OnStar Additional Information

Transferring Service

Press to request account transfer eligibility information. The Advisor can assist in canceling or removing account information. If OnStar receives information that vehicle ownership has changed, OnStar may send a voice message to the vehicle, requesting updated account information.

Reactivation for Subsequent Owners

Press and follow the prompts to speak to an Advisor as soon as possible after acquiring the vehicle. The Advisor will update vehicle records and will explain the OnStar service offers and options available.

How OnStar Service Works

Automatic Crash Response, Emergency Services, Crisis Assist, Stolen Vehicle Assistance, Vehicle Diagnostics, Remote Door Unlock, Roadside Assistance, Turn-by-Turn Navigation, and Hands-Free Calling are available on most vehicles. Not all OnStar services are available everywhere or on all vehicles. For more information, a full description of OnStar services, system limitations, and OnStar terms and conditions:

- Call 888-4-ONSTAR (888-466-7827).
- See www.onstar.com (U.S.).
- See www.onstar.ca (Canada).
- Call TTY 1-877-248-2080.
- Press to speak with an Advisor.

OnStar services require a vehicle electrical system, wireless service, and GPS satellite technologies to be available and operating for features

to function properly. These systems may not operate if the battery is discharged or disconnected.

OnStar service cannot work unless your vehicle is in a place where OnStar has an agreement with a wireless service provider for service in that area, and the wireless service provider has coverage, network capacity, reception, and technology compatible with OnStar service. Service involving location information about the vehicle cannot work unless GPS signals are available, unobstructed, and compatible with the OnStar hardware. OnStar service may not work if the OnStar equipment is not properly installed or it has not been properly maintained. If equipment or software is added, connected, or modified, OnStar service may not work. Other problems beyond the control of OnStar may prevent service such as hills, tall buildings, tunnels, weather, electrical system design and architecture of the vehicle, damage to the vehicle in a crash, or wireless phone network congestion or jamming.

See *Radio Frequency Statement on page 13-15*.

Services for People with Disabilities

Advisors provide services to help subscribers with physical disabilities and medical conditions.

Press On for help with:

- Locating a gas station with an attendant to pump gas.
- Finding a hotel, restaurant, etc., that meets accessibility needs.
- Providing directions to the closest hospital or pharmacy in urgent situations.

TTY Users

OnStar has the ability to communicate to the deaf, hard-of-hearing, or speech-impaired customers while in the vehicle. The available dealer-installed TTY system can provide in-vehicle access to all of the OnStar services, except Virtual Advisor and OnStar Turn-by-Turn Navigation.

OnStar.com (U.S.) or OnStar.ca (Canada)

The website provides access to account information, allows management of the OnStar subscription, and viewing of videos of each service. Get subscription plan pricing and sign up for OnStar Vehicle Diagnostics. Click on the “My Account” tab on the home page. The website navigation and services provided may vary by country.

OnStar Personal Identification Number (PIN)

A PIN is needed to access some of the OnStar services, like Remote Door Unlock and Stolen Vehicle Assistance. You will be prompted to change the PIN the first time when speaking with an Advisor. To

change the OnStar PIN, call OnStar and provide the Advisor with the current number.

Warranty

OnStar equipment may be warranted as part of the New Vehicle Limited Warranty. The manufacturer of the vehicle furnishes detailed warranty information.

Languages

The vehicle can be programmed to respond in multiple languages. Press and ask an Advisor. Advisors are available in English, Spanish and French. Available languages may vary by country.

Potential Issues

OnStar cannot perform Remote Door Unlock or Stolen Vehicle Assistance after the vehicle has been off continuously for five days. After five days, OnStar can contact Roadside Assistance and a locksmith to help gain access to the vehicle.

Global Positioning System (GPS)

- Obstruction of the GPS can occur in a large city with tall buildings; in parking garages; around airports; in tunnels, underpasses, or parking garages; or in an area with very dense trees. If GPS signals are not available, the OnStar system should still operate to call OnStar. However, OnStar could have difficulty identifying the exact location.
- In emergency situations, OnStar can use the last stored GPS location to send to emergency responders.
- A temporary loss of GPS can cause loss of the ability to send a Turn-by-Turn Navigation route. The Advisor may give a verbal route or may ask for a call back after the vehicle is driven into an open area.

Cellular and GPS Antennas

Avoid placing items over or near the antenna to prevent blocking cellular and GPS signal reception. Cellular reception is required for OnStar to send remote signals to the vehicle.

Unable to Connect to OnStar Message

If there is limited cellular coverage or the cellular network has reached maximum capacity, this message may come on. Press to try the call again or try again after driving a few miles into another cellular area.

Vehicle and Power Issues

OnStar services require a vehicle electrical system, wireless service, and GPS satellite technologies to be available and operating for features to function properly. These systems may not operate if the battery is discharged or disconnected.

Add-on Electrical Equipment

The OnStar system is integrated into the electrical architecture of the vehicle. Do not add any electrical equipment. See *Add-On Electrical Equipment on page 9-70*. Added electrical equipment may interfere with the operation of the OnStar system and cause it to not operate.

Privacy

The complete OnStar Privacy Statement may be found at www.onstar.com (U.S.), or www.onstar.ca (Canada). Privacy-sensitive users of wireless communications are cautioned that the privacy of any information sent via wireless cellular communications cannot be assured. Third parties may unlawfully intercept or access transmissions and private communications without consent.

OnStar - libcurl and unzip acknowledgments

Certain OnStar components include libcurl and unzip software. Below are the notices and licenses associated with this software:

libcurl:

COPYRIGHT AND PERMISSION NOTICE

Copyright (c) 1996 - 2010, Daniel Stenberg, <daniel@haxx.se>.

All rights reserved.

Permission to use, copy, modify, and distribute this software for any purpose with or without fee is hereby granted, provided that the above copyright notice and this permission notice appear in all copies.

THE SOFTWARE IS PROVIDED “AS IS,” WITHOUT WARRANTY OF ANY KIND, EXPRESS OR IMPLIED, INCLUDING BUT NOT LIMITED TO THE WARRANTIES OF MERCHANTABILITY, FITNESS FOR A PARTICULAR PURPOSE AND NONINFRINGEMENT OF THIRD PARTY RIGHTS. IN NO EVENT SHALL THE AUTHORS OR COPYRIGHT HOLDERS BE LIABLE FOR ANY CLAIM, DAMAGES OR OTHER LIABILITY, WHETHER IN AN ACTION OF CONTRACT, TORT OR OTHERWISE, ARISING FROM, OUT OF OR IN CONNECTION WITH THE SOFTWARE OR THE USE OR OTHER DEALINGS IN THE SOFTWARE.

Except as contained in this notice, the name of a copyright holder shall not be used in advertising or otherwise to promote the sale, use or other dealings in this Software without prior written authorization of the copyright holder.

unzip:

This is version 2005-Feb-10 of the Info-ZIP copyright and license. The definitive version of this document

should be available at ftp://ftp.info-zip.org/pub/infozip/license.html indefinitely.

Copyright (c) 1990-2005 Info-ZIP. All rights reserved.

For the purposes of this copyright and license, “Info-ZIP” is defined as the following set of individuals:

Mark Adler, John Bush, Karl Davis, Harald Denker, Jean-Michel Dubois, Jean-loup Gailly, Hunter Goatley, Ed Gordon, Ian Gorman, Chris Herborth, Dirk Haase, Greg Hartwig, Robert Heath, Jonathan Hudson, Paul Kienitz, David Kirschbaum, Johnny Lee, Onno van der Linden, Igor Mandrichenko, Steve P. Miller, Sergio Monesi, Keith Owens, George Petrov, Greg Roelofs, Kai Uwe Rommel, Steve Salisbury, Dave Smith, Steven M. Schweda, Christian Spieler, Cosmin Truta, Antoine Verheijen, Paul von Behren, Rich Wales, Mike White

This software is provided “as is,” without warranty of any kind, express or implied. In no event shall Info-ZIP or its contributors be held liable for any direct, indirect, incidental, special or consequential damages arising out of the use of or inability to use this software.

Permission is granted to anyone to use this software for any purpose, including commercial applications, and to alter it and redistribute it freely, subject to the following restrictions:

1. Redistributions of source code must retain the above copyright notice, definition, disclaimer, and this list of conditions.
2. Redistributions in binary form (compiled executables) must reproduce the above copyright notice, definition, disclaimer, and this list of conditions in documentation and/or other materials provided with the distribution. The sole exception to this condition is redistribution of a standard UnZipSFX binary (including SFXWiz) as part of a self-extracting archive; that is permitted without inclusion of this license, as long as the normal SFX banner has not been removed from the binary or disabled.

3. Altered versions–including, but not limited to, ports to new operating systems, existing ports with new graphical interfaces, and dynamic, shared, or static library versions–must be plainly marked as such and must not be misrepresented as being the original source. Such altered versions also must not be misrepresented as being Info-ZIP releases–including, but not limited to, labeling of the altered versions with the names “Info-ZIP” (or any variation thereof, including, but not limited to, different capitalizations), “Pocket UnZip,” “WiZ” or “MacZip” without the explicit permission of Info-ZIP. Such altered versions are further prohibited from misrepresentative use of the Zip-Bugs or Info-ZIP e-mail addresses or of the Info-ZIP URL(s).

4. Info-ZIP retains the right to use the names “Info-ZIP,” “Zip,” “UnZip,” “UnZipSFX,” “WiZ,” “Pocket UnZip,” “Pocket Zip,” and “MacZip” for its own source and binary releases.

A

Accessories and Modifications 10-2
Accessory Power 9-19
Active Emergency Braking System 1-18, 9-54
Adaptive Cruise Control 9-37
Adaptive Forward Lighting (AFL) 6-5
Adaptive Forward Lighting (AFL) Light 5-28
Add-On Electrical Equipment 9-70
Additional Information OnStar® 14-5
Adjustments
Lumbar, Front Seats 3-4
Thigh Support 3-5
Air Cleaner/Filter, Engine 10-14
Air Filter, Passenger Compartment 8-9
Air Vents 8-8
Airbag System
Check 3-34
How Does an Airbag Restrain? 3-27
Passenger Sensing System 3-28
What Makes an Airbag Inflate? 3-26
What Will You See after an Airbag Inflates? 3-27
When Should an Airbag Inflate? 3-25
Where Are the Airbags? 3-24
Airbags
Adding Equipment to the Vehicle 3-33
Passenger Status Indicator . . . 5-18
Readiness Light 5-17
Servicing Airbag-Equipped Vehicles 3-33
System Check 3-22
Alarm
Vehicle Security 2-16
Alert
Side Blind Zone (SBZA) 9-56
All-Wheel Drive 9-26, 10-26
Antilock Brake System (ABS) 9-27
Warning Light 5-23
Appearance Care
Exterior 10-69
Interior 10-74
Armrest Storage 4-2
Assistance Systems for Driving 9-51
Assistance Systems for Parking and Backing 9-46
Automatic
Door Locks 2-13
Headlamp System 6-4
Transmission 9-23
Transmission Fluid 10-14
Automatic Transmission
Manual Mode 9-25
Shift Lock Control Function Check 10-27

B

Battery 10-25
Exterior Lighting Battery Saver 6-9
Jump Starting 10-64
Load Management 6-8
Power Protection 6-9
Voltage and Charging Messages 5-37
Blade Replacement, Wiper ... 10-28
Brake
Parking, Electric 9-28
System Warning Light 5-22
Brakes 10-23
Antilock 9-27
Assist 9-29
Fluid 10-24
System Messages 5-37
Braking 9-3
Braking System
Active Emergency 1-18
Break-In, New Vehicle 9-15
Bulb Replacement 10-31
Halogen Bulbs 10-29
Headlamp Aiming 10-29
Headlamps 10-29
High Intensity Discharge (HID) Lighting 10-30
License Plate Lamps 10-30
Buying New Tires 10-57

C

Calibration 5-5
California
Fuel Requirements 9-62
Perchlorate Materials Requirements 10-2
Warning 10-2
Canadian Vehicle Owners iii
Capacities and Specifications 12-2
Carbon Monoxide
Engine Exhaust 9-22
Trunk 2-14
Winter Driving 9-9
Cargo
Tie-Downs 4-3
Cautions, Danger, and Warnings iv
Center Console Storage 4-3
Chains, Tire 10-62
Charging System Light 5-19
Check
Engine Light 5-19
Child Restraints
Infants and Young Children 3-37
Lower Anchors and Tethers for Children 3-42
Older Children 3-35
Securing 3-49, 3-51
Systems 3-39
Circuit Breakers 10-32
Cleaning
Exterior Care 10-69
Interior Care 10-74
Climate Control Systems
Dual Automatic 8-1
Rear 8-6
Clock 5-5
Cluster, Instrument 5-10
Collision Damage Repair 13-9

Compartments
Storage 4-1
Compass 5-5
Messages 5-37
Competitive Driving Mode 9-33
Connections
OnStar® 14-3
Control
Traction and Electronic
Stability 9-30
Control of a Vehicle 9-3
Convenience Net 4-4
Convex Mirrors 2-19
Coolant
Engine 10-18
Engine Temperature
Gauge 5-16
Engine Temperature
Warning Light 5-26
Cooling System 10-16
Engine Messages 5-39
Courtesy Transportation
Program 13-7
Cruise Control 9-34
Light 5-29
Messages 5-38
Cruise Control, Active 9-37
Cupholders 4-2
Customer Assistance 13-4
Offices 13-3
Text Telephone (TTY)
Users 13-4
Customer Information
Service Publications
Ordering Information 13-11
Customer Satisfaction
Procedure 13-1

D

Damage Repair, Collision 13-9
Danger, Warnings, and
Cautions iv
Data Recorders, Event 13-13
Daytime Running
Lamps (DRL) 6-4
Defensive Driving 9-3
Delayed Locking 2-13
Differential, Limited-Slip 9-34
Distracted Driving 9-2
Dome Lamps 6-6
Door
Ajar Light 5-29
Ajar Messages 5-38
Delayed Locking 2-13
Locks 2-11
Power Locks 2-12
Rear Seat Pass-Through 3-12
Drive Belt Routing, Engine 12-4
Drive Systems
All-Wheel Drive 9-26, 10-26
Driver Assistance Systems 9-45
Driver Information
Center (DIC) 5-30
Driver Mode Control 9-31
Driving
Assistance Systems 9-51
Characteristics and
Towing Tips 9-65
Competitive 9-33
Defensive 9-3
Drunk 9-3
For Better Fuel Economy 1-21
Highway Hypnosis 9-8
Hill and Mountain Roads 9-8
If the Vehicle is Stuck 9-10
Loss of Control 9-5

Driving (cont'd)
Off-Road Recovery 9-5
Vehicle Load Limits 9-11
Wet Roads 9-7
Winter 9-9
Dual Automatic Climate
Control System 8-1

E

Electric Parking Brake 9-28
Electrical Equipment,
Add-On 9-70
Electrical System
Engine Compartment
Fuse Block 10-32
Fuses and Circuit
Breakers 10-32
Instrument Panel Fuse
Block 10-35
Overload 10-31
Rear Compartment Fuse
Block 10-38
Emergency
OnStar® 14-2
Engine
Air Cleaner/Filter 10-14
Check and Service Engine
Soon Light 5-19
Compartment Overview 10-5
Coolant 10-18
Coolant Heater 9-19
Coolant Temperature
Gauge 5-16
Coolant Temperature
Warning Light 5-26
Cooling System 10-16
Cooling System Messages . . . 5-39
Drive Belt Routing 12-4
Exhaust 9-22
Oil Life System 10-12
Oil Messages 5-39
Overheating 10-21
Power Messages 5-40
Pressure Light 5-27
Running While Parked 9-22
Starting 1-4, 9-17
Entry Lighting 6-7
Equipment, Towing 9-69
Event Data Recorders 13-13
Exit Lighting 6-7
Extender, Safety Belt 3-20
Exterior Lamp Controls 6-1
Exterior Lamps Off Reminder . . . 6-3
Exterior Lighting Battery
Saver 6-9

F

Features
Memory 1-8
Filter,
Engine Air Cleaner 10-14
Flash-to-Pass 6-4
Flashers, Hazard Warning 6-5
Flat Tire 10-63
Floor Mats 10-77
Fluid
Automatic Transmission 10-14
Brakes 10-24
Washer 10-22
Folding Mirrors 2-20
Forward Collision Alert
(FCA) System 9-52
Front Seats
Heated and Ventilated 3-8

Fuel 9-60
Additives 9-62
Economy Driving 1-21
Filling a Portable Fuel Container 9-64
Filling the Tank 9-62
Foreign Countries 9-62
Gasoline Specifications 9-62
Gauge 5-15
Low Fuel Warning Light 5-27
Requirements, California 9-62
System Messages 5-40
Fuses
Engine Compartment Fuse Block 10-32
Fuses and Circuit Breakers 10-32
Instrument Panel Fuse Block 10-35
Rear Compartment Fuse Block 10-38

G

Garage Door Opener 5-55
Programming 5-55
Gasoline
Specifications 9-62
Gauges
Engine Coolant Temperature 5-16
Fuel 5-15
Odometer 5-14
Speedometer 5-14
Tachometer 5-14
Trip Odometer 5-14
Warning Lights and Indicators 5-8
General Information
Service and Maintenance 11-1
Towing 9-65
Vehicle Care 10-2
Glove Box 4-2

H

Halogen Bulbs 10-29
Hazard Warning Flashers 6-5
Head Restraints 3-2
Head-up Display 5-33
Headlamps
Adaptive Forward Lighting (AFL) 6-5
Aiming 10-29
Automatic 6-4
Bulb Replacement 10-29
Daytime Running Lamps (DRL) 6-4
Flash-to-Pass 6-4
High Intensity Discharge (HID) Lighting 10-30
High-Beam On Light 5-28
High/Low Beam Changer 6-3
Lamps On Reminder 5-29
Heated
Rear Seats 3-12
Steering Wheel 5-3
Heated and Ventilated Front Seats 3-8
Heated Mirrors 2-20

Heater
Engine Coolant 9-19
High-Beam On Light 5-28
High-Speed Operation 10-50
Highway Hypnosis 9-8
Hill and Mountain Roads 9-8
Hood 10-4
Horn 5-3
How to Wear Safety Belts
Properly 3-14

I

Ignition Positions 9-16
Immobilizer 2-18
Indicator
Vehicle Ahead 5-24
Infants and Young Children,
Restraints 3-37
Infotainment 7-1
Infotainment System 13-15
Instrument Cluster 5-10
Instrument Panel
Storage Area 4-1
Interior Rearview Mirrors 2-21
Introduction iii

J

Jump Starting 10-64

K

Key and Lock Messages 5-40
Keyless Entry
Remote (RKE) System 2-3
Keys 2-1

L

Labeling, Tire Sidewall 10-44
Lamps
Daytime Running (DRL) 6-4
Dome 6-6
Exterior Controls 6-1
Exterior Lamps Off
Reminder 6-3
Exterior Lighting Battery
Saver 6-9
License Plate 10-30
Malfunction Indicator 5-19
Lamps (cont'd)
Messages 5-41
On Reminder 5-29
Reading 6-7
Lane Departure
Warning (LDW) 9-58
Lane Departure Warning
Light 5-24
Lap-Shoulder Belt 3-15
LATCH System
Replacing Parts after a
Crash 3-48
LATCH, Lower Anchors and
Tethers for Children 3-42
LED Lighting 10-30
Light
Adaptive Forward Lighting
(AFL) Light 5-28
Parking Brake 5-23
Lighting
Adaptive Forward 6-5
Entry 6-7
Exit 6-7
Illumination Control 6-6
LED 10-30

Lights
Airbag Readiness 5-17
Antilock Brake System (ABS) Warning 5-23
Brake System Warning 5-22
Charging System 5-19
Cruise Control 5-29
Door Ajar 5-29
Engine Coolant Temperature Warning 5-26
Engine Oil Pressure 5-27
Flash-to-Pass 6-4
High-Beam On 5-28
High/Low Beam Changer 6-3
Lane Departure Warning 5-24
Low Fuel Warning 5-27
Safety Belt Reminders 5-17
Security 5-28
Service Electric Parking Brake 5-23
StabiliTrak® OFF 5-25
Tire Pressure 5-26
Traction Control System (TCS)/StabiliTrak® 5-25
Traction Off 5-25
Limited-Slip Differential 9-34
Locks
Automatic Door 2-13
Delayed Locking 2-13
Door 2-11
Lockout Protection 2-13
Power Door 2-12
Safety 2-14
Loss of Control 9-5
Low Fuel Warning Light 5-27
Low-Profile Tires 10-43
Lower Anchors and Tethers for Children (LATCH System) 3-42
Lumbar Adjustment 3-4
Front Seats 3-4

M

Maintenance Records 11-16
Maintenance Schedule Recommended Fluids and Lubricants 11-13
Malfunction Indicator Lamp 5-19
Manual Mode 9-25
Memory Features 1-8
Memory Seats 3-6
Messages
Airbag System 5-45
Battery Voltage and Charging 5-37
Brake System 5-37
Compass 5-37
Door Ajar 5-38
Engine Cooling System 5-39
Engine Oil 5-39
Engine Power 5-40
Fuel System 5-40
Key and Lock 5-40
Lamp 5-41
Object Detection System 5-41
Ride Control System 5-44
Safety Belt 5-45
Security 5-45
Service Vehicle 5-45
Starting the Vehicle 5-46
Tire 5-46
Transmission 5-47
Vehicle 5-36
Vehicle Reminder 5-47
Vehicle Speed 5-47
Washer Fluid 5-47

Mirrors
Automatic Dimming
Rearview 2-21
Convex 2-19
Folding 2-20
Heated 2-20
Power 2-20
Tilt in Reverse 2-20
Mirrors, Interior Rearview 2-21
Mode 9-31
Driver Control 9-31
Monitor System, Tire
Pressure 10-50

N

Navigation
OnStar® 14-2
Net, Convenience 4-4
New Vehicle Break-In 9-15

O

Object Detection System
Messages 5-41
Odometer 5-14
Trip 5-14
Off-Road
Recovery 9-5
Oil
Engine 10-10
Engine Oil Life System 10-12
Messages 5-39
Pressure Light 5-27
Older Children, Restraints 3-35
Online Owner Center 13-4
OnStar®
System, In Brief 1-22
OnStar® Additional
Information 14-5
OnStar® Connections 14-3
OnStar® Emergency 14-2
OnStar® Navigation 14-2
OnStar® Overview 14-1
OnStar® Security 14-2
OnStar® Vehicle
Diagnostics 14-5
Ordering
Service Publications 13-11
Outlets
Power 5-6
Overheating, Engine 10-21

P

Park
Shifting Into 9-20
Shifting Out of 9-21
Parking
Brake and P (Park)
Mechanism Check 10-28
Over Things That Burn 9-21
Parking Brake
Light 5-23
Parking or Backing
Assistance Systems 9-46
Passenger Airbag Status
Indicator 5-18
Passenger Compartment Air
Filter 8-9
Passenger Sensing System . . . 3-28
Perchlorate Materials
Requirements, California 10-2
Personalization
Vehicle 5-48
Power
Door Locks 2-12
Mirrors 2-20
Outlets 5-6
Protection, Battery 6-9

Power (cont'd)
Retained Accessory (RAP) . . . 9-19
Seat Adjustment 3-3
Windows 2-21
Pregnancy, Using Safety Belts 3-20
Privacy
Radio Frequency Identification (RFID) 13-15
Program
Courtesy Transportation 13-7
Proposition 65 Warning, California 10-2

R

Radio Frequency Identification (RFID) 13-15
Statement 13-15
Reading Lamps 6-7
Rear Climate Control System . . . 8-6
Rear Seat
Pass-Through Door 3-12
Rear Seats 3-10
Heated 3-12
Rearview Mirrors
Automatic Dimming 2-21
Reclining Seatbacks 3-5
Recommended Fluids and Lubricants 11-13
Records
Maintenance 11-16
Recreational Vehicle Towing 10-67
Remote Keyless Entry (RKE) System 2-2, 2-3
Remote Vehicle Start 2-9
Replacement Bulbs 10-31
Replacement Parts
Airbags 3-34
Maintenance 11-14
Replacing Airbag System 3-34
Replacing LATCH System Parts after a Crash 3-48
Replacing Safety Belt System Parts after a Crash . . . 3-21
Reporting Safety Defects
Canadian Government 13-12
General Motors 13-12
U.S. Government 13-12
Restraints
Where to Put 3-41
Retained Accessory Power (RAP) 9-19
Reverse Tilt Mirrors 2-20
Ride Control Systems
Enhanced Traction System (ETS) 9-34
Messages 5-44
Roads
Driving, Wet 9-7
Roadside Service 13-5
Roof
Sunroof 2-25
Rotation, Tires 10-55
Routing, Engine Drive Belt 12-4
Run-Flat Tires 10-42
Running the Vehicle While Parked 9-22

S

Safety Belts 3-13
Care 3-21
Extender 3-20
How to Wear Safety Belts Properly 3-14
Lap-Shoulder Belt 3-15
Messages 5-45

Safety Belts (cont'd)
Reminders 5-17
Replacing after a Crash 3-21
Use During Pregnancy 3-20
Safety Defects Reporting
Canadian Government 13-12
General Motors 13-12
U.S. Government 13-12
Safety Locks 2-14
Safety System Check 3-20
Scheduling Appointments 13-7
Seats
Head Restraints 3-2
Heated and Ventilated Front . . . 3-8
Heated, Rear 3-12
Lumbar Adjustment, Front 3-4
Memory 3-6
Power Adjustment, Front 3-3
Rear 3-10
Reclining Seatbacks 3-5
Securing Child
Restraints 3-49, 3-51
Security
Light 5-28
Messages 5-45
OnStar® 14-2
Vehicle 2-16
Vehicle Alarm 2-16
Service 8-9
Accessories and
Modifications 10-2
Doing Your Own Work 10-3
Engine Soon Light 5-19
Maintenance Records 11-16
Maintenance, General
Information 11-1
Parts Identification Label 12-1
Publications Ordering
Information 13-11
Scheduling Appointments 13-7
Vehicle Messages 5-45
Service Electric Parking
Brake Light 5-23
Servicing the Airbag 3-33
Shift Lock Control Function
Check, Automatic
Transmission 10-27
Shifting
Into Park 9-20
Out of Park 9-21
Side Blind Zone
Alert (SBZA) 9-56
Signals, Turn and
Lane-Change 6-5
Specifications and
Capacities 12-2
Speedometer 5-14
StabiliTrak
OFF Light 5-25
Start Vehicle, Remote 2-9
Starter Switch Check 10-27
Starting the Engine 1-4, 9-17
Starting the Vehicle
Messages 5-46
Steering 9-4
Heated Wheel 5-3
Wheel Adjustment 5-2
Wheel Controls 5-3

Storage Areas
Armrest 4-2
Center Console 4-3
Convenience Net 4-4
Glove Box 4-2
Instrument Panel 4-1
Storage Compartments 4-1
Stuck Vehicle 9-10
Sun Visors 2-24
Sunroof 2-25
Symbols iv
System
Active Emergency Braking 9-54
Forward Collision
Alert (FCA) 9-52
Infotainment 7-1, 13-15
Systems
Driver Assistance 9-45

T

Tachometer 5-14
Text Telephone (TTY) Users . . . 13-4
Theft-Deterrent Systems 2-18
Immobilizer 2-18
Thigh Support Adjustment 3-5
Time 5-5
Tires
Buying New Tires 10-57
Chains 10-62
Designations 10-45
Different Size 10-59
If a Tire Goes Flat 10-63
Inflation Monitor System 10-51
Inspection 10-55
Low Profile 10-43
Messages 5-46
Pressure 10-50
Pressure Light 5-26
Pressure Monitor System . . . 10-50
Rotation 10-55
Run-Flat 10-42
Sidewall Labeling 10-44
Terminology and
Definitions 10-46
Uniform Tire Quality
Grading 10-59
Wheel Alignment and Tire
Balance 10-61
Wheel Replacement 10-61
When It Is Time for New
Tires 10-57
Winter 10-42
Towing
Driving Characteristics 9-65
Equipment 9-69
General Information 9-65
Recreational Vehicle 10-67
Trailer 9-68, 9-69
Vehicle 10-66
Track Events and
Competitive Driving 9-6
Traction
Control System (TCS)/
StabiliTrak® Light 5-25
Limited-Slip Differential 9-34
Off Light 5-25
Traction Control/Electronic
Stability Control 9-30
Trailer
Towing 9-68, 9-69
Transmission
Automatic 9-23
Fluid, Automatic 10-14
Messages 5-47
Transportation Program,
Courtesy 13-7
Trip Odometer 5-14
Trunk 2-14

Turn and Lane-Change
Signals 6-5

U

Uniform Tire Quality
Grading 10-59
Universal Remote System 5-55
Operation 5-57
Programming 5-55
Using This Manual iii

V

Vehicle
Alarm System 2-16
Canadian Owners iii
Control 9-3
Identification
Number (VIN) 12-1
Load Limits 9-11
Messages 5-36
Personalization 5-48
Reminder Messages 5-47
Remote Start 2-9
Vehicle (cont'd)
Security 2-16
Speed Messages 5-47
Towing 10-66
Vehicle Ahead Indicator 5-24
Vehicle Care
Tire Pressure 10-48
Vehicle Diagnostics
OnStar® 14-5
Ventilation, Air 8-8
Visors 2-24

W

Warning
Brake System Light 5-22
Lane Departure (LDW) 9-58
Warning Lights, Gauges, and
Indicators 5-8
Warnings iv
Cautions and Danger iv
Hazard Flashers 6-5
Washer Fluid 10-22
Messages 5-47
Wheels
Alignment and Tire
Balance 10-61
Different Size 10-59
Replacement 10-61
When It Is Time for New
Tires 10-57
Where to Put the Restraint 3-41
Windows 2-21
Power 2-21
Windshield
Replacement 10-29
Wiper/Washer 5-3
Winter
Driving 9-9
Winter Tires 10-42
Wiper Blade Replacement 10-28