2008 Cadillac Escalade EXT Owner Manual

Seats and Restraint Systems 1-1
Front Seats 1-2
Rear Seats 1-10
Safety Belts 1-12
Child Restraints 1-32
Airbag System 1-56
Restraint System Check 1-72
Features and Controls 2-1
Keys 2-3
Doors and Locks 2-10
Windows 2-24
Theft-Deterrent Systems 2-26
Starting and Operating Your Vehicle 2-30
Mirrors 2-46
Object Detection Systems 2-54
OnStar® System 2-56
Universal Home Remote System 2-60
Storage Areas 2-67
Sunroof 2-87
Instrument Panel 3-1
Instrument Panel Overview 3-4
Climate Controls 3-24
Warning Lights, Gages, and Indicators 3-29
Driver Information Center (DIC) 3-45
Audio System(s) 3-66
Driving Your Vehicle 4-1
Your Driving, the Road, and Your Vehicle 4-2
Towing 4-42
Service and Appearance Care 5-1
Service 5-3
Fuel 5-5
Checking Things Under the Hood 5-10
All-Wheel Drive 5-45
Rear Axle 5-46
Front Axle 5-47
Headlamp Aiming 5-48
Bulb Replacement 5-51
Windshield Wiper Blade Replacement 5-53
Tires 5-54
Appearance Care 5-97
Vehicle Identification 5-106
Electrical System 5-107
Capacities and Specifications 5-115
Maintenance Schedule 6-1
Maintenance Schedule 6-2
Customer Assistance Information 7-1
Customer Assistance and Information 7-2
Reporting Safety Defects 7-14
Vehicle Data Recording and Privacy 7-16
Index 1

GENERAL MOTORS, GM, the GM Emblem, CADILLAC, the CADILLAC Crest & Wreath, and the names ESCALADE and EXT are registered trademarks of General Motors Corporation.

This manual includes the latest information at the time it was printed. We reserve the right to make changes after that time without notice. For vehicles first sold in Canada, substitute the name “General Motors of Canada Limited” for Cadillac Motor Car Division whenever it appears in this manual.

This manual describes features that may be available in this model, but your vehicle may not have all of them. For example, more than one entertainment system may be offered or your vehicle may have been ordered without a front passenger or rear seats.

Keep this manual in the vehicle for quick reference.

Canadian Owners

A French language copy of this manual can be obtained from your dealer/retailer or from:

Helm, Incorporated
P.O. Box 07130
Detroit, MI 48207

1-800-551-4123
www.helminc.com

Propriétaires Canadiens

On peut obtenir un exemplaire de ce guide en français auprès de concessionnaire ou à l’adresse suivante:

Helm Incorporated
P.O. Box 07130
Detroit, MI 48207

1-800-551-4123
www.helminc.com

Litho in U.S.A.
Part No. 15854810 A First Printing

©2007 General Motors Corporation. All Rights Reserved.

Using this Manual

Many people read the owner manual from beginning to end when they first receive their new vehicle to learn about the vehicle's features and controls. Pictures and words work together to explain things.

Index

A good place to quickly locate information about the vehicle is the Index in the back of the manual. It is an alphabetical list of what is in the manual and the page number where it can be found.

Safety Warnings and Symbols

There are a number of safety cautions in this book. A box with the word CAUTION is used to tell about things that could hurt you or others if you were to ignore the warning.

⚠ CAUTION:

These mean there is something that could hurt you or other people.

We tell you what the hazard is and what to do to help avoid or reduce the hazard. Please read these cautions. If you do not, you or others could be hurt.

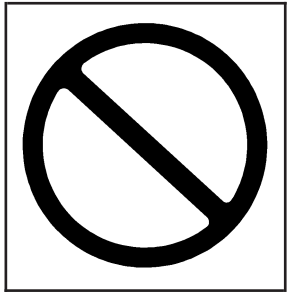

A circle with a slash through it is a safety symbol which means "Do Not," "Do Not do this" or "Do Not let this happen."

Vehicle Damage Warnings

You will also find notices in this manual.

Notice: **These mean there is something that could damage your vehicle.**

A notice tells about something that can damage the vehicle. Many times, this damage would not be covered by your vehicle's warranty, and it could be costly. The notice tells what to do to help avoid the damage.

When you read other manuals, you might see CAUTION and NOTICE warnings in different colors or in different words.

There are also warning labels on the vehicle which use the same words, CAUTION or NOTICE.

Vehicle Symbols

The vehicle has components and labels that use symbols instead of text. Symbols are shown along with the text describing the operation or information relating to a specific component, control, message, gage, or indicator.

Section 1 Seats and Restraint Systems

Front Seats 1-2
Power Seats 1-2
Power Lumbar 1-3
Heated Seats 1-4
Heated and Cooled Seats 1-5
Memory Seat, Mirrors, and Pedals 1-6
Power Reclining Seatbacks 1-8
Head Restraints 1-9

Rear Seats 1-10
Rear Seat Operation 1-10

Safety Belts 1-12
Safety Belts: They Are for Everyone 1-12
How to Wear Safety Belts Properly 1-17
Lap-Shoulder Belt 1-26
Safety Belt Use During Pregnancy 1-31
Safety Belt Extender 1-32

Child Restraints 1-32
Older Children 1-32
Infants and Young Children 1-35
Child Restraint Systems 1-39
Where to Put the Restraint 1-42
Lower Anchors and Tethers for Children (LATCH) 1-43
Securing a Child Restraint in a Rear Seat Position 1-50
Securing a Child Restraint in the Right Front Seat Position 1-53

Airbag System 1-56
Where Are the Airbags? 1-59
When Should an Airbag Inflate? 1-61
What Makes an Airbag Inflate? 1-63
How Does an Airbag Restrain? 1-63
What Will You See After an Airbag Inflates? 1-64
Passenger Sensing System 1-65
Servicing Your Airbag-Equipped Vehicle 1-70
Adding Equipment to Your Airbag-Equipped Vehicle 1-70

Restraint System Check 1-72
Checking the Restraint Systems 1-72
Replacing Restraint System Parts After a Crash 1-73

Front Seats

Power Seats

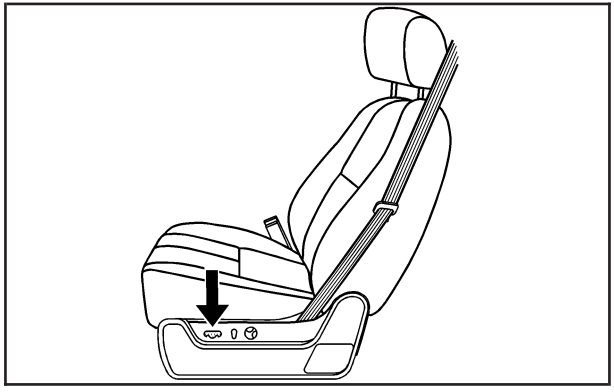

Driver's Seat with Power Seat Control, Power Recline, and Power Lumbar shown

The power seat controls are located on the outboard side of the front seats.

- Move the seat forward or rearward by sliding the control forward or rearward.
- Raise or lower the front part of the seat cushion by moving the front of the control up or down.
- Raise or lower the rear part of the seat cushion by moving the rear of the control up or down.
- Raise or lower the entire seat by moving the entire control up or down.

The power reclining seatback control is located behind the power seat control on the outboard side of the seats. See *Power Reclining Seatbacks on page 1-8*.

Your vehicle has a memory function which allows seat settings to be saved and recalled. See *Memory Seat, Mirrors, and Pedals on page 1-6*.

Power Lumbar

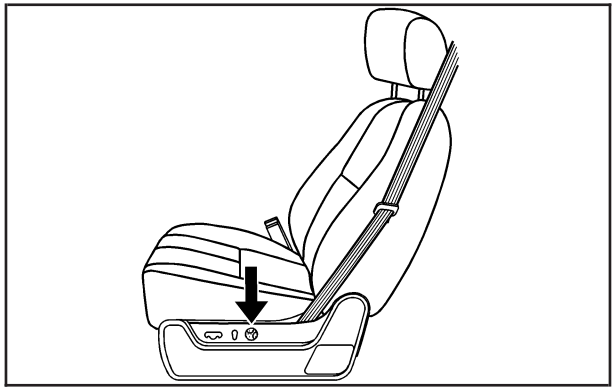

If the seats have power lumbar, the controls used to operate this feature are located on the outboard side of the seats.

- To increase lumbar support, press and hold the front of the control.
- To decrease lumbar support, press and hold the rear of the control.
- To raise the height of the lumbar support, press and hold the top of the control.
- To lower the height of the lumbar support, press and hold the bottom of the control.

Release the control when the lower seatback reaches the desired level of lumbar support.

Your vehicle may have a memory function which allows seat settings to be saved and recalled. See *Memory Seat, Mirrors, and Pedals on page 1-6* for more information.

Keep in mind that as your seating position changes, as it may during long trips, so should the position of your lumbar support. Adjust the seat as needed.

Heated Seats

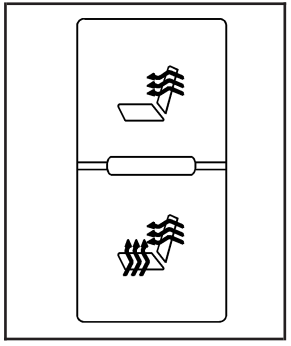

If the front seats have the heated seat feature, the buttons used to control this feature are located on the climate control panel.

(Heated Seatback): To heat only the seatback, press the top button with the heated seatback symbol.

This symbol will appear on the climate control display to indicate that the feature is on. Press the button to cycle through the temperature settings of high, medium, and low and to turn the heated seatback off. Indicator bars next to the symbol designate the level of heat selected: three for high, two for medium, and one for low.

(Heated Seat and Seatback): To heat the entire seat, press the bottom button with the heated seat and seatback symbol.

This symbol will appear on the climate control display to indicate that the feature is on. Press the button to cycle through the temperature settings of high, medium, and low and to turn the heated seat off. Indicator bars next to the symbol designate the level of heat selected: three for high, two for medium , and one for low.

The heated seats will be canceled ten seconds after the ignition is turned off. If you want to use the heated seat feature after you restart the vehicle, you will need to press the appropriate heated seat button again.

If your vehicle has heated and cooled seats, see *Heated and Cooled Seats on page 1-5*.

Heated and Cooled Seats

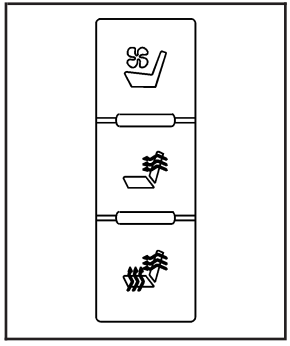

If the front seats have the heated and cooled seat feature, the buttons used to control this feature are located on the climate control panel.

(Cooled Seat): To cool the entire seat, press the button with the cooled seat symbol.

This symbol will appear on the climate control display to indicate that the feature is on. Press the button to cycle through the temperature settings of high, medium, and low and to turn the cooled seat off. Indicator bars next to the symbol designate the level of cooling selected: three for high, two for medium, and one for low.

(Heated Seatback): To heat only the seatback, press the button with the heated seatback symbol.

This symbol will appear on the climate control display to indicate that the feature is on. Press the button to cycle through the temperature settings of high, medium, and low and to turn the heated seatback off. Indicator bars next to the symbol designate the level of heat selected: three for high, two for medium, and one for low.

(Heated Seat and Seatback): To heat the entire seat, press the button with the heated seat and seatback symbol.

This symbol will appear on the climate control display to indicate that the feature is on. Press the button to cycle through the temperature settings of high, medium, and low and to turn the heated seat off. Indicator bars next to the symbol designate the level of heat selected: three for high, two for medium, and one for low.

The heated and cooled seats will be canceled after the ignition is turned off. If you want to use the heated and cooled seat feature after you restart your vehicle, you will need to press the appropriate seat button again.

Memory Seat, Mirrors, and Pedals

Your vehicle has the memory package.

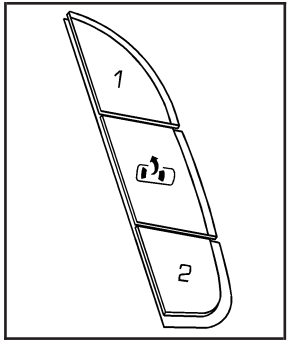

The controls for this feature are located on the driver's door, and are used to program and recall memory settings for the driver's seat, outside mirrors, and the adjustable throttle and brake pedal feature, if your vehicle has it.

To save your positions in memory, do the following:

1. Adjust the driver's seat, including the seatback recliner and lumbar, both outside mirrors, and the throttle and brake pedals to a comfortable position.

   See *Outside Power Foldaway Mirrors on page 2-52* and *Adjustable Throttle and Brake Pedal on page 2-34* for more information.

   Not all mirrors will have the ability to save and recall the mirror positions.

2. Press and hold button 1 until two beeps let you know that the position has been stored.

A second seating, mirror, and throttle and brake pedal position can be programmed by repeating the above steps and pressing button 2.

To recall the memory positions, the vehicle must be in PARK (P). Press and release either button 1 or button 2 corresponding to the desired driving position. The seat, outside mirrors, and adjustable throttle and brake pedals will move to the position previously stored. You will hear a single beep.

If you use the remote keyless entry transmitter to enter your vehicle and the remote recall memory feature is on, automatic seat, mirror, and adjustable pedal movement will occur. See “MEMORY SEAT RECALL” under *DIC Vehicle Customization on page 3-57* for more information.

To stop recall movement of the memory feature at any time, press one of the power seat controls, memory buttons, power mirror buttons, or adjustable pedal switch.

If something has blocked the driver’s seat and/or the adjustable pedals while recalling a memory position, the driver’s seat and/or the adjustable pedals recall may stop working. If this happens, remove the obstruction and press the appropriate function control for two seconds. Then try recalling the memory position again by pressing the appropriate memory button. If the memory position is still not recalling, see your dealer for service.

Easy Exit Seat

The control for this feature is located on the driver’s door between buttons 1 and 2.

With the vehicle in PARK (P), the exit position can be recalled by pressing the exit button. You will hear a single beep. The driver’s seat will move back.

If the easy exit seat feature is on in the Driver Information Center (DIC), automatic seat movement will occur when the key is removed from the ignition. See “EASY EXIT SEAT” under *DIC Vehicle Customization on page 3-57* for more information.

Further programming for the memory seat feature can be done using the DIC. You can select the automatic easy exit seat feature or the remote memory seat recall feature.

For programming information, see *DIC Vehicle Customization on page 3-57*.

Power Reclining Seatbacks

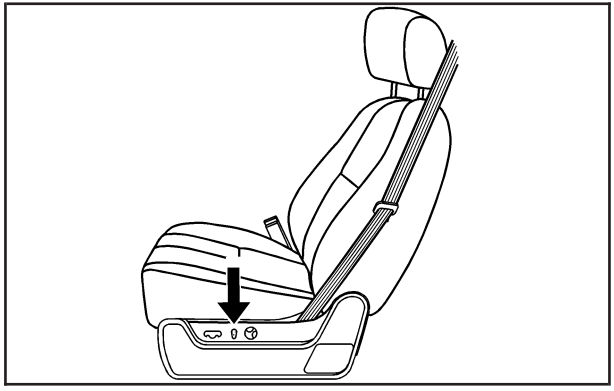

Driver's Seat with Power Seat Control, Power Recline, and Power Lumbar shown

The controls for the power reclining seatback are located on the outboard side of the front seats behind the power seat control.

- To recline the seatback, tilt the top of the control rearward.
- To bring the seatback forward, tilt the top of the control forward.

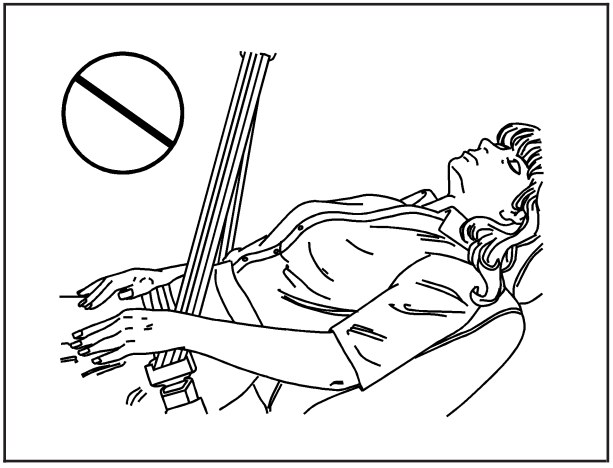

⚠ CAUTION:

Sitting in a reclined position when your vehicle is in motion can be dangerous. Even if you buckle up, your safety belts cannot do their job when you are reclined like this.

The shoulder belt cannot do its job. In a crash, you could go into it, receiving neck or other injuries.

The lap belt cannot do its job either. In a crash the belt could go up over your abdomen. The belt forces would be there, not at your pelvic bones. This could cause serious internal injuries.

For proper protection when the vehicle is in motion, have the seatback upright. Then sit well back in the seat and wear your safety belt properly.

Do not have a seatback reclined if your vehicle is moving.

Your vehicle has a memory function which allows seat settings to be saved and recalled. See *Memory Seat, Mirrors, and Pedals on page 1-6*.

Head Restraints

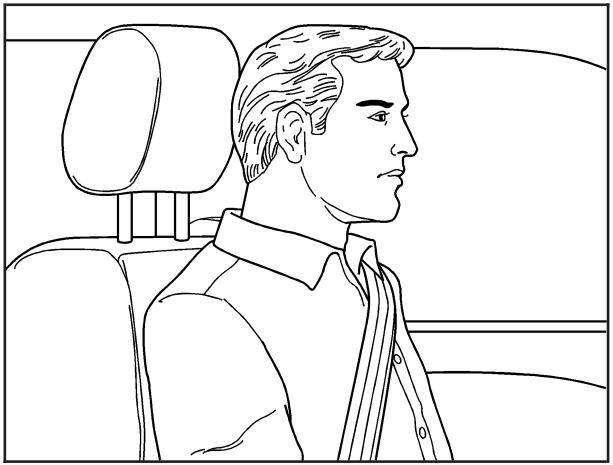

Adjust the head restraint so that the top of the restraint is at the same height as the top of the occupant's head. This position reduces the chance of a neck injury in a crash.

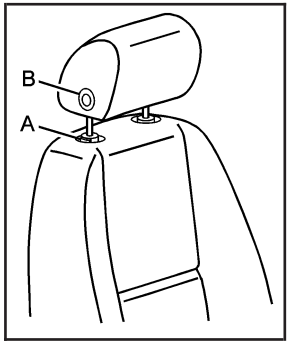

Pull the head restraint up to raise it. To lower the head restraint, press the release button (A), located on the top of the seatback, while you push the head restraint down.

The front seats may have head restraints that also tilt forward and rearward.

To tilt the head restraint, grasp the top of the restraint while pressing the button (B), located on the inboard side of the head restraint, and move it forward or rearward until the desired locking position is reached. Try to move the head restraint after the button is released to make sure that it is locked in place.

The second row seats may have head rests that can be adjusted up and down, but they do not tilt.

Rear Seats

Rear Seat Operation

The rear seat is a 60/40 split bench seat that can be folded to give you more cargo space and access to the folding midgate. See *Midgate® on page 2-13* for more information on operation of the folding midgate.

To fold either side of the seat do the following:

1. Push the rear seat head restraints all the way down.

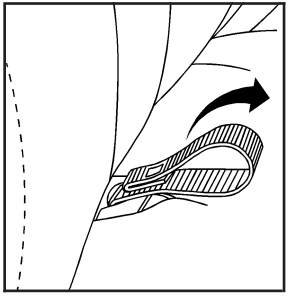

2. Pull the seat loop located where the seatback and seat cushion meet. The seat cushion will release and allow you to tilt it toward the front of the vehicle.

Notice: **Folding a rear seat with the safety belts still fastened may cause damage to the seat or the safety belts. Always unbuckle the safety belts and return them to their normal stowed position before folding a rear seat.**

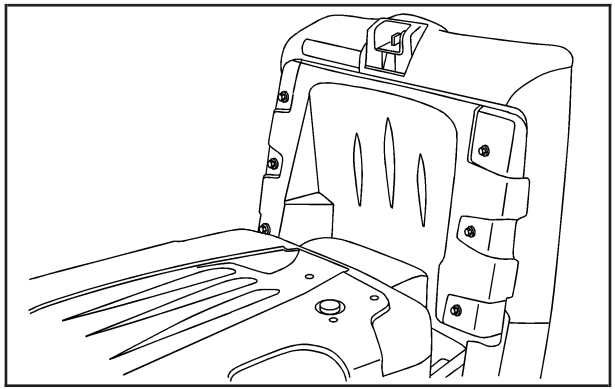

3. Fold the seatback forward until it is flat. You may have to move the front seats forward slightly to do this.
4. Repeat the procedure for the other side.

To return the seats to the normal position, push the seatback up and fold the seat cushion down.

⚠ CAUTION:

A safety belt that is improperly routed, not properly attached, or twisted will not provide the protection needed in a crash. The person wearing the belt could be seriously injured. After raising the rear seatback, always check to be sure that the safety belts are properly routed and attached, and are not twisted.

⚠ CAUTION:

If the seatback is not locked, it could move forward in a sudden stop or crash. That could cause injury to the person sitting there. Always be sure to press the rear of the seat cushion down. This action locks the seatback in place.

Push and pull on the seatback to make sure it is locked. Raise the head restraint.

Safety Belts

Safety Belts: They Are for Everyone

This part of the manual tells you how to use safety belts properly. It also tells you some things you should not do with safety belts.

⚠ CAUTION:

Do not let anyone ride where he or she cannot wear a safety belt properly. If you are in a crash and you are not wearing a safety belt, your injuries can be much worse. You can hit things inside the vehicle harder or be ejected from it and be seriously injured or killed.
In the same crash, you might not be, if you are buckled up. Always fasten your safety belt, and check that your passenger(s) are restrained properly too.

⚠ CAUTION:

People riding on the tailgate (if equipped) can easily lose their balance and fall even when the vehicle is operated at low speeds. Falling from a moving vehicle may result in serious injuries or death.

⚠ CAUTION:

It is extremely dangerous to ride in a cargo area, inside or outside of a vehicle. In a collision, people riding in these areas are more likely to be seriously injured or killed. Do not allow people to ride in any area of your vehicle that is not equipped with seats and safety belts. Be sure everyone in your vehicle is in a seat and using a safety belt properly.

Your vehicle has indicators as a reminder to buckle your safety belts. See *Safety Belt Reminders on page 3-31*.

In most states and in all Canadian provinces, the law requires wearing safety belts. Here is why:

You never know if you will be in a crash. If you do have a crash, you do not know if it will be a serious one.

A few crashes are mild, and some crashes can be so serious that even buckled up, a person would not survive. But most crashes are in between. In many of them, people who buckle up can survive and sometimes walk away. Without belts they could have been badly hurt or killed.

After more than 40 years of safety belts in vehicles, the facts are clear. In most crashes buckling up does matter... a lot!

Why Safety Belts Work

When you ride in or on anything, you go as fast as it goes.

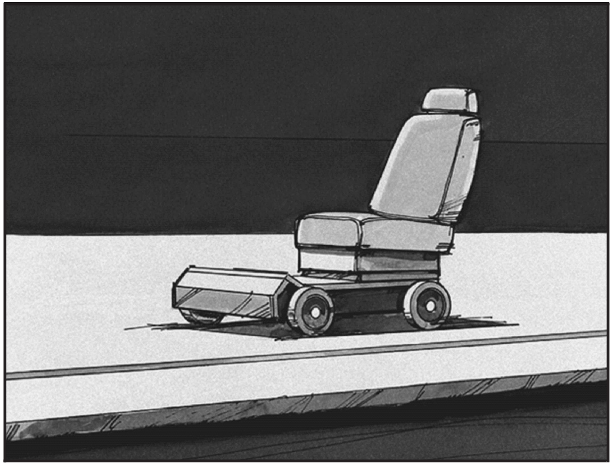

Take the simplest vehicle. Suppose it is just a seat on wheels.

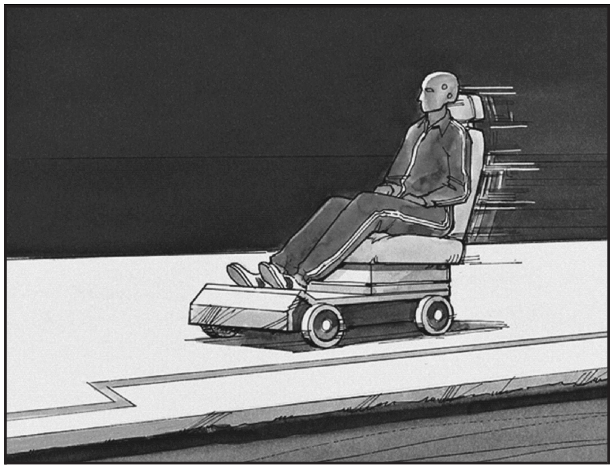

Put someone on it.

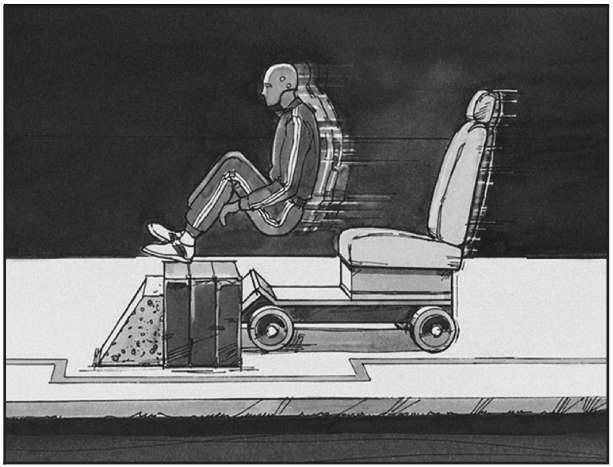

Get it up to speed. Then stop the vehicle.
The rider does not stop.

The person keeps going until stopped by something. In a real vehicle, it could be the windshield...

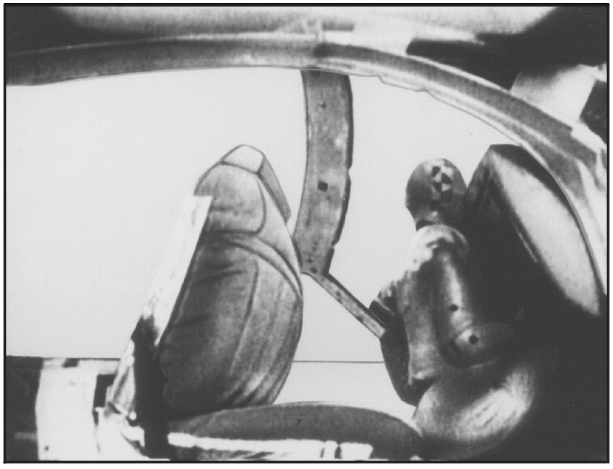

or the instrument panel...

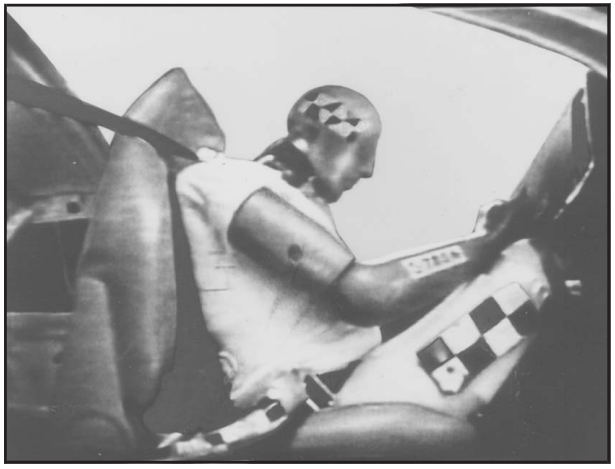

or the safety belts!

With safety belts, you slow down as the vehicle does. You get more time to stop. You stop over more distance, and your strongest bones take the forces. That is why safety belts make such good sense.

Questions and Answers About Safety Belts

Q: Will I be trapped in the vehicle after a crash if I am wearing a safety belt?

A: You *could* be — whether you are wearing a safety belt or not. But your chance of being conscious during and after an accident, so you can unbuckle and get out, is *much* greater if you are belted. And you can unbuckle a safety belt, even if you are upside down.

Q: If my vehicle has airbags, why should I have to wear safety belts?

A: Airbags are supplemental systems only; so they work *with* safety belts — not instead of them. Whether or not an airbag is provided, all occupants still have to buckle up to get the most protection. That is true not only in frontal collisions, but especially in side and other collisions.

Q: If I am a good driver, and I never drive far from home, why should I wear safety belts?

A: You may be an excellent driver, but if you are in a crash — even one that is not your fault — you and your passenger(s) can be hurt. Being a good driver does not protect you from things beyond your control, such as bad drivers.

Most accidents occur within 25 miles (40 km) of home. And the greatest number of serious injuries and deaths occur at speeds of less than 40 mph (65 km/h).

Safety belts are for everyone.

How to Wear Safety Belts Properly

This section is only for people of adult size.

Be aware that there are special things to know about safety belts and children. And there are different rules for smaller children and babies. If a child will be riding in your vehicle, see *Older Children on page 1-32* or *Infants and Young Children on page 1-35*. Follow those rules for everyone's protection.

It is very important for all occupants to buckle up. Statistics show that unbelted people are hurt more often in crashes than those who are wearing safety belts.

Occupants who are not buckled up can be thrown out of the vehicle in a crash. And they can strike others in the vehicle who are wearing safety belts.

First, before you or your passenger(s) wear a safety belt, there is important information you should know.

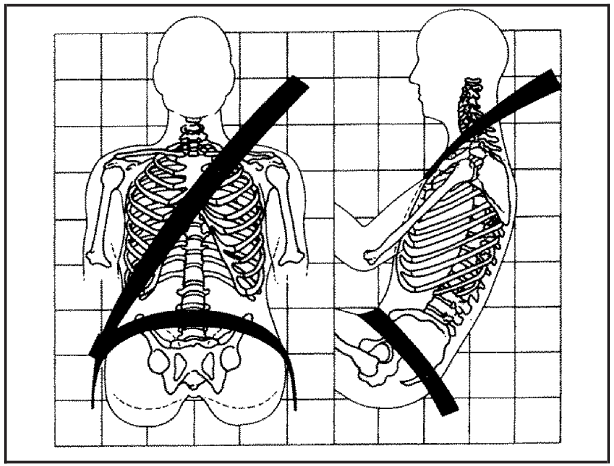

Sit up straight and always keep your feet on the floor in front of you. The lap part of the belt should be worn low and snug on the hips, just touching the thighs. In a crash, this applies force to the strong pelvic bones and you would be less likely to slide under the lap belt. If you slid under it, the belt would apply force on your abdomen. This could cause serious or even fatal injuries. The shoulder belt should go over the shoulder and across the chest. These parts of the body are best able to take belt restraining forces.

The shoulder belt locks if there is a sudden stop or crash.

Q: What is wrong with this?

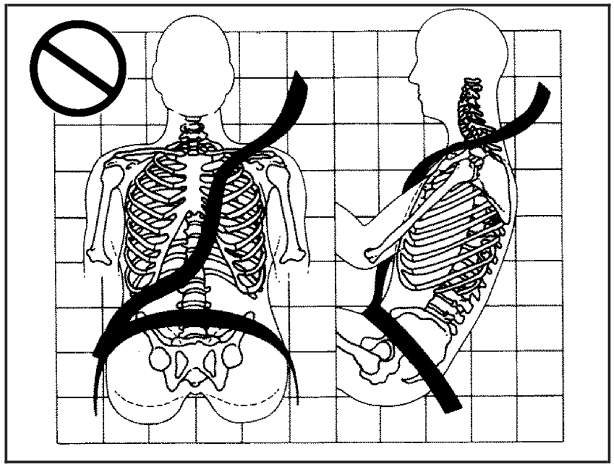

A: The shoulder belt is too loose. It will not give as much protection this way.

⚠ CAUTION:

You can be seriously hurt if your shoulder belt is too loose. In a crash, you would move forward too much, which could increase injury. The shoulder belt should fit snugly against your body.

Q: What is wrong with this?

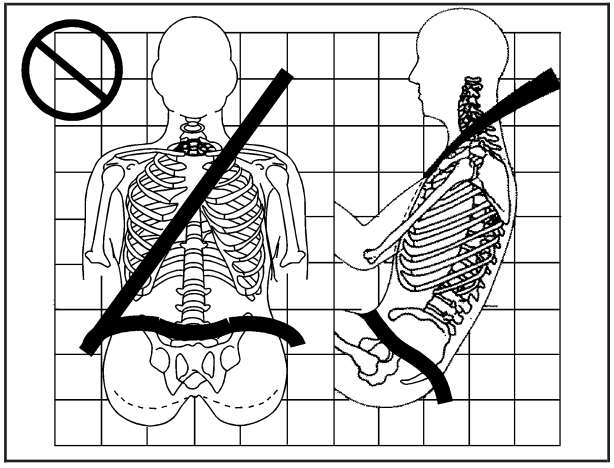

A: The lap belt is too loose. It will not give nearly as much protection this way.

⚠ CAUTION:

You can be seriously hurt if your lap belt is too loose. In a crash, you could slide under the lap belt and apply force on your abdomen. This could cause serious or even fatal injuries. The lap belt should be worn low and snug on the hips, just touching the thighs.

Q: What is wrong with this?

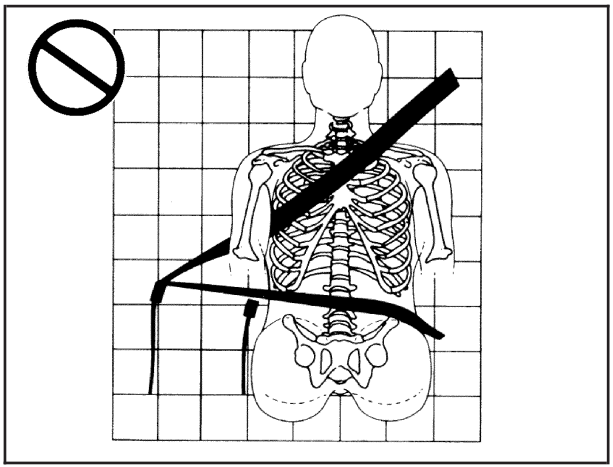

A: The belt is buckled in the wrong place.

⚠ CAUTION:

You can be seriously injured if your belt is buckled in the wrong place like this. In a crash, the belt would go up over your abdomen. The belt forces would be there, not on the pelvic bones. This could cause serious internal injuries. Always buckle your belt into the buckle nearest you.

Q: What is wrong with this?

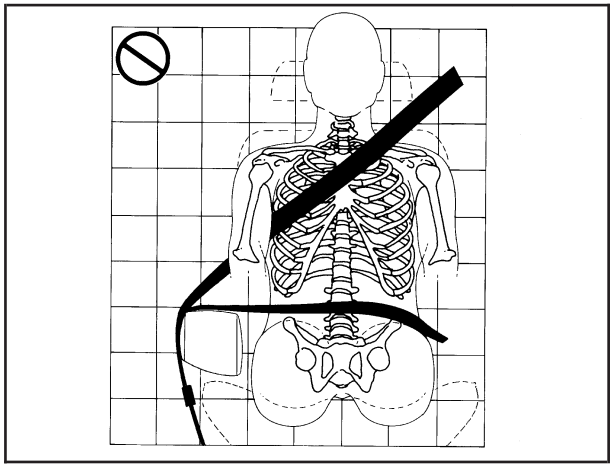

A: The belt is over an armrest.

⚠ CAUTION:

You can be seriously injured if your belt goes over an armrest like this. The belt would be much too high. In a crash, you can slide under the belt. The belt force would then be applied on the abdomen, not on the pelvic bones, and that could cause serious or fatal injuries. Be sure the belt goes under the armrests.

Q: What is wrong with this?

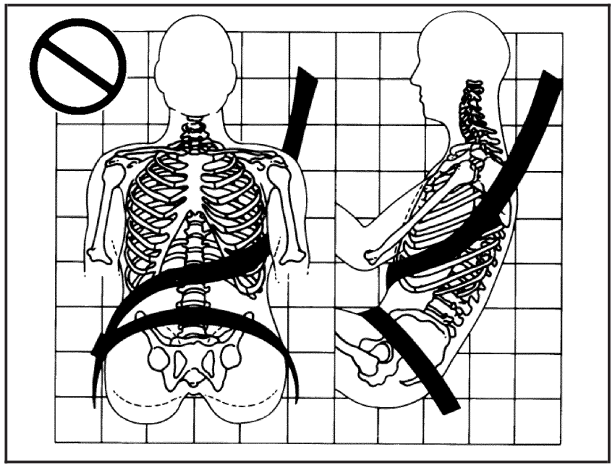

A: The shoulder belt is worn under the arm.
It should be worn over the shoulder at all times.

⚠ CAUTION:

You can be seriously injured if you wear the shoulder belt under your arm. In a crash, your body would move too far forward, which would increase the chance of head and neck injury. Also, the belt would apply too much force to the ribs, which are not as strong as shoulder bones. You could also severely injure internal organs like your liver or spleen. The shoulder belt should go over the shoulder and across the chest.

Q: What is wrong with this?

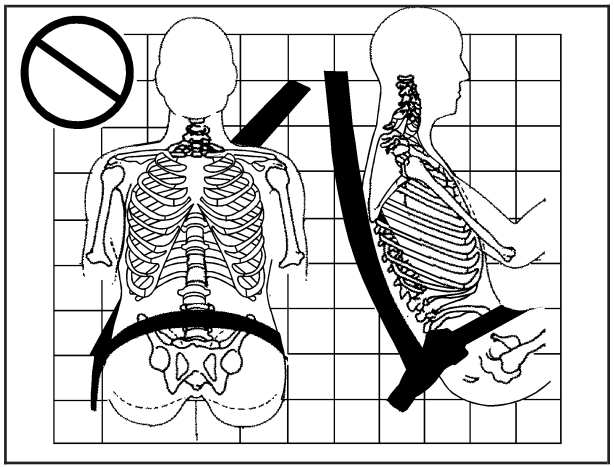

A: The belt is behind the body.

⚠ CAUTION:

You can be seriously injured by not wearing the lap-shoulder belt properly. In a crash, you would not be restrained by the shoulder belt. Your body could move too far forward increasing the chance of head and neck injury. You might also slide under the lap belt. The belt force would then be applied right on the abdomen. That could cause serious or fatal injuries. The shoulder belt should go over the shoulder and across the chest.

Q: What is wrong with this?

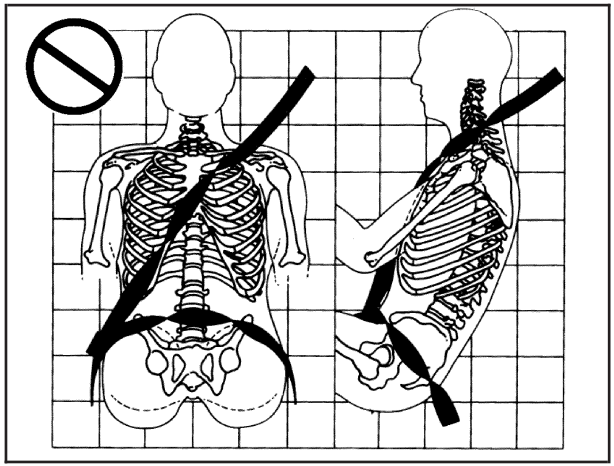

A: The belt is twisted across the body.

⚠ CAUTION:

You can be seriously injured by a twisted belt. In a crash, you would not have the full width of the belt to spread impact forces. If a belt is twisted, make it straight so it can work properly, or ask your dealer/retailer to fix it.

Lap-Shoulder Belt

All seating positions in your vehicle have a lap-shoulder belt.

Here is how to wear a lap-shoulder belt properly.

1. Adjust the seat, if the seat is adjustable, so you can sit up straight. To see how, see “Seats” in the Index.
2. Pick up the latch plate and pull the belt across you. Do not let it get twisted.

   The lap-shoulder belt may lock if you pull the belt across you very quickly. If this happens, let the belt go back slightly to unlock it. Then pull the belt across you more slowly.

   If you ever pull the shoulder portion of a passenger belt out all the way, you may engage the child restraint locking feature. If this happens, just let the belt go back all the way and start again.

   Engaging the child restraint locking feature may affect the passenger sensing system. See *Passenger Sensing System on page 1-65*.

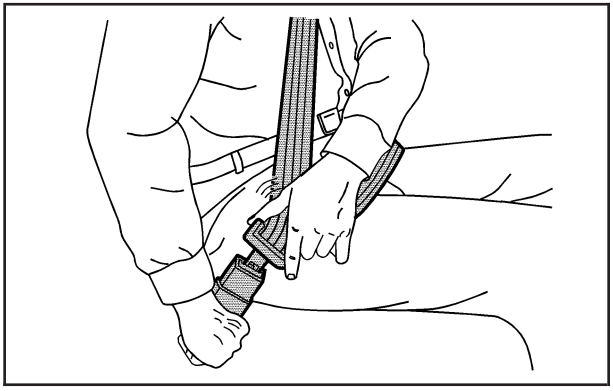

3. Push the latch plate into the buckle until it clicks.

   Pull up on the latch plate to make sure it is secure. If the belt is not long enough, see *Safety Belt Extender on page 1-32*.

   Make sure the release button on the buckle is positioned so you would be able to unbuckle the safety belt quickly if necessary.
4. If equipped with a shoulder belt height adjuster, move it to the height that is right for you. Improper shoulder belt height adjustment could reduce the effectiveness of the safety belt in a crash. See “Shoulder Belt Height Adjustment” later in this section.

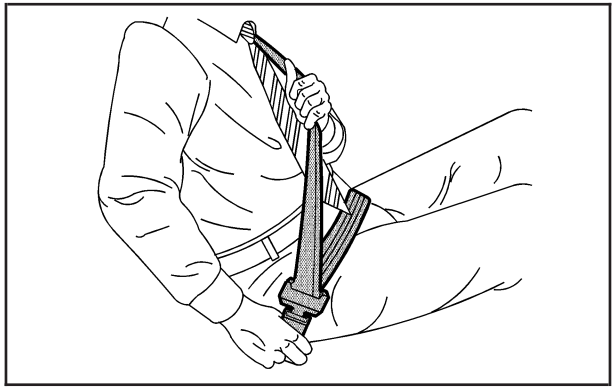

5. To make the lap part tight, pull up on the shoulder belt.

   It may be necessary to pull stitching on the safety belt through the latch plate to fully tighten the lap belt on smaller occupants.

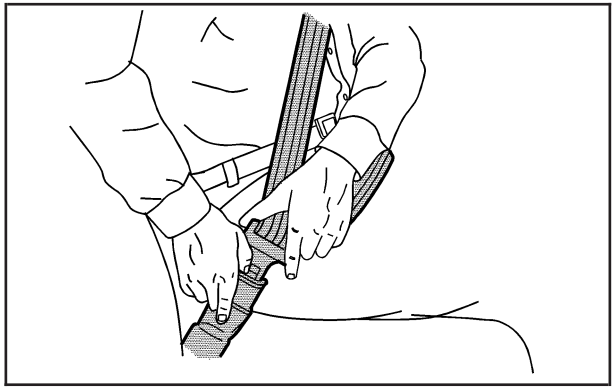

To unlatch the belt, just push the button on the buckle. The belt should go back out of the way.

Before you close a door, be sure the belt is out of the way. If you slam the door on it, you can damage both the belt and your vehicle.

Shoulder Belt Height Adjuster

Your vehicle has a shoulder belt height adjuster for the driver and right front passenger position.

Adjust the height so that the shoulder portion of the belt is centered on your shoulder. The belt should be away from your face and neck, but not falling off your shoulder. Improper shoulder belt height adjustment could reduce the effectiveness of the safety belt in a crash.

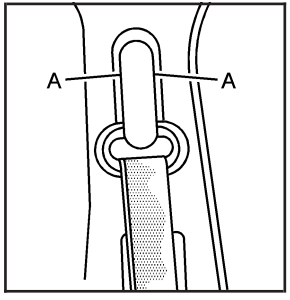

To move it down, squeeze the buttons (A) on the sides of the height adjuster and move the height adjuster to the desired position.

You can move the adjuster up just by pushing up on the shoulder belt guide.

After you move the adjuster to where you want it, try to move it down without squeezing the buttons to make sure it has locked into position.

Safety Belt Pretensioners

Your vehicle has safety belt pretensioners for front outboard occupants. Although you cannot see them, they are part of the safety belt assembly. They can help tighten the safety belts during the early stages of a moderate to severe frontal, near frontal, or rear crash if the threshold conditions for pretensioner activation are met. And, if your vehicle has side impact airbags, safety belt pretensioners can help tighten the safety belts in a side crash or a rollover event.

Pretensioners work only once. If they activate in a crash, you will need to get new ones, and probably other new parts for your safety belt system. See *Replacing Restraint System Parts After a Crash on page 1-73*.

Rear Safety Belt Comfort Guides

Rear shoulder belt comfort guides may provide added safety belt comfort for older children who have outgrown booster seats and for some adults. When installed on a shoulder belt, the comfort guide positions the belt away from the neck and head.

There is one guide for each rear passenger position in the rear seat. Here is how to install a comfort guide to the shoulder belt:

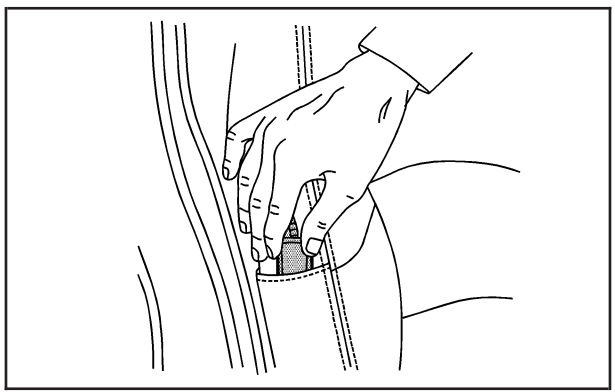

1. Remove the guide from its storage pocket on the side of the seatback.

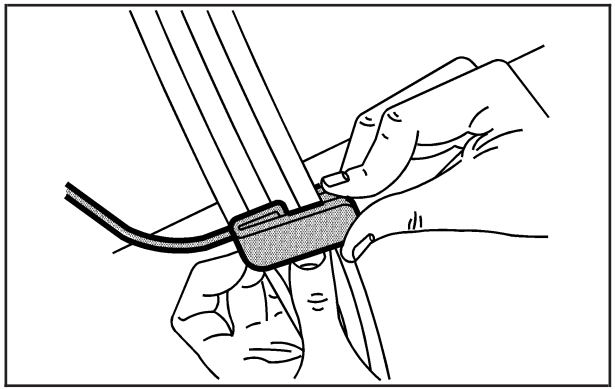

2. Place the guide over the belt and insert the two edges of the belt into the slots of the guide.

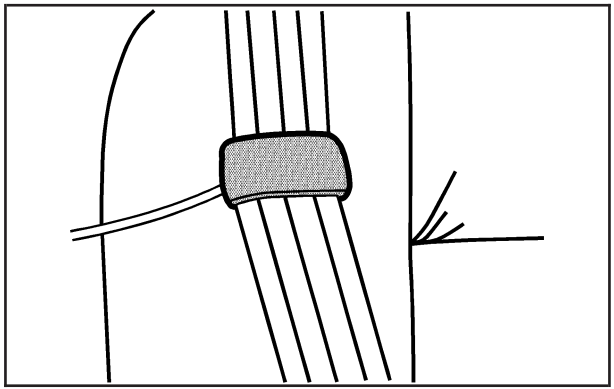

3. Be sure that the belt is not twisted and it lies flat. The elastic cord must be under the belt and the guide on top.

⚠ CAUTION:

A safety belt that is not properly worn may not provide the protection needed in a crash. The person wearing the belt could be seriously injured. The shoulder belt should go over the shoulder and across the chest. These parts of the body are best able to take belt restraining forces.

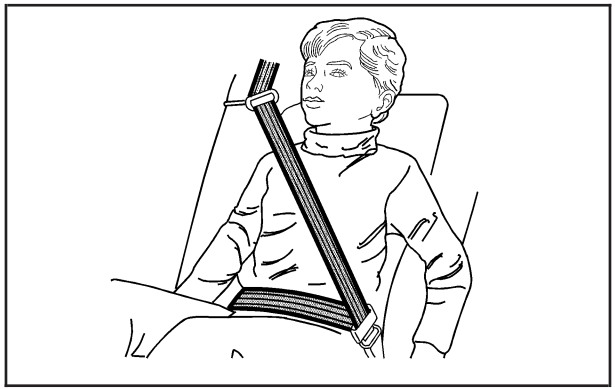

4. Buckle, position, and release the safety belt as described previously in this section. Make sure that the shoulder belt crosses the shoulder.

To remove and store the comfort guide, squeeze the belt edges together so that you can take them out of the guide. Slide the guide into its storage pocket on the side of the seatback.

Safety Belt Use During Pregnancy

Safety belts work for everyone, including pregnant women. Like all occupants, they are more likely to be seriously injured if they do not wear safety belts.

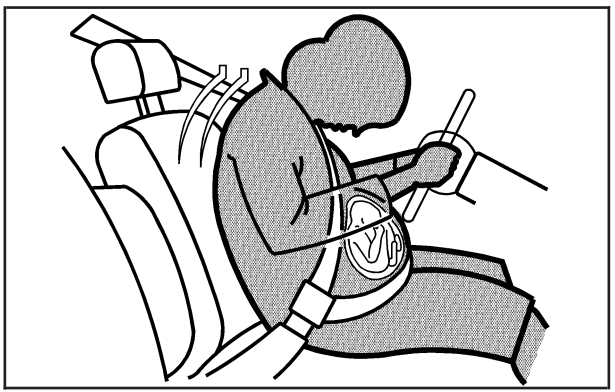

A pregnant woman should wear a lap-shoulder belt, and the lap portion should be worn as low as possible, below the rounding, throughout the pregnancy.

The best way to protect the fetus is to protect the mother. When a safety belt is worn properly, it is more likely that the fetus will not be hurt in a crash. For pregnant women, as for anyone, the key to making safety belts effective is wearing them properly.

Safety Belt Extender

If the vehicle's safety belt will fasten around you, you should use it.

But if a safety belt is not long enough, your dealer/retailer will order you an extender. When you go in to order it, take the heaviest coat you will wear, so the extender will be long enough for you. To help avoid personal injury, do not let someone else use it, and use it only for the seat it is made to fit. The extender has been designed for adults. Never use it for securing child seats. To wear it, attach it to the regular safety belt. For more information, see the instruction sheet that comes with the extender.

Child Restraints

Older Children

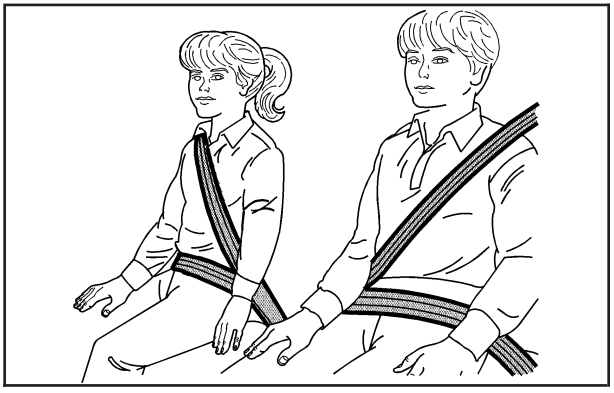

Older children who have outgrown booster seats should wear the vehicle's safety belts.

The manufacturer's instructions that come with the booster seat, state the weight and height limitations for that booster. Use a booster seat with a lap-shoulder belt until the child passes the below fit test:

- Sit all the way back on the seat. Do the knees bend at the seat edge? If yes, continue. If no, return to the booster seat.
- Buckle the lap-shoulder belt. Does the shoulder belt rest on the shoulder? If yes, continue. If no, try using the rear safety belt comfort guide. See "Rear Safety Belt Comfort Guides" under *Lap-Shoulder Belt on page 1-26* for more information. If the shoulder belt still does not rest on the shoulder, then return to the booster seat.
- Does the lap belt fit low and snug on the hips, touching the thighs? If yes, continue. If no, return to the booster seat.
- Can proper safety belt fit be maintained for the length of the trip? If yes, continue. If no, return to the booster seat.

Q: What is the proper way to wear safety belts?

A: An older child should wear a lap-shoulder belt and get the additional restraint a shoulder belt can provide. The shoulder belt should not cross the face or neck. The lap belt should fit snugly below the hips, just touching the top of the thighs. This applies belt force to the child's pelvic bones in a crash. It should never be worn over the abdomen, which could cause severe or even fatal internal injuries in a crash.

Also see "Rear Safety Belt Comfort Guides" under *Lap-Shoulder Belt on page 1-26*.

According to accident statistics, children and infants are safer when properly restrained in the rear seating positions than in the front seating positions.

In a crash, children who are not buckled up can strike other people who are buckled up, or can be thrown out of the vehicle. Older children need to use safety belts properly.

⚠ CAUTION:

Never do this.

Here two children are wearing the same belt. The belt cannot properly spread the impact forces. In a crash, the two children can be crushed together and seriously injured. A belt must be used by only one person at a time.

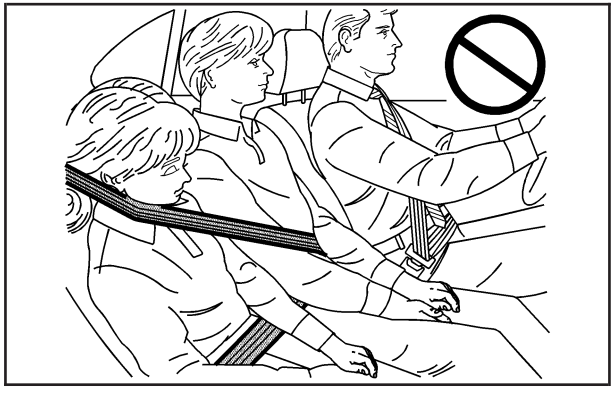

⚠ CAUTION:

Never do this.

Here a child is sitting in a seat that has a lap-shoulder belt, but the shoulder part is behind the child. In a crash, the child would not be restrained by the shoulder belt. The child might slide under the lap belt. The belt force would then be applied right on the abdomen. That could cause serious or fatal injuries. The child could also move too far forward increasing the chance of head and neck injury. The shoulder belt should go over the shoulder and across the chest.

Infants and Young Children

Everyone in a vehicle needs protection! This includes infants and all other children. Neither the distance traveled nor the age and size of the traveler changes the need, for everyone, to use safety restraints. In fact, the law in every state in the United States and in every Canadian province says children up to some age must be restrained while in a vehicle.

⚠ CAUTION:

Children can be seriously injured or strangled if a shoulder belt is wrapped around their neck and the safety belt continues to tighten. Never leave children unattended in a vehicle and never allow children to play with the safety belts.

Every time infants and young children ride in vehicles, they should have the protection provided by appropriate restraints. Children who are not restrained properly can strike other people, or can be thrown out of the vehicle. In addition, young children should not use the vehicle's adult safety belts alone; they need to use a child restraint.

⚠ CAUTION:

People should never hold an infant in their arms while riding in a vehicle. An infant does not weigh much — until a crash. During a crash an infant will become so heavy it is not possible to hold it. For example, in a crash at only 25 mph (40 km/h), a 12 lb (5.5 kg) infant will suddenly become a 240 lb (110 kg) force on a person's arms. An infant should be secured in an appropriate restraint.

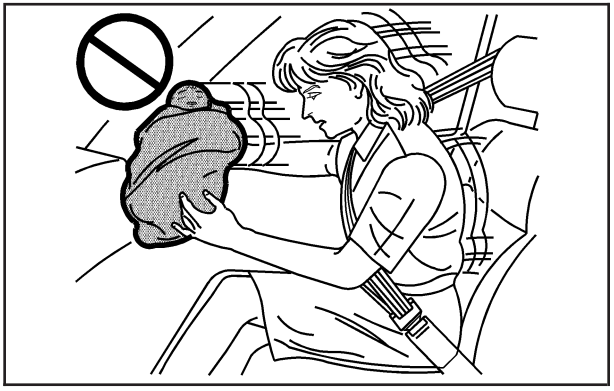

⚠ CAUTION:

Children who are up against, or very close to, any airbag when it inflates can be seriously injured or killed. Airbags plus lap-shoulder belts offer protection for adults and older children, but not for young children and infants. Neither the vehicle's safety belt system nor its airbag system is designed for them. Young children and infants need the protection that a child restraint system can provide.

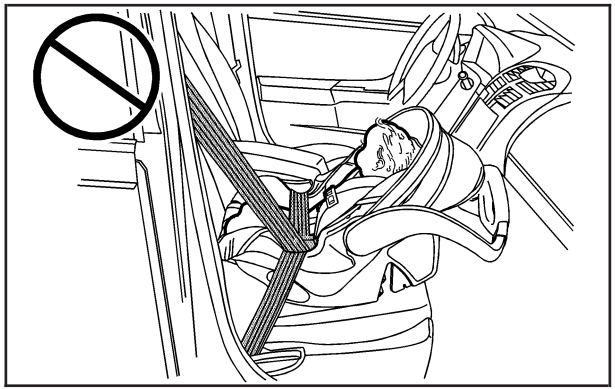

Q: What are the different types of add-on child restraints?

A: Add-on child restraints, which are purchased by the vehicle's owner, are available in four basic types. Selection of a particular restraint should take into consideration not only the child's weight, height, and age but also whether or not the restraint will be compatible with the motor vehicle in which it will be used.

For most basic types of child restraints, there are many different models available. When purchasing a child restraint, be sure it is designed to be used in a motor vehicle. If it is, the restraint will have a label saying that it meets federal motor vehicle safety standards.

The restraint manufacturer's instructions that come with the restraint state the weight and height limitations for a particular child restraint. In addition, there are many kinds of restraints available for children with special needs.

⚠ CAUTION:

Newborn infants need complete support, including support for the head and neck. This is necessary because a newborn infant's neck is weak and its head weighs so much compared with the rest of its body. In a crash, an infant in a rear-facing seat settles into the restraint, so the crash forces can be distributed across the strongest part of an infant's body, the back and shoulders. Infants should always be secured in appropriate infant restraints.

⚠ CAUTION:

The body structure of a young child is quite unlike that of an adult or older child, for whom the safety belts are designed. A young child's hip bones are still so small that the vehicle's regular safety belt may not remain low on the hip bones, as it should. Instead, it may settle up around the child's abdomen. In a crash, the belt would apply force on a body area that is unprotected by any bony structure. This alone could cause serious or fatal injuries. Young children should always be secured in appropriate child restraints.

Child Restraint Systems

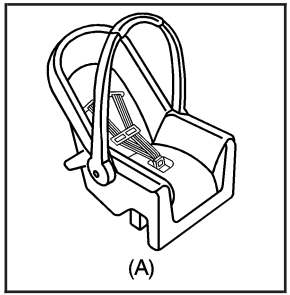

A rear-facing infant seat (A) provides restraint with the seating surface against the back of the infant.

The harness system holds the infant in place and, in a crash, acts to keep the infant positioned in the restraint.

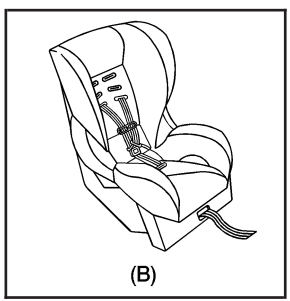

A forward-facing child seat (B) provides restraint for the child's body with the harness.

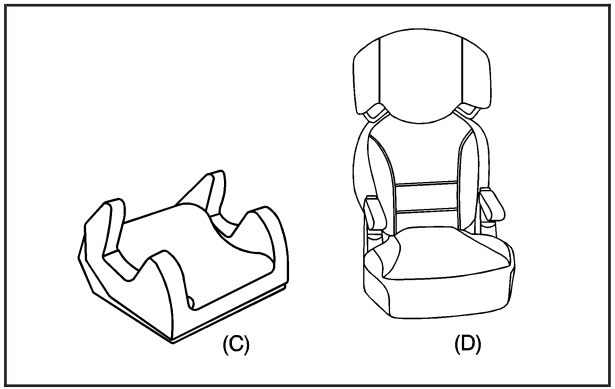

A booster seat (C-D) is a child restraint designed to improve the fit of the vehicle's safety belt system. A booster seat can also help a child to see out the window.

Securing an Add-On Child Restraint in the Vehicle

⚠ CAUTION:

A child can be seriously injured or killed in a crash if the child restraint is not properly secured in the vehicle. Make sure the child restraint is properly installed in the vehicle using the vehicle's safety belt or LATCH system, following the instructions that came with that restraint, and also the instructions in this manual.

To help reduce the chance of injury, the child restraint must be secured in the vehicle. Child restraint systems must be secured in vehicle seats by lap belts or the lap belt portion of a lap-shoulder belt, or by the LATCH system. See *Lower Anchors and Tethers for Children (LATCH) on page 1-43* for more information. A child can be endangered in a crash if the child restraint is not properly secured in the vehicle.

When securing an add-on child restraint, refer to the instructions that come with the restraint which may be on the restraint itself or in a booklet, or both, and to this manual. The child restraint instructions are important, so if they are not available, obtain a replacement copy from the manufacturer.

Keep in mind that an unsecured child restraint can move around in a collision or sudden stop and injure people in the vehicle. Be sure to properly secure any child restraint in your vehicle — even when no child is in it.

Securing the Child Within the Child Restraint

⚠ CAUTION:

A child can be seriously injured or killed in a crash if the child is not properly secured in the child restraint. Because there are different systems, it is important to refer to the instructions that come with the restraint. Make sure the child is properly secured, following the instructions that came with that restraint.

Where to Put the Restraint

Accident statistics show that children are safer if they are restrained in the rear rather than the front seat.

We recommend that children and child restraints be secured in a rear seat, including: an infant or a child riding in a rear-facing child restraint; a child riding in a forward-facing child seat; an older child riding in a booster seat; and children, who are large enough, using safety belts.

A label on your sun visor says, “Never put a rear-facing child seat in the front.” This is because the risk to the rear-facing child is so great, if the airbag deploys.

⚠ CAUTION:

A child in a rear-facing child restraint can be seriously injured or killed if the right front passenger’s airbag inflates. This is because the back of the rear-facing child restraint would be very close to the inflating airbag.

Even though the passenger sensing system is designed to turn off the right front passenger’s frontal airbag if the system detects a rear-facing child restraint, no system is fail-safe, and no one can guarantee that an airbag will not deploy under some unusual circumstance, even though it is turned off. We recommend that rear-facing child restraints be secured in a rear seat, even if the airbag is off.

If you secure a forward-facing child restraint in the right front seat, always move the front passenger seat as far back as it will go. It is better to secure the child restraint in a rear seat.

See *Passenger Sensing System on page 1-65* for additional information.

When securing a child restraint in a rear seating position, study the instructions that came with your child restraint to make sure it is compatible with this vehicle.

Wherever you install a child restraint, be sure to secure the child restraint properly.

Keep in mind that an unsecured child restraint can move around in a collision or sudden stop and injure people in the vehicle. Be sure to properly secure any child restraint in your vehicle — even when no child is in it.

Lower Anchors and Tethers for Children (LATCH)

The LATCH system holds a child restraint during driving or in a crash. This system is designed to make installation of a child restraint easier. The LATCH system uses anchors in the vehicle and attachments on the child restraint that are made for use with the LATCH system.

Make sure that a LATCH-compatible child restraint is properly installed using the anchors, or use the vehicle's safety belts to secure the restraint, following the instructions that came with that restraint, and also the instructions in this manual. When installing a child restraint with a top tether, you must also use either the lower anchors or the safety belts to properly secure the child restraint. A child restraint must never be installed using only the top tether and anchor.

In order to use the LATCH system in your vehicle, you need a child restraint that has LATCH attachments. The child restraint manufacturer will provide you with instructions on how to use the child restraint and its attachments. The following explains how to attach a child restraint with these attachments in your vehicle.

Not all vehicle seating positions or child restraints have lower anchors and attachments or top tether anchors and attachments.

Lower Anchors

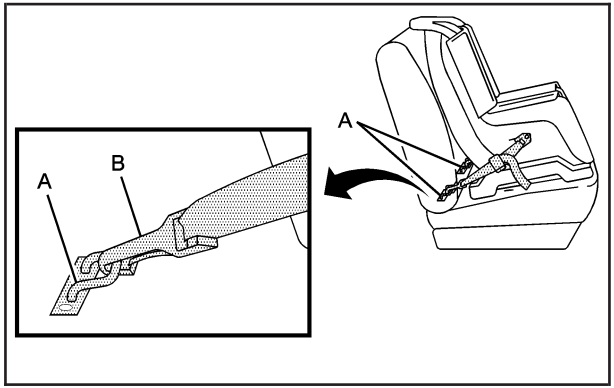

Lower anchors (A) are metal bars built into the vehicle. There are two lower anchors for each LATCH seating position that will accommodate a child restraint with lower attachments (B).

Top Tether Anchor

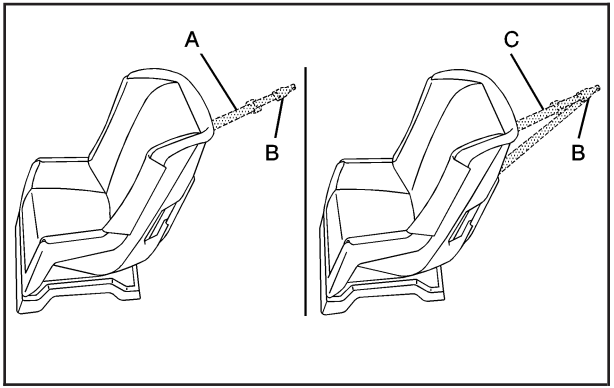

A top tether (A, C) anchors the top of the child restraint to the vehicle. A top tether anchor is built into the vehicle. The top tether attachment (B) on the child restraint connects to the top tether anchor in the vehicle in order to reduce the forward movement and rotation of the child restraint during driving or in a crash.

Your child restraint may have a single tether (A) or a dual tether (C). Either will have a single attachment (B) to secure the top tether to the anchor.

Some child restraints that have top tethers are designed for use with or without the top tether being attached. Others require the top tether always to be attached. In Canada, the law requires that forward-facing child restraints have a top tether, and that the tether be attached. Be sure to read and follow the instructions for your child restraint.

If the child restraint does not have a top tether, one can be obtained, in kit form, for many child restraints. Ask the child restraint manufacturer whether or not a kit is available.

Lower Anchor and Top Tether Anchor Locations

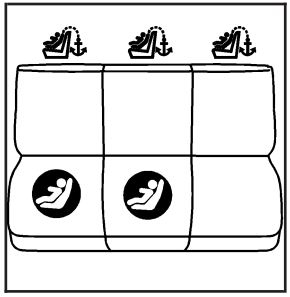

Rear Seat

(Top Tether Anchor): Seating positions with top tether anchors.

(Lower Anchor): Seating positions with two lower anchors.

The right side rear passenger and center seating positions have exposed metal anchors located in the crease between the seatback and the seat cushion.

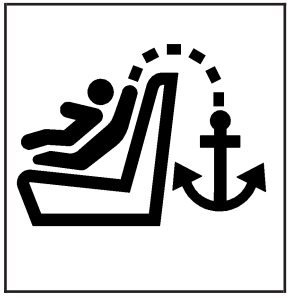

To assist you in locating the top tether anchors, the top tether anchor symbol is located near the top tether anchors.

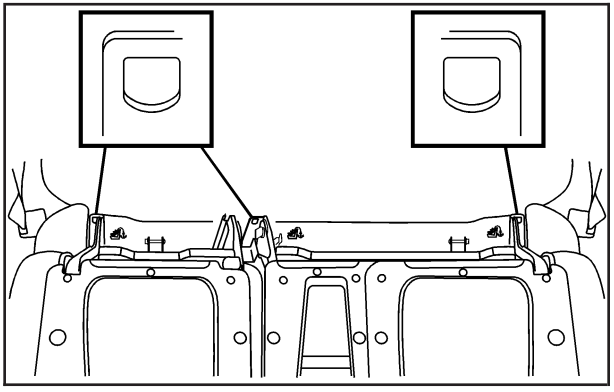

The top tether anchors are located on the back of the rear seat frame above the floor for each rear seating position. Fold down the rear seatback(s) to access the anchors. See *Rear Seat Operation on page 1-10*. Be sure to use an anchor located on the same side of the vehicle as the seating position where the child restraint will be placed.

Do not secure a child restraint in a position without a top tether anchor if a national or local law requires that the top tether be attached, or if the instructions that come with the child restraint say that the top tether must be attached.

Accident statistics show that children are safer if they are restrained in the rear rather than the front seat. See *Where to Put the Restraint on page 1-42* for additional information.

Securing a Child Restraint Designed for the LATCH System

⚠ CAUTION:

If a LATCH-type child restraint is not attached to anchors, the restraint will not be able to protect the child correctly. In a crash, the child could be seriously injured or killed. Make sure that a LATCH-type child restraint is properly installed using the anchors, or use the vehicle's safety belts to secure the restraint, following the instructions that came with that restraint, and also the instructions in this manual.

⚠ CAUTION:

Each top tether anchor and lower anchor in the vehicle is designed to hold only one child restraint. Attaching more than one child restraint to a single anchor could cause the anchor or attachment to come loose or even break during a crash. A child or others could be injured if this happens. To help prevent injury to people and damage to your vehicle, attach only one child restraint per anchor.

⚠ CAUTION:

Children can be seriously injured or strangled if a shoulder belt is wrapped around their neck and the safety belt continues to tighten. Secure any unused safety belts behind the child restraint so children cannot reach them. Pull the shoulder belt all the way out of the retractor to set the lock, if your vehicle has one, after the child restraint has been installed. Be sure to follow the instructions of the child restraint manufacturer.

Notice: **Contact between the child restraint LATCH attachment parts and the vehicle's safety belt assembly may cause damage to these parts. Make sure when securing unused safety belts behind the child restraint that there is no contact between the child restraint LATCH attachment parts and the vehicle's safety belt assembly.**

Folding an empty rear seat with the safety belts secured may cause damage to the safety belt or the seat. When removing the child restraint, always remember to return the safety belts to their normal, stowed position before folding the rear seat.

1. If the child restraint manufacturer recommends that the top tether be attached, attach the top tether to the top tether anchor, if there is one. Refer to the child restraint instructions and the following steps:
   1.1. To access the top tether anchors, raise the seat cushion by pulling up on the strap loop at the rear of the seat cushion and fold the seat cushion forward. Then fold the seatback forward until it is flat. See *Rear Seat Operation on page 1-10* for additional information.
   1.2. Place the child restraint in the vehicle, near the seating position that you are using.

1.3. Route the top tether according to your child restraint instructions and the following instructions:

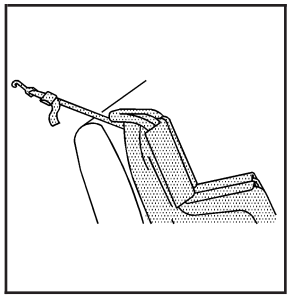

If the position you are using does not have a headrest or head restraint and you are using a single tether, route the tether over the seatback.

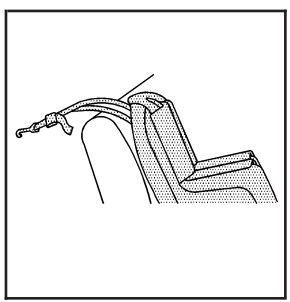

If the position you are using does not have a headrest or head restraint and you are using a dual tether, route the tether over the seatback.

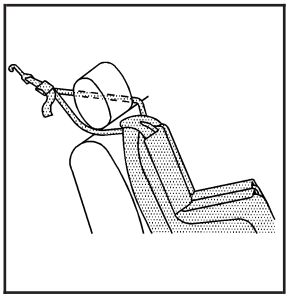

If the position you are using has an adjustable headrest or head restraint and you are using a dual tether, route the tether around the headrest or head restraint.

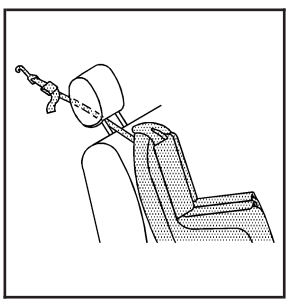

If the position you are using has an adjustable headrest or head restraint and you are using a single tether, raise the headrest or head restraint and route the tether under the headrest or head restraint and in between the headrest or head restraint posts.

1.4. Attach the top tether attachment to the top tether anchor.

⚠ CAUTION:

If the seatback is not locked, it could move forward in a sudden stop or crash. That could cause injury to the person sitting there. Always push and pull on the seatback to be sure it is locked.

1.5. Lift the seatback up and push it rearward. Then lower the seat cushion until the seatback and the seat cushion lock into position.

2. Attach the lower attachments to the lower anchors. If the child restraint does not have lower attachments or the desired seating position does not have lower anchors, secure the child restraint with the top tether and the safety belts. Refer to your child restraint manufacturer instructions and the instructions in this manual.
   2.1. Find the lower anchors for the desired seating position.
   2.2. Put the child restraint on the seat.
   2.3. Attach and tighten the lower attachments on the child restraint to the lower anchors.
3. Tighten the top tether.
4. Push and pull the child restraint in different directions to be sure it is secure.

Securing a Child Restraint in a Rear Seat Position

When securing a child restraint in a rear seating position, study the instructions that came with your child restraint to make sure it is compatible with this vehicle.

If your child restraint has the LATCH system, see *Lower Anchors and Tethers for Children (LATCH) on page 1-43* for how to install your child restraint using LATCH. If you secure a child restraint using a safety belt and it uses a top tether, see *Lower Anchors and Tethers for Children (LATCH) on page 1-43* for top tether anchor locations.

Do not secure a child restraint in a position without a top tether anchor if a national or local law requires that the top tether be anchored, or if the instructions that come with the child restraint say that the top strap must be anchored.

In Canada, the law requires that forward-facing child restraints have a top tether, and that the tether be attached.

If your child restraint does not have the LATCH system, you will be using the safety belt to secure the child restraint in this position. Be sure to follow the instructions that came with the child restraint. Secure the child in the child restraint when and as the instructions say.

If you need to install more than one child restraint in the rear seat, be sure to read *Where to Put the Restraint on page 1-42*.

1. If your child restraint manufacturer recommends using a top tether, attach and tighten the top tether to the top tether anchor. Refer to the instructions that came with the child restraint and see *Lower Anchors and Tethers for Children (LATCH) on page 1-43*.
2. Put the child restraint on the seat.
3. Pick up the latch plate, and run the lap and shoulder portions of the vehicle's safety belt through or around the restraint. The child restraint instructions will show you how.

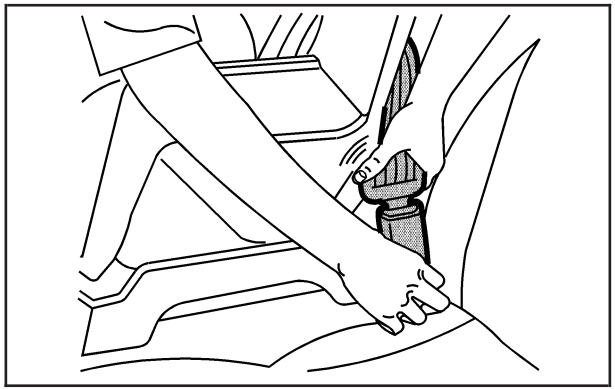

4. Push the latch plate into the buckle until it clicks.

   Make sure the release button is positioned so you would be able to unbuckle the safety belt quickly if necessary.

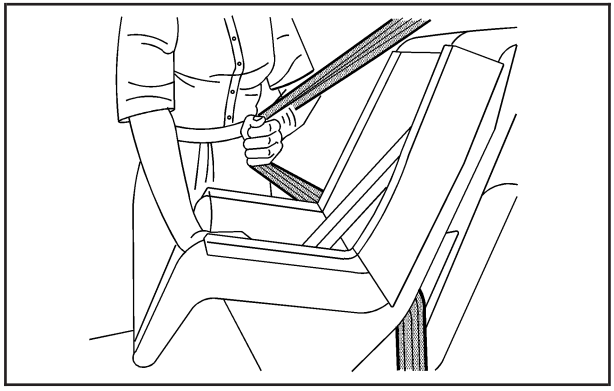

5. Pull the rest of the shoulder belt all the way out of the retractor to set the lock.

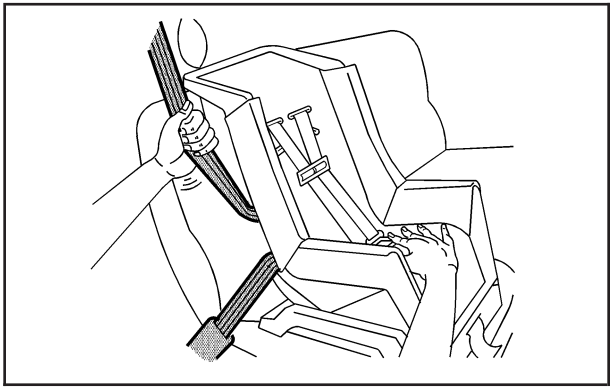

6. To tighten the belt, push down on the child restraint, pull the shoulder portion of the belt to tighten the lap portion of the belt and feed the shoulder belt back into the retractor. If you are using a forward-facing child restraint, you may find it helpful to use your knee to push down on the child restraint as you tighten the belt.
7. Push and pull the child restraint in different directions to be sure it is secure.

To remove the child restraint, unbuckle the vehicle's safety belt and let it go back all the way. If the top tether is attached to a top tether anchor, disconnect it.

Securing a Child Restraint in the Right Front Seat Position

Your vehicle has airbags. A rear seat is a safer place to secure a forward-facing child restraint. See *Where to Put the Restraint on page 1-42*.

In addition, your vehicle has a passenger sensing system which is designed to turn off the right front passenger's frontal airbag under certain conditions. See *Passenger Sensing System on page 1-65* and *Passenger Airbag Status Indicator on page 3-33* for more information on this, including important safety information.

A label on your sun visor says, "Never put a rear-facing child seat in the front." This is because the risk to the rear-facing child is so great, if the airbag deploys.

⚠ CAUTION:

A child in a rear-facing child restraint can be seriously injured or killed if the right front passenger's airbag inflates. This is because the back of the rear-facing child restraint would be very close to the inflating airbag.

CAUTION: (Continued)

CAUTION: (Continued)

Even though the passenger sensing system is designed to turn off the right front passenger's frontal airbag if the system detects a rear-facing child restraint, no system is fail-safe, and no one can guarantee that an airbag will not deploy under some unusual circumstance, even though it is turned off. We recommend that rear-facing child restraints be secured in a rear seat, even if the airbag is off.

If you secure a forward-facing child restraint in the right front seat, always move the front passenger seat as far back as it will go. It is better to secure the child restraint in a rear seat.

See *Passenger Sensing System on page 1-65* for additional information.

If your child restraint has the LATCH system, see *Lower Anchors and Tethers for Children (LATCH) on page 1-43* for how to install your child restraint using LATCH. If you secure a child restraint using a safety belt and it uses a top tether, see *Lower Anchors and Tethers for Children (LATCH) on page 1-43* for top tether anchor locations.

Do not secure a child seat in a position without a top tether anchor if a national or local law requires that the top tether be anchored, or if the instructions that come with the child restraint say that the top strap must be anchored.

In Canada, the law requires that forward-facing child restraints have a top tether, and that the tether be attached.

You will be using the lap-shoulder belt to secure the child restraint in this position. Follow the instructions that came with the child restraint.

1. Move the seat as far back as it will go before securing the forward-facing child restraint.

   When the passenger sensing system has turned off the right front passenger's frontal airbag, the off indicator on the passenger airbag status indicator should light and stay lit when you start the vehicle. See *Passenger Airbag Status Indicator on page 3-33*.

2. Put the child restraint on the seat.

3. Pick up the latch plate, and run the lap and shoulder portions of the vehicle's safety belt through or around the restraint. The child restraint instructions will show you how.

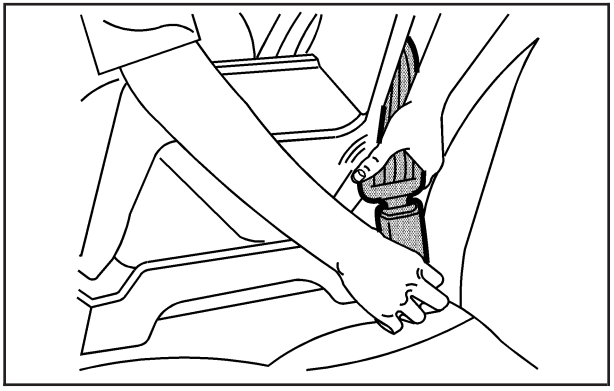

4. Push the latch plate into the buckle until it clicks.

   Make sure the release button is positioned so you would be able to unbuckle the safety belt quickly if necessary.

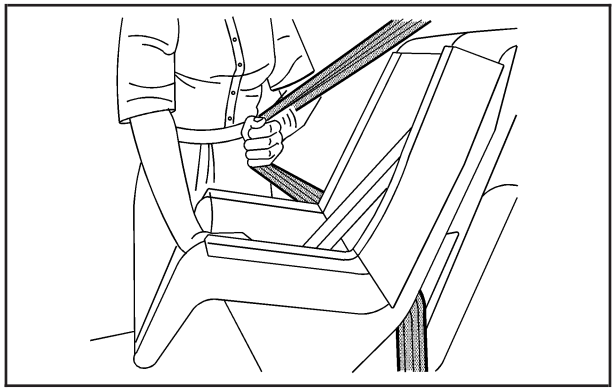

5. Pull the rest of the shoulder belt all the way out of the retractor to set the lock.

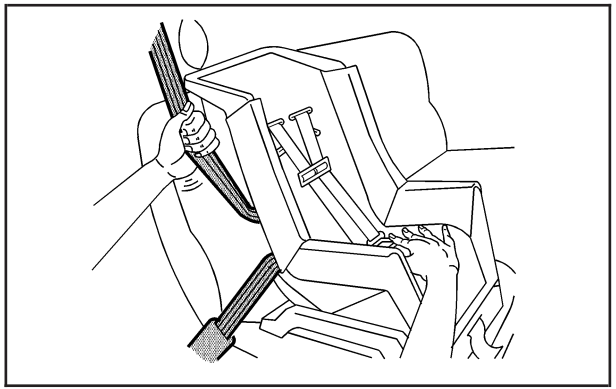

6. To tighten the belt, push down on the child restraint, pull the shoulder portion of the belt to tighten the lap portion of the belt and feed the shoulder belt back into the retractor. If you are using a forward-facing child restraint, you may find it helpful to use your knee to push down on the child restraint as you tighten the belt.
7. Push and pull the child restraint in different directions to be sure it is secure.

If the airbag is off, the off indicator in the passenger airbag status indicator will come on and stay on when the vehicle is started.

If a child restraint has been installed and the on indicator is lit, turn the vehicle off. Remove the child restraint from the vehicle and reinstall the child restraint.

If, after reinstalling the child restraint and restarting the vehicle, the on indicator is still lit, check to make sure that the vehicle's seatback is not pressing the child restraint into the seat cushion. If this happens, slightly recline the vehicle's seatback and adjust the seat cushion if possible. Also make sure the child restraint is not trapped under the vehicle head restraint. If this happens, adjust the head restraint.

Remove any additional material from the seat such as blankets, cushions, seat covers, seat heaters or seat massagers before reinstalling or securing the child restraint.

If the on indicator is still lit, secure the child in the child restraint in a rear seat position in the vehicle and check with your dealer/retailer.

To remove the child restraint, unbuckle the vehicle's safety belt and let it go back all the way.

Airbag System

Your vehicle has the following airbags:

- A frontal airbag for the driver.
- A frontal airbag for the right front passenger.
- A roof-rail airbag for the driver and the passenger seated directly behind the driver.
- A roof-rail airbag for the right front passenger and the passenger seated directly behind the right front passenger.

All of the airbags in your vehicle will have the word AIRBAG embossed in the trim or on an attached label near the deployment opening.

For frontal airbags, the word AIRBAG will appear on the middle part of the steering wheel for the driver and on the instrument panel for the right front passenger.

With roof-rail airbags, the word AIRBAG will appear along the headliner or trim.

Airbags are designed to supplement the protection provided by safety belts. Even though today's airbags are also designed to help reduce the risk of injury from the force of an inflating bag, all airbags must inflate very quickly to do their job.

Here are the most important things to know about the airbag system:

⚠ CAUTION:

You can be severely injured or killed in a crash if you are not wearing your safety belt — even if you have airbags. Wearing your safety belt during a crash helps reduce your chance of hitting things inside the vehicle or being ejected from it. Airbags are "supplemental restraints" to the safety belts. All airbags are designed to work with safety belts, but do not replace them.

⚠ CAUTION:

Frontal airbags are designed to deploy in moderate to severe frontal and near frontal crashes. They are not designed to inflate in rollover, rear crashes, or in many side crashes.

Rollover capable roof-rail airbags are designed to inflate in moderate to severe crashes where something hits the side of your vehicle, during a vehicle rollover, or in a severe frontal impact. They are not designed to inflate in rear crashes.

Everyone in your vehicle should wear a safety belt properly — whether or not there is an airbag for that person.

⚠ CAUTION:

Airbags inflate with great force, faster than the blink of an eye. Anyone who is up against, or very close to, any airbag when it inflates can be seriously injured or killed. Do not sit unnecessarily close to the airbag, as you would be if you were sitting on the edge of your seat or leaning forward. Safety belts help keep you in position before and during a crash. Always wear your safety belt, even with airbags. The driver should sit as far back as possible while still maintaining control of the vehicle.

Occupants should not lean on or sleep against the door or side windows in seating positions with roof-rail airbags.

⚠ CAUTION:

Airbags plus lap-shoulder belts offer the best protection for adults, but not for young children and infants. Neither the vehicle's safety belt system nor its airbag system is designed for them. Young children and infants need the protection that a child restraint system can provide. Always secure children properly in your vehicle. To read how, see *Older Children on page 1-32* or *Infants and Young Children on page 1-35*.

There is an airbag readiness light on the instrument panel cluster, which shows the airbag symbol.

The system checks the airbag electrical system for malfunctions. The light tells you if there is an electrical problem. See *Airbag Readiness Light on page 3-32* for more information.

Where Are the Airbags?

The driver's frontal airbag is in the middle of the steering wheel.

The right front passenger's frontal airbag is in the instrument panel on the passenger's side.

Driver Side shown, Passenger Side similar

The roof-rail airbags for the driver, right front passenger, and second row outboard passengers are in the ceiling above the side windows.

⚠ CAUTION:

If something is between an occupant and an airbag, the airbag might not inflate properly or it might force the object into that person causing severe injury or even death. The path of an inflating airbag must be kept clear.
Do not put anything between an occupant and an airbag, and do not attach or put anything on the steering wheel hub or on or near any other airbag covering.

If your vehicle has roof-rail airbags, never secure anything to the roof of your vehicle by routing the rope or tie down through any door or window opening. If you do, the path of an inflating roof-rail airbag will be blocked.

When Should an Airbag Inflate?

Frontal airbags are designed to inflate in moderate to severe frontal or near-frontal crashes to help reduce the potential for severe injuries mainly to the driver's or right front passenger's head and chest. However, they are only designed to inflate if the impact exceeds a predetermined deployment threshold. Deployment thresholds are used to predict how severe a crash is likely to be in time for the airbags to inflate and help restrain the occupants.

Whether your frontal airbags will or should deploy is not based on how fast your vehicle is traveling. It depends largely on what you hit, the direction of the impact, and how quickly your vehicle slows down.

Frontal airbags may inflate at different crash speeds. For example:

- If the vehicle hits a stationary object, the airbags could inflate at a different crash speed than if the vehicle hits a moving object.
- If the vehicle hits an object that deforms, the airbags could inflate at a different crash speed than if the vehicle hits an object does not deform.
- If the vehicle hits a narrow object (like a pole), the airbags could inflate at a different crash speed than if the vehicle hits a wide object (like a wall).
- If the vehicle goes into an object at an angle, the airbags could inflate at a different crash speed than if the vehicle goes straight into the object.

Thresholds can also vary with specific vehicle design.

Frontal airbags are not intended to inflate during vehicle rollovers, rear impacts, or in many side impacts.

In addition, your vehicle has dual-stage frontal airbags. Dual-stage airbags adjust the restraint according to crash severity. Your vehicle has electronic frontal sensors, which help the sensing system distinguish between a moderate frontal impact and a more severe frontal impact. For moderate frontal impacts, dual-stage airbags inflate at a level less than full deployment. For more severe frontal impacts, full deployment occurs.

Your vehicle has a seat position sensor which enables the sensing system to monitor the position of the driver's seat. The seat position sensor provides information that is used to determine if the airbags should deploy at a reduced level or at full deployment.

Your vehicle has roof-rail airbags. See *Airbag System on page 1-56*. Roof-rail airbags are intended to inflate in moderate to severe side crashes. In addition, these roof-rail airbags are intended to inflate during a rollover or in a severe frontal impact. Roof-rail airbags will inflate if the crash severity is above the system's designed threshold level. The threshold level can vary with specific vehicle design.

Roof-rail airbags are not intended to inflate in rear impacts. Both roof-rail airbags will deploy when either side of the vehicle is struck, or if the sensing system predicts that the vehicle is about to roll over, or in a severe frontal impact.

In any particular crash, no one can say whether an airbag should have inflated simply because of the damage to a vehicle or because of what the repair costs were. For frontal airbags, inflation is determined by what the vehicle hits, the angle of the impact, and how quickly the vehicle slows down. For roof-rail airbags, deployment is determined by the location and severity of the side impact. In a rollover event, roof-rail airbag deployment is determined by the direction of the roll.

What Makes an Airbag Inflate?

In a deployment event, the sensing system sends an electrical signal triggering a release of gas from the inflator. Gas from the inflator fills the airbag causing the bag to break out of the cover and deploy. The inflator, the airbag, and related hardware are all part of the airbag module.

Frontal airbag modules are located inside the steering wheel and instrument panel. For vehicles with roof-rail airbags, there are airbag modules in the ceiling of the vehicle, near the side windows that have occupant seating positions.

How Does an Airbag Restrain?

In moderate to severe frontal or near frontal collisions, even belted occupants can contact the steering wheel or the instrument panel. In moderate to severe side collisions, even belted occupants can contact the inside of the vehicle.

Airbags supplement the protection provided by safety belts. Frontal airbags distribute the force of the impact more evenly over the occupant's upper body, stopping the occupant more gradually. Roof-rail airbags distribute the force of the impact more evenly over the occupant's upper body.

Rollover capable roof-rail airbags are designed to help contain the head and chest of occupants in the outboard seating positions in the first and second rows. The rollover capable roof-rail airbags are designed to help reduce the risk of full or partial ejection in rollover events, although no system can prevent all such ejections.

But airbags would not help in many types of collisions, primarily because the occupant's motion is not toward those airbags. See *When Should an Airbag Inflate? on page 1-61* for more information.

Airbags should never be regarded as anything more than a supplement to safety belts.

What Will You See After an Airbag Inflates?

After the frontal airbags inflate, they quickly deflate, so quickly that some people may not even realize an airbag inflated. Roof-rail airbags may still be at least partially inflated for some time after they deploy. Some components of the airbag module may be hot for several minutes. For location of the airbag modules, see *What Makes an Airbag Inflate? on page 1-63*.

The parts of the airbag that come into contact with you may be warm, but not too hot to touch. There may be some smoke and dust coming from the vents in the deflated airbags. Airbag inflation does not prevent the driver from seeing out of the windshield or being able to steer the vehicle, nor does it prevent people from leaving the vehicle.

⚠ CAUTION:

When an airbag inflates, there may be dust in the air. This dust could cause breathing problems for people with a history of asthma or other breathing trouble. To avoid this, everyone in the vehicle should get out as soon as it is safe to do so. If you have breathing problems but cannot get out of the vehicle after an airbag inflates, then get fresh air by opening a window or a door. If you experience breathing problems following an airbag deployment, you should seek medical attention.

Your vehicle has a feature that may automatically unlock the doors, turn the interior lamps on, and turn the hazard warning flashers on when the airbags inflate. You can lock the doors, turn the interior lamps off, and turn the hazard warning flashers off by using the controls for those features.

In many crashes severe enough to inflate the airbag, windshields are broken by vehicle deformation. Additional windshield breakage may also occur from the right front passenger airbag.

- Airbags are designed to inflate only once. After an airbag inflates, you will need some new parts for the airbag system. If you do not get them, the airbag system will not be there to help protect you in another crash. A new system will include airbag modules and possibly other parts. The service manual for your vehicle covers the need to replace other parts.
- Your vehicle has a crash sensing and diagnostic module which records information after a crash. See *Vehicle Data Recording and Privacy on page 7-16* and *Event Data Recorders on page 7-17*.
- Let only qualified technicians work on the airbag systems. Improper service can mean that an airbag system will not work properly. See your dealer/retailer for service.

Passenger Sensing System

Your vehicle has a passenger sensing system for the right front passenger's position. The passenger airbag status indicator will be visible on the overhead console when you start your vehicle.

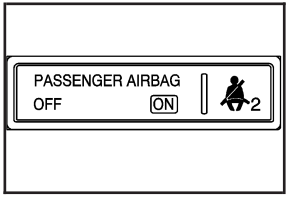

United States

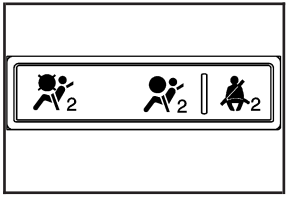

Canada

The words ON and OFF, or the symbol for on and off, will be visible during the system check. When the system check is complete, either the word ON or the word OFF, or the symbol for on or the symbol for off, will be visible. See *Passenger Airbag Status Indicator on page 3-33*.

The passenger sensing system will turn off the right front passenger's frontal airbag under certain conditions. The driver's airbags are not part of the passenger sensing system.

The passenger sensing system works with sensors that are part of the right front passenger's seat and safety belt. The sensors are designed to detect the presence of a properly-seated occupant and determine if the right front passenger's frontal airbag should be enabled (may inflate) or not.

Accident statistics show that children are safer if they are restrained in the rear rather than the front seat.

We recommend that children be secured in a rear seat, including: an infant or a child riding in a rear-facing child restraint; a child riding in a forward-facing child seat; an older child riding in a booster seat; and children, who are large enough, using safety belts.

A label on your sun visor says, "Never put a rear-facing child seat in the front." This is because the risk to the rear-facing child is so great, if the airbag deploys.

⚠ CAUTION:

A child in a rear-facing child restraint can be seriously injured or killed if the right front passenger's airbag inflates. This is because the back of the rear-facing child restraint would be very close to the inflating airbag.

Even though the passenger sensing system is designed to turn off the right front passenger's frontal airbag if the system detects a rear-facing child restraint, no system is fail-safe, and no one can guarantee that an airbag will not deploy under some unusual circumstance, even though it is turned off. We recommend that rear-facing child restraints be secured in a rear seat, even if the airbag is off.

If you secure a forward-facing child restraint in the right front seat, always move the front passenger seat as far back as it will go. It is better to secure the child restraint in a rear seat.

The passenger sensing system is designed to turn off the right front passenger's frontal airbag if:

- The right front passenger seat is unoccupied.
- The system determines that an infant is present in a rear-facing infant seat.
- The system determines that a small child is present in a child restraint.
- The system determines that a small child is present in a booster seat.
- A right front passenger takes his/her weight off of the seat for a period of time.
- The right front passenger seat is occupied by a smaller person, such as a child who has outgrown child restraints.
- Or, if there is a critical problem with the airbag system or the passenger sensing system.

When the passenger sensing system has turned off the right front passenger's frontal airbag, the off indicator will light and stay lit to remind you that the airbag is off. See *Passenger Airbag Status Indicator on page 3-33*.

If a child restraint has been installed and the on indicator is lit, turn the vehicle off. Remove the child restraint from the vehicle and reinstall the child restraint following the child restraint manufacturer's directions and refer to *Securing a Child Restraint in the Right Front Seat Position on page 1-53*.

If, after reinstalling the child restraint and restarting the vehicle, the on indicator is still lit, check to make sure that the vehicle's seatback is not pressing the child restraint into the seat cushion. If this happens, slightly recline the vehicle's seatback and adjust the seat cushion if possible. Also make sure the child restraint is not trapped under the vehicle head restraint. If this happens, adjust the head restraint. See *Head Restraints on page 1-9*.

Remove any additional material from the seat such as blankets, cushions, seat covers, seat heaters, or seat massagers before reinstalling or securing the child restraint.

If the on indicator is still lit, secure the child in the child restraint in a rear seat position in the vehicle, and check with your dealer/retailer.

The passenger sensing system is designed to enable (may inflate) the right front passenger's frontal airbag anytime the system senses that a person of adult size is sitting properly in the right front passenger's seat. When the passenger sensing system has allowed the airbag to be enabled, the on indicator will light and stay lit to remind you that the airbag is active.

For some children who have outgrown child restraints and for very small adults, the passenger sensing system may or may not turn off the right front passenger's frontal airbag, depending upon the person's seating posture and body build. Everyone in your vehicle who has outgrown child restraints should wear a safety belt properly — whether or not there is an airbag for that person.

If a person of adult-size is sitting in the right front passenger's seat, but the off indicator is lit, it could be because that person is not sitting properly in the seat. If this happens, turn the vehicle off, remove any additional material from the seat, such as blankets, cushions, seat covers, seat heaters or seat massagers and ask the person to place the seatback in the fully upright position, then sit upright in the seat, centered on the seat cushion, with the person's legs comfortably extended. Restart the vehicle and have the person remain in this position for two to three minutes. This will allow the system to detect that person and then enable the right front passenger's frontal airbag.

Safety belts help keep the passenger in position on the seat during vehicle maneuvers and braking, which helps the passenger sensing system maintain the passenger airbag status. See "Safety Belts" and "Child Restraints" in the Index for additional information about the importance of proper restraint use.

If you ever pull the shoulder portion of the belt out all the way, you will engage the child restraint locking feature. This may unintentionally cause the passenger sensing system to turn the airbag(s) off for some adult size occupants. If this happens, just let the belt go back all the way and start again.

⚠ CAUTION:

If the airbag readiness light in the instrument panel cluster ever comes on and stays on, it means that something may be wrong with the airbag system. If this ever happens, have the vehicle serviced promptly, because an adult-size person sitting in the right front passenger's seat may not have the protection of the airbag(s). See *Airbag Readiness Light on page 3-32* for more on this, including important safety information.

A thick layer of additional material, such as a blanket or cushion, or aftermarket equipment such as seat covers, seat heaters, and seat massagers can affect how well the passenger sensing system operates. We recommend that you not use seat covers or other aftermarket equipment other than any that GM has approved for your specific vehicle. See *Adding Equipment to Your Airbag-Equipped Vehicle on page 1-70* for more information about modifications that can affect how the system operates.

⚠ CAUTION:

Stowing of articles under the passenger's seat or between the passenger's seat cushion and seatback may interfere with the proper operation of the passenger sensing system.

Servicing Your Airbag-Equipped Vehicle

Airbags affect how your vehicle should be serviced. There are parts of the airbag system in several places around your vehicle. Your dealer/retailer and the service manual have information about servicing your vehicle and the airbag system. To purchase a service manual, see *Service Publications Ordering Information on page 7-15*.

⚠ CAUTION:

For up to 10 seconds after the ignition is turned off and the battery is disconnected, an airbag can still inflate during improper service. You can be injured if you are close to an airbag when it inflates. Avoid yellow connectors. They are probably part of the airbag system. Be sure to follow proper service procedures, and make sure the person performing work for you is qualified to do so.

Adding Equipment to Your Airbag-Equipped Vehicle

Q: Is there anything I might add to or change about the vehicle that could keep the airbags from working properly?

A: Yes. If you add things that change your vehicle's frame, bumper system, height, front end or side sheet metal, they may keep the airbag system from working properly. Changing or moving any parts of the front seats, safety belts, the airbag sensing and diagnostic module, steering wheel, instrument panel, roof-rail airbag modules, ceiling headliner or pillar garnish trim, overhead console, front sensors, side impact sensors, rollover sensor module, or airbag wiring can affect the operation of the airbag system.

In addition, your vehicle has a passenger sensing system for the right front passenger's position, which includes sensors that are part of the passenger's seat. The passenger sensing system may not operate properly if the original seat trim is replaced with non-GM covers, upholstery or trim, or with GM covers, upholstery or trim designed for a different vehicle. Any object, such as an aftermarket seat heater or a comfort enhancing pad or device, installed under or on top of the seat fabric, could also interfere with the operation of the passenger sensing system. This could either prevent proper deployment of the passenger airbag(s) or prevent the passenger sensing system from properly turning off the passenger airbag(s). See *Passenger Sensing System on page 1-65*.

If you have any questions about this, you should contact Customer Assistance before you modify your vehicle. The phone numbers and addresses for Customer Assistance are in Step Two of the Customer Satisfaction Procedure in this manual. See *Customer Satisfaction Procedure on page 7-2*.

If your vehicle has rollover roof-rail airbags, see *Different Size Tires and Wheels on page 5-72* for additional important information.

Q: Because I have a disability, I have to get my vehicle modified. How can I find out whether this will affect my airbag system?

A: If you have questions, call Customer Assistance. The phone numbers and addresses for Customer Assistance are in Step Two of the Customer Satisfaction Procedure in this manual. See *Customer Satisfaction Procedure on page 7-2*.

In addition, your dealer/retailer and the service manual have information about the location of the airbag sensors, sensing and diagnostic module and airbag wiring.

Restraint System Check

Checking the Restraint Systems

Safety Belts

Now and then, make sure the safety belt reminder light and all your belts, buckles, latch plates, retractors and anchorages are working properly.

Look for any other loose or damaged safety belt system parts. If you see anything that might keep a safety belt system from doing its job, have it repaired. Torn or frayed safety belts may not protect you in a crash. They can rip apart under impact forces. If a belt is torn or frayed, get a new one right away.

Make sure the safety belt reminder light is working. See *Safety Belt Reminders on page 3-31* for more information.

Keep safety belts clean and dry. See *Care of Safety Belts on page 5-100*.

Airbags

The airbag system does not need regularly scheduled maintenance or replacement. Make sure the airbag readiness light is working. See *Airbag Readiness Light on page 3-32* for more information.

Notice: **If an airbag covering is damaged, opened, or broken, the airbag may not work properly. Do not open or break the airbag coverings. If there are any opened or broken airbag covers, have the airbag covering and/or airbag module replaced. For the location of the airbag modules, see *What Makes an Airbag Inflate? on page 1-63*. See your dealer/retailer for service.**

Replacing Restraint System Parts After a Crash

⚠ CAUTION:

A crash can damage the restraint systems in your vehicle. A damaged restraint system may not properly protect the person using it, resulting in serious injury or even death in a crash. To help make sure your restraint systems are working properly after a crash, have them inspected and any necessary replacements made as soon as possible.

If you have had a crash, do you need new belts or LATCH system (if equipped) parts?

After a very minor crash, nothing may be necessary. But the belt assemblies that were used during any crash may have been stressed or damaged. See your dealer/retailer to have your safety belt assemblies inspected or replaced.

If your vehicle has the LATCH system and it was being used during a crash, you may need new LATCH system parts.

New parts and repairs may be necessary even if the belt or LATCH system (if equipped), was not being used at the time of the crash.

If an airbag inflates, you will need to replace airbag system parts. See the part on the airbag system earlier in this section.

Have your safety belt pretensioners checked if your vehicle has been in a crash, if your airbag readiness light stays on after you start your vehicle, or while you are driving. See *Airbag Readiness Light on page 3-32*.

NOTES

Section 2 Features and Controls

Keys 2-3
Remote Keyless Entry (RKE) System 2-4
Remote Keyless Entry (RKE) System Operation 2-5
Remote Vehicle Start 2-8

Doors and Locks 2-10
Door Locks 2-10
Power Door Locks 2-11
Delayed Locking 2-11
Programmable Automatic Door Locks 2-11
Rear Door Security Locks 2-12
Lockout Protection 2-12
Midgate® 2-13
Tailgate 2-23
Power Running Boards 2-23

Windows 2-24
Power Windows 2-25
Sun Visors 2-26

Theft-Deterrent Systems 2-26
Content Theft-Deterrent 2-26
PASS-Key® III+ 2-28
PASS-Key® III+ Operation 2-29

Starting and Operating Your Vehicle 2-30
New Vehicle Break-In 2-30
Ignition Positions 2-31
Retained Accessory Power (RAP) 2-32
Starting the Engine 2-32
Adjustable Throttle and Brake Pedal 2-34
Engine Coolant Heater 2-35
Automatic Transmission Operation 2-36
Tow/Haul Mode 2-40
Parking Brake 2-41
Shifting Into PARK (P) 2-42
Shifting Out of PARK (P) 2-43
Parking Over Things That Burn 2-44
Engine Exhaust 2-44
Running the Engine While Parked 2-45

Mirrors 2-46
Automatic Dimming Rearview Mirror with Intellibeam®, OnStar®, Compass, and Temperature Display 2-46
Automatic Dimming Rearview Mirror with OnStar®, Compass and Temperature Display 2-48
Outside Power Foldaway Mirrors 2-52

Object Detection Systems 2-54
Ultrasonic Rear Parking Assist (URPA) 2-54

OnStar® System 2-56

Universal Home Remote System 2-60
Universal Home Remote System Operation (With Three Round LED) 2-60

Storage Areas 2-67
Glove Box 2-67
Cupholder(s) 2-67
Instrument Panel Storage 2-67
Center Console Storage 2-67
Luggage Carrier 2-68
Rear Seat Armrest 2-69
Cargo Cover Panels 2-69
All-Weather Cargo Area 2-82
Top-Box Storage 2-86

Sunroof 2-87

Keys

⚠ CAUTION:

Leaving children in a vehicle with the ignition key is dangerous for many reasons, children or others could be badly injured or even killed. They could operate the power windows or other controls or even make the vehicle move. The windows will function with the keys in the ignition and they could be seriously injured or killed if caught in the path of a closing window. Do not leave the keys in a vehicle with children.

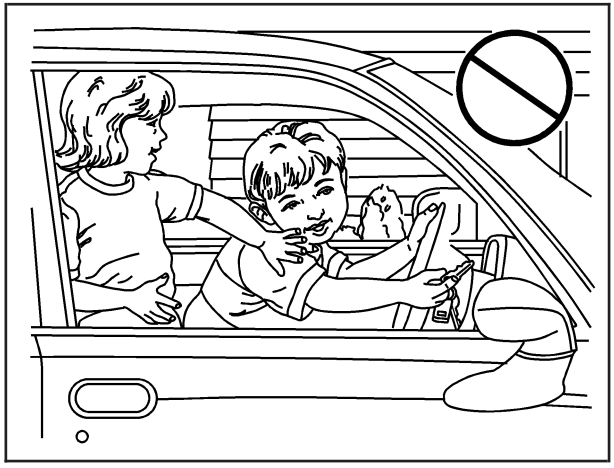

The key can be used for the ignition, door locks, tailgate, and side storage boxes.

See your dealer/retailer if a replacement key or additional key is needed.

Notice: **If you ever lock your keys in your vehicle, you may have to damage the vehicle to get in. Be sure you have spare keys.**

If you are locked out of your vehicle, contact Roadside Service. See *Roadside Service on page 7-7* for more information.

Remote Keyless Entry (RKE) System

Your Remote Keyless Entry (RKE) system operates on a radio frequency subject to Federal Communications Commission (FCC) Rules and with Industry Canada.

This device complies with Part 15 of the FCC Rules. Operation is subject to the following two conditions:

1. This device may not cause interference.
2. This device must accept any interference received, including interference that may cause undesired operation of the device.

This device complies with RSS-210 of Industry Canada. Operation is subject to the following two conditions:

1. This device may not cause interference.
2. This device must accept any interference received, including interference that may cause undesired operation of the device.

Changes or modifications to this system by other than an authorized service facility could void authorization to use this equipment.

At times you may notice a decrease in operating range. This is normal for any RKE system. If the transmitter does not work or if you have to stand closer to your vehicle for the transmitter to work, try this:

- Check the distance. You may be too far from your vehicle. You may need to stand closer during rainy or snowy weather.
- Check the location. Other vehicles or objects may be blocking the signal. Take a few steps to the left or right, hold the transmitter higher, and try again.
- Check to determine if battery replacement is necessary. See “Battery Replacement” later in this section.
- If you are still having trouble, see your dealer/retailer or a qualified technician for service.

Remote Keyless Entry (RKE) System Operation

The vehicle's doors can be locked and unlocked from about 3 feet (1 m) up to 65 feet (20 m) away with the Remote Keyless Entry (RKE) transmitter.

If your vehicle has the remote start feature you can also start your vehicle with the RKE transmitter. The RKE transmitter, with the remote start button, provides an increased operating range of 195 feet (60 m) away. However, the operating range may be less while the vehicle is running. As a result, you may need to be closer to your vehicle to turn it off than you were to start it.

There are other conditions which can affect the performance of the transmitter. See *Remote Keyless Entry (RKE) System on page 2-4*.

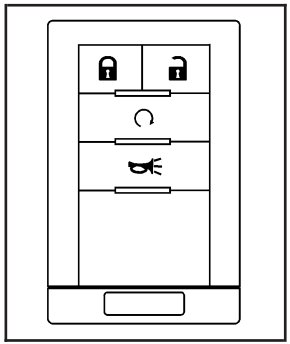

With Remote Start (Without Remote Start Similar)

(Remote Vehicle Start): If your vehicle has this feature, press to start the engine from outside the vehicle using the RKE transmitter. See *Remote Vehicle Start on page 2-8* for additional information.

(Lock): Press to lock all the doors, including the tailgate.

If enabled through the Driver Information Center (DIC), the turn signal lamps will flash once to indicate locking has occurred. If enabled through the DIC, the horn will chirp when 🔒 is pressed again within three seconds of the previous press of the lock button. See *DIC Vehicle Customization on page 3-57* for additional information.

Pressing 🔒 will arm the content theft-deterrent system. See *Content Theft-Deterrent on page 2-26*.

🔓 **(Unlock):** Press 🔓 to unlock the driver's door. If 🔓 is pressed again within three seconds, all remaining doors, including the tailgate will unlock.

If it is dark enough outside, your interior lamps will come on and stay on for 20 seconds or until the ignition is turned on. If enabled through the DIC, the turn signal lamps will flash twice to indicate unlocking has occurred. See *DIC Vehicle Customization on page 3-57*.

If enabled through the DIC, the exterior lights will turn on briefly if it is dark enough outside. See "APPROACH LIGHTING" under *DIC Vehicle Customization on page 3-57*.

Pressing 🔓 on the RKE transmitter will disarm the content theft-deterrent system. See *Content Theft-Deterrent on page 2-26*.

(Vehicle Locator/Panic Alarm): Press and release to locate your vehicle. The turn signal lamps will flash and the horn will sound three times.

Press and hold for more than two seconds to activate the panic alarm. The turn signal lamps will flash and the horn will sound repeatedly for 30 seconds. The alarm will turn off when the ignition is moved to ON/RUN or is pressed again. The ignition must be in LOCK/OFF for the panic alarm to work.

Matching Transmitter(s) to Your Vehicle

Each RKE transmitter is coded to prevent another transmitter from unlocking your vehicle. If a transmitter is lost or stolen, a replacement can be purchased through your dealer/retailer. All transmitters need to be re-coded to match the new transmitter. The lost transmitter will no longer work after the new transmitters are re-coded. The vehicle can have a maximum of eight transmitters matched to it. See “Relearn Remote Key” under *DIC Operation and Displays on page 3-45* for instructions on how to match RKE transmitters to your vehicle.

Battery Replacement

Replace the battery if the REPLACE BATTERY IN REMOTE KEY message displays in the DIC. See “REPLACE BATTERY IN REMOTE KEY” under *DIC Warnings and Messages on page 3-50* for additional information.

Notice: **When replacing the battery, use care not to touch any of the circuitry. Static from your body transferred to these surfaces may damage the transmitter.**

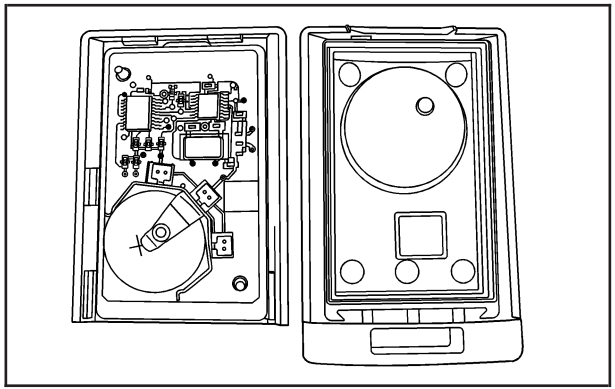

To replace the battery:

1. Separate the halves of the transmitter with a flat, thin object inserted into the notch, located above the metal base.
2. Remove the old battery. Do not use a metal object.
3. Insert the new battery, positive side facing up. Replace with a CR2032 or equivalent battery.
4. Put the transmitter back together tightly.

Remote Vehicle Start

Your vehicle may have a remote starting feature. This feature allows you to start the engine from outside of the vehicle. It may also start up the vehicle's heating or air conditioning systems and rear window defogger. Normal operation of the system will return after the key is turned to the ON/RUN position.

During a remote start, the climate control system will default to a heating or cooling mode depending on the outside temperatures.

During a remote start, if your vehicle has an automatic climate control system and heated seats, the heated seats will turn on during colder outside temperatures and will shut off when the key is turned to ON/RUN. If your vehicle does not have an automatic climate control system, during remote start, you will need to manually turn the heated seats on and off. See *Heated Seats on page 1-4* for additional information.

Laws in some communities may restrict the use of remote starters. For example, some laws may require a person using the remote start to have the vehicle in view when doing so. Check local regulations for any requirements on remote starting of vehicles.

Do not use the remote start feature if your vehicle is low on fuel. Your vehicle may run out of fuel.

The RKE transmitter with the remote start button, provides an increased range of operation. However, the range may be less while the vehicle is running. As a result, you may need to be closer to your vehicle to turn it off, than you were to turn it on.

There are other conditions which can affect the performance of the transmitter, see *Remote Keyless Entry (RKE) System on page 2-4* for additional information.

(Remote Start): This button will be on the RKE transmitter if you have remote start.

To start the vehicle using the remote start feature:

1. Aim the transmitter at the vehicle.
2. Press and release the transmitter's lock button. The vehicle's doors will lock. Immediately press and hold the transmitter's remote start button until the turn signal lights flash. If you cannot see the vehicle's lights, press and hold the remote start button for two to four seconds. Pressing the remote start button again after the vehicle has started will turn the engine off.

When the vehicle starts, the parking lamps will turn on and remain on while the vehicle is running.

If the vehicle is left running it will automatically shut off after 10 minutes unless a time extension has been done.

3. If it is the first remote start since the vehicle has been driven, repeat these steps, while the engine is still running, to extend the engine running time by 10 minutes. Remote start can be extended one time.

After entering the vehicle during a remote start, insert and turn the key to ON/RUN to drive the vehicle.

To manually shut off a remote start, do any of the following:

- Aim the RKE transmitter at the vehicle and press the remote start button until the parking lamps turn off.
- Turn on the hazard warning flashers.
- Turn the ignition switch on and then off.

The vehicle can be remote started two separate times between driving sequences. The engine will run for 10 minutes after each remote start.

Or, you can extend the engine run time by another 10 minutes within the first 10 minute remote start time frame, and before the engine stops.

For example, if the lock button and then the remote start buttons are pressed again after the vehicle has been running for five minutes, 10 minutes are added, allowing the engine to run for 15 minutes.

The additional ten minutes are considered a second remote vehicle start.

After your vehicles engine has been started two times using the remote vehicle start button, or a single remote start with one time extension, the vehicle must be started with the key.

After the key is removed from the ignition, the vehicle can be remote started again.

The vehicle cannot be remote started if the key is in the ignition, the hood is not closed, or if there is an emission control system malfunction and the check engine light comes on.

Also, the engine will turn off during a remote vehicle start if the coolant temperature gets too high or if the oil pressure gets low.

Vehicles that have the remote vehicle start feature are shipped from the factory with the remote vehicle start system enabled. The system may be enabled or disabled through the DIC. See “REMOTE START” under *DIC Vehicle Customization on page 3-57* for additional information.

Remote Start Ready

If your vehicle does not have the remote vehicle start feature, it may have the remote start ready feature. This feature allows your dealer/retailer to add the manufacturer’s remote vehicle start feature.

If your vehicle has the remote start ready feature, your RKE transmitter will have extended range that will allow you to lock or unlock your vehicle from approximately 197 feet (60 m) away.

See your dealer/retailer if you would like to add the manufacturer’s remote vehicle start feature to your vehicle.

Doors and Locks

Door Locks

⚠ CAUTION:

Unlocked doors can be dangerous.

- **Passengers, especially children, can easily open the doors and fall out of a moving vehicle. When a door is locked, the handle will not open it. You increase the chance of being thrown out of the vehicle in a crash if the doors are not locked. So, wear safety belts properly and lock the doors whenever you drive.**
- **Young children who get into unlocked vehicles may be unable to get out. A child can be overcome by extreme heat and can suffer permanent injuries or even death from heat stroke. Always lock your vehicle whenever you leave it.**
- **Outsiders can easily enter through an unlocked door when you slow down or stop your vehicle. Locking your doors can help prevent this from happening.**

There are several ways to lock and unlock the doors.

To lock or unlock the door from the outside, use the remote keyless entry (RKE) transmitter or the key.

To lock or unlock the door from the inside, slide the manual lever up or down, or use the power door locks switch.

Power Door Locks

The power door lock switches are located on the armrest on the front doors.

(Unlock): Press the side of the switch with the unlock symbol to unlock the doors and tailgate.

(Lock): Press the side of the switch with the lock symbol to lock the doors and tailgate.

Delayed Locking

When locking the doors with the power lock switch or the Remote Keyless Entry (RKE) transmitter and a door is open, the doors will lock five seconds after the last door is closed. You will hear three chimes to signal that the delayed locking feature is in use.

Pressing the power lock switch or the lock button on the RKE transmitter twice will override the delayed locking feature and immediately lock all the doors.

You can turn the delayed locking feature off or back on again by doing the following:

1. Press and hold the power door lock switch in the lock position.
2. Press unlock twice on the RKE transmitter.

This feature will not operate if the key is in the ignition.

You can also program this feature using the Driver Information Center (DIC). See “Door Lock Delay” under *DIC Vehicle Customization on page 3-57*.

Programmable Automatic Door Locks

Vehicles with an automatic lock/unlock feature enable you to program the vehicle’s power door locks. You can program this feature through the Driver Information Center (DIC). See *DIC Vehicle Customization on page 3-57* for more information on DIC programming.

Rear Door Security Locks

Your vehicle has rear door security locks. These prevent passengers from opening the rear doors from the inside.

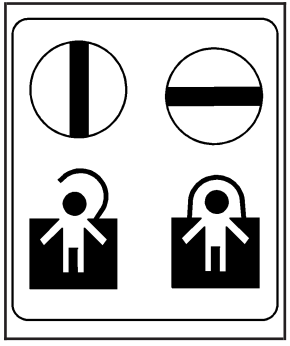

Security Lock Label shown

The rear door security locks are located on the inside edge of each rear door.

The rear doors must be open to access them. The label showing lock and unlock positions is located near the lock.

To set the locks, do the following:

1. Insert the key into the security lock slot and turn it so the slot is in the horizontal position.
2. Close the door.

When you want to open a rear door when the security lock is on, do the following:

1. Unlock the door by lifting the rear door manual lock, using the power door lock switch, or the Remote Keyless Entry (RKE) transmitter, if the vehicle has one.
2. Open the door from the outside.

To cancel the rear door security lock, do the following:

1. Unlock the door and open it from the outside.
2. Insert the key into the security lock slot and turn it so the slot is in the vertical position.

Lockout Protection

This feature protects you from locking your key in the vehicle when the key is in the ignition and a door is open.

If the power lock switch is pressed when a door is open and the key is in the ignition, all of the doors will lock and then the driver's door will unlock.

Midgate®

⚠ CAUTION:

It can be dangerous to drive with the cargo area covered and the tailgate and the Midgate® open because carbon monoxide (CO) gas can come into your vehicle. You can not see or smell CO. It can cause unconsciousness and even death. If you must drive with the cargo covers on and the tailgate and Midgate® open or if electrical wiring or other cable connections must pass through the seal between the body and the Midgate®:

- **Make sure all windows are shut.**
- **Turn the fan on your heating or cooling system to its highest speed on the setting that brings in outside air.**

CAUTION: (Continued)

CAUTION: (Continued)

This will force outside air into your vehicle. See *Dual Automatic Climate Control System on page 3-24*.

- **If you have air outlets on or under the instrument panel, open them all the way. See *Engine Exhaust on page 2-44*.**

Midgate® Operation

Your vehicle is equipped with a Midgate® and a removable rear glass panel. The Midgate® allows you to extend the length of your vehicle's cargo area.

The following are the main components of the Midgate® system:

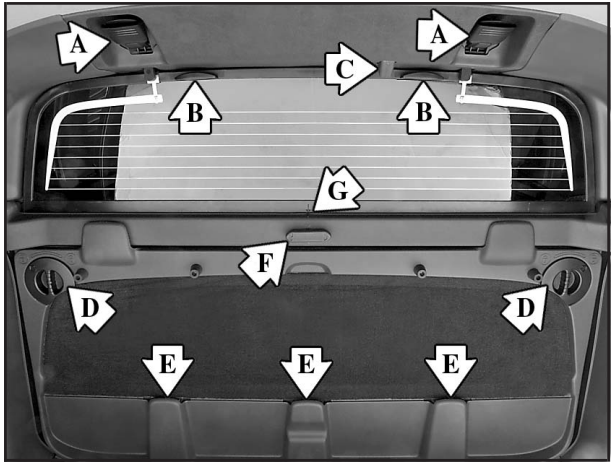

A. Latch Levers
B. Grab Handles
C. Glass-Catch Release Button
D. Glass Lock Knobs
E. Window Retaining Tabs
F. Midgate® Release Handle
G. Window Alignment Arrows

Rear Glass Removal and Storage

⚠ CAUTION:

If the removable rear glass is not stored properly, it could be thrown about the vehicle in a crash or sudden maneuver. People in the vehicle could be injured. Whenever you store the rear glass in the vehicle, always be sure that it is stored securely in the Midgate® storage pocket.

Do not remove the rear glass when the rear defroster is on. If you remove the rear glass with the rear defroster on, you may see a discharge spark coming from the latch area.

To remove the rear glass do the following:

1. Fold the rear seats. See *Rear Seat Operation on page 1-10* for more information. The front seats may have to be moved forward slightly to allow the rear seats to fold completely.

   Although the rear glass can be removed without folding the rear seats, you will not be able to access the rear glass storage pocket. Be sure to fold the seats before removing the rear glass.

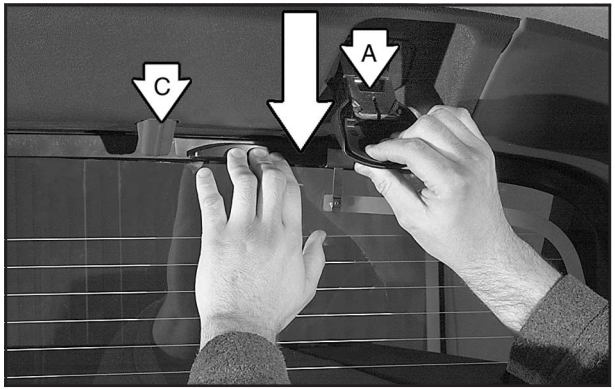

2. Squeeze and pull down the latch levers (A), located near the upper corners of the rear glass, to unlatch. Once unlatched, the glass-catch release button (C) will catch the rear glass and prevent it from falling forward.

3. While holding the rear glass in place, press the glass-catch release button (C) and pull the top of the rear glass toward you using the grab handle(s) (B) located at the top of the rear glass.

4. With the rear glass tilted toward you, lift it out from the lower window frame channel. Use the grab handles to assist you in removing the rear glass.

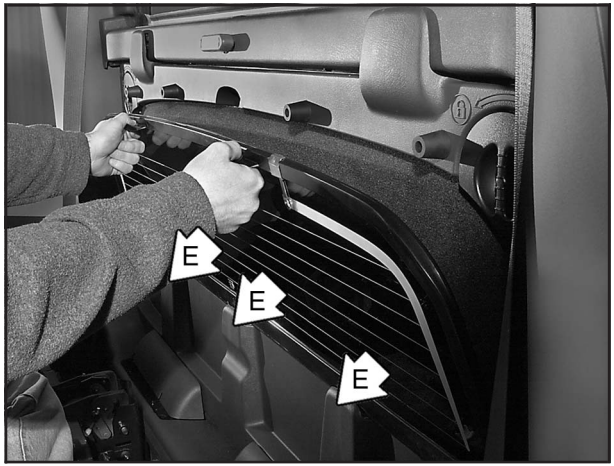

5. Load the rear glass into the storage pocket in the Midgate®, guiding the lower edge of the rear glass behind the three rear glass retaining tabs (E).

   Hold the rear glass flat against the storage pocket, with grab handles facing you, until the next step.

6. Turn both glass lock knobs (D), located at both top corners of the storage pocket, to the locked position. Push in on the corner of the rear glass to allow the lock knob to engage more easily.

Once both glass lock knobs are in the locked position, the rear glass is securely stored.

7. Push both latch levers up to the locked position. You should hear a click when each latch lever locks correctly.

   The rear seats can be returned to the normal position when the rear glass is out and stored properly in the storage pocket.

Reinstalling the Rear Glass

To reinstall the rear glass, do the following:

1. Squeeze and pull down the latch levers (A), located near the upper corners of the rear glass, to unlatch.

2. Hold the rear glass in place with one hand and turn the glass lock knobs, located at both top corners of the glass storage pocket, to the unlocked position.
3. Pull the rear glass out from the storage pocket using the grab handles.

4. With the rear glass tilted at an angle, place the bottom edge in the lower channel of the window frame.

Be sure to align the rear glass side-to-side using the alignment arrows (G).

5. Apply a firm downward pressure and then push the rear glass flat against the window frame. Use the grab handles at the top of the rear glass to assist you.

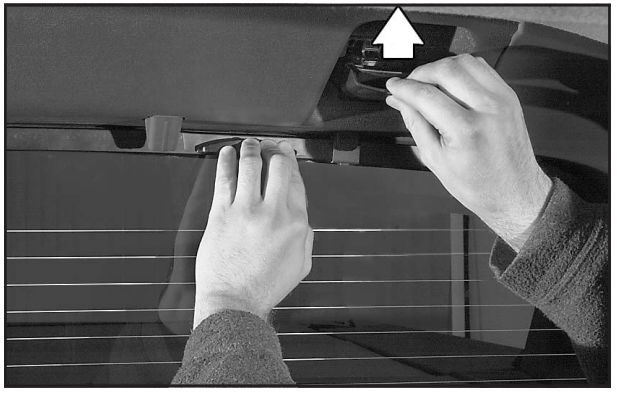

6. Push the rear glass flat against the window frame and push each latch lever up until it locks. You should hear a click when each latch lever locks correctly.

Lowering the Midgate® with the Rear Glass in Place

The Midgate® can be lowered to allow the cargo area of your vehicle to extend into the cab. The rear glass can be either installed in its normal position, or it can be removed and stored in the rear glass storage pocket.

To lower the Midgate®, do the following:

1. Fold the rear seats. The front seats might have to be moved forward slightly to allow the rear seats to fold. See *Rear Seat Operation on page 1-10* for more information.

Rear Glass in Normal Position

2. Standing outside of the vehicle, hold the Midgate® securely so it does not fall forward. Turn the Midgate® handle clockwise and pull the Midgate® toward you.

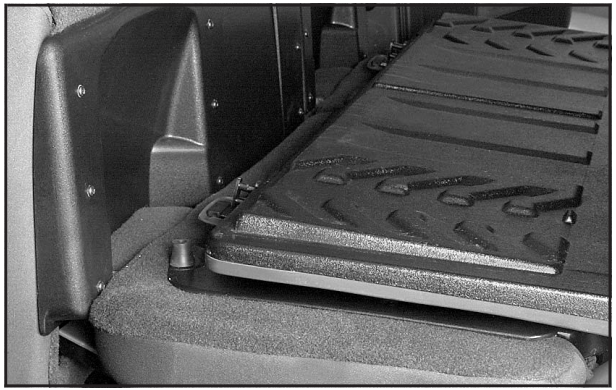

3. Lower the Midgate® until it is flat.

Lowering the Midgate® with the Rear Glass in the Storage Pocket

Rear Glass Stored in Glass Storage Pocket

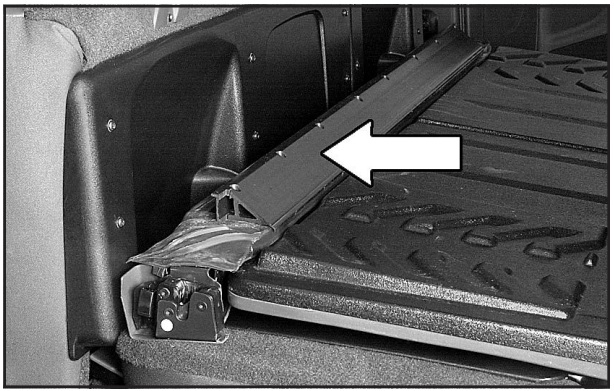

Midgate® Lowered with Crossbar Attached

This procedure works the same as the procedure described previously, but when you lower the Midgate® with the rear glass in the stored position, you will notice that the entire crossbar will lower with the Midgate®. This is completely normal; however, since the crossbar lowers with the Midgate®, it will be heavier. As you lower the Midgate® be ready for the extra weight and do not let the Midgate® fall as you lower it.

Raising the Midgate®

To return the Midgate® to its normal position, raise the Midgate® up with a firm swinging motion until it latches into place securely. This will help to ensure that the Midgate® closes with enough force to engage the latches.

If the rear glass is removed and you would like to put it back, do so using the instructions given previously.

Tailgate

⚠ CAUTION:

It is extremely dangerous to ride on the tailgate, even when the vehicle is operated at low speeds. People riding on the tailgate can easily lose their balance and fall in response to vehicle maneuvers. Falling from a moving vehicle may result in serious injuries or death. Do not allow people to ride on the tailgate. Be sure everyone in your vehicle is in a seat and using a safety belt properly.

Use the Remote Keyless Entry (RKE) transmitter or power door lock switch to lock and unlock the tailgate.

Open the tailgate by lifting up on its handle while pulling the tailgate toward you.

To shut the tailgate, push it firmly upward until it latches. Push and pull on the tailgate to be sure it is latched securely.

Tailgate Removal

The tailgate is not to be removed. This may cause damage to electrical connector resulting in loss of lock/unlock and rear vision camera function.

Power Running Boards

Your vehicle may have power running boards.

The power running boards automatically extend from beneath the vehicle on the side in which the door has been opened. Once the door is closed, the running boards will automatically move back under the vehicle after a brief delay. The vehicle must not be moving for the running boards to extend or retract.

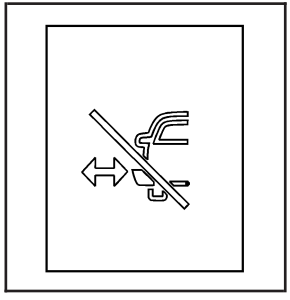

The switch used to disable the power running boards is located on the center console below the climate control system.

The running boards cannot be disabled in the extended position.

Windows

⚠ CAUTION:

Leaving children, helpless adults, or pets in a vehicle with the windows closed is dangerous. They can be overcome by the extreme heat and suffer permanent injuries or even death from heat stroke. Never leave a child, a helpless adult, or a pet alone in a vehicle, especially with the windows closed in warm or hot weather.

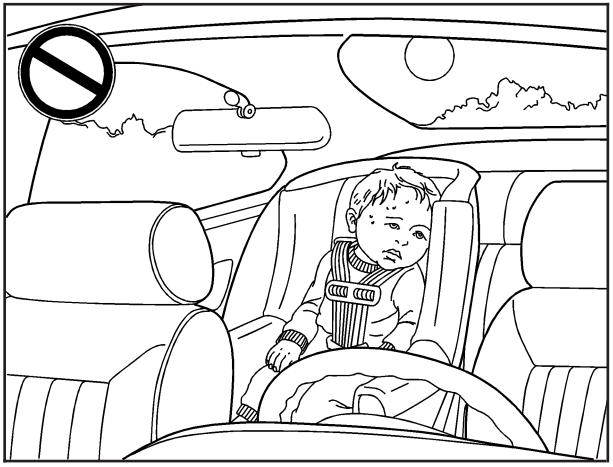

Power Windows

⚠ CAUTION:

Leaving children, helpless adults, or pets in a vehicle with the windows closed is dangerous. They can be overcome from extreme heat in warm or hot weather and suffer permanent injuries or even death from heat stroke.

Leaving children in a vehicle with the ignition key is dangerous for many reasons, children or others could be badly injured or even killed. They could operate the power windows or other controls or even make the vehicle move. The windows will function with the keys in the ignition and they could be seriously injured or killed if caught in the path of a closing window. Do not leave keys in a vehicle with children.

When there are children in the rear seat use the window lockout button to prevent unintentional operation of the windows.

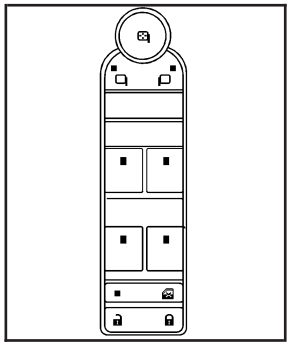

Driver's Side shown

The power window controls are located on each of the side doors.

The driver's door also has switches that control the passenger and rear windows. The power windows work when the ignition has been turned to ACCESSORY or RUN or when Retained Accessory Power (RAP) is active. See *Retained Accessory Power (RAP) on page 2-32*.

Press the switch to lower the window.

Pull up on the front edge of the switch to raise the window.

Express-Down Windows

Windows with an express-down feature allow the windows to be lowered without holding the switch. Press down fully on the window switch, then release, to activate the express-down mode. The express-down mode can be canceled at any time by pulling up on the front edge of the switch.

Window Lockout

(Window Lockout): The window lockout switch is located with the power window switches on the driver's door armrest. This feature prevents the rear passenger windows from operating, except from the driver's position. Press the switch to turn the lockout feature on or off. An indicator light will come on to show the lockout feature is on.

Sun Visors

Sun Visors with Slide Rod

Your vehicle may have this feature. Pull the sun visor down to block glare. Detach the sun visor from the center mount and slide it along the rod from side-to-side to cover the driver or passenger side of the front window. Swing the sun visor to the side to cover the side window. It can also be moved along the rod from side-to-side in this position.

Sun Visors with Fixed Rod and Pull-out Extension

Your vehicle may have this feature. Pull the sun visor down to block glare. Pull the sun visor extender out for additional coverage. Detach the sun visor from the center mount and swing it to the side to cover the side window.

Lighted Visor Vanity Mirror

Your vehicle has lighted visor vanity mirrors on both the driver's and passenger's sun visors. Pull the sun visor down and lift the mirror cover to turn the lamps on.

Theft-Deterrent Systems

Vehicle theft is big business, especially in some cities. Although your vehicle has a number of theft-deterrent features, we know that nothing we put on it can make it impossible to steal.

Content Theft-Deterrent

Your vehicle has a content theft-deterrent alarm system.

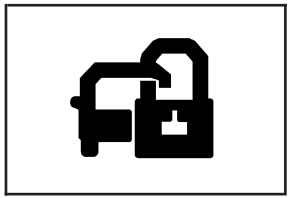

This is the security light.

To arm the theft-deterrent system:

1. Open the door.
2. Lock the door with the Remote Keyless Entry (RKE) transmitter or the power door lock switch. The security light will come on to inform the driver the system is arming. If a door is open when the doors are locked, the security light will flash.

   If the delayed locking feature is turned on, the theft-deterrent system will not start the arming process until the last door is closed and the delay timer has expired. See *Delayed Locking on page 2-11*.
3. Close all doors. The security light should go off after about 30 seconds. The alarm is not armed until the security light goes off.

   The content theft deterrent system does not sense if the midgate or tailgate are open or ajar, therefore, vehicle contents may not be protected if the midgate is left open or ajar.

If a locked door is opened without using the RKE transmitter, a ten second pre-alarm will occur. The horn will chirp and the lights will flash. If the key is not placed in the ignition and turned to START or the door is not unlocked by pressing the unlock button on the RKE transmitter during the ten second pre-alarm, the alarm will go off. Your vehicle's headlamps will flash and the horn will sound for about two minutes, then will turn off to save the battery power.

The theft-deterrent system will not activate if the doors are locked with the vehicle's key or the manual door lock. It activates only if you use the power door lock switch with the door open or the RKE transmitter. You should also remember that you can start your vehicle with the correct ignition key if the alarm has been set off.

To avoid setting off the alarm by accident:

- If you do not want to activate the theft-deterrent system, the vehicle should be locked with the door key after the doors are closed.
- Always unlock the doors with the RKE transmitter. Unlocking a door any other way will set off the alarm if it is armed.

If you set off the alarm by accident, press unlock on the RKE transmitter or place the key in the ignition and turn it to START to turn off the alarm. The alarm will not stop if you try to unlock a door any other way.

Testing the Alarm

To test the alarm:

1. From inside the vehicle, lower the driver's window and open the driver's door.
2. Activate the system by locking the doors with the power door lock switch while the door is open, or with the RKE transmitter.
3. Get out of the vehicle, close the door and wait for the security light to go out.
4. Then reach in through the window, unlock the door with the manual door lock and open the door. This should set off the alarm.

While the alarm is set, the power door unlock switch will not work.

If the alarm does not sound when it should but the headlamps flash, check to see if the horn works. The horn fuse may be blown. To replace the fuse, see *Fuses and Circuit Breakers on page 5-107*.

If the alarm does not sound or the headlamps do not flash, the vehicle should be serviced by your dealer/retailer.

PASS-Key® III+

The PASS-Key® III+ system operates on a radio frequency subject to Federal Communications Commission (FCC) Rules and with Industry Canada.

This device complies with Part 15 of the FCC Rules. Operation is subject to the following two conditions:

1. This device may not cause harmful interference.
2. This device must accept any interference received, including interference that may cause undesired operation.

This device complies with RSS-210 of Industry Canada. Operation is subject to the following two conditions:

1. This device may not cause interference.
2. This device must accept any interference received, including interference that may cause undesired operation of the device.

Changes or modifications to this system by other than an authorized service facility could void authorization to use this equipment.

PASS-Key® III+ uses a radio frequency transponder in the key that matches a decoder in your vehicle.

PASS-Key® III+ Operation

Your vehicle has PASS-Key® III+ (Personalized Automotive Security System) theft-deterrent system. PASS-Key® III+ is a passive theft-deterrent system.

The system is automatically armed when the key is removed from the ignition.

The system is automatically disarmed when the key is turned to ON/RUN, ACC/ACCESSORY or START from the LOCK/OFF position.

You do not have to manually arm or disarm the system.

The security light will come on if there is a problem with arming or disarming the theft-deterrent system.

When the PASS-Key® III+ system senses that someone is using the wrong key, it prevents the vehicle from starting. Anyone using a trial-and-error method to start the vehicle will be discouraged because of the high number of electrical key codes.

If the engine does not start and the security light on the instrument panel cluster comes on when trying to start the vehicle, there may be a problem with your theft-deterrent system. Turn the ignition off and try again.

If the engine still does not start, and the key appears to be undamaged, try another ignition key. At this time, you may also want to check the fuse, see *Fuses and Circuit Breakers on page 5-107*. If the engine still does not start with the other key, your vehicle needs service. If your vehicle does start, the first key may be faulty. See your dealer/retailer who can service the PASS-Key® III+ to have a new key made. In an emergency, contact Roadside Assistance.

It is possible for the PASS-Key® III+ decoder to learn the transponder value of a new or replacement key. Up to 10 keys may be programmed for the vehicle. The following procedure is for programming additional keys only. If all the currently programmed keys are lost or do not operate, you must see your dealer/retailer or a locksmith who can service PASS-Key® III+ to have keys made and programmed to the system.

See your dealer/retailer or a locksmith who can service PASS-Key® III+ to get a new key blank that is cut exactly as the ignition key that operates the system.

To program the new additional key:

1. Verify that the new key has a ⊕ stamped on it.
2. Insert the original, already programmed, key in the ignition and start the engine. If the engine will not start, see your dealer/retailer for service.
3. After the engine has started, turn the key to LOCK/OFF, and remove the key.
4. Insert the new key to be programmed and turn it to the ON/RUN position within five seconds of turning the ignition to the LOCK/OFF position in Step 3.

   The security light will turn off once the key has been programmed.
5. Repeat Steps 1 through 4 if additional keys are to be programmed.

If you lose or damage your PASS-Key® III+ key, see your dealer/retailer or a locksmith who can service PASS-Key® III+ to have a new key made.

Do not leave the key or device that disarms or deactivates the theft deterrent system in the vehicle.

Starting and Operating Your Vehicle

New Vehicle Break-In

Notice: **Your vehicle does not need an elaborate break-in. But it will perform better in the long run if you follow these guidelines:**

- **Keep your speed at 55 mph (88 km/h) or less for the first 500 miles (805 km).**
- **Do not drive at any one constant speed, fast or slow, for the first 500 miles (805 km). Do not make full-throttle starts. Avoid downshifting to brake or slow the vehicle.**
- **Avoid making hard stops for the first 200 miles (322 km) or so. During this time the new brake linings are not yet broken in. Hard stops with new linings can mean premature wear and earlier replacement. Follow this breaking-in guideline every time you get new brake linings.**
- **Do not tow a trailer during break-in. See *Towing a Trailer on page 4-43* for the trailer towing capabilities of your vehicle and more information.**

Following break-in, engine speed and load can be gradually increased.

Ignition Positions

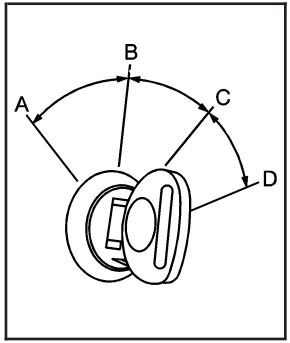

Use the key to turn the ignition switch to four different positions.

In order to shift out of PARK (P), ignition must be in the ON/RUN or ACC/ACCESSORY and the regular brake pedal must be applied.

A (LOCK/OFF): This position locks the ignition and transmission. It is a theft-deterrent feature. The key can only be removed when the ignition is turned to LOCK/OFF.

Notice: **Using a tool to force the key from the ignition switch could cause damage or break the key. Use the correct key and turn the key only with your hand. Make sure the key is all the way in. If it is, turn the steering wheel left and right while you turn the key hard. If none of this works, then your vehicle needs service.**

B (ACC/ACCESSORY): This position lets things like the radio and the windshield wipers operate while the engine is off.

Lengthy operation of features such as the radio in the ACC/ACCESSORY ignition position and the ON/RUN position may drain the battery and prevent your vehicle from starting. Do not operate your vehicle in the ACC/ACCESSORY ignition position for a long period of time.

C (ON/RUN): This is the position for driving. It is the position the ignition switch returns to after the engine starts, and the key is released.

The battery could be drained if you leave the key in the ACC/ACCESSORY or ON/RUN position with the engine off. You may not be able to start your vehicle if the battery is allowed to drain for an extended period of time.

D (START): This position starts the engine.

Key In the Ignition

Never leave your vehicle with the keys inside, as it is an easy target for joy riders or thieves. If you leave the key in the ignition and park your vehicle, a chime will sound, when you open the driver's door. Always remember to remove your key from the ignition and take it with you. This will lock your ignition and transmission. Also, always remember to lock the doors.

The battery could be drained if you leave the key in the ignition while your vehicle is parked. You may not be able to start your vehicle after it has been parked for an extended period of time.

Retained Accessory Power (RAP)

The following vehicle accessories can be used for up to 10 minutes after the engine is turned off:

- Audio System
- Power Windows
- OnStar® System (if equipped)
- Sunroof (if equipped)

These features work when the key is in ON/RUN or ACC/ACCESSORY. Once the key is turned from ON/RUN to LOCK/OFF, the windows and sunroof continue to work up to 10 minutes until any door is opened. The radio continues to work for up to 10 minutes or until the driver's door is opened.

Starting the Engine

Move your shift lever to PARK (P) or NEUTRAL (N). Your engine will not start in any other position – this is a safety feature. To restart when you are already moving, use NEUTRAL (N) only.

Notice: **Do not try to shift to PARK (P) if your vehicle is moving. If you do, you could damage the transmission. Shift to PARK (P) only when your vehicle is stopped.**

Starting Procedure

1. With your foot off the accelerator pedal, turn the ignition key to START. When the engine starts, let go of the key. The idle speed will go down as your engine gets warm. Do not race the engine immediately after starting it. Operate the engine and transmission gently to allow the oil to warm up and lubricate all moving parts.

Your vehicle has a Computer-Controlled Cranking System. This feature assists in starting the engine and protects components. If the ignition key is turned to the START position, and then released when the engine begins cranking, the engine will continue cranking for a few seconds or until the vehicle starts. If the engine does not start and the key is held in START for many seconds, cranking will be stopped after 15 seconds to prevent cranking motor damage. To prevent gear damage, this system also prevents cranking if the engine is already running. Engine cranking can be stopped by turning the ignition switch to the ACC/ACCESSORY or LOCK/OFF position.

Notice: **Cranking the engine for long periods of time, by returning the key to the START position immediately after cranking has ended, can overheat and damage the cranking motor, and drain the battery. Wait at least 15 seconds between each try, to let the cranking motor cool down.**

2. If the engine does not start after 5-10 seconds, especially in very cold weather (below 0°F or –18°C), it could be flooded with too much gasoline. Try pushing the accelerator pedal all the way to the floor and holding it there as you hold the key in START for up to a maximum of 15 seconds. Wait at least 15 seconds between each try, to allow the cranking motor to cool down. When the engine starts, let go of the key and accelerator. If the vehicle starts briefly but then stops again, do the same thing. This clears the extra gasoline from the engine. Do not race the engine immediately after starting it. Operate the engine and transmission gently until the oil warms up and lubricates all moving parts.

Notice: **The engine is designed to work with the electronics in your vehicle. If you add electrical parts or accessories, you could change the way the engine operates. Before adding electrical equipment, check with your dealer/retailer. If you do not, your engine might not perform properly. Any resulting damage would not be covered by your vehicle's warranty.**

Adjustable Throttle and Brake Pedal

Your vehicle has an adjustable throttle and brake pedal that lets you change their positions. This feature is designed for shorter drivers, since the pedals can not move farther away from the standard position, but can move toward the driver for better pedal reach.

The feature will not operate when the vehicle is in REVERSE (R) or while using the cruise control.

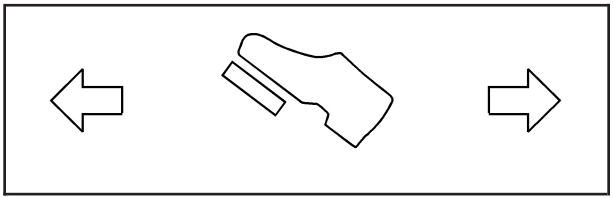

The switch used to adjust the pedals is located on the center console below the climate control system.

Press the right and left arrows to move the pedals either closer or further from your body.

Before you start driving, fully press the brake pedal to confirm the adjustment is right for you. While driving, make only small adjustments.

Your vehicle has a memory function which allows the pedals to be saved and recalled. See *Memory Seat, Mirrors, and Pedals on page 1-6* for more information.

Engine Coolant Heater

The engine coolant heater, if available, can help in cold weather conditions at or below 0°F (–18°C) for easier starting and better fuel economy during engine warm-up. Plug in the coolant heater at least four hours before starting your vehicle. An internal thermostat in the plug-end of the cord may exist which will prevent engine coolant heater operation at temperatures above 0°F (–18°C).

To Use the Engine Coolant Heater

1. Turn off the engine.
2. Open the hood and unwrap the electrical cord. The cord is located on the driver's side of the engine compartment, near the power steering fluid reservoir.
3. Plug the cord into a normal, grounded 110-volt AC outlet.

⚠ CAUTION:

Plugging the cord into an ungrounded outlet could cause an electrical shock. Also, the wrong kind of extension cord could overheat and cause a fire. You could be seriously injured. Plug the cord into a properly grounded three-prong 110-volt AC outlet. If the cord will not reach, use a heavy-duty three-prong extension cord rated for at least 15 amps.

4. Before starting the engine, be sure to unplug and store the cord as it was before to keep it away from moving engine parts. If you do not, it could be damaged.

How long should you keep the coolant heater plugged in? The answer depends on the outside temperature, the kind of oil you have, and some other things. Instead of trying to list everything here, we ask that you contact your dealer/retailer in the area where you will be parking your vehicle. The dealer/retailer can give you the best advice for that particular area.

Automatic Transmission Operation

Your vehicle has a Hydra-Matic® 6L80 automatic transmission, and has an electronic shift position indicator within the instrument panel cluster. The electronic shift position indicator displays when the shift lever is moved out of PARK (P).

There are several different positions for the shift lever.

P R N D M

PARK (P): This position locks your rear wheels. It is the best position to use when you start your engine because your vehicle cannot move easily.

When parked on a hill, especially when the vehicle has a heavy load, you may notice an increase in the effort to shift out of PARK (P). See Torque Lock (Automatic Transmission) under *Shifting Into PARK (P) on page 2-42* for more information.

⚠ CAUTION:

It is dangerous to get out of your vehicle if the shift lever is not fully in PARK (P) with the parking brake firmly set. Your vehicle can roll.

Do not leave your vehicle when the engine is running unless you have to. If you have left the engine running, the vehicle can move suddenly. You or others could be injured. To be sure your vehicle will not move, even when you are on fairly level ground, always set your parking brake and move the shift lever to PARK (P). See *Shifting Into PARK (P) on page 2-42*. If you are pulling a trailer, see *Towing a Trailer on page 4-43*.

REVERSE (R): Use this gear to back up.

Notice: **Shifting to REVERSE (R) while your vehicle is moving forward could damage the transmission. The repairs would not be covered by your warranty. Shift to REVERSE (R) only after your vehicle is stopped.**

To rock your vehicle back and forth to get out of snow, ice, or sand without damaging your transmission, see *If Your Vehicle is Stuck in Sand, Mud, Ice, or Snow on page 4-33*.

NEUTRAL (N): In this position, your engine does not connect with the wheels. To restart when you are already moving, use NEUTRAL (N) only. Also, use NEUTRAL (N) when your vehicle is being towed.

⚠ CAUTION:

Shifting into a drive gear while the engine is running at high speed is dangerous. Unless your foot is firmly on the brake pedal, your vehicle could move very rapidly. You could lose control and hit people or objects. Do not shift into a drive gear while your engine is running at high speed.

Notice: **Shifting out of PARK (P) or NEUTRAL (N) with the engine running at high speed may damage the transmission. The repairs would not be covered by your warranty. Be sure the engine is not running at high speed when shifting your vehicle.**

DRIVE (D): This position is for normal driving. It provides the best fuel economy for your vehicle. If you need more power for passing, and you are:

- Going less than about 35 mph (55 km/h), push your accelerator pedal about halfway down.
- Going about 35 mph (55 km/h) or more, push the accelerator all the way down.

By doing this, the vehicle shifts down to the next gear and has more power.

DRIVE (D) can be used when towing a trailer, carrying a heavy load, driving on steep hills, or for off-road driving. You may want to shift the transmission to a lower gear selection if the transmission shifts too often.

Downshifting the transmission in slippery road conditions could result in skidding, see Skidding under *Loss of Control on page 4-11*.

MANUAL MODE (M): This position lets drivers select the range of gears appropriate for current driving conditions. See Driver Shift Control (DSC) later in this section.

Notice: **Spinning the tires or holding the vehicle in one place on a hill using only the accelerator pedal may damage the transmission. The repair will not be covered by your warranty. If you are stuck, do not spin the tires. When stopping on a hill, use the brakes to hold the vehicle in place.**

Your vehicle has a shift stabilization feature that adjusts the transmission shifting to the current driving conditions in order to reduce rapid upshifts and downshifts. This shift stabilization feature is designed to determine, before making an upshift, if the engine will be able to maintain vehicle speed by analyzing things such as vehicle speed, throttle position and vehicle load.

If the shift stabilization feature determines that a current vehicle speed cannot be maintained, the transmission does not upshift and instead holds the current gear. In some cases, this may appear to be a delayed shift, however the transmission is operating normally.

Your vehicle's transmission uses adaptive shift controls that compares key shift parameters to pre-programmed ideal shifts stored in the transmissions computer. The transmission constantly makes adjustments to improve vehicle performance according to how the vehicle is being used, such as with a heavy load or when temperature changes. During this adaptive shift controls process, shifting may feel different as the transmission determines the best settings.

When temperatures are very cold, the Hydra-Matic® 6L80 automatic transmission's gear shifting may be delayed providing more stable shifts until the engine warms up. Shifts may be more noticeable with a cold transmission. This difference in shifting is normal.

Driver Shift Control (DSC)

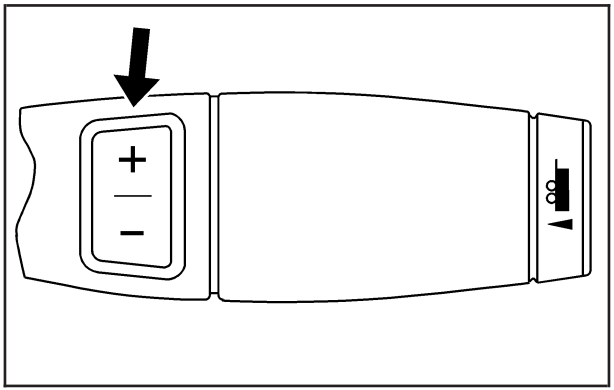

Your vehicle has a Driver Shift Control (DSC). The DSC controls the vehicle's transmission and vehicle speed while driving down hill or towing a trailer by allowing you to select a desired range of gears.

To use this feature, do the following:

1. Move the shift lever to the MANUAL MODE (M).
2. Press the plus/minus button, to upshift or downshift selecting the desired range of gears for your current driving conditions.

The DIC display will show the message MANUAL SHIFT on the first line and the current gear will be displayed on the second line. See *Driver Information Center (DIC) on page 3-45* and *DIC Operation and Displays on page 3-45* for more information. The number displayed in the DIC is the highest gear that can be used. However, your vehicle can automatically shift to lower gears as it adjusts to driving conditions. This means that all gears below that number are available. When FIFTH (5) is selected, FIRST (1) through FIFTH (5) gears are automatically shifted by the vehicle, but SIXTH (6) cannot be used until the plus/minus button located on the steering column lever is used to change to the gear.

Grade Braking is not available when the Driver Shift Control is active. See *Tow/Haul Mode on page 2-40* for more information.

While using the DSC, cruise control and the tow/haul mode can be used.

Tow/Haul Mode

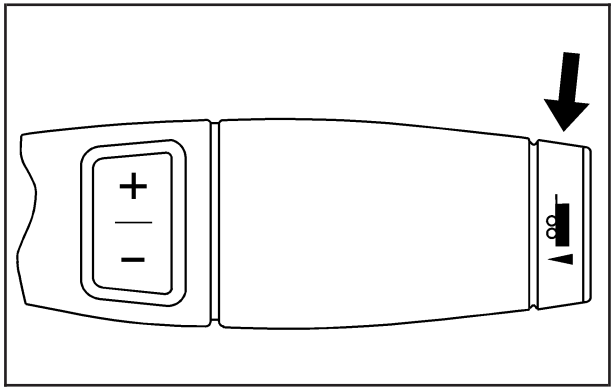

Your vehicle has a tow/haul mode. The tow/haul mode adjusts the transmission shift pattern to reduce shift cycling, providing increased performance, vehicle control, and transmission cooling when towing or hauling heavy loads.

Press the button located on the end of the shift lever to turn the tow/haul on or off. When the tow/haul is on, a light on the instrument panel cluster will come on.

See *Tow/Haul Mode Light on page 3-44* for more information.

Also see “Tow Haul Mode” under *Towing a Trailer on page 4-43* for more information.

The tow/haul mode works with the Autoride® feature, if the vehicle has this, to enhance the ride when trailering or with a loaded vehicle. See *Autoride® on page 4-42*.

Grade Braking

Grade Braking assists when driving on a downhill grade. It maintains the vehicle’s speed by automatically implementing a shift schedule that uses the engine and the transmission to slow the vehicle. This reduces wear on the brakes system and increases control of the vehicle. The system constantly monitors the vehicle’s speed, acceleration, throttle position, and whether the brake pedal is being pressed, and determines when to keep the current vehicle speed or to slow down. The system will then automatically command downshifts that reduces the vehicles speed, until the brake pedal is no longer being pressed. This indicates the desired vehicle speed has been reached.

The tow/haul mode and grade braking shift modes can be activated by pressing the button on the end of the shift control stalk. While in the DSC mode, grade braking is deactivated, allowing the driver to select a gear.

See *Automatic Transmission Operation on page 2-36* for more information.

Parking Brake

To set the parking brake, hold the regular brake pedal down with your right foot. Push down the parking brake pedal with your left foot.

A chime sounds and the warning light flashes when the parking brake is applied and the vehicle is moving at least 5 mph (8 km/h).

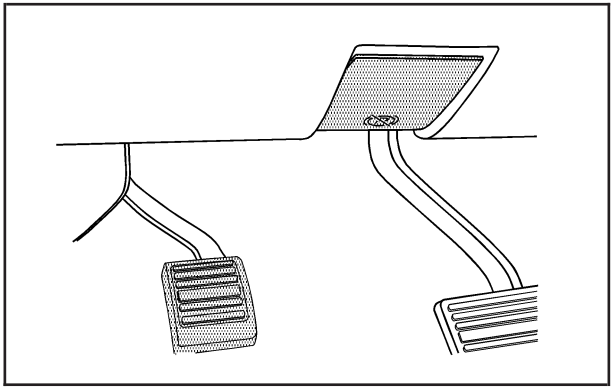

To release the parking brake, hold the regular brake pedal down. Then pull the bottom edge of the lever, with the parking brake symbol and located above the parking brake pedal.

If the ignition is on when the parking brake is released, the brake system warning light goes off.

Notice: **Driving with the parking brake on can overheat the brake system and cause premature wear or damage to brake system parts. Make sure that the parking brake is fully released and the brake warning light is off before driving.**

If you are towing a trailer and are parking on any hill, see *Towing a Trailer on page 4-43*.

Shifting Into PARK (P)

⚠ CAUTION:

It can be dangerous to get out of your vehicle if the shift lever is not fully in PARK (P) with the parking brake firmly set. Your vehicle can roll. If you have left the engine running, the vehicle can move suddenly. You or others could be injured. To be sure your vehicle will not move, even when you are on fairly level ground, use the steps that follow. If you are pulling a trailer, see *Towing a Trailer on page 4-43*.

1. Hold the brake pedal down with your right foot and set the parking brake.
2. Move the shift lever into the PARK (P) position by pulling the shift lever toward you and moving it up as far as it will go.
3. Turn the ignition key to LOCK/OFF.
4. Remove the key and take it with you. If you can leave your vehicle with the ignition key in your hand, your vehicle is in PARK (P).

Leaving Your Vehicle With the Engine Running

⚠ CAUTION:

It can be dangerous to leave your vehicle with the engine running. Your vehicle could move suddenly if the shift lever is not fully in PARK (P) with the parking brake firmly set. And, if you leave the vehicle with the engine running, it could overheat and even catch fire. You or others could be injured. Do not leave your vehicle with the engine running.

If you have to leave your vehicle with the engine running, be sure your vehicle is in PARK (P) and the parking brake is firmly set. After the shift lever is moved into PARK (P), hold the regular brake pedal down. Then, see if you can move the shift lever away from PARK (P) without first pulling it toward you. If you can, it means that the shift lever was not fully locked into PARK (P).

Torque Lock

If you are parking on a hill and you do not shift your transmission into PARK (P) properly, the weight of the vehicle can put too much force on the parking pawl in the transmission. It might be difficult to pull the shift lever out of PARK (P). This is called torque lock. To prevent torque lock, set the parking brake and then shift into PARK (P) properly before you leave the driver's seat. To find out how, see *Shifting Into PARK (P) on page 2-42*.

When you are ready to drive, move the shift lever out of PARK (P) before releasing the parking brake.

If torque lock does occur, you might need to have another vehicle push yours a little uphill to take some of the pressure from the parking pawl in the transmission. Then you should be able to pull the shift lever out of PARK (P).

Shifting Out of PARK (P)

This vehicle is equipped with an electronic shift lock release system. The shift lock release is designed to:

- Prevent ignition key removal unless the shift lever is in PARK (P) with the shift lever button fully released, and
- Prevent movement of the shift lever out of PARK (P), unless the ignition is in ON/RUN or ACC/ACCESSORY and the regular brake pedal is applied.

The shift lock release is always functional except in the case of an uncharged or low voltage (less than 9 volt) battery.

If your vehicle has an uncharged battery or a battery with low voltage, try charging or jump starting the battery. See *Jump Starting on page 5-40* for more information.

To shift out of PARK (P) use the following:

1. Apply the brake pedal.
2. Move the shift lever to the desired position.

If you still are unable to shift out of PARK (P):

1. Ease the pressure on the shift lever.
2. While holding down the brake pedal, press the shift lever all the way into PARK (P).
3. Move the shift lever to the desired position.

If you are still having a problem shifting, then have your vehicle serviced soon.

Parking Over Things That Burn

⚠ CAUTION:

Things that can burn could touch hot exhaust parts under your vehicle and ignite. Do not park over papers, leaves, dry grass, or other things that can burn.

Engine Exhaust

⚠ CAUTION:

Engine exhaust can kill. It contains the gas carbon monoxide (CO), which you cannot see or smell. It can cause unconsciousness and death.

You might have exhaust coming in if:

- **The exhaust system sounds strange or different.**
- **Your vehicle gets rusty underneath.**
- **Your vehicle was damaged in a collision.**
- **Your vehicle was damaged when driving over high points on the road or over road debris.**
- **Repairs were not done correctly.**
- **Your vehicle or the exhaust system has been modified improperly.**

If you ever suspect exhaust is coming into your vehicle:

- **Drive it only with all the windows down to blow out any CO; and**
- **Have your vehicle fixed immediately.**

Running the Engine While Parked

It is better not to park with the engine running.
But if you ever have to, here are some things to know.

⚠ CAUTION:

Idling the engine with the climate control system off could allow dangerous exhaust into your vehicle. See the earlier caution under *Engine Exhaust on page 2-44*.

Also, idling in a closed-in place can let deadly carbon monoxide (CO) into your vehicle even if the climate control fan is at the highest setting. One place this can happen is a garage. Exhaust — with CO — can come in easily. NEVER park in a garage with the engine running.

Another closed-in place can be a blizzard. See *Winter Driving on page 4-30*.

⚠ CAUTION:

It can be dangerous to get out of your vehicle if the shift lever is not fully in PARK (P) with the parking brake firmly set. Your vehicle can roll. Do not leave your vehicle when the engine is running unless you have to. If you have left the engine running, the vehicle can move suddenly. You or others could be injured. To be sure your vehicle will not move, even when you are on fairly level ground, always set the parking brake and move the shift lever to PARK (P).

Follow the proper steps to be sure your vehicle will not move. See *Shifting Into PARK (P) on page 2-42*.

If you are pulling a trailer, see *Towing a Trailer on page 4-43*.

Mirrors

Automatic Dimming Rearview Mirror with Intellibeam®, OnStar®, Compass, and Temperature Display

Your vehicle may have an automatic dimming rearview mirror with Intellibeam®, OnStar®, compass and temperature display. For more information on OnStar®, see *OnStar® System on page 2-56*. For more information on Intellibeam®, see “Intellibeam® Intelligent High-Beam Headlamp Control System” under *Exterior Lamps on page 3-14*.

The mirror includes an eight-point compass display in the upper right corner of the mirror face. When on, the compass automatically calibrates as the vehicle is driven. Outside temperature is also shown in the display.

Automatic Dimming

Your vehicle has an inside automatic dimming rearview mirror. The automatic dimming feature is activated whenever the vehicle is turned on and dims only during nighttime driving.

Compass Operation

AUTO : Press and hold the “auto highbeam” button for about three seconds to turn the compass/temperature display on or off.

When the ignition and the display features are on, the display will show two character boxes for about two seconds. After two seconds, the mirror will display the compass heading and temperature.

Compass Calibration

If after two seconds the display does not show the correct direction, (N for North for example), there may be a strong magnetic field interfering with the compass. Such interference may be caused by a magnetic antenna mount, magnetic note pad holder, or a similar magnetic item.

The compass can be placed in calibration mode manually by pressing and holding the “auto highbeam” button for about nine seconds until CAL is shown in the compass display.

The mirror can then be calibrated by driving the vehicle in circles at 5 mph (8 km/h) or less until the display reads the correct direction.

Compass Variance

The mirror is set to zone eight upon leaving the factory. It will be necessary to adjust the compass to compensate for compass variance if the vehicle is driven outside zone eight. Under certain circumstances, such as a long distance, cross-country trip, it will be necessary to adjust the compass variance.

Compass variance is the difference between earth's magnetic north and true geographic north. If the mirror is not adjusted to account for zone changes, the compass could give false readings.

To adjust for zone changes:

1. Find your current location and variance zone number on the zone map that follows.

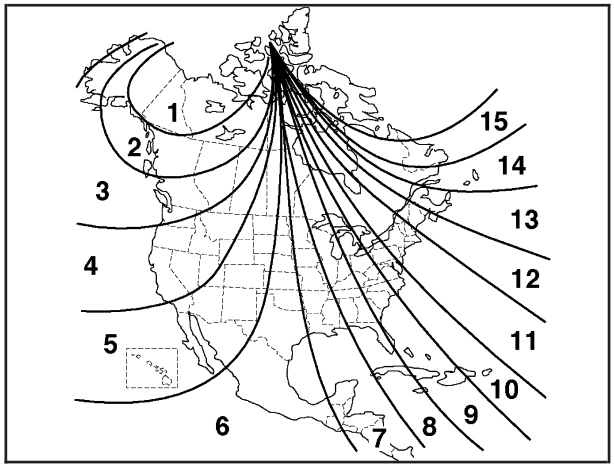

2. Press and hold the "auto highbeam" button about six seconds until a zone number appears in the display.
3. Once the zone number appears in the display, press the "auto highbeam" button quickly until you reach the correct zone number. Stop pressing the button and the mirror will return to normal operation. If C appears in the compass window, the compass needs calibration. See "Compass Calibration" listed previously.

Outside Temperature

Outside temperature is shown in the mirror display. Temperature will be displayed in Fahrenheit or Celsius based on the choice of English or metric in the vehicle's configuration menu.

If an abnormal temperature reading is displayed for an extended period of time, please consult your dealer/retailer. Under certain circumstances, a delay in updating the temperature is normal.

Cleaning the Mirror

When cleaning the mirror, use a paper towel or similar material dampened with glass cleaner. Do not spray glass cleaner directly on the mirror as that may cause the liquid cleaner to enter the mirror housing.

Automatic Dimming Rearview Mirror with OnStar®, Compass and Temperature Display

Your vehicle may have this feature. When on, the automatic dimming mirror dims to the proper level to minimize glare from lights behind you after dark.

The mirror has a dual display in the upper right corner of the mirror face that shows the compass reading and the outside temperature.

Control buttons for the OnStar® system, if equipped, are at the bottom of the mirror. See *OnStar® System on page 2-56* for more information about the services OnStar® provides.

⏻ **(On/Off):** This is the on/off button.

Temperature and Compass Display

Press the on/off button, located on the far left of the mirror face, to turn the compass/temperature display on or off.

If the display reads CAL, the compass needs to be calibrated. For more information, see “Compass Calibration” following.

To adjust between Fahrenheit and Celsius, do the following:

1. Press and hold the on/off button until either a flashing F or C appears.
2. Press the button again to change the display to the desired unit of measurement. After approximately four seconds of inactivity, the new unit will be locked in and the compass/temperature display will return.

If an abnormal temperature reading is displayed for an extended period of time, please see your GM dealer. Under certain circumstances, a delay in updating the temperature is normal.

Automatic Dimming Mirror Operation

The automatic dimming mirror function is turned on automatically each time the ignition is started. To operate the automatic dimming mirror, do the following:

1. Make sure the green indicator light, located to the left of the on/off button, is lit. If it is not, press and hold the on/off button until the green light comes on, indicating that the mirror is in automatic dimming mode.
2. Turn off the automatic dimming mirror function by pressing and holding the on/off button until the green indicator light turns off.

Compass Variance

The mirror is set in zone eight upon leaving the factory. It will be necessary to adjust the compass to compensate for compass variance if the vehicle is outside of zone eight. Under certain circumstances, as during a long distance cross-country trip, it will be necessary to adjust for compass variance. Compass variance is the difference between earth's magnetic north and true geographic north. If not adjusted to account for compass variance, the compass could give false readings.

To adjust for compass variance, do the following:

1. Find your current location and variance zone number on the following zone map.

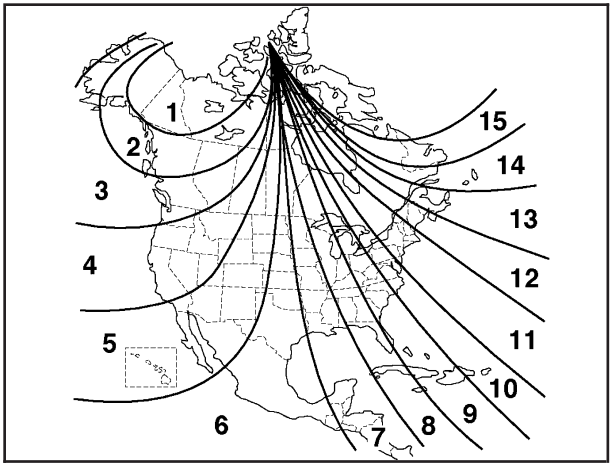

2. Press and hold the on/off button until a Z and a zone number appears in the display. The compass is now in zone mode.

3. Keep pressing the on/off button until the desired zone number appears in the display. Release the button. After approximately four seconds of inactivity, the new zone number will be locked in and the compass/temperature display will return.
4. Calibrate the compass as described next.

Compass Calibration

The compass may need calibration if one of the following occurs:

- After approximately five seconds, the display does not show a compass heading, N for North, for example, there may be a strong magnetic field interfering with the compass. Such interference may be caused by a magnetic antenna mount, magnetic note pad holder, or a similar magnetic item.
- The compass does not display the correct heading and the compass zone variance is set correctly.

In order to calibrate, CAL must be displayed in the mirror compass windows. If CAL is not displayed, push the on/off button for approximately 12 seconds or until CAL is displayed.

The compass can be calibrated by driving the vehicle in circles at 5 mph (8 km/h) or less until the display reads a direction.

Cleaning the Mirror

When cleaning the mirror, use a paper towel or similar material dampened with glass cleaner. Do not spray glass cleaner directly on the mirror as that may cause the liquid cleaner to enter the mirror housing.

Outside Power Foldaway Mirrors

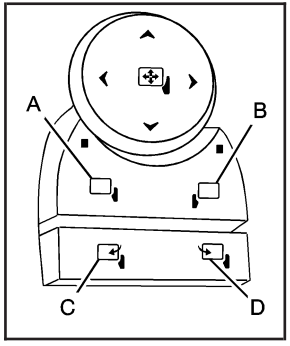

The outside power foldaway mirror controls are located on the driver's door armrest.

- Press (A) to select the driver's side mirror. Then press the arrows located on the four-way control pad to adjust the mirror. Press (A) again to deselect the mirror.
- Press (B) to select the passenger's side mirror. Then press the arrows located on the four-way control pad to adjust the mirror. Press (B) again to deselect the mirror.
- Press (C) to fold the mirrors out to the driving position.
- Press (D) to fold the mirrors in to the folded position.

If the mirrors are accidentally folded/unfolded manually, they may shake or flutter at normal driving speeds and may not stay in the unfolded position. If this happens, you will need to reset the mirrors. See "Resetting the Power Foldaway Mirrors" next.

Resetting the Power Foldaway Mirrors

You will need to reset the power foldaway mirrors if the following occurs:

- The mirrors are accidentally obstructed while folding.
- They are accidentally manually folded/unfolded.
- The mirrors will not stay in the unfolded position.
- The mirrors shake and flutter at normal driving speeds.

To reset the power foldaway mirrors, fold and unfold them one time using the mirror controls. This will reset them to their normal position.

This mirror has the following features.

Automatic Dimming

The driver's outside mirror will adjust for the glare of the headlamps behind you. See *Automatic Dimming Rearview Mirror with OnStar®, Compass and Temperature Display on page 2-48*.

Curb View Assist

If your vehicle has the memory package, the outside mirrors are able to perform the park tilt function. This feature may be useful in allowing the driver to view the curb when parallel parking. This feature will cause the passenger's and/or driver's mirror to tilt to a preselected position when the vehicle is in REVERSE (R).

The passenger's and/or driver's mirror will return to its original position when the vehicle is shifted out of REVERSE (R), or the ignition is turned off or to OFF/LOCK.

This feature can be turned on or off through the Driver Information Center (DIC). See *DIC Vehicle Customization on page 3-57*.

Heated Mirrors

The button to turn the heated mirrors on or off is located on the climate control panel. Press this button to warm the driver's and passenger's outside rearview mirrors to help clear them of ice, snow, and condensation.

See "Rear Window Defogger" under *Dual Automatic Climate Control System on page 3-24* for more information.

Convex Mirror

⚠ CAUTION:

A convex mirror can make things (like other vehicles) look farther away than they really are. If you cut too sharply into the right lane, you could hit a vehicle on your right. Check your inside mirror or glance over your shoulder before changing lanes.

The passenger's side mirror may have convex glass. A convex mirror's surface is curved so more can be seen from the driver's seat.

Your vehicle has a turn signal indicator on the mirror. An arrow on the mirror will flash in the direction of the turn or lane change.

Object Detection Systems

Ultrasonic Rear Parking Assist (URPA)

If your vehicle has the Ultrasonic Rear Parking Assist (URPA) system, it helps you park easier and avoid other vehicles while in REVERSE (R). It operates at speeds less than 5 mph (8 km/h). It can determine how close objects are to the rear bumper, up to 8 feet (2.5 m) behind your vehicle. The distance sensors are located on the rear bumper.

⚠ CAUTION:

The Ultrasonic Rear Parking Assist (URPA) system does not replace driver vision. It cannot detect:

- **objects that are below the bumper, underneath the vehicle, or if they are too close or far from the vehicle**
- **children, pedestrians, bicyclists, or pets.**

CAUTION: (Continued)

CAUTION: (Continued)

If you do not use proper care before and while backing; vehicle damage, injury, or death could occur. Even with URPA, always check behind your vehicle before backing up. While backing, be sure to look for objects and check your vehicle's mirrors.

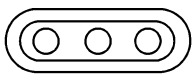

On some vehicles this display is located above the rear window towards the center of the vehicle and can be seen by looking over your right shoulder.

If your vehicle has the display, there are three color-coded lights to provide distance and system information.

If your vehicle does not have the display and it has URPA, you will hear the beeps as described in the following information.

How the System Works

URPA comes on automatically when the shift lever is moved into REVERSE (R). The rear display will then briefly illuminate to let you know the system is working.

URPA operates only at speeds less than 5 mph (8 km/h). If you are above this speed, the red light on the rear display will flash.

To be detected, objects must be at least 10 inches (25.4 cm) off the ground and below Midgate®/tailgate level. Objects must also be within 8 feet (2.5 m) from your rear bumper. This distance may be less during warmer or humid weather.

A single beep will sound the first time an object is detected between 20 inches (0.5 m) and 8 feet (2.5 m) away. Beeping will occur for three seconds when you are closer than 1 foot (0.3 m) from the object.

The following describes what will occur with the URPA display as you get closer to a detected object:

Description	English	Metric
amber light	8 ft	2.5 m
amber/amber lights	40 in	1.0 m
amber/amber/red lights	23 in	0.6 m
amber/amber/red lights flashing and beep for three seconds	1 ft	0.3 m

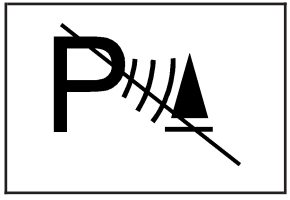

The system can be disabled by pressing the rear park aid disable button located next to the radio. The indicator light will come on to indicate that URPA is off.

Notice: **If you use URPA while the tailgate is lowered, it may not detect an object behind your vehicle, and you might back into the object and damage your vehicle. Always verify the tailgate is closed when using URPA or turn off URPA when driving with the tailgate lowered.**

When the System Does Not Seem to Work Properly

- The driver disables the system.
- The parking brake pedal is depressed.
- The ultrasonic sensors are not clean. Keep your vehicle's rear bumper free of mud, dirt, snow, ice and slush. For cleaning instructions, see *Washing Your Vehicle on page 5-101*.
- A trailer was attached to your vehicle, or a bicycle or an object was hanging out of your Midgate®/tailgate during your last drive cycle, the red light may illuminate in the rear display. Once the attached object is removed, URPA will return to normal operation.
- A tow bar is attached to your vehicle.
- The vehicle's bumper is damaged. Take the vehicle to your dealer/retailer to repair the system.
- Other conditions may affect system performance, such as vibrations from a jackhammer or the compression of air brakes on a very large truck.

If the system is still disabled, after driving forward at least 15 mph (25 km/h), take your vehicle to your dealer/retailer.

OnStar® System

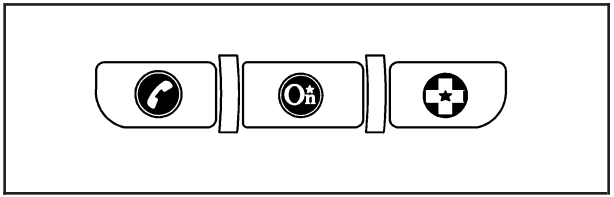

OnStar uses several innovative technologies and live advisors to provide you with a wide range of safety, security, information, and convenience services. If your airbags deploy, the system is designed to make an automatic call to OnStar Emergency advisors who can request emergency services be sent to your location. If you lock your keys in the vehicle, call OnStar at 1-888-4-ONSTAR and they can send a signal to unlock your doors. If you need roadside assistance, press the OnStar button and they can contact Roadside Service for you.

OnStar service is provided to you subject to the OnStar Terms and Conditions. You may cancel your OnStar service at any time by contacting OnStar. A complete OnStar Owner's Guide and the OnStar Terms and Conditions are included in the vehicle's OnStar Subscriber glove box literature. For more information, visit onstar.com or onstar.ca, contact OnStar at 1-888-4-ONSTAR (1-888-466-7827) or TTY 1-877-248-2080, or press the OnStar button to speak with an OnStar advisor 24 hours a day, 7 days a week.

Not all OnStar features are available on all vehicles. To check if your vehicle is equipped to provide the services described below, or for a full description of OnStar services and system limitations, see the OnStar Owner's Guide in your glove box or visit onstar.com.

OnStar Services

For new vehicles with OnStar, the Safe & Sound Plan, or the Directions & Connections Plan is included for one year from the date of purchase. You can extend this plan beyond the first year, or upgrade to the Directions & Connections Plan. For more information, press the OnStar button to speak with an advisor. Some OnStar services (such as Remote Door Unlock or Stolen Vehicle Location Assistance) may not be available until you register with OnStar.

Available Services with Safe & Sound Plan

- Automatic Notification of Airbag Deployment
- Advanced Automatic Crash Notification (AACN) (If equipped)
- Link to Emergency Services
- Roadside Assistance
- Stolen Vehicle Location Assistance
- AccidentAssist
- Remote Door Unlock/Vehicle Alert
- OnStar Vehicle Diagnostics
- GM Goodwrench® On Demand Diagnostics
- OnStar Hands-Free Calling with 30 complimentary minutes
- OnStar Virtual Advisor (U.S. Only)

Available Services included with Directions & Connections Plan

- All Safe and Sound Plan Services
- Driving Directions - Advisor delivered or OnStar Turn-by-Turn Navigation (If equipped)
- RideAssist
- Information and Convenience Services

OnStar Hands-Free Calling

OnStar Hands-Free Calling allows eligible OnStar subscribers to make and receive calls using voice commands. Hands-Free Calling is fully integrated into the vehicle, and can be used with OnStar Pre-Paid Minute Packages. Hands-Free Calling may also be linked to a Verizon Wireless service plan in the U.S. or a Bell Mobility service plan in Canada, depending on eligibility. To find out more, refer to the OnStar Owner's Guide in the vehicle's glove box, visit www.onstar.com or www.onstar.ca, or speak with an OnStar advisor by pressing the OnStar button or calling 1-888-4-ONSTAR (1-888-466-7827).

OnStar Virtual Advisor

OnStar Virtual Advisor is a feature of OnStar Hands-Free Calling that uses your minutes to access location-based weather, local traffic reports, and stock quotes. By pressing the phone button and giving a few simple voice commands, you can browse through the various topics. See the OnStar Owner's Guide for more information (Only available in the continental U.S.).

OnStar Steering Wheel Controls

Your vehicle may have a Talk/Mute button that can be used to interact with OnStar Hands-Free Calling. See *Audio Steering Wheel Controls on page 3-103* for more information.

On some vehicles, you may have to hold the button for a few seconds and give the command "ONSTAR" to activate the OnStar Hands-Free Calling.

On some vehicles, the mute button can be used to dial numbers into voicemail systems, or to dial phone extensions. See the OnStar Owner's Guide for more information.

How OnStar Service Works

Your vehicle's OnStar system has the capability of recording and transmitting vehicle information. This information is automatically sent to an OnStar Call Center at the time of an OnStar button press, Emergency button press or if your airbags or AACN system deploys. The vehicle information usually includes your GPS location and, in the event of a crash, additional information regarding the accident that your vehicle has been involved in

(e.g. the direction from which your vehicle was hit). When you use the Virtual Advisor feature of OnStar Hands-Free Calling, your vehicle also sends OnStar your GPS location so that we can provide you with location-based services.

OnStar service cannot work unless your vehicle is in a place where OnStar has an agreement with a wireless service provider for service in that area. OnStar service also cannot work unless you are in a place where the wireless service provider OnStar has hired for that area has coverage, network capacity and reception when the service is needed, and technology that is compatible with the OnStar service. Not all services are available everywhere, particularly in remote or enclosed areas, or at all times.

Location information about your vehicle is only available if the GPS satellite signals are unobstructed and available.

Your vehicle must have a working electrical system (including adequate battery power) for the OnStar equipment to operate. There are other problems OnStar cannot control that may prevent OnStar from providing OnStar service to you at any particular time or place. Some examples are damage to important parts of your vehicle in an accident, hills, tall buildings, tunnels, weather or wireless phone network congestion.

Your Responsibility

Increase the radio volume if you cannot hear the OnStar advisor. If the light next to the OnStar buttons is red, this means that your system is not functioning properly and should be checked by your dealer/retailer. If the light appears clear (no light is appearing), your OnStar subscription has expired. You can always press the OnStar button to confirm that your OnStar equipment is active.

Universal Home Remote System

The Universal Home Remote System provides a way to replace up to three hand-held Radio-Frequency (RF) transmitters used to activate devices such as garage door openers, security systems, and home lighting.

This device complies with Part 15 of the FCC Rules. Operation is subject to the following two conditions:

1. This device may not cause harmful interference.
2. This device must accept any interference received, including interference that may cause undesired operation.

This device complies with RSS-210 of Industry Canada. Operation is subject to the following two conditions:

1. This device may not cause interference.
2. This device must accept any interference received, including interference that may cause undesired operation of the device.

Changes or modifications to this system by other than an authorized service facility could void authorization to use this equipment.

Universal Home Remote System Operation (With Three Round LED)

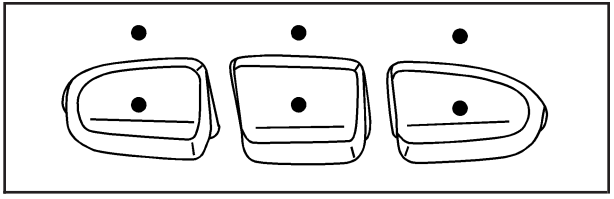

Your vehicle may have the Universal Home Remote System. If there are three round Light Emitting Diode (LED) indicator lights above the Universal Home Remote buttons, follow the instructions below.

This system provides a way to replace up to three remote control transmitters used to activate devices such as garage door openers, security systems, and home automation devices.

Do not use this system with any garage door opener that does not have the stop and reverse feature. This includes any garage door opener model manufactured before April 1, 1982.

Read the instructions completely before attempting to program the transmitter. Because of the steps involved, it may be helpful to have another person available to assist you in programming the transmitter.

Be sure to keep the original remote control transmitter for use in other vehicles, as well as, for future programming. You only need the original remote control transmitter for Fixed Code programming. It is also recommended that upon the sale or lease termination of the vehicle, the programmed buttons should be erased for security purposes. See “Erasing Universal Home Remote Buttons” later in this section.

When programming a garage door, it is advised to park outside of the garage. Be sure that people and objects are clear of the garage door or security device you are programming.

Programming Universal Home Remote — Rolling Code

If you have questions or need help programming the Universal Home Remote System, call 1-866-572-2728 or go to www.learcar2u.com.

Most garage door openers sold after 1996 are Rolling Code units.

Programming a garage door opener involves time-sensitive actions, so read the entire procedure before you begin. If you do not follow these actions, the device will time out and you will have to repeat the procedure.

To program up to three devices:

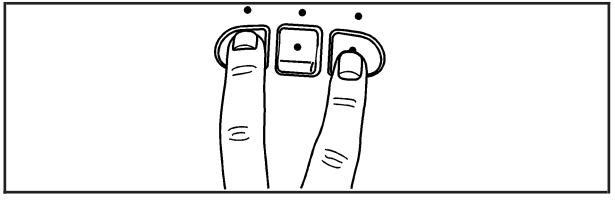

1. From inside the vehicle, press the two outside buttons at the same time for one to two seconds, and immediately release them.

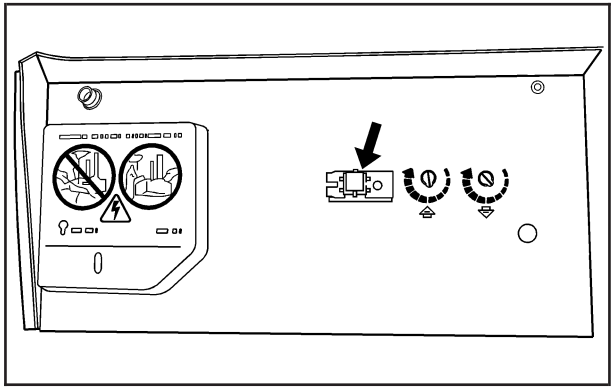

2. Locate in the garage, the garage door opener receiver (motor-head unit). Locate the “Learn” or “Smart” button. It can usually be found where the hanging antenna wire is attached to the motor-head unit and may be a colored button. Press this button. After you press this button, you will have 30 seconds to complete the following steps.
3. Immediately return to your vehicle. Press and hold the Universal Home Remote button that you would like to use to control the garage door until the garage door moves. The indicator light, above the selected button, should slowly blink. You may need to hold the button from five to 20 seconds.
4. Immediately, within one second, release the button when the garage door moves. The indicator light will blink rapidly until programming is complete.
5. Press and release the same button again. The garage door should move, confirming that programming is successful and complete.

To program another Rolling Code device such as an additional garage door opener, a security device, or home automation device, repeat Steps 1 through 5, choosing a different function button in Step 3 than what you used for the garage door opener.

If these instructions do not work, you probably have a Fixed Code garage door opener. Follow the Programming instructions that follow for a Fixed Code garage door opener.

Programming Universal Home Remote — Fixed Code

If you have questions or need help programming the Universal Home Remote System, call 1-866-572-2728 or go to www.learcar2u.com.

Most garage door openers sold before 1996 are Fixed Code units.

Programming a garage door opener involves time-sensitive actions, so read the entire procedure before you begin. If you do not follow these actions, the device will time out and you will have to repeat the procedure.

To program up to three devices:

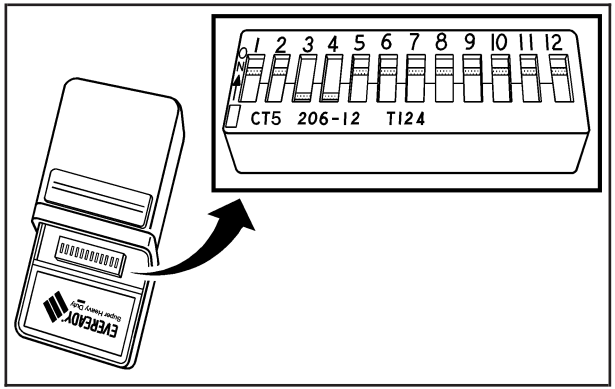

1. To verify if you have a Fixed Code garage door opener, remove the battery cover on your hand held transmitter supplied by the manufacturer of your garage door opener motor. If you see a row of dip switches similar to the graphic above, you have a Fixed Code garage door opener. If you do not see a row of dip switches, return to the previous section for Programming Universal Home Remote – Rolling Code.

   Your hand held transmitter may have between eight to 12 dip switches depending on the brand of transmitter.

Your garage door opener receiver (motor head unit) may also have a row of dip switches that can be used when programming the Universal Home Remote. If the total number of switches on the motor head and hand held transmitter are different, or if the dip switch settings are different, use the dip switch settings on the motor head unit to program your Universal Home Remote. The motor head dip switch settings can also be used when you do not have the original hand held transmitter.

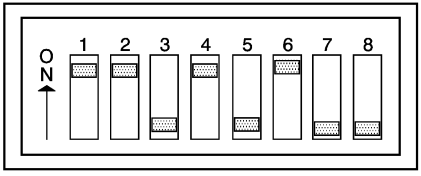

Switch Number	1	2	3	4	5	6	7	8
Switch Position	On	On	Off	On	Off	On	Off	Off
Your Universal Home Remote Button	Left	Left	Right	Left	Right	Left	Right	Right

Example of Eight Dip Switches with Two Positions

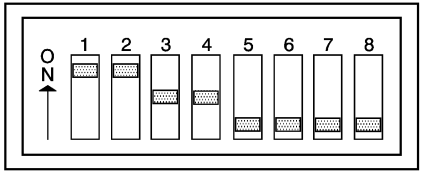

Switch Number	1	2	3	4	5	6	7	8
Switch Position	On	On	Neutral	Neutral	Off	Off	Off	Off
Your Universal Home Remote Button	Left	Left	Middle	Middle	Right	Right	Right	Right

Example of Eight Dip Switches with Three Positions

Your panel of switches may not appear exactly as they do in the examples, but they should be similar.

The switch positions on your hand-held transmitter may be labeled as follows:

- A switch in the up position may be labeled as “Up,” “+,” or “On.”
- A switch in the down position may be labeled as “Down,” “–,” or “Off.”
- A switch in the middle position may be labeled as “Middle,” “0,” or “Neutral.”

2. Write down the eight to 12 switch settings from left to right as follows:
   - When a switch is in the up position, write “Left.”
   - When a switch is in the down position, write “Right.”
   - If a switch is set between the up and down position, write “Middle.”

     The switch settings that you wrote down in Step 2 will now become the button strokes you enter into the Universal Home Remote in Step 4. Be sure to enter the switch settings that you wrote down in Step 2, in order from left to right, into the Universal Home Remote, when completing Step 4.
3. From inside your vehicle, first firmly press all three buttons at the same time for about three seconds. Release the buttons to put the Universal Home Remote into programming mode.

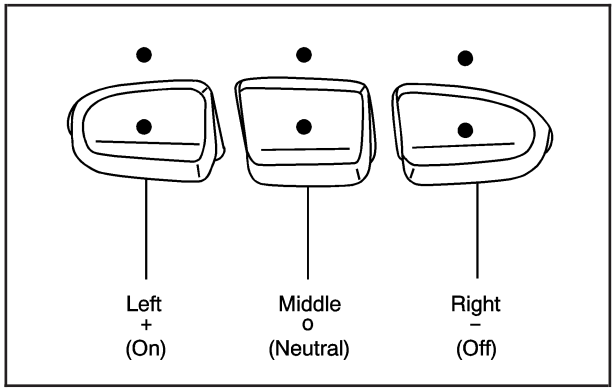

4. The indicator lights will blink slowly. Enter each switch setting from Step 2 into your vehicle’s Universal Home Remote. You will have two and one-half minutes to complete Step 4. Now press one button on the Universal Home Remote for each switch setting as follows:
   - If you wrote “Left,” press the left button in the vehicle.
   - If you wrote “Right,” press the right button in the vehicle.
   - If you wrote “Middle,” press the middle button in the vehicle.

5. After entering all of the switch positions, again, firmly press and release all three buttons at the same time. The indicator lights will turn on.
6. Press and hold the button you would like to use to control the garage door until the garage door moves. The indicator light above the selected button should slowly blink. You may need to hold the button from five to 55 seconds.
7. Immediately release the button when the garage door moves. The indicator light will blink rapidly until programming is complete.
8. Press and release the same button again. The garage door should move, confirming that programming is successful and complete.

To program another Fixed Code device such as an additional garage door opener, a security device, or home automation device, repeat Steps 1-8, choosing a different button in Step 6 than what you used for the garage door opener.

Using Universal Home Remote

Press and hold the appropriate button for at least half of a second. The indicator light will come on while the signal is being transmitted.

Reprogramming Universal Home Remote Buttons

You can reprogram any of the three buttons by repeating the instructions.

Erasing Universal Home Remote Buttons

You should erase the programmed buttons when you sell or terminate your lease.

To erase either Rolling Code or Fixed Code on the Universal Home Remote device:

1. Press and hold the two outside buttons at the same time for approximately 20 seconds, until the indicator lights, located directly above the buttons, begin to blink rapidly.
2. Once the indicator lights begin to blink, release both buttons. The codes from all buttons will be erased.

For help or information on the Universal Home Remote System, call the customer assistance phone number under *Customer Assistance Offices on page 7-5*.

Storage Areas

Glove Box

To open the glove box, lift up on the lever.

Cupholder(s)

Your vehicle has cupholders for the front and rear passengers.

The cupholders are located in the center console for the front passengers and on the rear of the center console for the rear passengers.

To use the front cupholders, press down on the access door and release. The door will then open. Push the door back down to close it.

To use the rear cupholders, pull down on the door located on the back of the console.

The front cupholder may be removed for cleaning by pushing down and then back on the cupholder.

Instrument Panel Storage

Your vehicle may have a closed storage area on the instrument panel above the compact disc changer. You can open the storage area by pressing in the bottom of the lid and the lid will automatically raise up. Press down on the lid to close the storage area.

Center Console Storage

Your vehicle has a console compartment between the bucket seats. The console has both an upper and lower storage bin that can be opened by lifting up on the latches located at the front of the console lids. The console may have an accessory power outlet inside, see *Accessory Power Outlet(s) on page 3-22*. The rear of the console also has a cupholder that swings down for the rear seat passengers to use.

Luggage Carrier

The vehicle may have a luggage carrier that can be used to load things on top of the vehicle.

The luggage carrier has siderails attached to the roof. It may also have crossrails which can be moved back and forth to help secure cargo. Tie the load to the siderails or siderail supports.

Notice: **Loading cargo on the luggage carrier that weighs more than 200 lbs (91 kg) or hangs over the rear or sides of the vehicle may damage your vehicle. Load cargo so that it rests on the slats as far forward as possible and against the side rails, making sure to fasten it securely.**

Do not exceed the maximum vehicle capacity when loading your vehicle. For more information on vehicle capacity and loading, see *Loading Your Vehicle on page 4-35*.

To prevent damage or loss of cargo while you are driving, check now and then to make sure the luggage and cargo are still securely fastened.

Be sure the cargo is properly loaded.

- If small heavy objects are placed on the roof, cut a piece of 3/8 inch plywood to fit inside the crossrails and siderails to spread the load. Tie the plywood to the siderail supports.
- Tie the load to the crossrails or the siderail supports. Use the crossrails only to keep the load from sliding. To move a crossrail, turn the release knobs, on both sides of the rail, counterclockwise to loosen it. Slide the crossrail to the desired position balancing the force side to side. Turn the release knobs, on both sides of the rail, clockwise to tighten it. Try to slide the crossrail back and forth slightly to be sure it is tight.
- If you need to carry long items, move the crossrails as far apart as they will go. Tie the load to the crossrails and the siderails or siderail supports. Also tie the load to the bumpers. Do not tie the load so tightly that the crossrails or siderails are damaged.
- After moving a crossrail, be sure it is securely locked into the siderail.

Your vehicle has a Center High-Mounted Stoplamp (CHMSL) located above the rear glass. When loading items on the roof, take care not to block or damage the CHMSL.

Rear Seat Armrest

Your vehicle's second row seat may have an armrest/storage compartment.

Pull the loop at the top of the armrest out to lower the armrest.

To open the compartment, push the button on the front of the armrest and pull the top open.

Cargo Cover Panels

⚠ CAUTION:

Improperly stored cargo cover panels could be thrown about the vehicle during a collision or sudden maneuver. You or others could be injured. If you remove a panel, always store it in the proper storage location. When you put it back, always be sure that is securely reattached.

Notice: **Exceeding the weight limit of 250 lbs (113 kg) can damage the cargo covers, and the repairs would not be covered by your warranty. Do not put anything on top of the cargo covers over the weight limit.**

Your vehicle has a three-piece cargo cover system. The cargo panels can be removed and stored in the cargo area of the vehicle.

To remove a cargo panel(s), do the following:

1. Lower the tailgate. See *Tailgate on page 2-23* for more information on the tailgate.

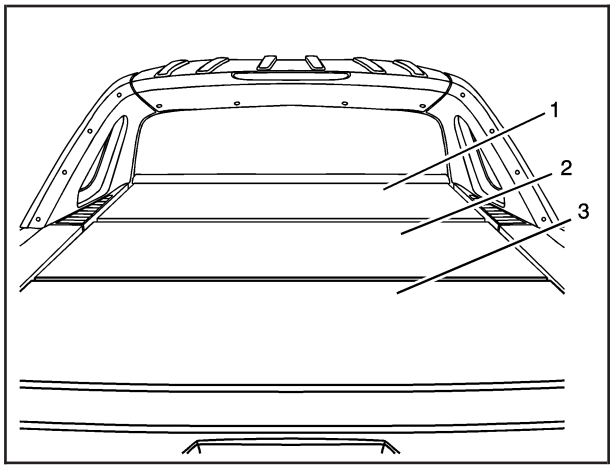

Before removing the cargo panel(s), notice the numbers embossed on the upper center portion of each panel. The panels are labeled 1, 2 and 3. Corresponding numbered labels are also on the bottom of the panels. These numbers on the top and bottom of the panels will be used as reference in the steps for removing, storing and reinstalling the panels.

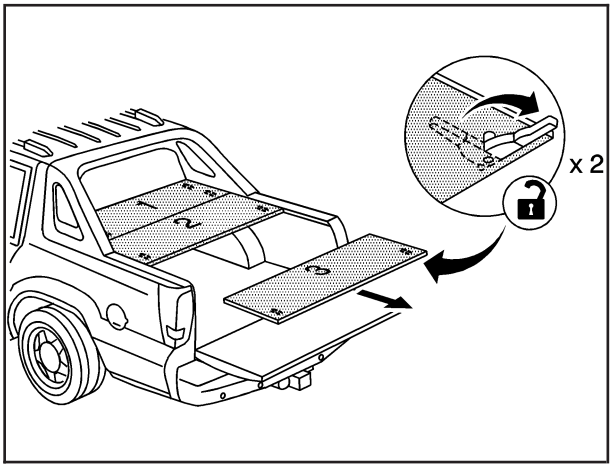

2. Remove cargo panel 3 by pulling the left and right cargo panel latches, located on the bottom of each cargo panel, toward you to unlock the cargo panel latches.
3. Pull the cargo panel up and then out from the side rails and set it aside. You only need to remove as many cargo panels as needed for your cargo carrying needs.

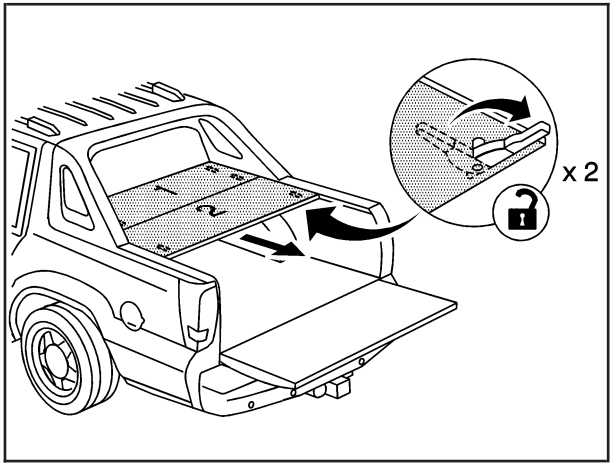

4. Remove cargo panel 2 in the same way and set it aside.

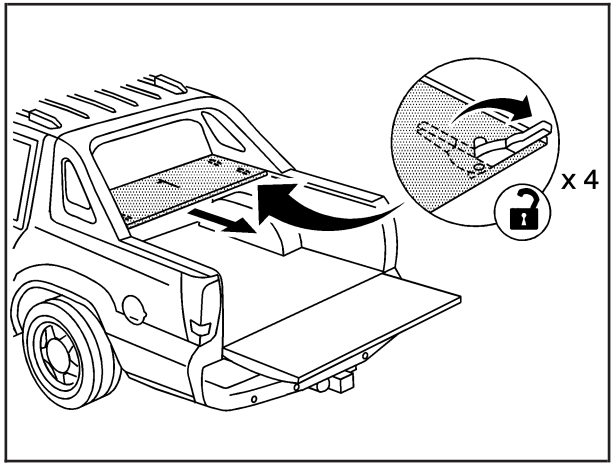

5. Remove cargo panel 1, but notice that there are four latches to release (two left-side and two right-side latches). Set the panel aside.

After each cargo panel is removed, store them within the cargo storage area using the cargo panel storage system.

Cargo Panel Storage System

The three cargo panels can be stored in the cargo area using the storage strap system. To store the panels, do the following:

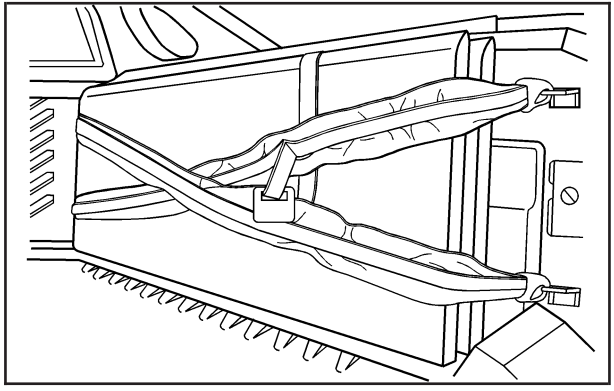

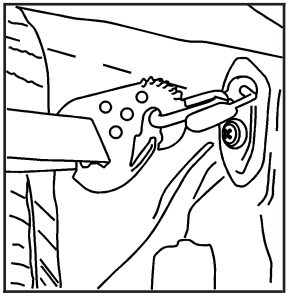

1. Secure the storage strap system in the cargo storage area by attaching the six clips on the cargo strap system to the tie down locations on either side of the storage area.

Always use the storage strap system to store the cargo panels during driving.

Before storing the cargo panels, be sure that their latches are in the locked position. The latches are in the locked position when they are parallel to the front and back edge of the panel.

Use the following instructions for the proper storage sequence and location for each panel:

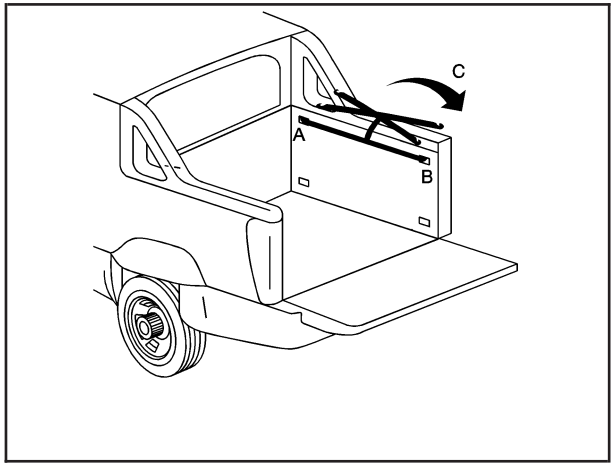

A. Secure clip A on the secondary strap.

B. Secure clip B on the secondary strap.

C. Place the remaining primary straps on top of the lid and tray.

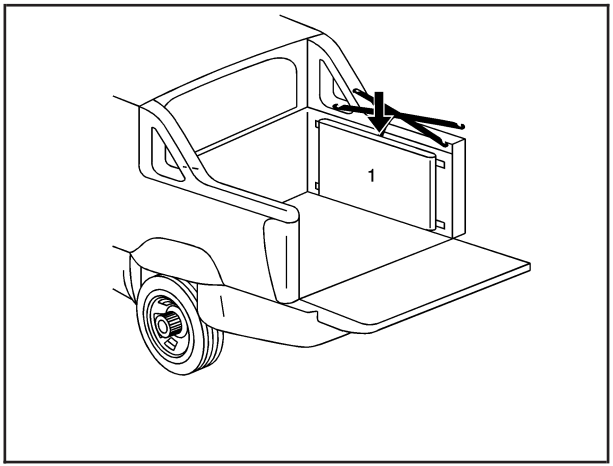

2. Starting with cargo panel 1, load the cargo panel with latches up and facing away from you.

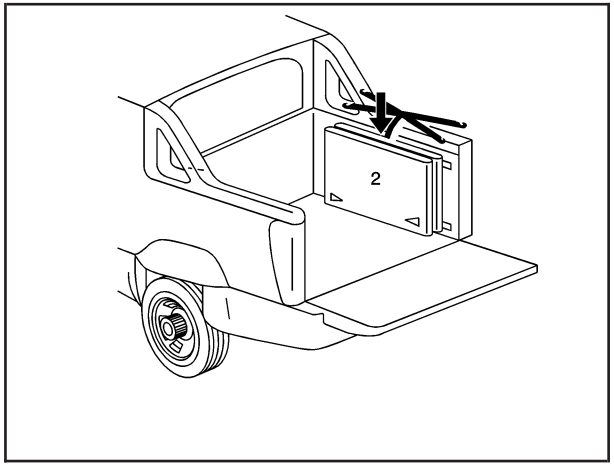

3. Store cargo panel 2 by loading the cargo panel with latches down and facing toward you.

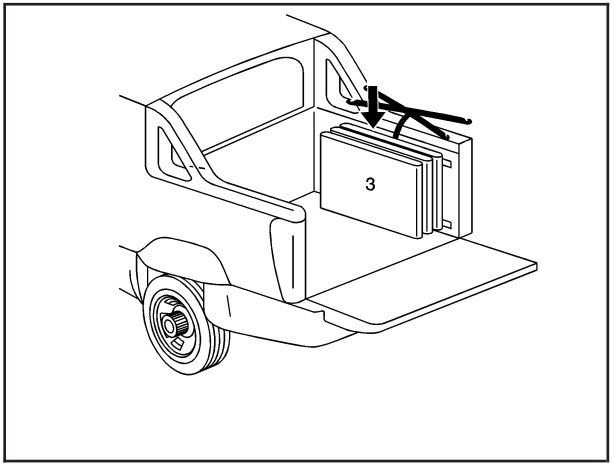

4. Store cargo panel 3 by loading the cargo panel with latches up and facing away from you.

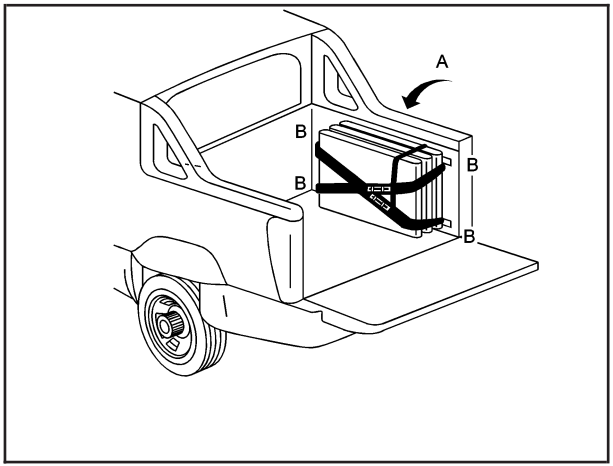

5. Place the primary straps over the three cargo covers (A). Fasten the four strap clips (B).

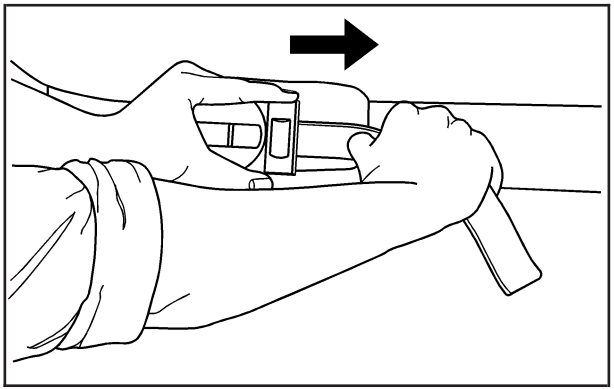

6. Tighten all straps by pulling on the free end of each strap.

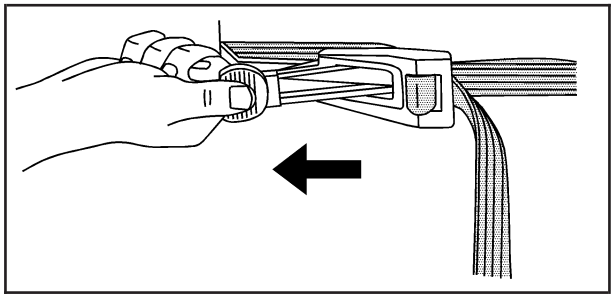

7. Close both cross locks at the center of the strap system to secure tightly.

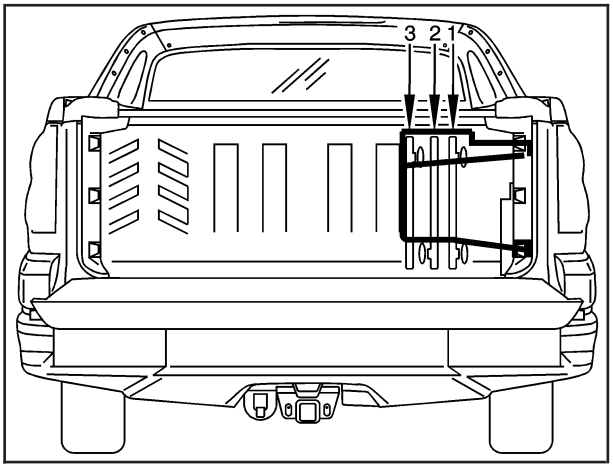

Panels 3, 2, 1 Loaded

Reinstalling the Cargo Cover Panels

To reinstall a cargo panel do the following.

1. You can either leave the strap system attached to the side of the cargo area while it is not in use, or you can store it inside the top box storage compartment. See *Top-Box Storage on page 2-86* for more information.

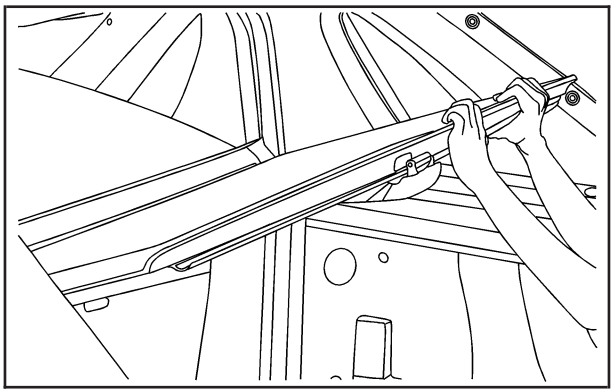

2. Starting with cargo panel 1, place the latches in the unlocked position. Place cargo panel 1 on the cargo area rails while holding the back of the cargo panel up.

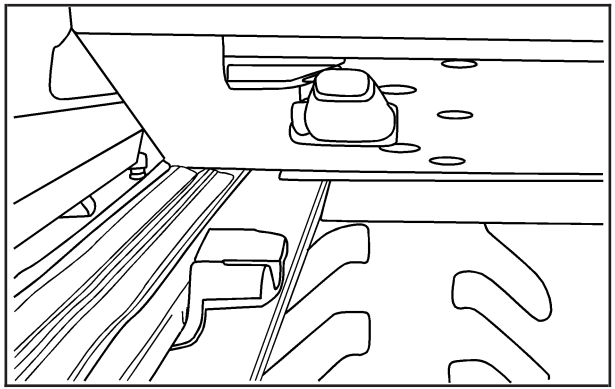

Left Side Shown, Right Side Similar

Push the panel forward until it is snug against the Midgate® and then let the back of the panel down being sure that the pegs align with the receivers.

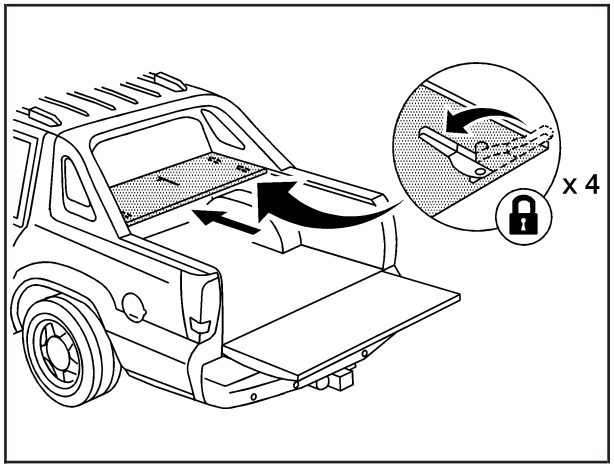

3. Push both left latches away from you to lock the latches. Remember that there are four latches total for panel 1. You should hear a click when each latch locks correctly. Lock the remaining two right latches on panel 1.

   The left latch on the cargo covers must be locked in place before you can lock the right latch. If you do not follow this exactly, the cargo cover panels may not lock in place correctly.

4. Install cargo cover 2 next. Place the latches in the unlocked position. Place the cargo cover panel on the cargo area rails while holding the back of the cargo panel up.

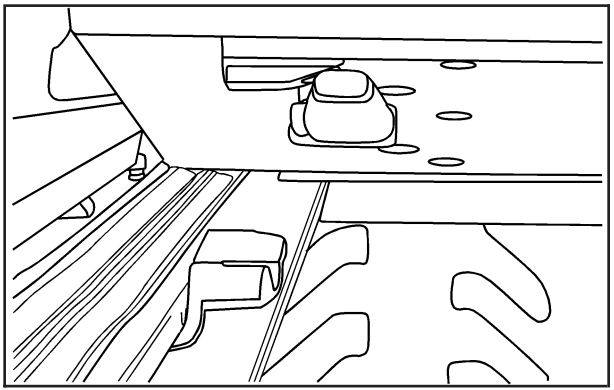

Left Side Shown, Right Side Similar

Push the panel forward until it is snug against the other panel and then let the back of the panel down being sure that the pegs align with the receivers.

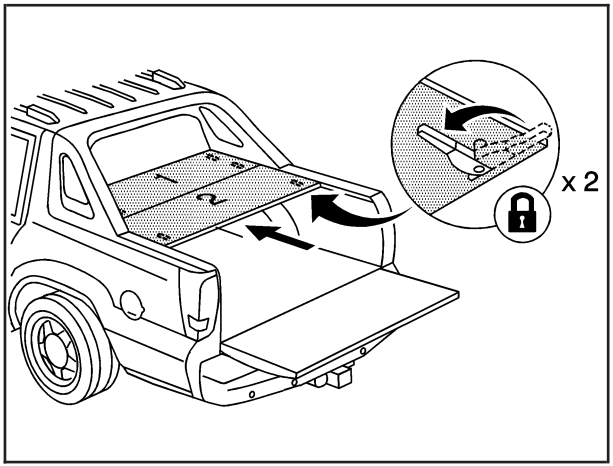

5. Push the latches away from you, starting with the left latch, to lock the panel in place. You should hear a click when each latch locks correctly.
6. Install cargo cover 3 next. Place the latches in the unlocked position. Place the cargo cover panel on the cargo area rails while holding the back of the cargo panel up.

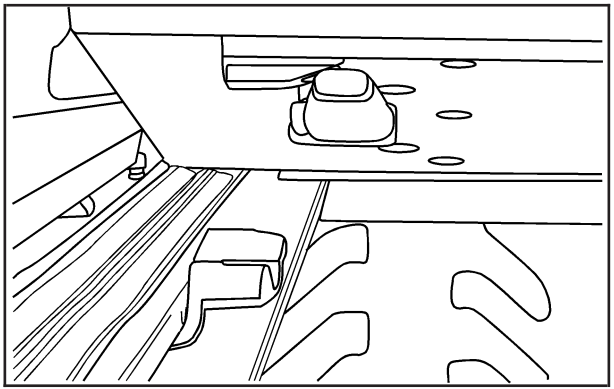

Left Side Shown, Right Side Similar

Push the panel forward until it is snug against the other panel and then let the back of the panel down being sure that the pegs align with the receivers.

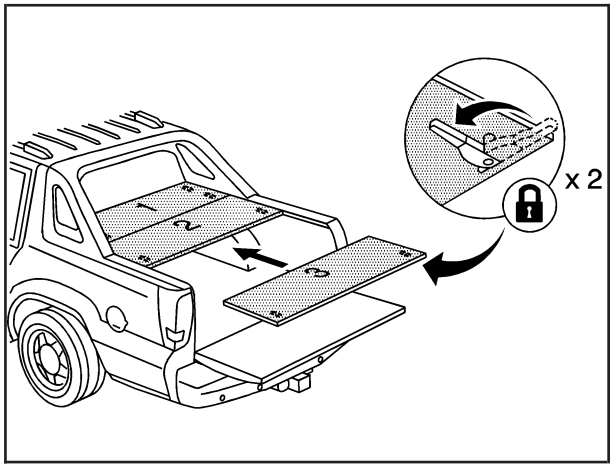

7. Push the latches away from you, starting with the left latch, to lock the panel in place. You should hear a click when each latch locks correctly.

Folding and Storage of Straps

To store the folding straps inside the top box storage compartment, do the following:

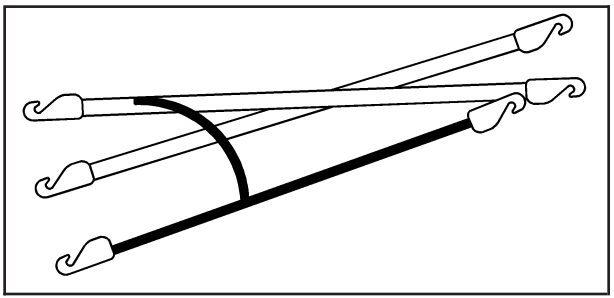

1. Extend the six strap ends on a flat surface.

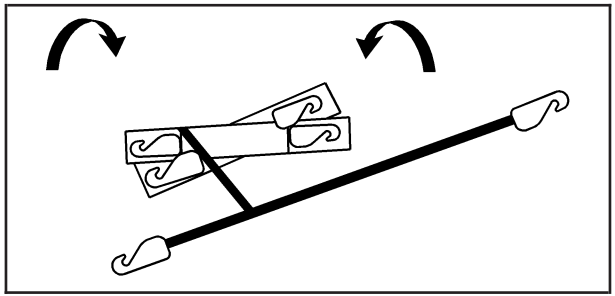

2. Fold the four primary strap ends towards the center as shown.

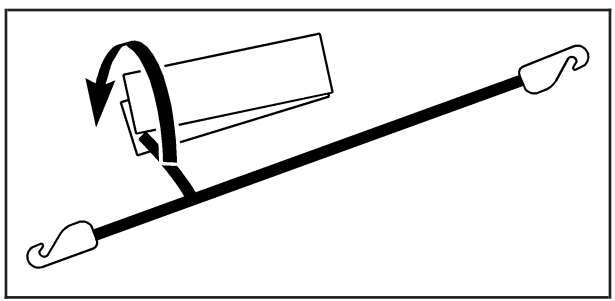

3. Take the short strap and surround the folded webbing, forming a package.

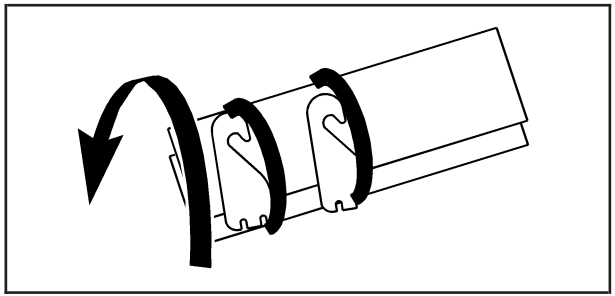

4. Take the secondary strap and wrap it around the package. Finally, attach the hooks to the webbing and place inside the top box storage compartment.

Cargo Tie Downs

There are cargo tie downs in the rear cargo area that you can use to strap cargo in.

All-Weather Cargo Area

Your vehicle has the ability to operate in many different configurations—cargo panels on or off, Midgate® up or down, rear glass in or out. The vehicle has features to help it resist the elements and protect cargo inside the cargo area. Your vehicle is designed to quickly direct water out of the cargo box. The top drain grates, side rail channels, catch cups, Midgate® drain, cargo area floor drains and the rubber cargo mat help do this.

Even when all of these things are working properly and the cover system is on, there may be some instances (heavy rains, automated car washes, etc.) when water may be present in the following areas:

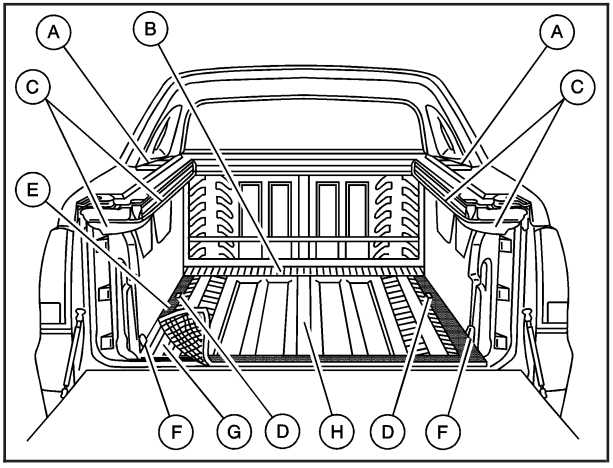

A. Top drain grates
B. Removable front drain grate (Midgate® drain grate)
C. Side rail channels and catch cups
D. Front drains
E. Water drainage area (around both sides of the cargo box and tailgate side)
F. Rear drains
G. Cargo floor
H. Cargo mat (central area of mat is intended to be dry)

Maintenance and Cleaning

To ensure that the water management system performs properly, be sure that the Midgate®, tailgate and cover system are fully closed and that all parts are clean and not blocked with debris. Follow the instructions given next in this section for the proper procedures on cleaning each item.

Top Drain Grates – Removal and Cleaning

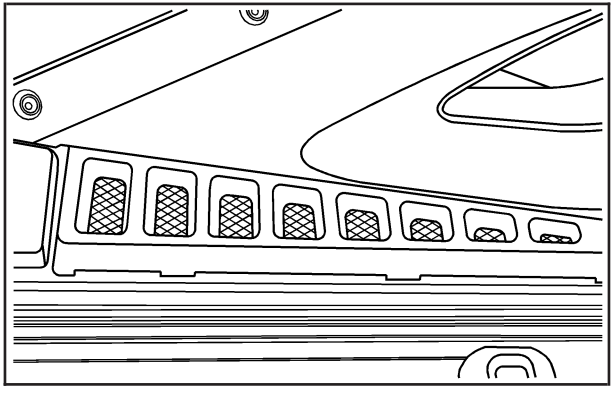

The top drain grates are located near the rear glass on both sides of the vehicle. Clean the grates and drains if there is a blockage.

To remove each drain grate, do the following:

1. Remove the cargo panels. See *Cargo Cover Panels on page 2-69* for more information.

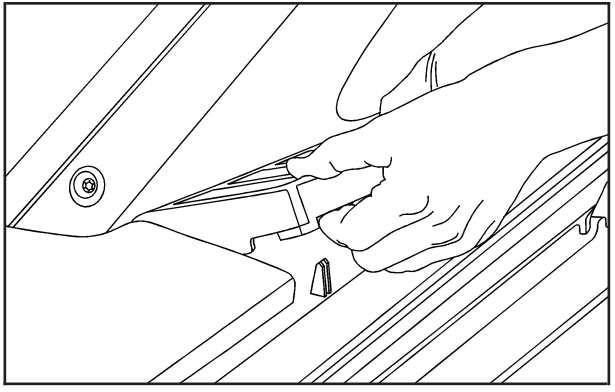

2. Grasp the edges of the grate and pull it out from the vehicle. Flush the drain with clean water.

To replace the drain grate do the following:

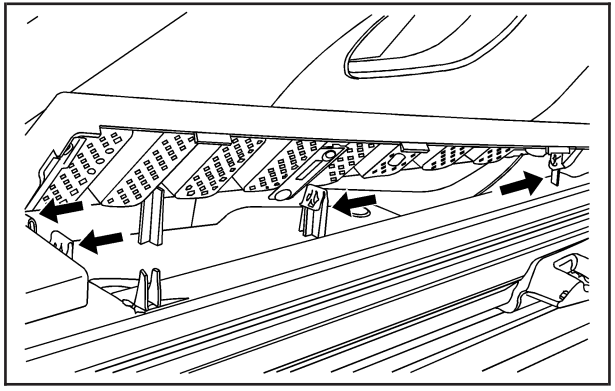

1. Line up the clips on the vehicle with the slots in the grate.
2. When you are sure that the clips are aligned with the slots, push the grate down firmly.

The grate should clip into place. Do not force the grate if it will not clip into place, realign the clips with the holes and try again.

Side Rail Channels

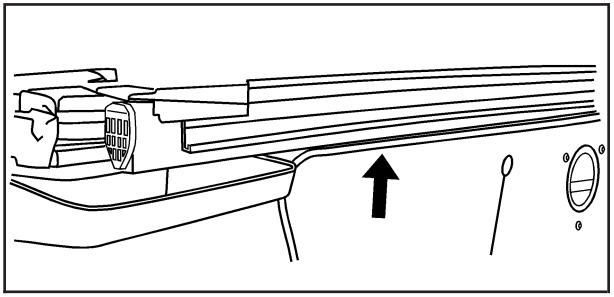

The side rail channels are located on top of both sides of the cargo area. You may want to flush them out with clean water if you notice any debris collecting inside of them.

When loading cargo into the cargo area, be careful not to damage the rails.

Midgate® Drain Grate Removal and Cleaning

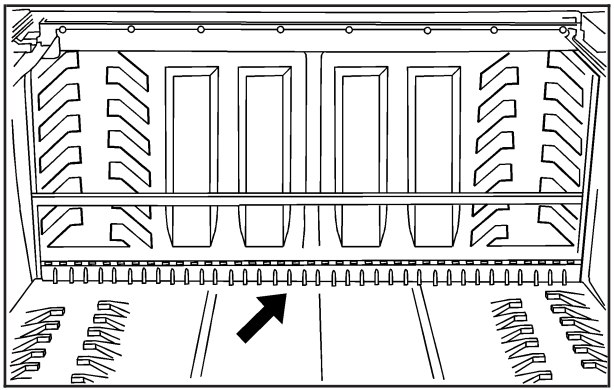

The Midgate® drain grate is located near the base of the Midgate® in the cargo area. You will find a removable drain grate covering the drain.

After hauling dirt, wood chips, pebbles etc. you will need to flush the midgate drain with water. But first you will have to remove the drain grate by using the following steps:

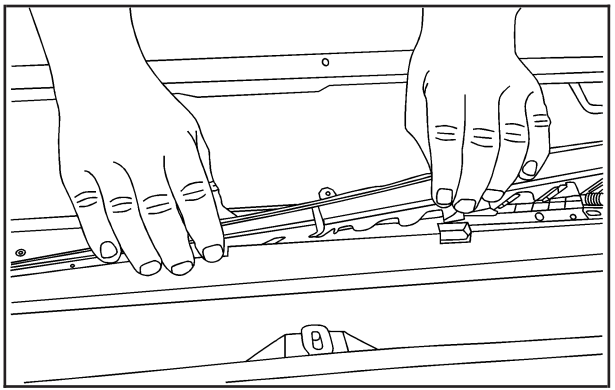

1. Lower the Midgate®. See *Midgate® on page 2-13* for more information.
2. Pull up on the rear side of the drain grate.
3. Tilt the drain grate away from you and pull it straight out.

Reverse the procedure to reinstall the drain grate.

Cargo Area Floor Drains

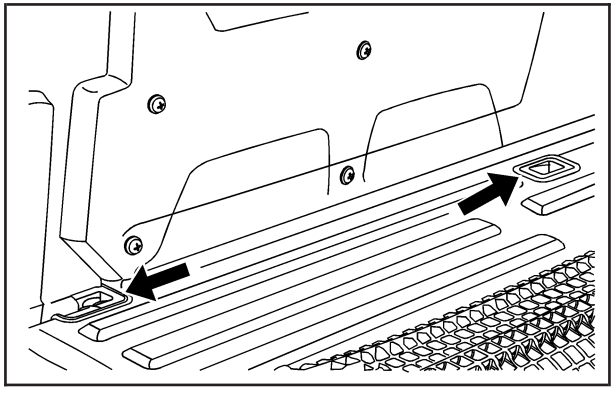

Your vehicle also has four cargo-area floor drains located under the cargo mat near the sides of the cargo area. These drains should be cleaned periodically to allow water to exit the cargo area.

The cargo mat has cutouts for the drains. You can flush the drains through the cutouts, but if the cargo area is extremely dirty you can lift up the edges of the cargo floor mat or take the whole mat out and flush the drains with water.

Top-Box Storage

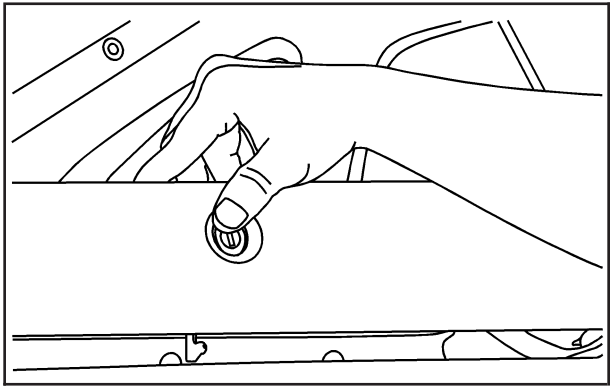

Your vehicle has top-box storage units on both sides of the vehicle. The passenger side top box contains the tools you will need to change a flat tire.

Use the ignition/door key to unlock/lock it. Press the key cylinder button and swing the lid open. Turn on the cargo lamps, if the vehicle has them, for more light inside. See *Exterior Cargo Lamps on page 3-19* for more information.

Sunroof

Your vehicle may be equipped with a power sliding sunroof. To open or close the sunroof, the ignition needs to be turned to ON, or Retained Accessory Power (RAP) must be active. When RAP is active, the sunroof will work for 10 minutes after the ignition is turned off, or until a front door is opened. See *Retained Accessory Power (RAP) on page 2-32* for more information.

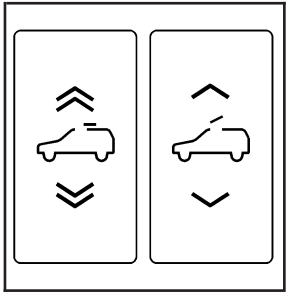

There are two switches in the overhead console that operate the sunroof.

Manual-Open/Manual-Close: To open the sunroof press and hold the rear of the driver's side switch until the sunroof reaches the desired position. To close the sunroof, press and hold the front of the driver's side switch until the sunroof reaches the desired position. The sunshade will open automatically with the sunroof, but can also be opened manually.

The sunroof has a comfort stop feature which stops the sunroof from opening to the full-open position. From the comfort stop position, press the rear of the driver's side switch a second time to open the sunroof to the full-open position.

When the sunroof is opened, an air deflector will automatically raise. The air deflector will retract when the sunroof is closed.

Express-Open/Express-Close: To express-open the sunroof, fully press and release the rear of the driver's side switch. The sunroof will open automatically. To stop the sunroof partway, press the switch a second time. To express-close the sunroof, fully press and release the front of the driver's side switch. The sunroof will close automatically. To stop the sunroof partway, press the switch a second time. The sunshade will open automatically with the sunroof, but can also be opened manually.

The sunroof has a comfort stop feature which stops the sunroof from opening to the full-open position. From the comfort stop position, press the rear of the driver's side switch a second time to open the sunroof to the full-open position.

When the sunroof is opened, an air deflector will automatically raise. The air deflector will retract when the sunroof is closed.

Vent: The sunroof has an express-vent open feature. From the closed position, press the rear of the passenger's side switch to vent the sunroof. To stop the sunroof partway, press the switch a second time. To close the sunroof, press and hold the front of the passenger's side switch. To stop the sunroof partway, release the switch.

Anti-Pinch Feature: If an object is in the path of the sunroof while it is closing, the anti-pinch feature will detect the object and stop the sunroof from closing at the point of the obstruction. The sunroof will then open halfway, and the air deflector will raise. To close the sunroof once it has re-opened, refer to the "Express-Close" or "Manual-Close" functions described previously. If the sunroof is in the vent position, and there is an object in the path of the sunroof when it closing, the anti-pinch feature will detect the object and stop the sunroof. To close the sunroof once it has re-opened, refer to the "Manual-Close" or "Express-Close" functions described previously.

Section 3 Instrument Panel

Instrument Panel Overview 3-4
Hazard Warning Flashers 3-6
Other Warning Devices 3-6
Horn 3-6
Tilt Wheel 3-6
Heated Steering Wheel 3-7
Turn Signal/Multifunction Lever 3-7
Turn and Lane-Change Signals 3-8
Headlamp High/Low-Beam Changer 3-9
Flash-to-Pass 3-9
Windshield Wipers 3-9
Rainsense™ II Wipers 3-10
Windshield Washer 3-10
Cruise Control 3-11
Exterior Lamps 3-14
Headlamps on Reminder 3-17
Daytime Running Lamps (DRL) 3-18
Automatic Headlamp System 3-18
Fog Lamps 3-19
Exterior Cargo Lamps 3-19
Instrument Panel Brightness 3-20
Dome Lamps 3-20
Dome Lamp Override 3-20
Entry/Exit Lighting 3-20
Reading Lamps 3-20
Electric Power Management 3-21
Battery Run-Down Protection 3-21
Accessory Power Outlet(s) 3-22
Ashtray(s) and Cigarette Lighter 3-23
Analog Clock 3-23

Climate Controls 3-24
Dual Automatic Climate Control System 3-24
Outlet Adjustment 3-28

Warning Lights, Gages, and Indicators 3-29
Instrument Panel Cluster 3-30
Speedometer and Odometer 3-31
Trip Odometer 3-31
Tachometer 3-31
Safety Belt Reminders 3-31
Airbag Readiness Light 3-32
Passenger Airbag Status Indicator 3-33
Charging System Light 3-35
Brake System Warning Light 3-36
Antilock Brake System Warning Light 3-37
StabiliTrak® Indicator Light 3-38
Engine Coolant Temperature Gage 3-39
Tire Pressure Light 3-39

Malfunction Indicator Lamp 3-40
Oil Pressure Light 3-42
Security Light 3-43
Fog Lamp Light 3-43
Lights On Reminder 3-43
Cruise Control Light 3-44
Highbeam On Light 3-44
Tow/Haul Mode Light 3-44
Fuel Gage 3-44

Driver Information Center (DIC) 3-45
DIC Operation and Displays 3-45
DIC Warnings and Messages 3-50
DIC Vehicle Customization 3-57

Audio System(s) 3-66
Setting the Clock 3-67
Radio(s) 3-68
Using an MP3 3-86
XM Radio Messages 3-90
Navigation/Radio System 3-91
Rear Seat Entertainment (RSE) System 3-91
Rear Seat Audio (RSA) 3-101
Theft-Deterrent Feature 3-102
Audio Steering Wheel Controls 3-103
Radio Reception 3-104
Fixed Mast Antenna 3-105
XM™ Satellite Radio Antenna System 3-105

NOTES

Instrument Panel Overview

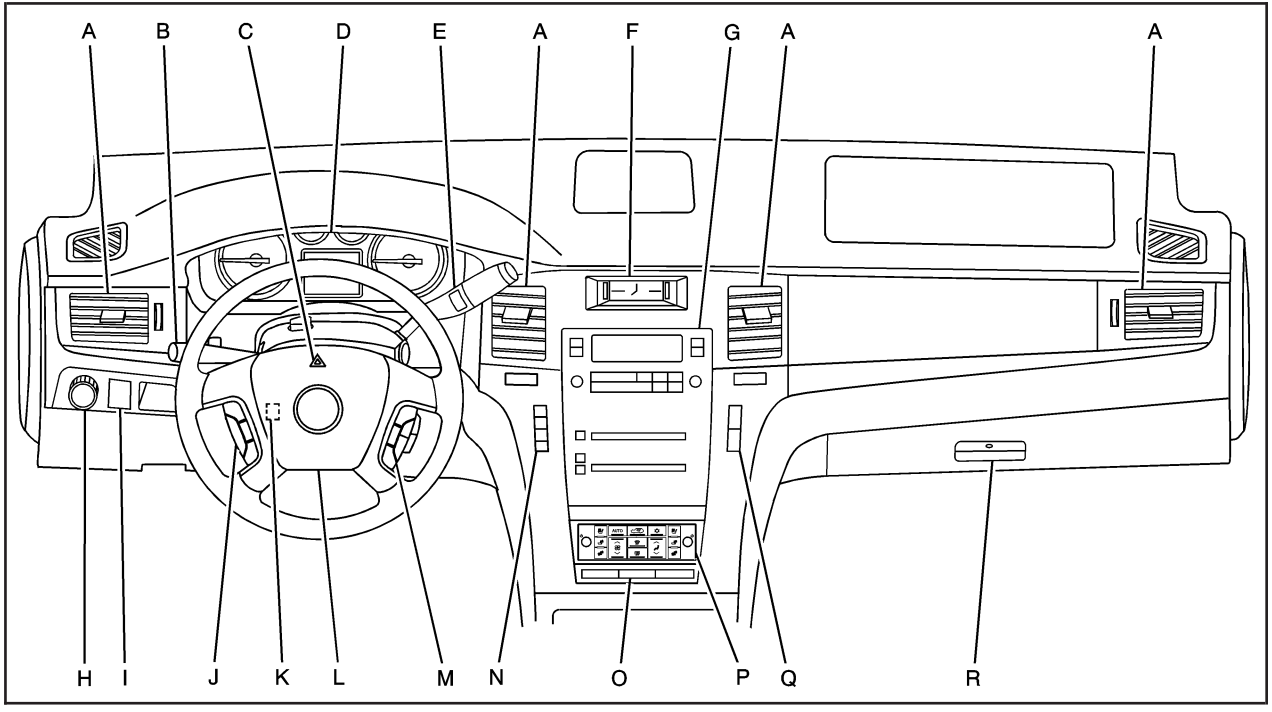

The main components of your instrument panel are the following:

A. Air Outlets. See *Outlet Adjustment on page 3-28*.

B. Turn Signal/Multifunction Lever. See *Turn Signal/Multifunction Lever on page 3-7*.

C. Hazard Warning Flasher Button. See *Hazard Warning Flashers on page 3-6*.

D. Instrument Panel Cluster. See *Instrument Panel Cluster on page 3-30*.

E. Shift Lever/Tow/Haul Selector Button. See *Automatic Transmission Operation on page 2-36* and *Tow/Haul Mode on page 2-40*.

F. Analog Clock. See *Analog Clock on page 3-23*.

G. Audio System. See *Audio System(s) on page 3-66*. Navigation/Radio System (if equipped). See *Navigation/Radio System on page 3-91*.

H. Exterior Lamps Control. See *Exterior Lamps on page 3-14*.

I. Dome Override Button. See *Dome Lamp Override on page 3-20*.

J. Cruise Control Buttons. See *Cruise Control on page 3-11*.

K. Tilt Lever. See *Tilt Wheel on page 3-6*.

L. Horn. See *Horn on page 3-6*.

M. Audio Steering Wheel Buttons. See *Audio Steering Wheel Controls on page 3-103*.

N. Driver Information Center (DIC) Buttons. See *Driver Information Center (DIC) on page 3-45*.

O. Pedal Adjust Button. See *Adjustable Throttle and Brake Pedal on page 2-34*. Heated Windshield Washer Fluid Button (If Equipped). See *Windshield Washer on page 3-10*. Power Running Boards Disable Button (If Equipped). See *Power Running Boards on page 2-23*.

P. Dual Automatic Climate Controls. See *Dual Automatic Climate Control System on page 3-24*. Heated Seats (If Equipped). See *Heated Seats on page 1-4*. Heated and Cooled Seats (If Equipped). See *Heated and Cooled Seats on page 1-5*.

Q. StabiliTrak® Disable Button. See. *StabiliTrak® System on page 4-6*.Ultrasonic Rear Parking Assist Disable Button. See. *Ultrasonic Rear Parking Assist (URPA) on page 2-54*.

R. Glove Box. See *Glove Box on page 2-67*.

Hazard Warning Flashers

The hazard warning flashers warn others. They also let police know you have a problem.

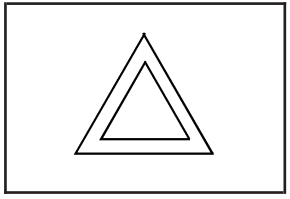

The hazard warning flasher button is located on top of the steering column.

Press the button to make the front and rear turn signal lamps flash on and off. Press the button again to turn the flashers off.

The hazard warning flashers work no matter what ignition position the key is in, and even if the key is not in the ignition.

When the hazard warning flashers are on, your vehicle's turn signals will not work.

Other Warning Devices

If you carry reflective triangles, you can set them up at the side of the road about 300 feet (100 m) behind your vehicle.

Horn

To sound the horn, press the center pad on the steering wheel.

Tilt Wheel

The tilt steering wheel allows you to adjust the steering wheel before you drive. You can raise it to the highest level to give your legs more room when you enter and exit the vehicle.

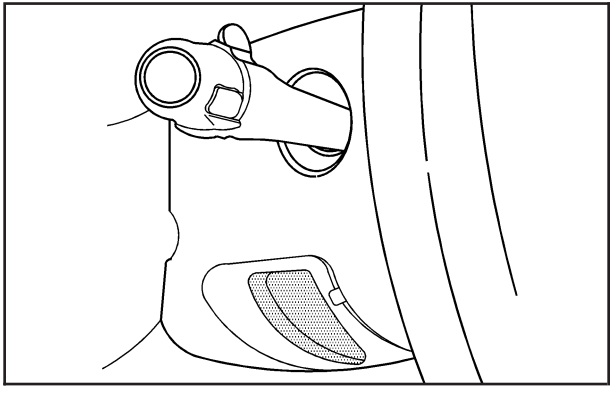

The tilt lever is located on the driver's side of the steering column under the turn signal lever.

To tilt the wheel, hold the steering wheel and pull the lever. Move the steering wheel to a comfortable level, then release the lever to lock the wheel in place.

Heated Steering Wheel

Your vehicle may have a heated steering wheel.

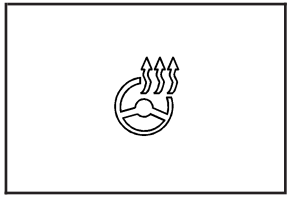

The button with this symbol is located on the left side of the steering wheel.

Press the button to turn the heated steering wheel on or off. A light on the button will display when the feature is turned on.

The steering wheel will take about three minutes to start heating.

Turn Signal/Multifunction Lever

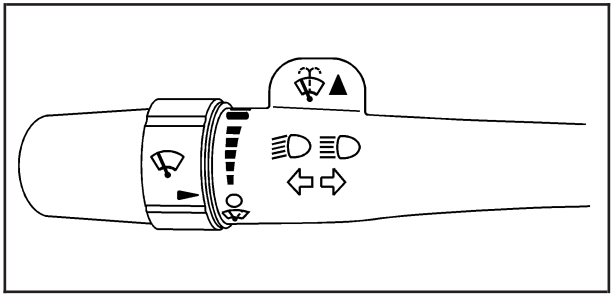

The lever on the left side of the steering column includes the following:

- Turn and Lane Change Signals. See *Turn and Lane-Change Signals on page 3-8*.
- Headlamp High/Low-Beam Changer. See *Headlamp High/Low-Beam Changer on page 3-9*.
- Flash-to-Pass. See *Flash-to-Pass on page 3-9*.
- Windshield Wipers. See *Windshield Wipers on page 3-9*.
- Windshield Washer. See *Windshield Washer on page 3-10*.

For information on the exterior lamps, see *Exterior Lamps on page 3-14*.

Turn and Lane-Change Signals

The turn signal has two upward (for right) and two downward (for left) positions. These positions allow you to signal a turn or a lane change.

To signal a turn, move the lever all the way up or down. When the turn is finished, the lever will return automatically.

To signal a lane change, raise or lower the lever for less than one second until the arrow starts to flash. This will cause the turn signals to automatically flash three times. It will flash six times if the tow-haul mode is active. Holding the turn signal lever for more than one second will cause the turn signals to flash until you release the lever. The lever will return by itself when it is released.

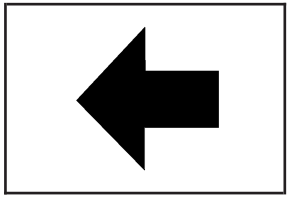

An arrow on the instrument panel cluster will flash in the direction of the turn or lane change.

As you signal a turn or a lane change, if the arrows flash more quickly than normal, a signal bulb may be burned out and other drivers will not see your turn signal.

If a bulb is burned out, replace it to help avoid an accident. If the arrows do not go on at all when you signal a turn, check for burned-out bulbs and a blown fuse. See *Instrument Panel Fuse Block on page 5-108* and *Underhood Fuse Block on page 5-111*.

Turn Signal On Chime

If your turn signal is left on for more than 3/4 of a mile (1.2 km), a chime will sound at each flash of the turn signal and the message TURN SIGNAL ON will also appear in the DIC. See *DIC Warnings and Messages on page 3-50*. To turn the chime and message off, move the turn signal lever to the off position.

Headlamp High/Low-Beam Changer

(Headlamp High/Low Beam Changer): To change the headlamps from low to high beam, push the lever toward the instrument panel. To return to low-beam headlamps, pull the multifunction lever toward you. Then release it.

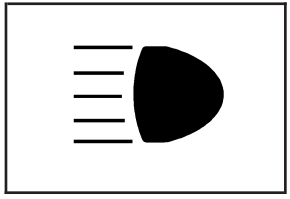

When the high beams are on, this indicator light on the instrument panel cluster will also be on.

Flash-to-Pass

This feature lets you use your high-beam headlamps to signal a driver in front of you that you want to pass. It works even if your headlamps are in the automatic position.

To use it, pull the turn signal lever toward you, then release it.

If your headlamps are in the automatic position or on low beam, your high-beam headlamps will turn on. They will stay on as long as you hold the lever toward you. The high-beam indicator on the instrument panel cluster will come on. Release the lever to return to normal operation.

Windshield Wipers

You control the windshield wipers by turning the band with the wiper symbol on it.

(Mist): For a single wiping cycle, turn the band to mist. Hold it there until the wipers start. Then let go. The wipers will stop after one wipe. If you want more wipes, hold the band on mist longer.

(Delay): You can set the wiper speed for a long or short delay between wipes. This can be very useful in light rain or snow. Turn the band to choose the delay time. The closer to the top of the lever, the shorter the delay.

(Low Speed): For steady wiping at low speed, turn the band away from you to the first solid band past the delay settings.

(High Speed): For high-speed wiping, turn the band further, to the second solid band past the delay settings.

(Off): To stop the wipers, move the band to off.

Be sure to clear ice and snow from the wiper blades before using them. If they are frozen to the windshield, carefully loosen or thaw them. If your blades do become worn or damaged, get new blades or blade inserts.

Rainsense™ II Wipers

Your vehicle has Rainsense™ II windshield wipers. These wipers automatically turn on when a sensor, mounted next to the inside rearview mirror, detects moisture on the windshield. When active, these wipers are able to detect moisture on the windshield and automatically turn on the wipers.

To turn on the Rainsense™ feature, the wipers must be set to one of the five delay settings. Each of the five settings adjusts the sensitivity of the rain sensor.

Since different drivers have different setting preferences, it is recommended that the mid-range setting, position three, be used initially. For more wipes, select the higher settings; for fewer wipes, select the lower settings located closer to the off position on the multifunction lever.

The rain sensor will automatically control the frequency of the wipes from off to high speed according to the weather conditions. The wipers can be left in a Rainsense™ mode even when it is not raining.

When Rainsense™ II is active, the headlamps will turn on automatically after approximately eight wipes. The headlamps will turn off if the wiper switch is set to a delay position, and there have been no wipes for approximately three minutes, or if the wiper switch is turned to the off position. If it is dark outside, the headlamps will remain on.

Notice: **Going through an automatic car wash with the wipers on can damage them. Turn the wipers off when going through an automatic car wash.**

Windshield Washer

⚠ CAUTION:

In freezing weather, do not use your washer until the windshield is warmed. Otherwise the washer fluid can form ice on the windshield, blocking your vision.

(Washer Fluid): Push the paddle marked with the windshield washer symbol at the top of the multifunction lever, to spray washer fluid on the windshield. The wipers clear the window and then either stop or return to the preset speed.

Heated Windshield Washer

For vehicles with the heated windshield washer fluid system it can be used to help clear ice, snow, tree sap, or bugs from your windshield.

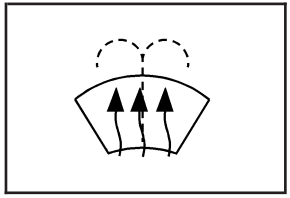

The button is located in the switchbank under the climate controls.

Push the heated washer fluid button to activate the heated windshield washer fluid system. The indicator light will flash. This activation initiates four heated wash/wipe cycles. The first heated wash/wipe cycle may take up to 40 seconds to occur, depending on outside temperature. After the first wash/wipe cycle, it may take up to 20 seconds for each of the remaining cycles to begin. Press the button again to turn off the heated windshield washer fluid system or it will automatically turn off after four wipe cycles have been completed.

When the heated windshield washer fluid system is activated under certain outside temperature conditions, steam may flow out of the washer nozzles for a short period of time before washer fluid is sprayed. This is a normal condition.

Cruise Control

⚠ CAUTION:

Cruise control can be dangerous where you cannot drive safely at a steady speed. So, do not use your cruise control on winding roads or in heavy traffic.

Cruise control can be dangerous on slippery roads. On such roads, fast changes in tire traction can cause excessive wheel slip, and you could lose control. Do not use cruise control on slippery roads.

With cruise control, you can maintain a speed of about 25 mph (40 km/h) or more without keeping your foot on the accelerator. This can really help on long trips. Cruise control does not work at speeds below about 25 mph (40 km/h).

When you apply your brakes, cruise control is turned off.

If your vehicle has the StabiliTrak® system and begins to limit wheel spin while you are using cruise control, the cruise control will automatically disengage. See *StabiliTrak® System on page 4-6*. When road conditions allow you to safely use it again, you may turn the cruise control back on.

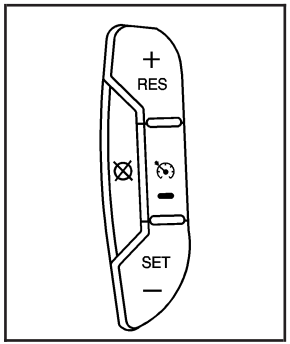

The cruise control buttons are located on left side of the steering wheel.

(On/Off): This button can both activate and turn off the system. The indicator light on the button turns on when cruise control is on and turns off when cruise control is off.

+ RES (Resume/Accelerate): Press this button to make the vehicle accelerate or resume to a previously set speed.

SET – (Set/Coast): Press this button to set the speed or make the vehicle decelerate.

(Cancel): Press this button to cancel cruise control without erasing the set speed from memory.

Setting Cruise Control

Cruise control will not work if your parking brake is set, or if the master cylinder brake fluid level is low.

The cruise control light on the instrument panel cluster will come on after the cruise control has been set to the desired speed.

⚠ CAUTION:

If you leave your cruise control on when you are not using cruise, you might hit a button and go into cruise when you do not want to. You could be startled and even lose control. Keep the cruise control switch off until you want to use cruise control.

1. Press the cruise control On/Off button.
2. Get up to the desired speed.
3. Press the SET– button located on the steering wheel and release it.
4. Take your foot off the accelerator.

Resuming a Set Speed

Suppose you set your cruise control at a desired speed and then you apply the brake. This shuts off the cruise control. But you do not need to reset it.

Once you are driving about 25 mph (40 km/h) or more, press the +RES button on your steering wheel. The vehicle will go back to the previous set speed and stay there.

Increasing Speed While Using Cruise Control

To increase the cruise speed while using cruise control:

- Press and hold the +RES button on the steering wheel until you reach your new desired speed, then release it.
- To increase vehicle speed in small increments, press the +RES button. Each time you do this, you will go about 1 mph (1.6 km/h) faster.

Reducing Speed While Using Cruise Control

To reduce your speed while using cruise control:

- Press and hold the SET– button on the steering wheel until the desired lower speed is reached, then release it.
- To slow down in very small amounts, press the SET– button on the steering wheel briefly. Each time you do this, the vehicle will go about 1 mph (1.6 km/h) slower.

Passing Another Vehicle While Using Cruise Control

Use the accelerator pedal to increase your speed. When you take your foot off the pedal, your vehicle will slow down to the previous set cruise speed.

Using Cruise Control on Hills

How well your cruise control will work on hills depends upon your speed, load, and the steepness of the hills. When going up steep hills, you may have to step on the accelerator pedal to maintain the vehicle's speed. When going downhill, you may have to brake or shift to a lower gear to keep the vehicle's speed down. Of course, applying the brake takes you out of cruise control. Many drivers find this to be too much trouble and do not use cruise control on steep hills.

Ending Cruise Control

There are three ways to end cruise control:

- Step lightly on the brake pedal.
- Press the cancel button on the steering wheel.
- Press the On/Off button on the steering wheel.

Erasing Speed Memory

When you turn off the cruise control or the ignition, the cruise control set speed memory is erased.

Exterior Lamps

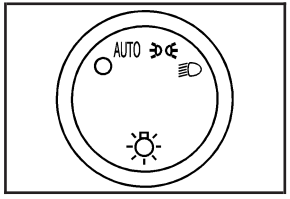

The exterior lamps control is located on the instrument panel to the left of the steering wheel.

It controls the following systems:

- Headlamps
- Taillamps
- Parking Lamps
- License Plate Lamps
- Instrument Panel Lights

The exterior lamps control has four positions:

(Off): Turn the control to this position to turn off the automatic headlamps and daytime running lamps (DRL). Turning the headlamp control to the off position again will turn the automatic headlamps or DRL back on.

For vehicles first sold in Canada, the off position will only work when the vehicle is shifted into the PARK (P) position.

AUTO (Automatic): Turn the control to this position to set the headlamps to automatically turn on at normal brightness, together with the following:

- Parking Lamps
- Instrument Panel Lights
- Taillamps
- License Plate Lamps

(Parking Lamps): Turn the control to this position to turn on the parking lamps together with the following:

- Instrument Panel Lights
- Taillamps
- License Plate Lamps

(Headlamps): Turn the control to this position to turn on the headlamps together with the following lamps listed below.

When the headlamps are turned on while the vehicle is on, the headlamps will turn off automatically 10 minutes after the ignition is turned off. When the headlamps are turned on while the vehicle is off, the headlamps will stay on for 10 minutes before automatically turning off to prevent the battery from being drained. Turn the headlamp control to off and then back to the headlamp on position to make the headlamps stay on for an additional 10 minutes.

- Parking Lamps
- Instrument Panel Lights
- Taillamps
- License Plate Lamps

IntelliBeam® Intelligent High-Beam Headlamp Control System

If your vehicle has this feature, be sure to read this entire section before using it.

IntelliBeam® is an enhancement to your vehicle's headlamp system. Using a digital light sensor on your rearview mirror, this system will turn the vehicle's high-beam headlamps on and off according to surrounding traffic conditions.

The IntelliBeam® system will turn your high-beam headlamps on when it is dark enough, there is no other traffic present, and the IntelliBeam® system is enabled.

Turning On and Enabling IntelliBeam®

Press and release the IntelliBeam® button on the inside rear view mirror. The IntelliBeam® indicator on the mirror will turn on to let you know the system has been turned on. Once the system has been turned on, it will remain on each time the vehicle is started. Additionally, the IntelliBeam® system must be enabled.

To enable the IntelliBeam® system, turn the exterior lamp control to AUTO, with the turn signal/multifunction lever in its neutral position. The High-Beam On Light will appear on the instrument panel cluster when the high-beams are on. See *Highbeam On Light on page 3-44*.

Driving with IntelliBeam®

IntelliBeam® will only activate your high-beams when driving over 20 mph (32 km/h).

The high-beam headlamps will remain on, under the automatic control of IntelliBeam®, until any of the following situations occur:

- The system detects an approaching vehicle's headlamps.
- The system detects a preceding vehicle's taillamps.
- The outside light is bright enough that high-beam headlamps are not required.
- The vehicle's speed drops below 15 mph (24 km/h).
- The headlamp stalk is moved forward to the high-beam position. See *Headlamp High/Low-Beam Changer on page 3-9*.

  When either of these conditions occur, the IntelliBeam® feature will be disabled and the IntelliBeam® light in the mirror will turn off until the high-beam stalk is returned to the neutral position.
- If IntelliBeam® was using low-beams prior to this action, the IntelliBeam® feature will be temporarily disabled until the stalk is returned to the neutral position.
- The exterior lamp control is turned to any setting except AUTO.

  When this occurs, IntelliBeam® will be disabled until the control is turned back to the AUTO position.
- The IntelliBeam® system is turned off at the inside rearview mirror.

IntelliBeam® may not turn off the high-beams if the system cannot detect other vehicle's lamps because of any of the following:

- The others vehicle's lamp(s) are missing, damaged, obstructed from view or otherwise undetected.
- The other vehicle's lamp(s) are covered with dirt, snow and/or road spray.
- The other vehicle's lamp(s) cannot be detected due to dense exhaust, smoke, fog, snow, road spray, mist or other airborne obstructions.
- Your vehicle's windshield is dirty, cracked or obstructed by something that blocks the view of the IntelliBeam light sensor.
- Your vehicle's windshield is covered with ice, dirt, haze or other obstructions.
- Your vehicle is loaded such that the front end of the vehicle points upward, causing the IntelliBeam sensor to aim high and not detect headlamps and taillamps.
- You are driving on winding or hilly roads.

You may need to manually disable or cancel the high-beam headlamps by turning the low-beam headlamps on, if any of the above conditions exist.

Disabling and Resetting IntelliBeam® at the Rearview Mirror

IntelliBeam® can be disabled by using the controls on the inside rearview mirror.

AUTO (On/Off): To disable the system, press this button on the inside rearview mirror. The IntelliBeam® indicator will turn off and will not come back on until the IntelliBeam® button is pressed again.

(Stalk Disable): When IntelliBeam® has turned on the high-beams, pull or push the high-beam stalk. This will disable IntelliBeam®. The IntelliBeam® indicator on the mirror will turn off. To re-enable IntelliBeam®, press the IntelliBeam® button on the mirror.

A different sensitivity setting is available for dealer diagnostics. This is done by pushing and holding this button for 20 seconds until the IntelliBeam® indicator light flashes three times. If you accidentally activate this, the vehicle's setting will automatically be reset each time the ignition is turned off and then on again.

Cleaning the IntelliBeam® Light Sensor

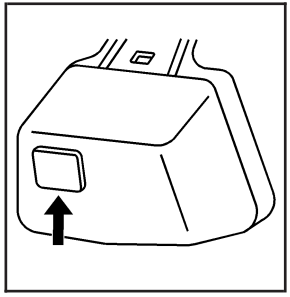

The light sensor is located on the inside of the vehicle in front of the inside rearview mirror.

Clean the light sensor window, periodically, using glass cleaner on a soft cloth. Gently wipe the sensor window. Do not spray glass cleaner directly on the surface of the sensor window.

Headlamps on Reminder

If a door is open, a reminder chime will sound when your headlamps or parking lamps are manually turned on and your key is out of the ignition. To turn off the chime, turn the headlamp switch to off or AUTO and then back on, or close and re-open the door. In the AUTO mode, the headlamps turn off once the ignition is in LOCK or may remain on until the headlamp delay ends (if enabled in the DIC). See "Exit Lighting" under *DIC Vehicle Customization on page 3-57*.

Daytime Running Lamps (DRL)

Daytime Running Lamps (DRL) can make it easier for others to see the front of your vehicle during the day. DRL can be helpful in many different driving conditions, but they can be especially helpful in the short periods after dawn and before sunset. Fully functional daytime running lamps are required on all vehicles first sold in Canada.

The DRL system will come on when the following conditions are met:

- The ignition is on.
- The exterior lamps control is in AUTO.
- The transmission is not in PARK (P).
- The light sensor determines it is daytime.

When the DRL are on, only the DRL lamps will be on. The taillamps, sidemarker, and other lamps will not be on. The instrument panel will not be lit up either.

When it begins to get dark, the automatic headlamp system will switch from DRL to the headlamps.

To turn off the DRL lamps, turn the exterior lamps control to the OFF position and then release. For vehicles first sold in Canada, the transmission must be in the PARK (P) position, before the DRL lamps can be turned off.

Automatic Headlamp System

When it is dark enough outside and the headlamp switch is in AUTO, the automatic headlamp system will turn on the headlamps at the normal brightness along with other lamps such as the taillamps, sidemarker, parking lamps, roof marker lamps, and the instrument panel lights. The radio lights will also be dim.

To turn off the automatic headlamp system, turn the exterior lamps switch to the off position and then release. For vehicles first sold in Canada, the transmission must be in the PARK (P) position, before the automatic headlamp system can be turned off.

The vehicle has a light sensor located on the top of the instrument panel. Be sure it is not covered, or the system will be on whenever the ignition is on.

The system may also turn on the headlamps when driving through a parking garage, heavy overcast weather, or a tunnel. This is normal.

There is a delay in the transition between the daytime and nighttime operation of the Daytime Running Lamps (DRL) and the automatic headlamp systems so that driving under bridges or bright overhead street lights does not affect the system. The DRL and automatic headlamp system will only be affected when the light sensor sees a change in lighting lasting longer than the delay.

If the vehicle is started in a dark garage, the automatic headlamp system will come on immediately. Once the vehicle leaves the garage, it takes approximately one minute for the automatic headlamp system to change to DRL if it is light outside. During that delay, the instrument panel cluster may not be as bright as usual. Make sure the instrument panel brightness control is in the full bright position. See *Instrument Panel Brightness on page 3-20*.

Fog Lamps

If your vehicle has fog lamps you can use them for better vision in foggy or misty conditions. Your parking lamps and/or low-beam headlamps must be on for your fog lamps to work.

The fog lamp button is located on the left side of your instrument panel.

(Fog Lamps): Press the button to turn the fog lamps on. An indicator light will come on in the instrument panel cluster to let you know that the fog lamps are on. Press the button again to turn them off.

Remember, fog lamps alone will not give off as much light as your headlamps. Never use your fog lamps in the dark without turning on the headlamps.

The fog lamps will go off whenever your high-beam headlamps come on. When the high beams go off, the fog lamps will come on again.

The fog lamps will be cancelled after the ignition is turned off. If you still want to use the fog lamps after you restart the vehicle, you will need to press the fog lamp button again.

Some localities have laws that require the headlamps to be on along with the fog lamps.

Exterior Cargo Lamps

You can use the cargo lamp if you need more light in the cargo area of your vehicle or in the top-box storage units. Some vehicles will only have a cargo lamp in the driver side top box.

The cargo lamps come on by turning on the interior dome lamps.

Instrument Panel Brightness

The knob for this feature is located next to the exterior lamps control.

(Instrument Panel Lights): Turn the knob clockwise or counterclockwise to brighten or dim the instrument panel lights and the radio display. This only works if the headlamps or parking lamps are on.

To turn on the dome lamps, with the vehicle doors closed, turn the knob all the way clockwise.

Dome Lamps

The dome lamps come on when any door is opened. They turn off after all the doors are closed.

The dome lamps can also be turned on by turning the instrument panel brightness knob, located next to the exterior lamps control, clockwise to the farthest position. In this position, the dome lamps remain on whether a door is opened or closed.

Dome Lamp Override

The dome lamp override button is located next to the exterior lamps control.

DOME OFF **(Dome Off):** Press the button in and the dome lamps remain off when a door is opened. Press the button again to return it to the extended position so that the dome lamps come on when a door is opened.

Entry/Exit Lighting

Your vehicle has an illuminated entry/exit feature.

When a door is opened or the key is removed from the ignition, the dome lamps will come on if the dome override button is in the out position.

Reading Lamps

If your vehicle has reading lamps, press the button located next to the lamp to turn it on or off.

Your vehicle may also have reading lamps in other locations. To turn each one on or off, press the button located next to the lamp. The lamps cannot be adjusted.

Electric Power Management

The vehicle has Electric Power Management (EPM) that estimates the battery's temperature and state of charge. It then adjusts the voltage for best performance and extended life of the battery.

When the battery's state of charge is low, the voltage is raised slightly to quickly put the charge back in. When the state of charge is high, the voltage is lowered slightly to prevent overcharging. If the vehicle has a voltmeter gage or a voltage display on the Driver Information Center (DIC), you may see the voltage move up or down. This is normal. If there is a problem, an alert will be displayed.

The battery can be discharged at idle if the electrical loads are very high. This is true for all vehicles. This is because the generator (alternator) may not be spinning fast enough at idle to produce all the power that is needed for very high electrical loads.

A high electrical load occurs when several of the following loads are on: headlamps, high beams, fog lamps, rear window defogger, climate control fan at high speed, heated seats, engine cooling fans, trailer loads, and loads plugged into accessory power outlets.

EPM works to prevent excessive discharge of the battery. It does this by balancing the generator's output and the vehicle's electrical needs. It can increase engine idle speed to generate more power, whenever needed. It can temporarily reduce the power demands of some accessories.

Normally, these actions occur in steps or levels, without being noticeable. In rare cases at the highest levels of corrective action, this action may be noticeable to the driver. If so, a Driver Information Center (DIC) message might be displayed, such as Battery Saver Active or Service Battery Charging System. If this message is displayed, it is recommended that the driver reduce the electrical loads as much as possible. See *DIC Warnings and Messages on page 3-50*.

Battery Run-Down Protection

This feature shuts off the dome lamps if they are left on for more than 10 minutes when the ignition is in LOCK. This will help prevent the battery from running down.

Accessory Power Outlet(s)

Accessory power outlets can be used to connect auxiliary electrical equipment, such as a cellular telephone or CB radio.

One accessory power outlet is located inside the center floor console. Lift up on the lower latch located at the front of the console lid to access the accessory power outlet.

There may also be an accessory power outlet located on the rear of the center floor console above the cupholder.

To use an accessory power outlet, remove the protective cap. When not in use, always cover the accessory power outlet with the protective cap.

Do not try to put the cigarette lighter in any of the accessory power outlets.

Notice: **If electrical devices are left plugged into a power outlet, the battery may drain causing your vehicle not to start or damage to the battery. This would not be covered by the warranty. Always unplug all electrical devices when turning off your vehicle.**

Certain electrical accessories may not be compatible with the accessory power outlet and could result in blown vehicle or adapter fuses. If you experience a problem see your dealer/retailer for additional information on accessory power outlets.

The accessory power outlets are powered, even when the ignition is in LOCK/OFF. Continuing to use power outlets while the ignition is in LOCK/OFF may cause the vehicle's battery to run down.

Notice: **Adding any electrical equipment to your vehicle may damage it or keep other components from working as they should. The repairs would not be covered by your warranty. Do not use equipment exceeding maximum amperage rating of 20 amperes. Check with your dealer/retailer before adding electrical equipment.**

When adding electrical equipment, be sure to follow the proper installation instructions included with the electrical equipment you install.

Notice: **Improper use of the power outlet can cause damage not covered by your warranty. Do not hang any type of accessory or accessory bracket from the plug because the power outlets are designed for accessory power plugs only.**

Ashtray(s) and Cigarette Lighter

The front ashtray and cigarette lighter are located in the center console near the cupholders, if the vehicle has them. Press on the access door to open it and use the ashtray and lighter.

Notice: **If you put papers, pins, or other flammable items in the ashtray, hot cigarettes or other smoking materials could ignite them and possibly damage your vehicle. Never put flammable items in the ashtray.**

To remove the ashtray, pull it from the center console. Slide it back in and push down to be sure it is secure.

To use the cigarette lighter, push it in all the way, and let go. When it is ready, it will pop back out by itself.

Notice: **Holding a cigarette lighter in while it is heating does not let the lighter back away from the heating element when it is hot. Damage from overheating can occur to the lighter or heating element, or a fuse could be blown. Do not hold a cigarette lighter in while it is heating.**

Analog Clock

The analog clock is located on the instrument panel above the radio. The clock is not connected with any other vehicle system and runs by itself. To adjust the clock:

1. The adjustment button is located in the lower left corner of the clock.
2. Push and hold the adjustment button to advance the clock hands. Holding the button down will cause the clock to advance faster. Release the button before reaching the desired time.
3. Push and release the button to increase the time by one minute increments until the desired time is reached.

Climate Controls

Dual Automatic Climate Control System

With this system, you can control the heating, cooling, and ventilation in your vehicle. Your vehicle also has a flow-through ventilation system described later in this section.

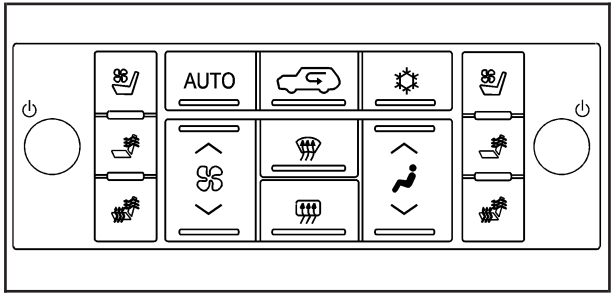

Climate Control with Cooled and Heated Seats shown

You can select different climate control settings for the driver and passengers.

Driver's Side Temperature Knob

The driver's side knob is used to adjust the temperature of the air coming through the system on the driver's side. The temperature can be adjusted even if the system is turned off. This is possible since outside air will always flow through the system as the vehicle is moving forward unless it is set to recirculation mode. See "Recirculation" later in this section.

Turn the knob counterclockwise or clockwise to lower or increase the temperature inside the vehicle. The display will show the temperature setting decreasing or increasing.

Passenger's Side Temperature Knob

The passenger's side knob can be used to change the temperature of the air coming through the system on the passenger's side of the vehicle. The temperature can be adjusted even if the system is turned off. This is possible since outside air will always flow through the system as the vehicle is moving forward unless it is set to recirculation mode. See "Recirculation" later in this section.

Turn the knob counterclockwise or clockwise to lower or increase the temperature inside the vehicle. The display will show the temperature setting decreasing or increasing.

Set the passenger's temperature setting to match the driver's temperature setting by pressing the passenger power knob.

Automatic Operation

AUTO (Automatic): When automatic operation is active the system will control the inside temperature, the air delivery, and the fan speed.

Use the steps below to place the entire system in automatic mode:

1. Press the AUTO button.

   When AUTO is selected, the display will change to show the current temperature(s) and AUTO will appear. The current delivery mode and fan speed will also be displayed for approximately five seconds.

   When AUTO is selected, the air conditioning operation and air inlet will be automatically controlled. The air conditioning compressor will run when the outside temperature is over about 40°F (4°C). The air inlet will normally be set to outside air. If it is hot outside, the air inlet may automatically switch to recirculate inside air to help quickly cool down your vehicle. The light on the button will come on in recirculation.

2. Set the driver's and passenger's temperature.

   To find your comfort setting, start with a 74°F (23°C) temperature setting and allow about 20 minutes for the system to regulate. Use the driver's or passenger's temperature buttons to adjust the temperature setting as necessary. If you choose the temperature setting of 60°F (15°C), the system will remain at the maximum cooling setting.
   If you choose the temperature setting of 90°F (32°C), the system will remain at the maximum heat setting. Choosing either maximum setting will not cause the vehicle to heat or cool any faster.

Be careful not to cover the sensor located on the top of the instrument panel near the windshield. This sensor regulates air temperature based on sun load and also turns on your headlamps.

To avoid blowing cold air in cold weather, the system will delay turning on the fan until warm air is available. The length of delay depends on the engine coolant temperature. Pressing the fan switch will override this delay and change the fan to a selected speed.

⏻ **(Off):** Press the driver's side temperature knob to turn off the climate control system. Outside air will still enter the vehicle, and will be directed to the floor. This direction can be changed by pressing the mode button. The temperature can also be adjusted using either temperature knob. Press the up or down arrows on the fan switch, the defrost button, the AUTO button, driver's side temperature knob, or the air conditioning button to turn the system on when it is off.

Manual Operation

You may manually adjust the air delivery mode or fan speed.

(Fan): The switch with the fan symbol allows you to manually adjust the fan speed. Press the up arrow to increase fan speed and the down arrow to decrease fan speed.

Pressing this button when the system is off will turn the system on.

Pressing either arrow while using automatic operation will place the fan in manual operation. The fan setting will display and the AUTO light will turn off. The air delivery will remain in automatic operation.

(Mode): Press this button to manually change the direction of the airflow in your vehicle. Repeatedly press the button until the desired mode appears on the display.

When the system is turned off, the display will go blank after displaying the current status of the system.

(Vent): This setting will deliver air to the instrument panel outlets.

(Bi-Level): This mode allows for split air to the instrument panel outlets and to the floor outlets. The flow can be divided between vent and floor outlets depending upon where the knob is placed between the settings. A little air is directed towards the windshield and side window vents. Cooler air is directed to the upper vents and warmer air to the floor vents.

(Floor): This mode directs most of the air to the floor outlets, with some of the air directed to the windshield, side window outlets, and second row floor outlets. In this mode, the system will automatically select Outside Air.

(Defog): See “Defogging and Defrosting” later in this section.

(Recirculation): Press this button to turn the recirculation mode on. When the button is pressed, an indicator light will come on.

This mode keeps outside air from entering the vehicle. It can be used to reduce outside air and odors from entering your vehicle. Recirculation may also help cool the air inside your vehicle more quickly once the temperature inside the vehicle is less than the outside temperature. The recirculation mode cannot be used with floor, defrost, or defogging modes.

If you try to select recirculation in one of those modes, the indicator will flash three times and turn off. The air conditioning compressor will also come on when this mode is activated. While in recirculation mode the windows may fog when the weather is cold and damp. To clear the fog, select either the blend or defrost mode and increase the fan speed. Recirculation mode can be turned off by pressing the button again, or turning off the engine.

Air Conditioning

(Air Conditioning): Press this button to turn the air conditioning (A/C) compressor on and off. When air conditioning is selected, an indicator light will come on to let you know that the air conditioning has been activated.

Pressing this button when the outside temperature is too cool for air conditioning will make the air conditioning indicator flash three times and then turn off indicating the air conditioning mode is not available. If the air conditioning is on and the outside temperature drops below a temperature which is too cool for air conditioning to be effective, the air conditioning light will turn off to let you know the air conditioning mode has been canceled.

On hot days, open the windows long enough to let hot inside air escape. This helps to reduce the time it takes for your vehicle to cool down. It also helps the system to operate more efficiently.

The air conditioning system removes moisture from the air, so you may sometimes notice a small amount of water dripping underneath your vehicle while idling or after turning off the engine. This is normal.

If your vehicle has heated seats or heated and cooled seats, see *Heated Seats on page 1-4* or *Heated and Cooled Seats on page 1-5*.

Defogging and Defrosting

Fog on the inside of the windows is a result of high humidity (moisture) condensing on the cool window glass. This can be minimized if the climate control system is used properly. There are two modes to clear fog or frost from your windshield. Use the defog mode to clear the windows of fog or moisture and warm the passengers. Use the defrost mode to remove fog or frost from the windshield more quickly.

Use the mode up and down arrows to select the defog or defrost modes.

(Defog): This mode directs air to the windshield, floor outlets, and side window vents. When you select this mode, the system turns off recirculation and runs the air conditioning compressor unless the outside temperature is close to freezing. The recirculation mode cannot be selected while in the defog mode. Do not drive the vehicle until all the windows are clear.

(Defrost): This mode directs a portion of the air to the windshield, side window vents and some to the floor vents. In this mode, the system will automatically force outside air into your vehicle. The recirculation mode cannot be selected while in the defrost mode. The air conditioning compressor will run automatically in this setting, unless the outside temperature is close to freezing. Do not drive the vehicle until all the windows are clear.

Rear Window Defogger

The rear window defogger uses a warming grid to remove fog from the rear window.

(Rear Window Defogger): The rear window defogger will turn off automatically after it has been activated. The defogger can also be turned off by pressing the button again or by turning off the engine. Do not drive the vehicle until all the windows are clear.

If your vehicle has heated outside rearview mirrors, the mirrors will heat to help clear fog or frost from the surface of the mirror when the rear window defog button is pressed. See *Outside Power Foldaway Mirrors on page 2-52*.

Notice: **Do not use a razor blade or sharp object to clear the inside rear window. Do not adhere anything to the defogger grid lines in the rear glass. These actions may damage the rear defogger. Repairs would not be covered by your warranty.**

Outlet Adjustment

Your vehicle has air outlets located in the center and on the side of the instrument panel that allow you to adjust the direction and amount of airflow inside the vehicle. There are also air outlets on the rear of the center console for rear seat passenger use. Move the louvers up or down. Use the rotary knob next to or underneath the outlet to close the louvers. For the most efficient airflow and temperature control, keep the outlet in the fully opened position.

Operation Tips

- Keep the hood and front air inlets free of ice, snow, or any other obstruction, such as leaves. The heater and defroster will work far better, reducing the chance of fogging the inside of your windows.
- Keep the air path under the front seats clear of objects. This helps air to circulate throughout your vehicle.
- Adding outside equipment to the front of your vehicle, such as hood-air deflectors, etc., may affect the performance of the heating and air conditioning system. Check with your dealer before adding equipment to the outside of your vehicle.

Warning Lights, Gages, and Indicators

This part describes the warning lights and gages on your vehicle. The pictures will help you locate them.

Warning lights and gages can signal that something is wrong before it becomes serious enough to cause an expensive repair or replacement. Paying attention to your warning lights and gages could also save you or others from injury.

Warning lights come on when there may be or is a problem with one of your vehicle's functions. As you will see in the details on the next few pages, some warning lights come on briefly when you start the engine just to let you know they are working. If you are familiar with this section, you should not be alarmed when this happens.

Gages can indicate when there may be or is a problem with one of your vehicle's functions. Often gages and warning lights work together to let you know when there is a problem with your vehicle.

When one of the warning lights comes on and stays on when you are driving, or when one of the gages shows there may be a problem, check the section that tells you what to do about it. Please follow this manual's advice. Waiting to do repairs can be costly – and even dangerous. So please get to know your warning lights and gages. They are a big help.

Your vehicle also has a Driver Information Center (DIC) that works along with the warning lights and gages. See *Driver Information Center (DIC) on page 3-45*.

Instrument Panel Cluster

Your instrument panel cluster is designed to let you know at a glance how your vehicle is running. You will know how fast you are going, about how much fuel you have and many other things you will need to know to drive safely and economically.

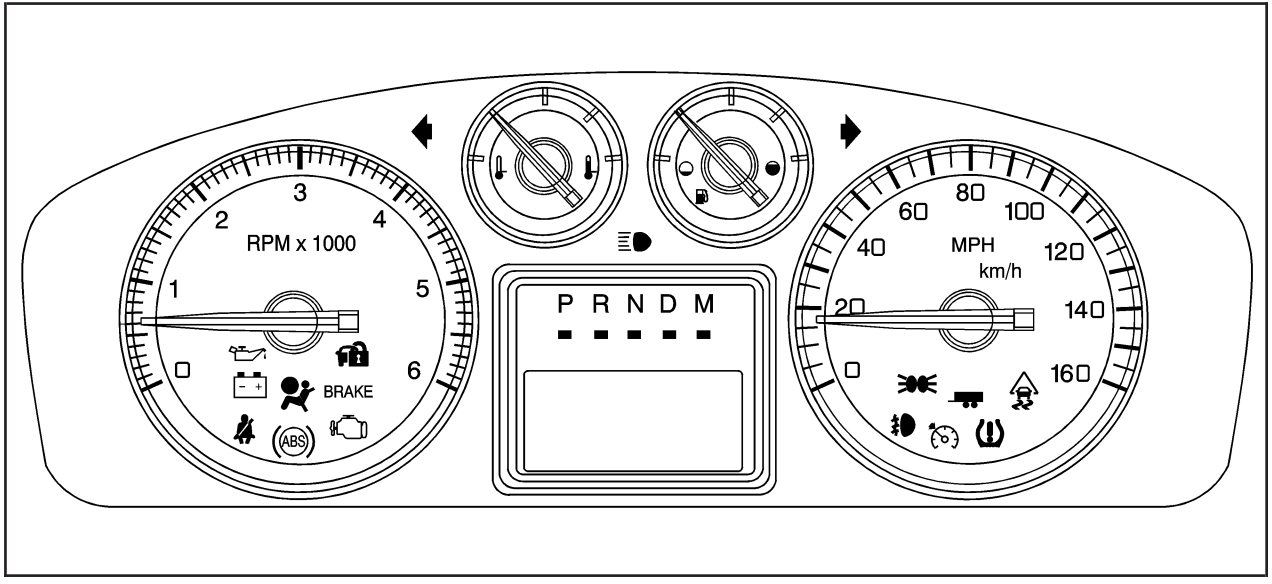

United States version shown, Canada similar.

Speedometer and Odometer

The speedometer lets you see your vehicle's speed in both miles per hour (mph) and kilometers per hour (km/h).

The odometer works together with the Driver Information Center (DIC). The odometer mileage can be checked without the vehicle running by pressing the Trip/Fuel button on the instrument panel cluster. See "Odometer" under *DIC Operation and Displays on page 3-45* for more information.

If your vehicle ever needs a new odometer installed, the new one will be set to the correct mileage total of the old odometer.

Trip Odometer

The trip odometer can tell you how far your vehicle has been driven since you last set the trip odometer to zero.

For more information see "Trip Odometer" under *DIC Operation and Displays on page 3-45*.

Tachometer

Your tachometer displays the engine speed in revolutions per minute (rpm).

Safety Belt Reminders

Safety Belt Reminder Light

When the engine is started, a chime will come on for several seconds to remind people to fasten their safety belts, unless the driver's safety belt is already buckled.

The safety belt light will also come on and stay on for several seconds, then it will flash for several more.

This chime and light is repeated if the driver remains unbuckled and the vehicle is in motion. If the driver's belt is already buckled, neither the chime nor the light will come on.

Passenger Safety Belt Reminder Light

Several seconds after the engine is started, a chime will sound for several seconds to remind the front passenger to buckle their safety belt. This would only occur if the passenger airbag is enabled. See *Passenger Sensing System on page 1-65* for more information. The passenger safety belt light, located on the instrument panel, will come on and stay on for several seconds and then flash for several more.

This chime and light are repeated if the passenger remains unbuckled and the vehicle is in motion.

If the passenger's safety belt is buckled, neither the chime nor the light will come on.

Airbag Readiness Light

There is an airbag readiness light on the instrument panel cluster, which shows the airbag symbol. The system checks the airbag's electrical system for malfunctions. The light tells you if there is an electrical problem. The system check includes the airbag sensor, the pretensioners, the airbag modules, the wiring and the crash sensing and diagnostic module. For more information on the airbag system, see *Airbag System on page 1-56*.

This light will come on when you start your vehicle, and it will flash for a few seconds. The light should go out and the system is ready.

If the airbag readiness light stays on after you start the vehicle or comes on when you are driving, your airbag system may not work properly. Have your vehicle serviced right away.

⚠ CAUTION:

If the airbag readiness light stays on after you start your vehicle, it means the airbag system may not be working properly. The airbags in your vehicle may not inflate in a crash, or they could even inflate without a crash. To help avoid injury to yourself or others, have your vehicle serviced right away if the airbag readiness light stays on after you start your vehicle.

The airbag readiness light should flash for a few seconds when you start the engine. If the light does not come on then, have it fixed immediately. If there is a problem with the airbag system, an airbag Driver Information Center (DIC) message may also come on. See *DIC Warnings and Messages on page 3-50* for more information.

Passenger Airbag Status Indicator

Your vehicle has the passenger sensing system. Your overhead console has a passenger airbag status indicator.

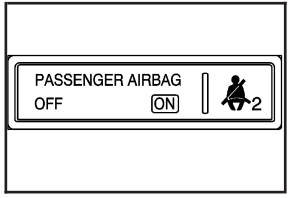

United States

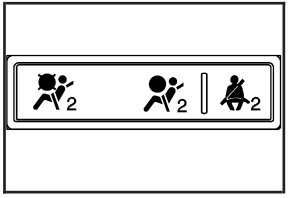

Canada

When you start the vehicle, the passenger airbag status indicator will light ON and OFF, or the symbol for on and off, for several seconds as a system check.

Then, after several more seconds, the status indicator will light either ON or OFF, or either the on or off symbol to let you know the status of the right front passenger's frontal airbag.

If the word ON or the on symbol is lit on the passenger airbag status indicator, it means that the right front passenger's frontal airbag is enabled (may inflate).

⚠ CAUTION:

If the on indicator comes on when you have a rear-facing child restraint installed in the right front passenger's seat, it means that the passenger sensing system has not turned off the passenger's frontal airbag. A child in a rear-facing child restraint can be seriously injured or killed if the right front passenger's airbag inflates. This is because the back of the rear-facing child restraint would be very close to the inflating airbag. Do not use a rear-facing child restraint in the right front passenger's seat if the airbag is turned on.

⚠ CAUTION:

Even though the passenger sensing system is designed to turn off the right front passenger's frontal airbag if the system detects a rear-facing child restraint, no system is fail-safe, and no one can guarantee that an airbag will not deploy under some unusual circumstance, even though it is turned off. We recommend that rear-facing child restraints be secured in the rear seat, even if the airbag is off.

If the word OFF or the off symbol is lit on the airbag status indicator, it means that the passenger sensing system has turned off the right front passenger's frontal airbag. See *Passenger Sensing System on page 1-65* for more on this, including important safety information.

If, after several seconds, both status indicator lights remain on, or if there are no lights at all, there may be a problem with the lights or the passenger sensing system. See your dealer/retailer for service.

⚠ CAUTION:

If the airbag readiness light in the instrument panel cluster ever comes on and stays on, it means that something may be wrong with the airbag system. If this ever happens, have the vehicle serviced promptly, because an adult-size person sitting in the right front passenger's seat may not have the protection of the airbag(s). See *Airbag Readiness Light on page 3-32* for more on this, including important safety information.

Charging System Light

This light will come on briefly when you turn on the ignition, but the engine is not running, as a check to show you it is working.

It should go out once the engine is running. If it stays on, or comes on while you are driving, you may have a problem with the charging system. A charging system Driver Information Center (DIC) message may also appear. See *DIC Warnings and Messages on page 3-50* for more information. This light could indicate that you have problems with a generator drive belt, or another electrical problem. Have it checked right away. If you must drive a short distance with the light on, be certain to turn off all your accessories, such as the radio and air conditioner.

Brake System Warning Light

With the ignition on, the brake system warning light will come on when you set the parking brake. If you try to drive with the parking brake engaged, a chime will sound when the vehicle speed is greater than 3 mph (5 km/h).

Your vehicle's hydraulic brake system is divided into two parts. If one part is not working, the other part can still work and stop you. For good braking, though, you need both parts working well.

If the warning light comes on and a chime sounds there could be a brake problem. Have your brake system inspected right away.

This light may also come on due to low brake fluid. See *Brakes on page 5-36* for more information.

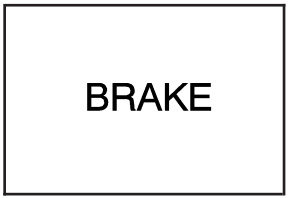

United States

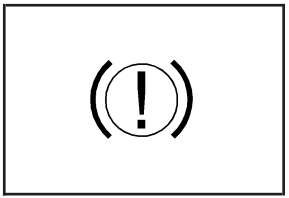

Canada

This light should come on briefly when you turn the ignition key to RUN. If it does not come on then, have it fixed so it will be ready to warn you if there is a problem.

If the light comes on while you are driving, pull off the road and stop carefully. You may notice that the pedal is harder to push or may go closer to the floor. It may take longer to stop. If the light is still on, have the vehicle towed for service. See *Towing Your Vehicle on page 4-42*.

⚠ CAUTION:

Your brake system may not be working properly if the brake system warning light is on. Driving with the brake system warning light on can lead to an accident. If the light is still on after you have pulled off the road and stopped carefully, have the vehicle towed for service.

Antilock Brake System Warning Light

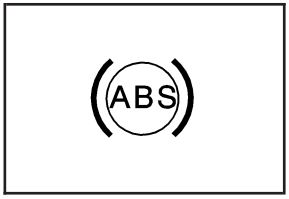

For vehicles with the Antilock Brake System (ABS), this light will come on briefly when you start the engine.

That is normal. If the light does not come on then, have it fixed so it will be ready to warn you if there is a problem.

If the ABS light stays on, turn the ignition off, if the light comes on when you are driving, stop as soon as it is safely possible and turn the ignition off. Then start the engine again to reset the system. If the ABS light still stays on, or comes on again while you are driving, your vehicle needs service. If the regular brake system warning light is not on, you still have brakes, but you do not have antilock brakes. If the regular brake system warning light is also on, you do not have antilock brakes and there is a problem with your regular brakes. See *Brake System Warning Light on page 3-36*

For vehicles with a Driver Information Center (DIC), see *DIC Warnings and Messages on page 3-50* for all brake related DIC messages.

StabiliTrak® Indicator Light

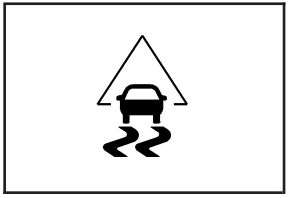

This warning light should come on briefly when the engine is started.

If the warning light does not come on then, have it fixed so it will be ready to warn you if there is a problem. If it stays on, or comes on when you are driving, there may be a problem with your StabiliTrak® system and your vehicle may need service. When this warning light is on, the system is off and will not limit wheel spin. Adjust your driving accordingly.

This light will also flash when the StabiliTrak® system is active.

If the StabiliTrak® system warning light comes on and stays on for an extended period of time when the system is turned on, your vehicle needs service. See *StabiliTrak® System on page 4-6* for more information.

Engine Coolant Temperature Gage

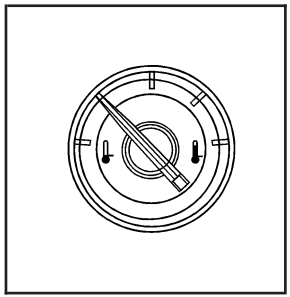

This gage shows the engine coolant temperature.

If the indicator on the gage moves towards the shaded in thermostat, it means that your engine coolant has overheated. If you have been operating your vehicle under normal driving conditions, you should pull off the road, stop your vehicle and turn off the engine as soon as possible.

See *Engine Overheating on page 5-26*.

Tire Pressure Light

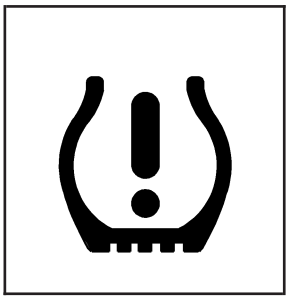

This light comes on briefly when the engine is started.

This light will also come on when one or more of your tires are significantly underinflated.

A tire pressure message in the Driver Information Center (DIC), may accompany the light. See *DIC Warnings and Messages on page 3-50* for more information.

Stop and check your tires as soon as it is safe to do so. If underinflated, inflate to the proper pressure. See *Tires on page 5-54* for more information.

If a problem is detected with the Tire Pressure Monitor System, this light will flash for approximately 60 seconds and then stay on solid for the remainder of the ignition cycle. See *Tire Pressure Monitor System on page 5-63* for more information.

Malfunction Indicator Lamp

Check Engine Light

A computer system called OBD II (On-Board Diagnostics-Second Generation) monitors operation of the fuel, ignition, and emission control systems. It makes sure that emissions are at acceptable levels for the life of the vehicle, helping to produce a cleaner environment.

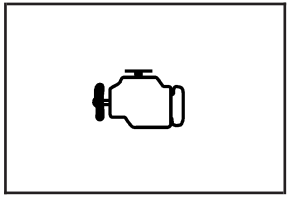

The check engine light comes on to indicate that there is an OBD II problem and service is required.

Malfunctions often are indicated by the system before any problem is apparent. This can prevent more serious damage to your vehicle. This system is also designed to assist your service technician in correctly diagnosing any malfunction.

Notice: **If you keep driving your vehicle with this light on, after a while, the emission controls might not work as well, your vehicle's fuel economy might not be as good, and the engine might not run as smoothly. This could lead to costly repairs that might not be covered by your warranty.**

Notice: **Modifications made to the engine, transmission, exhaust, intake, or fuel system of your vehicle or the replacement of the original tires with other than those of the same Tire Performance Criteria (TPC) can affect your vehicle's emission controls and can cause this light to come on. Modifications to these systems could lead to costly repairs not covered by your warranty. This could also result in a failure to pass a required Emission Inspection/Maintenance test. See *Accessories and Modifications on page 5-3*.**

This light comes on, as a check to show it is working, when the ignition is turned ON/RUN but the engine is not running. If the light does not come on, have it repaired. This light also comes on during a malfunction in one of two ways:

- **Light Flashing** — A misfire condition has been detected. A misfire increases vehicle emissions and could damage the emission control system on your vehicle. Diagnosis and service might be required.
- **Light On Steady** — An emission control system malfunction has been detected on your vehicle. Diagnosis and service might be required.

If the Light is Flashing

The following can prevent more serious damage to your vehicle:

- Reduce vehicle speed.
- Avoid hard accelerations.
- Avoid steep uphill grades.
- If you are towing a trailer, reduce the amount of cargo being hauled as soon as it is possible.

If the light stops flashing and remains on steady, see “If the Light Is On Steady” following.

If the light continues to flash, when it is safe to do so, stop the vehicle. Find a safe place to park the vehicle. Turn the ignition off, wait at least 10 seconds, and restart the engine. If the light remains on steady, see “If the Light Is On Steady” following. If the light is still flashing, follow the previous steps and see your dealer/retailer for service as soon as possible.

If the Light Is On Steady

You might be able to correct the emission system malfunction by considering the following:

Did you recently put fuel into your vehicle?

If so, reinstall the fuel cap, making sure to fully install the cap. See *Filling the Tank on page 5-8*. The diagnostic system can determine if the fuel cap has been left off or improperly installed. A loose or missing fuel cap allows fuel to evaporate into the atmosphere. A few driving trips with the cap properly installed should turn the light off.

Did you just drive through a deep puddle of water?

If so, your vehicle’s electrical system might be wet. The condition is usually corrected when the electrical system dries out. A few driving trips should turn the light off.

Have you recently changed brands of fuel?

If so, be sure to fuel your vehicle with quality fuel. See *Gasoline Octane on page 5-5*. Poor fuel quality causes the engine not to run as efficiently as designed. You might notice this as stalling after start-up, stalling when you put the vehicle into gear, misfiring, hesitation on acceleration, or stumbling on acceleration — these conditions might go away once the engine is warmed up. This will be detected by the system and cause the light to turn on.

If you experience one or more of these conditions, change the fuel brand you use. It will require at least one full tank of the proper fuel to turn the light off.

If none of the above steps have made the light turn off, your dealer/retailer can check the vehicle. Your dealer/retailer has the proper test equipment and diagnostic tools to fix any mechanical or electrical problems that might have developed.

Emissions Inspection and Maintenance Programs

Some state/provincial and local governments have or might begin programs to inspect the emission control equipment on your vehicle. Failure to pass this inspection could prevent you from getting a vehicle registration.

Here are some things you need to know to help your vehicle pass an inspection:

Your vehicle will not pass this inspection if the check engine light is on or not working properly.

Your vehicle will not pass this inspection if the OBD (on-board diagnostic) system determines that critical emission control systems have not been completely diagnosed by the system. The vehicle would be considered not ready for inspection.

This can happen if you have recently replaced the battery or if the battery has run down. The diagnostic system is designed to evaluate critical emission control systems during normal driving. This can take several days of routine driving. If you have done this and your vehicle still does not pass the inspection for lack of OBD system readiness, your dealer/retailer can prepare the vehicle for inspection.

Oil Pressure Light

⚠ CAUTION:

Do not keep driving if the oil pressure is low. If you do, your engine can become so hot that it catches fire. You or others could be burned. Check your oil as soon as possible and have your vehicle serviced.

Notice: **Lack of proper engine oil maintenance may damage the engine. The repairs would not be covered by your warranty. Always follow the maintenance schedule in this manual for changing engine oil.**

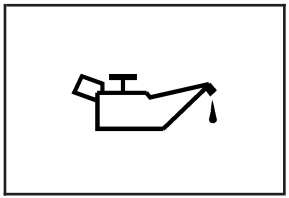

This light will come on briefly when you start your engine. If it does not, have your vehicle serviced.

When the light comes on and stays on, it means that oil is not flowing through your engine properly. You could be low on oil and you might have some other system problem.

Security Light

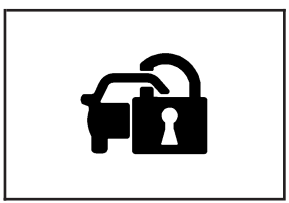

For information regarding this light and the vehicle's security system, see *Content Theft-Deterrent on page 2-26*.

Fog Lamp Light

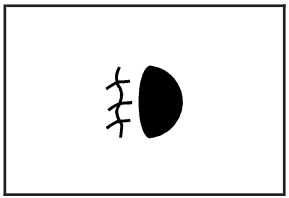

The fog lamp light will come on when the fog lamps are in use.

The light will go out when the fog lamps are turned off. See *Fog Lamps on page 3-19* for more information.

Lights On Reminder

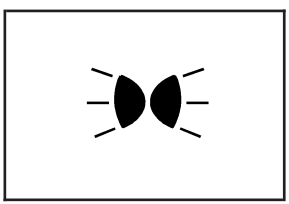

This light comes on whenever the parking lamps are on.

See *Exterior Lamps on page 3-14* for more information.

Cruise Control Light

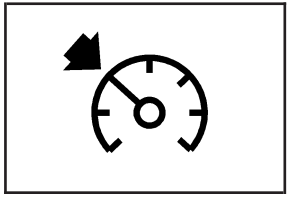

This light comes on whenever you set the cruise control.

The light goes out when the cruise control is turned off. See *Cruise Control on page 3-11* for more information.

Highbeam On Light

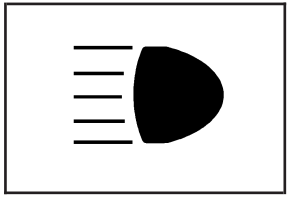

This light comes on when the high-beam headlamps are in use.

See *Headlamp High/Low-Beam Changer on page 3-9* for more information.

Tow/Haul Mode Light

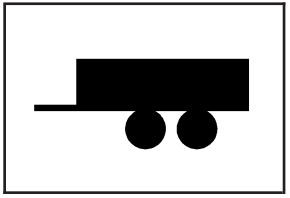

This light comes on when the Tow/Haul mode has been activated.

For more information, see *Tow/Haul Mode on page 2-40*.

Fuel Gage

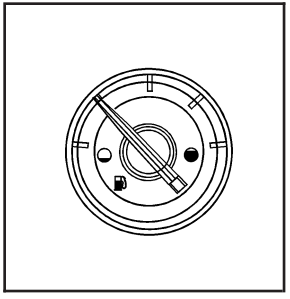

When the ignition is on, the fuel gage tells you about how much fuel you have left in your tank.

The gage will first indicate empty before you are out of fuel, and you should get more fuel as soon as possible.

Here are some situations you may experience with your fuel gage. None of these indicate a problem with the fuel gage.

- At the gas station, the fuel pump shuts off before the gage reads full.
- It takes a little more or less fuel to fill up than the fuel gage indicated. For example, the gage may have indicated the tank was half full, but it actually took a little more or less than half the tank's capacity to fill the tank.
- The gage goes back to empty when you turn off the ignition.

Driver Information Center (DIC)

Your vehicle has a Driver Information Center (DIC).

The DIC displays information about your vehicle. It also displays warning messages if a system problem is detected. The DIC also allows some features to be customized. See *DIC Vehicle Customization on page 3-57* for more information.

All messages will appear in the DIC display located in the center of the instrument panel cluster.

The DIC comes on when the ignition is on. After a short delay, the DIC will display the information that was last displayed before the engine was turned off.

See *DIC Operation and Displays on page 3-45* and *DIC Vehicle Customization on page 3-57* for the displays available.

DIC Operation and Displays

The DIC has different displays which can be accessed by pressing the DIC buttons located on the instrument panel, next to the steering wheel.

The DIC displays trip, fuel, and vehicle system information, and warning messages if a system problem is detected. A digital speedometer also appears at the bottom of the DIC display. The digital speedometer can be enabled or disabled. See "DISPLAY DIGITAL SPEED" under *DIC Vehicle Customization on page 3-57* for more information.

DIC Buttons

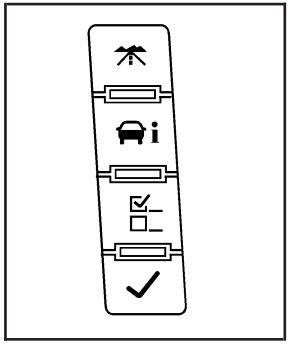

The buttons are the trip/fuel, vehicle information, customization, and set/reset buttons. The button functions are detailed in the following pages.

(Trip/Fuel): Press this button to display the odometer, trip odometer, fuel range, average economy, fuel used, timer, and transmission temperature.

(Vehicle Information): Press this button to display the oil life, units, tire pressure readings, and Remote Keyless Entry (RKE) transmitter programming.

(Customization): Press this button to customize the feature settings on your vehicle. See *DIC Vehicle Customization on page 3-57* for more information.

(Set/Reset): Press this button to set or reset certain functions and to turn off or acknowledge messages on the DIC.

Trip/Fuel Menu Items

(Trip/Fuel): Press this button to scroll through the following menu items:

Odometer

Press the trip/fuel button until ODOMETER displays. This display shows the distance the vehicle has been driven in either miles (mi) or kilometers (km).

To switch between English and metric measurements, see “Units” later in this section.

Trip Odometer

Press the trip/fuel button until TRIP displays. This display shows the current distance traveled in either miles (mi) or kilometers (km) since the last reset for the trip odometer.

The trip odometer can be reset to zero by pressing the set/reset button while the trip odometer is displayed.

Fuel Range

Press the trip/fuel button until FUEL RANGE displays. This display shows the approximate number of remaining miles (mi) or kilometers (km) the vehicle can be driven without refueling. The display will show LOW if the fuel level is low.

The fuel range estimate is based on an average of the vehicle's fuel economy over recent driving history and the amount of fuel remaining in the fuel tank. This estimate will change if driving conditions change. For example, if driving in traffic and making frequent stops, this display may read one number, but if the vehicle is driven on a freeway, the number may change even though the same amount of fuel is in the fuel tank. This is because different driving conditions produce different fuel economies. Generally, freeway driving produces better fuel economy than city driving. Fuel range cannot be reset.

Average Economy

Press the trip/fuel button until AVERAGE ECONOMY displays. This display shows the approximate average miles per gallon (mpg) or liters per 100 kilometers (L/100 km). This number is calculated based on the number of mpg (L/100 km) recorded since the last time this menu item was reset. To reset AVERAGE ECONOMY, press and hold the set/reset button.

Fuel Used

Press the trip/fuel button until FUEL USED displays. This display shows the number of gallons (gal) or liters (L) of fuel used since the last reset of this menu item. To reset the fuel used information, press and hold the set/reset button while FUEL USED is displayed.

Timer

Press the trip/fuel button until TIMER displays. This display can be used as a timer.

To start the timer, press the set/reset button while TIMER is displayed. The display will show the amount of time that has passed since the timer was last reset, not including time the ignition is off. Time will continue to be counted as long as the ignition is on, even if another display is being shown on the DIC. The timer will record up to 99 hours, 59 minutes and 59 seconds (99:59:59) after which the display will return to zero.

To stop the timer, press the set/reset button briefly while TIMER is displayed.

To reset the timer to zero, press and hold the set/reset button while TIMER is displayed.

Transmission Temperature

Press the trip/fuel button until TRANS TEMP displays. This display shows the temperature of the automatic transmission fluid in either degrees Fahrenheit (°F) or degrees Celsius (°C).

Blank Display

This display shows no information.

Vehicle Information Menu Items

(Vehicle Information): Press this button to scroll through the following menu items:

Oil Life

Press the vehicle information button until OIL LIFE REMAINING displays. This display shows an estimate of the oil's remaining useful life. If you see 99% OIL LIFE REMAINING on the display, that means 99% of the current oil life remains. The engine oil life system will alert you to change the oil on a schedule consistent with your driving conditions.

When the remaining oil life is low, the CHANGE ENGINE OIL SOON message will appear on the display. See "CHANGE ENGINE OIL SOON" under *DIC Warnings and Messages on page 3-50*. You should change the oil as soon as you can. See *Engine Oil on page 5-13*. In addition to the engine oil life system monitoring the oil life, additional maintenance is recommended in the Maintenance Schedule in this manual. See *Scheduled Maintenance on page 6-4* for more information.

Remember, you must reset the OIL LIFE display yourself after each oil change. It will not reset itself. Also, be careful not to reset the OIL LIFE display accidentally at any time other than when the oil has just been changed. It cannot be reset accurately until the next oil change. To reset the engine oil life system, see *Engine Oil Life System on page 5-16*.

Units

Press the vehicle information button until UNITS displays. This display allows you to select between English or Metric units of measurement. Once in this display, press the set/reset button to select between ENGLISH or METRIC units. All of the vehicle information will then be displayed in the unit of measurement selected.

Tire Pressure

The pressure for each tire can be viewed in the DIC. The tire pressure will be shown in either pounds per square inch (psi) or kilopascals (kPa). Press the vehicle information button until the DIC displays FRONT TIRES PSI (kPa) LEFT ## RIGHT ##. Press the vehicle information button again until the DIC displays REAR TIRES PSI (kPa) LEFT ## RIGHT ##.

If a low or high tire pressure condition is detected by the system while driving, a message advising you to check the pressure in a specific tire will appear in the display. See *Inflation - Tire Pressure on page 5-61* and *DIC Warnings and Messages on page 3-50* for more information.

If the tire pressure display shows dashes instead of a value, there may be a problem with your vehicle. If this consistently occurs, see your dealer/retailer for service.

Relearn Remote Key

This display allows you to match Remote Keyless Entry (RKE) transmitters to your vehicle. To match an RKE transmitter to your vehicle:

1. Press the vehicle information button until PRESS ✓ TO RELEARN REMOTE KEY displays.
2. Press the set/reset button until REMOTE KEY LEARNING ACTIVE is displayed.
3. Press and hold the lock and unlock buttons on the first transmitter at the same time for about 15 seconds.

   On vehicles with memory recall seats, the first transmitter learned will match driver 1 and the second will match driver 2.

   A chime will sound indicating that the transmitter is matched.
4. To match additional transmitters at this time, repeat Step 3.

   Each vehicle can have a maximum of eight transmitters matched to it.
5. To exit the programming mode, you must cycle the key to LOCK/OFF.

Blank Display

This display shows no information.

DIC Warnings and Messages

Messages are displayed on the DIC to notify the driver that the status of the vehicle has changed and that some action may be needed by the driver to correct the condition. Multiple messages may appear one after another.

Some messages may not require immediate action, but you can press any of the DIC buttons on the instrument panel to acknowledge that you received the messages and to clear them from the display.

Some messages cannot be cleared from the DIC display because they are more urgent. These messages require action before they can be cleared. You should take any messages that appear on the display seriously and remember that clearing the messages will only make the messages disappear, not correct the problem.

The following are the possible messages that can be displayed and some information about them.

CHANGE ENGINE OIL SOON

This message displays when the engine oil needs to be changed. When you change the engine oil, be sure to reset the CHANGE ENGINE OIL SOON message. See *Engine Oil Life System on page 5-16* for information on how to reset the message. See *Engine Oil on page 5-13* and *Scheduled Maintenance on page 6-4* for more information.

CHECK TIRE PRESSURE

This message displays when the pressure in one or more of the vehicle's tires needs to be checked. This message also displays LEFT FRONT, RIGHT FRONT, LEFT REAR, or RIGHT REAR to indicate which tire needs to be checked. You can receive more than one tire pressure message at a time. To read the other messages that may have been sent at the same time, press the set/reset button. If a tire pressure message appears on the DIC, stop as soon as you can. Have the tire pressures checked and set to those shown on the Tire Loading Information label. See *Tires on page 5-54*, *Loading Your Vehicle on page 4-35*, and *Inflation - Tire Pressure on page 5-61*. The DIC also shows the tire pressure values. See *DIC Operation and Displays on page 3-45*. If the tire pressure is low, the low tire pressure warning light comes on. See *Tire Pressure Light on page 3-39*.

DRIVER DOOR OPEN

This message displays and a chime sounds if the driver door is not fully closed and the vehicle is in a drive gear. Stop and turn off the vehicle, check the door for obstructions, and close the door again. Check to see if the message still appears on the DIC.

ENGINE HOT A/C (Air Conditioning) TURNED OFF

This message displays when the engine coolant becomes hotter than the normal operating temperature. See *Engine Coolant Temperature Gage on page 3-39*. To avoid added strain on a hot engine, the air conditioning compressor automatically turns off. When the coolant temperature returns to normal, the air conditioning compressor turns back on. You can continue to drive your vehicle.

If this message continues to appear, have the system repaired by your dealer/retailer as soon as possible to avoid damage to the engine.

ENGINE OVERHEATED IDLE ENGINE

Notice: **If you drive your vehicle while the engine is overheating, severe engine damage may occur. If an overheat warning appears on the instrument panel cluster and/or DIC, stop the vehicle as soon as possible. See *Engine Overheating on page 5-26* for more information.**

This message displays when the engine coolant temperature is too hot. Stop and allow the vehicle to idle until it cools down. See *Engine Coolant Temperature Gage on page 3-39*.

See *Overheated Engine Protection Operating Mode on page 5-28* for information on driving to a safe place in an emergency.

ENGINE OVERHEATED STOP ENGINE

Notice: **If you drive your vehicle while the engine is overheating, severe engine damage may occur. If an overheat warning appears on the instrument panel cluster and/or DIC, stop the vehicle as soon as possible. See *Engine Overheating on page 5-26* for more information.**

This message displays and a chime sounds if the engine cooling system reaches unsafe temperatures for operation. Stop and turn off the vehicle as soon as it is safe to do so to avoid severe damage. This message clears when the engine has cooled to a safe operating temperature.

ENGINE POWER IS REDUCED

This message displays and a chime sounds when the cooling system temperature gets too hot and the engine further enters the engine coolant protection mode. See *Engine Overheating on page 5-26* for further information.

This message also displays when the vehicle's engine power is reduced. Reduced engine power can affect the vehicle's ability to accelerate. If this message is on, but there is no reduction in performance, proceed to your destination. The performance may be reduced the next time the vehicle is driven. The vehicle may be driven at a reduced speed while this message is on, but acceleration and speed may be reduced. Anytime this message stays on, the vehicle should be taken to your dealer/retailer for service as soon as possible.

FUEL LEVEL LOW

This message displays and a chime sounds if the fuel level is low. Refuel as soon as possible. See *Fuel Gage on page 3-44* and *Fuel on page 5-5* for more information.

HOOD OPEN

This message displays and a chime sounds if the hood is not fully closed. Stop and turn off the vehicle, check the hood for obstructions, and close the hood again. Check to see if the message still appears on the DIC.

LEFT REAR DOOR OPEN

This message displays and a chime sounds if the driver side rear door is not fully closed and the vehicle is in a drive gear. Stop and turn off the vehicle, check the door for obstructions, and close the door again. Check to see if the message still appears on the DIC.

MANUAL SHIFT X

If your vehicle has Driver Shift Control (DSC) and the shift lever is in the MANUAL MODE (M) position, this message displays along with the current gear. See *Automatic Transmission Operation on page 2-36* for more information.

OIL PRESSURE LOW STOP ENGINE

Notice: **If you drive your vehicle while the engine oil pressure is low, severe engine damage may occur. If a low oil pressure warning appears on the Driver Information Center (DIC), stop the vehicle as soon as possible. Do not drive the vehicle until the cause of the low oil pressure is corrected. See *Engine Oil on page 5-13* for more information.**

This message displays if low oil pressure levels occur. Stop the vehicle as soon as safely possible and do not operate it until the cause of the low oil pressure has been corrected. Check the oil as soon as possible and have your vehicle serviced by your dealer/retailer. See *Engine Oil on page 5-13*.

PARKING ASSIST OFF

After the vehicle has been started, this message displays to remind the driver that the Ultrasonic Rear Parking Assist (URPA) system has been turned off. Press the set/reset button to acknowledge this message and clear it from the DIC display. To turn the URPA system back on, see *Ultrasonic Rear Parking Assist (URPA) on page 2-54*.

PASSENGER DOOR OPEN

This message displays and a chime sounds if the passenger door is not fully closed and the vehicle is in a drive gear. Stop and turn off the vehicle, check the door for obstructions, and close the door again. Check to see if the message still appears on the DIC.

REMOTE KEY LEARNING ACTIVE

This message displays while you are matching a Remote Keyless Entry (RKE) transmitter to your vehicle. See “Matching Transmitter(s) to Your Vehicle” under *Remote Keyless Entry (RKE) System Operation on page 2-5* and *DIC Operation and Displays on page 3-45* for more information.

REPLACE BATTERY IN REMOTE KEY

This message displays if a Remote Keyless Entry (RKE) transmitter battery is low. The battery needs to be replaced in the transmitter. See “Battery Replacement” under *Remote Keyless Entry (RKE) System Operation on page 2-5*.

RIGHT REAR DOOR OPEN

This message displays and a chime sounds if the passenger side rear door is not fully closed and the vehicle is in a drive gear. Stop and turn off the vehicle, check the door for obstructions, and close the door again. Check to see if the message still appears on the DIC.

SERVICE AIR BAG

This message displays if there is a problem with the airbag system. Have your dealer/retailer inspect the system for problems. See *Airbag Readiness Light on page 3-32* and *Airbag System on page 1-56* for more information.

SERVICE BATTERY CHARGING SYSTEM

On some vehicles, this message displays if there is a problem with the battery charging system. Under certain conditions, the charging system light may also turn on in the instrument panel cluster. See *Charging System Light on page 3-35*. Driving with this problem could drain the battery. Turn off all unnecessary accessories. Have the electrical system checked as soon as possible. See your dealer/retailer.

SERVICE BRAKE SYSTEM

This message displays along with the brake system warning light if there is a problem with the brake system. See *Brake System Warning Light on page 3-36*. If this message appears, stop as soon as possible and turn off the vehicle. Restart the vehicle and check for the message on the DIC display. If the message is still displayed or appears again when you begin driving, the brake system needs service as soon as possible. See your dealer/retailer.

SERVICE BRAKES SOON

This message displays if there is a problem with the brake system. If this message appears, stop as soon as possible and turn off the vehicle. Restart the vehicle and check for the message on the DIC display. If the message is still displayed or appears again when you begin driving, the brake system needs service. See your dealer/retailer.

SERVICE PARKING ASSIST

This message displays if there is a problem with the Ultrasonic Rear Parking Assist (URPA) system. Do not use this system to help you park. See *Ultrasonic Rear Parking Assist (URPA) on page 2-54* for more information. See your dealer/retailer for service.

SERVICE STABILITRAK

If your vehicle has StabiliTrak® and this message displays, it means there may be a problem with the StabiliTrak® system. If you see this message, try to reset the system. Stop; turn off the engine for at least 15 seconds; then start the engine again. If this message still comes on, it means there is a problem. You should see your dealer/retailer for service. The vehicle is safe to drive, however, you do not have the benefit of StabiliTrak®, so reduce your speed and drive accordingly.

SERVICE SUSPENSION SYSTEM

This message displays when the Road Sensing Suspension (RSS) system is not operating properly. Have your vehicle serviced by your dealer/retailer.

SERVICE THEFT DETERRENT SYSTEM

This message displays when there is a problem with the theft-deterrent system. The vehicle may or may not restart so you may want to take the vehicle to your dealer/retailer before turning off the engine. See *PASS-Key® III+ Operation on page 2-29* for more information.

SERVICE TIRE MONITOR SYSTEM

This message displays if a part on the Tire Pressure Monitor System (TPMS) is not working properly. The tire pressure light also flashes and then remains on during the same ignition cycle. See *Tire Pressure Light on page 3-39*. Several conditions may cause this message to appear. See *Tire Pressure Monitor Operation on page 5-64* for more information. If the warning comes on and stays on, there may be a problem with the TPMS. See your dealer/retailer.

SERVICE TRACTION CONTROL

If your vehicle has StabiliTrak®, this message displays when there is a problem with the Traction Control System (TCS). When this message displays, the system will not limit wheel spin. Adjust your driving accordingly. See your dealer/retailer for service. See *StabiliTrak® System on page 4-6* for more information.

STABILITRAK OFF

If your vehicle has StabiliTrak®, this message displays when you turn off StabiliTrak®, or when the stability control has been automatically disabled. To limit wheel spin and realize the full benefits of the stability enhancement system, you should normally leave StabiliTrak® on. However, you should turn StabiliTrak® off if your vehicle gets stuck in sand, mud, ice, or snow and you want to rock your vehicle to attempt to free it, or if you are driving in extreme off-road conditions and require more wheel spin. See *If Your Vehicle is Stuck in Sand, Mud, Ice, or Snow on page 4-33*. To turn the StabiliTrak® system on or off, see *StabiliTrak® System on page 4-6*.

There are several conditions that can cause this message to appear.

- One condition is overheating, which could occur if StabiliTrak® activates continuously for an extended period of time.
- The message also displays if the brake system warning light is on. See *Brake System Warning Light on page 3-36*.
- The message could display if the stability system takes longer than usual to complete its diagnostic checks due to driving conditions.
- The message displays if an engine or vehicle related problem has been detected and the vehicle needs service. See your dealer/retailer.

The message turns off as soon as the conditions that caused the message to be displayed are no longer present.

TIGHTEN GAS CAP

This message may display along with the check engine light on the instrument panel cluster if the vehicle's fuel cap is not tightened properly. See *Malfunction Indicator Lamp on page 3-40*. Reinstall the fuel cap fully. See *Filling the Tank on page 5-8*. The diagnostic system can determine if the fuel cap has been left off or improperly installed. A loose or missing fuel cap allows fuel to evaporate into the atmosphere. A few driving trips with the cap properly installed should turn this light and message off.

TIRE LEARNING ACTIVE

This message displays when the Tire Pressure Monitor System (TPMS) is re-learning the tire positions on your vehicle. The tire positions must be re-learned after rotating the tires or after replacing a tire or sensor. See *Tire Inspection and Rotation on page 5-68*, *Tire Pressure Monitor System on page 5-63*, and *Inflation - Tire Pressure on page 5-61* for more information.

TRACTION CONTROL OFF

If your vehicle has StabiliTrak®, this message displays when the Traction Control System (TCS) is turned off. Adjust your driving accordingly. See *StabiliTrak® System on page 4-6* for more information.

TRANSMISSION HOT IDLE ENGINE

Notice: **If you drive your vehicle while the transmission fluid is overheating and the transmission temperature warning is displayed on the instrument panel cluster and/or DIC, you can damage the transmission. This could lead to costly repairs that would not be covered by your warranty. Do not drive your vehicle with overheated transmission fluid or while the transmission temperature warning is displayed.**

This message displays along with a continuous chime if the transmission fluid in the vehicle gets hot. Driving with the transmission fluid temperature high can cause damage to the vehicle. Stop the vehicle and let it idle to allow the transmission to cool. This message clears and the chime stops when the fluid temperature reaches a safe level.

TURN SIGNAL ON

This message displays and a chime sounds if a turn signal is left on for 3/4 of a mile (1.2 km). Move the turn signal/multifunction lever to the off position.

WASHER FLUID LOW ADD FLUID

This message displays when the windshield washer fluid is low. Fill the windshield washer fluid reservoir as soon as possible. See *Engine Compartment Overview on page 5-12* for the location of the windshield washer fluid reservoir. Also, see *Windshield Washer Fluid on page 5-35* for more information.

DIC Vehicle Customization

Your vehicle may have customization capabilities that allow you to program certain features to one preferred setting. Customization features can only be programmed to one setting on the vehicle and cannot be programmed to a preferred setting for two different drivers.

All of the customization options may not be available on your vehicle. Only the options available will be displayed on the DIC.

The default settings for the customization features were set when your vehicle left the factory, but may have been changed from their default state since then.

The customization preferences are automatically recalled.

To change customization preferences, use the following procedure.

Entering the Feature Settings Menu

1. Turn the ignition on and place the vehicle in PARK (P).

   To avoid excessive drain on the battery, it is recommended that the headlamps are turned off.

2. Press the customization button to scroll through the available customizable options.

Feature Settings Menu Items

The following are customization features that allow you to program settings to the vehicle:

DISPLAY IN ENGLISH

This feature will only display if a language other than English has been set. This feature allows you to change the language in which the DIC messages appear to English.

Press the customization button until the PRESS √ TO DISPLAY IN ENGLISH screen appears on the DIC display. Press the set/reset button once to display all DIC messages in English.

DISPLAY LANGUAGE

This feature allows you to select the language in which the DIC messages will appear.

Press the customization button until the DISPLAY LANGUAGE screen appears on the DIC display. Press the set/reset button once to access the settings for this feature. Then press the customization button to scroll through the following settings:

ENGLISH (default): All messages will appear in English.

DEUTSCH: All messages will appear in German.

ITALIANO: All messages will appear in Italian.

FRANCAIS: All messages will appear in French.

ESPANOL: All messages will appear in Spanish.

ARABIC: All messages will appear in Arabic.

CHINESE: All messages will appear in Chinese.

NO CHANGE: No change will be made to this feature. The current setting will remain.

To select a setting, press the set/reset button while the desired setting is displayed on the DIC.

AUTO DOOR LOCK

This feature allows you to select when the vehicle's doors will automatically lock. See *Programmable Automatic Door Locks on page 2-11* for more information.

Press the customization button until AUTO DOOR LOCK appears on the DIC display. Press the set/reset button once to access the settings for this feature. Then press the customization button to scroll through the following settings:

SHIFT OUT OF PARK (default): The doors, including the tailgate, will automatically lock when the vehicle is shifted out of PARK (P).

AT VEHICLE SPEED: The doors, including the tailgate, will automatically lock when the vehicle speed is above 8 mph (13 km/h) for three seconds.

NO CHANGE: No change will be made to this feature. The current setting will remain.

To select a setting, press the set/reset button while the desired setting is displayed on the DIC.

AUTO DOOR UNLOCK

This feature allows you to select whether or not to turn off the automatic door unlocking feature. It also allows you to select which doors and when the doors will automatically unlock. See *Programmable Automatic Door Locks on page 2-11* for more information.

Press the customization button until AUTO DOOR UNLOCK appears on the DIC display. Press the set/reset button once to access the settings for this feature. Then press the customization button to scroll through the following settings:

OFF: None of the doors will automatically unlock.

DRIVER AT KEY OUT: Only the driver's door will unlock when the key is taken out of the ignition.

DRIVER IN PARK: Only the driver's door will unlock when the vehicle is shifted into PARK (P).

ALL AT KEY OUT: All of the doors, including the tailgate, will unlock when the key is taken out of the ignition.

ALL IN PARK (default): All of the doors, including the tailgate, will unlock when the vehicle is shifted into PARK (P).

NO CHANGE: No change will be made to this feature. The current setting will remain.

To select a setting, press the set/reset button while the desired setting is displayed on the DIC.

REMOTE DOOR LOCK

This feature allows you to select the type of feedback you will receive when locking the vehicle with the Remote Keyless Entry (RKE) transmitter. You will not receive feedback when locking the vehicle with the RKE transmitter if the doors are open. See *Remote Keyless Entry (RKE) System Operation on page 2-5* for more information.

Press the customization button until REMOTE DOOR LOCK appears on the DIC display. Press the set/reset button once to access the settings for this feature. Then press the customization button to scroll through the following settings:

OFF: There will be no feedback when you press the lock button on the RKE transmitter.

LIGHTS ONLY: The exterior lamps will flash when you press the lock button on the RKE transmitter.

HORN ONLY: The horn will sound on the second press of the lock button on the RKE transmitter.

HORN & LIGHTS (default): The exterior lamps will flash when you press the lock button on the RKE transmitter, and the horn will sound when the lock button is pressed again within five seconds of the previous command.

NO CHANGE: No change will be made to this feature. The current setting will remain.

To select a setting, press the set/reset button while the desired setting is displayed on the DIC.

REMOTE DOOR UNLOCK

This feature allows you to select the type of feedback you will receive when unlocking the vehicle with the Remote Keyless Entry (RKE) transmitter. You will not receive feedback when unlocking the vehicle with the RKE transmitter if the doors are open. See *Remote Keyless Entry (RKE) System Operation on page 2-5* for more information.

Press the customization button until REMOTE DOOR UNLOCK appears on the DIC display. Press the set/reset button once to access the settings for this feature. Then press the customization button to scroll through the following settings:

LIGHTS OFF: The exterior lamps will not flash when you press the unlock button on the RKE transmitter.

LIGHTS ON (default): The exterior lamps will flash when you press the unlock button on the RKE transmitter.

NO CHANGE: No change will be made to this feature. The current setting will remain.

To select a setting, press the set/reset button while the desired setting is displayed on the DIC.

DELAY DOOR LOCK

This feature allows you to select whether or not the locking of the vehicle's doors and tailgate will be delayed. When locking the doors and tailgate with the power door lock switch and a door or the tailgate is open, this feature will delay locking the doors and tailgate until five seconds after the last door is closed. You will hear three chimes to signal that the delayed locking feature is in use. The key must be out of the ignition for this feature to work. You can temporarily override delayed locking by pressing the power door lock switch twice or the lock button on the RKE transmitter twice. See *Delayed Locking on page 2-11* for more information.

Press the customization button until DELAY DOOR LOCK appears on the DIC display. Press the set/reset button once to access the settings for this feature. Then press the customization button to scroll through the following settings:

OFF: There will be no delayed locking of the vehicle's doors.

ON (default): The doors will not lock until five seconds after the last door or the tailgate is closed.

NO CHANGE: No change will be made to this feature. The current setting will remain.

To select a setting, press the set/reset button while the desired setting is displayed on the DIC.

EXIT LIGHTING

This feature allows you to select the amount of time you want the exterior lamps to remain on when it is dark enough outside. This happens after the key is turned from ON/RUN to LOCK/OFF.

Press the customization button until EXIT LIGHTING appears on the DIC display. Press the set/reset button once to access the settings for this feature. Then press the customization button to scroll through the following settings:

OFF: The exterior lamps will not turn on.

30 SECONDS (default): The exterior lamps will stay on for 30 seconds.

1 MINUTE: The exterior lamps will stay on for one minute.

2 MINUTES: The exterior lamps will stay on for two minutes.

NO CHANGE: No change will be made to this feature. The current setting will remain.

To select a setting, press the set/reset button while the desired setting is displayed on the DIC.

APPROACH LIGHTING

This feature allows you to select whether or not to have the exterior lights turn on briefly during low light periods after unlocking the vehicle using the Remote Keyless Entry (RKE) transmitter.

Press the customization button until APPROACH LIGHTING appears on the DIC display. Press the set/reset button once to access the settings for this feature. Then press the customization button to scroll through the following settings:

OFF: The exterior lights will not turn on when you unlock the vehicle with the RKE transmitter.

ON (default): If it is dark enough outside, the exterior lights will turn on briefly when you unlock the vehicle with the RKE transmitter.

The lights will remain on for 20 seconds or until the lock button on the RKE transmitter is pressed, or the vehicle is no longer off. See *Remote Keyless Entry (RKE) System Operation on page 2-5* for more information.

NO CHANGE: No change will be made to this feature. The current setting will remain.

To select a setting, press the set/reset button while the desired setting is displayed on the DIC.

AUTO HIGH BEAMS

If your vehicle has this feature, it allows you to select to have the Intellibeam® system turned off or on. See *Exterior Lamps on page 3-14* for more information.

Press the customization button until AUTO HIGH BEAMS appears on the DIC display. Press the set/reset button once to access the settings for this feature. Then press the customization button to scroll through the following settings:

OFF (default): The Intellibeam® system will be turned off.

ON: The Intellibeam® system will be turned on.

NO CHANGE: No change will be made to this feature. The current setting will remain.

To select a setting, press the set/reset button while the desired setting is displayed on the DIC.

CHIME VOLUME

This feature allows you to select the volume level of the chime.

Press the customization button until CHIME VOLUME appears on the DIC display. Press the set/reset button once to access the settings for this feature. Then press the customization button to scroll through the following settings:

NORMAL: The chime volume will be set to a normal level.

LOUD: The chime volume will be set to a loud level.

NO CHANGE: No change will be made to this feature. The current setting will remain.

There is no default for chime volume. The volume will stay at the last known setting.

To select a setting, press the set/reset button while the desired setting is displayed on the DIC.

PARK TILT MIRRORS

This feature allows you to select whether or not the outside mirror(s) will automatically tilt down when the vehicle is shifted into REVERSE (R). See *Outside Power Foldaway Mirrors on page 2-52* for more information.

Press the customization button until PARK TILT MIRRORS appears on the DIC display. Press the set/reset button once to access the settings for this feature. Then press the customization button to scroll through the following settings:

OFF (default): Neither outside mirror will be tilted down when the vehicle is shifted into REVERSE (R).

DRIVER MIRROR: The driver's outside mirror will be tilted down when the vehicle is shifted into REVERSE (R).

PASSENGER MIRROR: The passenger's outside mirror will be tilted down when the vehicle is shifted into REVERSE (R).

BOTH MIRRORS: The driver's and passenger's outside mirrors will be tilted down when the vehicle is shifted into REVERSE (R).

NO CHANGE: No change will be made to this feature. The current setting will remain.

To select a setting, press the set/reset button while the desired setting is displayed on the DIC.

EASY EXIT SEAT

This feature allows you to select your preference for the automatic easy exit seat feature. See *Memory Seat, Mirrors, and Pedals on page 1-6* for more information.

Press the customization button until EASY EXIT SEAT appears on the DIC display. Press the set/reset button once to access the settings for this feature. Then press the customization button to scroll through the following settings:

OFF (default): No automatic seat exit recall will occur.

ON: The driver's seat will move back when the key is removed from the ignition.

The automatic easy exit seat movement will only occur one time after the key is removed from the ignition. If the automatic movement has already occurred, and you put the key back in the ignition and remove it again, the seat will stay in the original exit position, unless a memory recall took place prior to removing the key again.

NO CHANGE: No change will be made to this feature. The current setting will remain.

To select a setting, press the set/reset button while the desired setting is displayed on the DIC.

MEMORY SEAT RECALL

This feature allows you to select your preference for the remote memory seat recall feature. See *Memory Seat, Mirrors, and Pedals on page 1-6* for more information.

Press the customization button until MEMORY SEAT RECALL appears on the DIC display. Press the set/reset button once to access the settings for this feature. Then press the customization button to scroll through the following settings:

OFF (default): No remote memory seat recall will occur.

ON: The driver's seat, and on some vehicles, the outside mirrors will automatically move to the stored driving position when the unlock button on the Remote Keyless Entry (RKE) transmitter is pressed. On some vehicles with the adjustable throttle and brake pedal feature, the pedals will also automatically move. See "Relearn Remote Key" under *DIC Operation and Displays on page 3-45* for more information on matching transmitters to driver ID numbers.

NO CHANGE: No change will be made to this feature. The current setting will remain.

To select a setting, press the set/reset button while the desired setting is displayed on the DIC.

REMOTE START

If your vehicle has this feature, it allows you to turn the remote start off or on. The remote start feature allows you to start the engine from outside of the vehicle using the Remote Keyless Entry (RKE) transmitter. See *Remote Vehicle Start on page 2-8* for more information.

Press the customization button until REMOTE START appears on the DIC display. Press the set/reset button once to access the settings for this feature. Then press the customization button to scroll through the following settings:

OFF: The remote start feature will be disabled.

ON (default): The remote start feature will be enabled.

NO CHANGE: No change will be made to this feature. The current setting will remain.

To select a setting, press the set/reset button while the desired setting is displayed on the DIC.

DISPLAY DIGITAL SPEED

This feature allows you to enable or disable the digital speedometer on the DIC.

Press the customization button until DISPLAY DIGITAL SPEED appears on the DIC display. Press the set/reset button once to access the settings for this feature. Then press the customization button to scroll through the following settings:

OFF: The digital speedometer will be disabled.

ON (default): The digital speedometer will be enabled.

NO CHANGE: No change will be made to this feature. The current setting will remain.

To select a setting, press the set/reset button while the desired setting is displayed on the DIC.

FACTORY SETTINGS

This feature allows you to set all of the customization features back to their factory default settings.

Press the customization button until FACTORY SETTINGS appears on the DIC display. Press the set/reset button once to access the settings for this feature. Then press the customization button to scroll through the following settings:

RESTORE ALL (default): The customization features will be set to their factory default settings.

DO NOT RESTORE: The customization features will not be set to their factory default settings.

To select a setting, press the set/reset button while the desired setting is displayed on the DIC.

EXIT FEATURE SETTINGS

This feature allows you to exit the feature settings menu.

Press the customization button until PRESS ✓ TO EXIT FEATURE SETTINGS appears in the DIC display. Press the set/reset button once to exit the menu.

If you do not exit, pressing the customization button again will return you to the beginning of the feature settings menu.

Exiting the Feature Settings Menu

The feature settings menu will be exited when any of the following occurs:

- The vehicle is no longer in ON/RUN.
- The trip/fuel or vehicle information DIC buttons are pressed.
- The end of the feature settings menu is reached and exited.
- A 40 second time period has elapsed with no selection made.

Audio System(s)

Determine which radio your vehicle has and then read the pages following to familiarize yourself with its features.

⚠ CAUTION:

This system provides you with far greater access to audio stations and song listings. Giving extended attention to entertainment tasks while driving can cause a crash and you or others can be injured or killed. Always keep your eyes on the road and your mind on the drive — avoid engaging in extended searching while driving.

Keeping your mind on the drive is important for safe driving. See *Defensive Driving on page 4-2*. Here are some ways in which you can help avoid distraction while driving.

While your vehicle is parked:

- Familiarize yourself with all of its controls.
- Familiarize yourself with its operation.

- Set up your audio system by presetting your favorite radio stations, setting the tone, and adjusting the speakers. Then, when driving conditions permit, you can tune to your favorite radio stations using the presets and steering wheel controls if the vehicle has them.

Notice: **Before adding any sound equipment to your vehicle, such as an audio system, CD player, CB radio, mobile telephone, or two-way radio, make sure that it can be added by checking with your dealer/retailer. Also, check federal rules covering mobile radio and telephone units. If sound equipment can be added, it is very important to do it properly. Added sound equipment may interfere with the operation of your vehicle's engine, radio, or other systems, and even damage them. Your vehicle's systems may interfere with the operation of sound equipment that has been added.**

Notice: **The chime signals related to safety belts, parking brake, and other functions of your vehicle operate through the radio/entertainment system. If that equipment is replaced or additional equipment is added to your vehicle, the chimes may not work. Make sure that replacement or additional equipment is compatible with your vehicle before installing it. See *Accessories and Modifications on page 5-3*.**

Your vehicle may have a feature called Retained Accessory Power (RAP). With RAP, the audio system can be played even after the ignition is turned off. See *Retained Accessory Power (RAP) on page 2-32* for more information.

Setting the Clock

1. Press the ▷▷| (tune/select) knob (the passenger side knob) to enter the main menu.
2. Turn the same knob until SET CLOCK displays.
3. Press this knob to select SET CLOCK.
4. Turn this knob to adjust the time.
5. Press the same knob to update the time. VEHICLE TIME UPDATED displays.

If the CLOCK/RADIO DISP (display) is programmed into one of the configurable keys, pressing the key switches the display back to the clock set function. The time and date always appears on the radio display. See "Configurable Radio Display Keys" later in this section for more information on configuring the keys.

Setting the Date

1. Press the ▷▷| knob (the passenger side knob) to enter the main menu.
2. Turn the same knob until SET DATE displays.
3. Press this knob to select SET DATE.
4. Turn this knob to adjust the date.
5. Press the same knob to update the time. VEHICLE DATE UPDATED displays.

If the DATE is programmed into one of the configurable keys, pressing the key switches the display back to the date set function. The time and date always appears on the radio display. See “Configurable Radio Display Keys” later in this section for more information on configuring the keys.

Radio(s)

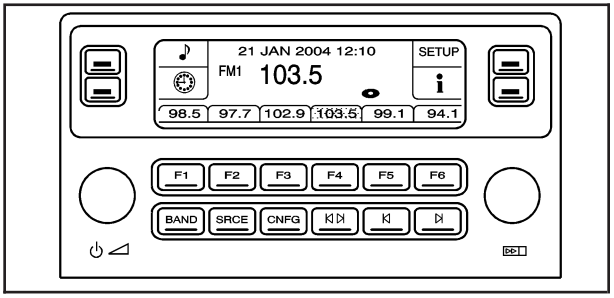

Radio with CD and DVD

Playing the Radio

⏻ **(Power):** Press to turn the radio on and off.

Press and hold for more than two seconds to turn off the radio, RSE (Rear Seat Entertainment) video screen, and RSA (Rear Seat Audio).

◿ **(Volume):** Turn clockwise or counterclockwise to increase or to decrease the volume.

SRCE (Source): Press to select a source, either radio, CD, DVD, or auxiliary, if your vehicle has this feature. The CD or DVD must be loaded to select the source and to play. CD or DVD displays if a disc is loaded. If a CD or DVD is not loaded, the display changes to the auxiliary source, if your vehicle has this feature, or continue to play the radio.

Vehicle Noise Compensation (VNC): Your vehicle has a Bose® audio system. It includes Bose AudioPilot® noise compensation technology. When turned on, AudioPilot® continuously adjusts the audio system equalization, to compensate for background noise, so that the audio always sounds the same at the set volume level.

This feature is most effective at lower radio volume settings where background noise can affect how well the music is being heard through the audio system. At higher volume settings, where the music is much louder than the background noise, there might be little or no adjustments by AudioPilot®.

Turn the AudioPilot® on by pressing the ▷▷□ (tune/select) knob to enter the main menu. Then turn this knob until VNC:AUDIOPILOT displays. Press this knob to turn AudioPilot® on and off. An X appears in the box while it is on.

To turn AudioPilot® off, press the ▷▷□ knob to enter the main menu, turn this knob until VNC:AUDIOPILOT appears, and press this knob. The X in the box disappears when it is turned off. For additional information on AudioPilot®, visit www.bose.com/audiopilot.

Finding a Station

BAND: Press to select AM, FM1, FM2, or XM1 or XM2 (if equipped).

▷▷□ **(Tune/Select):** Turn to select radio stations.

|◁ ▷| **(Seek):** Press the left arrow to go to the previous station and stay there. Press the right arrow to go to the next station and stay there. The sound mutes while seeking.

The radio only seeks stations with a strong signal that are in the selected band.

|◁ ▷| **(Scan):** Press the arrows to enter scan mode. SCAN displays. Press the arrows to scan to the next station. The radio goes to a station, plays for five seconds, and then goes on to the next station. Press the arrows again to stop scanning.

To scan preset stations, press and hold the arrows for more than two seconds until a beep sounds and PSCAN displays. The radio goes to the first preset station, plays for five seconds, and then goes to the next preset station. Press the arrows again to stop scanning presets.

The radio only scans stations with a strong signal that are in the selected band.

LOCAL/DISTANT Selection: With this feature the radio can be set to search for local stations or stations that are further away, for a larger selection. To set this feature to LOCAL or DISTANT, perform the following steps:

1. Press the ▷▷| (tune/select) knob to enter the main menu.
2. Turn this knob until SEEK LOCAL or SEEK DISTANT displays.
3. Press this knob again to select either LOCAL or DISTANT.
4. Press the BACK (F6) button to exit the display. To return to the original display, repeatedly press the BACK (F6) button or wait for the display to time out.

To search for stations, press the seek arrows. If the system is set to LOCAL, SEEK displays and the radio seeks stations only with strong signals. If the system is set to DISTANT, D-SEEK displays and the radio seeks stations with weak and strong signals.

Setting Preset Stations

Up to 30 stations (six AM, six FM1, six FM2, and six XM1 and six XM2 (if equipped)), can be programmed on the six numbered pushbuttons, by performing the following steps:

1. Turn the radio on.
2. Press BAND to select AM, FM1, FM2, or XM1 or XM2 (if equipped).
3. Tune in the desired station.
4. Press and hold one of the six numbered pushbuttons for two seconds until a beep sounds. The set preset station number displays above the pushbutton that is set. When that numbered pushbutton is pressed for less than two seconds, the station that was set, returns.
5. Repeat the steps for each pushbutton.

   To set the preset stations with an equalization setting, DSP (Digital Signal Processing) setting, or a PTY (program type) setting, see each of these features later in this section. Once one of these additional settings is selected, the preset station remembers each setting and it remains active, until the setting is turned off for that preset station.

AUTOSTORE PRESETS: To set the preset stations automatically, perform the following steps:

1. Turn the radio on.
2. Press BAND to select AM, FM1, or FM2.
3. Press the ▷▷ (tune/select) knob to enter the main menu.
4. Turn this knob until AUTOSTORE PRESETS displays.
5. Press this knob again to select. AUTOSTORE displays. The radio automatically searches the band and selects and stores the six radio stations with the strongest signal. The stations are stored by signal strength, not sequential order. The set preset station number displays above the pushbutton that is set.
6. Press the BACK (F6) button to exit the display. To return to the original display, repeatedly press the BACK (F6) button or wait for the display to time out.

When battery power is removed and later applied, the radio presets do not have to be reset.

This function does not work with XM™.

PRESETS HOME/AWAY: This feature enables the radio to store two different kinds of station presets. HOME can be used for local stations and AWAY can be for stations available outside of the local broadcast area. To set preset stations for home and away perform the following steps:

1. Press the ▷▷ knob to enter the main menu.
2. Turn this knob until PRESETS HOME/AWAY displays.
3. Press this knob again to select. HOME or AWAY displays.
4. Press the BACK (F6) button to exit the display. To return to the original display, repeatedly press the BACK (F6) button or wait for the display to time out.

Follow the manual or automatic steps previously listed for setting the preset pushbuttons for both home and away.

This function does not work with XM™.

Setting the Tone (Bass/Midrange/Treble)

To adjust the bass, midrange, and treble, perform the following steps:

1. Press the ▷▷| knob to enter the main menu.
2. Turn this knob until BASS – MID – TREBLE displays.
3. Press this knob to scroll through the settings.
4. Turn this knob again to increase or to decrease the bass, midrange, or treble. If a station is weak or has static, decrease the treble.
5. Press this knob to set the adjustment.
6. Press the BACK (F6) button to exit the display. To return to the original display, repeatedly press the BACK (F6) button or wait for the display to time out.

AUDIO EQUALIZER: This feature lets you select customized equalization settings. To choose an equalization setting (EQ0 through EQ5), perform the following steps:

1. Press the ▷▷| knob to enter the main menu.
2. Turn this knob until EQUALIZER displays.
3. Press this knob again to set the equalization setting. The equalization setting displays.
4. Press the BACK (F6) button to exit the display. To return to the original display, repeatedly press the BACK (F6) button or wait for the display to time out.

The equalization settings are preset to EQ0 (Normal), EQ1 (Pop), EQ2 (Rock), EQ3 (Jazz), EQ4 (Talk), and EQ5 (Country).

Adjusting the Speakers (Balance/Fade)

To adjust the balance or fade, perform the following steps:

1. Press the ▷▷| knob to enter the main menu.
2. Turn this knob until BALANCE – FADER displays.
3. Press this knob to enter the tone settings.
4. Press this knob again to scroll to BALANCE or FADER.
5. Turn this knob to adjust the BALANCE to the right or the left speakers and the FADER to the front or the rear speakers.
6. Press this knob again to set the adjustment.
7. Press the BACK (F6) button to exit the display. To return to the original display, repeatedly press the BACK (F6) button or wait for the display to time out.

EQ0 does not display while in this mode.

Digital Signal Processing (DSP): This feature is used to provide a choice of different listening experiences. To choose a DSP setting, perform the following steps:

1. Press the ▷▷| knob to enter the main menu.
2. Turn this knob until DSP displays.
3. Press this knob again to set the DSP setting. The DSP setting displays.
4. Press the BACK (F6) button to exit the display. To return to the original display, repeatedly press the BACK (F6) button or wait for the display to time out.

The DSP settings available are:

- **Normal**: Select this setting for normal mode. It provides the best sound quality for all seating positions.
- **Centerpoint®**: Select this setting to enable Bose Centerpoint®. Centerpoint® signal processing gives surround sound quality for a CD, MP3, or a DVD stereo audio source. Centerpoint® delivers five independent audio channels from conventional stereo recordings.
- **Rear**: Select this setting to adjust the audio for the rear seat passengers to receive the best possible sound quality.
- **Driver**: Select this setting to adjust the audio for the driver to receive the best possible sound quality.
- **5.1 Surround**: Select this setting to turn on true 5.1 surround sound processing, available for DVD-A or DVD-V sources that were recorded in 5.1 Surround. This setting is only available if the Rear Seat Audio (RSA) control is turned off.

  5.1 Surround + Normal — Select this mode for the best audio for all seating positions.

XM™ Satellite Radio Service

XM™ is a satellite radio service that is based in the 48 contiguous United States and 10 Canadian provinces. XM™ Satellite Radio has a wide variety of programming and commercial-free music, coast-to-coast, and in digital-quality sound. During your trial or when you subscribe, you will get unlimited access to XM™ Radio Online for when you are not in your vehicle. A service fee is required to receive the XM™ service. For more information, contact XM™ at www.xmradio.com or call 1-800-929-2100 in the U.S. and www.xmradio.ca or call 1-877-438-9677 in Canada.

i (Information): Press while in XM™ mode to retrieve additional text information related to the current XM™ station such as: Channel, Song, Artist, and CAT (category). To view this information, perform the following:

1. Press the ▷▷| knob to enter the main menu.
2. Turn this knob until INFO (information) displays.
3. Press this knob again to select INFO. The display changes to show the additional XM™ information.
4. Press the BACK (F6) button to exit the display. To return to the original display, repeatedly press the BACK (F6) button or wait for the display to time out.

Radio Data System (RDS)

The audio system has a Radio Data System (RDS). RDS features are available for use only on FM stations that broadcast RDS information.

With RDS, the radio can do the following:

- Seek to stations broadcasting the selected type of programming.
- Receive announcements concerning local and national emergencies.
- Display messages from radio stations.
- Seek to stations with traffic announcements.

This system relies upon receiving specific information from these stations and only works when the information is available. In rare cases, a radio station could broadcast incorrect information that causes the radio features to work improperly. If this happens, contact the radio station.

While the radio is tuned to an RDS station, the station name or call letters display instead of the frequency. RDS stations can also provide the time of day, a program type (PTY) for current programming, and the name of the program being broadcast.

The RDS function does not work with XM™.

RDS Messages

ALERT: Alert warns of local and national emergencies. When, an alert announcement comes on the current radio station or a related network station, ALERT displays. The announcement should be heard, even if the volume is low or a CD or DVD is playing. If a CD or DVD is playing, play stops during the announcement. Alert announcements cannot be turned off. If the radio tunes to a related network station for the announcement, it returns to the original station when the announcement ends.

ALERT is not affected by tests of the emergency broadcast system. This feature is not supported by all RDS stations.

MSG (Message): If the current RDS station has a message, MSG displays. The message displays the artist, song title, call in phone numbers, etc. If the entire message does not display, parts of the message appear every three seconds until the message is completed. Once the completed message has displayed, MSG disappears from the display until a new message is received.

To display the last message, perform the following steps:

1. Press the ▷▷□ knob to enter the main menu.
2. Turn this knob until RECALL RDS MESSAGE displays.
3. Press this knob again until the message displays.

Once the message has been displayed, MSG disappears from the display until another new message is received.

TP (Traffic Program): TP displays when the radio detects a signal from an RDS station that has traffic announcement broadcast capability.

TA (Traffic Announcement): If TA displays, it means the tuned radio station broadcasts traffic announcements.

If the station does not broadcast traffic announcements, when TA is turned on it seeks to a station that does. When a station that broadcasts traffic announcements is found, the radio stops seeking and TA displays. If no station is found that broadcasts traffic announcements, No Traffic displays.

The radio plays traffic announcements even if the volume is low. The radio interrupts the play of a CD or DVD if the last tuned station broadcasts traffic announcements.

To turn TA on or off, perform the following steps:

1. Press the ▷▷□ knob to enter the main menu.
2. Turn this knob until TRAFFIC ANNOUNCE displays.
3. Press this knob again to select ON or OFF. An X appears in the box when ON is selected.
4. Press the BACK (F6) button to exit the display. To return to the original display, repeatedly press the BACK (F6) button or wait for the display to time out.

Activating Program Type (PTY) Stations (RDS and XM™)

PTY lets you search for stations with specific types of music. The selectable PTYs are POP, EASY, TALK, CNTRY (Country), CLASS (Classical), and JAZZ.

To activate program types, perform the following steps:

1. Press the ▷▷| knob to enter the main menu.
2. Turn this knob until PROGRAM TYPE MODE displays.
3. Press this knob again to select ON or OFF. An X appears in the box when ON is selected.
4. Press the BACK (F6) button to exit the display. To return to the original display, repeatedly press the BACK (F6) button or wait for the display to time out.

Once program type is activated the PTYs displays above the pushbuttons, in place of the preset stations (if programmed). Press the pushbutton for the desired PTY. The radio might not go to all of the stations with that music type when pressing the pushbutton, as not all stations support PTYs.

AF (Alternate Frequency): Alternate frequency allows the radio to switch to a stronger station with the same program type.

To turn AF on or off, perform the following steps:

1. Press the ▷▷| knob to enter the main menu.
2. Turn this knob until ALTERNATE FREQ. displays.
3. Press this knob again to select AF OFF, AF ON, or AF REG (regular). When AF is selected an X appears in that box.
4. Press the BACK (F6) button to exit the display. To return to the original display, repeatedly press the BACK (F6) button or wait for the display to time out.

This function does not work with XM™.

Radio Message

THEFTLOCK: This message displays when the THEFTLOCK® system has activated. Take the vehicle to the dealer/retailer for service.

Radio Messages for XM™ Only

See *XM Radio Messages on page 3-90* later in this section for further detail.

Using the Six-Disc CD Changer

The CD player can play the smaller 3 inch (8 cm) single CDs with an adapter ring. Full-size CDs and the smaller CDs are loaded in the same manner.

When a CD is inserted, the CD functions display above the pushbuttons, in place of the preset stations, if programmed.

(Load): Press to load CDs into the CD player. This CD player holds up to six CDs.

To insert one CD, do the following:

1. The ignition and the radio can be on or off.
2. Press and release the button. Please Wait displays.
3. When INSERT displays, insert a CD partway into the slot, label side up. The player pulls the CD in.

When a CD is inserted, CD displays. The number of the CD and the track number also displays if the radio is on.

If the radio is on, the CD begins to play automatically.

To insert multiple CDs, do the following:

1. The ignition and the radio can be on or off.
2. Press and hold the button for two seconds. Please Wait displays and a beep sounds.
3. When INSERT displays, insert a CD partway into the slot, label side up. The player pulls the CD in.

   Do not load a CD until INSERT displays. The CD player takes up to six CDs. Do not try to load more than six. If you want to load less than six CDs, load the desired amount. The CD player times out when it does not receive any more CDs and the last CD loaded begins to play.

If the radio is on, the last CD loaded begins to play automatically.

Care of Your CDs

If playing a CD-R, the sound quality can be reduced due to CD-R quality, the method of recording, the quality of the music that has been recorded, and the way the CD-R has been handled. Handle them carefully. Store CD-R(s) in their original cases or other protective cases and away from direct sunlight and dust. The CD and DVD player scans the bottom surface of the disc. If the surface of a CD is damaged, such as cracked, broken, or scratched, the CD does not play properly or not at all. Do not touch the bottom side of a CD while handling it; this could damage the surface. Pick up CDs by grasping the outer edges or the edge of the hole and the outer edge.

If the surface of a CD is soiled, take a soft, lint free cloth or dampen a clean, soft cloth in a mild, neutral detergent solution mixed with water, and clean it. Make sure the wiping process starts from the center to the edge.

Care of Your CD and DVD Player

Do not add any label to a CD, it could get caught in the CD player. If a CD is recorded on a personal computer and a description label is needed, try labeling the top of the recorded CD with a marking pen.

The use of CD lens cleaners for CDs is not advised, due to the risk of contaminating the lens of the CD optics with lubricants internal to the CD and DVD player mechanism.

Notice: **If a label is added to a CD, or more than one CD is inserted into the slot at a time, or an attempt is made to play scratched or damaged CDs, the CD player could be damaged. While using the CD player, use only CDs in good condition without any label, load one CD at a time, and keep the CD player and the loading slot free of foreign materials, liquids, and debris.**

If an error displays, see “CD Messages” later in this section.

F1 DISC ↓ (Down): Press to go to the previous CD.

F2 DISC ↑ (Up): Press to go to the next CD.

F3 CD REV ≪ (Reverse): Press and hold to reverse quickly within the track. Holding this button plays in reverse at 10 times the normal speed. After holding it for more than four seconds it plays in reverse at 20 times the normal speed. Release to play the passage. The elapsed time of the track displays.

F4 CD FWD ≫ (Forward): Press and hold to advance quickly within the track. Holding this button plays at 10 times the normal speed. After holding it for more than four seconds it plays at 20 times the normal speed. Release to play the passage. The elapsed time of the track displays.

F5 MODE: Press to select from NORMAL, RPT TRCK (Repeat Track), RPT DISC (Repeat CD), RDM TRCK (Random Track), and RDM ALL (Random All CDs).

- **Normal:** Sets the system for normal play of the CD(s).
- **RPT TRCK (Repeat Track):** Repeats the track over again. RPT TRCK displays. Press the MODE pushbutton again to turn off repeat play and advance to the next mode.

- **RPT DISC (Repeat CD):** Repeats the CD over again. RPT DISC displays. Press the MODE pushbutton again to turn off repeat play and advance to the next mode.
- **RDM TRCK (Random Track):** Plays the tracks on the current CD in random, rather than sequential order. RDM TRCK displays. Press the MODE pushbutton again to turn off random play and advance to the next mode.
- **RDM ALL (Random All CDs):** Plays all of the CDs loaded in random, rather than sequential order. RDM ALL displays. Press the MODE pushbutton again to turn off random play and advance to the next mode.

F6 DISP (Display): Press to display the time of the track. Press again to display CD PLAY MODE.

⏮ ⏭ **(Seek):** Press the left arrow to go to the start of the current track. Press it again to go to the previous track, or press the right arrow to go to the start of the next track. Pressing either arrow for more than two seconds searches the previous or next tracks at two tracks per second. Release to stop searching and to play the track.

⏮ ⏭ **(Scan):** Press the arrows to listen to each track for 10 seconds. The CD goes to a track, plays for 10 seconds, and then goes to the next track. Press the arrows again to stop scanning.

SRCE (Source): Press to select a source, either radio, CD, DVD or AUX (auxiliary), if your vehicle has this feature. The CD must be loaded to select the source and to play. CD appears on the display if a CD is loaded. If a CD is not loaded, the display changes to the next available source, either DVD, AUX, if your vehicle has this feature, or radio.

⏏ **(Eject):** Press to eject the CD that is currently playing, or press and hold to eject all of the CDs loaded. A beep sounds. Eject can be activated with the ignition or radio off. If the CD is not removed after a short time, the CD is pulled back into the CD player for storage.

Playing an MP3 CD-R Disc

Radios with the MP3 feature are capable of playing an MP3 CD-R disc. For more information on how to play an MP3 CD-R disc, see *Using an MP3 on page 3-86* later in this section.

CD Messages

If the CD comes out, it could be for one of the following reasons:

- It is very hot. When the temperature returns to normal, the CD should play.
- You are driving on a very rough road. When the road becomes smoother, the CD should play.
- The CD is dirty, scratched, wet, or upside down.
- The air is very humid. If so, wait about an hour and try again.
- The format of the CD might not be compatible. See *Using an MP3 on page 3-86* later in this section.
- There could have been a problem while burning the CD.
- The label could be caught in the CD player.

If any error occurs repeatedly or if an error cannot be corrected, contact your dealer/retailer. If the radio displays an error message, write it down and provide it to your dealer/retailer when reporting the problem.

Using the DVD Player

Insert a disc partway into the slot, label side up. The player pulls it in. If the ignition and the radio are on, the CD or DVD begins playing. A DVD can be loaded with the radio off, but it does not start playing until the radio is on, and sourced to DVD. The DVD player can be controlled by the buttons on the radio, the RSA (Rear Seat Audio) system, and the remote control, if your vehicle has this feature. See the *Rear Seat Entertainment (RSE) System on page 3-91* for more information. A DVD icon displays whenever a disc is loaded. The DVD player can also be run for passengers in the rear seat with the radio off. The rear seat passenger can power on the video screen and use the remote control to navigate the disc. See *Rear Seat Entertainment (RSE) System on page 3-91* for more information.

The DVD player is capable of playing both DVD video and DVD audio discs. This DVD player includes Dolby® Digital Decoding*, and DTS® Decoding**, so discs can be played that were recorded using these technologies.

*Manufactured under license from Dolby® Laboratories. Dolby®, and the double-D symbol are registered trademarks of Dolby® Laboratories.

**DTS and DTS Digital Surround are registered trademarks of Digital Theater Systems Inc.

⏏ **(Eject):** Press to eject the DVD or CD. Eject can be activated with the ignition or radio off. If the disc is not removed after a short time, the disc is pulled back into the DVD player for storage.

The DVD player is only compatible with DVDs of the appropriate region code. The region code is printed on the jacket of most DVDs.

DVD video, DVD audio, DVD-R/RW, and DVD + R/RW are fully supported by this DVD player. In addition, standard audio CDs, CD-R, CD-RW, video CD, SACD, MP3, and WMA formatted discs are fully supported. If a disc is inserted that is not supported, an error message displays and the disc is ejected.

When a DVD is inserted, the DVD functions display above the pushbuttons, in place of the preset stations. These functions vary based on the type of disc that is inserted. Loading the disc can take some time as the DVD player reads the disc and determines the type.

DVD Messages

If the disc comes out, it could be for one of the following reasons:

- It is very hot. When the temperature returns to normal, the disc should play.
- You are driving on a very rough road. When the road becomes smoother, the disc should play.
- The disc is dirty, scratched, wet, or upside down.
- The air is very humid. If so, wait about an hour and try again.
- The region code on your DVD might not be correct for your region.
- The format of the disc might not be compatible. See “MP3 Format” later in this section.
- There could have been a problem while burning the disc.
- The label could be caught in the DVD player.

If the disc is not playing correctly, for any other reason, try a known good disc.

If any error occurs repeatedly or if an error cannot be corrected, contact your dealer/retailer. If the radio displays an error message, write it down and provide it to your dealer/retailer when reporting the problem.

Playing a DVD Video

F1 (Play/Pause): Press to turn on the video screen, if your vehicle has this feature, and begin playing the DVD. Press to pause the DVD if it is playing. Press Play (F1) to restart the DVD if it is paused.

F2 (Stop): Press once to stop the DVD and retain the current position. Press it again from the stopped state to return to the beginning of the disc.

F3 (Reverse): Press and hold, if the DVD is playing, to enter fast reverse mode. Hold to play in reverse at four times the normal speed. Hold it for more than four seconds to play in reverse at 32 times the normal speed. Release to return to normal play mode.

F4 (Forward): If the DVD player is playing, press and hold to enter fast forward mode. Hold to play at four times the normal speed. Hold it for more than four seconds to play at 32 times the normal speed. Release to return to normal play mode.

Press and hold, if the DVD is playing, to enter slow forward mode. Hold to play at half the normal speed. Hold it for more than four seconds to play at an eighth the normal speed. Release to return to the pause state.

F6 (Menu): Press to go to the DVD root menu and to bring up the menu navigation arrows. Pressing keys F1 through F4 moves the cursor to navigate the DVD menu. Press F6 to enter your selection.

⏮ ⏭ **(Seek):** Press the left arrow to go to the start of the current chapter. Press it again to go to the previous chapter, or press the right arrow to go to the next chapter. Press and hold to change chapter at a rate of one per second.

(Tune/Select): Turn to the left one notch to go to the start of the current chapter. Turn it again to go to the previous chapter, or turn to the right one notch to go to the next chapter.

INFO: Press the programmed INFO soft key, or press the (tune/select) knob and turn until INFO is shown, and then press the tune/select knob. Pressing INFO brings up the Information display. It shows the current Title number, Chapter number and elapsed time of the DVD, and additional menu items.

- **F1 SUB:** Press to view the Subtitle Language Menu.
- **F2 ANGLE:** Press to view the Angle Menu.
- **F6 BACK:** Press to return to the previous screen.

Playing a DVD Audio Disc

Not all DVD audio discs are recorded to industry standards and for this reason might not play properly in your vehicle.

F1 (Play/Pause): Press to pause the DVD if it is playing. Press Play (F1) to restart the DVD if it is paused.

F2 (Stop): Press once to stop the DVD and retain the current position. Press it again from the stopped state to return to the beginning of the disc.

F3 (Reverse): Press and hold, if the DVD player is playing, to enter fast reverse mode. Hold to play in reverse at four times the normal speed. Hold it for more than four seconds to play in reverse at 32 times the normal speed. Release to return to normal play mode.

F4 (Forward): Press and hold, if the DVD player is playing, to enter fast forward mode. Hold to play at four times the normal speed. Hold it for more than four seconds to play at 32 times the normal speed. Release to return to normal play mode.

F5 MODE: Press to select from NORMAL, and RPT TRCK (repeat track).

- **Normal:** Sets the system for normal play of the DVD.
- **RPT TRCK (Repeat Track):** Repeats the track over again. RPT TRCK displays. Press the MODE button again to turn off repeat play and advance to the next mode.

F6 DISP (Display): Press to display the time of the track. Press again to display DVD PLAY MODE.

⊲ ⊳ **(Seek):** Press the left arrow to go to the start of the current track. Press it again to go to the previous track, or press the right arrow to go to the next track. Press and hold to change tracks at a rate of one per second.

⊳⊳ **(Tune/Select):** Turn to the left one notch to go to the start of the current track. Turn it again to go to the previous track, or turn to the right one notch to go to the next track.

If your vehicle has Rear Seat Audio (RSA), you can view the menu and the playlist can be viewed from the DVD audio disc on the video screen. Turn on the video screen with the power button on the remote control to view and navigate the menu and playlists. See *Rear Seat Entertainment (RSE) System on page 3-91* for more information.

Playing a CD in the DVD Drive

F3 (Reverse): Press and hold to enter fast reverse mode. Hold to play in reverse at four times the normal speed. Hold it for more than four seconds to play in reverse at 32 times the normal speed. Release to return to normal play mode.

F4 (Forward): Press and hold to enter fast forward mode. Hold to play at four times the normal speed. Hold it for more than four seconds to play at 32 times the normal speed. Release to return to normal play mode.

F5 MODE: Press to select from NORMAL, RPT TRCK, and RDM TRCK.

- **Normal:** Sets the system for normal play of the DVD.
- **RPT TRCK (Repeat Track):** Repeats the track over again. RPT TRCK displays. Press the MODE pushbutton again to turn off repeat play and advance to the next mode.
- **RDM TRCK (Random Track):** Plays the tracks on the current DVD in random, rather than sequential order. RDM TRCK displays. Press the MODE pushbutton again to turn off random play and advance to the next mode.

F6 DISP (Display): Press to display the time of the track. Press again to display CD PLAY MODE.

⏮ ⏭ **(Seek):** Press the left arrow to go to the start of the current track. Press it again to go to the previous track, or press the right arrow to go to the next track. Press and hold to change tracks at a rate of one per second.

▷▷| **(Tune/Select):** Turn to the left one notch to go to the start of the current track. Turn it again to go to the previous track, or turn to the right one notch to go to the next track.

⏮ ⏭ **(Scan):** Press the arrows to listen to each track for 10 seconds. The CD goes to a track, plays for 10 seconds, and then goes to the next track. Press the arrows again to stop scanning.

If your vehicle has Rear Seat Entertainment (RSE), you can view the track details from your CD on the video screen. Turn on the video screen with the power button on the remote control to view and navigate the tracks. See *Rear Seat Entertainment (RSE) System on page 3-91* for more information.

Using the AUX Display (If Equipped)

If your vehicle has Rear Seat Entertainment (RSE), an AUX screen appears as the SRCE (source) key is pressed. When AUX is selected in the front, the audio from the device plugged into the auxiliary jacks in the rear can be played over the vehicle speakers. Select between AUX and DVD video on the video screen while listening to AUX audio. See *Rear Seat Entertainment (RSE) System on page 3-91* for more information on the auxiliary jacks.

SRCE (Source): Press to select the AUX display.

F2 (DVD): Press to select DVD video on the video screen in the rear, with AUX audio on the vehicle speakers.

F5 (AUX): Press to select AUX video on the video screen in the rear, with AUX audio on the vehicle speakers.

Configurable Radio Display Keys

This feature lets you customize the four keys that are located on each side of the radio display to make it easier to adjust the radio features.

To program the configurable radio display keys, perform the following steps:

1. Press the knob to enter the main menu.
2. Turn the ▷▷| knob until SETUP displays.
3. Press this knob to enter into SETUP.
4. Turn this knob until CONFIGURE DISPLAY KEYS displays.
5. Press this knob again to enter into CONFIGURE DISPLAY KEYS.
6. Turn this knob to select which of the four configurable keys to be changed. The currently assigned feature shows on the display.
7. Press this knob to select the configurable key to change.
8. Turn this knob to find the feature that you would like to store to the key.
9. Press this knob again when the feature to be stored is found. The display updates and shows the symbol of the selected feature next to the configurable key.
10. Repeat the previous steps for each configurable key.

Once a feature is programmed to a key, the feature does not display when programming the remaining configurable keys. The configurable keys can be changed at any time.

Using an MP3

MP3 CD-R Disc

MP3 Format

If you burn your own MP3 disc on a personal computer:

- Make sure the MP3 files are recorded on a CD-R disc.
- Do not mix standard audio and MP3 files on one disc.
- Make sure playlists have a .mp3 or .wpl extension, other file extensions may not work.
- Files can be recorded with a variety of fixed or variable bit rates. Song title, artist name, and album are available for display by the radio when recorded using ID3 tags version 1 and 2.
- Create a folder structure that makes it easy to find songs while driving. Organize songs by albums using one folder for each album. Each folder or album should contain 18 songs or less.
- Make sure to finalize the disc when burning an MP3 disc, using multiple sessions. It is usually better to burn the disc all at once.

The player is able to read and play a maximum of 99 folders and playlists. Long file names, folder names, or playlist names can use more disc memory space than necessary. To conserve space on the disc, minimize the length of the file, folder, or playlist names.

You can also play an MP3 CD that was recorded using no file folders. The system can support up to 11 folders in depth, though, keep the depth of the folders to a minimum in order to keep down the complexity and confusion in trying to locate a particular folder during playback. If a CD contains more than the maximum of 99 folders and playlists the player can access and navigate up to the maximum, but all items over the maximum are ignored.

Root Directory

The root directory is treated as a folder. If the root directory has compressed audio files, the directory displays as F1 ROOT. All files contained directly under the root directory are accessed prior to any root directory folders. However, playlists (Px) are always accessed before root folders or files.

Empty Directory or Folder

If a root directory or a folder exists somewhere in the file structure that contains only folders/subfolders and no compressed files directly beneath them, the player advances to the next folder in the file structure that contains compressed audio files and the empty folder does not display.

No Folder

When the CD contains only compressed files, the files are located under the root folder. The next and previous folder functions not function on a CD that was recorded without folders or playlists. When displaying the name of the folder the radio displays ROOT.

When the CD contains only playlists and compressed audio files, but no folders, all files are located under the root folder. The folder down and the folder up buttons search playlists (Px) first and then go to the root folder. When the radio displays the name of the folder the radio displays ROOT.

Order of Play

Tracks are played in the following order:

- Play begins from the first track in the first playlist and continues sequentially through all tracks in each playlist. When the last track of the last playlist has played, play continues from the first track of the first playlist.
- If the CD does not contain any playlists, play begins from the first track under the root directory. When all tracks from the root directory have played, play continues from files according to their numerical listing. After playing the last track from the last folder, play begins again at the first track of the first folder or root directory.

When play enters a new folder, the display does not automatically show the new folder name unless you have chosen the folder mode as the default display. The new track name displays.

File System and Naming

The song name that displays is the song name that is contained in the ID3 tag. If the song name is not present in the ID3 tag, the radio displays the file name without the extension (such as .mp3) as the track name.

Track names longer than 32 characters or four pages are shortened. Parts of words on the last page of text and the extension of the filename displays.

Preprogrammed Playlists

Preprogrammed playlists that were created using WinAmp™, MusicMatch™, or Real Jukebox™ software can be accessed, however, they cannot be edited using the radio. These playlists are treated as special folders containing compressed audio song files.

Playing an MP3

When a CD is inserted, CD displays, the number of the CD and the track number displays if the radio is on.

If the radio is on, the CD begins to play automatically.

If the ignition or radio is turned off with a CD in the player it stays in the player. When the ignition or radio is turned on, the CD starts to play where it stopped, if it was the last selected audio source.

As each new track starts to play, the track number displays.

F3 (Reverse): Press and hold this pushbutton to enter fast reverse mode. Hold the pushbutton to play in reverse at four times the normal speed. Hold it for more than four seconds to play in reverse at 32 times the normal speed. Release the pushbutton to return to normal play mode.

A quick press of this pushbutton goes to the beginning of the previous folder.

F4 (Forward): Press and hold this pushbutton to enter fast forward mode. Hold the pushbutton to play at four times the normal speed. Hold it for more than four seconds to play at 32 times the normal speed. Release the pushbutton to return to normal play mode.

A quick press of this pushbutton advances to the next folder.

F5 MODE: Press this pushbutton to select from NORMAL, RPT TRCK (repeat track), and RDM TRCK (random track).

- **Normal:** Sets the system for normal play of the DVD.
- **RPT TRCK (Repeat Track):** Repeats the track over again. RPT TRCK displays. Press the MODE pushbutton again to turn off repeat play and advance to the next mode.
- **RDM TRCK (Random Track):** Plays the tracks on the current DVD in random, rather than sequential order. RDM TRCK appears on the display. Press the MODE pushbutton again to turn off random play and advance to the next mode.

F6 DISP (Display): Press this pushbutton to display the time of the track. Press this pushbutton again to display CD PLAY MODE.

⏮ or ⏭ (Seek): Press the left seek arrow to go to the start of the current track. Press it again to go to the previous track, or press the right seek arrow to go to the next track. Press and hold these buttons to change tracks at a rate of one per second.

TUNE/SEL Knob: Turn to the left one notch to go to the start of the current track. Turn it again to go to the previous track, or turn to the right one notch to go to the next track.

⏮ ⏭ **(Scan):** Press the scan arrows to listen to each track for 10 seconds. The CD goes to a track, plays for 10 seconds, and then goes to the next track. Press the scan arrows again to stop scanning.

If your vehicle has rear seat entertainment, you can view the menu and playlist from your CD on the video screen. Turn on the video screen with the power button on the remote control to view and navigate the menu and playlists. See *Rear Seat Entertainment (RSE) System on page 3-91* for more information.

i (Information): Press this button, while an MP3 CD is loaded, to view the Title, Artist, Album, or Folder names. To view this information, perform the following:

1. Press the tune/select knob to enter the main menu.
2. Turn this knob until INFO displays.
3. Press this knob again to select INFO. The display changes to show the additional MP3 information.
4. Press one of the following pushbuttons to view that specific information.
   - **F1 TTLE (Title):** Displays the title name.
   - **F2 ATST (Artist):** Displays the artist name.
   - **F3 ALBM (Album):** Displays the album name.
   - **F4 FLDR (Folder):** Displays the folder name.
5. Press the BACK (F6) button to exit the display. To return to the original display, repeatedly press the BACK (F6) button or wait for the display to time out.

SRCE (Source): Press this button to select a source, either radio, CD, DVD, or AUX (auxiliary), if your vehicle has this feature. The CD must be loaded to select the source and to play. CD displays if a CD is loaded. If a CD is not loaded, the display changes to the next available source, either DVD, AUX, if your vehicle has this feature, or radio.

⏏ **(Eject):** Press this button to eject a CD. Eject can be activated with the ignition and the radio off. If the CD is not removed after a short time, the CD pulls back into the CD player for storage.

XM Radio Messages

XL (Explicit Language Channels): These channels, or any others, can be blocked at a customer's request, by calling 1-800-852-XMXM (9696).

Updating: The encryption code in the receiver is being updated, and no action is required. This process should take no longer than 30 seconds.

No Signl: The system is functioning correctly, but the vehicle is in a location that is blocking the XM™ signal. When the vehicle is moved into an open area, the signal should return.

Loading: The audio system is acquiring and processing audio and text data. No action is needed. This message should disappear shortly.

Off Air: This channel is not currently in service. Tune in to another channel.

CH Unavl: This previously assigned channel is no longer assigned. Tune to another station. If this station was one of the presets, choose another station for that preset button.

No Info: No artist, song title, category, or text information is available at this time on this channel. The system is working properly.

No Info: No text or informational messages are available at this time on this channel. The system is working properly.

NotFound: There are no channels available for the selected category. The system is working properly.

XM Lock: The XM™ receiver in your vehicle may have previously been in another vehicle. For security purposes, XM™ receivers cannot be swapped between vehicles. If this message is received after having your vehicle serviced, check with your dealer/retailer.

Radio ID: If tuned to channel 0, this message alternates with the XM™ Radio 8 digit radio ID label. This label is needed to activate the service.

Unknown: If this message is received when tuned to channel 0, there could be a receiver fault. Consult with your dealer/retailer.

Check XM: If this message does not clear within a short period of time, the receiver could have a fault. Consult with your dealer/retailer.

Navigation/Radio System

Your vehicle may have a navigation radio system.

The navigation system has built-in features intended to minimize driver distraction. Technology alone, no matter how advanced, can never replace your own judgment. See the Navigation System manual for some tips to help you reduce distractions while driving.

Rear Seat Entertainment (RSE) System

Your vehicle may have a DVD Rear Seat Entertainment (RSE) system. The RSE system works with the vehicle's audio system. The DVD player is part of the front radio. The RSE system includes a radio with a DVD player, a video display screen, and if your vehicle has a third row seat, it could have a second video display screen, audio/video jacks, two wireless headphones, and a remote control. See *Radio(s) on page 3-68* for more information on the vehicle's audio/DVD system.

Driver Control of the Audio System

The driver has basic control of the whole audio system. Press and hold the ⏻ (power) knob for more than two seconds to turn off the radio, RSE (rear seat entertainment), and the RSA (rear seat audio). See *Radio(s) on page 3-68* for more information.

If your vehicle has the navigation system, see the Navigation System manual for more information.

Before You Drive

The RSE is designed for rear seat passengers only. The driver cannot safely view the video screen while driving and should not try to do so.

In severe or extreme weather conditions the RSE system might not work until the temperature is within the operating range. The operating range for the RSE system is above –4°F (–20°C) or below 140°F (60°C). If the temperature of your vehicle is outside of this range, heat or cool the vehicle until the temperature is within the operating range of the RSE system.

Headphones

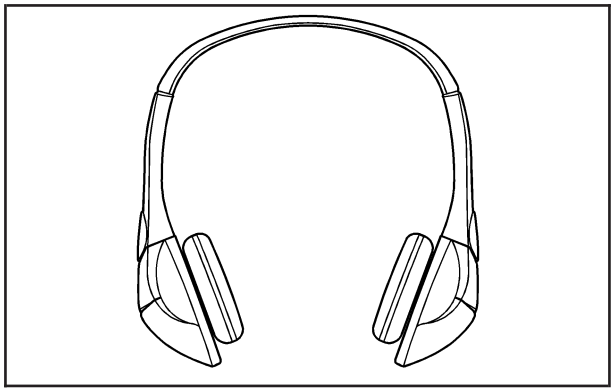

The RSE includes two 2-channel wireless headphones that are dedicated to this system. Channel 1 is dedicated to the DVD player, while Channel 2 is dedicated to RSA selections. These headphones are used to listen to media such as CDs, DVDs, MP3s, DVDAs, radio, any auxiliary source connected to A/V jacks, or the auxiliary input jack, if your vehicle has this feature. The wireless headphones have an On/Off button, channel 1/2 switch, and a volume control.

If your vehicle has a third row video screen display, it has two additional headphones.

Push the power button to turn on the headphones. An indicator light located on the headphones comes on. If the light comes on but, there is intermittent sound and/or static on the headphones, or if the indicator light does not come on, the batteries might need to be replaced. See “Battery Replacement” later in this section for more information. Switch the headphones to Off when not in use.

The infrared transmitters are located at the rear of the RSE overhead console. The headphones shut off automatically to save the battery power if the RSE system and the RSA are shut off or if the headphones are out of range of the transmitters for more than 3 minutes. If you move too far forward or step out of the vehicle, the headphones lose the audio signal.

The headphones automatically turn off after four hours of continuous use.

To adjust the volume on the headphones, use the volume control located on the right side.

For optimal audio performance, the headphones must be worn correctly. The symbol L (Left) appears on the upper left side, above the ear pad and should

be positioned on the left ear. The symbol R (Right) appears on the upper right side, above the ear pad and should be positioned on the right ear.

Notice: **Do not store the headphones in heat or direct sunlight. This could damage the headphones and repairs will not be covered by your warranty. Storage in extreme cold can weaken the batteries. Keep the headphones stored in a cool, dry place.**

If the foam ear pads attached to the headphones become worn or damaged, the pads can be replaced separately from the headphone set. See your dealer/retailer for more information.

Battery Replacement

To change the batteries on the headphones, do the following:

1. Turn the screw to loosen the battery door located on the left side of the headphones. Slide the battery door open.
2. Replace the two batteries in the compartment. Make sure that they are installed correctly, using the diagram on the inside of the battery compartment.
3. Replace the battery door and tighten the door screw.

If the headphones are to be stored for a long period of time, remove the batteries and keep them in a cool, dry place.

Audio/Video (A/V) Jacks

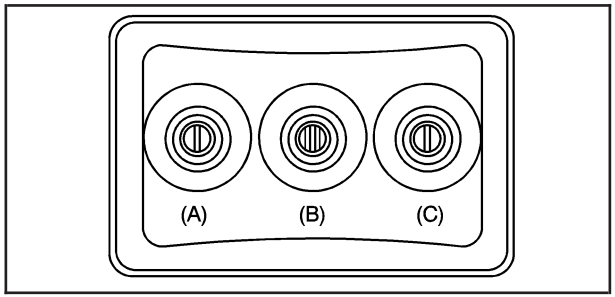

The A/V jacks are located on the rear of the floor console. The A/V jacks allow audio or video signals to be connected from an auxiliary device such as a camcorder or a video game unit to the RSE system. Adapter connectors or cables (not included) may be required to connect the auxiliary device to the A/V jacks. Refer to the manufacturer's instructions for proper usage.

The A/V jacks are color coded to match typical home entertainment system equipment. The yellow jack (A) is for the video input. The white jack (B) is for the left audio input. The red jack (C) is for the right audio input.

Power for auxiliary devices is not supplied by the radio system.

To use the auxiliary inputs of the RSE system, connect an external auxiliary device to the color-coded A/V jacks and turn both the auxiliary device and the video screen power on. If the video screen is in the DVD player mode, pressing the AUX (auxiliary) button on the remote control switches the video screen from the DVD player mode to the auxiliary device. The radio plays the audio of the connected auxiliary device by sourcing to auxiliary. See *Radio(s) on page 3-68* for more information.

For optimal sound quality, increase the portable audio device's volume to the loudest level. Higher levels of volume decreases audio distortion.

It is always best to power your portable audio device through its own battery while playing.

How to Change the RSE Video Screen Settings

The screen display mode (normal, full, and zoom), screen brightness, and setup menu language can be changed from the on screen setup menu. To change any feature, perform the following:

1. Press the ▢ (display menu) button on the remote control.
2. Use the remote control ▲, ▼, ◀, ▶ navigation arrows and the ◀┘ button to use the setup menu.
3. Press the ▢ menu button again to remove the setup menu from the screen.

Audio Output

Audio from the DVD player or auxiliary inputs can be heard through the following possible sources:

- Wireless Headphones
- Vehicle Speakers
- Vehicle wired headphone jacks on the rear seat audio system, if your vehicle has this feature.

The RSE system always transmits the audio signal to the wireless headphones, if there is audio available. See "Headphones" earlier in this section for more information.

The DVD player is capable of outputting audio to the wired headphone jacks on the RSA system, if your vehicle has this feature. The DVD player can be selected as an audio source on the RSA system. See *Rear Seat Audio (RSA) on page 3-101* for more information.

When a device is connected to the radio's auxiliary input jack, if your vehicle has this feature, or A/V jacks, the rear seat passengers are be able to hear audio from the auxiliary device through the wireless or wired headphones. The front seat passengers are able to listen to playback from this device through the vehicle speakers by selecting AUX as the source on the radio.

Video Screen

The video screen is located in the overhead console.

To use the video screen, do the following:

1. Push the release button located on the overhead console.
2. Move the screen to the desired position.

When the video screen is not in use, push it up into its locked position.

If a DVD is playing and the screen is raised to its locked position, the screen remains on, this is normal, and the DVD continues to play through the previous audio source. Use the remote control power button or eject the disc to turn off the screen.

The overhead console contains the IR transmitters for the wireless headphones and the IR receivers for the remote control. They are located at the rear of the console.

Notice: **Avoid directly touching the video screen, as damage may occur. See "Cleaning the Video Screen" later in this section for more information.**

Remote Control

To use the remote control, aim it at the transmitter window at the rear of the overhead console and press the desired button. Direct sunlight or very bright light can affect the ability of the RSE transmitter to receive signals from the remote control. If the remote control does not seem to be working, the batteries may need to be replaced. See "Battery Replacement" later in this section. Objects blocking the line of sight can also affect the function of the remote control.

If a CD or DVD is in the Radio DVD slot, the remote control power button can be used to turn on the video screen display and start the disc. The radio can also turn on the video screen display. See *Radio(s) on page 3-68* for more information.

Notice: **Storing the remote control in a hot area or in direct sunlight can damage it, and the repairs will not be covered by your warranty. Storage in extreme cold can weaken the batteries. Keep the remote control stored in a cool, dry place.**

If the remote control becomes lost or damaged, a new universal remote control can be purchased. If this happens, make sure the universal remote control uses a code set of Toshiba®.

Remote Control Buttons

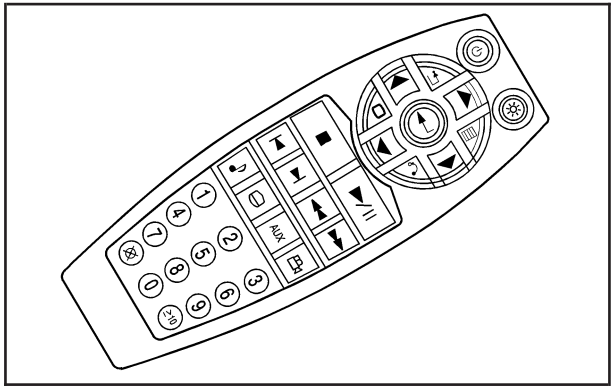

(Power): Press to turn the video screen on and off.

(Illumination): Press to turn the remote control backlight on. The backlight automatically times out after 7 to 10 seconds if no other button is pressed while the backlight is on.

(Title): Press to return the DVD to the main menu of the DVD. This function can vary for each disc.

(Main Menu): Press to access the DVD menu. The DVD menu is different on every DVD. Use the navigation arrows to move the cursor around the DVD menu. After making a selection press the enter button. This button only operates when using a DVD.

▲, ▼, ◀, ▶ **(Menu Navigation Arrows):** Use the arrow buttons to navigate through a menu.

(Enter): Press to select the choice that is highlighted in any menu.

(Display Menu): Press to adjust the brightness, screen display mode (normal, full, or zoom), and display the language menu.

(Return): Press to exit the current active menu and return to the previous menu. This button operates only when the display menu or a DVD menu is active.

■ **(Stop):** Press to stop playing, fast reversing, or fast forwarding a DVD. Press twice to return to the beginning of the DVD.

►‖ **(Play/Pause):** Press to start playing a DVD. Press while a DVD is playing to pause it. Press again to continue playing the DVD.

When the DVD is playing, depending on the radio, you might be able to do slow play by pressing the play/pause button then pressing the fast forward button. The DVD continues playing in a slow play mode. You can also, depending on the radio, perform reverse slow play by pressing the play/pause button and then pressing the fast reverse button. To cancel slow play mode, press the play/pause button.

|◄ **(Previous Track/Chapter):** Press to return to the start of the current track or chapter. Press again to go to the previous track or chapter. This button might not work when the DVD is playing the copyright information or the previews.

►| **(Next Track/Chapter):** Press to go to the beginning of the next chapter or track. This button might not work when the DVD is playing the copyright information or the previews.

◄◄ **(Fast Reverse):** Press to fast reverse the DVD or CD. To stop fast reversing a DVD video, press the play/pause button. To stop fast reversing a DVD audio or CD, release the fast reverse button. This button might not work when the DVD is playing the copyright information or the previews.

►► **(Fast Forward):** Press to fast forward the DVD or CD. To stop fast forwarding a DVD video, press the play/pause button. To stop fast forwarding a DVD audio or CD, release the fast forward button. This button might not work when the DVD is playing the copyright information or the previews.

♪ **(Audio):** Press to change audio tracks on DVDs that have this feature when the DVD is playing. The format and content of this function vary for each disc.

▭ **(Subtitles):** Press to turn ON/OFF subtitles and to move through subtitle options when a DVD is playing. The format and content of this function varies for each disc.

AUX (Auxiliary): Press to switch the system between the DVD player and an auxiliary source.

If your vehicle has a third row video screen, the AUX button controls the source display on the second row video screen, and the third row video screen as described in the table below:

Aux Button Press	Second Row Screen	Third Row Screen
Default State (No Press)	DVD Media	DVD Media
First Press	Aux Video Source	Aux Video Source
Second Press	DVD Media	Aux Video Source
Third Press	Aux Video Source	DVD Media
Fourth Press	Return to Default State	Return to Default State

(Camera): Press to change camera angles on DVDs that have this feature when a DVD is playing. The format and content of this function varies for each disc.

1 through 0 (Numeric Keypad): The numeric keypad provides the capability of direct chapter or track number selection.

(Clear): Press within three seconds after entering a numeric selection, to clear all numeric inputs.

≧ 10 (Double Digit Entries): Press to select chapter or track numbers greater than 9. Press this button before entering the number.

Battery Replacement

To change the remote control batteries, do the following:

1. Slide the rear cover back on the remote control.
2. Replace the two batteries in the compartment. Make sure that they are installed correctly, using the diagram on the inside of the battery compartment.
3. Replace the battery cover.

If the remote control is to be stored for a long period of time, remove the batteries and keep them in a cool, dry place.

Problem	Recommended Action
No power.	The ignition might not be turned ON/RUN or in ACC/ACCESSORY.
The picture does not fill the screen. There are black borders on the top and bottom or on both sides or it looks stretched out.	Check the display mode settings in the setup menu by pressing the display menu button on the remote control.

Problem	Recommended Action
In auxiliary mode, the picture moves or scrolls.	Check the auxiliary input connections at both devices.
The remote control does not work.	Check to make sure there is no obstruction between the remote control and the transmitter window. Check the batteries to make sure they are not dead or installed incorrectly.
After stopping the player, I push Play but sometimes the DVD starts where I left off and sometimes at the beginning.	If the stop button was pressed one time, the DVD player resumes playing where the DVD was stopped. If the stop button was pressed two times the DVD player begins to play from the beginning of the DVD.
The auxiliary source is running but there is no picture or sound.	Check that the RSE video screen is in the auxiliary source mode. Check the auxiliary input connections at both devices.

Problem	Recommended Action
Sometimes the wireless headphone audio cuts out or buzzes.	Check for obstructions, low batteries, reception range, and interference from cellular telephone towers or by using your cellular telephone in the vehicle. Check that the headphones are on correctly using the L (left) and R (right) on the headphones.
I lost the remote and/or the headphones.	See your dealer/retailer for assistance.
The DVD is playing, but there is no picture or sound.	Check that the RSE video screen is sourced to the DVD player.

DVD Display Error Messages

The DVD display error message depends on which radio you have. The video screen might display one of the following:

Disc Load/Eject Error: This message displays when there are disc load or eject problems.

Disc Format Error: This message displays, if the disc is inserted with the disc label wrong side up, or if the disc is damaged.

Disc Region Error: This message displays, if the disc is not from a correct region.

No Disc Inserted: This message displays, if no disc is present when ⏏ or DVD AUX is pressed on the radio.

DVD Distortion

Video distortion may occur when operating cellular phones, scanners, CB radios, Global Position Systems (GPS)*, two-way radios, mobile fax, or walkie talkies.

It might be necessary to turn off the DVD player when operating one of these devices in or near the vehicle.

*Excludes the OnStar® System.

Cleaning the RSE Overhead Console

When cleaning the RSE overhead console surface, use only a clean cloth dampened with clean water.

Cleaning the Video Screen

When cleaning the video screen, use only a clean cloth dampened with clean water. Use care when directly touching or cleaning the screen, as damage can result.

Rear Seat Audio (RSA)

This feature lets rear seat passengers listen to and control any of the music sources: radio, CDs, DVDs, or other auxiliary sources. The rear seat passengers can control the same music sources the front seat passengers are listening to (dual control) or a different source. For example, rear seat passengers can control and listen to a CD through the headphones, while the driver listens to the radio through the speakers. The rear seat passengers have control of the volume for each set of headphones.

The RSA functions can be used even when the main radio is off. The front audio system will display the headphone icon when the RSA is on, and will disappear from the display when it is off.

Audio can be heard through wired headphones (not included) plugged into the jacks on the RSA. If your vehicle has this feature, audio can also be heard on Channel 2 of the wireless headphones.

The front audio system allows the rear speakers to continue playing even when the RSA audio is active through the headphones.

To listen to an iPod or portable audio device through the RSA, attach the iPod or portable audio device to the front auxiliary input (if available), located on the front audio system. Turn the iPod on, then choose the front auxiliary input with the RSA SRCE button.

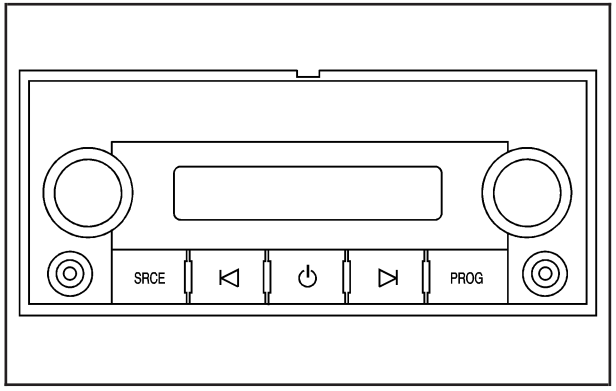

(Power): Press this button to turn the RSA on or off.

Volume: Turn this knob to increase or to decrease the volume of the wired headphones. The left knob controls the left headphones and the right knob controls the right headphones.

SRCE (Source): Press this button to switch between the radio (AM/FM), XM™ (if equipped), CD, and if your vehicle has these features, DVD, front auxiliary, and rear auxiliary.

⏮ ⏭ **(Seek):** When listening to FM, AM, or XM™ (if equipped), press the seek arrows to go to the previous or to the next station or channels and stay there. This function is inactive, with some radios, if the front seat passengers are listening to the radio.

Press and hold either seek arrow until the display flashes, to tune to an individual station. The display stops flashing after the buttons have not been pushed for more than two seconds. This function is inactive, with some radios, if the front seat passengers are listening to the radio.

While listening to a disc, press the right seek arrow to go to the next track or chapter on the disc. Press the left seek arrow to go back to the start of the current track or chapter (if more than 10 seconds have played). This function is inactive, with some radios, if the front seat passengers are listening to the disc.

When a DVD video menu is being displayed, press the left or right seek arrow to perform a cursor up or down on the menu. Hold the left or right seek arrow to perform a cursor left or right on the menu.

PROG (Program): Press this button to go to the next preset radio station or channel set on the main radio. This function is inactive, with some radios, if the front seat passengers are listening to the radio.

When a CD or DVD audio disc is playing, press this button to go to the beginning of the CD or DVD audio. This function is inactive, with some radios, if the front seat passengers are listening to the disc.

When a disc is playing in the CD or DVD changer, press this button to select the next disc, if multiple discs are loaded. This function is inactive, with some radios, if the front seat passengers are listening to the disc.

When a DVD video menu is being displayed, press the PROG button to perform the enter menu function.

Theft-Deterrent Feature

THEFTLOCK® is designed to discourage theft of your vehicle's radio. The feature works automatically by learning a portion of the Vehicle Identification Number (VIN). If the radio is moved to a different vehicle, it does not operate and LOC, LOCK, or LOCKED could display.

With THEFTLOCK® activated, the radio does not operate if stolen.

Audio Steering Wheel Controls

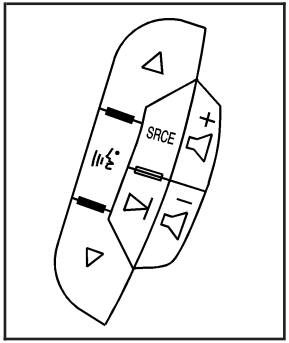

Your vehicle has audio steering wheel controls, they may differ depending on your vehicle's options.

Some audio controls can be adjusted at the steering wheel. They include the following:

▽△ **(Next/Previous):** Press the down or up arrow to go to the next or to the previous radio station stored as a favorite.

When a CD/DVD is playing, press the down or up arrow to go to the next or to the previous track or chapter.

(Mute/Voice Recognition): Press and release this button to silence the vehicle speakers only. The audio of the wireless and wired headphones, if your vehicle has these features, does not mute. Press and release this button again, to turn the sound on.

If your vehicle has the navigation system, press and hold this button for longer than one second to initiate voice recognition. See "Voice Recognition" in the Navigation System manual for more information.

Press and hold this button for longer than one second to interact with the OnStar® system. If your vehicle also has the navigation system, press and hold this button for longer than one second to initiate voice recognition and say "OnStar" to enter OnStar® mode. See the *OnStar® System on page 2-56* in this manual for more information.

SRCE (Source): Press this button to switch between the radio (AM, FM), XM™ (if equipped), CD, and if your vehicle has these features, DVD, front auxiliary, and rear auxiliary.

+ ◁ – ◁ (Volume): Press the plus or minus volume button to increase or to decrease the radio volume.

▷| (Seek): Press the seek arrow to go to the next radio station while in AM, FM, or XM™ (if equipped). Press the seek arrow to go to the next track or chapter while sourced to the CD or DVD slot. Press the seek arrow to go to the next disc while sourced to a CD or DVD changer, if multiple discs are loaded.

Radio Reception

Frequency interference and static can occur during normal radio reception if items such as cell phone chargers, vehicle convenience accessories, and external electronic devices are plugged into the accessory power outlet. If there is interference or static, unplug the item from the accessory power outlet.

AM

The range for most AM stations is greater than for FM, especially at night. The longer range can cause station frequencies to interfere with each other.
For better radio reception, most AM radio stations boost the power levels during the day, and then reduce these levels during the night. Static can also occur when things like storms and power lines interfere with radio reception. When this happens, try reducing the treble on your radio.

FM Stereo

FM stereo gives the best sound, but FM signals reach only about 10 to 40 miles (16 to 65 km). Tall buildings or hills can interfere with FM signals, causing the sound to fade in and out.

XM™ Satellite Radio Service

XM™ Satellite Radio Service gives digital radio reception from coast-to-coast in the 48 contiguous United States, and in Canada. Just as with FM, tall buildings or hills can interfere with satellite radio signals, causing the sound to fade in and out. In addition, traveling or standing under heavy foliage, bridges, garages, or tunnels may cause loss of the XM™ signal for a period of time. The radio may display No Signl to indicate interference.

Fixed Mast Antenna

The fixed mast antenna can withstand most car washes without being damaged. If the mast should ever become slightly bent, straighten it out by hand. If the mast is badly bent, replace it.

Check occasionally to make sure the mast is still tightened to its base. If tightening is required, tighten by hand, then with a wrench one quarter turn.

XM™ Satellite Radio Antenna System

The XM™ Satellite Radio antenna is located on the roof of your vehicle. Keep this antenna clear of snow and ice build up for clear radio reception.

If your vehicle has a sunroof, the performance of the XM™ system may be affected if the sunroof is open.

Loading items onto the roof of your vehicle can interfere with the performance of the XM™ system. Make sure the XM™ Satellite Radio antenna is not obstructed.

NOTES

Section 4 Driving Your Vehicle

Your Driving, the Road, and Your Vehicle 4-2
Defensive Driving 4-2
Drunk Driving 4-2
Control of a Vehicle 4-3
Braking 4-3
Antilock Brake System (ABS) 4-4
Braking in Emergencies 4-5
Locking Differential 4-5
Road Sensing Suspension 4-6
StabiliTrak® System 4-6
All-Wheel Drive (AWD) System 4-8
Steering 4-9
Off-Road Recovery 4-11
Passing 4-11
Loss of Control 4-11
Off-Road Driving 4-12
Driving at Night 4-27
Driving in Rain and on Wet Roads 4-27
Before Leaving on a Long Trip 4-28
Highway Hypnosis 4-28
Hill and Mountain Roads 4-29
Winter Driving 4-30
If Your Vehicle is Stuck in Sand, Mud, Ice, or Snow 4-33
Rocking Your Vehicle to Get It Out 4-33
Recovery Hooks 4-34
Loading Your Vehicle 4-35
Truck-Camper Loading Information 4-41

Towing 4-42
Towing Your Vehicle 4-42
Recreational Vehicle Towing 4-42
Autoride® 4-42
Towing a Trailer 4-43
Trailer Recommendations 4-55

Your Driving, the Road, and Your Vehicle

Defensive Driving

Defensive driving means “always expect the unexpected.” The first step in driving defensively is to wear your safety belt — See *Safety Belts: They Are for Everyone on page 1-12*.

⚠ CAUTION:

Assume that other road users (pedestrians, bicyclists, and other drivers) are going to be careless and make mistakes. Anticipate what they might do and be ready. In addition:

- **Allow enough following distance between you and the driver in front of you.**
- **Focus on the task of driving.**

Driver distraction can cause collisions resulting in injury or possible death. These simple defensive driving techniques could save your life.

Drunk Driving

⚠ CAUTION:

Drinking and then driving is very dangerous. Your reflexes, perceptions, attentiveness, and judgment can be affected by even a small amount of alcohol. You can have a serious — or even fatal — collision if you drive after drinking. Do not drink and drive or ride with a driver who has been drinking. Ride home in a cab; or if you are with a group, designate a driver who will not drink.

Death and injury associated with drinking and driving is a global tragedy.

Alcohol affects four things that anyone needs to drive a vehicle: judgment, muscular coordination, vision, and attentiveness.

Police records show that almost 40 percent of all motor vehicle-related deaths involve alcohol. In most cases, these deaths are the result of someone who was drinking and driving. In recent years, more than 17,000 annual motor vehicle-related deaths have been associated with the use of alcohol, with about 250,000 people injured.

For persons under 21, it is against the law in every U.S. state to drink alcohol. There are good medical, psychological, and developmental reasons for these laws.

The obvious way to eliminate the leading highway safety problem is for people never to drink alcohol and then drive.

Medical research shows that alcohol in a person's system can make crash injuries worse, especially injuries to the brain, spinal cord, or heart. This means that when anyone who has been drinking — driver or passenger — is in a crash, that person's chance of being killed or permanently disabled is higher than if the person had not been drinking.

Control of a Vehicle

The following three systems help to control your vehicle while driving — brakes, steering, and accelerator. At times, as when driving on snow or ice, it is easy to ask more of those control systems than the tires and road can provide. Meaning, you can lose control of your vehicle. See *StabiliTrak® System on page 4-6*.

Adding non-dealer/non-retailer accessories can affect your vehicle's performance. See *Accessories and Modifications on page 5-3*.

Braking

See *Brake System Warning Light on page 3-36*.

Braking action involves perception time and reaction time. First, you have to decide to push on the brake pedal. That is perception time. Then you have to bring up your foot and do it. That is reaction time.

Average reaction time is about three-fourths of a second. But that is only an average. It might be less with one driver and as long as two or three seconds or more with another. Age, physical condition, alertness, coordination, and eyesight all play a part. So do alcohol, drugs, and frustration. But even in three-fourths of a second, a vehicle moving at 60 mph (100 km/h) travels 66 feet (20 m). That could be a lot of distance in an emergency, so keeping enough space between your vehicle and others is important.

And, of course, actual stopping distances vary greatly with the surface of the road, whether it is pavement or gravel; the condition of the road, whether it is wet, dry, or icy; tire tread; the condition of the brakes; the weight of the vehicle; and the amount of brake force applied.

Avoid needless heavy braking. Some people drive in spurts — heavy acceleration followed by heavy braking — rather than keeping pace with traffic. This is a mistake. The brakes might not have time to cool between hard stops. The brakes will wear out much faster if you do a lot of heavy braking. If you keep pace with the traffic and allow realistic following distances, you will eliminate a lot of unnecessary braking. That means better braking and longer brake life.

If your vehicle's engine ever stops while you are driving, brake normally but do not pump the brakes. If you do, the pedal could get harder to push down. If the engine stops, you will still have some power brake assist. But you will use it when you brake. Once the power assist is used up, it can take longer to stop and the brake pedal will be harder to push.

Adding non-dealer/non-retailer accessories can affect your vehicle's performance. See *Accessories and Modifications on page 5-3*.

Antilock Brake System (ABS)

Your vehicle has the Antilock Brake System (ABS), an advanced electronic braking system that will help prevent a braking skid.

When you start the engine and begin to drive away, ABS will check itself. You might hear a momentary motor or clicking noise while this test is going on. This is normal.

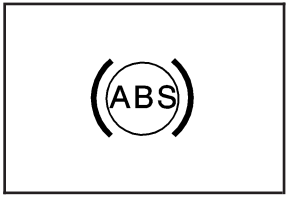

If there is a problem with ABS, this warning light will stay on. See *Antilock Brake System Warning Light on page 3-37*.

Along with ABS, your vehicle has a Dynamic Rear Proportioning (DRP) system. If there is a DRP problem, both the brake and ABS warning lights come on accompanied by a 10-second chime. The lights and chime will come on each time the ignition is turned on until the problem is repaired. See your dealer/retailer for service.

Let us say the road is wet and you are driving safely. Suddenly, an animal jumps out in front of you. You slam on the brakes and continue braking. Here is what happens with ABS:

A computer senses that wheels are slowing down. If one of the wheels is about to stop rolling, the computer will separately work the brakes at each front wheel and at both rear wheels.

ABS can change the brake pressure faster than any driver could. The computer is programmed to make the most of available tire and road conditions. This can help you steer around the obstacle while braking hard.

As you brake, the computer keeps receiving updates on wheel speed and controls braking pressure accordingly.

Remember: ABS does not change the time you need to get your foot up to the brake pedal or always decrease stopping distance. If you get too close to the vehicle in front of you, you will not have time to apply the brakes if that vehicle suddenly slows or stops. Always leave enough room up ahead to stop, even though you have ABS.

Using ABS

Do not pump the brakes. Just hold the brake pedal down firmly and let antilock work for you. You might feel the brakes vibrate or notice some noise, but this is normal.

Braking in Emergencies

With ABS, you can steer and brake at the same time. In many emergencies, steering can help you more than even the very best braking.

Locking Differential

If your vehicle has this feature, your locking differential can give you additional traction on snow, mud, ice, sand or gravel. It works like a standard axle most of the time, but when one of the wheels has no traction and the other does, this feature will allow the wheel with traction to move the vehicle.

Road Sensing Suspension

The Road Sensing Suspension (RSS) feature provides superior vehicle ride and handling under a variety of passenger and loading conditions.

The system is fully automatic and uses a computer controller to continuously monitor vehicle speed, wheel to body position, lift/dive and steering position of the vehicle. The controller then sends signals to each shock absorber to independently adjust the damping level to provide the optimum vehicle ride.

RSS also interacts with the tow/haul mode that, when engaged, will provide additional control of the shock absorbers. This additional control results in better ride and handling characteristics when the vehicle is loaded or towing a trailer. See “Tow/Haul Mode” under *Towing a Trailer on page 4-43*.

StabiliTrak® System

Your vehicle may be equipped with the StabiliTrak® system which combines antilock brake, traction and stability control systems and helps the driver maintain directional control of the vehicle in most driving conditions.

When you first start your vehicle and begin to drive away, the system performs several diagnostic checks to ensure there are no problems. You may hear or feel the system working. This is normal and does not mean there is a problem with your vehicle. The system should initialize before the vehicle reaches 20 mph (32 km/h). In some cases, it may take approximately two miles of driving before the system initializes.

If the system fails to turn on or activate, the StabiliTrak® light along with one of the following messages will be displayed on the Driver Information Center (DIC): TRACTION CONTROL OFF, SERVICE TRACTION CONTROL, STABILITRAK OFF, SERVICE STABILITRAK. If these DIC messages appear, make sure the StabiliTrak® system has not been turned off using the StabiliTrak® on/off button. Then turn the steering wheel clockwise from the nine o’clock position to the three o’clock position. If this clears the message(s), your vehicle does not need servicing. If this does not clear the message(s), then turn the vehicle off, wait 15 seconds, and then turn it back on again to reset the system. If any of these messages still appear on the Driver Information Center (DIC), your vehicle should be taken in for service. For more information on the DIC messages, see *Driver Information Center (DIC) on page 3-45*.

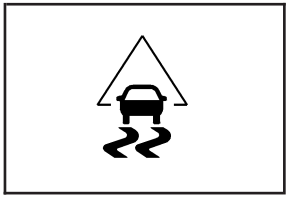

The StabiliTrak® light will flash on the instrument panel cluster when the system is both on and activated.

You may also feel or hear the system working; this is normal.

The traction control disable button is located on the instrument panel below the climate controls.

The traction control part of StabiliTrak® can be turned off by pressing and releasing the StabiliTrak® button if both systems (traction control and StabiliTrak®) were previously on. To disable both traction control and StabiliTrak®, press and hold the button for five seconds.

Traction control and StabiliTrak® can be turned on by pressing and releasing the StabiliTrak® button if not automatically shut off for any other reason.

When the TCS or StabiliTrak® system is turned off, the StabiliTrak® light and the appropriate TCS off or StabiliTrak® off message will be displayed on the DIC to warn the driver. Your vehicle will still have brake-traction control when traction control is off, but will not be able to use the engine speed management system. See “Traction Control Operation” next for more information.

When the traction control system has been turned off, you may still hear system noises as a result of the brake-traction control coming on.

It is recommended to leave the system on for normal driving conditions, but it may be necessary to turn the system off if your vehicle is stuck in sand, mud, ice or snow, and you want to “rock” your vehicle to attempt to free it. It may also be necessary to turn off the system when driving in extreme off-road conditions where high wheel spin is required. See *If Your Vehicle is Stuck in Sand, Mud, Ice, or Snow on page 4-33*.

Traction Control Operation

The traction control system is part of the StabiliTrak® system. Traction control limits wheel spin by reducing engine power to the wheels (engine speed management) and by applying brakes to each individual wheel (brake-traction control) as necessary.

The traction control system is enabled automatically when you start your vehicle. It will activate and the StabiliTrak® light will flash if it senses that any of the wheels are spinning or beginning to lose traction while driving. If you turn off traction control, only the brake-traction control portion of traction control will work. The engine speed management will be disabled. In this mode, engine power is not reduced automatically and the driven wheels can spin more freely. This can cause the brake-traction control to activate constantly.

Notice: **If you allow the wheel(s) of one axle to spin excessively while the StabiliTrak®, ABS and brake warning lights and the SERVICE STABILITRAK message are displayed, you could damage the transfer case. The repairs would not be covered by your warranty. Reduce engine power and do not spin the wheel(s) excessively while these lights and this message are displayed.**

The traction control system may activate on dry or rough roads or under conditions such as heavy acceleration while turning or abrupt upshifts/downshifts of the transmission. When this happens, you may notice a reduction in acceleration, or may hear a noise or vibration. This is normal.

If your vehicle is in cruise control when the system activates, the StabiliTrak® light will flash and the cruise control will automatically disengage. When road conditions allow you to use cruise again, you may re-engage the cruise control. See *Cruise Control on page 3-11*.

StabiliTrak® may also turn off automatically if it determines that a problem exists with the system. If the problem does not clear itself after restarting the vehicle, you should see your dealer for service.

All-Wheel Drive (AWD) System

With this feature, engine power is sent to all four wheels at all times. This is like four-wheel drive, but there is no separate lever or switch to engage or disengage the front axle. It is fully automatic, and adjusts itself as needed for road conditions. See *StabiliTrak® System on page 4-6* for more information.

Steering

Power Steering

If you lose power steering assist because the engine stops or the system is not functioning, you can steer but it will take much more effort.

Steering Tips

It is important to take curves at a reasonable speed.

A lot of the “driver lost control” accidents mentioned on the news happen on curves. Here is why:

Experienced driver or beginner, each of us is subject to the same laws of physics when driving on curves. The traction of the tires against the road surface makes it possible for the vehicle to change its path when you turn the front wheels. If there is no traction, inertia will keep the vehicle going in the same direction. If you have ever tried to steer a vehicle on wet ice, you will understand this.

The traction you can get in a curve depends on the condition of the tires and the road surface, the angle at which the curve is banked, and your speed. While you are in a curve, speed is the one factor you can control.

Suppose you are steering through a sharp curve. Then you suddenly accelerate. Both control systems — steering and acceleration — have to do their work where the tires meet the road. Adding the sudden acceleration can demand too much of those places. You can lose control. See *StabiliTrak® System on page 4-6*.

What should you do if this ever happens? Ease up on the accelerator pedal, steer the vehicle the way you want it to go, and slow down.

Speed limit signs near curves warn that you should adjust your speed. Of course, the posted speeds are based on good weather and road conditions. Under less favorable conditions you will want to go slower.

If you need to reduce your speed as you approach a curve, do it before you enter the curve, while the front wheels are straight ahead.

Try to adjust your speed so you can drive through the curve. Maintain a reasonable, steady speed. Wait to accelerate until you are out of the curve, and then accelerate gently into the straightaway.

Adding non-dealer/non-retailer accessories can affect your vehicle’s performance. See *Accessories and Modifications on page 5-3*.

Steering in Emergencies

There are times when steering can be more effective than braking. For example, you come over a hill and find a truck stopped in your lane, or a car suddenly pulls out from nowhere, or a child darts out from between parked cars and stops right in front of you. You can avoid these problems by braking — if you can stop in time. But sometimes you cannot; there is not room. That is the time for evasive action — steering around the problem.

Your vehicle can perform very well in emergencies like these. First, apply the brakes. See *Braking on page 4-3*. It is better to remove as much speed as you can from a possible collision. Then steer around the problem, to the left or right depending on the space available.

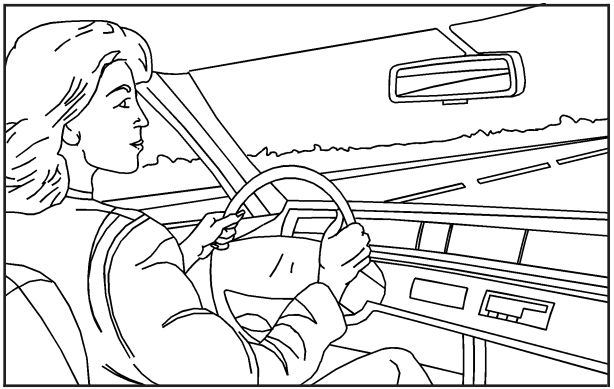

An emergency like this requires close attention and a quick decision. If you are holding the steering wheel at the recommended 9 and 3 o'clock positions, you can turn it a full 180 degrees very quickly without removing either hand. But you have to act fast, steer quickly, and just as quickly straighten the wheel once you have avoided the object.

The fact that such emergency situations are always possible is a good reason to practice defensive driving at all times and wear safety belts properly.

Off-Road Recovery

You may find that your right wheels have dropped off the edge of a road onto the shoulder while you are driving.

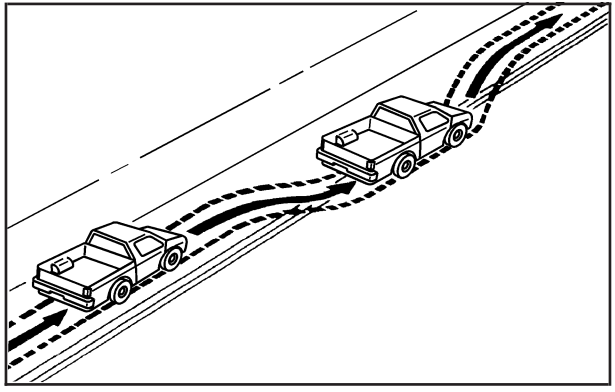

If the level of the shoulder is only slightly below the pavement, recovery should be fairly easy. Ease off the accelerator and then, if there is nothing in the way, steer so that your vehicle straddles the edge of the pavement. You can turn the steering wheel up to one-quarter turn until the right front tire contacts the pavement edge. Then turn the steering wheel to go straight down the roadway.

Passing

Passing another vehicle on a two-lane road can be dangerous. To reduce the risk of danger while passing, we suggest the following tips:

- Look down the road, to the sides, and to crossroads for situations that might affect a successful pass. If in doubt, wait.
- Watch for traffic signs, pavement markings, and lines that could indicate a turn or an intersection. Never cross a solid or double-solid line on your side of the lane.
- Do not get too close to the vehicle you want to pass. Doing so can reduce your visibility.
- Wait your turn to pass a slow vehicle.
- When you are being passed, ease to the right.

Loss of Control

Let us review what driving experts say about what happens when the three control systems — brakes, steering, and acceleration — do not have enough friction where the tires meet the road to do what the driver has asked.

In any emergency, do not give up. Keep trying to steer and constantly seek an escape route or area of less danger.

Skidding

In a skid, a driver can lose control of the vehicle. Defensive drivers avoid most skids by taking reasonable care suited to existing conditions, and by not overdriving those conditions. But skids are always possible.

The three types of skids correspond to your vehicle's three control systems. In the braking skid, the wheels are not rolling. In the steering or cornering skid, too much speed or steering in a curve causes tires to slip and lose cornering force. And in the acceleration skid, too much throttle causes the driving wheels to spin.

A cornering skid is best handled by easing your foot off the accelerator pedal.

Remember: Any traction control system helps avoid only the acceleration skid. If your traction control system is off, then an acceleration skid is also best handled by easing your foot off the accelerator pedal.

If your vehicle starts to slide, ease your foot off the accelerator pedal and quickly steer the way you want the vehicle to go. If you start steering quickly enough, your vehicle may straighten out. Always be ready for a second skid if it occurs.

Of course, traction is reduced when water, snow, ice, gravel, or other material is on the road. For safety, you will want to slow down and adjust your driving to these conditions. It is important to slow down on slippery surfaces because stopping distance will be longer and vehicle control more limited.

While driving on a surface with reduced traction, try your best to avoid sudden steering, acceleration, or braking, including reducing vehicle speed by shifting to a lower gear. Any sudden changes could cause the tires to slide. You may not realize the surface is slippery until your vehicle is skidding. Learn to recognize warning clues — such as enough water, ice, or packed snow on the road to make a mirrored surface — and slow down when you have any doubt.

Remember: Any Antilock Brake System (ABS) helps avoid only the braking skid.

Off-Road Driving

Many of the same design features that help make your vehicle responsive on paved roads during poor weather conditions — features like all-wheel drive — help make it much better suited for off-road use than a conventional passenger car. Its higher ground clearance also helps your vehicle step over some off-road obstacles. But your vehicle does not have features like special underbody shielding and a transfer case low gear range, things that are usually thought necessary for extended or severe off-road service. This guide is for operating your vehicle off paved roads.

Also, see *Braking on page 4-3*.

The airbag system is designed to work properly under a wide range of conditions, including off-road usage. Observe safe driving speeds, especially on rough terrain. As always, wear your safety belt.

Off-road driving can be great fun. But it does have some definite hazards. The greatest of these is the terrain itself.

“Off-roading” means you have left the great North American road system behind. Traffic lanes are not marked. Curves are not banked. There are no road signs. Surfaces can be slippery, rough, uphill, or downhill. In short, you have gone right back to nature.

Off-road driving involves some new skills. And that is why it is very important that you read this guide. You will find many driving tips and suggestions. These will help make your off-road driving safer and more enjoyable.

If you think you will need some more ground clearance at the front of your vehicle, you can remove the front fascia lower air dam.

The front fascia lower air dam is held in place by two bolts and 10 snap features. The bolts and snap features are accessible from underneath the front fascia.

The following steps must be performed on the bolts and snap features to remove the air dam:

1. Remove the two outboard air dam bolts.
2. With a flat-blade screwdriver, push down on the snap features and disengage the snaps.
3. After the bolts are removed and the snaps are disengaged, push forward on the air dam until it is free.

When you are back on roads, though, be sure to replace the air dam.

Notice: **Operating your vehicle for extended periods without the front fascia lower air dam installed can cause improper air flow to the engine. Always be sure to replace the front fascia air dam when you are finished off-road driving.**

To reinstall the lower air dam do the following:

1. Line up the snap features and push the air dam rearward to engage the snaps.
2. Install the two outboard bolts.

Before You Go Off-Roading

There are some things to do before you go out. For example, be sure to have all necessary maintenance and service work done. Check to make sure all underbody shields, if the vehicle has them, are properly attached. Is there enough fuel? Is the spare tire fully inflated? Are the fluid levels up where they should be? What are the local laws that apply to off-roading where you will be driving? If you do not know, you should check with law enforcement people in the area. Will you be on someone's private land? If so, be sure to get the necessary permission.

Loading Your Vehicle for Off-Road Driving

⚠ CAUTION:

- **Cargo on the load floor piled higher than the seatbacks can be thrown forward during a sudden stop. You or your passengers could be injured. Keep cargo below the top of the seatbacks.**

CAUTION: (Continued)

CAUTION: (Continued)

- **Unsecured cargo on the load floor can be tossed about when driving over rough terrain. You or your passengers can be struck by flying objects. Secure the cargo properly.**
- **Heavy loads on the roof raise the vehicle's center of gravity, making it more likely to roll over. You can be seriously or fatally injured if the vehicle rolls over. Put heavy loads inside the cargo area, not on the roof. Keep cargo in the cargo area as far forward and low as possible.**

There are some important things to remember about how to load your vehicle.

- The heaviest things should be on the load floor and forward of the rear axle. Put heavier items as far forward as you can.
- Be sure the load is secured properly, so driving on the off-road terrain does not toss things around.

You will find other important information in this manual. See *Loading Your Vehicle on page 4-35* and *Tires on page 5-54*.

Environmental Concerns

Off-road driving can provide wholesome and satisfying recreation. However, it also raises environmental concerns. We recognize these concerns and urge every off-roader to follow these basic rules for protecting the environment:

- Always use established trails, roads, and areas that have been specially set aside for public off-road recreational driving; obey all posted regulations.
- Avoid any driving practice that could damage the environment — shrubs, flowers, trees, grasses — or disturb wildlife. This includes wheel-spinning, breaking down trees, or unnecessary driving through streams or over soft ground.
- Always carry a litter bag — make sure all refuse is removed from any campsite before leaving.
- Take extreme care with open fires where permitted, camp stoves, and lanterns.
- Never park your vehicle over dry grass or other combustible materials that could catch fire from the heat of the vehicle's exhaust system.

Traveling to Remote Areas

It makes sense to plan your trip, especially when going to a remote area. Know the terrain and plan your route. You are much less likely to get bad surprises. Get accurate maps of trails and terrain. Try to learn of any blocked or closed roads.

It is also a good idea to travel with at least one other vehicle. If something happens to one of them, the other can help quickly.

Getting Familiar with Off-Road Driving

It is a good idea to practice in an area that is safe and close to home before you go into the wilderness. Off-road driving does require some new and different driving skills. Here is what we mean.

Tune your senses to different kinds of signals. Your eyes, for example, need to constantly sweep the terrain for unexpected obstacles. Your ears need to listen for unusual tire or engine sounds. With your arms, hands, feet, and body, you will need to respond to vibrations and vehicle bounce.

Controlling your vehicle is the key to successful off-road driving. One of the best ways to control your vehicle is to control your speed. Here are some things to keep in mind. At higher speeds:

- You approach things faster and you have less time to scan the terrain for obstacles.
- You have less time to react.
- You have more vehicle bounce when you drive over obstacles.
- You will need more distance for braking, especially since you are on an unpaved surface.

⚠ CAUTION:

When you are driving off-road, bouncing and quick changes in direction can easily throw you out of position. This could cause you to lose control and crash. So, whether you are driving on or off the road, you and your passengers should wear safety belts.

Scanning the Terrain

Off-road driving can take you over many different kinds of terrain. You need to be familiar with the terrain and its many different features. Here are some things to consider.

Surface Conditions: Off-roading can take you over hard-packed dirt, gravel, rocks, grass, sand, mud, snow, or ice. Each of these surfaces affects the steering, acceleration, and braking of your vehicle in different ways. Depending upon the kind of surface you are on, you may experience slipping, sliding, wheel spinning, delayed acceleration, poor traction, and longer braking distances.

Surface Obstacles: Unseen or hidden obstacles can be hazardous. A rock, log, hole, rut, or bump can startle you if you are not prepared for them. Often these obstacles are hidden by grass, bushes, snow, or even the rise and fall of the terrain itself. Here are some things to consider:

- Is the path ahead clear?
- Will the surface texture change abruptly up ahead?
- Does the travel take you uphill or downhill? There is more discussion of these subjects later.
- Will you have to stop suddenly or change direction quickly?

When you drive over obstacles or rough terrain, keep a firm grip on the steering wheel. Ruts, troughs, or other surface features can jerk the wheel out of your hands if you are not prepared.

When you drive over bumps, rocks, or other obstacles, the wheels can leave the ground. If this happens, even with one or two wheels, you cannot control the vehicle as well or at all.

Because you will be on an unpaved surface, it is especially important to avoid sudden acceleration, sudden turns, or sudden braking.

In a way, off-road driving requires a different kind of alertness from driving on paved roads and highways. There are no road signs, posted speed limits, or signal lights. You have to use your own good judgment about what is safe and what is not.

Drinking and driving can be very dangerous on any road. And this is certainly true for off-road driving. At the very time you need special alertness and driving skills, your reflexes, perceptions, and judgment can be affected by even a small amount of alcohol. You could have a serious — or even fatal — accident if you drink and drive or ride with a driver who has been drinking. See *Drunk Driving on page 4-2*.

Driving on Off-Road Hills

Off-road driving often takes you up, down, or across a hill. Driving safely on hills requires good judgment and an understanding of what your vehicle can and cannot do. There are some hills that simply cannot be driven, no matter how well built the vehicle.

⚠ CAUTION:

Many hills are simply too steep for any vehicle. If you drive up them, you will stall. If you drive down them, you cannot control your speed. If you drive across them, you will roll over. You could be seriously injured or killed. If you have any doubt about the steepness, do not drive the hill.

Approaching a Hill

When you approach a hill, you need to decide if it is one of those hills that is just too steep to climb, descend, or cross. Steepness can be hard to judge.

On a very small hill, for example, there may be a smooth, constant incline with only a small change in elevation where you can easily see all the way to the top. On a large hill, the incline may get steeper as you near the top, but you may not see this because the crest of the hill is hidden by bushes, grass, or shrubs.

Here are some other things to consider as you approach a hill.

- Is there a constant incline, or does the hill get sharply steeper in places?
- Is there good traction on the hillside, or will the surface cause tire slipping?
- Is there a straight path up or down the hill so you will not have to make turning maneuvers?
- Are there obstructions on the hill that can block your path, such as boulders, trees, logs, or ruts?
- What is beyond the hill? Is there a cliff, an embankment, a drop-off, a fence? Get out and walk the hill if you do not know. It is the smart way to find out.
- Is the hill simply too rough? Steep hills often have ruts, gullies, troughs, and exposed rocks because they are more susceptible to the effects of erosion.

Driving Uphill

Once you decide you can safely drive up the hill, you need to take some special steps.

- Use a low gear and get a firm grip on the steering wheel.
- Get a smooth start up the hill and try to maintain your speed. Do not use more power than you need, because you do not want the wheels to start spinning or sliding.

⚠ CAUTION:

Turning or driving across steep hills can be dangerous. You could lose traction, slide sideways, and possibly roll over. You could be seriously injured or killed. When driving up hills, always try to go straight up.

- Try to drive straight up the hill if at all possible. If the path twists and turns, you might want to find another route.
- Ease up on your speed as you approach the top of the hill.
- Attach a flag to the vehicle to make you more visible to approaching traffic on trails or hills.
- Sound the horn as you approach the top of the hill to let opposing traffic know you are there.
- Use the headlamps even during the day. They make your vehicle more visible to oncoming traffic.

⚠ CAUTION:

Driving to the top (crest) of a hill at full speed can cause an accident. There could be a drop-off, embankment, cliff, or even another vehicle. You could be seriously injured or killed. As you near the top of a hill, slow down and stay alert.

There are some things you should do if the vehicle stalls, or is about to stall, and you cannot make it up the hill:

- Push the brake pedal to stop the vehicle and keep it from rolling backwards. Also, apply the parking brake.
- If the engine is still running, shift the transmission to REVERSE (R), release the parking brake, and slowly back down the hill in REVERSE (R).
- If the engine has stopped running, you will need to restart it. With the brake pedal pressed and the parking brake still applied, shift the transmission to PARK (P) and restart the engine. Then, shift to REVERSE (R), release the parking brake, and slowly back down the hill as straight as possible in REVERSE (R).
- As you are backing down the hill, put your left hand on the steering wheel at the 12 o'clock position. This way, you will be able to tell if the wheels are straight and maneuver as you back down. It is best that you back down the hill with the wheels straight rather than in the left or right direction. Turning the wheel too far to the left or right will increase the possibility of a rollover.

There are also some things you must not do if you stall, or are about to stall, when going up a hill:

- Never attempt to prevent a stall by shifting into NEUTRAL (N) to rev-up the engine and regain forward momentum. This will not work. Your vehicle will roll backwards very quickly and you could go out of control.

  Instead, apply the regular brake to stop the vehicle. Then apply the parking brake. Shift to REVERSE (R), release the parking brake, and slowly back straight down.
- Never attempt to turn around if you are about to stall when going up a hill. If the hill is steep enough to stall your vehicle, it is steep enough to cause you to roll over if you turn around. If you cannot make it up the hill, you must back straight down the hill.

If, after stalling, you try to back down the hill and decide you just cannot do it, set the parking brake, put the transmission in PARK (P) and turn off the engine. Leave the vehicle and go get some help. Exit on the uphill side and stay clear of the path the vehicle would take if it rolled downhill.

Driving Downhill

When off-roading takes you downhill, you will want to consider a number of things:

- How steep is the downhill? Will I be able to maintain vehicle control?
- What is the surface like? Smooth? Rough? Slippery? Hard-packed dirt? Gravel?
- Are there hidden surface obstacles? Ruts? Logs? Boulders?
- What is at the bottom of the hill? Is there a hidden creek bank or even a river bottom with large rocks?

If you decide you can go down a hill safely, then try to keep your vehicle headed straight down, and use a low gear. This way, engine drag can help the brakes and they will not have to do all the work. Descend slowly, keeping your vehicle under control at all times.

⚠ CAUTION:

Heavy braking when going down a hill can cause your brakes to overheat and fade. This could cause loss of control and a serious accident. Apply the brakes lightly when descending a hill and use a low gear to keep vehicle speed under control.

There some things not to do when driving down a hill. These are important because, if you ignore them, you could lose control and have a serious accident:

- When driving downhill, avoid turns that take you across the incline of the hill. A hill that is not too steep to drive down may be too steep to drive across. You could roll over if you do not drive straight down.
- Never go downhill with the transmission in NEUTRAL (N). This is called “free-wheeling.” The brakes will have to do all the work and could overheat and fade.

Your vehicle is much more likely to stall when going uphill. But if it happens when going downhill:

1. Stop your vehicle by applying the regular brakes. Apply the parking brake.
2. Shift to PARK (P) and, while still braking, restart the engine.
3. Shift back to a low gear, release the parking brake, and drive straight down.
4. If the engine will not start, get out and get help.

Driving Across an Incline

Sooner or later, an off-road trail will probably go across the incline of a hill. If this happens, you have to decide whether to try to drive across the incline.

Here are some things to consider:

⚠ CAUTION:

Driving across an incline that is too steep will make your vehicle roll over. You could be seriously injured or killed. If you have any doubt about the steepness of the incline, do not drive across it. Find another route instead.

- A hill that can be driven straight up or down may be too steep to drive across. When you go straight up or down a hill, the length of the wheel base — the distance from the front wheels to the rear wheels — reduces the likelihood the vehicle will tumble end over end. But when you drive across an incline, the much more narrow track width — the distance between the left and right wheels — may not prevent the vehicle from tilting and rolling over. Also, driving across an incline puts more weight on the downhill wheels. This could cause a downhill slide or a rollover.

- Surface conditions can be a problem when you drive across a hill. Loose gravel, muddy spots, or even wet grass can cause your tires to slip sideways, downhill. If the vehicle slips sideways, it can hit something that will trip it — a rock, a rut, etc. — and roll over.
- Hidden obstacles can make the steepness of the incline even worse. If you drive across a rock with the uphill wheels, or if the downhill wheels drop into a rut or depression, your vehicle can tilt even more.

For reasons like these, you need to decide carefully whether to try to drive across an incline. Just because the trail goes across the incline does not mean you have to drive it. The last vehicle to try it might have rolled over.

When driving across an incline that is not too steep, the vehicle can hit some loose gravel and start to slide downhill. If you feel your vehicle starting to slide sideways, turn downhill. This should help straighten out the vehicle and prevent the side slipping. However, a much better way to prevent this is to get out and “walk the course” so you know what the surface is like before you drive it.

Stalling on an Incline

⚠ CAUTION:

Getting out on the downhill (low) side of a vehicle stopped across an incline is dangerous. If the vehicle rolls over, you could be crushed or killed. Always get out on the uphill (high) side of the vehicle and stay well clear of the rollover path.

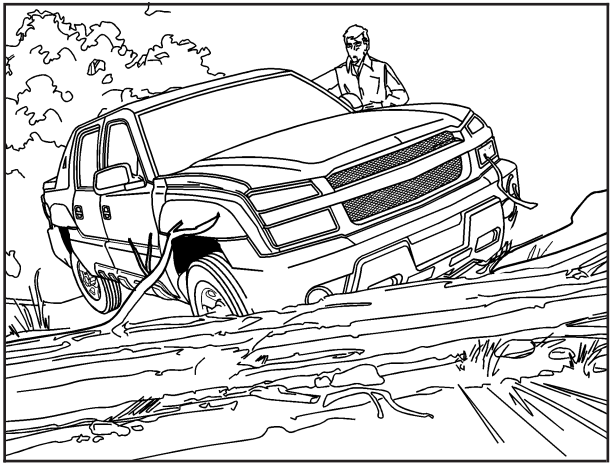

If your vehicle stalls when you are crossing an incline, be sure you, and any passengers, get out on the uphill side, even if the door there is harder to open. If you get out on the downhill side and the vehicle starts to roll over, you will be right in its path.

If you have to walk down the slope, stay out of the path the vehicle will take if it does roll over.

Driving in Mud, Sand, Snow, or Ice

When you drive in mud, snow, or sand, the wheels will not get good traction. You cannot accelerate as quickly, turning is more difficult, and you will need longer braking distances.

It is best to use a low gear when you are in mud — the deeper the mud, the lower the gear. In really deep mud, the idea is to keep your vehicle moving so you do not get stuck.

When you drive on sand, you will sense a change in wheel traction. But it will depend upon how loosely packed the sand is. On loosely packed sand, such as on beaches or sand dunes, the tires will tend to sink into the sand. This has an effect on steering, accelerating, and braking. Drive at a reduced speed and avoid sharp turns or abrupt maneuvers.

Hard packed snow and ice offer the worst tire traction. On these surfaces, it is very easy to lose control. On wet ice, for example, the traction is so poor that you will have difficulty accelerating. And if you do get moving, poor steering and difficult braking can cause you to slide out of control.

⚠ CAUTION:

Driving on frozen lakes, ponds, or rivers can be dangerous. Underwater springs, currents under the ice, or sudden thaws can weaken the ice. Your vehicle could fall through the ice and you and your passengers could drown. Drive your vehicle on safe surfaces only.

Driving in Water

⚠ CAUTION:

Driving through rushing water can be dangerous. Deep water can sweep your vehicle downstream and you and your passengers could drown. If it is only shallow water, it can still wash away the ground from under your tires, and you could lose traction and roll the vehicle over. Do not drive through rushing water.

Heavy rain can mean flash flooding, and flood waters demand extreme caution.

Find out how deep the water is before you drive through it. If it is deep enough to cover the wheel hubs, axles, or exhaust pipe, do not try it — you probably will not get through. Also, water that deep can damage the axle and other vehicle parts.

If the water is not too deep, drive slowly through it. At faster speeds, water splashes on the ignition system and your vehicle can stall. Stalling can also occur if you get the tailpipe under water. And, as long as the tailpipe is under water, you will never be able to start the engine. When you go through water, remember that when the brakes get wet, it may take you longer to stop.

See *Driving in Rain and on Wet Roads on page 4-27* for more information on driving through water.

After Off-Road Driving

Remove any brush or debris that has collected on the underbody, chassis, or under the hood. These accumulations can be a fire hazard.

After operation in mud or sand, have the brake linings cleaned and checked. These substances can cause glazing and uneven braking. Check the body structure, steering, suspension, wheels, tires, and exhaust system for damage. Also, check the fuel lines and cooling system for any leakage.

Your vehicle will require more frequent service due to off-road use. Refer to the Maintenance Schedule for additional information.

Driving at Night

Night driving is more dangerous than day driving because some drivers are likely to be impaired — by alcohol or drugs, with night vision problems, or by fatigue.

Night driving tips include:

- Drive defensively.
- Do not drink and drive.
- Reduce headlamp glare by adjusting the inside rearview mirror.
- Slow down and keep more space between you and other vehicles because your headlamps can only light up so much road ahead.
- Watch for animals.
- When tired, pull off the road.
- Do not wear sunglasses.
- Avoid staring directly into approaching headlamps.
- Keep the windshield and all glass on your vehicle clean — inside and out.
- Keep your eyes moving, especially during turns or curves.

No one can see as well at night as in the daytime. But, as we get older, these differences increase. A 50-year-old driver might need at least twice as much light to see the same thing at night as a 20-year-old.

Driving in Rain and on Wet Roads

Rain and wet roads can reduce vehicle traction and affect your ability to stop and accelerate. Always drive slower in these types of driving conditions and avoid driving through large puddles and deep-standing or flowing water.

⚠ CAUTION:

Wet brakes can cause crashes. They might not work as well in a quick stop and could cause pulling to one side. You could lose control of the vehicle.

After driving through a large puddle of water or a car/vehicle wash, lightly apply the brake pedal until the brakes work normally.

Flowing or rushing water creates strong forces. Driving through flowing water could cause your vehicle to be carried away. If this happens, you and other vehicle occupants could drown. Do not ignore police warnings and be very cautious about trying to drive through flowing water.

Hydroplaning

Hydroplaning is dangerous. Water can build up under your vehicle's tires so they actually ride on the water. This can happen if the road is wet enough and you are going fast enough. When your vehicle is hydroplaning, it has little or no contact with the road.

There is no hard and fast rule about hydroplaning. The best advice is to slow down when the road is wet.

Other Rainy Weather Tips

Besides slowing down, other wet weather driving tips include:

- Allow extra following distance.
- Pass with caution.
- Keep windshield wiping equipment in good shape.
- Keep the windshield washer fluid reservoir filled.
- Have good tires with proper tread depth. See *Tires on page 5-54*.

Before Leaving on a Long Trip

To prepare your vehicle for a long trip, consider having it serviced by your dealer/retailer before departing.

Things to check on your own include:

- *Windshield Washer Fluid:* Reservoir full? Windows clean — inside and outside?
- *Wiper Blades:* In good shape?
- *Fuel, Engine Oil, Other Fluids:* All levels checked?
- *Lamps:* Do they all work and are lenses clean?
- *Tires:* Are treads good? Are tires inflated to recommended pressure?
- *Weather and Maps:* Safe to travel? Have up-to-date maps?

Highway Hypnosis

Always be alert and pay attention to your surroundings while driving. If you become tired or sleepy, find a safe place to park your vehicle and rest.

Other driving tips include:

- Keep the vehicle well ventilated.
- Keep interior temperature cool.
- Keep your eyes moving — scan the road ahead and to the sides.
- Check the rearview mirror and vehicle instruments often.

Hill and Mountain Roads

Driving on steep hills or through mountains is different than driving on flat or rolling terrain. Tips for driving in these conditions include:

- Keep your vehicle serviced and in good shape.
- Check all fluid levels and brakes, tires, cooling system, and transmission.
- Going down steep or long hills, shift to a lower gear.

⚠ CAUTION:

If you do not shift down, the brakes could get so hot that they would not work well. You would then have poor braking or even none going down a hill. You could crash. Shift down to let the engine assist the brakes on a steep downhill slope.

⚠ CAUTION:

Coasting downhill in NEUTRAL (N) or with the ignition off is dangerous. The brakes will have to do all the work of slowing down and they could get so hot that they would not work well. You would then have poor braking or even none going down a hill. You could crash. Always have the engine running and your vehicle in gear when you go downhill.

- Stay in your own lane. Do not swing wide or cut across the center of the road. Drive at speeds that let you stay in your own lane.
- Top of hills: Be alert — something could be in your lane (stalled car, accident).
- Pay attention to special road signs (falling rocks area, winding roads, long grades, passing or no-passing zones) and take appropriate action.

See *Off-Road Driving on page 4-12* for information about driving off-road.

Winter Driving

Here are some tips for winter driving:

- Have your vehicle in good shape for winter.
- You might want to put winter emergency supplies in your vehicle.

Include an ice scraper, a small brush or broom, a supply of windshield washer fluid, a rag, some winter outer clothing, a small shovel, a flashlight, a red cloth, and a couple of reflective warning triangles. And, if you will be driving under severe conditions, include a small bag of sand, a piece of old carpet, or a couple of burlap bags to help provide traction. Be sure you properly secure these items in your vehicle.

Also see *Tires on page 5-54*.

Driving on Snow or Ice

Most of the time, those places where the tires meet the road probably have good traction.

However, if there is snow or ice between the tires and the road, you can have a very slippery situation. You have a lot less traction, or grip, and need to be very careful.

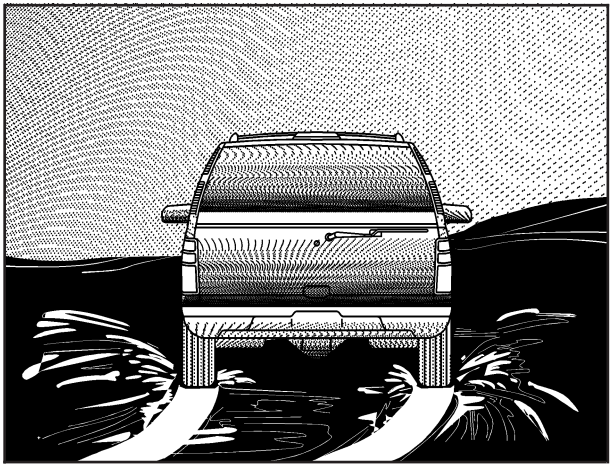

What is the worst time for this? Wet ice. Very cold snow or ice can be slick and hard to drive on. But wet ice can be even more trouble because it can offer the least traction of all. You can get wet ice when it is about freezing, 32°F (0°C), and freezing rain begins to fall. Try to avoid driving on wet ice until salt and sand crews can get there.

Whatever the condition — smooth ice, packed, blowing, or loose snow — drive with caution.

Accelerate gently. Try not to break the fragile traction. If you accelerate too fast, the drive wheels will spin and polish the surface under the tires even more.

The Antilock Brake System (ABS) improves your vehicle's stability when you make a hard stop on a slippery road. Even though you have ABS, begin stopping sooner than you would on dry pavement. See *Antilock Brake System (ABS) on page 4-4*.

- Allow greater following distance on any slippery road.
- Watch for slippery spots. The road might be fine until you hit a spot that is covered with ice. On an otherwise clear road, ice patches can appear in shaded areas where the sun cannot reach, such as around clumps of trees, behind buildings, or under bridges. Sometimes the surface of a curve or an overpass can remain icy when the surrounding roads are clear. If you see a patch of ice ahead of you, brake before you are on it. Try not to brake while you are actually on the ice, and avoid sudden steering maneuvers.

If You Are Caught in a Blizzard

If you are stopped by heavy snow, you could be in a serious situation. You should probably stay with your vehicle unless you know for sure that you are near help and you can hike through the snow. Here are some things to do to summon help and keep yourself and your passengers safe:

- Turn on the hazard warning flashers.
- Tie a red cloth to your vehicle to alert police that you have been stopped by the snow.
- Put on extra clothing or wrap a blanket around you. If you do not have blankets or extra clothing, make body insulators from newspapers, burlap bags, rags, floor mats — anything you can wrap around yourself or tuck under your clothing to keep warm.

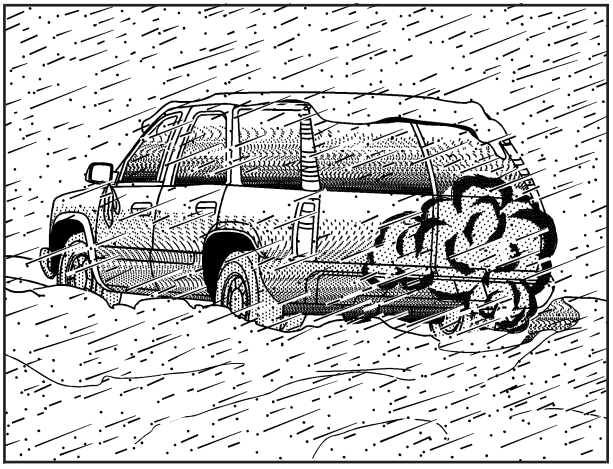

You can run the engine to keep warm, but be careful.

⚠ CAUTION:

Snow can trap exhaust gases under your vehicle. This can cause deadly CO (carbon monoxide) gas to get inside. CO could overcome you and kill you. You cannot see it or smell it, so you might not know it is in your vehicle. Clear away snow from around the base of your vehicle, especially any that is blocking the exhaust pipe. And check around again from time to time to be sure snow does not collect there.

Open a window just a little on the side of the vehicle that is away from the wind. This will help keep CO out.

Run your engine only as long as you must. This saves fuel. When you run the engine, make it go a little faster than just idle. That is, push the accelerator slightly. This uses less fuel for the heat that you get and it keeps the battery charged. You will need a well-charged battery to restart the vehicle, and possibly for signaling later on with the headlamps. Let the heater run for a while.

Then, shut the engine off and close the window almost all the way to preserve the heat. Start the engine again and repeat this only when you feel really uncomfortable from the cold. But do it as little as possible. Preserve the fuel as long as you can. To help keep warm, you can get out of the vehicle and do some fairly vigorous exercises every half hour or so until help comes.

If Your Vehicle is Stuck in Sand, Mud, Ice, or Snow

Slowly and cautiously spin the wheels to free your vehicle when stuck in sand, mud, ice, or snow. See *Rocking Your Vehicle to Get It Out on page 4-33*.

If your vehicle has a traction system, it can often help to free a stuck vehicle. Refer to your vehicle's traction system in the Index. If the stuck condition is too severe for the traction system to free the vehicle, turn the traction system off and use the rocking method.

⚠ CAUTION:

If you let your vehicle's tires spin at high speed, they can explode, and you or others could be injured. The vehicle can overheat,

CAUTION: (Continued)

CAUTION: (Continued)

causing an engine compartment fire or other damage. Spin the wheels as little as possible and avoid going above 35 mph (55 km/h) as shown on the speedometer.

For information about using tire chains on your vehicle, see *Tire Chains on page 5-76*.

Rocking Your Vehicle to Get It Out

First, turn the steering wheel left and right to clear the area around the front wheels. For vehicles with StabiliTrak®, turn the traction control part of the system off. See *StabiliTrak® System on page 4-6*. Then shift back and forth between REVERSE (R) and a forward gear, spinning the wheels as little as possible. To prevent transmission wear, wait until the wheels stop spinning before shifting gears. Release the accelerator pedal while you shift, and press lightly on the accelerator pedal when the transmission is in gear. By slowly spinning the wheels in the forward and reverse directions, you will cause a rocking motion that could free your vehicle. If that does not get your vehicle out after a few tries, it might need to be towed out. Or, you can use recovery hooks, if your vehicle has them. If your vehicle does need to be towed out, see *Towing Your Vehicle on page 4-42*.

Recovery Hooks

⚠ CAUTION:

These hooks, when used, are under a lot of force. Always pull the vehicle straight out. Never pull on the hooks at a sideways angle. The hooks could break off and you or others could be injured from the chain or cable snapping back.

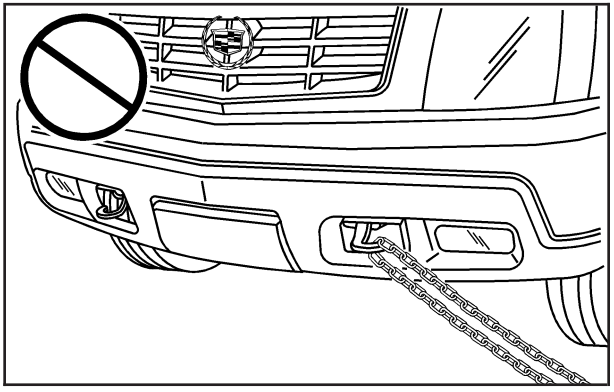

Notice: **Never use recovery hooks to tow the vehicle. Your vehicle could be damaged and it would not be covered by warranty.**

For vehicles with recovery hooks at the front of the vehicle, you can use them if you are stuck off-road and need to be pulled to some place where you can continue driving.

Loading Your Vehicle

It is very important to know how much weight your vehicle can carry. This weight is called the vehicle capacity weight and includes the weight of all occupants, cargo, and all nonfactory-installed options. Two labels on your vehicle show how much weight it was designed to carry, the Tire and Loading Information label and the Certification/ Tire label.

⚠ CAUTION:

Do not load your vehicle any heavier than the Gross Vehicle Weight Rating (GVWR), or either the maximum front or rear Gross Axle Weight Rating (GAWR). If you do, parts on your vehicle can break, and it can change the way your vehicle handles. These could cause you to lose control and crash. Also, overloading can shorten the life of your vehicle.

Tire and Loading Information Label

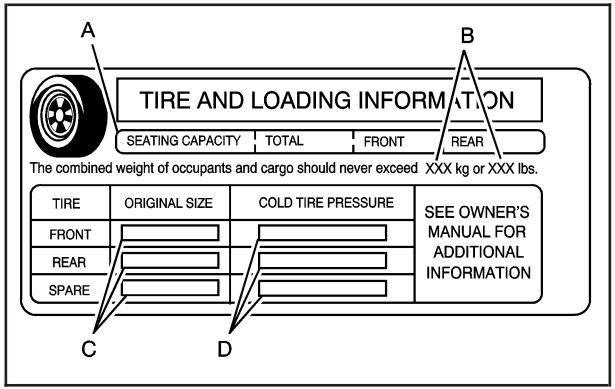

Label Example

A vehicle specific Tire and Loading Information label is attached to the center pillar (B-pillar). With the driver's door open, you will find the label attached below the door lock post (striker). The tire and loading information label shows the number of occupant seating positions (A), and the maximum vehicle capacity weight (B) in kilograms and pounds.

The Tire and Loading Information label also shows the size of the original equipment tires (C) and the recommended cold tire inflation pressures (D).

For more information on tires and inflation see *Tires on page 5-54* and *Inflation - Tire Pressure on page 5-61*.

There is also important loading information on the vehicle Certification/Tire label. It tells you the Gross Vehicle Weight Rating (GVWR) and the Gross Axle Weight Rating (GAWR) for the front and rear axles. See “Certification/Tire Label” later in this section.

Steps for Determining Correct Load Limit

1. Locate the statement “The combined weight of occupants and cargo should never exceed XXX kg or XXX lbs” on your vehicle’s placard.
2. Determine the combined weight of the driver and passengers that will be riding in your vehicle.
3. Subtract the combined weight of the driver and passengers from XXX kg or XXX lbs.
4. The resulting figure equals the available amount of cargo and luggage load capacity. For example, if the “XXX” amount equals 1400 lbs and there will be five 150 lb passengers in your vehicle, the amount of available cargo and luggage load capacity is 650 lbs (1400 – 750 (5 x 150) = 650 lbs).
5. Determine the combined weight of luggage and cargo being loaded on the vehicle. That weight may not safely exceed the available cargo and luggage load capacity calculated in Step 4.
6. If your vehicle will be towing a trailer, the load from your trailer will be transferred to your vehicle. Consult this manual to determine how this reduces the available cargo and luggage load capacity of your vehicle. See *Towing a Trailer on page 4-43* for important information on towing a trailer, towing safety rules and trailering tips.

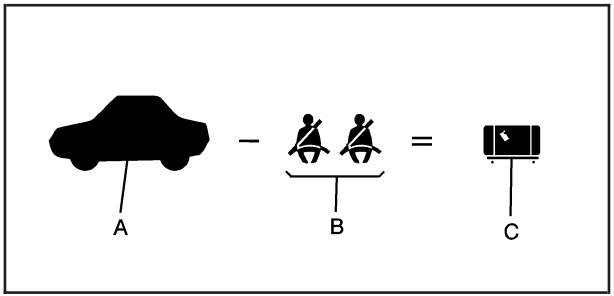

Example 1

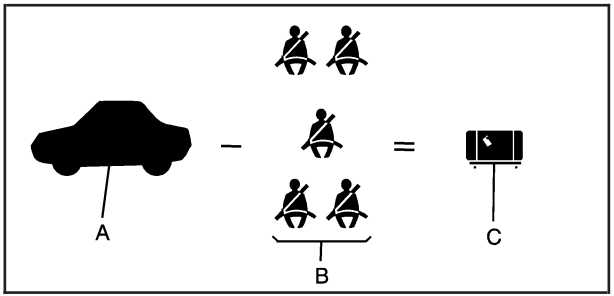

Example 2

Item	Description	Total
A	Vehicle Capacity Weight for Example 1 =	1,000 lbs (453 kg)
B	Subtract Occupant Weight 150 lbs (68 kg) × 2 =	300 lbs (136 kg)
C	Available Occupant and Cargo Weight =	700 lbs (317 kg)

Item	Description	Total
A	Vehicle Capacity Weight for Example 2 =	1,000 lbs (453 kg)
B	Subtract Occupant Weight 150 lbs (68 kg) × 5 =	750 lbs (136 kg)
C	Available Cargo Weight =	250 lbs (113 kg)

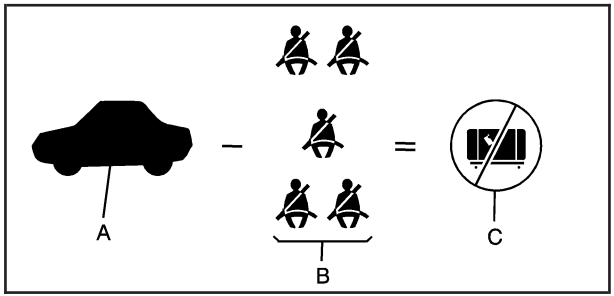

Example 3

Item	Description	Total
A	Vehicle Capacity Weight for Example 3 =	1,000 lbs (453 kg)
B	Subtract Occupant Weight 200 lbs (91 kg) × 5 =	1,000 lbs (453 kg)
C	Available Cargo Weight =	0 lbs (0 kg)

Refer to your vehicle's tire and loading information label for specific information about your vehicle's capacity weight and seating positions. The combined weight of the driver, passengers and cargo should never exceed your vehicle's capacity weight.

Certification/Tire Label

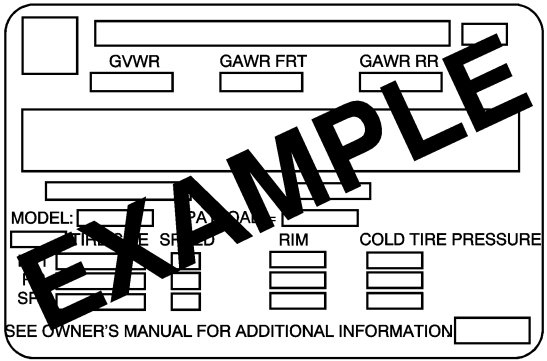

A vehicle specific Certification/Tire label is attached to the rear edge of the driver's door. The label shows the size of your vehicle's original tires and the inflation pressures needed to obtain the gross weight capacity of your vehicle. This is called Gross Vehicle Weight Rating (GVWR). The GVWR includes the weight of the vehicle, all occupants, fuel, and cargo.

The Certification/Tire label also tells you the maximum weights for the front and rear axles, called Gross Axle Weight Rating (GAWR). To find out the actual loads on your front and rear axles, you need to go to a weigh station and weigh your vehicle. Your dealer can help you with this. Be sure to spread out your load equally on both sides of the center line.

Never exceed the GVWR for your vehicle, or the GAWR for either the front or rear axle.

And, if you do have a heavy load, you should spread it out.

⚠ CAUTION:

In the case of a sudden stop or collision, things carried in the bed of your truck could shift forward and come into the passenger area, injuring you and others. If you put things in the bed of your truck, you should make sure they are properly secured.

⚠ CAUTION:

Do not load your vehicle any heavier than the Gross Vehicle Weight Rating (GVWR), or either the maximum front or rear Gross Axle Weight Rating (GAWR). If you do, parts on your vehicle can break, and it can change the way your vehicle handles. These could cause you to lose control and crash. Also, overloading can shorten the life of your vehicle.

Your warranty does not cover parts or components that fail because of overloading.

The label will help you decide how much cargo and installed equipment your truck can carry.

Using heavier suspension components to get added durability might not change your weight ratings. Ask your dealer to help you load your vehicle the right way.

If you put things inside your vehicle — like suitcases, tools, packages, or anything else — they go as fast as the vehicle goes. If you have to stop or turn quickly, or if there is a crash, they will keep going.

⚠ CAUTION:

Things you put inside your vehicle can strike and injure people in a sudden stop or turn, or in a crash.

- **Put things in the cargo area of your vehicle. Try to spread the weight evenly.**
- **Never stack heavier things, like suitcases, inside the vehicle so that some of them are above the tops of the seats.**
- **Do not leave an unsecured child restraint in your vehicle.**
- **When you carry something inside the vehicle, secure it whenever you can.**
- **Do not leave a seat folded down unless you need to.**

There is also important loading information for off-road driving in this manual. See “Loading Your Vehicle for Off-Road Driving” under *Off-Road Driving on page 4-12*.

Add-On Equipment

When you carry removable items, you may need to put a limit on how many people you can carry inside your vehicle. Be sure to weigh your vehicle before you buy and install the new equipment.

Notice: **Overloading your vehicle may cause damage. Repairs would not be covered by your warranty. Do not overload your vehicle.**

Remember not to exceed the Gross Axle Weight Rating (GAWR) of the front or rear axle.

The Cargo Weight Rating (CWR) is the maximum weight of the load your vehicle can carry. It does not include the weight of the people inside. But you can figure about 150 lbs (68 kg) for each seat.

The total cargo load must not be more than your vehicle's CWR.

Automatic Level Control

The automatic level control rear suspension comes as a part of the Road Sensing Suspension. See *Road Sensing Suspension on page 4-6*.

This type of level control is fully automatic and will provide a better leveled riding position as well as better handling under a variety of passenger and loading conditions. An air compressor connected to the rear shocks will raise or lower the rear of the vehicle to maintain proper vehicle height. The system is activated when the ignition key is turned to RUN and will automatically adjust vehicle height thereafter. The system may exhaust (lower vehicle height) for up to 10 minutes after the ignition key has been turned to LOCK. You may hear the air compressor operating when the height is being adjusted.

If a weight-distributing hitch is being used, it is recommended to allow the shocks to inflate, thereby leveling the vehicle prior to adjusting the height. See "Weight Distributing Hitches and Weight Carrying Hitches" under *Towing a Trailer on page 4-43*.

Truck-Camper Loading Information

Your vehicle was neither designed nor intended to carry a slide-in type camper.

Notice: **Adding a slide-in camper or similar equipment to your vehicle can damage it, and the repairs would not be covered by your warranty. Do not install a slide-in camper or similar equipment on your vehicle.**

Towing

Towing Your Vehicle

Consult your dealer/retailer or a professional towing service if you need to have your disabled vehicle towed. See *Roadside Service on page 7-7*.

If you want to tow your vehicle behind another vehicle for recreational purposes (such as behind a motorhome), see Recreational Vehicle Towing following.

Recreational Vehicle Towing

Recreational vehicle towing means towing your vehicle behind another vehicle — such as behind a motorhome. The two most common types of recreational vehicle towing are known as “dinghy towing” (towing your vehicle with all four wheels on the ground) and “dolly towing” (towing your vehicle with two wheels on the ground and two wheels up on a device known as a “dolly”).

Dinghy Towing and Dolly Towing

All-Wheel Drive Vehicles

Notice: **Towing an all-wheel-drive vehicle with all four wheels on the ground, or even with only two of its wheels on the ground, will damage drivetrain components. Do not tow an all-wheel-drive vehicle if any of its wheels will be on the ground.**

Your vehicle is not designed to be towed with any of the wheels on the ground. If your vehicle must be towed, see *Towing Your Vehicle on page 4-42*.

Autoride®

The Autoride® feature provides improved vehicle ride and handling under a variety of passenger and loading conditions.

The system is fully automatic and uses a computer controller to continuously monitor vehicle speed, wheel to body position, lift/dive and steering position of the vehicle. The controller then sends signals to each shock absorber to independently adjust the damping level to provide the optimum vehicle ride.

Autoride® also interacts with the tow/haul mode that, when activated, will provide additional control of the shock absorbers. This additional control results in better ride and handling characteristics when the vehicle is loaded or towing a trailer. See “Tow/Haul Mode” under *Towing a Trailer on page 4-43* for more information.

Towing a Trailer

Do not tow a trailer during break-in. See *New Vehicle Break-In on page 2-30* for more information.

⚠ CAUTION:

If you do not use the correct equipment and drive properly, you can lose control when you pull a trailer. For example, if the trailer is too heavy, the brakes may not work well — or even at all. You and your passengers could be seriously injured. You may also damage your vehicle; the resulting repairs would not be covered by your warranty. Pull a trailer only if you have followed all the steps in this section. Ask your dealer/retailer for advice and information about towing a trailer with your vehicle.

Notice: **Pulling a trailer improperly can damage your vehicle and result in costly repairs that would not be covered by your warranty. Always follow the instructions in this section and check with your dealer/retailer for more information about towing a trailer with your vehicle.**

To identify the trailering capacity of your vehicle, you should read the information in “Weight of the Trailer” that appears later in this section.

Trailering is different than just driving your vehicle by itself. Trailering means changes in handling, acceleration, braking, durability and fuel economy. Successful, safe trailering takes correct equipment, and it has to be used properly.

That’s the reason for this part. In it are many time-tested, important trailering tips and safety rules. Many of these are important for your safety and that of your passengers. So please read this section carefully before you pull a trailer.

If You Do Decide To Pull A Trailer

If you do, here are some important points:

- There are many different laws, including speed limit restrictions, having to do with trailering. Make sure your rig will be legal, not only where you live but also where you'll be driving. A good source for this information can be state or provincial police.
- Consider using a sway control. See "Hitches" later in this section.
- Don't tow a trailer at all during the first 500 miles (800 km) your new vehicle is driven. Your engine, axle or other parts could be damaged.
- Then, during the first 500 miles (800 km) that you tow a trailer, don't drive over 50 mph (80 km/h) and don't make starts at full throttle. This helps your engine and other parts of your vehicle wear in at the heavier loads.
- You can tow in DRIVE (D). You may want to shift the transmission to THIRD (3) or, if necessary, a lower gear selection if the transmission shifts too often (e.g., under heavy loads and/or hilly conditions). See "Tow/Haul Mode" following.

Three important considerations have to do with weight:

- the weight of the trailer
- the weight of the trailer tongue
- and the weight on your vehicle's tires

Tow/Haul Mode

Tow/Haul is designed to assist while your vehicle is pulling a large or heavy load or trailer. Tow/Haul is most useful while pulling such a load in rolling terrain, in stop-and-go traffic, or when you need improved low-speed control, such as when parking. The purpose of the tow/haul mode is to do the following:

- Reduce the frequency and improve the predictability of transmission shifts when pulling a heavy trailer or a large or heavy load.
- Provide the same solid shift feel when pulling a heavy trailer or a large or heavy load as when the vehicle is unloaded.
- Improve control of vehicle speed while requiring less throttle pedal activity when pulling a heavy trailer or a large or heavy load.

Tow/haul is designed to be most effective when the vehicle and trailer combined weight is at least 75 percent of the vehicle's Gross Combination Weight Rating (GCWR). See "Weight of the Trailer" later in this section.

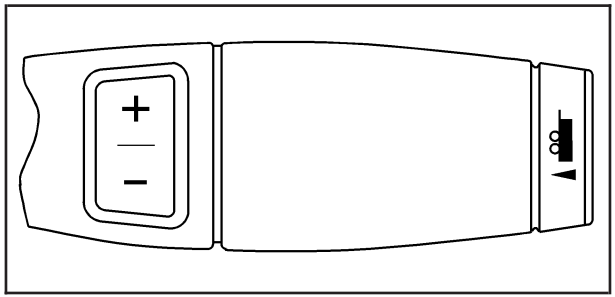

Press the button at the end of the shift lever to enable/disable the Tow/Haul mode.

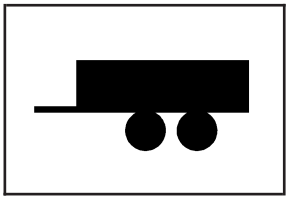

A light on the instrument panel will illuminate to indicate that Tow/Haul mode has been selected.

The vehicle will automatically turn off tow/haul every time it is started.

Operating the vehicle in Tow/Haul when lightly loaded or with no trailer at all will not cause damage. However, there is no benefit to the selection of Tow/Haul when the vehicle is unloaded. Such a selection when unloaded may result in unpleasant engine and transmission driving characteristics and reduced fuel economy. Tow/Haul is recommended only when pulling a heavy trailer or a large or heavy load.

Weight of the Trailer

How heavy can a trailer safely be?

It depends on how you plan to use your rig. For example, speed, altitude, road grades, outside temperature and how much your vehicle is used to pull a trailer are all important. It can also depend on any special equipment that you have on your vehicle, and the amount of tongue weight the vehicle can carry. See “Weight of the Trailer Tongue” later in this section for more information.

Maximum trailer weight is calculated assuming only the driver is in the tow vehicle and it has all the required trailering equipment. The weight of additional optional equipment, passengers and cargo in the tow vehicle must be subtracted from the maximum trailer weight.

Use the following chart to determine how much your vehicle can weigh, based upon your vehicle model and options.

Notice: **Using a fifth-wheel or goose-neck hitch device on your vehicle could damage the vehicle. The repairs would not be covered by your warranty. Do not use a fifth-wheel or goose-neck hitch device on your vehicle.**

Vehicle	Axle Ratio	Maximum Trailer Weight	*GCWR
AWD 6.2L	3.42	7,400 lbs (3 357 kg)	14,000 lbs (6 350 kg)
*The Gross Combination Weight Rating (GCWR) in the total allowable weight of the completely loaded vehicle and trailer including any passengers, cargo, equipment and conversions. The GCWR for your vehicle should not be exceeded.			

Ask your dealer for our trailering information or advice, or write us at our Customer Assistance Offices. See *Customer Assistance Offices on page 7-5* for more information.

Weight of the Trailer Tongue

The tongue load (A) of any trailer is an important weight to measure because it affects the total or gross weight of your vehicle. The Gross Vehicle Weight (GVW) includes the curb weight of the vehicle, any cargo you may carry in it, and the people who will be riding in the vehicle. If you have a lot of options, equipment, passengers or cargo in your vehicle, it will reduce the tongue weight your vehicle can carry, which will also reduce the trailer weight your vehicle can tow. And if you will tow a trailer, you must add the tongue load to the GVW because your vehicle will be carrying that weight, too. See *Loading Your Vehicle on page 4-35* for more information about your vehicle's maximum load capacity.

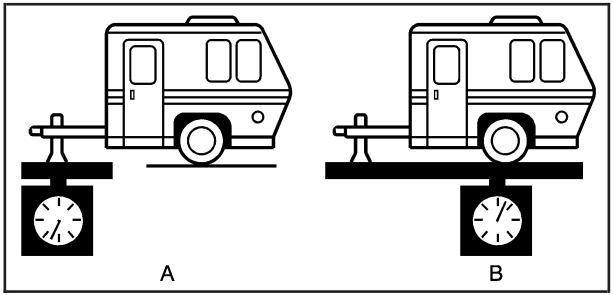

The trailer tongue weight (A) should be 10 percent to 15 percent of the total loaded trailer weight (B), up to a maximum of 600 lbs (272 kg) with a weight carrying hitch. The trailer tongue weight (A) should be 10 percent to 15 percent of the total loaded trailer weight (B), up to the maximum of 1,000 lbs (454 kg) with a weight distributing hitch.

Do not exceed the maximum allowable tongue weight for your vehicle. Choose the shortest hitch extension that will position the hitch ball closest to the vehicle. This will help reduce the effect of trailer tongue weight on the rear axle.

After you've loaded your trailer, weigh the trailer and then the tongue, separately, to see if the weights are proper. If they aren't, you may be able to get them right simply by moving some items around in the trailer.

Trailering may be limited by the vehicle's ability to carry tongue weight. Tongue weight cannot cause the vehicle to exceed the GVWR (Gross Vehicle Weight Rating) or the RGAWR (Rear Gross Axle Weight Rating). The effect of additional weight may reduce your trailering capacity more than the total of the additional weight.

Consider the following example:

A vehicle model base weight is 5,500 lbs (2 495 kg); 2,800 lbs (1 270 kg) at the front axle and 2,700 lbs (1 225 kg) at the rear axle. It has a GVWR of 7,200 lbs (3 266 kg), a RGAWR of 4,000 lbs (1 814 kg) and a GCWR (Gross Combination Weight Rating) of 14,000 lbs (6 350 kg). The trailer rating should be:

14,000 lbs (6350 kg)	GCWR
–5,500 lbs (2495 kg)	Vehicle Weight
8,500 lbs (3855 kg)	Trailer Rating

You can expect tongue weight to be at least 10 percent of trailer weight (850 lbs (386 kg)) and because the weight is applied well behind the rear axle, the effect on the rear axle will be greater than just the weight itself, as much as 1.5 times as much. The weight at the rear axle could be 850 lbs (386 kg) X 1.5 = 1,275 lbs (578 kg). Since the rear axle already weighs 2,700 lbs (1 225 kg), adding 1,275 lbs (578 kg) brings the total to 3,975 lbs (1 803 kg). This is very close to, but within the limit for RGAWR as well. The vehicle is set to trailer up to 8,500 lbs (3 856 kg).

But let's say your specific vehicle is equipped with some of the latest options and you have a front seat passenger and two rear seat passengers with some luggage and gear in the vehicle as well. You may add 300 lbs (136 kg) to the front axle weight and 400 lbs (181 kg) to the rear axle weight. Your vehicle now weighs:

2,800 lbs (1270 kg)	+	300 lbs (136 kg)	Front
2,700 lbs (1225 kg)	+	400 lbs (181 kg)	Rear
6,200 lbs (2812 kg)			Total

Weight is still below 7,200 lbs (3 266 kg) and you may think that you should subtract 700 additional pounds (318 kg) from your trailering capacity to stay within GCWR limits. Your maximum trailer would only be 7,800 lbs (3 538 kg). You may go further and think you must limit tongue weight to less than 1,000 lbs (454 kg) to avoid exceeding GVWR. But, you must still consider the effect on the rear axle. Because your rear axle now weighs 3,100 lbs (1 406 kg), you can only put 900 lbs (408 kg) on the rear axle without exceeding RGAWR. The effect of tongue weight is about 1.5 times the actual weight. Dividing the 900 lbs (408 kg) by 1.5 leaves you with being able to handle only 600 lbs (272 kg) of tongue weight. Since tongue weight is usually at least 10 percent of total loaded trailer weight, you can expect that the largest trailer your vehicle can properly handle is 6,000 lbs (2 721 kg).

It is important that you make sure your vehicle does not exceed any of its ratings — GCWR, GVWR, RGAWR, Maximum Trailer Rating or Tongue Weight. The only way to be sure you are not exceeding any of these ratings is to weigh your vehicle and trailer.

Total Weight on Your Vehicle's Tires

Be sure your vehicle's tires are inflated to the upper limit for cold tires. You'll find these numbers on the Certification label at the rear edge of the driver's door or see *Loading Your Vehicle on page 4-35*. Then be sure you do not go over the GVW limit for your vehicle, or the GAWR, including the weight of the trailer tongue. If you use a weight distributing hitch, make sure you don't go over the rear axle limit before you apply the weight distribution spring bars.

Hitches

It's important to have the correct hitch equipment. Crosswinds, large trucks going by and rough roads are a few reasons why you'll need the right hitch.

Weight-Distributing Hitches and Weight Carrying Hitches

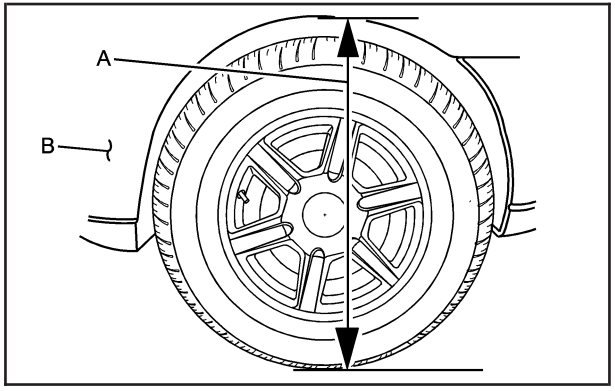

(A) Body-to-Ground Distance (B) Front of Vehicle

When using a weight-distributing hitch, the hitch must be adjusted so that the distance (A) remains the same both before and after coupling the trailer to the tow vehicle.

If you'll be pulling a trailer that, when loaded, will weigh more than 5,000 lbs (2 270 kg) be sure to use a properly mounted weight-distributing hitch and sway control of the proper size. This equipment is very important for proper vehicle loading and good handling when driving. You should always use a sway control if your trailer will weigh more than these limits. You can ask a hitch dealer about sway controls.

Safety Chains

You should always attach chains between your vehicle and your trailer. Cross the safety chains under the tongue of the trailer to help prevent the tongue from contacting the road if it becomes separated from the hitch. Always leave just enough slack so you can turn with your rig. Never allow safety chains to drag on the ground.

Trailer Brakes

If your trailer weighs more than 2,000 lbs (900 kg) loaded, then it needs its own brakes – and they must be adequate. Be sure to read and follow the instructions for the trailer brakes so you'll be able to install, adjust and maintain them properly.

Driving with a Trailer

Towing a trailer requires a certain amount of experience. Before setting out for the open road, you'll want to get to know your rig. Acquaint yourself with the feel of handling and braking with the added weight of the trailer. And always keep in mind that the vehicle you are driving is now a good deal longer and not nearly as responsive as your vehicle is by itself.

Before you start, check all trailer hitch parts and attachments, safety chains, electrical connector, lamps, tires and mirror adjustment. If the trailer has electric brakes, start your vehicle and trailer moving and then apply the trailer brake controller by hand to be sure the brakes are working. This lets you check your electrical connection at the same time.

During your trip, check occasionally to be sure that the load is secure, and that the lamps and any trailer brakes are still working.

Following Distance

Stay at least twice as far behind the vehicle ahead as you would when driving your vehicle without a trailer. This can help you avoid situations that require heavy braking and sudden turns.

Passing

You'll need more passing distance up ahead when you're towing a trailer. And, because you're a good deal longer, you'll need to go much farther beyond the passed vehicle before you can return to your lane.

Backing Up

Hold the bottom of the steering wheel with one hand. Then, to move the trailer to the left, just move that hand to the left. To move the trailer to the right, move your hand to the right. Always back up slowly and, if possible, have someone guide you.

Making Turns

Notice: **Making very sharp turns while trailering could cause the trailer to come in contact with the vehicle. Your vehicle could be damaged. Avoid making very sharp turns while trailering.**

When you're turning with a trailer, make wider turns than normal. Do this so your trailer won't strike soft shoulders, curbs, road signs, trees or other objects. Avoid jerky or sudden maneuvers. Signal well in advance.

Turn Signals When Towing a Trailer

The arrows on your instrument panel will flash whenever you signal a turn or lane change. Properly hooked up, the trailer lamps will also flash, telling other drivers you're about to turn, change lanes or stop.

When towing a trailer, the arrows on your instrument panel will flash for turns even if the bulbs on the trailer are burned out. Thus, you may think drivers behind you are seeing your signal when they are not. It's important to check occasionally to be sure the trailer bulbs are still working.

Driving On Grades

Reduce speed and shift to a lower gear *before* you start down a long or steep downgrade. If you don't shift down, you might have to use your brakes so much that they would get hot and no longer work well.

You can tow in DRIVE (D). You may want to shift the transmission to THIRD (3) or, if necessary, a lower gear selection if the transmission shifts too often (e.g., under heavy loads and/or hilly conditions).

You may also want to activate the tow/haul mode if the transmission shifts too often. See "Tow/Haul Mode" earlier.

When towing at high altitude on steep uphill grades, consider the following: Engine coolant at higher altitudes will boil at a lower temperature than at or near sea level. If you turn your engine off immediately after towing at high altitude on steep uphill grades, your vehicle may show signs similar to engine overheating. To avoid this, let the engine run while parked (preferably on level ground) with the automatic transmission in PARK (P) for a few minutes before turning the engine off. If you do get the overheat warning, see *Engine Overheating on page 5-26*.

Parking on Hills

⚠ CAUTION:

You really should not park your vehicle, with a trailer attached, on a hill. If something goes wrong, your rig could start to move. People can be injured, and both your vehicle and the trailer can be damaged.

But if you ever have to park your rig on a hill, here's how to do it:

1. Apply your regular brakes, but don't shift into PARK (P) yet.
2. Have someone place chocks under the trailer wheels.
3. When the wheel chocks are in place, release the regular brakes until the chocks absorb the load.
4. Reapply the regular brakes. Then apply your parking brake and shift into PARK (P).
5. Release the regular brakes.

When You Are Ready to Leave After Parking on a Hill

1. Apply your regular brakes and hold the pedal down while you:
   - start your engine,
   - shift into a gear, and
   - release the parking brake.
2. Let up on the brake pedal.
3. Drive slowly until the trailer is clear of the chocks.
4. Stop and have someone pick up and store the chocks.

Maintenance When Trailer Towing

Your vehicle will need service more often when you're pulling a trailer. See the Maintenance Schedule for more on this. Things that are especially important in trailer operation are automatic transmission fluid (don't overfill or underfill), engine oil, axle lubricant, belts, cooling system and brake system. Each of these is covered in this manual, and the Index will help you find them quickly. If you're trailering, it's a good idea to review these sections before you start your trip.

Check periodically to see that all hitch nuts and bolts are tight.

Trailer Wiring Harness

Heavy-Duty Trailer Wiring Package

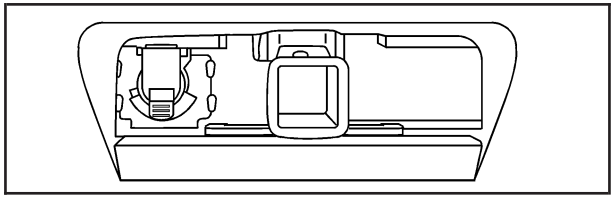

Your vehicle is equipped with the seven-wire trailer towing harness. This harness with a seven-pin universal heavy-duty trailer connector is attached to the rear bumper beam. It is located next to the integrated trailer hitch.

The seven-wire harness contains the following trailer circuits:

- Yellow: Left Stop/Turn Signal
- Dark Green: Right Stop/Turn Signal
- Brown: Taillamps
- White: Ground
- Light Green: Back-up Lamps
- Red w/ Black Stripe: Battery Feed*
- Dark Blue: Trailer Brake*

*The fuses for these two circuits are installed in the underhood electrical center, but the wires are not connected. They should be connected by your dealer or a qualified service technician.

If you are charging a remote (non-vehicle) battery, press the tow/haul mode button located at the end of the shift lever. This will boost the vehicle system voltage and properly charge the battery.

Electric Brake Control Wiring Provisions

These wiring provisions are included with your vehicle as part of the heavy-duty trailer wiring package. These provisions are for an electric brake controller. The red/black stripe power feed will not be connected to the battery until the ring terminal is unstowed and connected to the underhood electrical center. The instrument panel contains blunt cut wires near the data link connector for the trailer brake controller. The harness contains the following wires:

- Dark Blue: Auxiliary
- Red/Black: Battery
- Light Blue/White: Brake Switch
- White: Ground

It should be installed by your dealer or a qualified service center.

Trailer Recommendations

You must subtract your hitch loads from the Cargo Weight Rating (CWR). CWR is the maximum weight of the load your vehicle can carry. It doesn't include the weight of the people inside, but you can figure about 150 lbs. (68 kg) for each seat. The total cargo load must not be more than your vehicles CWR.

Weigh your vehicle with your trailer attached, so that you won't go over the GVWR or GAWR. If you are using a weight-distributing hitch, weigh the vehicle without the spring bars in place.

You'll get the best performance if you spread out the weight of your load the right way, and if you choose the correct hitch and trailer brakes.

For more information see *Towing a Trailer on page 4-43*.

NOTES

Section 5 Service and Appearance Care

Service 5-3
Accessories and Modifications 5-3
California Proposition 65 Warning 5-4
California Perchlorate Materials Requirements 5-4
Doing Your Own Service Work 5-4
Adding Equipment to the Outside of Your Vehicle 5-5

Fuel 5-5
Gasoline Octane 5-5
Gasoline Specifications 5-6
California Fuel 5-6
Additives 5-6
Fuels in Foreign Countries 5-7
Filling the Tank 5-8
Filling a Portable Fuel Container 5-10

Checking Things Under the Hood 5-10
Hood Release 5-11
Engine Compartment Overview 5-12
Engine Oil 5-13
Engine Oil Life System 5-16
Engine Air Cleaner/Filter 5-17
Automatic Transmission Fluid 5-20
Engine Coolant 5-23
Coolant Surge Tank Pressure Cap 5-26
Engine Overheating 5-26
Overheated Engine Protection Operating Mode 5-28
Cooling System 5-29
Engine Fan Noise 5-33
Power Steering Fluid 5-34
Windshield Washer Fluid 5-35
Brakes 5-36
Battery 5-39
Jump Starting 5-40

All-Wheel Drive 5-45

Rear Axle 5-46

Front Axle 5-47

Headlamp Aiming 5-48

Bulb Replacement 5-51
High Intensity Discharge (HID) Lighting 5-51
Taillamps, Turn Signal, Sidemarker, Stoplamps and Back-up Lamps 5-51
License Plate Lamp 5-52
Replacement Bulbs 5-53

Windshield Wiper Blade Replacement 5-53

Tires 5-54
Tire Sidewall Labeling 5-55
Tire Terminology and Definitions 5-58
Inflation - Tire Pressure 5-61
High-Speed Operation 5-62
Tire Pressure Monitor System 5-63
Tire Pressure Monitor Operation 5-64

Section 5 Service and Appearance Care

Tire Inspection and Rotation 5-68
When It Is Time for New Tires 5-70
Buying New Tires 5-71
Different Size Tires and Wheels 5-72
Uniform Tire Quality Grading 5-73
Wheel Alignment and Tire Balance 5-74
Wheel Replacement 5-75
Tire Chains 5-76
If a Tire Goes Flat 5-77
Changing a Flat Tire 5-78
Removing the Spare Tire and Tools 5-79
Removing the Flat Tire and Installing the Spare Tire 5-84
Secondary Latch System 5-90
Storing a Flat or Spare Tire and Tools 5-94
Spare Tire 5-97

Appearance Care 5-97
Interior Cleaning 5-97
Fabric/Carpet 5-99
Leather 5-99
Instrument Panel, Vinyl, and Other Plastic Surfaces 5-100
Wood Panels 5-100
Speaker Covers 5-100
Care of Safety Belts 5-100
Weatherstrips 5-100
Washing Your Vehicle 5-101
Cleaning Exterior Lamps/Lenses 5-101
Finish Care 5-101
Windshield and Wiper Blades 5-102
Aluminum or Chrome-Plated Wheels and Trim 5-103
Tires 5-104
Sheet Metal Damage 5-104
Finish Damage 5-104
Underbody Maintenance 5-104
Chemical Paint Spotting 5-104
Vehicle Care/Appearance Materials 5-105

Vehicle Identification 5-106
Vehicle Identification Number (VIN) 5-106
Service Parts Identification Label 5-106

Electrical System 5-107
Add-On Electrical Equipment 5-107
Windshield Wiper Fuses 5-107
Power Windows and Other Power Options 5-107
Fuses and Circuit Breakers 5-107
Instrument Panel Fuse Block 5-108
Center Instrument Panel Fuse Block 5-110
Underhood Fuse Block 5-111

Capacities and Specifications 5-115

Service

For service and parts needs, visit your dealer/retailer. You will receive genuine GM parts and GM-trained and supported service people.

Genuine GM parts have one of these marks:

Accessories and Modifications

When non-dealer/non-retailer accessories are added to your vehicle they can affect your vehicle's performance and safety, including such things as, airbags, braking, stability, ride and handling, emissions systems, aerodynamics, durability, and electronic systems like antilock brakes, traction control and stability control. Some of these accessories could even cause malfunction or damage not covered by warranty.

GM Accessories are designed to complement and function with other systems on your vehicle. Your GM dealer/retailer can accessorize your vehicle using genuine GM Accessories. When you go to your GM dealer/retailer and ask for GM Accessories, you will know that GM-trained and supported service technicians will perform the work using genuine GM Accessories.

Also, see *Adding Equipment to Your Airbag-Equipped Vehicle on page 1-70*.

California Proposition 65 Warning

Most motor vehicles, including this one, contain and/or emit chemicals known to the State of California to cause cancer and birth defects or other reproductive harm. Engine exhaust, many parts and systems (including some inside the vehicle), many fluids, and some component wear by-products contain and/or emit these chemicals.

California Perchlorate Materials Requirements

Certain types of automotive applications, such as airbag initiators, seat belt pretensioners, and lithium batteries contained in remote keyless entry transmitters, may contain perchlorate materials. Special handling may be necessary. For additional information, see www.dtsc.ca.gov/hazardouswaste/perchlorate.

Doing Your Own Service Work

⚠ CAUTION:

You can be injured and your vehicle could be damaged if you try to do service work on a vehicle without knowing enough about it.

- **Be sure you have sufficient knowledge, experience, the proper replacement parts, and tools before you attempt any vehicle maintenance task.**
- **Be sure to use the proper nuts, bolts, and other fasteners. English and metric fasteners can be easily confused. If you use the wrong fasteners, parts can later break or fall off. You could be hurt.**

If you want to do some of your own service work, you should use the proper service manual. It tells you much more about how to service your vehicle than this manual can. To order the proper service manual, see *Service Publications Ordering Information on page 7-15*.

Your vehicle has an airbag system. Before attempting to do your own service work, see *Servicing Your Airbag-Equipped Vehicle on page 1-70*.

You should keep a record with all parts receipts and list the mileage and the date of any service work you perform. See *Maintenance Record on page 6-17*.

Adding Equipment to the Outside of Your Vehicle

Things you might add to the outside of your vehicle can affect the airflow around it. This can cause wind noise and can affect fuel economy and windshield washer performance. Check with your dealer/retailer before adding equipment to the outside of your vehicle.

Fuel

Use of the recommended fuel is an important part of the proper maintenance of your vehicle. To help keep the engine clean and maintain optimum vehicle performance, we recommend the use of gasoline advertised as TOP TIER Detergent Gasoline.

Gasoline Octane

Use premium unleaded gasoline with a posted octane rating of 91 or higher. You can also use regular unleaded gasoline rated at 87 octane or higher, but your vehicle's acceleration could be slightly reduced, and you might notice a slight audible knocking noise, commonly referred to as spark knock. If the octane is less than 87, you might notice a heavy knocking noise when you drive. If this occurs, use a gasoline rated at 87 octane or higher as soon as possible. Otherwise, you could damage the engine. If you are using gasoline rated at 87 octane or higher and you hear heavy knocking, the engine needs service.

Gasoline Specifications

At a minimum, gasoline should meet ASTM specification D 4814 in the United States or CAN/CGSB-3.5 or 3.511 in Canada. Some gasolines contain an octane-enhancing additive called methylcyclopentadienyl manganese tricarbonyl (MMT). We recommend against the use of gasolines containing MMT. See *Additives on page 5-6* for additional information.

California Fuel

If your vehicle is certified to meet California Emissions Standards, it is designed to operate on fuels that meet California specifications. See the underhood emission control label. If this fuel is not available in states adopting California emissions standards, your vehicle will operate satisfactorily on fuels meeting federal specifications, but emission control system performance might be affected.

The malfunction indicator lamp could turn on and your vehicle might fail a smog-check test. See *Malfunction Indicator Lamp on page 3-40*. If this occurs, return to your authorized dealer/retailer for diagnosis. If it is determined that the condition is caused by the type of fuel used, repairs might not be covered by your warranty.

Additives

To provide cleaner air, all gasolines in the United States are now required to contain additives that help prevent engine and fuel system deposits from forming, allowing the emission control system to work properly. In most cases, you should not have to add anything to the fuel. However, some gasolines contain only the minimum amount of additive required to meet U.S. Environmental Protection Agency regulations. To help keep fuel injectors and intake valves clean, or if your vehicle experiences problems due to dirty injectors or valves, look for gasoline that is advertised as TOP TIER Detergent Gasoline. Also, your dealer/retailer has additives that will help correct and prevent most deposit-related problems.

Gasolines containing oxygenates, such as ethers and ethanol, and reformulated gasolines might be available in your area. We recommend that you use these gasolines, if they comply with the specifications described earlier. However, E85 (85% ethanol) and other fuels containing more than 10% ethanol must not be used in vehicles that were not designed for those fuels.

Notice: **Your vehicle was not designed for fuel that contains methanol. Do not use fuel containing methanol. It can corrode metal parts in the fuel system and also damage plastic and rubber parts. That damage would not be covered under your warranty.**

Some gasolines that are not reformulated for low emissions can contain an octane-enhancing additive called methylcyclopentadienyl manganese tricarbonyl (MMT); ask the attendant where you buy gasoline whether the fuel contains MMT. We recommend against the use of such gasolines. Fuels containing MMT can reduce the life of spark plugs and the performance of the emission control system could be affected. The malfunction indicator lamp might turn on. If this occurs, return to your dealer/retailer for service.

Fuels in Foreign Countries

If you plan on driving in another country outside the United States or Canada, the proper fuel might be hard to find. Never use leaded gasoline or any other fuel not recommended in the previous text on fuel. Costly repairs caused by use of improper fuel would not be covered by your warranty.

To check the fuel availability, ask an auto club, or contact a major oil company that does business in the country where you will be driving.

Filling the Tank

⚠ CAUTION:

Fuel vapor burns violently and a fuel fire can cause bad injuries. To help avoid injuries to you and others, read and follow all the instructions on the pump island. Turn off your engine when you are refueling. Do not smoke if you are near fuel or refueling your vehicle. Do not use cellular phones. Keep sparks, flames, and smoking materials away from fuel. Do not leave the fuel pump unattended when refueling your vehicle. This is against the law in some places. Do not re-enter the vehicle while pumping fuel. Keep children away from the fuel pump; never let children pump fuel.

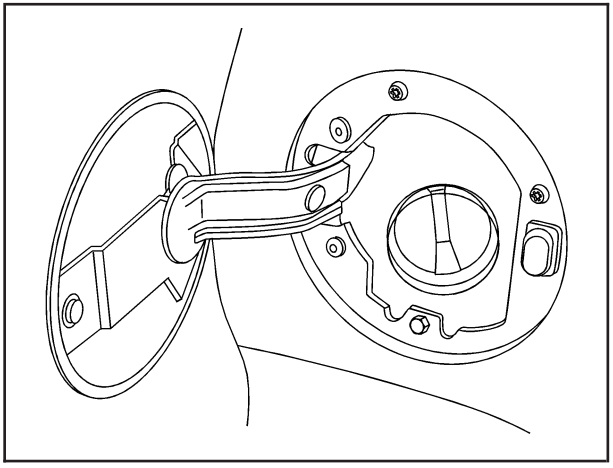

The tethered fuel cap is located behind a hinged fuel door on the driver's side of the vehicle.

To remove the fuel cap, turn it slowly counterclockwise. It will require more effort to turn the fuel cap on the last turn as you loosen it.

⚠ CAUTION:

Fuel can spray out on you if you open the fuel cap too quickly. If you spill fuel and then something ignites it, you could be badly burned. This spray can happen if your tank is nearly full, and is more likely in hot weather. Open the fuel cap slowly and wait for any hiss noise to stop. Then unscrew the cap all the way.

Be careful not to spill fuel. Do not top off or overfill the tank and wait a few seconds after you have finished pumping before removing the nozzle. Clean fuel from painted surfaces as soon as possible. See *Washing Your Vehicle on page 5-101*.

When replacing the fuel cap, insert the tether in its hole before tightening the cap. Turn the fuel cap clockwise until it clicks. It will require more effort to turn the fuel cap on the last turn as you tighten it. Make sure the cap is fully installed. The diagnostic system can determine if the fuel cap has been left off or improperly installed. This would allow fuel to evaporate into the atmosphere. See *Malfunction Indicator Lamp on page 3-40*.

The TIGHTEN GAS CAP message will be displayed on the Driver Information Center (DIC) if the fuel cap is not properly installed. See *DIC Warnings and Messages on page 3-50* for more information.

⚠ CAUTION:

If a fire starts while you are refueling, do not remove the nozzle. Shut off the flow of fuel by shutting off the pump or by notifying the station attendant. Leave the area immediately.

Notice: **If you need a new fuel cap, be sure to get the right type. Your dealer/retailer can get one for you. If you get the wrong type, it may not fit properly. This may cause your malfunction indicator lamp to light and may damage your fuel tank and emissions system. See *Malfunction Indicator Lamp on page 3-40*.**

Filling a Portable Fuel Container

⚠ CAUTION:

Never fill a portable fuel container while it is in your vehicle. Static electricity discharge from the container can ignite the fuel vapor. You can be badly burned and your vehicle damaged if this occurs. To help avoid injury to you and others:

- **Dispense fuel only into approved containers.**
- **Do not fill a container while it is inside a vehicle, in a vehicle's trunk, pickup bed, or on any surface other than the ground.**
- **Bring the fill nozzle in contact with the inside of the fill opening before operating the nozzle. Contact should be maintained until the filling is complete.**
- **Do not smoke while pumping fuel.**
- **Do not use a cellular phone while pumping fuel.**

Checking Things Under the Hood

⚠ CAUTION:

An electric fan under the hood can start up and injure you even when the engine is not running. Keep hands, clothing, and tools away from any underhood electric fan.

⚠ CAUTION:

Things that burn can get on hot engine parts and start a fire. These include liquids like fuel, oil, coolant, brake fluid, windshield washer and other fluids, and plastic or rubber. You or others could be burned. Be careful not to drop or spill things that will burn onto a hot engine.

Hood Release

To open the hood do the following:

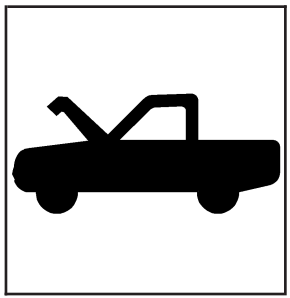

1. Pull the handle with this symbol on it. It is located inside the vehicle to the lower left of the steering wheel.

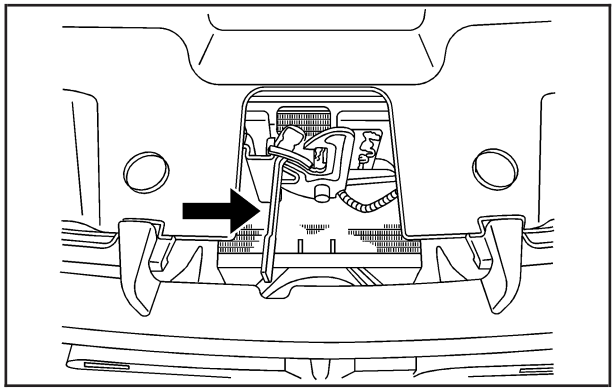

2. Then go to the front of the vehicle and locate the secondary hood release, near the center of the grille.
3. Push the secondary hood release to the right.
4. Lift the hood.

   Before closing the hood, be sure all the filler caps are on properly. Then bring the hood from full open to within 6 inches (152 mm) from the closed position, pause, then push the front center of the hood with a swift, firm motion to fully close the hood.

Engine Compartment Overview

When you open the hood on the 6.2L engine this is what you will see:

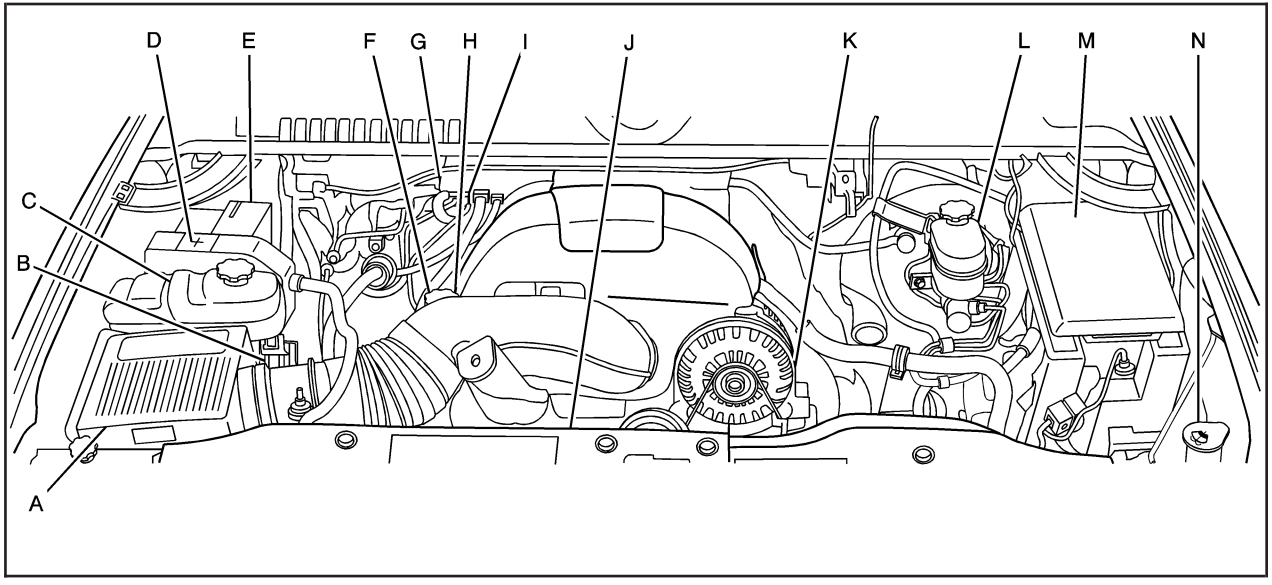

A. Engine Air Cleaner/Filter. See *Engine Air Cleaner/Filter on page 5-17*.

B. Air Filter Restriction Indicator (If Equipped). See *Engine Air Cleaner/Filter on page 5-17*.

C. Coolant Surge Tank and Pressure Cap. See *Cooling System on page 5-29* and *Coolant Surge Tank Pressure Cap on page 5-26*.

D. Remote Positive (+) Terminal. See *Jump Starting on page 5-40*.

E. Battery. See *Battery on page 5-39*.

F. Engine Oil Fill Cap. See “When to Add Engine Oil” under *Engine Oil on page 5-13*.

G. Automatic Transmission Dipstick (Out of View). See “Checking the Fluid Level” under *Automatic Transmission Fluid on page 5-20*.

H. Remote Negative (–) Terminal (GND) (Out of View). See *Jump Starting on page 5-40*.

I. Engine Oil Dipstick (Out of View). See “Checking Engine Oil” under *Engine Oil on page 5-13*.

J. Engine Cooling Fan (Out of View). See *Cooling System on page 5-29*.

K. Power Steering Fluid Reservoir (Out of View). See *Power Steering Fluid on page 5-34*.

L. Brake Master Cylinder Reservoir. See “Brake Fluid” under *Brakes on page 5-36*.

M. Underhood Fuse Block. See *Underhood Fuse Block on page 5-111*.

N. Windshield Washer Fluid Reservoir. See “Adding Washer Fluid” under *Windshield Washer Fluid on page 5-35*.

Engine Oil

Checking Engine Oil

It is a good idea to check the engine oil every time you get fuel. In order to get an accurate reading, the oil must be warm and the vehicle must be on level ground.

The engine oil dipstick handle is a yellow loop. See *Engine Compartment Overview on page 5-12* for the location of the engine oil dipstick.

1. Turn off the engine and give the oil several minutes to drain back into the oil pan. If you do not do this, the oil dipstick might not show the actual level.
2. Pull out the dipstick and clean it with a paper towel or cloth, then push it back in all the way. Remove it again, keeping the tip down, and check the level.

When to Add Engine Oil

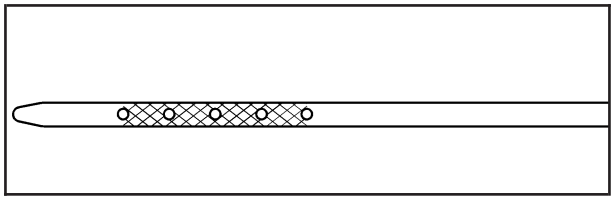

If the oil is below the cross-hatched area at the tip of the dipstick, add at least one quart/liter of the recommended oil. This section explains what kind of oil to use. For engine oil crankcase capacity, see *Capacities and Specifications on page 5-115*.

Notice: **Do not add too much oil. If the engine has so much oil that the oil level gets above the cross-hatched area that shows the proper operating range, the engine could be damaged.**

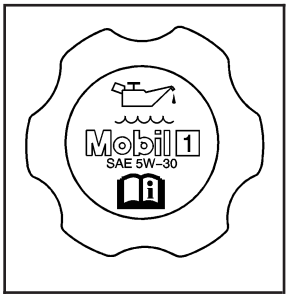

See *Engine Compartment Overview on page 5-12* for the location of the engine oil fill cap.

Be sure to add enough oil to put the level somewhere in the proper operating range. Push the dipstick all the way back in when you are through.

What Kind of Engine Oil to Use

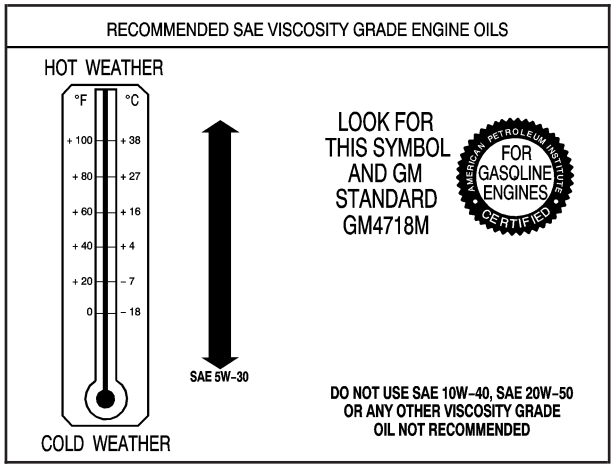

Look for three things:

- GM4718M

  Your vehicle's engine requires a special oil meeting GM Standard GM4718M. Oils meeting this standard may be identified as synthetic. However, not all synthetic oils will meet this GM standard. Look for and use only an oil that meets GM Standard GM4718M.

Notice: **If you use oils that do not have the GM4718M Standard designation, you can cause engine damage not covered by your warranty.**

- SAE 5W-30

  As shown in the viscosity chart, SAE 5W-30 is best for your vehicle.

  These numbers on an oil container show its viscosity, or thickness. Do not use other viscosity oils such as SAE 20W-50.

- Oils meeting these requirements should have the starburst symbol on the container. This symbol indicates that the oil has been certified by the American Petroleum Institute (API).

Look for this on the oil container, and use only those oils that are identified as meeting GM Standard GM4718M and have the starburst symbol on the front of the oil container.

Your vehicle's engine is filled at the factory with a Mobil 1® synthetic oil, which meets all requirements for your vehicle.

Substitute Engine Oil: When adding oil to maintain engine oil level, oil meeting GM Standard GM4718M may not be available. You can add substitute oil designated SAE 5W-30 with the starburst symbol at all temperatures. Substitute oil not meeting GM Standard GM4718M should not be used for an oil change.

Engine Oil Additives

Do not add anything to the oil. The recommended oils with the starburst symbol that meet GM standards are all you need for good performance and engine protection.

Engine Oil Life System

When to Change Engine Oil

Your vehicle has a computer system that lets you know when to change the engine oil and filter. This is based on engine revolutions and engine temperature, and not on mileage. Based on driving conditions, the mileage at which an oil change will be indicated can vary considerably. For the oil life system to work properly, you must reset the system every time the oil is changed.

When the system has calculated that oil life has been diminished, it will indicate that an oil change is necessary. A CHANGE ENGINE OIL SOON message will come on. See *DIC Warnings and Messages on page 3-50*. Change the oil as soon as possible within the next 600 miles (1 000 km). It is possible that, if you are driving under the best conditions, the oil life system might not indicate that an oil change is necessary for over a year. However, the engine oil and filter must be changed at least once a year and at this time the system must be reset. Your dealer/retailer has trained service people who will perform this work using genuine parts and reset the system. It is also important to check the oil regularly and keep it at the proper level.

If the system is ever reset accidentally, you must change the oil at 3,000 miles (5 000 km) since your last oil change. Remember to reset the oil life system whenever the oil is changed.

How to Reset the Engine Oil Life System

The Engine Oil Life System calculates when to change the engine oil and filter based on vehicle use. Whenever the oil is changed, reset the system so it can calculate when the next oil change is required. If a situation occurs where you change the oil prior to a CHANGE ENGINE OIL SOON message being turned on, reset the system.

Always reset the engine oil life to 100% after every oil change. It will not reset itself. To reset the Engine Oil Life System:

1. Display the OIL LIFE REMAINING on the DIC.
2. Press and hold the SET/RESET button on the DIC for more than five seconds. The oil life will change to 100%.

If the CHANGE ENGINE OIL SOON message comes back on when you start your vehicle, the Engine Oil Life System has not reset. Repeat the procedure.

What to Do with Used Oil

Used engine oil contains certain elements that can be unhealthy for your skin and could even cause cancer. Do not let used oil stay on your skin for very long. Clean your skin and nails with soap and water, or a good hand cleaner. Wash or properly dispose of clothing or rags containing used engine oil. See the manufacturer's warnings about the use and disposal of oil products.

Used oil can be a threat to the environment. If you change your own oil, be sure to drain all the oil from the filter before disposal. Never dispose of oil by putting it in the trash, pouring it on the ground, into sewers, or into streams or bodies of water. Instead, recycle it by taking it to a place that collects used oil. If you have a problem properly disposing of used oil, ask your dealer/retailer, a service station, or a local recycling center for help.

Engine Air Cleaner/Filter

See *Engine Compartment Overview on page 5-12* for the location of the engine air cleaner/filter and the air filter restriction indicator, if the vehicle has one.

When to Inspect the Engine Air Cleaner/Filter

If your vehicle has an air filter restriction indicator, it lets you know when the engine air cleaner/filter needs to be replaced. On vehicles with a restriction indicator, you should inspect the air filter restriction indicator at every oil change and replace the engine air cleaner/filter when the indicator tells you to.

On vehicles without an air filter restriction indicator, inspect the air cleaner/filter at the Maintenance II intervals and replace it at the first oil change after each 50,000 mile (80 000 km) interval. See *Scheduled Maintenance on page 6-4* for more information. If you are driving in dusty/dirty conditions, inspect the filter at each engine oil change.

How to Inspect the Engine Air Cleaner/Filter

Vehicles With an Air Filter Restriction Indicator

Locate the air filter restriction indicator on the engine air cleaner/filter cover. When the indicator turns black or is in the red/orange “change” zone, replace the filter and reset the indicator. See the steps following to replace the engine air cleaner/filter and to reset the air filter restriction indicator.

Vehicles Without an Air Filter Restriction Indicator

To inspect the air cleaner/filter, remove the engine air cleaner/filter from the vehicle by following Steps 1 through 6. When you have the engine air cleaner/filter removed, lightly shake it to release loose dust and dirt. If the engine air cleaner/filter remains caked with dirt, a new filter is required.

Replacing the Engine Air Cleaner/Filter and Resetting the Air Filter Restriction Indicator

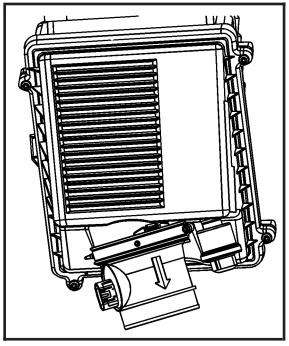

1. Locate the air cleaner/filter assembly. See *Engine Compartment Overview on page 5-12*.

2. Loosen the four screws on the cover of the housing and lift up the cover.

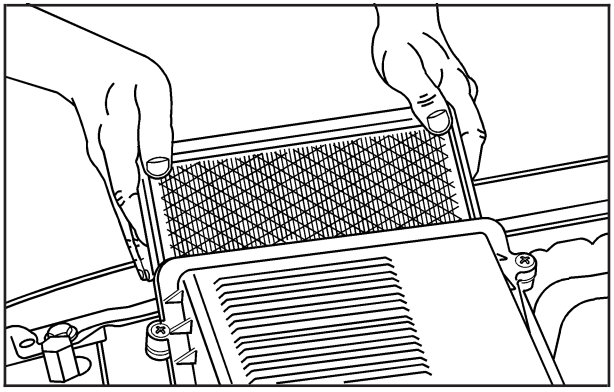

3. Remove the engine air cleaner/filter from the housing. Care should be taken to dislodge as little dirt as possible.
4. Clean the engine air cleaner/filter sealing surfaces and the housing.
5. Inspect or replace the engine air cleaner/filter.
6. Reinstall the cover and tighten the screws.
7. Reset the air filter restriction indicator, if the vehicle has one, by pressing the top button on the indicator.

⚠ CAUTION:

Operating the engine with the air cleaner/filter off can cause you or others to be burned. The air cleaner not only cleans the air; it helps to stop flames if the engine backfires. If it is not there and the engine backfires, you could be burned. Do not drive with it off, and be careful working on the engine with the air cleaner/filter off.

Automatic Transmission Fluid

When to Check and Change Automatic Transmission Fluid

It is usually not necessary to check the transmission fluid level. The only reason for fluid loss is a transmission leak or overheating the transmission. If you suspect a small leak, then use the following checking procedures to check the fluid level. However, if there is a large leak, then it may be necessary to have the vehicle towed to a dealer/retailer service department and have it repaired before driving the vehicle further.

Notice: **Use of the incorrect automatic transmission fluid may damage your vehicle, and the damages may not be covered by your warranty. Always use the automatic transmission fluid listed in *Recommended Fluids and Lubricants on page 6-13*.**

Change the fluid and filter at the intervals listed in the Maintenance Schedule. See *Scheduled Maintenance on page 6-4*. Be sure to use the transmission fluid listed in *Recommended Fluids and Lubricants on page 6-13*.

How to Check Automatic Transmission Fluid

Notice: **Too much or too little fluid can damage your transmission. Too much can mean that some of the fluid could come out and fall on hot engine parts or exhaust system parts, starting a fire. Too little fluid could cause the transmission to overheat. Be sure to get an accurate reading if you check your transmission fluid.**

Before checking the fluid level, prepare your vehicle as follows:

1. Start the engine and park your vehicle on a level surface. Keep the engine running.
2. Apply the parking brake and place the shift lever in PARK (P).
3. With your foot on the brake pedal, move the shift lever through each gear range, pausing for about three seconds in each range. Then, move the shift lever back to PARK (P).
4. Allow the engine to idle (500 – 800 rpm) for at least one minute. Slowly release the brake pedal.

5. Keep the engine running and press the Trip/Fuel button or trip odometer reset stem until TRANS TEMP (Transmission Temperature) displays on the Driver Information Center (DIC).
6. Using the TRANS TEMP reading, determine and perform the appropriate check procedure. If the TRANS TEMP reading is not within the required temperature ranges, allow the vehicle to cool, or operate the vehicle until the appropriate transmission fluid temperature is reached.

Cold Check Procedure

Use this procedure only as a reference to determine if the transmission has enough fluid to be operated safely until a hot check procedure can be made. The hot check procedure is the most accurate method to check the fluid level. Perform the hot check procedure at the first opportunity. Use this cold check procedure to check fluid level when the transmission temperature is between 80°F and 90°F (27°C and 32°C).

1. Locate the transmission dipstick at the rear of the engine compartment, on the passenger side of the vehicle.

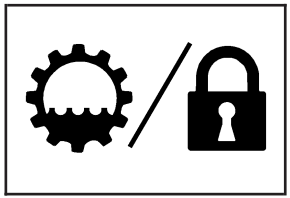

The dipstick handle has this graphic. See *Engine Compartment Overview on page 5-12* for more information.

2. Flip the handle up, and then pull out the dipstick and wipe it with a clean rag or paper towel.
3. Install the dipstick by pushing it back in all the way, wait three seconds, and then pull it back out again.
4. Check both sides of the dipstick, and read the lower level. Repeat the check procedure to verify the reading.

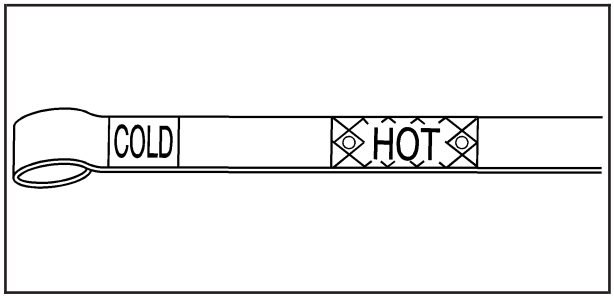

5. If the fluid level is below the COLD check band, add only enough fluid as necessary to bring the level into the COLD band. It does not take much fluid, generally less than one pint (0.5L). Do not overfill.
6. Perform a hot check at the first opportunity after the transmission reaches a normal operating temperature between 160°F to 200°F (71°C to 93°C).
7. If the fluid level is in the acceptable range, push the dipstick back in all the way, then flip the handle down to lock the dipstick in place.

Hot Check Procedure

Use this procedure to check the transmission fluid level when the transmission fluid temperature is between 160°F and 200°F (71°C and 93°C).

The hot check is the most accurate method to check the fluid level. The hot check should be performed at the first opportunity in order to verify the cold check. The fluid level rises as fluid temperature increases, so it is important to ensure the transmission temperature is within range.

1. Locate the transmission dipstick at the rear of the engine compartment, on the passenger side of the vehicle.

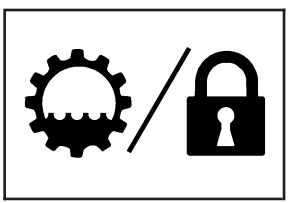

The dipstick handle has this graphic. See *Engine Compartment Overview on page 5-12* for more information.

2. Flip the handle up, and then pull out the dipstick and wipe it with a clean rag or paper towel.
3. Install the dipstick by pushing it back in all the way, wait three seconds, and then pull it back out again.

4. Check both sides of the dipstick, and read the lower level. Repeat the check procedure to verify the reading.

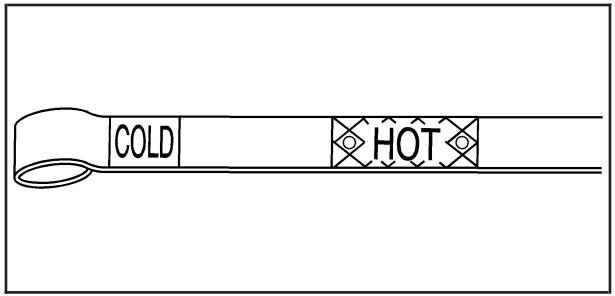

5. Safe operating level is within the HOT cross hatch band on the dipstick. If the fluid level is not within the HOT band, and the transmission temperature is between 160°F and 200°F (71°C and 93°C), add or drain fluid as necessary to bring the level into the HOT band. If the fluid level is low, add only enough fluid to bring the level into the HOT band. It does not take much fluid, generally less than one pint (0.5L). Do not overfill.
6. If the fluid level is in the acceptable range, push the dipstick back in all the way, then flip the handle down to lock the dipstick in place.

Consistency of Readings

Always check the fluid level at least twice using the procedures described. Consistency (repeatable readings) is important to maintaining proper fluid level. If fluid is added, it may take 15 minutes or longer to obtain an accurate reading because of residual fluid draining down the dipstick tube. If inconsistent readings persist, check the transmission breather to be sure it is clean and not clogged. If readings are still inconsistent, contact your dealer/retailer.

Engine Coolant

The cooling system in your vehicle is filled with DEX-COOL® engine coolant. This coolant is designed to remain in your vehicle for five years or 150,000 miles (240 000 km), whichever occurs first, if you add only DEX-COOL® extended life coolant.

The following explains your cooling system and how to add coolant when it is low. If you have a problem with engine overheating, see *Engine Overheating on page 5-26*.

A 50/50 mixture of clean, drinkable water and DEX-COOL® coolant will:

- Give freezing protection down to –34°F (–37°C).
- Give boiling protection up to 265°F (129°C).
- Protect against rust and corrosion.
- Help keep the proper engine temperature.
- Let the warning lights and gages work as they should.

Notice: **Using coolant other than DEX-COOL® may cause premature engine, heater core, or radiator corrosion. In addition, the engine coolant may require changing sooner, at the first maintenance service after each 30,000 miles (50 000 km) or 24 months, whichever occurs first. Any repairs would not be covered by your warranty. Always use DEX-COOL® (silicate-free) coolant in your vehicle.**

What to Use

Use a mixture of one-half clean, drinkable water and one-half DEX-COOL® coolant which will not damage aluminum parts. If you use this coolant mixture, you do not need to add anything else.

⚠ CAUTION:

Adding only plain water to your cooling system can be dangerous. Plain water, or some other liquid such as alcohol, can boil before the proper coolant mixture will. Your vehicle's coolant warning system is set for the proper coolant mixture. With plain water or the wrong mixture, your engine could get too hot but you would not get the overheat warning. Your engine could catch fire and you or others could be burned. Use a 50/50 mixture of clean, drinkable water and DEX-COOL® coolant.

Notice: **If you use an improper coolant mixture, your engine could overheat and be badly damaged. The repair cost would not be covered by your warranty. Too much water in the mixture can freeze and crack the engine, radiator, heater core, and other parts.**

If you have to add coolant more than four times a year, have your dealer/retailer check your cooling system.

Notice: **If you use extra inhibitors and/or additives in your vehicle's cooling system, you could damage your vehicle. Use only the proper mixture of the engine coolant listed in this manual for the cooling system. See *Recommended Fluids and Lubricants on page 6-13* for more information.**

Checking Coolant

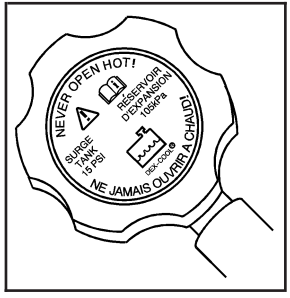

The coolant surge tank is located in the engine compartment on the passenger's side of the vehicle. See *Engine Compartment Overview on page 5-12* for more information on location.

⚠ CAUTION:

Turning the surge tank pressure cap when the engine and radiator are hot can allow steam and scalding liquids to blow out and burn you badly. Never turn the surge tank pressure cap — even a little — when the engine and radiator are hot.

The vehicle must be on a level surface. When your engine is cold, the coolant level should be at the FULL COLD mark.

Adding Coolant

If more coolant is needed, add the proper DEX-COOL® coolant mixture at the surge tank, but only when the engine is cool.

⚠ CAUTION:

You can be burned if you spill coolant on hot engine parts. Coolant contains ethylene glycol, and it will burn if the engine parts are hot enough. Do not spill coolant on a hot engine.

When replacing the pressure cap, make sure it is hand-tight and fully seated.

Coolant Surge Tank Pressure Cap

Notice: **If the pressure cap is not tightly installed, coolant loss and possible engine damage may occur. Be sure the cap is properly and tightly secured.**

The coolant surge tank pressure cap must be fully installed on the coolant surge tank. See *Engine Compartment Overview on page 5-12* for more information on location.

Engine Overheating

There is a coolant temperature gage on your vehicle's instrument panel. See *Engine Coolant Temperature Gage on page 3-39*.

In addition, ENGINE OVERHEATED STOP ENGINE, ENGINE OVERHEATED IDLE ENGINE, and a ENGINE POWER IS REDUCED message comes on in the Driver Information Center (DIC) on the instrument panel. See *DIC Warnings and Messages on page 3-50*.

If Steam Is Coming From Your Engine

⚠ CAUTION:

Steam from an overheated engine can burn you badly, even if you just open the hood. Stay away from the engine if you see or hear steam coming from it. Turn it off and get everyone away from the vehicle until it cools down. Wait until there is no sign of steam or coolant before you open the hood.

If you keep driving when the vehicles engine is overheated, the liquids in it can catch fire. You or others could be badly burned. Stop your engine if it overheats, and get out of the vehicle until the engine is cool.

See *Overheated Engine Protection Operating Mode on page 5-28* for information on driving to a safe place in an emergency.

Notice: **If your engine catches fire because you keep driving with no coolant, your vehicle can be badly damaged. The costly repairs would not be covered by your warranty. See *Overheated Engine Protection Operating Mode on page 5-28* for information on driving to a safe place in an emergency.**

If No Steam Is Coming From Your Engine

The ENGINE OVERHEATED STOP ENGINE or the ENGINE OVERHEATED IDLE ENGINE message, along with a low coolant condition, can indicate a serious problem.

If you get an engine overheat warning, but see or hear no steam, the problem may not be too serious. Sometimes the engine can get a little too hot when you:

- Climb a long hill on a hot day.
- Stop after high-speed driving.
- Idle for long periods in traffic.
- Tow a trailer. See *Towing a Trailer on page 4-43*.

If you get the ENGINE OVERHEATED STOP ENGINE or the ENGINE OVERHEATED IDLE ENGINE message with no sign of steam, try this for a minute or so:

1. If the vehicle has an air conditioner and it is on, turn it off.
2. Turn on the heater to the highest temperature and at the highest fan speed and open the windows as necessary.
3. In heavy traffic, let the engine idle in NEUTRAL (N) while stopped. If it is safe to do so, pull off the road, shift to PARK (P) or NEUTRAL (N) and let the engine idle.

If you no longer have the overheat warning, you can drive. Just to be safe, drive slower for about 10 minutes. If the warning does not come back on, you can drive normally.

If the warning continues, pull over, stop, and park your vehicle immediately.

If there is still no sign of steam and your vehicle has an engine-driven cooling fan, push down the accelerator until the engine speed is about twice as fast as normal idle speed for at least five minutes while parked.

If there is still no sign of steam and your vehicle has an electric cooling fan, idle the engine for five minutes while parked.

If you still have the warning, turn off the engine and get everyone out of the vehicle until it cools down. Also, see “Overheated Engine Protection Operating Mode” later in this section.

You might decide not to lift the hood but to get service help right away.

Overheated Engine Protection Operating Mode

If an overheated engine condition exists and the ENGINE POWER IS REDUCED message is displayed, an overheat protection mode which alternates firing groups of cylinders helps prevent engine damage. In this mode, you will notice a loss in power and engine performance. This operating mode allows your vehicle to be driven to a safe place in an emergency. Driving extended miles (km) and/or towing a trailer in the overheat protection mode should be avoided.

Notice: **After driving in the overheated engine protection operating mode, to avoid engine damage, allow the engine to cool before attempting any repair. The engine oil will be severely degraded. Repair the cause of coolant loss, change the oil and reset the oil life system. See *Engine Oil on page 5-13*.**

Cooling System

When you decide it is safe to lift the hood, here is what you will see:

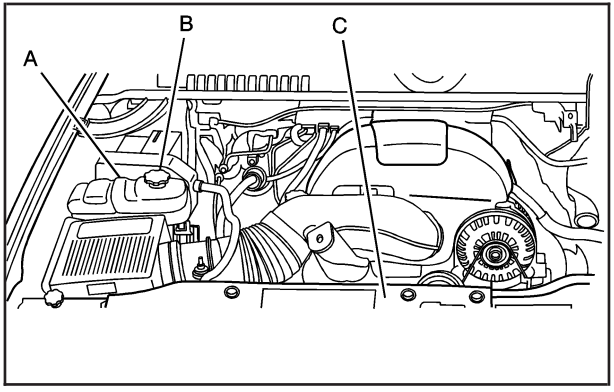

A. Coolant Surge Tank
B. Coolant Surge Tank Pressure Cap
C. Engine Cooling Fan

⚠ CAUTION:

An electric engine cooling fan under the hood can start up even when the engine is not running and can injure you. Keep hands, clothing, and tools away from any underhood electric fan.

If the coolant inside the coolant surge tank is boiling, do not do anything else until it cools down. The vehicle should be parked on a level surface. Check the coolant level after the system cools down. Some amount of coolant may be lost due to overheating.

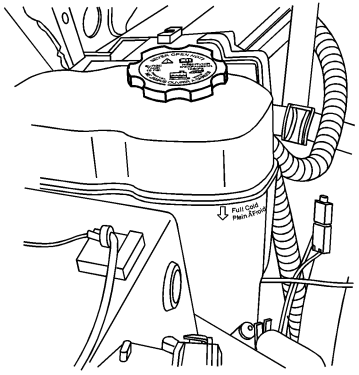

The coolant level should be at or above the FULL COLD mark. If it is not, you may have a leak at the pressure cap or in the radiator hoses, heater hoses, radiator, water pump, or somewhere else in the cooling system.

⚠ CAUTION:

Heater and radiator hoses, and other engine parts, can be very hot. Do not touch them. If you do, you can be burned.

Do not run the engine if there is a leak. If you run the engine, it could lose all coolant. That could cause an engine fire, and you could be burned. Get any leak fixed before you drive the vehicle.

Notice: **Engine damage from running your engine without coolant is not covered by your warranty. See *Overheated Engine Protection Operating Mode on page 5-28* for information on driving to a safe place in an emergency.**

Notice: **Using coolant other than DEX-COOL® may cause premature engine, heater core, or radiator corrosion. In addition, the engine coolant could require changing sooner, at 30,000 miles (50 000 km) or 24 months, whichever occurs first. Any repairs would not be covered by the warranty. Always use DEX-COOL® (silicate-free) coolant in the vehicle.**

How to Add Coolant to the Coolant Surge Tank

If you have not found a problem yet, check to see if coolant is visible in the surge tank. If coolant is visible but the coolant level is not at or above the FULL COLD mark, add a 50/50 mixture of clean, drinkable water and DEX-COOL® coolant at the coolant surge tank, but be sure the cooling system, including the coolant surge tank pressure cap, is cool before you do it. See *Engine Coolant on page 5-23* for more information.

If no coolant is visible in the surge tank, add coolant as follows:

⚠ CAUTION:

Steam and scalding liquids from a hot cooling system can blow out and burn you badly. They are under pressure, and if you turn the radiator pressure cap — even a little — they can come out at high speed. Never turn the cap when the cooling system, including the radiator pressure cap, is hot. Wait for the cooling system and radiator pressure cap to cool if you ever have to turn the pressure cap.

⚠ CAUTION:

Adding only plain water to the cooling system can be dangerous. Plain water, or some other liquid such as alcohol, can boil before the proper coolant mixture will. The vehicle's coolant warning system is set for the proper coolant mixture. With plain water or the wrong mixture, the engine could get too hot but you would not get the overheat warning. The engine could catch fire and you or others could be burned. Use a 50/50 mixture of clean, drinkable water and DEX-COOL® coolant.

Notice: **In cold weather, water can freeze and crack the engine, radiator, heater core and other parts. Use the recommended coolant and the proper coolant mixture.**

⚠ CAUTION:

You can be burned if you spill coolant on hot engine parts. Coolant contains ethylene glycol and it will burn if the engine parts are hot enough. Do not spill coolant on a hot engine.

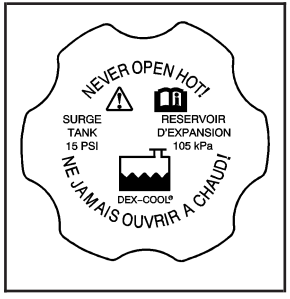

1. You can remove the coolant surge tank pressure cap when the cooling system, including the coolant surge tank pressure cap and upper radiator hose, is no longer hot.

   Remove the coolant surge tank pressure cap by slowly turning the pressure cap counterclockwise about one full turn. If you hear a hiss, wait for that to stop. A hiss means there is still some pressure left.

2. Then keep turning the pressure cap slowly, and remove it.

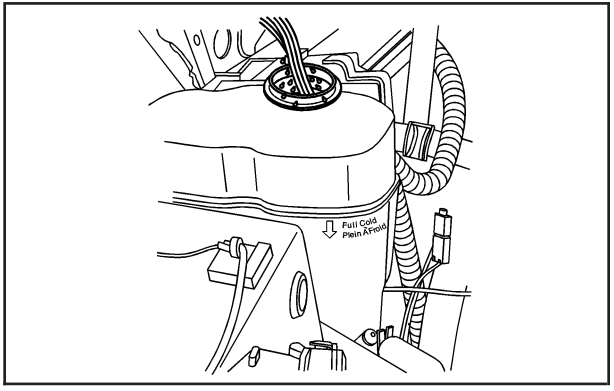

3. Fill the coolant surge tank with the proper mixture, to the FULL COLD mark.

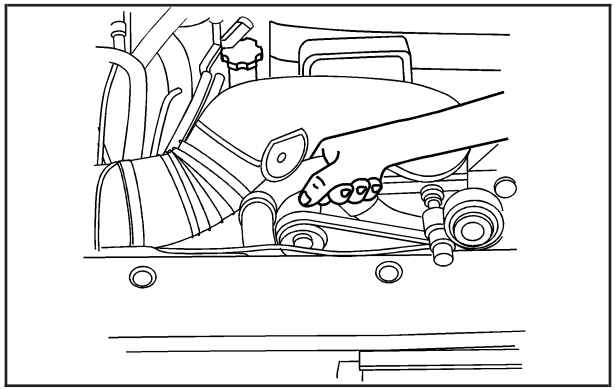

4. With the coolant surge tank pressure cap off, start the engine and let it run until you can feel the upper radiator hose getting hot. Watch out for the engine cooling fan.

   By this time, the coolant level inside the coolant surge tank may be lower. If the level is lower, add more of the proper mixture to the coolant surge tank until the level reaches the FULL COLD mark.

5. Then replace the pressure cap. Be sure the pressure cap is hand-tight and fully seated.
6. Verify coolant level after engine is shut off and the coolant is cold. If necessary, repeat coolant fill procedure Steps 1 through 6.

Engine Fan Noise

Your vehicle has electric cooling fans. You might hear the fans spinning at low speed during most everyday driving. The fans can turn off if no cooling is required. Under heavy vehicle loading, trailer towing, and/or high outside temperatures, or if you are operating the air conditioning system, the fans can change to high speed and you might hear an increase in fan noise. This is normal and indicates that the cooling system is functioning properly. The fans change to low speed when additional cooling is no longer required.

Power Steering Fluid

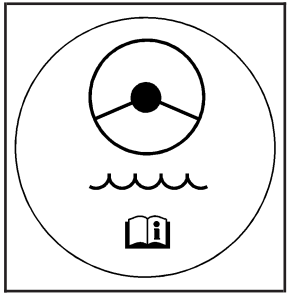

See *Engine Compartment Overview on page 5-12* for reservoir location.

When to Check Power Steering Fluid

It is not necessary to regularly check power steering fluid unless you suspect there is a leak in the system or you hear an unusual noise. A fluid loss in this system could indicate a problem. Have the system inspected and repaired.

How to Check Power Steering Fluid

To check the power steering fluid, do the following:

1. Turn the key off and let the engine compartment cool down.
2. Wipe the cap and the top of the reservoir clean.
3. Unscrew the cap and wipe the dipstick with a clean rag.
4. Replace the cap and completely tighten it.
5. Remove the cap again and look at the fluid level on the dipstick.

The level should be at the FULL COLD mark.
If necessary, add only enough fluid to bring the level up to the mark.

What to Use

To determine what kind of fluid to use, see *Recommended Fluids and Lubricants on page 6-13*. Always use the proper fluid.

Notice: **Use of the incorrect fluid may damage your vehicle and the damages may not be covered by your warranty. Always use the correct fluid listed in *Recommended Fluids and Lubricants on page 6-13*.**

Windshield Washer Fluid

What to Use

When windshield washer fluid needs to be added, be sure to read the manufacturer's instructions before use. Use a fluid that has sufficient protection against freezing in an area where the temperature may fall below freezing.

Adding Washer Fluid

Your vehicle has a low washer fluid message in the DIC that comes on when the washer fluid is low. The message is displayed for 15 seconds at the start of each ignition cycle. When the WASHER FLUID LOW ADD FLUID message displays, you will need to add washer fluid to the windshield washer fluid reservoir.

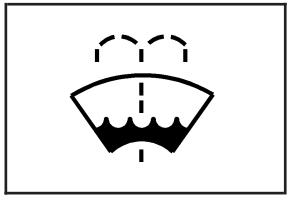

Open the cap with the washer symbol on it. Add washer fluid until the tank is full. See *Engine Compartment Overview on page 5-12* for reservoir location.

Notice:

- **When using concentrated washer fluid, follow the manufacturer's instructions for adding water.**
- **Do not mix water with ready-to-use washer fluid. Water can cause the solution to freeze and damage your washer fluid tank and other parts of the washer system. Also, water does not clean as well as washer fluid.**
- **Fill the washer fluid tank only three-quarters full when it is very cold. This allows for fluid expansion if freezing occurs, which could damage the tank if it is completely full.**
- **Do not use engine coolant (antifreeze) in your windshield washer. It can damage the vehicle's windshield washer system and paint.**

Brakes

Brake Fluid

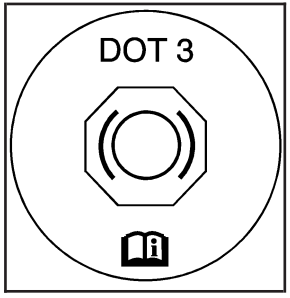

The brake master cylinder reservoir is filled with DOT-3 brake fluid. See *Engine Compartment Overview on page 5-12* for the location of the reservoir.

There are only two reasons why the brake fluid level in the reservoir might go down. The first is that the brake fluid goes down to an acceptable level during normal brake lining wear. When new linings are put in, the fluid level goes back up. The other reason is that fluid is leaking out of the brake hydraulic system. If it is, you should have the brake hydraulic system fixed, since a leak means that sooner or later the brakes will not work well.

It is not a good idea to top off the brake fluid. Adding brake fluid will not correct a leak. If fluid is added when the linings are worn, there will be too much fluid when new brake linings are installed. Add or remove brake fluid, as necessary, only when work is done on the brake hydraulic system.

⚠ CAUTION:

If you have too much brake fluid, it can spill on the engine. The fluid will burn if the engine is hot enough. You or others could be burned, and your vehicle could be damaged. Add brake fluid only when work is done on the brake hydraulic system. See “Checking Brake Fluid” in this section.

When the brake fluid falls to a low level, the brake warning light will come on. See *Brake System Warning Light on page 3-36*.

Refer to the Maintenance Schedule to determine when to check the brake fluid. See *Scheduled Maintenance on page 6-4*.

Checking Brake Fluid

The brake fluid can be checked without taking off the cap by looking at the brake fluid reservoir.

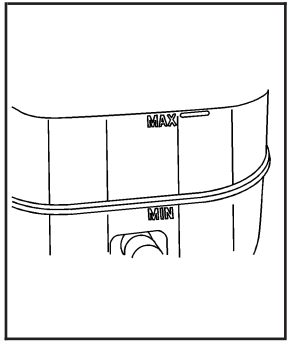

The fluid level should be above MIN. If it is not, have the brake hydraulic system checked to see if there is a leak.

After work is done on the brake hydraulic system, make sure the level is above the MIN but not over the MAX mark.

What to Add

When you do need brake fluid, use only DOT-3 brake fluid. Use new brake fluid from a sealed container only. See *Recommended Fluids and Lubricants on page 6-13*.

Always clean the brake fluid reservoir cap and the area around the cap before removing it. This helps keep dirt from entering the reservoir.

⚠ CAUTION:

With the wrong kind of fluid in the brake hydraulic system, the brakes might not work well. This could cause a crash. Always use the proper brake fluid.

Notice:

- **Using the wrong fluid can badly damage brake hydraulic system parts. For example, just a few drops of mineral-based oil, such as engine oil, in the brake hydraulic system can damage brake hydraulic system parts so badly that they will have to be replaced. Do not let someone put in the wrong kind of fluid.**
- **If you spill brake fluid on your vehicle's painted surfaces, the paint finish can be damaged. Be careful not to spill brake fluid on your vehicle. If you do, wash it off immediately. See *Washing Your Vehicle on page 5-101*.**

Brake Wear

Your vehicle has disc brakes. Disc brake pads have built-in wear indicators that make a high-pitched warning sound when the brake pads are worn and new pads are needed. The sound can come and go or be heard all the time your vehicle is moving, except when you are pushing on the brake pedal firmly.

⚠ CAUTION:

The brake wear warning sound means that soon the brakes will not work well. That could lead to an accident. When you hear the brake wear warning sound, have your vehicle serviced.

Notice: **Continuing to drive with worn-out brake pads could result in costly brake repair.**

Some driving conditions or climates can cause a brake squeal when the brakes are first applied or lightly applied. This does not mean something is wrong with the brakes.

Properly torqued wheel nuts are necessary to help prevent brake pulsation. When tires are rotated, inspect brake pads for wear and evenly tighten wheel nuts in the proper sequence to torque specifications in *Capacities and Specifications on page 5-115*.

Brake linings should always be replaced as complete axle sets.

Brake Pedal Travel

See your dealer/retailer if the brake pedal does not return to normal height, or if there is a rapid increase in pedal travel. This could be a sign that brake service might be required.

Brake Adjustment

Every time you make a brake stop, the disc brakes adjust for wear.

Replacing Brake System Parts

The braking system on a vehicle is complex. Its many parts have to be of top quality and work well together if the vehicle is to have really good braking. Your vehicle was designed and tested with top-quality brake parts. When you replace parts of the braking system — for example, when the brake linings wear down and you need new ones put in — be sure you get new approved replacement parts. If you do not, the brakes might not work properly. For example, if someone puts in brake linings that are wrong for your vehicle, the balance between the front and rear brakes can change — for the worse. The braking performance you have come to expect can change in many other ways if someone puts in the wrong replacement brake parts.

Battery

Your vehicle has a maintenance free battery. When it is time for a new battery, see your dealer/retailer for one that has the replacement number shown on the original battery's label. See *Engine Compartment Overview on page 5-12* for battery location.

Warning: Battery posts, terminals, and related accessories contain lead and lead compounds, chemicals known to the State of California to cause cancer and reproductive harm. Wash hands after handling.

Vehicle Storage

⚠ CAUTION:

Batteries have acid that can burn you and gas that can explode. You can be badly hurt if you are not careful. See *Jump Starting on page 5-40* for tips on working around a battery without getting hurt.

Infrequent Usage: If you drive your vehicle infrequently, remove the black, negative (–) cable from the battery. This will help keep the battery from running down.

Extended Storage: For extended storage of your vehicle, remove the black, negative (–) cable from the battery or use a battery trickle charger. This will help maintain the charge of the battery over an extended period of time.

Jump Starting

If your vehicle's battery (or batteries) has run down, you may want to use another vehicle and some jumper cables to start your vehicle. Be sure to use the following steps to do it safely.

⚠ CAUTION:

Batteries can hurt you. They can be dangerous because:

- **They contain acid that can burn you.**
- **They contain gas that can explode or ignite.**
- **They contain enough electricity to burn you.**

If you do not follow these steps exactly, some or all of these things can hurt you.

Notice: **Ignoring these steps could result in costly damage to your vehicle that would not be covered by your warranty.**

Trying to start your vehicle by pushing or pulling it will not work, and it could damage your vehicle.

1. Check the other vehicle. It must have a 12-volt battery with a negative ground system.

Notice: **If the other vehicle's system is not a 12-volt system with a negative ground, both vehicles can be damaged. Only use vehicles with 12-volt systems with negative grounds to jump start your vehicle.**

2. Get the vehicles close enough so the jumper cables can reach, but be sure the vehicles are not touching each other. If they are, it could cause a ground connection you do not want. You would not be able to start your vehicle, and the bad grounding could damage the electrical systems.

   To avoid the possibility of the vehicles rolling, set the parking brake firmly on both vehicles involved in the jump start procedure. Put the automatic transmission in PARK (P) or a manual transmission in NEUTRAL before setting the parking brake. If you have a four-wheel-drive vehicle, be sure the transfer case is in a drive gear, not in NEUTRAL.

Notice: **If you leave your radio or other accessories on during the jump starting procedure, they could be damaged. The repairs would not be covered by your warranty. Always turn off your radio and other accessories when jump starting your vehicle.**

3. Turn off the ignition on both vehicles. Unplug unnecessary accessories plugged into the cigarette lighter or the accessory power outlets. Turn off the radio and all the lamps that are not needed. This avoids sparks and helps save both batteries. And it could save the radio!

4. Open the hood on the other vehicle and locate the positive (+) and negative (–) terminal locations on that vehicle.

   Your vehicle has a remote positive (+) jump starting terminal and a remote negative (–) jump starting terminal. You should always use these remote terminals instead of the terminals on the battery.

   If the vehicle has a remote positive (+) terminal, it is located under a red plastic cover at the positive battery post. To uncover the remote positive (+) terminal, open the red plastic cover.

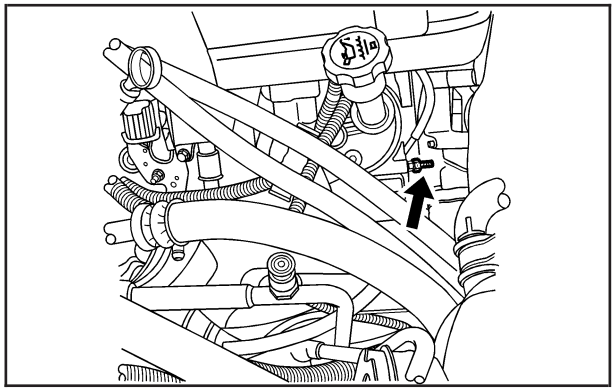

The remote negative (–) terminal is a stud located on the right front of the engine, where the negative battery cable attaches.

See *Engine Compartment Overview on page 5-12* for more information on the location of the remote positive (+) and remote negative (–) terminals.

⚠ CAUTION:

An electric fan can start up even when the engine is not running and can injure you. Keep hands, clothing and tools away from any underhood electric fan.

⚠ CAUTION:

Using a match near a battery can cause battery gas to explode. People have been hurt doing this, and some have been blinded. Use a flashlight if you need more light.

CAUTION: (Continued)

CAUTION: (Continued)

Be sure the battery has enough water. You do not need to add water to the battery installed in your new vehicle. But if a battery has filler caps, be sure the right amount of fluid is there. If it is low, add water to take care of that first. If you do not, explosive gas could be present.

Battery fluid contains acid that can burn you. Do not get it on you. If you accidentally get it in your eyes or on your skin, flush the place with water and get medical help immediately.

⚠ CAUTION:

Fans or other moving engine parts can injure you badly. Keep your hands away from moving parts once the engine is running.

5. Check that the jumper cables do not have loose or missing insulation. If they do, you could get a shock. The vehicles could be damaged too.

   Before you connect the cables, here are some basic things you should know. Positive (+) will go to positive (+) or to a remote positive (+) terminal if the vehicle has one. Negative (–) will go to a heavy, unpainted metal engine part or to a remote negative (–) terminal if the vehicle has one.

   Do not connect positive (+) to negative (–) or you will get a short that would damage the battery and maybe other parts too. And do not connect the negative (–) cable to the negative (–) terminal on the dead battery because this can cause sparks.

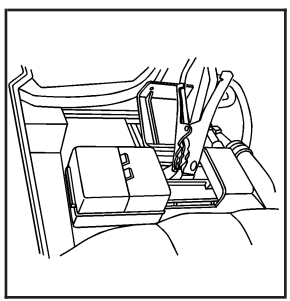

6. Connect the red positive (+) cable to the positive (+) terminal of the vehicle with the dead battery. Use a remote positive (+) terminal if the vehicle has one.

7. Do not let the other end touch metal. Connect it to the positive (+) terminal of the good battery. Use a remote positive (+) terminal if the vehicle has one.

8. Now connect the black negative (–) cable to the negative (–) terminal of the good battery. Use a remote negative (–) terminal if the vehicle has one.

   Do not let the other end touch anything until the next step. The other end of the negative (–) cable does not go to the dead battery. It goes to a heavy, unpainted metal engine part or to the remote negative (–) terminal on the vehicle with the dead battery.

9. Connect the other end of the negative (–) cable to the remote negative (–) terminal, on the vehicle with the dead battery.

10. Now start the vehicle with the good battery and run the engine for a while.

11. Try to start the vehicle that had the dead battery. If it will not start after a few tries, it probably needs service.

Notice: **If the jumper cables are connected or removed in the wrong order, electrical shorting may occur and damage the vehicle. The repairs would not be covered by your warranty. Always connect and remove the jumper cables in the correct order, making sure that the cables do not touch each other or other metal.**

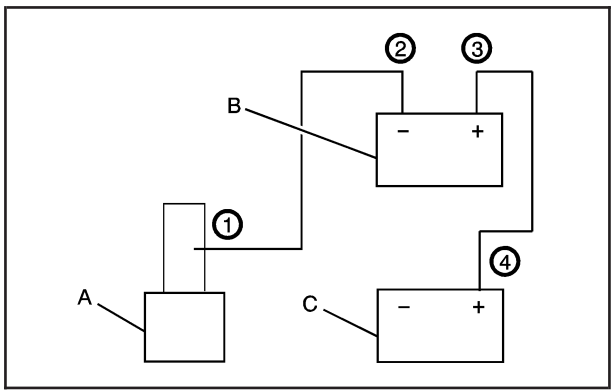

Jumper Cable Removal

A. Heavy, Unpainted Metal Engine Part or Remote Negative (–) Terminal

B. Good Battery or Remote Positive (+) and Remote Negative (–) Terminals

C. Dead Battery or Remote Positive (+) Terminal

To disconnect the jumper cables from both vehicles do the following:

1. Disconnect the black negative (–) cable from the vehicle that had the bad battery.
2. Disconnect the black negative (–) cable from the vehicle with the good battery.
3. Disconnect the red positive (+) cable from the vehicle with the good battery.
4. Disconnect the red positive (+) cable from the other vehicle.
5. Return the remote positive (+) terminal cover, if the vehicle has one, to its original position.

All-Wheel Drive

Transfer Case

If your vehicle is equipped with All-Wheel Drive, be sure to perform the lubricant checks described in this section. There are two additional systems that need lubrication.

When to Check Lubricant

Refer to the Maintenance Schedule to determine how often to check the lubricant. See *Scheduled Maintenance on page 6-4*.

How to Check Lubricant

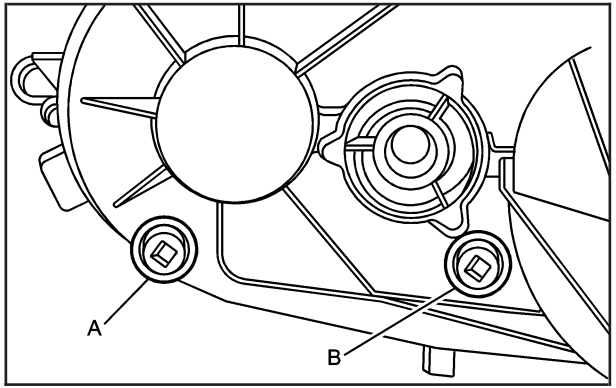

(A) Drain Plug (B) Filler Plug

To get an accurate reading, the vehicle should be on a level surface.

If the level is below the bottom of the filler plug hole, located on the transfer case, you'll need to add some lubricant. Add enough lubricant to raise the level to the bottom of the filler plug hole. Use care not to overtighten the plug.

What to Use

Refer to the Maintenance Schedule to determine what kind of lubricant to use. See *Recommended Fluids and Lubricants on page 6-13*.

Rear Axle

When to Check Lubricant

It is not necessary to regularly check rear axle fluid unless you suspect there is a leak or you hear an unusual noise. A fluid loss could indicate a problem. Have it inspected and repaired.

All axle assemblies are filled by volume of fluid during production. They are not filled to reach a certain level. When checking the fluid level on any axle, variations in the readings can be caused by factory fill differences between the minimum and the maximum fluid volume. Also, if a vehicle has just been driven before checking the fluid level, it may appear lower than normal because fluid has traveled out along the axle tubes and has not drained back to the sump area. Therefore, a reading taken five minutes after the vehicle has been driven will appear to have a lower fluid level than a vehicle that has been stationary for an hour or two. Remember that the rear axle assembly must be supported to get a true reading.

How to Check Lubricant

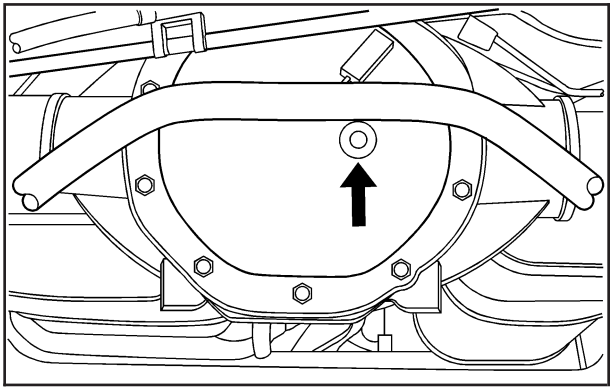

To get an accurate reading, the vehicle should be on a level surface.

The proper level is from 0.04 inch to 0.75 inch (1.0 mm to 19.0 mm) below the bottom of the filler plug hole, located on the rear axle. Add only enough fluid to reach the proper level.

What to Use

Refer to the Maintenance Schedule to determine what kind of lubricant to use. See *Recommended Fluids and Lubricants on page 6-13*.

Front Axle

When to Check and Change Lubricant

It is not necessary to regularly check front axle fluid unless you suspect there is a leak or you hear an unusual noise. A fluid loss could indicate a problem. Have it inspected and repaired.

How to Check Lubricant

To get an accurate reading, the vehicle should be on a level surface.

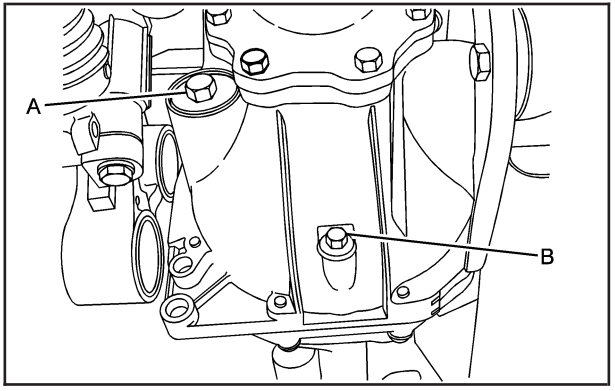

1500 Series

A: Fill Plug

B: Drain Plug

- When the differential is cold, add enough lubricant to raise the level from 0 (0 mm) to 1/8 inch (3.2 mm) below the filler plug hole.
- When the differential is at operating temperature (warm), add enough lubricant to raise the level to the bottom of the filler plug hole.

What to Use

Refer to the Maintenance Schedule to determine what kind of lubricant to use. See *Recommended Fluids and Lubricants on page 6-13*.

Headlamp Aiming

The vehicle has a visual optical headlamp aiming system. The aim of the headlamps have been preset at the factory and should need no further adjustment.

However, if the vehicle is damaged in a crash, the aim of the headlamps may be affected and adjustment may be necessary.

If oncoming vehicles flash their high beams at you, this may mean the vertical aim of your headlamps needs to be adjusted.

It is recommended that the vehicle is taken to your dealer/retailer for service if the headlamps need to be adjusted. It is possible however, to re-aim the headlamps as described.

The vehicle should:

- Be placed so the headlamps are 25 ft. (7.6 m) from a light colored wall or other flat surface.
- Have all four tires on a level surface which is level all the way to the wall or other flat surface.
- Be placed so it is perpendicular to the wall or other flat surface.
- Not have any snow, ice, or mud on it.
- Be fully assembled and all other work stopped while headlamp aiming is being performed.
- Be normally loaded with a full tank of fuel and one person or 160 lbs (75 kg) sitting on the driver seat.
- Have the tires properly inflated.
- Have the spare tire is in its proper location in the vehicle.

Headlamp aiming is done with the vehicle's low-beam headlamps. The high-beam headlamps will be correctly aimed if the low-beam headlamps are aimed properly.

To adjust the vertical aim:

1. Open the hood. See *Hood Release on page 5-11* for more information.

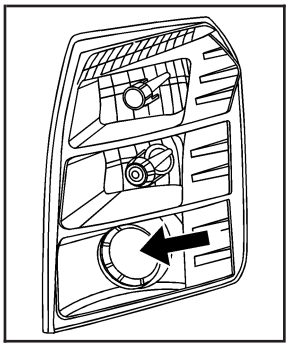

2. Locate the center of the projector lens of the low-beam headlamp.

3. Record the distance from the ground to the center of the projector lens of the low-beam headlamp.

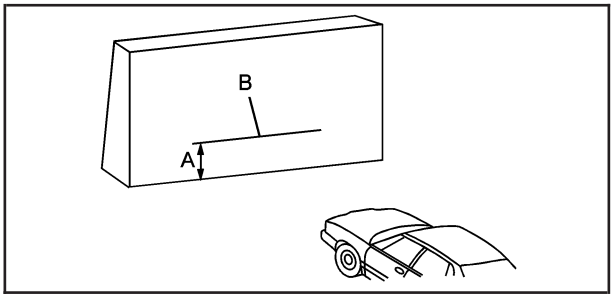

4. At a wall, measure from the ground upward (A) to the recorded distance from Step 3 and mark it.

5. Draw or tape a horizontal line (B) on the wall the width of the vehicle at the height of the mark in Step 4.

Notice: **Do not cover a headlamp to improve beam cut-off when aiming. Covering a headlamp may cause excessive heat build-up which may cause damage to the headlamp.**

6. Turn on the low-beam headlamps and place a piece of cardboard or equivalent in front of the headlamp not being adjusted. This allows only the beam of light from the headlamp being adjusted to be seen on the flat surface.

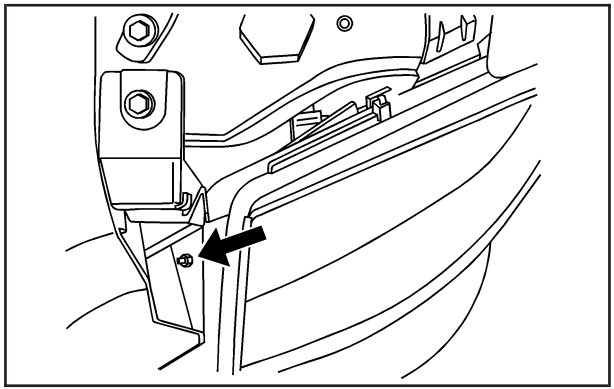

7. Locate the vertical headlamp aiming screws, which are under the hood near each headlamp assembly.

   The adjustment screw can be turned with a E8 Torx® socket.

8. Turn the vertical aiming screw until the headlamp beam is aimed to the horizontal tape line. Turn it clockwise or counterclockwise to raise or lower the angle of the beam.

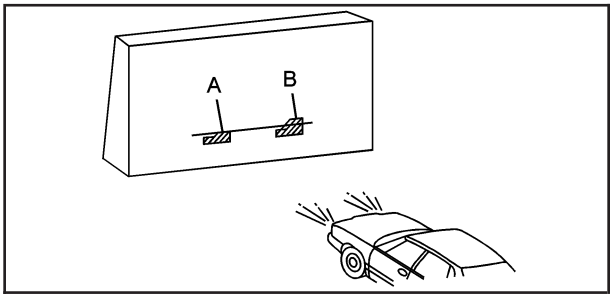

9. Make sure that the light from the headlamp is positioned at the bottom edge of the horizontal tape line. The lamp on the left (A) shows the correct headlamp aim. The lamp on the right (B) shows the incorrect headlamp aim.

10. Repeat Steps 7 through 9 for the opposite headlamp.

Bulb Replacement

For the proper type of replacement bulbs, see *Replacement Bulbs on page 5-53*.

For any bulb changing procedure not listed in this section, contact your dealer/retailer.

High Intensity Discharge (HID) Lighting

⚠ CAUTION:

The low beam high intensity discharge lighting system operates at a very high voltage. If you try to service any of the system components, you could be seriously injured. Have your dealer/retailer or a qualified technician service them.

Your vehicle has HID headlamps. After your vehicle's HID headlamp bulb has been replaced, you may notice that the beam is a slightly different shade than it was originally. This is normal.

Taillamps, Turn Signal, Sidemarker, Stoplamps and Back-up Lamps

To replace one of these bulbs:

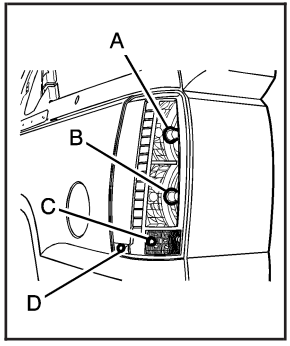

A. Stoplamp/Turn Signal/Taillamp
B. Stoplamp/Turn Signal/Taillamp
C. Back-up Lamp
D. Sidemarker Lamp

1. Open the tailgate. See *Tailgate on page 2-23* for more information.

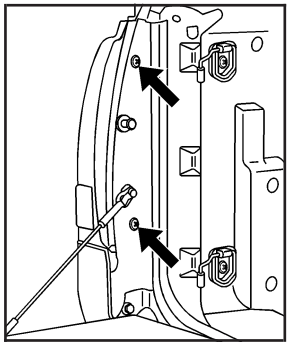

2. Remove the two screws from the taillamp assembly.

3. Pull the taillamp assembly straight back to remove.
4. Turn the bulb socket counterclockwise to remove it from the taillamp assembly.
5. Pull the bulb straight out from the socket.
6. Press a new bulb into the socket, insert it into the taillamp assembly and turn the bulb socket clockwise until it clicks.
7. Reinstall the taillamp assembly and tighten the screws.

License Plate Lamp

To replace one of these bulbs:

1. Reach under the rear bumper for the bulb socket.

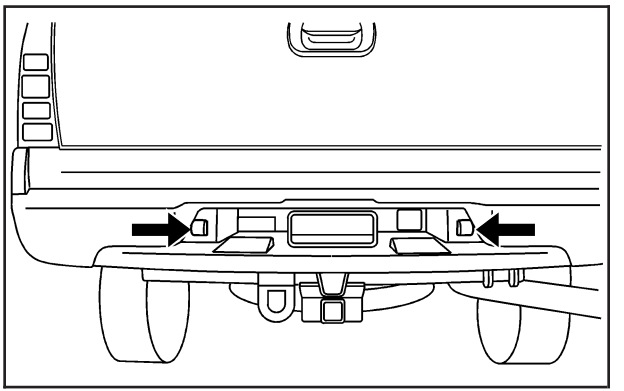

2. Turn the bulb socket counterclockwise and pull the bulb socket out of the connector.
3. Pull the old bulb from the bulb socket, keeping the bulb straight as you pull it out.
4. Install the new bulb.
5. Reverse Steps 1 through 3 to reinstall the bulb socket.

Replacement Bulbs

Exterior Lamp	Bulb Number
Back-up Lamp	7441
License Plate Lamp	168
Sidemarker Lamp	194
Stoplamp/Taillamp/ Turn Signal Lamp	3057

For replacement bulbs not listed here, contact your dealer/retailer.

Windshield Wiper Blade Replacement

Windshield wiper blades should be inspected for wear or cracking. See *Scheduled Maintenance on page 6-4*.

Replacement blades come in different types and are removed in different ways. To replace the wiper blade assembly, do the following:

1. Pull the windshield wiper arm connector away from the windshield.

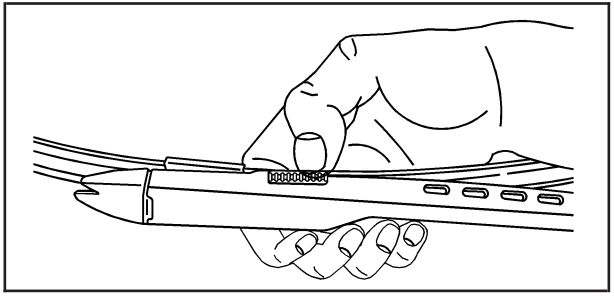

2. Squeeze the grooved areas on each side of the blade, and rotate the blade assembly away from the arm connector.

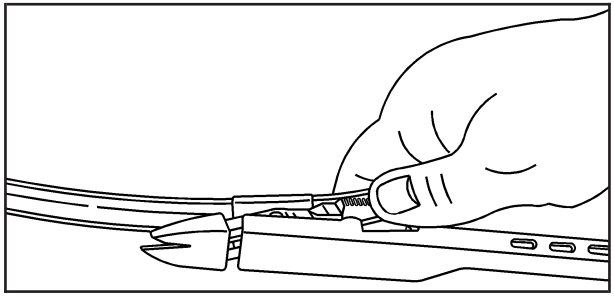

3. Install the new blade onto the arm connector and make sure the grooved areas are fully set in the locked position.

For the proper type and size, see *Maintenance Replacement Parts on page 6-15*.

Tires

Your new vehicle comes with high-quality tires made by a leading tire manufacturer. If you ever have questions about your tire warranty and where to obtain service, see your vehicle Warranty booklet for details.

⚠ CAUTION:

- **Poorly maintained and improperly used tires are dangerous.**
- **Overloading your tires can cause overheating as a result of too much flexing. You could have an air-out and a serious accident. See *Loading Your Vehicle on page 4-35*.**

CAUTION: (Continued)

CAUTION: (Continued)

- **Underinflated tires pose the same danger as overloaded tires. The resulting accident could cause serious injury. Check all tires frequently to maintain the recommended pressure. Tire pressure should be checked when your tires are cold. See *Inflation - Tire Pressure on page 5-61*.**
- **Overinflated tires are more likely to be cut, punctured, or broken by a sudden impact — such as when you hit a pothole. Keep tires at the recommended pressure.**
- **Worn, old tires can cause accidents. If your tread is badly worn, or if your tires have been damaged, replace them.**

See *High-Speed Operation on page 5-62* for inflation pressure adjustment for high speed driving.

22-Inch Tires

If your vehicle has the optional 22-inch P285/45R22 size tires, they are classified as touring tires and are designed for on-road use. The low-profile, wide tread design is not recommended for off-road driving. See *Off-Road Driving on page 4-12*, for additional information.

Tire Sidewall Labeling

Useful information about a tire is molded into the sidewall. The following illustration is an example of a typical P-Metric tire sidewall.

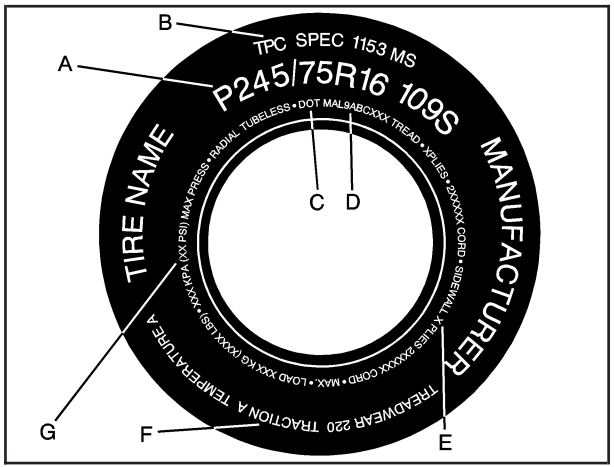

Passenger (P-Metric) Tire

(A) Tire Size: The tire size code is a combination of letters and numbers used to define a particular tire's width, height, aspect ratio, construction type, and service description. See the "Tire Size" illustration later in this section for more detail.

(B) TPC Spec (Tire Performance Criteria Specification): Original equipment tires designed to GM's specific tire performance criteria have a TPC specification code molded onto the sidewall. GM's TPC specifications meet or exceed all federal safety guidelines.

(C) DOT (Department of Transportation): The Department of Transportation (DOT) code indicates that the tire is in compliance with the U.S. Department of Transportation Motor Vehicle Safety Standards.

(D) Tire Identification Number (TIN): The letters and numbers following DOT code are the Tire Identification Number (TIN). The TIN shows the manufacturer and plant code, tire size, and date the tire was manufactured. The TIN is molded onto both sides of the tire, although only one side may have the date of manufacture.

(E) Tire Ply Material: The type of cord and number of plies in the sidewall and under the tread.

(F) Uniform Tire Quality Grading (UTQG): Tire manufacturers are required to grade tires based on three performance factors: treadwear, traction, and temperature resistance. For more information, see *Uniform Tire Quality Grading on page 5-73*.

(G) Maximum Cold Inflation Load Limit: Maximum load that can be carried and the maximum pressure needed to support that load. For information on recommended tire pressure see *Inflation - Tire Pressure on page 5-61* and *Loading Your Vehicle on page 4-35*.

Tire Size

The following examples show the different parts of a tire size.

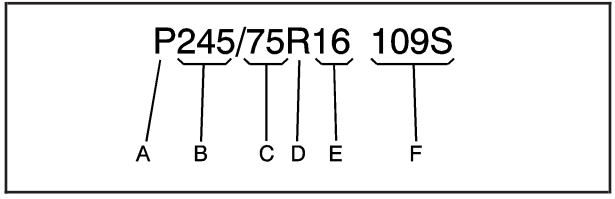

Passenger (P-Metric) Tire

(A) Passenger (P-Metric) Tire: The United States version of a metric tire sizing system. The letter P as the first character in the tire size means a passenger vehicle tire engineered to standards set by the U.S. Tire and Rim Association.

(B) Tire Width: The three-digit number indicates the tire section width in millimeters from sidewall to sidewall.

(C) Aspect Ratio: A two-digit number that indicates the tire height-to-width measurements. For example, if the tire size aspect ratio is 75, as shown in item C of the light truck (LT-Metric) tire illustration, it would mean that the tire's sidewall is 75% as high as it is wide.

(D) Construction Code: A letter code is used to indicate the type of ply construction in the tire. The letter R means radial ply construction; the letter D means diagonal or bias ply construction; and the letter B means belted-bias ply construction.

(E) Rim Diameter: Diameter of the wheel in inches.

(F) Service Description: The service description indicates the load range and speed rating of a tire. The load index can range from 1 to 279. Speed ratings range from A to Z.

Tire Terminology and Definitions

Air Pressure: The amount of air inside the tire pressing outward on each square inch of the tire. Air pressure is expressed in pounds per square inch (psi) or kilopascal (kPa).

Accessory Weight: This means the combined weight of optional accessories. Some examples of optional accessories are, automatic transmission, power steering, power brakes, power windows, power seats, and air conditioning.

Aspect Ratio: The relationship of a tire's height to its width.

Belt: A rubber coated layer of cords that is located between the plies and the tread. Cords may be made from steel or other reinforcing materials.

Bead: The tire bead contains steel wires wrapped by steel cords that hold the tire onto the rim.

Bias Ply Tire: A pneumatic tire in which the plies are laid at alternate angles less than 90 degrees to the centerline of the tread.

Cold Tire Pressure: The amount of air pressure in a tire, measured in pounds per square inch (psi) or kilopascals (kPa) before a tire has built up heat from driving. See *Inflation - Tire Pressure on page 5-61*.

Curb Weight: The weight of a motor vehicle with standard and optional equipment including the maximum capacity of fuel, oil, and coolant, but without passengers and cargo.

DOT Markings: A code molded into the sidewall of a tire signifying that the tire is in compliance with the U.S. Department of Transportation (DOT) motor vehicle safety standards. The DOT code includes the Tire Identification Number (TIN), an alphanumeric designator which can also identify the tire manufacturer, production plant, brand, and date of production.

GVWR: Gross Vehicle Weight Rating. See *Loading Your Vehicle on page 4-35*.

GAWR FRT: Gross Axle Weight Rating for the front axle. See *Loading Your Vehicle on page 4-35*.

GAWR RR: Gross Axle Weight Rating for the rear axle. See *Loading Your Vehicle on page 4-35*.

Intended Outboard Sidewall: The side of an asymmetrical tire, that must always face outward when mounted on a vehicle.

Kilopascal (kPa): The metric unit for air pressure.

Light Truck (LT-Metric) Tire: A tire used on light duty trucks and some multipurpose passenger vehicles.

Load Index: An assigned number ranging from 1 to 279 that corresponds to the load carrying capacity of a tire.

Maximum Inflation Pressure: The maximum air pressure to which a cold tire can be inflated. The maximum air pressure is molded onto the sidewall.

Maximum Load Rating: The load rating for a tire at the maximum permissible inflation pressure for that tire.

Maximum Loaded Vehicle Weight: The sum of curb weight, accessory weight, vehicle capacity weight, and production options weight.

Normal Occupant Weight: The number of occupants a vehicle is designed to seat multiplied by 150 lbs (68 kg). See *Loading Your Vehicle on page 4-35*.

Occupant Distribution: Designated seating positions.

Outward Facing Sidewall: The side of an asymmetrical tire that has a particular side that faces outward when mounted on a vehicle. The side of the tire that contains a whitewall, bears white lettering, or bears manufacturer, brand, and/or model name molding that is higher or deeper than the same moldings on the other sidewall of the tire.

Passenger (P-Metric) Tire: A tire used on passenger cars and some light duty trucks and multipurpose vehicles.

Recommended Inflation Pressure: Vehicle manufacturer's recommended tire inflation pressure as shown on the tire placard. See *Inflation - Tire Pressure on page 5-61* and *Loading Your Vehicle on page 4-35*.

Radial Ply Tire: A pneumatic tire in which the ply cords that extend to the beads are laid at 90 degrees to the centerline of the tread.

Rim: A metal support for a tire and upon which the tire beads are seated.

Sidewall: The portion of a tire between the tread and the bead.

Speed Rating: An alphanumeric code assigned to a tire indicating the maximum speed at which a tire can operate.

Traction: The friction between the tire and the road surface. The amount of grip provided.

Tread: The portion of a tire that comes into contact with the road.

Treadwear Indicators: Narrow bands, sometimes called wear bars, that show across the tread of a tire when only 1/16 inch (1.6 mm) of tread remains. See *When It Is Time for New Tires on page 5-70*.

UTQGS (Uniform Tire Quality Grading Standards): A tire information system that provides consumers with ratings for a tire's traction, temperature, and treadwear. Ratings are determined by tire manufacturers using government testing procedures. The ratings are molded into the sidewall of the tire. See *Uniform Tire Quality Grading on page 5-73*.

Vehicle Capacity Weight: The number of designated seating positions multiplied by 150 lbs (68 kg) plus the rated cargo load. See *Loading Your Vehicle on page 4-35*.

Vehicle Maximum Load on the Tire: Load on an individual tire due to curb weight, accessory weight, occupant weight, and cargo weight.

Vehicle Placard: A label permanently attached to a vehicle showing the vehicle's capacity weight and the original equipment tire size and recommended inflation pressure. See "Tire and Loading Information Label" under *Loading Your Vehicle on page 4-35*.

Inflation - Tire Pressure

Tires need the correct amount of air pressure to operate effectively.

Notice: **Do not let anyone tell you that under-inflation or over-inflation is all right. It is not. If your tires do not have enough air (under-inflation), you can get the following:**

- **Too much flexing**
- **Too much heat**
- **Tire overloading**
- **Premature or irregular wear**
- **Poor handling**
- **Reduced fuel economy**

If your tires have too much air (over-inflation), you can get the following:

- **Unusual wear**
- **Poor handling**
- **Rough ride**
- **Needless damage from road hazards**

A vehicle specific Tire and Loading Information label is attached to your vehicle. This label shows your vehicle's original equipment tires and the correct inflation pressures for your tires when they are cold. The recommended cold tire inflation pressure, shown on the label, is the minimum amount of air pressure needed to support your vehicle's maximum load carrying capacity.

For additional information regarding how much weight your vehicle can carry, and an example of the Tire and Loading Information label, see *Loading Your Vehicle on page 4-35*. How you load your vehicle affects vehicle handling and ride comfort. Never load your vehicle with more weight than it was designed to carry.

When to Check

Check your tires once a month or more.

Do not forget to check the pressure of the spare tire. See *Spare Tire on page 5-97* for additional information.

How to Check

Use a good quality pocket-type gage to check tire pressure. You cannot tell if your tires are properly inflated simply by looking at them. Radial tires may look properly inflated even when they are underinflated. Check the tire's inflation pressure when the tires are cold. Cold means your vehicle has been sitting for at least three hours or driven no more than 1 mile (1.6 km).

Remove the valve cap from the tire valve stem. Press the tire gage firmly onto the valve to get a pressure measurement. If the cold tire inflation pressure matches the recommended pressure on the Tire and Loading Information label, no further adjustment is necessary. If the pressure is low, add air until you reach the recommended amount.

If you overfill the tire, release air by pushing on the metal stem in the center of the tire valve. Recheck the tire pressure with the tire gage.

Be sure to put the valve caps back on the valve stems. They help prevent leaks by keeping out dirt and moisture.

High-Speed Operation

⚠ CAUTION:

Driving at high speeds, 100 mph (160 km/h) or higher, puts an additional strain on tires. Sustained high-speed driving causes excessive heat build up and can cause sudden tire failure. You could have a crash and you or others could be killed. Some high-speed rated tires require inflation pressure adjustment for high speed operation. When speed limits and road conditions are such that a vehicle can be driven at high speeds, make sure the tires are rated for high speed operation, in excellent condition, and set to the correct cold tire inflation pressure for the vehicle load.

If your vehicle has P265/65R18 or P285/45R22 size tires and you will be driving at high speeds, speeds of 100 mph (160 km/h) or higher, set the cold inflation pressure to 3 psi (20 kPa) above the recommended tire pressure shown on the Tire and Loading Information Label. When you end this high-speed driving, return the tires to the cold inflation pressure shown on the Tire and Loading Information label. See *Loading Your Vehicle on page 4-35* and *Inflation - Tire Pressure on page 5-61*.

Tire Pressure Monitor System

The Tire Pressure Monitor System (TPMS) uses radio and sensor technology to check tire pressure levels. The TPMS sensors monitor the air pressure in your vehicle's tires and transmit tire pressure readings to a receiver located in the vehicle.

Each tire, including the spare (if provided), should be checked monthly when cold and inflated to the inflation pressure recommended by the vehicle manufacturer on the vehicle placard or tire inflation pressure label. (If your vehicle has tires of a different size than the size indicated on the vehicle placard or tire inflation pressure label, you should determine the proper tire inflation pressure for those tires.)

As an added safety feature, your vehicle has been equipped with a tire pressure monitoring system (TPMS) that illuminates a low tire pressure telltale when one or more of your tires is significantly under-inflated.

Accordingly, when the low tire pressure telltale illuminates, you should stop and check your tires as soon as possible, and inflate them to the proper pressure. Driving on a significantly under-inflated tire causes the tire to overheat and can lead to tire failure. Under-inflation also reduces fuel efficiency and tire tread life, and may affect the vehicle's handling and stopping ability.

Please note that the TPMS is not a substitute for proper tire maintenance, and it is the driver's responsibility to maintain correct tire pressure, even if under-inflation has not reached the level to trigger illumination of the TPMS low tire pressure telltale.

Your vehicle has also been equipped with a TPMS malfunction indicator to indicate when the system is not operating properly. The TPMS malfunction indicator is combined with the low tire pressure telltale. When the system detects a malfunction, the telltale will flash for approximately one minute and then remain continuously illuminated. This sequence will continue upon subsequent vehicle start-ups as long as the malfunction exists.

When the malfunction indicator is illuminated, the system may not be able to detect or signal low tire pressure as intended. TPMS malfunctions may occur for a variety of reasons, including the installation of replacement or alternate tires or wheels on the vehicle that prevent the TPMS from functioning properly. Always check the TPMS malfunction telltale after replacing one or more tires or wheels on your vehicle to ensure that the replacement or alternate tires and wheels allow the TPMS to continue to function properly.

See *Tire Pressure Monitor Operation on page 5-64*, for additional information.

Federal Communications Commission (FCC) and Industry and Science Canada

The Tire Pressure Monitor System (TPMS) operates on a radio frequency and complies with Part 15 of the FCC Rules. Operation is subject to the following two conditions:

1. This device may not cause harmful interference.
2. This device must accept any interference received, including interference that may cause undesired operation.

The Tire Pressure Monitor System (TPMS) operates on a radio frequency and complies with RSS-210 of Industry and Science Canada. Operation is subject to the following two conditions:

1. This device may not cause interference.
2. This device must accept any interference received, including interference that may cause undesired operation of the device.

Changes or modifications to this system by other than an authorized service facility could void authorization to use this equipment.

Tire Pressure Monitor Operation

The Tire Pressure Monitor System (TPMS) is designed to warn the driver when a low tire pressure condition exists. TPMS sensors are mounted onto each tire and wheel assembly, excluding the spare tire and wheel assembly. The TPMS sensors monitor the air pressure in the vehicle’s tires and transmits the tire pressure readings to a receiver located in the vehicle.

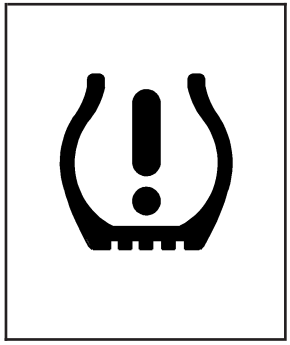

When a low tire pressure condition is detected, the TPMS illuminates the low tire pressure warning light located on the instrument panel cluster.

At the same time a message to check the pressure in a specific tire appears on the Driver Information Center (DIC) display. The low tire pressure warning light and the DIC warning message come on at each ignition cycle until the tires are inflated to the correct inflation pressure. Using the DIC, tire pressure levels can be viewed by the driver. For additional information and details about the DIC operation and displays see *DIC Operation and Displays on page 3-45* and *DIC Warnings and Messages on page 3-50*.

The low tire pressure warning light may come on in cool weather when the vehicle is first started, and then turn off as you start to drive. This could be an early indicator that the air pressure in the tire(s) are getting low and need to be inflated to the proper pressure.

A Tire and Loading Information label, attached to your vehicle, shows the size of your vehicle's original equipment tires and the correct inflation pressure for your vehicle's tires when they are cold. See *Loading Your Vehicle on page 4-35*, for an example of the Tire and Loading Information label and its location on your vehicle. Also see *Inflation - Tire Pressure on page 5-61*.

Your vehicle's TPMS can warn you about a low tire pressure condition but it does not replace normal tire maintenance. See *Tire Inspection and Rotation on page 5-68* and *Tires on page 5-54*.

Notice: **Liquid tire sealants could damage the Tire Pressure Monitor System (TPMS) sensors. Sensor damage caused by using a tire sealant is not covered by your warranty. Do not use liquid tire sealants.**

TPMS Malfunction Light and Message

The TPMS will not function properly if one or more of the TPMS sensors are missing or inoperable. When the system detects a malfunction, the low tire warning light flashes for about one minute and then stays on for the remainder of the ignition cycle. A DIC warning message is also displayed. The low tire warning light and DIC warning message come on at each ignition cycle until the problem is corrected. Some of the conditions that can cause the malfunction light and DIC message to come on are:

- One of the road tires has been replaced with the spare tire. The spare tire does not have a TPMS sensor. The TPMS malfunction light and DIC message should go off once you re-install the road tire containing the TPMS sensor.
- The TPMS sensor matching process was started but not completed or not completed successfully after rotating the vehicle's tires. The DIC message and TPMS malfunction light should go off once the TPMS sensor matching process is performed successfully. See "TPMS Sensor Matching Process" later in this section.
- One or more TPMS sensors are missing or damaged. The DIC message and the TPMS malfunction light should go off when the TPMS sensors are installed and the sensor matching process is performed successfully. See your dealer/retailer for service.
- Replacement tires or wheels do not match your vehicle's original equipment tires or wheels. Tires and wheels other than those recommended for your vehicle could prevent the TPMS from functioning properly. See *Buying New Tires on page 5-71*.
- Operating electronic devices or being near facilities using radio wave frequencies similar to the TPMS could cause the TPMS sensors to malfunction.

If the TPMS is not functioning it cannot detect or signal a low tire condition. See your dealer/retailer for service if the TPMS malfunction light and DIC message comes on and stays on.

TPMS Sensor Matching Process

Each TPMS sensor has a unique identification code. Any time you rotate your vehicle's tires or replace one or more of the TPMS sensors, the identification codes will need to be matched to the new tire/wheel position. The sensors are matched to the tire/wheel positions in the following order: driver side front tire, passenger side front tire, passenger side rear tire, and driver side rear tire using a TPMS diagnostic tool. See your dealer/retailer for service.

The TPMS sensors can also be matched to each tire/wheel position by increasing or decreasing the tire's air pressure. If increasing the tire's air pressure, do not exceed the maximum inflation pressure indicated on the tire's sidewall.

To decrease air-pressure out of a tire you can use the pointed end of the valve cap, a pencil-style air pressure gage, or a key.

You have two minutes to match the first tire/wheel position, and five minutes overall to match all four tire/wheel positions. If it takes longer than two minutes, to match the first tire and wheel, or more than five minutes to match all four tire and wheel positions the matching process stops and you need to start over.

The TPMS sensor matching process is outlined below:

1. Set the parking brake.
2. Turn the ignition switch to ON/RUN with the engine off.
3. Press the Remote Keyless Entry (RKE) transmitter's LOCK and UNLOCK buttons at the same time for approximately five seconds. The horn sounds twice to signal the receiver is in relearn mode and TIRE LEARNING ACTIVE message displays on the DIC screen.
4. Start with the driver side front tire.
5. Remove the valve cap from the valve cap stem. Activate the TPMS sensor by increasing or decreasing the tire's air pressure for five seconds, or until a horn chirp sounds. The horn chirp, which may take up to 30 seconds to sound, confirms that the sensor identification code has been matched to this tire and wheel position.
6. Proceed to the passenger side front tire, and repeat the procedure in Step 5.
7. Proceed to the passenger side rear tire, and repeat the procedure in Step 5.

8. Proceed to the driver side rear tire, and repeat the procedure in Step 5. The horn sounds two times to indicate the sensor identification code has been matched to the driver side rear tire, and the TPMS sensor matching process is no longer active.
   The TIRE LEARNING ACTIVE message on the DIC display screen goes off.
9. Turn the ignition switch to LOCK/OFF.
10. Set all four tires to the recommended air pressure level as indicated on the Tire and Loading Information label.
11. Put the valve caps back on the valve stems.

Tire Inspection and Rotation

We recommend that you regularly inspect your vehicle's tires, including the spare tire, for signs of wear or damage. See *When It Is Time for New Tires on page 5-70* for more information.

Tires should be rotated every 5,000 to 8,000 miles (8 000 to 13 000 km). See *Scheduled Maintenance on page 6-4*.

The purpose of a regular tire rotation is to achieve a uniform wear for all tires on the vehicle. This will ensure that your vehicle continues to perform most like it did when the tires were new.

Any time you notice unusual wear, rotate your tires as soon as possible and check wheel alignment. Also check for damaged tires or wheels. See *When It Is Time for New Tires on page 5-70* and *Wheel Replacement on page 5-75*.

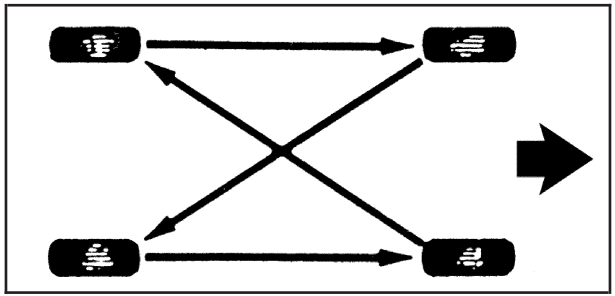

When rotating your vehicle's tires, always use the correct rotation pattern shown here.

Do not include the spare tire in the tire rotation.

After the tires have been rotated, adjust the front and rear inflation pressures as shown on the Tire and Loading Information label. See *Inflation - Tire Pressure on page 5-61* and *Loading Your Vehicle on page 4-35*.

Reset the Tire Pressure Monitor System. See *Tire Pressure Monitor Operation on page 5-64*.

Make certain that all wheel nuts are properly tightened. See "Wheel Nut Torque" under *Capacities and Specifications on page 5-115*.

⚠ CAUTION:

Rust or dirt on a wheel, or on the parts to which it is fastened, can make wheel nuts become loose after time. The wheel could come off and cause an accident. When you change a wheel, remove any rust or dirt from places where the wheel attaches to the vehicle. In an emergency, you can use a cloth or a paper towel to do this; but be sure to use a scraper or wire brush later, if needed, to get all the rust or dirt off. See *Changing a Flat Tire on page 5-78*.

Make sure the spare tire is stored securely. Push, pull, and then try to rotate or turn the tire. If it moves, tighten the cable. See *Storing a Flat or Spare Tire and Tools on page 5-94*.

When It Is Time for New Tires

Various factors, such as maintenance, temperatures, driving speeds, vehicle loading, and road conditions, influence when you need new tires.

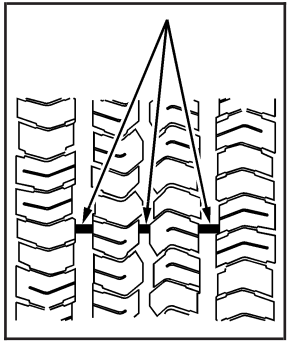

One way to tell when it is time for new tires is to check the treadwear indicators, which appear when your tires have only 1/16 inch (1.6 mm) or less of tread remaining. Some commercial truck tires may not have treadwear indicators.

You need new tires if any of the following statements are true:

- You can see the indicators at three or more places around the tire.
- You can see cord or fabric showing through the tire's rubber.
- The tread or sidewall is cracked, cut, or snagged deep enough to show cord or fabric.
- The tire has a bump, bulge, or split.
- The tire has a puncture, cut, or other damage that cannot be repaired well because of the size or location of the damage.

The rubber in tires degrades over time, even if they are not being used. This is also true for the spare tire, if your vehicle has one. Multiple conditions affect how fast this aging takes place, including temperatures, loading conditions, and inflation pressure maintenance. With proper care and maintenance tires will typically wear out before they degrade due to age. If you are unsure about the need to replace your tires as they get older, consult the tire manufacturer for more information.

Buying New Tires

GM has developed and matched specific tires for your vehicle. The original equipment tires installed on your vehicle, when it was new, were designed to meet General Motors Tire Performance Criteria Specification (TPC spec) system rating. If you need replacement tires, GM strongly recommends that you get tires with the same TPC Spec rating. This way, your vehicle will continue to have tires that are designed to give the same performance and vehicle safety, during normal use, as the original tires.

GM's exclusive TPC Spec system considers over a dozen critical specifications that impact the overall performance of your vehicle, including brake system performance, ride and handling, traction control, and tire pressure monitoring performance. GM's TPC Spec number is molded onto the tire's sidewall near the tire size. If the tires have an all-season tread design, the TPC spec number will be followed by an MS for mud and snow. See *Tire Sidewall Labeling on page 5-55* for additional information.

GM recommends replacing tires in sets of four. This is because uniform tread depth on all tires will help keep your vehicle performing most like it did when the tires were new. Replacing less than a full set of tires can affect the braking and handling performance of your vehicle. See *Tire Inspection and Rotation on page 5-68* for information on proper tire rotation.

⚠ CAUTION:

Mixing tires could cause you to lose control while driving. If you mix tires of different sizes, brands, or types (radial and bias-belted tires), the vehicle might not handle properly, and you could have a crash. Using tires of different sizes, brands, or types could also cause damage to your vehicle. Be sure to use the same size, brand, and type tires on all wheels.

Your vehicle may have a different size spare than the road tires (those originally installed on your vehicle). When new, your vehicle included a spare tire and wheel assembly with a similar overall diameter as your vehicle's road tires and wheels, so it is all right to drive on it. Because this spare was developed for use on your vehicle, it will not affect vehicle handling.

⚠ CAUTION:

If you use bias-ply tires on your vehicle, the wheel rim flanges could develop cracks after many miles of driving. A tire and/or wheel could fail suddenly, causing a crash. Use only radial-ply tires with the wheels on your vehicle.

If you must replace your vehicle's tires with those that do not have a TPC Spec number, make sure they are the same size, load range, speed rating, and construction type (radial and bias-belted tires) as your vehicle's original tires.

Vehicles that have a tire pressure monitoring system may give an inaccurate low-pressure warning if non-TPC spec rated tires are installed on your vehicle. Non-TPC Spec rated tires may give a low-pressure warning that is higher or lower than the proper warning level you would get with TPC Spec rated tires. See *Tire Pressure Monitor System on page 5-63*.

Your vehicle's original equipment tires are listed on the Tire and Loading Information Label. See *Loading Your Vehicle on page 4-35*, for more information about the Tire and Loading Information Label and its location on your vehicle.

Different Size Tires and Wheels

If you add wheels or tires that are a different size than your original equipment wheels and tires, this could affect the way your vehicle performs, including its braking, ride and handling characteristics, stability, and resistance to rollover. Additionally, if your vehicle has electronic systems such as anti-lock brakes, rollover airbags, traction control, and electronic stability control, the performance of these systems can be affected.

⚠ CAUTION:

If you add different sized wheels, your vehicle may not provide an acceptable level of performance and safety if tires not recommended for those wheels are selected. You may increase the chance that you will crash and suffer serious injury. Only use GM specific wheel and tire systems developed for your vehicle, and have them properly installed by a GM certified technician.

See *Buying New Tires on page 5-71* and *Accessories and Modifications on page 5-3* for additional information.

Uniform Tire Quality Grading

Quality grades can be found where applicable on the tire sidewall between tread shoulder and maximum section width. For example:

Treadwear 200 Traction AA Temperature A

The following information relates to the system developed by the United States National Highway Traffic Safety Administration (NHTSA), which grades tires by treadwear, traction, and temperature performance. This applies only to vehicles sold in the United States. The grades are molded on the sidewalls of most passenger car tires. The Uniform Tire Quality Grading (UTQG) system does not apply to deep tread, winter-type snow tires, space-saver, or temporary use spare tires, tires with nominal rim diameters of 10 to 12 inches (25 to 30 cm), or to some limited-production tires.

While the tires available on General Motors passenger cars and light trucks may vary with respect to these grades, they must also conform to federal safety requirements and additional General Motors Tire Performance Criteria (TPC) standards.

Treadwear

The treadwear grade is a comparative rating based on the wear rate of the tire when tested under controlled conditions on a specified government test course. For example, a tire graded 150 would wear one and a half (1.5) times as well on the government course as a tire graded 100. The relative performance of tires depends upon the actual conditions of their use, however, and may depart significantly from the norm due to variations in driving habits, service practices, and differences in road characteristics and climate.

Traction – AA, A, B, C

The traction grades, from highest to lowest, are AA, A, B, and C. Those grades represent the tire's ability to stop on wet pavement as measured under controlled conditions on specified government test surfaces of asphalt and concrete. A tire marked C may have poor traction performance.

Warning: **The traction grade assigned to this tire is based on straight-ahead braking traction tests, and does not include acceleration, cornering, hydroplaning, or peak traction characteristics.**

Temperature – A, B, C

The temperature grades are A (the highest), B, and C, representing the tire's resistance to the generation of heat and its ability to dissipate heat when tested under controlled conditions on a specified indoor laboratory test wheel. Sustained high temperature can cause the material of the tire to degenerate and reduce tire life, and excessive temperature can lead to sudden tire failure. The grade C corresponds to a level of performance which all passenger car tires must meet under the Federal Motor Vehicle Safety Standard No. 109. Grades B and A represent higher levels of performance on the laboratory test wheel than the minimum required by law.

Warning: **The temperature grade for this tire is established for a tire that is properly inflated and not overloaded. Excessive speed, underinflation, or excessive loading, either separately or in combination, can cause heat buildup and possible tire failure.**

Wheel Alignment and Tire Balance

The tires and wheels on your vehicle were aligned and balanced carefully at the factory to give you the longest tire life and best overall performance. Adjustments to wheel alignment and tire balancing will not be necessary on a regular basis. However, if you notice unusual tire wear or your vehicle pulling to one side or the other, the alignment might need to be checked. If you notice your vehicle vibrating when driving on a smooth road, the tires and wheels might need to be rebalanced. See your dealer/retailer for proper diagnosis.

Wheel Replacement

Replace any wheel that is bent, cracked, or badly rusted or corroded. If wheel nuts keep coming loose, the wheel, wheel bolts, and wheel nuts should be replaced. If the wheel leaks air, replace it (except some aluminum wheels, which can sometimes be repaired). See your dealer/retailer if any of these conditions exist.

Your dealer/retailer will know the kind of wheel you need.

Each new wheel should have the same load-carrying capacity, diameter, width, offset, and be mounted the same way as the one it replaces.

If you need to replace any of your wheels, wheel bolts, wheel nuts, or Tire Pressure Monitor System (TPMS) sensors, replace them only with new GM original equipment parts. This way, you will be sure to have the right wheel, wheel bolts, wheel nuts, and TPMS sensors for your vehicle.

⚠ CAUTION:

Using the wrong replacement wheels, wheel bolts, or wheel nuts on your vehicle can be dangerous. It could affect the braking and handling of your vehicle, make your tires lose air and make you lose control. You could have a collision in which you or others could be injured. Always use the correct wheel, wheel bolts, and wheel nuts for replacement.

Notice: **The wrong wheel can also cause problems with bearing life, brake cooling, speedometer or odometer calibration, headlamp aim, bumper height, vehicle ground clearance, and tire or tire chain clearance to the body and chassis.**

See *Changing a Flat Tire on page 5-78* for more information.

Used Replacement Wheels

⚠ CAUTION:

Putting a used wheel on your vehicle is dangerous. You cannot know how it has been used or how far it has been driven. It could fail suddenly and cause a crash. If you have to replace a wheel, use a new GM original equipment wheel.

Tire Chains

⚠ CAUTION:

Do not use tire chains. There is not enough clearance. Tire chains used on a vehicle without the proper amount of clearance can cause damage to the brakes, suspension, or other vehicle parts. The area damaged by the tire chains could cause you to lose control of your vehicle and you or others may be injured in a crash. Use another type of traction device only if its manufacturer recommends it for use on your vehicle and tire size combination and road conditions. Follow that manufacturer's instructions. To help avoid damage to your vehicle, drive slowly, re-adjust or remove the device if it is contacting your vehicle, and do not spin your wheels. If you do find traction devices that will fit, install them on the rear tires.

If a Tire Goes Flat

It is unusual for a tire to blowout while you are driving, especially if you maintain your vehicle's tires properly. If air goes out of a tire, it is much more likely to leak out slowly. But if you should ever have a blowout, here are a few tips about what to expect and what to do:

If a front tire fails, the flat tire creates a drag that pulls the vehicle toward that side. Take your foot off the accelerator pedal and grip the steering wheel firmly. Steer to maintain lane position, and then gently brake to a stop well out of the traffic lane.

A rear blowout, particularly on a curve, acts much like a skid and may require the same correction you would use in a skid. In any rear blowout remove your foot from the accelerator pedal. Get the vehicle under control by steering the way you want the vehicle to go. It may be very bumpy and noisy, but you can still steer. Gently brake to a stop, well off the road if possible.

⚠ CAUTION:

Lifting a vehicle and getting under it to do maintenance or repairs is dangerous without the appropriate safety equipment and training. The jack provided with your vehicle is designed only for changing a flat tire. If it is used for anything else, you or others could be badly injured or killed if the vehicle slips off the jack. Use the jack provided with your vehicle only for changing a flat tire.

If a tire goes flat, the next part shows how to use the jacking equipment to change a flat tire safely.

Changing a Flat Tire

If a tire goes flat, avoid further tire and wheel damage by driving slowly to a level place. Turn on your vehicle's hazard warning flashers. See *Hazard Warning Flashers on page 3-6* for more information.

⚠ CAUTION:

Changing a tire can be dangerous. The vehicle can slip off the jack and roll over or fall on you or other people. You and they could be badly injured or even killed. Find a level place to change your tire. To help prevent the vehicle from moving:

1. **Set the parking brake firmly.**
2. **Put the shift lever in PARK (P).**
3. **Turn off the engine and do not restart while the vehicle is raised.**
4. **Do not allow passengers to remain in the vehicle.**

To be even more certain the vehicle will not move, you should put blocks at the front and rear of the tire farthest away from the one being changed. That would be the tire, on the other side, at the opposite end of the vehicle.

When your vehicle has a flat tire, use the following example as a guide to assist you in the placement of wheel blocks.

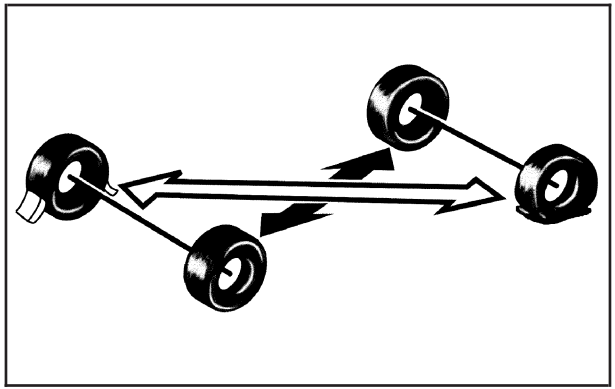

The following information tells you how to use the jack and change a tire.

Removing the Spare Tire and Tools

The jack and the wheel blocks are located under a cover near the passenger side rear seat.

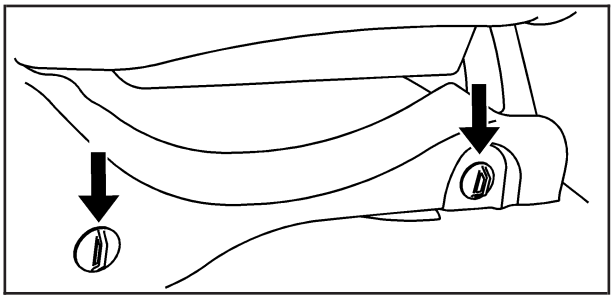

Rear Seat (Passenger Side) Jack Cover

1. Remove the jack cover by turning the two wing nuts one-quarter turn counterclockwise and pulling the jack cover off.

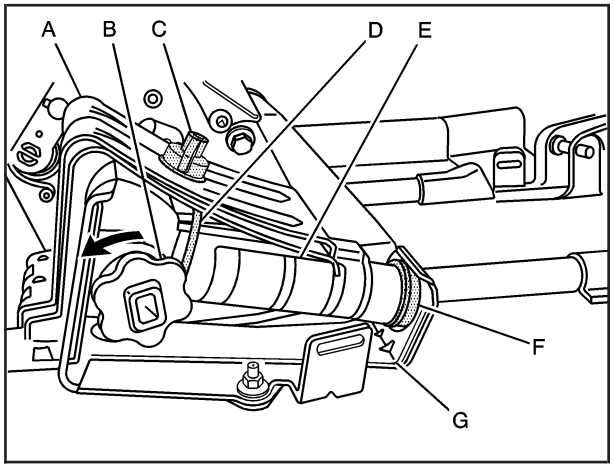

A. Wheel Blocks
B. Knob
C. Wing Nut
D. Retaining Hook
E. Jack
F. Jack Head
G. Mounting Bracket

2. Release the jack (E) from the mounting bracket (G) by turning the knob (B) on the jack counterclockwise to lower the jack head (F) from the mounting bracket.
3. Remove the wheel blocks (A) attached to the jack (E) by turning the wing nut (C) counterclockwise. Place the wheel blocks where needed as indicated in previously in this section.

The tools for changing a flat tire are located in the passenger's side top-box storage unit.

To remove the tools, do the following:

1. Open the top door on the passenger's side top-box storage unit. Use the ignition/door key to unlock it if it is locked. See *Top-Box Storage on page 2-86* for more information.
2. Remove the black pouch from the storage box.

   You now have all of the tools you will need to lower the spare tire and change a flat.

To access the spare tire:

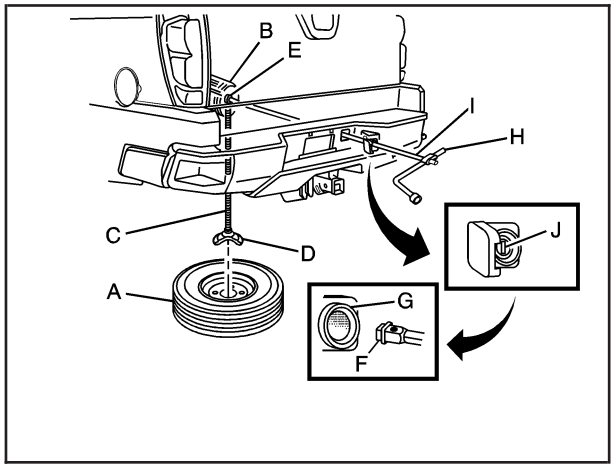

A. Spare Tire (Valve Stem Pointed Down)
B. Hoist Assembly
C. Hoist Cable
D. Tire/Wheel Retainer
E. Hoist Shaft
F. Hoist End of Extension Tool
G. Hoist Shaft Access Hole
H. Wheel Wrench
I. Jack Handle Extension(s)
J. Spare Tire Lock

1. Open the hoist shaft access cover on the bumper to access the spare tire lock (J).
2. To remove the spare tire lock, insert the ignition key, turn it clockwise and then pull.

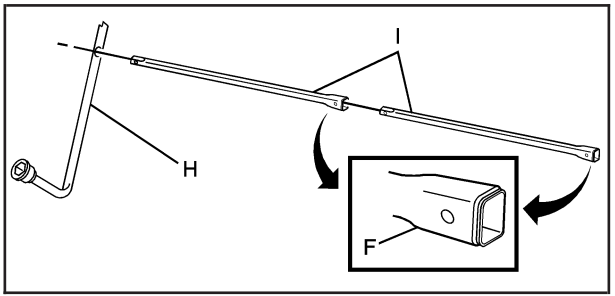

3. Assemble the two jack handle extensions (I) and wheel wrench (H) as shown.

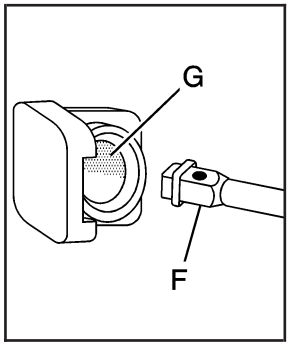

4. Insert the open end of the extension (F) through the hole in the rear bumper (G) (hoist shaft access hole).

Be sure the hoist end (F) of the extension connects to the hoist shaft (E). The ribbed square end of the extension is used to lower the spare tire.

Do not use the chiseled end of the wheel wrench.

5. Turn the wheel wrench counterclockwise to lower the spare tire to the ground. Continue to turn the wheel wrench until the spare tire can be pulled out from under the vehicle.

   If the spare tire does not lower to the ground, the secondary latch is engaged causing the tire not to lower. See *Secondary Latch System on page 5-90* for more information.

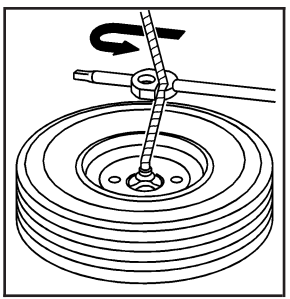

6. Use the wheel wrench hook that allows you to pull the hoist cable towards you, to assist in reaching the spare tire.

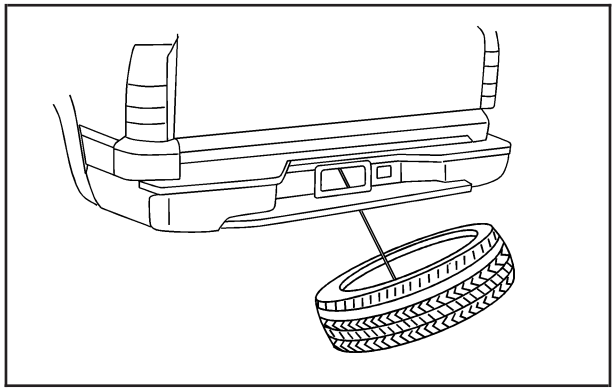

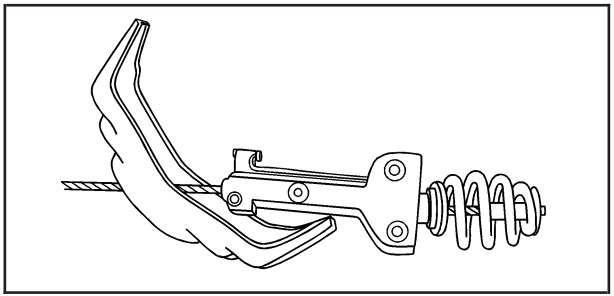

7. Tilt the tire with slack in the cable to access the tire/wheel retainer (D). Separate the retainer from the guide pin by sliding the retainer up the pin while pressing down on the latch. When the retainer is separated from the guide pin, tilt the retainer and pull it through the center of the wheel along with the cable and guide pin.
8. Put the spare tire near the flat tire.

Removing the Flat Tire and Installing the Spare Tire

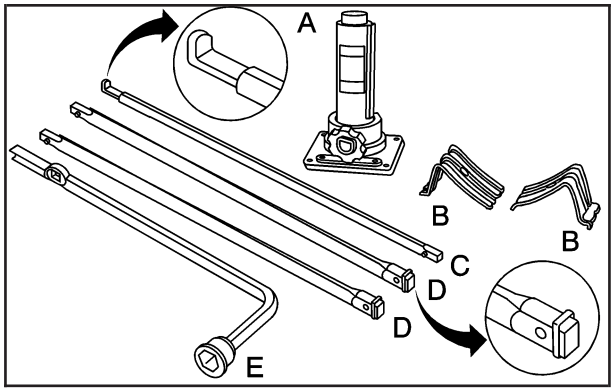

The tools that are needed include the jack (A), the wheel blocks (B), the jack handle (C), the jack handle extensions (D), and the wheel wrench (E).

1. Do a safety check before proceeding. See *Changing a Flat Tire on page 5-78* for more information.

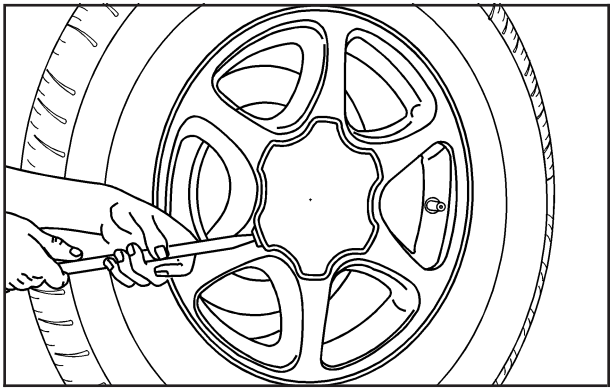

2. To remove the center cap, place the chiseled end of the wheel wrench in the slot on the wheel and gently pry the cap out.

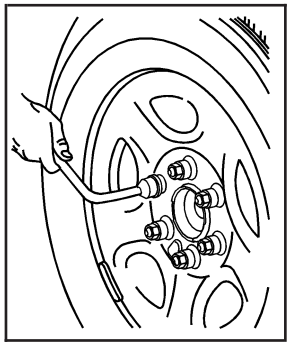

3. Use the wheel wrench to loosen all the wheel nuts. Turn the wheel wrench counterclockwise to loosen the wheel nuts. Do not remove the wheel nuts yet.

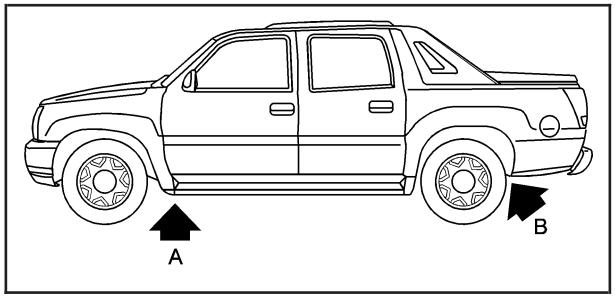

Jacking Locations (Overall View)

A. Front Position
B. Rear Position

⚠ CAUTION:

Getting under a vehicle when it is jacked up is dangerous. If the vehicle slips off the jack, you could be badly injured or killed. Never get under a vehicle when it is supported only by a jack.

⚠ CAUTION:

Raising your vehicle with the jack improperly positioned can damage the vehicle and even make the vehicle fall. To help avoid personal injury and vehicle damage, be sure to fit the jack lift head into the proper location before raising the vehicle.

4. Position the jack under the vehicle as shown.

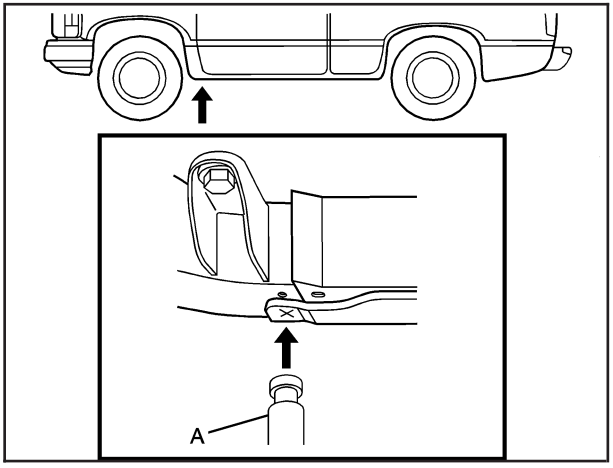

Front Position

Front Tire Flat: If the flat tire is on a front tire of the vehicle, you will need to use the jack handle (B) and only one jack handle extension (C). Attach the wheel wrench (D) to the jack handle extension (C). Attach the jack handle (B) to the jack (A). Position the jack on the frame behind the flat tire near the front body mount (E) as shown. Turn the wheel wrench (D) clockwise to raise the vehicle. Raise the vehicle far enough off the ground so there is enough room for the spare tire to clear the ground.

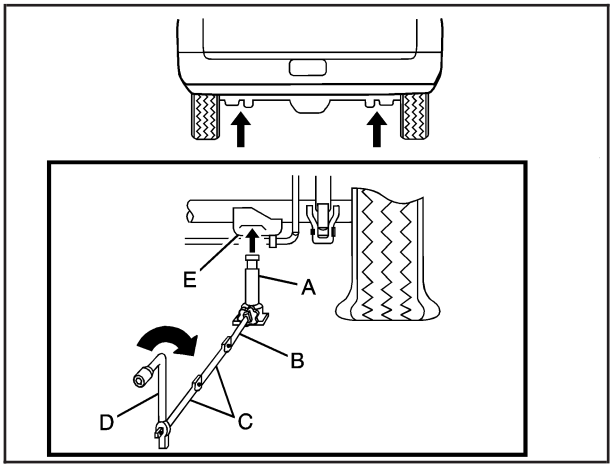

Rear Position

Rear Tire Flat: If the flat tire is on a rear tire of the vehicle, use the jack handle (B) and both jack handle extensions (C). Attach the wheel wrench (D) to the jack handle extensions (C). Attach the jack handle (B) to the jack (A). Use the jacking pad provided on the rear axle. Turn the wheel wrench (D) clockwise to raise the vehicle. Raise the vehicle far enough off the ground so there is enough room for the spare tire to clear the ground.

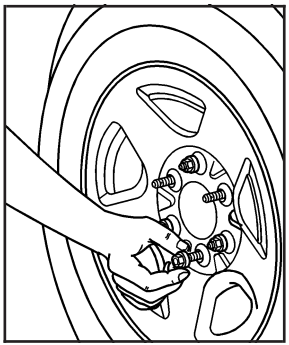

5. Remove all the wheel nuts.

6. Take off the flat tire.

⚠ CAUTION:

Rust or dirt on a wheel, or on the parts to which it is fastened, can make wheel nuts become loose after time. The wheel could come off and cause an accident. When you change a wheel, remove any rust or dirt from places where the wheel attaches to the vehicle. In an emergency, you can use a cloth or a paper towel to do this; but be sure to use a scraper or wire brush later, if needed, to get all the rust or dirt off. See *Changing a Flat Tire on page 5-78*.

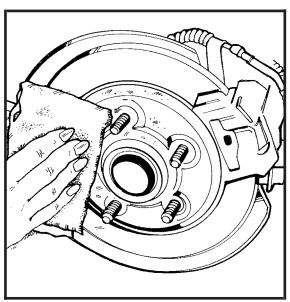

7. Remove any rust or dirt from the wheel bolts, mounting surfaces, and spare wheel.
8. Install the spare tire.

⚠ CAUTION:

Never use oil or grease on studs or nuts. Because the nuts might come loose. The vehicle's wheel could fall off, causing a crash.

9. Put the wheel nuts back on with the rounded end of the nuts toward the wheel after mounting the spare tire.
10. Tighten each wheel nut by hand. Then use the wheel wrench to tighten the wheel nuts until the wheel is held against the hub.
11. Turn the wheel wrench counterclockwise to lower the vehicle. Lower the jack completely.

⚠ CAUTION:

Incorrect or improperly tightened wheel nuts can cause the wheel to come loose and even come off. This could lead to a crash. If you have to replace them, be sure to get new original equipment wheel nuts. Stop somewhere as soon as you can and have the nuts tightened with a torque wrench to the proper torque specification. See *Capacities and Specifications on page 5-115* for wheel nut torque specification.

Notice: **Improperly tightened wheel nuts can lead to brake pulsation and rotor damage. To avoid expensive brake repairs, evenly tighten the wheel nuts in the proper sequence and to the proper torque specification. See *Capacities and Specifications on page 5-115* for the wheel nut torque specification.**

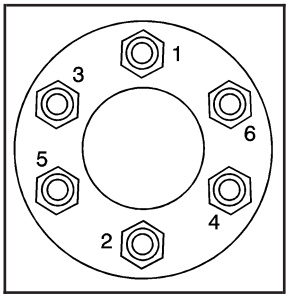

12. Tighten the nuts firmly in a crisscross sequence as shown by turning the wheel wrench clockwise.

When you reinstall the regular wheel and tire, you must also reinstall the center cap. Line the tab on the back of the tab with the slot in the wheel. Place the cap on the wheel and press until it snaps into place.

Secondary Latch System

Your vehicle has an underbody-mounted tire hoist assembly equipped with a secondary latch system. It is designed to stop the spare tire from suddenly falling off your vehicle. For the secondary latch to work, the spare must be installed with the valve stem pointing down. See *Storing a Flat or Spare Tire and Tools on page 5-94*.

⚠ CAUTION:

Before beginning this procedure read all the instructions. Failure to read and follow the instructions could damage the hoist assembly and you and others could get hurt. Read and follow the instructions listed next.

To release the spare tire from the secondary latch:

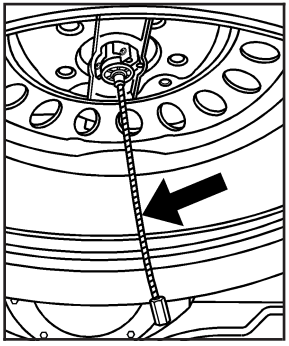

1. Check under the vehicle to see if the cable end is visible. If the cable is not visible proceed to Step 6.
2. If it is visible, first try to tighten the cable by turning the wheel wrench clockwise until you hear two clicks or feel it skip twice. You cannot overtighten the cable.
3. Loosen the cable by turning the wrench counterclockwise three or four turns.

4. Repeat this procedure at least two times. If the spare tire lowers to the ground, continue with Step 5 of *Removing the Spare Tire and Tools on page 5-79*.
5. If the spare does not lower, turn the wrench counterclockwise until approximately 6 inches (15 cm) of cable is exposed.
6. Stand the wheel blocks on their shortest ends, with the backs facing each other.

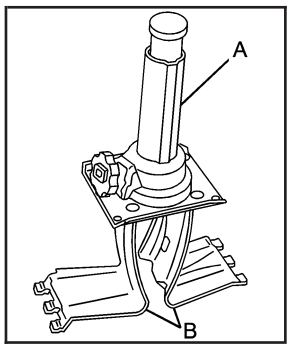

7. Place the bottom edge of the jack (A) on the wheel blocks (B), separating them so that the jack is balanced securely.

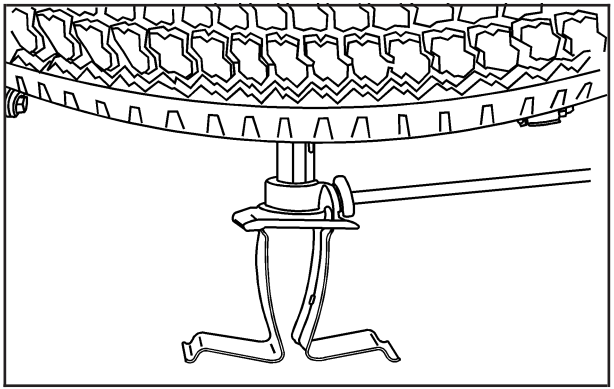

8. Attach the jack handle, extension, and wheel wrench to the jack and place it (with the wheel blocks) under the vehicle toward the front of the rear bumper.

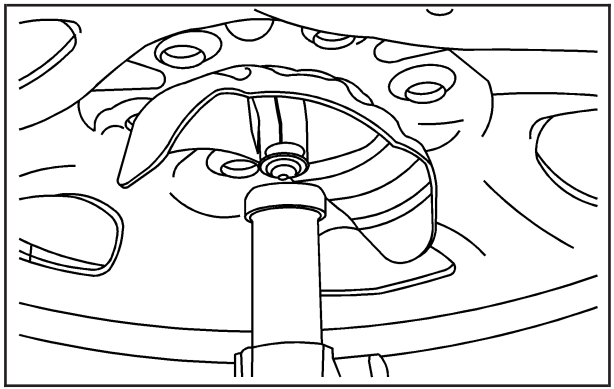

9. Position the center lift point of the jack under the center of the spare tire.

10. Turn the wrench clockwise to raise the jack until it lifts the end fitting.

11. Continue raising the jack until the spare tire stops moving upward and is held firmly in place. The secondary latch has released and the spare tire is balancing on the jack.

12. Lower the jack by turning the wheel wrench counterclockwise. Keep lowering the jack until the spare tire slides off the jack or is hanging by the cable.

⚠ CAUTION:

Someone standing too close during the procedure could be injured by the jack. If the spare tire does not slide off the jack completely, make sure no one is behind you or on either side of you as you pull the jack out from under the spare.

13. Disconnect the jack handle from the jack and carefully remove the jack. Use one hand to push against the spare while firmly pulling the jack out from under the spare tire with the other hand.

    If the spare tire is hanging from the cable, insert the hoist end of extension, and wheel wrench into the hoist shaft hole in the bumper and turn the wheel wrench counterclockwise to lower the spare the rest of the way.

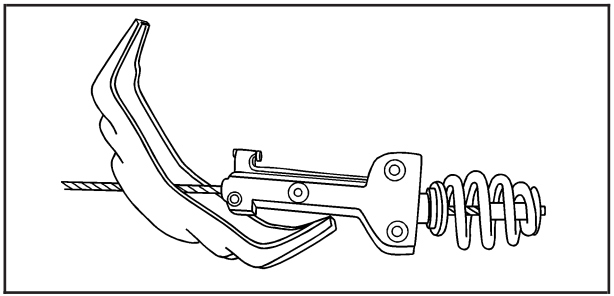

14. Tilt the tire retainer at the end of the cable and pull it through the wheel opening. Pull the tire out from under the vehicle.
15. Turn the wheel wrench in the hoist shaft hole in the bumper clockwise to raise the cable back up if the cable is hanging under the vehicle.

Have the hoist assembly inspected as soon as you can. You will not be able to store a spare or flat tire using the hoist assembly until it has been replaced.

To continue changing the flat tire, see *Removing the Flat Tire and Installing the Spare Tire on page 5-84*.

Storing a Flat or Spare Tire and Tools

⚠ CAUTION:

Storing a jack, a tire, or other equipment in the passenger compartment of the vehicle could cause injury. In a sudden stop or collision, loose equipment could strike someone. Store all these in the proper place.

Notice: **Storing an aluminum wheel with a flat tire under your vehicle for an extended period of time or with the valve stem pointing up can damage the wheel. Always stow the wheel with the valve stem pointing down and have the wheel/tire repaired as soon as possible.**

Store the tire under the rear of the vehicle in the spare tire carrier.

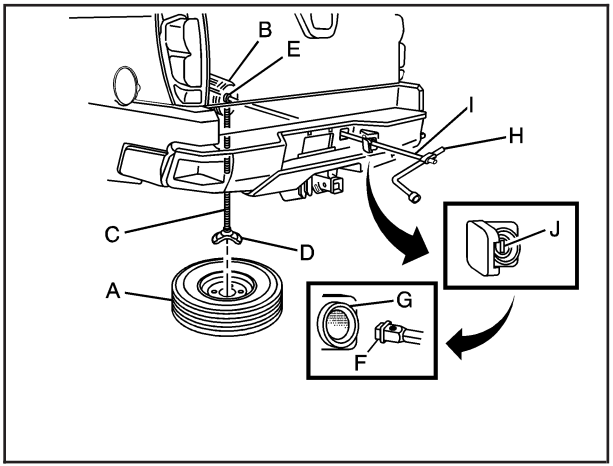

A. Spare Tire/Flat Tire (Valve Stem Pointed Down)
B. Hoist Assembly
C. Hoist Cable
D. Tire/Wheel Retainer
E. Hoist Shaft
F. Hoist End of Extension Tool
G. Hoist Shaft Access Hole
H. Wheel Wrench
I. Jack Handle Extension(s)
J. Spare Tire Lock

1. Put the tire (A) on the ground at the rear of the vehicle with the valve stem pointed down, and to the rear.

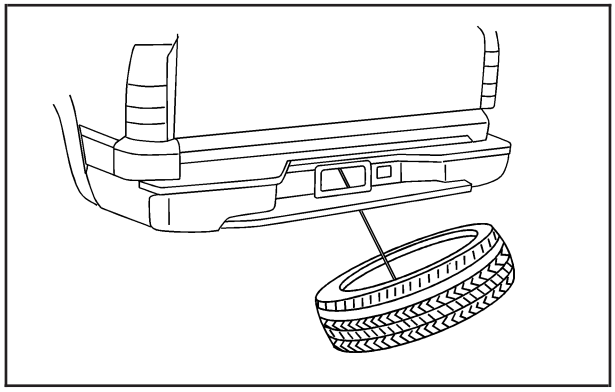

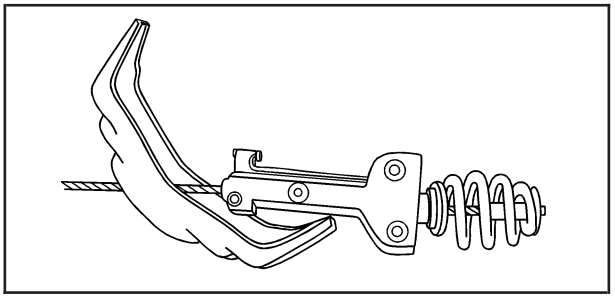

2. Tilt the tire. Separate the tire/wheel retainer (D) from the guide pin. Pull the pin through the center of the wheel. Tilt the retainer down through the center wheel opening.

Make sure the retainer is fully seated across the underside of the wheel.

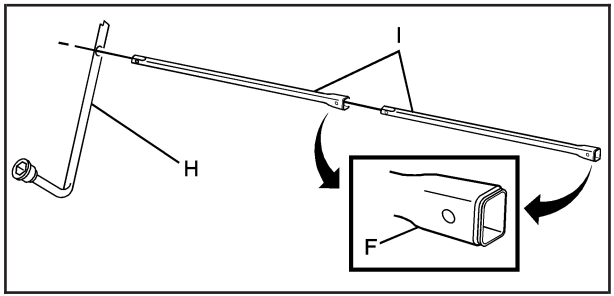

3. Assemble the two jack handle extensions (I) and wheel wrench (H) as shown.

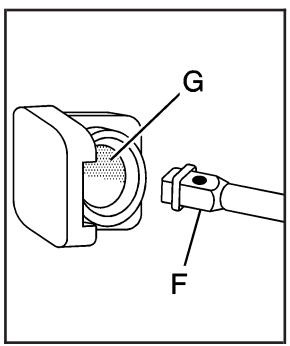

4. Insert the open end of the extension (F) through the hole in the rear bumper (G) (hoist shaft access hole).

5. Raise the tire part way upward. Make sure the retainer is seated in the wheel opening.

6. Raise the tire fully against the underside of the vehicle by turning the wheel wrench clockwise until you hear two clicks or feel it skip twice. You cannot overtighten the cable.

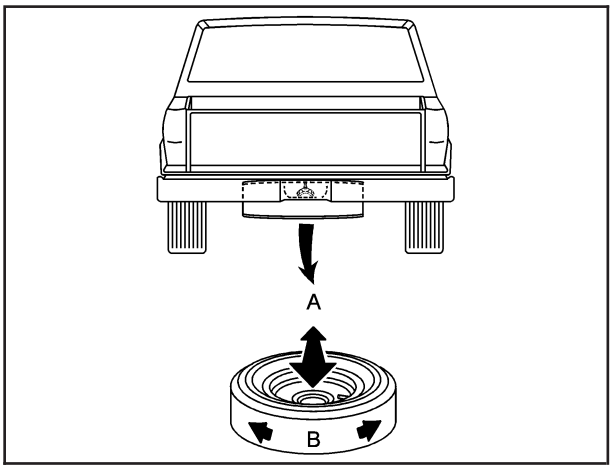

7. Make sure the tire is stored securely. Push, pull (A), and then try to turn (B) the tire. If the tire moves, use the wheel wrench to tighten the cable.
8. Reinstall the spare tire lock.
9. Close the hoist shaft access cover.

To store the tools, follow these steps:

1. Return the tools to the tool bag and place it back in the top-box storage unit.
2. Assemble the wheel blocks and jack together with the wing nut by reversing Step 2 under *Removing the Spare Tire and Tools on page 5-79*
3. Replace the jack cover and tighten the jack-cover wing nuts.

Spare Tire

Your vehicle, when new, had a fully-inflated spare tire. A spare tire may lose air over time, so check its inflation pressure regularly. See *Inflation - Tire Pressure on page 5-61* and *Loading Your Vehicle on page 4-35* for information regarding proper tire inflation and loading your vehicle. For instruction on how to remove, install or store a spare tire, see *Removing the Flat Tire and Installing the Spare Tire on page 5-84* and *Storing a Flat or Spare Tire and Tools on page 5-94*.

After installing the spare tire on your vehicle, you should stop as soon as possible and make sure the spare is correctly inflated. The spare tire is made to perform well at speeds up to 70 mph (112 km/h) at the recommended inflation pressure, so you can finish your trip.

Have the damaged or flat road tire repaired or replaced as soon as you can and installed back onto your vehicle. This way, a spare tire will be available in case you need it again. Do not mix tires and wheels of different sizes, because they will not fit. Keep your spare tire and its wheel together.

Appearance Care

Interior Cleaning

Your vehicle's interior will continue to look its best if it is cleaned often. Although not always visible, dust and dirt can accumulate on your upholstery. Dirt can damage carpet, fabric, leather, and plastic surfaces. Regular vacuuming is recommended to remove particles from your upholstery. It is important to keep your upholstery from becoming and remaining heavily soiled. Soils should be removed as quickly as possible. Your vehicle's interior may experience extremes of heat that could cause stains to set rapidly.

Lighter colored interiors may require more frequent cleaning. Use care because newspapers and garments that transfer color to your home furnishings may also transfer color to your vehicle's interior.

When cleaning your vehicle's interior, only use cleaners specifically designed for the surfaces being cleaned. Permanent damage may result from using cleaners on surfaces for which they were not intended. Use glass cleaner only on glass. Remove any accidental over-spray from other surfaces immediately. To prevent over-spray, apply cleaner directly to the cleaning cloth.

Notice: **If you use abrasive cleaners when cleaning glass surfaces on your vehicle, you could scratch the glass and/or cause damage to the rear window defogger. When cleaning the glass on your vehicle, use only a soft cloth and glass cleaner.**

Many cleaners contain solvents that may become concentrated in your vehicle's breathing space. Before using cleaners, read and adhere to all safety instructions on the label. While cleaning your vehicle's interior, maintain adequate ventilation by opening your vehicle's doors and windows.

Dust may be removed from small buttons and knobs using a small brush with soft bristles.

Your dealer/retailer has a product for cleaning your vehicle's glass. Should it become necessary, you can also obtain a product from your dealer/retailer to remove odors from your vehicle's upholstery.

Do not clean your vehicle using the following cleaners or techniques:

- Never use a knife or any other sharp object to remove a soil from any interior surface.
- Never use a stiff brush. It can cause damage to your vehicle's interior surfaces.
- Never apply heavy pressure or rub aggressively with a cleaning cloth. Use of heavy pressure can damage your interior and does not improve the effectiveness of soil removal.
- Use only mild, neutral-pH soaps. Avoid laundry detergents or dishwashing soaps with degreasers. Using too much soap will leave a residue that leaves streaks and attracts dirt. For liquid cleaners, about 20 drops per gallon (3.78 L) of water is a good guide.
- Do not heavily saturate your upholstery while cleaning.
- Damage to your vehicle's interior may result from the use of many organic solvents such as naptha, alcohol, etc.

Fabric/Carpet

Use a vacuum cleaner with a soft brush attachment frequently to remove dust and loose dirt. A canister vacuum with a beater bar in the nozzle may only be used on floor carpet and carpeted floor mats. For soils, always try to remove them first with plain water or club soda. Before cleaning, gently remove as much of the soil as possible using one of the following techniques:

- For liquids: gently blot the remaining soil with a paper towel. Allow the soil to absorb into the paper towel until no more can be removed.
- For solid dry soils: remove as much as possible and then vacuum.

To clean, use the following instructions:

1. Saturate a lint-free, clean white cloth with water or club soda.
2. Wring the cloth to remove excess moisture.
3. Start on the outside edge of the soil and gently rub toward the center. Continue cleaning, using a clean area of the cloth each time it becomes soiled.
4. Continue to gently rub the soiled area until the cleaning cloth remains clean.
5. If the soil is not completely removed, use a mild soap solution and repeat the cleaning process that was used with plain water.

If any of the soil remains, a commercial fabric cleaner or spot lifter may be necessary. When a commercial upholstery cleaner or spot lifter is to be used, test a small hidden area for colorfastness first. If the locally cleaned area gives any impression that a ring formation may result, clean the entire surface.

After the cleaning process has been completed, a paper towel can be used to blot excess moisture from the fabric or carpet.

Leather

A soft cloth dampened with water can be used to remove dust. If a more thorough cleaning is necessary, a soft cloth dampened with a mild soap solution can be used. Allow the leather to dry naturally. Do not use heat to dry. Never use steam to clean leather. Never use spot lifters or spot removers on leather. Many commercial leather cleaners and coatings that are sold to preserve and protect leather may permanently change the appearance and feel of your leather and are not recommended. Do not use silicone or wax-based products, or those containing organic solvents to clean your vehicle’s interior because they can alter the appearance by increasing the gloss in a non-uniform manner. Never use shoe polish on leather.

Instrument Panel, Vinyl, and Other Plastic Surfaces

A soft cloth dampened with water may be used to remove dust. If a more thorough cleaning is necessary, a clean soft cloth dampened with a mild soap solution can be used to gently remove dust and dirt. Never use spot lifters or removers on plastic surfaces. Many commercial cleaners and coatings that are sold to preserve and protect soft plastic surfaces may permanently change the appearance and feel of your interior and are not recommended. Do not use silicone or wax-based products, or those containing organic solvents to clean your vehicle's interior because they can alter the appearance by increasing the gloss in a non-uniform manner.

Some commercial products may increase gloss on your instrument panel. The increase in gloss may cause annoying reflections in the windshield and even make it difficult to see through the windshield under certain conditions.

Wood Panels

Use a clean cloth moistened in warm, soapy water (use mild dish washing soap). Dry the wood immediately with a clean cloth.

Speaker Covers

Vacuum around a speaker cover gently, so that the speaker will not be damaged. Clean spots with just water and mild soap.

Care of Safety Belts

Keep belts clean and dry.

⚠ CAUTION:

Do not bleach or dye safety belts. If you do, it may severely weaken them. In a crash, they might not be able to provide adequate protection. Clean safety belts only with mild soap and lukewarm water.

Weatherstrips

Silicone grease on weatherstrips will make them last longer, seal better, and not stick or squeak. Apply silicone grease with a clean cloth. During very cold, damp weather frequent application may be required. See *Recommended Fluids and Lubricants on page 6-13*.

Washing Your Vehicle

The best way to preserve your vehicle's finish is to keep it clean by washing it often.

Notice: **Certain cleaners contain chemicals that can damage the emblems or nameplates on your vehicle. Check the cleaning product label. If it states that it should not be used on plastic parts, do not use it on your vehicle or damage may occur and it would not be covered by the warranty.**

Do not wash the vehicle in direct sunlight. Use a car washing soap. Do not use cleaning agents that are petroleum based or that contain acid or abrasives, as they can damage the paint, metal or plastic on your vehicle. Approved cleaning products can be obtained from your dealer/retailer. See *Vehicle Care/Appearance Materials on page 5-105*. Follow all manufacturers' directions regarding correct product usage, necessary safety precautions and appropriate disposal of any vehicle care product.

Rinse the vehicle well, before washing and after to remove all cleaning agents completely. If they are allowed to dry on the surface, they could stain.

Dry the finish with a soft, clean chamois or an all-cotton towel to avoid surface scratches and water spotting

High pressure car washes may cause water to enter the vehicle. Avoid using high pressure washes closer than 12 inches (30 cm) to the surface of the vehicle. Use of power washers exceeding 1,200 psi (8 274 kPa) can result in damage or removal of paint and decals.

Cleaning Exterior Lamps/Lenses

Use only lukewarm or cold water, a soft cloth and a car washing soap to clean exterior lamps and lenses. Follow instructions under *Washing Your Vehicle on page 5-101*.

Finish Care

Occasional waxing or mild polishing of your vehicle by hand may be necessary to remove residue from the paint finish. You can get approved cleaning products from your dealer/retailer. See *Vehicle Care/Appearance Materials on page 5-105*.

If your vehicle has a basecoat/clearcoat paint finish, the clearcoat gives more depth and gloss to the colored basecoat. Always use waxes and polishes that are non-abrasive and made for a basecoat/clearcoat paint finish.

Notice: **Machine compounding or aggressive polishing on a basecoat/clearcoat paint finish may damage it. Use only non-abrasive waxes and polishes that are made for a basecoat/clearcoat paint finish on your vehicle.**

Foreign materials such as calcium chloride and other salts, ice melting agents, road oil and tar, tree sap, bird droppings, chemicals from industrial chimneys, etc., can damage your vehicle's finish if they remain on painted surfaces. Wash the vehicle as soon as possible. If necessary, use non-abrasive cleaners that are marked safe for painted surfaces to remove foreign matter.

Exterior painted surfaces are subject to aging, weather and chemical fallout that can take their toll over a period of years. You can help to keep the paint finish looking new by keeping your vehicle garaged or covered whenever possible.

Protecting Exterior Bright Metal Parts

Bright metal parts should be cleaned regularly to keep their luster. Washing with water is all that is usually needed. However, you may use chrome polish on chrome or stainless steel trim, if necessary.

Use special care with aluminum trim. To avoid damaging protective trim, never use auto or chrome polish, steam or caustic soap to clean aluminum. A coating of wax, rubbed to high polish, is recommended for all bright metal parts.

Windshield and Wiper Blades

Clean the outside of the windshield with glass cleaner.

Clean the rubber blades using a lint free cloth or paper towel soaked with windshield washer fluid or a mild detergent. Wash the windshield thoroughly when cleaning the blades. Bugs, road grime, sap, and a buildup of vehicle wash/wax treatments may cause wiper streaking. Replace the wiper blades if they are worn or damaged.

Wipers can be damaged by:

- Extreme dusty conditions
- Sand and salt
- Heat and sun
- Snow and ice, without proper removal

Aluminum or Chrome-Plated Wheels and Trim

Your vehicle may have either aluminum or chrome-plated wheels.

Keep the wheels clean using a soft clean cloth with mild soap and water. Rinse with clean water. After rinsing thoroughly, dry with a soft clean towel. A wax may then be applied.

Notice: **Chrome wheels and other chrome trim may be damaged if you do not wash your vehicle after driving on roads that have been sprayed with magnesium, calcium or sodium chloride. These chlorides are used on roads for conditions such as ice and dust. Always wash your vehicle's chrome with soap and water after exposure.**

Notice: **If you use strong soaps, chemicals, abrasive polishes, cleaners, brushes, or cleaners that contain acid on aluminum or chrome-plated wheels, you could damage the surface of the wheel(s). The repairs would not be covered by your warranty. Use only approved cleaners on aluminum or chrome-plated wheels.**

The surface of these wheels is similar to the painted surface of your vehicle. Do not use strong soaps, chemicals, abrasive polishes, abrasive cleaners, cleaners with acid, or abrasive cleaning brushes on them because you could damage the surface. Do not use chrome polish on aluminum wheels.

Notice: **Using chrome polish on aluminum wheels could damage the wheels. The repairs would not be covered by your warranty. Use chrome polish on chrome wheels only.**

Use chrome polish only on chrome-plated wheels, but avoid any painted surface of the wheel, and buff off immediately after application.

Notice: **If you drive your vehicle through an automatic car wash that has silicone carbide tire cleaning brushes, you could damage the aluminum or chrome-plated wheels. The repairs would not be covered by your warranty. Never drive a vehicle equipped with aluminum or chrome-plated wheels through an automatic car wash that uses silicone carbide tire cleaning brushes.**

Tires

To clean the tires, use a stiff brush with tire cleaner.

Notice: **Using petroleum-based tire dressing products on your vehicle may damage the paint finish and/or tires. When applying a tire dressing, always wipe off any overspray from all painted surfaces on your vehicle.**

Sheet Metal Damage

If the vehicle is damaged and requires sheet metal repair or replacement, make sure the body repair shop applies anti-corrosion material to parts repaired or replaced to restore corrosion protection.

Original manufacturer replacement parts will provide the corrosion protection while maintaining the warranty.

Finish Damage

Any stone chips, fractures or deep scratches in the finish should be repaired right away. Bare metal will corrode quickly and may develop into major repair expense.

Minor chips and scratches can be repaired with touch-up materials available from your dealer/retailer. Larger areas of finish damage can be corrected in your dealer's/retailer's body and paint shop.

Underbody Maintenance

Chemicals used for ice and snow removal and dust control can collect on the underbody. If these are not removed, corrosion and rust can develop on the underbody parts such as fuel lines, frame, floor pan, and exhaust system even though they have corrosion protection.

At least every spring, flush these materials from the underbody with plain water. Clean any areas where mud and debris can collect. Dirt packed in close areas of the frame should be loosened before being flushed. Your dealer/retailer or an underbody car washing system can do this for you.

Chemical Paint Spotting

Some weather and atmospheric conditions can create a chemical fallout. Airborne pollutants can fall upon and attack painted surfaces on the vehicle. This damage can take two forms: blotchy, ring-shaped discolorations, and small, irregular dark spots etched into the paint surface.

Although no defect in the paint job causes this, we will repair, at no charge to the owner, the surfaces of new vehicles damaged by this fallout condition within 12 months or 12,000 miles (20 000 km) of purchase, whichever occurs first.

Vehicle Care/Appearance Materials

Description	Usage
Polishing Cloth	Interior and exterior polishing cloth.
Tar and Road Oil Remover	Removes tar, road oil, and asphalt.
Chrome Cleaner and Polish	Use on chrome or stainless steel.
White Sidewall Tire Cleaner	Removes soil and black marks from whitewalls and raised white lettering.
Vinyl Cleaner	Cleans vinyl.
Glass Cleaner	Removes dirt, grime, smoke and fingerprints.
Chrome Wheel Cleaner	Removes dirt and grime from chrome wheels.
Finish Enhancer	Removes dust, fingerprints, and surface contaminants. Spray on and wipe off.

Description	Usage
Swirl Remover Polish	Removes swirl marks, fine scratches, and other light surface contamination.
Cleaner Wax	Removes light scratches and protects finish.
Foaming Tire Shine Low Gloss	Cleans, shines, and protects tires. No wiping necessary.
Wash Wax Concentrate	Medium foaming shampoo. Cleans and lightly waxes. Biodegradable and phosphate free.
Spot Lifter	Quickly removes spots and stains from carpets, vinyl, and cloth upholstery.
Odor Eliminator	Odorless spray odor eliminator used on fabrics, vinyl, leather and carpet.

Vehicle Identification

Vehicle Identification Number (VIN)

This is the legal identifier for your vehicle. It appears on a plate in the front corner of the instrument panel, on the driver side. You can see it if you look through the windshield from outside your vehicle. The VIN also appears on the Certification/Tire and Service Parts labels and the certificates of title and registration.

Engine Identification

The eighth character in the VIN is the engine code. This code helps you identify your vehicle's engine, specifications, and replacement parts. See *Capacities and Specifications on page 5-115* for your vehicle's engine code.

Service Parts Identification Label

This label is on the inside of the glove box.
It is very helpful if you ever need to order parts.
The label has the following information:

- Vehicle Identification Number (VIN)
- Model designation
- Paint information
- Production options and special equipment

Do not remove this label from the vehicle.

Electrical System

Add-On Electrical Equipment

Notice: **Do not add anything electrical to your vehicle unless you check with your dealer/retailer first. Some electrical equipment can damage your vehicle and the damage would not be covered by your warranty. Some add-on electrical equipment can keep other components from working as they should.**

Add-on equipment can drain your vehicle's battery, even if your vehicle is not operating.

Your vehicle has an airbag system. Before attempting to add anything electrical to your vehicle, see *Servicing Your Airbag-Equipped Vehicle on page 1-70*.

Windshield Wiper Fuses

The windshield wiper motor is protected by a circuit breaker and a fuse. If the motor overheats due to heavy snow, etc., the wiper will stop until the motor cools. If the overload is caused by some electrical problem, have it fixed.

Power Windows and Other Power Options

Circuit breakers protect the power windows and other power accessories. If the current load is too heavy, the circuit breaker opens and then closes after a cool down period, protecting the circuit until the problem is fixed or goes away.

Fuses and Circuit Breakers

The wiring circuits in your vehicle are protected from short circuits by a combination of fuses, circuit breakers and fusible thermal links. This greatly reduces the chance of fires caused by electrical problems.

Look at the silver-colored band inside the fuse. If the band is broken or melted, replace the fuse. Be sure you replace a bad fuse with a new one of the identical size and rating.

If you ever have a problem on the road and don't have a spare fuse, you can borrow one that has the same amperage. Just pick some feature of your vehicle that you can get along without – like the radio or cigarette lighter – and use its fuse, if it is the correct amperage. Replace it as soon as you can.

Instrument Panel Fuse Block

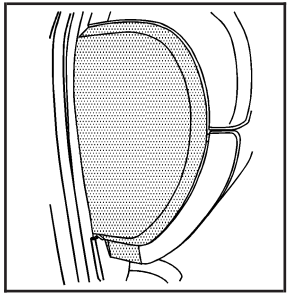

The instrument panel fuse block access door is located on the driver side edge of the instrument panel.

Pull off the cover to access the fuse block.

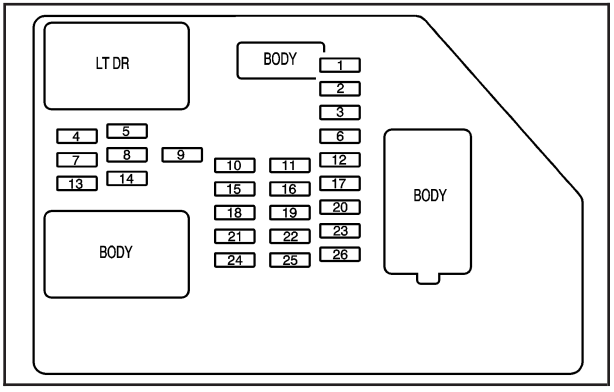

Fuses	Usage
1	Rear Seats
2	Rear Accessory Power Outlet
3	Steering Wheel Controls Backlight
4	Driver Door Module
5	Dome Lamps, Driver Side Turn Signal
6	Driver Side Turn Signal, Stoplamp

Fuses	Usage
7	Instrument Panel Back Lighting
8	Passenger Side Turn Signal, Stoplamp
9	Passenger Door Module, Universal Home Remote System
10	Power Door Lock 2 (Unlock Feature)
11	Power Door Lock 2 (Lock Feature)
12	Stoplamps, Center-High Mounted Stoplamp
13	Rear Climate Controls
14	Power Mirror
15	Body Control Module (BCM)
16	Accessory Power Outlets
17	Interior Lamps
18	Power Door Lock 1 (Unlock Feature)
19	Rear Seat Entertainment
20	Ultrasonic Rear Parking Assist

Fuses	Usage
21	Power Door Lock 1 (Lock Feature)
22	Driver Information Center (DIC)
23	Not Used
24	Not Used
25	Driver Seat Module, Remote Keyless Entry System
26	Driver Power Door Lock (Unlock Feature)

Circuit Breaker	Usage
LT DR	Driver Side Power Window Circuit Breaker

Harness Connector	Usage
LT DR	Driver Door Harness Connection
BODY	Harness Connector
BODY	Harness Connector

Center Instrument Panel Fuse Block

The center instrument panel fuse block is located underneath the instrument panel, to the left of the steering column.

Top View

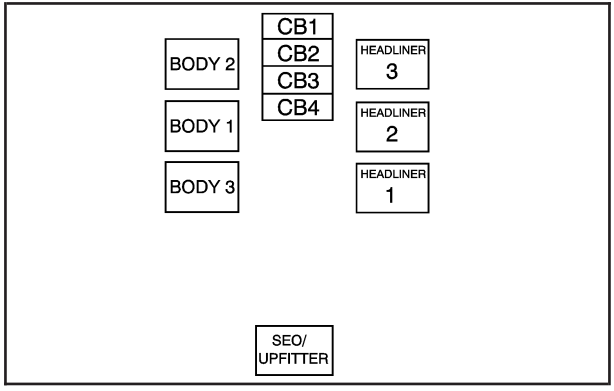

Harness Connector	Usage
BODY 2	Body Harness Connector 2
BODY 1	Body Harness Connector 1
BODY 3	Body Harness Connector 3
HEADLINER 3	Headliner Harness Connector 3
HEADLINER 2	Headliner Harness Connector 2
HEADLINER 1	Headliner Harness Connector 1
SEO/UPFITTER	Special Equipment Option Upfitter Harness Connector

Circuit Breaker	Usage
CB1	Passenger Side Power Window Circuit Breaker
CB2	Passenger Seat Circuit Breaker
CB3	Driver Seat Circuit Breaker
CB4	Rear Sliding Window

Underhood Fuse Block

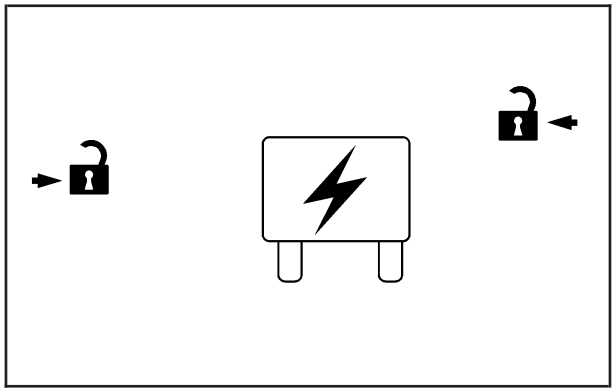

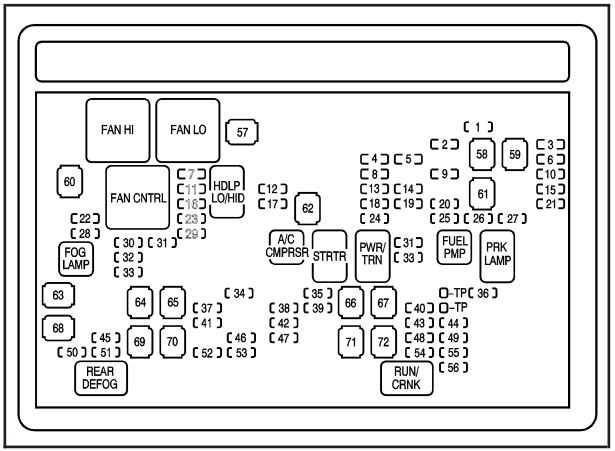

The underhood fuse block is located in the engine compartment, on the driver side of the vehicle.
To access the fuse/relay block, push in on the tabs on the end of the fuse/relay block cover and lift.

Notice: **Spilling liquid on any electrical components on your vehicle may damage it. Always keep the covers on any electrical component.**

To remove fuses, hold the end of the fuse between your thumb and index finger and pull straight out.

Fuses	Usage
1	Right Trailer Stop/Turn Lamp
2	Electronic Stability Suspension Control, Automatic Level Control Exhaust
3	Left Trailer Stop/Turn Lamp
4	Engine Controls

Fuses	Usage
5	Engine Control Module, Throttle Control
6	Trailer Brake Controller
7	Front Washer
8	Oxygen Sensors
9	Antilock Brakes System 2
10	Trailer Back-up Lamps
11	Driver Side Low-Beam Headlamp
12	Engine Control Module (Battery)
13	Fuel Injectors, Ignition Coils (Right Side)
14	Transmission Control Module (Battery)
15	Vehicle Back-up Lamps
16	Passenger Side Low-Beam Headlamp
17	Air Conditioning Compressor
18	Oxygen Sensors
19	Transmission Controls (Ignition)
20	Fuel Pump

Fuses	Usage
21	Fuel System Control Module
22	Headlamp Washers
23	Rear Windshield Washer
24	Fuel Injectors, Ignition Coils (Left Side)
25	Trailer Park Lamps
26	Driver Side Park Lamps
27	Passenger Side Park Lamps
28	Fog Lamps
29	Horn
30	Passenger Side High-Beam Headlamp
31	Daytime Running Lamps
32	Driver Side High-Beam Headlamp
33	Daytime Running Lights 2
34	Sunroof
35	Key Ignition System, Theft Deterrent System
36	Windshield Wiper

Fuses	Usage
37	SEO B2 Upfitter Usage (Battery)
38	Electric Adjustable Pedals
39	Climate Controls (Battery)
40	Airbag System (Ignition)
41	Amplifier
42	Audio System
43	Miscellaneous (Ignition), Cruise Control
44	Liftgate Release
45	Airbag System (Battery)
46	Instrument Panel Cluster
47	Power Take-Off
48	Auxiliary Climate Control (Ignition), Compass-Temperature Mirror
49	Center High-Mounted Stoplamp (CHMSL)
50	Rear Defogger
51	Heated Mirror

Fuses	Usage
52	SEO B1 Upfitter Usage (Battery)
53	Cigarette Lighter, Auxiliary Power Outlet
54	Automatic Level Control Compressor Relay, SEO Upfitter Usage
55	Climate Controls (Ignition)
56	Engine Control Module, Secondary Fuel Pump (Ignition)

J-Case Fuses	Usage
57	Cooling Fan 1
58	Automatic Level Control Compressor
59	Heavy Duty Antilock Brake System
60	Cooling Fan 2
61	Antilock Brake System 1
62	Starter
63	Stud 2 (Trailer Brakes)
64	Left Bussed Electrical Center 1

J-Case Fuses	Usage
65	Electric Running Boards
66	Heated Windshield Washer System
67	Four-Wheel Drive System
68	Stud 1 (Trailer Connector Battery Power)
69	Mid-Bussed Electrical Center 1
70	Climate Control Blower
71	Power Liftgate Module
72	Left Bussed Electrical Center 2

Relays	Usage
FAN HI	Cooling Fan High Speed
FAN LO	Cooling Fan Low Speed

Relays	Usage
ENG EXH VLV	Not Used
FAN CNTRL	Cooling Fan Control
HDLP LO/HID	Hi Intensity Discharge Headlamp
FOG LAMP	Front Fog Lamps
A/C CMPRSR	Air Conditioning Compressor
STRTR	Starter
PWR/TRN	Powertrain
FUEL PMP	Fuel Pump
PRK LAMP	Parking Lamps
REAR DEFOG	Rear Defogger
RUN/CRANK	Switched Power

Capacities and Specifications

The following approximate capacities are given in English and metric conversions. See *Recommended Fluids and Lubricants on page 6-13* for more information.

Application	Capacities	
	English	Metric
Air Conditioning Refrigerant R134a	For the Air Conditioning system refrigerant charge amount, see the refrigerant caution label located under the hood. Please see your dealer/retailer for more information.	
Cooling System	16.9 qt	16.0 L
Engine Oil with Filter	6.0 qt†	5.7 L†
Fuel Tank	31.5 gal	119.2 L
Transmission Fluid (Pan Removal and Filter Replacement)	6.0 qt	5.7 L
Transfer Case Fluid	1.5 qt	1.4 L
Wheel Nut Torque	140 lb ft	190 N•m
†Oil filter should be changed at every oil change. After refill, the level must be rechecked. Add enough engine coolant so that the fluid is within the proper operating range.		

Engine Specifications

Engine	VIN Code	Transmission	Spark Plug Gap
6.2L V8	8	Automatic	0.040 in (1.01 mm)

NOTES

Section 6 Maintenance Schedule

Maintenance Schedule 6-2
Introduction 6-2
Maintenance Requirements 6-2
Your Vehicle and the Environment 6-2
Using the Maintenance Schedule 6-2
Scheduled Maintenance 6-4
Additional Required Services 6-6
Maintenance Footnotes 6-7
Owner Checks and Services 6-9
At Each Fuel Fill 6-9
At Least Once a Month 6-10
At Least Once a Year 6-10
Recommended Fluids and Lubricants 6-13
Maintenance Replacement Parts 6-15
Engine Drive Belt Routing 6-16
Maintenance Record 6-17

Maintenance Schedule

Introduction

Important: Keep engine oil at the proper level and change as recommended.

Have you purchased the GM Protection Plan? The Plan supplements your new vehicle warranties. See your Warranty and Owner Assistance booklet or your dealer/retailer for details.

Maintenance Requirements

Notice: **Maintenance intervals, checks, inspections, replacement parts, and recommended fluids and lubricants as prescribed in this manual are necessary to keep your vehicle in good working condition. Any damage caused by failure to follow scheduled maintenance might not be covered by warranty.**

Your Vehicle and the Environment

Proper vehicle maintenance not only helps to keep your vehicle in good working condition, but also helps the environment. All recommended maintenance is important. Improper vehicle maintenance can even affect the quality of the air we breathe. Improper fluid levels or the wrong tire inflation can increase the level of emissions from your vehicle. To help protect our environment, and to keep your vehicle in good condition, be sure to maintain your vehicle properly.

Using the Maintenance Schedule

We want to help you keep your vehicle in good working condition. But we do not know exactly how you will drive it. You might drive very short distances only a few times a week. Or you might drive long distances all the time in very hot, dusty weather. You might use your vehicle in making deliveries. Or you might drive it to work, to do errands, or in many other ways.

Because of all the different ways people use their vehicles, maintenance needs vary. You might need more frequent checks and replacements. So please read the following and note how you drive. If you have any questions on how to keep your vehicle in good condition, see your dealer/retailer.

This schedule is for vehicles that:

- carry passengers and cargo within recommended limits. You will find these limits on the Tire and Loading Information label. See *Loading Your Vehicle on page 4-35*.
- are driven on reasonable road surfaces within legal driving limits.
- are driven off-road in the recommended manner. See *Off-Road Driving on page 4-12*.
- use the recommended fuel. See *Gasoline Octane on page 5-5*.

The services in *Scheduled Maintenance on page 6-4* should be performed when indicated. See *Additional Required Services on page 6-6* and *Maintenance Footnotes on page 6-7* for further information.

⚠ CAUTION:

Performing maintenance work on a vehicle can be dangerous. In trying to do some jobs, you can be seriously injured. Do your own maintenance work only if you have the required know-how and the proper tools and equipment for the job. If you have any doubt, see your dealer/retailer to have a qualified technician do the work. See *Doing Your Own Service Work on page 5-4*.

Some maintenance services can be complex. So, unless you are technically qualified and have the necessary equipment, you should have your dealer/retailer do these jobs.

When you go to your dealer/retailer for your service needs, you will know that trained and supported service technicians will perform the work using genuine parts.

If you want to purchase service information, see *Service Publications Ordering Information on page 7-15*.

Owner Checks and Services on page 6-9 tells you what should be checked, when to check it, and what you can easily do to help keep your vehicle in good condition.

The proper replacement parts, fluids, and lubricants to use are listed in *Recommended Fluids and Lubricants on page 6-13* and *Maintenance Replacement Parts on page 6-15*. When your vehicle is serviced, make sure these are used. All parts should be replaced and all necessary repairs done before you or anyone else drives the vehicle. We recommend the use of genuine parts from your dealer/retailer.

Scheduled Maintenance

To maintain the ride, handling, and performance of your vehicle, it is important that the first tire rotation service be performed when the vehicle has 5,000 to 8,000 miles (8 000 to 13 000 km). Check tires for inflation pressures and wear. See *Tires on page 5-54*. Rotate tires. See *Tire Inspection and Rotation on page 5-68* and “Tire Wear Inspection” in *At Least Once a Month on page 6-10*.

When the CHANGE ENGINE OIL SOON message comes on, it means that service is required for your vehicle. Have your vehicle serviced as soon as possible within the next 600 miles (1 000 km). It is possible that, if you are driving under the best conditions, the engine oil life system may not indicate that vehicle service is necessary for over a year. However, the engine oil and filter must be changed at least once a year and at this time the system must be reset. Your dealer/retailer has trained service technicians who will perform this work using genuine parts and reset the system.

If the engine oil life system is ever reset accidentally, you must service your vehicle within 3,000 miles (5 000 km) since your last service. Remember to reset the oil life system whenever the oil is changed. See *Engine Oil Life System on page 5-16* for information on the Engine Oil Life System and resetting the system.

When the CHANGE ENGINE OIL SOON message appears, the following services, checks, and inspections are required:

- ❑ Change engine oil and filter. See *Engine Oil on page 5-13*. Reset oil life system. See *Engine Oil Life System on page 5-16*. *An Emission Control Service.*
- ❑ Lubricate chassis components. *See footnote #.*
- ❑ Visually check for any leaks or damage. *See footnote (j).*
- ❑ Inspect engine air cleaner filter or change indicator (if equipped). If necessary, replace filter. See *Engine Air Cleaner/Filter on page 5-17*. *See footnote (k).*
- ❑ Rotate tires and check inflation pressures and wear. See *Tire Inspection and Rotation on page 5-68* and "Tire Wear Inspection" in *At Least Once a Month on page 6-10*.
- ❑ Inspect brake system. *See footnote (a).*
- ❑ Check engine coolant and windshield washer fluid levels and add fluid as needed.
- ❑ Perform any needed additional services. See "Additional Required Services" in this section.
- ❑ Inspect suspension and steering components. *See footnote (b).*
- ❑ Inspect engine cooling system. *See footnote (c).*
- ❑ Inspect wiper blades. *See footnote (d).*
- ❑ Inspect restraint system components. *See footnote (e).*
- ❑ Lubricate body components. *See footnote (f).*
- ❑ Check transmission fluid level and add fluid as needed.

Additional Required Services

The following services should be performed at the first maintenance service after the indicated miles (kilometers) shown for each item.

Additional Required Services

Service and Miles (Kilometers)	25,000 (40 000)	50,000 (80 000)	75,000 (120 000)	100,000 (160 000)	125,000 (200 000)	150,000 (240 000)
Inspect fuel system for damage or leaks.	•	•	•	•	•	•
Inspect exhaust system for loose or damaged components.	•	•	•	•	•	•
Vehicles without a filter restriction indicator: Replace engine air cleaner filter. See *Engine Air Cleaner/Filter on page 5-17*.		•		•		•
Change automatic transmission fluid and filter (severe service). *See footnote (h).*		•		•		•
Change automatic transmission fluid and filter (normal service).				•		
Change transfer case fluid. *See footnote (m).*		•		•		•
Inspect evaporative control system. *An Emission Control Service. See footnotes † and (g).*		•		•		•

Additional Required Services (cont'd)

Service and Miles (Kilometers)	25,000 (40 000)	50,000 (80 000)	75,000 (120 000)	100,000 (160 000)	125,000 (200 000)	150,000 (240 000)
Replace spark plugs and inspect spark plug wires. *An Emission Control Service.*				•		
Engine cooling system service (or every five years, whichever occurs first). *An Emission Control Service. See footnote (i).*						•
Inspect engine accessory drive belt. *An Emission Control Service. See footnote (l).*						•

Maintenance Footnotes

† *The U.S. Environmental Protection Agency or the California Air Resources Board has determined that the failure to perform this maintenance item will not nullify the emission warranty or limit recall liability prior to the completion of the vehicle's useful life. We, however, urge that all recommended maintenance services be performed at the indicated intervals and the maintenance be recorded.*

Lubricate the front suspension, steering linkage, and parking brake cable guides. Control arm ball joints are maintenance-free.

(a) *Visually inspect brake lines and hoses for proper hook-up, binding, leaks, cracks, chafing, etc. Inspect disc brake pads for wear and rotors for surface condition. Inspect other brake parts, including calipers, parking brake, etc.*

(b) *Visually inspect front and rear suspension and steering system for damaged, loose, or missing parts, signs of wear or lack of lubrication. Inspect power steering lines and hoses for proper hook-up, binding, leaks, cracks, chafing, etc. Visually check constant velocity joints, rubber boots, and axle seals for leaks.*

(c) *Visually inspect hoses and have them replaced if they are cracked, swollen, or deteriorated. Inspect all pipes, fittings, and clamps; replace with genuine parts as needed. To help ensure proper operation, a pressure test of the cooling system and pressure cap and cleaning the outside of the radiator and air conditioning condenser is recommended at least once a year.*

(d) *Inspect wiper blades for wear, cracking, or contamination. Clean the windshield and wiper blades, if contaminated. Replace wiper blades that are worn or damaged. See Windshield Wiper Blade Replacement on page 5-53* and *Windshield and Wiper Blades on page 5-102 for more information.*

(e) *Make sure the safety belt reminder light and safety belt assemblies are working properly. Look for any other loose or damaged safety belt system parts. If you see anything that might keep a safety belt system from doing its job, have it repaired. Have any torn or frayed safety belts replaced. Also see Checking the Restraint Systems on page 1-72.*

(f) *Lubricate all key lock cylinders, hood latch assembly, secondary latch, pivots, spring anchor, release pawl, rear compartment hinges, outer tailgate handle pivot points, latch bolt, fuel door hinge, and folding seat hardware. More frequent lubrication may be required when exposed to a corrosive environment. Applying silicone grease on weatherstrips with a clean cloth will make them last longer, seal better, and not stick or squeak.*

(g) *Inspect system. Check all fuel and vapor lines and hoses for proper hook-up, routing, and condition. Check that the purge valve works properly, if equipped. Replace as needed.*

(h) *Change automatic transmission fluid and filter if the vehicle is mainly driven under one or more of these conditions:*

- *In heavy city traffic where the outside temperature regularly reaches 90°F (32°C) or higher.*
- *In hilly or mountainous terrain.*
- *When doing frequent trailer towing.*
- *Uses such as found in taxi, police, or delivery service.*

(i) *Drain, flush, and refill cooling system. This service can be complex; you should have your dealer/retailer perform this service. See Engine Coolant on page 5-23 for what to use. Inspect hoses. Clean radiator, condenser, pressure cap, and filler neck. Pressure test the cooling system and pressure cap.*

(j) *A fluid loss in any vehicle system could indicate a problem. Have the system inspected and repaired and the fluid level checked. Add fluid if needed.*

(k) *If you drive regularly under dusty conditions, inspect the filter at each engine oil change.*

(l) *Visually inspect belt for fraying, excessive cracks, or obvious damage. Replace belt if necessary.*

(m) *Check vent hose at transfer case for kinks and proper installation.*

Owner Checks and Services

These owner checks and services should be performed at the intervals specified to help ensure the safety, dependability, and emission control performance of your vehicle. Your dealer/retailer can assist you with these checks and services.

Be sure any necessary repairs are completed at once. Whenever any fluids or lubricants are added to your vehicle, make sure they are the proper ones, as shown in *Recommended Fluids and Lubricants on page 6-13*.

At Each Fuel Fill

It is important to perform these underhood checks at each fuel fill.

Engine Oil Level Check

Notice: **It is important to check the engine oil regularly and keep it at the proper level. Failure to keep the engine oil at the proper level can cause damage to the engine not covered by your warranty.**

Check the engine oil level and add the proper oil if necessary. See *Engine Oil on page 5-13*.

Engine Coolant Level Check

Check the engine coolant level and add DEX-COOL® coolant mixture if necessary. See *Engine Coolant on page 5-23*.

Windshield Washer Fluid Level Check

Check the windshield washer fluid level in the windshield washer fluid reservoir and add the proper fluid if necessary.

At Least Once a Month

Tire Inflation Check

Inspect your vehicle's tires and make sure they are inflated to the correct pressures. Do not forget to check the spare tire. See *Inflation - Tire Pressure on page 5-61*. Check to make sure the spare tire is stored securely. See *Changing a Flat Tire on page 5-78*.

Tire Wear Inspection

Tire rotation may be required for high mileage highway drivers prior to the Engine Oil Life System service notification. Check the tires for wear and, if necessary, rotate the tires. See *Tire Inspection and Rotation on page 5-68*.

At Least Once a Year

Starter Switch Check

⚠ CAUTION:

When you are doing this inspection, the vehicle could move suddenly. If the vehicle moves, you or others could be injured.

1. Before you start, be sure you have enough room around the vehicle.
2. Firmly apply both the parking brake and the regular brake. See *Parking Brake on page 2-41*.

   Do not use the accelerator pedal, and be ready to turn off the engine immediately if it starts.
3. Try to start the engine in each gear. The vehicle should start only in PARK (P) or NEUTRAL (N). If the vehicle starts in any other position, contact your dealer/retailer for service.

Automatic Transmission Shift Lock Control System Check

⚠ CAUTION:

When you are doing this inspection, the vehicle could move suddenly. If the vehicle moves, you or others could be injured.

1. Before you start, be sure you have enough room around the vehicle. It should be parked on a level surface.
2. Firmly apply the parking brake. See *Parking Brake on page 2-41*.

   Be ready to apply the regular brake immediately if the vehicle begins to move.
3. With the engine off, turn the ignition to ON/RUN, but do not start the engine. Without applying the regular brake, try to move the shift lever out of PARK (P) with normal effort. If the shift lever moves out of PARK (P), contact your dealer/retailer for service.

Ignition Transmission Lock Check

While parked, and with the parking brake set, try to turn the ignition to LOCK/OFF in each shift lever position.

- The ignition should turn to LOCK/OFF only when the shift lever is in PARK (P).
- The ignition key should come out only in LOCK/OFF.

Contact your dealer/retailer if service is required.

Parking Brake and Automatic Transmission Park (P) Mechanism Check

⚠ CAUTION:

When you are doing this check, your vehicle could begin to move. You or others could be injured and property could be damaged. Make sure there is room in front of your vehicle in case it begins to roll. Be ready to apply the regular brake at once should the vehicle begin to move.

Park on a fairly steep hill, with the vehicle facing downhill. Keeping your foot on the regular brake, set the parking brake.

- To check the parking brake's holding ability: With the engine running and transmission in NEUTRAL (N), slowly remove foot pressure from the regular brake pedal. Do this until the vehicle is held by the parking brake only.
- To check the PARK (P) mechanism's holding ability: With the engine running, shift to PARK (P). Then release the parking brake followed by the regular brake.

Contact your dealer/retailer if service is required.

Hood Support Gas Strut Service

Visually inspect gas strut for signs of wear, corrosion, cracks, loss of lubricant, or other damage. Check the hold open ability of gas strut. If necessary, replace with genuine parts from your dealer/retailer.

Underbody Flushing Service

At least every spring, use plain water to flush any corrosive materials from the underbody. Take care to clean thoroughly any areas where mud and other debris can collect.

Recommended Fluids and Lubricants

Fluids and lubricants identified below by name, part number, or specification can be obtained from your dealer/retailer.

Usage	Fluid/Lubricant
Engine Oil	The engine requires a special engine oil meeting GM Standard GM4718M. Oils meeting this standard can be identified as synthetic, and should also be identified with the American Petroleum Institute (API) Certified for Gasoline Engines starburst symbol. However, not all synthetic API oils with the starburst symbol will meet this GM standard. Look for and use only oil that meets GM Standard GM4718M. For the proper viscosity, see *Engine Oil on page 5-13*.

Usage	Fluid/Lubricant
Engine Coolant	50/50 mixture of clean, drinkable water and use only DEX-COOL® Coolant. See *Engine Coolant on page 5-23*.
Hydraulic Brake System	Delco® Supreme 11 Brake Fluid or equivalent DOT-3 brake fluid.
Windshield Washer	Optikleen® Washer Solvent.
Power Steering System	GM Power Steering Fluid (GM Part No. U.S. 89021184, in Canada 89021186).
Automatic Transmission	DEXRON®-VI Automatic Transmission Fluid.
Key Lock Cylinders	Multi-Purpose Lubricant, Superlube (GM Part No. U.S. 12346241, in Canada 10953474).

Usage	Fluid/Lubricant
Chassis Lubrication	Chassis Lubricant (GM Part No. U.S. 12377985, in Canada 88901242) or lubricant meeting requirements of NLGI #2, Category LB or GC-LB.
Front and Rear Axle	SAE 75W-90 Synthetic Axle Lubricant (GM Part No. U.S. 89021677, in Canada 89021678) meeting GM Specification 9986115.
Transfer Case	DEXRON®-VI Automatic Transmission Fluid.
Front Axle Propshaft Spline	Spline Lubricant, Special Lubricant (GM Part No. U.S. 12345879, in Canada 10953511) or lubricant meeting requirements of GM 9985830.

Usage	Fluid/Lubricant
Hood Hinges	Multi-Purpose Lubricant, Superlube (GM Part No. U.S. 12346241, in Canada 10953474).
Outer Tailgate Handle Pivot Points	Multi-Purpose Lubricant, Superlube (GM Part No. U.S. 12346241, in Canada 10953474).
Weatherstrip Conditioning	Weatherstrip Lubricant (GM Part No. U.S. 3634770, in Canada 10953518) or Dielectric Silicone Grease (GM Part No. U.S. 12345579, in Canada 992887).
Weatherstrip Squeaks	Synthetic Grease with Teflon, Superlube (GM Part No. U.S. 12371287, in Canada 10953437).

Maintenance Replacement Parts

Replacement parts identified below by name, part number, or specification can be obtained from your GM dealer.

Maintenance Replacement Parts

Part	GM Part Number	ACDelco® Part Number
Engine Air Cleaner/Filter	15908916	A3086C
Oil Filter	89017524	PF48
Spark Plugs	12571164	41-985
Wiper Blades		
Front – 21.6 inches (55.0 cm)	15930910	—

Engine Drive Belt Routing

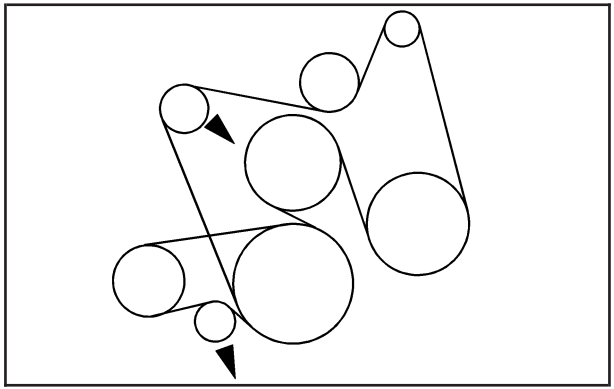

Maintenance Record

After the scheduled services are performed, record the date, odometer reading, who performed the service, and the type of services performed in the boxes provided. See *Maintenance Requirements on page 6-2*. Any additional information from *Owner Checks and Services on page 6-9* can be added on the following record pages. You should retain all maintenance receipts.

Maintenance Record

Date	Odometer Reading	Serviced By	Maintenance Stamp	Services Performed

Maintenance Record (cont'd)

Date	Odometer Reading	Serviced By	Maintenance Stamp	Services Performed

Maintenance Record (cont'd)

Date	Odometer Reading	Serviced By	Maintenance Stamp	Services Performed

Maintenance Record (cont'd)

Date	Odometer Reading	Serviced By	Maintenance Stamp	Services Performed

Section 7 Customer Assistance Information

Customer Assistance and Information 7-2
Customer Satisfaction Procedure 7-2
Online Owner Center 7-4
Customer Assistance for Text Telephone (TTY) Users 7-5
Customer Assistance Offices 7-5
GM Mobility Reimbursement Program 7-6
Roadside Service 7-7
Scheduling Service Appointments 7-9
Courtesy Transportation 7-10
Collision Damage Repair 7-11

Reporting Safety Defects 7-14
Reporting Safety Defects to the United States Government 7-14
Reporting Safety Defects to the Canadian Government 7-15
Reporting Safety Defects to General Motors 7-15
Service Publications Ordering Information 7-15

Vehicle Data Recording and Privacy 7-16
Event Data Recorders 7-17
OnStar® 7-18
Navigation System 7-18
Radio Frequency Identification (RFID) 7-18

Customer Assistance and Information

Customer Satisfaction Procedure

Your satisfaction and goodwill are important to your dealer and to Cadillac. Normally, any concerns with the sales transaction or the operation of your vehicle will be resolved by your dealer's sales or service departments. Sometimes, however, despite the best intentions of all concerned, misunderstandings can occur. If your concern has not been resolved to your satisfaction, the following steps should be taken:

STEP ONE: Discuss your concern with a member of dealership management. Normally, concerns can be quickly resolved at that level. If the matter has already been reviewed with the sales, service or parts manager, contact the owner of the dealership or the general manager.

STEP TWO: If after contacting a member of dealership management, it appears your concern cannot be resolved by the dealership without further help, in the United States, contact the Cadillac Customer Assistance Center, 24 hours a day, by calling 1-800-458-8006. In Canada, contact the Canadian Cadillac Customer Communication Centre by calling 1-888-446-2000.

We encourage you to call the toll-free number in order to give your inquiry prompt attention. Please have the following information available to give the Customer Assistance Representative:

- Vehicle Identification Number (VIN). This is available from the vehicle registration or title, or the plate at the top left of the instrument panel and visible through the windshield.
- Dealership name and location.
- Vehicle delivery date and present mileage.

When contacting Cadillac, please remember that your concern will likely be resolved at a dealer's facility. That is why we suggest you follow Step One first if you have a concern.

STEP THREE (United States Owners): Both General Motors and your dealer are committed to making sure you are completely satisfied with your new vehicle. However, if you continue to remain unsatisfied after following the procedure outlined in Steps One and Two, you should file with the Better Business Bureau (BBB) Auto Line Program to enforce your rights.

The BBB Auto Line Program is an out of court program administered by the Council of Better Business Bureaus to settle automotive disputes regarding vehicle repairs or the interpretation of the New Vehicle Limited Warranty.

Although you may be required to resort to this informal dispute resolution program prior to filing a court action, use of the program is free of charge and your case will generally be heard within 40 days. If you do not agree with the decision given in your case, you may reject it and proceed with any other venue for relief available to you.

You may contact the BBB Auto Line Program using the toll-free telephone number or write them at the following address:

BBB Auto Line Program
Council of Better Business Bureaus, Inc.
4200 Wilson Boulevard
Suite 800
Arlington, VA 22203-1838

Telephone: 1-800-955-5100

This program is available in all 50 states and the District of Columbia. Eligibility is limited by vehicle age, mileage and other factors. General Motors reserves the right to change eligibility limitations and/or discontinue its participation in this program.

STEP THREE (Canadian Owners):

General Motors Participation in the Mediation/Arbitration Program

In the event that you do not feel your concerns have been addressed after the following the procedure outlined in Steps One and Two. General Motors of Canada Limited wants you to be aware of its participation in a no-charge mediation/Arbitration program. General Motors of Canada Limited has committed to binding arbitration of owner disputes involving factory-related vehicle service claims. The program provides for the review of the facts involved by an impartial third party arbiter, and may include an informal hearing before the arbiter. The program is designed so that the entire dispute settlement process, from the time you file your complaint to the final decision, should be completed in approximately 70 days. We believe our impartial program offers advantages over courts in most jurisdictions because it is informal, quick, and free of charge.

For further information concerning eligibility in the Canadian Motor Vehicle Arbitration Plan (CAMVAP), call toll-free 1-800-207-0685. Alternatively you may call the General Motors Customer Communication Centre, 1-800-263-3777 (English), 1-800-263-7854 (French), or you may write to the Mediation/Arbitration Program at the following address. Your inquiry should be accompanied by your Vehicle Identification Number (VIN).

Mediation/Arbitration Program
c/o Customer Communication Centre
General Motors of Canada Limited
Mail Code: CA1–163–005
1908 Colonel Sam Drive
Oshawa, Ontario L1H 8P7

Online Owner Center

(United States only)

The Owner Center is a resource for your GM ownership needs. Specific vehicle information can be found in one place.

The Online Owner Center allows you to:

- Get e-mail service reminders.
- Access information about your specific vehicle, including tips and videos and an electronic version of this owner manual.
- Keep track of your vehicle's service history and maintenance schedule.
- Find GM dealers/retailers for service nationwide.
- Receive special promotions and privileges only available to members.

Refer to www.MyGMLink.com on the web for updated information and to register your vehicle.

My GM Canada (Canada only)

My GM Canada is a password-protected section of gmcanada.com where you can save information on GM vehicles, get personalized offers, and use handy tools and forms with greater ease.

Here are a few of the valuable tools and services you will have access to:

- My Showroom: Find and save information on vehicles and current offers in your area.
- My Dealers/Retailers: Save details such as address and phone number for each of your preferred GM Dealers or Retailers.
- My Driveway: Receive service reminders and helpful advice on owning and maintaining your vehicle.
- My Preferences: Manage your profile, subscribe to E-News and use tools and forms with greater ease.

To sign up to My GM Canada, visit the My GM Canada section within www.gmcanada.com.

Customer Assistance for Text Telephone (TTY) Users

To assist customers who are deaf, hard of hearing, or speech-impaired and who use Text Telephones (TTYs), Cadillac has TTY equipment available at its Customer Assistance Center. Any TTY user can communicate with Cadillac by dialing: 1-800-833-CMCC (2622). (TTY users in Canada can dial 1-800-263-3830.)

Customer Assistance Offices

Cadillac encourages customers to call the toll-free number for assistance. However, if a customer wishes to write or e-mail Cadillac, the letter should be addressed to:

United States — Customer Assistance

Cadillac Customer Assistance Center
Cadillac Motor Car Division
P.O. Box 33169
Detroit, MI 48232-5169

www.Cadillac.com
1-800-458-8006
1-800-833-2622 (For Text Telephone devices (TTYs))
Roadside Assistance: 1-800-882-1112
Fax Number: 313-381-0022

From Puerto Rico:
1-800-496-9992 (English)
1-800-496-9993 (Spanish)
Fax Number: 313-381-0022

From U.S. Virgin Islands:
1-800-496-9994
Fax Number: 313-381-0022

Canada — Customer Assistance

General Motors of Canada Limited
Canadian Cadillac Customer Communication Centre, CA1-163-005
1908 Colonel Sam Drive
Oshawa, Ontario L1H 8P7

www.gmcanada.com
1-888-446-2000
1-800-263-3830 (For Text Telephone devices (TTYs))
Roadside Assistance: 1-800-882-1112

Overseas — Customer Assistance

Please contact the local General Motors Business Unit.

Mexico, Central America and Caribbean Islands/Countries (Except Puerto Rico and U.S. Virgin Islands) — Customer Assistance

General Motors de Mexico, S. de R.L. de C.V.
Customer Assistance Center
Paseo de la Reforma # 2740
Col. Lomas de Bezares
C.P. 11910, Mexico, D.F.
01-800-508-0000
Long Distance: 011-52-53 29 0 800

GM Mobility Reimbursement Program

GM MOBILITY℠

This program, available to qualified applicants, can reimburse you up to $1,000 of the cost of eligible aftermarket adaptive equipment required for your vehicle, such as hand controls or a wheelchair/scooter lift.

The offer is available for a very limited period of time from the date of vehicle purchase/lease. For more details, or to determine your vehicle's eligibility, visit gmmobility.com or call the GM Mobility Assistance Center at 1-800-323-9935. Text telephone (TTY) users, call 1-800-833-9935.

General Motors of Canada also has a Mobility Program. Call 1-800-GM-DRIVE (463-7483) for details. TTY users call 1-800-263-3830.

Roadside Service

In the United States or Canada, call **1-800-882-1112**.

Text Telephone (TTY), U.S. only, call 1-888-889-2438.

Service is available 24 hours a day, 365 days a year.

As the owner of a new Cadillac vehicle, you are automatically enrolled in the Cadillac Roadside Service® program.

Who Is Covered?

Roadside Service coverage is for the vehicle operator, regardless of ownership. In Canada, a person driving this vehicle without the consent of the owner is not eligible for coverage.

Cadillac Owner Privileges™

The following services are provided in the U.S. and Canada up to 5 years/100,000 miles (160 000 km), whichever occurs first, and, in Canada only, up to a maximum coverage of $100. These services are provided at a nominal charge if the vehicle is no longer within the Powertrain warranty.

Roadside Service provides several Cadillac Owner Privileges™ at “no charge,” throughout your *Cadillac Powertrain Warranty — 5 years/100,000 miles (160 000 km).*

Emergency Road Service is performed on site for the following situations:

- **Fuel Delivery:** Delivery of enough fuel for the vehicle to get to the nearest service station (approximately $5 in Canada). In Canada, for safety reasons, propane and other alternative fuels will not be provided through this service.
- **Lock-out Service:** Lock-out service will be covered at no charge if you are unable to gain entry into your vehicle. A remote unlock may be available if you have an active OnStar® subscription. To ensure security, the driver must present personal identification before lock-out service is provided. In Canada, the vehicle registration is also required.
- **Emergency Tow From a Public Roadway or Highway:** Tow to the nearest dealership for warranty service or in the event of a vehicle-disabling crash. Winch-out assistance is provided when the vehicle is mired in sand, mud, or snow.
- **Flat Tire Change:** Installation of a spare tire in good condition, when equipped and properly inflated, is covered at no charge. The customer is responsible for the repair or replacement of the tire if not covered by a warrantable failure.
- **Jump Start:** A battery jump start is covered at no charge if the vehicle does not start.

- **Trip Routing Service:** Upon request, Cadillac Roadside Service will send you detailed, computer personalized maps, highlighting your choice of either the most direct route or the most scenic route to your destination, anywhere in North America, along with helpful travel information pertaining to your trip.

  Please allow three weeks before your planned departure date. In Canada, trip routing requests will be limited to six per calendar year.

- **Trip Interruption Benefits and Assistance:** If your trip is interrupted due to a warranty failure, incidental expenses may be reimbursed during the 60 months/ 100,000 miles (160 000 km) warranty period. Items covered are hotel, meals, and rental car.

- **Alternative Service (Canada only):** There may be times when Roadside Service cannot provide timely assistance. Your advisor may authorize you to secure local emergency road service, and you will be reimbursed up to $100 upon submission of the original receipt to Cadillac Roadside Service®.

Cadillac and General Motors of Canada Limited reserve the right to limit services or reimbursement to an owner or driver when, in their sole discretion, the claims become excessive in frequency or type of occurrence.

Cadillac Technician Roadside Service (U.S. only)

Cadillac's exceptional Roadside Service is more than an auto club or towing service. It provides every Cadillac owner in the United States with the advantage of contacting a Cadillac advisor and, where available, a Cadillac trained dealer technician who can provide on-site service.

A dealer technician will travel to your location within a 30 mile radius of a participating Cadillac dealership. If beyond this radius, we will arrange to have your car towed to the nearest Cadillac dealership. Each technician travels with a specially equipped service vehicle complete with the necessary Cadillac parts and tools required to handle most roadside repairs.

Calling for Assistance

For prompt and efficient assistance when calling, please provide the following to the Roadside Service Representative:

- Your name, home address, and home telephone number
- Telephone number of your location
- Location of the vehicle
- Model, year, color, and license plate number of the vehicle
- Odometer reading, Vehicle Identification Number (VIN), and delivery date of the vehicle
- Description of the problem

Towing and Road Service Exclusions

Specifically excluded from Roadside Service coverage are towing or services for vehicles operated on a non-public roadway or highway, fines, impound towing caused by a violation of local, Municipal, State, Provincial or Federal law, and mounting, dismounting or changing of snow tires, chains, or other traction devices.

Roadside Service is not part of or included in the coverage provided by the New Vehicle Limited Warranty. Cadillac and General Motors of Canada Limited reserve the right to make any changes or discontinue the Roadside Service program at any time without notification.

Scheduling Service Appointments

When your vehicle requires warranty service, contact your dealer/retailer and request an appointment. By scheduling a service appointment and advising your service consultant of your transportation needs, your dealer/retailer can help minimize your inconvenience.

If your vehicle cannot be scheduled into the service department immediately, keep driving it until it can be scheduled for service, unless, of course, the problem is safety-related. If it is, please call your dealership/retailer, let them know this, and ask for instructions.

If the dealer/retailer requests that you simply drop the vehicle off for service, you are urged to do so as early in the work day as possible to allow for the same day repair.

Courtesy Transportation

To enhance your ownership experience, we and our participating dealers are proud to offer Courtesy Transportation, a customer support program for vehicles with the Bumper to Bumper (Base Warranty Coverage period in Canada) and extended powertrain warranty in both the U.S. and Canada.

Several courtesy transportation options are available to assist in reducing your inconvenience when warranty repairs are required.

Courtesy Transportation is not a part of the New Vehicle Limited Warranty. A separate booklet entitled “Warranty and Owner Assistance Information” furnished with each new vehicle provides detailed warranty coverage information.

Transportation Options

Warranty service can generally be completed while you wait. However, if you are unable to wait, GM helps to minimize your inconvenience by providing several transportation options. Depending on the circumstances, your dealer can offer you one of the following:

Shuttle Service

Participating dealers can provide shuttle service to get you to your destination with minimal interruption of your daily schedule. This includes one-way or round trip shuttle service to a destination up to 10 miles (16 km) from the dealership.

Public Transportation or Fuel Reimbursement

If your vehicle requires warranty repairs, and public transportation is used instead of the dealer’s shuttle service, the expense must be supported by original receipts and can only be up to the maximum amount allowed by GM for shuttle service. In addition, for U.S. customers, should you arrange transportation through a friend or relative, limited reimbursement for reasonable fuel expenses may be available. Claim amounts should reflect actual costs and be supported by original receipts. See your dealer for information regarding the allowance amounts for reimbursement of fuel or other transportation costs.

Courtesy Rental Vehicle

Your dealer may arrange to provide you with a courtesy rental vehicle or reimburse you for a rental vehicle that you obtain if your vehicle is kept for a warranty repair. If you obtain a rental vehicle on your own, please see your dealer for the maximum number of days allowed and the allowance per rental day. Rental reimbursement must be supported by original receipts. This requires that you sign and complete a rental agreement and meet state, local, and rental vehicle provider requirements. Requirements vary and may include minimum age requirements, insurance coverage, credit card, etc. You are responsible for fuel usage charges and may also be responsible for taxes, levies, usage fees, excessive mileage, or rental usage beyond the completion of the repair.

It may not be possible to provide a like-vehicle as a courtesy rental.

Additional Program Information

All program options, such as shuttle service, may not be available at every dealer. Please contact your dealer for specific information about availability. All Courtesy Transportation arrangements will be administered by appropriate dealer personnel.

General Motors reserves the right to unilaterally modify, change, or discontinue Courtesy Transportation at any time and to resolve all questions of claim eligibility pursuant to the terms and conditions described herein at its sole discretion.

Collision Damage Repair

If your vehicle is involved in a collision and it is damaged, have the damage repaired by a qualified technician using the proper equipment and quality replacement parts. Poorly performed collision repairs will diminish your vehicle's resale value, and safety performance can be compromised in subsequent collisions.

Collision Parts

Genuine GM Collision parts are new parts made with the same materials and construction methods as the parts with which your vehicle was originally built. Genuine GM Collision parts are your best choice to ensure that your vehicle's designed appearance, durability and safety are preserved. The use of Genuine GM parts can help maintain your GM New Vehicle Warranty.

Recycled original equipment parts may also be used for repair. These parts are typically removed from vehicles that were total losses in prior crashes. In most cases, the parts being recycled are from undamaged sections of the vehicle. A recycled original equipment GM part, may be an acceptable choice to maintain your vehicle's originally designed appearance and safety performance, however, the history of these parts is not known. Such parts are not covered by your GM New Vehicle Limited Warranty, and any related failures are not covered by that warranty.

Aftermarket collision parts are also available. These are made by companies other than GM and may not have been tested for your vehicle. As a result, these parts may fit poorly, exhibit premature durability /corrosion problems, and may not perform properly in subsequent collisions. Aftermarket parts are not covered by your GM New Vehicle Limited Warranty, and any vehicle failure related to such parts are not covered by that warranty.

Repair Facility

GM also recommends that you choose a collision repair facility that meets your needs before you ever need collision repairs. Your GM dealer/retailer may have a collision repair center with GM-trained technicians and state of the art equipment, or be able to recommend a collision repair center that has GM-trained technicians and comparable equipment.

Insuring Your Vehicle

Protect your investment in your GM vehicle with comprehensive and collision insurance coverage. There are significant differences in the quality of coverage afforded by various insurance policy terms. Many insurance policies provide reduced protection to your GM vehicle by limiting compensation for damage repairs by using aftermarket collision parts. Some insurance companies will not specify aftermarket collision parts. When purchasing insurance, we recommend that you assure your vehicle will be repaired with GM original equipment collision parts. If such insurance coverage is not available from your current insurance carrier, consider switching to another insurance carrier.

If your vehicle is leased, the leasing company may require you to have insurance that assures repairs with Genuine GM Original Equipment Manufacturer (OEM) parts or Genuine Manufacturer replacement parts. Read your lease carefully, as you may be charged at the end of your lease for poor quality repairs.

If a Crash Occurs

Here is what to do if you are involved in a crash.

- Try to relax and then check to make sure you are all right. If you are uninjured, make sure that no one else in your vehicle, or the other vehicle, is injured.
- If there has been an injury, call emergency services for help. Do not leave the scene of a crash until all matters have been taken care of. Move your vehicle only if its position puts you in danger or you are instructed to move it by a police officer.
- Give only the necessary and requested information to police and other parties involved in the crash. Do not discuss your personal condition, mental frame of mind, or anything unrelated to the crash. This will help guard against post-crash legal action.
- If you need roadside assistance, call GM Roadside Assistance. See *Roadside Service on page 7-7* for more information.
- If your vehicle cannot be driven, know where the towing service will be taking it. Get a card from the tow truck operator or write down the driver's name, the service's name, and the phone number.
- Remove any valuables from your vehicle before it is towed away. Make sure this includes your insurance information and registration if you keep these items in your vehicle.
- Gather the important information you will need from the other driver. Things like name, address, phone number, driver's license number, vehicle license plate, vehicle make, model and model year, Vehicle Identification Number (VIN), insurance company and policy number, and a general description of the damage to the other vehicle.
- If possible, call your insurance company from the scene of the crash. They will walk you through the information they will need. If they ask for a police report, phone or go to the police department headquarters the next day and you can get a copy of the report for a nominal fee. In some states/provinces with "no fault" insurance laws, a report may not be necessary. This is especially true if there are no injuries and both vehicles are driveable.
- Choose a reputable collision repair facility for your vehicle. Whether you select a GM dealer/retailer or a private collision repair facility to fix the damage, make sure you are comfortable with them. Remember, you will have to feel comfortable with their work for a long time.
- Once you have an estimate, read it carefully and make sure you understand what work will be performed on your vehicle. If you have a question, ask for an explanation. Reputable shops welcome this opportunity.

Managing the Vehicle Damage Repair Process

In the event that your vehicle requires damage repairs, GM recommends that you take an active role in its repair. If you have a pre-determined repair facility of choice, take your vehicle there, or have it towed there. Specify to the facility that any required replacement collision parts be original equipment parts, either new Genuine GM parts or recycled original GM parts. Remember, recycled parts will not be covered by your GM vehicle warranty.

Insurance pays the bill for the repair, but you must live with the repair. Depending on your policy limits, your insurance company may initially value the repair using aftermarket parts. Discuss this with your repair professional, and insist on Genuine GM parts. Remember if your vehicle is leased you may be obligated to have the vehicle repaired with Genuine GM parts, even if your insurance coverage does not pay the full cost.

If another party's insurance company is paying for the repairs, you are not obligated to accept a repair valuation based on that insurance company's collision policy repair limits, as you have no contractual limits with that company. In such cases, you can have control of the repair and parts choices as long as cost stays within reasonable limits.

Reporting Safety Defects

Reporting Safety Defects to the United States Government

If you believe that your vehicle has a defect which could cause a crash or could cause injury or death, you should immediately inform the National Highway Traffic Safety Administration (NHTSA) in addition to notifying General Motors.

If NHTSA receives similar complaints, it may open an investigation, and if it finds that a safety defect exists in a group of vehicles, it may order a recall and remedy campaign. However, NHTSA cannot become involved in individual problems between you, your dealer/retailer, or General Motors.

To contact NHTSA, you may call the Vehicle Safety Hotline toll-free at 1-888-327-4236 (TTY: 1-800-424-9153); go to http://www.safercar.gov; or write to:

Administrator, NHTSA
400 Seventh Street, SW.
Washington D.C., 20590

You can also obtain other information about motor vehicle safety from http://www.safercar.gov.

Reporting Safety Defects to the Canadian Government

If you live in Canada, and you believe that your vehicle has a safety defect, notify Transport Canada immediately, in addition to notifying General Motors of Canada Limited. Call them at 1-800-333-0510 or write to:

Transport Canada
Road Safety Branch
2780 Sheffield Road
Ottawa, Ontario K1B 3V9

Reporting Safety Defects to General Motors

In addition to notifying NHTSA (or Transport Canada) in a situation like this, please notify General Motors.

Call 1-800-458-8006, or write:

Cadillac Customer Assistance Center
Cadillac Motor Car Division
P.O. Box 33169
Detroit, MI 48232-5169

In Canada, call 1-888-446-2000, or write:

Canadian Cadillac Customer Communication Centre, CA1-163-005
General Motors of Canada Limited
1908 Colonel Sam Drive
Oshawa, Ontario L1H 8P7

Service Publications Ordering Information

Service Manuals

Service Manuals have the diagnosis and repair information on engines, transmission, axle suspension, brakes, electrical, steering, body, etc.

Service Bulletins

Service Bulletins' give additional technical service information needed to knowledgeably service General Motors cars and trucks. Each bulletin contains instructions to assist in the diagnosis and service of your vehicle.

Owner Information

Owner publications are written specifically for owners and intended to provide basic operational information about the vehicle. The owner manual includes the Maintenance Schedule for all models.

In-Portfolio: Includes a Portfolio, Owner Manual, and Warranty Booklet.

RETAIL SELL PRICE: $35.00 (U.S.) plus processing fee

Without Portfolio: Owner Manual only.

RETAIL SELL PRICE: $25.00 (U.S.) plus processing fee

Current and Past Model Order Forms

Technical Service Bulletins and Manuals are available for current and past model GM vehicles. To request an order form, specify year and model name of the vehicle.

ORDER TOLL FREE: 1-800-551-4123 Monday-Friday 8:00 AM - 6:00 PM Eastern Time

For Credit Card Orders Only
(VISA-MasterCard-Discover), visit Helm, Inc.
on
the World Wide Web at: www.helminc.com

Or you can write to:

Helm, Incorporated
P.O. Box 07130
Detroit, MI 48207

Prices are subject to change without notice and without incurring obligation. Allow ample time for delivery.

Note to Canadian Customers: All listed prices are quoted in U.S. funds. Canadian residents are to make checks payable in U.S. funds.

Vehicle Data Recording and Privacy

Your GM vehicle has a number of sophisticated computers that record information about the vehicle's performance and how it is driven. For example, your vehicle uses computer modules to monitor and control engine and transmission performance, to monitor the conditions for airbag deployment and deploy airbags in a crash and, if so equipped, to provide antilock braking to help the driver control the vehicle. These modules may store data to help your dealer/retailer technician service your vehicle. Some modules may also store data about how you operate the vehicle, such as rate of fuel consumption or average speed. These modules may also retain the owner's personal preferences, such as radio pre-sets, seat positions, and temperature settings.

Event Data Recorders

This vehicle has an Event Data Recorder (EDR). The main purpose of an EDR is to record, in certain crash or near crash-like situations, such as an airbag deployment or hitting a road obstacle, data that will assist in understanding how a vehicle's systems performed. The EDR is designed to record data related to vehicle dynamics and safety systems for a short period of time, typically 30 seconds or less. The EDR in this vehicle is designed to record such data as:

- How various systems in your vehicle were operating
- Whether or not the driver and passenger safety belts were buckled/fastened
- How far, if at all, the driver was pressing the accelerator and/or brake pedal
- How fast the vehicle was traveling

This data can help provide a better understanding of the circumstances in which crashes and injuries occur.

Important: EDR data is recorded by your vehicle only if a non-trivial crash situation occurs; no data is recorded by the EDR under normal driving conditions and no personal data (e.g., name, gender, age, and crash location) is recorded. However, other parties, such as law enforcement, could combine the EDR data with the type of personally identifying data routinely acquired during a crash investigation.

To read data recorded by an EDR, special equipment is required, and access to the vehicle or the EDR is needed. In addition to the vehicle manufacturer, other parties, such as law enforcement, that have the special equipment, can read the information if they have access to the vehicle or the EDR.

GM will not access this data or share it with others except: with the consent of the vehicle owner or, if the vehicle is leased, with the consent of the lessee; in response to an official request of police or similar government office; as part of GM's defense of litigation through the discovery process; or, as required by law. Data that GM collects or receives may also be used for GM research needs or may be made available to others for research purposes, where a need is shown and the data is not tied to a specific vehicle or vehicle owner.

OnStar®

If your vehicle has OnStar and you subscribe to the OnStar services, please refer to the OnStar Terms and Conditions for information on data collection and use. See also *OnStar® System on page 2-56* in this manual for more information.

Navigation System

If your vehicle has a navigation system, use of the system may result in the storage of destinations, addresses, telephone numbers, and other trip information. Refer to the navigation system operating manual for information on stored data and for deletion instructions.

Radio Frequency Identification (RFID)

RFID technology is used in some vehicles for functions such as tire pressure monitoring and ignition system security, as well as in connection with conveniences such as key fobs for remote door locking/unlocking and starting, and in-vehicle transmitters for garage door openers. RFID technology in GM vehicles does not use or record personal information or link with any other GM system containing personal information.

A

Accessories and Modifications 5-3
Adding Equipment to Your Airbag-Equipped
  Vehicle 1-70
Additives, Fuel 5-6
Add-On Electrical Equipment 5-107
Adjustable Throttle and Brake Pedal 2-34
Air Cleaner/Filter, Engine 5-17
Air Conditioning 3-24
Airbag
  Passenger Status Indicator 3-33
  Readiness Light 3-32
Airbag System 1-56
  What Will You See After an Airbag Inflates? 1-64
  When Should an Airbag Inflate? 1-61
  Where Are the Airbags? 1-59
Airbag Systems
  Adding Equipment to Your Airbag-Equipped
    Vehicle 1-70
  How Does an Airbag Restrain? 1-63
  Passenger Sensing System 1-65
  Servicing Your Airbag-Equipped Vehicle 1-70
  What Makes an Airbag Inflate? 1-63
All-Wheel Drive 5-45
All-Wheel-Drive (AWD) System 4-8
Analog Clock 3-23
Antenna, Fixed Mast 3-105
Antenna, XM™ Satellite Radio Antenna
  System 3-105
Antilock Brake System (ABS) 4-4
Antilock Brake, System Warning Light 3-37
Appearance Care
  Aluminum or Chrome-Plated Wheels 5-103
  Care of Safety Belts 5-100
  Chemical Paint Spotting 5-104
  Cleaning Exterior Lamps/Lenses 5-101
  Fabric/Carpet 5-99
  Finish Care 5-101
  Finish Damage 5-104
  Instrument Panel, Vinyl, and Other
    Plastic Surfaces 5-100
  Interior Cleaning 5-97
  Leather 5-99
  Sheet Metal Damage 5-104
  Speaker Covers 5-100
  Tires 5-104
  Underbody Maintenance 5-104
  Vehicle Care/Appearance Materials 5-105
  Washing Your Vehicle 5-101
  Weatherstrips 5-100
  Windshield and Wiper Blades 5-102
  Wood Panels 5-100
Appointments, Scheduling Service 7-9
Ashtray 3-23

Audio System 3-66
Audio Steering Wheel Controls 3-103
Fixed Mast Antenna 3-105
Navigation/Radio System,
see Navigation Manual 3-91
Radio Reception 3-104
Rear Seat Audio (RSA) 3-101
Setting the Clock 3-67
Theft-Deterrent Feature 3-102
XM™ Satellite Radio Antenna System 3-105
Audio System(s) 3-68
Automatic Headlamp System 3-18
Automatic Transmission
Fluid 5-20
Operation 2-36
Autoride® 4-42

B

Battery 5-39
Electric Power Management 3-21
Run-Down Protection 3-21
Brake
Emergencies 4-5
Brakes 5-36
System Warning Light 3-36
Braking 4-3
Braking in Emergencies 4-5
Break-In, New Vehicle 2-30
Bulb Replacement 5-51
Headlamp Aiming 5-48
High Intensity Discharge (HID) Lighting 5-51
License Plate Lamps 5-52
Replacement Bulbs 5-53
Taillamps, Turn Signal, Sidemarker,
Stoplamps, and Back-Up Lamps 5-51
Buying New Tires 5-71

C

Calibration 2-46, 2-48
California Fuel 5-6
California Perchlorate Materials Requirements 5-4
California Proposition 65 Warning 5-4
Canadian Owners ii
Capacities and Specifications 5-115
Carbon Monoxide 2-13, 2-23, 2-44, 4-30, 4-43
Care of
Safety Belts 5-100
Cargo Area, All-Weather 2-82
Cargo Cover Panels 2-69
CD, MP3 3-86

Center Console Storage Area 2-67
Chains, Tire 5-76
Charging System Light 3-35
Check
  Engine Light 3-40
Checking Things Under the Hood 5-10
Chemical Paint Spotting 5-104
Child Restraints
  Child Restraint Systems 1-39
  Infants and Young Children 1-35
  Lower Anchors and Tethers for Children 1-43
  Older Children 1-32
  Securing a Child Restraint in a
    Rear Seat Position 1-50
  Securing a Child Restraint in the
    Right Front Seat Position 1-53
  Where to Put the Restraint 1-42
Cigarette Lighter 3-23
Cleaning
  Aluminum or Chrome-Plated Wheels 5-103
  Exterior Lamps/Lenses 5-101
  Fabric/Carpet 5-99
  Finish Care 5-101
  Instrument Panel, Vinyl, and Other
    Plastic Surfaces 5-100
  Interior 5-97
  Leather 5-99
Cleaning (cont.)
  Speaker Covers 5-100
  Tires 5-104
  Underbody Maintenance 5-104
  Washing Your Vehicle 5-101
  Weatherstrips 5-100
  Windshield and Wiper Blades 5-102
  Wood Panels 5-100
Climate Control System
  Dual Automatic 3-24
  Outlet Adjustment 3-28
Clock 3-23
Clock, Setting 3-67
Collision Damage Repair 7-11
Compass 2-46, 2-48
Content Theft-Deterrent 2-26
Control of a Vehicle 4-3
Coolant
  Engine Temperature Gage 3-39
  Heater, Engine 2-35
  Surge Tank Pressure Cap 5-26
Cooled Seats 1-5
Cooling System 5-29
Cruise Control 3-11
Cruise Control Light 3-44
Cupholder(s) 2-67

Customer Assistance Information
Courtesy Transportation 7-10
Customer Assistance for Text Telephone (TTY) Users 7-5
Customer Assistance Offices 7-5
Customer Satisfaction Procedure 7-2
GM Mobility Reimbursement Program 7-6
Reporting Safety Defects to General Motors 7-15
Reporting Safety Defects to the Canadian Government 7-15
Reporting Safety Defects to the United States Government 7-14
Roadside Service 7-7
Service Publications Ordering Information 7-15

D

Daytime Running Lamps 3-18
Defensive Driving 4-2
Delayed Locking 2-11
Differential, Locking 4-5
Disc, MP3 3-86
Doing Your Own Service Work 5-4
Dome Lamp Override 3-20
Dome Lamps 3-20
Door
Delayed Locking 2-11
Locks 2-10
Power Door Locks 2-11
Programmable Automatic Door Locks 2-11
Rear Door Security Locks 2-12
Driver Information Center (DIC) 3-45
DIC Operation and Displays 3-45
DIC Vehicle Customization 3-57
DIC Warnings and Messages 3-50
Driving
At Night 4-27
Before a Long Trip 4-28
Defensive 4-2
Drunken 4-2
Highway Hypnosis 4-28
Hill and Mountain Roads 4-29
In Rain and on Wet Roads 4-27
Off-Road 4-12
Recovery Hooks 4-34
Rocking Your Vehicle to Get it Out 4-33
Winter 4-30
Dual Automatic Climate Control System 3-24
DVD
Rear Seat Entertainment System 3-91

E

EDR 7-16
Electrical System
Add-On Equipment 5-107
Center Instrument Panel Fuse Block 5-110
Fuses and Circuit Breakers 5-107
Instrument Panel Fuse Block 5-108
Power Windows and Other Power Options 5-107
Underhood Fuse Block 5-111
Windshield Wiper Fuses 5-107
Engine
Air Cleaner/Filter 5-17
Check and Service Engine Soon Light 3-40
Coolant 5-23
Coolant Heater 2-35
Coolant Temperature Gage 3-39
Drive Belt Routing 6-16
Engine Compartment Overview 5-12
Exhaust 2-44
Fan Noise 5-33
Oil 5-13
Oil Life System 5-16
Overheated Protection Operating Mode 5-28
Overheating 5-26
Running While Parked 2-45
Starting 2-32
Entry/Exit Lighting 3-20
Event Data Recorders 7-17
Extender, Safety Belt 1-32
Exterior Cargo Lamps 3-19
Exterior Lamps 3-14

F

Filter
Engine Air Cleaner 5-17
Finish Damage 5-104
Fixed Mast Antenna 3-105
Flashers, Hazard Warning 3-6
Flash-to-Pass 3-9
Flat Tire 5-77
Flat Tire, Changing 5-78
Flat Tire, Storing 5-94
Fluid 5-20
Power Steering 5-34
Windshield Washer 5-35
Fog Lamp
Fog 3-19
Fog Lamp Light 3-43
Front Axle 5-47
Fuel 5-5
Additives 5-6
California Fuel 5-6

Fuel (cont.)
Filling a Portable Fuel Container 5-10
Filling the Tank 5-8
Fuels in Foreign Countries 5-7
Gage 3-44
Gasoline Octane 5-5
Gasoline Specifications 5-6
Fuses
Center Instrument Panel Fuse Block 5-110
Fuses and Circuit Breakers 5-107
Instrument Panel Fuse Block 5-108
Underhood Fuse Block 5-111
Windshield Wiper 5-107

G

Gage
Engine Coolant Temperature 3-39
Fuel 3-44
Speedometer 3-31
Tachometer 3-31
Garage Door Opener 2-60
Gasoline
Octane 5-5
Specifications 5-6
Glove Box 2-67
GM Mobility Reimbursement Program 7-6

H

Hazard Warning Flashers 3-6
Head Restraints 1-9
Headlamp
Aiming 5-48
Headlamps
Bulb Replacement 5-51
Daytime Running Lamps 3-18
Exterior Lamps 3-14
Flash-to-Pass 3-9
High Intensity Discharge (HID) Lighting 5-51
High/Low Beam Changer 3-9
On Reminder 3-17
Heated Seats 1-4, 1-5
Heated Steering Wheel 3-7
Heater 3-24
Highbeam On Light 3-44
High-Speed Operation, Tires 5-62
Highway Hypnosis 4-28
Hill and Mountain Roads 4-29
Hood
Checking Things Under 5-10
Release 5-11
Horn 3-6
How to Wear Safety Belts Properly 1-17

I

Ignition Positions 2-31
Infants and Young Children, Restraints 1-35
Inflation - Tire Pressure 5-61
Instrument Panel
  Overview 3-4
  Storage Area 2-67
Instrument Panel (I/P)
  Brightness 3-20
  Cluster 3-30

J

Jump Starting 5-40

K

Keyless Entry System 2-4
Keys 2-3

L

Labeling, Tire Sidewall 5-55
Lamps
  Dome 3-20
  Dome Lamp Override 3-20
  Exterior Cargo 3-19
  Reading 3-20
Lap-Shoulder Belt 1-26
LATCH System
  Child Restraints 1-43
License Plate Lamps 5-52
Light
  Airbag Readiness 3-32
  Antilock Brake System Warning 3-37
  Brake System Warning 3-36
  Charging System 3-35
  Cruise Control 3-44
  Fog Lamp 3-43
  Highbeam On 3-44
  Lights On Reminder 3-43
  Malfunction Indicator 3-40
  Oil Pressure 3-42

Light (cont.)
Passenger Airbag Status Indicator 3-33
Safety Belt Reminders 3-31
Security 3-43
StabiliTrak® Indicator 3-38
Tire Pressure 3-39
Tow/Haul Mode 3-44
Lighting
Entry/Exit 3-20
Lights
Exterior Lamps 3-14
Flash-to-Pass 3-9
High/Low Beam Changer 3-9
On Reminder 3-17
Loading Your Vehicle 4-35
Locking Differential 4-5
Lockout Protection 2-12
Locks
Delayed Locking 2-11
Door 2-10
Lockout Protection 2-12
Power Door 2-11
Programmable Automatic Door Locks 2-11
Rear Door Security Locks 2-12
Loss of Control 4-11
Luggage Carrier 2-68
Lumbar
Power Controls 1-3

M

Maintenance Schedule
Additional Required Services 6-6
At Each Fuel Fill 6-9
At Least Once a Month 6-10
At Least Once a Year 6-10
Introduction 6-2
Maintenance Footnotes 6-7
Maintenance Record 6-17
Maintenance Replacement Parts 6-15
Maintenance Requirements 6-2
Owner Checks and Services 6-9
Recommended Fluids and Lubricants 6-13
Scheduled Maintenance 6-4
Using 6-2
Your Vehicle and the Environment 6-2
Malfunction Indicator Light 3-40
Manual, Using iii
Memory Seat, Mirrors, and Pedals 1-6
Message
DIC Warnings and Messages 3-50
Midgate® 2-13
Mirrors
Automatic Dimming Mirror with Intellibeam™, OnStar®, Compass, and Temperature Display 2-46

Mirrors (cont.)
Automatic Dimming Rearview with OnStar®, Compass and Temperature Display 2-48
Outside Power Foldaway Mirrors 2-52
MP3 3-86
MyGMLink.com 7-4

N

Navigation System, Privacy 7-18
Navigation/Radio System, see Navigation Manual 3-91
New Vehicle Break-In 2-30

O

Odometer 3-31
Odometer, Trip 3-31
Off-Road Driving 4-12
Off-Road Recovery 4-11
Oil
Engine 5-13
Pressure Light 3-42
Oil, Engine Oil Life System 5-16
Older Children, Restraints 1-32
Online Owner Center 7-4
OnStar, Privacy 7-18
OnStar® System, see OnStar® Manual 2-56
Operation, Universal Home Remote System 2-60
Other Warning Devices 3-6
Outlet Adjustment 3-28
Outlets
Accessory Power 3-22
Outside
Power Foldaway Mirrors 2-52
Overheated Engine Protection Operating Mode 5-28
Owner Checks and Services 6-9
Owners, Canadian ii

P

Paint, Damage 5-104
Park Aid 2-54
Park Brake 2-41
Park (P)
Shifting Into 2-42
Shifting Out of 2-43
Parking
Assist 2-54
Over Things That Burn 2-44
Passenger Airbag Status Indicator 3-33
Passenger Sensing System 1-65

Passing 4-11
PASS-Key® III+ 2-28
PASS-Key® III+ Operation 2-29
Perchlorate Materials Requirements, California 5-4
Power
  Door Locks 2-11
  Electrical System 5-107
  Lumbar Controls 1-3
  Reclining Seatbacks 1-8
  Retained Accessory (RAP) 2-32
  Running Boards 2-23
  Seat 1-2
  Steering Fluid 5-34
  Windows 2-25
Privacy 7-16
  Event Data Recorders 7-17
  Navigation System 7-18
  OnStar 7-18
  Radio Frequency Identification 7-18
Programmable Automatic Door Locks 2-11

R

Radio Frequency Identification (RFID),
  Privacy 7-18
Radios 3-66
Radio(s) 3-68
Radios
  Navigation/Radio System,
    see Navigation Manual 3-91
  Rear Seat Audio 3-101
  Reception 3-104
  Setting the Clock 3-67
  Theft-Deterrent 3-102
Rainsense™ II Wipers 3-10
Reading Lamps 3-20
Rear Axle 5-46
Rear Door Security Locks 2-12
Rear Seat Armrest 2-69
Rear Seat Audio (RSA) 3-101
Rear Seat Entertainment System 3-91
Rear Seat Operation 1-10
Rearview Mirror, Automatic Dimming with
  OnStar®, Compass and Temperature Display 2-48
Reclining Seatbacks, Power 1-8
Recommended Fluids and Lubricants 6-13
Recovery Hooks 4-34
Recreational Vehicle Towing 4-42
Remote Keyless Entry (RKE) System 2-4
Remote Keyless Entry (RKE) System,
  Operation 2-5
Remote Vehicle Start 2-8
Removing the Flat Tire and Installing
  the Spare Tire 5-84

Removing the Spare Tire and Tools 5-79
Replacement Bulbs 5-53
Replacement Parts, Maintenance 6-15
Reporting Safety Defects
  Canadian Government 7-15
  General Motors 7-15
  United States Government 7-14
Restraint System Check
  Checking the Restraint Systems 1-72
  Replacing Restraint System Parts
    After a Crash 1-73
Retained Accessory Power (RAP) 2-32
Road Sensing Suspension 4-6
Roadside
  Service 7-7
Rocking Your Vehicle to Get it Out 4-33
Routing, Engine Drive Belt 6-16
Running Boards, Power 2-23
Running the Engine While Parked 2-45

S

Safety Belt
  Reminder Light 3-31
Safety Belts
  Care of 5-100
  How to Wear Safety Belts Properly 1-17
  Lap-Shoulder Belt 1-26
Safety Belts (cont.)
  Safety Belt Extender 1-32
  Safety Belt Use During Pregnancy 1-31
  Safety Belts Are for Everyone 1-12
Safety Warnings and Symbols iii
Scheduled Maintenance 6-4
Seats
  Head Restraints 1-9
  Heated and Cooled Seats 1-5
  Heated Seats 1-4
  Memory, Mirrors and Pedals 1-6
  Power Lumbar 1-3
  Power Reclining Seatbacks 1-8
  Power Seats 1-2
  Rear Seat Operation 1-10
Secondary Latch System 5-90
Securing a Child Restraint
  Rear Seat Position 1-50
  Right Front Seat Position 1-53
Security Light 3-43
Service 5-3
  Accessories and Modifications 5-3
  Adding Equipment to the Outside
    of Your Vehicle 5-5
  California Pershlorate Materials Requirements 5-4
  California Proposition 65 Warning 5-4
  Doing Your Own Work 5-4
  Engine Soon Light 3-40
  Publications Ordering Information 7-15

Service, Scheduling Appointments 7-9
Servicing Your Airbag-Equipped Vehicle 1-70
Sheet Metal Damage 5-104
Shifting Into Park (P) 2-42
Shifting Out of Park (P) 2-43
Signals, Turn and Lane-Change 3-8
Spare Tire 5-97
  Installing 5-84
  Removing 5-79
  Storing 5-94
Specifications, Capacities 5-115
Speedometer 3-31
StabiliTrak® System 4-6
StabiliTrak® Indicator Light 3-38
Start Vehicle, Remote 2-8
Starting the Engine 2-32
Steering 4-9
Steering Wheel Controls, Audio 3-103
Steering Wheel, Heated 3-7
Steering Wheel, Tilt Wheel 3-6
Storage Areas
  All-Weather Cargo Area 2-82
  Center Console Storage Area 2-67
  Cupholder(s) 2-67
  Glove Box 2-67
Storage Areas (cont.)
  Instrument Panel Storage Area 2-67
  Luggage Carrier 2-68
  Rear Seat Armrest 2-69
  Top-Box Storage 2-86
Stuck in Sand, Mud, Ice, or Snow 4-33
Sun Visors 2-26
Sunroof 2-87

T

Tachometer 3-31
Tailgate 2-23
Taillamps
  Turn Signal, Sidemarker, Stoplamps,
    and Back-Up Lamps 5-51
Theft-Deterrent, Radio 3-102
Theft-Deterrent Systems 2-26
  Content Theft-Deterrent 2-26
  PASS-Key® III+ 2-28
  PASS-Key® III+ Operation 2-29
Tilt Wheel 3-6
Time, Setting 3-67
Tire
  Pressure Light 3-39

Tires 5-54
Aluminum or Chrome-Plated Wheels, Cleaning 5-103
Buying New Tires 5-71
Chains 5-76
Changing a Flat Tire 5-78
Cleaning 5-104
Different Size 5-72
High-Speed Operation 5-62
If a Tire Goes Flat 5-77
Inflation - Tire Pressure 5-61
Inspection and Rotation 5-68
Installing the Spare Tire 5-84
Pressure Monitor Operation 5-64
Pressure Monitor System 5-63
Removing the Flat Tire 5-84
Removing the Spare Tire and Tools 5-79
Secondary Latch System 5-90
Spare Tire 5-97
Storing a Flat or Spare Tire and Tools 5-94
Tire Sidewall Labeling 5-55
Tire Terminology and Definitions 5-58
Uniform Tire Quality Grading 5-73
Wheel Alignment and Tire Balance 5-74
Wheel Replacement 5-75
When It Is Time for New Tires 5-70
Top-Box Storage 2-86
Tow/Haul Mode 2-40
Tow/Haul Mode Light 3-44
Towing
Recreational Vehicle 4-42
Towing a Trailer 4-43
Your Vehicle 4-42
Traction
Locking Differential 4-5
Road Sensing Suspension 4-6
StabiliTrak® System 4-6
Trailer
Recommendations 4-55
Transmission
Fluid, Automatic 5-20
Transmission Operation, Automatic 2-36
Trip Odometer 3-31
Truck-Camper Loading Information 4-41
Turn and Lane-Change Signals 3-8
Turn Signal/Multifunction Lever 3-7

U

Ultrasonic Rear Parking Assist (URPA) 2-54
Uniform Tire Quality Grading 5-73
Universal Home Remote System 2-60
Operation 2-60
Using this Manual iii

V

Vehicle
Control 4-3
Damage Warnings iv
Loading 4-35
Symbols iv
Vehicle Customization, DIC 3-57
Vehicle Data Recording and Privacy 7-16
Vehicle Identification
Number (VIN) 5-106
Service Parts Identification Label 5-106
Vehicle, Remote Start 2-8
Ventilation Adjustment 3-28
Visors 2-26

W

Warning Lights, Gages and
Indicators 3-29
Warnings
DIC Warnings and Messages 3-50
Hazard Warning Flashers 3-6
Other Warning Devices 3-6
Safety and Symbols iii
Vehicle Damage iv
Wheels
Alignment and Tire Balance 5-74
Different Size 5-72
Replacement 5-75
Where to Put the Restraint 1-42
Windows 2-24
Power 2-25
Windshield
Rainsense™ II Wipers 3-10
Washer 3-10
Washer Fluid 5-35
Wiper Blade Replacement 5-53
Wiper Blades, Cleaning 5-102
Wiper Fuses 5-107
Wipers 3-9
Winter Driving 4-30

X

XM Radio Messages 3-90
XM™ Satellite Radio Antenna System 3-105

Y

Your Vehicle and the Environment 6-2