WORKSHOP MANUAL

V6 2.5 milano

V6 3.0 milano

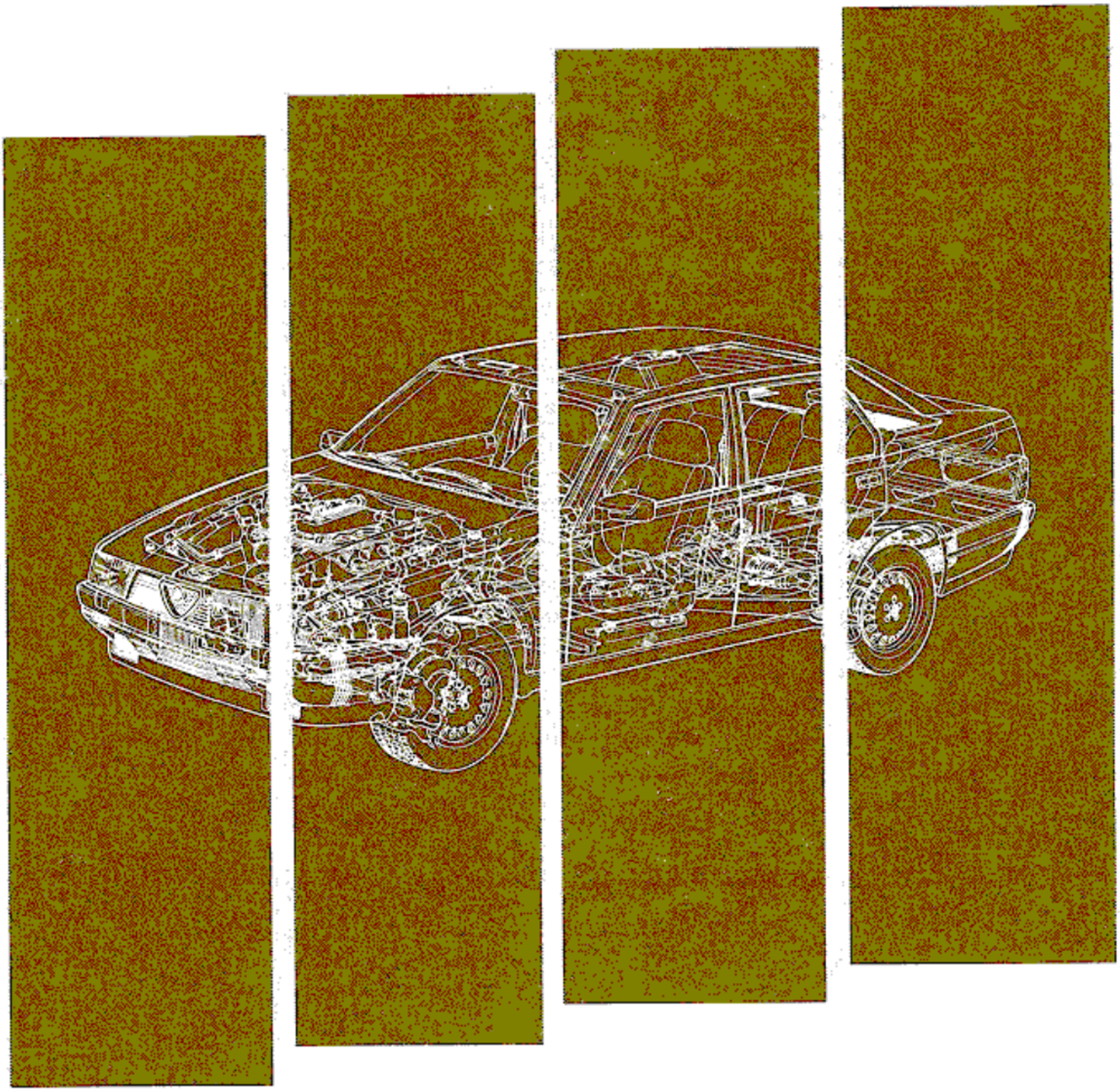

ASSISTENZA TECNICA

FOREWORD

This manual is intended for use by workshops belonging to the ALFA ROMEO Service Organization. It contains all necessary instructions for tune up, repair and overhaul of the units and systems with which the ALFA ROMEO cars are equipped. It includes procedures concerning removal and installation, disassembly and assembly, checks and inspections as well as instructions for effective trouble diagnosis.
All operations are extensively illustrated so that the part or unit involved, as well as the proper tool to be used, are easily identified.
All data, figures and technical specifications herein contained are up to date at time of publication. Any subsequent change in values or technical specifications occurring between reprints, will be included in the Technical Bulletins issued by the Service Department as changes take place.
The manufacturer reserves the right to make - at any time and without notice - all those changes that it deems necessary to improve the vehicle or arising out of manufacturing or commercial requirements. It further advises that not all models mentioned in this manual will be available in all countries.

HOW TO USE THE MANUAL

This manual is designed as a guide for personnel assigned to provide effective service to the mechanical units concerned. The instructions herein contained are in general common to all different models of the same group; when they are meant for one particular model, it is previously indicated with a specific detailed reference to be found in the CONTENTS and in the text.

All instructions given for the purpose of restoring faulty components to proper working conditions, do not necessarily reflect manufacturer's directives as regards service, but they must just the same be complied with. Furthermore, since most given instructions concern complete disassembly of components; they should be followed in their entirety only when it is strictly necessary.

For easier consultation of the manual, read the CONTENTS carefully.

The following chapters are of the utmost importance:

- *SERVICE DATA AND SPECIFICATIONS to be complied with when tuning up and repairing the vehicle. The specifications have been subdivided into four different items: Technical Data, General Specifications, Checks and Adjustments and Tightening Torques;*
- *TROUBLE DIAGNOSIS AND CORRECTIONS where likely causes of trouble, as well as the relevant recommended corrective action, are listed;*
- *SPECIAL SERVICE TOOLS designed to allow quick, accurate and safe repairs.*

Measurements given in this manual are expressed in the International System of Units (SI) as well as in the yard/pound system and in the metric system.

Captions CAUTION and WARNING emphasize steps that must be followed with extreme care to avoid personal injury and/or damage to the vehicle or part of it.

Remember to keep the manual up-to-date with the data supplied by the "Technical Bulletin" periodically issued by the Service Department.

WORKSHOP INSTRUCTIONS

Disassembly and assembly operations should be always carried out using proper tools (general-purpose as well as special service tools) since makeshift tools will damage the parts involved.

To loosen tight fitting cast iron parts, just lightly strike them with a lead or aluminium hammer; use a wooden or plastic mallet to loosen light alloy parts.
Separate one by one the parts making up each unit and partially tighten nuts onto relevant studs or screws.

On disassembly, check if parts that should be marked do in fact have the relevant number or reference stamped on it. If any previously replaced part is found to be in properly marked, it should be stamped accordingly.

Before washing, clean all parts with a brush and cloth removing most dirt (thus avoiding needless dirtying of the washing fluid); then wash them with detergent or special compound. Remove any residual dirt with a jet of compressed air. Dry all parts immediately after washing to prevent them from rusting.

Thoroughly wash parts that have been ground or lapped and blow them with a jet of compressed air to remove all residues.

Reassembly, clean all parts (especially those that have been ground) with a jet of compressed air or a clean brush.
On assembly also suitably lubricate parts (except self-lubricating bushes) to prevent seizure during their running-in period.
To apply lubricant, use a clean brush as well as clean oil keeping them away from dust and dirt at all times and using them only for this special purpose.

Suitably protect with adhesive tape or clean cloths all engine parts that after disassembly show orifices or drilling which are likely to let in dust or foreign matter.

On assembly, replace all gaskets, seal rings, spring washers and lock rings in addition to all worn or damaged parts.

IMPORTANT NOTICE

When replacing units or parts thereof, be sure to use only genuine spare parts to ensure interchangeability as well as proper performance.

When ordering, remember to show the part number taken from the Spare Parts Catalogue or from the microfiches.
Service quality varies according to procedures used, personnel skill, and available tools and parts.

QUICK REFERENCE INDEX

COMPLETE CAR	GR. 00
ENGINE MAIN MECHANICAL UNIT	GR. 01
FUEL SYSTEM	GR. 04
IGNITION, STARTING, CHARGING SYSTEM	GR. 05
ENGINE COOLING SYSTEM	GR. 07
CLUTCH	GR. 12
GEARBOX	GR. 13
TRANSMISSION	GR. 15
DIFFERENTIAL AND AXLE SHAFT UNIT	GR. 17
FRONT SUSPENSION	GR. 21
FRONT AND REAR BRAKES	GR. 22
STEERING	GR. 23
REAR SUSPENSION	GR. 25
ELECTRICAL SYSTEM	GR. 40
CLUSTER AND ELECTRONIC INSTRUMENTS	GR. 43
HEATER	GR. 80

GROUP 00

CONTENTS

GENERAL VIEWS 00-3
WHEELS AND TIRES 00-4
MODEL VARIATIONS 00-5
SERVICE AND IDENTIFICATION DATA 00-6
Identification labels 00-6
Vehicle identification codes 00-6
LIFTING AND TOWING POINTS 00-7
Jack 00-7
Hydraulic jack and safety stands 00-8
Towing 00-8
SPECIAL SERVICE TOOLS 00-8
INSTRUCTIONS FOR PRE-DELIVERY INSPECTION 00-9
Operations in the engine compartment 00-9
Operations on vehicle exterior and in the passenger compartment 00-9
Operations on vehicle lower part 00-11
Functional tests 00-11
MAINTENANCE 00-11
VEHICLE MAINTENANCE SCHEDULE 00-12
FLUIDS AND LUBRICANTS LAYOUT 00-13
RECOMMENDED FUEL AND LUBRICANTS 00-14
Fuel 00-14
Fluids and lubricants 00-15
APPROXIMATE REFILL CAPACITIES 00-19
ENGINE MAINTENANCE 00-20
Engine main mechanical unit 00-20
Replacement of engine oil and oil filter - check on lubrication system tightness 00-20
Check on bolts and nuts tightening 00-20
Tightening of cylinder head nuts 00-21
Check and adjustment of valve clearance 00-21
Replacement of timing system drive belt 00-25
Check on timing system and drive belt tensioning 00-26
Checking good conditions, replacing and adjusting drive belts of alternator, air conditioner compressor, power steering pump 00-29
Check on cylinder compression 00-29
Fuel system 00-31
Cleaning of air cleaner and/or cleaner element replacement 00-31
Check and adjustment of idle r.p.m. and exhaust emissions 00-31
Engine ignition 00-33
Check and adjustment of spark advance 00-33
Check, cleaning and/or replacement of spark plugs; firing order 00-34
Engine cooling 00-35
Checking and refilling the system 00-35
Exhaust system 00-36
Replacement of exhaust gas sensor and catalytic converter 00-36
Trouble diagnosis and corrections 00-37

CONTENTS (cont.)

Engine 00-37
Ignition 00-44
Fuel system 00-45
Check with BOSCH tester 00-60
Detailed diagnosis for Lambda sensor 00-73
EZ-L Ignition system diagnostics (YB milano ● model only) 00-74
Ignition system diagnostics (YB milano ● model only) 00-78/1
Injection wiring diagram 00-79
MAINTENANCE OF MECHANICAL COMPONENTS AND BODY 00-81
Clutch 00-81
Check on clutch-brakes fluid level and check on the system 00-81
Gearbox differential 00-81
Transmission 00-81
Front axle and suspension 00-81
Check 00-81
Adjustment of wheel bearings preload 00-81
Rear axle and suspension 00-82
Check 00-82
Check on vehicle height 00-82
Preliminary operations 00-82
Front height 00-83
Rear height 00-83
Height adjustment 00-84
Wheel alignment 00-85
Check on front wheels alignment 00-85
Check on rear wheels alignment 00-87
Front and rear brakes 00-87
Brake system 00-87
Front brakes 00-88
Rear brakes 00-88
Parking brake 00-88
Adjustment 00-88
(ABS) Wheel antilock system 00-89
Air gap adjustment between front impulse pick-up and impulse emitting wheel 00-89
Air gap adjustment between rear impulse pick-up and impulse emitting wheel 00-89/1
Steering system 00-89/1
Check on the unit 00-89/1
Check on power steering tank oil level 00-89/1
Tires 00-89/1
Tire pressure check 00-89/1
Body 00-89/2
Locks and hinges 00-89/2
Seat belts 00-89/2
Trouble diagnosis and corrections 00-90
Transmission 00-90
Suspension 00-91
Steering wheel 00-91
Brakes 00-92
Diagnosis procedure of the (ABS) MARK II wheel antilock system 00-93
Electrical diagnosis of the brake fluid tank for the (ABS) MARK II antilock braking system 00-93/20
(ABS) MARK II wheel antilock system wiring diagram 00-93/22
SERVICE DATA AND SPECIFICATIONS 00-94
Engine maintenance 00-94
Technical data - Checks and adjustments 00-94
Fluids and lubricants 00-95
Wheels and tires 00-95
Tightening torques 00-95
Maintenance of mechanical components and body 00-96
Technical data - Checks and adjustments 00-96
Fluids and lubricants 00-97
Tightening torques 00-97
SPECIAL SERVICE TOOLS 00-98

GENERAL VIEWS

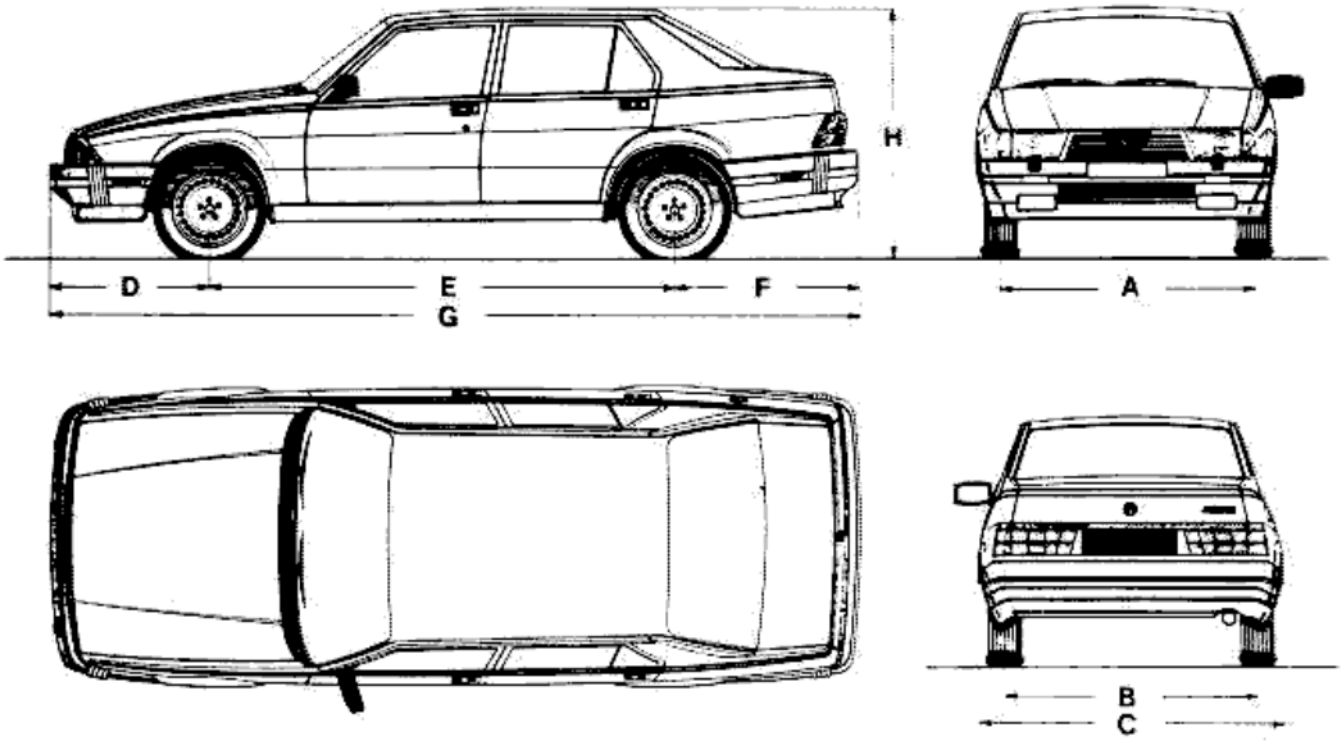

DIMENSIONS

Unit: mm (in)

Model \ Dimensions	A	B	C	D	E	F	G	H max	R	
VR milano / VR milano	1378(1) (54.25)	1368(1) (53.86)	1630 (64.17)	862 (33.94)	2510 (98.82)	1046 (41.18)	4418 (173.94)	1400 (55.1)	5050 (198.8)	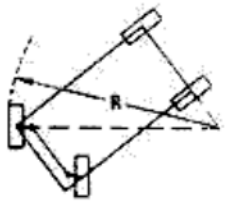

(1) with rims 5 1/2 J x 14" H2

R = Radius of the circumference described in correspondence with ground from driving wheel outer edge in the max steering conditions.

WEIGHTS AND LOADS

Unit: lb (kg)

Weights and Loads \ Model		VR milano ◆ VR milano ◉
Max weight allowed		3846 (1745)
Curbweight		2909 (1320)
Payload		937 (425)
Max gross weight per axle allowed	Front	1834 (832)
	Rear	2012 (913)
Seating capacity	Front	2
	Rear	3

WHEELS AND TIRES

Winter Tires - see Bulletin: 00-89-01
3/3/89

Rims and tires \ Model			VR milano VR milano ◆ Argento	◉ Oro	◉ Platino
Rims	Back spacing = 135mm off Set = 45mm Early Production + 30mm Late 30		$5\frac{1}{2}$ J x 14" H2		6 J x 15"
Tubeless Tires			195/60 VR 14"		195/55 VR 15"
Inflating Pressure bar ; kPa ; p.s.i. (kg/cm²) (1)	N	A	1.96 ; 195.1 ; 28 (2.0)		
		P	1.96 ; 195.1 ; 28 (2.0)		
	C	A	2.16 ; 215.7 ; 31 (2.2)		
		P	2.45 ; 245 ; 35 (2.5)		

A : Front
P : Rear
N : with reduced load and normal speed
C : at full load and high speed
V : over 130 mph (210 km/h)

(1) Pressures measured on cold tires

CAUTION:
The wheel nut must be tightened to 98 N·m torque (72.16 ft·lb; 10 kg·m)

MODEL VARIATIONS

Identification \ Model / Variations		VB milano			VB 1.2 milano
		Argento	Oro	Platino	Verde
Body		4 - door saloon			
Drive		L.H			
Edition		U.S.A. M.Y. 87			
Identification No.	– on identification label	161.14	161.16	161.36	161.24
Type approval No.	– on label at bottom of windshield	116.H1		–	124.H1
	– on U.S.A. safety regulations label	–		116.H1	–
	– on rear right side compartment floor	162.B30			162.B20
Chassis serial No.	– on rear right side of luggage compartment floor	From 00075019	From 00050026	From 00025034	From 00050001
Engine type and serial No.	– on rear left side of crankcase	019.11 From A60001			061.24 From 000.001

SERVICE AND IDENTIFICATION DATA

IDENTIFICATION LABELS

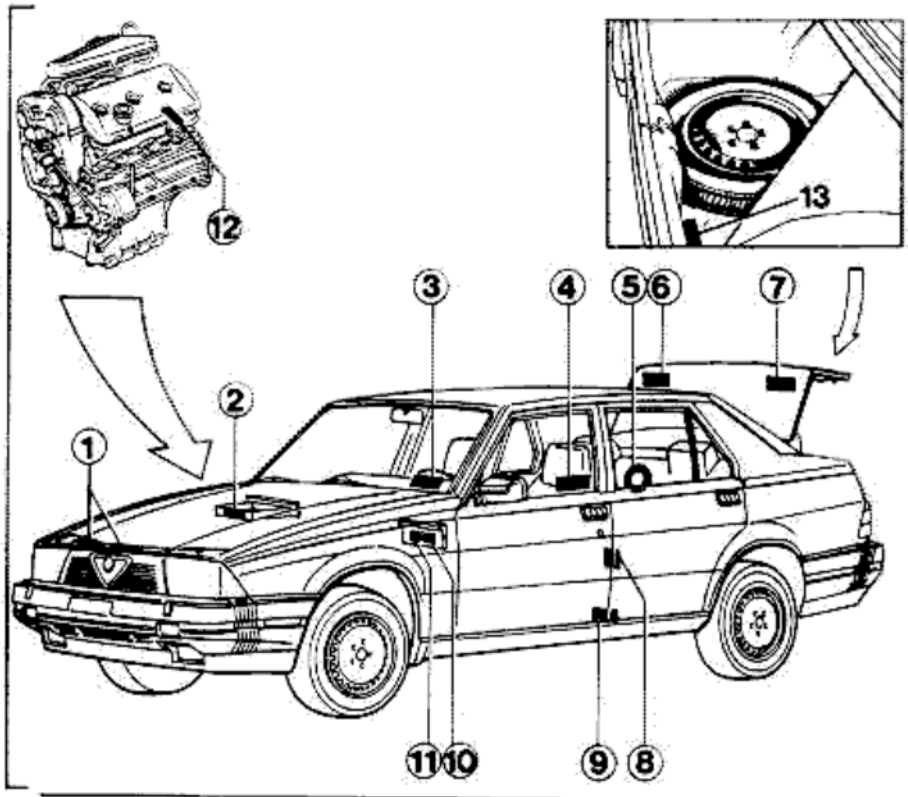

	Data
1	**Engine tune up data - Compliance with exhaust emission regulations** – Tune up label
2	**Break in instructions** – Label on bottom side of glovebox drawer
3 9	**Vehicle identification number** – Windshield plate – D.O.T. certification label
4	**Compliance with California exhaust emissions standards** – Label on front left window
5	**Fuel requirements** – Label near fuel tank filler port
6	**Paint** – Paint label
7	**Lubrication data** – Lubrication data label
8	**Compliance with exhaust emission importation regulations** – Label on jamb
9	**Production date** – D.O.T. certification label
9	**Gross vehicle weight** – D.O.T. certification label
10	**Directions for catalytic converter equipped cars** – Fusebox lid inner side
11	**Useful load - Seating capacity - Tire pressure** – Fusebox lid inner side
12	**Engine number** – On crankcase rear side (at the left bank head joining surface)
13	**Body number** – On trunk floor pan

VEHICLE IDENTIFICATION CODES

A) CHASSIS NUMBERING (VIN - CEE)

This consists of two groups of numbers and symbols, as indicated below:

$$+\,ZAR\overbrace{\underbrace{161}_{(1a)}\underbrace{160}_{(1b)}}^{(1)} + \overbrace{0000100}^{(2)} +$$

(1) Type code: This consists of:
1a) **Basic type number:** This is allocated for each model range of vehicles with a common concept (i.e. 161 - 6V-2.5 Milano - 116-Alfetta range, 119 - 2500 V-6 range)
1b) **Suffix letter for variants:** This identifies the characteristics within the basic model range (i.e.: 160 - 6V-2.5 Milano - 119A -Alfetta 6 2500 with manual gearbox, 116 C: GTV 2.5)

(2) **Progressive serial number:** This is allocated on a consecutive basis by the Production Department.

B) ENGINE NUMBERING

This consists of two groups of numbers and symbols, as follows:

$$\overbrace{AR01911}^{(1)} \star \overbrace{A60001}^{(2)} \star$$

(1) Type number: This is allocated to each range with similar technical characteristics (i.e.: 01911 - 6V-2.5 Milano - 016.08 Alfetta 1800 engine, 019.13 - 2500 V-6 engine)

(2) **Progressive engine serial number:** This is allocated on a consecutive basis by the Production Department.

C) VEHICLE IDENTIFICATION NUMBER (VIN - USA)

This consists of three groups of numbers and symbols, as indicated below:

$$ZAR\overbrace{\underbrace{D}_{(1a)}\underbrace{A}_{(1b)}\underbrace{116}_{(1c)}}^{(1)}\ \overbrace{H}^{(2)}\overbrace{1}^{(3)}\overbrace{001001}^{(4)}$$

(1) **Vehicle model consisting of:**
1a) **Family** (e.g. A: Sport sedan, B: Spider, etc.)
1b) **Production variants:** (e.g. A: Manual gearbox, B: Automatic transmission, etc.)
1c) **Model variants:** e.g.: Body type (Sedan or Coupe), engine type (cycle, total displacement, power output, etc.)

(2) **Model year**

(3) **Manufacturing plant identification number**

(4) **Progressive serial number**

LIFTING AND TOWING POINTS

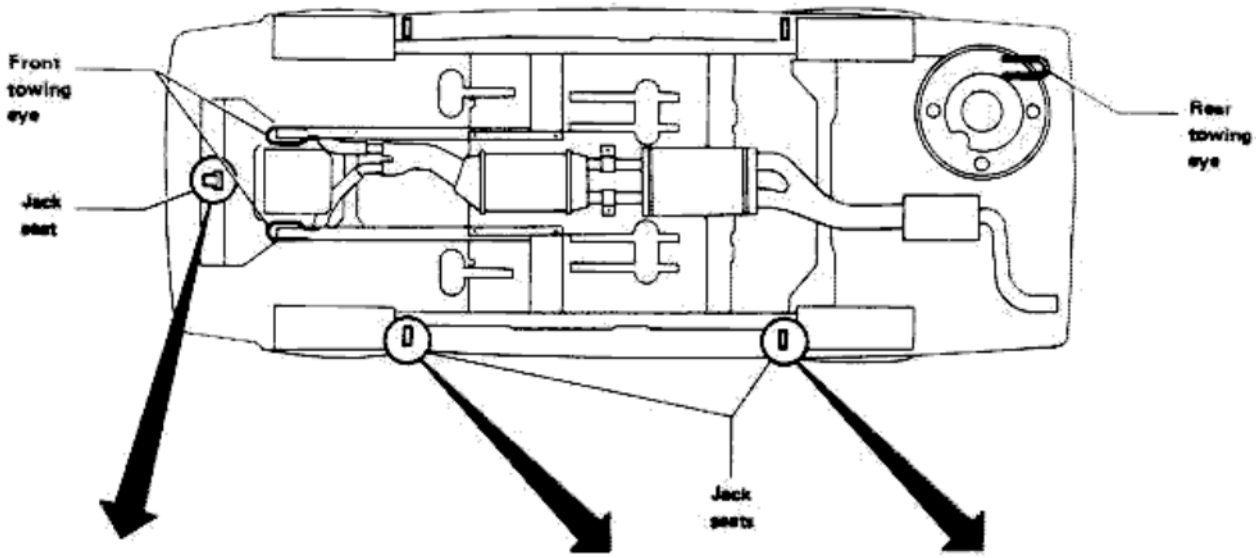

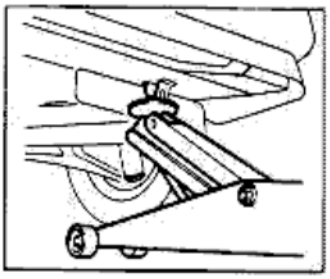

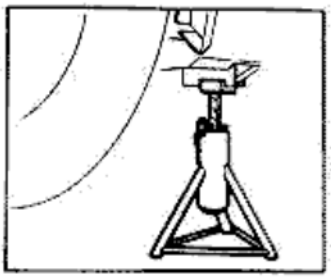

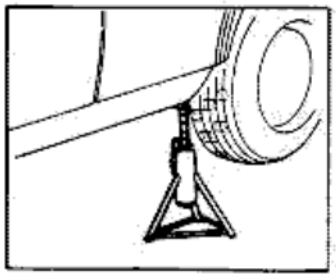

JACK

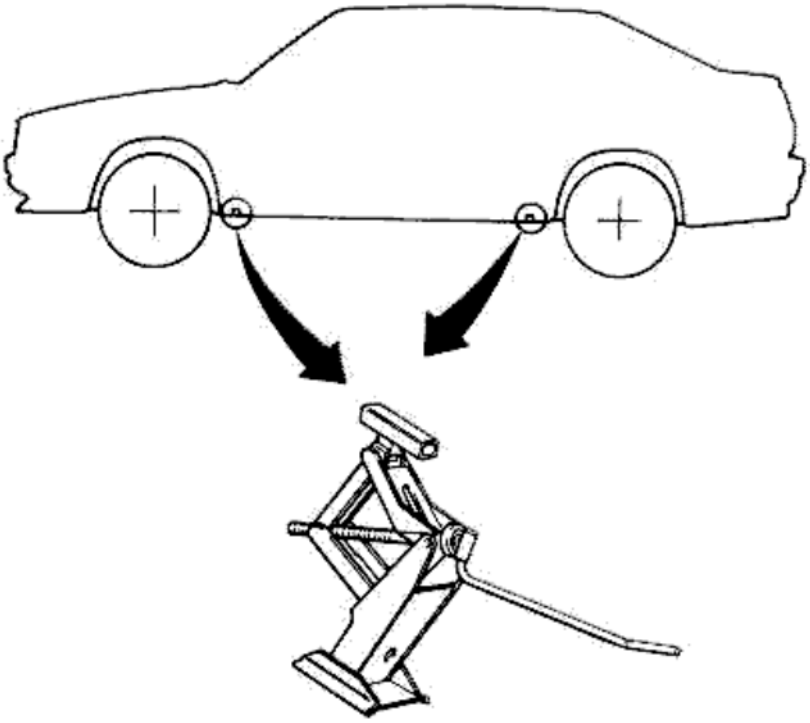

WARNING:
a. Never get under the vehicle while it is supported only by the jack. Always use safety stands to support frame when you have to work under the vehicle.
b. Place wheel chocks at both front and back of the wheels diagonally opposite to jack position.

Position the jack, supplied with the vehicle, in the safety points shown in the figure.

HYDRAULIC JACK AND SAFETY STANDS

WARNING:
a. When raising vehicle with the jack, be sure to support it with safety stands.
b. When jacking up the rear (front) of the vehicle, place chocks in front (back) of the front (rear) wheels.

CAUTION:
When raising the vehicle, always place a wooden block under vehicle lifting points.
Position the jack and the safety stands in a safe manner under the points shown in the figure.

TOWING

Closely follow the motor vehicle regulations concerning vehicle towing.

CAUTION:
a. Use suitable towing equipment to prevent damaging the vehicle.
b. Before towing, make sure that front and rear axles as well as steering wheel are in good working conditions. If not so, make use of a dolly.
c. If vehicle must be towed with its rear wheels raised, the front wheels must be placed on a towing dolly.
d. Set the ignition key to "0" position and do not withdraw it from the ignition block, otherwise, the steering lock could become engaged.
e. Before starting vehicle towing, release parking brake and shift the gear lever to "neutral".
f. Do not apply lateral forces to towing bar. Always keep towing bar, or similar devices, in line with the vehicle.
g. Remember that when vehicle is being towed, there is no vacuum in the servobrake; therefore, when braking, exert greater pressure on brake pedal.

SPECIAL SERVICE TOOLS

Special service tools play a very important role in a vehicle's maintenance since they are essential to ensure accurate, reliable and quick service. To this effect, it must be remembered that times taken relevant to the various maintenance operations are computed assuming that said special tools are being used. All special service tools, made expressly on the Manufacturer's design, needed for overhauling, maintenance and repair of models are listed and illustrated in this manual. The identification number is determined by the relevant ordering part number and consists of a letter followed by a five figure number according to the following schedule:

A.0.0000	Special Service Tool
C.0.0000	Tester
U.0.0000	Reamer

The listed tools must be ordered by the authorized workshop according to the usual systems already followed by each Service - network.

INSTRUCTIONS FOR PRE-DELIVERY INSPECTION

This chapter lists and describes the pre-delivery operations required for the Y.P milano vehicles. The operation description does not refer to each version, but gives general information concerning the parts for which inspection is required.
As regards the technical specifications related to each operation, and the lubricant products (and similar), refer to the "Service Data and Specifications" present in each section.

CAUTION:
Pre-delivery inspection of a new vehicle, prior to customer delivery, consists in carrying out all checking operations and tests hereafter described in order to detect and thus eliminate any damage or malfunction.
It goes without saying, however, that when Dealer personnel picks up the vehicle, a visual check should be performed in order to:

a. **make sure that vehicle is in normal driving conditions, especially as regards level of fluids and controls in general**
b. **detect any dents or scratches on body or other damage to the vehicle interior (upholstery).**
c. **make sure nothing is missing, especially factory supplied accessories, spare tire and any parts that are to be fitted on vehicle as pre-delivery completion.**

If topping up is required as a result of the checks, proceed accordingly; this operation is to be considered as part of pre-delivery inspection. In the event of interventions (malfunctions) different from those indicated, carry out the adjustments according to the current technical and administrative procedures.

As each operation is being carried out, the relevant card must be filled out and then filed together with the sold vehicle's other documents; the pre-delivery card included in the Service Book supplied to the customer must also be duly filled out to indicate that the pre-delivery checks have been carefully carried out.

OPERATIONS IN THE ENGINE COMPARTMENT

Coolant

- With engine cold, check the header tank level. Top up if necessary with the specified liquid, up to the max level.

Engine oil

- Check that level is up to the "MAX" mark on the dipstick (carry out this operation after parking the vehicle on a flat surface, and after the engine has been off for a few minutes). If required, top up with specified oil.

Power steering oil

- Check that level is up to the "MAX" mark on the plug stick (before carrying out the check, with the engine idling, rotate the steering wheel completely in both directions in order to carry out bleeding).

Brake and clutch fluid

- Check that the level in the tank is up to the "MAX" mark on the tank. If required, top up with specified fluid remembering that tins must be sealed and opened only when ready to use.
  Be sure to perform this operation with utmost care and cleanliness

Battery electrolyte

- Check that the electrolyte covers the plates upper edge by 5 mm (0.197 in). If lower, top up with distilled water.

Windshied washer liquid

- Check that this tank is full. Top up, if necessary, with appropriate solution.

Engine electric fan

- Connect the thermal switch cables together and check electric fan functioning.
- Check that cables are firmly connected to thermal switch.

OPERATIONS ON VEHICLE EXTERIOR AND IN THE PASSENGER COMPARTMENT

Exterior cleaning

- If required, dewax the vehicle using suitable products and procedures; wash the vehicle's exterior with a solution of water and shampoo, rinse it thoroughly and dry it.
  Finish cleaning by removing any stubborn spots using suitable compounds.

Paint

- Visually and thoroughly check all painted surfaces and remove accidental or manufacturing flaws, if any.

Exterior moldings and fittings

- Visually check all vehicle's outside parts: bumpers, moldings, grills, headlight rims, letters and emblems making sure they are securely fitted, and have no spots or dents.

Doors and hoods

- Visually check all weatherstrips for tight fit and make sure they are not damaged, out of shape or dirty.
- See if doors and hoods are aligned and centered with relevant openings.

Factory issued accessory equipment

- Check if following items are in their proper place in the vehicle: tool kit, spare tire, jack, Instruction Book and Service Book.

Locks, hinges, windows

- Check proper working condition of all door locks (close, lock, open from inside and outside). Check hood and trunk in the same way.
- Check door and hood hinges for smooth noiseless operation.
- Check if windows can be opened and closed all the way without sticking and noise.

Interior finishings

- Check all upholstery (roof, carpets, panels etc...) removing possible stains or scratches.

Seats, seat belt and accessory equipment

- Inspect seats checking if they slide freely on tracks without sticking and noise. Also check proper working condition of seat and head-rest adjusting devices.
- Check inside and outside rear-view mirrors making sure they swing easily and stay firmly in place when set; also check snap switch on mirror for day/night driving.
- Check if seat belts and relevant retractors are in good working condition.
- Check maneuverability of sun visors, ashtrays, glove compartment and any other accessory.

Heating and air conditioning system

- Check correct functioning of heater controls and air inlet lids and louvers (opening and closing).
- Check that electric fan operates correctly at the various speeds.
- For the vehicles equipped with air conditioner, start the engine and check that, when operating the related control on vehicle, the closing of the electromagnetic coupling occurs and, consequently, the compressor operation.

Lights, indicators, electric accessory equipment

- With the ignition key set to "MAR", check whether lights outside and inside the vehicle, as well as the related warning lamps, illuminate: front and rear parking lights, licence plate lights, direction and hazard lights, stop lights, high/low beams, headlight flashing, reverse light, engine and luggage compartment lights, passenger compartment lights (through manual control, and on doors) and the related switch off timer, front and rear spot lights, cluster lights and related adjustment rheostat (or rheostats), glove compartment light.
- Check whether the following warning lamps illuminate: alternator, fuel reserve, engine oil pressure, brake fluid level, parking brake on, starter on, heated rear window on, engine temperature; check correct functioning of the ALFA ROMEO control warning lamps which illuminate all at the same time as soon as the ignition switch is set to the "MAR" position, and then switch off after a few seconds.
- Check proper functioning of horns, cigar lighters, door locking device, power window controls, and front seats electrical controls.

Windshield wash/wipe and headlight washer

- After installing the wiper blades, check whether windshield wiper works properly at the different speeds, as well as intermittently.
- Operate the windshield washer and check that nozzle jet is uniform and correctly directed towards the upper part of the window.
- Check that headlight washer jet is correctly directed towards headlights (only where required by Regulations).

Tire pressure

- Check tire pressure and, if required, restore to specified values. Use higher p.s.i. for the spare wheel.

Tightening of wheel nuts or screws

- Using a wrench, check that nuts or screws of wheels are completely tightened. Check that nuts are appropriate for the type of vehicle and rim, as indicated in the spare Parts Catalogue.

OPERATIONS ON VEHICLE LOWER PART

Gearbox-differential oil

- Remove filler plug and check that the lubricant level reaches the lower rim of the related hole. Top up if necessary with the specified oil and re-fit filler plug.

Systems tightness

- Visually check for leaks in the following systems: fuel, power steering, brakes, clutch, engine cooling.
- Check for oil leaks from engine, gearbox and differential.

FUNCTIONAL TESTS

Engine controls

- Check that the starter control operates without sticking along the whole travel and that, when the related knob is pushed down, the related device is completely disengaged from carburetor.
- Check that the pedal accelerator control operates without sticking and, with the pedal at the end of travel, the throttle valve is fully open.

Engine start-up and functioning

- Check that engine starts correctly. With engine hot, check steady functioning of the engine at the specified idle r.p.m.

Instruments

- With engine running, check correct functioning of all electrically operated instruments: rev counter, speedometer, oil pressure gauge, water thermometer, fuel level gauge, clock.

Brake, clutch and gearbox controls

- With engine running, push the brake pedal and check that, after the initial empty stroke, it stops without elasticity.
- Check also proper functioning of parking brake lever.
- With engine running, push the clutch pedal and check that all speeds can be shifted without sticking or noise.

MAINTENANCE

Maintenance operations consist in checking and restoring proper working conditions of some parts of the vehicle which are most likely to become worn or out-of-adjustment as a consequence of the vehicle's normal use.
A list of the various operations to be performed at different intervals, as shown in the chart that follows, is included in the coupons of the Service Book which accompanies each vehicle.
Coupons will have to be stamped by the Service Organisation Agency to show that specified maintenance operations have been carried out.
Just as for pre-delivery inspection, should topping up or change of fluids and lubricants - as described in the text - become necessary, they will be considered as part of maintenance operations. If damage or malfunctions other than those listed are encountered, they will be taken care of, repaired, or adjusted according to current technical and administrative procedures.

VEHICLE MAINTENANCE SCHEDULE

No.	Operations	Mileage covered (× 1,000)									Note
		1.5	7.5	15	22.5	30	37.5	45	52.5	60	
1	Change engine oil and filter	X	X	X	X	X	X	X	X	X	1
2	Check boots of C.V. joints and steering rods for soundness	X	X	X	X	X	X	X	X	X	
3	Inspect braking system	X	X	X	X	X	X	X	X	X	
4	Check brake pads for wear and replace pad as required		X	X	X	X	X	X	X	X	2
5	Check brake fluid level	X	X	X	X		X	X	X	X	
6	Check parking brake travel and adjust if necessary	X	X	X	X	X	X	X	X	X	
7	Check tire pressure	X	X	X	X	X	X	X	X	X	3
8	Lubricate door, hood and trunk hinges. If necessary adjust strikers	X	X	X	X	X	X	X	X	X	
9	Check electrolyte level in battery if necessary. Tighten and grease battery terminals	X	X	X	X	X	X	X	X	X	3
10	Check valve clearance and adjust, if necessary	X				X				X	E
11	Check alternator, power steering, and air conditioner compressor (if so equipped) drive belts; adjust tension as necessary					X				X	E
12	Change air cleaner element					X				X	
13	Check power steering fluid level	X	X	X	X	X	X	X	X	X	
14	Change spark plugs					X				X	E
15	Change engine coolant mixture					X				X	4
16	Change gearbox and differential oil	X				X				X	
17	Check gearbox and differential oil level and top up as necessary			X				X			5
18	Change brake fluid					X				X	6
19	Check cylinder head nuts for proper torque	X									E
20	Check idle speed and adjust if necessary	X									E
21	Check front wheel toe-out and adjust as necessary	X				X				X	
22	Check head lamp beam aiming and adjust as required	X				X				X	
23	Test vehicle	X									
24	Check engine bolts for tightness	X									E
25	Replace exhaust gas sensor and catalytic converter									X	E
26	Check front wheel hub bearings backlash	X		X		X		X		X	7

NOTE:

1. To be performed at the stated mileages or once a year whichever occurs first. Check oil level more frequently (when refuelling).
2. To be carried out at the stated mileages and more frequently when driving hard or when driving mainly in mountainous conditions.
3. To be performed more frequently (when refuelling).
4. To be performed at the stated mileages or once every two years whichever occurs first. Check coolant level more frequently (when refuelling).
5. Check gearbox oil more frequently (when refuelling).
6. To be carried out at the stated mileages or once a year whichever occurs first.
7. Only for vehicles with ABS system.

E. Maintenance required for proper function of emission control system performance.

FLUIDS AND LUBRICANTS LAYOUT

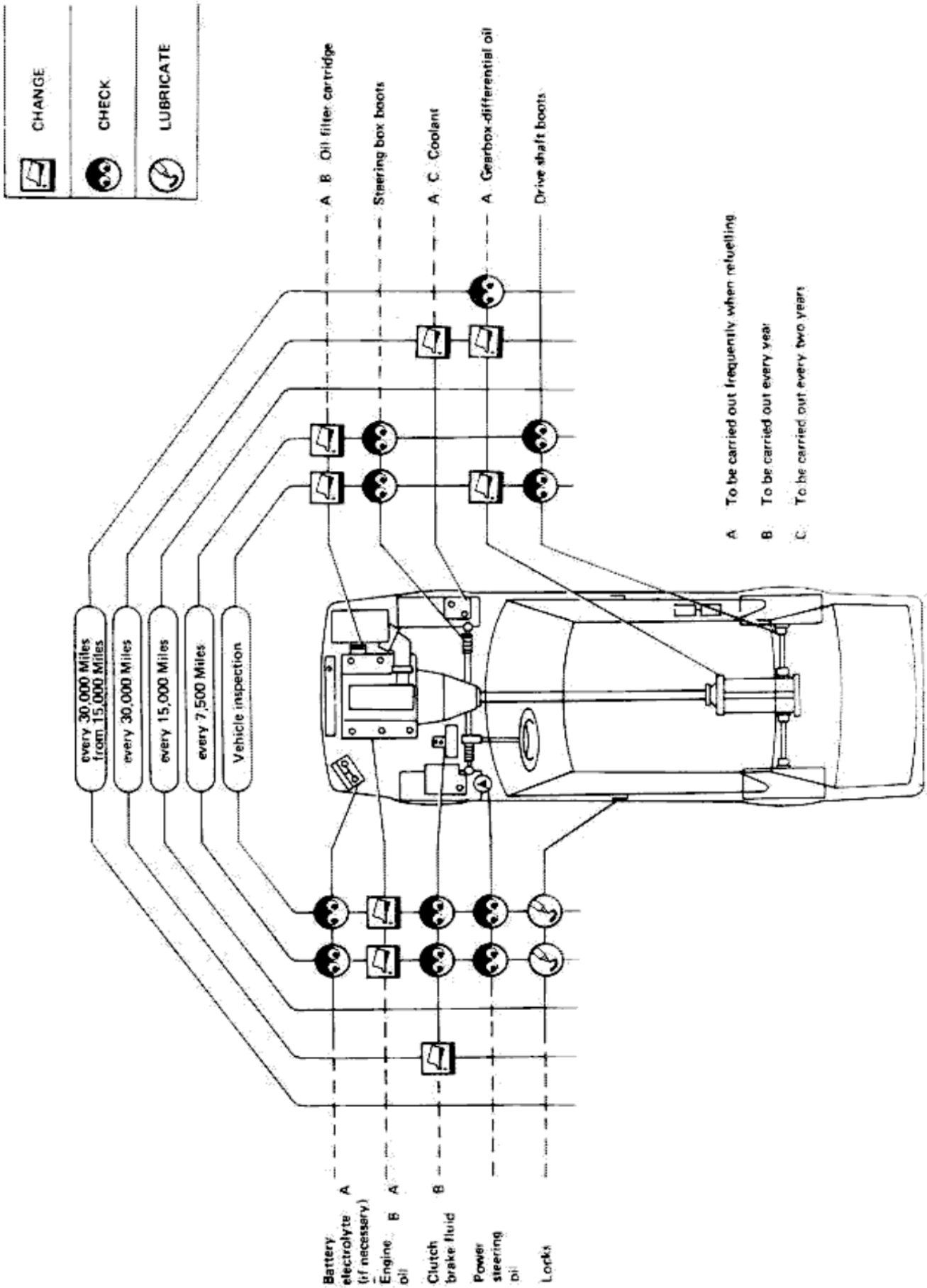

RECOMMENDED FUEL AND LUBRICANTS

FUEL

Octane rating

A gasoline's resistance to detonation or «knock» is noted by its octane rating. Purchase and use of correct octane fuel is essential to prevent «knock» which may eventually be harmful to your car's engine. The higher the rating, the higher the ability to resist «knock». Regular fuels have an octane rating range from 91 to 95 RON (Research Octane Number) or 86 to 90 PON (Pump Octane Number). PON ratings appear on gasoline pumps in the U.S. This rating is determined in the following manner:

$$\frac{RON + MON^{*}}{2} = PON$$

* Motor Octane Number

For example: Research Octane Number and Motor Octane Number divided by 2 equals Pump Octane Number.

The P.O.N. octane rating is usually 5 points less than the RON rating:
91 RON = 86 P.O.N
95 RON = 90 P.O.N

Important note for VE milano ◉ .
Use of fuels with octane ratings lower than 91 RON or 86 P.O.N. should be avoided.

Important note for VE milano ◉ .
The VE milano ◉ has been designed to operate on **Premium** unleaded gasoline having a minimum of 90 octane as posted on gasoline dispensing pumps displaying the $\frac{RON + MON}{2}$ rating method (95 Research Octane Number).

FLUIDS AND LUBRICANTS

Type	Application	Classification	Name				Notes
			AGIP	IP	SHELL	Other	
OIL	Engine - 01	SAE 10W/50 API SF	Sint 2000 SAE 10W/50	Sintiax SAE 10W/40	Fire & Ice Motor 15W/50		Ambient temperature – 18 to 40°C (- 0.4 to 104°F)
	Gearbox - Differential - 13 - 17	SAE 80W/90 API GL-5	Rotra MP SX SAE 75W/90	Pontiax HDS SAE 75W/90	Spirax HD 80W/90		Ambient temperature -40 to 150°C (–40 to 302°F)
	Front suspension - 21	SAE 80W/90 API GL-5	Rotra MP SX SAE 75W/90	Pontiax HDS SAE 75W/90	Spirax HD 80W/90		Ambient temperature –40 to 150°C (–40 to 302°F)
	Steering box/wheel - 23	DEXRON II	ATF DEXRON II 11297	DEXRON FLUID II 11297	DEXRON II 10709-D20137		
	Air Conditioner - 80					SUN OIL COMPANY Suniso 46	
GREASE	Engine - 01					UNION CARBIDE CHEMICALS COMPANY: Ucon lubricant 50 HB - 5100	
						MILLOIL: Lubricant for elastomer seals	
						SIPAL AREXONS - Carbo silicon for valves	
						ISECO: Molykote Paste G	
						ISECO: Molykote BR2	
						ISECO: Molykote A	
	Engine - Fuel System - 04	N.L.G.I. No. 1	Grease 15				Basic substance: Al-Ca
						Antiseize R, GORI: Never Seez	
						Bosch 5.964.080.105	
						ISECO: Molykote Long-term No. 2	
						REINACH: E10 TAC	

Type	Application	Classification	Name				Notes
			AGIP	IP	SHELL	Other	
GREASE	Engine ignition - 05					REINACH - E10 TAC	
	Engine cooling system - 07					Antiseize R. GORI Never Seez	
	Clutch - 12	N.L.G.I. No. 3	Grease 33 FD	Autogrease FD			Basic Substance Bentonite Polythene
						ISECO: Molykote BR2	
	Gearbox - 13	N.L.G.I. No. 3	Grease 33 FD	Autogrease FD	Retinax AX	ESSO: Norva 275	Basic substance Bentonite Polythene
						ISECO: Molykote Longterm No. 2	
						ISECO: Molykote BR2	
	Transmission - 15	N.L.G.I. No. 1	Grease 15	Autogrease MP	Retinax G11	ISECO: Molykote BR2	
						ISECO: Molykote G RAPID	
	Differential - 17					ISECO: Molykote VN 2461/c	
						OPTIMOL: Ollstamoly 2LN584	Basic Substance: Li
						ISECO: Molykote BR2	
	Front suspension - 21	N.L.G.I. No. 3	Grease 33 FD	Autogrease FD	Retinax AX		Basic Substance Bentonite Polythene
						ISECO: Molykote BR2	
						ISECO: Ergon Rubber Grease No. 3	
						ESSO: NORVA 275	
						SPCA: Spagraph	
						REINACH: Sterul B2AR	

Type	Application	Classification	Name				Notes
			AGIP	IP	SHELL	Other	
GREASE	Front suspension : 21					Antiseize R. GORI Never Seez	
						ISECO: Molykote Longterm No. 2	
	Front and Rear brakes : 22	N.L.G.I. No. 1	Grease 15		Retinax G11		Basic Substance Al : Ca
						ATE: Bremszylinder Paste	
						ISECO: Molykote Longterm No. 2	
	Steering box wheel : 23	N.L.G.I. No. 3	Grease 33 FD	Autogrease FD	Retinax AX		Basic Substance Bentonite Polythene
						REINACH: Sferul B2AR	
						SPCA: Spagraph	
						ESSO NORVA 275	
						ISECO: Ergon Rubber Grease No. 3	
						ISECO: Molykote Paste G	
						CALYPSOL	
	Rear Suspension : 25					REINACH: Sferul B2AR	
						SPCA: Spagraph	
						ISECO: Ergon Rubber Grease No. 3	
						Antiseize Compound R. GORI: Never Seez	
						MILLA. Protection LT	
						HOUGHTON: Rust veto 1064	

Type	Application	Classification	Name				Notes
			AGIP	IP	SHELL	Other	
GREASE	Wheels and Tires - 28					UNION CARBIDE CHEMICALS COMPANY: Ucon lubricant 50 HB - 5100	
						MILLOIL: Lubricant for elastomer seals	
	Air Conditioner - 80					UNION CARBIDE CHEMICALS COMPANY: Ucon lubricant 50 HB - 5100	
						MILLOIL: Lubricant for elastomer seals	
FLUID	Engine Cooling - 07		Antifreeze	Antifreeze			Ethylene Glycol (concentrated) Std. No. 3681 - 69956
							Antifreeze (ready for use) Std. No. 3681 - 69958
	Brakes - Clutch - 22 - 12		Brake Fluid Super HD	Auto Fluid FR			
						ATE "S"	
	Air Conditioner - 80					Freon 12	

SAE VISCOSITY

Unit of Measurement	°C (°F)	Motor Oil	Gearbox - Differential Oil
		SAE 10W50	SAE 80W90
Cps	– 40 (– 40)	–	150000
Csi	– 20 (– 4)	2600	–
	40 (104)	165	118
	50 (122)	110	–
	100 (212)	19	14,3 to 15,3

APPROXIMATE REFILL CAPACITIES

Approximate refill capacities			Vehicle model	YF milano ◉ YF milano ◉
FUEL TANK			l (Gals)	67 (17.7)
FUEL RESERVE			l (Gals)	8 to 10 (2.1 to 2.6)
ENGINE OIL SUMP kg (lb)		With filter		6 (13)
		Without filter		5.5 (12)
CAMSHAFT SUPPORT WELLS (*)			kg (lb)	0.450 (0.99)
GEARBOX - DIFFERENTIAL OIL			kg (lb)	2.07 (4.56)
POWER STEERING SYSTEM OIL			kg (lb)	0.8 (1.76)
COOLANT	Min T °C(°F)	CONCENTRATED ANTIFREEZE	l (Gals)	3.6 (0.95)
	– 20 (–4)	DISTILLED WATER	l (Gals)	6.4 (1.7)
		ANTIFREEZE READY TO USE	l (Gals)	10 (2.64)
	– 35 (– 31)	CONCENTRATED ANTIFREEZE	l (Gals)	5 (1.3)
		DISTILLED WATER	l (Gals)	5 (1.3)
		ANTIFREEZE READY TO USE	l (Gals)	–

(*) Replacement to be carried out only in the case of disassembly

ENGINE MAINTENANCE

ENGINE MAIN MECHANICAL UNIT

REPLACEMENT OF ENGINE OIL AND OIL FILTER - CHECK ON LUBRICATION SYSTEM TIGHTNESS

1. With engine hot, remove the oil filler plug (1) and the oil sump plug (3), and drain oil completely (wait 15 minutes at least).

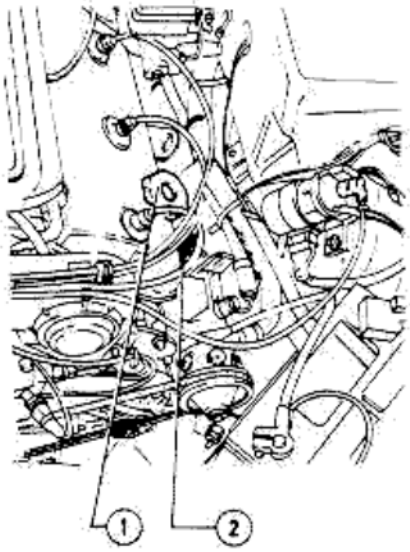

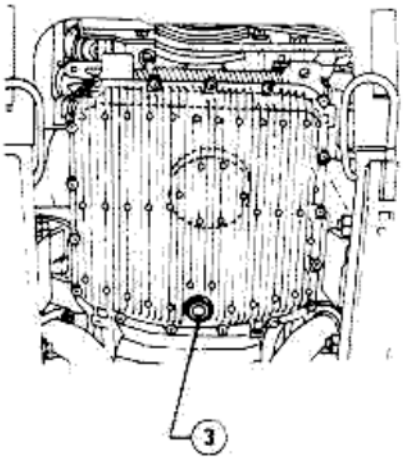

1 Oil filler plug
2 Oil dipstick
3 Oil drain plug

- A milky oil indicates the presence of coolant leaks in the oil. Identify the cause, and take corrective measures.
- An oil with extremely low viscosity, indicates dilution with fuel.

2. By means of a suitable wrench, release oil filter and remove.

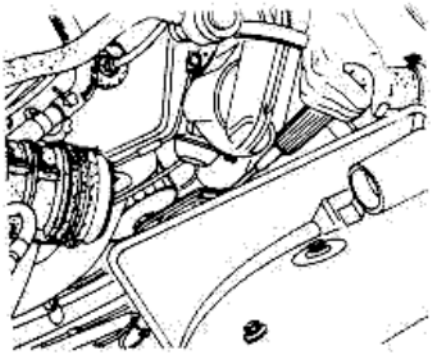

3. When engine oil is completely drained, clean the drain plug and tighten it on sump, together with the related gasket.
4. Wet the gasket of a new oil filter, then tighten filter fully.
5. Refill engine with the quantity and quality of oil specified.

ENGINE OIL

Type.

AGIP Sint 2000 10W50
IP Sintiax 10W40
SHELL Fire & Ice Motor 15W/50

Quantity:	**6.0 kg**	**(13.2 lb)**
Cylinder head camshaft support wells (*)	**450 g**	**(1 lb)**
Sump at max level	**5.5 kg**	**(12.1 lb)**
Filter capacity	**0.5 kg**	**(1.1 lb)**
Difference between max and min level on dipstick	**2 kg**	**(4.4 lb)**

(*) Refilling to be carried out for each support well when disassembling.

6. Check oil level by means of the dipstick.
7. Re-insert filler plug, and start the engine, letting it idle for about 2 minutes.
8. Check for lubricant leaks. If necessary, replace or tighten any item with poor oil seal.
9. Switch off the engine and wait for a few minutes.
10. Remove the dipstick and clean it; insert the dipstick again, remove it, and check that oil level reaches the MAX reference mark.

CAUTION:
The oil level check is to be carried out with the vehicle parked on a level surface.

CHECK ON BOLTS AND NUTS TIGHTENING

Check (and restore if necessary) the tightening of bolts and nuts securing the various parts to body, and those connecting the various components to each other. In the case of bolts fitted with split pin or calking, a visual inspection of tightening conditions is sufficient.
Take the utmost care in checking the bolts and nuts that are the most important from the safety point of view.
These bolts and nuts attach the following components.

As regards the tightening torque values, refer to: Service Data and Specifications - Tightening Torques.

1. **Front suspension**
a. Lower levers to body
b. Upper levers to body
c. Struts to body
d. Ball joints to steering knuckle

2. Brakes

a. Calipers to related supports
b. Rear brake discs to differential shafts

3. Steering wheel

a. Steering box to body
b. Steering rods to steering wheel levers
c. Steering rods to steering box arm
d. Steering column joints
e. Bolts securing steering column to body

4. Rear suspension

a. De Dion axle to cross member
b. Cross member to body
c. Transverse tie rods to Watt parallelogram and body
d. Watt parallelogram to De Dion axle

5. Other

a. Drive shafts to differential
b. Wheels and hubs

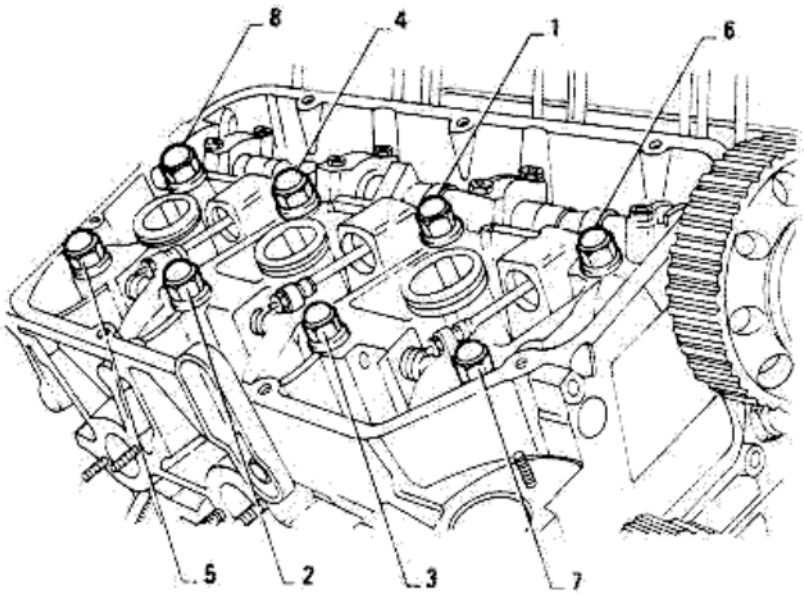

See Technical Bulletins: 01-88-01
01-88-02
01-88-03

TIGHTENING OF CYLINDER HEAD NUTS

1. During first coupon maintenance

a. Remove the timing system covers operating as per: "Check and Adjustment of Valve Clearance - Removal of Timing System Covers".
b. With engine cold, loosen the nuts by one turn, and one at a time, according to the given sequence, lay a coat of oil on the surfaces between washer and nuts, then tighten to the specified torque.

The figure shows the right head; as regards the left head, the tightening sequence is symmetrical.

(T) : Tightening torque
97.8 to 108.2 N·m
(72 to 79.8 ft·lb;
10 to 11 kg·m)

c. Install head covers and the surrounding components, by reversing the order of removal.

2. When reassembling cylinder heads

a. **Lubricate** the surfaces between washer, nut and threads with engine oil and, with engine cold, tighten nuts gradually to the specified torque.

(T) : Tightening torque
88.5 to 97.8 N·m
(65 to 72.3 ft·lb;
9 to 10 kg·m)

b. After covering about 1,000 km, proceed, with engine cold, as per step 1.

CHECK AND ADJUSTMENT OF VALVE CLEARANCE

The following operations are to be carried out with engine cold.

1. Remove timing system covers.

a. Detach the negative battery terminal.
b. Detach connector (7) from the air-flow sensor (8) and release the related cable from the securing bracket.
c. Detach sleeve (13) from throttle body (1).
d. Disconnect hose (4) from the adjusting union on intake air box.
e. Disconnect hose (5) from intake air box and hose (14) and (16) from sleeve (13).
f. Detach hose (10) and connector (12) from the auxiliary air device and detach from the timing system cover.
g. Detach hose (2) from throttle body, and hose (9) from timing system cover.
g1. **[For 3000 engine]:** Disconnect hose (15) from the intake air box.
h. Release the five clips securing air cleaner cover and remove it together with sleeve (13) and oil vapor separator (6). Remove also the filtering element.

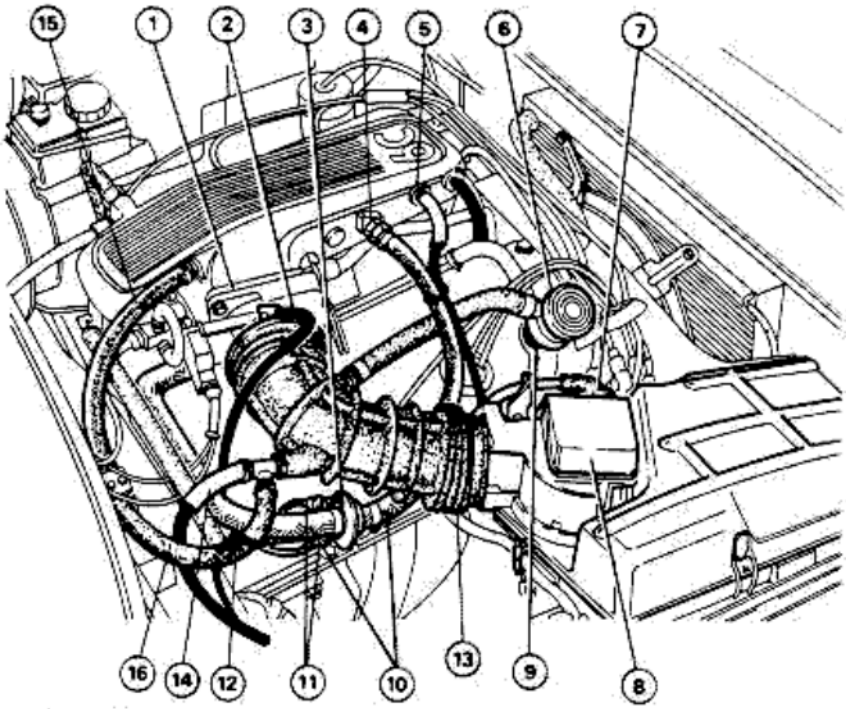

1 Throttle body
2 Vacuum intake hose for ignition distributor vacuum control end (for 3000 engine) vacuum hose for purge control valve
3 Auxiliary air device
4 By-pass hose for idle r.p.m. adjustment
5 Fuel vapor recirculation hose
6 Oil vapor separator
7 Connector for air-flow sensor potentiometer
8 Air-flow sensor
9 Oil vapor return hose
10 Auxiliary air piping
11 Ground cables for auxiliary air device
12 Supply connector for auxiliary air device
13 Air sleeve
14 Fuel vapor recirculation hose
15 Hose for air delivery to A.C. solenoid (for 3000 engine)
16 Hose for air delivery to intake air box from A.C. solenoid (for 3000 engine)

i. Detach the spark plug caps, disconnect the high voltage cable from coil, remove the ignition distributor shell covers; then release cover and remove it.

1. Unscrew the screws securing the timing system covers and remove covers.

2. By means of a syringe, suck the oil from lubrication tanks.

3. Clean the spark plug seats, remove spark plugs and plug the holes, so as to prevent foreign matter from entering.

4. With engine cold, check that the clearance between the cams resting radius and cups crown is within the specified values.

To check the intake valves clearance, use feeler gauge C.6.0197.

INTAKE VALVES CLEARANCE MEASUREMENT

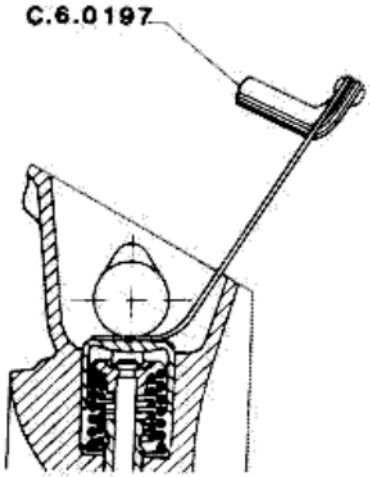

EXHAUST VALVES CLEARANCE MEASUREMENT

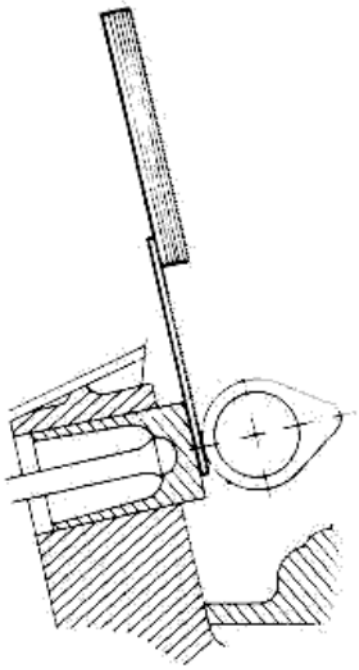

Valve clearance (on cold engine)
Intake
G_A = 0.475 to 0.500 mm (0.019 to 0.020 in)
Exhaust
G_S = 0.225 to 0.250 mm (0.009 to 0.010 in)

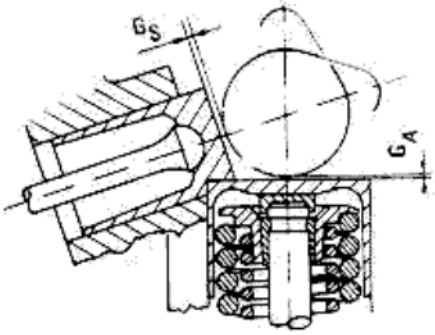

5. Should intake valves adjustment be required, proceed as follows.

a. Take note of the clearance on each exhaust valve.

b. Engage the 5th speed, move vehicle forward so as to cause crank shaft to rotate until notch P (marked on engine pulley) mates with reference pin (1).

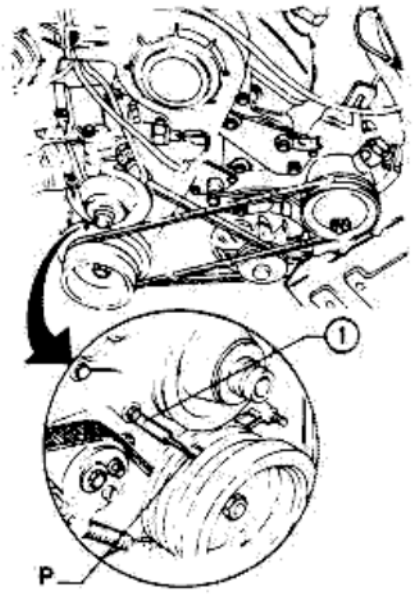

1 Reference pin

Notches (2) on camshaft will then be aligned with the corresponding reference notches (1) marked on the related caps.

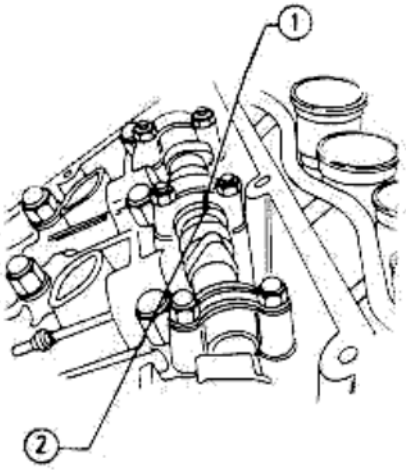

1 Camshaft cap notch
2 Camshaft notch

c. Remove the cover which protects the timing system belt.
d. By means of tool A.2.0361, keep camshaft still, and unscrew the nut securing camshaft pulley.

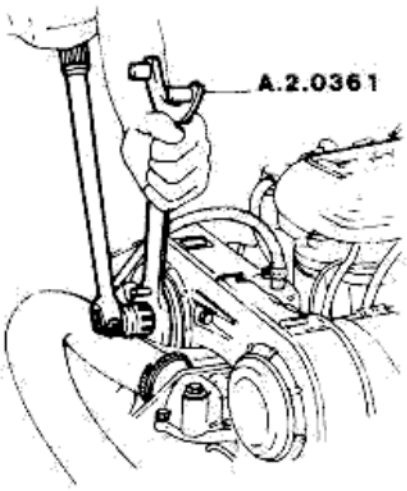

e. Unscrew the three screws, which secure hub, shown in the figure.

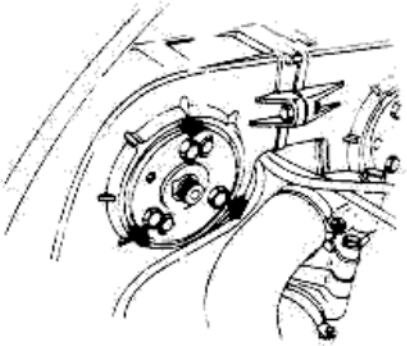

f. Secure tool A.3.0521 to hub, and withdraw hub itself from the toothed pulley.

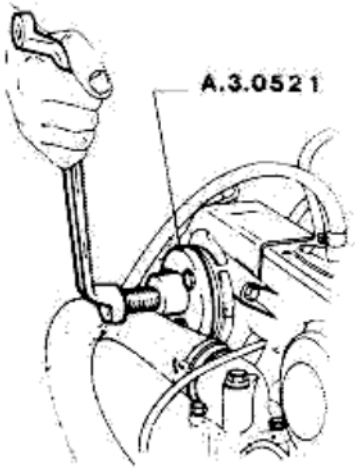

g. Disassemble the camshaft caps; withdraw camshaft by lifting it from rear side.
h. Withdraw cups and recover caps.
i. By means of tool C.1.0108, measure the caps thickness; then select the most suitable one among the set of caps, to restore the correct clearance.

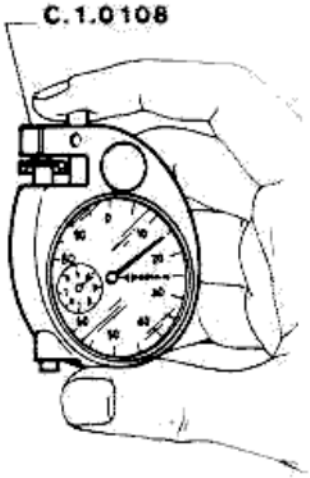

l. Install caps and cups lubricating them with engine oil.
m. Position the camshaft and install the related caps complying with the sequence, and following the arrow marked on them.

- Right head cap: arrow towards engine rear side
- Left head cap: arrow towards engine front side

n. Tighten the nuts securing caps to the specified torque.

(T) : Tightening torque
Nuts securing camshaft caps (in engine oil)
16 to 18 N·m
(11.8 to 13.2 ft·lb;
1.6 to 1.8 kg·m)

o. Rotate camshaft so that the notches marked on shaft are aligned with those marked on caps. Also check that notch P is aligned on crankshaft pulley.

p. Install hub complete with a new O-ring, and screw the three securing screws without tightening them.

q. Screw the nut which secures toothed pulley to camshaft; use tool **A.2.0361**, to prevent pulley from rotating and lock the nut to the specified torque. Also tighten completely the three screws securing hub.

(T) : Tightening torque
Nut securing camshaft front hub
97 to 117 N·m
(71 to 86 ft·lb;
9.9 to 11.9 kg·m)

6. Should adjustment of the exhaust valve clearance be required, proceed as follows:

a. By means of tool **A.5.0220**, loosen lock nut (1) operating on tool intermediate lever.

b. By means of the same tool, operate the adjusting screw (2) until the specified value is measured on the feeler gauge.

c. Tighten lock nut (1), and recheck clearance.

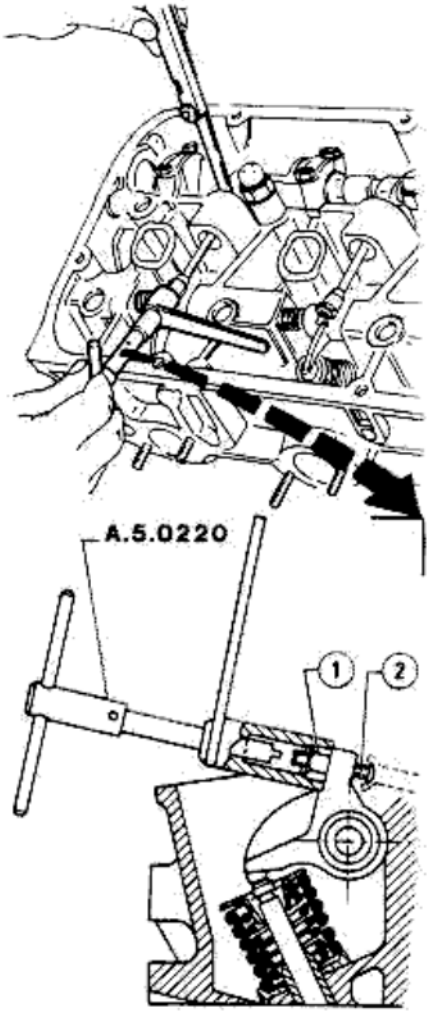

1 Locknut
2 Adjusting screw

7. Before reassembling, position camshafts correctly, as follows.

a. Install tool **C.6.0183** fitted with comparator, into the seat of 1st cylinder spark plugs.

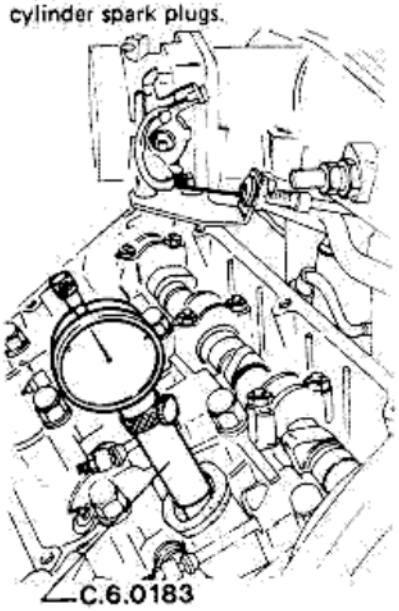

b. Engage the 5th speed and move vehicle so as to rotate crankshaft until the piston of first cylinder is at the T.D.C., during the expansion stroke. This position is identified by the motion reversal of comparator index.

c. When in this position, check that

- notches (2) on camshafts are in line with those (1) in the related caps.

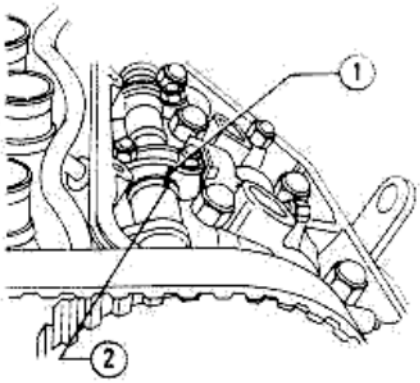

1 Camshaft cap notch
2 Camshaft notch

- the notches P on engine pulley are in line with the reference pin (1) on engine block.

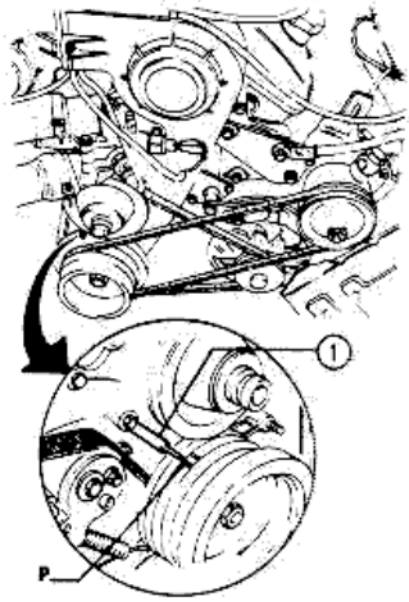

1 Reference pin

8. Reassemble by reversing the order of disassembly.

REPLACEMENT OF TIMING SYSTEM DRIVE BELT

Removal

1. Detach the negative battery terminal.
2. Remove the timing system covers (refer to: Check and Adjustment of Valve Clearance - Removal of Timing System Covers).
3. Remove the drive belts of alternator coolant pump and power steering pump (refer to: Checking Good Conditions, Replacing and Adjusting Drive Belts of Alternator, Air Conditioner Compressor, Power Steering Pump).
4. Disconnect sleeves (1) and (5) of thermostat (2).

Recover the coolant drained from the system.

5. Detach connectors (4) and (6) from thermostat (2).
6. Unscrew sender (3) from thermostat unit.

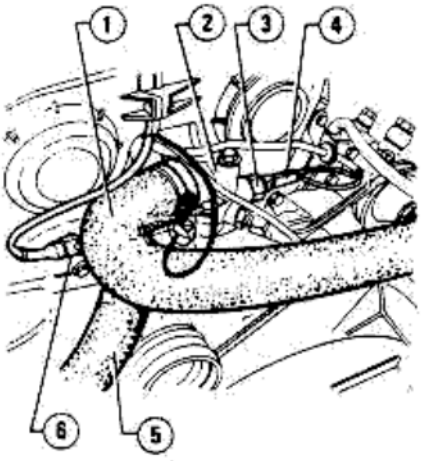

1 Coolant delivery sleeve to radiator
2 Thermostat
3 Coolant temperature sender
4 Coolant temperature sender connector
5 Coolant return sleeve to thermostat unit
6 Connector for thermo-time switch

7. Clean the spark plug seats, remove spark plugs and plug the holes to prevent foreign matter from entering.
8. Unscrew the bolt and screws which secure the timing belt case cover; remove the timing belt case.
9. Engage the 5th speed and move vehicle forward so as to rotate crankshaft until notch P (marked on engine pulley) is in line with reference pin (3). When in this position, notches (1) and (2), marked on camshafts, will be aligned with the corresponding notches marked on the related caps. In addition the piston of 1st cylinder is at the T.D.C. with both valves closed (compression stroke); also check that rotor arm (4) of ignition distributor is towards the reference notch marked on distributor body.

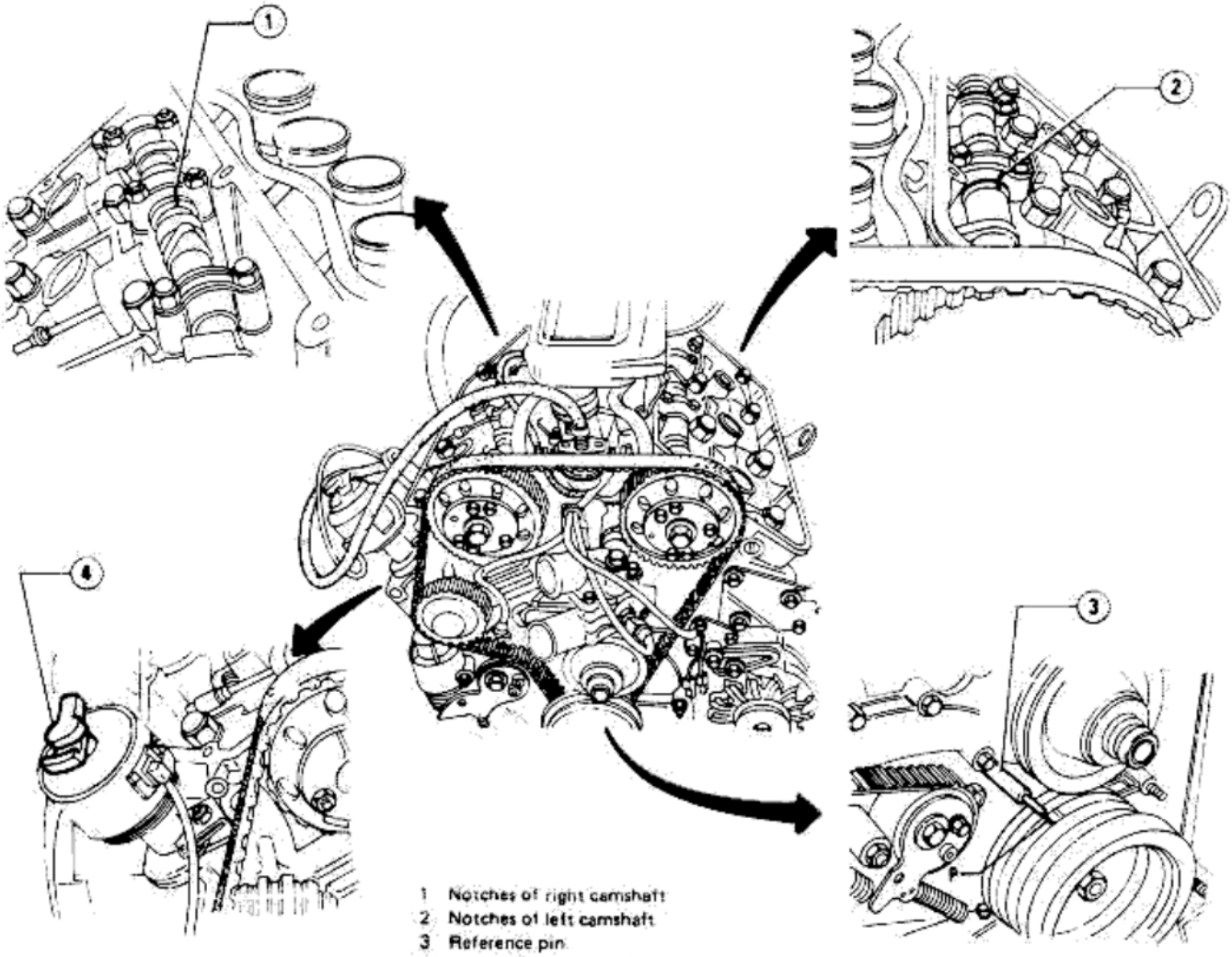

1 Notches of right camshaft
2 Notches of left camshaft
3 Reference pin
4 Ignition distributor rotor arm

10. Lift arm (1) of belt tightener and insert pin **A.2.0363** to keep the belt tightener arm lifted.

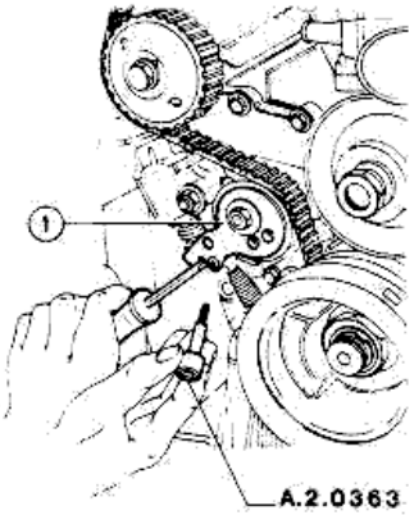

1 Belt tightener arm

11. Loosen nuts (1) and (2), press the belt tightener downward, up to end of travel, then tighten nut (1).

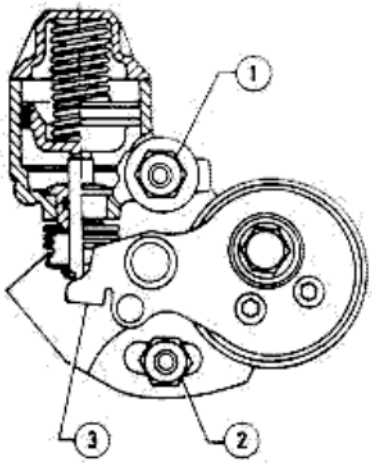

1 Nut
2 Nut
3 Belt tightener arm

12. Remove the toothed belt removing it from pulleys.

Reassembly

1. Install tool **C.6.0183**, fitted with comparator, into the spark plug seat of 1st cylinder and check engine correct timing by checking that notches are aligned, as described in Removal - step 9.

CAUTION:
During the belt reassembly operations, check that the notches are always correctly aligned.

2. Fit the timing system drive belt on pulleys, keeping the belt parts already installed taut, and complying with the following sequence.
a. crankshaft toothed pulley
b. left head toothed pulley
c. right head toothed pulley
d. ignition distributor control toothed pulley
e. belt tightener pulley.
3. Loosen the belt tightener securing nut.
4. To bed the timing system drive belt, engage the 5th speed, move vehicle forward in order to rotate crankshaft by two turns, stopping when the piston of first cylinder is at the T.D.C., in the compression stroke (all notches are aligned, refer to: Removal - step 9).
5. Keep belt taut, press the belt tightener pulley against belt itself; then tighten the two nuts which secure belt tightener.
6. Lift the belt tightener arm slightly, remove pin **A.2.0363** and release the arm.
7. Terminate the reassembly by reversing the order of removal and complying with the following indications.
a. **Lubricate** the threading of coolant temperature sender with the specified antiseize product.

Antiseize:
R. GORI Never Seez
LOCTITE Anti Seize

b. Tighten the following components to the specified torque.

(T) : Tightening torque
Coolant temperature sender on thermostat container (with specified anti-seize product)
20 to 25 N·m
(15 to 18 ft·lb;
2 to 2.5 kg·m)

c. Carry out the belts tensioning (refer to: Checking Good Conditions, Replacing and Adjusting Drive Belts of Alternator, Air Conditioner Compressor, Power Steering Pump).
d. Restore coolant correct level (refer to: Engine Cooling).

See Technical Bulletin 01-89-03

CHECK ON TIMING SYSTEM AND DRIVE BELT TENSIONING

(A) Check and adjustment of timing system

This check is to be carried out with valve clearance to the specified value and timing system drive belt normally taut.

1. Disconnect the negative battery terminal.
2. Remove the timing system covers (refer to: Check and Adjustment of Valve Clearance).
3. Clean the spark plug seats, remove spark plugs, and plug the holes in order to prevent foreign matter from entering.
4. Check the correct adjustment of timing system as follows.
a. Install probe **C.6.0183**, fitted with dial gauge, into the spark plug seat of first cylinder.
b. Engage the 5th speed and move vehicle so as to rotate crankshaft until the piston of 1st cylinder is at the T.D.C. in the expansion stroke. This position is indicated by the motion reversal of dial gauge index.
c. When in this position, ensure that:
- The notches on camshafts are in line with those on the related caps.
- Notch P on engine pulley is in line with the reference pin on engine block.

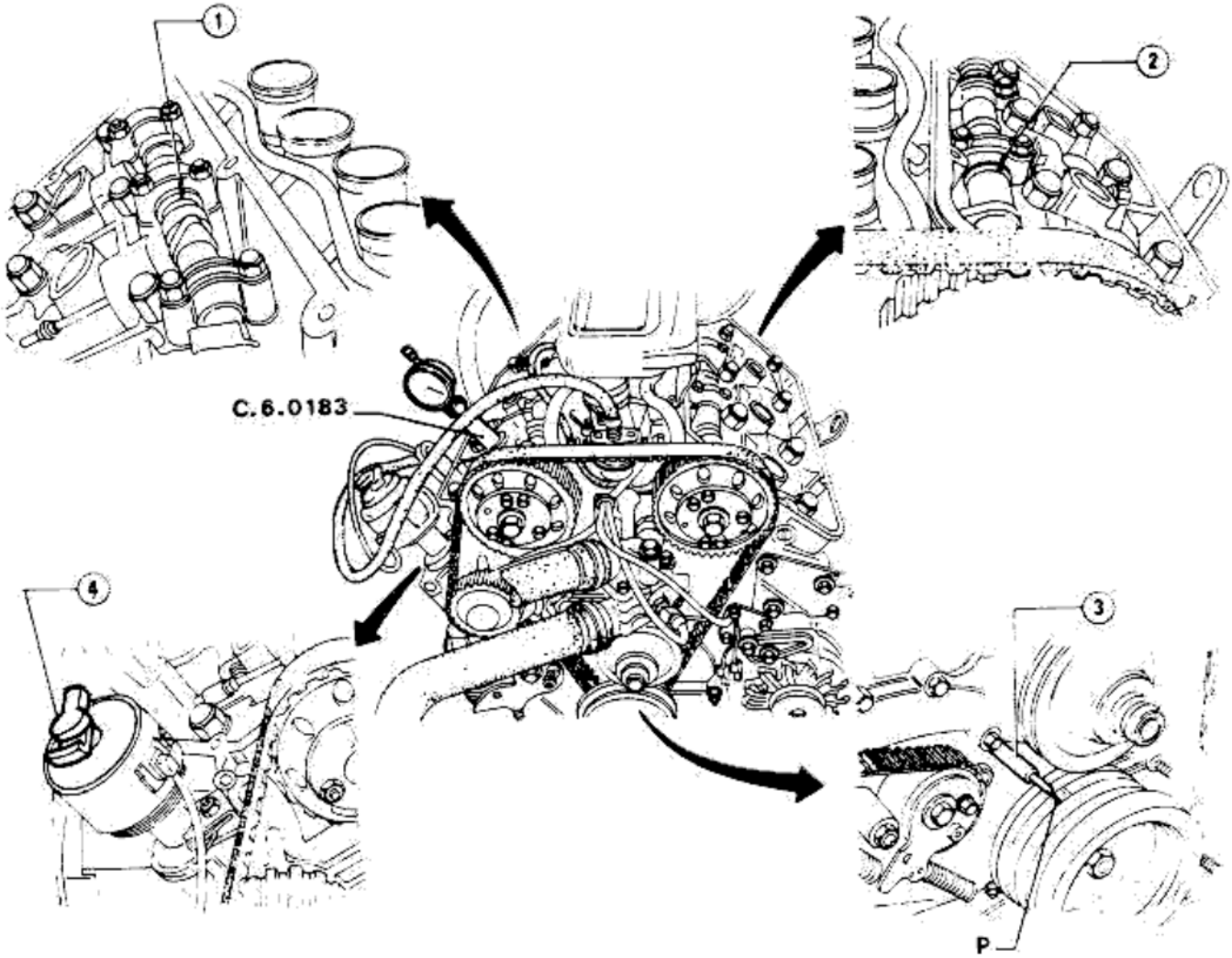

1 Notches on right camshaft
2 Notches on left camshaft
3 Reference pin
4 Ignition distributor rotor arm

5. If the notches on camshafts and those on the related caps are not aligned, carry out the adjustment operation by proceeding as follows.
a. Use tool **A.2.0361** to keep camshaft still, and unscrew the nut which secures pulley to shaft.

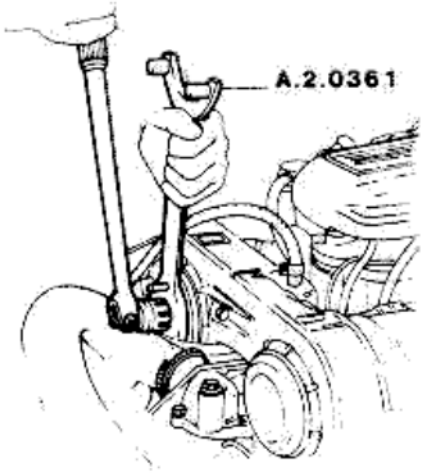

b. Unscrew the three securing screws of hub (they are shown in the figure).

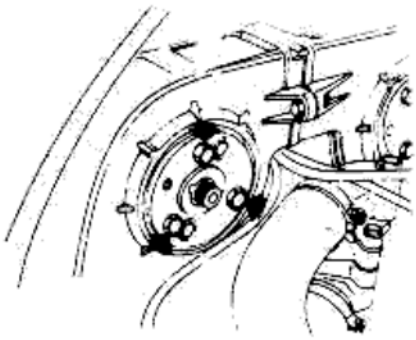

c. Secure tool **A.3.0521** to hub, and withdraw hub itself from toothed pulley, recovering the related tongue.

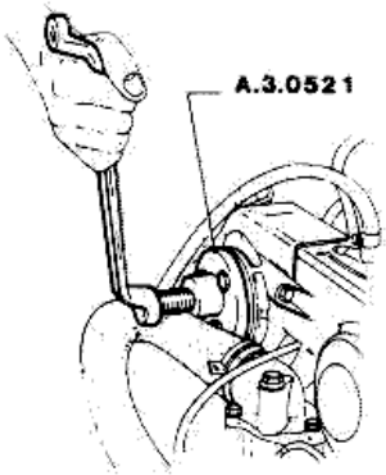

d. Rotate camshaft until its notch is aligned with the reference notch on cap, and check that, at the same time, notch P on crankshaft pulley is aligned with the reference pin.

e. Refit the hub complete with a new O-ring and screw the three securing screws without tightening them.

f. Screw the nut securing toothed pulley to camshaft; use tool **A.2.0361** to prevent pulley from rotating, and tighten the nut to the specified torque. Also tighten the three screws securing hub.

(T): Tightening torque
Nut securing front hub to camshaft
97 to 117 N·m
(71 to 86 ft·lb;
9.9 to 11.9 kg·m)

6. Check that all notches are correctly aligned and, using a dial gauge, check that the piston of first cylinder is at its T.D.C., in the expansion stroke.

7. Install by reversing the order of removal.

(B) Check and adjustment of timing system drive belt tensioning

This adjustment is to be carried out with engine cold, and after tightening the head securing screws.

1. Detach the negative battery terminal.

2. Detach connectors (1) and (4), then unscrew sender (3) from thermostat (2).

Recover coolant

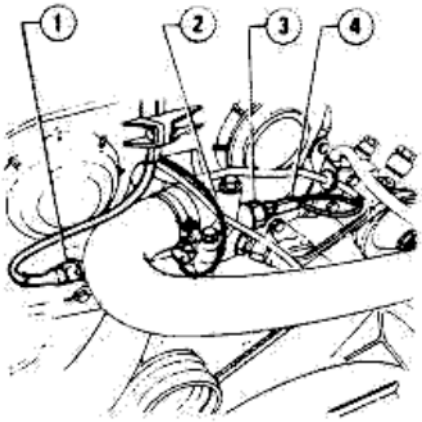

1 Connector for thermo-time switch
2 Thermostat
3 Coolant temperature sender
4 Connector for coolant temperature sender

3. Detach the spark plug caps, disconnect the high voltage cable from coil, and release the bundle of cables from the plastic clamps.

4. Unscrew the bolt and screws which secure timing belt case, then remove it.

5. Disconnect belt tightener arm (1) and insert pin **A.2.0363** into the hole of arm itself, in order to keep the belt tightener arm lifted.

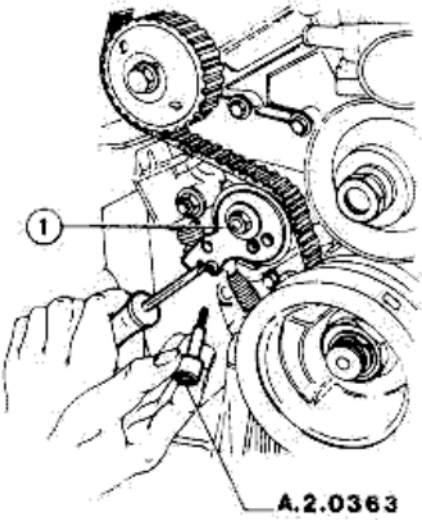

1 Belt tightener arm

6. Loosen nuts (1) and (2), press the belt tightener against the belt, then tighten nuts.

The loosening of nuts, should allow the possible belt backlash to be recovered. Nevertheless, it is good practice to press tightener against the belt.

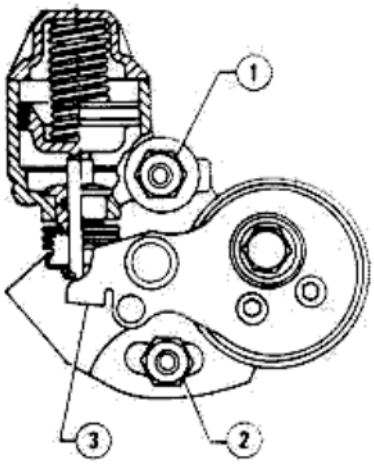

1 Nut
2 Nut
3 Belt tightener arm

7. Lift the belt tightener arm enough to remove pin **A.2.0363**, then release belt tightener.

8. Terminate the reassembly by reversing the order of removal, and complying with the following indications.

a. **Lubricate** the threading of coolant temperature sender with the specified anti-seize product.

Antiseize:
R. GORI Never Seez
LOCTITE Anti Seize

b. Tighten the following component to the specified torque.

(T): Tightening torque
Coolant temperature sender on thermostat container (with the specified antiseize product)
20 to 25 N·m
(15 to 18 ft·lb;
2 to 2.5 kg·m)

c. Restore coolant correct level.

CHECKING GOOD CONDITIONS, REPLACING AND ADJUSTING DRIVE BELTS OF ALTERNATOR, AIR CONDITIONER COMPRESSOR, POWER STEERING PUMP

1. Alternator drive belt

a. Tensioning adjustment

Tensioning is correct when, applying

147 to 294 N

(33.1 to 66.1 lb; 15 to 30 kg)

load in the middle of belt, this deflects by **16 mm (0.63 in)**.

To adjust the tensioning, unscrew screws (1) and (2) on adjusting arm, then loosen bolt (3).

Move the alternator away, so as to increase the belt tensioning, and tighten screw (2); re-check the belt tensioning, then tighten bolt (3) and screw (1).

b. Belt replacement

Remove drive belt of air conditioner compressor and power steering pump (refer to steps 2 and 3). Loosen screws (1) and (2) and bolt (3). Move the alternator inward and remove the worn belt. Fit the new belt on the three pulleys and move alternator until the belt tensioning required is obtained.

Tighten screw (2) completely and check the tensioning; tighten bolt (3) and screw (1).

Fit the drive belt of air conditioner compressor and power steering pump; then tension them (refer to steps 2. and 3.).

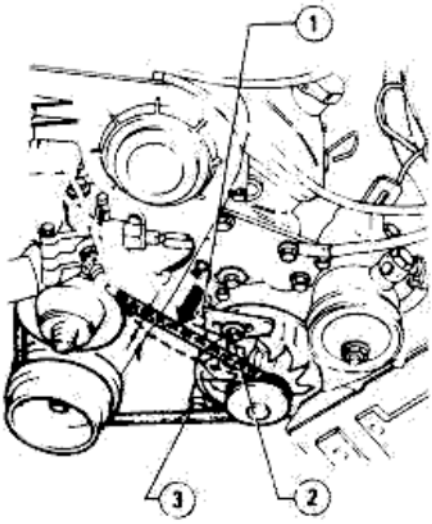

1 Screw
2 Screw
3 Bolt

2. Power steering pump drive belt

a. Tensioning adjustment

Tensioning is correct when, applying

147 to 294 N

(33.1 to 66.1 lb; 15 to 30 kg)

load in the middle of belt, this deflects by **13 mm (0.51 in)**. To adjust the tensioning, loosen screws (1), (2) and (3), on the front adjusting bracket, and the rear bracket securing bolt. Move the pump away so as to increase the belt tensioning, then tighten screws (1) and (3).

Re-check the belt tensioning. Tighten screw (2) and the rear bracket securing bolt.

b. Belt replacement

Remove the drive belt of air conditioner compressor (refer to step 3). Loosen screws (1), (2), (3) and the rear bracket securing bolt, move the pump inward; then remove belt. Fit the new belt on the two pulleys and move the pump until the required tensioning is obtained.

Tighten screws (1) and (3) completely. Re-check the tensioning and tighten screw (2) and the bolt securing rear bracket.

Fit the belt of air conditioner compressor (refer to step 3.).

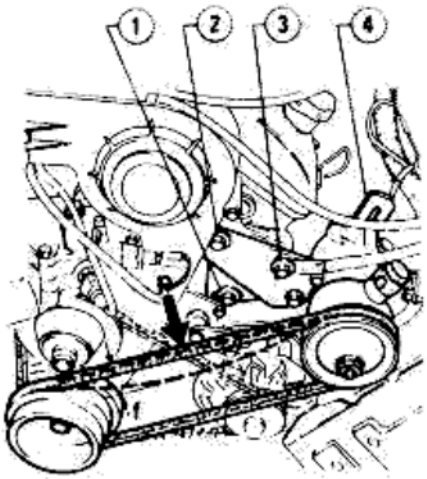

1 Screw
2 Screw
3 Screw
4 Rear bracket

3. Air conditioner compressor drive belt

a. Belt tensioning

Tensioning is correct when, applying

196 to 343 N

(44 to 77 lb; 20 to 35 kg)

load approx. in the middle of belt, this deflects by **14 mm (0.55 in)**. To adjust the tensioning, unscrew bolt (1) on the belt tightener pulley (2). To increase the tensioning lower the belt tightener pulley and tighten bolt (1).

b. Belt replacement

Release bolt (1) of belt tightner. Move the belt tightener pulley upwards, then remove the worn belt. Fit the new belt on the three pulleys, and move the belt tightener pulley downwards, until the belt tensioning required is obtained. Tighten bolt (1) completely and check the tensioning.

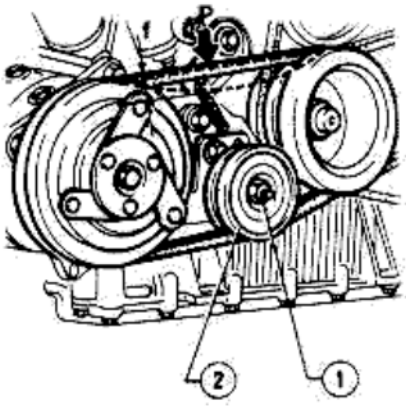

1 Bolt
2 Belt tightener pulley

CHECK ON CYLINDER COMPRESSION

When checking poor engine performance because power is not up to specs, it is advisable to test cylinder compression using the related tester.

The check is to be carried out as follows:

a. Start the engine and warm it up to the normal running temperature.

b. Remove spark plugs.

c. Detach the coil supply cable (+15).
d. Detach the connectors on the injectors.
e. Apply the compression tester in the seat of a spark plug.

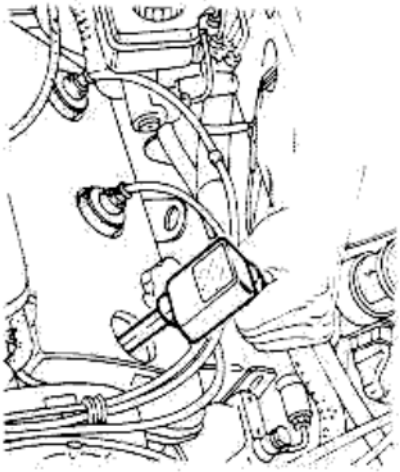

f. Crank the engine briefly, keeping the accelerator pedal fully pressed, so that the accelerator throttle is fully open (check for leaks from pressure gauge union).

g. Repeat the test to measure the compression value of the remaining cylinders taking care to reset the writing end of tester each time, then compare the values measured.

h. If the difference between the pressure values measured in the cylinders is considerable, identify the cause starting from the valve tightness check and, if necessary, checking the compression rings.

FUEL SYSTEM

CLEANING OF AIR CLEANER AND/OR CLEANER ELEMENT REPLACEMENT

1. Cleaning

a. Release the five clips (4) which secure air cleaner cover (3) to container, and lift cover enough to remove cleaner element, without damaging sleeve (1) and the surrounding components.
b. Clean the element thoroughly, blowing low pressure compressed air on element lower side.
c. Clean cleaner element container.
d. When reassembling, take care to position cleaner element correctly (on the filtering element, there is a mark indicating the upper side).
e. Fit filter cover and lock it with the clips.

2. Replacement

The cleaner element must be replaced periodically, according to the periods indicated in: Vehicle Maintenance Schedule.

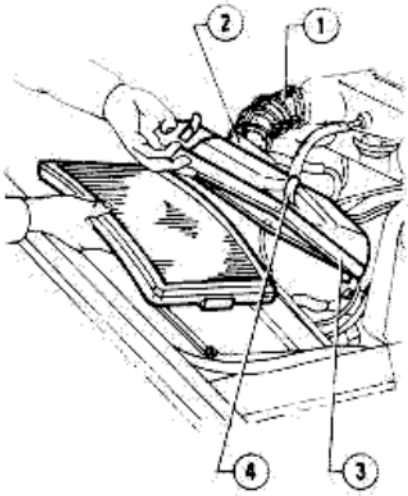

1 Sleeve
2 Air-flow sensor
3 Filter cover
4 Clip

CHECK AND ADJUSTMENT OF IDLE R.P.M. AND EXHAUST EMISSIONS

1. Adjustment of idle r.p.m.

This adjustment is to be carried out with engine at normal running temperature, gearbox in neutral, and all the ancillary devices excluded. Proceed as follows.
a. Loosen lock nut (1) and rotate screw (2) until the specified r.p.m. value is obtained:

[For 2500 engine]:
950 ± 50 r.p.m.
up to 1200 m (4000 ft) A.S.L.
800 to 900 r.p.m.
over 1200 m (4000 ft) A.S.L.
value indicated is acceptable
[For 3000 engine]:
850 ± 50 r.p.m.
up to 1200 m (4000 ft) A.S.L.
700 to 900 r.p.m.
over 1200 m (4000 ft) A.S.L.
value indicated is acceptable

b. Tighten lock nut (1).

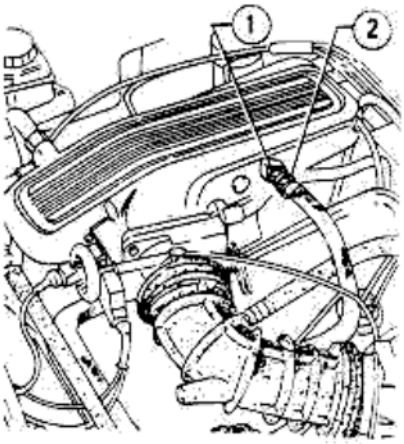

1 Lock nut
2 Idle r.p.m. adjusting screw

2. Check and adjustment of exhaust emissions (carbon monoxide percentage CO%)

This check is performed by analyzing the exhaust gas taken from the tap on the exhaust piping up stream of the catalytic converter using NDIR equipment.
This check is to be carried out with engine at normal running temperature (after the electric fan has switched on and off) and after carrying out the idle r.p.m. adjustment.

Also the following preliminary checks are to be carried out:
- Check on engine oil level
- Cleaning on air cleaner element
- Ignition system efficiency
- Ignition timing

a. Disconnect connectors (1) and (2) of the Lambda sensor.

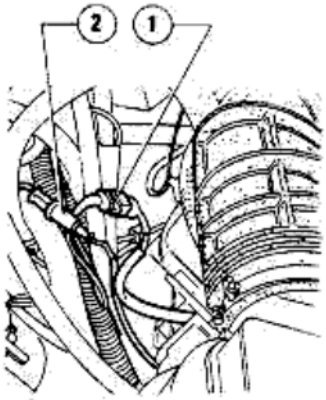

1 Lambda sensor resistance connector
2 Lambda sensor connector

b. Using tool **A.5.0212**, unscrew the tap screw to take some of the exhaust gases, fit tool **C.2.0051** in its place and connect it to the analyzer; the CO value must be within the specified values:

%CO = 0.5 to 0.7 (for 2500 engine)
%CO = 0.5 to 0.9 (for 3000 engine)
(with Lambda sensor disconnected)

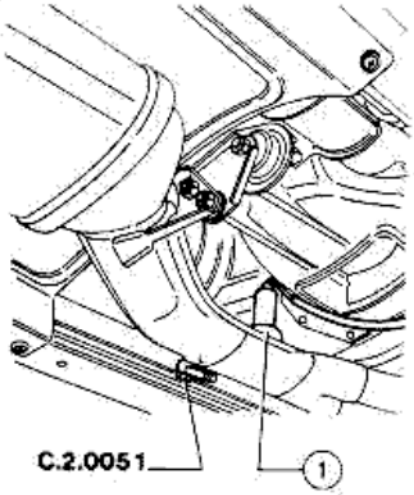

1 Lambda sensor

c. If the CO percentage is not within the specified range of values, adjust the adjusting screw (3) located on the air-flow sensor under sealing plug (2).

d. Remove sealing plug (2) as follows:

- Remove the air-flow sensor from the vehicle and secure it on a suitable tool or in a vice with protective jaws.

CAUTION:
Take great care not to damage or deform the air-flow sensor body.

- Using a drill, make a hole in the aluminium plug (2).

CAUTION:
Do not drill through completely as this may damage adjusting screw (3) underneath.

Remove any bits with a jet of compressed air and tap the previously made hole until sufficient thread bite has been obtained.

- Screw a screw in the hole and pull it outwards to remove plug (2).
- Install the air-flow sensor on vehicle.

e. Start the engine, and run it until reaching normal running temperature, then adjust adjusting screw (3) according to the following indications:

- screwing increases the CO percentage
- unscrewing decreases the CO percentage.

f. After adjusting, insert the new sealing plug.

g. Then check that idle speed is within the specified values; if not, repeat adjustment as described in step 1.

h. Reconnect the Lambda sensor wiring connectors and refit the plug on the exhaust gas manifold.

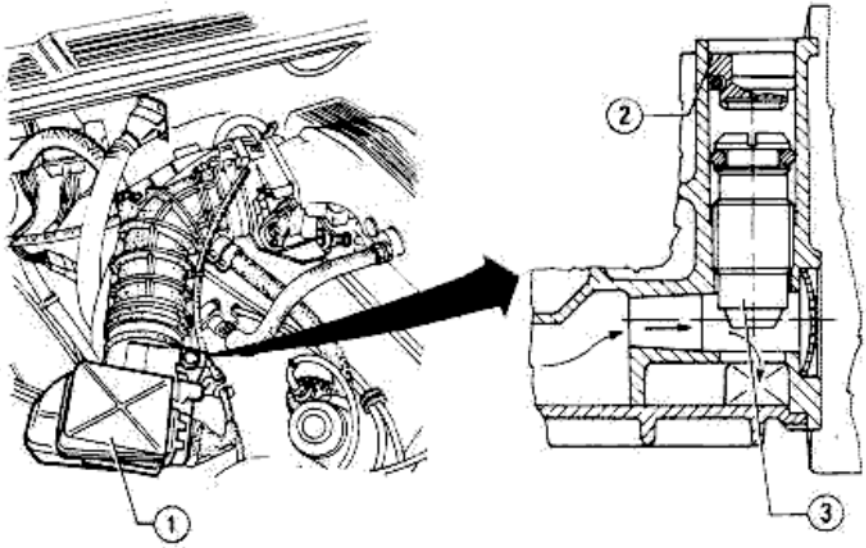

1 Air-flow sensor
2 Sealing plug
3 Adjusting screw

ENGINE IGNITION

CHECK AND ADJUSTMENT OF SPARK ADVANCE

CAUTION:
The checking of idle r.p.m. timing, must be carried out with the utmost care; correct timing, in fact, is the most important factor as far as the emission levels are concerned.

1. Detach the vacuum intake hose for vacuum advance, from the ignition distributor.
2. Connect the stroboscopic gun to the terminal related to the spark plug of cylinder n. 1, on the ignition distributor; connect both positive and negative terminals of stroboscopic gun to the related battery terminals.
3. Connect an electronic rev counter to engine.
4. Run the engine to normal running temperature and, at idle check that notch **F** (marked on engine pulley) is aligned with the reference pin
   - **(2° ±1° before T.D.C.)** (for 2500 engine)
   - **(7° ±1° before T.D.C.)** (for 3000 engine)

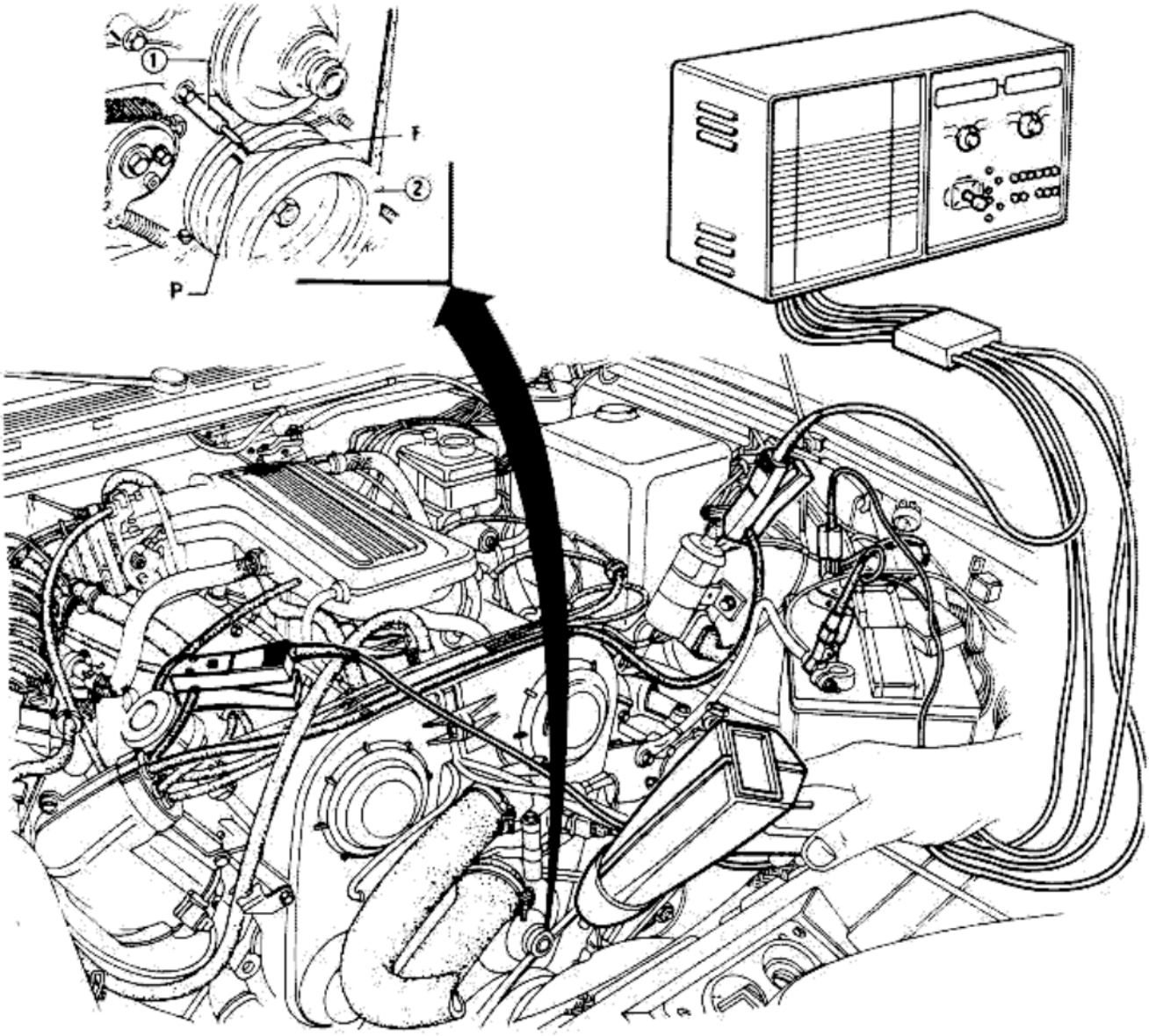

1 Reference pin
2 Engine pulley

5. If required, adjust timing as follows:

a. Unscrew nut (2) of the ignition distributor securing bolt.

b. Rotate distributor body (1) until notch F is aligned with the reference pin.

c. Tighten the nut, checking that distributor body has not been moved.

d. Re-check the timing.

6. Reconnect the vacuum intake hose for the vacuum advance.

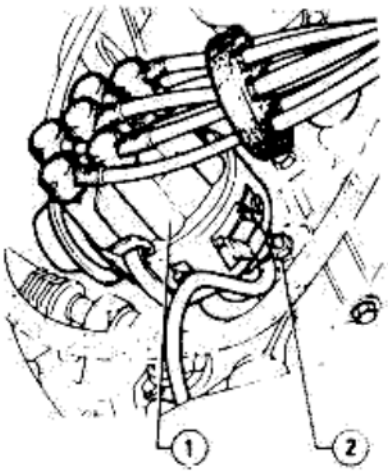

1 Ignition distributor body
2 Bolt securing distributor

Ignition distributor advance graphs

Vacuum advance diagram

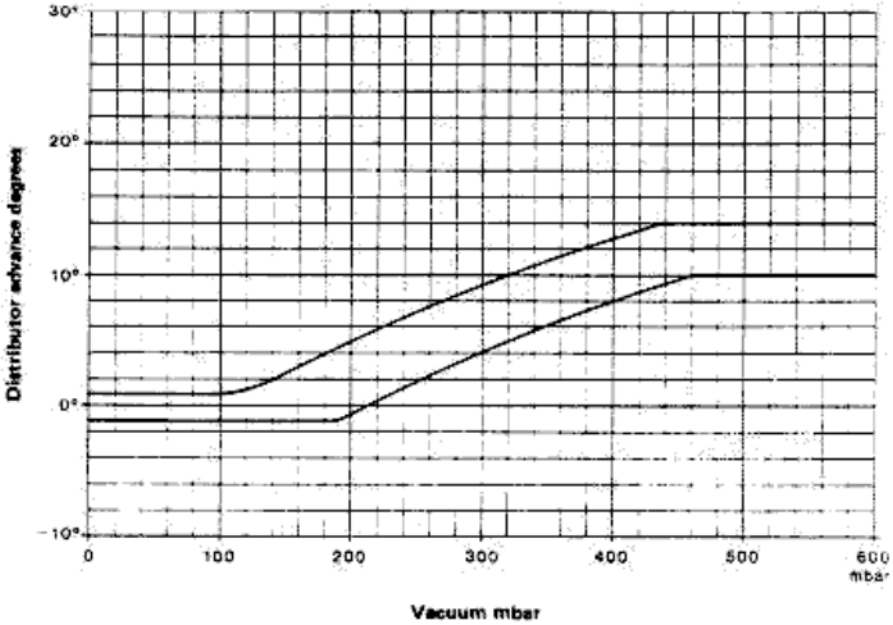

CHECK, CLEANING AND/OR REPLACEMENT OF SPARK PLUGS; FIRING ORDER

- The standard plugs fitted to the engine are:
  SILVER LODGE HL-E and, as alternative, **CHAMPION RN11YC**. The **LODGE HL-E** spark plugs are of the surface gap type with four points and a central electrode; these plugs require no routine adjustment of the gap between the electrode and points.
  The **CHAMPION RN11YC** spark plugs feature a central electrode faced by a single ground electrode; the gap between the two electrodes should be adjusted regularly **0.7 to 0.8 mm (0.028 to 0.031 in)**.
- Use of spark plugs having different features or dimensions, can cause serious engine damage and alter emission levels.
- Clean or replace the spark plugs periodically, according to the routine checks contained in the Vehicle Maintenance Schedule.
- If the ceramic insulator is cracked, or electrodes are too worn, replace the spark plugs.

Replacement

a. With engine cold, roll up the rubber cap, withdraw the cables and remove the spark plugs.

b. **Lubricate** the threading with **ISECO Molykote A grease**, and tighten the spark plugs to the torque:

25 to 34 N·m
(18 to 25 ft·lb; 2.5 to 3.5 kg·m)

c. Check for good mechanical and electrical connection between spark plug cables and couplings.

If in doubt, slide the rubber cap along cable, tighten the coupling

fully, and refit rubber cap above coupling. Connect coupling to the spark plug.

CAUTION:
The spark plug cables are to be reconnected according to firing order.

Firing order: 1-4-2-5-3-6

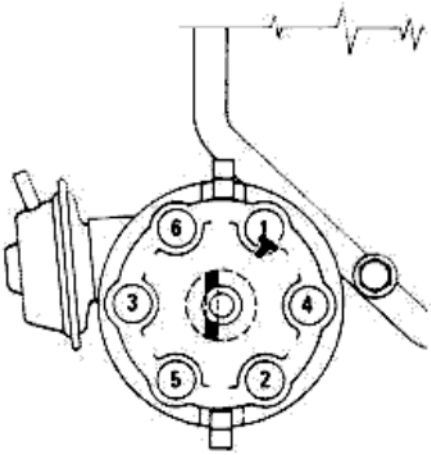

ENGINE COOLING

CHECKING AND REFILLING THE SYSTEM

1. System check

a. Check that the coolant level in the filler tank is within the MAX and MIN reference marks.
b. Check for good conditions and leaks in the sleeves and piping.
c. Check the filler tank plug, ensuring that springs, gasket and valves are in good condition
d. Test the electric fan functioning.
– Detach the two cables of thermostat and short circuit them.
– Turn the ignition key and check that electric fan starts.
e. Check radiator referring to Group 07 - Radiator.
f. Should considerable amounts of coolant be required, identify any possible leaks in the cooling system, in order to eliminate them.

2. System refill

Drain the system, then refill it with the following quantity and quality of liquid.

Min external temperature	°C (°F)	–20 (–4)	–35 (–31)
Concentrated antifreeze Std. No. 3681-69956	l (Gals)	3.6 (0.95)	5 (1.32)
Dilution distilled water	l (Gals)	6.4 (1.69)	5 (1.32)
Antifreeze ready to use Std. No. 3681-69958	l (Gals)	10 (2.64)	–

To increase antifreeze protection at temperatures below **–30°C (–22°F)** without draining the system completely, replace **1.5 l (0.4 gals)** of the mixture with the same amount of concentrated antifreeze. For temperatures below **–45°C (–49°F)** replace **3.3 l (0.87 gals)** of the mixture.

CAUTION:
Products harmful to paint. Avoid contact with painted surfaces.

Refilling is to be carried out through tank filler, complying with the following indications:
a. Set the heater control knob to the fully open position.
b. Fill the system until reaching the max index of header tank.
c. Run the engine to the normal running temperature, so that the residuous air contained in the system flows through thermostat opening.
d. With engine cold, top-up up to the level corresponding to the max index of header tank.
e. Refit tank plug.

EXHAUST SYSTEM

REPLACEMENT OF EXHAUST GAS SENSOR AND CATALYTIC CONVERTER

1. Place vehicle on lift.
2. Working from the engine compartment, disconnect connectors (1) and (2) of the Lambda sensor electrical wiring.

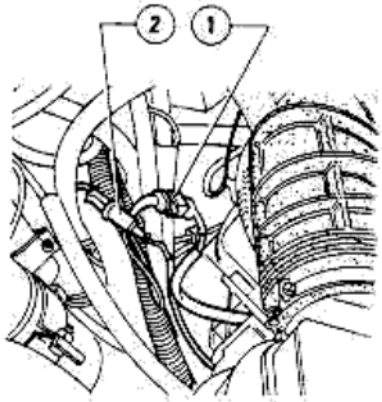

1 Lambda sensor resistance connector
2 Lambda sensor connector

3. Working from under the vehicle, unscrew the bolt securing clamp (4) and release wiring (3).
4. Unscrew nuts securing catalytic converter (7) to the two exhaust manifolds.
5. Loosen the two clamps (6) at the tail end of the catalytic converter.

6. Unscrew and remove the two bolts securing the catalytic converter to support (1) and unhook retaining rings (5).
7. Slant the converter downwards and release it from the two exhaust manifolds, recovering the gaskets in between.
8. Remove the catalytic converter by disconnecting it from the center section of the exhaust pipe.
9. Fit a new Lambda sensor to a new catalytic converter taken from the spare parts, as follows.

a. Apply R. GORI **Never Seez** grease to the sensor threading or alternatively **BOSCH 5.964.080.105.**
b. Using tool **A.5.0264** tighten the Lambda sensor on the catalytic converter.

10. Install the new catalytic converter on the vehicle by reversing the order of removal and complying with the following indications.
a. Fit new gaskets between exhaust manifolds and catalytic converter.
b. Shake the exhaust pipe to settle it in place, then tighten all the nuts and securing bolts.
c. Position the Lambda sensor wiring and secure it with the clamp on the flywheel bellhousing.
d. Connect the two Lambda sensor wiring connectors located in the engine compartment.
e. Start the engine and check all piping joints for gas leaks and undue noise.

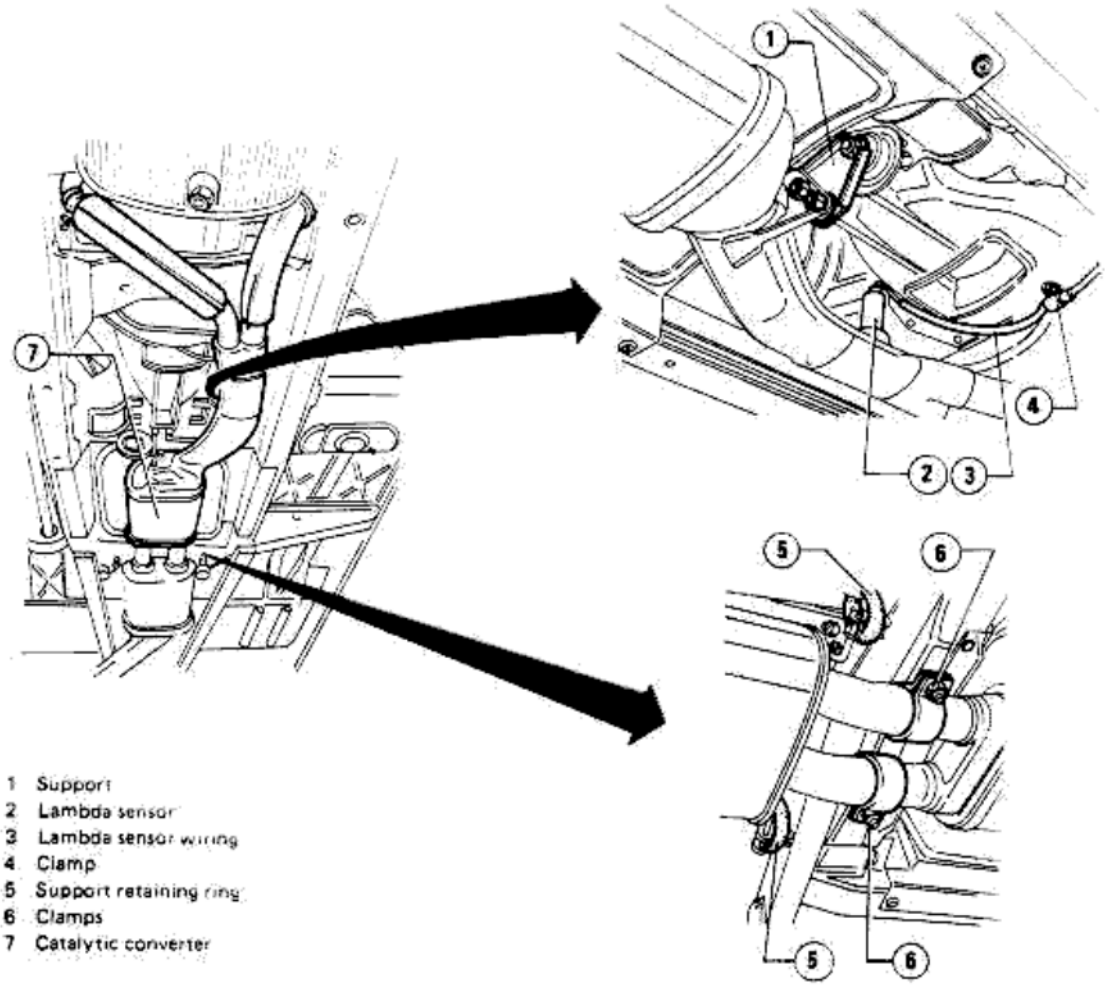

1 Support
2 Lambda sensor
3 Lambda sensor wiring
4 Clamp
5 Support retaining ring
6 Clamps
7 Catalytic converter

TROUBLE DIAGNOSIS AND CORRECTIONS

ENGINE

Condition	Probable cause	Corrective action
STARTER DOES NOT TURN OR TURNS SLOWLY (Starting system trouble diagnosis procedure) **Run starting motor after switching on the lights**		
A. LIGHTS SWITCH OFF OR DIM CONSIDERABLY		
	• Battery flat	◇ Charge the battery and check the charging system
	• Battery faulty	Replace
	• Battery terminals oxidized	Clean terminals
B. LIGHTS STAY BRIGHT AND STARTER DOES NOT WORK		
	• Interruptions in the electric connections of starting system	Restore continuity
	• Ignition block faulty	Replace ignition block
	• Starter faulty	Repair and/or replace

ENGINE CRANKS NORMALLY BUT FAILS TO START

In most cases the trouble lies in:
- Ignition system
- Fuel system

Occasionally, the trouble can be due to the following.
- Valves operate incorrectly
- Engine poor compression

Condition	Probable cause	Corrective action
(Trouble diagnosis procedure) **First of all, check the spark plugs.**		
Ignition system faulty	• Spark plugs faulty	Clean, or replace
	• High voltage cables interrupted	Replace cables
	• Rotor arm current leakage	Clean or replace cover
	• Ignition coil faulty	Replace coil
	• Low or no current in the primary circuit	Check for loosened or disconnected terminals in the primary circuit
	• Electronic control unit	Check efficiency of electronic control unit
	• Relay set faulty	Replace relay
	• Incorrect timing	Adjust
Fuel system faulty	• Lack of fuel	Refill
	• Tank, fuel filter and piping clogged	□ Clean and/or replace
	• Fuel pump faulty	□ Replace
	• Injection system components faulty	□ Check system
	• Control unit faulty	Check or replace
POOR COMPRESSION	• Spark plug tightening poor	Tighten spark plugs correctly
(Trouble diagnosis procedure) **Measure compression, then pour lubricant oil in the spark plug hole**		
A. COMPRESSION INCREASES		
Poor sealing between cylinders and rings	• Compression rings sticking and damaged	△ Replace compression rings
	• Cylinders too worn	△ Overhaul engine
B. COMPRESSION REMAINS UNCHANGED		
Leaks through valves and head	• Valve clearance incorrect	Adjust
	• Poor tightness of valve seats	△ Overhaul head
	• Head gasket faulty	△ Replace gasket

Condition	Probable cause	Corrective action
ENGINE IDLING INCORRECT		
Fuel system faulty	• Accelerator control cable faulty	Check and adjust
	• Idling adjustment incorrect	Adjust
	• Air filter clogged	Replace filter element
	• Poor tightness of air intake system	Check ducts, tighten clamps, replace faulty components if required
	• Air-flow sensor faulty	□ Replace
	• Injectors and/or pressure regulator faulty	□ Check and/or replace
	• Auxiliary air device faulty	□ Replace
	• Air and/or water temperature sensors faulty	□ Replace
Poor compression	As above	As above
Ignition system faulty	• Incorrect operation of ignition system (spark plugs, high voltage coil, coil, etc.)	Adjust and/or replace
	• Ignition timing incorrect	Adjust
VEHICLE FAILS TO REACH THE MAX SPEED		
(Trouble diagnosis procedure) Check that: Fuel is of the specified type Clutch does not slip Wheels turn smoothly (brakes, bearings) Tires are at the specified pressure		
Poor compression	As above	As above
Engine overheating	• Coolant insufficient	Refill and check system tightness
	• Water pump drive belt loosened or broken	Overhaul or replace
	• Thermal switch on radiator faulty	□ Replace
	• Water pump faulty	□ Replace
	• Radiator clogged or leaking	□ Clean, repair or replace
	• Electric fan faulty	□ Replace
	• Air in the cooling system	□ Restore tightness

Condition	Probable cause	Corrective action
Engine overcooling	• Thermostat faulty • Thermal switch faulty	□ Replace □ Replace
Fuel system faulty	As above	As above
Ignition system faulty	• Spark plugs faulty • Ignition timing incorrect	Clean or replace Adjust

ENGINE NOISY

(Trouble diagnosis procedure)
Check that: **Engine is not overloaded due to incorrect use of gearbox**
Check: **"Knocking due to incorrect combustion"**
"Mechanical knocking"

KNOCKING DUE TO INCORRECT COMBUSTION

Backfire, self-ignition, detonations	• Improper fuel	Use the proper fuel
Incorrect ignition	• Ignition timing incorrect • Improper spark plugs	Adjust timing Use the proper spark plugs
Mixture too lean	• Insufficient fuel delivery and/or air seepage in the air intake ducts	Check fuel system
Cylinder head faulty	• Carbon deposits in combustion chambers	Δ Disassemble head and remove the carbon deposits

MECHANICAL KNOCKING

Main bearings knocking	• Main bearings worn (this noise increases during acceleration)	Δ Replace bearings and grind or replace crankshaft
Big end bearing knocking	• Big end bearings worn (noise is slightly louder than that of main bearings; also this noise increases during acceleration)	Δ See previous item

Condition	Probable cause	Corrective action
Pistons noisy	• Piston and/or cylinder liners worn. (Noise is metallic and increases as soon as rotation speed increases; it decreases when engine is hot)	△ Overhaul engine
Valves noisy	• Valve clearance adjustment incorrect	Adjust
Water pump noisy	• Rotor backlash	○ Replace pump
Alternator noisy	• Bearing backlash	◇ Replace bearings
Exhaust noisy	• Exhaust system components loosened or damaged	□ Check, and replace if required
EXCESSIVE OIL CONSUMPTION		
Oil leaks	• Drain plug loosened	Tighten
	• Oil sump screws loosened	Tighten or replace
	• Oil sump gasket inefficient	Replace gasket
	• Oil filter loosened	Tighten, or replace if required
	• Oil pressure switch loosened	Tighten
	• Oil dipstick poor tightness	Replace dipstick
Excessive oil consumption	• Cylinders and pistons worn	△ Grind cylinders and replace pistons
	• Compression rings mounted incorrectly	△ Restore correct mounting
	• Compression rings worn	△ Replace compression rings, or grind cylinder, and replace pistons if required
	• Valve guides and rubbers worn	△ Replace valve guides and rubbers
Other	• Valve stem worn	△ Replace valves
	• Improper oil grade	Change oil and refill with oil of proper grade
	• Engine overheating	As above

Condition	Probable cause	Corrective action
EXCESSIVE FUEL CONSUMPTION		
CAUTION The utmost care is recommended in the measuring of fuel consumption, since speed, load, type of road, and driving habits, **greatly affect fuel consumption**		
Engine power not up to normal	As above	As above
Faults in the fuel system	• Idle r.p.m. too high	Adjust idle r.p.m.
	• Accelerator return incorrect	Adjust
	• Fuel leaks	Repair or tighten the fuel piping connections
	• Air cleaner clogged	Replace cleaner
	• Mixture too reach	Check fuel system components
OTHER TROUBLES		
Oil pressure reduced	• Improper oil	Use the proper oil
	• Oil insufficient	Top-up with the proper oil
	• Overheating	As above
	• Oil pump pressure relief valve inefficient	Repair or replace
	• Excessive backlash in the sliding surfaces	△ Overhaul engine
	• Oil filter clogged	Replace element
	• Oil pressure switch faulty	Replace
Sliding surfaces too worn	• Oil pressure insufficient	As above
	• Improper oil quality, or oil fouling	Use proper oil (replace cleaner element)
	• Air cleaner defective	Replace cleaner element
	• Overheating or overcooling	As above
Seizing of sliding surfaces	• Oil pressure insufficient	As above
	• Backlash insufficient	△ Replace the damaged parts checking backlashes
	• Overheating	As above

Condition	Probable cause	Corrective action
CATALYTIC CONVERTER OVERHEATING		
CAUTION: Excessive converter temperature may result in alumina element damage and inferior conversion efficiency. Outer casing damage may also result, with consequent risk of fire.		
Catalytic converter overheating	• Plug fouling	Clean or replace plugs
	• Fuel pump faulty or fuel filter clogged (low pressure)	□ Replace or clean
	• Injectors defective	□ Replace
	• Air cleaner element dirty	Replace
	• Throttle linkage adjustment incorrect	□ Adjust linkage
	• Engine and auxiliaries not adjusted as required	△ Tune engine
	• Exhaust line leakage upstream of Lambda sensor	Rectify leakage
	• Pressure regulator defective	□ Replace
	• Battery voltage low (or charging system defective)	◇ Recharge battery (or overhaul system)
	Converter overheating may also be caused by:	
	• Low fuel tank level	Keep tank adequately supplied
	• Prolonged engine overloading (e.g. driving at max. speed, towing or prolonged mountain driving)	Avoid engine overloading

△ Refer to Group 01
□ Refer to Group 04
◇ Refer to Group 05
○ Refer to Group 07

IGNITION

Condition	Probable cause	Corrective action
Irregular firing	• Spark plugs faulty	Replace spark plugs
	• Poor high voltage connections	Replace or restore high voltage connections
	• Distributor cap with signs of flashover or burning	Replace distributor cap
	• Rotor arm faulty	◇ Replace rotor arm
	• Mechanical failure of ignition distributor	◇ Disassemble distributor and replace the faulty components or if required replace the whole ignition distribution
	• Ignition coil cap with signs of flashover or burning	Replace ignition coil
	• Ignition coil secondary winding short-circuited or interrupted	Replace ignition coil
	• Electronic module inefficient	Replace electronic module
	• Ignition timing incorrect (at idle)	Time ignition
	• Advance control unit defective	Replace control unit
No spark	• Electric connections interrupted	Identify the interruption and repair or replace connections
	• Coil ignition distributor cap punctured by high voltage or by discharges	Replace distributor cap
	• Rotor arm punctured by high voltage or by discharges	◇ Replace rotor arm
	• Ignition coil cap punctured by high voltage or by discharges	Replace ignition coil
	• Ignition coil primary winding short - circuited or discharged	Replace ignition coil
	• Ignition coil secondary winding interrupted	Replace ignition coil
	• Ignition electronic module faulty	Replace module
	• Advance control unit defective	Replace control unit

◇ Refer to Group 05

FUEL SYSTEM

A. QUICK DIAGNOSIS

NOTE:
The correct use of this trouble diagnosis procedure assumes vehicle to be in order (transmission in particular), and engine in good operating conditions (valves, cylinders, couplings)

1 Cold start is difficult or impossible
2 Warm start is difficult or impossible
3 Engine starts and stalls immediately
4 Irregular functioning during warm-up
5 Irregular idle r.p.m.
6 Fail to reach max speed
7 Excessive fuel consumption
8 Engine misses in all running conditions
9 Idle CO value too high
10 Idle CO value too low

Condition

1	2	3	4	5	6	7	8	9	10	Probable cause	Corrective action
X	X	X	X	X	X	X	X			• Poor connections of system connectors and/or wiring continuity absent	Check correct connection of connectors and electric continuity
X	X	X								• Relay set faulty	Replace relay
X	X	X		X	X					• Air and/or fuel piping incorrectly connected or damaged	Check, and restore if required
X	X	X			X		X			• Fuel pump faulty or delivery insufficient	Check pump and related connector
X	X	X		X	X		X		X	• Fuel pressure too low	Check functioning of pump and pressure regulator Check delivery piping Check supply system filter
	X	X		X		X				• Fuel pressure too high	Check pressure regulator Check return piping
X										• Cold start injector fails to open	Replace injector

1	2	3	4	5	6	7	8	9	10	Probable cause	Corrective action
	X	X		X		X		X		• Cold start injector fails to close	Replace injector
X	X									• Thermo-time switch faulty	Check, and replace if required
X		X								• Auxiliary air device fails to open	Check valve
			X	X	X					• Auxiliary air device fails to close	Check valve
X	X			X	X	X	X	X	X	• Air-flow sensor faulty	Perform a mechanical and electrical check of air-flow sensor efficiency
X	X	X	X	X	X				X	• Poor tightness of air supply system	Check tighteners
X	X			X					X	• Little fuel delivered by one or more injectors	Remove injector connectors one at a time, in order to identify the faulty one. Replace the faulty injector.
	X			X		X		X		• Too much fuel delivered by one or more injectors	Remove injector connectors one at a time in order to identify the faulty one. Replace the faulty injector
X	X	X				X		X	X	• Air and/or water sensors faulty	Check water temperature sensor or air-flow sensor. Replace if required
		X		X						• Idle r.p.m. adjustment incorrect	Adjust
				X				X	X	• Mixture strength too rich or too lean	Adjust mixture strength by operating the by-pass screw on the air-flow sensor using a tester
				X						• Throttle rest position incorrect	Check position of throttle or of accelerator control cable

1	2	3	4	5	6	7	8	9	10	Probable cause	Corrective action
				X	X					• Throttle switch maladjusted or faulty	Check the min and max r.p.m. contacts. Replace switch if required
				X	X	X				• Air cleaner clogged	Replace
					X					• Accelerator throttle fails to open completely	Adjust accelerator cable
X	X	X								• Air-flow sensor pump contact faulty	Check contact
X	X	X	X	X	X	X	X	X	X	• Electronic control unit faulty	Replace control unit
X	X	X		X	X	X	X			• Ignition system (coil, distributor, spark plugs) faulty	Check system components. Replace the faulty ones
								X		• Lambda sensor inefficient	Replace Lambda sensor
						X	X	X	X	• Altitude compensation device defective	Replace altitude compensation device

B. DETAILED TROUBLE DIAGNOSIS

The troubleshooting program is arranged in two columns: the left column contains the symptom of troubles; the right column states the test steps to be performed.
If the questions in the left column can be conclusively answered in an affirmative way without testing, proceed to the next symptom in the same column. On the other hand, should the stated trouble be suspected, the directions in the right column must be followed until the trouble is found.
When the sequence of instructions in the right column is completed, troubleshooting is continued in the symptom column.

STARTER RUNS; ENGINE DOES NOT START OR STARTS WITH DIFFICULTY (COLD AND/OR WARM START)

Are electrical connections OK? — No → Check electrical connections.

Yes ↓

Ignition OK ? — No → Check battery voltage, ignition distributor, spark plugs, coil, ignition timing, etc.

Yes ↓

Perform the test by connecting Bosch Tester between ECU and harness.
Refer to "Check with Bosch Tester".
Test O.K. ? — No → If after electrical test, engine still fails to start or starts with difficulty, check for mechanical troubles: compression valve setting and engine oil pressure.

Yes ↓

All hoses correctly connected? (Visual inspection) — No → Check for proper connection of air intake system and fuel piping. Also check for deformation or damage. Eliminate any defects.

Yes ↓

Is fuel pump operating? (Listen) — No → Disconnect fuel pump connector:
Start engine and check connector voltage.
If voltage is present, replace fuel pump.
If voltage is absent, check fuse 20 (refer to: Wiring diagram on page 00-79) and lead 50 from ignition block to relay set.

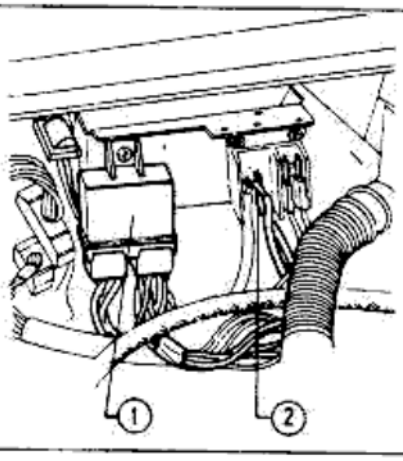

1 Relay set
2 +50 cable

Yes ↓

STARTER RUNS; ENGINE DOES NOT START OR STARTS WITH DIFFICULTY (COLD AND/OR WARM START) (continued)

Yes

Fuel pressure O. K. ?
(Test value: 2.5 bar (36.26 p.s.i.)

No →

Test value not reached:
1. Throttle return hose:
   Pressure rises above 4 bar (58 p.s.i.) = replace pressure regulator.
   Pressure remains below 4 bar (58 p.s.i.) = replace fuel pump.
2. Check for fuel piping and filter throughflow.
3. Fuel filter clogged.
4. Tank corroded.

Test value exceeded:
1. Fuel return hose clogged or constricted.
2. Replace pressure regulator.

Yes

Cold start injector O.K. ?

No →

Check injector supply voltage. For this purpose, withdraw injector connector. Connect test lamp to connector terminals 46 and 47 (refer to: Wiring diagram on page 00-79). Start engine.
Test lamp lights up when coolant < 30°C (86°F). Test lamp does not light up above 40°C (104°F). If not so, check leads 45, 46 and 47 for continuity using test lamp (refer to: Wiring diagram on page 00-79). If O.K. check thermo-time switch.

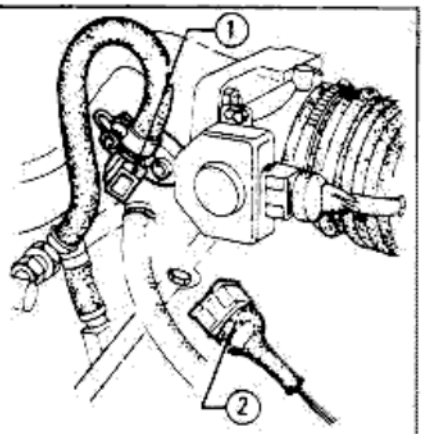

1 Cold start injector
2 Injector connector

Yes

Yes

Perform electrical check on cold start injector: resistance approx. 4 Ω
If the cold start injector is faulty, replace it.

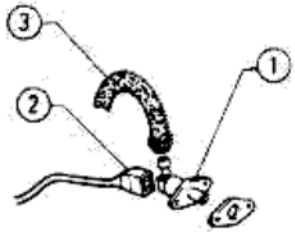

1 Cold start injector
2 Injector connector
3 Supply hose

Yes

STARTER RUNS; ENGINE DOES NOT START OR STARTS WITH DIFFICULTY (COLD AND/OR WARM START) (continued)

Perform mechanical check on cold start injector: remove it from intake manifold and keep it in a container. Disconnect lead 1 from ignition coil. Warning: Fire hazard! During starting and at a temperature of below +30°C (86°F), injector must discharge spray (max. 80 s.). At above +40°C (104°F), injector must not discharge spray.
Injector must likewise not discharge spray with ignition switched on and pressure built up.
Execute spray-discharge test above +40°C (104°F) as follows:
Detach the thermo-time switch connector and ground terminal "W".

Yes

Is thermo-time switch O.K.?

No

Check thermo-time switch. Withdraw connector and measure resistance directly at thermo-time switch.

Between terminal "W" and ground:
below +30° C (86°F) = 0 Ohm
above +40°C (104°F) = 100 to 160 Ω

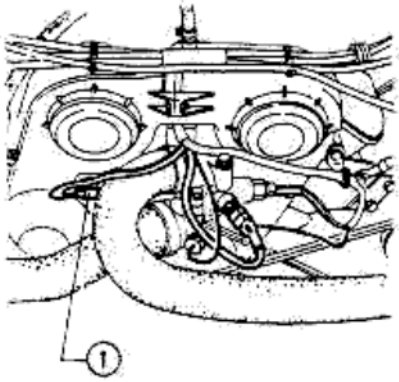

1 Thermo - time switch

If not so, replace thermo-time switch.

Yes

Yes

Check supply cables electric continuity at terminals 45, 46, 47 (refer to: Wiring diagram on page 00-79).

Is auxiliary air device mechanically O.K.?

No

Visually inspect the auxiliary air device (piping disconnected):
With engine cold, device will open in relation to temperature; with engine hot, device must be closed. If not so, replace auxiliary air device.

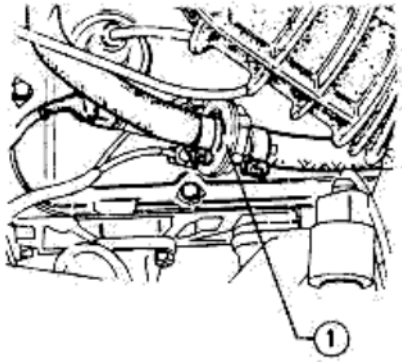

1 Auxiliary air device

Yes

STARTER RUNS; ENGINE DOES NOT START OR STARTS WITH DIFFICULTY (COLD AND/OR WARM START) (continued)

Yes

Is air-flow sensor O.K.?

No

Remove the air-flow sensor.

1. Open air-flow sensor flap manually. It must be possible to open air-flow sensor flap with uniform ease as far as stop and flap must then close automatically as far as stop.

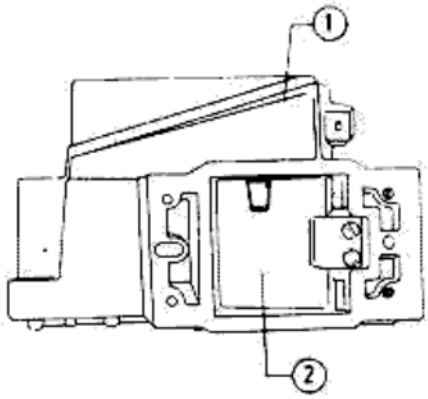

1 Air-flow sensor
2 Throttle

2. Connect tester and set test step 2.2 (Refer to Check with Bosch Tester). Test value: when air-flow sensor flap is deflected, voltage must continuously drop from 7 to 8 V to approx. 200 m V. If not so, replace air-flow sensor.

Yes

Coolant temperature sensor (NTC II)

No

Measure resistance directly at sensor, using an ohmmeter.

at −10°C (14°F) = 7 to 12 k Ω
+20°C (68°F) = 2 to 3 k Ω
+80°C (176°F) = 250 to 400 Ω

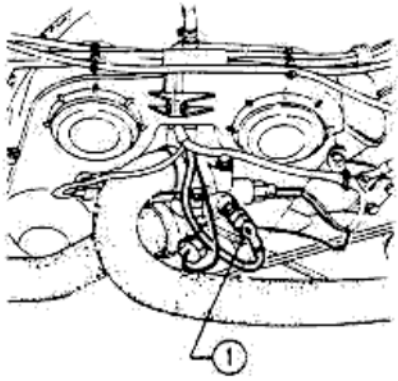

1 Temperature sensor

Yes

Is intake system free from leaks ?

No

Check intake manifold, bolted - on assemblies and all hose connections for leaks.

ENGINE STARTS AND THEN CUTS OUT AGAIN

Ignition O.K. ?

- No → Check battery voltage, ignition timing, spark plugs, ignition coil, ignition distributor, etc.
- Yes ↓

Perform the test by connecting Bosch Tester between ECU and harness. (Refer to "Check with Bosch Tester"). Is test O.K. ?

- No → If after electrical test, engine still does not start or starts with difficulty, check for mechanical troubles: compression, valve adjustment, and engine oil pressure.
- Yes ↓

Are all hoses correctly connected? (visual inspection) Is intake system free from leaks?

- No → Check that intake system hoses are free from deformation or damage and properly connected. Eliminate defects.

  Check air tightness of intake manifold, bolted-assemblies and all hose connection.
- Yes ↓

Is fuel pump operating? (listen)

- No →
  1. Disconnect fuel pump connector: Start engine and check connector voltage. If voltage is present, replace fuel pump.
  2. Check voltage presence from air-flow sensor, terminal 36 to relay set terminal 86 b. (Refer to: Wiring diagram on page 00-79).
  3. If voltage is absent: Check fuel pump contact in the air-flow sensor; remove air-flow sensor; detach connector from air-flow sensor and connect an ohmmeter at terminals 36 and 39 of air-flow sensor. (Refer to: Wiring diagram on page 00-79). Slightly open flap manually. Reading shall be within ∞ to 0 Ohm.

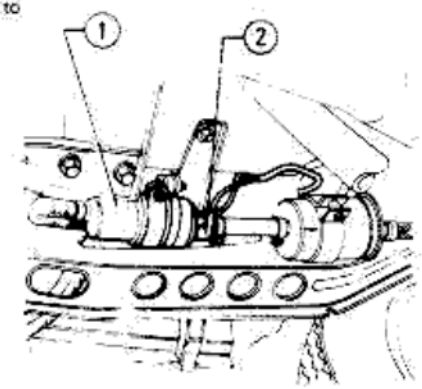

1 Fuel pump
2 Pump connector

- Yes ↓

ENGINE STARTS AND THEN CUTS OUT AGAIN (Continued)

Yes

Fuel pressure O.K. ?
(test value 2.5 bar (36.26 p.s.i.))

No →

Test value not reached
1. Throttle return hose
   Pressure rises above 4 bar (58 p.s.i.) = replace pressure regulator
   Pressure remains below 4 bar (58 p.s.i.) = replace fuel pump
2. Check for fuel piping and filter throughflow.
3. Fuel filter clogged.
4. Tank corroded.

Test value exceeded
1. Fuel return hose clogged or constricted
2. Replace pressure regulator.

Yes

Cold start injector
O.K. ? (tightness)

No →

Check cold start injector tightness. Remove injector by unscrewing the two screws securing it to the intake air box. Directly supply fuel pump with a battery to create the operating pressure in the circuit; check (visually) for injector dripping.

ERRATIC IDLING, IDLING CO % VALUE TOO HIGH OR TOO LOW

All work on idling must be carried out with the engine at operating temperature, with transmission in neutral and the air conditioner (if present) switched off.

Ignition O.K. ?

No →

Check battery voltage, ignition timing, spark plugs, ignition coil, ignition distributor etc.

Yes

Perform the test by connecting Bosch Tester between ECU and harness. Refer to: "Check with Bosch Tester"
Is test O.K. ?

No →

If after electrical test, engine still does not start, or starts with difficulty, check for mechanical troubles: compression, valves adjustment, and engine oil pressure.

Yes

Throttle valve closed?

No →

Set throttle valve to "hairs breadth" clearance and, by means of Solex air-flow sensor, check that air passage through throttle in the closed position, is 300 scale N.
If air-flow sensor is not available, check, by means of a feeler gauge, that clearance between throttle blade and sleeve is 0.04 mm (0.00157 in).
To adjust, screw or unscrew the throttle end - of - travel screw.

Yes

Idle r.p.m. and idle CO % adjusting screws checked?

No →

Adjust idle r.p.m. operating the related screw: 950 ± 50 r.p.m.

Yes

ERRATIC IDLING, IDLING CO% VALUE TOO HIGH OR TOO LOW (Continued)

Yes

Check CO emission upstream of converter with Lambda sensor inserted (0.3 to 0.5 % max). To reduce, turn air-flow sensor by-pass screw counter-clockwise. Recheck idle speed and CO.
Adjust by following procedure. Apply a new seal.

Yes

All hoses correctly connected? (visual inspection)

No → Check for proper connection of air intake system. Also check for deformation or damage. Eliminate defects.

Yes

Cold start injector O.K. ? (tightness)

No → Check cold start injector tightness. Remove injector by unscrewing the two screws securing it to the intake air box. Directly supply fuel pump with a battery, to create the operating pressure in the circuit; check (visually) for injector dripping.

Yes

Injectors mechanically O.K. ?

No → With engine running, withdraw connectors one by one from injectors. If injector is in good condition, engine r.p.m. must drop noticeably and uniformly for all cylinders.

Yes

Fuel pressure O.K. ? (test value 2.5 bar (36.26 p.s.i.))

No →

Test value not reached:
1. Throttle return hose:
   Pressure rises above 4 bar (58 p.s.i.) = replace pressure regulator.
   Pressure remains below 4 bar (58 p.s.i.) = replace fuel pump.
2. Check fuel piping and filter for throughflow.
3. Fuel filter clogged.
4. Tank corroded.

Test value exceeded:
1. Fuel return hose clogged or constricted.
2. Replace pressure regulator.

Yes

Coolant temperature sensor O.K. ? (NTC II)

No → Measure resistance directly at sensor, using an ohmmeter:

at −10°C (14°F) = 7 to 12 kOhm
+20°C (68°F) = 2 to 3 kOhm
+80°C (176°F) = 250 to 400 Ohm

Yes

Air-flow sensor O.K.?

No →

Remove air-flow sensor:
1. Open air-flow sensor flap manually. It must be possible to open air-flow sensor flap with uniform ease as far as stop and flap must then close automatically as far as stop.
2. Connect tester and set test step 2.2. (Refer to: "Check with Bosch Tester"). Test value: when air-flow sensor flap is deflected, voltage must continuously drop from 7 to 8 V to approx. 200 mV. If not so, replace the air-flow sensor.

Yes

ERRATIC IDLING, IDLING CO % VALUE TOO HIGH OR TOO LOW (Continued)

Yes

Is intake system free from leaks?

No → Check intake manifold, bolted - on assemblies and all hose connections for leaks.

INSUFFICIENT POWER DELIVERY, POOR ACCELERATION

Ignition O.K.?

No → Check battery voltage, ignition timing, spark plugs, ignition coil, ignition distributor, etc.

Yes

Perform the test by connecting Bosch Tester between ECU and harness. (Refer to "Check with Bosch Tester"). Is test O.K.?

No → If after electrical check, engine still does not start, or starts with difficulty, check for mechanical troubles, compression, valve adjustment, and engine oil pressure.

Yes

All hoses correctly connected? (visual inspection).

Is intake system free from leaks?

No → Check for proper connection of air intake system. Also check for deformation or damage. Eliminate defects.

Check intake manifold, bolted - on connections, and all hose connections for leaks.

Yes

Auxiliary air device mechanically O.K.?

No → Visually inspect the auxiliary air device (piping disconnected). With engine cold, device will open in relation to temperature; with engine hot, device must be closed. If not so, replace auxiliary air device.

Yes

Is air-flow sensor O.K.?

No → Remove the air-flow sensor.
1. Open air-flow sensor flap manually. It must be possible to open air-flow sensor flap with uniform ease as far as stop, and flap must then close automatically as far as stop.
2. Connect tester and set test step 2.2. with electronic equipment Bosch (Refer to: "Check with Bosch Tester"). Test value: when air-flow sensor flap is deflected, voltage must continuously drop from 7 to 8 V to approx 200 mV. If not so, replace the air-flow sensor.

Yes

Coolant temperature sensor O.K.? (NTC II)

No → Measure resistance directly at sensor, using an ohmmeter:

at −10°C (14°F) = 7 to 12 kOhm
+20°C (68°F) = 2 to 3 kOhm
+80°C (176°F) = 250 to 400 Ohm

COMBUSTION MISSES IN ALL DRIVING CONDITIONS

Ignition O.K.?
- No → Check battery voltage, ignition timing, spark plugs, ignition coil, ignition distributor, etc.
- Yes ↓

Perform the test by connecting Bosch Tester between ECU and harness. (Refer to "Check with Bosch Tester"). Is test O.K.?
- No → If after electrical check, engine still does not start, or starts with difficulty, check for mechanical troubles: compression, valve adjustment, and engine oil pressure.
- Yes ↓

Connectors of ignition system harness O.K.?
- No → Check connectors for proper attachment and corrosion. Check leads: 5, 16, 17, 35 and 49 for continuity and loose contacts (Refer to: Wiring diagram on page 00-79).
- Yes ↓

Voltage supply to fuel injection system O.K.?
- No → Detach both connectors from relay set. Check whether all receptacles and leads are O.K. Check all connection leads for continuity while moving harness. Suspected lead breaks. See also preceding test step with Bosch Tester.
- Yes ↓

Is air-flow sensor O.K.?
- No → Remove the air-flow sensor.
  1. Open air-flow sensor flap manually. It must be possible to open air-flow sensor with uniform ease as far as stop, and flap must then close automatically as far as stop.
  2. Connect tester and set test step 2.2 with electronic equipment Bosch (Refer to: "Check with Bosch Tester"). Test value: when air-flow sensor flap is deflected, voltage must continuously drop from 7 to 8 V to approx. 200 mV. If not so, replace the air-flow sensor.
- Yes ↓

ECU O.K.?
- No → Connect Bosch Tester. Let engine run. Tap control unit slightly and move multiple conductor connector. Look for combustion misses. If required, repair multiple conductor connector, or replace the faulty control unit. Check wire 1 from coil to injection control unit.

EXCESSIVE FUEL CONSUMPTION - TOWN TRAFFIC ?

Note: are all brakes free? Tire pressure correct?

Ignition O.K. ?

- No → Check battery voltage, ignition timing, spark plugs, ignition coil, ignition distributor, etc.
- Yes ↓

Perform the test by connecting Bosch Tester between ECU and harness. (Refer to "Check with Bosch Tester"). Test O.K. ?

- No → If, after electrical check, engine still does not start, or starts with difficulty, check for mechanical troubles: compression, valve adjustment, and engine oil pressure.
- Yes ↓

Fuel pressure O.K. ? (Test value 2.5 bar (36.26 p.s.i.))

- No →
  Test value not reached:
  1. Throttle return hose.
     Pressure rises above 4 bar (58 p.s.i.) = replace pressure regulator.
     Pressure remains below 4 bar (58 p.s.i.) = replace fuel pump.
  2. Check fuel piping and filter for throughflow.
  3. Fuel filter clogged.
  4. Tank corroded.

  Test value exceeded:
  1. Fuel return hose clogged or constricted.
  2. Replace pressure regulator.
- Yes ↓

Injectors mechanically O.K. ?

- No → With engine running, withdraw connectors one by one speed must slow down from injectors. If injector is operating, engine r.p.m. must drop noticeably.
- Yes ↓

Cold start injector O.K. ? (tightness)

- No → Check tightness of cold start injector. Remove injector by unscrewing the two screws securing it to the intake air box. Directly supply fuel pump with a battery to create the operating pressure in the circuit; check (visually) for injector dripping.
- Yes ↓

Is air-flow sensor O.K.?

- No →
  Remove the air-flow sensor:
  1. Open air-flow sensor flap manually. It must be possible to open air-flow sensor flap with uniform ease as far as stop, and flap must then close automatically as far as stop.
  2. Connect tester and set test step 2.2 with electronic equipment Bosch (Refer to: "Check with Bosch Tester"). Test value: when air-flow sensor flap is deflected, voltage must continuously drop from 7 to 8 V to approx. 200 mV. If not so, replace air-flow sensor. Use a new seal.
- Yes ↓

Measure emissions with a CO tester with engine at normal running temperature upstream of the catalytic converter. Is the measured value within 0.3 to 0.5% range, with Lambda sensor connected?

- No → If CO value is too high, rotate the air-flow sensor by-pass adjusting screw counterclockwise. Re-check engine speed and CO concentration. Adjust according to procedure. Use a new seal.
  Check Lambda sensor closed loop control system.

ENGINE FAILS TO DELIVER MAX POWER

Ignition O.K. ?

- No → Check battery voltage, ignition timing, spark plugs, ignition coil, ignition distributor, etc.
- Yes ↓

Perform the test by connecting Bosch Tester between ECU and harness. Refer to "Check with Bosch Tester". Test O.K. ?

- No → If, after electrical check, engine still does not start, or starts with difficulty, check for mechanical troubles: compression, valve adjustment, and engine oil pressure.
- Yes ↓

Does throttle valve open fully?

- No → Check that throttle max opening corresponds to max acceleration position of pedal.
  Check throttle control cable - adjust if necessary.
- Yes ↓

Throttle switch O.K. ?

- No → Accelerator pedal in released position:
  Resistance between terminals 3 and 18 (full load contact): ∞.
  Accelerator pedal fully depressed:
  Resistance between terminals 3 and 18 (on throttle switch): 0 Ohm.
  If not so, check throttle control cable, or replace switch.

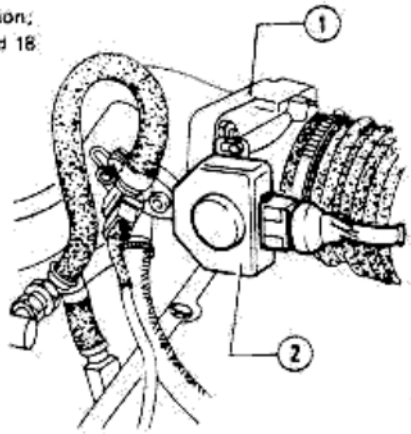

1. Throttle body
2. Throttle switch

- Yes ↓

Fuel pressure O.K. ?
(test value: 2.5 bar (36.26 p.s.i.))

- No → Test value not reached:
  1. Throttle return hose.
     Pressure rises above 4 bar (58 p.s.i.) = replace pressure regulator.
     Pressure remains below 4 bar (58 p.s.i.) = replace fuel pump.
  2. Check fuel piping and filter throughflow.
  3. Fuel filter clogged.
  4. Tank corroded.

  Test value exceeded:
  1. Fuel return hose clogged or constricted.
  2. Replace pressure regulator.
- Yes ↓

All hoses correctly connected? (visual inspection)

Is intake system free from leaks?

- No → Check for proper connection of air intake system. Also check for deformation or damage. Eliminate defects.

  Check intake manifold, bolted - on assemblies, and all hose connections for leaks.
- Yes ↓

ENGINE FAILS TO DELIVER MAX POWER (Continued)

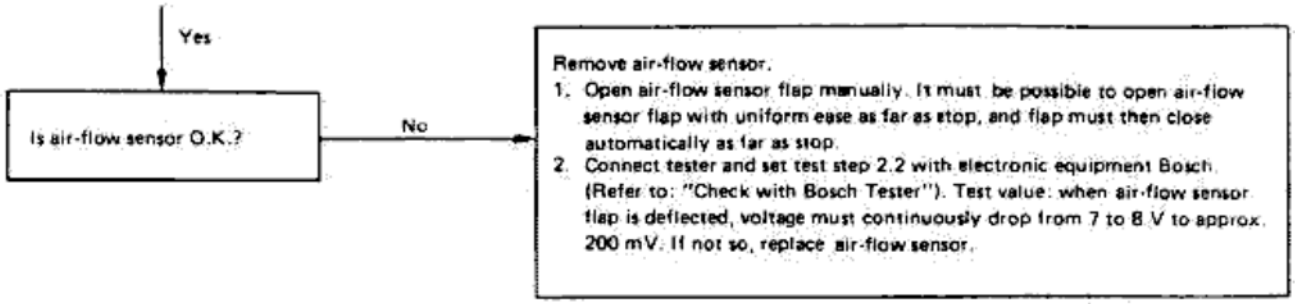

CHECK WITH BOSCH TESTER (0.648.100.202)

- Remove the injection ECU (refer to Group 04 - Electrical Components - Injection Control Unit).
- Connect the female connector of the Bosch Tester to the control unit and the male connector to the car's wiring harness.

CAUTION:
Take the utmost care when attaching and disconnecting connectors.

- Turn the cylinder selector switch to "6".
- Switch on the ignition; the red lamp on tester will come on.

The red indicator lamp must stay lit throughout test procedure. If the lamp goes off, voltage supply is defective.

The green lamp monitors the triggering of injection pulses.
When starting motor is actuated this lamp blinks.

The green indicator lamp is normally off.

Tester with analog display

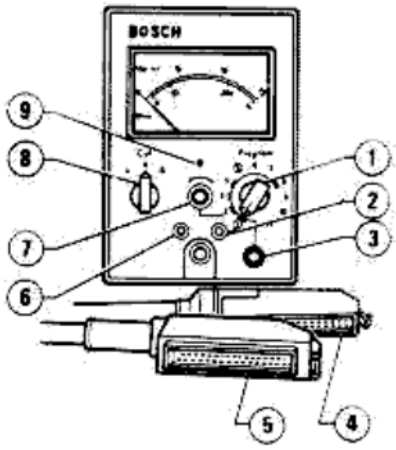

1 Rotary switch "program"
2 Indicator lamp "green"
3 "Program" button
4 Connection to control unit
5 Connection to wiring harness
6 Indicator lamp "red"
7 Adjustment knob
8 Cylinder selector switch
9 Mechanical zero adjustment

For the electric references see: INJECTION WIRING DIAGRAM on page 00-79.

TEST 1.1

Program switch in position		1
Operations	Program button	–
	To be carried out on vehicle	–
Correct reading	Meter	0 V
	Lamps red	on
	Lamps green	off
Component under test		Gauging instrument in tester
Test type		Tester mechanical zero setting
Incorrect reading		Pointer not indicating zero

Trouble diagnosis and other information

Adjust the zero setting of tester gauging instrument.

TEST 1.2

Program switch in position			1
Operations	Program button		-
	To be carried out on vehicle		–
Correct reading	Meter		0 V
	Lamps	red	on
		green	off
Component under test			Relay set (main)
Test type			Voltage supply
Incorrect reading			Red lamp not lit up

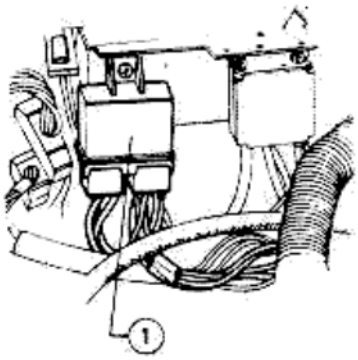

1 Main relay set

Trouble diagnosis and other information

Check lead from relay set, term. 85 to multiple conductor connector, term. 28 from ECU term. 28 to ECU term. 16 as well as multiple conductor connector term. 16 to ground terminal for a break, using ohmmeter (nominal value 0 Ω). With ignition switched on, test voltage at relay set terms. 88 c, 88 z, 88 a 88 e, 88 b, 88 f, and multiple conductor connector term. 10. Eliminate any lead breaks or contact resistances, or replace relay set.

TEST 1.3

Program switch in position			1
Operations	Program button		–
	To be carried out on vehicle		Shift to neutral actuate starting motor
Correct reading	Meter		8 to 15 V
	Lamps	red	on
		green	blinking
Component under test			Starting motor term. 50 and relay set
Test type			Voltage at ECU term. 4
Incorrect reading			No voltage indication

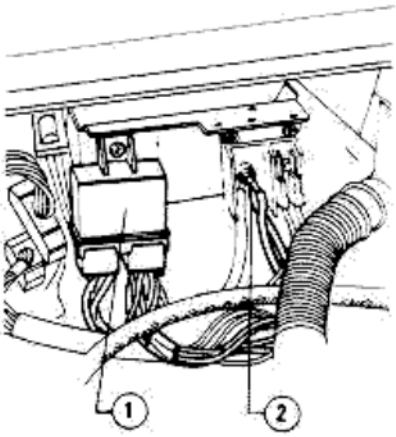

1 Main relay set
2 Starting motor term. 50

Trouble diagnosis and other information

Voltage indication less than 8 V; battery insufficiently charged or considerable voltage drops. No voltage indication test voltage when starting, at relay set terms. 86 a and 86 – multiple conductor connector term. 4. Look for break or replace relay set.

TEST 1.4

Program switch in position			1
Operations	Program button		
	To be carried out on vehicle		Shift to neutral actuate starting motor
Correct reading	Meter		8 to 15 V
	Lamps	red	on
		green	blinking
Component under test			Lead from ECU term. 1 and coil term. 1
Test type			ECU - coil triggering
Incorrect reading			Green light not blinking

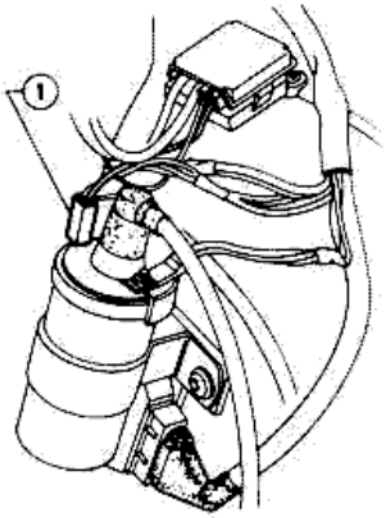

1 Coil term. 1 (yellow)

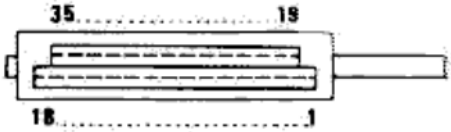

View of multiple conductor connector from system wiring. Terminal 1 (coil) connected to rev.counter.

Trouble diagnosis and other information

Check lead 1 from ignition coil term. 1 to multiple conductor connector term. 1 of break.

TEST 1.5

Program switch in position			1
Operations	Program button		yes
	To be carried out on vehicle		–
Correct reading	Meter		0 V
	Lamps	red	on
		green	off
Component under test			Relay set (fuel pump contact on air-flow sensor)
Test type			No voltage at ECU term. 20
Incorrect reading			Indication not zero

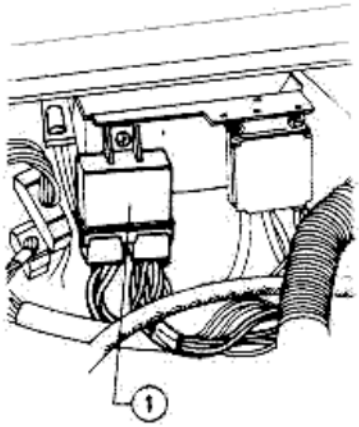

1 Main relay set

Trouble diagnosis and other information

Detach air-flow sensor connector. Repeat test. Voltage indication: replace relay set; voltage indication 0 V: replace air-flow sensor (pump contact does not open)

TEST 1.6

Program switch in position			1
Operations	Program button		yes
	To be carried out on vehicle		Shift to neutral actuate starting motor
Correct reading	Meter		8 to 15 V
	Lamps	red	on
		green	blinking
Component under test			Relay set
Test type			Voltage at ECU term. 20
Incorrect reading			No voltage indication

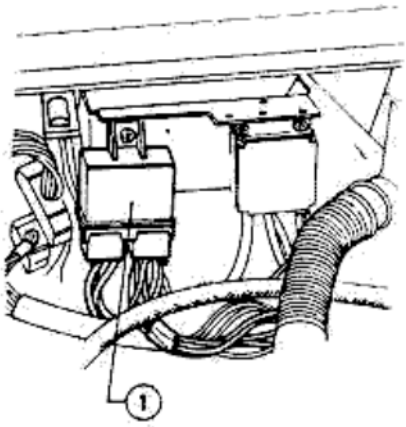

1 Main relay set

Trouble diagnosis and other information

Slightly open by hand the air-flow sensor flap, then repeat the test step; if malfunction persists, remove the air-flow sensor connector and slightly open the flap. The ohmmeter connected across terms. 36 and 39, should indicate 0 Ω. If reading is correct, check for continuity in the leads from relay set terms. 36 and 39 to the relevant terminals of air-flow sensor, as well as from relay set term. 86 b to the relevant terminal of multiple conductor connector.

TEST 1.7

Program switch in position			1
Operations	Program button		yes
	To be carried out on vehicle		Shift to neutral actuate starting motor
Correct reading	Meter		8 to 15 V
	Lamps	red	on
		green	blinking
Component under test			Lead from ECU term. 1 to ignition coil term. 1
Test type			ECU triggering of ignition coil term. 1
Incorrect reading			Green light not blinking

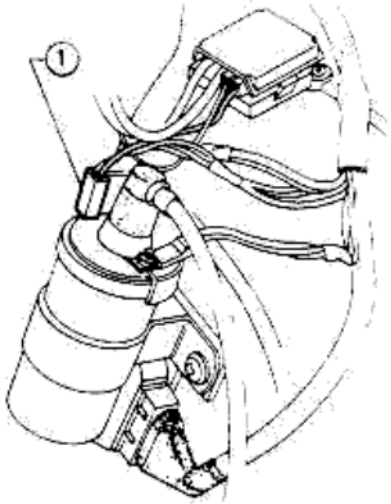

1 Coil terminal 1 (yellow)

Trouble diagnosis and other information

Check the continuity in the lead from coil term. 1 to intermediate connector, and then to term. 1 of ECU multiple conductor connector.

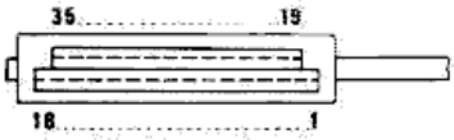

View of multiple conductor connector from system wiring. Terminal 1 (coil) connected to rev. counter.

TEST 2.1 N.B. set adjusting knob to 15 V

Program switch in position		2
Operations	Program button	
	To be carried out on vehicle	
Correct reading	Meter	15 V
	Lamps red	on
	Lamps green	off
Component under test		Tester
Test type		Tester operation
Incorrect reading		Matching indicating instrument to battery voltage

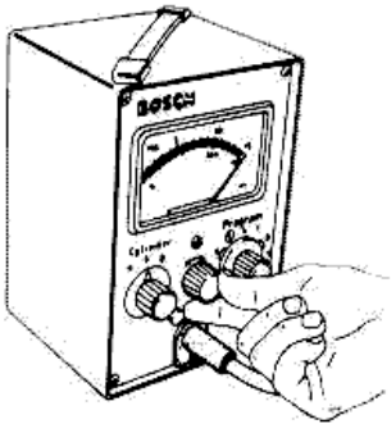

Trouble diagnosis and other information

Tester faulty.

TEST 2.2

Program switch in position		2
Operations	Program button	yes
	To be carried out on vehicle	–
Correct reading	Meter	7 to 8 V
	Lamps red	on
	Lamps green	off
Component under test		Air-flow sensor potentiometer
Test type		Potentiometer voltage with flap in off position
Incorrect reading		No indication, or indication exceeding nominal value

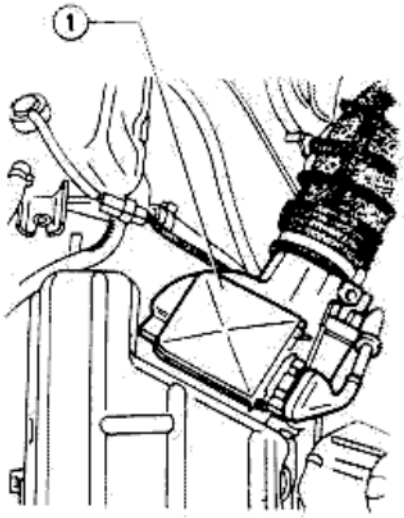

1 Air-flow sensor

Trouble diagnosis and other information

Check leads from air-flow sensor to multiple conductor connector for break, using ohmmeter. Terminals 6, 7, 8, 9 on both assemblies. Voltage drops at plug-in contacts. Replace air-flow sensor and check air-flow sensor flap for freedom of movement.

TEST 3.1

Program switch in position			3
Operations	Program button		
	To be carried out on vehicle		–
Correct reading	Meter		70 to 500 Ω
	Lamps	red	on
		green	off
Component under test			Relay set and ground connection
Test type			Resistance from ECU term. 20 to ground via pump relay coil
Incorrect reading			Resistance outside tolerance

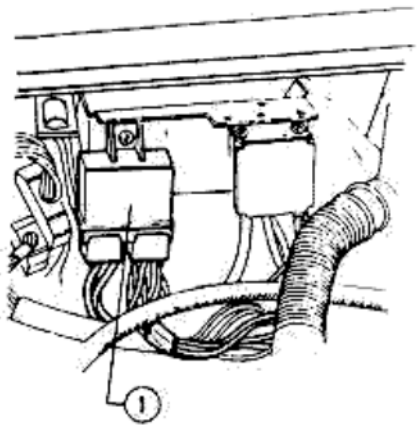

1 Main relay set

Trouble diagnosis and other information

Resistance between double relay terms. 86 b and 85 = 70 to 500 Ohm. Replace relay set if necessary. Check following leads for breaks using ohmmeter: multiple conductor connector term. 20 and relay set term. 86 b; relay set term. 85 and multiple conductor connector term. 28; multiple conductor connector term. 16 and ground terminal.

TEST 3.2

Program switch in position			3
Operations	Program button		yes
	To be carried out on vehicle		–
Correct reading	Meter		25 to 75 Ω
	Lamps	red	on
		green	off
Component under test			Auxiliary air device and fuel pump
Test type			Joint resistance of auxiliary air device and fuel pump from ECU term. 34 to ground
Incorrect reading			Resistance outside tolerance

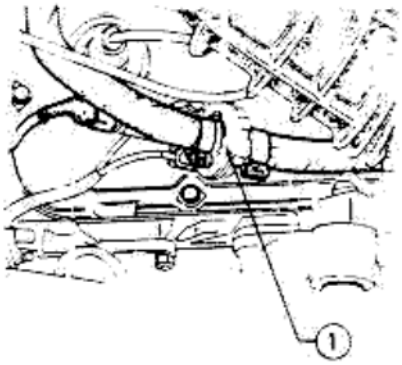

1 Auxiliary air device

Trouble diagnosis and other information

Resistance between auxiliary air device terms. 34 and 48: approx. 50 Ohm. Resistance between relay set term. 88 d and ground: approx. 1 Ohm. In case of break, check ground lead and positive lead to pump. Check following connections for breaks using ohmmeter.

Multiple conductor connector term. 34 to auxiliary air device term. 34, auxiliary air device term. 48 to relay set term. 88 c, relay set term. 88 d (in case of break, replace relay set). Test plug-in connection.

TEST 4.1

Program switch in position			4
Operations	Program button		–
	To be carried out on vehicle		–
Correct reading	Meter		30 Ω to 30 kΩ (in relation to temperature)
	Lamps	red	on
		green	off
Component under test			Coolant temperature sensor (NTC II)
Test type			Resistance from ECU term. 13 through sensor, to ground
Incorrect reading			Resistance outside tolerance

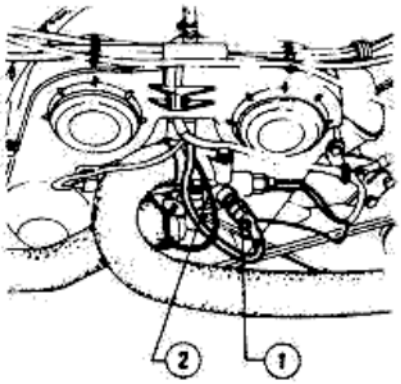

1 Coolant temperature sensor
2 Thermostat

Trouble diagnosis and other information

Measure resistance value directly at temperature sensor II (terms. 13 and 49):
at −10°C (14°F) : 7 to 12 kΩ
+20°C (68°F) : 2 to 3 kΩ
+80°C (176°F) : 250 to 400 Ω

Temperature sensor II.
Check following leads for breaks using ohmmeter:
Multiple conductor connector term. 13 to temperature sensor term. 13; temperature sensor term. 49 to ground terminal. Test plug-in connections.

TEST 4.2

Program switch in position			4
Operations	Program button		yes
	To be carried out on vehicle		–
Correct reading	Meter		30 Ω to 30 kΩ (in relation to temperature)
	Lamps	red	on
		green	off
Component under test			Air temperature sensor (NTC I)
Test type			Resistance from ECU term. 27 to ground
Incorrect reading			Resistance outside tolerance

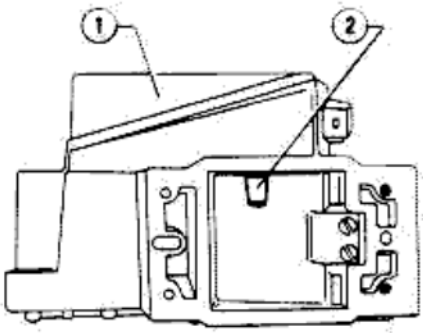

1 Air-flow sensor
2 Air temperature sensor

Trouble diagnosis and other information

Measure resistance value directly at air-flow sensor (terms. 27 and 6):
at −10°C (14°F) : 7 to 12 kΩ
+20°C (68°F) : 2 to 3 kΩ
+80°C (176°F) : 250 to 400 Ω

Temperature sensor I.
Check following leads for breaks using ohmmeter: multiple conductor connector term. 27 to air-flow sensor term. 27; air-flow sensor term. 6 to multiple conductor connector term. 6.

TEST 5.1

Program switch in position			5
Operations	Program button		-
	To be carried out on vehicle		Accelerator pedal released
Correct reading	Meter		0 Ω
	Lamps	red	on
		green	off
Component under test			Throttle switch
Test type			Resistance from ECU term. 18 to switch term. 3
Incorrect reading			No indication

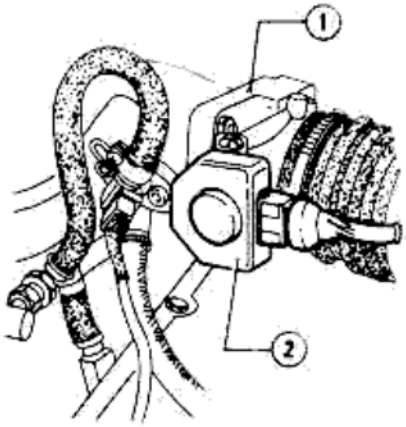

1 Throttle body
2 Switch

Trouble diagnosis and other information

Check continuity of following connections with an ohmmeter:
ECU multiple conductor connector term. 2 and throttle switch term. 2; throttle switch term. 18 and ECU multiple conductor connector term. 18. Check plug-in connections.

TEST 5.2

Program switch in position			5
Operations	Program button		–
	To be carried out on vehicle		Partial load on accelerator pedal
Correct reading	Meter		∞
	Lamps	red	on
		green	off
Component under test			Throttle switch
Test type			Resistance from throttle switch term. 18 to switch term. 2
Incorrect reading			No indication or indication too low

Trouble diagnosis and other information

Check plug-in connections. Check for short across throttle switch (term 18). If shorted, repair them. If circuits are O.K., replace throttle switch.

TEST 5.3

Program switch in position		5
Operations	Program button	–
	To be carried out on vehicle	Accelerator pedal fully pressed
Correct reading	Meter	0 Ω
	Lamps red	on
	Lamps green	off
Component under test		Throttle switch
Test type		Resistance from ECU term. 18 to throttle switch term. 3
Incorrect reading		No indication or ∞

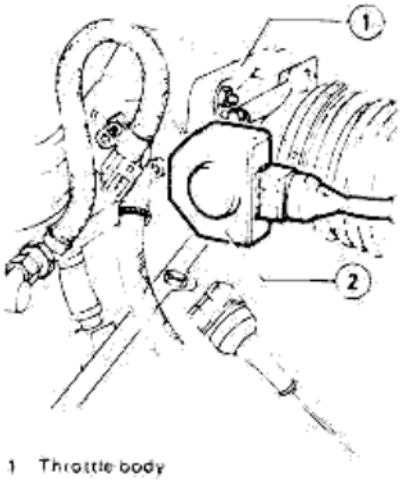

1 Throttle body
2 Switch

Trouble diagnosis and other information

Does throttle valve open fully? Check throttle linkage from accelerator pedal to throttle valve. Check plug-in connections. Direct resistance measurement at throttle switch between term. 18 and term. 3 (open throttle valve fully). Replace throttle switch if necessary. Check lead from multiple conductor connector term. 3 to switch term. 3 for break. Check lead from multiple conductor connector term. 18 to throttle switch term. 18 for break.

TEST 6

Program switch in position		6
Operations	Program button	–
	To be carried out on vehicle	–
Correct reading	Meter	3.90 to 5.70 ms
	Lamps red	on
	Lamps green	off
Component under test		ECU
Test type		Starting control
Incorrect reading		No indication or indication outside tolerance

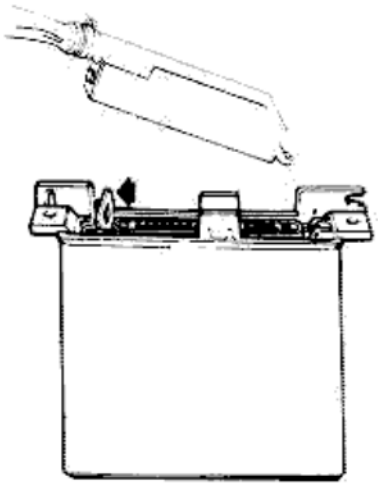

Trouble diagnosis and other information

1. Check the ground terminal and test for current supply to terminals 5 and 49 ensure that contacts are correctly attached.
2. Check plug-in connections of multiple conductor connector.
3. ECU faulty.

TEST 7

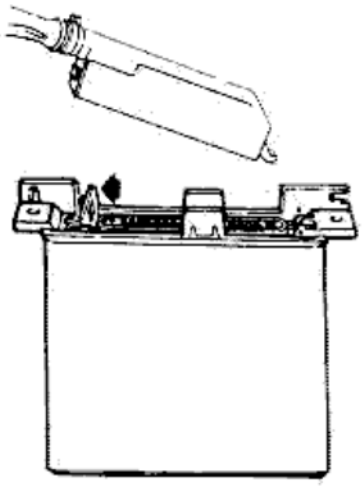

Program switch in position		7
Operations	Program button	–
	To be carried out on vehicle	–
Correct reading	Meter	3.40 to 4.80 ms
	Lamps red	on
	Lamps green	off
Component under test		ECU
Test type		Warm - up phase
Incorrect reading		No indication or indication outside tolerance

Trouble diagnosis and other information

1. Check the ground terminal and test for current supply to terminals 5 and 49. Ensure that contacts are correctly attached.
2. Check plug-in connections of multiple conductor connector.
3. ECU faulty.

TEST 8.1

Program switch in position		8
Operations	Program button	–
	To be carried out on vehicle	–
Correct reading	Meter	2.80 to 4.10 ms
	Lamps red	on
	Lamps green	off
Component under test		ECU
Test type		Basic adjustment I
Incorrect reading		No indication or indication outside tolerance

Trouble diagnosis and other information

1. Check the ground terminal and test for current supply to terminals 5 and 49. Ensure that contacts are correctly attached.
2. Check plug-in connections of multiple conductor connector.
3. ECU faulty.

TEST 8.2

Program switch in position			8
Operations	Program button		yes
	To be carried out on vehicle		
Correct reading	Meter		3.25 to 4.65 ms
	Lamps	red	on
		green	off
Component under test			ECU
Test type			Full load correction
Incorrect reading			No indication or indication outside tolerance

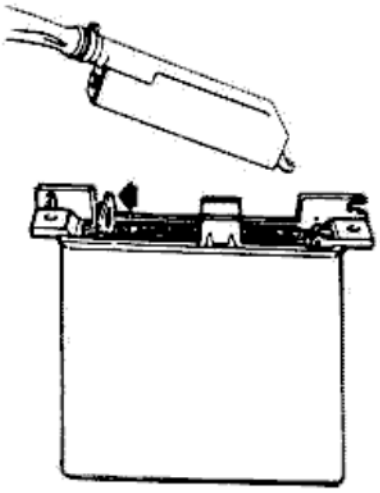

Trouble diagnosis and other information

1. Check the ground terminal and test for current supply to terminals 5 and 49. Ensure that contacts are correctly attached.
2. Check plug-in connections of multiple conductor connector.
3. ECU faulty.

TEST 9

Program switch in position			9
Operations	Program button		–
	To be carried out on vehicle		–
Correct reading	Meter		1.35 to 2.30 ms
	Lamps	red	on
		green	off
Component under test			ECU
Test type			Basic adjustment II
Incorrect reading			No indication or indication outside tolerance

Trouble diagnosis and other information

1. Check the ground terminal and test for current supply to terminals 5 and 49. Ensure that contacts are correctly attached.
2. Check plug-in connections of multiple conductor connector.
3. ECU faulty.

TEST 10

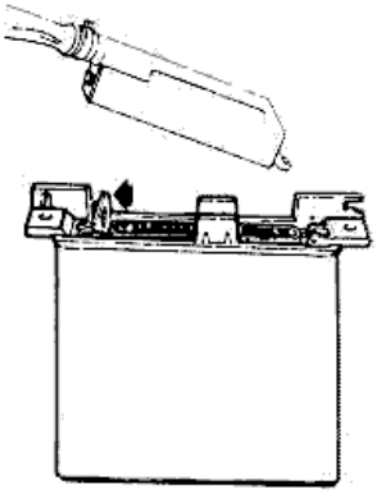

Program switch in position			10
Operations	Program button		–
	To be carried out on vehicle		–
Correct reading	Meter		5.60 to 7.60 ms
	Lamps	red	on
		green	off
Component under test			ECU
Test type			Basic adjustment III
Incorrect reading			No indication or indication outside tolerance

Trouble diagnosis and other information

1. Check the ground terminal and test for current supply to terminals 5 and 49. Ensure that contacts are correctly attached.
2. Check plug-in connections of multiple conductor connector.
3. ECU faulty.

TEST 11.1

Program switch in position			11
Operations	Program button		–
	To be carried out on vehicle		–
Correct reading	Tester		3.40 to 4.80 ms
	Lamps	red	on
		green	off
Component under test			ECU
Test type			Closed loop Lambda sensor
Incorrect reading			Out of tolerance

Trouble diagnosis and other information

Refer to "Detailed Diagnosis for Lambda sensor"

TEST 11.2

Program switch in position		11
Operations	Program button	–
	To be carried out on vehicle	Probe each injector manually and ascertain needle movement by feeling
Correct reading	Meter	3.40 to 4.80 ms
	Lamps red	on
	Lamps green	off
Component under test		Injector
Test type		Needle movement
Incorrect reading		Needle does not move

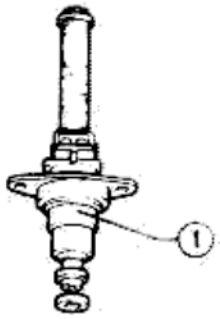

1 Injector

Trouble diagnosis and other information

1. Injection times properly set: injectors however fail to work (no needle movement). Check for continuity in the connections between terminals 16 and 17. Check connection between 29 and relay set terms. 88 b; if this operates properly, replace ECU (Electronic Control Unit) (final stage faulty).

2. If needle movement can now be felt, the injector is faulty: replace injector. Resistance of injector winding 2-3 Ohm.
If no needle movement can be felt, check leads from multiple conductor connector to relay set terms. 88 b, 88 e, 88 f. Check the connections

DETAILED DIAGNOSIS FOR LAMBDA SENSOR

- Connect CO analyzer to pick-up point on muffler upstream of catalytic converter.
- Start engine, run to warm up and maintain at idle, with gearbox in neutral and users disabled.

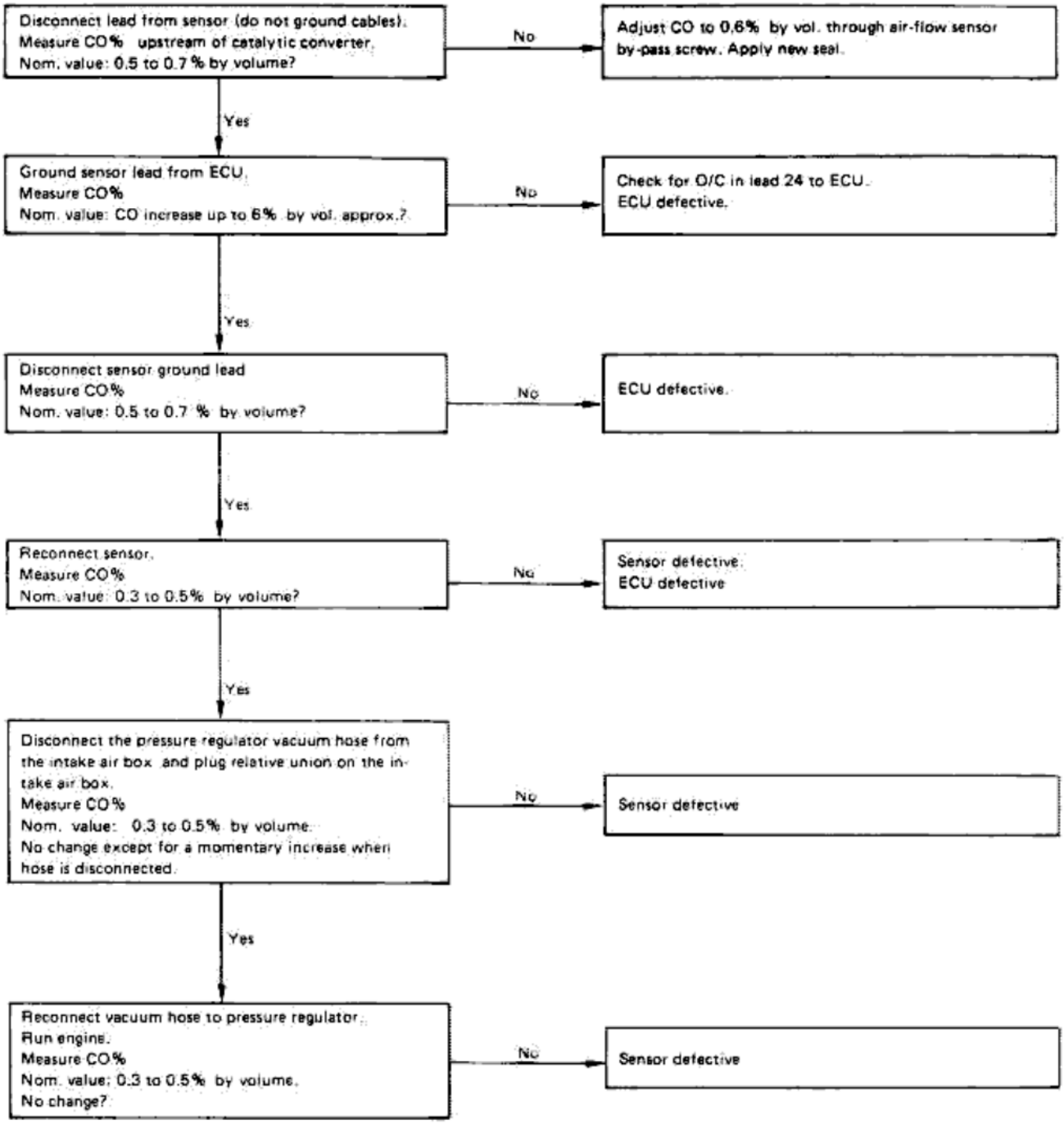

EZ-L IGNITION SYSTEM DIAGNOSTICS

[YF milano ● *model only*

Before starting any checks read the cautions described in "Group 05 - Digital Electronic Ignition-Cautions". Ensure that the battery is fully charged, the fuel system is efficient, and the engine is in good running order (e.g. compression, valve clearance).

Also make sure that ambient temperature and ignition system temperature are as specified (0 to 100°C; 32 to 212°F) since temperature notably affects test results.

For the electrical references see: Group 05 · Electrical System Engine ignition.

Before starting the checks, start the engine · If the engine does not start, misfires, loses power or idles irregularly, proceed as follows.

No Spark, Go to

Check the voltage on the coil primary.
If an oscilloscope is not available, use a spark gap to check for the spark.
If an oscilloscope is used for the check, connect it to the coil and start the engine; the oscilloscope must indicate a signal (the intensity is irrelevant).
If a spark gap is used, connect terminal 4 of the coil to the spark gap, insert a 5 kohm interference suppressor resistor on the coil and adjust the spark gap electrodes to 5 mm (0.2 in).
Start the engine; a spark must appear on the spark gap.
The primary signal is available or there is a spark on the spark gap?

No → If there is no primary signal or no sparking at the spark gap tester, continue the check with page ~~00-77~~ 00-76

(4) Power Module Supply Voltage

Yes ↓

Check distributor cap, rotor arm, ignition leads and spark plugs H.V. circuits are O.K.?

No → Repair H.V. circuits

Yes ↓

Check ignition coil.

Visual inspection:
Remove protection cap from coil and check that sealing plug is O.K. and there is no leakage of resin.

Electrical circuit:
Coil primary (terminals 15 and 1) 0.7 ....1.2 Ohm (note tester lead resistance).
Coil secondary (terminals 1 and 4) 6.9 ....11.9 k Ohm.
Sealing plug is O.K. and there is no leakage of resin?
Resistance values are correct?

No →
1. If sealing plug is missing or in case of resin leakage; **replace coil**.
2. If resistance values are incorrect, replace coil.

Yes ↓

Engine runs O.K.?

No →
1. **First check**
Remove distributor cap and dust cover.
Bring piston of cylinder no. 1 to T.D.C.
Distributor rotor arm must be positioned so that the center of the arm faces the reference mark of piston no. 1.
Distributor is timed?

Yes ↓

Yes ↓

Yes

2. Second check
Disconnect negative and positive battery terminals. Remove power module connector.
Switch on ignition.
1. Check resistance of conductors across battery positive terminal and power module connector terminal 4 including conductors across negative terminal to power module connector terminal 2.
   Total resistance <0.5 Ohm (note resistance of probes and associated leads).
   If this is not the case replace the cables.
2. Check resistance of conductors across battery positive terminal and coil terminal 15, as well as that of conductor from coil terminal 1 to power module connector terminal 1.
   Overall resistance < 0.5 Ohm (note resistance of probes and associated leads).
   If this is not the case replace the cables.

If first and second checks are O.K., replace power module.

Yes

Check static advance.
Disconnect vacuum hose from ignition distributor
Start engine and run at idle 950 ± 50 RPM
Static advance should be 2° ± 1° B.T.D.C.
Static advance is correct?

No → Loosen the nut securing the distributor and turn the distributor until reaching 2° ± 1° before TDC.

Yes

Check ignition temperature sensor electrical leads.
Ground the temperature sensor electrical connection using an auxiliary lead.
Remove the ignition ECU 4-pole connector.
Connect Ohmmeter to advance ECU 4-pole connector terminal C and to ground.
Ohmmeter should indicate a resistance value of approx. 0 Ohm.

No → Remedy open circuit across advance ECU 4-pole connector terminal C and ignition temperature sensor.

Yes

Check ignition temperature sensor.
Remove ignition advance ECU 4-pole connector.
Connect Ohmmeter across advance ECU 4-pole connector terminal C and ground.
With engine cold, temperature < 38° ± 3°C (100° ± 5.4°F) resistance 0 Ohm?
With engine hot, temperature > 38° ± 3°C (100° ± 5.4°F) resistance ∞ Ohm (circuit interrupted)?

No → Replace ignition temperature sensor.

Yes

Yes

Check throttle switch control voltage

1. Connect voltmeter across removed ignition advance ECU 4-pole connector terminal A and ground (throttle in idling position).
   Turn on ignition.
   Voltmeter reading should be over 2.8 V.
2. Connect voltmeter across removed advance ECU 4-pole connector terminal B and ground.
   Turn on ignition.
   Fully depress accelerator pedal.
   Voltmeter reading should be over 2.8 V.
   In checks 1 and 2 above, voltage is correct?

No →

1. If voltage is below 2.8 V, check L-Jetronic injection ECU.
2. If there is no voltage, unplug throttle switch connector. Connect Ohmmeter across terminals 2 and 18 of throttle switch.

Throttle closed

Resistance 0 Ohm approx.
With infinite resistance, adjust throttle switch first.
To this end, slacken retaining screws, turn throttle switch until idling contact (micro-switch) is heard to click (reading 0 Ohm).
If resistance is still infinite, replace throttle switch.
Check adjustment.
Open throttle slightly.
Idling contact should be heard to click (reading: ∞ Ohm).

3. Connect Ohmmeter to throttle switch terminals 3 and 18.

Open throttle fully

Resistance 0 Ohm approx.
If resistance is infinite, replace throttle switch.
If resistance readings of paras. 2 and 3 are 0 Ohm approx., check for open circuits across advance ECU 4-pole connector terminals A and B and throttle switch connector terminals 2 and 3.
Remedy any open circuit conditions.

Yes

Check advance angle

1. **Advance angle with engine warm at part throttle.**
   Remove advance ECU connector.
   Disconnect vacuum hose (distributor).
   At 3000 rpm advance should be 12° to 18°.
2. **Advance angle with engine cold at part throttle.**
   Insert advance ECU connector.
   Ground the temperature switch electrical connection using an auxiliary lead.
   At 3000 rpm advance should be 6° to 9°.
   In checks 1 and 2 above, advance was correct?

No → Replace advance ECU

No Spark? Start Here!

Yes

Check power module supply voltage

Back off rubber insulator on power module.
Connect voltmeter to power module connector terminals 4 and 2 with the tester probes.
Run engine at idling speed.
The voltage reading should be 12 to 14 V and may be 2 V max. below battery voltage.
Is voltage reading correct?

No →

Disconnect negative and positive battery terminals. Remove power module connector.
Switch on ignition.
Check resistance of conductors across positive battery terminal and power module connector terminal 4 including conductors across negative terminal to power module connector terminal 2.
Total resistance < 0.5 Ohm (note resistance of probes and associated leads).
If this is not the case replace the cables.

Yes

Yes

Check coil supply voltage
Connect voltmeter to coil terminal 15 and to battery negative.
Run engine at idling speed.
The voltage reading should be at least 10 V.
Is voltage reading correct?

No →

Check resistance of conductors across battery positive terminal and coil terminal 15, as well as that of conductor from coil terminal 1 to power module connector terminal 1.
Overall resistance < 0.5 Ohm (note resistance of probes and associated leads).
If this is not the case replace the cables.
If checks are O.K. replace power module.

Yes

Check distributor plug and receptacle
Visual inspection
Disconnect distributor plug and check that contacts are not oxidized or stuck (remedy any defects as necessary).
Insert distributor plug. If defects are not remedied, proceed with subsequent checks.

Yes

Check pulse generator voltage input
Insert power module connector. Back off rubber sheath from pulse generator connector.
Connect voltmeter across terminals + and −.
Turn on ignition.
Voltmeter reading should be over 6 V.
Is voltage reading correct?

No →

Remove distributor connector and advance ECU connector.
Use the Ohmmeter to carry out the following checks in succession across

1. **Distributor connector** — **Advance ECU connector**
   Terminal + and Terminal 8h
   Terminal − and Terminal 31d (next to terminal 15)

   In each case ohmmeter should indicate resistance approx. 0 Ohm. Remedy any open circuit.

2. **Advance ECU connector** — **Power module connector**
   Terminal 31d and Terminal 3
   Terminal 15 and Terminal 4

   In each case ohmmeter should indicate resistance approx. 0 Ohm. Remedy any open circuit condition. If no open circuit is detected during checks under 1 and 2, replace the advance ECU.

Yes

Check **pulse generator operation**
Power module and advance ECU connector inserted. Back off rubber sheath on distributor connector.
Connect oscilloscope ~~in "special" position according to operating instructions.~~ Primary Pick-ups.
Red terminal with probe to terminal 0 of distributor connector (measurement signal).
Black terminal to ground.
Start engine.
Oscilloscope must indicate a square wave pulse.
Is square wave signal indicated?

No → Replace pulse generator or distributor

Yes

Yes

Check ignition advance ECU
Back off rubber sheath on power module connector.
Connect oscilloscope, ~~in "special" position, according to operating instructions~~. Primary Pick-ups.
Red terminal with probe to terminal 5 of power module connector (measurement signal).
Black terminal to ground.
Start engine.
Oscilloscope should indicate a square wave pulse.
Is square wave pulse indicated?

No

Disconnect distributor and advance ECU connector.
Connect Ohmmeter successively across:

1. **Distributor connector** Terminal 0 and **Advance ECU connector** Terminal 7h
2. **Advance ECU connector** Terminal 7 and **Power module connector** Terminal 5

In each case Ohmmeter must indicate flow of current.
Remedy open circuit condition.
If no open circuit condition is found, replace advance ECU.

Yes

Replace power module.
Check ends here
NOTE: If defects persist check for possible defects in fuel system or mechanical defects in the engine.

IGNITION SYSTEM DIAGNOSTICS

V8 milano ⊕ *model only*

For the electrical references see: Group 05 - Electrical System -Engine Ignition.

Engine fails to start

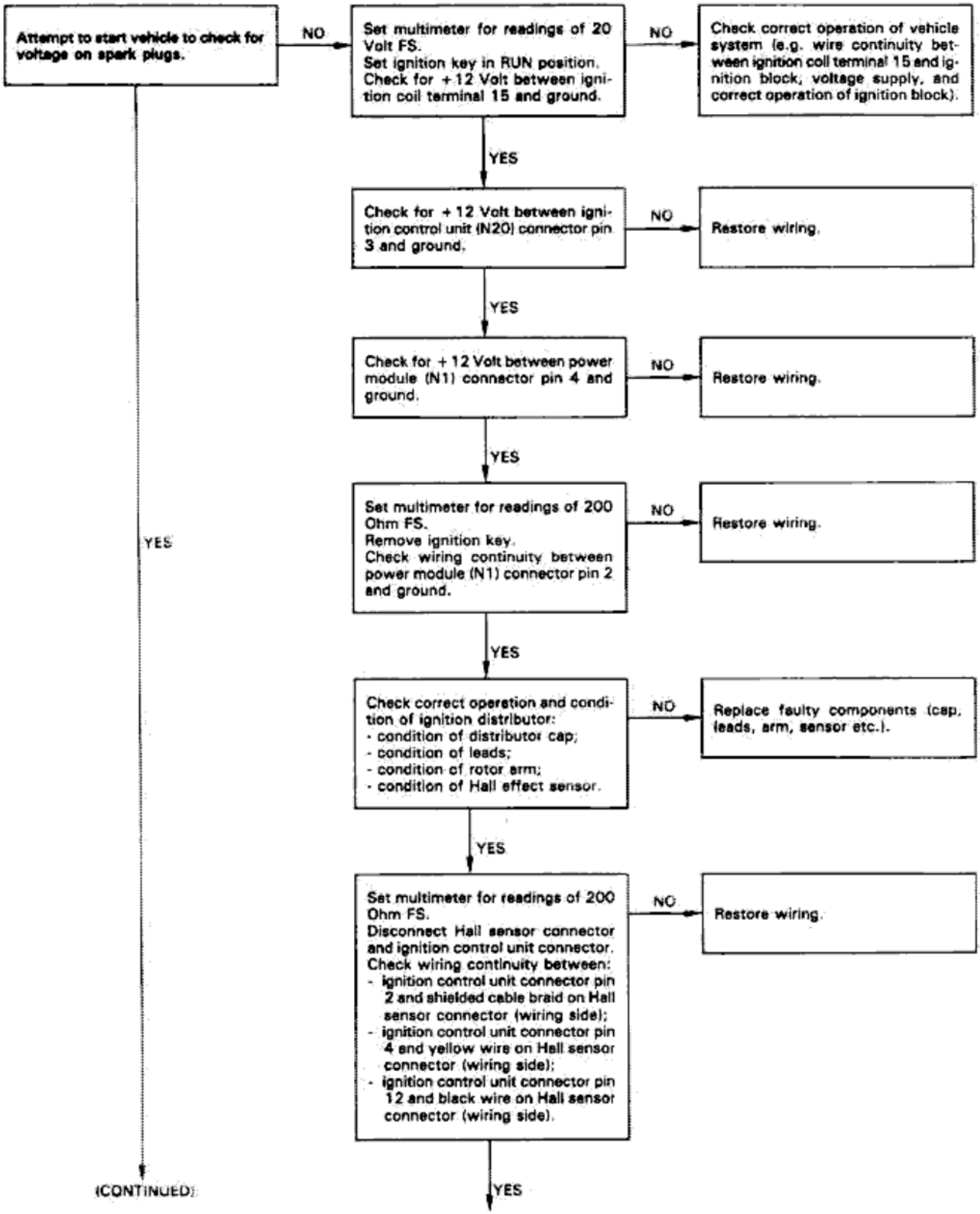

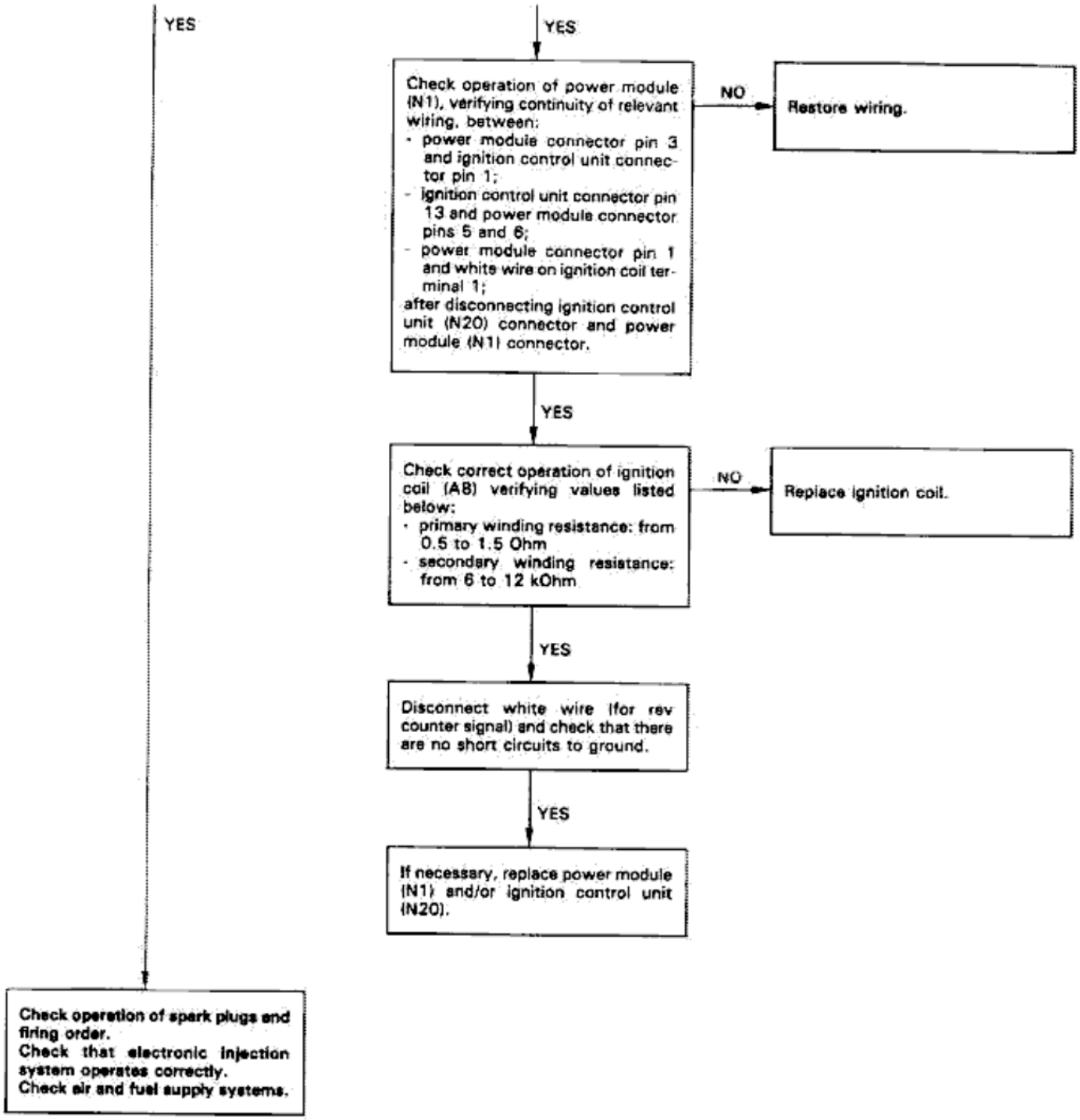
YES
YES
Check operation of power module (N1), verifying continuity of relevant wiring, between:
- power module connector pin 3 and ignition control unit connector pin 1;
- ignition control unit connector pin 13 and power module connector pins 5 and 6;
- power module connector pin 1 and white wire on ignition coil terminal 1;
after disconnecting ignition control unit (N20) connector and power module (N1) connector.
NO
Restore wiring.
YES
Check correct operation of ignition coil (A8) verifying values listed below:
- primary winding resistance: from 0.5 to 1.5 Ohm
- secondary winding resistance: from 6 to 12 kOhm
NO
Replace ignition coil.
YES
Disconnect white wire (for rev counter signal) and check that there are no short circuits to ground.
YES
If necessary, replace power module (N1) and/or ignition control unit (N20).
Check operation of spark plugs and firing order.
Check that electronic injection system operates correctly.
Check air and fuel supply systems.

Ignition advance variation check

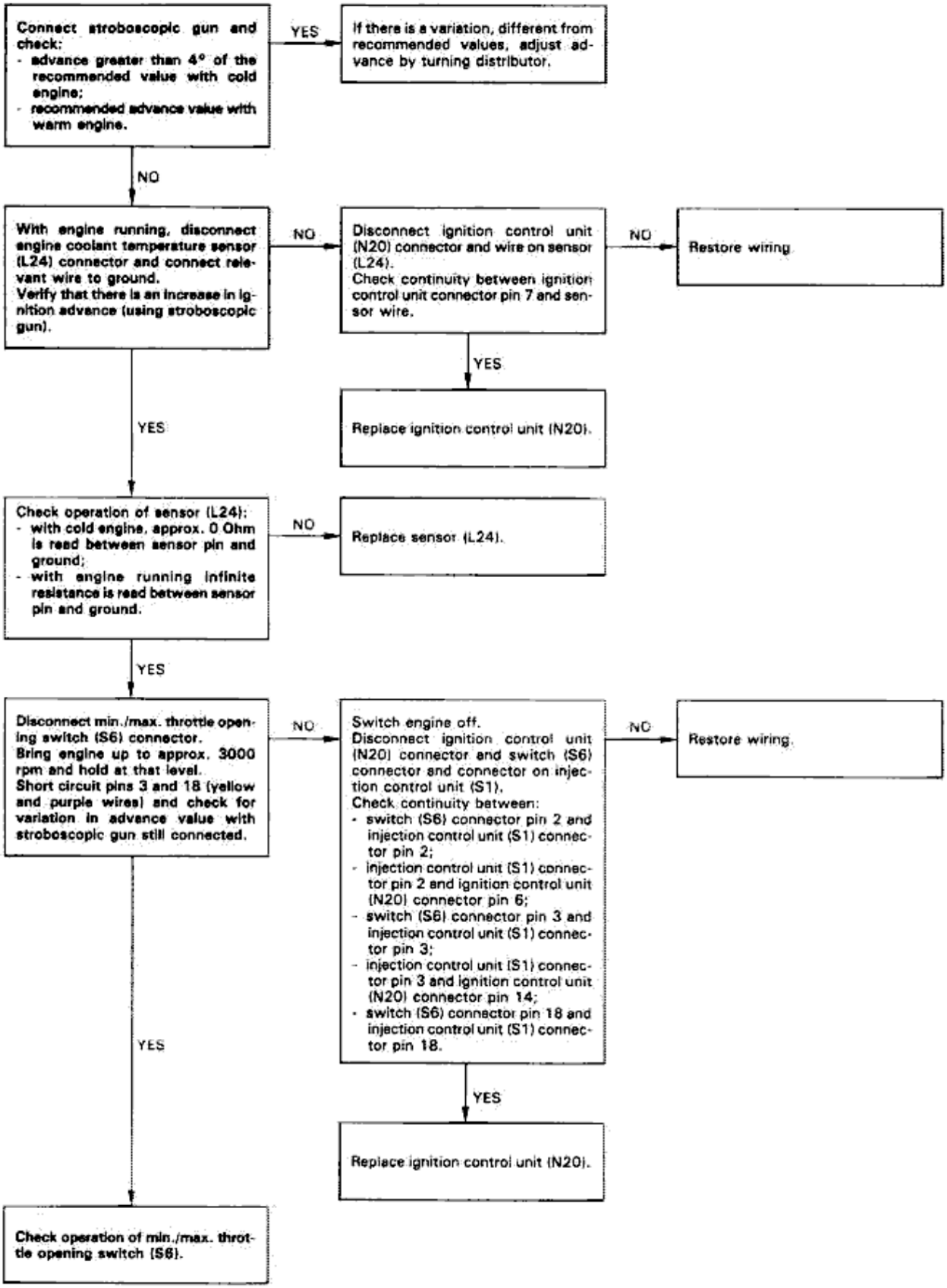

Model XR milano

INJECTION WIRING DIAGRAM

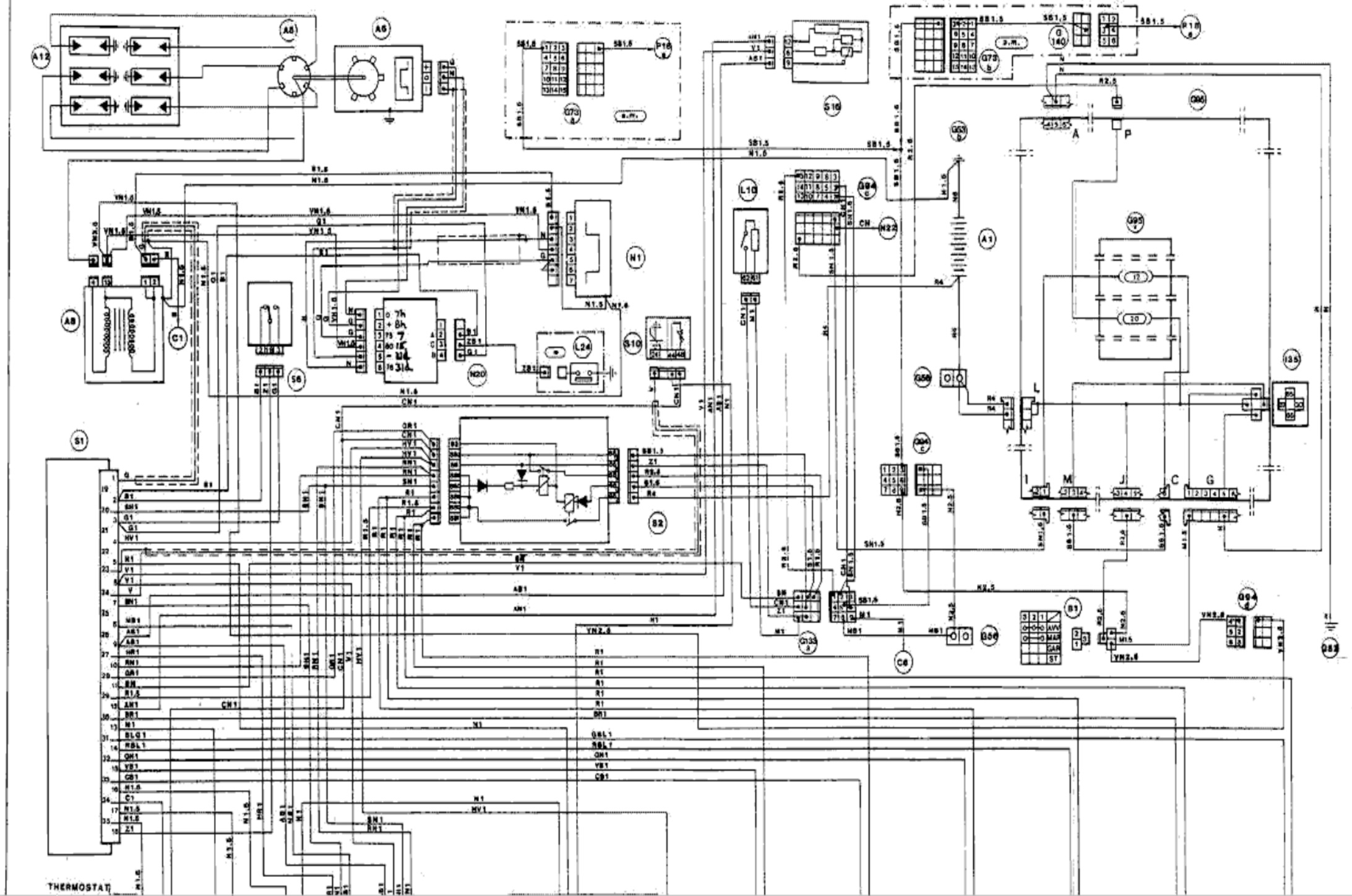

Model YB milano

INJECTION WIRING DIAGRAM

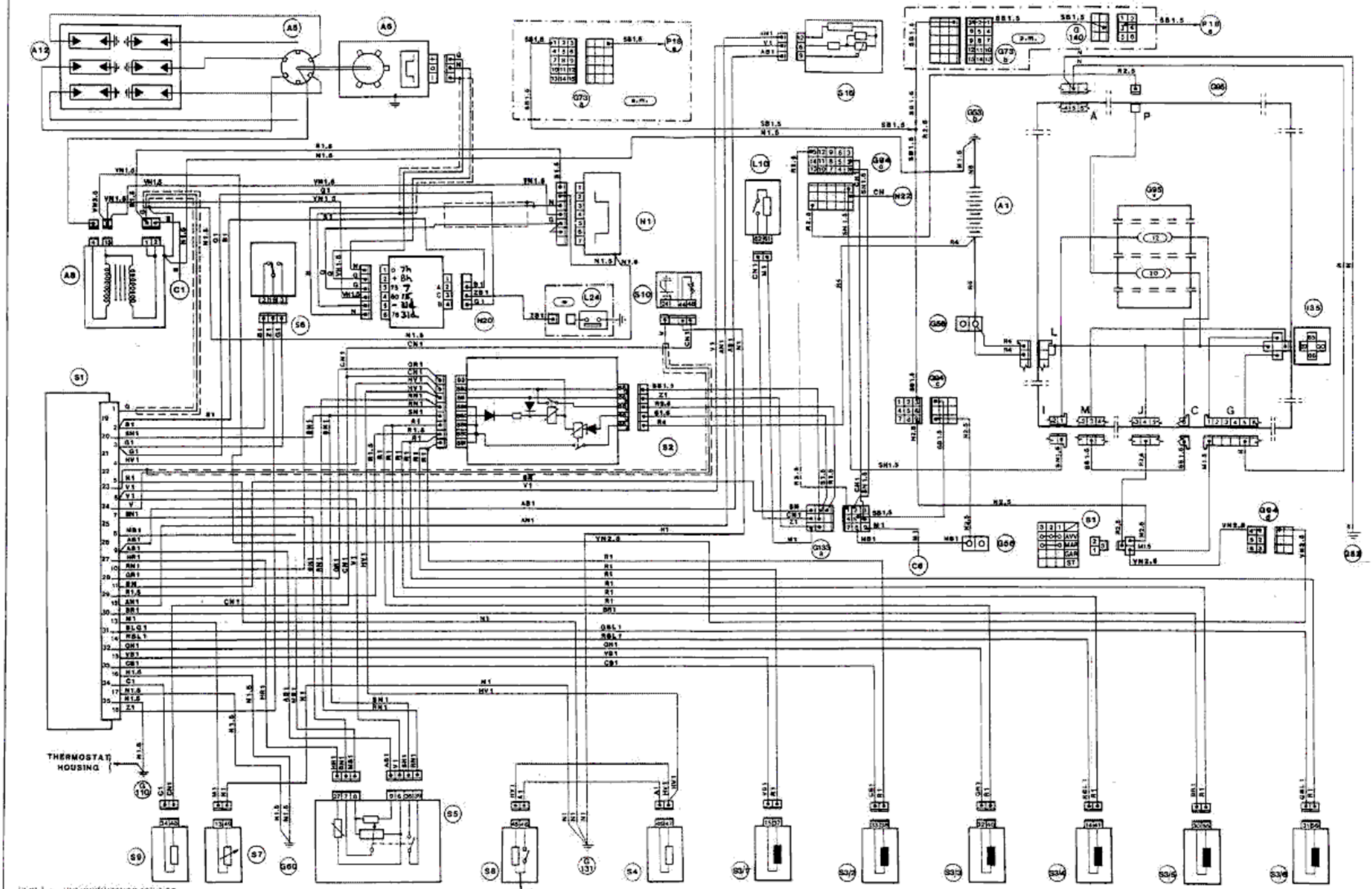

(a.m.) = pre-modification solution
(n.m.) = post-modification solution
(*) Applicable only for vehicles equipped with engine coolant temperature sensor

Model V8 milano

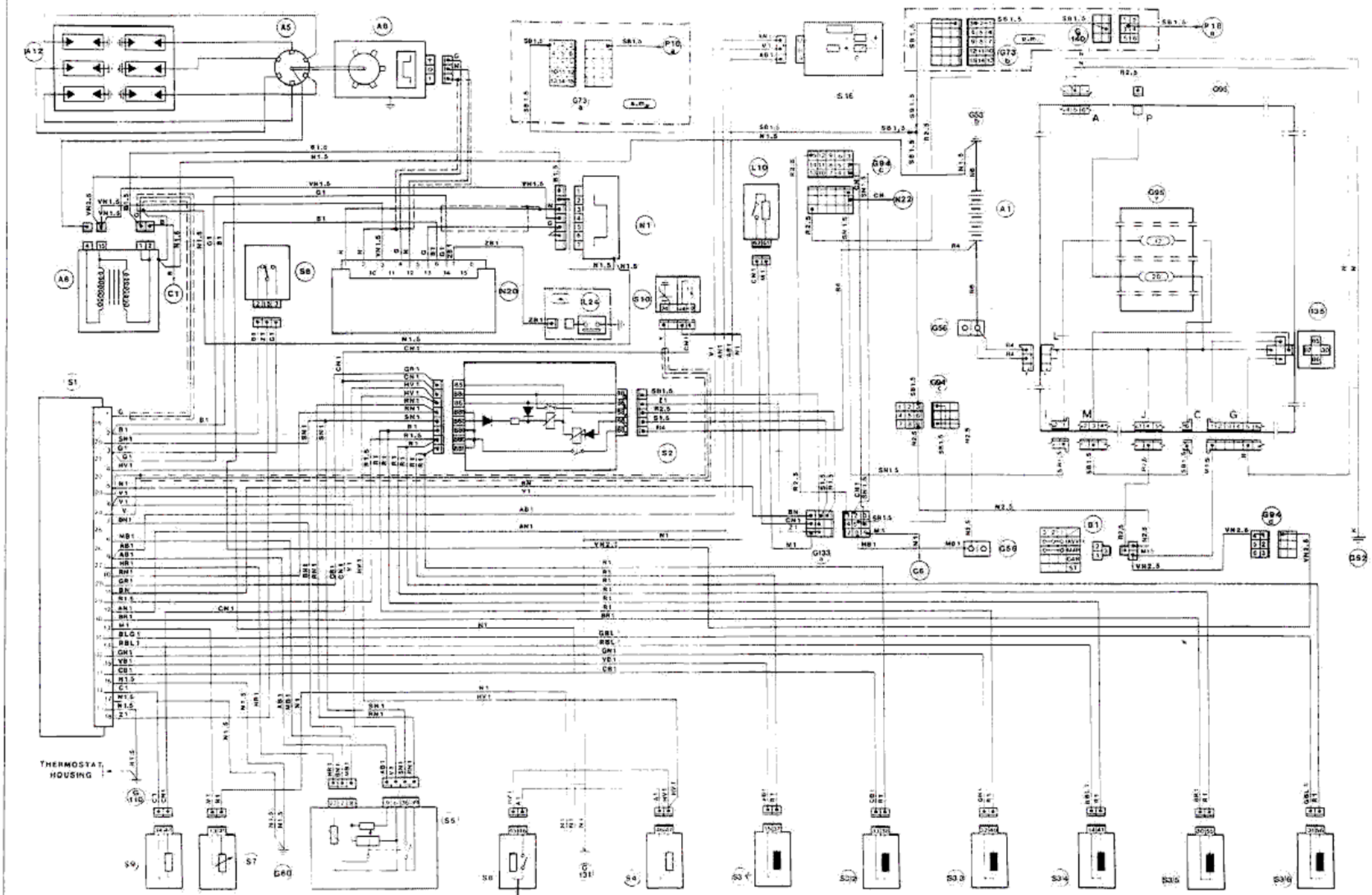

(a.m.) = pre-modification solution
(p.m.) = post-modification solution
(*) Applicable only for vehicles equipped with engine coolant temperature sensor

MAINTENANCE OF MECHANICAL COMPONENTS AND BODY

CLUTCH

CHECK ON CLUTCH-BRAKES FLUID LEVEL AND CHECK ON THE SYSTEM

Check that the level corresponds to the max mark on tank (2). Top up, if necessary, with the specified fluid. Check master cylinder (1) and operating cylinder for any oil leaks.

Clutch - brakes fluid
ATE "S"
AGIP Brake Fluid Super HD
IP Auto Fluid FR

If required, tighten unions to the specified torque, or overhaul or replace the components.

τ : **Tightening torques**
Clutch piping
- **Hoses**
  10 to 15 N·m
  (7.4 to 11 ft·lb; 1 to 1.5 kg·m)
  Pipes
  8 to 10 N·m
  (5.9 to 7.4 ft·lb; 0.8 to 1 kg·m)

Check that clutch push-on boot is intact.

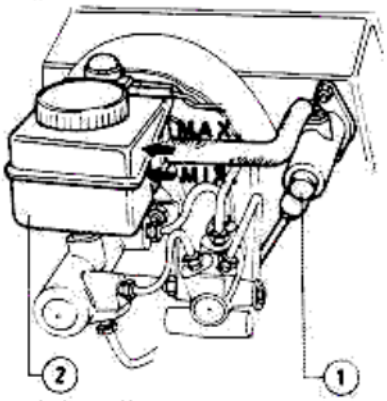

1 Clutch master cylinder
2 Clutch - brakes fluid tank

GEARBOX DIFFERENTIAL

1. Oil level check

Remove filler plug (1) and check that oil level reaches the lower edge of the related hole. Top up if necessary with the specified oil; clean plug and tighten it.

2. Oil change

1. Remove drain plug (2) from sump and filler plug (1).
2. Drain the oil completely (wait **15 minutes** at least); then clean drain plug (2) and tighten it.
3. Fill with the quantity and quality of oil specified through filler hole.

Gearbox - differential fluid
Type
AGIP Rotra MP SX SAE 75 W/90
IP Pontiax HDS SAE 75 W/90
SHELL Spirax HD 80 W/90

Quantity
2.070 kg (4.56 lb)

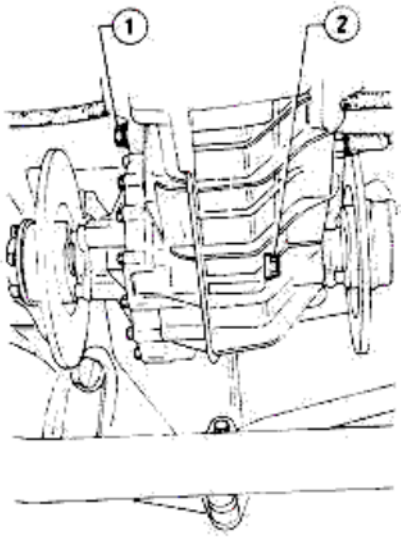

1 Filler plug
2 Drain plug

TRANSMISSION

1. Propeller shaft

Visually inspect that front, rear and central joints and central support are in good condition.

2. Drive shafts

Check that boots are free from damage and grease leaks. Replace them if necessary. Also check that constant velocity joints are in good condition.

FRONT AXLE AND SUSPENSION

CHECK

1. Set vehicle on lift.
2. Check for good condition and degree of wear suspension components.
   Replace all the worn components.
3. Check tightening of bolts and nuts (refer to Service Data and Specifications). If bolts and nuts are loosened, set the vehicle to nominal height corresponding to static load (refer to: Check on Vehicle Height) and tighten the bolts and nuts loosened to the specified torque.
4. Check shock absorbers for any oil leaks or damage.

ADJUSTMENT OF WHEEL BEARINGS PRELOAD

After replacement or disassembly of bearings, carry out the related adjustment operating as follows. For bearing replacement refer to: Group 21 - Steering Knuckles and Wheel Hubs.

Grease bearings with the prescribed quantity of grease.

1. Lock the nut securing hub to
   20 to 24 N·m
   (15 to 18 ft·lb; 2 to 2.5 kg·m)
   torque, rotating hub, at the same time, by **4 to 5 turns** to facilitate bedding of bearings into their seats and to prevent bevel races from being damaged by rollers.
2. Loosen nut and re-tighten it to the prescribed torque
   5 to 10 N·m
   (3.7 to 7.4 ft·lb; 0.5 to 1 kg·m)
   by means of torque spanner.

3. Adjust the front wheel hub bearing preload.

3a. *Vehicles not equipped with ABS wheel anti-lock system.*

(1) Unscrew nut by **90°** and insert the split pin. If the nut notch and the hub support hole are not aligned, screw the nut to the minimum angle required to insert the split pin.

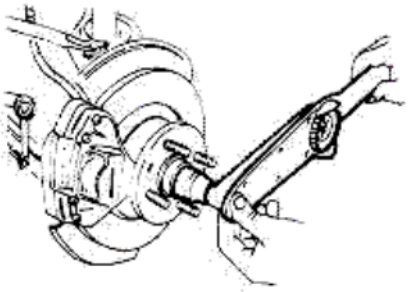

(2) By means of a mallet, strike the hub support end, and verify that washer is not blocked (washer shall result to be easily movable, by using a screwdriver as a lever, between washer and hub).

Should the washer be blocked, remove split pin and unscrew the nut enough to allow the split pin to be inserted into the hole on hub support, perpendicular to that previously used.

Strike the hub support end with a mallet; then repeat the washer backlash chek.

3b. *Vehicles equipped with ABS wheel anti-lock system.*

(1) Mount a dial gauge on a magnetic base (or on a suitable support) so that its probe is aligned along the steering knuckle axis.

Preload the dial gauge by 1 mm (0.04 in) approx.

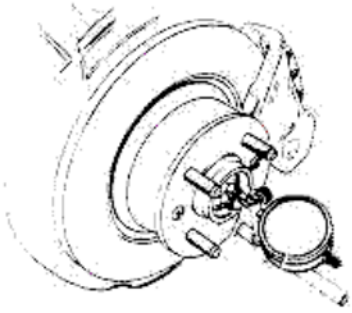

1

1 Dial gauge

(2) Move the wheel hub backwards and forwards and read backlash indicated on the dial gauge; this value must be within the prescribed values.

Front hub bearings backlash
G = 0.02 to 0.12 mm
(0.00079 to 0.00472 in)

(3) Refit the split pin as follows:
- If the backlash value is within **0.02 to 0.06 mm (0.00079 to 0.00236 in)** unscrew the nut until the split pin can be inserted.
- If the backlash value is within **0.06 to 0.12 mm (0.00236 to 0.00472 in)** screw the nut until the split pin can be inserted.

(4) Bend the split pin back and refit the hub cover.

REAR AXLE AND SUSPENSION

CHECK

1. Set vehicle on lift.
2. Check for any loosening, wear or damage in the components of rear axle and suspension.
Replace all the worn components.
3. Check tightening of bolts and nuts (refer to: Service Data and Specifications). If bolts and nuts are loosened, set the vehicle to nominal height corresponding to static load (refer to: Check on Vehicle Height), and tighten the bolts and nuts loosened to the specified torque.
4. Check shock absorbers for any oil leaks or damage.

CHECK ON VEHICLE HEIGHT

PRELIMINARY OPERATIONS

a. Set vehicle in running order, with fluids at max level, plus spare wheel.
b. Check that tire pressure is that specified.
c. Set vehicle on lift.
d. Load the vehicle, arranging loads as per figure.

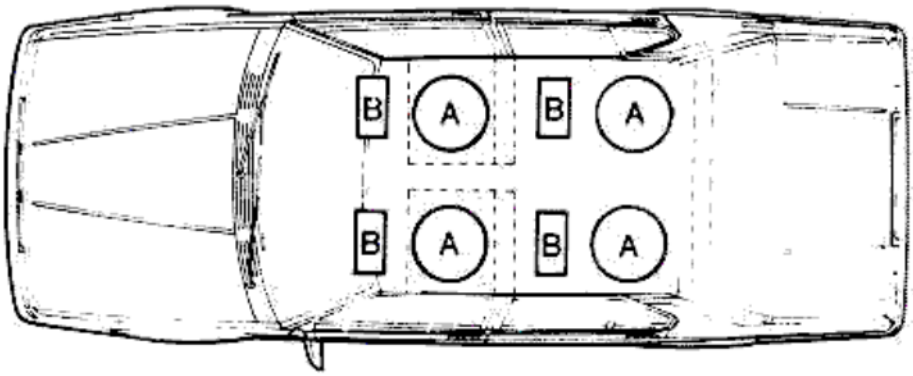

Static load equivalent to four passengers

Load equivalent to one passenger
A + B = 490 + 245 = 735 N
(50 + 25 = 75 kg; 110 + 55 = 165 lb)

e. Raise vehicle, disconnect antiroll bars of front and rear suspensions, front and rear shock absorbers, and loosen the bolts which secure the Watt parallelogram struts to body.
f. Shake vehicle a few times in order to obtain a good setting of suspensions.

FRONT HEIGHT

Check the front height measuring dimensions **A** and **B** shown in the figure

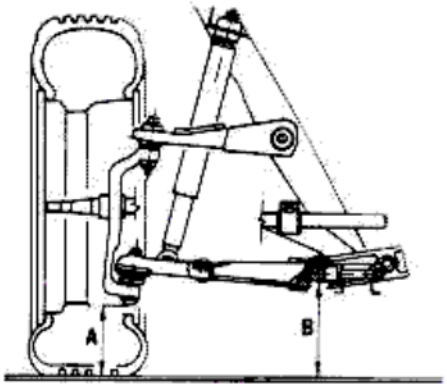

Front height dimension
B - A = 44 ± 5 mm (1.732 ± 0.197 in)

The dimension measurement is to be carried out for the front right suspension as well as front left suspension.
The difference in values between right and left suspensions must not exceed 5 mm (0.197 in).

Dimension measurement

Measure dimensions **A** and **B**, using the tools mentioned below and setting the tester's graduated movable stem in the fully withdrawn position.
- Tool **A.4.0146**
- Tool **A.4.0149**
- Tool **A.4.0151**

Dimension A measurement

1. Position tool **A.4.0146** on the vehicle resting plane.
2. Screw probe (1) into upper hole of tool (2) head. Release screws (4) and (5), then tighten screw (3) with the graduated stem fully withdrawn. Rest the tool on the outer plane of ruler and skim lower end of hub support with the upper part of probe, as shown in the figure.
3. Tighten screws (4) and (5); the tool is now reset.

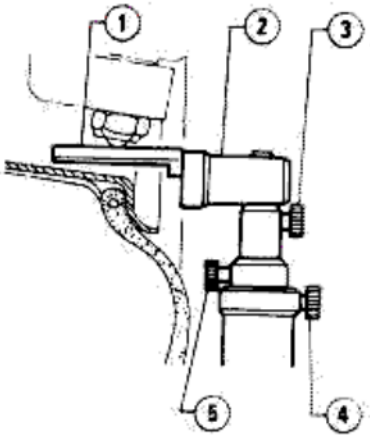

1 Probe
2 Tool for suspension height check
3 Screw
4 Screw
5 Screw

Dimension B measurement

4. Move tool (1) on inner plane of ruler; release screw (2), withdraw the graduated stem until it skims the lower part of lever support with probe (3) head, as shown in the figure; then tighten screw (2).

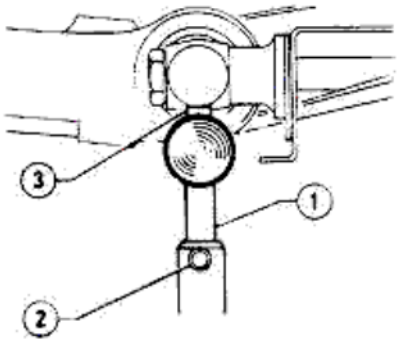

1 Tool for suspension height check
2 Screw
3 Probe

Measure the real dimension of front height on the graduated stem, in correspondence with the upper edge of sleeve.

E = B − A

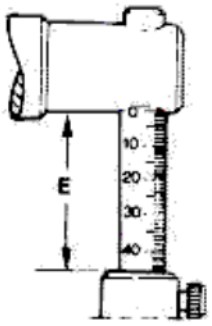

REAR HEIGHT

Check the rear height by measuring, with a surface gauge, placed on a ruler parallel to floor plane, the **C** and **T** dimensions specified, obtained by tracing three straight lines parallel to floor plane, through points 1, 2 and 3, respectively (refer to the following figure).

Points 1 and 3

Axis of the bolt securing Watt parallelogram to body.

Point 2

Axis of the bolts securing Watt parallelogram to rigid axle.

Dimension T measurement

By means of a surface gauge, meausre dimensions **X** and **Y**, as indicated in the following figure.
The **T** dimension is the difference obtained from **X − Y**.

Dimension C measurement

By means of a surface gauge, measure dimension **Z**, as indicated in the figure.
The **C** dimension is the difference obtained from **Y − Z**.

Vehicle rear height dimensions
T = x − y = 83 ± 5 mm (3.27 ± 0.2 in)
C = y − z = 13 ± 5 mm (0.51 ± 0.2 in)

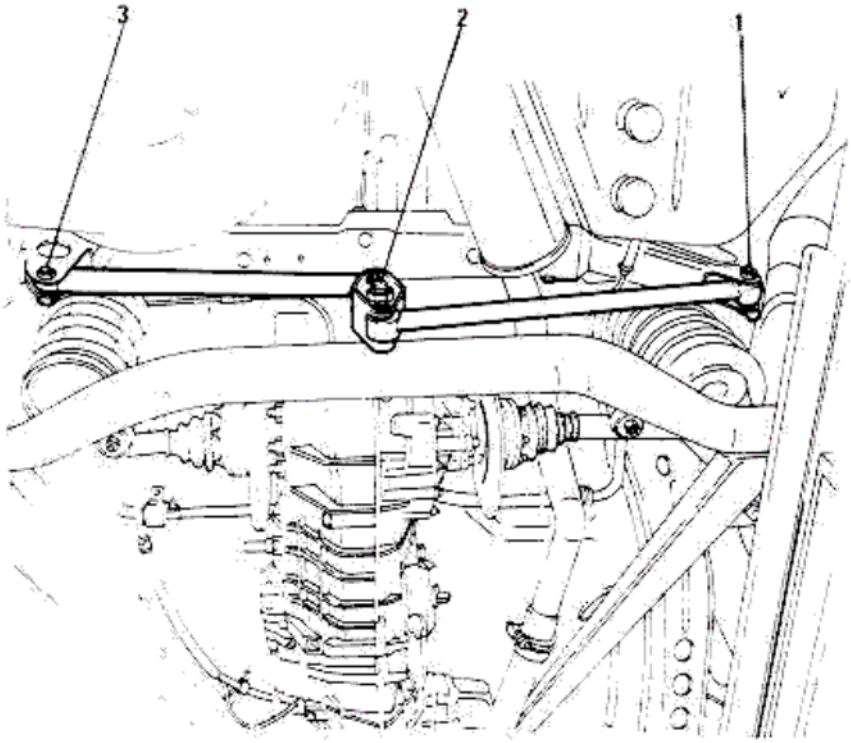

Front height

This adjustment is obtained by rotating the torsion bars with respect to the references on front levers and on rear housings. The different number of teeth of the torsion bar ends (front: **35 teeth**, rear: **34 teeth**), permits a minimum height adjustment (on both couplings) of about **2.5 mm (0.1 in)** to be obtained when moving torsion bars by one tooth. The diameter of torsion bars mounted on the vehicle in object is **22.8 mm (0.90 in)**.

To correct the vehicle height, operate as per the table below, taking into account that the indications refer to the suspensions seen from the rear side.

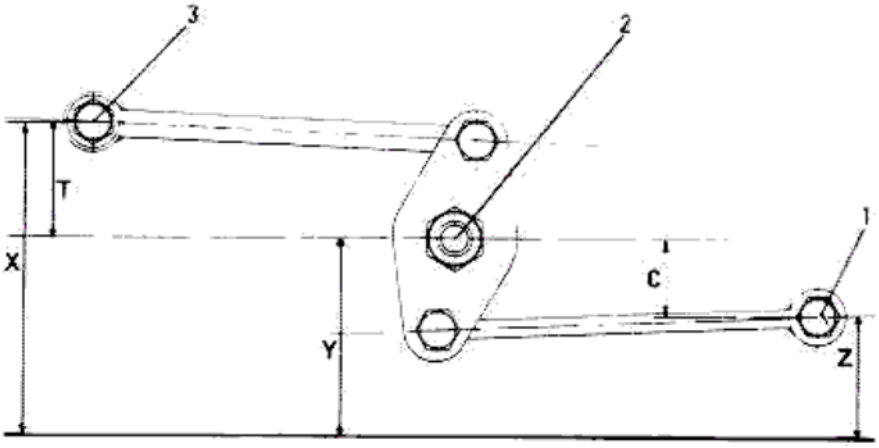

ROTATION DIRECTION OF TORSION BARS FOR HEIGHT ADJUSTMENT

Adjustment / Heights	Left torsion bar	Right torsion bar
Lower height	Counter-clockwise rotation	Clockwise rotation
	The height dimension increases	
Upper height	Clockwise rotation	Counter clockwise rotation
	The height dimension decreases	

HEIGHT ADJUSTMENT

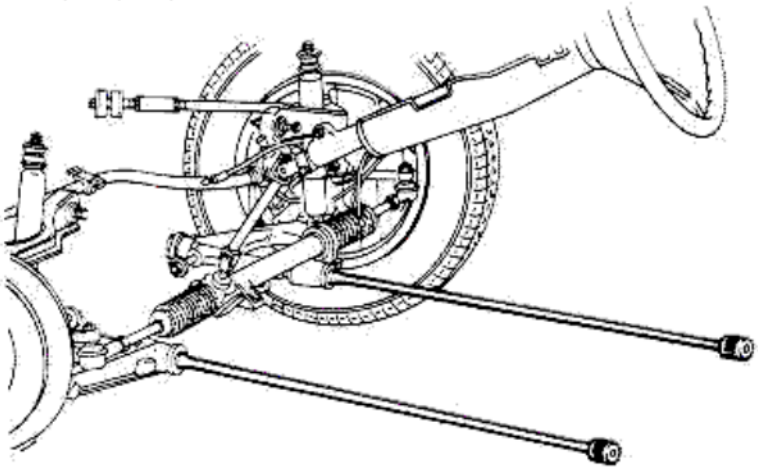

If basic torsion bars are to be replaced, refer to Group 21 - Service Data and Specifications - General Specifications - Basic Bar Replacement.

Rear height

This adjustment is to be carried out by shimming the springs; to do this proceed as follows:

1. Detach axle shaft from wheel side, disconnect the struts connecting Watt parallelogram to body, raise vehicle with a column lift fitted with tool **A.2.0075**, support vehicle with stands and remove wheels.
2. Lower the lift and axle until springs are completely unloaded.
3. Restore the height values by inserting the required shims (1) between upper pillow and body. Shims are available as spare part, with the following dimensions:

7 – 14 – 21 mm
(0.276 – 0.552 – 0.8268 in)

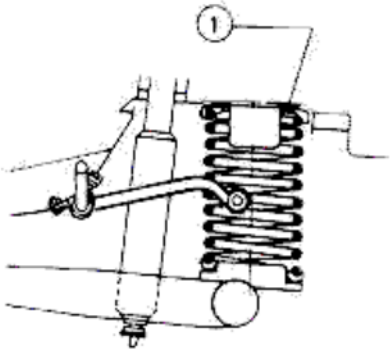

1 Adjusting shims

4. If **21 mm (0.8268 in)** adjustment is exceeded, the springs should be replaced: the replaced spring must be of the same type.

5. Reconnect the detached parts by reversing the order of removal. Take the utmost care when securing the Watt parallelogram struts to body; this operation, in fact, is to be carried out with the vehicle in the nominal height conditions.

WHEEL ALIGNMENT

CHECK ON FRONT WHEELS ALIGNMENT

To carry out the check and adjustment of front wheels alignment, perform the following preliminary operations.

a. Check that tire pressure is that specified (refer to: Wheels and Tires).
b. Set the vehicle to the nominal height corresponding to the static load.
c. Measure the front height dimension **E** and dimensions **C** and **T** related to rear height (refer to: Check on Vehicle Height).
d. Check for any rim deformation.
e. Lock the brake pedal in the fully pressed position in order to prevent wheels from turning, when moving them from side to side on rotating plates.
f. Shake the front part of the vehicle to allow the silent blocks to fall into their natural position.

1. Toe-~~out~~ IN

On aligned wheels, check that the steering wheel spokes are centered. If required, withdraw the steering wheel and center the spokes.

a. Using suitable equipment check that the toe-~~out~~ IN value is that specified.

Toe-~~out~~ IN valve

E - D mm (in)	Angle α	Rim diameter mm (in)
1 ± 1 (0.040 ± 0.040)	0°08'	390 (15.4)

The following condition related to tie rod length equality is also to be checked.

G = H

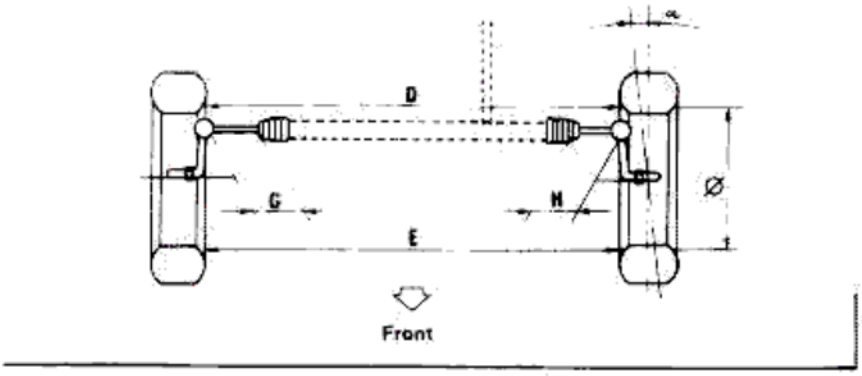

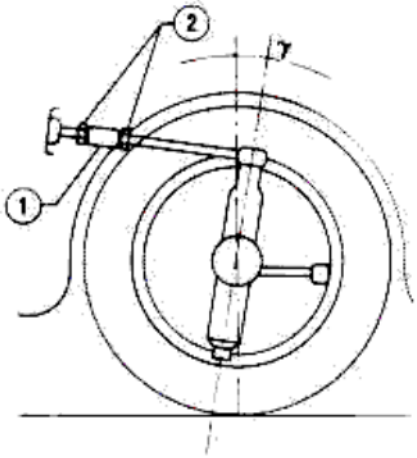

1 Bush
2 Lock nuts

b. If required, adjust the toe-out value, as follows.

- Release lock nuts of steering rods.
- Rotate the side tie rods suitably until the specified toe-out value is obtained.
- Tighten the lock nut to the specified torque.

(T) : **Tightening torque**
Lock nut securing ball joint on steering rod
54 to 88 N·m
(40 to 65 ft·lb;
5.5 to 9 kg·m)

c. Re-check the toe-out value. The toe-out value varies by ~ **35'** on one wheel (**3.5 mm; 0.138 in** – on dimension **D-E**) when rotating one steering rod by one turn.

2. Camber angle

Checking is to be performed on both wheels.

$$\beta = -30' \pm 30'$$

The max difference between right and left wheel must be **40'**.
The camber value varies by **15'**, when adding or removing one shim (1).

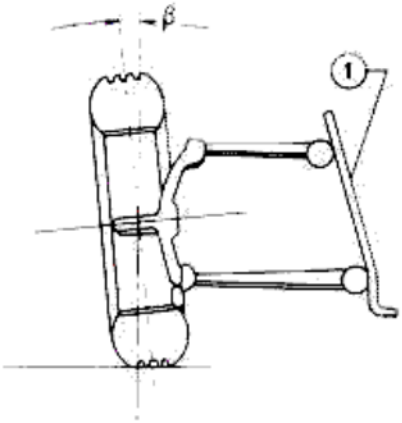

1 Shim

3. Caster angle

Checking is to be performed on both wheels.

$$\gamma = \cancel{2}\ 4^\circ\ 30' \pm 30'$$

The max difference between right and left wheel must be **20'**.
If the caster angle is not that specified adjust by loosening lock nuts (2) and rotating longitudinal arm bush (1).
Each time bush (1) is rotated by 1 turn, a variation of **45'** is obtained on each tire.

Slight caster variations, within the tolerance range allowed, permit a slight drift of vehicle to be adjusted.

4. Steering lock

$$\delta = 30^\circ$$

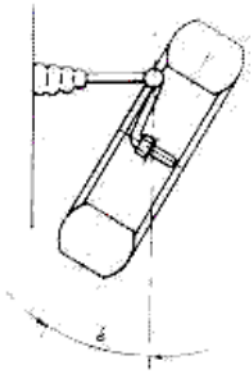

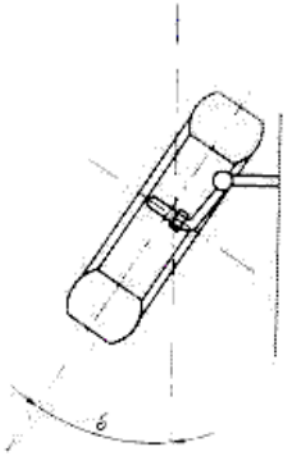

CHECK ON REAR WHEELS ALIGNMENT

The following angles cannot be adjusted.

1. **Toe-in angle**

$\alpha = 0° \pm 10'$

Max difference between right and left wheel

$\Delta \alpha = 10'$

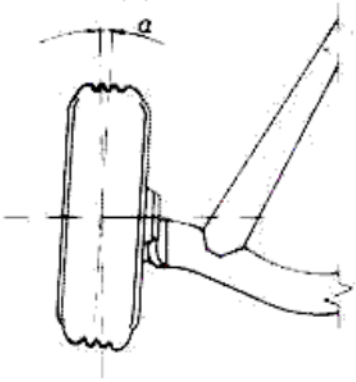

2. **Camber angle**

$\beta = 0° \pm 30'$

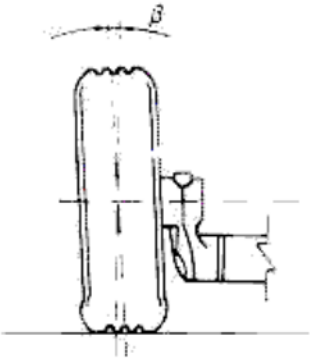

Max difference between right and left wheel

$\Delta \beta = 20'$

FRONT AND REAR BRAKES

BRAKE SYSTEM

1. **Check on brake system**

a. Visually check for any damage and oxidation in the piping of the hydraulic brake system. Also check that piping is correctly secured.
b. Check for any fluid leaks in the hydraulic system unions.
c. If required, tighten unions to the specified torque.

(T) : Tightening torque
- Pipes
  10 to 12 N·m
  (7.4 to 8.8 ft·lb,
  1 to 1.2 kg·m)
- Hoses
  10 to 15 N·m
  (7.4 to 11 ft·lb,
  1 to 1.5 kg·m)

d. Check for restrictions or cracks in the servobrake vacuum intake. Also check that it is correctly secured.

2. **Check on brakes fluid level**

a. Check that the fluid level reaches the max mark indicated on tank.
Top up if necessary, with the proper fluid.

Brakes - clutch fluid
ATE "S"
AGIP Brake Fluid Super HD
IP Auto Fluid FR

b. If fluid level is low, check the braking system to identify any leaks.

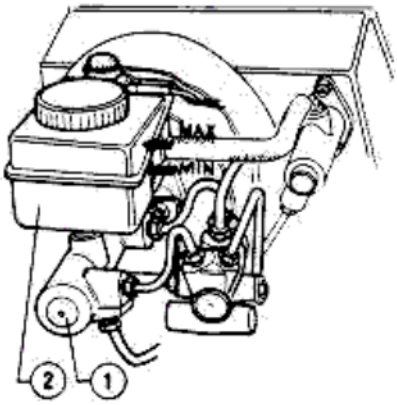

1 Brake master cylinder
2 Clutch-brake fluid tank

3. **Brake fluid draining**

3a. *Vehicles not equipped with ABS wheel antilock system.*
Connect a hose to bleeder screws of front and rear wheels, and drain the brake system fluid into a container.

3b. *Vehicles equipped with ABS wheel antilock system*
Proceed as indicated in step 3a, and drain brake and clutch fluid from the tank as follows:
(1) Remove plug (1) from tank (2)

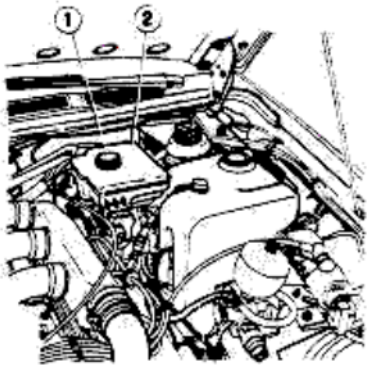

1 Plug
2 Brake and clutch fluid tank
3 Electric pump supply hose

(2) Detach supply hose (2) from electric pump (3) and collect the fluid draining directly from the tank (1) in a suitable container.

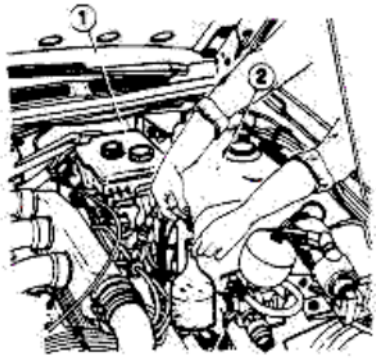

1 Brake and clutch fluid tank
2 Electric pump supply hose
3 Electric pump

CAUTION:
Fluid is corrosive. Do not drop brake fluid on painted surfaces.

4. **System refill**
Refill system with new oil and bleed air from the system. (Refer to: Group 22 - Brake System Bleeding
Use only the specified fluids, taken from original sealed tins to be opened only when ready to use. The filling operation is to be carried out with the filter inserted into tank.

WARNING
If brake pedal travel is long and spongy, it means that air bubbles are present. If so, repeat system bleeding.

Brake booster check

1. Check wear degree of vacuum hose and the related connections. Check also that brake booster is free from dents.
2. Check for any cracks or restrictions in the vacuum intake hose. Also ensure that it is correctly secured.

Front discs / Models	Discs thickness wear limit
V8 milano / V8 milano	S = 20 mm (0.787 in)

FRONT BRAKES

1. Check on pads wear and replacement.

Pads are to be replaced when the related sensors contained in the pads indicate pad wear to the ALFA ROMEO Control.

If pads need to be replaced proceed as follows:

a. Remove front wheels.
b. Remove upper pin and cross-shaped spring of each caliper, and check that pad thickness is not near the min value allowed.
c. If pads are replaced, withdraw the other pin, detach the wear indicator from the connector located in the engine compartment, and disassemble pads.
d. Move pistons backward, check orientation and install the new pads, with the related wear indicator.
e. Insert the first pin, the spring and the second pin; connect the wear indicator.
Install wheels.

2. Check on brake discs

a. With pads disassembled, check degree of wear on brake discs.

REAR BRAKES

1. Check on pad wear and replacement

Pads are to be replaced when the related sensors contained in the pads indicate pad wear to the ALFA ROMEO Control.

If pads need to be replaced proceed as follows:

a. Remove safety springs, pins and springs from rear calipers.
b. Move the pad-disc backlash adjusting devices backward, then withdraw the pads.
Check that pad thickness is not near the min value allowed.
If so, replace them.
c. Install pads directing them with the arrow towards disc rotation, insert pins, springs and safety springs.
d. Adjust pad-disc backlash.

2. Brake disc check

Check degree of wear on brake discs.

Rear discs / Models	Discs thickness wear limit
V8 milano / V8 milano	S = 8 mm (0.315 in)

PARKING BRAKE

ADJUSTMENT

1. Check that the parking brake lever is in the released position.
2. Position nut (1) to eliminate the end play of cable (6), without moving levers (3) from the released position.
3. Tighten lock nut (2).
4. Check that rear wheels locking occurs within the 4th and 6th notch of scroll gear of parking brake control lever.

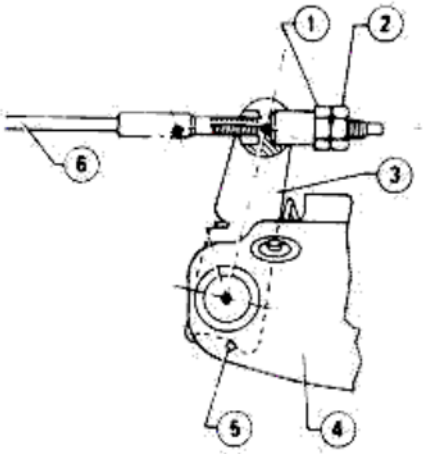

1 Adjusting nut
2 Securing lock nut
3 Plungers control lever
4 Brake caliper
5 Lever end-of travel pin
6 Parking brake control cable

5. Check the following
- With control lever in the released position, the levers will also be in the released position against the end-of travel pin, and the backlash between pads and discs must be that specified (refer to Group 22 Service Data and Specifications - Checks and Adjustments).
- When operating the control lever, the cable must slide freely and no end play must be present
- When parking brake lever is moved one notch, the warning lamp must illuminate and then go off, as soon as lever is set in the rest position
- The parking lever maneuverability, must be easy and smooth and, when the lever is engaged the hooking tooth must enter its seat in the scroll gear without seizing

(ABS) WHEEL ANTI-LOCK SYSTEM

AIR GAP ADJUSTMENT BETWEEN FRONT IMPULSE PICK-UP AND IMPULSE EMITTING WHEEL

- *New impulse pick-up installation*

1. Loosen air gap adjustment screw (1).
2. Push the impulse pick-up against the impulse emitting wheel (a plastic shim with thickness equal to the necessary air gap is located on the impulse pick-up head).
3. Keeping the impulse pick-up against the impulse emitting wheel, tighten the screw adjusting air gap (1) to the prescribed torque.

(T) : **Tightening torque**
Air gap adjustment screw between impulse pick-up and impulse emitting wheel
2.4 to 3 N·m
(1.74 to 2.17 ft·lb;
0.24 to 0.3 kg·m)

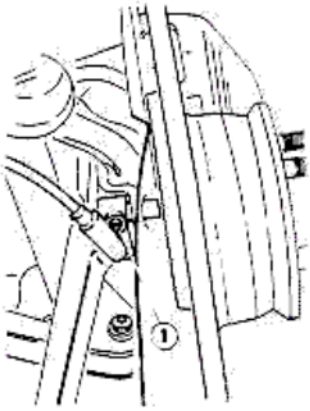

1 Air gap adjustment screw between impulse pick-up and impulse emitting wheel

- *Used impulse pick-up installation*

1. Using a thickness gauge, check that the air gap between impulse pick-up and impulse emitting wheel is that prescribed, performing the same check two or three times with the impulse emitting wheel in different positions.

Air gap between front impulse pick-up and impulse emitting wheel
t = 0.7 mm (0.028 in)

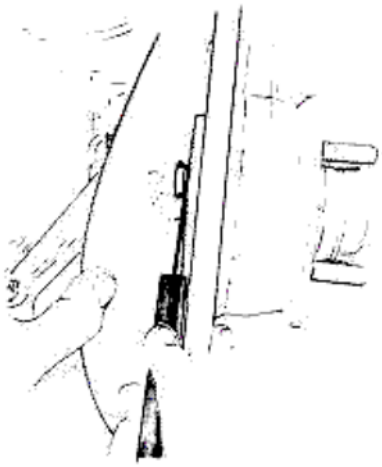

2. If this value is not measured, loosen the screw adjusting air gap (1).

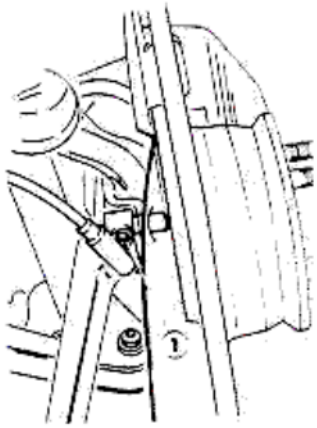

1 Air gap adjustment screw between impulse pick-up and impulse emitting wheel

3. Insert the shim equal to the prescribed air gap (**t = 0.7 mm (0.028 in)**) between impulse pick-up and impulse emitting wheel.
4. Keeping impulse pick-up, shim and impulse emitting wheel together, tighten the adjustment screw to the prescribed torque.

(T) : **Tightening torque**
Air gap adjustment screw between impulse pick-up and impulse emitting wheel
2.4 to 3 N·m
(1.74 to 2.17 ft·lb;
0.24 to 0.3 kg·m)

5. With the impulse emitting wheel in two or three different positions, check that the air gap is that prescribed.

AIR GAP ADJUSTMENT BETWEEN REAR IMPULSE PICK-UP AND IMPULSE EMITTING WHEEL

- *New impulse pick-up installation*

1. Loosen air gap adjustment screw (1).
2. Push the impulse pick-up against the impulse emitting wheel (a plastic shim with thickness equal to the necessary air gap is located on the impulse pick-up head).
3. Keeping the impulse pick-up against the impulse emitting wheel, tighten the screw adjusting air gap (1) to the prescribed torque.

(T) : **Tightening torque**
Air gap adjustment screw between impulse pick-up and impulse emitting wheel
2.4 to 3 N·m
(1.74 to 2.17 ft·lb;
(0.24 to 0.3 kg·m)

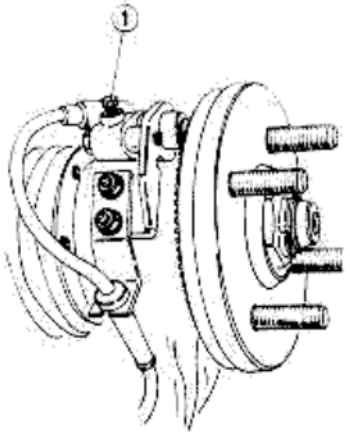

1 Air gap adjustment screw between impulse pick-up and impulse emitting wheel

- *Used impulse pick-up installation*

1. Using a thickness gauge check that the air gap between impulse pick-up and impulse emitting wheel is that prescribed, performing the same check two or three times with the impulse emitting wheel in different positions.

Air gap between rear impulse pick-up and impulse emitting wheel
t = 1.1 mm (0.043 in)

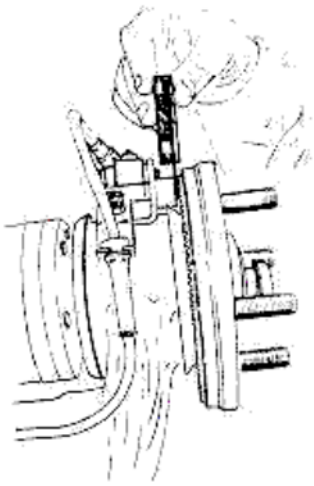

2. If this value is not measured, loosen the screw adjusting air gap (1).

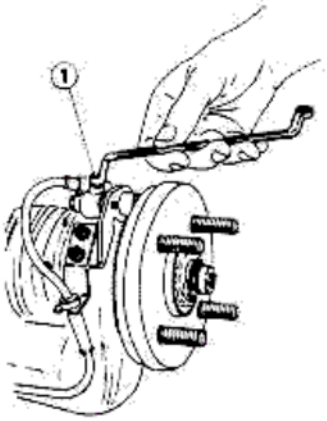

1 Air gap adjustment screw between impulse pick-up and impulse emitting wheel

3. Insert the shim equal to the prescribed air gap **(t = 1.1 mm (0.043 in))** between impulse pick-up and impulse emitting wheel.
4. Keeping impulse pick-up, shim and impulse emitting wheel together, tighten the adjustment screw to the prescribed torque.

(T) : **Tightening torque**
Air gap adjustment screw between impulse pick-up and impulse emitting wheel
2.4 to 3 N·m
(1.74 to 2.17 ft·lb;
0.24 to 0.3 kg·m)

5. With the impulse emitting wheel in two or three different positions, check that the air gap is that prescribed.

STEERING SYSTEM

CHECK ON THE UNIT

1. Check for seizing or stiffness when the steering wheel is moved in both directions.
2. Rotate steering wheel clockwise and counterclockwise, and check for excessive backlash.
3. Tighten (where required) the steering box connection points (refer to: Group 23 - Service Data and Specifications - Tightening Torques).
4. Check rack rubber boots are in good condition, replace them if required.
5. Check ball and flexible joints of steering rods, replace them if worn.

CHECK ON POWER STEERING TANK OIL LEVEL

Check the oil level in the power steering system tank and check system tightness.

Power steering oil

AGIP ATF Dexron II 11297
IP Dexron Fluid II 11297
SHELL Dexron II 10709 D 20137

TIRES

TIRE PRESSURE CHECK

With the tires at ambient temperature check that pressure is at the specified values, restore if necessary (refer to: Wheels and Tires). The spare wheel must be at the highest value.

BODY

LOCKS AND HINGES

1. **Lubricate** locks and hinges.
2. Adjust lock strikers.

SEAT BELTS

WARNING

- **If seat belts are to be washed, do not use chemical detergents or solvents, since they could damage the buckles.**
- **After a serious accident involving belt stress, replace, same, even if apparently not damaged.**

1. Check anchors making sure they are not loose on mountings.
2. Check seat belts degree of wear.
3. Check for proper working condition of buckles and tongues.
4. Fasten seat belts and check if they are promptly locked if a sudden movement occurs.
   If not so, check retractor locking system.

If the condition of any seat belt component is doubtful, replace the whole belt assembly.

T : **Tightening torque**
Seat belt screws
28 to 44 N·m
(20.5 to 32 ft·lb,
2.8 to 4.4 kg·m)

TROUBLE DIAGNOSIS AND CORRECTIONS

TRANSMISSION

Condition	Probable cause	Corrective action
Clutch slips	(Engine r.p.m. does not correspond to vehicle speed, particularly when accelerating or going uphill). (Trouble diagnosis procedure) – **Engage parking brake** – **Press clutch pedal and engage 4th speed** – **Increase engine speed, and gradually release the clutch pedal; if vehicle does not move and engine does not stop, clutch is slipping.**	
	• Gasket worn or wet with oil	Replace the worn components
	• Insufficient load of pressure plate diaphragm spring	Replace pressure plate
Clutch noisy (Trouble diagnosis procedure)		
– Noisy when pressing the pedal	• Thrust bearing and/or support damaged	Replace thrust bearing and/or support
– Noisy when clutch is engaged	• Clutch unit faulty	Check clutch
Noisy with vehicle stationary (clutch checked) (gearbox in neutral)	• Propeller shaft and/or related support faulty	Check propeller shaft and related supports
Noisy when running (clutch checked)		
– Noisy only when gearbox is engaged	• Oil level in the gearbox-differential casing insufficient	Top-up and eliminate any leaks
	• Bearings damaged	Replace bearings
	• Gears worn or damaged	Replace gears
– Noisy also with gearbox to neutral	• Bearings damaged	Replace bearings
	• Differential and/or wheel bearings damaged	Replace bearings
– Noisy during both acceleration and deceleration and pick-up	• Pinion - crown mating defective	Check mating
	• Axle shafts and related joints damaged	Replace the faulty components
– Noisy when taking a curve	• Differential faulty	Check

Condition	Probable cause	Corrective action
Gear engagement/disengagement difficult	(Trouble diagnosis procedure) – **Disengage clutch and engage reverse gear** – **Shift into neutral and, after a short interval, engage the reverse gear**	
– If engagement is noisy	• Declutching defective	Check clutch and related control
– If engagement is not noisy	• Outer and/or inner gearbox linkage faulty	Check linkage
	• Synchronizers inefficient	Replace synchronizers

SUSPENSION

Condition	Probable cause	Corrective action
Noisy when running	Make sure that wheels are correctly secured	
	• Connections of shock absorber and/or suspension arms damaged	Replace the faulty components
	• Shock absorbers unloaded	Replace
	• Wheel bearings damaged	Replace
Vehicle drifts	• Tires defective or incorrect pressure	Check
	• Wheel alignment incorrect	Check and restore
	• Resistance from brakes	Check brakes
	• Faults in the steering wheel linkage	Check linkage

STEERING WHEEL

Condition	Probable cause	Corrective action
Steering wheel jerks (suspensions checked)	• Steering wheel linkage connection defective	Check
	• Steering box loosened or damaged	Check and restore

Condition	Probable cause	Corrective action
Steering wheel stiff and/or noisy (suspension checked)	Make sure that tires are correctly inflated	
	• Power steering inefficient	Check and restore
	• Power steering pump and/or drive belts faulty	Check

BRAKES

Condition	Probable cause	Corrective action
Poor braking action	(Trouble diagnosis procedure) – **with engine stopped, press brake pedal repeatedly** – **start engine keeping brake pedal pressed**	
– Pedal rises against driver's feet	• Servobrake inefficient	Replace
– Pedal lowers; its travel is long	• Pads worn or wet with oil	Replace and eliminate any leaks
	• Fluid leaks from system	Check and restore
	• Master cylinder and/or plungers inefficient	Check and restore
	• Air in the system	Carry out bleeding
Vehicle drifts when braking (suspensions checked)	• Tires pressure incorrect	Restore correct pressure and check tires
	• Pads and discs worn or wet with oil	Clean and/or replace. Eliminate any leaks
	• Brake calipers faulty	Check
Vehicle held back when running	• Parking brake faulty	Check and adjust
	• Brake master cylinder and/or calipers faulty	Check
	• Control linkage sticking	Check and adjust
Noisy and vibrations when braking	• Pads deformed or wet with brake fluid	Replace pads and eliminate any leaks
	• Brake discs scratched	Grind or replace discs

DIAGNOSIS PROCEDURE OF THE (ABS) MARK II WHEEL ANTILOCK SYSTEM

CAUTION:

- Prior to beginning the diagnosis procedure, refer to the indications given in "Group 22 - Troubleshooting for the (ABS) MARK II Wheel Antilock Braking System".
- Reference should be made to the wiring diagram shown later and cabling shown in Group 40.
- The ANTI LOCK warning light is indicated in the text with the symbol A.L.

DIAGNOSTIC INSTRUMENTATION

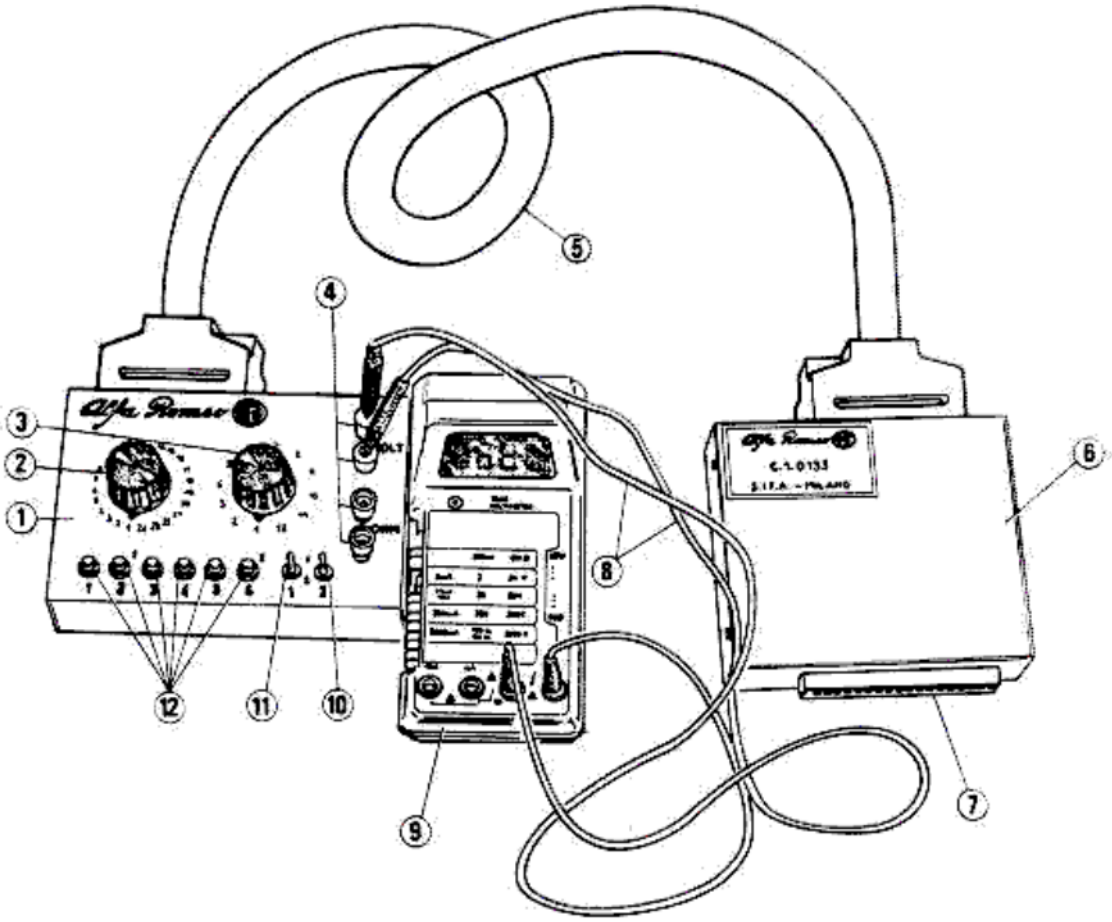

1 Universal diagnoser for electronic systems (C.1.0132)
2 Selector (1)
3 Selector (2)
4 Jacks
5 Connecting cable (C.9.0033)
6 Interface for ABS MARK II (C.1.0133)
7 Connection to wiring connector
8 Tie cables
9 Multimeter
10 Switch (2)
11 Switch (1)
12 Pushbuttons

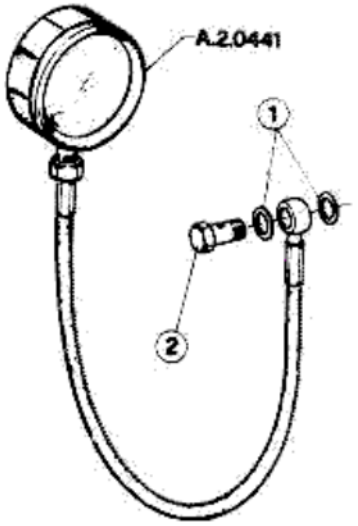

WARNING

Prior to working on the hydraulic circuit, the brake fluid pressure should be completely discharged by pressing the brake pedal at least 20 times until it sticks, with the ignition key removed. The circuit is at 180 bar.

Hydraulic circuit pressure gauge (**A.2.0441**)
1 Washers
2 Screw

PRELIMINARY OPERATIONS

- Remove the ignition key.
- Fully discharge the hydraulic circuit pressure (**press brake pedal at least 20 times until it sticks**).
- Connect the pressure gauge (**A.2.0441**) to the pump unit outlet.

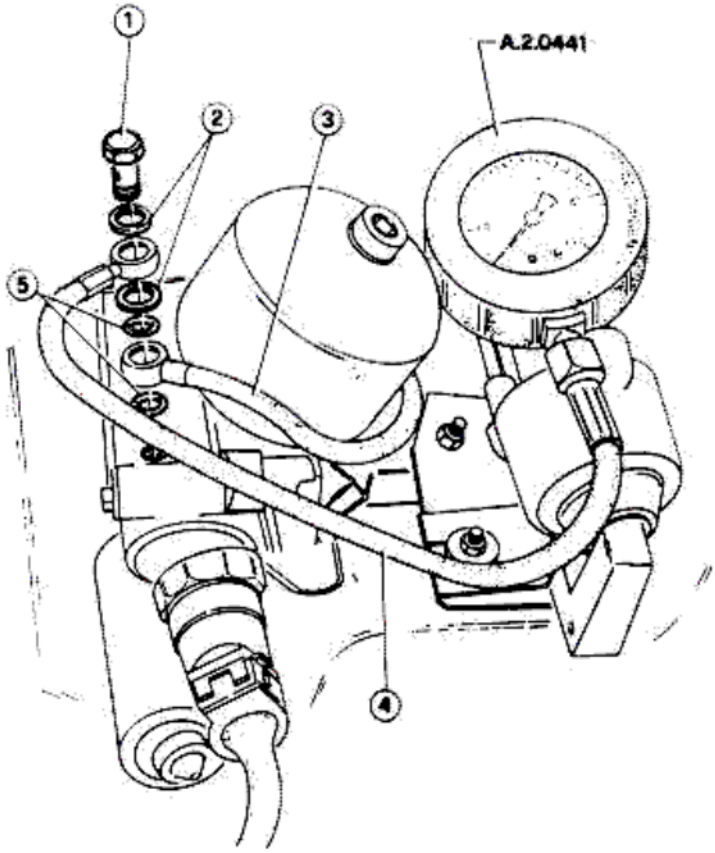

1 Screw
2 Washers
3 Pressurized fluid delivery hose
4 Pressure gauge A.2.0441 hose
5 O-Rings

Test N°1

Ensure that the pressure in the hydraulic circuit is below 80 bar.

Insert the ignition key and check the "BRAKE" light illumination on A.R. CONTROL and ABS illumination on instrument panel.

NO → Carry out "ELECTRICAL TESTS WITH DIAGNOSER" (with particular reference to test N° 5).

YES

Check that the pressure in the hydraulic circuit starts to increase.

NO → Is pump motor working?

YES

YES

NO →

Check that electric motor supply is 12V.

a) If supply is 12V : replace electropump.

b) If supply is not 12V : find fault by testing these points with a multimeter, referring to ground.

Pressure switch connector pin 1	~ 0V
Pressure switch connector pin 4	~ 0V
Terminal 85 relay I40	~ 0V
Terminal 86 relay I40	12V
Fuse relay I40	12V
Terminal 87 relay I40	12V
Electropump connector, pin 2	12V
Electropump connector, pin 1	~ 0V

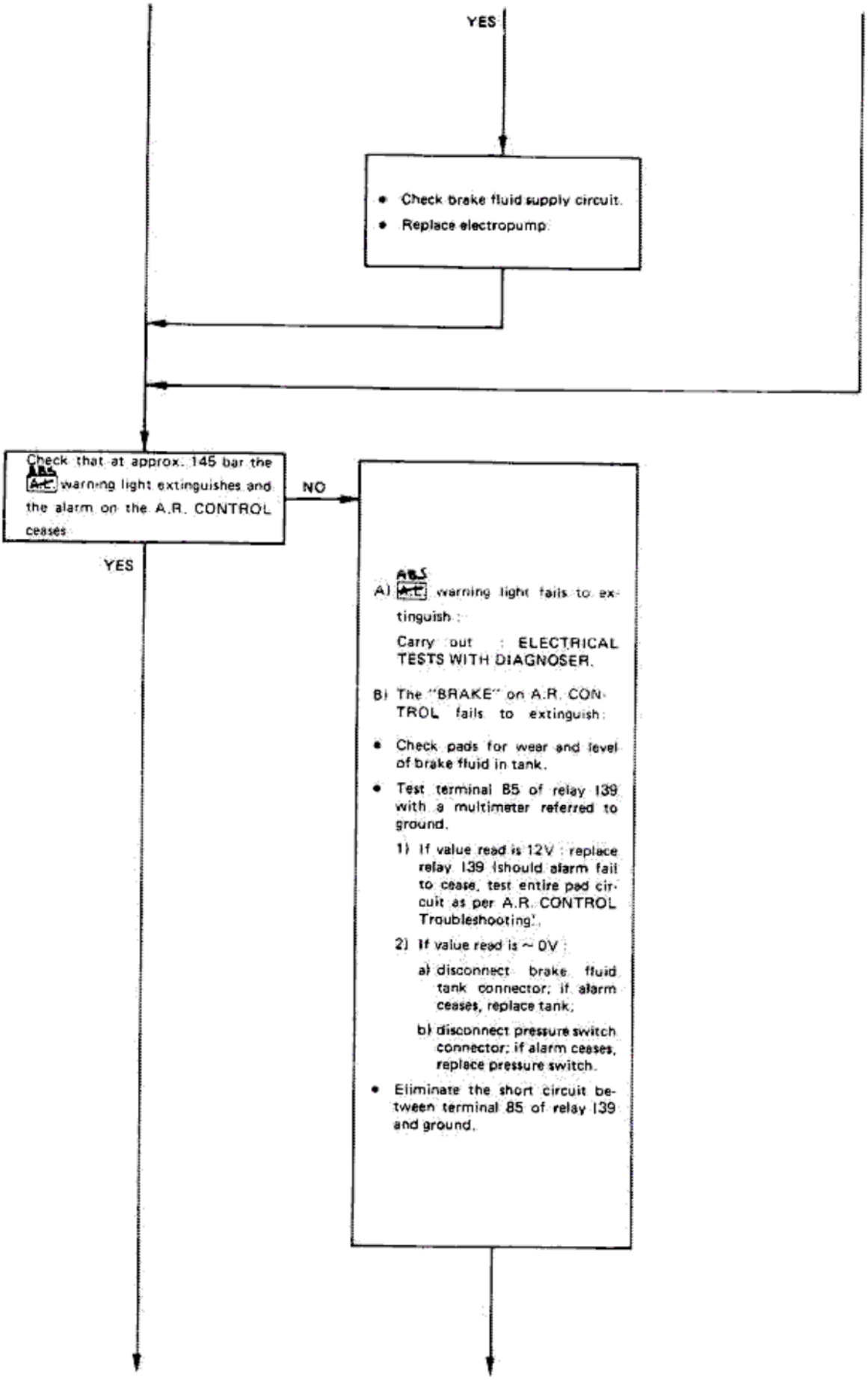
YES
• Check brake fluid supply circuit.
• Replace electropump.
Check that at approx. 145 bar the ABS A.R. warning light extinguishes and the alarm on the A.R. CONTROL ceases
NO
YES
A) ABS A.R. warning light fails to extinguish :
Carry out : ELECTRICAL TESTS WITH DIAGNOSER.
B) The "BRAKE" on A.R. CONTROL fails to extinguish:
• Check pads for wear and level of brake fluid in tank.
• Test terminal 85 of relay 139 with a multimeter referred to ground.
1) If value read is 12V : replace relay 139 (should alarm fail to cease, test entire pad circuit as per A.R. CONTROL Troubleshooting).
2) If value read is ~ 0V :
a) disconnect brake fluid tank connector; if alarm ceases, replace tank;
b) disconnect pressure switch connector; if alarm ceases, replace pressure switch.
• Eliminate the short circuit between terminal 85 of relay 139 and ground.

YES

Check that the pressure does not exceed 180 bar.

NO

- If the pressure settles at a pressure above 190 bar, the pressure switch is incorrectly calibrated and should therefore be replaced.
- If electropump however keeps running, disconnect the pressure switch connector;
  - a) if the electropump stops, replace the pressure switch;
  - b) if the electropump does not stop, look for the fault by testing these points with a multimeter referred to ground.

Pressure switch connector pin 4	12V
Terminal 87 of relay 140	~ 0V

YES

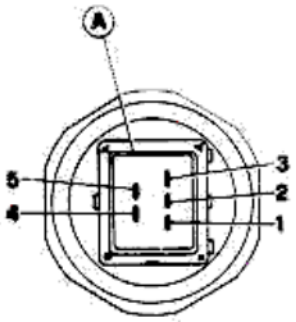

A Pressure switch connector on Pump

Check that the time elapsed on reaching 180 bar is no more that 60 seconds.

NO

- Check that electric motor supply is 12V.
- Replace electropump.

YES

Test N° 2

With a pressurized hydraulic circuit (pump at a halt) and the key inserted, press the brake pedal several times.

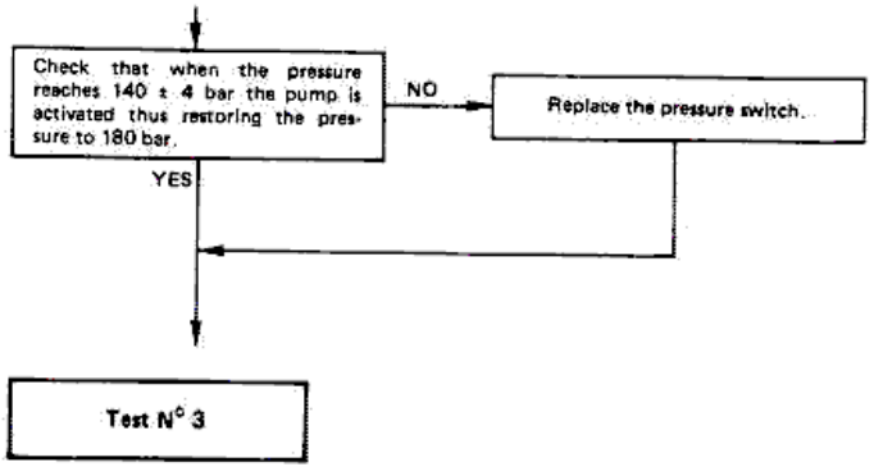
Check that when the pressure reaches 140 ± 4 bar the pump is activated thus restoring the pressure to 180 bar.
NO
Replace the pressure switch.
YES
Test N° 3

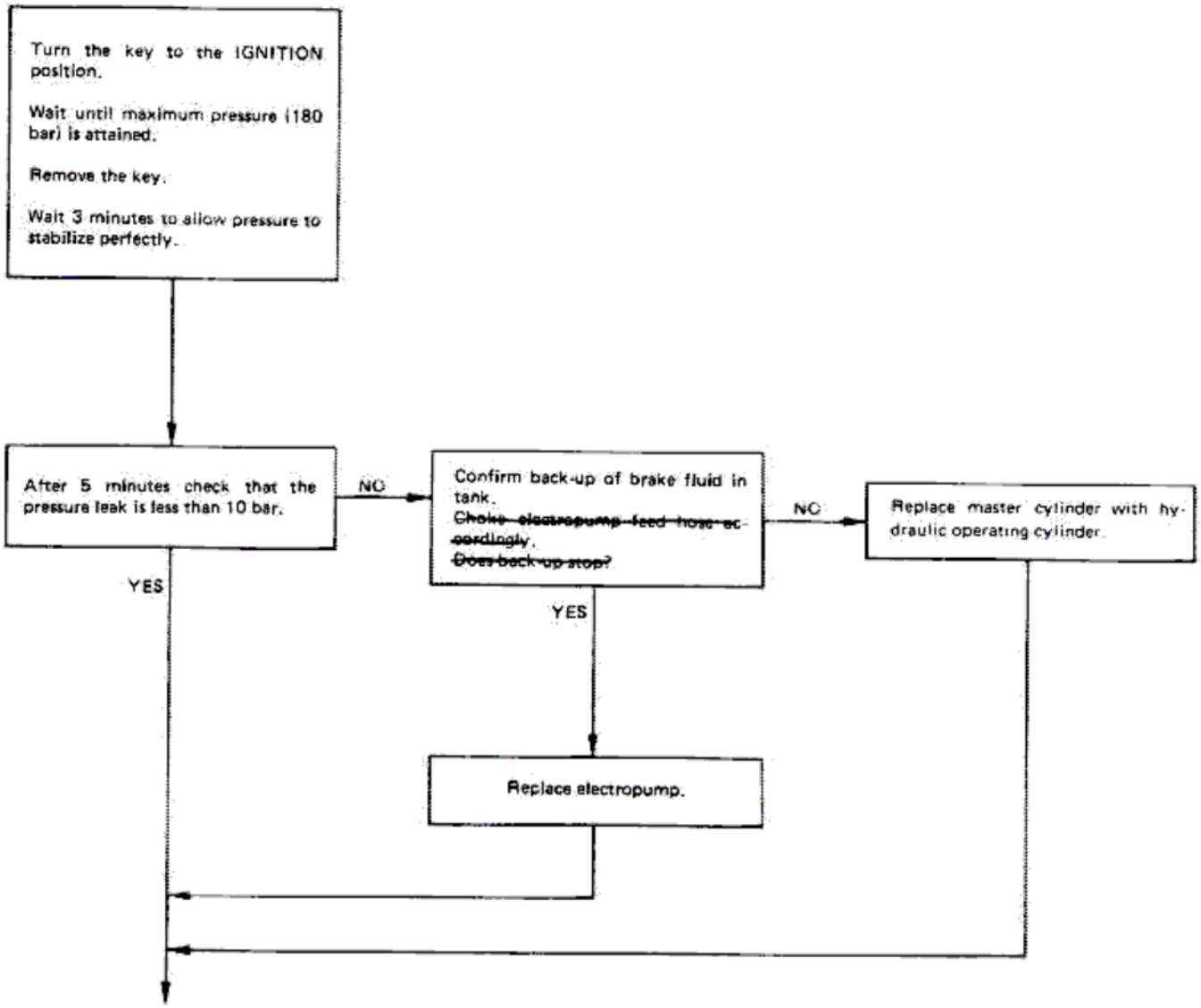
Turn the key to the IGNITION position.
Wait until maximum pressure (180 bar) is attained.
Remove the key.
Wait 3 minutes to allow pressure to stabilize perfectly.
After 5 minutes check that the pressure leak is less than 10 bar.
NO
Confirm back-up of brake fluid in tank.
Choke electropump feed hose accordingly.
Does back-up stop?
NO
Replace master cylinder with hydraulic operating cylinder.
YES
YES
Replace electropump.

ELECTRICAL TESTS WITH DIAGNOSER

NOTE:
Subsequent to a repair it is advisable to resume the diagnosis from the start.

Ohmmetric measurement set-up

- Disconnect the connector from the ABS unit.
- Insert the diagnostic equipment interface (**C.1.0133**) in the cable connector.

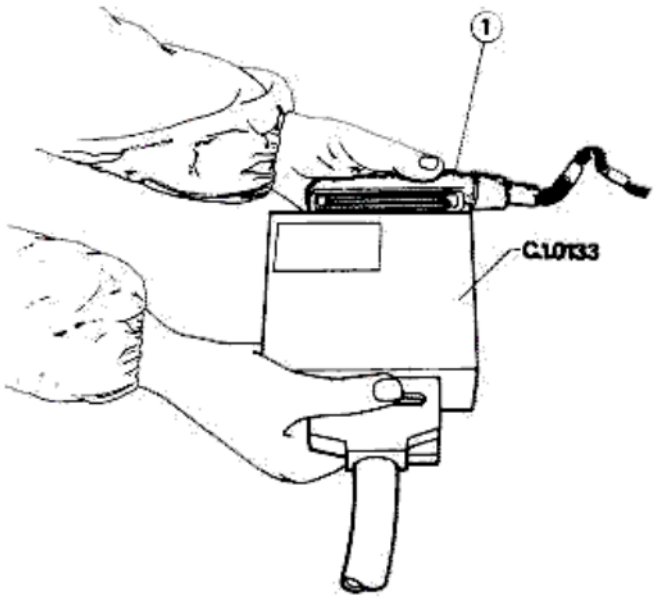

1 Cable connector

- Ensure that the interface (**C.1.0133**) is connected to the diagnoser (**C.1.0132**) by means of the cable supplied **C.9.0033**.

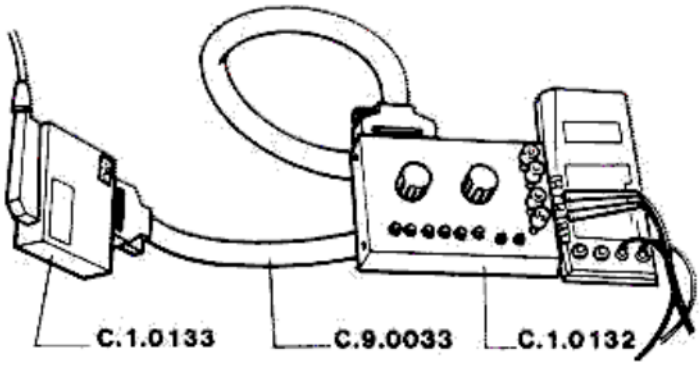

- Set rotating selectors (1) and (2) to position 1.
- Set switches (1) and (2) to position 1.
- Verify that the pressure in the hydraulic circuit is 140 thru 180 bar.
- Remove the key.
- Set-up the multimeter for OHM measurement and insert the prods of the tie cables into the blue and black jacks of the diagnoser marked OHM.
- Selectors (1) and (2) to position 1.

Test N° 4

Impulse pick-ups test

Selector (1) to position 1.

Set multimeter to position 20 KΩ scale. ~~F3~~

Read 2100 ± 300 Ω on the multimeter.
Turn selector (1) to positions 2 - 3 - 4 and check that the value obtained remains between 2100 ± 300 Ω.

Selector 1	Impulse pick-up tested
position 1	RH rear
position 2	LH front
position 3	LH rear
position 4	RH front

NO →

Operate on defective impulse pick-up only.

A) If the value read on the diagnoser is approx. 1000 Ω, one of the two connecting cables between the impulse pick-up and control unit connector is short circuiting on the body; eliminate the problem.

B) For other values (and therefore for other types of failure) the resistance should be measured directly on the impulse pick-up involved and also on the control unit connector.

NOTE :
Measuring directly on the multimeter (without the diagnoser) the impulse pick-up resistance should be 1100 ± 300 Ω.

Impulse pick-up	Control unit connector
RH rear (L30)	4 - 22
LH front (L29)	5 - 23
LH rear (L31)	6 - 24
RH front (L28)	7 - 25

YES ↓

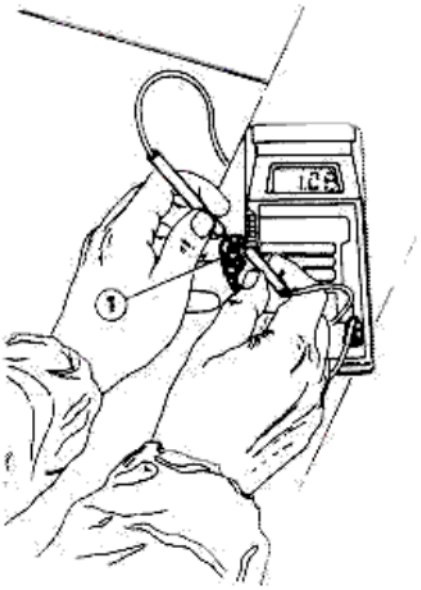

1 Impulse pick-up electrical connection

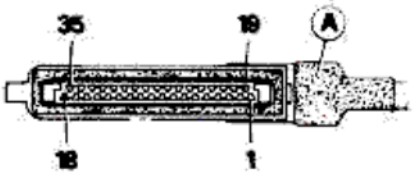

A Control unit connector

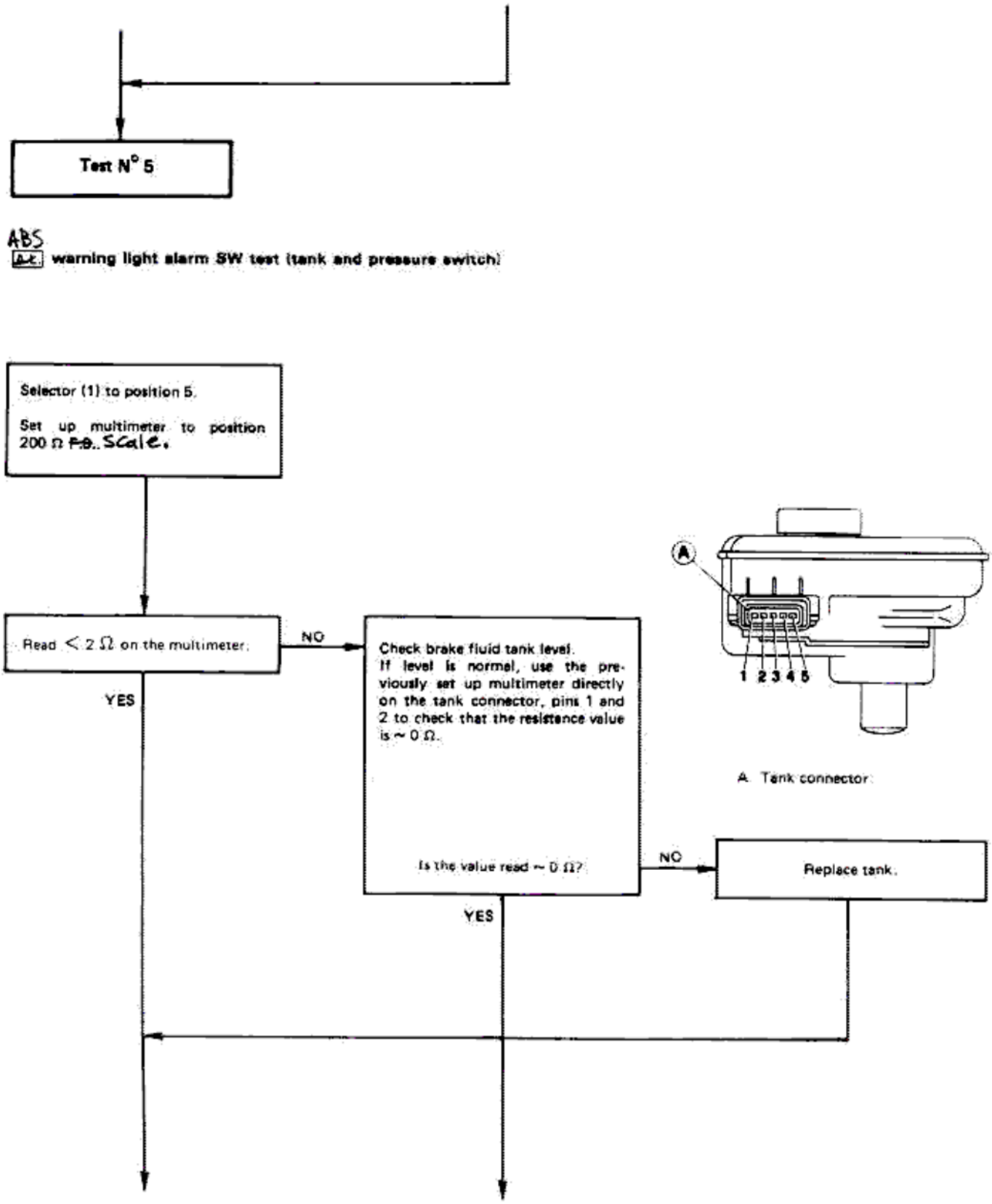
Test N° 5
ABS
warning light alarm SW test (tank and pressure switch)
Selector (1) to position 5.
Set up multimeter to position 200 Ω P.B. Scale.
Read < 2 Ω on the multimeter.
NO
YES
Check brake fluid tank level.
If level is normal, use the previously set up multimeter directly on the tank connector, pins 1 and 2 to check that the resistance value is ~ 0 Ω.
Is the value read ~ 0 Ω?
NO
YES
Replace tank.
A
1 2 3 4 5
A Tank connector

- Reconnect connector to tank.
- Turn key to IGNITION position.
- Wait for electropump to stop.
- Remove key.
- Disconnect pressure switch connector.
- Using previously set up multimeter, check directly on the pressure switch connector, pins 3 and 5 that the resistance value is ~0 Ω.

Is the value read ~ 0 Ω?

NO → Replace pressure switch.

YES ↓

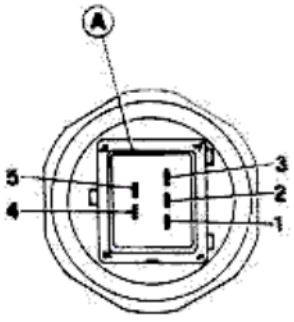

A Pressure switch connector

Reconnect the connectors and check continuity between pins 9 and 10 of the control unit connector (disconnecting interface **C.1.0133**).
Otherwise look for opening on cable between :

- Pin 2 tank connector and pin 3 pressure switch connector.
- Pin 1 tank connector and pin 9 control unit connector.
- Pin 5 ~~tank~~ pressure switch connector and pin 10 control unit connector.

Remove brake fluid tank connector.

Read infinite resistance on the multimeter.

NO → Verify that there is no continuity to ground on one of the two pins 9 and 10 of the control unit connector (with interface **C.1.0133** disconnected).
Otherwise look for the short circuit in the connections of pins 1 and 2 of the tank connector.

YES ↓

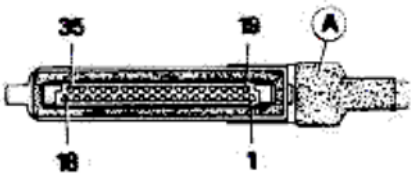

A Control unit connector

Replace tank connector.

Read < 2 Ω on the multimeter.

Press the brake pedal several times.

Read infinite resistance on the multimeter when the pressure goes below 105 bar.

NO → Disconnect the pressure switch connector.
Is infinite resistance read on the multimeter?

NO → Eliminate the short circuit on the pressure switch cable :
- from pin 10, control unit, connector to pin 5, pressure switch connector;
- from pin 3, pressure switch connector, to pin 2, brake fluid tank connector;
- from pin 1, brake fluid tank to pin 9, control unit connector.

YES → Replace pressure switch.

YES → **Test N°6**

Electrovalve test

Multimeter to position 200 Ω ~~F.S.~~ scale.

Check the resistances indicated below for the various selector positions (1) :

position 6	6 thru 9 Ω (FRONT RH load)
position 7	4 thru 6 Ω (rear drain)
position 8	4 thru 6 Ω (FRONT LH drain)
position 9	4 thru 6 Ω (FRONT RH drain)
position 10	6 thru 9 Ω (rear load)
position 11	6 thru 9 Ω (FRONT LH load)

NO → Using previously set up multimeter, check the following values directly on the electrovalve unit connector.

Prod position	Correct value (Ω)	Corresponding electrovalve
7 - 1	5 thru 8	Front LH Load
7 - 2	3 thru 5	Front LH Drain
7 - 3	5 thru 8	Rear Load
7 - 4	3 thru 5	Rear Drain
7 - 5	3 thru 5	Front RH Drain
7 - 6	5 thru 8	Front RH Load

NO → Replace electrovalve unit.

YES

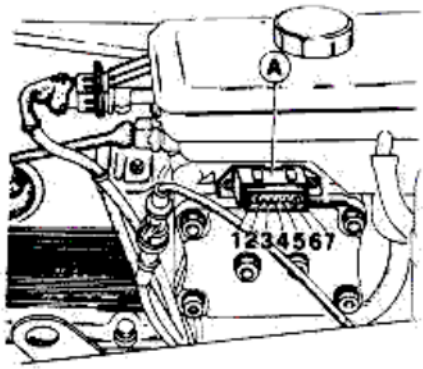

A Electrovalve unit connector

Check cable continuity between electrovalve unit connector and control unit connector.

Electrovalve unit connector pin	Control unit connector pin
1	35
2	16
3	17
4	33
5	34
6	15
7	11

Selector (1) to position 12. Read 3 thru 6 Ω on the multimeter (MAIN ELECTROVALVE).

NO → With a previously set up multimeter, check that the resistance value is 2 thru 5 Ω directly on the main electrovalve connector.

NO → Replace master cylinder with hydraulic operating cylinder.

YES

YES

Check continuity of the cable corresponding to the main electrovalve.

Main electrovalve connector pin	Control unit connector pin
1	18
2	Directly to ground

Voltmetric measurement set-up

- Remove the key.
- Selector (1) to position 1.
- Selector (2) to position 1.
- Switches (1) and (2) to position 1.
- Turn the key and wait until maximum pressure (180 bar) is reached in the hydraulic circuit.
- Remove the key.
- Set the multimeter up for VOLT measurement and insert the cable tie black prod into the black jack marked VOLT and the red prod of the other cable tie into the red jack marked VOLT.

Test N° 7

Control unit inhibit test during start-up phase

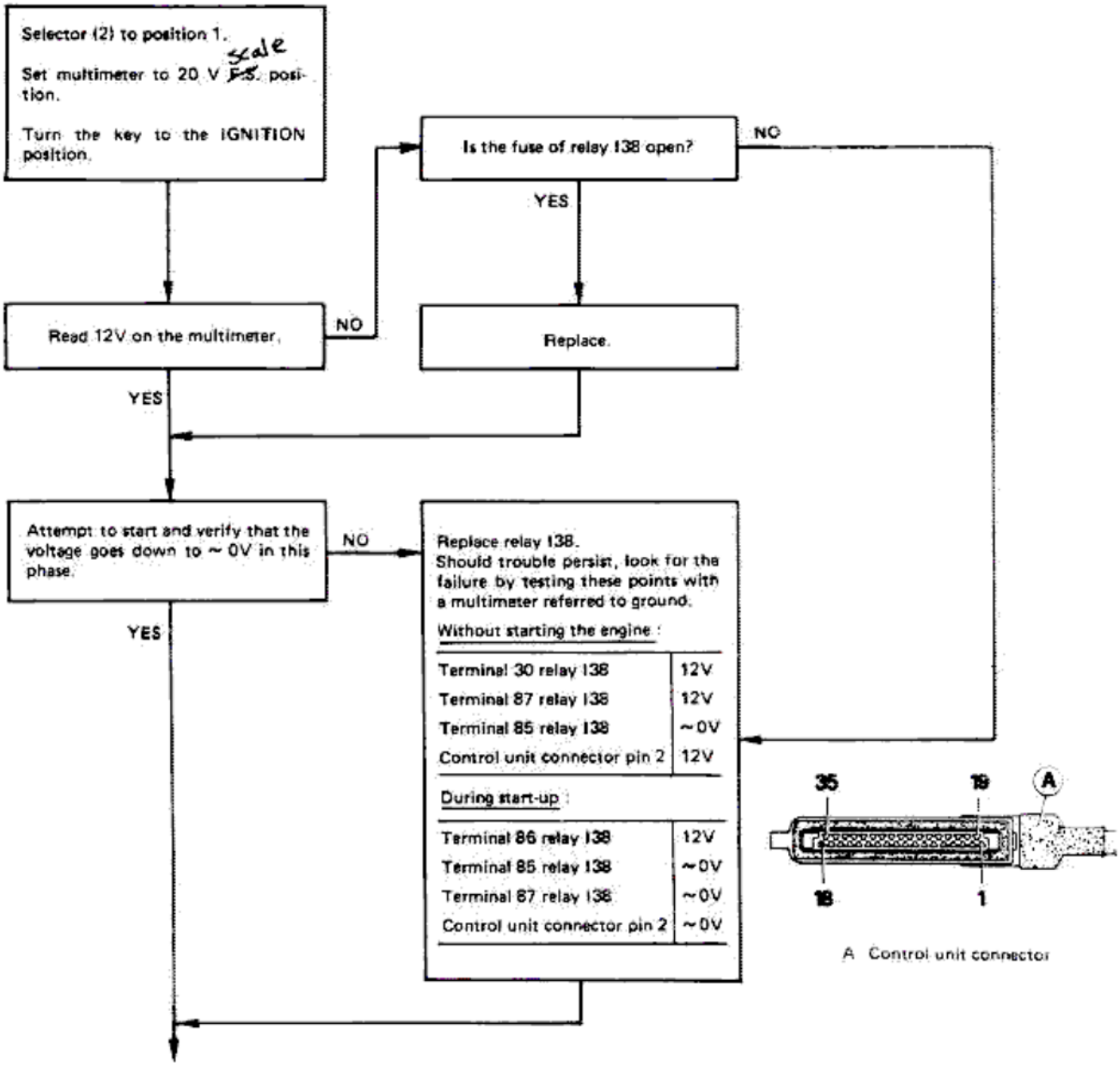

Test N° 8

ABS control unit main supply test

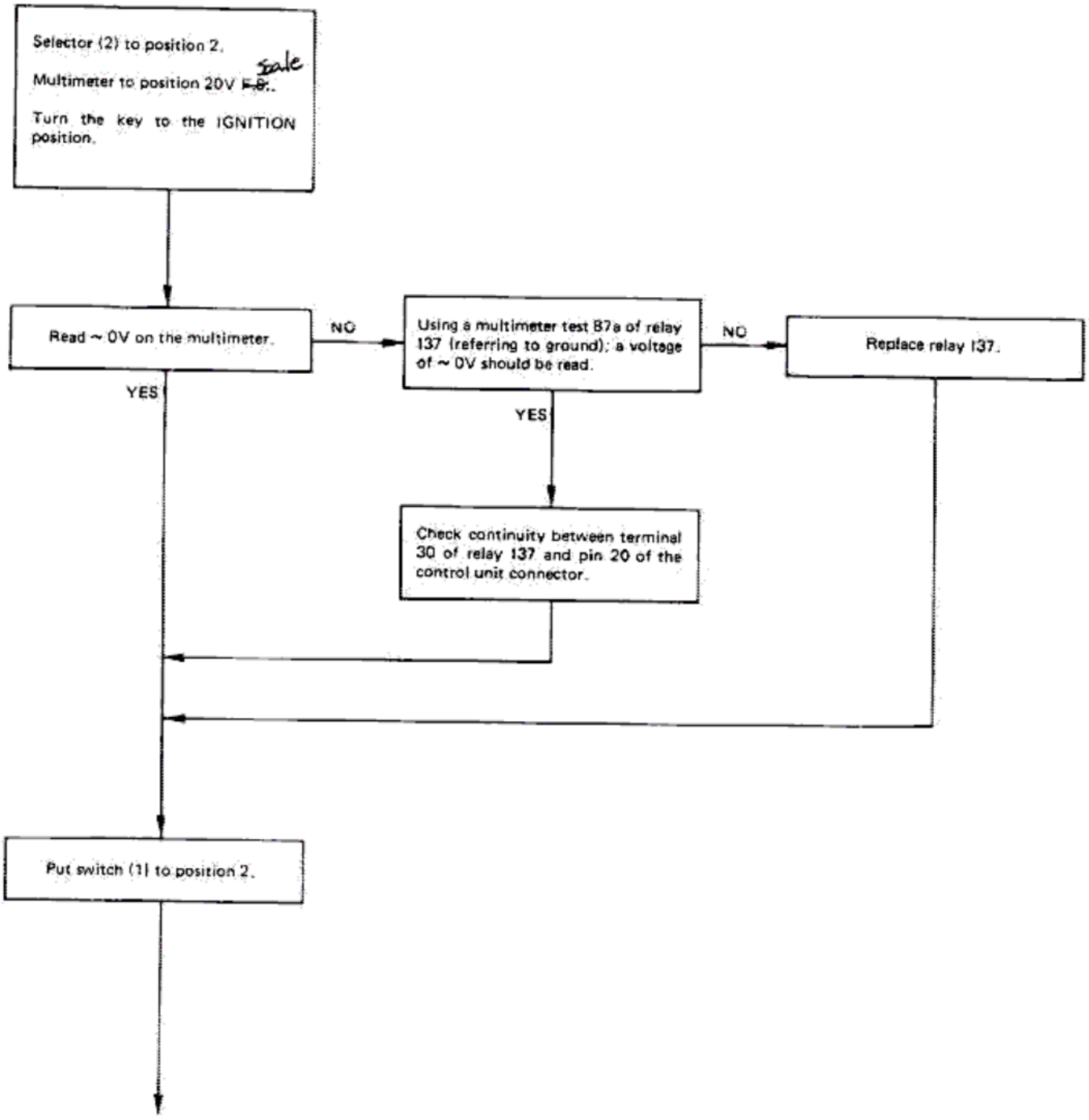

Read 12V on the multimeter.

NO →

Replace relay 137 or associated fuse.
If the trouble persists, look for the cause by testing these points with a multimeter, referring to ground.

Fuse of relay 137	12V
Terminal 85 relay 137	~0V
Terminal 86 relay 137	12V
Terminal 30 relay 137	12V
Control unit connector pin 20	12V

YES

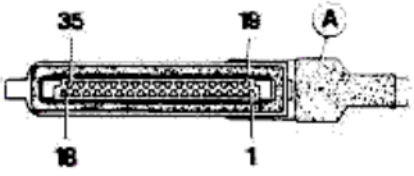

A Control unit connector

Turn selector (2) to position 3.

Carry out the same procedure as described for selector (2) in position 2.

- With switch (1) to position 1, read ~ 0V on the multimeter.
- With switch (1) to position 2, read 12V on the multimeter.

NO →

Check continuity of the cable between terminal 30 of relay 137 and control unit connector on pin 3.

YES

Test N° 9

Diode N29a diminished voltage test (see Wiring Diagram)

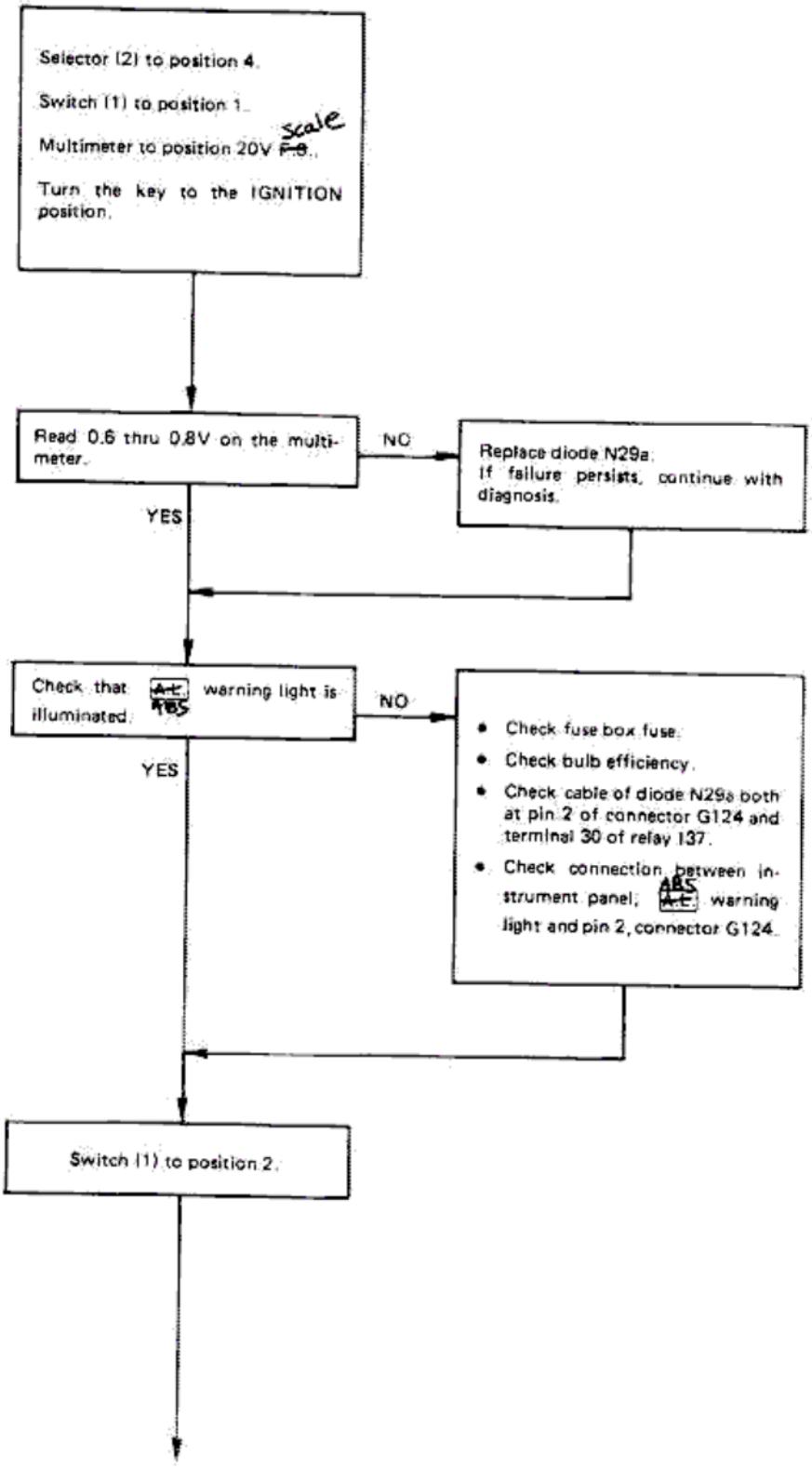

Read 12V on the multimeter.

NO → Check cable between pin 2 of connector G124 and pin 27 of the control unit connector.

YES

Check that the ABS warning light is extinguished.

Test N° 10

Electrovalve ground efficiency test

Selector (2) to position 5.

Switch (1) to position 2.

Set multimeter to 200 mV ~~F.S.~~ Scale.

Turn the key to the IGNITION position.

Read ~ 0V on multimeter.

Press pushbuttons 1-2-3 and check that the voltage read on the multimeter does not exceed 35 mV.

NO → Check efficiency of electrovalve ground.

YES

Press pushbutton 4 for short periods and check that the voltage read on the multimeter does not exceed 25 mV.

NO

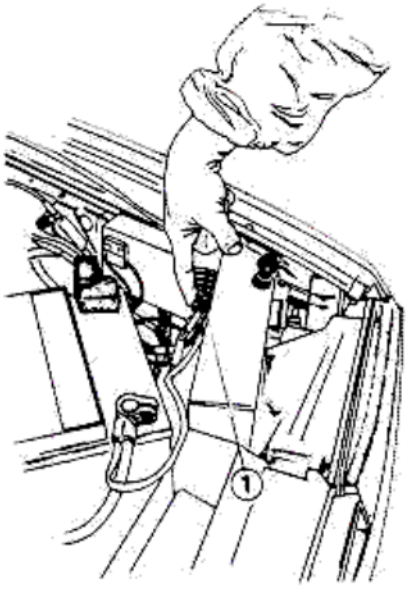

1 Electrovalve unit ground

Test N° 11

Impulse pick-up dynamic test

Set multimeter to position 2V ~~F.S.~~ scale in ALTERNATED CURRENT. — set to 2Volt A/C Scale.

Switch (1) in position 1.

Raise the vehicle so that the wheels turn freely.

- Selector (2) to position 6. Turn the rear RH wheel at approx. 1 rev. per sec. and read 0.15 thru 0.7V on the multimeter.
- Selector (2) to position 7. Turn the front LH wheel at approx. 1 rev. per sec. and read 0.15 thru 0.7V on the multimeter.
- Selector (2) to position 8. Turn the rear LH wheel at approx. 1 rev. per sec. and read 0.15 thru 0.7V on the multimeter.
- Selector (2) to position 9. Turn the front RH wheel at approx. 1 rev. per sec. and read 0.15 thru 0.7V on the multimeter.

NO →

- Complete the four tests so as to establish that there is no inversion between the cables of the individual impulse pick-ups, bearing in mind that when a rear wheel is turned it may pull the other one into motion.
- Check good condition of the impulse emitting wheel.
- Check the air gap between the impulse pick-up and impulse emitting wheel. (See: Service Data and Specifications)

YES

Electrovalve dynamic test set-up

- Remove the key.
- **Ascertain that all previous tests proved positive otherwise refrain from carrying out the following.**
- Selector (1) to position 1.
- Selector (2) to position 1.
- Switch (1) to position 2.
- Switch (2) to position 1.
- Raise the car enough to allow the wheels to turn freely.
- Insert the key and wait until the pressure in the hydraulic circuit reaches the maximum pressure of 180 bar.

Test N° 12

Front LH load and drain electrovalve test

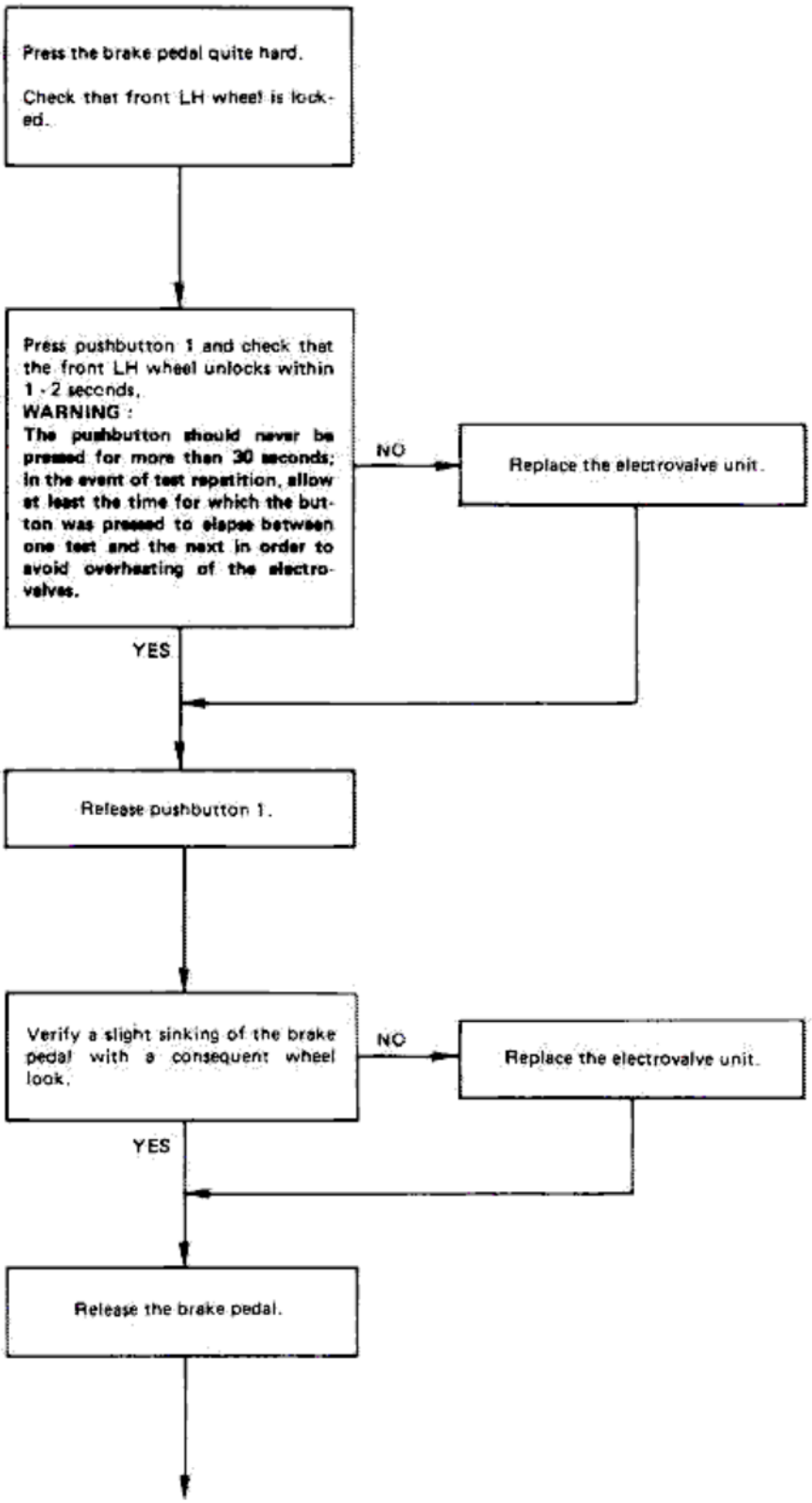

Test N° 13

Front RH load and drain electrovalve test

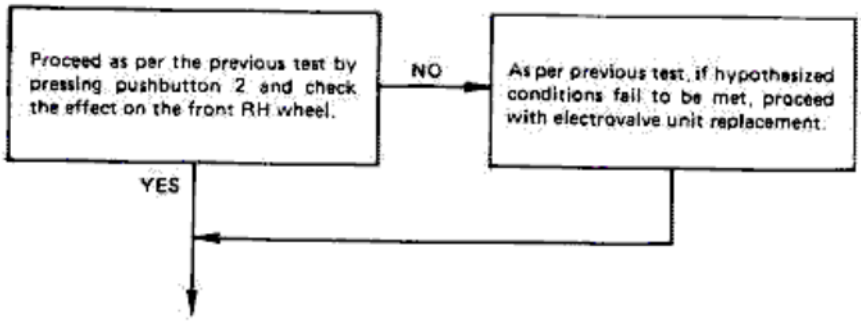

Test N° 14

Rear load and drain electrovalve test

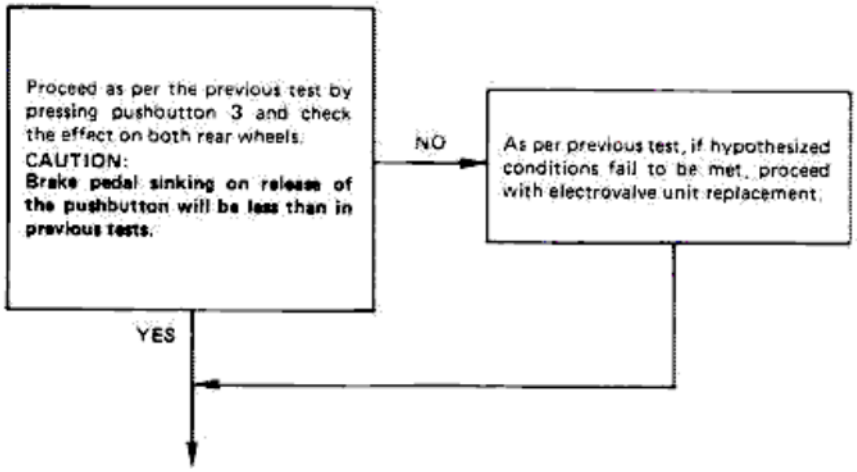

Test N° 15

Main electrovalve test

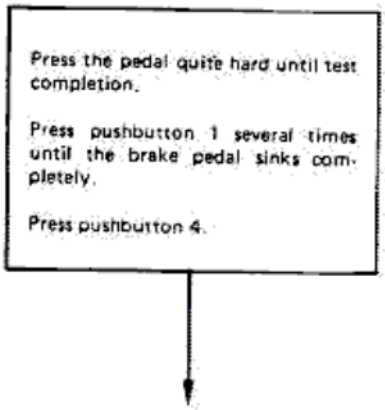

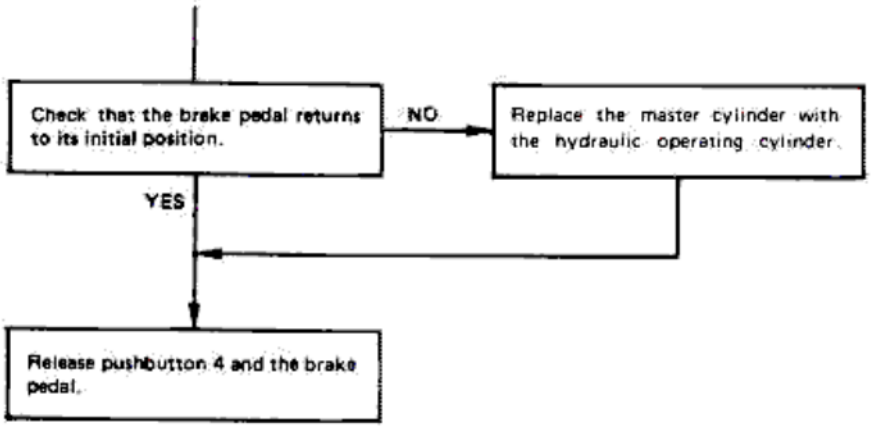

OBSERVATIONS

Should the problem persist on completion of the diagnostic procedure, proceed thus:

- Check that all the connections are well connected and rust free.
- Check that the clearance of the front wheel hub bearings come within the tolerance limits (see: Group 21 - Front Suspension - Service Data and Specifications).
- Check that diode N29b (see Wiring Diagram) is not open.
- Check that relay I40 (see Wiring Diagram) is efficient.
- Replace ABS control unit.

ELECTRICAL DIAGNOSIS OF THE BRAKE FLUID TANK FOR THE (ABS) MARK II ANTILOCK BRAKING SYSTEM

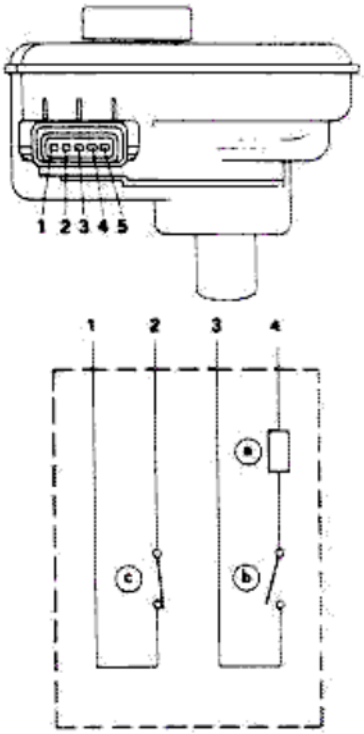

a. Resistance (≤ 10 Ω)
b. Microswitch FLS1; it sends a tank minimum oil level alarm to the A.R. CONTROL
c. Microswitch FLS2; it signals an excessive decrease in the tank brake fluid level to the ABS control unit.

- Disconnect the brake fluid tank connector.
- Remove the plug.
- Check that the level of the brake fluid in the tank reaches the MAX mark otherwise top up.

Using a multimeter set up for OHM measurement, check the resistance values summed up in the following table.

Points to test	Resistance
Pins 1 and 2	~ 0 Ω
Pins 3 and 4	Infinity

NO → Replace brake fluid tank.

YES ↓

Keeping the prods of the multimeter on pins 3 and 4, gradually syringe the brake fluid out from the tank.
Check that at a certain level (between MIN and MAX) microswitch FLS1 closes and read a resistance value lower than 10 Ω on the multimeter.

NO → Replace brake fluid tank.

YES ↓

Now put the multimeter prods on pins 1 and 2.
Syringe the fluid up further and check that microswitch FLS2 opens, reading a value of infinite resistance on the multimeter.

NO → Replace brake fluid tank.

YES ↓

Gradually fill up the brake fluid tank, verifying first the closure of microswitch FLS2 (read a value of ~ 0 Ω on pins 1 and 2) and subsequently the opening of microswitch FLS1 (read a value of infinite resistance on pins 3 and 4).

NO → Replace brake fluid tank.

(ABS) MARK II WHEEL ANTILOCK SYSTEM WIRING DIAGRAM

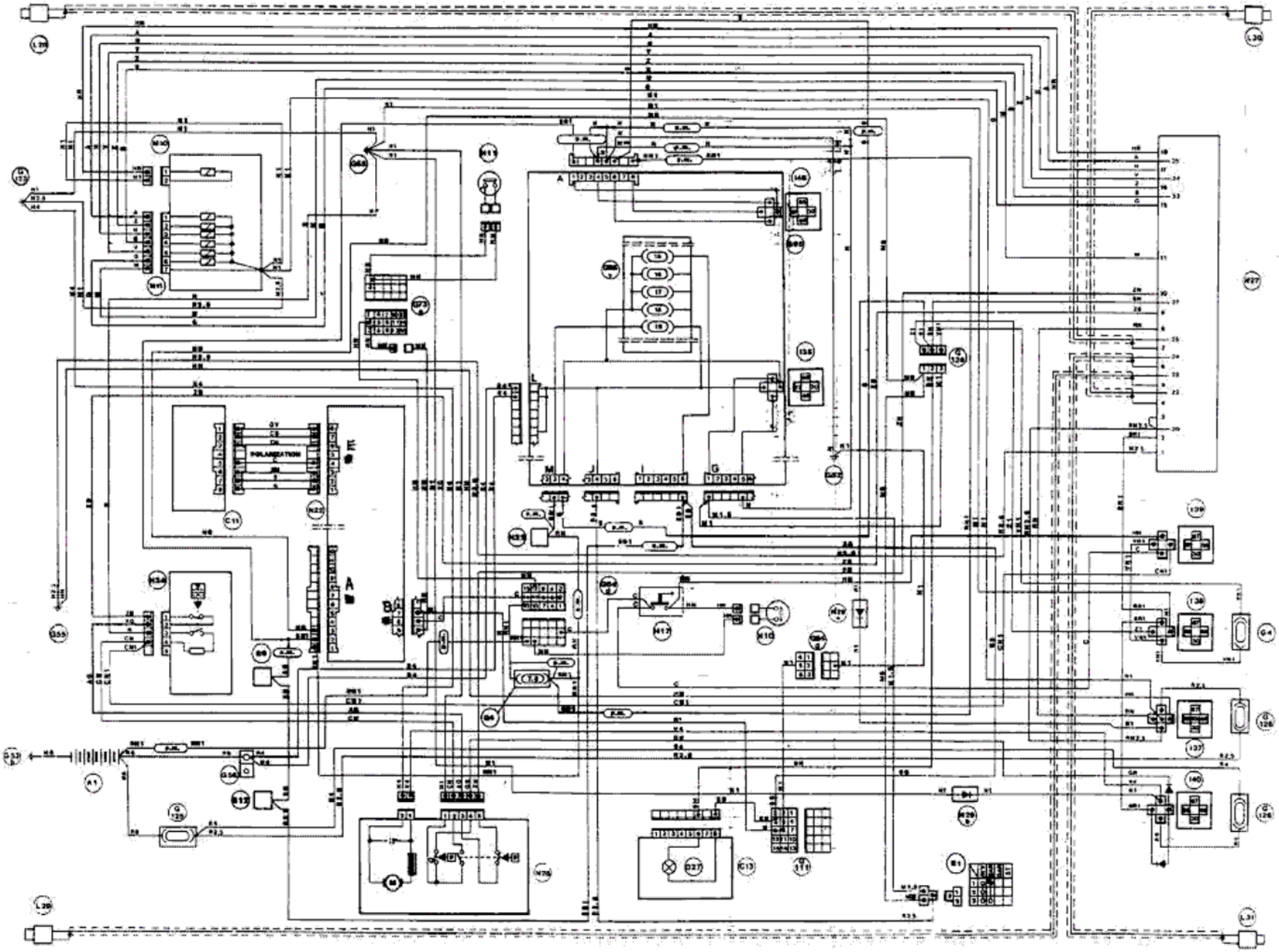

A1	Battery
B1	Ignition switch
C11	ALFA ROMEO Control display
C13	Optoelectronic cluster
D27	ABS system warning lamp
G4	Free fusebox
G52	Fusebox ground
G53	Engine compartment ground
G53a	Engine compartment ground - right side
G53b	Engine compartment ground - left side
G55	Hood ledge panel ground
G56	Branch terminal board
G73a	Connector for right rear services
G94b	8-way connector for engine compartment
G95	Central fusebox
G95D	Connector for ALFA ROMEO Control
G95E	Connector for console
G95N	Connector for battery
G95O	Connector for ignition switch
G95P	Connector for door services
G95Q	Connector for performance gauge
G95S	Connector for cluster
G95V	Fuses
G96	Single connector for ALFA ROMEO Control - cluster
G99c	Connector for engine dashboard (C)
G103	Connector for grounds and brakes fluid tank
G123	Pedal assembly ground
G124	ABS system connector
G125	ABS system free fusebox
G126	ABS system relay safety fuse
H10	Left front brake pad switch
H11	Right rear brake pad switch
H34	ABS system brake fluid tank switch
I2	Heated rear window relay
I17	Fog light relay
I27	Seat height adjustment relay
I31	Front power windows - heater relay
I37	ABS system control unit relay
I38	ABS system auxiliary relay
I39	Brake fluid level warning lamp relay
I40	ABS system brake fluid electropump relay
L28	Front RH pick-up
L29	Front LH pick-up
L30	Rear RH pick-up
L31	Rear LH pick-up
M10	Brake fluid adjusting valves
M11	ABS system main valve
N22	ALFA ROMEO Control unit
N27	ABS system control unit
N28	Brake fluid electropump apparatus
N29a	Connection for free diode (A)
N29b	Connection for free diode (B)

(s.m.) = pre-modification solution
(p.m.) = post-modification solution

SERVICE DATA AND SPECIFICATIONS

ENGINE MAINTENANCE

TECHNICAL DATA – CHECKS AND ADJUSTMENTS

Engine unit

		Data
Valve clearance (cold engine)		
Intake	mm (in)	0.475 to 0.500 (0.019 to 0.020)
Exhaust	mm (in)	0.225 to 0.250 (0.009 to 0.010)
Alternator - pump belt tensioning		
Forced applied to belt	N (lb; kg)	147 to 294 (33.1 to 66.1; 15 to 30)
Arrow	mm (in)	16 (0.63)
Power steering pump belt tensioning		
Force applied to belt	N (lb; kg)	147 to 294 (33.1 to 66.1; 15 to 30)
Arrow	mm (in)	13 (0.51)
Air conditioner compressor belt tensioning		
Force applied to belt	N (lb; kg)	196 to 343 (44.1 to 77.2; 20 to 35)
Arrow	mm (in)	14 (0.55)

Fuel system

		Data
Engine idle r.p.m. (gearbox in neutral - clutch engaged)	r.p.m.	950 ± 50 (1) 850 ± 50 (2)
Exhaust CO percentage with idle r.p.m., upstream of catalytic converter, with Lambda sensor disconnected	% in vol.	0.5 to 0.7 (3) 0.5 to 0.9 (4)
Fuel delivery pressure	kPa bar kg/cm² p.s.i.	245.4 2.5 2.5 35.6
Fuel system tightness test pressure	kPa bar kg/cm² p.s.i.	250 2.5 2.55 36.3

(1) For 2500 engine:
Over 1200 m (4000 ft) A.S.L. is acceptable
800 to 900 r.p.m.
(2) For 3000 engine:
Over 1200 m (4000 ft) A.S.L. is acceptable
700 to 900 r.p.m.
(3) For 2500 engine
(4) For 3000 engine

Cooling system

Test pressure		Data
Pressure relief valve adjustment	kPa bar kg/cm² p.s.i.	68.6 ± 9.8 0.686 ± 0.098 0.7 ± 0.1 9.95 ± 1.42
Hydraulic system	kPa bar kg/cm² p.s.i.	107.9 1.08 1.1 15.65

Ignition

Timing (1)		Data
Static advance	r.p.m.	950 ± 50 (3) 850 ± 50 (4)
	advance degrees (2)	2° ± 1° (3) 7° ± 1° (4)

(1) Timing values must be measured with vacuum advance calibrator tube disconnected
(2) Before T.D.C.
(3) For 2500 engine (019.11)
(4) For 3000 engine (061.24)

FLUIDS AND LUBRICANTS

Refer to: Fluids and Lubricants Layout - Recommended Fuel and Lubricants - Approximate Refill Capacities

WHEELS AND TIRES

For tire pressure, refer to paragraph "Wheels and Tires"

TIGHTENING TORQUES

Item / Unit of measurement	N·m (ft·lb; kg·m)
TIGHTENING OF CYLINDER HEAD NUTS (*)	
A) On reassembly	
- cold engine Nuts	88.5 to 97.8 (65 to 72.3; 9 to 10)
B) After 1000 km (621 mi.)	
- cold engine Nuts	97.8 to 108.2 (72.3 to 79.8; 10 to 11)
Nuts securing camshaft caps (1)	16 to 18 (11.8 to 13.2; 1.6 to 1.8)
Spark plugs tightening (3)	25 to 34 (18 to 25; 2.5 to 3.5)
Nut securing camshaft front hub	97 to 117 (71 to 86; 9.9 to 11.9)
Coolant temperature transmitter on thermostat housing (2)	20 to 25 (15 to 18; 2 to 2.5)

(*) During first free coupon operation, proceed as per step B
(1) In oil
(2) With antiseize R. GORI: Never Seez
(3) In oil: ISECO Molykote A

MAINTENANCE OF MECHANICAL COMPONENTS AND BODY

TECHNICAL DATA – CHECKS AND ADJUSTMENTS

Axles and Suspension

		Data
Vehicle static load diagram (1)	N (lb, kg)	A + B = 490 + 245 = 735 (110 + 55 = 165 ; 50 + 25 = 75)
Front height	mm (in)	E = B – A = 44 ± 5 (1.73 ± 0.19)
Rear height	mm (in) mm (in)	C = 13 ± 5 (0.51 ± 0.19) T = 83 ± 5 (3.27 ± 0.19)
Front toe-~~out~~ IN (2) Front toe-~~out~~ IN angle	mm (in)	E – D = 1 ± 1 (~~0.08~~ 0.040" ± 0.040") α = 9' .08°
Wheel rim diameter	mm (in)	Ø = 390 (15.4)
Rear toe-in angle Tie-rod length		α = 0° ± 10' G = H
Front camber angle (2) Rear camber angle (2)		β = – 30' ± 30' β = 0° ± 30'
Front caster angle (2) Max steering lock (2)		γ = 4° 30' ± 30' δ = 30°

(1) After loading, move car up and down to settle suspension. Suspension height is to be carried out with vehicle in running order.
(2) Values referring to vehicle in nominal height, corresponding to static load.

Front wheel hub bearing clearance check (*)

a. Slacken into securing front wheel concerned.
b. Raise the front of the vehicle and rest it on stands, remove the wheel.
c. Remove hub cover.
d. Install a comparator on a magnetic base (or suitable tool) so that it touches the steering knuckle axis (preload the comparator to 1 mm (0.04 in)).

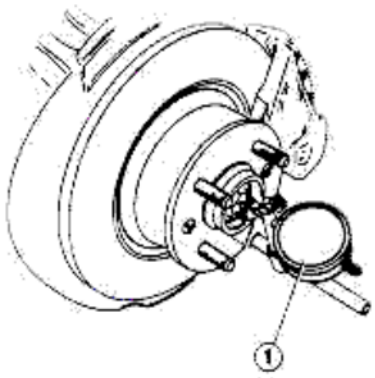

1 Comparator

e. Move the wheel hub axially (back and forth) and read the clearance indicated on the comparator.
This clearance should come within specified values.

Front hub bearing clearance:
G = 0.02 thru 0.12
(0.00079 thru 0.00472 in)

(*) Vehicle equipped with (ABS) MARK II wheel antilock braking system.

Braking system

		Data
Front disc brakes	Disc min thickness mm (in)	20 (0.787)
Rear disc brakes	Disc min. thickness mm (in)	8 (0.315)
Parking brake	Number of notches available on scroll gear before wheel locking	4 to 6
Air gap between impulse pick-up and impulse emitting wheel (front and rear)(1)		(*)

(1) For vehicles equipped with (ABS) MARK II wheel anti-lock braking system.
(*) See: Group 22 - Service Data and Specifications - Checks and Adjustments.

FLUIDS AND LUBRICANTS

Refer to: Fluids and Lubricants Layout - Recommended Fuel and Lubricants - Approximate Refill Capacities.

TIGHTENING TORQUES

Item / Unit of measurement	N·m (ft·lb ; kg·m)
Clutch system hose unions	10 to 15 (7.4 to 11 ; 1 to 1.5)
Clutch system pipe unions	8 to 10 (5.9 to 7.4 ; 0.8 to 1)
Wheel hub nut; first tightening	20 to 24 (15 to 18 ; 2 to 2.5)
Wheel hub nut; second tightening	5 to 10 (3.7 to 7.4 ; 0.5 to 1)
Brake system pipe unions	10 to 12 (7.4 to 8.8 ; 1 to 1.2)
Brake system hose unions	10 to 15 (7.4 to 11 ; 1 to 1.5)
Screw adjusting air gap between impulse pick-up and impulse emitting wheel (front and rear) (1)	2.4 to 3 (1.7 to 2.2 ; 0.24 to 0.3)
Locknut securing ball joint to steering rod	54 to 88 (40 to 65 ; 5.5 to 9)
Seat belts securing screws	28 to 44 (20.5 to 32 ; 2.8 to 4.4)

(1) For vehicles equipped with (ABS) MARK II wheel anti-lock braking system.

SPECIAL SERVICE TOOLS

Tool P.N.	Name	Page ref.
A.2.0075	Support for jacking up car	00-85
A.2.0361	Tool for rotating camshaft and auxiliary control pulleys	00-23 00-24 00-27 00-28
A.2.0363	Pin for stopping belt - tensioner device	00-26 00-28
A.2.0441	Hydraulic circuit pressure gauge (ABS MARK II system) 200 bar	00-93/1
A.3.0521	Puller for camshaft pulley	00-23 00-27
A.4.0146	Ruler for suspension height check	00-83
A.4.0149	Tool for suspension height check	00-83
A.4.0151	Probe for suspension height check	00-83
A.5.0212	Wrench manifold gas pick-up plug	00-31

Tool P.N.	Name	Page ref.
A.5.0220	Combined 3 mm and 11 mm wrench for adjusting exhaust side tappets	00-24
A.5.0264	Wrench, Lambda sensor	00-36
C.1.0108	Dial gauge for checking valve caps	00-23
C.1.0132	Universal instrument for electronic system diagnosis	00-93 00-93/6
C.1.0133	Interface for ABS MARK II	00-93 00-93/6 00-93/9
C.2.0051	Connection, manifold gas pick-up plug	00-31
C.6.0183	Tool for checking T.D.C.	00-24 00-26
C.6.0197	Curved feeler gauge for checking valve clearance	00-22
C.6.0198	30 mm travel dial gauge (to be used with C.6.0183)	00-24
C.9.0033	Connection cable between C.1.0132 and C.1.0133	00-93 00-93/6