Service Training

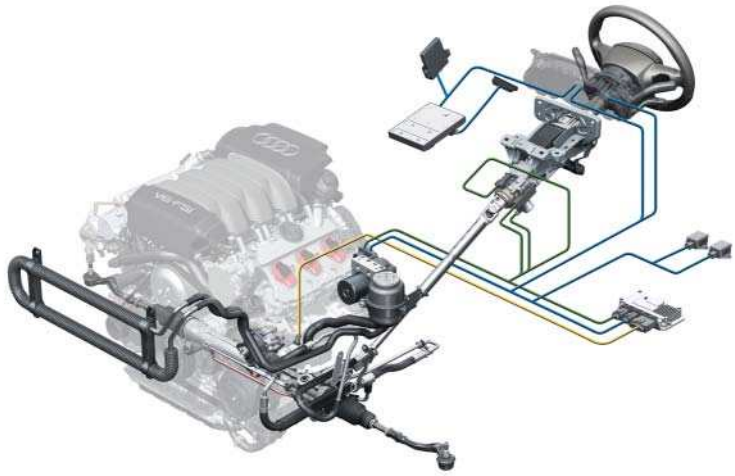

Dynamic Steering in the Audi A4'08

Self-Study Programme 402

In the Audi A4'08, dynamic steering is featured for the first time in an Audi vehicle. This steering system eliminates the compromise of having a constant steering ratio. An optimal steering ratio is obtained as a function of driving speed and steering wheel angle. The dynamic steering system provides a suitable steering ratio for every situation - whether parking, driving on windy country roads or at high speed on a motorway.

Over and above this, the dynamic steering system assists the ESP system in specific driving situations by implementing corrective steering inputs which serve to maintain dynamic stability. This intelligent new system, therefore, not only enhances driving and steering comfort, but also provides a marked improvement in active motoring safety.

402_004

Contents

Introduction

Basic design and functions

System overview / system components

Active steering control unit J792 10
Actuator 11
Electric motor 14
Dynamic steering lock. 15
Sensors 16
System overview 18

Function diagram / CAN data interchange

Operation and driver information

Steering ratio selection. 22
Functions of the ESP button E256 22
Function and fault indication 23

Special system functions

Initialisation. 24
Initialisation after a fault. 25

Servicing

Steering pump with ECO function

Overview 28
Design and function 29
System response in the event of a fault 30

The self-study programme teaches the design and function of new vehicle models, new automotive parts or new technologies.

The self-study programme is not a repair manual!
All values given are intended as a guideline only and refer to the software version valid at the time of preparation of the SSP.

For maintenance and repair work, always refer to the current technical literature.

Reference

Note

In conventional steering systems there is a direct mechanical connection between the steering wheel and the steering gear. This also means there is a given relationship between the steering wheel angle and the lock angle of the steered wheels. The geometric configuration of the interlocking teeth of the steering gear rack and the steering pinion rack allows different ratios to be obtained.

Nevertheless, only one ratio can be implemented in a vehicle at a time. The selection of suitable ratios always represents a best possible compromise between different and at times conflicting requirements. The ratio characteristic curve of the conventional power steering system of the Audi A4 without dynamic steering is shown in yellow in the diagram.

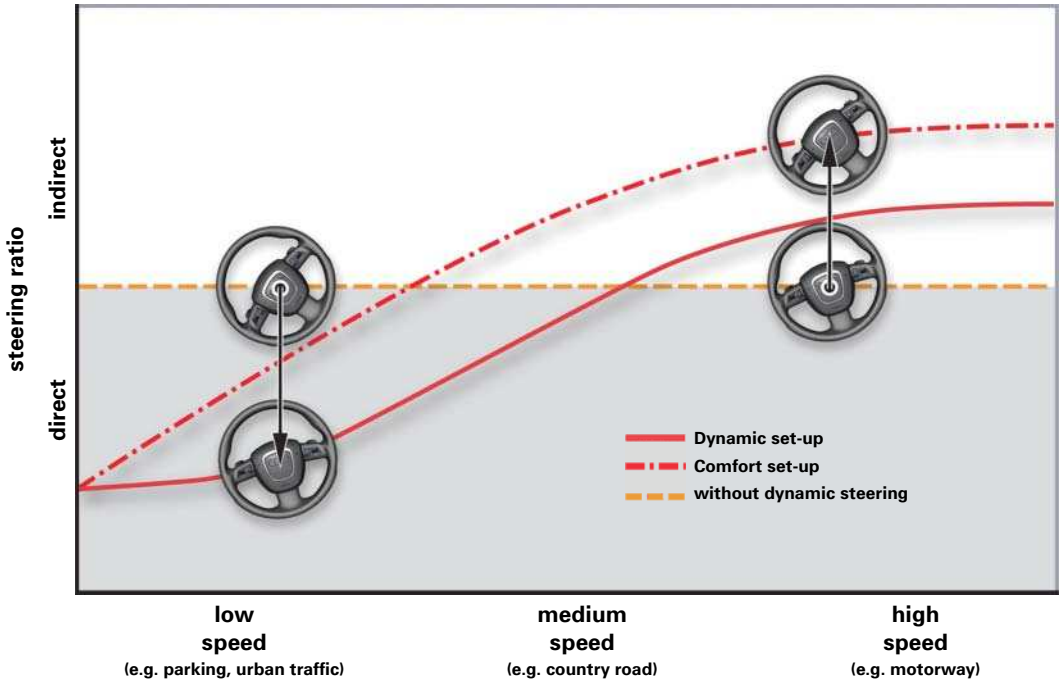

402_001

The key requirements can only be met optimally by a variable ratio characteristic curve. Such a characteristic curve varies the actual steering angle of the wheels according to driving speed and steering angle.

For the Audi A4, the dynamic steering system generally implements two variable curves with comfortable and sporty characteristics (red characteristic curves in the diagram). Drivers can select the characteristic curve which suits their preferences (refer to chapter "Operation and driver information"). The dependency of steering ratio on vehicle speed is clearly recognisable.

The variable characteristic curve is implemented by an additional electromechanical drive steering pinion, which is superimposed on the driver's steering input.

In an emergency, i.e. in case of failure of this drive, the steering system functions in exactly the same way as a conventional steering system.

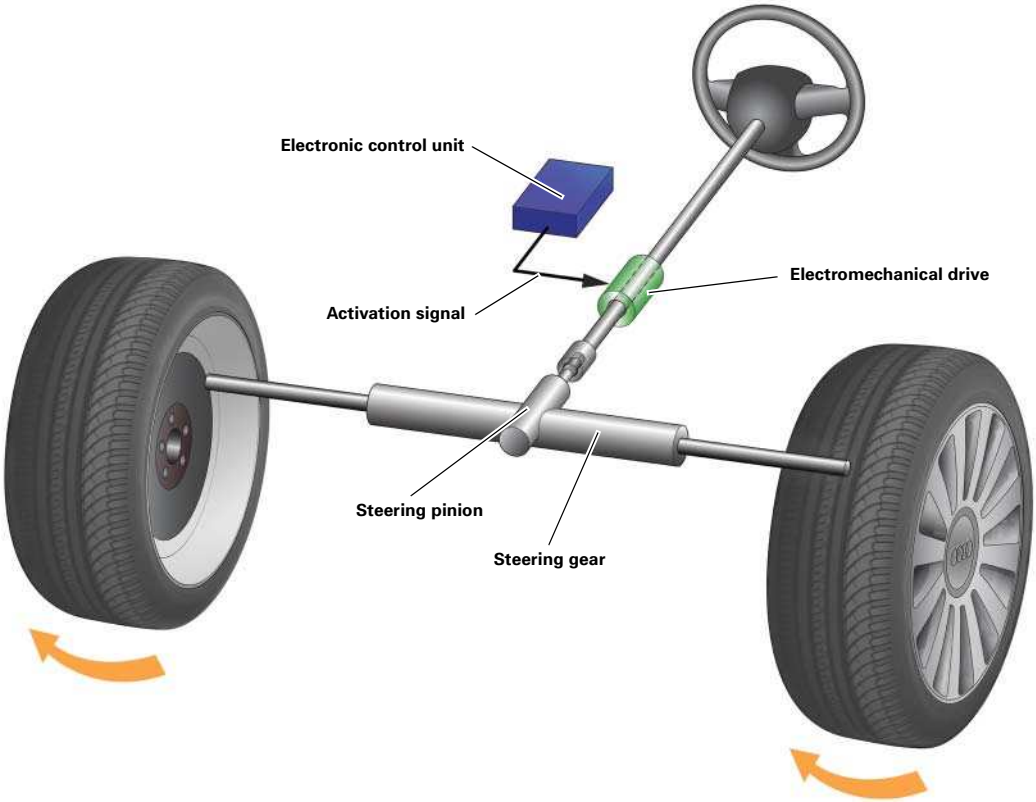

402_002

However, the advantages of the dynamic steering system go far beyond that. Working in conjunction with the ESP system and associated sensors, the system also activates when critical driving situations are imminent.
The dynamic steering system assists the ESP at the dynamic stability limit through controlled adjustment of the front-wheel steering angle.

This has two key advantages. Firstly, the overall stability of the vehicle is improved through simultaneous corrective braking and steering inputs, i.e. active safety is significantly enhanced. This is especially true at high speeds (>100 kph), since at these speeds the dynamic steering system can take full advantage of its very quick reaction times.

Secondly, in less critical driving situations braking can be dispensed with either partially or even completely, thereby allowing the vehicle to be stabilised more harmoniously and comfortably. By reducing the number of corrective braking inputs, particularly on road surfaces with a low friction coefficient (e.g. snow-covered roads), the vehicle moves with much greater agility than a vehicle stabilised by braking only while achieving the same level of driving stability.

ESP utilises the dynamic steering function in both oversteer and understeer situations, as well as under braking on road surfaces with different friction coefficients (μ-split).

Oversteering vehicle

In an oversteer situation, ESP stabilises the vehicle by integrating the dynamic steering system, which applies a controlled amount of counter-steer in order to prevent the rear end of the vehicle from "fishtailing".

A typical situation which can easily cause the vehicle to oversteer is changing lanes quickly.

When steering back on the new lane, particularly at high speeds, the rear end may begin to slide sideways (fishtail). The driver is often too late applying the necessary counter-steer, or fail to do so at all. Heavy corrective braking by the ESP system is the consequence.

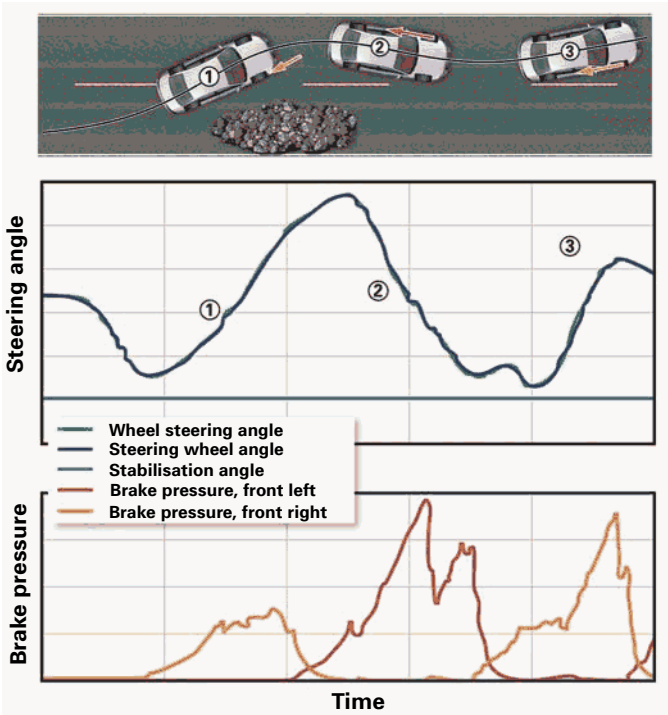

402_044

With the dynamic steering system, stabilising counter-steer is applied automatically, without the driver noticing anything. This significantly reduces the steering effort required on the part of the driver. The driver need only apply the steering angle that would be necessary in a similar, stable driving situation.

There is also much less need for corrective braking by the ESP system.
This translates to improved vehicle stability when changing lanes and higher lane-changing speeds.

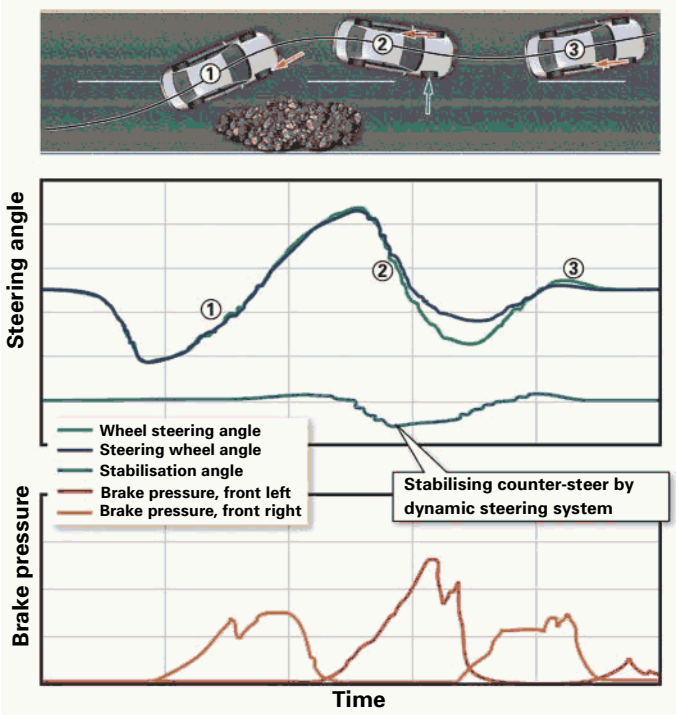

402_045

Understeering vehicle

In an understeer situation, the vehicle veers towards the outside of the road when the front wheels are turned.

This driving state is characterised by decreasing lateral traction with increasing steering angle, with the result that the cornering radius becomes larger.

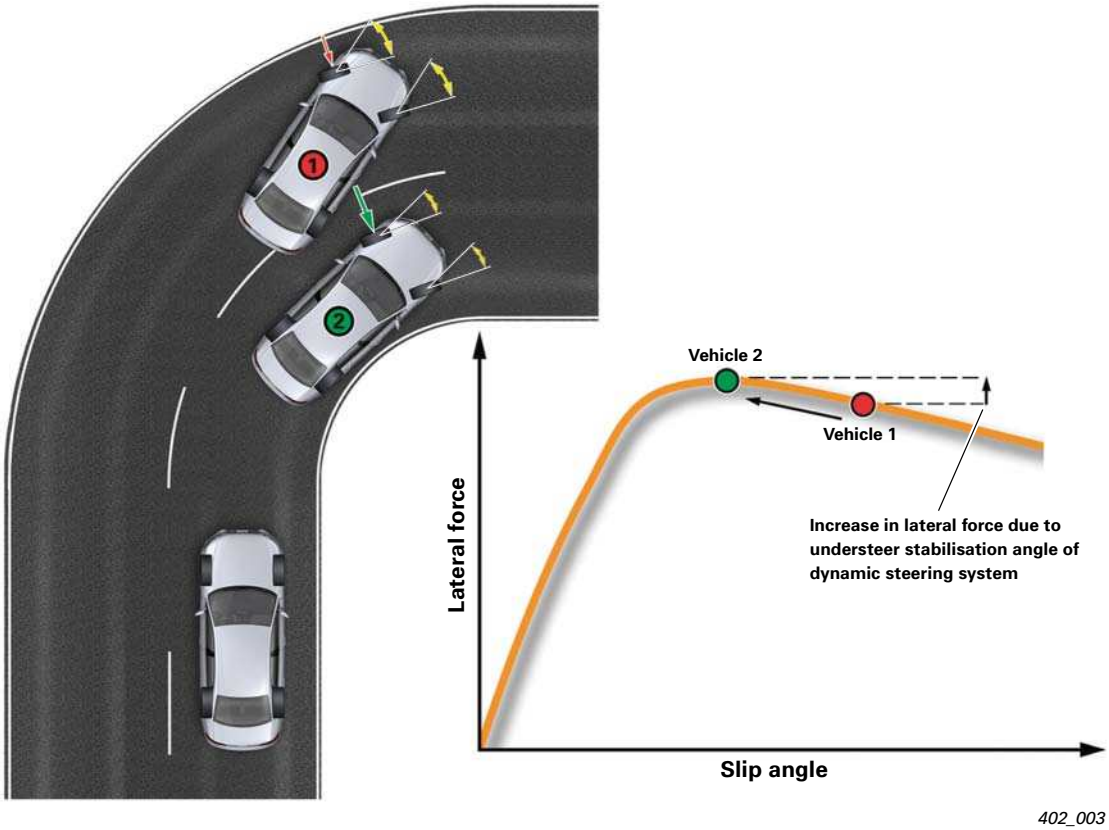

Most drivers react to this situation by applying more steering lock (vehicle 1). That has the effect of reducing the available lateral traction, with the result that the static friction between the tyres and the road surface becomes sliding friction, causing the vehicle to lose control and leave the road. In this situation, corrective intervention by the ESP system will often be of no use.

The dynamic steering system takes corrective action before this happens. The dynamic steering system "countersteers" the vehicle (vehicle 2). The actual angle which the wheels turn is less than the angle set by the driver via the steering wheel.

Lateral traction is thereby preserved, and the vehicle travels along the shortest physically possible curve radius.

If this is insufficient, the ESP system applies corrective braking preferably to the wheels on the inside of the curve. Additional stabilising counter-torque is thereby produced about the vehicle's vertical axis. The vehicle is thus braked and steered back onto the desired trajectory.

Braking on road surfaces with different friction coefficients (μ-split)

So-called μ-split surfaces are characterised in that the road surface has a high friction coefficient on one side of the vehicle (e.g. dry tarmac) and a low friction coefficient on the other side (e.g. water or ice). This is the case for example when snow-covered or icy road surfaces are partially thawed or when wet leaves is lying on an otherwise dry road. Under braking, the vehicle "pulls" towards the side of the road with the higher friction coefficient where braking force is stronger.

To be able to maintain a straight line in a vehicle without dynamic steering, the driver must apply enough steering lock to compensate for the pull effect. In a vehicle with dynamic steering, the steering angle is automatically controlled by the ESP and dynamic steering systems. The driver does not notice anything and the steering wheel remains in the position corresponding to the desired direction of travel. Since ESP and dynamic steering are able to set the required steering angle more quickly and accurately than the driver, the additional use of dynamic steering in this driving situation provides, on average, shorter stopping distances than in vehicles without dynamic steering .

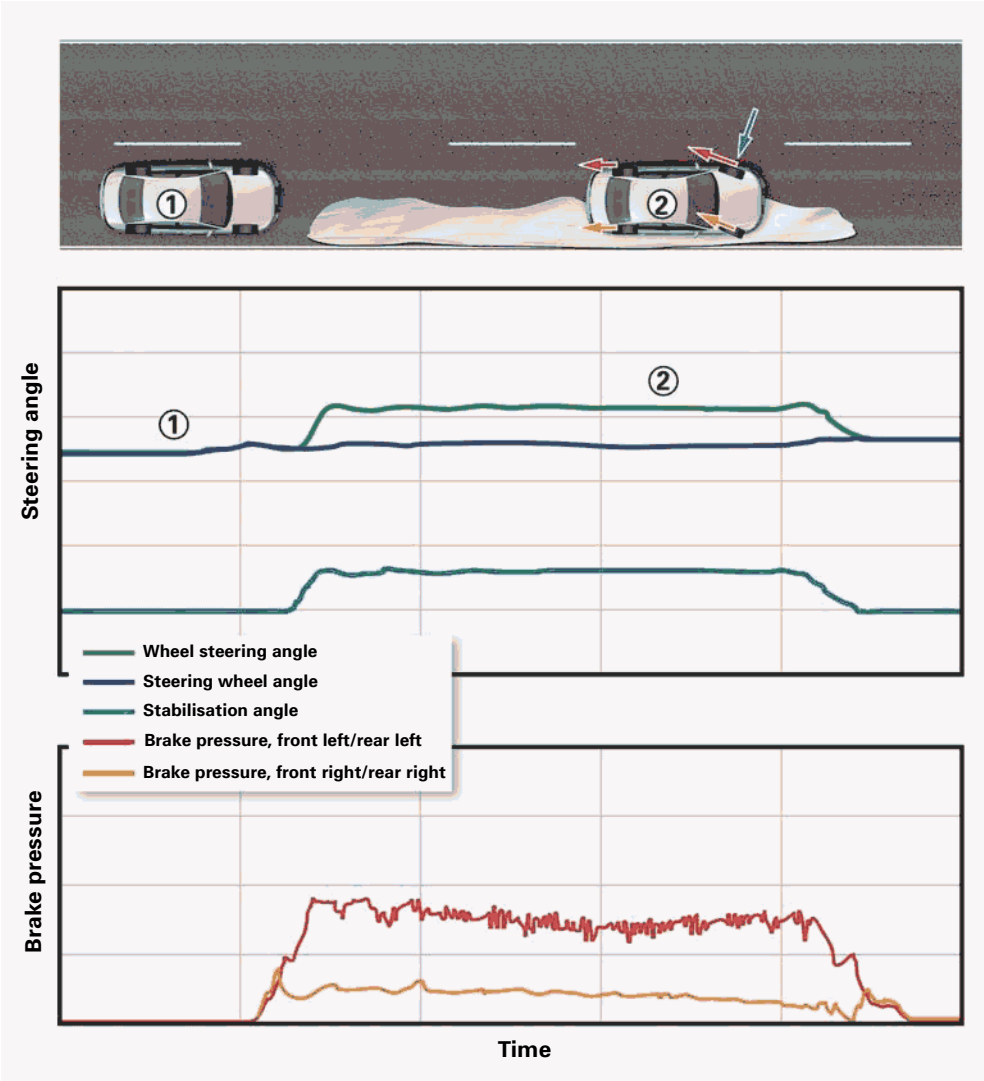

402_046

A superposition gearbox (actuator) integrated in the steering system maintains the mechanical connection between the steering wheel and the front axle in all situations.

In the event of serious system faults, the engine shaft of the superposition gearbox locks in order to prevent malfunctioning.

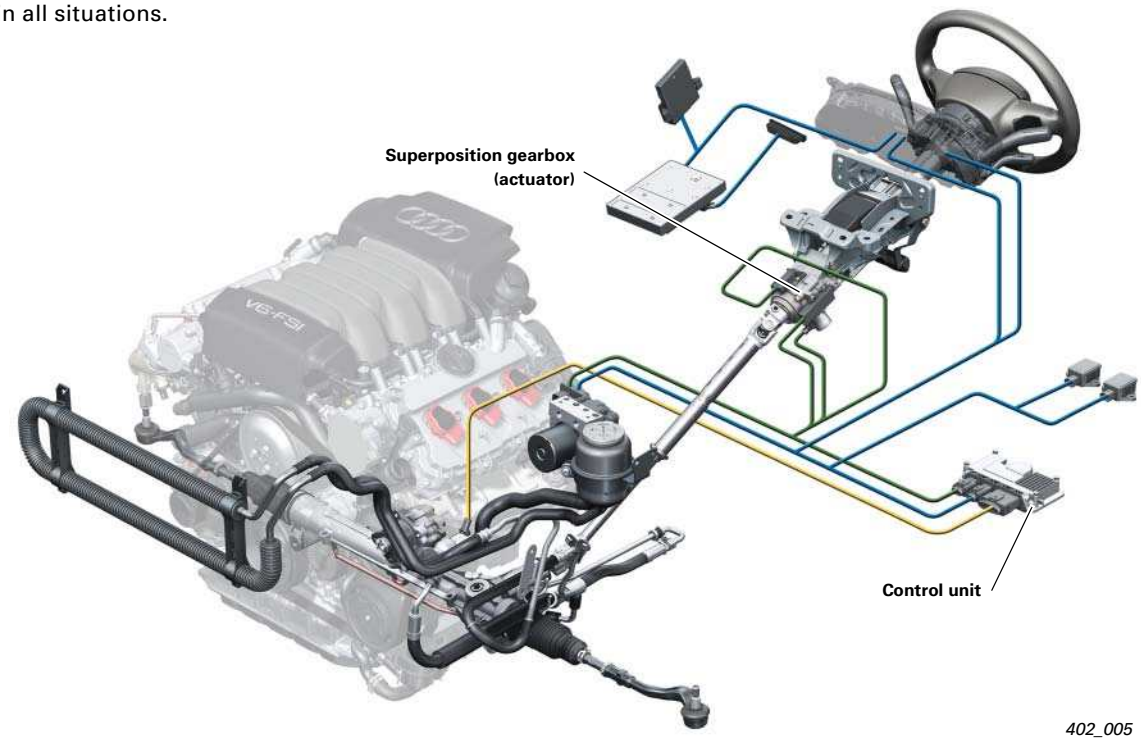

A control unit determines whether an increase or reduction in steering angle is needed. The control unit activates an electric motor, which drives the superposition gearbox. The total steering angle of the wheels is determined from the total overlap angle and the driver's steering input. The overlap angle can:

- increase the driver's steering input,
- reduce the driver's steering input,
- implement a steering angle without any steering input from the driver.

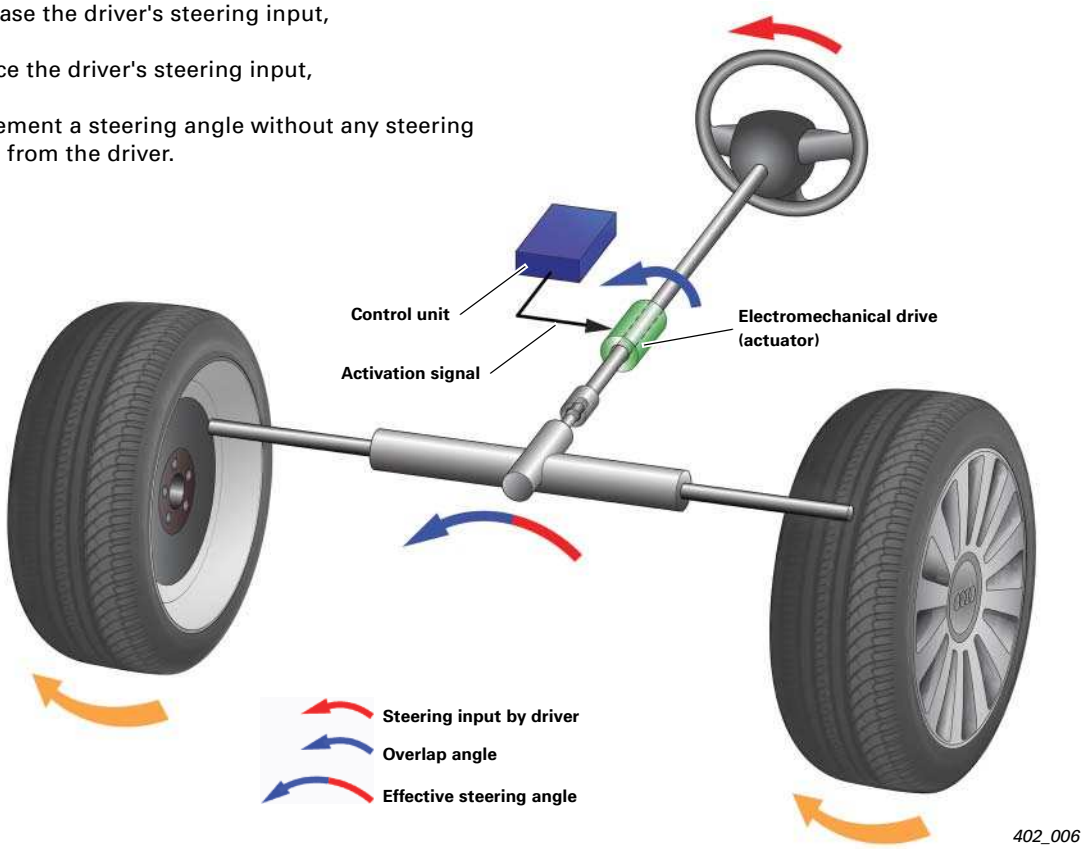

Active steering control unit J792

The control unit is located in the driver's footwell, in front of the seat cross-member. Its functionality can be subdivided as follows:

1. Basic function:

The control unit calculates the overlap angle necessary to implement the variable steering ratio. This calculation is essentially based on the vehicle's speed and the driver's steering input. This control mode is always active when the system is running normally.

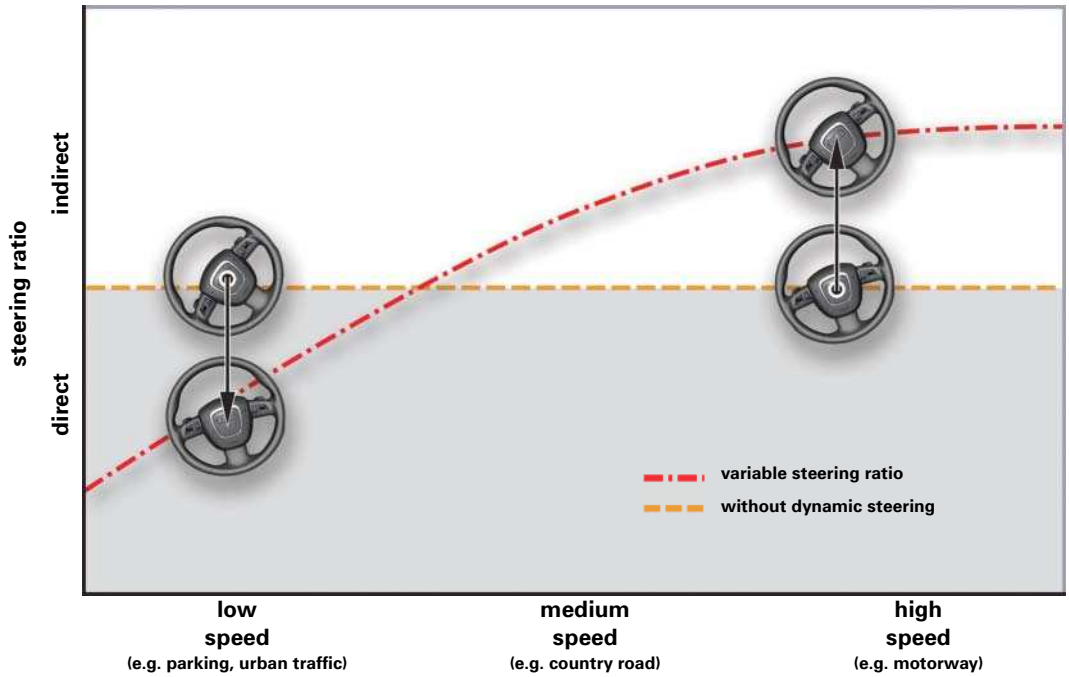

402_007

2. Auxiliary function: stabilising intervention

The ESP control unit uses stabilising functions in order to calculate the steering angle adjustments necessary to maintain dynamic stability. These correction values are sent to control unit J792 via the dash panel insert-suspension CAN bus. The control unit J792 adds the correction value to the calculated overlap angle. The corrected steering angle is then applied to the wheels.

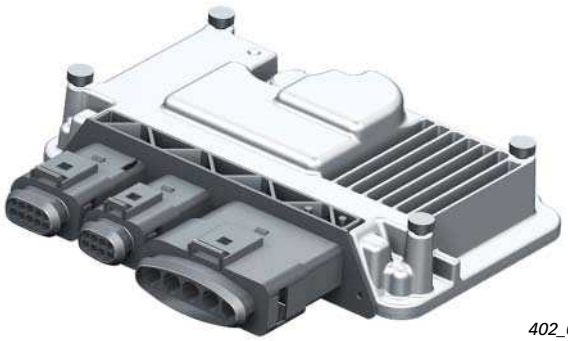

402_008

A safety system monitors the proper functioning of the control unit. All faults which, for safety reasons, lead to corrective intervention by the actuator are diagnosed. Depending on the nature of the fault, measures taken range from shutdown of selected subsystems to a complete system shutdown.

The control unit does not participate in run-on mode of the CAN bus via terminal 15.

The control unit is monitored by an integrated temperature sensor. The shutdown temperature threshold is 100°C.

Actuator

Design and function:

The actuator applies torsion to the steering pinion for the purposes of steering angle correction. The actuator is comprised of a strain wave gear driven by an electric motor.
These gears are ideal for converting fast rotational movements (e.g. of an electric motor) to much slower rotational movements.

The basic principle is that two gears with different numbers of teeth are in meshing engagement with each other. In the case of the dynamic steering system, the gear driven directly by the electric motor has 100 teeth while the output gear has a spline with 102 teeth.

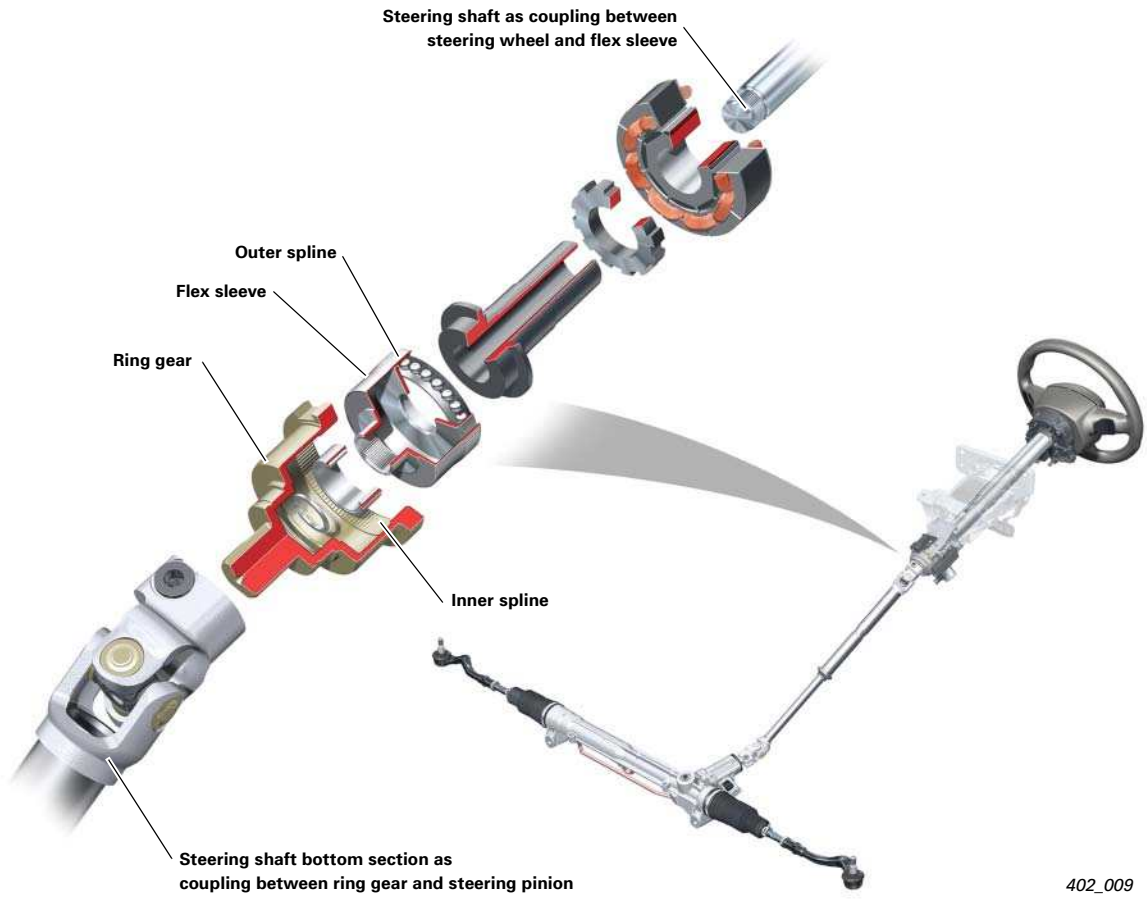

402_009

The steering shaft, which is coupled directly to the steering wheel, is also connected to the steering pinion of the steering gear in the dynamic steering system by a spline. The flex sleeve is coupled to the upper part of the steering shaft (to which the steering wheel is also directly coupled) by interlocking teeth so as to be free from backlash. This flex sleeve is a barrel-shaped component with a thin, i.e. flexible, outer wall. This outer wall has an outer spline with 100 teeth.

The mating part is a ring gear which has an inner spline with 102 teeth. The ring gear is rigidly coupled to the bottom part of the steering shaft, and hence to the steering pinion in the steering gear. When the driver turns the steering wheel, the flex sleeve and the ring gear behave like an interlocking shaft and hub, and the rotational movement is transmitted positively. This principle of operation is identical to that of a conventional steering system.

Actuator

Design and function:

In the upper steering shaft, a hollow shaft is mounted in such a way as to be independently rotatable within the actuator housing. This hollow shaft is driven directly by an electric motor. For this purpose, the engine rotor is rigidly coupled to the hollow shaft on one side.

The opposite side of the shaft is rigidly coupled to the inner ring of an angular contact ball bearing. This inner ring is not perfectly round. The balls travel along an eccentric, oval path as they roll around the ring.

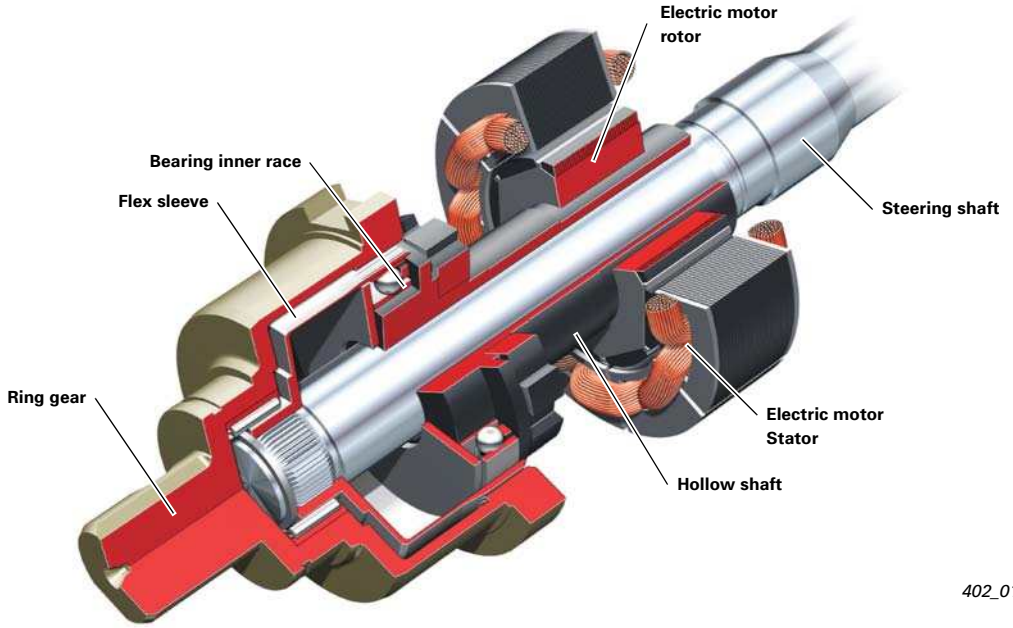

402_010

The bearing outer race is a flexible steel ring. The eccentric outer shape of the bearing inner race is transmitted to the outer race. The flex sleeve is lightly press fitted onto the outer race of this bearing. The flexible outer wall of the flex sleeve likewise follows the eccentric outer shape of the bearing.

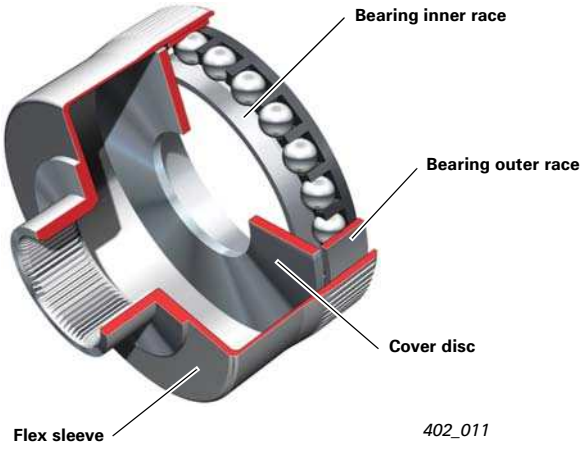

402_011

The outer spline of the flex sleeve is not in mesh with the conventional ("round") inner spline of the ring gear over its full circumference due to the eccentricity of the bearing.

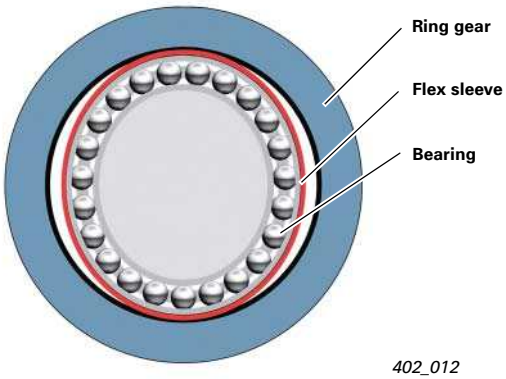

402_012

When the electric motor is actuated, the hollow shaft is driven. The inner ring of the angular contact ball bearings rotates, causing the eccentricity to rotate as well. Due to the different numbers of teeth on the flex sleeve spline and on the ring gear spline, the teeth on the flex sleeve do not mesh exactly with the teeth on the ring gear. The teeth on the flex sleeve engage the tooth flanks of the ring gear in a laterally offset manner.

The resultant force acting on this tooth flank produces a minimal rotational movement of the ring gear. All the teeth on the circumference of the spline mesh in a time-shifted manner due to the "rotation" of the eccentricity under motor drive. This produces a continuous rotational movement of the ring gear and the steering pinion coupled to it. The steering angle of the wheels changes. The reduction ratio from the motor to the steering pinion is approximately 50:1.

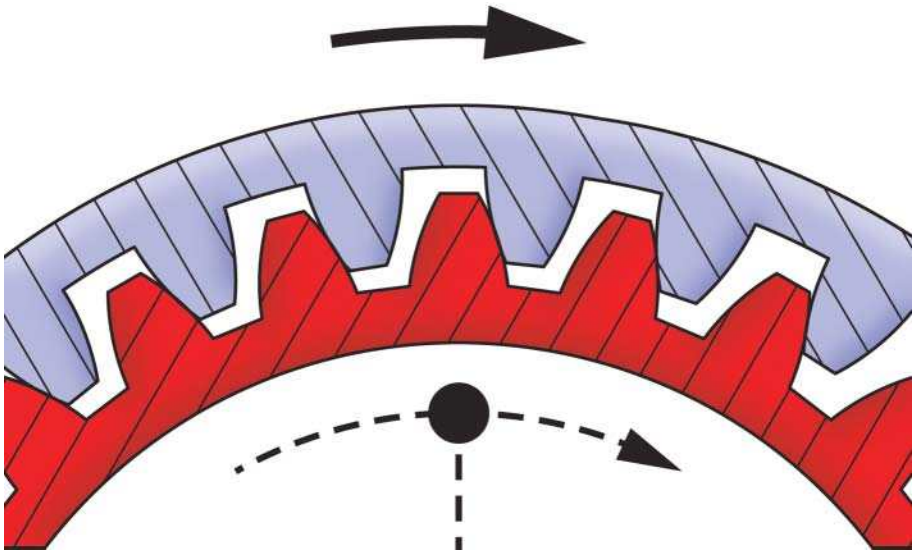

402_013

Eccentricity

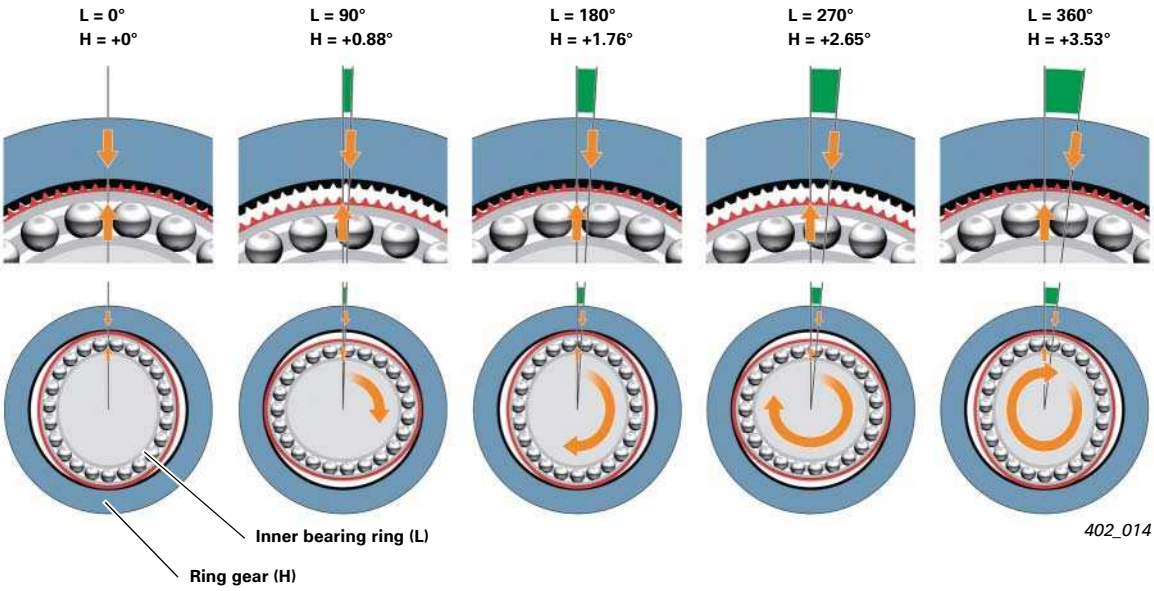

402_014

Electric motor

A permanently excited synchronous motor is deployed. The rotor rigidly coupled to the hollow shaft is comprised of eight permanent magnets with alternating polarity.

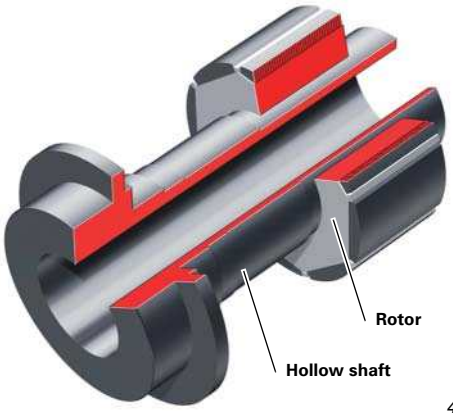

402_017

The stator consists of six pairs of coils. The coils are arranged inside the actuator housing and activated by the control unit. The shielded supply lead is connected to the actuator housing.

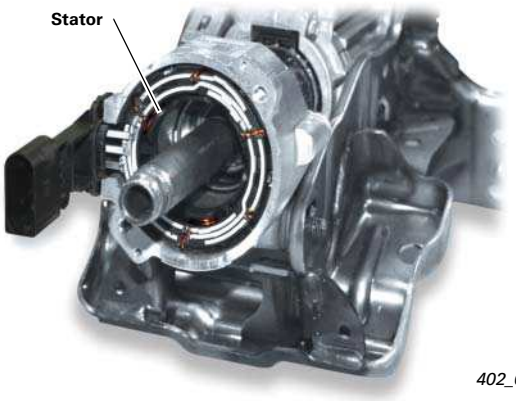

402_018

The motor is activated by three phase-offset AC voltages, which produce a rotating magnetic field around the stationary coils. The force action of this alternating magnetic field on the permanent magnet of the rotor mounted on the hollow shaft induces a rotational movement of the rotor.

The principal advantage of this type of electric motor is that it has a quick response, which is essential for making corrective steering inputs to stabilise the vehicle.

Dynamic steering lock

To represent a safe fallback mode in the event of a system fault or failure, the dynamic steering gear can be locked (disabled) mechanically. During normal operation, the lock is engaged whenever the internal combustion engine is shut off.

When the engine is started, the dynamic steering system is unlocked, as indicated by an audible "click" noise.

Locking is provided by a solenoid bolted onto the gearbox housing.

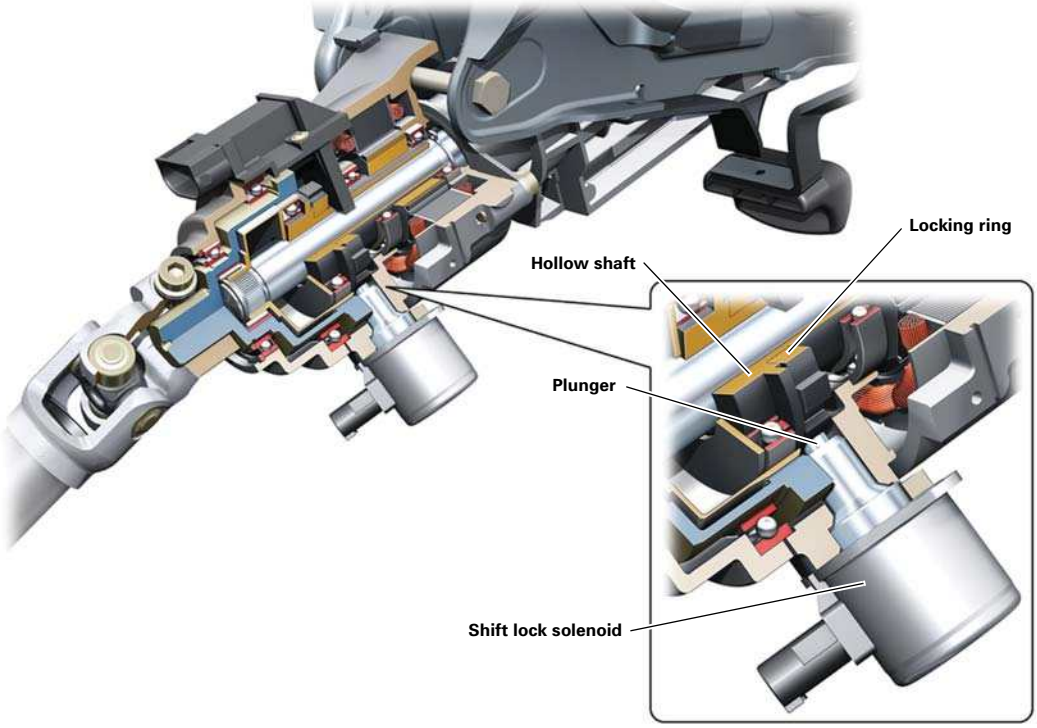

402_019

A ring with multiple outer recesses is attached to the electric motor driven hollow shaft. The cylindrical plunger of the solenoid engages these recesses. The hollow shaft is thereby locked, and the eccentric bearing can no longer be driven by the electric motor.
The plunger locks the dynamic steering gear without electrical current, and is held in its limit stop position by a compression spring.

If the magnetic coil is activated via the discrete from control unit J792, the plunger is moved towards the magnetic coil against the pressure of the spring. The plunger is thereby disengaged releasing the hollow shaft and the dynamic steering gear.

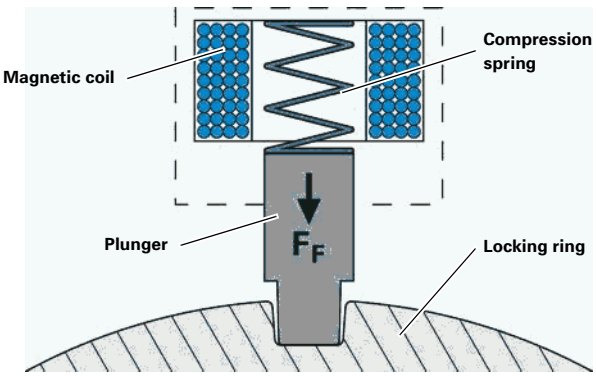

F_F = spring force

402_020

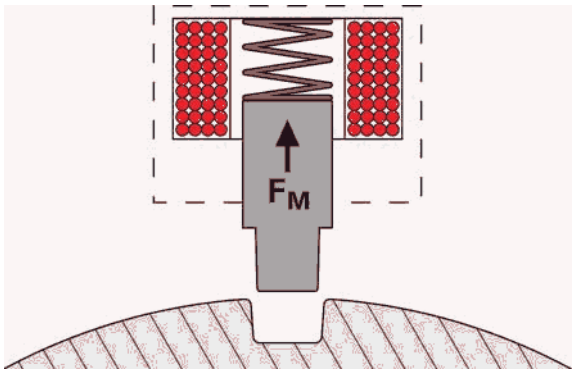

F_M = magnetic force

402_021

Sensors

Motor position sensor

The position of the hollow shaft, i.e. the eccentricity of the bearing, is measured by a motor position sensor. A magnetic ring on the hollow shaft acts as a sender. The magnetic ring is comprised of eight poles. The magnetic field is measured by a sensor with three Hall elements. A signal is generated for every 15-degree revolution of the motor (equivalent to 0.3 degrees at the steering wheel) and sent through discrete wiring to control unit J792. The actual position is stored in control unit J792 when the ignition is turned off. In the event of a sudden loss of terminal 30, the zero position is identified by the index sensor (refer to "Initialisation" on page 24).

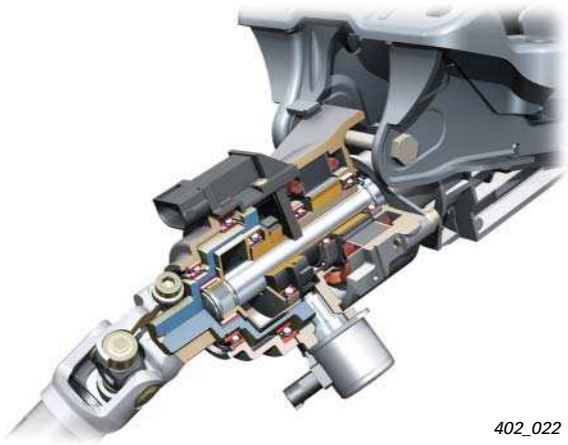

402_022

Index sensor

The index sensor outputs one signal per turn of the steering wheel or per revolution of the actuator output shaft. This signal is used to determine the centre position of the steering gear and for initialising the control unit after a fault (refer to "Initialisation after a fault"). A magnetically preloaded Hall sensor is used. The sensor is installed together with the motor position sensor in a common housing. A recess on the outside of the output-end ring gear serves as a sender. This recess produces a square-wave signal at the Hall sensor of the index sensor.

The motor position sensor and index sensor are installed in a common housing.

402_023

Index sensor recess

402_024

ESP sensor unit G419 and ESP sensor unit 2 G536

Two sensor units (G419 and G536) are used on vehicles with dynamic steering. The sensor units are functionally identical and, when intact, deliver identical signals for yaw rate and transverse acceleration. The sensor units can be distinguished externally by their connectors.

The dual-sensor configuration provides security against malfunctions, which can be caused by faulty sensor signals. The signals from both sensors are checked to ensure they have the same wave form.

The sensor units are connected to the ESP control unit J104 and the active steering control unit J792 by sensor-CAN. The ESP control unit requires the signals of both sensor units in order to calculate the steering overlap angle necessary to stabilise the vehicle.

The sensor units are located below the driver seat.

402_025

Steering angle sender G85

A key input signal is that of momentary steering angle. This signal is required both for calculating the overlap angle required to obtain the variable steering ratio and for calculating the overlap angle necessary to stabilise the vehicle.

For this reason, the information is read in by both control units (J104 and J792).

The steering angle sender is configured for redundancy.

It outputs prepared measured data to the dash panel insert-suspension CAN bus.

402_026

System overview

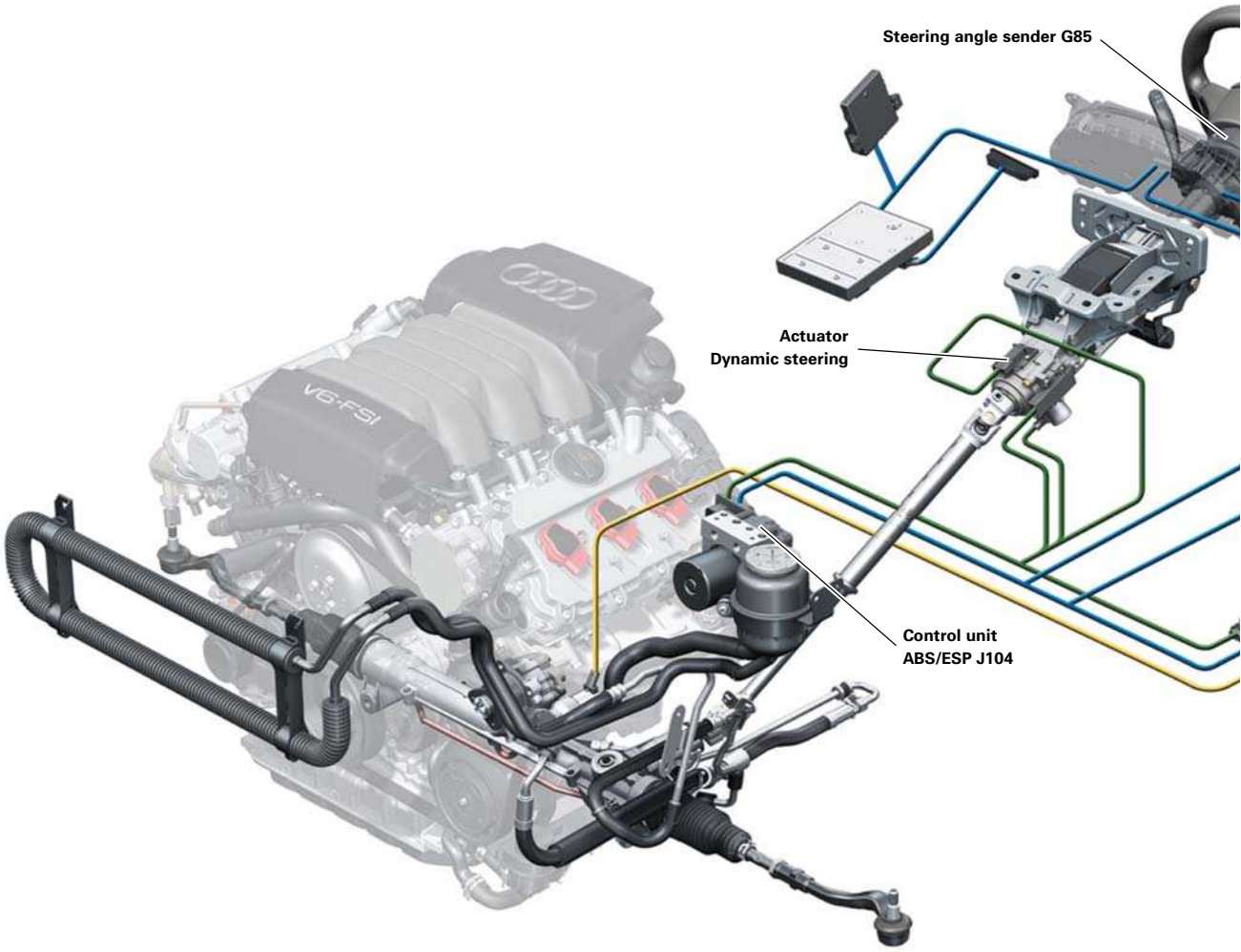

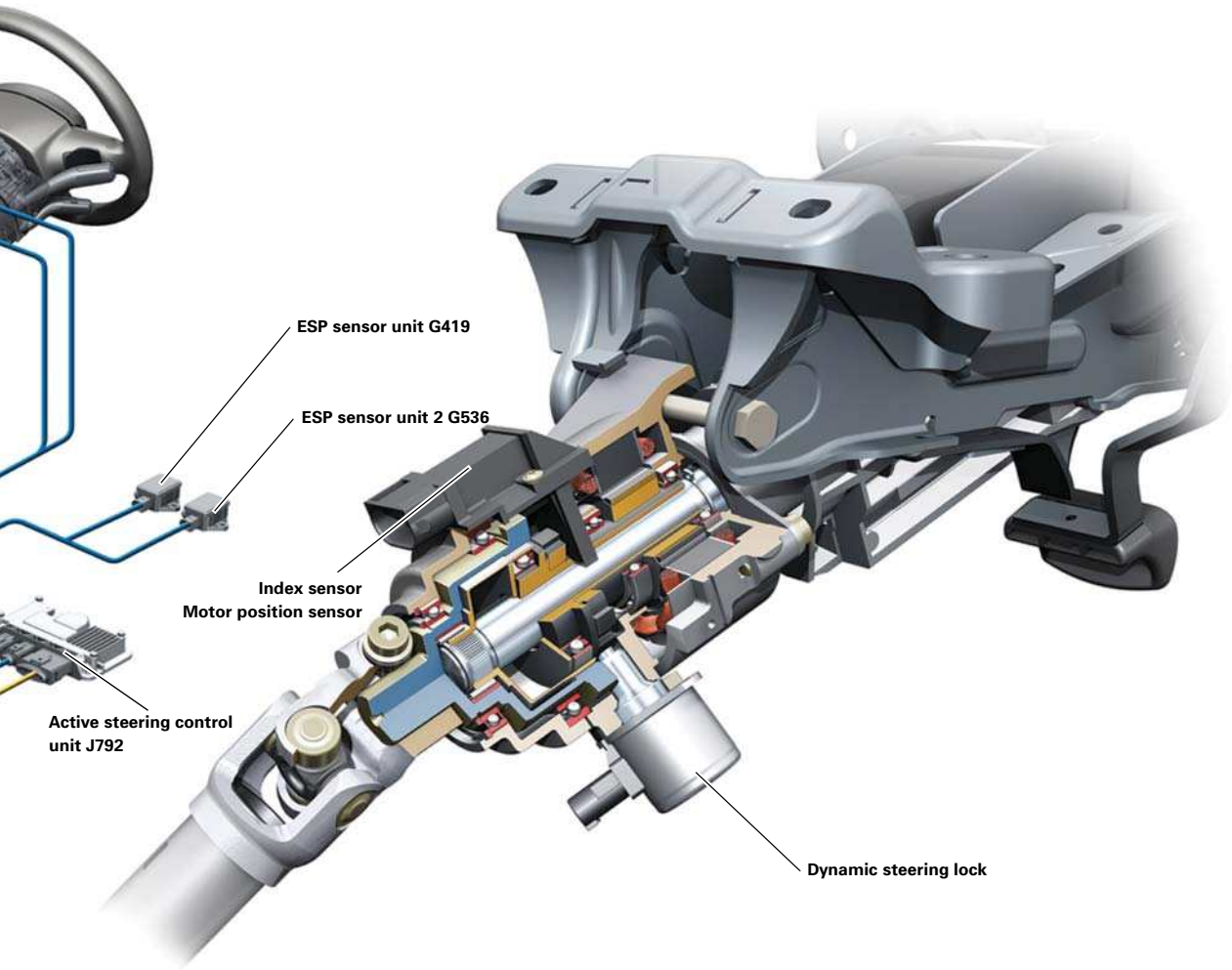
ESP sensor unit G419
ESP sensor unit 2 G536
Index sensor
Motor position sensor
Active steering control unit J792
Dynamic steering lock

402_026a

Function diagram

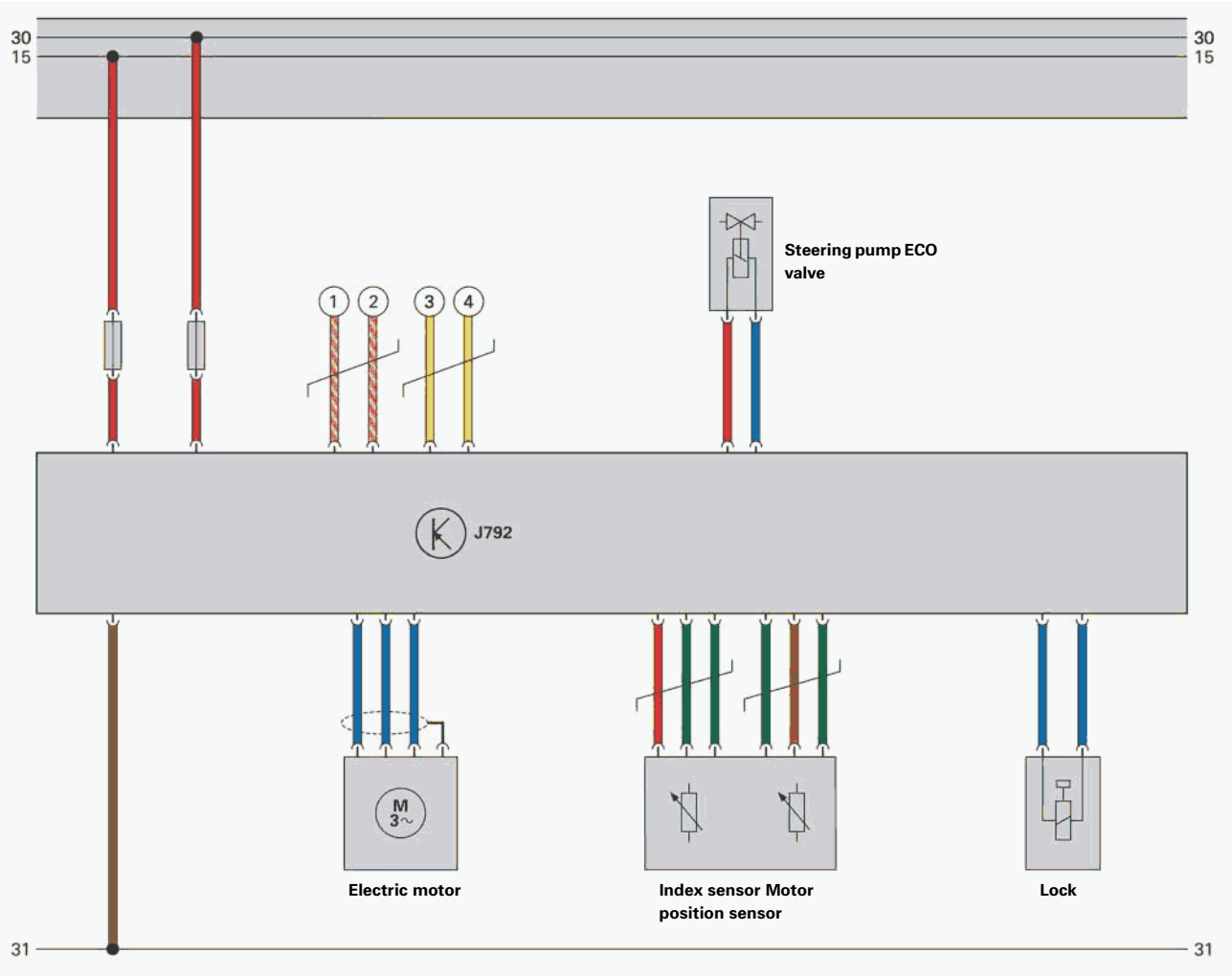

402_030

J792 Active steering control unit

Positive

Ground

Output signal

Input signal

Dash panel insert - suspension CAN

Sensor-CAN to ESP control unit J104

CAN data interchange

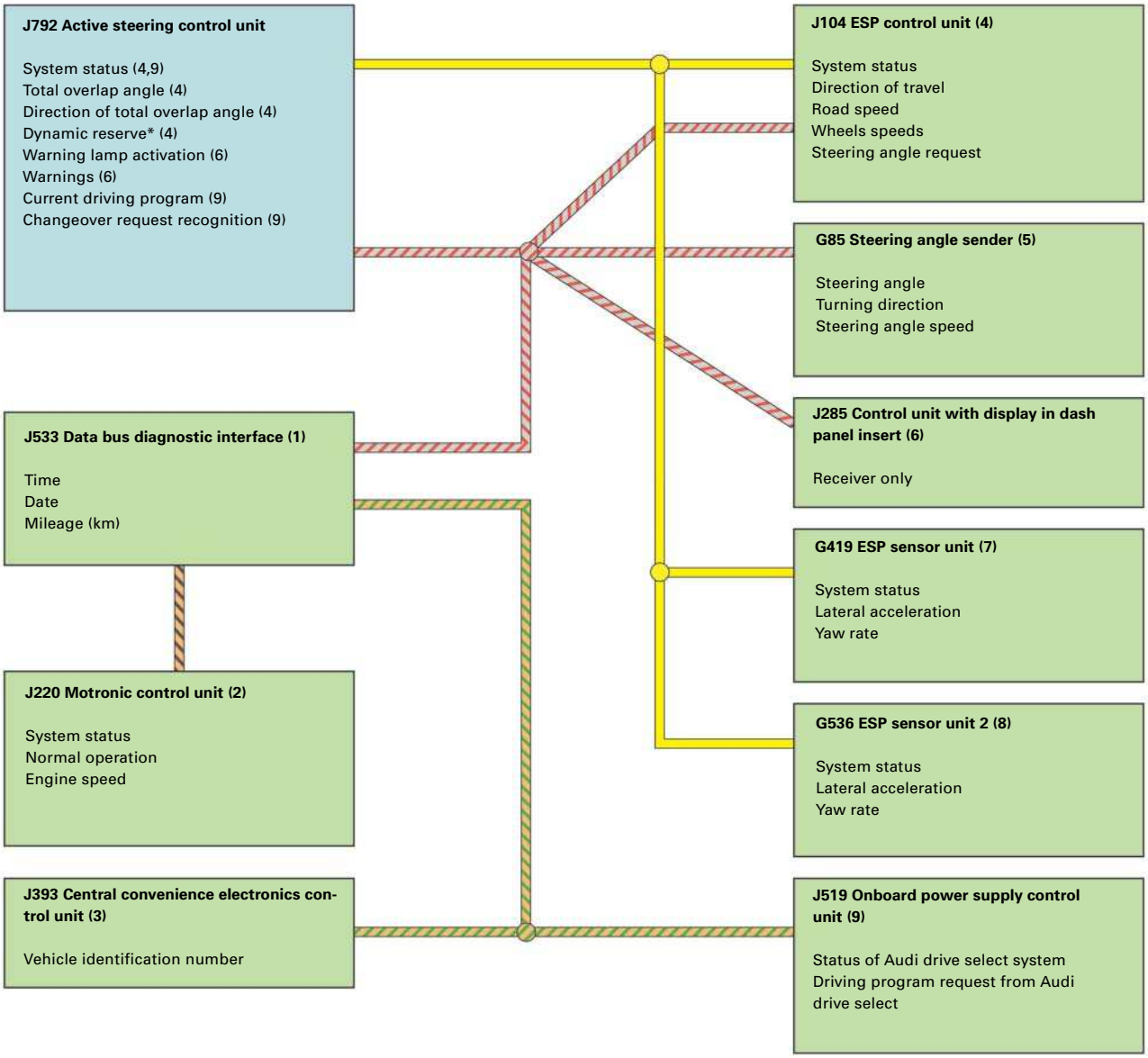

402_031

Powertrain CAN bus

Dash panel insert-suspension CAN

Convenience CAN

Sensor-CAN

Information sent by control unit J792 The number in brackets denotes the bus users to which the information is sent

Information received and evaluated by control unit J792

***: indicates, in degrees, the steering angle and speed which can be set by activating the electric motor;**

Steering ratio selection

With Audi drive select, drivers can select a steering ratio to suit their preferences (Dynamic or Comfort). For detailed information regarding Audi drive select, please refer to Self-Study Programme 409.

Functions of the ESP button E256

Briefly pressing the button (<3 s) deactivates the TCS function.

However, the stabilising function of the dynamic steering system continues to be fully available.

The ESP function remains active, but the braking is reduced.

This mode is designed specifically for "freeing" the vehicle when it is stuck in loose surfaces or snow, for example.

402_027

Switch position in vehicles with MMI

Pressing the button for longer than 3 s deactivates the ESP function.

The stabilising functions of the dynamic steering system are also deactivated in understeer and oversteer situations.

However, the stabilising function of the dynamic steering system continues to be fully available under braking on
road surfaces with different friction coefficients.

This function cannot be deactivated by the driver.

402_028

Switch position in vehicles without MMI

Pressing the button for longer than 10 s reactivates all functions. The ESP function cannot be deactivated again until the ignition is turned off and back on.

Function and fault indication

A warning lamp integrated in the rev counter serves the dynamic steering system as a function and fault indicator.

Texts are also shown on the centre display.

The diagnostic warning lamp is checked when the ignition is turned on. The warning lamp remains activated until the engine is started. When the engine is running, the dynamic steering system is activated by releasing the lock.

402_029

If a system fault occurs, this is indicated on the centre display of the dash panel insert and by the warning lamp.

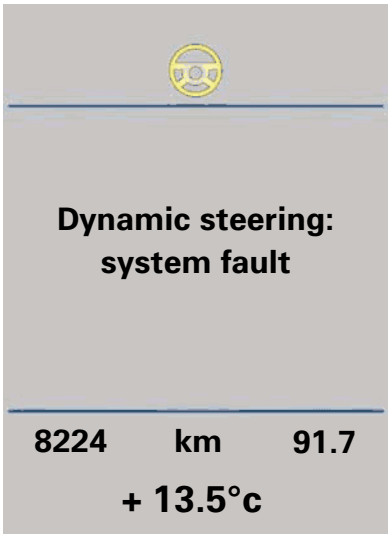

402_034

System response varies according to fault severity. The control unit is designed in such a way that the system can continue to operate with a minimum of limitations.
Each possible and diagnosable fault is assigned to an explicitly defined system limitation (="fallback mode").

The following deviations in system response can occur:

– The vehicle's steering response has been modified. When driving at low speeds, more steering input may be necessary. At high speeds, the vehicle may respond more sensitively to steering inputs.

– The stabilising functions of the dynamic steering system are no longer are available.

– The steering wheel may be at an angle when driving in a straight line.

In the event of serious system faults, all functions of the dynamic steering system are disabled.

Initialisation

On account of current statutory requirements, the dynamic steering system is designed in such a way that, despite the possibility for electromechanical adjustment, a permanent mechanical connection exists between the steering wheel and the steering pinion. Even when dynamic steering is off, it is possible to steer the wheels with the steering wheel (e.g. to carry out repairs with the vehicle raised on the lift). Such a steering operation is executed without steering angle overlap by the dynamic steering system, i.e. without implementing the variable characteristic curve.

The next time the system starts, i.e. when the internal combustion engine is started, the steering angle of the front wheels will no longer match the steering angle defined by the variable characteristic curve at the corresponding steering wheel angle. The task of the initialisation routine now is to determine this deviation from the nominal value and to implement the necessary steering angle overlap in order to restore the correct steering angle at the front wheels.

This process is indicated on the display by flashing of the warning lamp and by the text "Initialisation" when the engine starts.

If the vehicle is set in motion during this initialisation routine, the display remains active until the initialisation procedure is complete. In this case, the initialisation procedure takes place "in the background" and is virtually unnoticed by the driver.

The initialisation is implemented with the signals generated by the motor position sensor and the steering angle sensor. The steering angle sensor indicates to the control unit the momentary position of the steering wheel. The motor position sensor signals the position of the hollow shaft, and hence the eccentricity of the bearing. The control unit calculates the difference between the nominal and actual motor positions and makes the necessary correction by activating the motor.

If this difference is greater than a steering wheel angle of 8°, the correction is made when the vehicle is stationary. If the vehicle is driven away immediately, the correction is aborted and substituted by a correction during the steering input. If minor deviations occur, a correction is generally made during the next driver steering input.

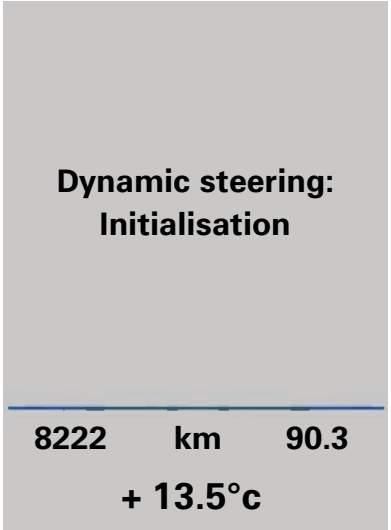

402_032

Note

The steering wheel may move without any action by the driver during the stationary initialisation routine.

Initialisation after a fault

If the active steering control unit J792 is not capable of reliably saving the signal from the motor position sensor when the ignition is turned off, due to a serious fault, a special initialisation routine is started. This procedure requires the index sensor, which outputs a signal when the steering gear is in its centre position.

From the basic setting procedure (refer to "Service work"), the active steering control unit knows the assignments of the measured data generated by the steering angle sender (=steering wheel position), the motor position sensor
(position of eccentricity) and the index sensor (steering gear pinion position).

The motor position sensor can now be reinitialised by the pulse generated by the index sensor and from the position of the steering angle sensor. The "normal" initialisation routine synchronises the steering wheel if it is at an angle.

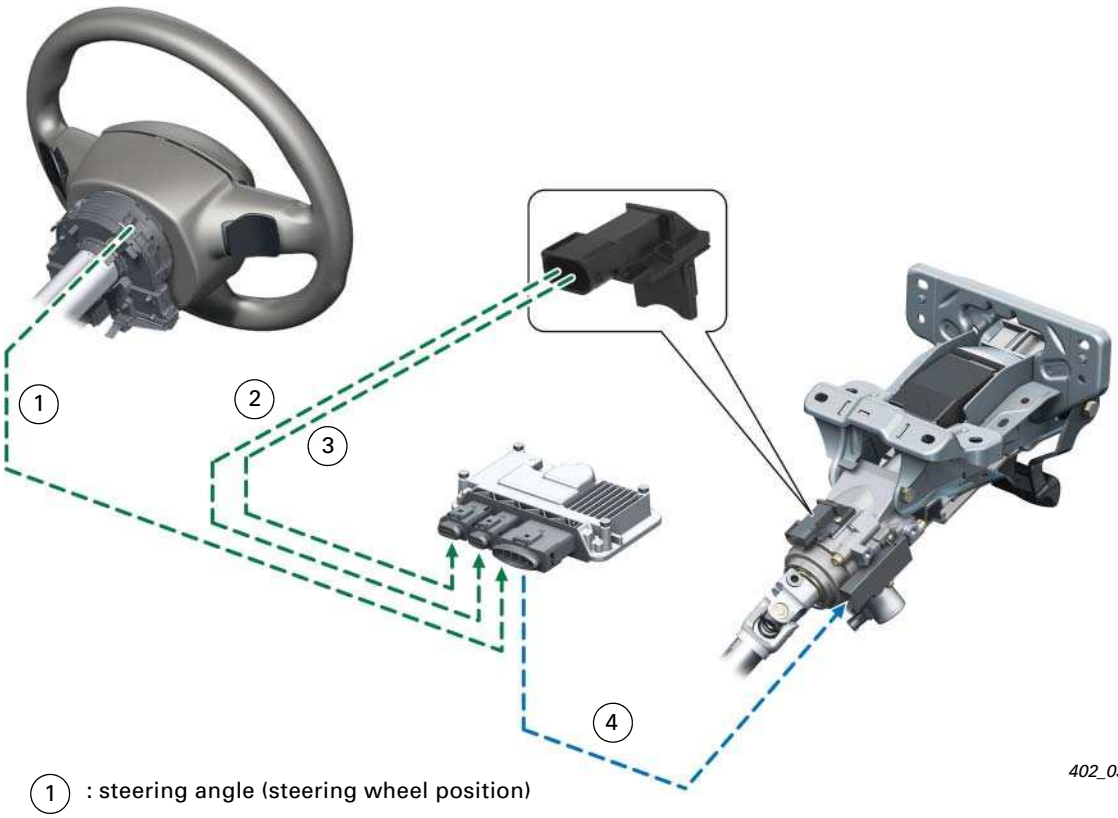

402_033

1 : steering angle (steering wheel position)

2 : motor position (position of eccentricity)

3 : index pulse (steering gear pinion position)

4 : activation of electric motor

The dynamic steering system has the address 1B.

The functions shown in the figure can be selected in the Guided Fault Finding menu under "Function and component selection".

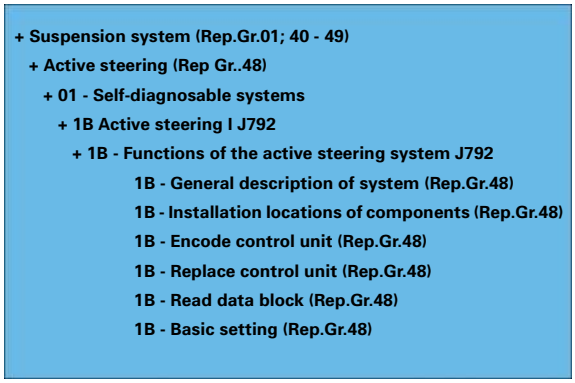

402_035

Encoding the active steering control unit J792

The control unit is encoded online via SVM (Software Version Management).

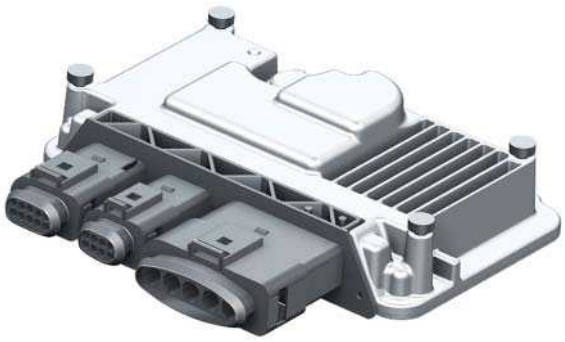

402_008

Basic setting of the dynamic steering system

The basic setting procedure teaches the active steering control unit, once only, the assignments of the measured values of the steering angle sender (=steering wheel position), of the motor position sensor (position of the eccentricity) and the index sensor (position of the steering gear pinion). In the case of new vehicles, the individual sensor signals are assigned to each other at the factory. These assignments are, therefore, a basic requirement for the initialisation and also for ensuring that the steering wheel is aligned straight when driving in a straight line on a level road surface. This procedure must be carried out with utmost care.

The basic setting procedure must be performed in the service workshop after:

– installing a new / different active steering control unit J792

– installing a new / different steering column

– installing a new / different steering angle sender G85 or after recalibrating the steering angle sender

– changing the wheel alignment values

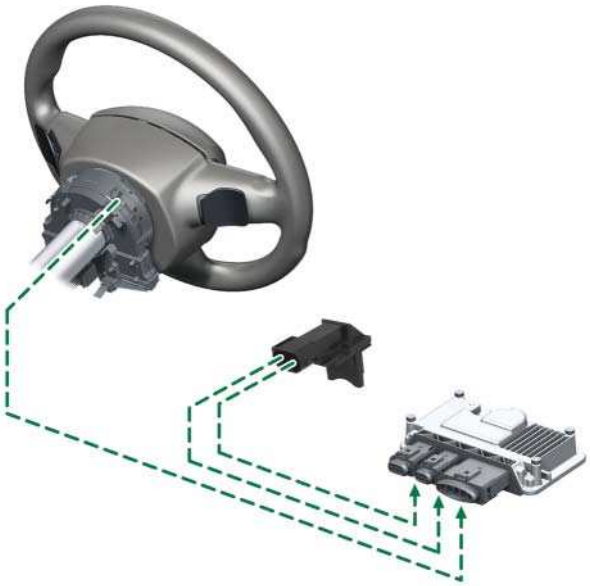

402_037

Basic setting of the dynamic steering system

When the "Basic setting" function is selected in the Guided Fault Finding menu of the diagnostic tester, the steering angle sender is calibrated before starting the actual basic setting procedure. The calibration is done using the new special tool, steering wheel balance VAS 6458.
This calibration procedure must be carried out with utmost care.
After the calibration, control unit J792 knows the steering angle at which the steering wheel is aligned perfectly straight.
A wheel alignment rig is required for the following basic setting procedure. The front wheels are moved into the position defined by "identical individual toe values relative to geometric drive axis". In this position, the control unit J792 utilises the motor position sensor to determine the momentary steering angle, as well as the position of the dynamic steering system's electric motor (and hence the eccentricity).

The position of the index sensor relative to the associated steering angles is determined by subsequent steering wheel movements about the centre position.
The difference between the steering angles is determined for identical individual toe values relative to the geometric drive axis and steering angle when the steering wheel is aligned straight. The steering wheel angle is then corrected automatically by control unit J79 via activation of the electric motor. This ensures that the steering wheel is aligned straight when driving in a straight line.
A prerequisite for basic setting is an encoded control unit J792.

Overview

The dynamic steering system is capable of very quick steering wheel movements. A high performance steering pump is required in order to achieve this. However, there is relatively little need for very fast steering inputs. If a conventional steering pump was to be used, the pump would permanently produce a high hydraulic fluid flow rate, even though this is not needed in most situations. For this reason, a steering pump with a special closed-loop control system is used in the V6 and V8 petrol engined versions of the Audi A4`08 with dynamic steering.

This control system has the following advantages over conventional systems:

- Reduction in system temperature of approx. 15 to 20°C
- Reduction in fuel consumption of approx. 0.1 to 0.2 litres per 100 km
- Approx. 35% reduction in pump power consumption

Design and function

The central actuator in the system is an electrically activated hydraulic valve, or ECO valve. This valve provides a demand driven hydraulic fluid flow within the steering system.

It is activated electrically by control unit J792, which utilises a PWM signalas a function of steering speed and driving speed.

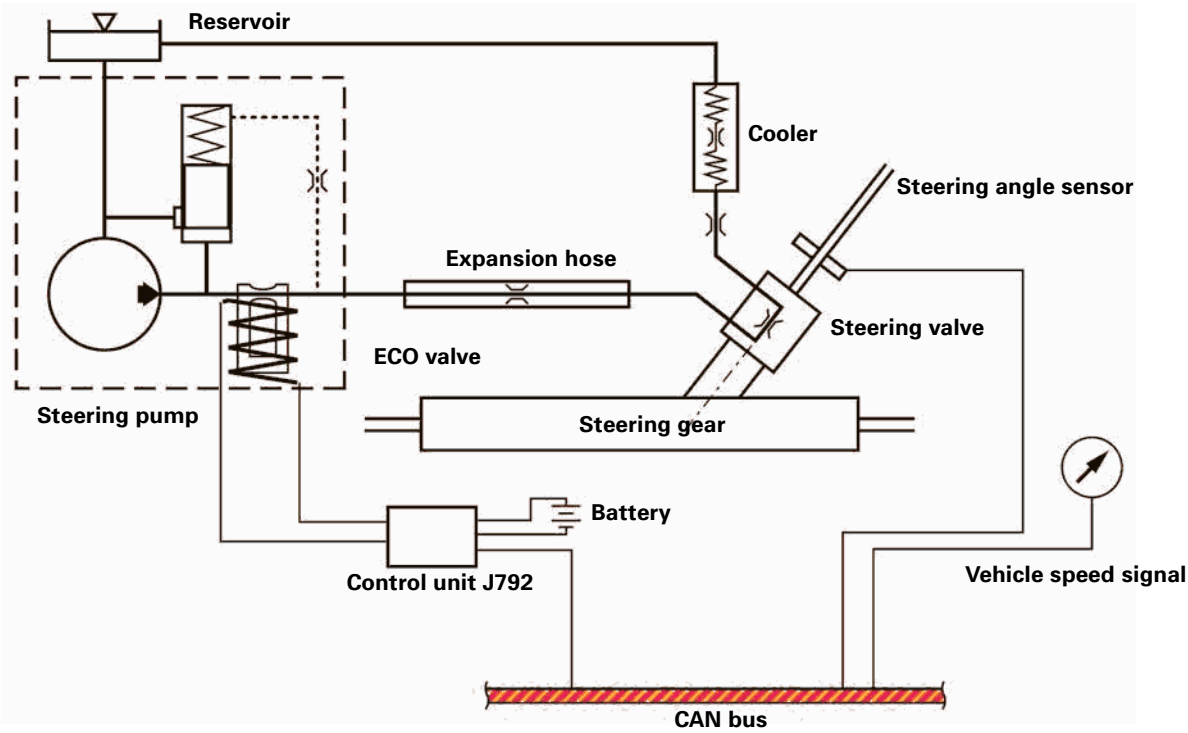

402_040

Design and function

If the valve has a small port cross-section, a high back-pressure develops at the inlet end of the valve. This back-pressure acts upon the pressure control valve gate. A line allowing the hydraulic fluid to flow from the pressure side of the pump to the intake side of the pump opens when a defined back-pressure level is exceeded. The resistance against which the pump must work is thereby reduced, resulting in the above-mentioned advantages.

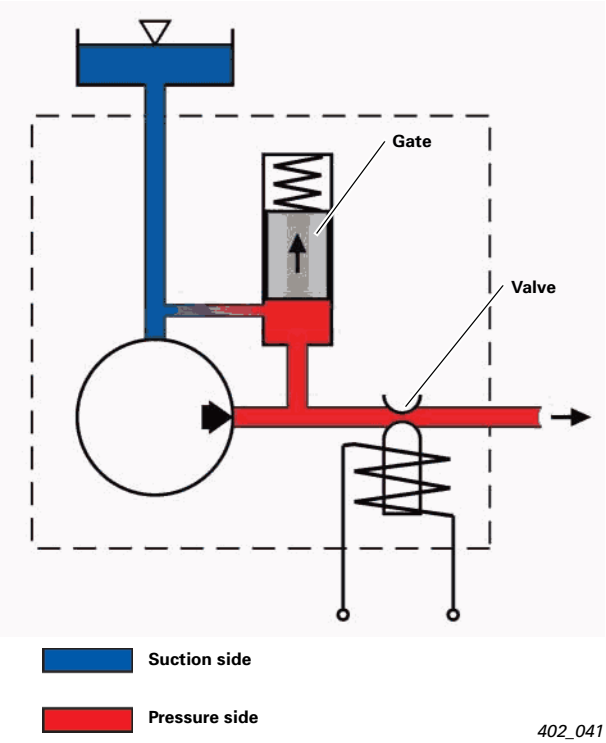

402_041

Quick steering inputs and low driving speeds produce a large valve port cross-section. A low back pressure develops on the inlet side of the valve. The pressure control valve gate is not moved far enough in order to open the line leading to the intake side of the pump.

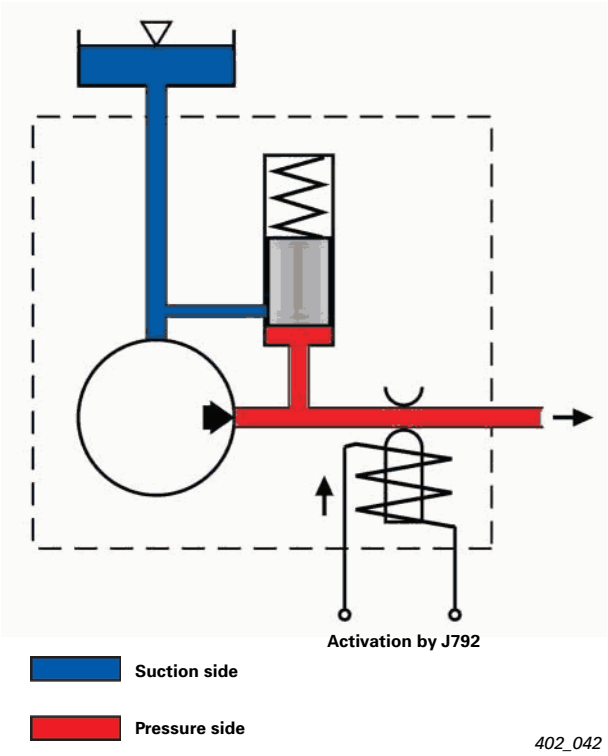

402_042

System response in the event of a fault

All steering pumps with ECO valves must pass a function test prior to installation. Their mechanical functioning is not monitored.

Safety-critical situations cannot occur in the event that the steering pump malfunctions mechanically or electrically. If this happens, the valve is opened with a defined cross-section. The volumetric flow rate available for operation of the steering system is sufficient for all driving situations. The necessary steering effort is, however, slightly higher, particularly with rapid steering inputs.

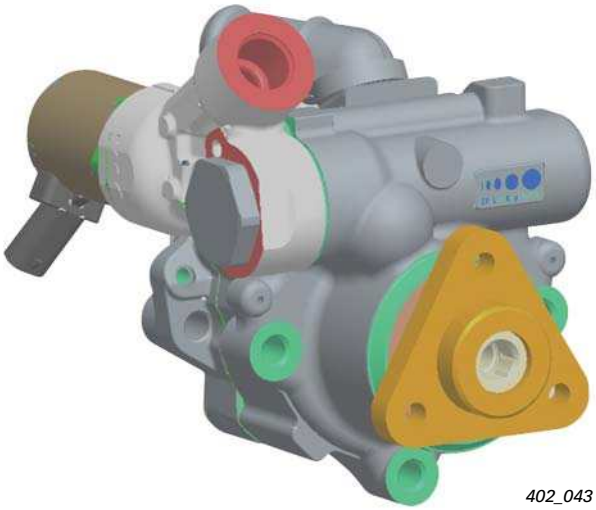

402_043

Servicing work

The ECO valve is an integral part of the steering pump and is not accessible from the exterior. In the event of a fault, the complete steering pump must be replaced in a service workshop. A fault indicator is steering movements when the vehicle is stationary. The required steering effort will then be much greater than in an intact system.

Vorsprung durch Technik **www.audi.de**

402

All rights reserved. Technical specifications subject to change without notice.

Copyright
AUDI AG
I/VK-35
Service.training@audi.de
Fax +49-841/89-36367

AUDI AG
D-85045 Ingolstadt
Technical status: 08/07

Printed in Germany
A07.5S00.39.20