Knuckle/Control Arms/Compliance Pivot

Illustrated Index

Overall Suspension

NOTE:
- Wipe off the grease before tightening the nut at the ball joint.
- Torque specifications, see page 18-14.

☆: **Corrosion resistant bolt/nut**

NOTE: Align the white line on the stabilizer bar with the bushing end, and install the stabilizer bar.

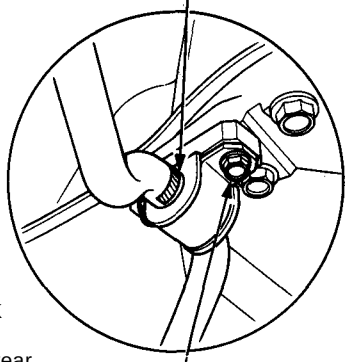

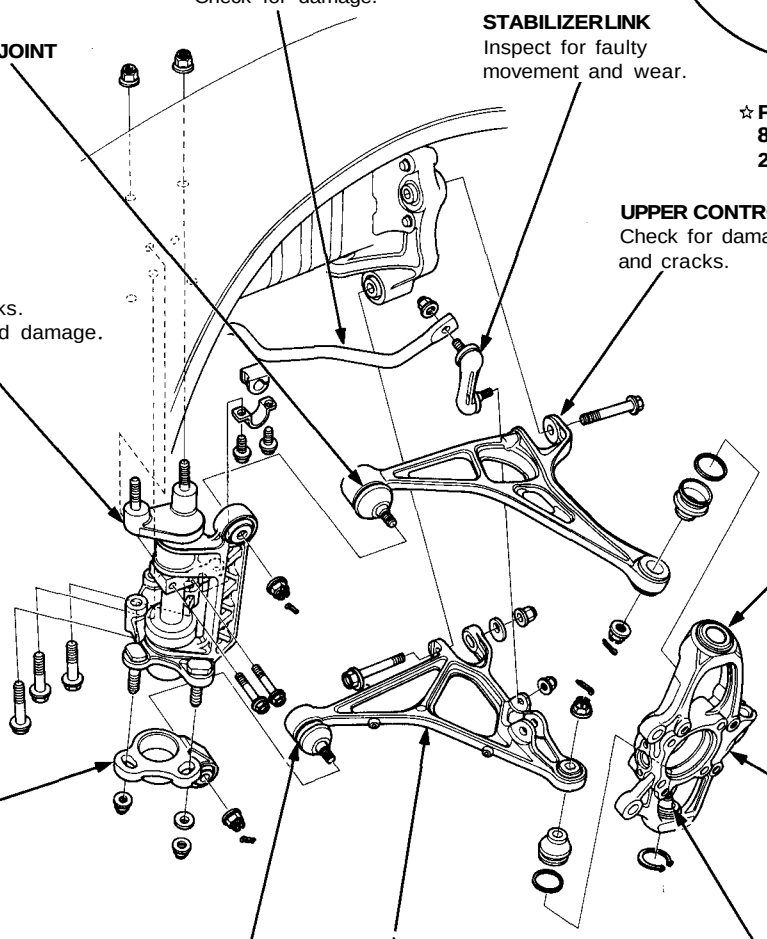

NOTE: Replace the joint boot if any are damaged. The parts marked with an asterisk (*) have a retainer attaching the ball joints. Replace the retainer whenever the boot is replaced.

CAUTION: Do not remove the arms, knuckle, and compliance pivot by striking them with a hammer, and take care not to drop them.

cardiagn.com