Intermediate Shaft

Reassembly

1. Press the intermediate shaft bearing into the bearing support using the special tools.

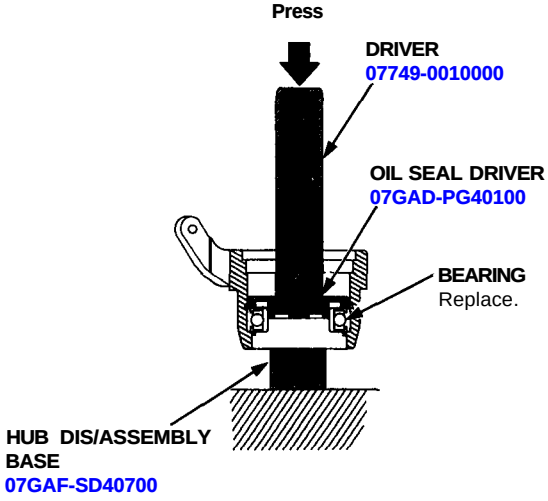

2. Seat the internal circlip in the groove of the bearing support.

CAUTION: Install the circlip with the radiused side facing out.

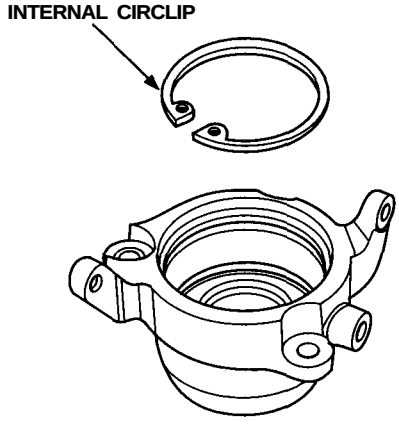

3. Press the intermediate shaft inner seal into the bearing support using the special tools.

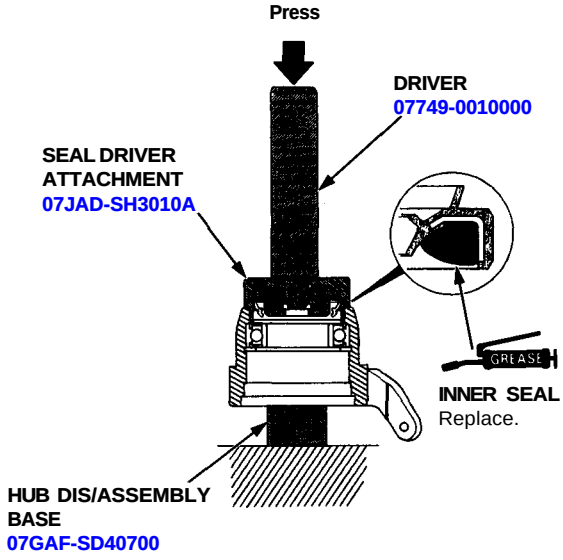

4. Press the intermediate shaft into the shaft bearing using the special tools.

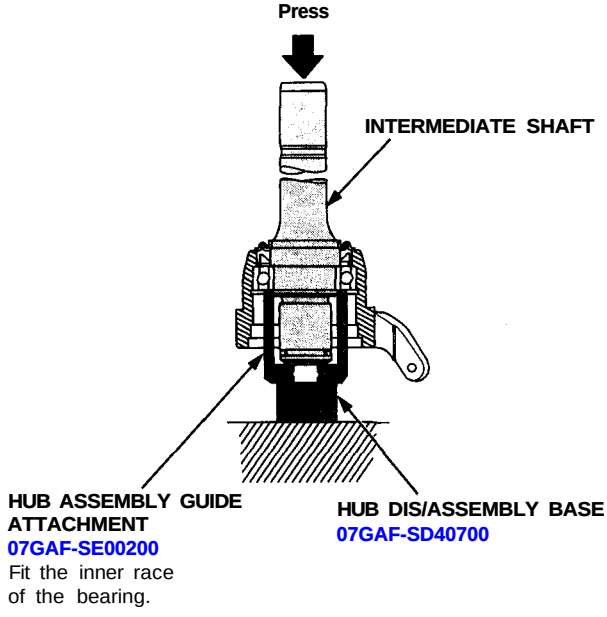

cardiagn.com

5. Seat the external circlip in the groove of the intermediate shaft.

CAUTION: Install the circlip with the radiused side facing out.

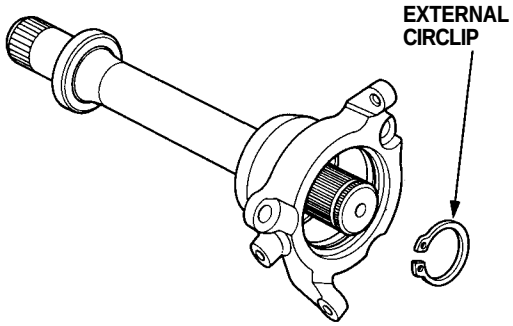

6. Press the outer seal into the bearing support using the special tools.

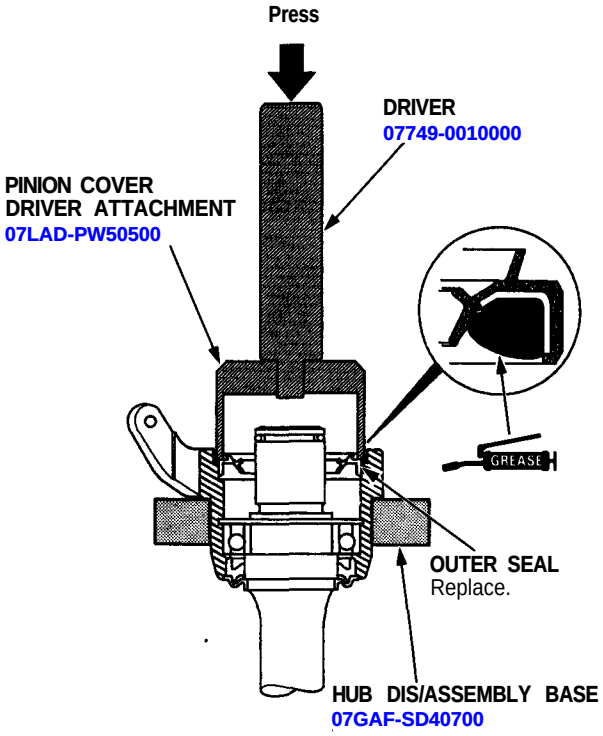

cardiagn.com