Differential

Reassembly

NOTE:
- If the limited slip differential clutch set was replaced, the 65 mm shim (differential housing cover side) and 112 mm shim (differential housing cover side) must be adjusted.
- Reassemble the parts in the same order and direction they were before disassembly.
- Lubricate the clutch disc surface with transmission oil.

1. Reassemble the parts as shown below.

   NOTE: Position the 65 mm shim with the thickness stamp mark facing up.

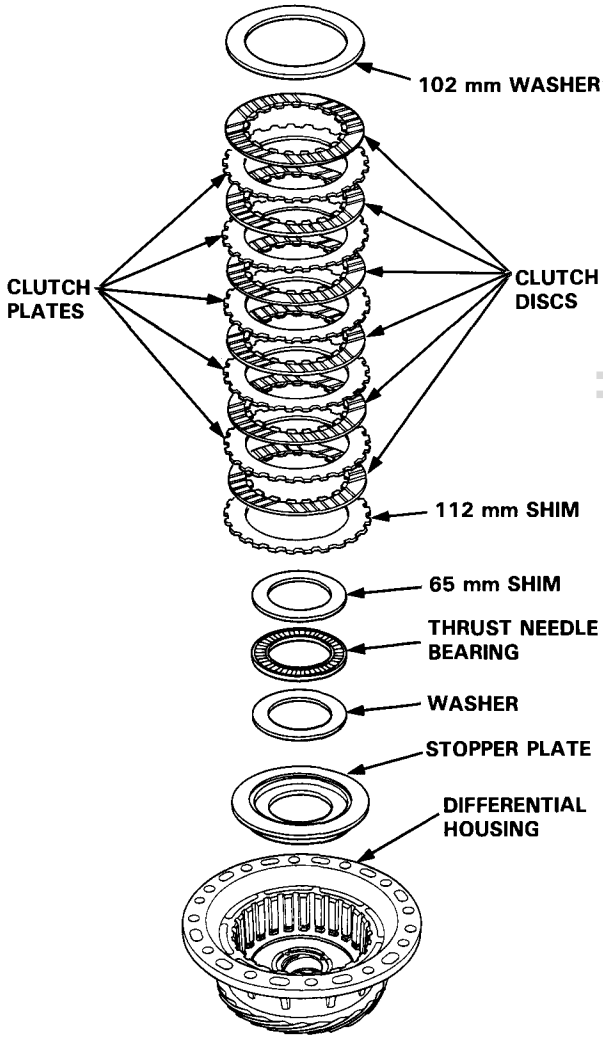

(cont'd)

cardiagn.com

Differential

Reassembly (cont'd)

2. Install the carrier assembly.

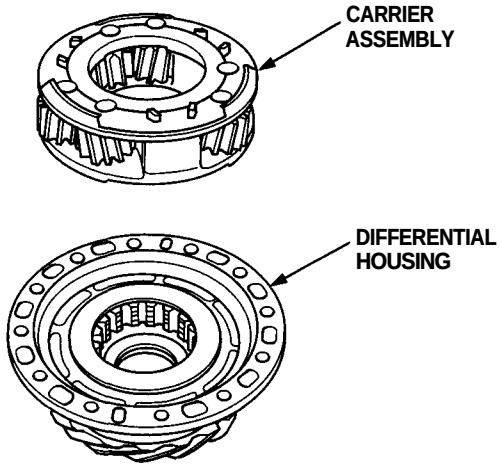

3. Install the final driven gear.

NOTE: Align the mark on the differential housing cover with the mark on the final driven gear.

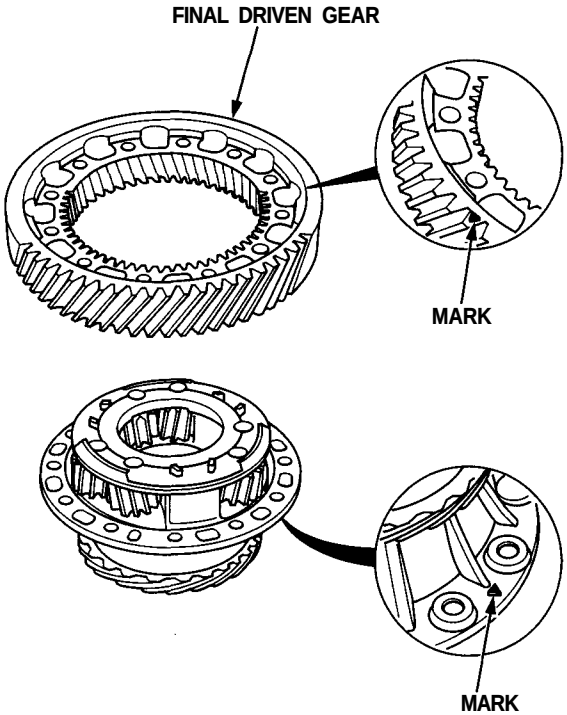

4. Install the washers, thrust needle bearing, and central gear.

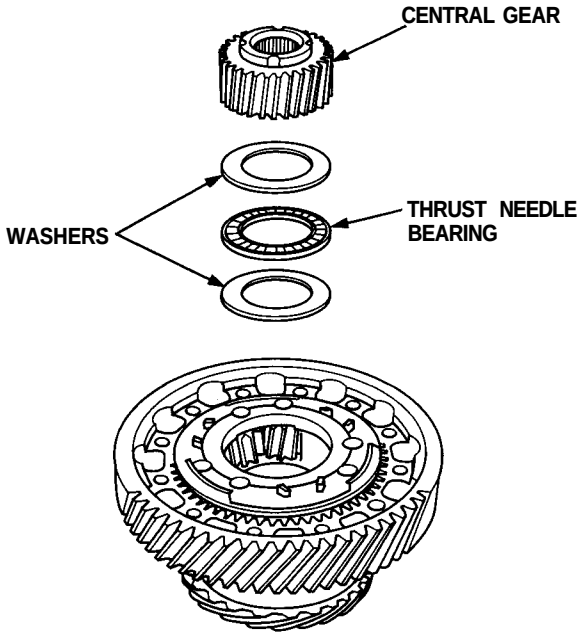

- **65 mm shim adjustment**

5. Clean the gear end surface on the central gear.

6. Set the plastigauge (Blue) strip on the central gear at four points in a crisscross pattern.

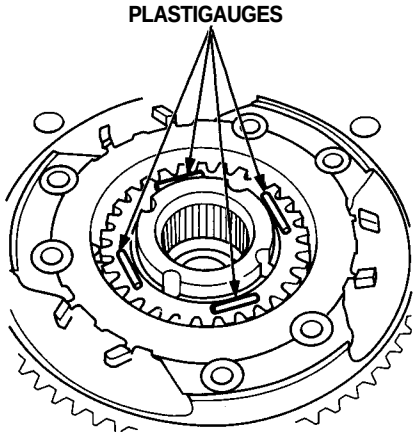

cardiagn.com

7. Install the washer, thrust needle bearing, 65 mm shim, 112 mm shim, clutch disc, and spring plate.

NOTE:
- Be careful not to move the plastigauge when installing the washer.
- Position the 65 mm shim with the thickness stamp mark facing up.

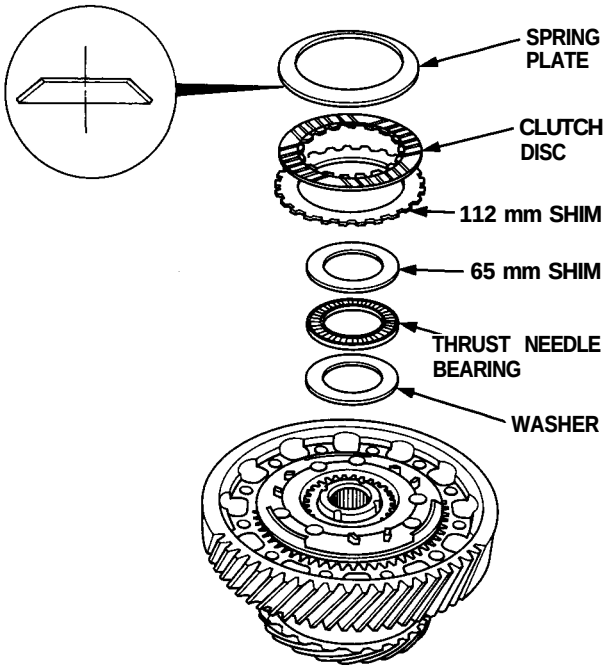

8. Align the marks, then install the differential housing cover.

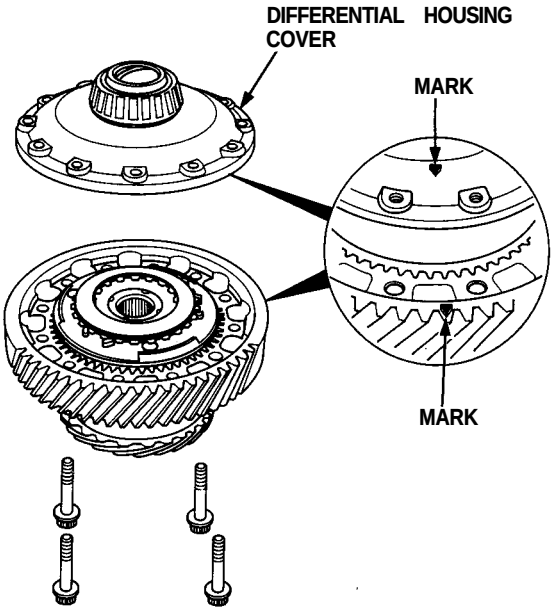

9. Tighten the mounting bolts in a crisscross pattern in several steps.

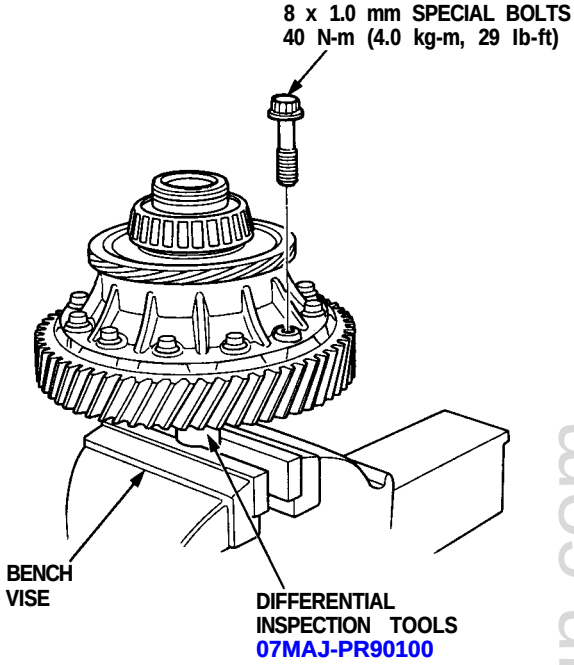

10. Remove the parts shown below.

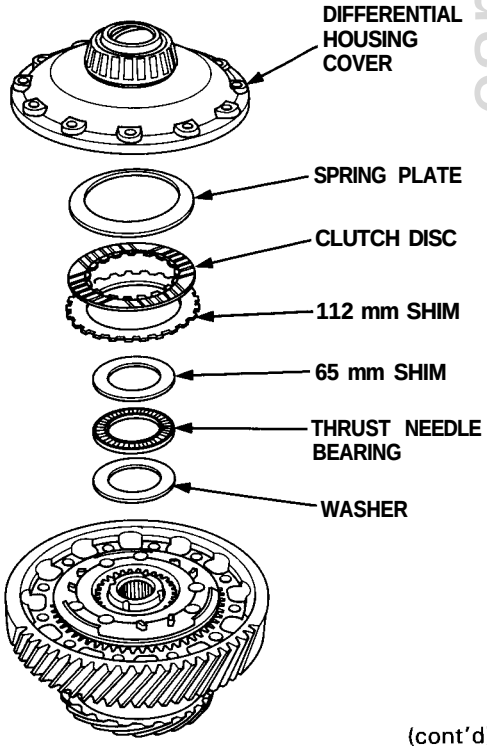

(cont'd)

cardiagn.com

Differential

Reassembly (cont'd)

11. Measure the widest part of the plastigauge.

Standard: 0.18-0.229 mm

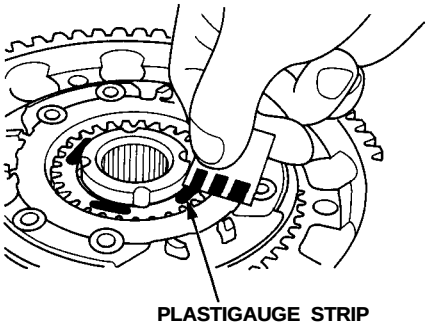

- If the plastigauge measures within the standard, go to step 14.
- If the plastigauge does not measure within the standard, continue with step 12.

12. Select the proper 65 mm shim based on the following table.

- If the measurement was less than 0.18 mm, install a thinner shim.
- If the measurement was more than 0.229 mm, install a thicker shim.

65 mm shim

	Part Number	Thickness
A	41371—PR8—F00	1.2 mm (0.0472 in)
B	41372—PR8—F00	1.3 mm (0.0512 in)
C	41373—PR8—F00	1.4 mm (0.0551 in)
D	41374—PR8—F00	1.5 mm (0.0591 in)
E	41375—PR8—F00	1.6 mm (0.0630 in)
F	41376—PR8—F00	1.7 mm (0.0669 in)
G	41377—PR8—F00	1.8 mm (0.0709 in)
H	41378—PR8—F00	1.9 mm (0.0748 in)
I	41379—PR8—F00	2.0 mm (0.0787 in)
J	41380—PR8—F00	2.1 mm (0.0827 in)
K	41381—PR8—F00	2.2 mm (0.0866 in)
L	41382—PR8—F00	2.3 mm (0.0906 in)
M	41383—PR8—F00	2.4 mm (0.0945 in)
N	41384—PR8—F00	2.5 mm (0.0984 in)
O	41385—PR8—F00	2.6 mm (0.1024 in)

13. After installing a thinner or thicker shim, be sure to recheck the measurement with plastigauge.

- After installing a thinner shim:
  If the measured value is less than 0.18 mm, select the next thinner shim, and recheck.
  If the new value is more than 0.229 mm, the selected shim is OK.

- After installing a thicker shim:
  If the measured value is more than 0.229 mm, select the next thicker shim, and recheck.
  If the new value is less than 0.18 mm, take the shim you chose at the step 12.

14. Install the washer, thrust needle bearing, 65 mm shim, 112 mm shim, clutch plate, clutch disc, and spring plate.

NOTE: Position the 65 mm shim with the thickness stamp mark facing up.

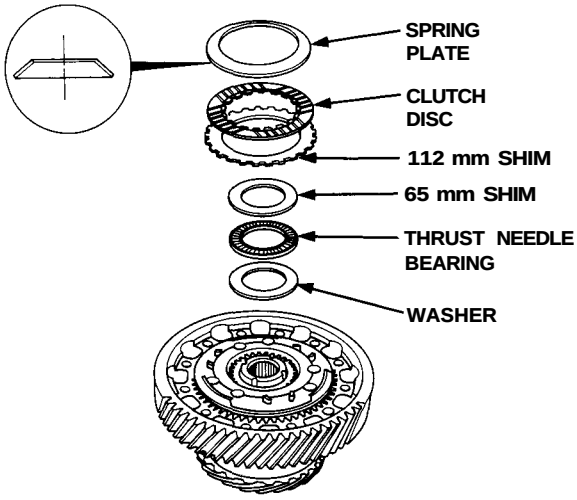

15. Align the marks, then install the differential housing cover.

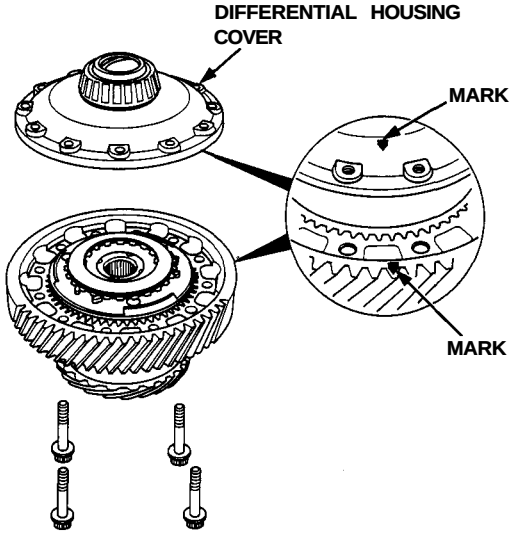

cardiagn.com

16. Tighten the mounting bolts in a crisscross pattern in several steps.

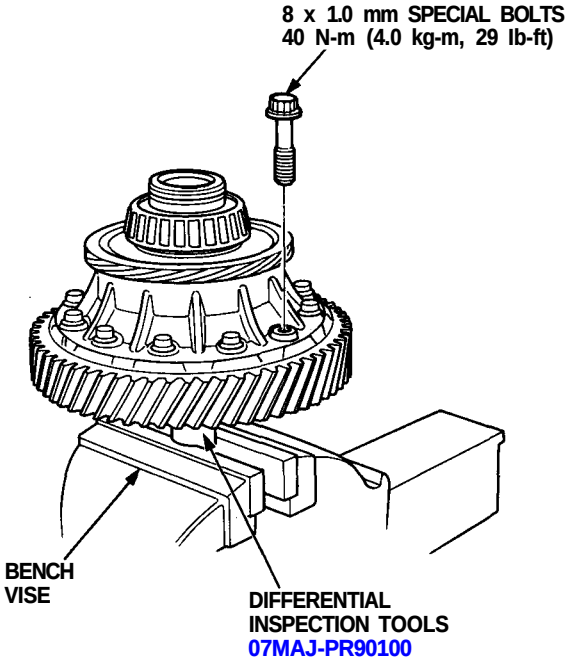

- **112 mm shim adjustment**

17. Measure the preset torque (see page 15-4).

Standard: 60-140 N-m (6-14 kg-m, 43-101 lb-ft)

112 mm SHIM

◯ Standard shim

	Part Number	Thickness
A	41261–PR8–000	1.2 mm (0.0472 in)
B	41262–PR8–000	1.4 mm (0.0551 in)
C	41263–PR8–000	1.6 mm (0.0630 in)
D	41264–PR8–000	1.8 mm (0.0709 in)
E	41265–PR8–000	2.0 mm (0.0787 in)
F	41266–PR8–000	2.2 mm (0.0866 in)
Ⓖ	41267–PR8–000	2.4 mm (0.0945 in)
H	41268–PR8–000	2.6 mm (0.1024 in)
I	41269–PR8–000	2.8 mm (0.1102 in)
J	41270–PR8–000	3.0 mm (0.1181 in)

- If the preset torque is more than the standard, select a thinner 112 mm shim, and recheck the preset torque.
- If the preset torque is less than the standard, select a thicker 112 mm shim, and recheck the preset torque.

cardiagn.com