Audi A2 2001 ➤

MM-MPI injection and ignition system (4-cylinder)									
Engine ID	AUA								

Edition 06.2000

Protected by copyright. Copying for private or commercial purposes, in part or in whole, is not permitted unless authorised by AUDI AG. AUDI AG does not guarantee or accept any liability with respect to the correctness of information in this document. Copyright by AUDI AG.

List of Workshop Manual Repair GroupsList of Workshop Manual Repair GroupsList of Workshop Manual Repair Groups

Audi A2 2001 ➤

MM-MPI injection and ignition system (4-cylinder)

Repair Group

01 - Self-diagnosis

24 - Mixture preparation, Injection

28 - Ignition system

Protected by copyright. Copying for private or commercial purposes, in part or in whole, is not permitted unless authorised by AUDI AG. AUDI AG does not guarantee or accept any liability with respect to the correctness of information in this document. Copyright by AUDI AG.

Technical information should always be available to the foremen and mechanics, because their careful and constant adherence to the instructions is essential to ensure vehicle road-worthiness and safety. In addition, the normal basic safety precautions for working on motor vehicles must, as a matter of course, be observed.

All rights reserved.
No reproduction without prior agreement from publisher.

Copyright © 2010 Audi AG, Ingolstadt

Contents

01 - Self-diagnosis 1
1 General notes onself-diagnosis 1
1.1 General notes onself-diagnosis 1
1.2 Features of self-diagnosis 1
1.3 Technical data of self-diagnosis 1
1.4 Significance of EPC warning lamp (fault lamp for electronic accelerator) in dash panel insert 2
1.5 Significance of exhaust emissions warning lamp 3
1.6 Connecting vehicle diagnostic, testing and information system VAS 5051 and selecting engine electronics control units 4
1.7 Connecting fault reader V.A.G 1551 and selecting engine control unit 7
2 Fault memory 9
2.1 Fault memory 9
2.2 Interrogating and erasing fault memory of engine control unit 9
2.3 Automatic test sequence 11
3 Fault table: from V.A.G code 16486 / SAE P0 codes 11
3.1 Fault table: from V.A.G code 16486 / SAE P0 codes 11
4 Fault table: from V.A.G code 17510 / SAE P1 codes 18
4.1 Fault table: from V.A.G code 17510 / SAE P1 codes 18
5 Final control diagnosis 29
5.1 Final control diagnosis 29
5.2 Performing final control diagnosis 29
6 Readiness code 35
6.1 Readiness code 35
6.2 Reading readiness code 35
6.3 Generating readiness code 36
7 Measured value blocks (datablocks) 41
7.1 Measured value blocks (datablocks) 41
7.2 Safety precautions 41
7.3 Read measured value block 41
8 Evaluating measured value blocks, display groups 0...6 -Basic functions- 42
8.1 Evaluating measured value blocks, display groups 0...6 -Basic functions- 42
9 Evaluating measured value blocks, display groups 10...29 -Ignition- 47
9.1 Evaluating measured value blocks, display groups 10...29 -Ignition- 47
10 Evaluating measured value blocks, display grps 30...49, 99 -Lambda regulation- 50
10.1 Evaluating measured value blocks, display grps 30...49, 99 -Lambda regulation- 50
11 Evaluating measured value blocks, display groups 50...69 -Speed regulation- 55
11.1 Evaluating measured value blocks, display groups 50...69 -Speed regulation- 55
12 Evaluating measured value blocks, display groups 70...75 -Exhaust gas recirculation- 58
12.1 Evaluating measured value blocks, display groups 70...75 -Exhaust gas recirculation- 58
13 Evaluating measured value blocks, display group 100 -Readiness code- 59
13.1 Evaluating measured value blocks, display group 100 -Readiness code- 59
14 Evaluating measured value blocks, display groups 120...129 -Communication- 60
14.1 Evaluating measured value blocks, display groups 120...129 -Communication- 60

24 - Mixture preparation, Injection 62
1 General notes on the injection system 62
1.1 General notes on the injection system 62
1.2 Servicing injection system 63
1.3 Fitting locations overview 63
1.4 Wiring and component check with test box V.A.G 1598/31 66
1.5 Removing and installing parts of the injection system 68

Protected by copyright. Copying for private or commercial purposes, in part or in whole, is not permitted unless authorised by AUDI AG. AUDI AG does not guarantee or accept any liability with respect to the correctness of information in this document. Copyright by AUDI AG.

1.6 Dismantling and assembling intake manifold 77
1.7 Dismantling and assembling fuel rail with injectors 80
1.8 Safety precautions 84
1.9 Rules for cleanliness 85
1.10 Technical data 85
2 Checking components 85
2.1 Checking components 85
2.2 Checking lambda probe heating for lambda probe before catalytic converter 85
2.3 Checking lambda probe heating for lambda probe after catalytic converter 88
2.4 Testing accelerator position senders 92
2.5 Checking throttle valve control part 95
2.6 Checking intake manifold pressure sender 96
2.7 Checking intake air temperature sender 100
2.8 Checking coolant temperature sender 104
2.9 Checking engine speed sender 107
2.10 Checking injectors 109
2.11 Checking fuel pressure regulator and holding pressure 115
2.12 Checking intake air system for leaks (unmetered air) 118
3 Checking functions 119
3.1 Checking functions 119
3.2 Idling check 119
3.3 Checking lambda probe and lambda regulation before catalytic converter 121
3.4 Checking lambda probe and lambda regulation after catalytic converter 125
3.5 Checking ageing of lambda probe before catalytic converter 128
3.6 Checking engine operating mode 129
4 Engine control unit 130
4.1 Engine control unit 130
4.2 Checking control unit voltage supply 130
4.3 Procedure after voltage supply open circuit 132
4.4 Replacing engine control unit 133
4.5 Coding engine control unit 134
4.6 Coding variants of engine control unit 135
4.7 Adapting engine control unit to throttle valve control part 136
4.8 Testing fuel pump relay -J17 and activation 138
5 Checking additional signals 142
5.1 Checking additional signals 142
5.2 Checking speed signal 142
5.3 Testing cruise control system (CCS) 144
5.4 Checking signal from brake light switch and brake pedal switch 146
5.5 Testing clutch pedal switch -F36 149
5.6 Checking rpm signal 151
5.7 Checking data bus 152

28 - Ignition system 156
1 Servicing ignition system 156
1.1 Servicing ignition system 156
1.2 General notes on ignition system 156
1.3 Removing and installing parts of the ignition system 157
1.4 Safety precautions 159
1.5 Test data, spark plugs 160
1.6 Checking Hall sender 161
1.7 Checking ignition transformer 162
1.8 Checking knock sensor 166
1.9 Checking misfiring recognition 167

Protected by copyright. Copying for private or commercial purposes, in part or in whole, is not permitted unless authorised by AUDI AG. AUDI AG does not guarantee or accept any liability with respect to the correctness of information in this document. Copyright by AUDI AG.

01 - Self-diagnosis

1 - General notes onself-diagnosis

1.1 - General notes onself-diagnosis

1.2 - Features of self-diagnosis

The 4LV injection and ignition system control unit (J537) is equipped with a fault memory.

If faults occur in the sensors and components being monitored, they will be stored in the fault memory together with an indication of the type of fault.

After evaluating the information, the engine control unit decides among different faults => Fault table page 18 and stores these until the contents of the fault memory is erased.

Faults which only occur sporadically will have the addendum "sporadic fault" on the print out. These faults will be indicated on the display by the addendum "/SP". The cause of sporadic faults can be e.g. a loose contact or a brief open circuit. If a sporadic fault does not occur again within 40 warm-up phases (engine start below 50° C coolant temperature - switched off above 72° C), it will be erased from the fault memory.

The faults stored can be read-out with the fault reader V.A.G 1551, the vehicle system tester V.A.G 1552 or the new tester VAS 5051 => Page 9 .

The fault memory must be erased after the faults have been eliminated => Page 36 .

Note:

Protected by copyright. Copying for private or commercial purposes, in part or in whole, is not permitted unless authorised by AUDI AG. AUDI AG does not guarantee or accept any liability with respect to the correctness of information in this document. Copyright by AUDI AG.

General information for self-diagnosis can be found in the instruction manuals for the fault reader V.A.G 1551, vehicle system tester V.A.G 1552 or the new tester VAS 5051.

1.3 - Technical data of self-diagnosis

Control unit identification

The control unit version is displayed when the fault reader V.A.G 1551, the vehicle system tester V.A.G 1552 or the new tester VAS 5051 is connected and engine electronics control unit selected => Page 7 .

Technical data

Engine code	**AUA**
System designation	MARELLI 4LV
Complying with (emissions standard)	EU 4
Electronic throttle	yes
Self-diagnosis capability	yes
Final control diagnosis	yes
Operating mode of diagnostic link with V.A.G 1551/1552	rapid data transfer
Fault memory	permanent memory 1)
Memory for learnt values	volatile memory 2)
Lambda control system	2 probes

Knock control	1 knock sensor
Intake manifold change-over function	no
Camshaft timing control	no
Boost pressure control	no
Secondary air system	no
Exhaust gas recirculation	yes

1) Independent of voltage supply.

2) Values are erased when voltage supply is interrupted.

Functions which can be selected when using the fault readers V.A.G 1551/1552 or VAS 5051

Note:

The prerequisites for selecting the desired functions can be determined from the following table.

Function		Prerequisite		
Functions on fault reader V.A.G 1551 or on system tester V.A.G 1552		Engine stopped, ignition switched on	Engine running at idling speed	Vehicle being driven
01	Interrogate control unit version	yes	yes	yes
02	Interrogate fault memory	yes1)	yes	yes
03	Final control diagnosis	yes	no	no
04	Basic setting2)	yes	yes	yes
05	Erase fault memory	yes	yes	yes
06	End output	yes	yes	yes
07	Code control unit	yes	no	no
08	Read measured value block	yes	yes	yes
15	Read off readiness code	yes	yes	yes

1) Carry out with engine stopped and ignition switched on only ifenginedoes not start.

2) Must be carried out after the following: Replacing engine control unit, throttle valve control part, exhaust recirculation valve or engine, or disconnecting battery.

The air conditioning and the ACF system are automatically shut off in mode 04.

1.4 - Significance of EPC warning lamp (fault lamp for electronic accelerator) in dash panel insert

Protected by copyright. Copying for private or commercial purposes, in part or in whole, is not permitted unless authorised by AUDI AG. AUDI AG does not guarantee or accept any liability with respect to the correctness of information in this document. Copyright by AUDI AG.

"EPC" is the abbreviation for Electronic Power Control.

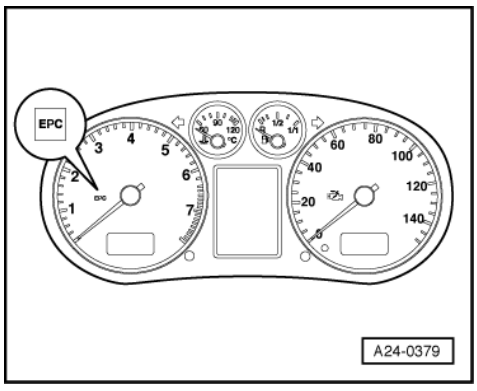

-> Location of EPC warning lamp

If faults are detected in the electronic power control system when the engine is running, the engine control unit will switch on the EPC lamp. (These faults are identified in the fault table.) Simultaneously an entry is made in the engine control unit fault memory.

Functional check:

- Switch on ignition:
  the EPC warning lamp must light-up.

If the EPC warning lamp does not light-up with ignition switched on:

If the EPC warning lamp lights up with ignition switched on:

- Start engine and run at idling speed:
  The EPC warning lamp must go out after
  a few seconds.

If the EPC warning lamp does not go out:

- Interrogate fault memory, if necessary, repair any faults and then erase fault memory => Page 9 , interrogating and erasing fault memory.

1.5 - Significance of exhaust emissions warning lamp

If the engine control unit detects a fault this is indicated by switching the exhaust emissions warning lamp on.

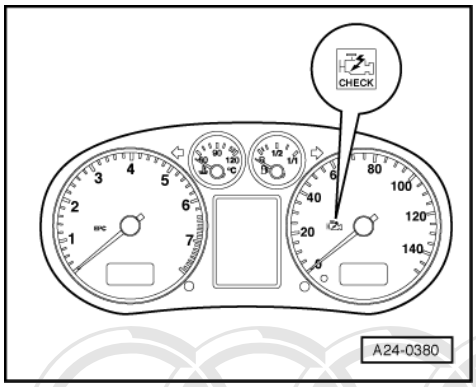

-> Location of exhaust emissions warning lamp

Note:

The exhaust emissions warning lamp can switch on in the continuous or flashing mode. Always interrogate fault memory => Page 9 .

- Flashing mode: There is a faultpresent which can damage the catalytic converter if the vehicle is driven further in this condition (with the same throttle opening). If this occurs, continue driving only at reduced power.
- Continuous mode: There is a fault present which causes the emissions to deteriorate. Interrogate engine or gearbox control unit in this case.

Protected by copyright. Copying for private or commercial purposes, in part or in whole, is not permitted unless authorised by AUDI AG. AUDI AG does not guarantee or accept any liability with respect to the correctness of information in this document. Copyright by AUDI AG.

- Interrogate the fault memory if the engine doesnot run properly or if the customer has reported a problem and the exhaust gas warning lamp does notlight up. This is because faults can be stored which will not switch the exhaust gas warning lamp on immediately.

Functional check:

- Switch on ignition:
  the exhaust emissions warning lamp must light-up.

If the exhaust emissions warning lamp does not light-up with ignition switched on:

If the exhaust emissions warning lamp lights-up with ignition switched on, continue check as follows:

- Start engine and run at idling speed:
  The exhaust emissions warning lamp must go out after a few seconds.

If the exhaust emissions warning lamp does not go out:

Protected by copyright. Copying for private or commercial purposes, in part or in whole, is not permitted unless authorised by AUDI AG. AUDI AG does not guarantee or accept any liability with respect to the correctness of information in this document. Copyright by AUDI AG.

- Interrogate fault memory, if necessary, repair any faults and then erase fault memory => Page 9 , interrogating and erasing fault memory.

1.6 - Connecting vehicle diagnostic, testing and information system VAS 5051 and selecting engine electronics control units

All functions which could previously be performed with V.A.G 1551/1552 can also be performed with the new vehicle diagnostic, testing and information system VAS 5051 in the operating mode: "Vehicle self-diagnosis":

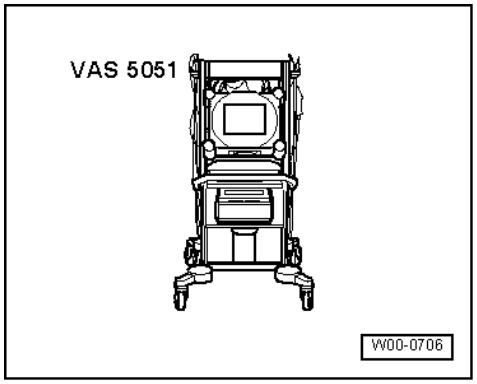

=> Operating instructions for Vehicle Diagnosis, Testing and Information System VAS 5051.

Special tools, workshop equipment, testers, measuring instruments and auxiliary items required

- VAS 5051 Vehicle Diagnosis, Testing and Information System

Test conditions

- Fuse OK.
- The battery voltage must be at least 11.5 V.
- Switch off air conditioner.
- On vehicles with automatic gearbox, make sure selector lever is in "P" or "N".

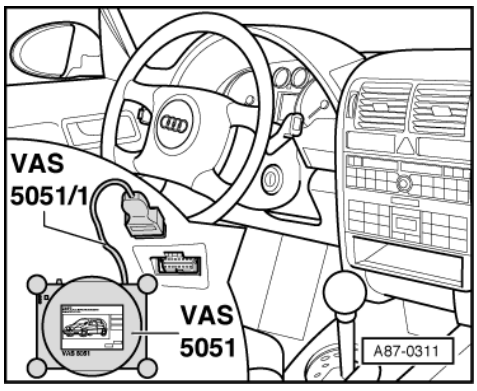

Work sequence

- -> Connect up vehicle diagnostic, testing and information system VAS 5051 with diagnostic cable VAS 5051/1.

Warning:
- **When carrying out road tests using vehicle diagnostic, testing and information system VAS 5051, the tester must always be secured on the rear seat and operated from this position.**

Depending on the function required:

- Switch on ignition

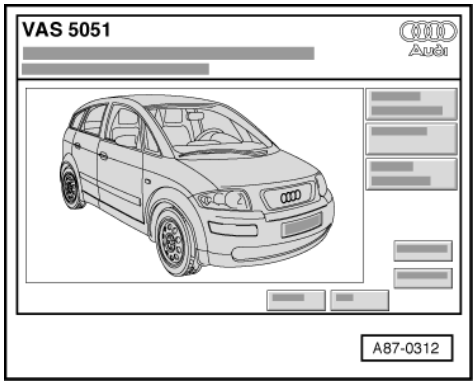

or
Start the engine => Page 2 : table of "Functions which can be selected".

Select operating mode:

- -> Select "Vehicle self-diagnosis" on VAS 5051.

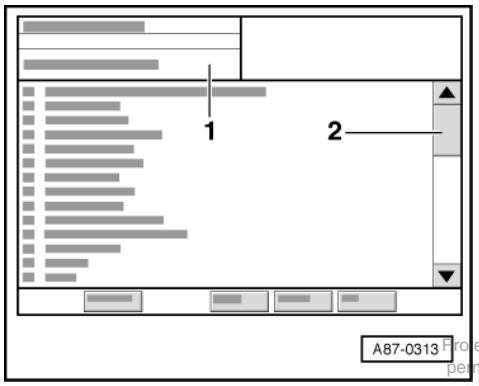

Protected by copyright. Copying for private or commercial purposes, in part or in whole, is not permitted unless authorised by AUDI AG. AUDI AG does not guarantee or accept any liability with respect to the correctness of information in this document. Copyright by AUDI AG.

-> Indicated on display:

Select vehicle system:

- Select
  "01 - Engine electronics"
  on the display.

Notes:

- A message will appear in display zone -1- instructing you to select the required vehicle system.

- Move the scroll bar -2- up or down to display all other vehicle systems with diagnosis capability (for all models and equipment versions) which are not visible on the screen.

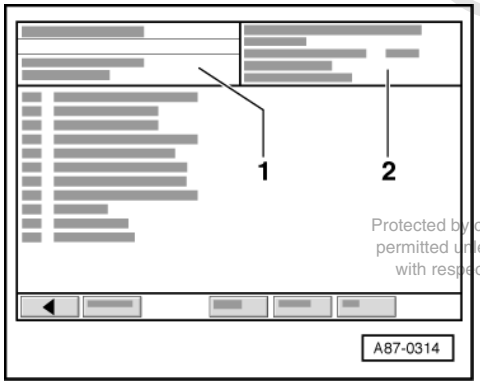

Protected by copyright. Copying for private or commercial purposes, in part or in whole, is not permitted unless authorised by AUDI AG. AUDI AG does not guarantee or accept any liability with respect to the correctness of information in this document. Copyright by AUDI AG.

-> Wait until the message "Select diagnosis function" appears in display zone -1- of VAS 5051.

The control unit identification and coding will be displayed in display zone -2-, as in this example:

- 036 906 034..	Control unit number (see also Parts List)
- 1.4 ltr.	Engine capacity
- R4	In-line engine, 4 cylinders
- EPC	Electronic Power Control
- G - or no display	Vehicle with or without cruise control
- SG - AG	Manual gearbox Automatic gearbox
- D00	Software version of control unit
- Coding 31	Coding of engine control unit
- WSC 12345	Workshop Code of V.A.G 1551 which was used to perform the last coding

If the coding differs from the vehicle version, then:

- Checking control unit coding => Page 134 , coding engine control unit

Select diagnostic function:

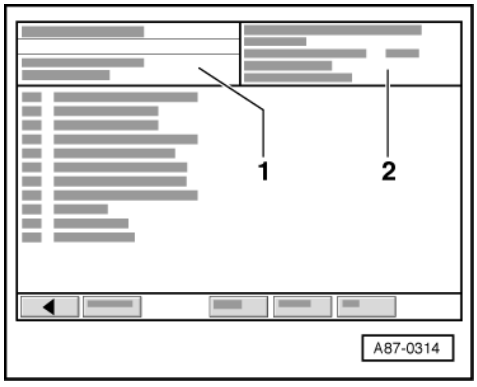

At this point all diagnostic functions are available.

- -> Select the desired function on the display.

- Further measures see repair procedures.

Notes:

- In the functions 04 - Basic setting/08 - Read data block, the display zones will be listed from top to bottom.
- If the display does not indicate as described in the work sequence:

=> Operating instructions for Vehicle Diagnosis, Testing and Information System VAS 5051.

1.7 - Connecting fault reader V.A.G 1551 and selecting engine control unit

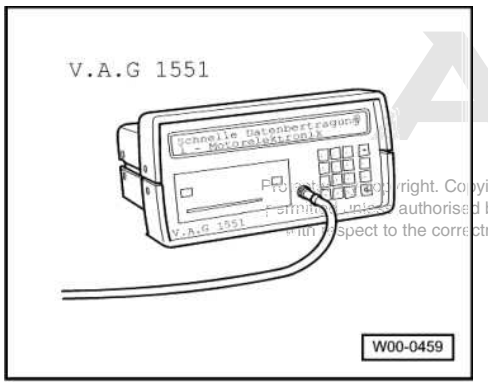

Audi
Copyright. Copying for private or commercial purposes, in part or in whole, is not permitted unless authorised by AUDI AG. AUDI AG does not guarantee or accept any liability with respect to the correctness of information in this document. Copyright by AUDI AG.

Special tools, workshop equipment, testers, measuring instruments and auxiliary items required

- -> V.A.G 1551 Fault reader

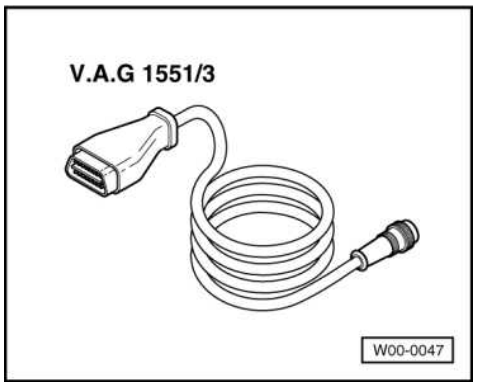

- -> V.A.G 1551/3 Cable

Test conditions

- Fuse OK.
- The battery voltage must be at least 11.5 V.

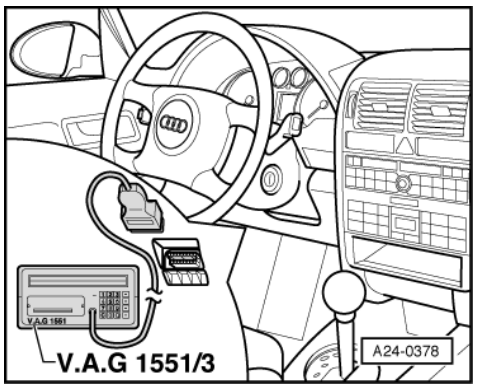

- Earth connections on engine and gearbox OK.

Work sequence

- -> Connect up fault reader V.A.G 1551 using diagnostic cable V.A.G 1551/3A.

Warning:
- **When carrying out road tests using fault reader V.A.G**

Note:

The following description only covers the procedure for performing self-diagnosis with fault reader V.A.G 1551.

-> Indicated on display:

```
V.A.G - SELF DIAGNOSIS      HELP
1 - Rapid data transfer*
2 - Flash code output*
```

* Appears alternately

- If no display appears, check diagnostic cables:

=> Current flow diagrams, Electrical fault finding and Fitting locations binder

Depending on the function required:

- Switch on ignition

  or
  Start the engine => Page 2 : table of "Functions which can be selected"

Protected by copyright. Copying for private or commercial purposes, in part or in whole, is not permitted unless authorised by AUDI AG. AUDI AG does not guarantee or accept any liability with respect to the correctness of information in this document. Copyright by AUDI AG.

- Switch on printer with the Print button
  (Warning lamp in button lights up).

- Press key 1 for "Rapid data transfer".

-> Indicated on display:

```
Rapid data transfer      HELP
Enter address word XX
```

```
Rapid data transfer      Q
01 - Engine electronics
```

-> Press keys 0 and 1 for address word "Engine electronics" and confirm entry by pressing the Q key.

-> If the display shows one of the messages reproduced here, check the diagnosis wiring.

```
Rapid data transfer      HELP
Control unit does not answer
```

=> Current flow diagrams, Electrical fault finding and Fitting locations binder

```
Rapid data transfer      HELP
K wire not switching to earth
```

```
Rapid data transfer      HELP
K wire not switching to positive
```

-> The display on fault reader V.A.G 1551 will show the control unit identification. For example:

```
036 906 0034 Q      1.4l/R4      EPC
AG      D00
Coding 31      WSC 12345
```

- 036 906 034..	Control unit number (see also Parts List)
- 1.4 ltr.	Engine capacity
- R4	In-line engine, 4 cylinders
- EPC	Electronic Power Control
- G - or no display	Vehicle with or without cruise control
- SG - AG	Manual gearbox Automatic gearbox
- D00	Software version of control unit
- Coding 31	Control unit coding
- WSC 12345	Workshop Code of V.A.G 1551 which was used to perform the last coding

- Press ⇒key.

-> Indicated on display (chassis No. of vehicle)

```
WAUZ8ZZYN02126      AUZ7ZOW0801181
```

Protected by copyright. Copying for private or commercial purposes, in part or in whole, is not permitted unless authorised by AUDI AG. AUDI AG does not guarantee or accept any liability with respect to the correctness of information in this document. Copyright by AUDI AG.

- WAUZ8ZZYN00002341: 17-digit vehicle identification No. (chassis No. of vehicle)
- AUZ7Z0X0590944: 14-digit Identification No. for immobilizer control unit

- Press the ⇒key.

-> Indicated on display:

```
Rapid data transfer     HELP
Select function XX
```

- Further measures see repair procedures.

2 - Fault memory

2.1 - Fault memory

Interrogate fault memory of all control units
=> Page 11 , Automatic test sequence

2.2 - Interrogating and erasing fault memory of engine control unit

Special tools, workshop equipment, testers, measuring instruments and auxiliary items required

- Fault reader V.A.G 1551 or vehicle system tester V.A.G 1552 with cable V.A.G 1551/3A

Work sequence

Note:

All functions which could previously be performed with V.A.G 1551/1552 can also be performed with the new tester VAS 5051.

- Connect fault reader V.A.G 1551 (V.A.G 1552). Start engine and select "Address word" 01 of engine control unit. When doing this the engine must be running at idling speed.
  (Connecting fault reader and selecting engine control unit
  => Page 7 .)

Only when engine does not start:

- Operate starter for approx. 6 seconds and then do not switch off the ignition.

- Switch on fault reader printer with the print key. The warning lamp in key must light up.

-> Indicated on display:

```
Rapid data transfer      HELP
Select function XX
```

- Operate fault reader taking into account the information on the display:
- Press keys 0 and 2 for function "Interrogate fault memory" and confirm entry with Q key.

-> The number of faults stored or "No fault recognised!" will be shown on the display.

```
X Faults recognised!
```

If no fault is stored:

- Press ⇒key.

If one or more faults are stored:

The stored faults will be displayed and printed out one after the other.

-> After the stored faults have been printed out, the display will show:

```
Rapid data transfer      HELP
Select function XX
```

- Press keys 0 and 5 for the function "Erase fault memory" and confirm entry with Q key.

-> Indicated on display:

```
Rapid data transfer
Fault memory is erased!
```

Note:

If the ignition is switched off between "Interrogate fault memory" and "Erase fault memory" the fault memory will not be erased.

- Press ⇒key.

-> Indicated on display:

```
Rapid data transfer      HELP
Select function XX
```

- Press keys 0 and 6 for the function "End output" and confirm entry with the Q key.

-> Indicated on display:

```
Rapid data transfer      HELP
Enter address word XX
```

Protected by copyright. Copying for private or commercial purposes, in part or in whole, is not permitted unless authorised by AUDI AG. AUDI AG does not guarantee or accept any liability with respect to the correctness of information in this document. Copyright by AUDI AG.

- Switch off ignition.
- Rectify faults printed out using fault table:
  SAE P0 codes=> Page 18
- Read readiness code => Page 36 .

2.3 - Automatic test sequence

During test and assembly work the tester can detectfaults originating from other control units (e.g. plug disconnected). Therefore, on completion, the fault memories of all control units must be interrogated and erased. To do this:

- Press key 0 twice for address word "Automatic test sequence" and confirm entry with Q key. The V.A.G 1551 transmits all known address words one after the other.

When a control unit answers with its identification the number of stored faults appears on the display or "No fault recognised".

Any system faults that are stored will be displayed one after the other and printed out. The V.A.G 1551 will then transmit the next address word.

-> The automatic test sequence has ended when following is indicated on display:

```
Rapid data transfer      HELP
Enter address word XX
```

- Erase all fault memories and then carry out a road test.

  During the road test the following operating conditions must be fulfilled:
  - The coolant temperature must exceed 80 °C .
  - When the temperature is reached, the operating conditions
    Idling
    Part throttle
    Full throttle
    Overrun
    Enrichment
    must be attained several times.
  - At full throttle the speed must exceed 3500 rpm.

- Again interrogate the fault memories of all control units using the "automatic test sequence".

Data generated with VCDS (VAG-COM) and Windows may be printed or copied only if permitted unless authorised by AUDI AG. AUDI AG does not guarantee or accept any liability with respect to the correctness of information in this document. Copyright by AUDI AG.

If no fault is stored:

- Press the ⇒key.

-> Indicated on display:

```
Rapid data transfer      HELP
Select function XX
```

- Press keys 0 and 6 for the function "End output" and confirm entry with the Q key.

-> Indicated on display:

```
Rapid data transfer      HELP
Enter address word XX
```

- Switch off ignition.

3 - Fault table: from V.A.G code 16486 / SAE P0 codes

3.1 - Fault table: from V.A.G code 16486 / SAE P0 codes

Notes:

- The fault code overview is listed according to SAE or V.A.G code.
- Faults related to the Electronic accelerator, or electronic power control ("EPC"), areindicated additionally by the electronic accelerator warning lamp ("EPC warning lamp") in the dash panel insert.
- Faults affecting emission control are indicated additionally by the exhaust gas warning lamp in the dash panelinsert.

- Explanation of the fault types (e.g. "open circuit/short circuit to earth"):

=> Fault reader operating instructions

- If components are indicated as faulty:
  First check the wiring and connectors to these components as well as the system earth connections according to current flow diagram. This is particularly relevant if faults are output as "occurring sporadically" (SP).
- Erase fault memory after rectifying fault =>Page 36 .

V.A.G 1551 print out, e.g.:

16497 P0113 035

Intake air temperature sender -G42

Signal too large

Sporadic fault

Explanation:

- 16497 = Fault code
- P0113 = Additional fault code
- 035 = Fault type as a number
- Intake air temperature sender -G42 = Faulty current path or incorrect location
- Signal too large = Fault type as text
- Sporadic faults = Faults that are not always present e.g. loose contact

Fault code		Fault text	Fault elimination
SAE	V.A.G		
P0106	16490	Intake manif.press./air press. -G71 / -F96, implausible signal	- Check intake manifold pressure sender => Page 96
P0107	16491	Intake manif.press./air press. -G71 / -F96, signal too small	

1) Engine control unit switches on the exhaust emissions warning lamp in dash panel insert if this fault occurs. Significance of exhaust emissions warning lamp => 3 .

Fault code		Fault text	Fault elimination
SAE	V.A.G		
P0112	16496	Intake air temperature sender -G42, signal too low1)	- Check intake air temperature sender => Page 100
P0113	16497	Intake air temperature sender -G42, signal too high1)	
P0116	16500	Coolant temperature sender -G62, implausible signal1)	- Check coolant temperature sender => Page 104
P0117	16501	Coolant temperature sender -G62, signal too low1)	- Check thermostat: => Repair group 19; Removing and installing parts of cooling system; Parts of cooling system, engine-side Parts of cooling system, engine-side
P0118	16502	Coolant temperature sender -G62, signal too high1)	
P0122	16506	Throttle valve potentiometer -G69, signal too low1)	- Check throttle valve control part => Page 95

Protected by copyright. Copying for private or commercial purposes, in part or in whole, is not permitted unless authorised by AUDI AG. AUDI AG does not guarantee or accept any liability with respect to the correctness of information in this document. Copyright by AUDI AG.

Fault code		Fault text	Fault elimination
P0123	16507	Throttle valve potentiometer -G69, signal too high1)	

1) Engine control unit switches on the exhaust emissions warning lamp in dash panel insert if this fault occurs. Significance of exhaust emissions warning lamp => 3 .

Fault code		Fault text	Fault elimination
SAE	V.A.G		
P0130	16514	Bank 1 probe 1, electrical fault in circuit1)	- Check Lambda probe and Lambda regulation before catalytic converter => Page 121
P0133	16517	Bank 1 probe 1, signal too slow1)	- Check Lambda probe and Lambda regulation before catalytic converter => Page 121
P0134	16518	Bank 1 probe 1 no activity1)	
P0136	16520	Bank 1 probe 2, electrical fault in circuit1)	- Check Lambda probe heating after catalytic converter => Page 88
P0137	16521	Bank 1 probe 2, voltage too low1)	- Check Lambda probe and Lambda regulation after catalytic converter => Page 125
P0138	16522	Bank 1 probe 2, voltage too high1)	- Check Lambda probe heating after catalytic converter => Page 88
P0140	16524	Bank 1 probe 2 no activity1)	
P0141	16525	Bank 1 probe 2, Heating element circuit, electrical fault1)	

Protected by copyright. Copying or publication for commercial purposes, in part or in whole, is not permitted unless authorised by AUDI AG. AUDI AG does not guarantee or accept any liability with respect to the correctness of information in this document. Copyright by AUDI AG.

1) Engine control unit switches on the exhaust emissions warning lamp in dash panel insert if this fault occurs. Significance of exhaust emissions warning lamp => 3 .

Fault code		Fault text	Fault elimination
SAE	V.A.G		
P0170	16554	Bank 1, fuel measuring system, faulty1)	- Check fuel pressure regulator and holding pressure => Page 115
			- Check injectors =>Page 109
			- Check activated charcoal filter solenoid valve 1: => Repair group 20; Activated charcoal filter system; Checking solenoid valve 1 for activated charcoal filter Checking solenoid valve 1 for activated charcoal filter
			- Check Lambda probe and Lambda regulation before catalytic converter => Page 121
			- Check Lambda probe and Lambda regulation after catalytic converter => Page 125

1) Engine control unit switches on the exhaust emissions warning lamp in dash panel insert if this fault occurs. Significance of exhaust emissions warning lamp => 3 .

Fault code		Fault text	Fault elimination
SAE	V.A.G		
P0171	16555	Bank 1, fuel measuring system, system too lean1)	- Check fuel pressure regulator and holding pressure =>Page 115
			- Check injectors =>Page 109

Fault code		Fault text	Fault elimination
			- Check fuel pump: => Repair group 20; Removing and installing parts of fuel system; Checking fuel pump Checking fuel pump
			- Check intake system for leaks => Page 118
			- Check exhaust system for leaks: => Repair group 26; Removing and installing parts of exhaust system
			- Check vacuum pipes for leaks
Continued on next page			

1) Engine control unit switches on the exhaust emissions warning lamp in dash panel insert if this fault occurs. Significance of exhaust emissions warning lamp => 3 .

Fault code		Fault text	Fault elimination
SAE	V.A.G		
P0171	16555	Continuation Bank 1, fuel measuring system, system too lean1)	Check activated charcoal filter system for leaks: => Repair group 20; Activated charcoal filter system
			- Check Lambda probe and Lambda regulation before catalytic converter => Page 121
			- Check Lambda probe and Lambda regulation after catalytic converter => Page 125

Protected by copyright. Copying for private or commercial purposes, in part or in whole, is not permitted unless authorised by AUDI AG. AUDI AG does not guarantee or accept any liability with respect to the correctness and completeness of this document's contents. Copyright by AUDI AG.

1) Engine control unit switches on the exhaust emissions warning lamp in dash panel insert if this fault occurs. Significance of exhaust emissions warning lamp => 3 .

Fault code		Fault text	Fault elimination
SAE	V.A.G		
P0172	16556	Bank 1, fuel measuring system, system too rich1)	- Check fuel pressure regulator and holding pressure => Page 115
			- Check injectors =>Page 109
			- Check activated charcoal filter solenoid valve 1: => Page 29 , Final control diagnosis Check activated charcoal filter solenoid valve 1: => Repair group 20; Activated charcoal filter system; Checking solenoid valve 1 for activated charcoal filter Checking solenoid valve 1 for activated charcoal filter
			- Check Lambda probe and Lambda regulation before catalytic converter => Page 121
			- Check Lambda probe and Lambda regulation after catalytic converter => Page 125

1) Engine control unit switches on the exhaust emissions warning lamp in dash panel insert if this fault occurs. Significance of exhaust emissions warning lamp => 3 .

Fault code		Fault text	Fault elimination
SAE	V.A.G		

P0201	16585	Injector, cylinder 1 -N30, fault in electrical circuit1)	- Check injectors=>Page 109
P0202	16586	Injector, cylinder 2 -N31, fault in electrical circuit1)	
P2023	16587	Injector, cylinder 3 -N32, fault in electrical circuit1)	
P0204	16588	Injector, cylinder 4 -N33, fault in electrical circuit1)	
P0219	16603	Maximum engine revs surpassed	- Repair mechanical damage
P0222	16606	Angle sender 2 for throttle valve drive -G188, signal too low1)2)	- Check throttle valve control part => Page 95
P0223	16607	Angle sender 2 for throttle valve drive -G188, signal too high1)2)	
P0227	16611	Accelerator pedal position sender -G79, signal too low1)2)	- Check accelerator pedal position sender: => Page 92
P0228	16612	Accelerator pedal position sender -G79, signal too high 1)2)	

1) Engine control unit switches on the EPC warning lamp in dash panel insert if this fault occurs. Significance of EPC warning lamp => 2 .

2) Engine control unit switches on the exhaust emissions warning lamp in dash panel insert if this fault occurs. Significance of exhaust emissions warning lamp=> 3 .

Protected by copyright. Copying for private or commercial purposes, in part or in whole, is not permitted unless authorised by AUDI AG. AUDI AG does not guarantee or accept any liability with respect to the correctness of information in this document. Copyright by AUDI AG.

Fault code		Fault text	Fault elimination
SAE	V.A.G		
P0262	16646	Injector Cyl. 1 -N30, short to positive1)	- Check injectors =>Page 109
P0265	16649	Injector Cyl. 2 -N31, short to positive1)	
P0268	16652	Injector Cyl. 3 -N32, short to positive1)	
P0271	16655	Injector Cyl. 4 -N33, short to positive1)	
P0300	16684	Misfire detected1)	- Check injectors=>Page 109
P0301	16685	Cyl. 1 misfire detected1)	- Check ignition cables and spark plugs => Page 156
P0302	16686	Cyl. 2 misfire detected1)	- Check ignition transformer => Page 162
P0303	16687	Cyl.3 misfire detected1)	- Check misfiring recognition => Page 167
P0304	16688	Cyl. 4 misfire detected1)	- Check exhaust gas recirculation valve (-N18): => Page 29 , Final control diagnosis Check exhaust gas recirculation system: => Repair group 26; Exhaust gas recirculation system

1) Engine control unit switches on the exhaust emissions warning lamp in dash panel insert if this fault occurs. Significance of exhaust emissions warning lamp => 3 .

Fault code		Fault text	Fault elimination
SAE	V.A.G		
P0321	16705	Engine speed sender -G28, implausible signal1)	- Check engine speed sender =>Page 107
P0322	16706	Engine speed sender -G28 no signal	
P0324	16708	Knock sensor malfunction	- Check knock sensors => Page 166
			- Evaluate measured value block 28 =>Page 47

P0325	16709	Knock sensor 1 -G61, fault in electrical circuit	- Check knock sensors => Page 166
P0326	16710	Knock sensor 1 -G61, implausible signal	- Check knock sensors => Page 166
			- Evaluate measured value block 28 =>Page 47
P0327	16711	Knock sensor 1 -G61, signal too low	- Check knock sensor => Page 166
P0328	16712	Knock sensor 1 -G61 signal too high	

1) Engine control unit switches on the exhaust emissions warning lamp in dash panel insert if this fault occurs. Significance of exhaust emissions warning lamp => 3 .

Fault code		Fault text	Fault elimination
SAE	V.A.G		
P0341	16725	Camshaft pos. sensor => sender -G40, implausible signal1)	- Check Hall sender =>Page 161
P0342	16726	Camshaft pos. sensor => sender -G40 signal too low1)	
P0343	16727	Camshaft pos. sensor => sender -G40 signal too high1)	
P0351	16735	Ignition activation, cylinder 1, malfunction1)	Check activation =>Page 164
P0352	16736	Ignition activation, cylinder 2, malfunction1)	
P0401	16785	Exhaust gas recirculation system, flow rate insufficient1)	- Check exhaust gas recirculation valve (-N18): => Page 29 , Final control diagnosis
P0402	16786	Exhaust gas recirculation system, flow rate too high1)	- Perform basic settings (read measured value blocks 74 and 75) =>Page 58
P0403	16787	EGR valve -N18, malfunction1)	
P0404	16788	Exhaust gas recirculation system,deviation1)	
P0407	16791	Exhaust gas recirculation potentio. -G212, signal too low1)	
P0408	16792	Exhaust gas recirculation potentio. -G212, signal too high1)	

1) Engine control unit switches on the exhaust emissions warning lamp in dash panel insert if this fault occurs. Significance of exhaust emissions warning lamp => 3 .

Fault code		Fault text	Fault elimination
SAE	V.A.G		
P0420	16804	Bank1, Catalyst system, Efficiency too low1)	- Check Lambda probe and lambda regulation before catalytic converter => Page 121
			- Check Lambda probe and Lambda regulation after catalytic converter => Page 125
			- Check intake system for leaks => Page 118
			- Check exhaust system for leaks: => Repair group 26; Removing and installing parts of exhaust system

Protected by copyright. Copying for private or commercial purposes, in part or in whole, is not permitted unless authorised by AUDI AG. AUDI AG does not guarantee or accept any liability with respect to the correctness of information in this document. Copyright by AUDI AG.

			- Check catalytic converter: => Repair group 26; Removing and installing parts of exhaust system

1) Engine control unit switches on the exhaust emissions warning lamp in dash panel insert if this fault occurs. Significance of exhaust emissions warning lamp => 3 .

Fault code		Fault text	Fault elimination
SAE	V.A.G		
P0441	16825	Tank breathing system, flow rate faulty1)	- Check activated charcoal filter solenoid valve 1 => Page 29 , Final control diagnosis
			- Check activated charcoal filter solenoid valve 1: => Repair group 20; Activated charcoal filter system; Checking solenoid valve 1 for activated charcoal filter Checking solenoid valve 1 for activated charcoal filter
			- Check hoses and connecting pipes from fuel tank to throttle valve control part: => Repair group 20; Checking fuel tank breather
			- Check intake system for leaks => Page 118

Fault code		Fault text	Fault elimination
SAE	V.A.G		
P0443	16827	Tank breathing system, fault in electrical circuit1)	- Check activated charcoal filter solenoid valve 1 => Page 29 , Final control diagnosis
			- Check activated charcoal filter solenoid valve 1: => Repair group 20; Activated charcoal filter system; Checking solenoid valve 1 for activated charcoal filter Checking solenoid valve 1 for activated charcoal filter
P0461	16845	Fuel status signal, implausible signal	- Check fuel gauge sender signal => Current flow diagrams, Electrical fault finding and Fitting locations binder

1) Engine control unit switches on the exhaust emissions warning lamp in dash panel insert if this fault occurs. Significance of exhaust emissions warning lamp => 3 .

Protected by copyright. Copying for private or commercial purposes, in part or in whole, is not permitted unless authorised by AUDI AG. AUDI AG does not guarantee or accept any liability with respect to the correctness of information in this document. Copyright by AUDI AG.

Fault code		Fault text	Fault elimination
SAE	V.A.G		
P0501	16885	Vehicle speed signal, implausible signal1)	- Check speed signal => Page 142
P0532	16916	A/C pressure sensor, signal too low	- Check -G65: => Heating, air conditioning; => Repair group 87
P0533	16917	A/C pressure sensor, Signal too high	
P0562	16946	Voltage supply, voltage too low	- Procedure after voltage supply open circuit => Page 132
P0563	16947	Voltage supply, voltage too high	- Check voltage supply => Page 130
P0571	16955	Brake light switch -F,implausible signal	- Check brake light switch and brake pedal switch => Page 146
P0604	16988	Control unit defective1)	- Renew engine control unit (-J537) => Page 133

P0605	16989	Control unit defective1)	

1) Engine control unit switches on the exhaust emissions warning lamp in dash panel insert if this fault occurs. Significance of exhaust emissions warning lamp => 3 .

Fault code		Fault text	Fault elimination
SAE	V.A.G		
P0606	16990	Control unit defective1)	- Renew engine control unit (-J537) => Page 133
P0607	16991	Throttle valve control part -J338, low voltage at base setting1)	- Check battery, charge if needed Adapt engine control unit to throttle valve control part => Page 136
P0638	17022	Throttle valve control part -J338, implausible signal1) 2)	- Check throttle valve control part => Page 95

1) Engine control unit switches on the EPC warning lamp in dash panel insert if this fault occurs. Significance of EPC warning lamp => 2 .

2) Engine control unit switches on the exhaust emissions warning lamp in dash panel insert if this fault occurs. Significance of exhaust emissions warning lamp =>Page 3 .

Protected by copyright. Copying for private or commercial purposes, in part or in whole, is not
with respect to the correctness of information in this document. Copyright by AUDI AG.

4 - Fault table: from V.A.G code 17510 / SAE P1 codes

4.1 - Fault table: from V.A.G code 17510 / SAE P1 codes

Notes:

- The fault code overview is listed according to SAE or V.A.G code.
- Erase fault memory after rectifying fault =>Page 36 .

Fault code		Fault text	Fault elimination
SAE	V.A.G		
P1102	17510	Bank 1, probe 1 heating current circuit short to positive1)	- Check Lambda probe heating before catalytic converter => Page 85
P1105	17513	Bank 1, probe 2 heating current circuit short to positive1)	- Check Lambda probe heating after catalytic converter => Page 88
P1115	17523	Bank 1, probe 1 heating current circuit short to earth1)	- Check Lambda probe heating before catalytic converter => Page 85
P1116	17524	Bank 1, probe 1 heating current circuit open circuit1)	
P1117	17525	Bank1, probe 2 heating current circuit short to earth1)	- Check Lambda probe heating after catalytic converter => Page 88
P1118	17526	Bank 1, probe 2 heating current circuit open circuit1)	

1) Engine control unit switches on the exhaust emissions warning lamp in dash panel insert if this fault occurs. Significance of exhaust emissions warning lamp => 3 .

Fault code		Fault text	Fault elimination
SAE	V.A.G		
P1151	17559	Bank1, mixture adaption region 1 Below lean limit1); 2)	- Check fuel pressure regulator and holding pressure => Page 115
			- Check injectors =>Page 109
			- Check fuel pump: => Repair group 20; Removing and installing parts of fuel system; Check fuel pump Check fuel pump
			- Check intake system for leaks => Page 118
			- Check exhaust system for leaks: => Repair group 26; Removing and installing parts of exhaust system
Continued on next page			

1) Engine control unit switches on the exhaust emissions warning lamp in dash panel insert if this fault occurs. Significance of exhaust emissions warning lamp => 3 .

Note:

2)add. = additive, i.e. the fault only affects the system at idling speed.

Fault code		Fault text	Fault elimination
SAE	V.A.G		
P1151	17559	Continuation Bank1, mixture adaption region 1 Below lean limit1); 2)	- Check exhaust gas recirculation valve (-N18): => Page 29 , Final control diagnosis Check exhaust gas recirculation system: => Repair group 26; Exhaust gas recirculation system
			- Check activated charcoal filter system for leaks: => Repair group 20; Activated charcoal filter system
			- Check Lambda probe and Lambda regulation before catalytic converter => Page 121
			- Check Lambda probe and Lambda regulation after catalytic converter => Page 125

Protected by copyright. Copying for private or commercial purposes, in part or in whole, is not permitted unless authorized by AUDI AG. AUDI AG does not guarantee or accept any liability with respect to the correctness of information in this document. Copyright by AUDI AG.

1) Engine control unit switches on the exhaust emissions warning lamp in dash panel insert if this fault occurs. Significance of exhaust emissions warning lamp => 3 .

Note:

2)add. = additive, i.e. the fault only affects the system at idling speed.

Fault code		Fault text	Fault elimination
SAE	V.A.G		
P1152	17560	Bank1, mixture adaption region 2 Below lean limit1); 2)	- Check fuel pressure regulator and holding pressure => Page 115
			- Check injectors =>Page 109
			- Check fuel pump: => Repair group 20; Removing and installing parts of fuel system; Check fuel pump Check fuel pump
			- Check intake system for leaks => Page 118
			- Check exhaust system for leaks: => Repair group 26; Removing and installing parts of exhaust system

Continued on next page

1) Engine control unit switches on the exhaust emissions warning lamp in dash panel insert if this fault occurs. Significance of exhaust emissions warning lamp => 3 .

Note:

2)mult. = multiplicative, i.e. the fault affects the system across the whole range of engine speeds and engine loads.

Fault code		Fault text	Fault elimination
SAE	V.A.G		
P1152	17560	Continuation Bank1, mixture adaption region 2 Below lean limit1) 2)	- Check exhaust gas recirculation valve (-N18): => Page 29 , Final control diagnosis Check exhaust gas recirculation system: => Repair group 26; Exhaust gas recirculation system
			- Check activated charcoal filter system for leaks: => Repair group 20; Activated charcoal filter system
			- Check Lambda probe and Lambda regulation before catalytic converter => Page 121
			- Check Lambda probe and Lambda regulation after catalytic converter => Page 125

Protected by copyright. Copying for private or commercial purposes, in part or in whole, is not permitted unless authorised by AUDI AG. AUDI AG does not guarantee or accept any liability with respect to the correctness of information in this document. Copyright by AUDI AG.

1) Engine control unit switches on the exhaust emissions warning lamp in dash panel insert if this fault occurs. Significance of exhaust emissions warning lamp => 3 .

Note:

2)mult. = multiplicative, i.e. the fault affects the system across the whole range of engine speeds and engine loads.

Fault code		Fault text	Fault elimination
SAE	V.A.G		
P1155	17563	Intake manifold pressure sender -G71short to positive1)2)	- Check intake manifold pressure sender =>Page 96
P1156	17564	Intake manifold pressure sender -G71 open circuit/short to earth1)2)	
P1158	17566	Intake manifold pressure sender -G71, implausible signal1)2)	- Clean throttle valve

1) Engine control unit switches on the EPC warning lamp in dash panel insert if this fault occurs. Significance of EPC warning lamp =>Page 2 .

2) Engine control unit switches on the exhaust emissions warning lamp in dash panel insert if this fault occurs. Significance of exhaust emissions warning lamp =>Page 3 .

Fault code		Fault text	Fault elimination
SAE	V.A.G		
P1165	17573	Bank1, mixture adaption region 1 Rich limit exceeded1); 2)	- Check fuel pressure regulator and holding pressure => Page 115
			- Check injectors =>Page 109
			- Check fuel pump: => Repair group 20; Removing and installing parts of fuel system; Check fuel pump Check fuel pump
			- Check intake system for leaks => Page 118

Fault code		Fault text	Fault elimination
			- Check exhaust system for leaks: => Repair group 26; Removing and installing parts of exhaust system
Continued on next page			

1) Engine control unit switches on the exhaust emissions warning lamp in dash panel insert if this fault occurs. Significance of exhaust emissions warning lamp => 3 .

Note:

2)add. = additive, i.e. the fault only affects the system at idling speed.

Fault code		Fault text	Fault elimination
SAE	V.A.G		
P1165	17573	Continuation Bank1, mixture adaption region 1 Rich limit exceeded1); 2)	- Check exhaust gas recirculation valve (-N18): => Page 29 , Final control diagnosis Check exhaust gas recirculation system: => Repair group 26; Exhaust gas recirculation system
			- Check activated charcoal filter system for leaks: => Repair group 20; Activated charcoal filter system
			- Check Lambda probe and Lambda regulation before catalytic converter => Page 121
			- Check Lambda probe and Lambda regulation after catalytic converter => Page 125

1) Engine control unit switches on the exhaust emissions warning lamp in dash panel insert if this fault occurs. Significance of exhaust emissions warning lamp => 3 .

Note:

2)add. = additive, i.e. the fault only affects the system at idling speed.

Fault code		Fault text	Fault elimination
SAE	V.A.G		
P1166	17574	Bank1, mixture adaption region 2 Rich limit exceeded1) 2)	- Check fuel pressure regulator and holding pressure => Page 115
			- Check injectors =>Page 109
			- Check fuel pump: => Repair group 20; Removing and installing parts of fuel system; Check fuel pump Check fuel pump
			- Check intake system for leaks => Page 118
			- Check exhaust system for leaks: => Repair group 26; Removing and installing parts of exhaust system
Continued on next page			

Protected by copyright. Copying for private or commercial purposes, in part or in whole, is not permitted unless authorised by AUDI AG. AUDI AG does not guarantee or accept any liability with respect to the correctness of information in this document. Copyright by AUDI AG.

1) Engine control unit switches on the exhaust emissions warning lamp in dash panel insert if this fault occurs. Significance of exhaust emissions warning lamp => 3 .

Note:

2)mult. = multiplicative, i.e. the fault affects the system across the whole range of engine speeds and engine loads.

Fault code		Fault text	Fault elimination
SAE	V.A.G		
P1166	17574	Continuation Bank1, mixture adaption region 2 Rich limit exceeded1); 2)	- Check exhaust gas recirculation valve (-N18): => Page 29 , Final control diagnosis Check exhaust gas recirculation system: => Repair group 26; Exhaust gas recirculation system
			- Check activated charcoal filter system for leaks: => Repair group 20; Activated charcoal filter system
			- Check Lambda probe and Lambda regulation before catalytic converter => Page 121
			- Check Lambda probe and Lambda regulation after catalytic converter => Page 125

1) Engine control unit switches on the exhaust emissions warning lamp in dash panel insert if this fault occurs. Significance of exhaust emissions warning lamp => 3 .

Note:

2)mult. = multiplicative, i.e. the fault affects the system across the whole range of engine speeds and engine loads.

Fault code		Fault text	Fault elimination
SAE	V.A.G		
P1171	17579	Angle sender 2 for throttle valve drive -G188, implausible signal1)2)	- Check throttle valve control part => Page 95
P1172	17580	Angle sender 2 for throttle valve drive -G188, signal too low1)2)	
P1173	17581	Angle sender 2 for throttle valve drive -G188, signal too high1)	- Clean throttle valve

1) Engine control unit switches on the EPC warning lamp in dash panel insert if this fault occurs. Significance of EPC warning lamp => 2 .

Protected by copyright. Copying for private or commercial purposes, in part or in whole, is not permitted unless authorised by AUDI AG. AUDI AG does not guarantee or accept any liability with respect to the correctness of information in this document. Copyright by AUDI AG.

2) Engine control unit switches on the exhaust emissions warning lamp in dash panel insert if this fault occurs. Significance of exhaust emissions warning lamp =>Page 3 .

Fault code		Fault text	Fault elimination
SAE	V.A.G		
P1174	17582	Bank1, fuel measurement system Deviation in injection timing1)	- Check fuel pressure regulator and holding pressure => Page 115
			- Check injectors =>Page 109
			- Check fuel pump: => Repair group 20; Removing and installing parts of fuel system; Check fuel pump Check fuel pump
			- Check intake system for leaks => Page 118
			- Check exhaust system for leaks: => Repair group 26; Removing and installing parts of exhaust system
Continued on next page			

1) Engine control unit switches on the exhaust emissions warning lamp in dash panel insert if this fault occurs. Significance of exhaust emissions warning lamp => 3 .

Fault code		Fault text	Fault elimination
SAE	V.A.G		
P1174	17582	Continuation Bank1, fuel measurement system Deviation in injection timing1)	- Check exhaust gas recirculation valve => Page 29 , Final control diagnosis Check exhaust gas recirculation system: => Repair group 26; Exhaust gas recirculation system
			- Check activated charcoal filter system for leaks: => Repair group 20; Activated charcoal filter system
			- Check Lambda probe and Lambda regulation before catalytic converter => Page 121
			- Check Lambda probe and Lambda regulation after catalytic converter => Page 125

1) Engine control unit switches on the exhaust emissions warning lamp in dash panel insert if this fault occurs. Significance of exhaust emissions warning lamp => 3 .

Protected by copyright. Copying for private or commercial purposes, in part or in whole, is not permitted unless authorised by AUDI AG. AUDI AG does not guarantee or accept any liability with respect to the correctness of information in this document. Copyright by AUDI AG.

Fault code		Fault text	Fault elimination
SAE	V.A.G		
P1176	17584	Bank 1 Lambda correction after cat, control limit reached1)	- Check intake system for leaks (unmetered air) => Page 118
			- Check Lambda probe and Lambda regulation after catalytic converter => Page 125
			- Check Lambda probe heating after catalytic converter => Page 88

1) Engine control unit switches on the exhaust emissions warning lamp in dash panel insert if this fault occurs. Significance of exhaust emissions warning lamp => 3 .

Fault code		Fault text	Fault elimination
SAE	V.A.G		
P1178	17586	Linear Lambda probe/pump current, Open circuit1)	- Check Lambda probe and Lambda regulation before catalytic converter => Page 121
P1179	17587	Linear Lambda probe/pump current, Short to earth1)	
P1180	17588	Linear Lambda probe/pump current, Short to positive1)	- Check Lambda probe heating before catalytic converter => Page 85
P1181	17589	Linear Lambda probe/reference voltage, Open circuit1)	- Check Lambda probe and Lambda regulation before catalytic converter => Page 121
P1182	17590	Linear Lambda probe/reference voltage, Short to earth1)	- Check Lambda probe heating before catalytic converter => Page 85
P1183	17591	Linear Lambda probe/reference voltage, Short to positive1)	- Check ignition cables and spark plugs => Page 156
P1190	17598	Linear Lambda probe/reference voltage implausible1)	- Check misfire detection => Page 167

1) Engine control unit switches on the exhaust emissions warning lamp in dash panel insert if this fault occurs. Significance of exhaust emissions warning lamp => 3 .

Fault code		Fault text	Fault elimination
SAE	V.A.G		
P1196	17604	Bank 1, probe 1 heating element circuit, Electrical fault1)	- Check Lambda probe heating before catalytic converter =>Page 85

P1198	17606	Bank 1, probe 2 heating element circuit, Electrical fault1)	- Check Lambda probe heating after catalytic converter => Page 88
P1213	17621	Injector Cyl. 1 -N30 short to positive1)	- Check injectors =>Page 109
P1214	17622	Injector Cyl. 2 -N31 short to positive1)	
P1215	17623	Injector Cyl. 3 -N32 short to positive1)	
P1216	17624	Injector Cyl. 4 -N33 short to positive1)	

1) Engine control unit switches on the exhaust emissions warning lamp in dash panel insert if this fault occurs. Significance of exhaust emissions warning lamp => 3 .

Fault code		Fault text	Fault elimination
SAE	V.A.G		
P1237	17645	Injector Cyl. 1 -N30 open circuit1)	- Check injectors =>Page 109
P1238	17646	Injector Cyl. 2 -N31 open circuit1)	
P1239	17647	Injector Cyl. 3 -N32 open circuit1)	
P1240	17648	Injector Cyl. 4 -N33 open circuit1)	
P1337	17745	Bank 1, camshaft pos. sensor => sender -G40, Short to earth	- Check Hall sender =>Page 161
P1338	17746	Bank 1, camshaft pos. sensor => sender -G40, Open circuit/ short to positive	

1) Engine control unit switches on the exhaust emissions warning lamp in dash panel insert if this fault occurs. Significance of exhaust emissions warning lamp => 3 .

Fault code		Fault text	Fault elimination
SAE	V.A.G		
P1341	17749	Ignition output 1, short to earth1)	- Check ignition transformer => Page 162 - Check Hall sender => Page 161
P1342	17750	Ignition output 1, short to positive1)	
P1343	17751	Ignition output 2 short to earth1)	
P1344	17752	Ignition output 2, short to positive1)	
P1348	17756	Ignition output 1, open circuit1)	
P1349	17757	Ignition output 2, open circuit1)	

Protected by copyright. Copying for private or commercial purposes, in part or in whole, is not permitted unless authorised by AUDI AG. AUDI AG does not guarantee or accept any liability with respect to the correctness of information in this document. Copyright by AUDI AG.

1) Engine control unit switches on the exhaust emissions warning lamp in dash panel insert if this fault occurs. Significance of exhaust emissions warning lamp => 3 .

2) Engine control unit switches on the EPC warning lamp in dash panel insert if this fault occurs. Significance of EPC warning lamp => 2 .

Fault code		Fault text	Fault rectification
SAE	V.A.G		
P1355	17763	Ignition circuit cylinder 11) Open circuit	- Check ignition transformer => Page 162
P1356	17764	Ignition circuit cylinder 11) Short to positive	
P1357	17765	Ignition circuit cylinder 11) Short to earth	

P1358	17766	Ignition circuit cylinder 21) Open circuit	
P1359	17767	Ignition circuit cylinder 21) Short to positive	
P1360	17768	Ignition circuit cylinder 21) Short to earth	

1)Faults relating to "Ignition circuit..." apply to wiring connections between the engine control unit and the ignition output stage of the ignition coil via which the engine control unit activates the output stages. "Ignition circuit, cylinder 1..."applies to cylinders one and four, "Ignition circuit, cylinder 2..." applies to cylinders two and three.

Protected by copyright. Copying for private or commercial purposes, in part or in whole, is not permitted unless authorised by AUDI AG. AUDI AG does not guarantee or accept any liability with respect to the correctness of information in this document. Copyright by AUDI AG.

Fault code		Fault text	Fault elimination
SAE	V.A.G		
P1385	17793	Control unit defective1)	- Renew engine control unit => Page 133
P1388	17796	Control unit defective1)2)	- Renew engine control unit => Page 133
P1398	17806	Engine speed signal, TD short to earth	- Check engine speed sender =>Page 107
P1399	17807	Engine speed signal, TD short to positive	
P1401	17809	Exhaust gas recirculation valve -N18, Short to earth1)	- Check exhaust gas recirculation valve=>Page 29 , Final control diagnosis
P1402	17810	Exhaust gas recirculation valve -N18, Short to positive1)	
P1403	17811	Exhaust gas recirculation system, Control difference1)	
P1404	17812	Exhaust gas recirculation system, Basic settings not performed	- Perform basic setting (Measured value block 74) =>Page 58

1) Engine control unit switches on the exhaust emissions warning lamp in dash panel insert if this fault occurs. Significance of exhaust emissions warning lamp => 3 .

2) Engine control unit switches on the EPC warning lamp in dash panel insert if this fault occurs. Significance of EPC warning lamp => 2 .

Fault code		Fault text	Fault elimination
SAE	V.A.G		
P1410	17818	Tank breathing valve -N80 short to positive1)	- Check activated charcoal filter solenoid valve 1=> Page 29 , Final control diagnosis
P1425	17833	Tank breathing valve -N80 short to earth1)	
P1426	17834	Tank breathing valve -N80 open circuit1)	

1) Engine control unit switches on the exhaust emissions warning lamp in dash panel insert if this fault occurs. Significance of exhaust emissions warning lamp => 3 .

Fault code		Fault text	Fault elimination
SAE	V.A.G		
P1439	17847	EGR potentiometer - G212 Fault in basic setting1)	- Check exhaust gas recirculation valve=> Page 29 , Final control diagnosis
P1440	17848	Exhaust gas recirculation valve - N18, open circuit1)	

Fault code		Fault text	Fault elimination
P1442	17850	EGR potentiometer - G212 Signal too high1)	- Perform basic settings (measured value block 74) => Page 58
P1443	17851	EGR potentiometer -G212 Signal too low1)	
P1501	17909	Fuel pump relay -J17, Short to earth	- Check fuel pump relay => Page 138
P1502	17910	Fuel pump relay -J17, short to positive	

1) Engine control unit switches on the exhaust emissions warning lamp in dash panel insert if this fault occurs. Significance of exhaust emissions warning lamp => 3 .

Fault code		Fault text	Fault elimination
SAE	V.A.G		
P1504	17912	Air intake system, Leak detected1)2)	- Check intake system for leaks (unmetered air) => Page 118
			- Check exhaust gas recirculation system: => Repair group 26; Exhaust gas recirculation system
			- Check activated charcoal filter solenoid valve 1: => Repair group 20; Activated charcoal filter system; Checking solenoid valve 1 for activated charcoal filter Checking solenoid valve 1 for activated charcoal filter
			- Check throttle valve control unit => Page 95

1) Engine control unit switches on the exhaust emissions warning lamp in dash panel insert if this fault occurs. Significance of exhaust emissions warning lamp => 3.

The reproduction, distribution and utilization of this document as well as the communication of its contents to others without express authorization is prohibited. Offenders will be held liable for the payment of damages. We reserve all rights in the event of the grant of a patent, utility model or design. We do not guarantee or accept any liability with respect to the correctness of information in this document. Copyright by AUDI AG.

2) Engine control unit switches on the EPC warning lamp in dash panel insert if this fault occurs. Significance of EPC warning lamp => 2 .

Fault code		Fault text	Fault elimination
SAE	V.A.G		
P1541	17949	Fuel pump relay - J17, Open circuit	- Check fuel pump relay => Page 138
P1542	17950	Angle sender for throttle valve drive -G187, Implausible signal2)	- Check throttle valve control part => Page 95 Clean throttle valve
P1543	17951	Angle sender for throttle valve drive -G187 signal too low 1)2)	
P1544	17952	Angle sender for throttle valve drive -G187 signal too high 1)2)	
P1545	17953	Throttle valve control malfunction 1)2)	

1) Engine control unit switches on the exhaust emissions warning lamp in dash panel insert if this fault occurs. Significance of exhaust emissions warning lamp => 3 .

2) Engine control unit switches on the EPC warning lamp in dash panel insert if this fault occurs. Significance of EPC warning lamp => 2 .

Fault code		Fault text	Fault elimination
SAE	V.A.G		
P1553	17961	Altitudesensor signal/intake manifold pressure, Implausible ratio1)	- Check intake manifold pressure sender =>Page 96
			- Check intake system for leaks (unmetered air) => Page 118

			- Check exhaust gas recirculation system: => Repair group 26; Exhaust gas recirculation system
			- Check activated charcoal filter solenoid valve 1: => Repair group 20; Activated charcoal filter system; Checking solenoid valve 1 for activated charcoal filter Checking solenoid valve 1 for activated charcoal filter
			- Check throttle valve control part => Page 95

1) Engine control unit switches on the EPC warning lamp in dash panel insert if this fault occurs. Significance of EPC warning lamp => 2 .

Fault code		Fault text	Fault elimination
SAE	V.A.G		
P1554	17962	Throttle valve control part -J338 Basic setting condition not met 1)	- Adapt engine control unit to throttle valve control part => Page 136
P1559	17967	Throttle valve control part -J338 Fault in basic setting 1)2)	
P1560	17968	Maximum engine revs surpassed	- Repair mechanical damage
P1564	17972	Throttle valve control part -J338 low voltage at base setting 1)	- Check battery, charge if needed Adapt engine control unit to throttle valve control part => Page 136
P1565	17973	Throttle valve control part -J338 lower limit not reached 1)2)	- Check throttle valve control part=> Page 95
P1569	17977	CCS switch -E45, Implausible signal	- Check cruise control signal => Page 144

1) Engine control unit switches on the EPC warning lamp in dash panel insert if this fault occurs. Significance of EPC warning lamp => 2 .

2) Engine control unit switches on the exhaust emissions warning lamp in dash panel insert if this fault occurs. Significance of exhaust emissions warning lamp =>Page 3 .

Fault code		Fault text	Fault elimination
SAE	V.A.G		
P1570	17978	Engine control unit blocked	- Adapt electronic immobilizer to engine control unit => Electrical system; Repair group 01; Self-diagnosis of immobiliser
P1581	17989	Throttle valve control part -J338 Basic setting not performed	- Adapt engine control unit to throttle valve control part => Page 136
P1602	18010	Voltage supply Kl 30, Voltage too low	- Procedure after voltage supply open circuit => Page 130
P1611	18019	Request fault lamp be switched on, Short to earth	- Check exhaust emissions warning lamp: => Current flow diagrams, Electrical fault finding and Fitting locations binder
P1612	18020	Engine control unit incorrectly coded	- Code engine control unit => Page 134
P1626	18034	Drive train data bus no messages from gearbox control unit	- Check data bus => Page 152

Protected by copyright. Copying for private or commercial purposes, in part or in whole, is not permitted unless authorised by AUDI AG. AUDI AG does not guarantee or accept any liability with respect to the correctness of information in this document. Copyright by AUDI AG.

Fault code		Fault text	Fault elimination
SAE	V.A.G		

P1630	18038	Accelerator pedal position sender -G79 signal too low1)2)	- Check accelerator pedal position sender: => Repair group 20; Electronic Engine Power Control (EPC); Check accelerator pedal position sender Check accelerator pedal position sender
P1631	18039	Accelerator pedal position sender -G79 signal too high 1)2)	
P1633	18041	Accelerator pedal position sender 2 -G185 signal too low 1)2)	
P1634	18042	Accelerator pedal position sender 2 -G185 signal too high 1)2)	
P1635	18043	Drive train data bus, No message from air conditioner CU	- Check data bus => Page 152
P1636	18044	Drive train date bus, No message from airbag CU	
P1637	18045	Drive train data bus, No message from elec. CU	

Protected by copyright. Copying for private or commercial purposes, in part or in whole, is not permitted unless authorised by AUDI AG. AUDI AG does not guarantee or accept any liability with respect to the correctness of information in this document. Copyright by AUDI AG.

1) Engine control unit switches on the EPC warning lamp in dash panel insert if this fault occurs. Significance of EPC warning lamp => 2 .

2) Engine control unit switches on the exhaust emissions warning lamp in dash panel insert if this fault occurs. Significance of exhaust emissions warning lamp =>Page 3 .

Fault code		Fault text	Fault elimination
SAE	V.A.G		
P1639	18047	Accelerator pedal position senders 1/2 -G79 +G185 implausible signal 1)	- Check accelerator pedal position sender: => Repair group 20; Checking engine electronic power control (EPC); Checking accelerator pedal position sender Checking accelerator pedal position sender
P1640	18048	Control unit defective2)	- Check control unit voltage supply => Page 130
			- Renew engine control unit (J537) => Page 133
P1641	18049	Please interrogate air cond. CU fault memory	- Interrogate fault memory of A/C control unit => Heating, air conditioner; Repair group 01
P1648	18056	Drive train data bus defective	- Check data bus => Page 152
P1649	18057	Drive train data bus no messages from ABS control unit	

1) Engine control unit switches on the EPC warning lamp in dash panel insert if this fault occurs. Significance of EPC warning lamp => 2 .

2) Engine control unit switches on the exhaust emissions warning lamp in dash panel insert if this fault occurs. Significance of exhaust emissions warning lamp =>Page 3 .

Fault code		Fault text	Fault elimination
SAE	V.A.G		
P1650	18058	Drive train data bus message from combi-instrument missing	- Check data bus => Page 152
P1652	18060	Please interrogate fault memory of gearbox control unit	=> Repair group 01; Self-diagnosis for automatic gearbox 001; Perform self-diagnosis; Interrogate fault memory Perform self-diagnosis; Interrogate fault memory
P1653	18061	Please interrogate fault memory of ABS control unit	=> Repair group 01; Running gear self-diagnosis for ABS, Perform self-diagnosis

Fault code		Fault text	Fault elimination
P1654	18062	Please interrogate fault memory of combi-instrument	=> Repair group 01; Electrical system, self-diagnosis
P1656	18064	Air conditioning input/output Short to earth	- Check air conditioning system: => Current flow diagrams, Electrical fault finding and Fitting locations binder
P1657	18065	Air conditioning input/output Short to positive	

Fault code		Fault text	Fault elimination
SAE	V.A.G		
P1673	18081	Speed signal, fault message from ABS control unit	=> Running gear, Self-diagnosis for ABS; Repair group 01; Performing self-diagnosis Performing self-diagnosis
P1677	18085	Electric throttle control fault lamp - K132 Short to positive1)	- Check data bus => Page 152 - Check dash panel insert: => Electrical system, Self-diagnosis; Repair group 01
P1678	18086	Electric throttle control fault lamp -K132 Short to earth1)	
P1679	18087	Electr.throttle control fault lamp -K132 Open circuit1)	
P1691	18099	Warning lamp for self-diagnosis -K83 Open circuit	- Check data bus => Page 152 - Check dash panel insert: => Electrical system, Self-diagnosis; Repair group 01
P1692	18100	Warning lamp for self-diagnosis -K83 Short to earth	
P1693	18101	Warning lamp for self-diagnosis -K83 Short to positive	

1) Engine control unit switches on the EPC warning lamp in dash panel insert if this fault occurs. Significance of EPC warning lamp => 2 .

5 - Final control diagnosis

5.1 - Final control diagnosis

Protected by copyright. Copying for private or commercial purposes, in part or in whole, is not permitted unless authorised by AUDI AG. AUDI AG does not guarantee or accept any liability with respect to the correctness of information in this document. Copyright by AUDI AG.

5.2 - Performing final control diagnosis

The final control diagnosis activates the following components in the stated sequence:

1. Throttle valve positioner (V60)

2. Activated charcoal filter solenoid valve 1 (N80)

3. Exhaust gas recirculation valve (N18)

4. Engine speed signal1)

5. Fuel pump relay (J17)

6. Engine/air conditioner compressor electrical connection1)

1) not relevant

Special tools, workshop equipment, testers, measuring instruments and auxiliary items required

- Fault reader V.A.G 1551 or vehicle system tester V.A.G 1552 with cable V.A.G 1551/3A
- Test box V.A.G 1598/31
- Hand multimeter V.A.G 1526 or multimeter V.A.G 1715
- Diode test lamp V.A.G 1527
- Adapter set V.A.G 1594
- Current flow diagram

Check conditions

- Fuses must be OK.
- The battery voltage must be at least 11.5 V.
- All electrical consumers, e.g. lights and rear window heating must be switched off.

Protected by copyright. Copying for private or commercial purposes, in part or in whole, is not permitted unless authorised by AUDI AG. AUDI AG does not guarantee or accept any liability with respect to the correctness of information in this document. Copyright by AUDI AG.

Notes:

- The final control diagnosis can only be carried out if the engine is stationary and ignition switched on.
- The final control diagnosis will be aborted if the engine is started or a rotational impulse is recognised.
- During the final control diagnosis the individual final controls will be activated until advancing to the next final control by pressing the ⇒ button.
- The final control elements (actuators) are checked acoustically or by touching.

Work sequence

- Connect the fault reader V.A.G 1551 (V.A.G 1552). Then switch ignition on and select engine control unit with the "Address word" 01.
  (Connecting fault reader and selecting engine control unit => Page 7 .)

-> Indicated on display:

```
Rapid data transfer     HELP
Select function XX
```

- Operate fault reader taking into account the information on the display:
- Press keys 0 and 3 for the function "Final control diagnosis".

-> Indicated on display:

```
Rapid data transfer     Q
03 Final control diagnosis
```

Activating throttle valve positioner (V60):

- Confirm input with Q key.

-> Indicated on display:

```
Final control diagnosis
Throttle valve positioner-V60
```

The throttle valve positioner should open and close the throttle valve until the test sequence is advanced to the next final control element by pressing the ⇒key.

If the throttle valve positioner does not move:

- Check throttle valve positioner
  =>Page 95 , Checking throttle valve control part.

Activating activated charcoal filter solenoid valve 1 (N80):

- Press ⇒key.

-> Indicated on display:

```
Final control diagnosis
Activ. charcoal filter solenoid valve
1     -N80
```

The solenoid valve (fitting locations: => Page 63) should click until the test sequence is advanced to the next final control element by pressing the ⇒key.

- Pull hose off activated charcoal filter at solenoid valve.
- Connect an auxiliary hose to the vacant valve connection.
- Blow into auxiliary hose during final control diagnosis (in direction of throttle valve control part).
  Valve must open and close

If the solenoid valve does not click:

- Continue check => Page 32 .

Activating exhaust gas recirculation valve (N18):

- Press ⇒key.

-> Indicated on display:

```
Final control diagnosis
Exhaust gas recirculation valve -N18
```

The exhaust gas recirculation valve (engine compartment, left, on cylinder head) must click until the next final control is activated by pressing the ⇒key.

If the exhaust gas recirculation valve does not click:

- Continue check => Page 34 .

Activating engine speed signal (G28):

- Press ⇒key.

-> Indicated on display:

```
Final control diagnosis
Engine speed signal
```

Not relevant for this test.

Activating fuel pump relay (J17):

- Press ⇒key.

-> Indicated on display:

```
Final control diagnosis
Fuel pump relay J17
```

The fuel pump relay (on the relay plate) must click until the next final control is activated by pressing the ⇒key.

If the relay does not click:

- Check fuel pump relay:

=> Page 138

Protected by copyright. Copying for private or commercial purposes, in part or in whole, is not permitted unless authorised by AUDI AG. AUDI AG does not guarantee or accept any liability with respect to the correctness of information in this document. Copyright by AUDI AG.

Engine/air conditioner compressor electrical connection:

- Press ⇒key.

-> Indicated on display:

```
Final control diagnosis
Engine/ACC. electrical connection
```

Not relevant for this test.

- Press ⇒key.

-> Indicated on display:

```
Rapid data transfer      HELP
Select function XX
```

- Press keys 0 and 6 for the "End output" function and confirm input with the Q key.

-> Indicated on display:

```
Rapid data transfer      HELP
Enter address word XX
```

- Switch off ignition.

Continuation of check ifthe activated charcoal filter solenoid 1 does not click:

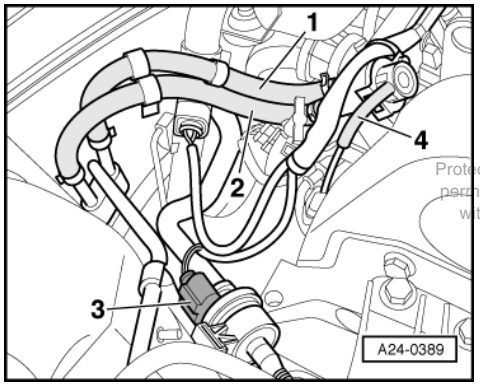

Protected by copyright. Copying for private or commercial purposes, in part or in whole, is not permitted unless authorised by AUDI AG. AUDI AG does not guarantee or accept any liability with respect to the correctness of information in this document. Copyright by AUDI AG.

- -> Unplug 2-pin connector from solenoid valve 1 (N80) -3-.

Fitting location => Fitting locations overview, Page 63

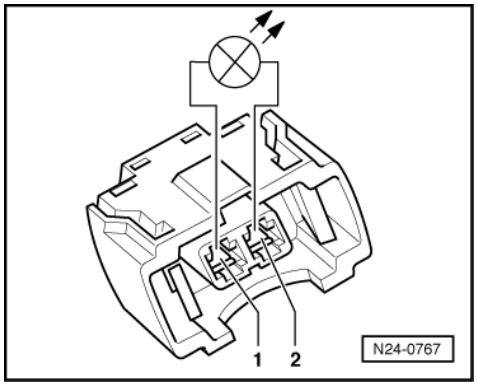

- -> Connect diode test lamp V.A.G 1527 using adapter cables from V.A.G 1594 to detached connector.
  The LED shouldflash (bright/darker)

IfLEDflashes:

- Proceed with final control diagnosis until completed.
- Switch off ignition.
- Replace solenoid valve 1 (N80):

=> Repair group 20; Activated charcoal filter system; Removing and installing parts of activated charcoal filter system Activated charcoal filter system Removing and installing parts of activated charcoal filter system

If LED does not flash:

- Proceed with final control diagnosis until completed.
- Switch off ignition.

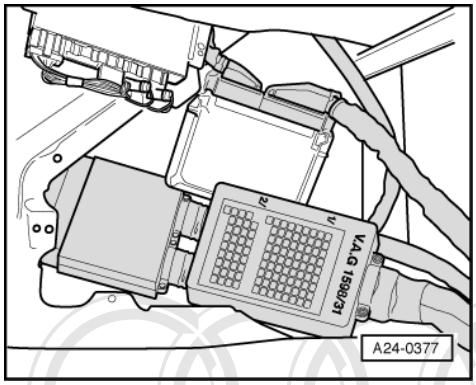

- -> Connect test box V.A.G 1598/31 to control unit wiring harness. The engine control unit remains disconnected => Page 66 .

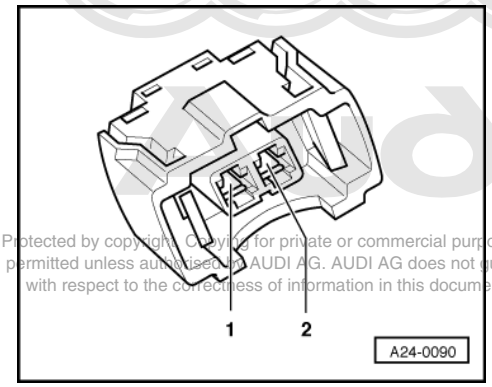

Protected by copyright. Copying for private or commercial purposes, in part or in whole, is not permitted unless authorised by AUDI AG. AUDI AG does not guarantee or accept any liability with respect to the correctness of information in this document. Copyright by AUDI AG.

- -> Check wire for open circuit between test box socket 64 and 2-pin connector contact 2 using current flow diagram.
  Wire resistance: max. 1.5 ω
- Additionally check wire for short to battery positive and earth.
  Specification: ∞ω
- Check wire between 2 pin connector contact 1 and the fuel pump relay (J17) for open circuit using current flow diagram.
  Wire resistance: max. 1.5 ω

If no wiring fault is detected:

- Replace engine control unit
  => Page 133 .

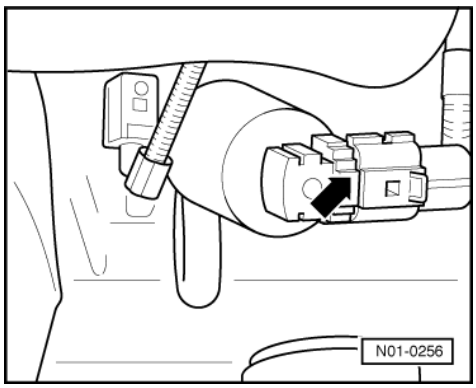

Continuation of check iftheexhaust gas recirculation valve does not click:

- -> Pull the 6-pin connector off EGR valve (N18) -arrow- (on camshaft housing, left).

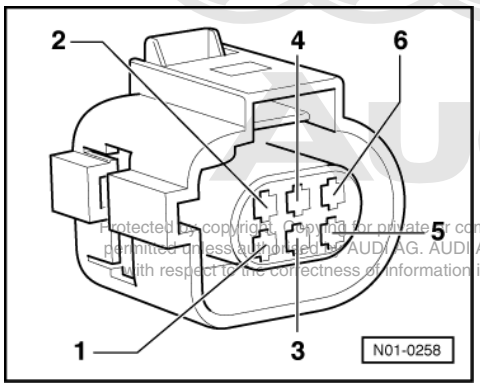

Protected by copyright. Copying for private or commercial purposes, in part or in whole, is not permitted unless authorised by AUDI AG. AUDI AG does not guarantee or accept any liability with respect to the correctness of information in this document. Copyright by AUDI AG.

If LED flashes:

- -> Connect the diode test lamp V.A.G 1527 to detached connector at contacts 1+5 using adapter cables from V.A.G 1594.
  The LED must flash (bright/darker)
- Proceed with final control diagnosis until completed.
- Switch off ignition.
- Replace the exhaust gas recirculation valve (N18):

=> Repair group 26; Exhaust gasrecirculation system Exhaust gasrecirculation system

If LED does not flash:

- Proceed with final control diagnosis until completed.
- Switch off ignition.

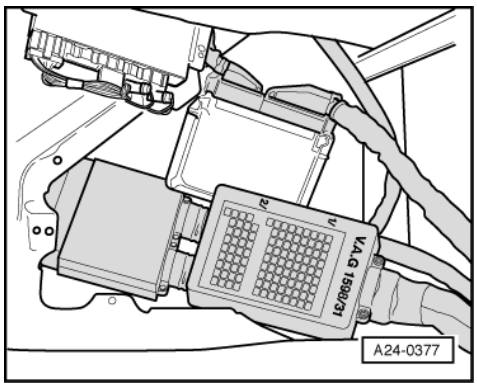

- -> Connect test box V.A.G 1598/31 to control unit wiring harness. The engine control unit remains disconnected => Page 66 .

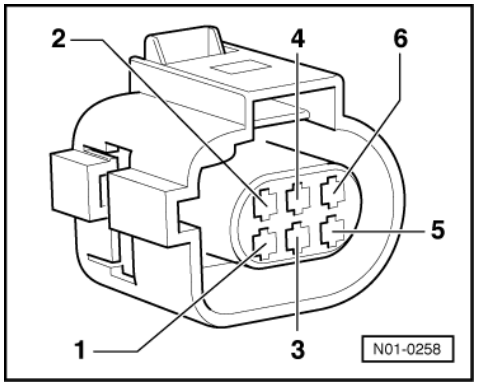

- -> Check wire for open circuit between test box socket 114 and 6-pin connector contact 5 using current flow diagram.
  Wire resistance: max. 1.5 ω
- Additionally check wire for short to battery positive and earth.
  Specification: ∞ω
- Check wire between 6-pin connector contact 1 and the fuel pump relay (J17) for open circuit using current flow diagram.
  Wire resistance: max. 1.5 ω

If no wiring fault is detected:

Protected by copyright. Copying for private or commercial purposes, in part or in whole, is not permitted unless authorised by AUDI AG. AUDI AG does not guarantee or accept any liability with respect to the correctness of information in this document. Copyright by AUDI AG.

- Replace engine control unit
  => Page 133.

6 - Readiness code

6.1 - Readiness code

Function

The readiness code is an 8-digit number code which displays the status of the emission-relevant diagnosis.

When the diagnosis of a system (e.g. tank venting system) has been successfully completed, the corresponding digit in the number code will change from 1 to 0.

The diagnosis is performed at regular intervals during normal driving. It is recommended that the readiness code be generated after performing repairs on an emission-relevant system, to guarantee that these systems function correctly. If a fault is detected during the diagnosis it will be entered in the fault memory.

Each time the fault memory is erased or the voltage supply is interrupted the readiness code will be erased.

6.2 - Reading readiness code

Special tools, workshop equipment, testers, measuring instruments and auxiliary items required

- Fault reader V.A.G 1551 with cable V.A.G 1551/3

Work sequence

- Connect the fault reader V.A.G 1551. Then switch ignition on and select engine control unit with the "Address word" 01.
  (Connecting fault reader and selecting engine control unit
  => Page 7.)

-> Indicated on display:

```
Rapid data transfer     HELP
Select function XX
```

- Press keys 1 and 5 for the "Readiness code" function and confirm entry with Q key.

Must appear on display when all diagnosis functions have been successfully completed:

-> Indicated on display:

```
Readiness code
00000000 - Test complete
```

- Press ⇒key.

- Press keys 0 and 6 for the "End data transfer" function and confirm input with the Q key.

-> Indicated on display:

```
Readiness code
00101101 - Test not complete
```

One of the diagnostic checks has not run through successfully:

- Press ⇒key.
- Generate readiness code => Page 36

Significance of figures in 8-digit number block for readiness code

The readiness code is generated only when all display zones show 0								
1	2	3	4	5	6	7	8	Diagnostic function
							0	Catalytic converter
						0		Catalytic converter heating (currently no diagnosis/always "0")
					0			Activated charcoal filter system (tank venting system)
				0				Secondary air system (not fitted/always "0")
			0					Air conditioner (currently no diagnosis/always "0")
		0						Lambda probes
	0							Lambda probe heating
0								Exhaust gas recirculation

6.3 - Generating readiness code

Special tools, workshop equipment, testers, measuring instruments and auxiliary items required

- Fault reader V.A.G 1551 (or vehicle system tester V.A.G 1552) with cable V.A.G 1551/3

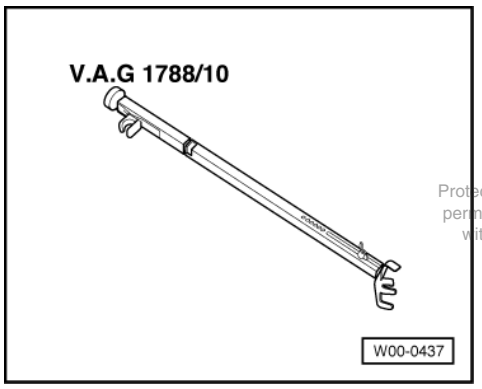

- -> V.A.G 1788/10 Engine speed adjuster

Protected by copyright. Copying for private or commercial purposes, in part or in whole, is not permitted unless authorised by AUDI AG. AUDI AG does not guarantee or accept any liability with respect to the correctness of information in this document. Copyright by AUDI AG.

Test conditions

- Vehicle stationary
- On vehicles with automatic gearbox selector lever in "P" or "N" position
- All electrical consumers, e.g. lights and rear window heating must be switched off.
- Intake air temperature less than 60°C
  =>display group 04, display zone 4
- Coolant temperature must be at least 80 °C, =>display group 04, display zone 3.

Work sequence

- Connect fault reader V.A.G 1551 (V.A.G 1552). Start engine and select "Address word" 01 of engine control unit. When doing this the engine must be running at idling speed.
  (Connecting fault reader and selecting engine control unit
  => Page 7 .)

Work step 1: Interrogate fault memory

-> Indicated on display:

```
Rapid data transfer      HELP
Select function XX
```

Protected by copyright. Copying for private or commercial purposes, in part or in whole, is not permitted unless authorised by AUDI AG. AUDI AG does not guarantee or accept any liability with respect to the correctness and completeness of this document's Copyright by AUDI AG

- Press keys 0 and 2 for function "Interrogate fault memory" and confirm entry with Q key.

-> The number of faults stored or "No fault recognised!" will be shown on the display.

```
X Faults recognised!
```

If a fault is stored:

- Rectify faults printed out using fault table:
  SAE P0 codes=> Page 18

If no fault is stored:

- Press ⇒key.

Work step 2: Erase fault memory

-> Indicated on display:

```
Rapid data transfer      HELP
Select function XX
```

- Press keys 0 and 5 for the function "Erase fault memory" and confirm entry with Q key.

Note:

The readiness code is reset or erased each time fault memory is erased.

-> Indicated on display:

```
Rapid data transfer
Fault memory is erased!
```

Note:

If the ignition is switched off between "Interrogate fault memory" and "Erase fault memory" the fault memory will not be erased.

- Press ⇒key.

Note:

- During the work sequence the engine must not be switched off.

Work step 3: Activated charcoal filter system diagnosis (tank breathing system)

-> Indicated on display:

```
Rapid data transfer      HELP
Select function XX
```

- Press keys 0 and 4 for the "Introduce basic setting" function and confirm entry with Q key.

-> Indicated on display:

```
Basic setting
Input display group number XXX
```

- Press keys 0, 7 and 0 for "Display group number 70" and confirm entry with Q key.

-> Indicated on display:
(1...4 = Display zones)

```
System in basic setting     70
     1     2     3     4
```

Note:

Do not press clutch pedal or brake pedal.

When the diagnosis is initiated by the engine control unit the display in display zone 4 jumps from "Test OFF" to "Test ON"

- Run engine at idling speed until the specification "TVV OK" is displayed in display zone 4.

If the display does not indicate as described:

- Interrogate fault memory => Page 9 .
- Generate about 3 throttle bursts and repeat the diagnosis.

If the display indicates as described:

- Press C key.

Work step 4: Lambda probe ageing diagnosis (cycle duration monitor)

-> Indicated on display:

```
Basic setting
Input display group number XXX
```

Protected by copyright. Copying for private or commercial purposes, in part or in whole, is not permitted unless authorised by AUDI AG. AUDI AG does not guarantee or accept any liability with respect to the correctness of information in this document. Copyright by AUDI AG.

- Press keys 0, 3 and 4 for "Display group number 34" and confirm entry with Q key.

-> Indicated on display:
(1...4 = Display zones)

```
System in basic setting     34
     1     2     3     4
```

- Rev up engine twice to over 5,000 rpm.
- Set engine speed to 1500...3900 rpm using speed regulator V.A.G 1788/10:
- Maintain the engine speed until the display in display zone 4 jumps from "Test OFF" to "Test ON".
- Continue to maintain the same speed until specification "B1-P1 OK" appears in display zone 4.
- Press ⇒key.

-> Indicated on display:

```
Rapid data transfer     HELP
Select function XX
```

- Press keys 0 and 8 for the function "Read measured value block" and confirm entry with Q key.

-> Indicated on display:

```
Read measured value block
Input display group number XXX
```

- Press keys 0, 3 and 0 for the "Display group number 30" and confirm entry with Q key.

-> Indicated on display:
(1...4 = Display zones)

```
Read measured value block     30
    1     2     3     4
```

- Check the operating condition of the lambda control in front of catalytic converter (display zone 1):
  Specification: 111
- Check the operating condition of the lambda control after catalytic converter (display zone 2):
  Specification: 110

Note:

The 3rd bit in display zone 2 (i.e. Lambda regulation active) will not be set to 1 until the part-throttle condition (2500-4000 rpm) is reached.

Significance of 3 digit number block in display zones 1 and 2:

Protected by copyright. Copying for private or commercial purposes, in part or in whole, is not permitted unless authorised by AUDI AG. AUDI AG does not guarantee or accept any liability with respect to the correctness of information in this document. Copyright by AUDI AG.

Significance if display = 1			
1	2	3	
		1	Lambda control active (partial throttle)
	1		Lambda probe operationally ready
1			Lambda probe heating on

If the specifications are not obtained:

- Interrogate fault memory => Page 9 .

If the specifications are obtained:

- Press ⇒key.

Work step 5: Catalytic converter diagnosis

Note:

This diagnosis is terminated only when there are no faults in the Lambda probe and activated charcoal filter systems.

-> Indicated on display:

```
Rapid data transfer     HELP
Select function XX
```

- Press keys 0 and 4 for the function "Initiating basic settings" and confirm entry with Q key.

-> Indicated on display:

```
Basic setting
Input display group number XXX
```

- Press keys 0, 4 and 6 for "Display group number 46" and confirm entry with Q key.

-> Indicated on display:
(1...4 = Display zones)

```
System in basic setting     46
     1     2     3     4
```

- Maintain engine speed at 1500...3900 rpm until display in
  display zone 4 jumps from "Test OFF" to "Test ON".
  Catalytic converter temperature in
  display zone 2 must be at least 300 °C.

- Continue to maintain engine speed at 1500...3900 rpm until Specification "Cat B1 OK" appears in display zone 4.

Note:

It can take several minutes for the display to change from "Test ON" to "Cat B1 OK".

If the specifications are not attained:

- Interrogate fault memory => Page 9 .

If the specification is obtained:

- Press C key.

Work step 6: Exhaust gas recirculation system diagnosis

-> Indicated on display:

```
Basic setting
Input display group number XXX
```

- Press keys 0, 7 and 5 for the "Display group number 75" and confirm entry with Q key.

Protected by copyright. Copying for private or commercial purposes, in part or in whole, is not permitted unless authorised by AUDI AG. AUDI AG does not guarantee or accept any liability with respect to the correctness of information in this document. Copyright by AUDI AG.

-> Indicated on display:
(1...4 = Display zones)

```
System in basic setting     75
     1     2     3     4
```

Note:

Do not press clutch pedal or brake pedal.

- Rev. up briefly maximum engine speed approx. 5 times.

If the diagnosis is initiated from engine control unit the display in display zone 4 jumps from "Test OFF" to "Test ON"

- Leave the engine running at idle until specification "Sys. OK" appears in display zone 4.

If the display does not indicate as described:

- Interrogate fault memory => Page 9 .

If the display indicates as described:

- Press ⇒key.
- Press keys 0 and 6 for the "End output" function and confirm input with the Q key.
- Read readiness code => Page 35

7 - Measured value blocks (datablocks)

7.1 - Measured value blocks (datablocks)

7.2 - Safety precautions

Observe the following points if test and measuring instruments are required during a test drive:

- Test and measuring instruments must be secured to rear seat and operated by a 2nd person from this location.

  If test and measuring instruments are operated from front passenger's seat and the vehicle is involved in an accident, there is a possibility that the person sitting in this seat may receive serious injuries when the airbag is triggered.

Protected by copyright. Copying for private or commercial purposes, in part or in whole, is not permitted unless authorised by AUDI AG. AUDI AG does not guarantee or accept any liability with respect to the correctness of information in this document. Copyright by AUDI AG.

7.3 - Read measured value block

- Fault reader V.A.G 1551 with cable V.A.G 1551/3

Test conditions

- Coolant temperature must be at least 80 °C, =>display group 04, display zone 3.
- All electrical consumers, e.g. lights and rear window heating must be switched off
- If the vehicle is equipped with an air conditioning system, this must be switched off.
- On vehicles with automatic gearbox selector lever in "P" or "N" position
- No faults must be stored in fault memory
  => Page 9 , interrogating fault memory

Work sequence

- Connect fault reader V.A.G 1551 (V.A.G 1552). Start engine and select "Address word" 01 of engine control unit. When doing this the engine must be running at idling speed.
  (Connecting fault reader and selecting engine control unit => Page 7 .)

-> Indicated on display:

```
Rapid data transfer     HELP
Select function XX
```

- Press keys 0 and 8 for the function "Read measured value block" and confirm entry with Q key.

-> Indicated on display:

```
Read measured value block     HELP
Input display group number XXX
```

- Select required display group number.

Note:

The display group number 1 is an example, to illustrate the sequence.

- Press keys 0, 0 and 1 for "Display group number 1" and confirm entry with Q key.

-> Indicated on display:
(1...4 = Display zones)

```
Read measured value block     1
     1     2     3     4
```

Note:

To change to another display group proceed as follows:

Display group	V.A.G 1551	V.A.G 1552
Higher	Press key 3	Press ↑key
Lower	Press key 1	Press ↓key
Skip	Press key C	Press key C

- If the specifications in all display zones are obtained, press ⇒key.

-> Indicated on display:

```
Rapid data transfer      HELP
Select function XX
```

- Press keys 0 and 6 for the "End data transfer" function and confirm input with the Q key.

Protected by copyright. Copying for private or commercial purposes, in part or in whole, is not permitted unless authorised by AUDI AG. AUDI AG does not guarantee or accept any liability with respect to the correctness of information in this document. Copyright by AUDI AG.

Note:

Measured value blocks which are not described in this chapter are currently only intended for the research and development and production. The values displayed are not relevant for service department fault finding.

8 - Evaluating measured value blocks, display groups 0...6 -Basic functions-

8.1 - Evaluating measured value blocks, display groups 0...6 -Basic functions-

Display group 1 -Basic functions-						
Read measured value block 1			⇒	◂ Indicated on display		
xxxx rpm	xx.x °C	xx.x %	xxxxxxxx			
1	2	3	4	◂ Display zones	Specification	Evaluation
				Adjustment conditions	10111111	=> Page 42
				Lambda regulation values	-15...15 %	=> Page 47
				Coolant temperature	75...85 °C	=> Page 43
				Engine speed (idling speed)	630...830 rpm1)	=> Page 43

1) Up-to-date specifications:

=> Exhaust emissions test binder

Significance of 8-digit number block

Significance if display = 1								
1	2	3	4	5	6	7	8	Significance
							1	Coolant temperature above 80 °C
						1		Speed below 2000 rpm
					1			Throttle valve closed
				1				Lambda regulation OK.
			1					Idling switch closed
		1						Air conditioner compressor switched off
	1							Catalytic converter hot (over 300 °C)

Significance if display = 1								
1								No faults recognised by self-diagnosis

Evaluating display group 1, display zone 1 - Engine speed (idling speed)

Appears on display	Possible fault cause	Fault elimination
Less than specification	- Throttle valve control part sticking or defective - Air filter element obstructed by dirt	- Check throttle valve control part => Page 95 - Renew air filter element
Greater than specification	- Throttle valve control part sticking or defective - Large amount of unmetered air (cannot be compensated for by the idling stabilisation)	- Interrogate fault memory, => Page 9 - Check intake air system for leaks => Page 118 - Check throttle valve control part => Page 95 - Perform idling check => Page 119

Protected by copyright. Copying for private or commercial purposes, in part or in whole, is not permitted unless authorised by AUDI AG. AUDI AG does not guarantee or accept any liability with respect to the correctness of information in this document. Copyright by AUDI AG.

Evaluating display group 1, display zone 2 - Coolant temperature

Appears on display	Possible fault cause	Fault elimination
Less than 80 °C	- Engine too cold - Coolant temperature sender or wiring to engine control unit - Thermostat defective	- If necessary carry out test drive - Check coolant temperature sender =>Page 104 - Check thermostat => Repair group 19; Removing and installing parts of cooling system; Parts of cooling system engine side
More than 110 °C	- Radiator soiled - Radiator fan not functioning - Thermostat defective - Coolant temperature sender or wiring to engine control unit	- Clean radiator - Check function - Check thermostat => Repair group 19; Removing and installing parts of cooling system; Parts of cooling system - Check coolant temperature sender =>Page 104

Display group 2 -Basic functions-

▪ Engine running at idling speed

Read measured value block 2 ⇒ ◂ Indicated on display

xxxx rpm	xxx.x %	x.x ms	xxx mbar	◂ Display zones	Specification	Evaluation
1	2	3	4			
				Intake manifold pressure	290...360 mbar	=> Page 44
				Injection period	2.0...4.0 ms	=> Page 44
				Engine load	12...18 %	=> Page 47
				Engine speed (idling speed)	630...830 rpm1)	=> Page 43

1) Up-to-date specifications:

=> Exhaust emissions test binder

Evaluating display group 2, display zone 3 - Injection period

Appears on display	Possible fault cause	Fault elimination
Less than 2.0 ms	- Large amount of fuel from the activated charcoal filter system - Incorrect injectors with greater throughput installed	- Check activated charcoal filter solenoid valve 1 => Page 29 , Final control diagnosis - Check injectors => Page 109 - Check injector part number: => Parts micro-fiche
More than 4.0 ms	- Increased engine load due to electric consumers, air conditioner, gear selected or P.A.S. on full lock - Incorrect injectors with smaller throughput installed	- Eliminate increased load (air conditioner, power assisted steering etc.) - Check injectors => Page 109 - Check injector part number: => Parts micro-fiche

Protected by copyright. Copying for private or commercial purposes, in part or in whole, is not permitted unless authorised by AUDI AG. AUDI AG does not guarantee or accept any liability with respect to the correctness of information in this document. Copyright by AUDI AG.

Evaluating display group 2, display zone 4 - Intake manifold pressure

Appears on display	Possible fault cause	Fault elimination
Less than 290 mbar	- Large amount of unmetered air (air leak) between intake manifold and air cleaner	- Rectify air leak
More than 360 mbar	- Gear selected (automatic gearbox) - Engine loaded due to ancillaries - Air filter element obstructed by dirt	- Place selector lever in P or N - Eliminate load (air conditioner, power-assisted steering etc.) - Renew air filter element

Display group 3 -Basic functions-

▪ Engine running at idling speed

Read measured value block 3 ⇒ ◂ Indicated on display

xxxx rpm	xxx mbar	xx°	xx.x°BTDC	◂ Display zones	Specification	Evaluation
1	2	3	4			
				Ignition timing	0...8 ° BTDC	---
				Throttle valve angle (potentiometer 1 -G187)	1...5 °	=> Page 47
				Intake manifold pressure	290...360 mbar	=> Page 44
				Engine speed (idling speed)	630...830 rpm1)	=> Page 43

1) Up-to-date specifications:

=> Exhaust emissions test binder

Display group 4 -Basic functions-

▪ Engine running at idling speed

Read measured value block 4 ⇒ ◂ Indicated on display

xxxx rpm	xx.xxx V	xxx.x °C	xxx.x °C	◂ Display zones	Specification	Evaluation
1	2	3	4			
				Intake air temperature	-10...50 °C	=> Page 46
				Coolant temperature	75...85 °C	=> Page 45
				Voltage supply for engine control unit	12.5...14.5 V	=> Page 45

Engine speed (idling speed)	630...830 rpm1)	=> Page 43

1) Up-to-date specifications:

=> Exhaust emissions test binder

Note on display zone 3:

The engine control unit will use the intake air temperature as a replacement value for an engine start (start temperature - replacement value) as soon as there is a fault stored in the fault memory, which affects the coolant temperature sender (G62). The temperature then rises according to a model stored in the control unit. When the engine has reached normal working temperature a fixed replacement value will be displayed after a certain period. This fixed value is also dependent upon the intake air temperature.

Note on display zone 4:

The total temperature range is given as the specification. The displayed value must be above ambient temperature.

Evaluating display group 4, display zone 2 - Control unit voltage supply

Appears on display	Possible fault cause	Fault elimination
Less than 12.500 V	- Alternator defective, battery heavily discharged	- Check alternator and battery voltage, charge battery: => Electrical system; Repair group 27
	- Heavy battery load shortly after starting due to high charging current and current consumers	=> Increase revs slightly for a few minutes and switch off current consumers
	- Transfer resistance in the current supply or the engine control unit earth connection	- Check engine control unit voltage supply => Page 130
	- Current draw when ignition is off	- Eliminate current draw
More than 14.500 V	- Voltage regulator on alternator defective	- Check voltage regulator, replace if necessary: => Electrical system; Repair group 27
	- Excess voltage due to jump starting or quick charging unit	- Interrogate fault memory => Page 9

Evaluating display group 4, display zone 3 - Coolant temperature

Appears on display	Possible fault cause	Fault elimination
Less than 75 °C	- Engine too cold	- If necessary carry out test drive
	- Coolant temperature sender or wiring to engine control unit	- Check coolant temperature sender =>Page 104
	- Thermostat defective	- Check thermostat => Repair group 19; Removing and installing parts of cooling system; Parts of cooling system Parts of cooling system
Higher than 110 °C	- Dirt on radiator	- Clean radiator
	- Radiator fan not working	- Check function
	- Thermostat defective	- Check thermostat => Repair group 19; Removing and installing parts of cooling system; Parts of cooling system Parts of cooling system
	- Coolant temperature sender or wiring to engine control unit	- Check coolant temperature sender =>Page 104

Protected by copyright. Copying for private or commercial purposes, in part or in whole, is not permitted unless authorised by AUDI AG. AUDI AG does not guarantee or accept any liability with respect to the correctness of information in this document. Copyright by AUDI AG.

Constant -40.0 °C	- Wiring open circuit or short to positive	- Check coolant temperature sender =>Page 104
Constant 120.0 °C	- Short to earth	

Evaluating display group 4, display zone 4 - Intake air temperature

Appears on display	Possible fault cause	Fault elimination
Constant -40.0 °C	- Wiring open circuit or short to positive	- Check intake air temperature sender =>Page 100
Constant 120.0 °C	- Short to earth	

Display group 5 -Basic functions-

▪ Engine running at idling speed

Read measured value block 5 ⇒ ◂ Indicated on display

xxxx rpm | xxx.x % | xxx km/h | Text

1	2	3	4	◂ Display zones	Specification	Evaluation
				Operating mode (idling, part throttle, enrichment, overrun)	Idling	---
				Road speed	0 km/h	---
				Engine load	12...18 %	=> Page 47
				Engine speed (idling speed)	630...830 rpm1)	=> Page 43

1) Up-to-date specifications:

=> Exhaust emissions test binder

Protected by copyright. Copying for private or commercial purposes, in part or in whole, is not permitted unless authorised by AUDI AG. AUDI AG does not guarantee or accept any liability with respect to the correctness of information in this document. Copyright by AUDI AG.

Display group 6 -Basic function-

▪ Engine running at idling speed

Read measured value block 6 ⇒ ◂ Indicated on display

xxxx rpm | xxx.x % | xxx.x °C | xx.x %

1	2	3	4	◂ Display zones	Specification	Evaluation
				Elevation correction factor	-30.0...5.0 %	---
				Intake air temperature	-40...120.0 °C	=> Page 46
				Engine load	12...18 %	=> Page 47
				Engine speed (idling speed)	630...830 rpm1)	=> Page 43

1) Up-to-date specifications:

=> Exhaust emissions test binder

Note on display zone 3:

The total temperature range is given as the specification. The displayed value must be above ambient temperature.

9 - Evaluating measured value blocks, display groups 10...29 -Ignition-

9.1 - Evaluating measured value blocks, display groups 10...29 -Ignition-

Display group 10 -Ignition-						
▪ Engine running at idling speed						
Read measured value block 10			⇒	◂ Indicated on display		
xxxx rpm	xxx.x %	xxx.x %	xx.x°BTDC			
1	2	3	4	◂ Display zones	Specification	Evaluation
				Ignition timing	0...10 ° BTDC	---
				Throttle valve angle (potentiometer 1 -G187)	0...11 %	=> Page 47
				Engine load	10...20 %	=> Page 47
				Engine speed (idling speed)	630...830 rpm1)	=> Page 43

1) Up-to-date specifications:

=> Exhaust emissions test binder

Evaluating display group 10, display zone 2 - Engine load

Appears on display	Possible fault cause	Fault elimination
Less than 10 %	- Lesser values can only occur when driving in overrun	
Greater than 20 %	- Poor idling (not running on all cylinders)	- Check injectors => Page 156
	- Electric consumers switched on	- Switch off electric consumers
	- Steering wheel is being turned	- Do not turn steering wheel
	- Gear selected (automatic gearbox)	- Place selector lever in P or N

Evaluating display group 10, display zone 3 - Throttle valve angle

Appears on display	Possible fault cause	Fault elimination
More than 11 %	- Engine control unit not adapted to throttle valve control part	- Adapt engine control unit to throttle valve control part => Page 136
	- Throttle valve potentiometer in throttle valve control part defective	- Check throttle valve control part => Page 95
	- Throttle valve sticking	- Eliminate cause
	- Dirt in air filter element	- Renew air filter element

Display group 11 -Ignition-						
▪ Engine running at idling speed						
Read measured value block 11			⇒	◂ Indicated on display		
xxxx rpm	xxx.x %	xxx.x %	xx.x°BTDC			
1	2	3	4	◂ Display zones	Specification	Evaluation

			Ignition timing	0...10 ° BTDC	---
			Intake air temperature	-	-
		Coolant temperature		-	-
	Engine speed (idling speed)			630...830 rpm1)	=> Page 43

1) Up-to-date specifications:

=> Exhaust emissions test binder

Display group14 -Ignition- Misfire recognition total						
▪ Whilst driving						
Read measured value block 14			⇒	◂ Indicated on display		
xxxx rpm	xx.x %	xxx	Text			
1	2	3	4	◂ Display zones	Specification	Evaluation
				Misfire recognition (activated, blocked)	activated	---
				Misfire count (total)1)	0	=> Page 48
			Engine load		12.0...100.0 %	---
		Engine speed			630...5700 rpm	---

Protected by copyright. Copying for private or commercial purposes, in part or in whole, is not permitted unless authorised by AUDI AG. AUDI AG does not guarantee or accept any liability with respect to the correctness of information in this document. Copyright by AUDI AG.

1) When the engine is idling, the misfire count is returned to zero if no misfires are detected for approx. 3 minutes.

Evaluating display group 14, display zone 3 - Total number of misfires

Appears on display	Possible fault cause	Fault elimination
More than 0	- Spark plug defective - Spark plug connector defective - Ignition transformer defective	- Check spark plugs and ignition/HT wiring with connector => Page 162
	- Injector defective	- Check injectors => Page 109
	- Exhaust gas recirculation valve dirty or sticking	- Check exhaust gas recirculation valve => Page 29 , Final control diagnosis

Display group 15 -Ignition- Misfire recognition Cyl. 1 to Cyl. 3						
▪ Whilst driving						
Read measured value block 15			⇒	◂ Indicated on display		
xxx	xxx	xxx	Text			
1	2	3	4	◂ Display zones	Specification	Evaluation
				Misfire recognition (activated, blocked)	activated	---
			Misfire Cyl. 31)		0	=> Page 49
		Misfire Cyl. 21)			0	=> Page 49
	Misfire Cyl. 11)				0	=> Page 49

1) When the engine is idling, the misfire count is returned to zero if no misfires are detected for approx. 3 minutes.

Display group 16 -Ignition- misfire recognition Cyl. 4
▪ Whilst driving

Read measured value block 16 ⇒				◂ Indicated on display		
xxx	---	---	Text			
1	2	3	4	◂ Display zones	Specification	Evaluation
				Misfire recognition (activated, blocked)	activated	---
	Misfire Cyl. 41)				0	=> Page 49

1) When the engine is idling, the misfire count is returned to zero if no misfires are detected for approx. 3 minutes.

Evaluating display group 15 display zones 1 to 3 or display group 16 display zone 1 - Misfire recognition Cyl. 1 to Cyl. 4

Protected by copyright. Copying for private or commercial purposes, in part or in whole, is not permitted unless authorised by AUDI AG. AUDI AG does not guarantee or accept any liability with respect to the correctness of information in this document. Copyright by AUDI AG.

Appears on display	Possible fault cause	Fault elimination
More than 0	- Spark plug defective - Spark plug connector defective - Ignition transformer defective	- Check spark plugs and ignition/HT wiring with connector => Page 162
	- Injector defective	- Check injectors => Page 109
	- Exhaust gas recirculation valve dirty or sticking	- Check exhaust gas recirculation valve => Page 29 , Final control diagnosis

Display group 22 -Ignition- Knock control						
▪ Whilst driving						
Read measured value block 22 ⇒				◂ Indicated on display		
xxxx rpm	x.xx %	xx.x °CA	xx.x °CA			
1	2	3	4	◂ Display zones	Specification	Evaluation
				Cyl. No. 2 retardation of ignition timing by knock control	0...14 °CA	=> Page 50
				Cyl. No. 1 retardation of ignition timing by knock control	0...14 °CA	=> Page 50
		Engine load			15...100 %	---
	Engine speed				630...5700 rpm	---

Note on display zones 3 and 4:

The display value should be 0.0 °CA at idling speed.

14°is the maximum possible retardation

Display group 23 -Ignition- Knock control						
▪ Whilst driving						
Read measured value block 23 ⇒				◂ Indicated on display		
xxxx rpm	x.xx %	xx.x °CA	xx.x °CA			
1	2	3	4	◂ Display zones	Specification	Evaluation
				Cyl. No. 4 retardation of ignition timing by knock control	0...14 °CA	=> Page 50
				Cyl. No. 3 retardation of ignition timing by knock control	0...14 °CA	=> Page 50
		Engine load			15...100 %	---

Engine speed	630...5700 rpm	---

Note on display zones 3 and 4:

The display value should be 0.0 °CA at idling speed.

14°is the maximum possible retardation

Evaluating display groups 22/23, display zones 3 and 4 - Retardation of ignition

Appears on display	Possible fault cause	Fault elimination
All cylinders 14 °CA	- Knock sensor defective	- Check knock sensors => Page 166
	- Connector corroded	
	- Knock sensor incorrectly tightened	- Loosen knock sensor and tighten to 20 Nm
	- Ancillary components on engine loose	- Tighten ancillary components
	- Poor fuel quality	- Change type of fuel
One cylinder deviates greatly from the others	- Connector corroded	- Check knock sensors => Page 166
	- Mechanical engine damage	- Check compression pressures: => Repair group 15; Removing and installing cylinder head; Checking compression pressure Checking compression pressure
	- Ancillary components on engine loose	- Tighten ancillary components

Display group 28 -Ignition- knock control

- Whilst driving

Read measured value block 28 ⇒ ◂ Indicated on display

xxxx rpm | xx.x % | xxx.x °C | Text

1	2	3	4	◂ Display zones	Specification	Evaluation
				Knock sensor test result (Test On / Test OFF / Sys. OK. / Sys. n.OK.	Sys. OK.	---
				Coolant temperature	60...110 °C	=> Page 45
				Engine load	50...70 %	---
				Engine speed	2000...4000 rpm	---

10 - Evaluating measured value blocks, display grps 30...49, 99 -Lambda regulation-

Protected by copyright. Copying for private or commercial purposes, in part or in whole, is not permitted unless authorised by AUDI AG. AUDI AG does not guarantee or accept any liability with respect to the correctness of information in this document. Copyright by AUDI AG.

10.1 - Evaluating measured value blocks, display grps 30...49, 99 -Lambda regulation-

Display group 30 -Lambda regulation-

- Engine running at idling speed

Read measured value block 30 ⇒ ◂ Indicated on display

xxx xxx

1	2	3	4	◂ Display zones	Specification	Evaluation
		Lambda regulation status after catalytic converter			110	=> Page 51
	Lambda regulation status before catalytic converter				111	=> Page 51

Note on display zone 2:

The 3rd character in the display is not set to 1 (Lambda regulation active) until the engine is run in the part throttle range.

Significance of 3 digit number block in display zone 1:

Significance if display = 1			
1	2	3	
		1	Lambda regulation active
	1		Lambda probe operationally ready
1			Lambda probe heating on

Reproduction of this document or any part of it for commercial purposes, in part or in whole, is not permitted unless authorised by AUDI AG. AUDI AG does not guarantee or accept any liability with respect to the correctness of information in this document. Copyright by AUDI AG.

Display group 32 -Lambda regulation- Lambda learnt values						
▪ Engine running at idling speed						
Read measured value block 32			⇒	◂ Indicated on display		
xx.x %	xx.x %	---	---			
1	2	3	4	◂ Display zones	Specification	Evaluation
		Lambda learnt value at part load (multiplicative) before catalytic converter1)			-10.0...10.0 %	=> Page 52
	Lambda learnt value at idling speed (additive) before catalytic converter				-10.0...10.0 %	=> Page 52

1) Readings will only be displayed after driving for some time at part throttle and reducing engine rpm to idling speed several times.

Note:

"Multiplicative" means that the fault will have an effect across the whole range of engine speeds and engine loads.

"Additive" means that the fault will only have an effect at idling speed.

Notes on display zones 1 and 2:

Low values indicate that the engine is running too rich and therefore the Lambda regulation is leaning the mixture.

- High values indicate that the engine is running too lean and therefore the Lambda regulation enriches the mixture.
- If there is no voltage supply to the control unit all the values learnt will be cancelled.
- add = additive - The effects of the fault (e.g. unmetered air) will reduce as the engine speed increases. The injection period will be modified by a fixed amount for additive learnt values. This amount is not dependent upon the basic injection period.
- mul = multiplicative - The effects of the fault (e.g. faulty injector) will increase as the engine speed increases. A multiplicative learnt value is a proportional change to the injection period. This change is dependent on the basic injection period.

- Learning conditions for part load: coolant temperature min. 75 °C, intake air temperature max. 90 °C, whilst driving.

Evaluating display zone 32, display zones 1 and 2 - Lambda learnt values

Appears on display	Possible fault cause	Fault elimination
Low Lambda learnt values	- Low learnt values at idling but with normal learnt values at part throttle: possible oil dilution (high level of fuel in oil)	- Disappears after motorway drive or oil change
	- Injector leaking	- Check injector =>Page 109
	- Fuel pressure too high	- Check fuel pressure regulator and holding pressure => Page 115
	- Activated charcoal filter solenoid valve 1 permanently open	- Check activated charcoal filter solenoid valve 1 => Page 29 , Final control diagnosis
	- Lambda probe heating defective or Lambda probe soiled	- Check Lambda probe heating before catalytic converter =>Page 85

Appears on display	Possible fault cause	Fault elimination
High Lambda learnt values	- High learnt values at idling speed, not so high learnt values at part throttle: possible unmetered air in area of intake manifold	- Check intake air system for leaks =>Page 118
	- Unmetered air between air filter and throttle valve	- Eliminate cause
	- Injector blocked	- Check quantity injected rate =>Page 109
	- Fuel pressure too low	- Check fuel pressure regulator and holding pressure => Page 115
	- Unmetered air at exhaust manifold gasket	
	- Lambda probe heating defective or Lambda probe soiled	- Check Lambda probe heating before catalytic converter =>Page 85

Display group 33 -Lambda regulation- Lambda regulation values

- Engine running at idling speed

Read measured value block 33 ⇒ ◂ Indicated on display

xx.x %	x.xxx V	---	---	◂ Display zones	Specification	Evaluation
1	2	3	4			
				Lambda probe voltage, Lambda probe before catalytic converter	0.4...0.5 V	---

Protected by copyright. Copying for private or commercial purposes, in part or in whole, is not permitted unless authorised by AUDI AG. AUDI AG does not guarantee or accept any liability with respect to the correctness of information in this document. Copyright by AUDI AG

Lambda regulator before catalytic converter	-15.0...15.0 %	=> Page 53

Notes on display zone 1:

- The display must fluctuate around 0. If constant 0 is displayed, the Lambda regulation has switched from regulation to control, because there is a fault in the Lambda regulation. Interrogate fault memory => Page 9 .

Evaluating display group 33, display zone 1 - Lambda regulator before catalytic converter

Appears on display	Possible fault cause	Fault elimination
Outside tolerance range	- Minus range: Mixture too rich, Lambda control weakens mixture - Positive range: Mixture too lean, Lambda control enriches mixture	- Wait 30 seconds until the display has stabilised
	- Unmetered air	- Check intake system for leaks => Page 118
	- Injector defective	- Check injectors =>Page 109
	- Lambda learnt value on limit	- Check Lambda learnt value in display group 32

Protected by copyright. Copying for private or commercial purposes, in part or in whole, is not permitted unless authorised by AUDI AG. AUDI AG does not guarantee or accept any liability with respect to the correctness of information in this document. Copyright by AUDI AG.

Display group 34 -Lambda regulation- Lambda probe diagnosis before catalytic converter (checking ageing via amplitude duration monitoring)

- Rev up briefly over 5,000 rpm twice
- Vehicle stationary, engine running at raised speed
- Control unit in mode 04-Basic settings

Read measured value block 34 ⇒				◂ Indicated on display		
xxxx rpm	xxx.x °C	xx.xx s	Text	◂ Display zones	Specification	Evaluation
1	2	3	4	Result of Lambda probe before catalytic converter ageing check (Test OFF / test ON / B1-P1 OK / B1-P1 n.OK)	B1-P1 OK	---
				Cycle duration Lambda probe before catalytic converter	max. 1.0 s	---
				Catalytic converter temperature	---	---
				Engine speed	1500...3900 rpm	---

Note on display zone 3 and 4:

The cycle duration of the lambda probe indicates the time between two voltage pulses (e.g. rich - lean - rich). It is therefore a means of evaluating lambda probe ageing (i.e. the condition of the lambda probe). If the indicated cycle duration is exceeded, "B1-P1 n. OK" will appear in display zone 4.

Display group 36 -Lambda regulation- Operational readiness of probe after catalytic converter

- Vehicle stationary, foot brake depressed, engine running at increased idling speed (1500...4000 rpm)
- Control unit in mode 04-Basic settings

Read measured value block 36 ⇒				◂ Indicated on display		
x.xxx V	Text			◂ Display zones	Specification	Evaluation
1	2	3	4			

	Check Lambda probe after catalytic converter (Test OFF/Test ON/B1-P2 OK / B1-P2 n.OK)	B1-P2 OK	---
	Lambda probe voltage after catalytic converter	0.000...1.000 V	=> Page 54

Evaluating display group 36, display zone 1 - Lambda probe voltage, Lambda probe after catalytic converter

Appears on display	Possible fault cause	Fault elimination
Constant 1.100 V	- Short to positive via: - Lambda probe, probe wiring, earth wiring, engine control unit	- Check Lambda probe 2 basic voltage => Page 124
Constant between 0.400...0.500 V	- Open circuit via: - Lambda probe, probe wiring, earth wiring, engine control unit	
Constant 0.000 V	- Short to earth via: - Lambda probe, probe wiring, earth wiring, engine control unit	

Display group 37 -Lambda regulation- Lambda probes

- Whilst driving

Read measured value block 37 ⇒ ◂ Indicated on display

xxx %	x.xxx V	xxx.xxx	Text	◂ Display zones	Specification	Evaluation
1	2	3	4	Test of Lambda probes (Test ON / OFF / Syst. OK / n.OK)	Syst. OK	
				Not for Service	---	---
				Lambda probe voltage Lambda probe after catalytic converter	0.000...1.000 V	=> Page 54
				Engine load	12.0...40.0 %	=>Page 43

Protected by copyright. Copying for private or commercial purposes, in part or in whole, is not permitted unless authorised by AUDI AG. AUDI AG does not guarantee or accept any liability with respect to the correctness of information in this document. Copyright by AUDI AG.

Display group 41 -Lambda regulation- Lambda probe heating

- Engine running at idling speed

Read measured value block 41 ⇒ ◂ Indicated on display

	Text	xxx ω	Text	◂ Display zones	Specification	Evaluation
1	2	3	4	Lambda probe heating after catalytic converter	Htg.aC.ON Htg.aC.OFF	---
				Lambda probe heating resistance after catalytic converter	---	---
				Lambda probe heating before catalytic converter	Htg.bC.ON Htg.bC.OFF	---

Note:

The Lambda probe heating may be switched ON or OFF depending on the operating conditions of the engine, therefore the display in display zone 2 or 4 may show "Htg.b(a)C.ON" or alternating from "Htg.b(a)C.ON" to Htg.b(a)C.OFF".

Display group 46 -Lambda regulation- Catalytic converter diagnosis (conversion test)

- Control unit in mode 04-Basic setting
- Vehicle stationary, engine running at raised speed

Read measured value block 46 ⇒				◂ Indicated on display		
xxxx rpm	xxxx °C	xx %	Text			
1	2	3	4	◂ Display zones	Specification	Evaluation
				Result of catalytic converter conversion test (Test OFF / test ON / Cat B1 OK/Cat B1 n.OK)	Cat B1 OK	---
				Catalytic converter conversion measurement	at least 50 %	---
				Catalytic converter temperature	at least 300 °C	---
				Engine speed	1500...3900 rpm,	---

Note to display group 46:

- Conditions required for the conversion test:
  No entries in fault memory, engine running at increased rpm, coolant temperature 60...118 °C, Lambda regulation active and stable.

Display group 99 -Lambda regulation- Lambda regulation operating condition						
▪ Engine running at idling speed						
Read measured value block 99 ⇒				◂ Indicated on display		
xxxx rpm	xxx.x °C	xx.x %	Text			
1	2	3	4	◂ Display zones	Specification	Evaluation
				Lambda regulation operating mode	λ-Reg. OFF or λ-Reg. ON	---
				Lambda regulator before catalytic converter	-15.0...15.0 %	=> Page 53
				Coolant temperature	80...110 °C	=> Page 45
				Engine speed (idling speed)	630...830 rpm1)	=> Page 43

1) Up-to-date specifications:

=> Exhaust emissions test binder

11 - Evaluating measured value blocks, display groups 50...69 -Speed regulation-

11.1 - Evaluating measured value blocks, display groups 50...69 -Speed regulation-

Protected by copyright. Copying for private or commercial purposes, in part or in whole, is not permitted unless authorised by AUDI AG. AUDI AG does not guarantee or accept any liability with respect to the correctness of information in this document. Copyright by AUDI AG.

Display group 50 -Speed regulation- Operating condition						
▪ Engine running at idling speed						
Read measured value block 50 ⇒				◂ Indicated on display		
xxxx rpm	xxxx rpm	Text	Text			
1	2	3	4	◂ Display zones	Specification	Evaluation
				Air conditioner compressor operating mode ON/OFF	ON or OFF	---
				Air conditioner operating mode	ON or OFF	---
				Engine speed (specified in idling condition):	680 rpm	---

Engine speed (idling speed)	630...830 rpm1)	=> Page 43

1) Up-to-date specifications:

=> Exhaust emissions test binder

Note on display zone 2:

- The engine speed specified by the engine control unit will be displayed (calculated by control unit).
- The specified engine speed is increased when battery is heavily discharged or engine has overheated.

Note on display zone 3 and 4:

- "OFF" is always displayed on vehicles without air conditioner.
- Checking signal from and to air conditioner compressor =>Checking data bus, Page 152 .

Display group 54 -Speed regulation-

▪ Whilst driving

Read measured value block 54			⇒	◂ Indicated on display		
xxxx rpm	Text	xxx.x %	xxx.x %			
1	2	3	4	◂ Display zones	Specification	Evaluation
				Throttle valve angle (Potentiometer 1 -G187)	0.0...100.0%	---
				Accelerator pedal position sender 1 -G79	0.0...100.0%	---
				Operating mode: Idling, part throttle, enrichment, overrun, full throttle	---	---
				Engine speed	630...5700 rpm	---

Note on display zone 2:

The operating mode is displayed according to engine speed or load. At a higher engine speed, "overrun" is displayed when throttle valve is closed only up to 1450 rpm, and then again at idle.

Display group 55 -Speed regulation- Idling stabilisation

▪ Engine running at idling speed

Read measured value block 55			⇒	◂ Indicated on display		
xxxx rpm	xx.x Nm	xx.x %	xxxxx			
1	2	3	4	◂ Display zones	Specification	Evaluation
				Operating mode	xxxxx	=> Page 57
				Idling regulator learnt value Air conditioner on Air conditioner off	-6.0...6.0 % -3.0...6.0 %	---
				Idling regulator	-10...0 %	---
				Engine speed (idling speed)	630...830 rpm1)	=> Page 43

1) Up-to-date specifications:

=> Exhaust emissions test binder

Note on display zone 3:

Protected by copyright. Copying for private or commercial purposes, in part or in whole, is not permitted unless authorised by AUDI AG. AUDI AG does not guarantee or accept any liability with respect to the correctness of information in this document. Copyright by AUDI AG.

Displayed is the amount that the idling speed stabilisation has moved away from the prescribed average. For a new engine the values lie in the positive range, because of the higher friction and in the negative range with an engine that has run-in.

Significance of figures in 5-digit number block, display zone 4 - operating modes

Significance if display = 1					
1	2	3	4	5	Significance
				1	Air conditioner compressor switched on
			1		Driving range (gear) selected
		1			Air conditioning system switched on
	x				Not relevant
x					Not relevant

Display group 56 -Speed regulation- Idling speed stabilisation						
▪ Engine running at idling speed						
Read measured value block 56			⇒	◂ Indicated on display		
xxxx rpm	xxxx rpm	xx.xx Nm	xxxxx			
1	2	3	4	◂ Display zones	Specification	Evaluation
				Operating mode	xxxxx	=> Page 57
				Idling regulator	-10...10 Nm	---
				Engine speed (specified in idling condition):	680 rpm	---
				Engine speed (idling speed)	630...830 rpm1)	=> Page 43

1) Up-to-date specifications:

=> Exhaust emissions test binder

Note on display zone 2:

- The engine speed specified by the engine control unit will be displayed (calculated by control unit).
- The specified engine speed is increased when battery is heavily discharged or engine has overheated.

Display group 60 -Speed regulation- Adaption of electronic accelerator system						
▪ Ignition on, engine not running						
▪ Control unit in mode 04 basic setting						
Read measured value block 60			⇒	◂ Indicated on display		
xx %	xx %	x	Text			
1	2	3	4	◂ Display zones	Specification	Evaluation
				Adaption condition (ADP runs, ADP OK or ADP ERROR)	ADP OK	---
				Learning step counter	0...12	---
				Throttle valve angle (potentiometer 2 -G188)	98...2%	---
				Throttle valve angle (potentiometer 1 -G187)	2...98%	---

Note on display group 60:

- Adaption (matching) of the throttle valve control part is performed with ignition switched on and accelerator released.
- Engine control unit is adapted to throttle valve control unit when selecting display group 60 under function 04 "Basic setting". This adaption must always be carried out when another throttle valve control part (or another complete engine) or another engine control unit is fitted.
- If the voltage supply is interrupted (battery disconnected) the adaption (matching) must be carried out again => Page 132 Procedure after voltage supply open circuit.
- The counter in display zone 3 counts up to 12 during the adaption (otherwise, fault entered in fault memory.

Audi
Printed by: [illegible] Date: [illegible]
Third party trust [illegible] Audi AG. Passing on to third parties or reproduction of this text
with respect to the correctness of information in this document. Copyright by AUDI AG.

- The basic settings are completed first when the counter in display zone 3 reaches step 12.

Display group 61 -Speed regulation- Electronic accelerator system						
▪ Whilst driving						
Read measured value block 61			⇒	◂ Indicated on display		
xxxx rpm	---	xxx.x %	xxxxx			
1	2	3	4	◂ Display zones	Specification	Evaluation
				Operating mode	xxxxx	=> Page 57
				Throttle valve angle (potentiometer 1 -G187)	0...100 %	---
				Engine speed	630...5700 rpm	---

Display group 62 -Speed regulation- Electronic accelerator system						
▪ Ignition on, engine not running						
Read measured value block 62			⇒	◂ Indicated on display		
xx %	xx %	xx %	xx %			
1	2	3	4	◂ Display zones	Specification	Evaluation
				Accelerator pedal position sender 2 -G185	0...100 %	---
				Accelerator pedal position sender 1 -G79	0...100 %	---
				Throttle valve angle (potentiometer 2 -G188)	98...2%	---
				Throttle valve angle (potentiometer 1 -G187)	2...98 %	---

12 - Evaluating measured value blocks, display groups 70...75 -Exhaust gas recirculation-

12.1 - Evaluating measured value blocks, display groups 70...75 -Exhaust gas recirculation-

Protected by copyright. Copying for private or commercial purposes, in part or in whole, is not permitted unless authorised by AUDI AG. AUDI AG does not guarantee or accept any liability with respect to the correctness of information in this document. Copyright by AUDI AG.

Display group 70 -Emission control- Activated charcoal filter system diagnosis (tank breathing system)						
▪ Engine running at idling speed						
▪ Coolant temperature at least 80.0 °C						
▪ Control unit in mode 04-Basic settings						
Read measured value block 70			⇒	◂ Indicated on display		
xx.x %	xx.x %	xxx mbar	Text			
1	2	3	4	◂ Display zones	Specification	Evaluation
				Result of activated charcoal filter diagnosis (Test OFF / test ON / TVV OK / TVV n.OK)	TVV OK	---
				Intake manifold pressure	240...420 mbar	---
				Result of current diagnosis	>25%	---
				Opening angle	12...38%	---

Note:

TVV means fuel tank venting valve (activated charcoal filter system solenoid valve 1).

Notes on display zone 1:

During the diagnosis the display fluctuates by approx. 8 % in a range between 12...38 %.

Display group 74 -Emission control- Adaption of EGR-valve						
▪ Ignition on, engine not running ▪ Control unit in mode 04 basic setting						
Read measured value block 74 ⇒				◂ Indicated on display		
x.x V	x.x V	x.x V	Text			
1	2	3	4	◂ Display zones	Specification	Evaluation
				Adaption condition (ADP runs, ADP OK or ADP ERROR)	ADP OK	---
				Current potentiometer voltage value	0.3...4.6 V	---
			100% position		2.9...4.6 V	---
		0 position (basic setting)			0.3...1.3 V	---

Notes on display group 74:

- Adaption of exhaust gas recirculation valve takes place when ignition is switched on.
- When selecting function 04 "basic settings" of display group 74, the engine control unit is adapted to the exhaust gas recirculation valve. This process must be carried out if another exhaust gas recirculation valve (or a complete engine) or another engine control unit has been fitted.
- If it is not possible to perform the adaption process, start the engine briefly and then switch off the ignition for 10 seconds.

Protected by copyright. Copying for private or commercial purposes, in part or in whole, is not permitted unless authorised by AUDI AG. AUDI AG does not guarantee or accept any liability with respect to the correctness of information in this document. Copyright by AUDI AG.

Display group 75 -Exhaust gas recirculation						
▪ Engine running at idling speed ▪ Control unit in mode 04 basic setting - Rev up to max. revolutions briefly 5 times						
Read measured value block 75			⇒	◂ Indicated on display		
xxxx rpm	xxx mbar	xxx mbar	Text			
1	2	3	4	◂ Display zones	Specification	Evaluation
				Result test on / test off / Sys. OK / Sys. n.OK	Sys. OK	---
			Intake manifold pressure difference		at least 45 mbar	---
		Intake manifold pressure			240...420 mbar	---
	Engine speed				1800...5600 rpm	---

Note on display zone 3:

The intake manifold pressure difference is load-dependent and can cause faults at less than 90 mbar.

13 - Evaluating measured value blocks, display group 100 -Readiness code-

13.1 - Evaluating measured value blocks, display group 100 -Readiness code-

Display group 100 -Readiness code-						
▪ Engine running at idling speed						
Read measured value block 100			⇒	◂ Indicated on display		
xxxxxxxx	xxx.x °C	xxx.x s	xxxxxxxx			
1	2	3	4	◂ Display zones	Specification	Evaluation
				Diagnosis status	---	---
			Period since last engine start		---	---

	Coolant temperature	80.0...110.0 °C	=> Page 45
	Readiness code	00000000	=> Page 60

Significance of figures in 8-digit number block, display zone 1 - Readiness code

The readiness code is generated only when all display zones show 0								
1	2	3	4	5	6	7	8	Diagnostic function
							0	Catalytic converter
						0		Catalytic converter heating (currently no diagnosis/always "0")
					0			Activated charcoal filter system (tank venting system)
				0				Secondary air system (not fitted/always "0")
			0					Air conditioner (currently no diagnosis/always "0")
		0						Lambda probes
	0							Lambda probe heating
0								Exhaust gas recirculation system

14 - Evaluating measured value blocks, display groups 120...129 -Communication-

14.1 - Evaluating measured value blocks, display groups 120...129 -Communication-

Display group 120 -Traction control -TC-

- Whilst driving

Read measured value block 120 ⇒ ◂ Indicated on display

xxxx rpm	xxx Nm	xxx Nm	Text	◂ Display zones	Specification	Evaluation
1	2	3	4	Status	active / n.active	---
				Actual engine load	---	---
				Specified engine load	---	---
				Engine speed	630...830 rpm	---

Display group 125 -Communication -data bus messages-

- Engine running at idling speed

Read measured value block 125 ⇒ ◂ Indicated on display

Text	Text	Text	Text	◂ Display zones	Specification	Evaluation
1	2	3	4	Air conditioner status	Air cond 1	---
				Combi status	Combi 1	---
				ABS status	ABS 1	---
				Gearbox status	Gear 1	---

Protected by copyright. Copying for private or commercial purposes, in part or in whole, is not permitted unless authorised by AUDI AG. AUDI AG does not guarantee or accept any liability with respect to the correctness of information in this document. Copyright by AUDI AG.

Note on display group 125:

Specification = 1; Control units with active data bus are displayed.

Display group 126 -Communication -data bus messages-						
▪ Engine running at idling speed						
Read measured value block 126			⇒	◂ Indicated on display		
Text	Text	Text	Text			
1	2	3	4	◂ Display zones	Specification	Evaluation

			Airbag status		Airbag 1	---

Note on display group 126:

Specification = 1; Control units with active data bus are displayed.

Protected by copyright. Copying for private or commercial purposes, in part or in whole, is not permitted unless authorised by AUDI AG. AUDI AG does not guarantee or accept any liability with respect to the correctness of information in this document. Copyright by AUDI AG.

24 - Mixture preparation, Injection

1 - General notes on the injection system

1.1 - General notes on the injection system

Servicing ignition part:

=> Repair group 28

- The engine control unit is equipped with self-diagnosis. Before carrying out repairs and fault finding the fault memory of all control units must be interrogated using the automatic test sequence. This is necessary as various control units are connected to each other via a data bus. The vacuum hoses and connections must also be checked (unmetered air).
- Fuel hoses in engine compartment must only be secured with spring type clips. The use of clamp or screw type clips is not permissible.
- Disconnecting and connecting the battery must only be done with the ignition switched off, otherwise the engine control unit could be damaged.
- Components marked with * are checked via the self diagnosis
  => Page 9 , interrogating and erasing fault memory.
- Components marked with **can be checked with the final control diagnosis => Page 29 .
- For trouble-free operation of the electrical components, a voltage of at least 11.5 V is necessary.

- Do not use sealants containing silicone. Particles of silicone drawn into the engine, will not be burnt in the engine and damage the Lambda probe.
- If the engine starts, runs for a short period and then stops after fault finding, repairs or component tests, this may be because the immobilizer is disabling the engine control unit. In this case, the fault memory must be interrogated and if necessary the control unit matched. Perform adaptation (matching) of immobilizer to engine control unit => Electrical system; Repair group 01; Self-diagnosis of immobilizer.
- During some checks it is possible that the control unit will recognise and store a fault. Therefore after completing all checks and repairs the fault memory must be interrogated and if necessary erased.
  => Page 9 , interrogating and erasing fault memory
- Vehicles with an airbag are fitted with a crash/fuel shut-off. It reduces the risk of a vehicle burning in the event of a crash in that the fuel pump is switched off by the fuel pump relay. At the same time this device improves the starting of the engine because as soon as the door is opened the fuel pump is activated to build-up pressure in the fuel system.

Safety precautions =>Page 84

Rules for cleanliness => Page 85

Technical data => Page 85

Checking intake system for leaks (unmetered air) => Page 118 .

Checking engine operating mode => Page 129

Copyright AUDI AG. All rights reserved. The reproduction, distribution and utilization of this document as well as the communication of its contents to others without express authorization is prohibited. Offenders will be held liable for the payment of damages. All rights created by patent grant or registration of a utility model or design patent are reserved.
This document is a translation of the original German document. AUDI AG does not guarantee or accept any liability with respect to the correctness of information in this document. Copyright by AUDI AG.

1.2 - Servicing injection system

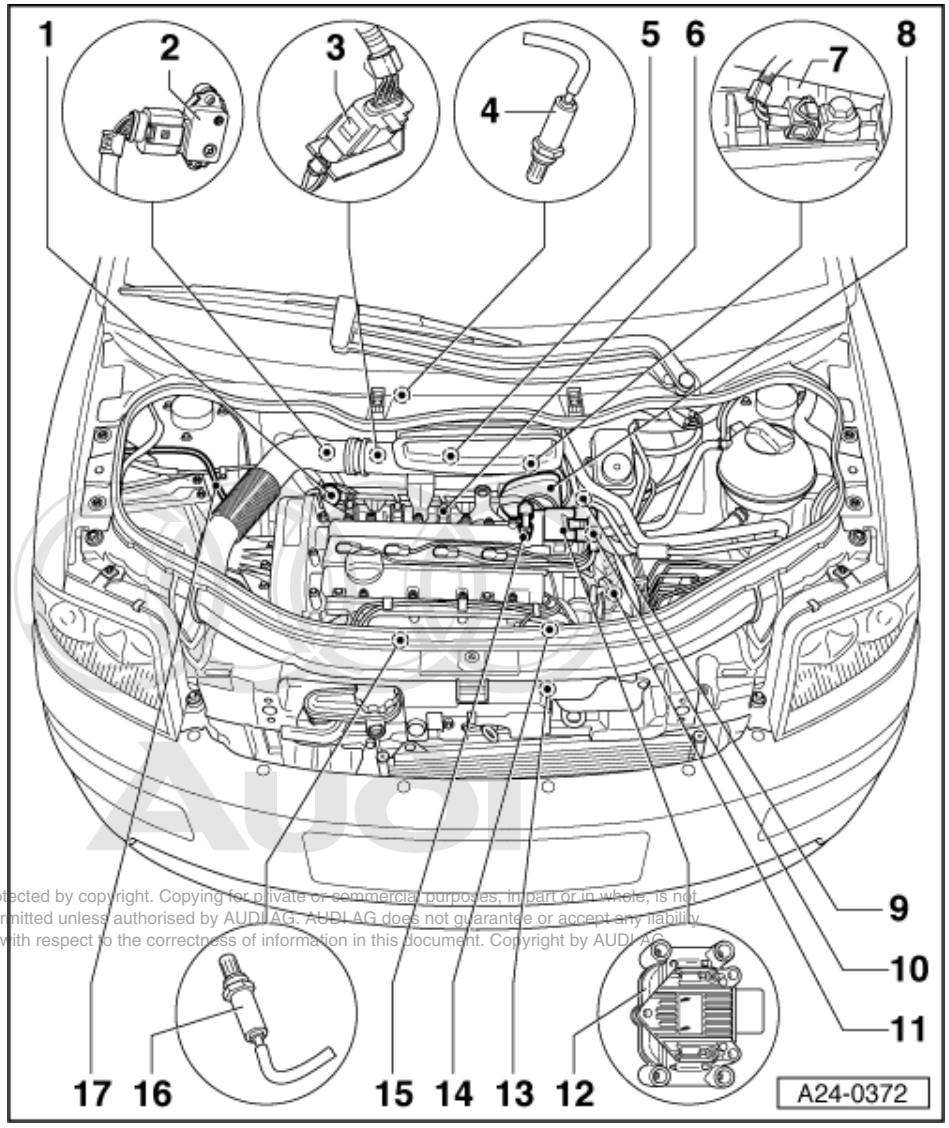

Protected by copyright. Copying for private or commercial purposes, in part or in whole, is not permitted unless authorised by AUDI AG. AUDI AG does not guarantee or accept any liability with respect to the correctness of information in this document. Copyright by AUDI AG.

1.3 - Fitting locations overview

- Engine control unit* (control unit J537 for 4LV injection system) in driver's footwell

1 **Fuel pressure regulator**

2 **Intake manifold pressure sender (G71)* with intake air temperature sender (G42)***

3 **3-pin connector, black**
- For engine speed sender (G28)
- Location: at rear of engine between intake manifold and crankcase breather

4 **Lambda probe 2 after catalytic converter (G130)*, 50Nm**
- Location: at rear of catalytic converter
- Electrical connector: box in left footwell

5 **Intake manifold**

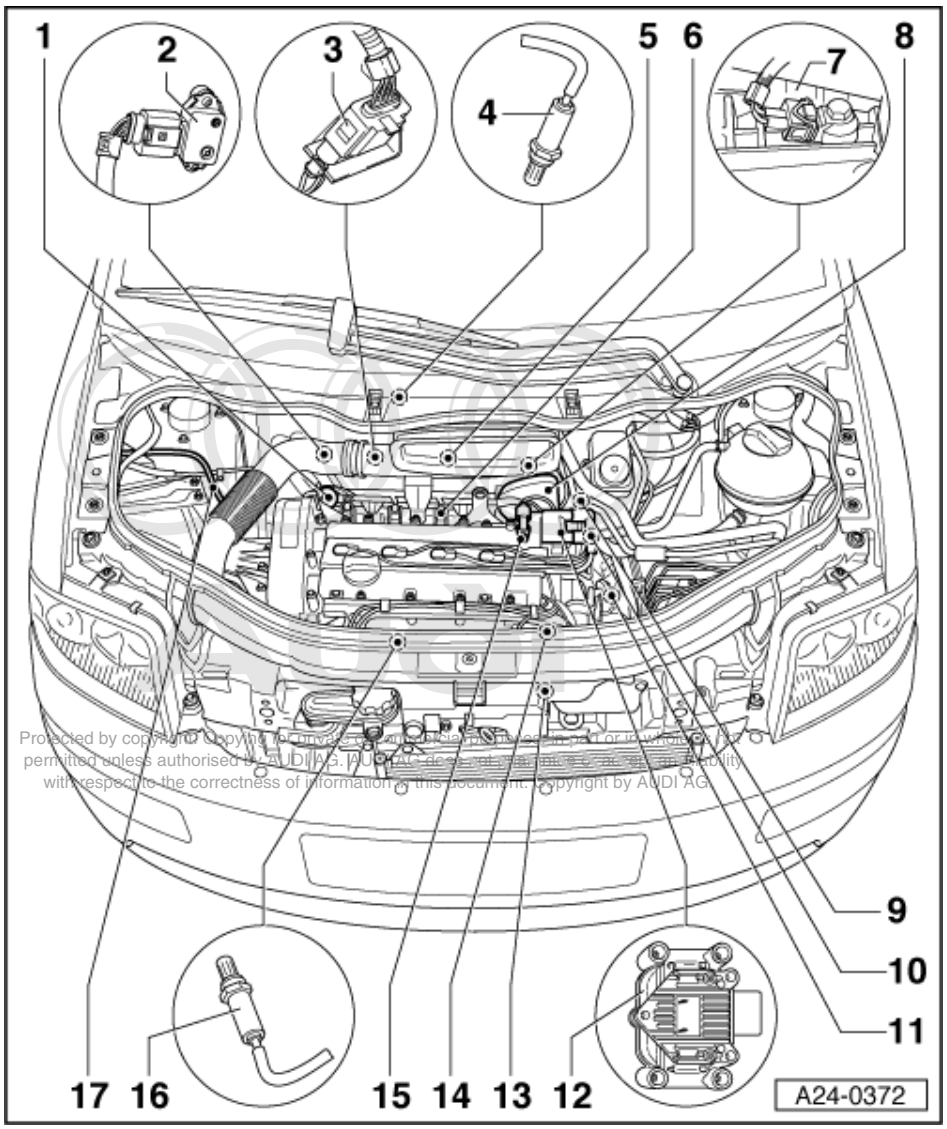

Protected by copyright. Copying for private or commercial purposes, in part or in whole, is not permitted unless authorised by AUDI AG. AUDI AG does not guarantee or accept any liability with respect to the correctness of information in this document. Copyright by AUDI AG.

6 Injectors (N30...N33)*
(4LV injection system control unit -J537)

7 Knock sensor 1 (G61)*
- Fitting location: cylinder block intake side
- => Page 158 , item 6

8 Throttle valve control part (J338)*

9 Earth connection

10 Engine speed sender (G28)*
- Fitting location: cylinder block intake side

11 6-pin connector
- Black
- For Lambda probe and Lambda probe heating before catalytic converter

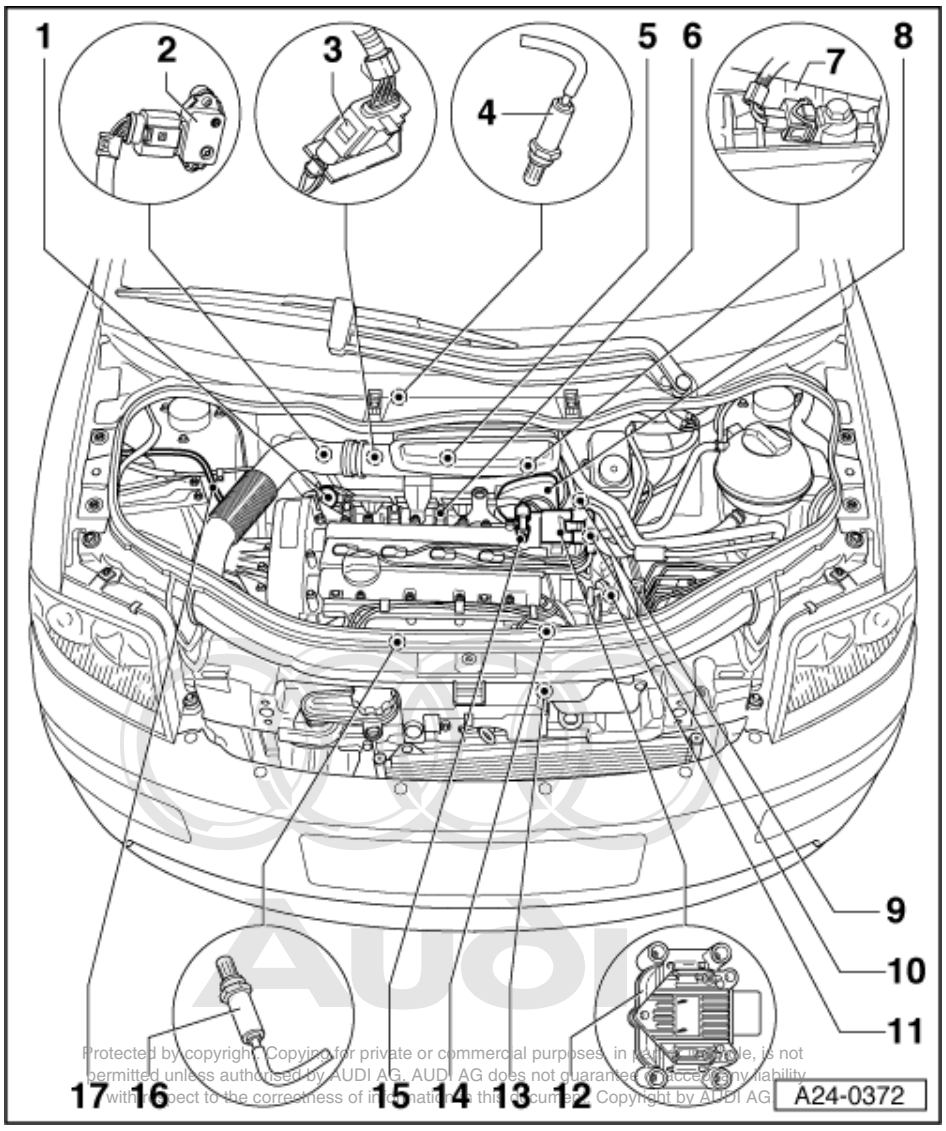

Protected by copyright. Copying for private or commercial purposes, in part or whole, is not permitted unless authorised by AUDI AG. AUDI AG does not guarantee or accept any liability with respect to the correctness of information in this document. Copyright by AUDI AG.

12 Ignition transformer (N152)*

- With ignition cable identification, do not interchange
- => Page 157 , item 2

13 Exhaust gas recirculation valve (N18)*/ with exhaust gas recirculation potentiometer (G 212)***

=> Repair group 26; Exhaust gas recirculation system; Servicing parts of the exhaust gas recirculation system Exhaust gas recirculation system Servicing parts of the exhaust gas recirculation system

14 Coolant temperature sender (G62)*

- Green
- With coolant temperature gauge sender (G2)

15 Hall sender (G40)*

- => Page 159 , item 9

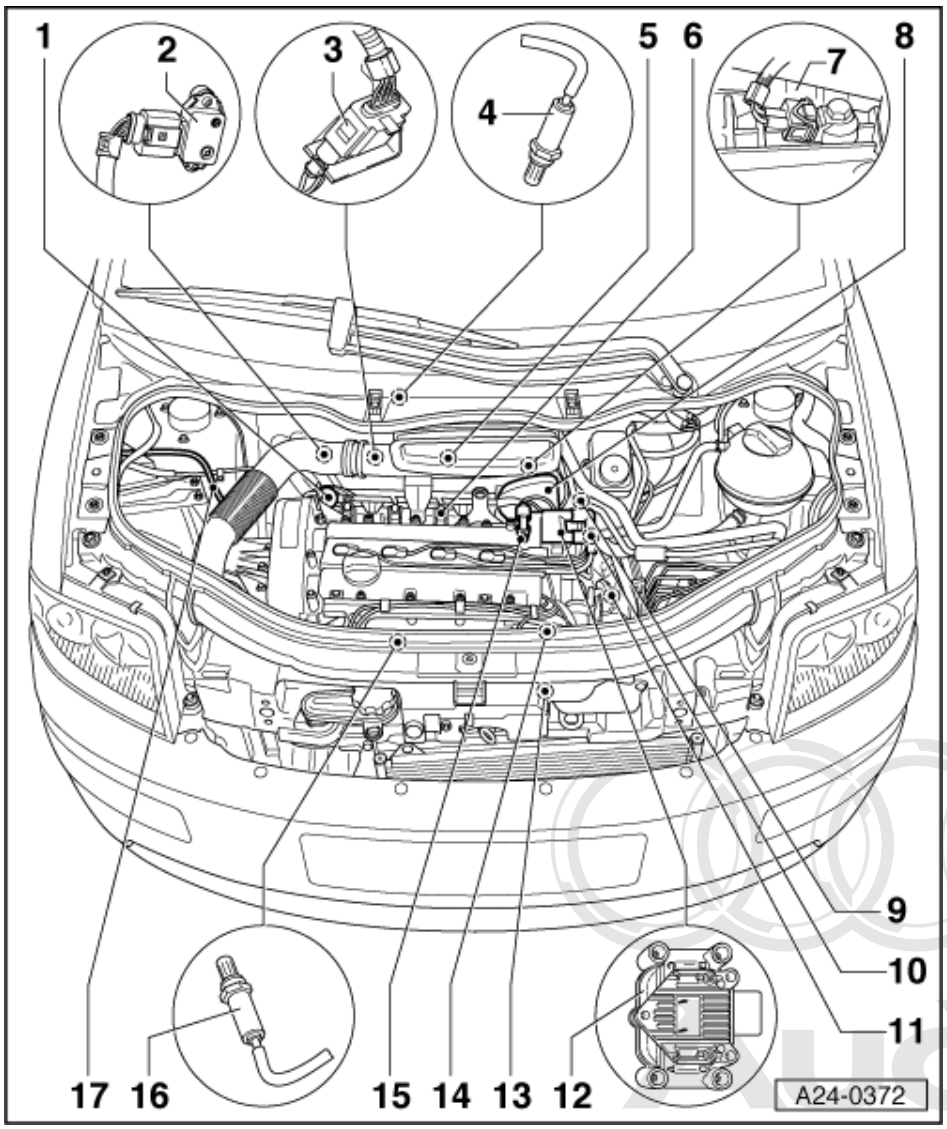

16 Lambda probe 1 before catalytic converter (G39)*, 50Nm

- Fitting location: In exhaust manifold

17 Activated charcoal filter solenoid valve 1 (N80)*/**

- Activated charcoal filter system

=> Repair group 20; Activated charcoal filter system Activated charcoal filter system

Protected by copyright. Copying for private or commercial purposes, in part or in whole, is not permitted unless authorised by AUDI AG. AUDI AG does not guarantee or accept any liability with respect to the correctness of information in this document. Copyright by AUDI AG.

1.4 - Wiring and component check with test box V.A.G 1598/31

Notes:

- Use the hand multimeter V.A.G 1526 or the multimeter V.A.G 1715 and the diode test lamp V.A.G 1527 for the checks.
- To connect the testers to test box 1598/31, always use the adapter leads from adapter set V.A.G 1594.
- When the engine control unit is disconnected the learned values are erased but the contents of the fault memory remain intact.

Warning!
To prevent damage to the electronic components, switch to the respective measuring range before connecting the test leads and o

Connecting test box V.A.G 1598/31

Important: switch off ignition.

- Lift up floor mat in left footwell

=> General body repairs, Interior; Repair group 70; Removing and installing floor mat Removing and installing floor mat

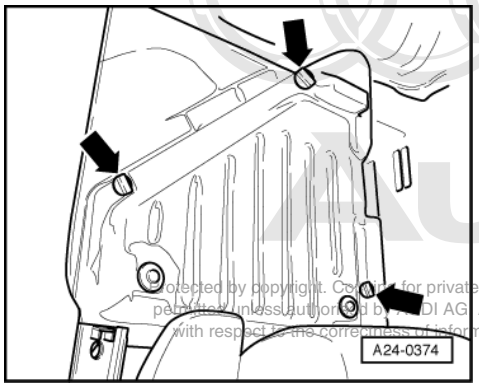

Protected by copyright. Copying for private or commercial purposes, in part or in whole, is not permitted unless authorised by AUDI AG. AUDI AG does not guarantee or accept any liability with respect to the correctness of information in this document. Copyright by AUDI AG.

- -> Loosen screws -arrow- securing cover.
- Take off cover.

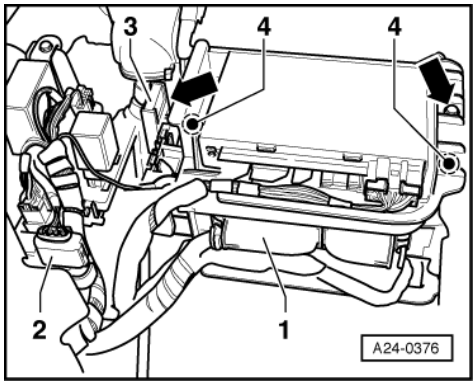

- -> Release connector on engine control unit -1- and unplug connector.

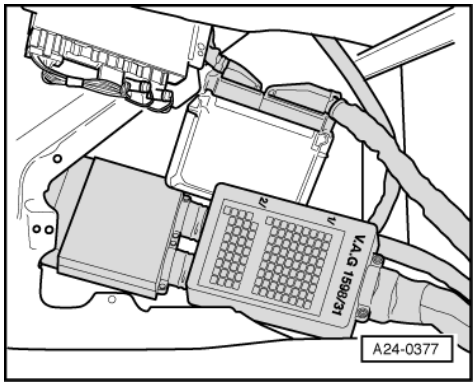

- -> Connect test box V.A.G 1598/31 to connector on relevant wiring harness.
- Carry out test as described in the relevant repair instructions.

1.5 - Removing and installing parts of the injection system

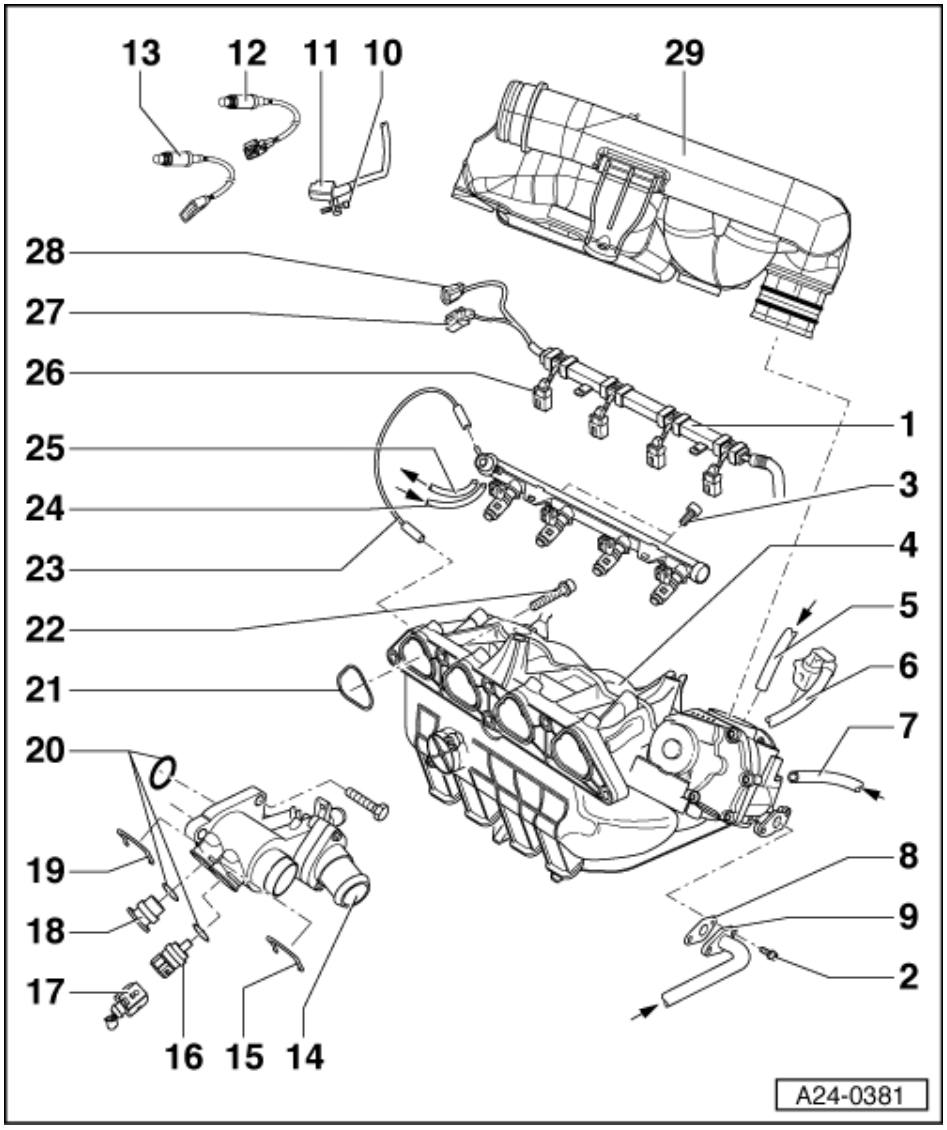

1 Plug
- Clipped onto fuel rail

2 10 Nm

3 Bolt (10 Nm) and fuel rail with injectors
- Dismantling and assembling
=> Page 80

Protected by copyright. Copying for private or commercial purposes, in part or in whole, is not permitted unless authorised by AUDI AG. AUDI AG does not guarantee or accept any liability with respect to the correctness of information in this document. Copyright by AUDI AG.

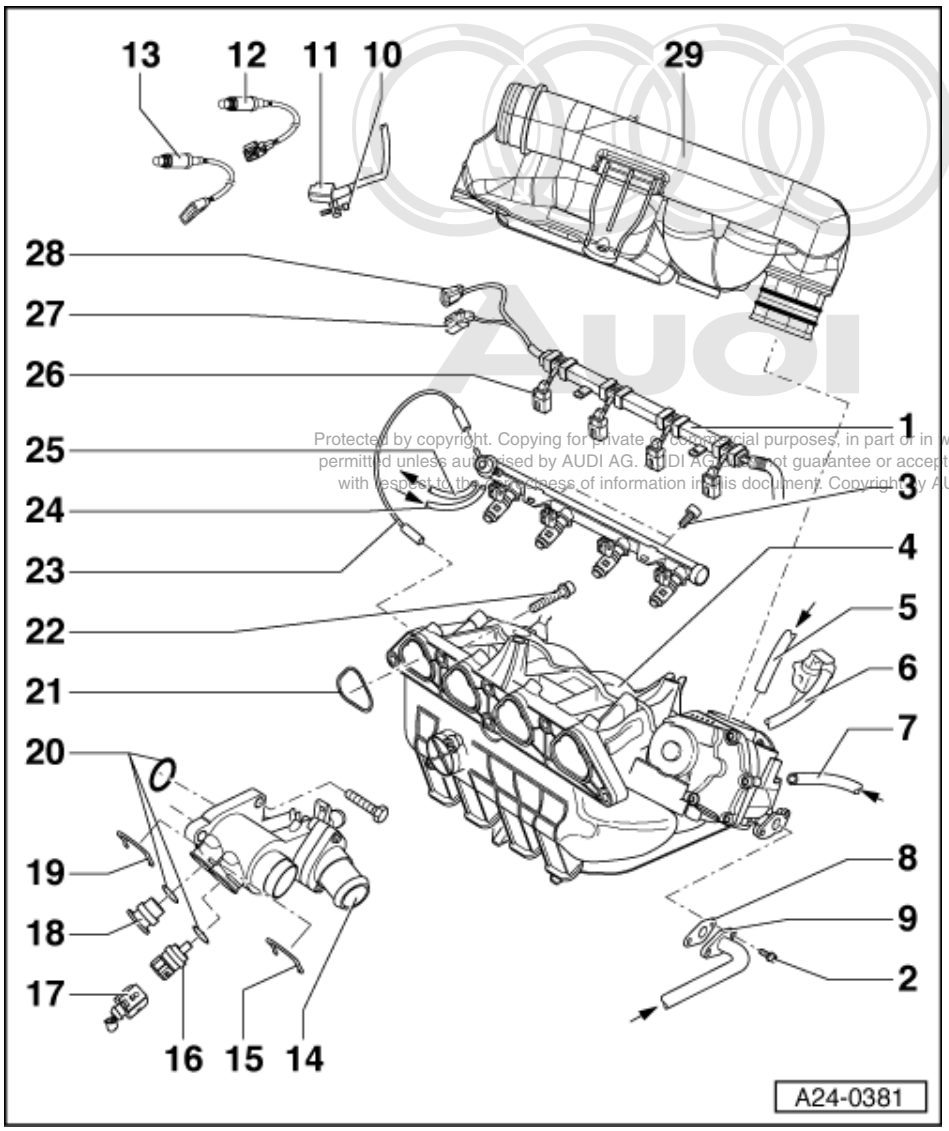

Protected by copyright. Copying for private or commercial purposes, in part or in whole, is not permitted unless authorised by AUDI AG. AUDI AG does not guarantee or accept any liability with respect to the correctness of information in this document. Copyright by AUDI AG.

4 Intake manifold

- Dismantling and assembling => Page 77

5 From activated charcoal filter solenoid valve (N80)*/**

=> Repair group 20; Activated charcoal filter system Activated charcoal filter system

6 Connector

- Black, 6-pin
- For throttle valve control part (J338)
- Connector contacts are gold-plated

7 From brake servo

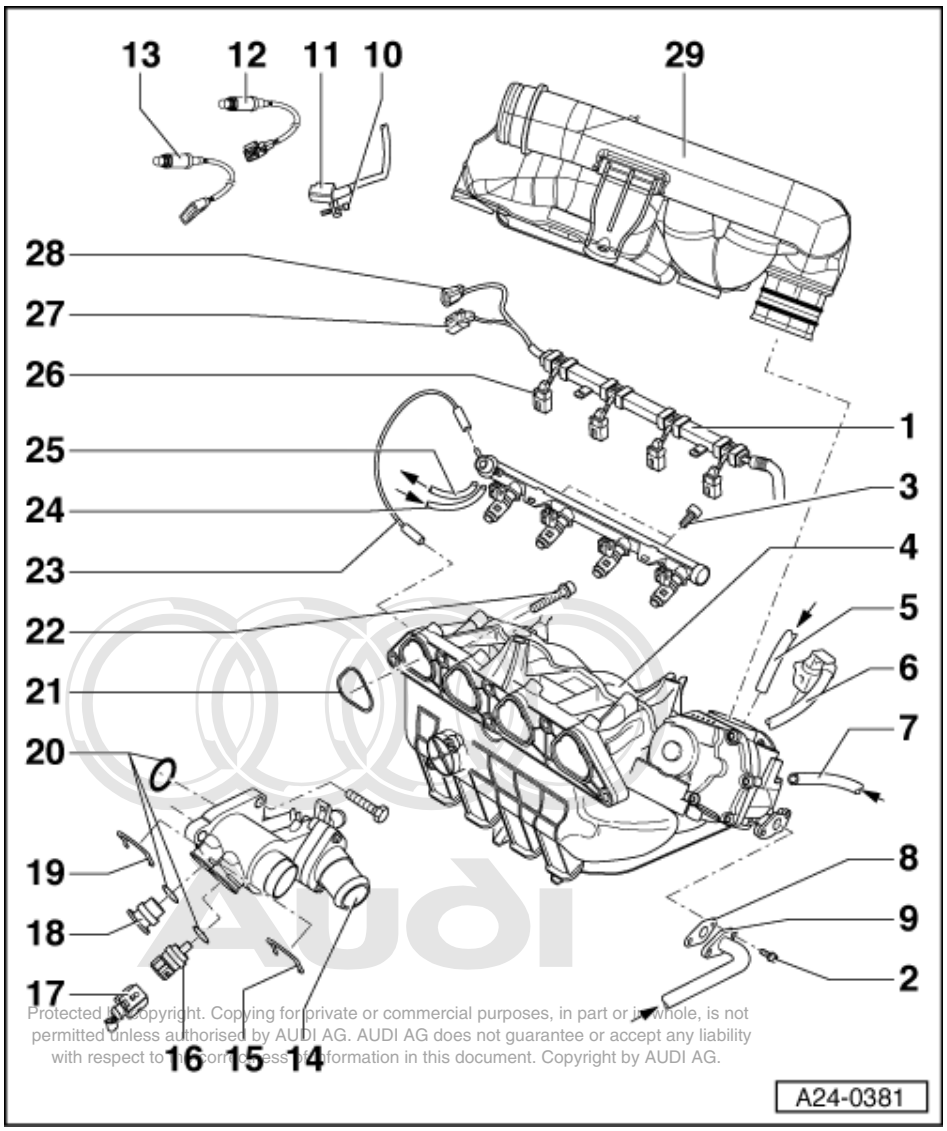

Protected by copyright. Copying for private or commercial purposes, in part or in whole, is not permitted unless authorised by AUDI AG. AUDI AG does not guarantee or accept any liability with respect to the correctness of information in this document. Copyright by AUDI AG.

8 Gasket

- Renew

9 From exhaust gas recirculation valve

=> Repair group 26; Exhaust gas recirculation system; Servicing parts of the exhaust gas recirculation system Exhaust gas recirculation system Servicing parts of the exhaust gas recirculation system

10 5 Nm

11 Engine speed sender (G28)*

=> Electrical system; Repair group 27; Starter; Removing and installing starter Starter Removing and installing starter

- Checking => Page 107
- Fitting location => Page 63 , fitting location overview

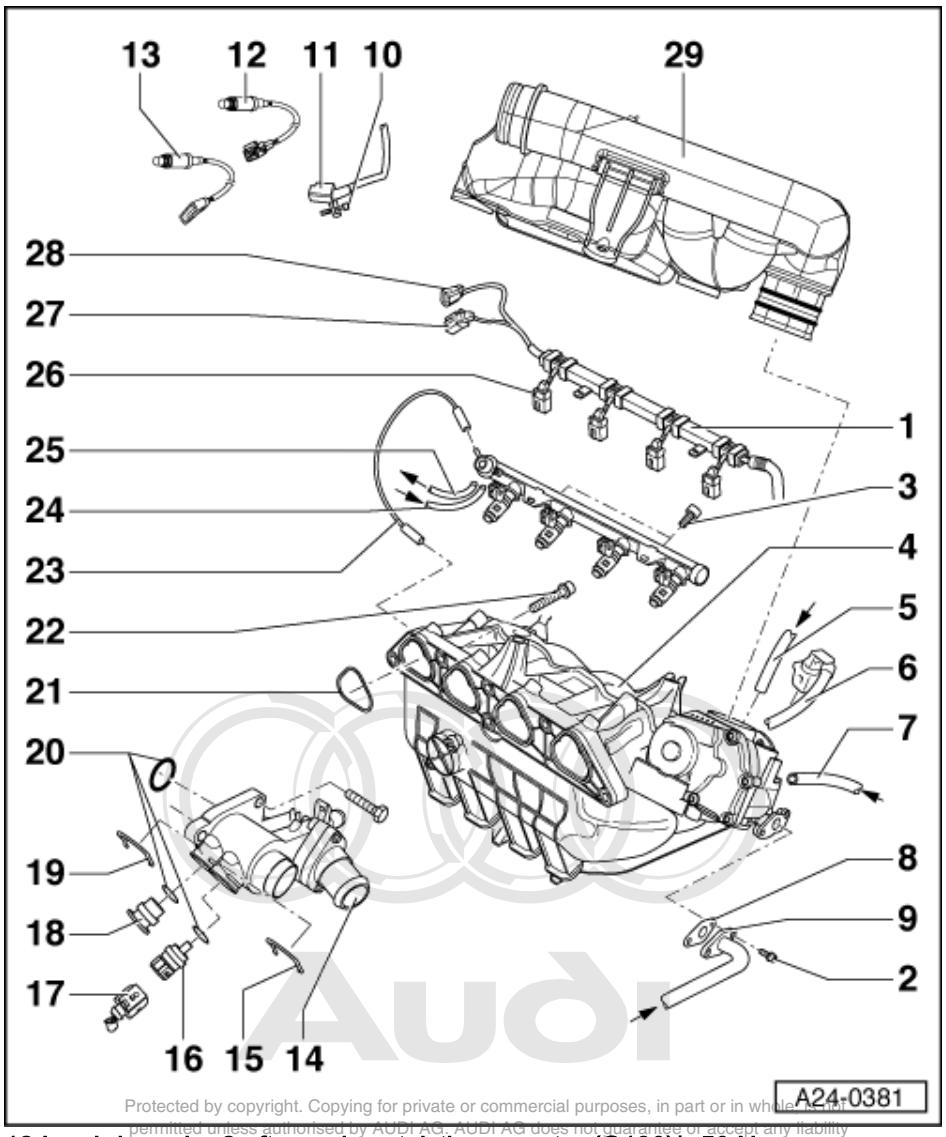

Protected by copyright. Copying for private or commercial purposes, in part or in whole, is not permitted unless authorised by AUDI AG. AUDI AG does not guarantee or accept any liability with respect to the correctness and completeness of this document. ©AUDI AG.

12 Lambda probe 2 after main catalytic converter (G130)*, 50 Nm

- Grease only the threads with "G 052 112 A3"; "G 052 112 A3" must not get into the slots on the probe body
- Remove and install with ring spanner 3337
- With 4-pole connector
- Contacts 3 and 4 gold plated
- Probe heating voltage supply via fuel pump relay (J17)
- Checking Lambda probe and Lambda regulation after catalytic converter => Page 125
- Checking Lambda probe heating for Lambda probe after catalytic converter => Page 88
- Location: at rear of main catalytic converter

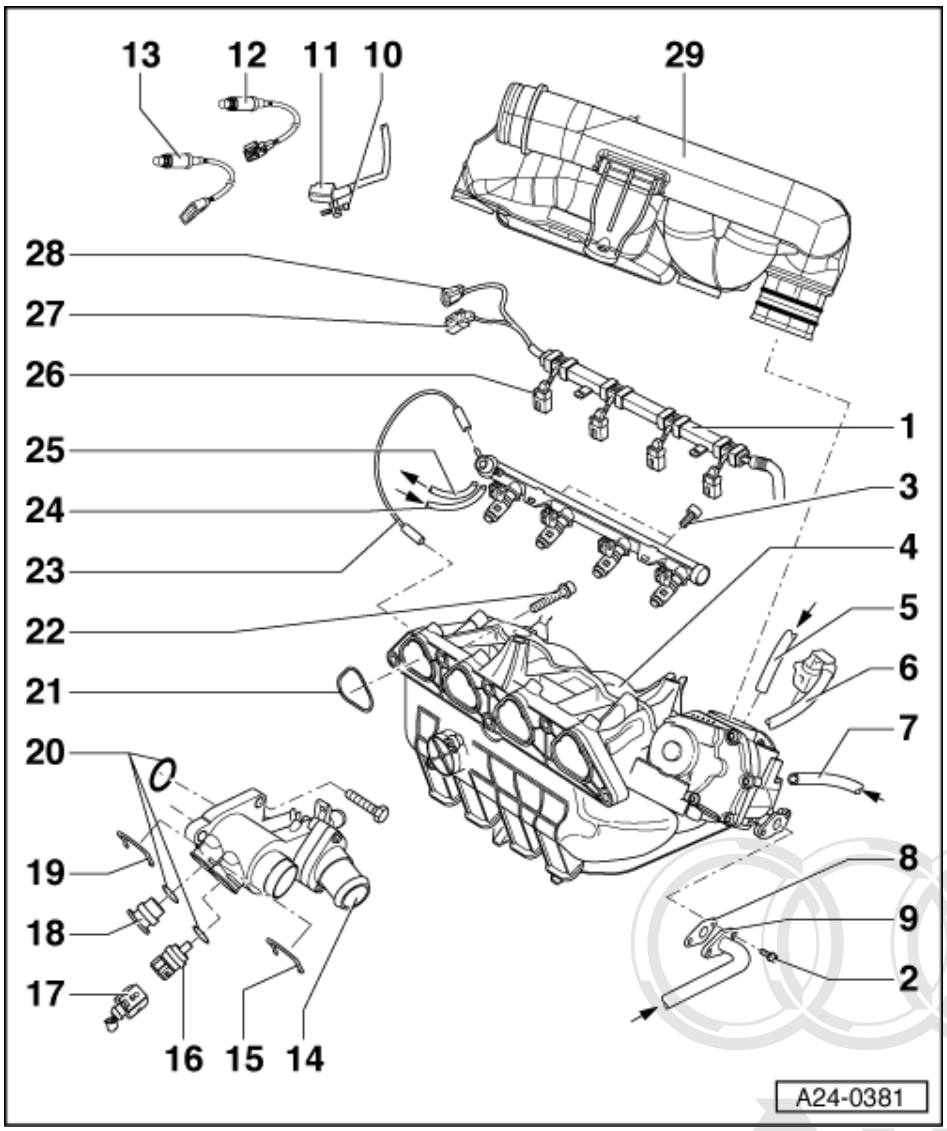

13 Lambda probe 1 before primary catalytic converter (G39)*, 50Nm

- Grease only the threads with "G 052 112 A3"; "G 052 112 A3" must not get into the slots on the probe body
- Remove and install with ring spanner 3337
- With 6-pin connector
- Contacts gold plated
- Probe heating voltage supply via fuel pump relay (J17)
- Checking Lambda probe and Lambda regulation before catalytic converter=> Page 121
- Checking Lambda probe heating before catalytic converter => Page 85
- Checking Lambda probe ageing Lambda probe 1 => Page 128
- Fitting location: In exhaust manifold

Protected by copyright. Copying for private or commercial purposes, in part or in whole, is not permitted unless authorised by AUDI AG. AUDI AG does not guarantee or accept any liability with respect to the correctness of information in this document. Copyright by AUDI AG.

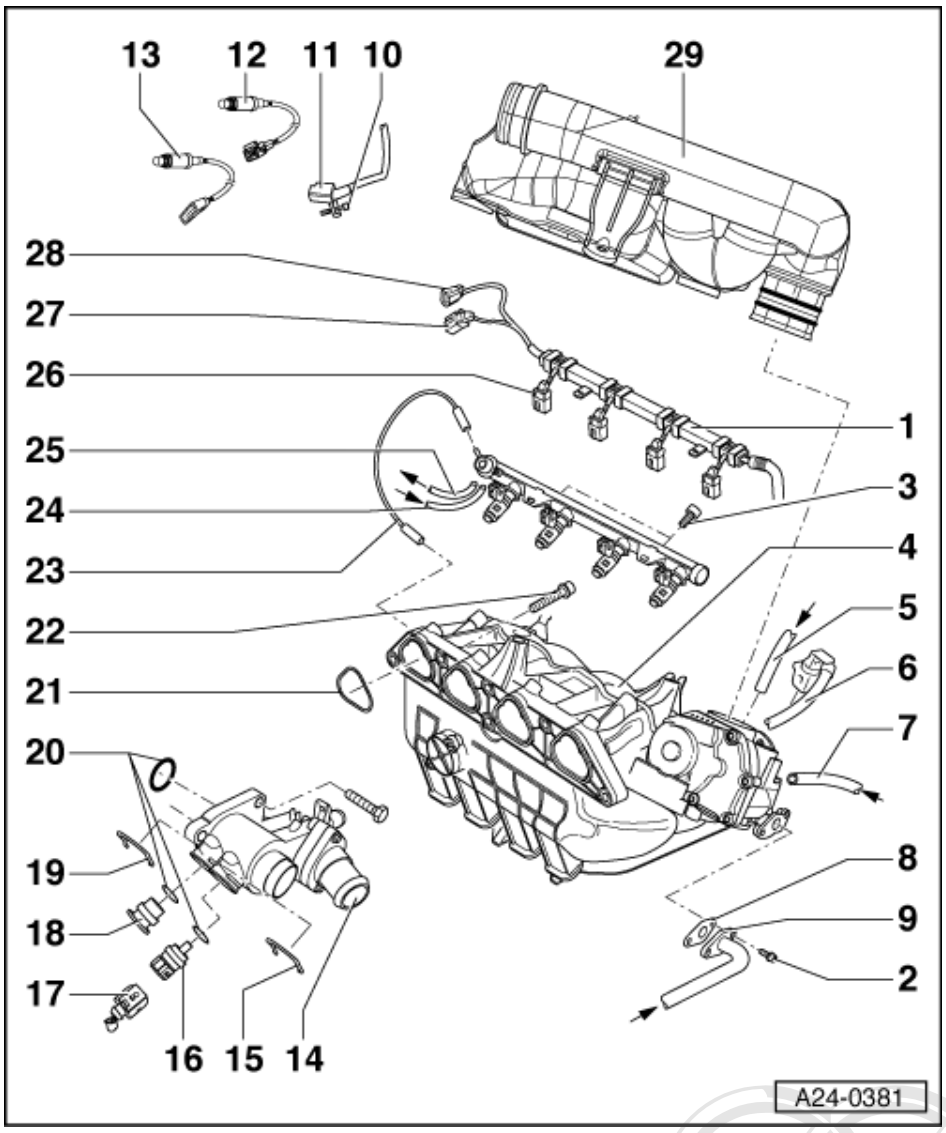

14 Thermostat housing

15 Retaining clip

- Check seated securely

16 Coolant temperature sender (G62)*

- For engine control unit
- With coolant temperature gauge sender (G2)
- If necessary release pressure in cooling system before removing
- Resistance value between contacts C and D
  =>Page 83 , Fig. 1
- Checking =>Page 104

17 Connector

- Black, 4-pin
- For coolant temperature sender (G62) and coolant temperature gauge sender (G2)
- Contacts gold plated

Protected by copyright. Copying for private or commercial purposes, in part or in whole, is not permitted unless authorised by AUDI AG. AUDI AG does not guarantee or accept any liability with respect to the correctness of information in this document. Copyright by AUDI AG.

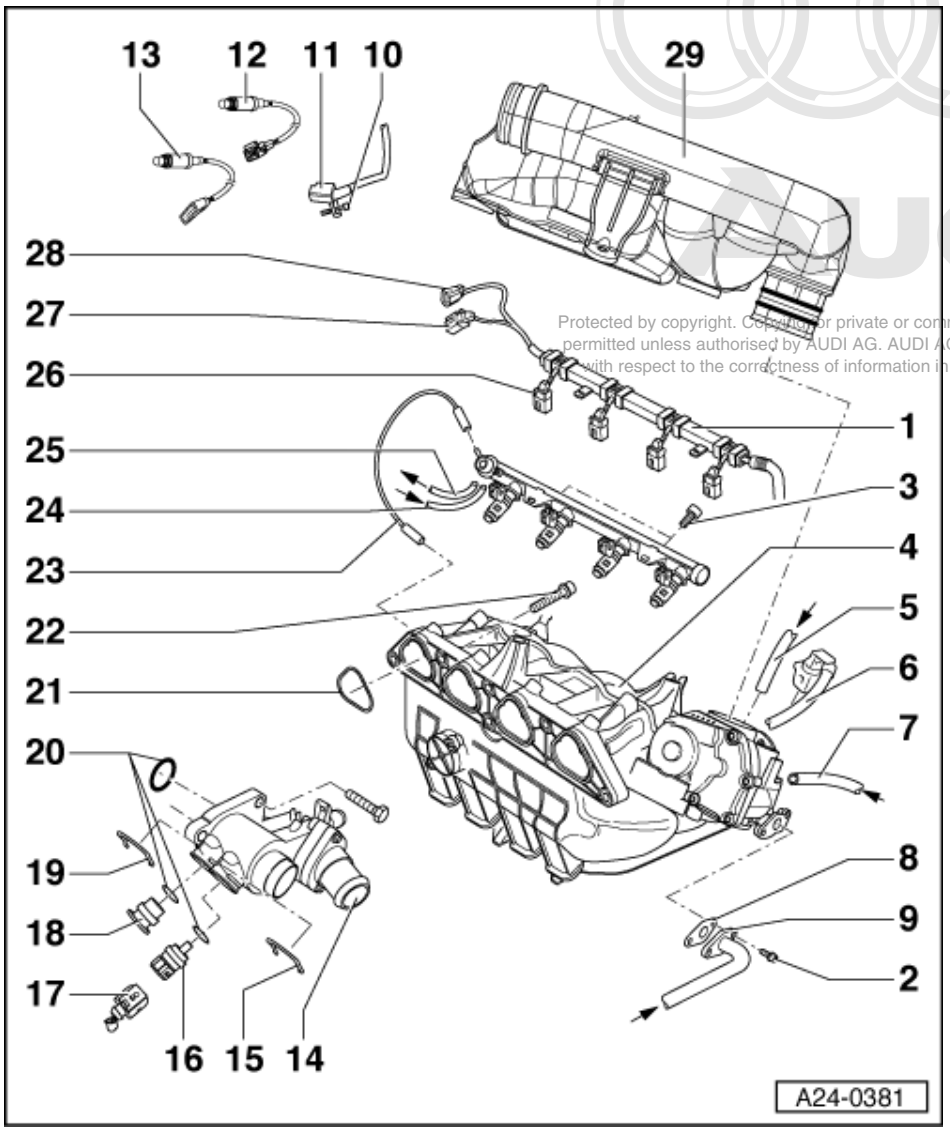

Protected by copyright. Copying for private or commercial purposes, in part or in whole, is not permitted unless authorised by AUDI AG. AUDI AG does not guarantee or accept any liability with respect to the correctness of information in this document. Copyright by AUDI AG.

18 Plug

- If necessary release pressure in cooling system before removing

19 Retaining frame

20 O-ring

- Renew if damaged

21 Seal

- Renew

22 20 Nm

23 Vacuum hose

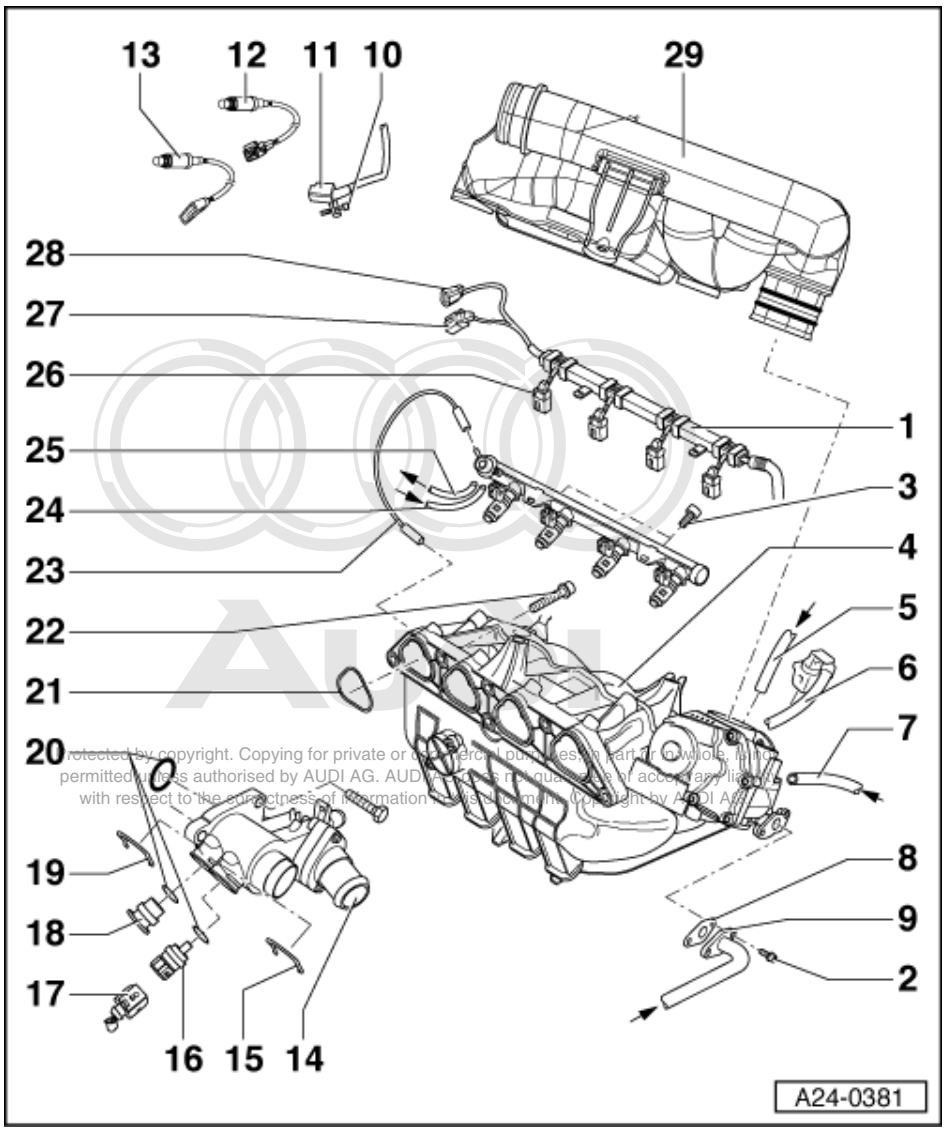

Protected by copyright. Copying for private or commercial purposes, in part or in whole, is not permitted unless authorised by AUDI AG. AUDI AG does not guarantee or accept any liability with respect to the correctness of information in this document. Copyright by AUDI AG.

24 Supply hose

- Black with white marks
- Secure with spring-type clips
- Check securely seated
- From fuel filter:

=> Repair Group 20; Removing and installing parts of fuel supply system; Removing and installing fuel tank with attachments and fuel filter Removing and installing parts of fuel supply system Removing and installing fuel tank with attachments and fuel filter

25 Return hose

- Blue or with blue marking
- Secure with spring-type clips
- Check securely seated
- To the fuel delivery unit in fuel tank

=> Repair Group 20; Removing and installing parts of fuel supply system; Removing and installing fuel tank with attachments and fuel filter Removing and installing parts of fuel supply system Removing and installing fuel tank with attachments and fuel filter

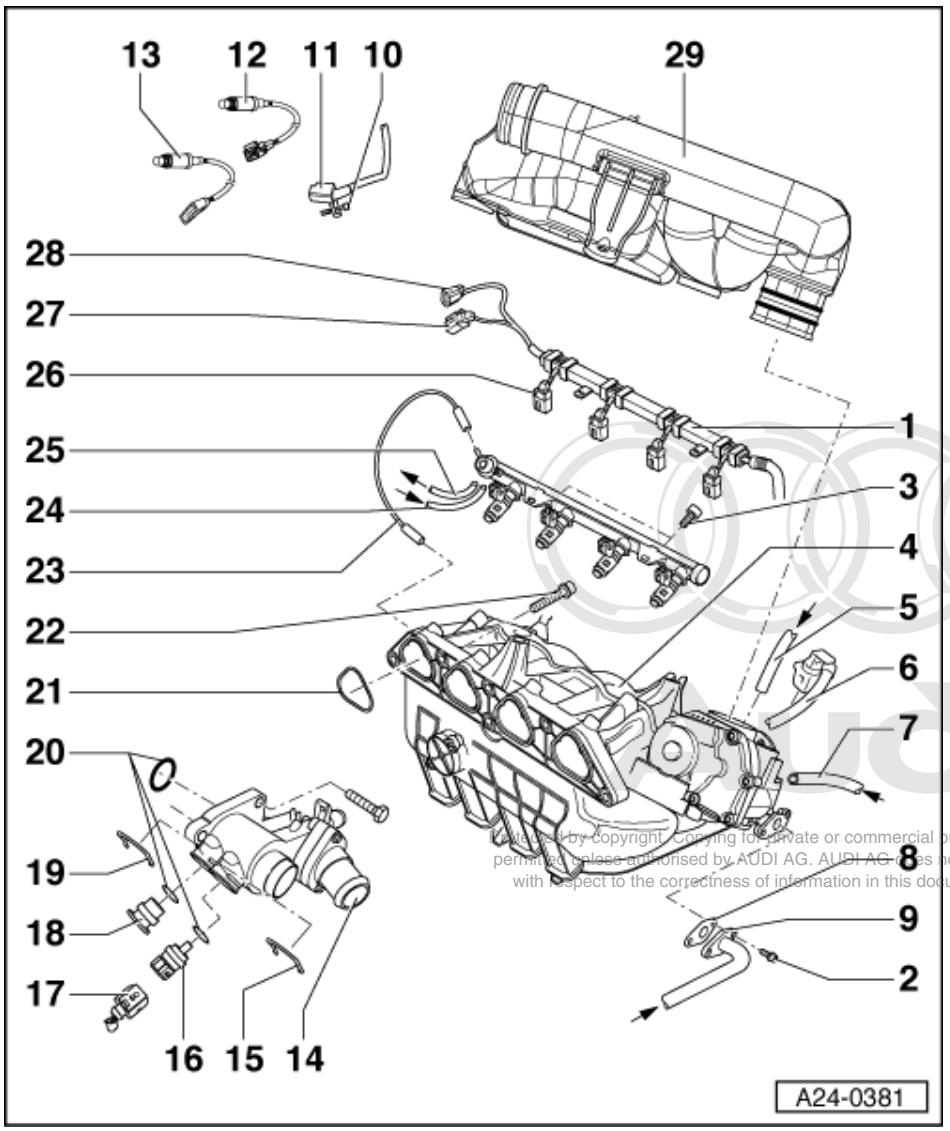

Protected by copyright. Copying for private or commercial purposes, in part or in whole, is not permitted unless authorised by AUDI AG. AUDI AG does not guarantee or accept any liability with respect to the correctness of information in this document. Copyright by AUDI AG.

26 Connector

- Black, 2-pin
- For injector (N30...N33)

27 Connector

- Black, 2-pin
- For knock sensor 1 (G61)
- Connector contacts are gold-plated
- Fitting location => Page 63 , engine compartment overview

28 Connector

- Black, 4-pin
- For intake manifold pressure sender and sender for intake air temperature in intake manifold
- Connector contacts are gold-plated
- Fitting location => Page 63 , engine compartment overview

29 Resonator (air collector)

1.6 - Dismantling and assembling intake manifold

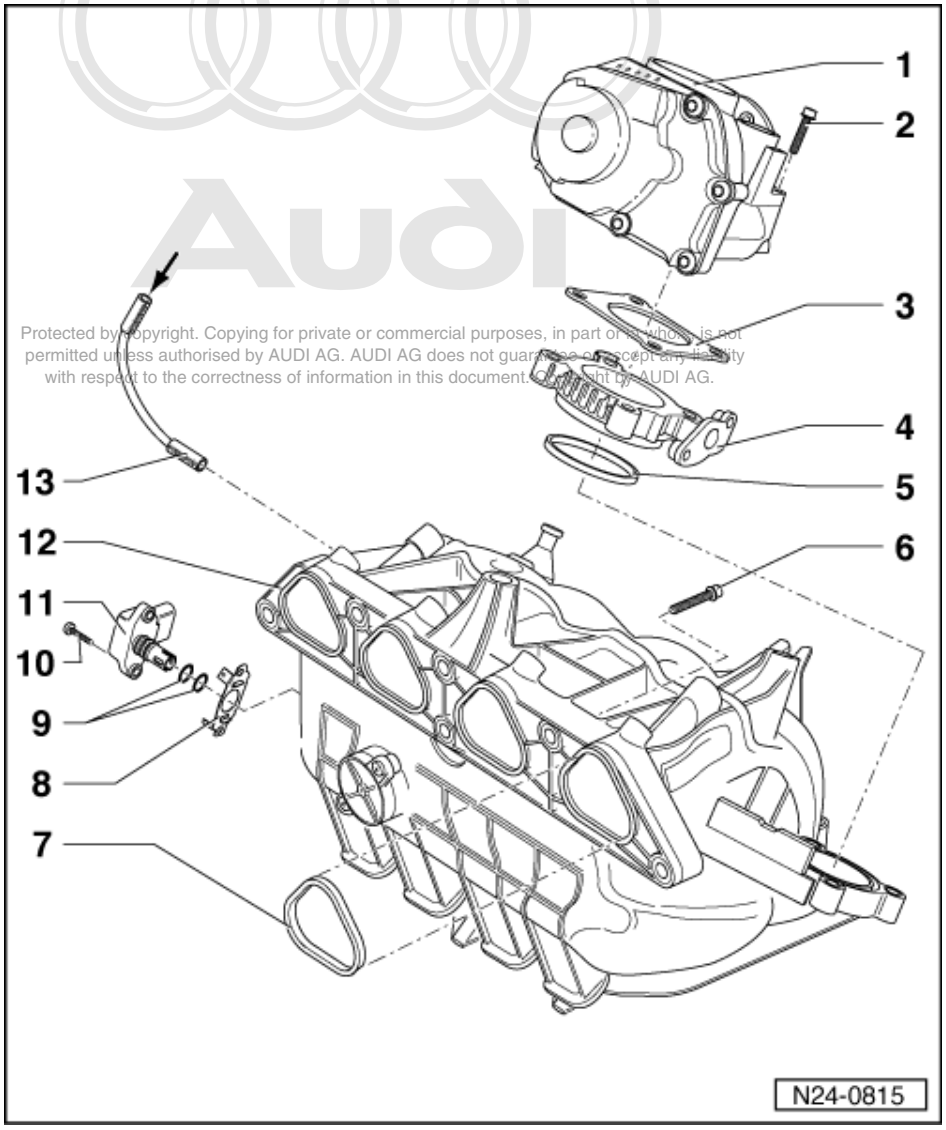

Protected by copyright. Copying for private or commercial purposes, in part or in whole, is not permitted unless authorised by AUDI AG. AUDI AG does not guarantee or accept any liability with respect to the correctness of information in this document. Copyright by AUDI AG.

1 Throttle valve control part (J338)*

- Checking => Page 95
- If replaced match engine control unit => Page 136
- If renewed adapt control unit for automatic gearbox:

=> Self-diagnosis for automatic gearbox 001; Repair group 01; Performing self-diagnosis Performing self-diagnosis

2 10 Nm

3 Gasket

- Note installation position
- Renew

4 Intake connecting flange

5 Seal

- Renew if damaged

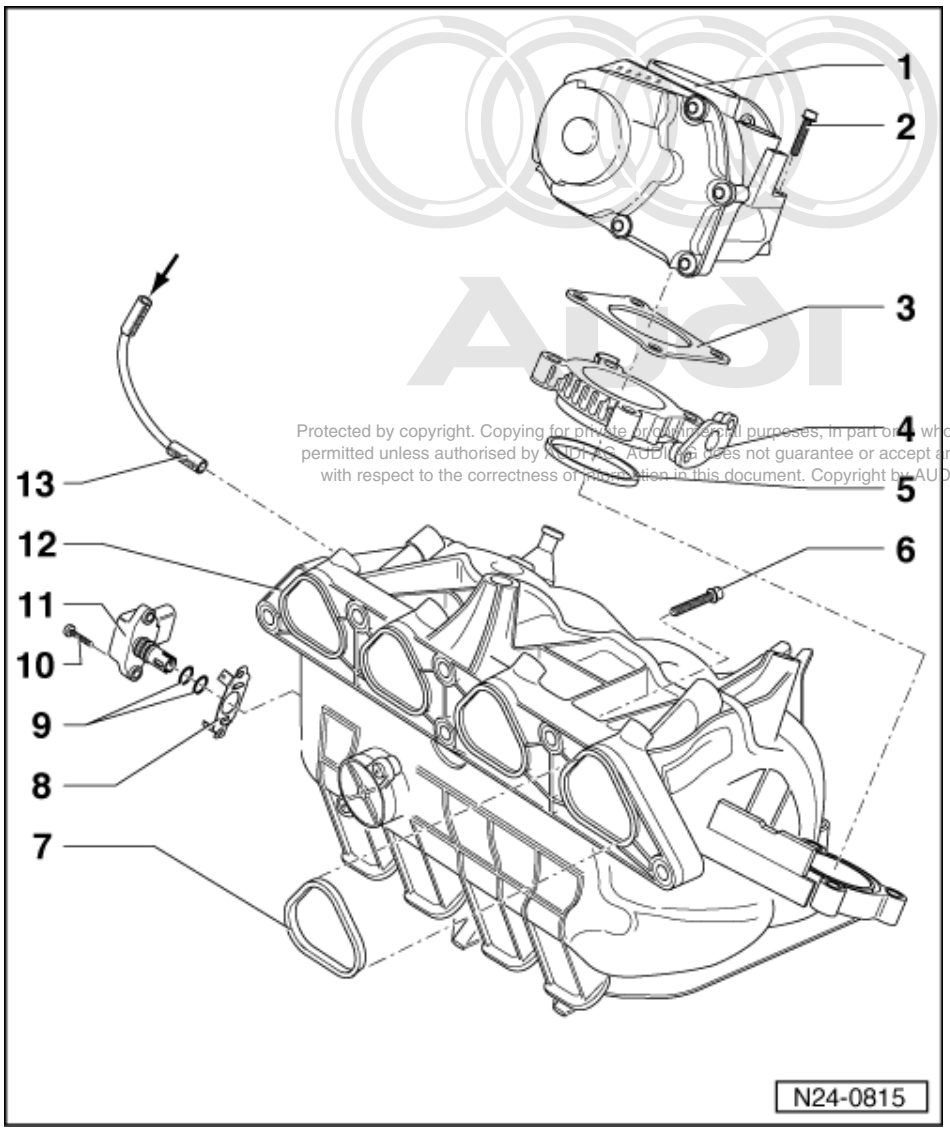

Protected by copyright. Copying for private or commercial purposes, in part or in whole, is not permitted unless authorised by AUDI AG. AUDI AG does not guarantee or accept any liability with respect to the correctness of information in this document. Copyright by AUDI AG.

6 20 Nm

7 Seal
- Renew

8 Guide plate
- Note installation position
- Renew if damaged

9 O-ring
- Renew if damaged

10 3 Nm

11 Intake manifold pressure sender (G71)* with intake air temperature sender (G42)*
- Checking intake manifold pressure sender
  =>Page 96
- Checking intake air temperature sender =>Page 100
- Intake air temperature sender resistance values between contacts 1 and 2=>Page 83 , Fig. 2

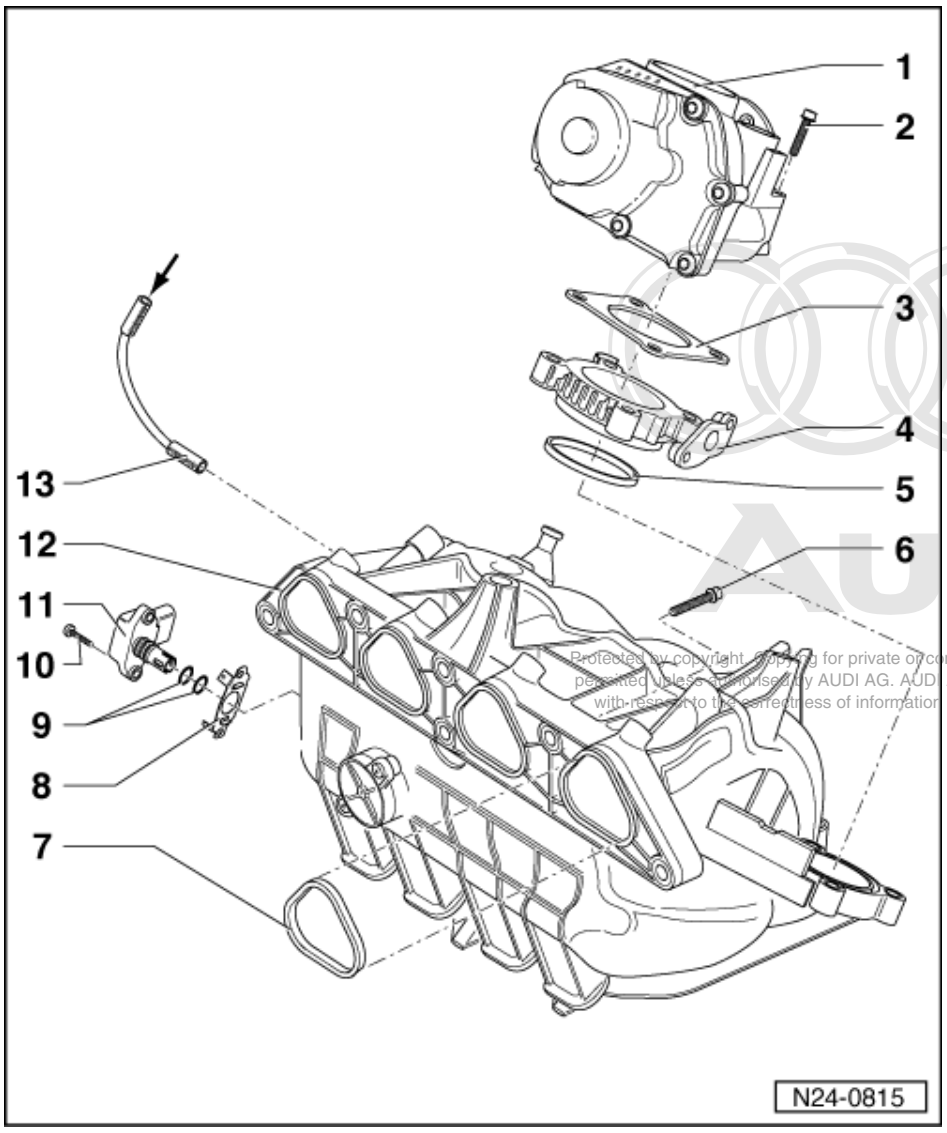

Protected by copyright. Copying for private or commercial purposes, in part or in whole, is not permitted unless authorised by AUDI AG. AUDI AG does not guarantee or accept any liability with respect to the correctness of information in this document. Copyright by AUDI AG.

12 Intake manifold

- Removing and installing
  =>Page 68 , removing and installing parts of the injection system

13 Vacuum hose

- From fuel pressure regulator
  => Page 82 , item 12

1.7 - Dismantling and assembling fuel rail with injectors

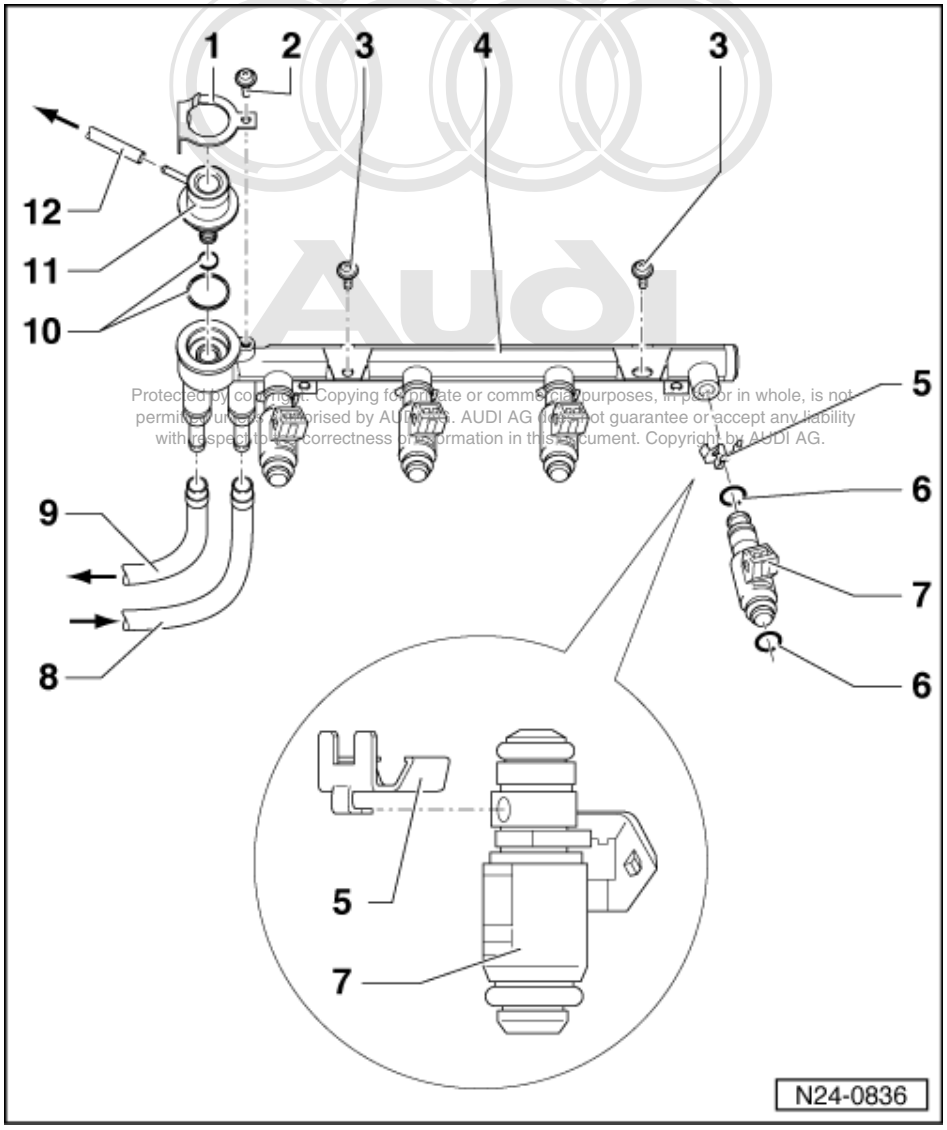

Protected by copyright. Copying for private or commercial purposes, in part or in whole, is not permitted unless authorised by AUDI AG. AUDI AG does not guarantee or accept any liability with respect to the correctness of information in this document. Copyright by AUDI AG.

1 **Retaining plate**
- Note installation position
- Renew if damaged

2 **5 Nm**

3 **10 Nm**

4 **Fuel rail**
- Removing and installing
  =>Page 68 , item 3

5 **Retaining clip**
- Ensure seated correctly at injector and fuel rail

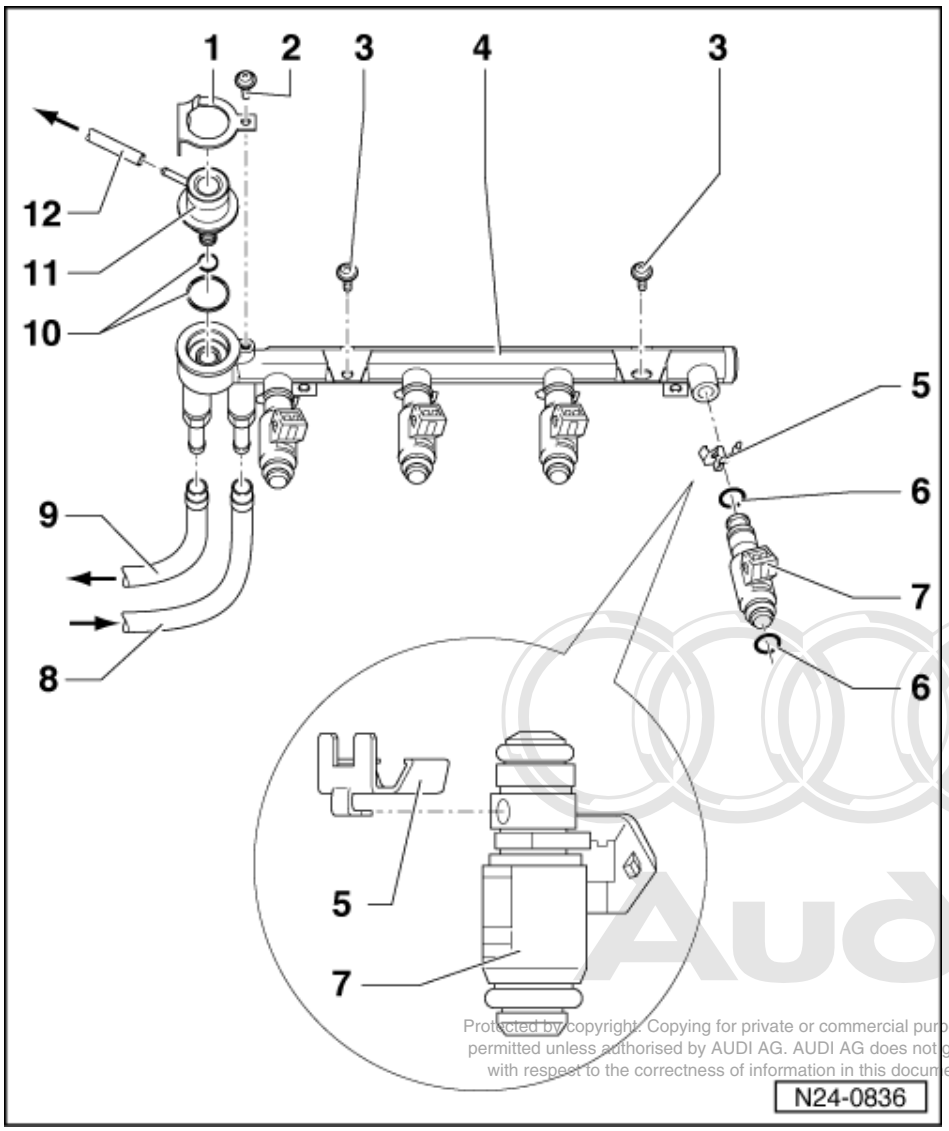

Protected by copyright. Copying for private or commercial purposes, in part or in whole, is not permitted unless authorised by AUDI AG. AUDI AG does not guarantee or accept any liability with respect to the correctness of information in this document. Copyright by AUDI AG.

6 O-ring

- Renew
- Before installing moisten with clean engine oil

7 Injectors (N30...N33)*

- Checking => Page 109
- Resistance 14.0...17.0 ω

8 Supply hose

- Black with white marks
- Secure with spring-type clips
- Check securely seated
- From fuel filter:

=> Repair group 20; Fuel supply system Fuel supply system

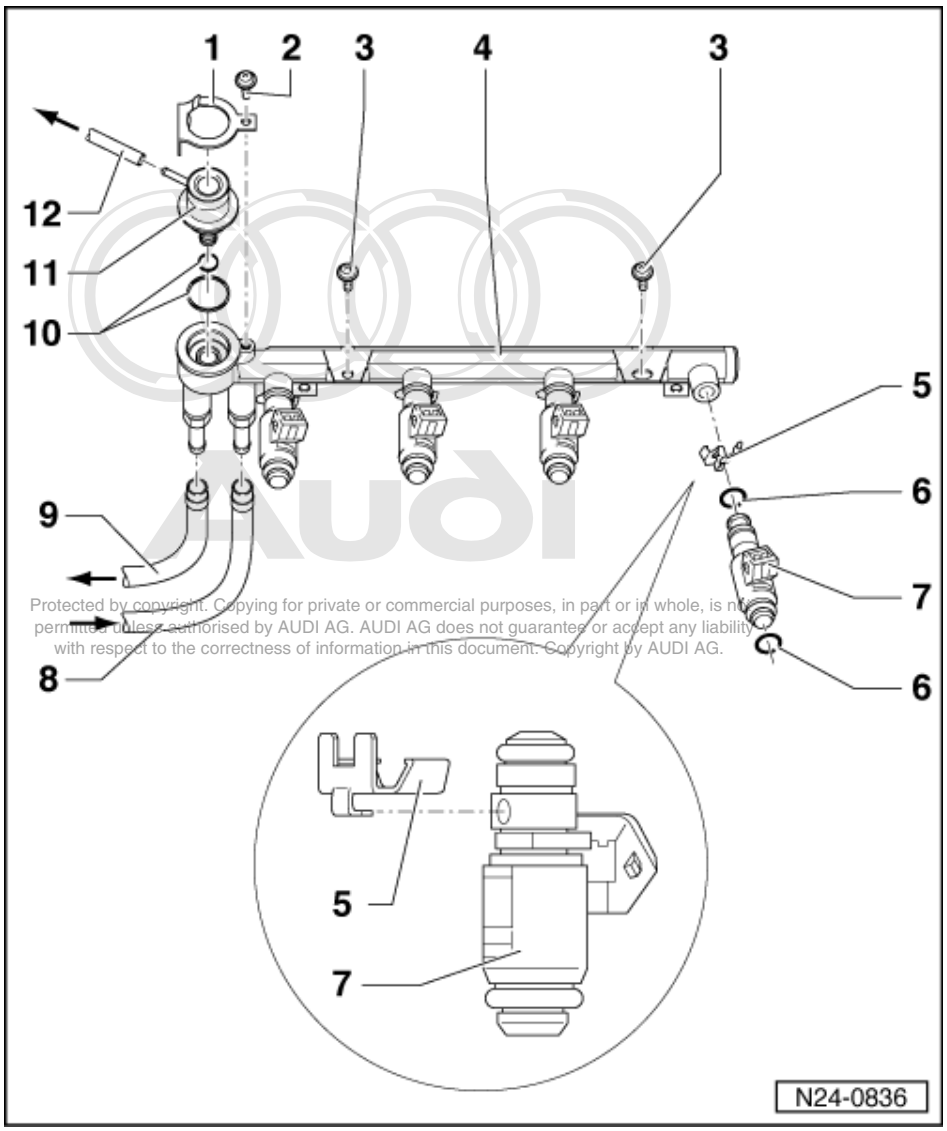

Protected by copyright. Copying for private or commercial purposes, in part or in whole, is not permitted unless authorised by AUDI AG. AUDI AG does not guarantee or accept any liability with respect to the correctness of information in this document. Copyright by AUDI AG.

9 Return hose

- Blue or with blue marking
- Secure with spring-type clips
- Check securely seated
- To the fuel delivery unit in fuel tank

=> Repair group 20; Fuel supply system Fuel supply system

10 O-ring

- Renew if damaged

11 Fuel pressure regulator

- Checking => Page 115 , checking fuel pressure regulator and holding pressure

12 Vacuum hose

- To intake manifold => Page 79 , item 13

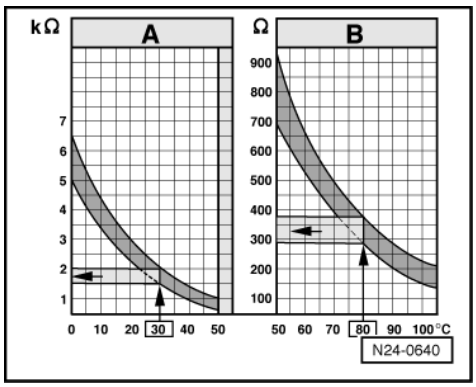

-> Fig. 1 Resistance values for coolant temperature sender (G62)

The diagram is divided into two temperature ranges:

A - From 0...50 °C
B - From 50...105 °C

Protected by copyright. Copying for private or commercial purposes, in part or in whole, is not permitted unless authorised by AUDI AG. AUDI AG does not guarantee or accept any liability with respect to the correctness of information in this document. Copyright by AUDI AG.

Examples:

- 30 °C is in range A and corresponds to a resistance of 1.5...2.0 kω
- 80 °C is in range B and corresponds to a resistance of 275...375 ω

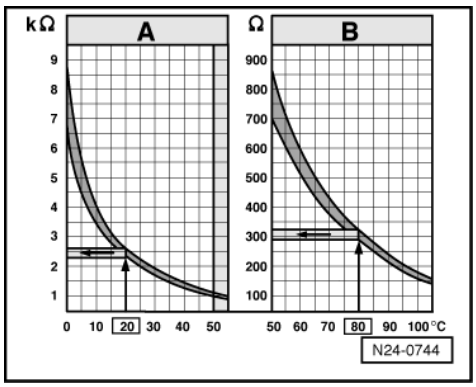

-> Fig.2 Resistance values for intake air temperature sender (G42)

The diagram is divided into two temperature ranges:

A - From 0...50 °C
B - From 50...105 °C

Examples:

- 20 °C is in range A and corresponds to a resistance of 2.3...2.6 kω
- 80 °C is in range B and corresponds to a resistance of 290...330 ω

1.8 - Safety precautions

Warning!
Fuel system is under pressure! Before opening the system place a cloth around the connection. Then release pressure by carefully loosening the connection.

To prevent injuries to persons and/or damage to the fuel injection and ignition system, the following must be noted:

- Do not touch or disconnect ignition wiring when the engine is running or being turned at starter speed.
- The ignition must be switched off before connecting or disconnecting injection or ignition system wiring or tester cables.

Observe following if test and measuring instruments are required during a test drive:

- Test and measuring instruments must be secured to rear seat and operated by a 2nd person from this location.

  If test and measuring instruments are operated from front passenger's seat and the vehicle is involved in an accident, there is a possibility that the person sitting in this seat may receive serious injuries when the airbag is triggered.

otected by copyright. Copying for private or commercial purposes, in part or in whole, is not
rmitted unless authorised by AUDI AG. AUDI AG does not guarantee or accept any liability
with respect to the correctness of information in this document. Copyright by AUDI AG.

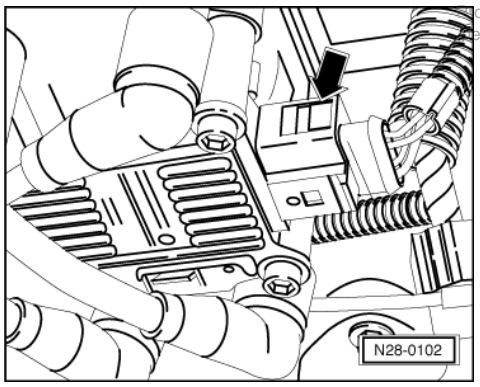

- If the engine is to be turned at starter speed, without starting:

- -> Pull 4 pin connector off ignition transformer -arrow-.

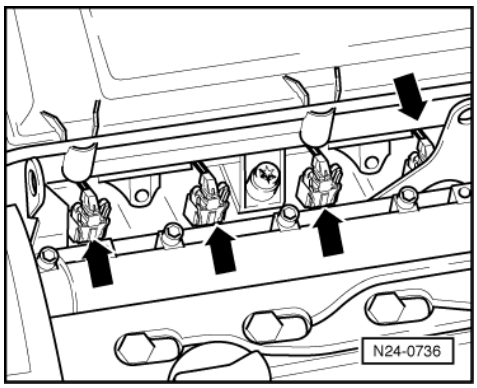

- -> Pull plugs -arrows- off all injectors.

1.9 - Rules for cleanliness

When working on the fuel supply/injection system, pay careful attention to the following "5 rules":

- Thoroughly clean all unions and the adjacent areas before disconnecting.
- Place parts that have been removed on a clean surface and cover them over. Do not use fluffy cloths.
- Carefully coveror seal opened components if the repair cannot be completed immediately.
- Only install clean components:
  Only unpack replacement parts immediately prior to installation.
  Do not use parts that have been stored loose (e.g. in tool boxes etc.).
- When the system is open:
  Do not work with compressed air if this can be avoided.
  Do not move vehicle unless absolutely necessary.

Protected by copyright. Copying for private or commercial purposes, in part or in whole, is not permitted unless authorised by AUDI AG. AUDI AG does not guarantee or accept any liability with respect to the correctness of information in this document. Copyright by AUDI AG.

1.10 - Technical data

Engine code			AUA
Idling test			
	Idling speed2)	rpm	680...7801)
Engine control unit3)			
	System		Magneti Marelli 4LV
	Part No.4)		036 906 034...
	Rev limiter	rpm	5500...5700

1) Up-to-date specifications:

=> Exhaust emissions test binder

2) Not adjustable

3) Replacing engine control unit => Page 133

4) For latest part number for engine control unit:

=> Parts film

2 - Checking components

2.1 - Checking components

2.2 - Checking lambda probe heating for lambda probe before catalytic converter

Special tools, workshop equipment, testers, measuring instruments and auxiliary items required

- Fault reader V.A.G 1551 or vehicle system tester V.A.G 1552 with cable V.A.G 1551/3
- Test box V.A.G 1598/31
- Hand multimeter V.A.G 1526 or multimeter V.A.G 1715
- Adapter set V.A.G 1594
- Current flow diagram

Check conditions

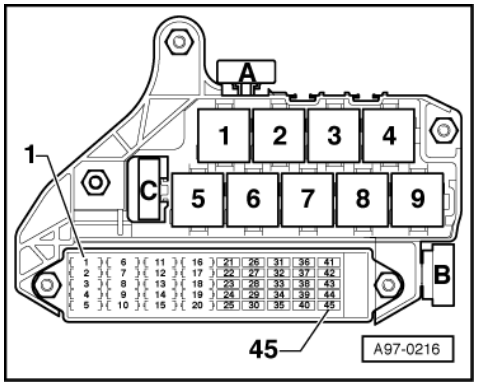

- -> Fuses for lambda probe must be OK.

=> Current flow diagrams, Electrical fault finding and Fitting locations binder

- The battery voltage must be at least 11.5 V.
- Fuel pump relay must be OK

Test sequence

- Connect fault reader V.A.G 1551 (V.A.G 1552). Start engine and select "Address word" 01 of engine control unit. When doing this the engine must be running at idling speed.
  (Connecting fault reader and selecting engine control unit
  => Page 7 .)

Protected by copyright. Copying for private or commercial purposes, in part or in whole, is not permitted unless authorised by AUDI AG. AUDI AG does not guarantee or accept any liability with respect to the correctness of information in this document. Copyright by AUDI AG.

-> Indicated on display:

```
Rapid data transfer      HELP
Select function XX
```

- Press keys 0 and 8 for the function "Read measured value block" and confirm entry with Q key.

-> Indicated on display:

```
Read measured value block      HELP
Input display group number XXX
```

- Press keys 0, 4 and 1 for "Display group number 41" and confirm entry with Q key.

-> Indicated on display:
(1...4 = Display zones)

```
Read measured value block 41
     1     2     3     4
```

- Check the status of the lambda probe heating in display zone 2:
  Display: Htg.bC.ON

Note:

The lambda probe heating may be switched on or off depending on the operating mode of the engine, therefore the display in display zone 2 may show "Htg.bC.ON or alternating from Htg.bC.ON to Htg.bC.OFF.

If the specification is not obtained:

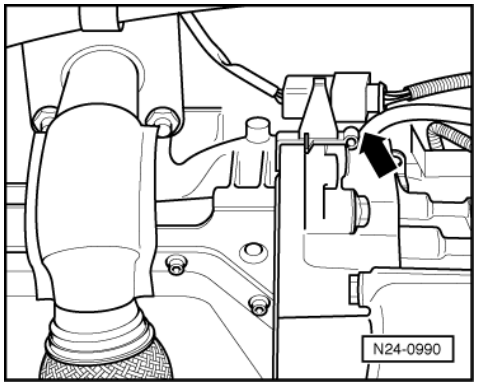

- -> Disconnect the 6-pin connector (black) to lambda probe before catalytic converter (G39).

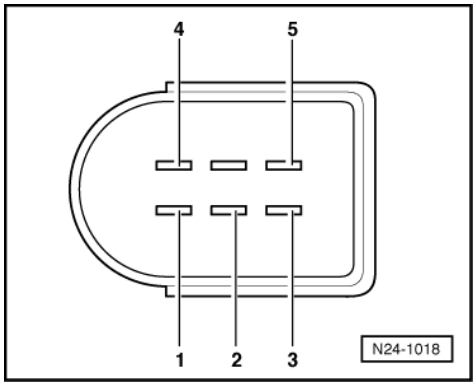

Test procedure if identification is not the same:

- -> Connect multimeter (resistance test range) between contacts 3 and 4.

◆ Specification at room temperature: 2.5 ... 10 ω

Test procedure if identification is the same:

- Connect multimeter (resistance test range) between contacts 1 and 2.

◆ Specification at room temperature: 2.5 ... 10 ω

If specification is not obtained:

- Replace lambda probe before catalytic converter (G39).

If specification is obtained:

Protected by copyright. Copying for private or commercial purposes, in part or in whole, is not permitted unless authorised by AUDI AG. AUDI AG does not guarantee or accept any liability with respect to the correctness of information in this document. Copyright by AUDI AG.

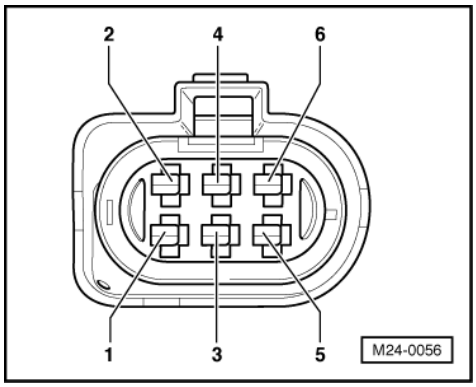

- -> Set multimeter to measure voltage and connect to contacts 1 and 2 on connector to control unit.
- Start engine and run at idling speed.
- Measure the voltage supply:
  When display group 41, display zone 2 displays
  Display, Htg.bC.ON:
  Specification: 11.0...14.5 V
  Display, Htg. bC.ON/Htg.bC.OFF (alternating)
  Specification: Between 0.0...12.0 V fluctuating
- Switch off ignition.

If no voltage is present:

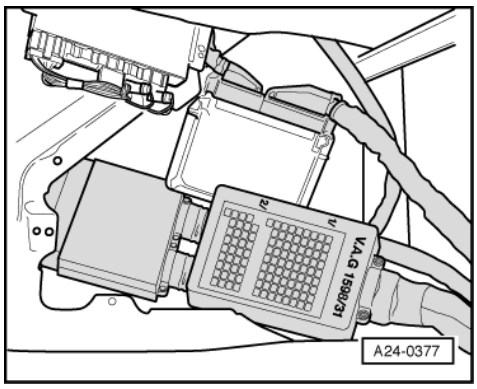

- -> Connect test box V.A.G 1598/31 to control unit wiring harness. The engine control unit remains disconnected => Page 66 .

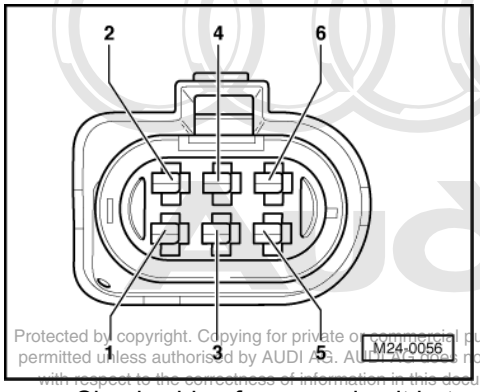

Protected by copyright. Copying for private or commercial purposes, in part or in whole, is not permitted unless authorised by AUDI AG. AUDI AG does not guarantee or accept any liability with respect to the correctness of information in this document. Copyright by AUDI AG.

- -> Check wiring for open circuit between test box and 6-pin connector using current flow diagram.
  Contact 1+socket 5
  Wire resistance: Max. 1.5 ω

If the specification is obtained:

- Check wiring from contact 2 to fuel pump relay (J17) using current flow diagram.

=> Current flow diagrams, Electrical fault finding and Fitting locations binder

2.3 - Checking lambda probe heating for lambda probe after catalytic converter

Special tools, workshop equipment, testers, measuring instruments and auxiliary items required

- Fault reader V.A.G 1551 or vehicle system tester V.A.G 1552 with cable V.A.G 1551/3
- Hand multimeter V.A.G 1526 or multimeter V.A.G 1715
- Adapter set V.A.G 1594
- Current flow diagram

Check conditions

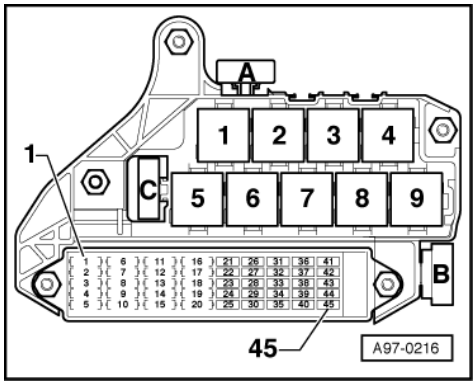

- -> Fuses for lambda probe must be OK.

=> Current flow diagrams, Electrical fault finding and Fitting locations binder

- The battery voltage must be at least 11.5 V.
- Fuel pump relay must be OK

Test sequence

- Connect fault reader V.A.G 1551 (V.A.G 1552). Start engine and select "Address word" 01 of engine control unit. When doing this the engine must be running at idling speed.
  (Connecting fault reader and selecting engine control unit => Page 7 .)

-> Indicated on display:

```
Rapid data transfer     HELP
Select function XX
```

- Press keys 0 and 8 for the function "Read measured value block" and confirm entry with Q key.

-> Indicated on display:

```
Read measured value block     HELP
Input display group number XXX
```

- Press keys 0, 4 and 1 for "Display group number 41" and confirm entry with Q key.

-> Indicated on display:
(1...4 = Display zones)

```
Read measured value block 41
     1     2     3     4
```

- Check status of lambda probe heating after catalytic converter in display zone 4:
  Display: Htg.aC.ON

Protected by copyright. Copying for private or commercial purposes, in part or in whole, is not permitted unless authorised by AUDI AG. AUDI AG does not guarantee or accept any liability with respect to the correctness of information in this document. Copyright by AUDI AG.

Note:

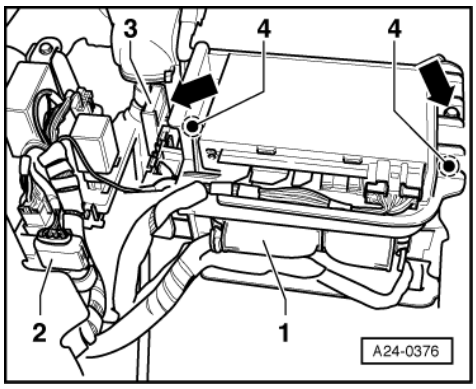

The lambda probe heating may be switched on or off depending on the operating mode of the engine, therefore the display in display zone 4 may show "Htg.aC.ON or alternating from Htg.aC.ON to Htg.aC.OFF.

If the specification is not obtained:

- -> Unplug 4-pin connector to lambda probe (G130) -2-. Fitting location: electronics box in left footwell.
- Lift up floor mat in left footwell:

=> General body repairs, Interior; Repair group 70; Removing and installing floor mats Removing and installing floor mats

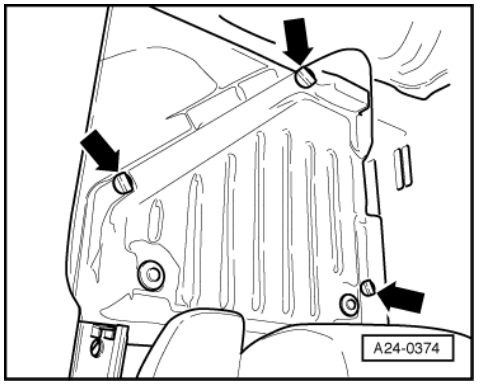

- -> Remove screws -arrows- securing cover.
- Take off cover.

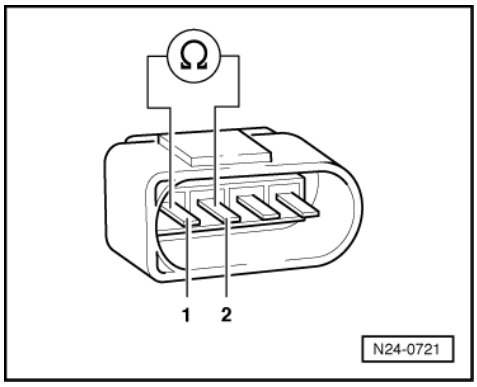

- -> Check probe heating for continuity at lambda probe connector contacts 1 and 2.

Note:

The heater element resistance is approx. 1...5 ω at room temperature. Even slight increases in room temperature increase the resistance greatly.

If it is determined that probe heating has an open circuit:

- Renew the lambda probe after catalytic converter (G130).

If probe heating has continuity:

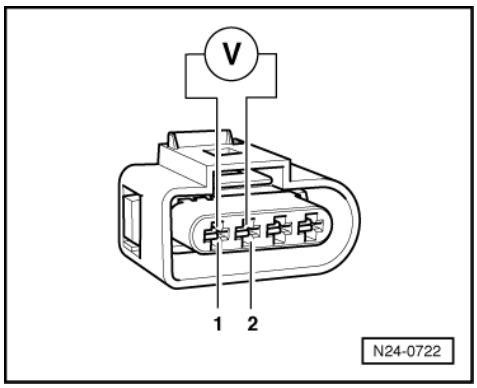

Protected by copyright. Copying for private or commercial purposes, in part or in whole, is not permitted unless authorised by AUDI AG. AUDI AG does not guarantee or accept any liability with respect to the correctness of information in this document. Copyright by AUDI AG.

- -> Connect multimeter using aux. cables from V.A.G 1594 to measure voltage at contacts 1+2 (connector to engine control unit).
- Start engine and run at idling speed.
- Measure the voltage supply:
  When display group 41, display zone 4 displays
  Display, Htg.aC.ON:
  Specification: 11.0...14.5 V
  Display, Htg. aC.ON/Htg.aC.OFF (alternating)
  Specification: Between 0.0...12.0 V fluctuating
- Switch off ignition.

If no voltage is present:

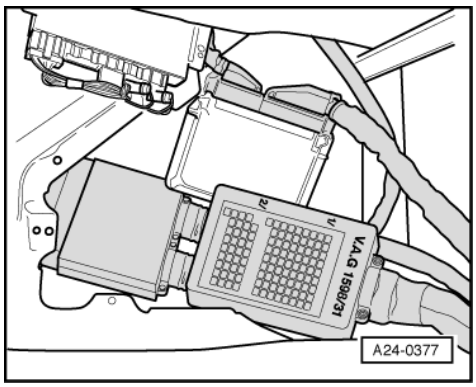

- -> Connect test box V.A.G 1598/31 to control unit wiring harness. The engine control unit remains disconnected => Page 66 .

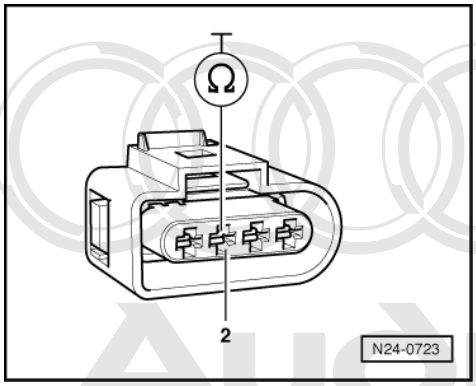

- -> Check wiring for open circuit between 4-pin connector contact 2 and socket 63
  Wire resistance: Max. 1.5 ω

Protected by copyright. Copying for private or commercial purposes, in part or in whole, is not permitted unless authorised by AUDI AG. AUDI AG does not guarantee or accept any liability with respect to the correctness of information in this document. Copyright by AUDI AG.

If the specification is obtained:

- Check wire between 4 pin connector contact 1 and fuel pump relay (J17) for open circuit using current flow diagram.
  Wire resistance: max. 1.5 ω

2.4 - Testing accelerator position senders

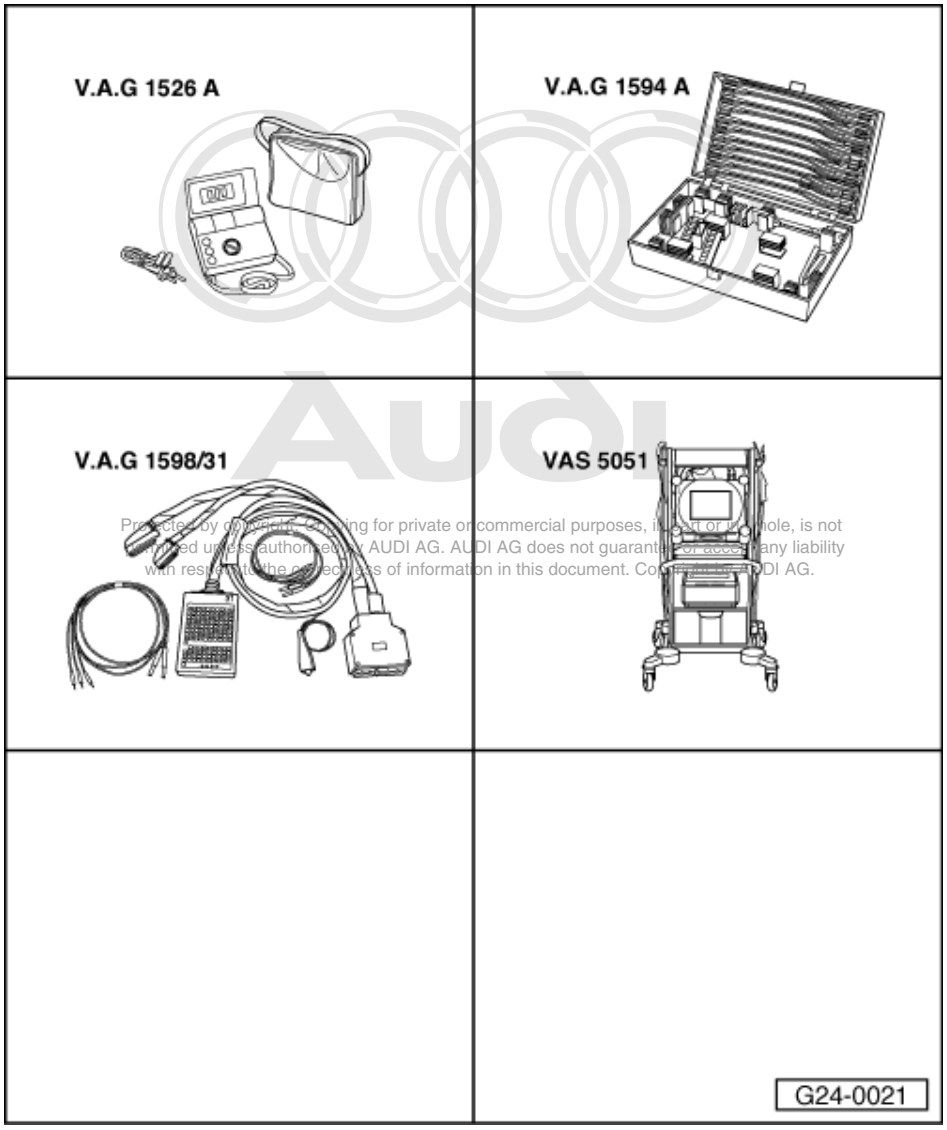

Protected by copyright. Copying for private or commercial purposes, in part or in whole, is not permitted unless authorised by AUDI AG. AUDI AG does not guarantee or accept any liability with respect to the correctness of information in this document. Copyright by AUDI AG.

Special tools and workshop equipment required

- V.A.G 1526 A
- V.A.G 1594 A
- V.A.G 1598/31
- VAS 5051 with VAS 5051/1

or

- V.A.G 1551 with V.A.G 1551/3 A

Accelerator position senders -G79 and -G185 are located on the accelerator pedal. Both senders inform the engine control unit of the driver's throttle requirement (pedal position), but each functions completely independently of the other (redundancy principle). Both senders are located in a single housing.

Test sequence

- Connect vehicle diagnostic, testing and information system VAS 5051 (or fault reader V.A.G 1551) and select engine electronics control unit by entering address word "01" (=> Page 7 .)
  When doing this the ignition must be switched on.

-> Indicated on display:

```
Rapid data transfer      HELP
Select function XX
```

- Enter "08" to select the function "Read measured value block" and confirm entry with Q key.

-> Indicated on display:

```
Read measured value block     Q
Enter display group number XXX
```

- Enter "062" for Display Group 062 and confirm entry with Q key.

- Check display values for electronic throttle potentiometer voltages.

	Display zones			
	1	2	3	4
Display Group 062: Electronic throttle potentiometer voltages				
Display	xx %	**xx %**	xx %	**xx %**
Indicates	Throttle valve angle (angle sender 1)	**Throttle valve angle (angle sender 2)**	Accelerator position sender	**Accelerator position sender 2**
Range	0 ... 100 %	100...0 %	0 ... 100 %	**0 ... 100 %**
Specification	3...100 %	3...100 %	**12...97 %**	**12...97 %**

Note:

The engine control unit converts the voltage readings from the angle senders into percentages of 5 V and displays them as percentages. (A supply voltage of 5 V is equivalent to 100%.)

- Observe display zones 3 and 4.
- Slowly depress accelerator to full throttle position.

The percentage value in display zone 3 should rise steadily between 12 and 97 % but without covering the full range of values.

The percentage value in display zone 4 should also rise steadily but without covering the full range of values (12...97 %).

If the display values do not appear as described:

- Check whether connector of accelerator pedal position has become detached, is not properly engaged or if the contacts of the connector are corroded.
- Test voltage supply and wiring to accelerator position senders
  =>Page 93 .

Testing voltage supply

- Remove storage compartment on driver's side.

Protected by copyright. Copying for private or commercial purposes, in part or in whole, is not permitted unless authorised by AUDI AG. AUDI AG does not guarantee or accept any liability with respect to the correctness of information in this document. Copyright by AUDI AG.

=> General body repairs, Interior; Repair group 68; Storage compartments, covers and trim; Removing driver's storage compartment Storage compartments, covers and trim Removing driver's storage compartment

- Unplug connector for accelerator position sender.
- Switch ignition on.

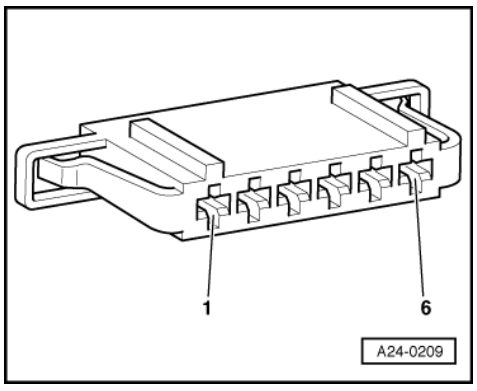

- -> Connect multimeter (voltage measurement range) as follows:

Connector Contact	Specification
1 + earth	approx. 5 V
1 + 5	approx. 5 V
2 + earth	approx. 5 V
2 + 3	approx. 5 V

If the specifications are obtained:

- Test the signal wires.

If the specifications are not obtained:

- Test wiring between engine control unit and accelerator position senders.

Testing wiring

- Connect test box V.A.G 1598/31 to wiring harness for engine control unit. Do not connect to the engine control unit itself.
=> Page 66 .

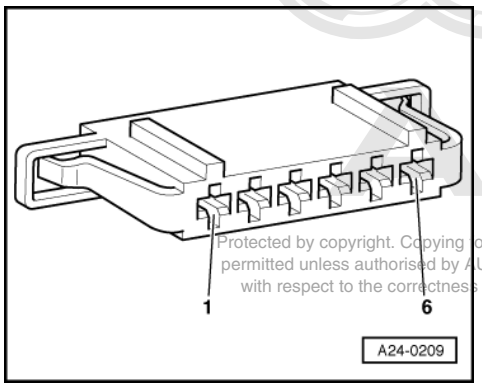

Protected by copyright. Copying for private or commercial purposes, in part or in whole, is not permitted unless authorised by AUDI AG. AUDI AG does not guarantee or accept any liability with respect to the correctness of information in this document. Copyright by AUDI AG.

- -> Test for open circuit and short to positive or earth in the following wiring connections:

Connector Contact	Test box V.A.G 1598/31 Socket
1	72
2	73
3	36
4	35
5	33
6	34

- Rectify any open/short circuit as necessary.

If no fault is detected in the wiring:

- Renew accelerator position senders.

=> Fuel supply system, Petrol engines; Repair group 20; Servicing accelerator mechanism - Vehicles with electronic throttle system Servicing accelerator mechanism - Vehicles with electronic throttle system

2.5 - Checking throttle valve control part

Components of throttle valve control part (J338):
Throttle valve drive (G186), angle sender 1 for throttle valve drive (G187) and angle sender 2 for throttle valve drive (G188).

Note:

If the throttle valve control part is replaced, the new control part must without fail be adapted to the engine control unit => Page 136 .

On vehicles fitted with an automatic gearbox the gearbox control unit must also be adapted:

=> Self-diagnosis for automatic gearbox 001; Repair group 01; Performing self-diagnosis Performing self-diagnosis

Special tools, workshop equipment, testers, measuring instruments and auxiliary items required

- Test box V.A.G 1598/31
- Hand multimeter V.A.G 1526 or multimeter V.A.G 1715
- Adapter set V.A.G 1594
- Current flow diagram

Test conditions

- Throttle valve not damaged or dirty.

Test sequence

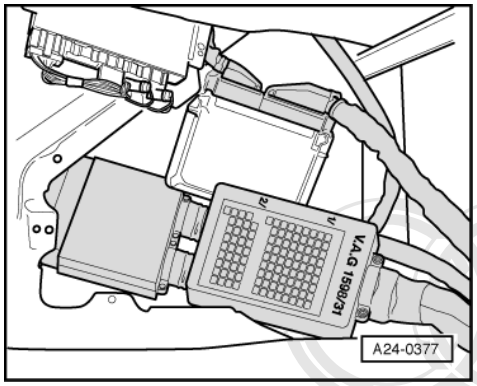

- -> Connect test box V.A.G 1598/31 to control unit wiring harness. The engine control unit remains disconnected => Page 66 .
- Measure resistance of throttle valve drive between contacts 117 + 118 on test box
  Specification: 3...200 ω

If the specification is not obtained:

- Replace throttle valve control part (J338).

Protected by copyright. Copying for private or commercial purposes, in part or in whole, is not permitted unless authorised by AUDI AG. AUDI AG does not guarantee or accept any liability with respect to the correctness of information in this document. Copyright by AUDI AG.

If the specification is obtained:

- Check voltage supply of throttle valve control part and wiring to control unit => Page 96 .

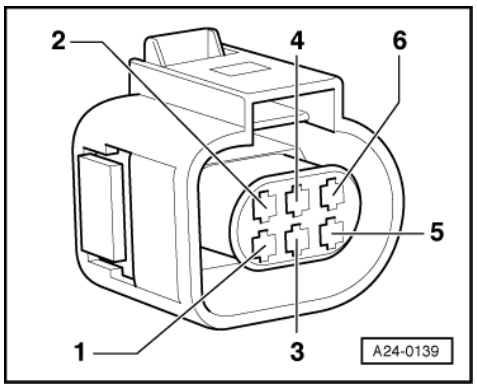

If the voltage supply and wiring is OK:

- Renew engine control unit => Page 133 .

Checking voltage supply and wiring to control unit

- -> Pull the 6-pin connector off the throttle valve control part.
- Connect the multimeter to measure voltage to contacts 2 + 6 of the connector.
- Switch on ignition.
  Specification: min. 4.5 V
- Switch off ignition.
- Connect the multimeter to measure voltage to contact 2 of the connector and earth.
- Switch on ignition.
  Specification: min. 4.5 V
- Switch off ignition.

If the specifications are not attained:

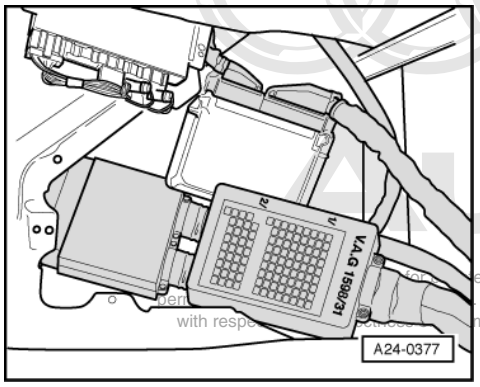

e or commercial purposes, in part or in whole, is not
AUDI AG does not guarantee or accept any liability
with respe mation in this document. Copyright by AUDI AG.

- -> Connect test box V.A.G 1598/31 to control unit wiring harness. The engine control unit remains disconnected => Page 66 .
- Check wiring for open circuit between test box and connector using current flow diagram:
  Contact 1+socket 92
  Contact 2+socket 83
  Contact 3+socket 117
  Contact 4+socket 84
  Contact 5+socket 118
  Contact 6+socket 91
  Wire resistance: max. 1.5 ω
- Additionally check wires for short to one another.
- Additionally check the wiring for short to battery positive or earth.

If no fault is detected in the wiring:

- Check engine control unit voltage supply => Page 130 .

2.6 - Checking intake manifold pressure sender

Note:

Only gold-plated contacts may be used when servicing the sender connector contacts

Special tools, workshop equipment, testers, measuring instruments and auxiliary items required

- Fault reader V.A.G 1551 or vehicle system tester V.A.G 1552 with cable V.A.G 1551/3A
- Test box V.A.G 1598/31
- Hand multimeter V.A.G 1526 or multimeter V.A.G 1715
- Adapter set V.A.G 1594

- Current flow diagram

Test sequence

- Connect fault reader V.A.G 1551 (V.A.G 1552). Start engine and select "Address word" 01 of engine control unit. When doing this the engine must be running at idling speed.
  (Connecting fault reader and selecting engine control unit
  => Page 7 .)

-> Indicated on display:

```
Rapid data transfer     HELP
Select function XX
```

- Press keys 0 and 8 for the function "Read measured value block" and confirm entry with Q key.

-> Indicated on display:

```
Read measured value block     HELP
Input display group number XXX
```

- Press keys 0, 0 and 3 for "Display group number 3" and confirm entry with Q key.

-> Indicated on display:
(1...4 = Display zones)

```
Read measured value block 3
     1     2     3     4
```

- Read off the displayed value for intake manifold pressure in display zone 2 and note this value.
- Briefly open throttle valve. The intake manifold pressure value must increase briefly.

If the display shows constantly 91 mbar or 1254 mbar:

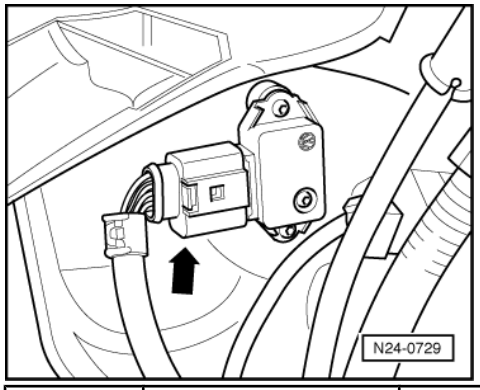

Display	Cause	Continuation of check
91 mbar	Open circuit or short to earth	=> Page 97
1254 mbar	Short to positive	=> Page 99

Continuation of check when display shows 91 mbar:

Protected by copyright. Copying for private or commercial purposes, in part or in whole, is not permitted unless authorised by AUDI AG. AUDI AG does not guarantee or accept any liability with respect to the correctness of information in this document. Copyright by AUDI AG.

- -> Pull 4 pin connector off intake manifold pressure sender (G71) with intake air temperature sender (G42) -arrow- (engine can stall).

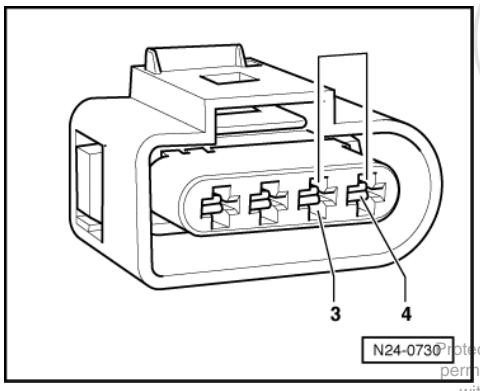

Protected by copyright. Copying for private or commercial purposes, in part or in whole, is not permitted unless authorised by AUDI AG. AUDI AG does not guarantee or accept any liability with respect to the correctness of information in this document. Copyright by AUDI AG.

- -> Bridge connector contacts 3+4 with aux. cables from V.A.G 1594 and observe display.

If the display jumps to 1254 mbar:

- Press ⇒key.
- Press keys 0 and 6 for the function "End output" and confirm entry with the Q key.
- Switch off ignition.

- Renew the intake manifold pressure sender (G71) with intake air temperature sender (G42) => Page 78 , item 11 .

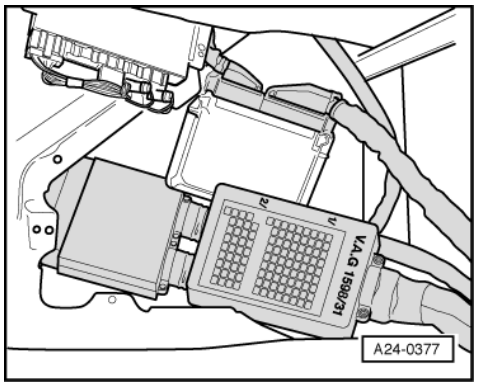

If the display remains at 91 mbar:

- Press ⇒key.
- Press keys 0 and 6 for the function "End output" and confirm entry with the Q key.
- Switch off ignition.
- -> Connect test box V.A.G 1598/31 to control unit wiring harness. The engine control unit remains disconnected => Page 66 .

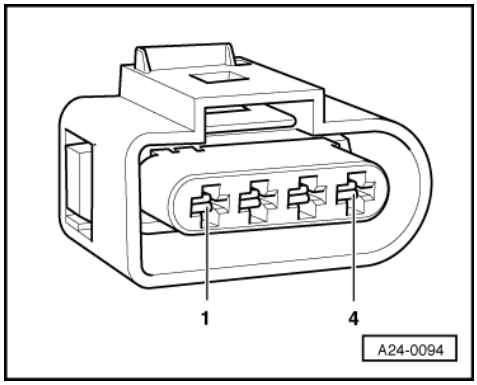

- -> Check wiring for open circuit between test box and connector using current flow diagram.
  Contact 3+socket 98
  Contact 4+socket 109
  Wire resistance: Max. 1.5 ω
- Additionally check wiring contact 4 for short to earth and to contact 1.

Specification: ∞ω

If no fault is detected in the wiring:

- Renew engine control unit => Page 133 .

Continuation of check when display shows 1254 mbar:

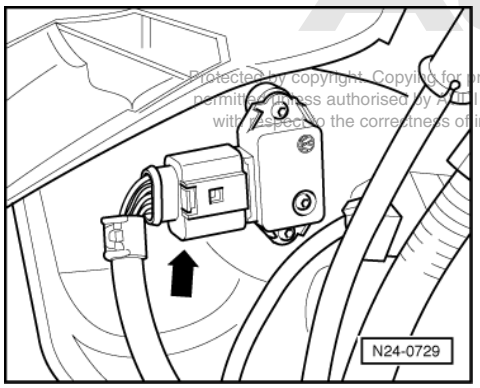

Protected by copyright. Copying for private or commercial purposes, in part or in whole, is not permitted unless authorised by AUDI AG. AUDI AG does not guarantee or accept any liability with respect to the correctness of information in this document. Copyright by AUDI AG.

- -> Pull 4 pin connector off intake manifold pressure sender (G71) with intake air temperature sender (G42) -arrow- (engine can stall).

If the display jumps to 91 mbar:

- Press ⇒key.
- Press keys 0 and 6 for the function "End output" and confirm entry with the Q key.
- Switch off ignition.
- Renew the intake manifold pressure sender (G71) with intake air temperature sender (G42) => Page 78 , item 11 .

If the display remains at 1254:

- Press the ⇒key.
- Press keys 0 and 6 for the function "End output" and confirm entry with the Q key.
- Switch off ignition.

- Release connector from control unit and pull off.

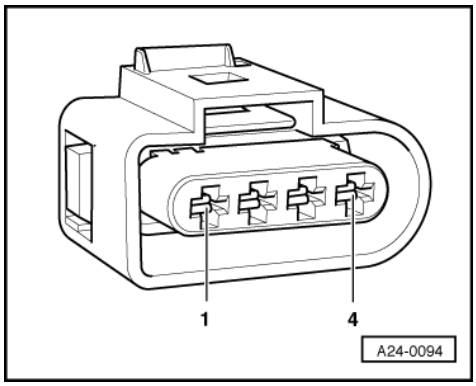

- -> Check wiring to control unit connector at 4 pin connector contact 4 for short to wire contact 3 and to battery positive.
  Specification: ∞ω

If no fault is detected in the wiring:

- Renew engine control unit => Page 133 .

2.7 - Checking intake air temperature sender

Note:
Only gold-plated contacts may be used when servicing the sender connector contacts

Special tools, workshop equipment, testers, measuring instruments and auxiliary items required

- Fault reader V.A.G 1551 or vehicle system tester V.A.G 1552 with cable V.A.G 1551/3A
- Test box V.A.G 1598/31
- Hand multimeter V.A.G 1526 or multimeter V.A.G 1715
- Adapter set V.A.G 1594
- Current flow diagram
- Chilling spray (commercially available)

Test sequence

- Connect the fault reader V.A.G 1551 (V.A.G 1552). Then switch ignition on and select engine control unit with the "Address word" 01.
  (Connecting fault reader and selecting engine control unit
  => Page 7 .)

-> Indicated on display:

```
Rapid data transfer      HELP
Select function XX
```

- Press keys 0 and 8 for the function "Read measured value block" and confirm entry with Q key.

-> Indicated on display:

```
Read measured value block      HELP
Input display group number XXX
```

- Press keys 0, 0 and 4 for "Display group number 4" and confirm entry with Q key.

-> Indicated on display:
(1...4 = Display zones)

```
Read measured value block      4
     1      2      3      4
```

- Read off intake air temperature value in display zone 4.

If the specification is not obtained:

- Perform check according to following table:

Display	Cause	Continuation of check
-40 °C	Open circuit or short to positive	=> Page 101
120 °C	Short to earth	=> Page 102
Approx. ambient temperature1)	---	=> Page 103

Protected by copyright. Copying for private or commercial purposes, in part or in whole, is not permitted unless authorised by AUDI AG. AUDI AG does not guarantee or accept any liability with respect to the correctness of information in this document. Copyright by AUDI AG.

1) If a temperature is displayed which is below the ambient air temperature of the sender, check sender wiring for transfer resistances. Note when doing this that sender is heated from external sources, e.g. radiated heat when engine is not running.

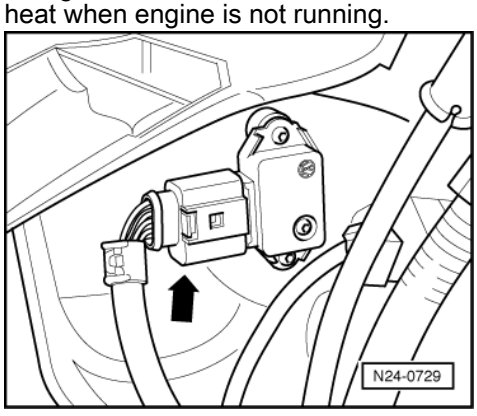

Continuation of check when display -40 °C:

- -> Pull 4 pin connector off intake air temperature sender (G42) with intake manifold pressure sender (G71) -arrow-.

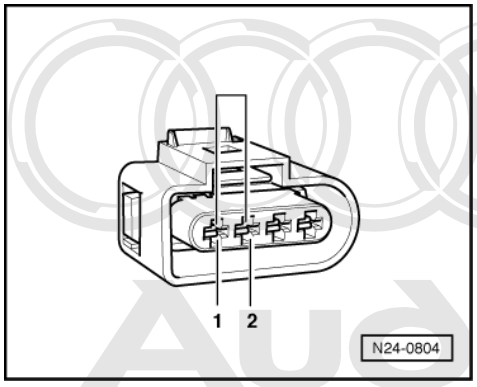

- -> Bridge connector contacts 1+2 using aux. cables from V.A.G 1594 and observe display.

Protected by copyright. Copying for private or commercial purposes, in part or in whole, is not permitted unless authorised by AUDI AG. AUDI AG does not guarantee or accept any liability with respect to the correctness of information in this document. Copyright by AUDI AG.

If the display jumps to 120 °C:

- Press ⇒key.
- Press keys 0 and 6 for the function "End output" and confirm entry with the Q key.
- Switch off ignition.
- Renew the intake manifold pressure sender (G71) with intake air temperature sender (G42) => Page 78 , item 11 .

If the display remains at -40 °C:

- Press ⇒key.

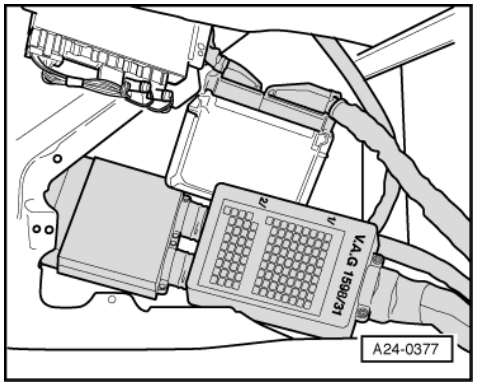

- Press keys 0 and 6 for the function "End output" and confirm entry with the Q key.
- Switch off ignition.
- -> Connect test box V.A.G 1598/31 to control unit wiring harness. The engine control unit remains disconnected => Page 66 .

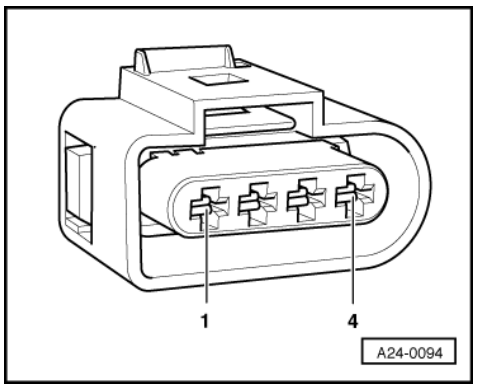

- -> Check the wiring for open circuit between test box and 4-pin connector using current flow diagram.
  Contact 1+socket 108
  Contact 2+socket 85
  Wire resistance: Max. 1.5 ω
- Check wiring additionally for short circuit to battery positive.
  Specification: ∞ω

If no fault is detected in the wiring:

- Renew the intake manifold pressure sender (G71) with intake air temperature sender (G42) => Page 78 , item 11 .

Continuation of check when display shows 120 °C:

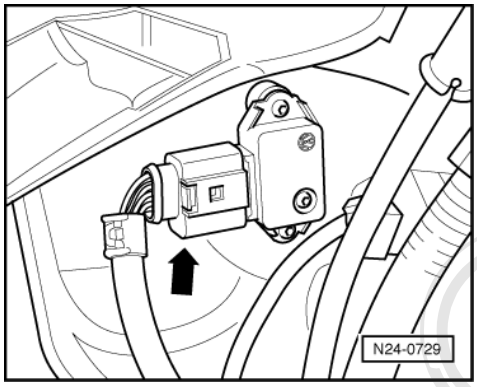

- -> Pull 4 pin connector off intake air temperature sender (G42) with intake manifold pressure sender (G71) -arrow-.

If the display jumps to -40 °C:

- Press ⇒key.
- Press keys 0 and 6 for the function "End output" and confirm entry with the Q key.
- Switch off ignition.
- Renew the intake manifold pressure sender (G71) with intake air temperature sender (G42) => Page 78 , item 11 .

Protected by copyright. Copying for private or commercial purposes, in part or in whole, is not permitted unless authorised by AUDI AG. AUDI AG does not guarantee or accept any liability with respect to the correctness of information in this document. Copyright by AUDI AG.

If the display remains at 120 °C:

- Press ⇒key.
- Press keys 0 and 6 for the function "End output" and confirm entry with the Q key.

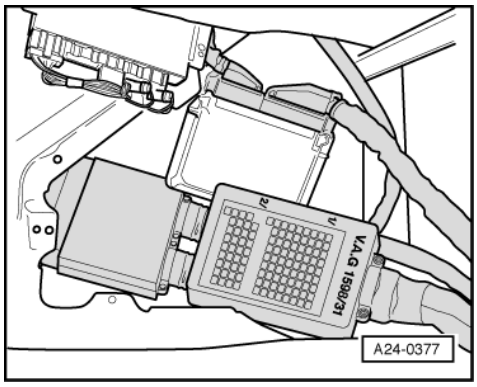

- Switch off ignition.
- -> Connect test box V.A.G 1598/31 to control unit wiring harness. The engine control unit remains disconnected => Page 66 .

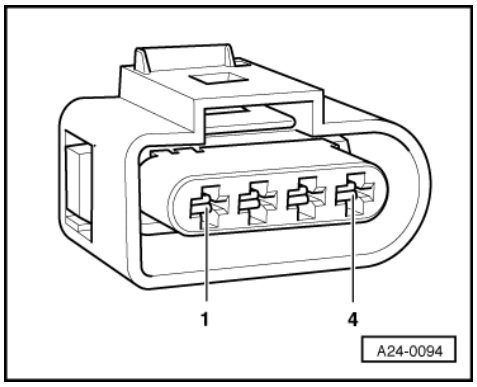

- -> Check the wiring for open circuit between test box and 4-pin connector using current flow diagram.
  Contact 1+socket 108
  Contact 2+socket 85
  Wire resistance: Max. 1.5 ω
- Check wiring additionally for short circuit to battery positive.
  Specification: ∞ω

If no fault is detected in the wiring:

- Renew the intake manifold pressure sender (G71) with intake air temperature sender (G42) => Page 78 , item 11 .

Continuation of check when display = ambient temperature:

Functional check of sender

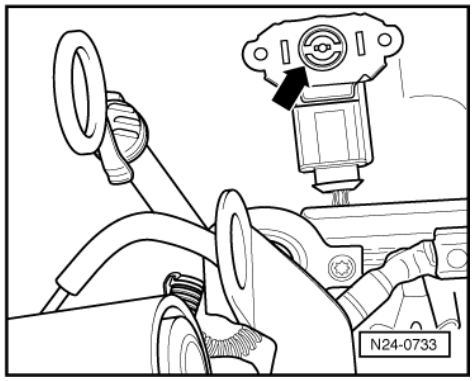

- -> Remove intake air temperature sender together with intake manifold pressure sender (connector remains connected).
- Note intake air temperature value in display zone 4.
- Spray sender with commercial chilling agent whilst observing the temperature value. The temperature value must
  decrease.
- Press ⇒key.
- Press keys 0 and 6 for the function "End output" and confirm entry with the Q key.
- Switch off ignition.

Protected by copyright. Copying for private or commercial purposes, in part or in whole, is not permitted unless authorised by AUDI AG. AUDI AG does not guarantee or accept any liability with respect to the correctness of information in this document. Copyright by AUDI AG.

If the specification is not obtained:

- Renew the intake manifold pressure sender (G71) with intake air temperature sender (G42) => Page 78 , item 11 .

2.8 - Checking coolant temperature sender

Special tools, workshop equipment, testers, measuring instruments and auxiliary items required

- Fault reader V.A.G 1551 or vehicle system tester V.A.G 1552 with cable V.A.G 1551/3A
- Test box V.A.G 1598/31
- Hand multimeter V.A.G 1526 or multimeter V.A.G 1715
- Adapter set V.A.G 1594
- Current flow diagram

Test sequence

- Connect the fault reader V.A.G 1551 (V.A.G 1552). Then switch ignition on and select engine control unit with the "Address word" 01.
  (Connecting fault reader and selecting engine control unit => Page 7 .)

-> Indicated on display:

```
Rapid data transfer      HELP
Select function XX
```

- Press keys 0 and 8 for the function "Read measured value block" and confirm entry with Q key.

-> Indicated on display:

```
Read measured value block     HELP
Input display group number XXX
```

- Press keys 0, 0 and 1 for "Display group number 1" and confirm entry with Q key.

-> Indicated on display:
(1...4 = Display zones)

```
Read measured value block     1
     1     2     3     4
```

- Note coolant temperature value in display zone 2.

Display	Cause	Continuation of check
-40 °C	Open circuit or short to positive	=> Page 104
120 °C	Short to earth	=> Page 105
Approx. coolant temperature1)	---	Only if sporadic faults have been detected:2) => Page 107

1) If a temperature is displayed which deviates greatly from the ambient temperature of the sender, check sender wiring for transfer resistances.
2) Check is only possible when the engine is cold.

Continuation of check when display shows -40 °C:

- Unplug 4-pin connector from coolant temperature sender (G62) with coolant temperature gauge sender (G2).
- Fitting locations=>Page 63

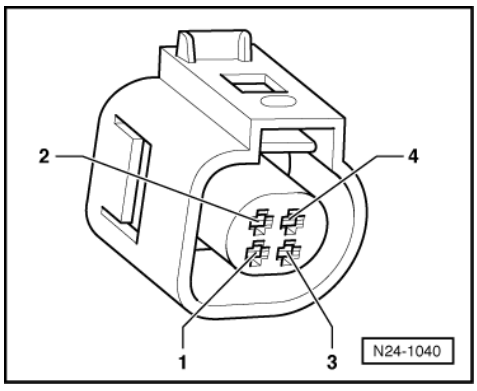

Protected by copyright. Copying for private or commercial purposes, in part or in whole, is not permitted unless authorised by AUDI AG. AUDI AG does not guarantee or accept any liability with respect to the correctness of information in this document. Copyright by AUDI AG.

- -> Bridge connector contacts 3+4 using adapter cables from V.A.G 1594 and observe display.

If the display jumps to 120 °C:

- Press ⇒key.
- Press keys 0 and 6 for the function "End output" and confirm entry with the Q key.
- Switch off ignition.
- Replace coolant temperature sender (G62) with coolant temperature gauge sender (G2) =>Page 73 , item 16 .

If the display remains at -40 °C:

- Press ⇒key.

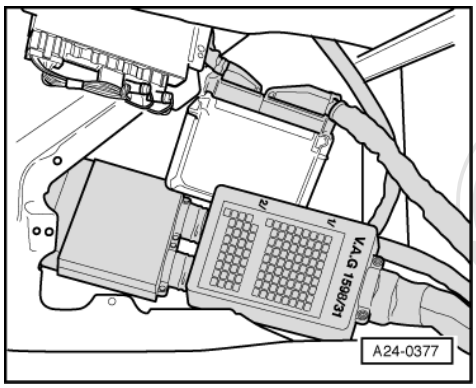

- Press keys 0 and 6 for the function "End output" and confirm entry with the Q key.
- Switch off ignition.
- -> Connect test box V.A.G 1598/31 to control unit wiring harness. The engine control unit remains disconnected => Page 66 .

Protected by copyright. Copying for private or commercial purposes, in part or in whole, is not permitted unless authorised by AUDI AG. AUDI AG does not guarantee or accept any liability with respect to the correctness of information in this document. Copyright by AUDI AG.

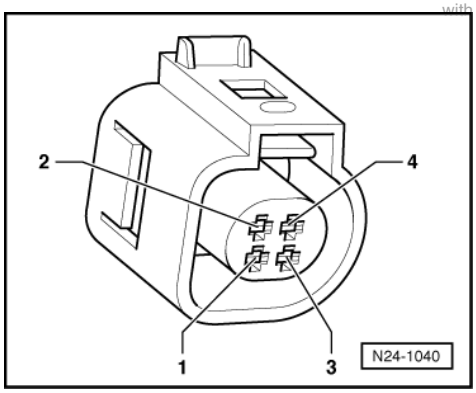

- -> Check wiring for open circuit between test box and 4-pin connector using current flow diagram.
  Contact 3 + socket 108
  Contact 4 + socket 93
  Wire resistance: Max. 1.5 ω
- Check wiring additionally for short circuit to battery positive.
  Specification: ∞ω

If no fault is detected in the wiring:

- Replace coolant temperature sender (G62) with coolant temperature gauge sender (G2) =>Page 73 , item 16 .

Continuation of check when display shows 120 °C:

- Unplug 4-pin connector from coolant temperature sender (G62) with coolant temperature gauge sender (G2).

- Fitting locations overview =>Page 63

If the display jumps to -40 °C:

- Press ⇒key.
- Press keys 0 and 6 for the function "End output" and confirm entry with the Q key.
- Switch off ignition.
- Replace coolant temperature sender (G62) with coolant temperature gauge sender (G2) =>Page 73 , item 16 .

If the display remains at 120 °C:

- Press ⇒key.
- Press keys 0 and 6 for the function "End output" and confirm entry with the Q key.

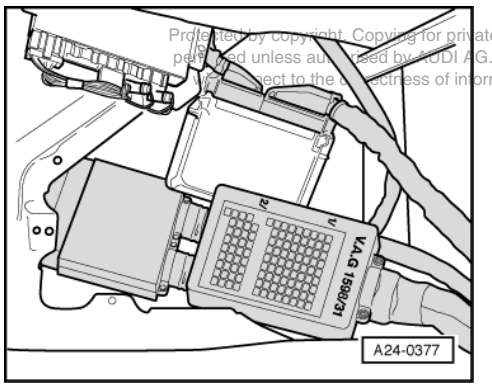

Protected by copyright. Copying for private or commercial purposes, in part or in whole, is not permitted unless authorised by AUDI AG. AUDI AG does not guarantee or accept any liability with respect to the correctness of information in this document. Copyright by AUDI AG.

- Switch off ignition.
- -> Connect test box V.A.G 1598/31 to control unit wiring harness. The engine control unit remains disconnected => Page 66 .

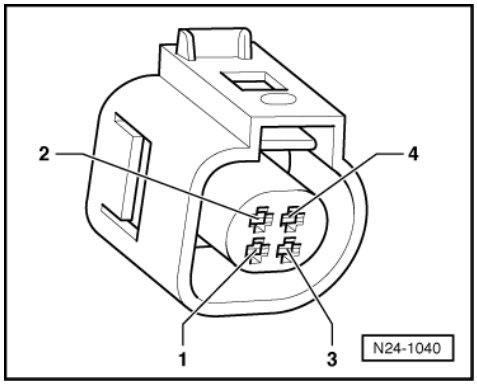

- -> Check the wiring for open circuit between test box and 4-pin connector using current flow diagram.
  Contact 3+socket 93
  Contact 4+socket 108
  Wire resistance: Max. 1.5 ω
- Check wiring additionally for short circuit to battery positive.
  Specification: ∞ω

If no fault is detected in the wiring:

- Replace coolant temperature sender (G62) with coolant temperature gauge sender (G2) =>Page 73 , item 16 .

Continuation of check when display = coolant temperature:

Test conditions

- Engine must be cold.

Functional check of sender

- Connect fault reader V.A.G 1551 (V.A.G 1552). Start engine and select "Address word" 01 of engine control unit. When doing this the engine must be running at idling speed. (Connecting fault reader and selecting engine control unit => Page 7 .)

Reproduction or copying for private or commercial purposes, in part or in whole, is not permitted unless authorised by AUDI AG. AUDI AG does not guarantee or accept any liability with respect to the correctness of information in this document. Copyright by AUDI AG.

-> Indicated on display:

```
Rapid data transfer      HELP
Select function XX
```

- Press keys 0 and 8 for the function "Read measured value block" and confirm entry with Q key.

-> Indicated on display:

```
Read measured value block     HELP
Input display group number XXX
```

- Press keys 0, 0 and 1 for "Display group number 1" and confirm entry with Q key.

-> Indicated on display:
(1...4 = Display zones)

```
Read measured value block     1
     1     2     3     4
```

- Observe coolant temperature value in display zone 2, whilst engine is running. The temperature figure must increase uniformly and without interruption.

Notes:

- If the display on fault reader jumps by 2...5 °C, it is a control unit fault and not caused by a defective sender.
- If irregular engine running occurs in certain temperature ranges and the temperature figure does not increase without interruption, the temperature signal is temporarily interrupted and the sender must be renewed.

- Press ⇒key.
- Press keys 0 and 6 for the function "End output" and confirm entry with the Q key.
- Switch off ignition.

If the specification is not obtained:

- Replace coolant temperature sender (G62) with coolant temperature gauge sender (G2) =>Page 73 , item 16 .

2.9 - Checking engine speed sender

The engine speed sender (G28) is a speed and reference mark sender. If the speed signal fails when the engine is running, it can cause the engine to stall.

Special tools, workshop equipment, testers, measuring instruments and auxiliary items required

- Test box V.A.G 1598/31
- Hand multimeter V.A.G 1526 or multimeter V.A.G 1715
- Adapter set V.A.G 1594

- Current flow diagram

Test conditions

- The battery voltage must be at least 11.5 V.

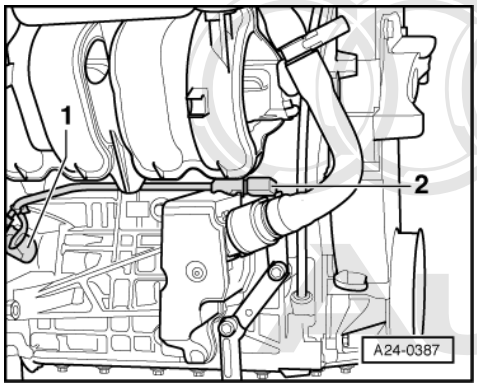

Protected by copyright. Copying for private or commercial purposes, in part or in whole, is not permitted unless authorised by AUDI AG. AUDI AG does not guarantee or accept any liability with respect to the correctness of information in this document. Copyright by AUDI AG.

Test sequence

- -> Unplug black 3-pin connector for engine speed sender -2- (accessible from underneath).
- Fitting locations overview=>Page 63

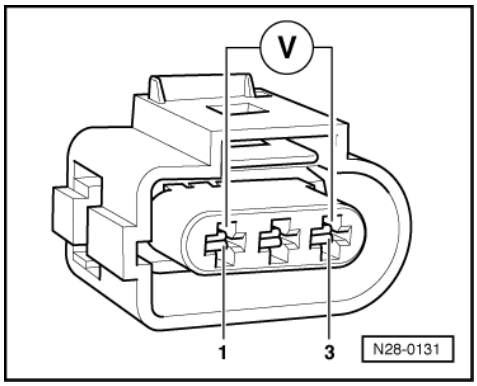

- -> Connect multimeter to measure voltage using aux. cables from V.A.G 1594 to contacts 1 (positive) and 3 (earth) on engine speed sender connector.
- Switch on ignition.
  Specification: min. 4.5 V
- Switch off ignition.

If no voltage is present:

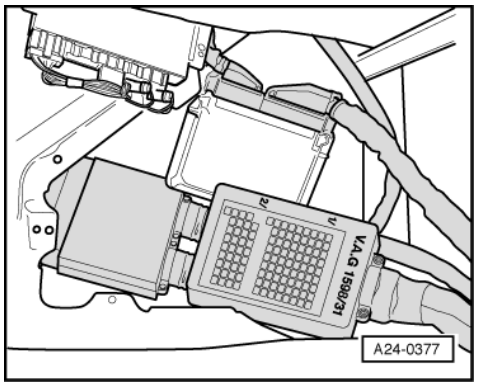

- -> Connect test box V.A.G 1598/31 to control unit wiring harness. The engine control unit remains disconnected => Page 66 .

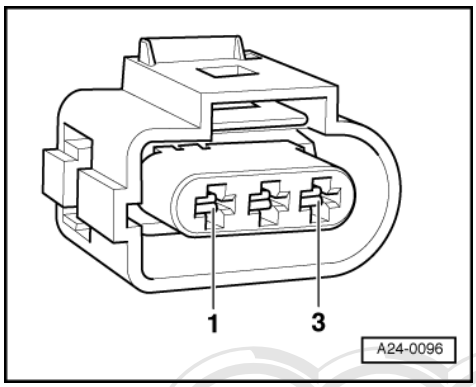

- -> Check wiring for open circuit between test box and 3-pin connector using current flow diagram.
  Contact 1+socket 87
  Contact 2+socket 82
  Contact 3+socket 108
  Wire resistance: Max. 1.5 ω
- Additionally check wires for short to one another.
  Specification: ∞ω

If no wiring fault is detected and voltage was present between contacts 1+3:

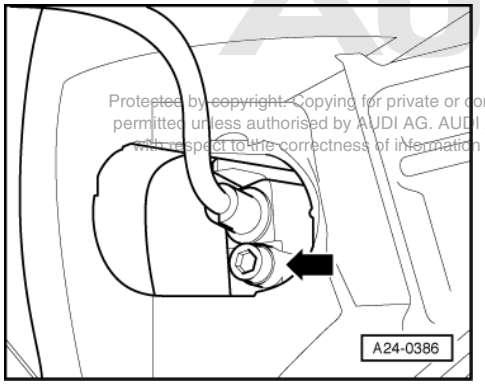

Protected by copyright. Copying for private or commercial purposes, in part or in whole, is not permitted unless authorised by AUDI AG. AUDI AG does not guarantee or accept any liability with respect to the correctness of information in this document. Copyright by AUDI AG.

- -> Replace engine speed sender (G28)
  =>Page 70 , item 11 (secured by bolt -arrow-).

Important: Refer to parts catalogue for correct Part No. of engine speed sender.

If no wiring fault is detected and no voltage was present between contacts 1+3:

- Replace engine control unit
  => Page 133 .

2.10 - Checking injectors

Checking activation

Special tools, workshop equipment, testers, measuring instruments and auxiliary items required

- Test box V.A.G 1598/31
- Hand multimeter V.A.G 1526 or multimeter V.A.G 1715
- Diode test lamp V.A.G 1527
- Adapter set V.A.G 1594
- Current flow diagram

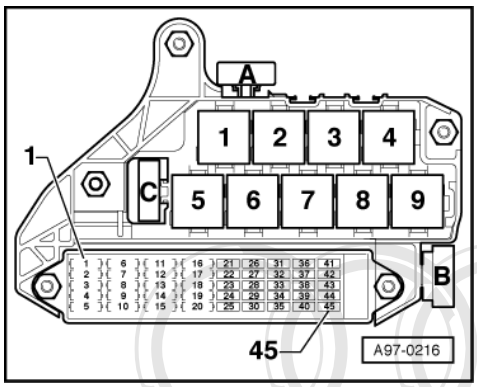

Check conditions

- -> Fuses must be OK.

=> Current flow diagrams, Electrical fault finding and Fitting locations binder

- Earth connection between engine and body must be OK.

Protected by copyright. Copying for private or commercial purposes, in part or in whole, is not permitted unless authorised by AUDI AG. AUDI AG does not guarantee or accept any liability with respect to the correctness of information in this document. Copyright by AUDI AG.

- The battery voltage must be at least 11.5 V.
- Engine speed sender must be OK, checking Page 107 .
- Hall sender must be OK, checking
  =>Page 161 .
- Fuel pump relay must be OK

Test sequence

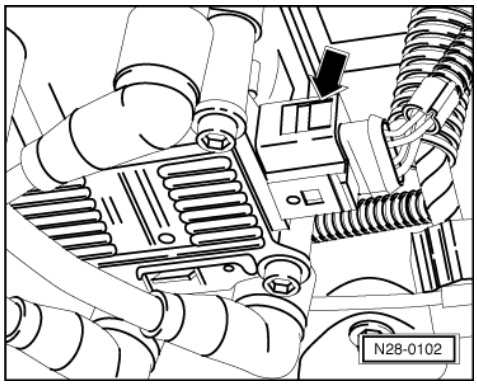

- -> Pull 4 pin connector off ignition transformer -arrow-.

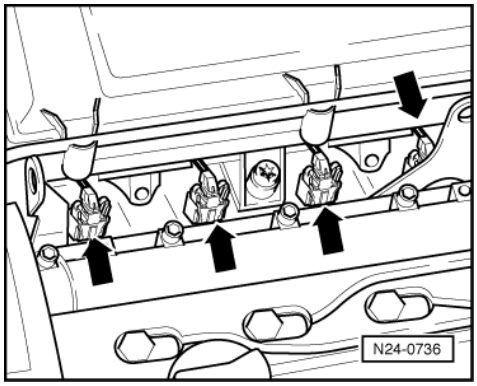

- -> Pull plug -arrows- off all injectors.

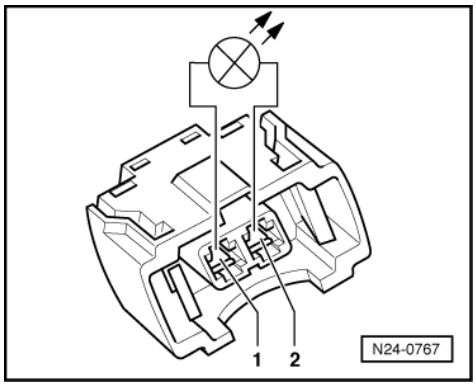

- -> Connect diode test lamp V.A.G 1527 using test leads from V.A.G 1594 to connector contacts of Cyl. 1.
- Operate the starter and check the voltage supply for No. 1 cylinder injector.
  The LED must light up
- Repeat check at the injector connectors for Cyls. 2...4.
- Switch off ignition.

If the LED does not light up on any cylinder:

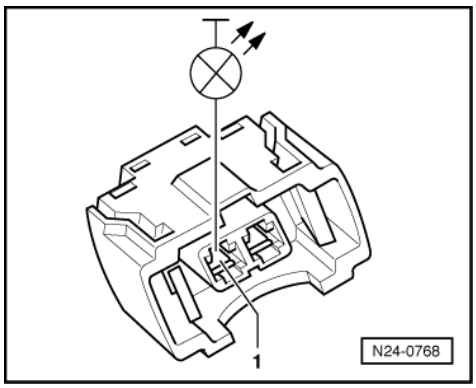

- -> Connect diode test lamp to Cyl. 1 connector, contact 1 and earth.
- Operate the starter and check the voltage supply for No. 1 cylinder injector.
  The LED must light up
- Repeat check at the injector connectors for Cyls. 2...4.

If the LED does not light up:

- Switch off ignition.
- Check wire between 2 pin connector contact 1 and fuel pump relay (J17) for open circuit according to current flow diagram.
  Wire resistance: max. 1.5 ω

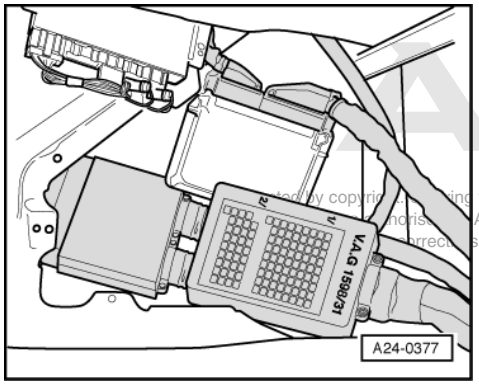

...ted by copyright ... for private or commercial purposes, in part or in whole, is not ... AUDI AG. AUDI AG does not guarantee or accept any liability ... of information in this document. Copyright by AUDI AG.

If the LED does not light up on one or several cylinders:

- -> Connect test box V.A.G 1598/31 to control unit wiring harness. The engine control unit remains disconnected => Page 66 .

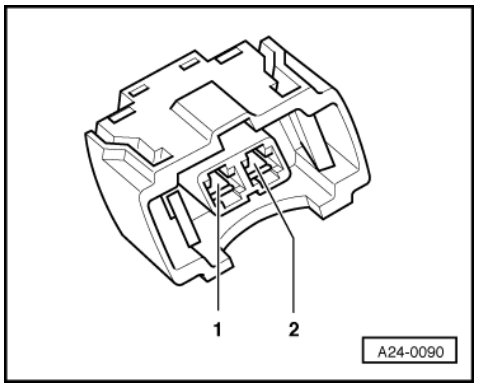

- -> Check wiring for open circuit between test box and 2-pin connectors of injectors using current flow diagram.
  Injector 1: Contact 2+socket 96
  Injector 2: Contact 2+socket 97
  Injector 3: Contact 2+socket 88
  Injector 4: Contact 2+socket 89
  Wire resistance: Max.1.5 ω
- Additionally check wires for short to one another.
  Specification: ∞ω
- Check wiring between connector contacts 1 of injectors for open circuit to one another.
  Wire resistance: Max. 1.5 ω

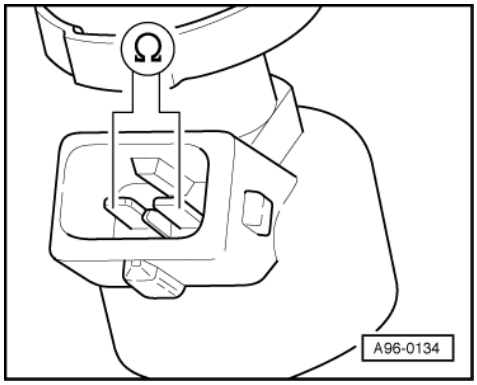

Checking resistance of injectors

Test sequence

- -> Check resistance of injectors individually
  Specification: 14.0...17.0 ω(at 20° C)

When the engine is warm the resistance will be approx. 4...6 ωhigher.

If the specification is not attained:

- Renew defective injector
  Page 81 , item 7 .

Protected by copyright. Copying for private or commercial purposes, in part or in whole, is not permitted unless authorised by AUDI AG. AUDI AG does not guarantee or accept any liability with respect to the correctness of information in this document. Copyright by AUDI AG.

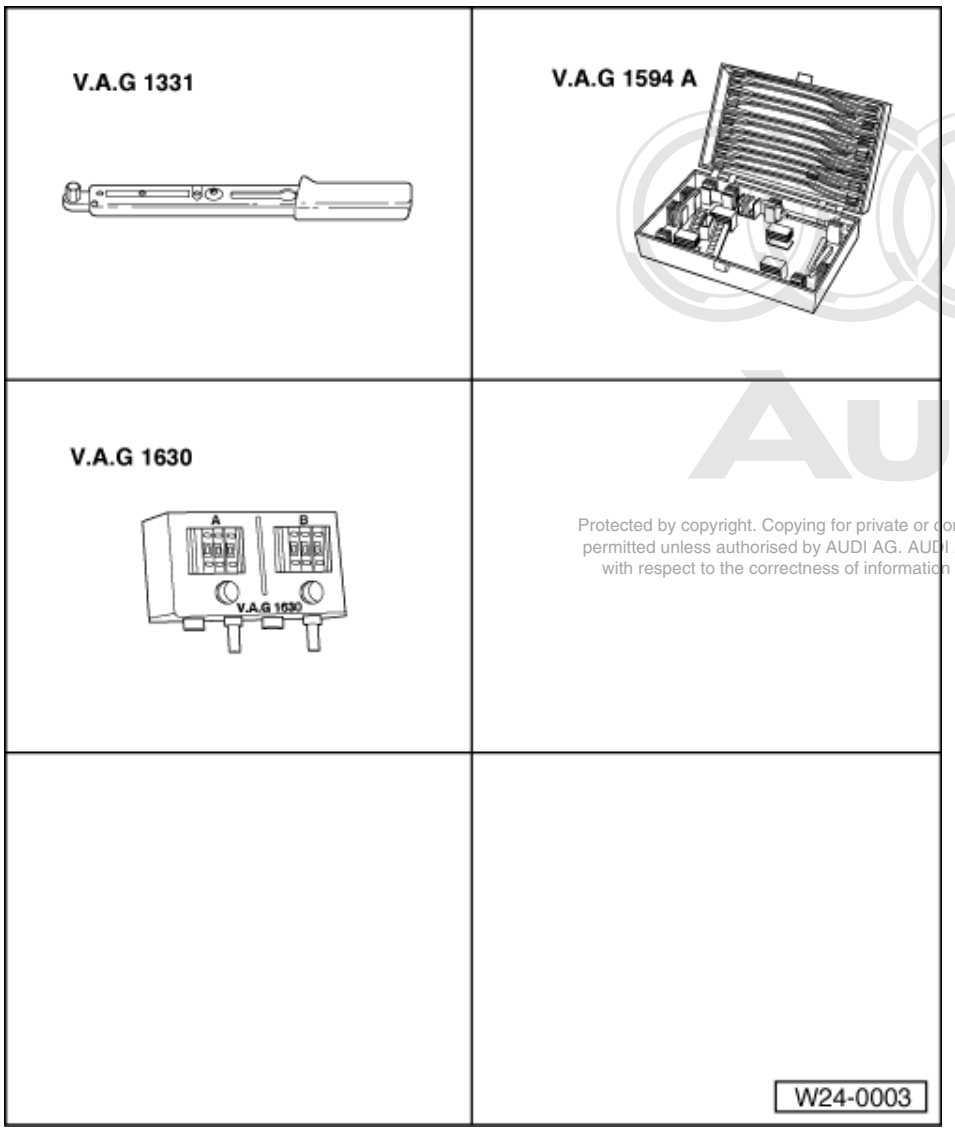

Protected by copyright. Copying for private or commercial purposes, in part or in whole, is not permitted unless authorised by AUDI AG. AUDI AG does not guarantee or accept any liability with respect to the correctness of information in this document. Copyright by AUDI AG.

Checking spray pattern and for leaks

Special tools, workshop equipment, test and measuring appliances and auxiliary items required

- V.A.G 1331 Torque wrench (5...50 Nm)
- V.A.G 1594 A Adapter set
- V.A.G 1630 Digital potentiometer
- Measuring container

Test conditions

- The fuel pressure must be in order, checking
  => Page 115 , checking fuel pressure regulator and holding pressure.

Test sequence

- Unplug 4-pin connector from coolant temperature sender (G62) with coolant temperature gauge sender (G2).
- Fitting locations overview: =>Page 63

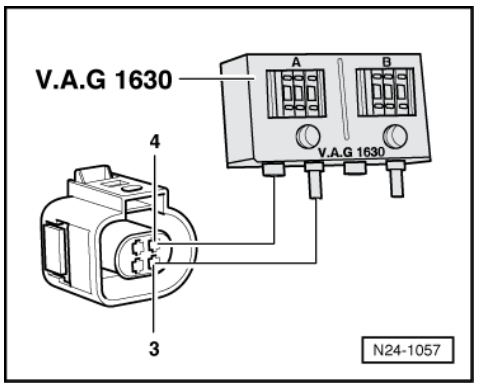

- -> Connect digital potentiometer V.A.G 1630 using test leads from V.A.G 1594 to connector contacts 3+4 and set connected side to 15 kω.
- Unclip the wiring harness for the injectors from intake manifold and thermostat housing.

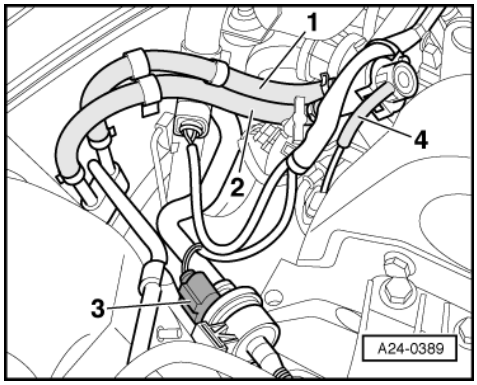

Protected by copyright. Copying for private or commercial purposes, in part or in whole, is not permitted unless authorised by AUDI AG. AUDI AG does not guarantee or accept any liability with respect to the correctness of information in this document. Copyright by AUDI AG.

- -> Disconnect vacuum hose from fuel pressure regulator -4-.
- Remove fuel rail complete with all injectors from intake manifold (fuel hoses remain connected) Page 68 , item 3 .

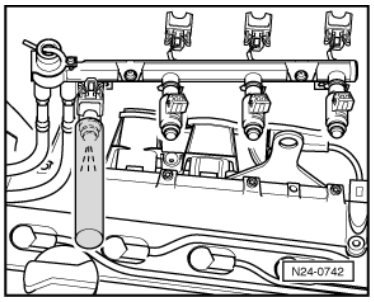

- -> Hold a small container under the injector to be checked and pull connectors off all other injectors.
- Have 2nd person operate starter. Injector must spray in pulses.
- Repeat check with other injectors ensuring that injector to be checked is only connected.
- Switch off ignition and afterwards check injectors for leaks. No more than
  2 drops/min
  may leak from each injector.

If the fuel loss is greater:

- Switch off ignition.
- Renew defective injector Page 81 , item 7 .

Perform installation of injectors in reverse order. When doing this note the following:

- Renew O-rings on all injectors and lightly moisten with clean engine oil.

- Fit fuel rail with secured injectors onto intake manifold and tighten evenly.

2.11 - Checking fuel pressure regulator and holding pressure

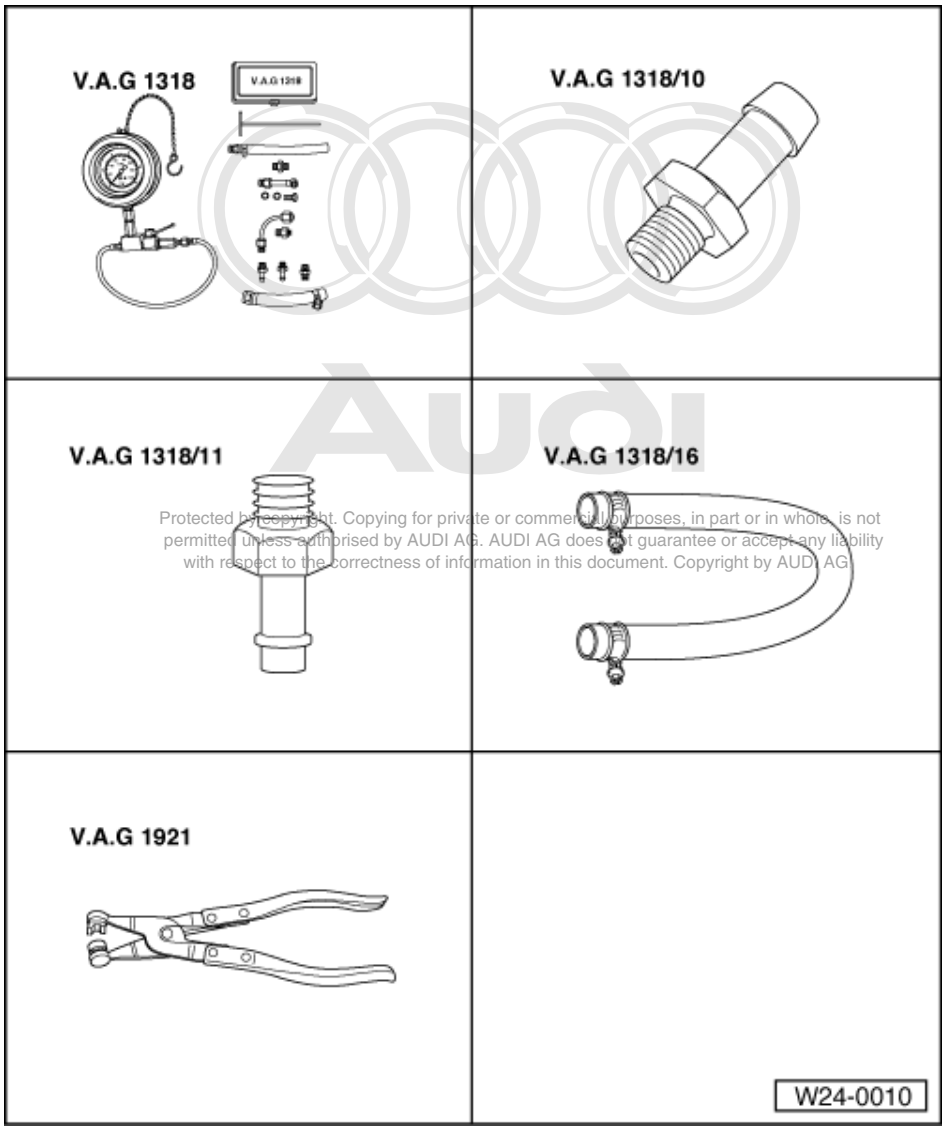

Protected by copyright. Copying for private or commercial purposes, in part or in whole, is not permitted unless authorised by AUDI AG. AUDI AG does not guarantee or accept any liability with respect to the correctness of information in this document. Copyright by AUDI AG.

The fuel pressure regulator regulates the fuel pressure depending on intake manifold pressure.

The specification for the check is dependent upon the working pressure of the fuel pump. This is

approx. 3.0 bar

Special tools, workshop equipment, test and measuring appliances and auxiliary items required

- V.A.G 1318 Pressure gauge
- V.A.G 1318/10 Adapter
- V.A.G 1318/11 Adapter
- V.A.G 1318/16 Hose adapter
- V.A.G 1921 Spring-type clip pliers

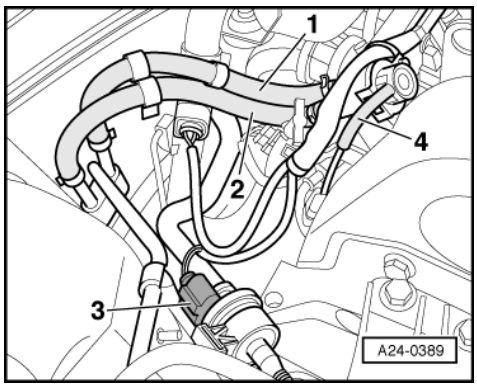

Test sequence

- -> Pull off the supply hose -1- (with white marking) and catch the fuel which runs out in a cloth.

Protected by copyright. Copying for private or commercial purposes, in part or in whole, is not permitted unless authorised by AUDI AG. AUDI AG does not guarantee or accept any liability with respect to the correctness of information in this document. Copyright by AUDI AG.

Warning!
Fuel system is under pressure! Before opening the system place a cloth around the connection. Then release pressure by carefully loosening the connection.

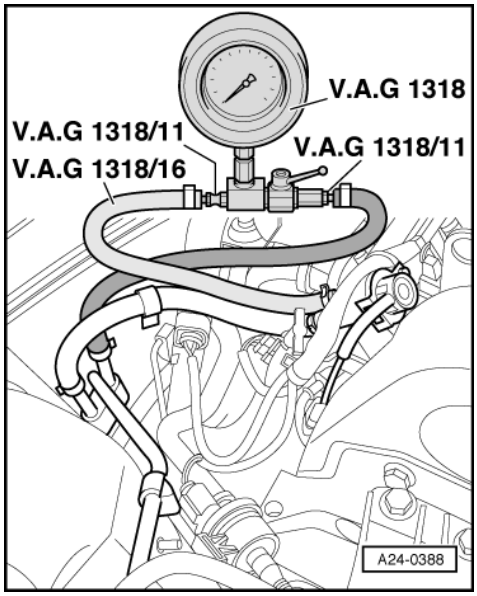

- -> Connect pressure gauge V.A.G 1318 to supply hose -1- and to supply pipe.
- Open cut-off tap on pressure gauge (the handle then points in the direction of flow).
- Start the engine and run at idling speed.
- Measure fuel pressure.
  Specification: Approx. 2.5 bar

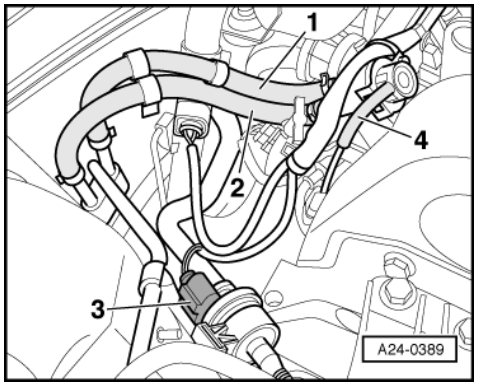

- -> Disconnect vacuum hose from fuel pressure regulator -4-. The fuel pressure should increase to approx. 3.0 bar.
- Switch off ignition.

If the specification is not obtained:

- Check quantity supplied by fuel pump.

=> Fuel supply system, Petrol engines; Repair group 20; Fuel supply system; Checking fuel pump delivery rate Fuel supply system Checking fuel pump delivery rate

If the specification is obtained:

- Check for leaks and holding pressure by observing pressure drop on gauge. After 10 minutes there must be
  a residual pressure of
  at least 2.0 bar.

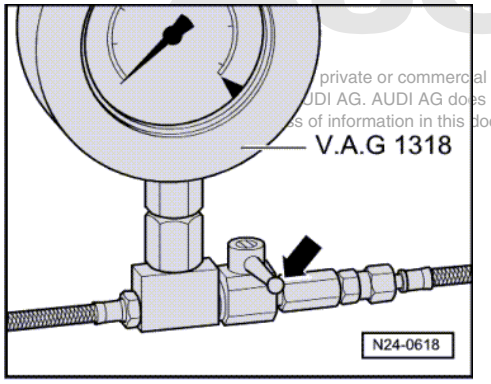

private or commercial purposes, in part or in whole, is not
UDI AG. AUDI AG does not guarantee or accept any liability
s of information in this document. Copyright by AUDI AG.

If the holding pressure drops below 2 bar:

- Start the engine and run at idling speed.
- -> Switch ignition off after the pressure has built-up. At the same time close pressure measured device cut-off tap (handle cross through-flow direction -arrow-).
- Observe pressure drop on gauge.

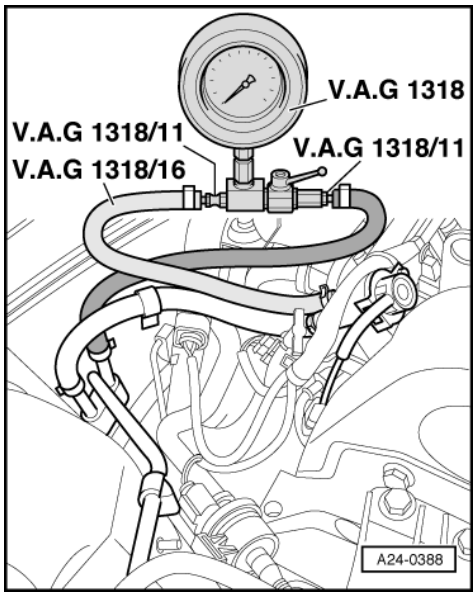

If the pressure does not drop:

- Check fuel pump non-return valve.

=> Fuel supply system, Petrol engines; Repair group 20; Fuel supply system; Checking fuel pump delivery rate Fuel supply system Checking fuel pump delivery rate

If the pressure drops again:

- -> Open pressure gauge V.A.G 1318 shut-off tap (handle in direction of flow).
- Start the engine and run at idling speed.

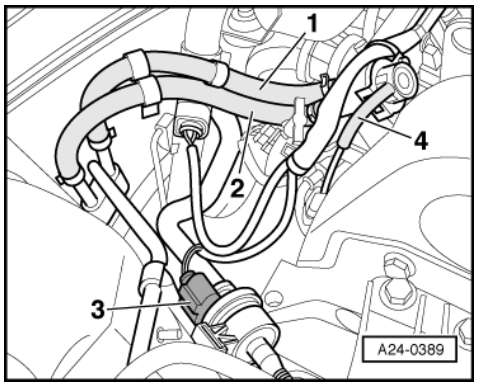

- -> Switch ignition off after the pressure has built-up. At the same time clamp-off the return hose (with blue marking) -2-.

Protected by copyright. Copying for private or commercial purposes, in part or in whole, is not permitted unless authorised by AUDI AG. AUDI AG does not guarantee or accept any liability with respect to the correctness of information in this document. Copyright by AUDI AG.

If the pressure does not drop:

- Renew fuel pressure regulator
  =>Page 82 , item 11 .

If the pressure drops again:

- Check pipe connections, O-rings on fuel manifold and injectors for leaks.
- Check pressure gauge for leaks.

Note:

Before removing pressure gauge place a cloth around the connections to be loosened.

2.12 - Checking intake air system for leaks (unmetered air)

Checking with engine leak detector spray G 001 800 A1

Special tools, workshop equipment, testers, measuring instruments and auxiliary items required

- Fault reader V.A.G 1551 or vehicle system tester V.A.G 1552 with cable V.A.G 1551/3A
- Engine leak detector spray G 001 800 A1

Test conditions

- Coolant temperature must be at least 80 °C, =>display group 1, display zone 2.

Test sequence

Notes:

- The vacuum in the intake system will cause the leak detector spray to be drawn in with the unmetered air. The leak detector spray reduces the ignitability of the mixture. This leads to a drop in engine speed and to a change of lambda probe voltage.

- The safety precautions listed on the container must be adhered to.

- Connect fault reader V.A.G 1551 (V.A.G 1552). Start engine and select "Address word" 01 of engine control unit. When doing this the engine must be running at idling speed.
  (Connecting fault reader and selecting engine control unit
  => Page 7 .)

-> Indicated on display:

```
Rapid data transfer     HELP
Select function XX
```

- Press keys 0 and 8 for the function "Read measured value block" and confirm entry with Q key.

-> Indicated on display:

```
Read measured value block     HELP
Input display group number XXX
```

- Press keys 0, 3 and 3 for "Display group number 33" and confirm entry with Q key.

-> Indicated on display:
(1...4 = Display zones)

```
Read measured value block     33
     1     2     3     4
```

- Observe the regulating value in display zone 1 .
- Systematically spray parts of the intake system with engine leak detector spray.

If the engine speed drops or the regulating value changes:

- Press ⇒key.
- Press keys 0 and 6 for the function "End output" and confirm entry with the Q key.
- Switch off ignition.
- Check sprayed areas of intake system for leaks and rectify if necessary.

Engine speed or regulating value does not change:

- Press ⇒key.
- Press keys 0 and 6 for the function "End output" and confirm entry with the Q key.
- Switch off ignition.

3 - Checking functions

3.1 - Checking functions

3.2 - Idling check

Notes:

Protected by copyright. Copying for private or commercial purposes, in part or in whole, is not permitted unless authorised by AUDI AG. AUDI AG does not guarantee or accept any liability with respect to the correctness of information in this document. Copyright by AUDI AG.

- Idling speed, ignition timing and CO content not adjustable.
- The idling speed is regulated to specification by the throttle valve positioner in conjunction with the DIS function.
- CO content regulated by lambda regulation. Faults in lambda control are detected in self-diagnosis and stored in fault memory.

Special tools, workshop equipment, testers, measuring instruments and auxiliary items required

- Fault reader V.A.G 1551 or vehicle system tester V.A.G 1552 with cable V.A.G 1551/3

Test conditions

- Exhaust system between cylinder head and catalytic converter free of leaks
- Coolant temperature must be at least 80 °C, =>display group 04, display zone 3.
- All electrical consumers, e.g. lights and rear window heating must be switched off
- If the vehicle is equipped with an air conditioning system, this must be switched off.
- On vehicles with automatic gearbox selector lever in "P" or "N" position

Test sequence

- Connect fault reader V.A.G 1551 (V.A.G 1552). Start engine and select "Address word" 01 of engine control unit. When doing this the engine must be running at idling speed.
  (Connecting fault reader and selecting engine control unit
  => Page 7 .)
- Interrogate fault memory, if necessary, repair fault and then erase fault memory.
  => Page 9 , interrogating and erasing fault memory
- Then:
  - Leave fault reader V.A.G 1551 connected.
  - Continue running engine at idling speed.

-> Indicated on display:

```
Rapid data transfer      HELP
Select function XX
```

Checking idling speed

- Press keys 0, 5 and 6 for "Display group number 56" and confirm entry with Q key.

-> Indicated on display:
(1...4 = Display zones)

```
Read measured value block      56
     1     2     3     4
```

- Check the operating mode in display zone 4
  Specification: 00000
  (Significance => Page 57)
- Check the specified idling speed in display zone 2.
  Specification:
  670 rpm

Protected by copyright. Copying for private or commercial purposes, in part or in whole, is not permitted unless authorised by AUDI AG. AUDI AG does not guarantee or accept any liability with respect to the correctness of information in this document. Copyright by AUDI AG.

Note:

The specified engine speed is increased when battery is heavily discharged or engine has overheated.

- Check idling speed in display zone 1.
  Specification:
  650...710 rpm1)

1) Up-to-date specifications:

=> Exhaust emissions test binder

- Press ⇒key.
- Press keys 0 and 6 for the "End data transfer" function and confirm input with the Q key.

If the idling speed is not obtained:

- Adapt the engine control unit to the throttle valve control part => Page 136
- Carry out test drive.
- Again interrogate the control unit fault memory.
- Repeat the idling check.

If the specifications are not obtained again:

- Check throttle valve control part
  => Page 95 .
- Check the operating condition of engine
  => Page 129 .
- Check the intake air system for unmetered air
  => Page 118

3.3 - Checking lambda probe and lambda regulation before catalytic converter

Special tools, workshop equipment, testers, measuring instruments and auxiliary items required

- Fault reader V.A.G 1551 or vehicle system tester V.A.G 1552 with cable V.A.G 1551/3
- Test box V.A.G 1598/31
- Hand multimeter V.A.G 1526 or multimeter V.A.G 1715
- Adapter set V.A.G 1594
- Current flow diagram

Test conditions

- Coolant temperature must be at least 80 °C, =>display group 04, display zone 3.
- Exhaust system between catalytic converter and cylinder head must be free of leaks

Functional check

- Connect fault reader V.A.G 1551 (V.A.G 1552). Start engine and select "Address word" 01 of engine control unit. When doing this the engine must be running at idling speed.
  (Connecting fault reader and selecting engine control unit
  => Page 7 .)

-> Indicated on display:

```
Rapid data transfer     HELP
Select function XX
```

- Press keys 0 and 8 for the function "Read measured value block" and confirm entry with Q key.

-> Indicated on display:

```
Read measured value block     HELP
Input display group number XXX
```

- Press keys 0, 3 and 0 for the "Display group number 30" and confirm entry with Q key.

-> Indicated on display:
(1...4 = Display zones)

```
Read measured value block     30
     1     2     3     4
```

- Check lambda regulation status before catalytic converter (display zone 1):
  Specification: 1 1 1

Protected by copyright. Copying for private or commercial purposes, in part or in whole, is not permitted unless authorised by AUDI AG. AUDI AG does not guarantee or accept any liability with respect to the correctness of information in this document. Copyright by AUDI AG.

Significance of 3 digit number block in display zone 1:

Significance if display = 1			
1	2	3	
		1	Lambda regulation active
	1		Lambda probe operationally ready

Significance if display = 1			
1			Lambda probe heating on

Notes:

- The first digit of the three-digit display (heating) fluctuates between 0 and 1.

If the specification is not obtained:

- Check the lambda probe heating before catalytic converter
  => Page 85 .
- Check basic voltage => Page 123 .

If the specification is obtained:

- Press ⇒key.
- Press keys 0 and 4 for the function "Initiating basic settings" and confirm entry with Q key.

-> Indicated on display:

```
Basic setting     HELP
Input display group number XXX
```

- Press keys 0, 3 and 4 for "Display group number 34" and confirm entry with Q key.

-> Indicated on display:
(1...4 = Display zones)

```
System in basic setting     34
     1     2     3     4
```

- Rev. up twice to over 5,000 rpm.
- Set engine speed to 1500...3900 rpm using speed regulator V.A.G 1788/10:
- Maintain this engine speed until "TEST ON" appears in
  display zone 4.

- Continue to maintain the same speed until
  specification "B1-P1 OK"
  appears in display zone 4.

If "B1-P1 n.OK"
appears in display zone 4,

- Press ⇒key.
- Press keys 0 and 8 for the function "Read measured value block" and confirm entry with Q key.

-> Indicated on display:

```
Read measured value block     HELP
Input display group number XXX
```

- Press keys 0, 3 and 3 for "Display group number 33" and confirm entry with Q key.

-> Indicated on display:
(1...4 = Display zones)

```
Read measured value block 33
     1     2     3     4
```

- Observe lambda regulation in display zone 1. The display should fluctuate at least 2 % in a range between
  -15.0...15.0 %
- Check lambda probe voltage in display zone 2. The voltage should fluctuate at least 20 times per minute in range of
  0... 1.0 V.

Copyright AUDI AG. This document contains proprietary information and may not be reproduced in whole or in part nor transmitted in any form or by any means, electronic or mechanical, for any purpose, in whole, is not permitted unless authorised by AUDI AG. AUDI AG does not guarantee or accept any liability with respect to the correctness of information in this document. Copyright by AUDI AG.

If the display in display zone 2 remains constantly at one value:

- Continue check according to following table.

Display	Cause	Continuation of check
Between 0.400... 0.500 V	Open circuit	=> Page 124 checking lambda probe wiring
1.105 V	Short to positive	
0.000 V	Short to earth	

If the lambda regulation in display zone 1 does not fluctuate as stated:

- Press ⇒key.
- Press keys 0 and 6 for the "End data transfer" function and confirm input with the Q key.
- Carry out road test and burn lambda probes clean and repeat check.

Observe the valid safety precautions when carrying out a road test
=> Page 84 .

If the the specifications in display zone 1 are not obtained even after a test drive, or the value does not fluctuate by at least 2 %:

- Check basic voltage => Page 123 .

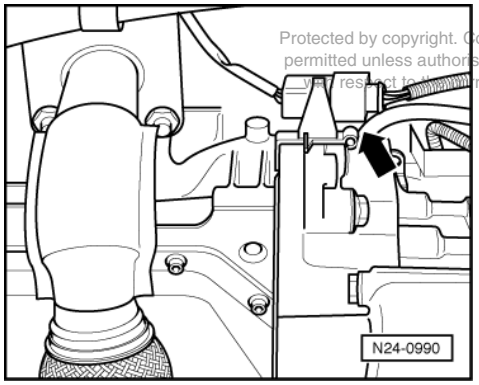

Protected by copyright. Copying for private or commercial purposes, in part or in whole, is not permitted unless authorised by AUDI AG. AUDI AG does not guarantee or accept any liability with respect to the correctness of information in this document. Copyright by AUDI AG.

Checking basic voltage

- -> Separate the 6-pin connector (black) to lambda probe before catalytic converter (G39).

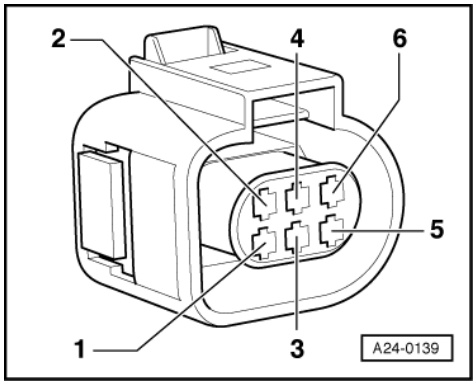

- -> Connect multimeter with aux. cables from V.A.G 1594 to measure voltage at contacts 3+4 (connector to engine control unit).
- Switch on ignition and measure basic voltage.
  Specification: 0.40...0.50 V

- Switch off ignition.

If the specification is not obtained:

- Check lambda probe wiring
  => Page 124

If the specification is obtained:

- Replace lambda probe before catalytic converter (G39).

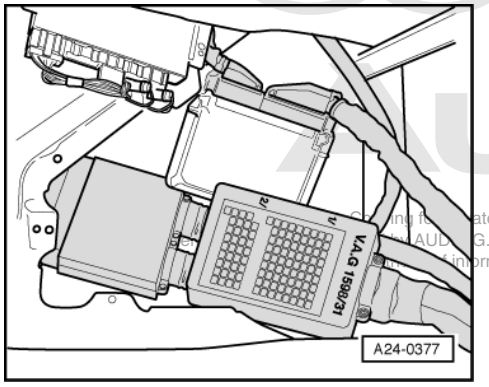

ate or commercial purposes, in part or in whole, is not
G. AUDI AG does not guarantee or accept any liability
formation in this document. Copyright by AUDI AG.

Checking lambda probe wiring

- -> Connect test box V.A.G 1598/31 to control unit wiring harness. The engine control unit remains disconnected => Page 66 .

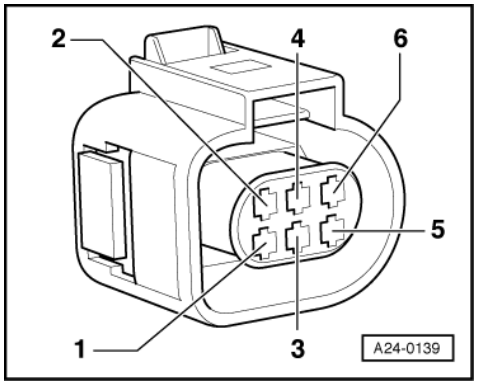

- -> Check wiring for open circuit between test box and 6-pin connector (to control unit) using current flow diagram.
  - Contact 3+socket 52
  - Contact 4+socket 71
  - Contact 5+socket 70
  - Contact 6+socket 51
  - Wire resistance: Max 1.5 ω
- Check the wiring at connector contacts 3+4 for short circuit to contacts 1+2.

If no fault is detected in the wiring:

- Replace lambda probe before catalytic converter (G39).

3.4 - Checking lambda probe and lambda regulation after catalytic converter

Special tools, workshop equipment, testers, measuring instruments and auxiliary items required

- Fault reader V.A.G 1551 or vehicle system tester V.A.G 1552 with cable V.A.G 1551/3
- Test box V.A.G 1598/31
- Hand multimeter V.A.G 1526 or multimeter V.A.G 1715
- Adapter set V.A.G 1594
- Current flow diagram

Check conditions

- Coolant temperature must be at least 80 °C, =>display group 04, display zone 3.
- Exhaust system between catalytic converter and cylinder head must be free of leaks

Functional check

Protected by copyright. Copying for private or commercial purposes, in part or in whole, is not permitted unless authorised by AUDI AG. AUDI AG does not guarantee or accept any liability with respect to the correctness of information in this document. Copyright by AUDI AG.

- Connect fault reader V.A.G 1551 (V.A.G 1552). Start engine and select "Address word" 01 of engine control unit. When doing this the engine must be running at idling speed.
  (Connecting fault reader and selecting engine control unit
  => Page 7 .)

-> Indicated on display:

```
Rapid data transfer      HELP
Select function XX
```

- Press keys 0 and 8 for the function "Read measured value block" and confirm entry with Q key.

-> Indicated on display:

```
Read measured value block     HELP
Input display group number XXX
```

- Press keys 0, 3 and 0 for the "Display group number 30" and confirm entry with Q key.

-> Indicated on display:
(1...4 = Display zones)

```
Read measured value block     30
     1     2     3     4
```

- Check lambda regulation status before catalytic converter (display zone 2):
  Specification: 1 1 0

Note:

The 3rd bit in display zone 2 (lambda regulation active) will not be set to 1 until the engine is run under part throttle conditions (2500-4000 rpm).

Significance of 3 digit number block in display zone 1:

Significance if display = 1			
1	2	3	
		x	Lambda regulation active (specification: 1/0)
	1		Lambda probe operationally ready
1			Lambda probe heating on

Notes:

- The lambda control of lambda probe (after the catalytic converter; B1-P2) is not active when the engine is not running under load.

- The first digit of the three-digit display (heating) fluctuates between 0 and 1.

If the specification is not obtained:

- Check lambda probe heating after catalytic converter
  => Page 85 .
- Check basic voltage => Page 127 .

If the specification is obtained:

- Press ⇒key.
- Press keys 0 and 4 for the function "Initiating basic settings" and confirm entry with Q key.

-> Indicated on display:

```
Basic setting     HELP
Input display group number XXX
```

- Press keys 0, 3 and 6 for "Display group number 36" and confirm entry with Q key.

-> Indicated on display:
(1...4 = Display zones)

```
System in basic setting     36
     1     2     3     4
```

- Apply brake and hold down brake pedal. The engine speed will be raised automatically. After a moment, the following appears in display zone 2:
  B1-P2 OK

If "B1-P2 n.OK"
appears in display zone 2,

- Check lambda probe 2 voltage at idling speed in display zone 1.
  Specification: 0.000...1.000 V
- Continue check according to following table.

Display	Cause	Continuation of check
Between 0.400... 0.500 V	Open circuit	=> Page 127 checking lambda probe wiring
1.105 V	Short to positive	
0.000 V	Short to earth	

If the lambda regulation in display zone 1 does not fluctuate as stated:

- Press ⇒key.
- Press keys 0 and 6 for the "End data transfer" function and confirm input with the Q key.
- Carry out road test and burn lambda probes clean and repeat check.

Observe the valid safety precautions when carrying out a road test => Page 84 .

If the the specifications in display zone 1 are not obtained even after a test drive, or the value does not fluctuate by at least 2 %:

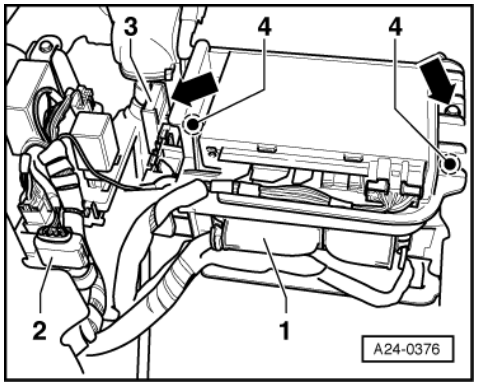

Protected by copyright. Copying for private or commercial purposes, in part or in whole, is not permitted unless authorised by AUDI AG. AUDI AG does not guarantee or accept any liability with respect to the correctness of information in this document. Copyright by AUDI AG.

- Check basic voltage => Page 127 .

Checking basic voltage

- -> Unplug 4-pin connector for lambda probe (G130) -2-.

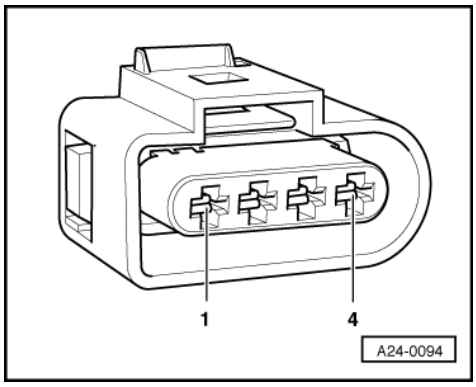

- -> Connect multimeter with aux. cables from V.A.G 1594 to measure voltage at contacts 3+4 (connector to engine control unit).
- Switch on ignition and measure basic voltage.
  Specification: 0.40...0.50 V
- Switch off ignition.

If the specification is obtained:

- Renew the lambda probe after catalytic converter (G130).

Checking lambda probe wiring, lambda probe 2

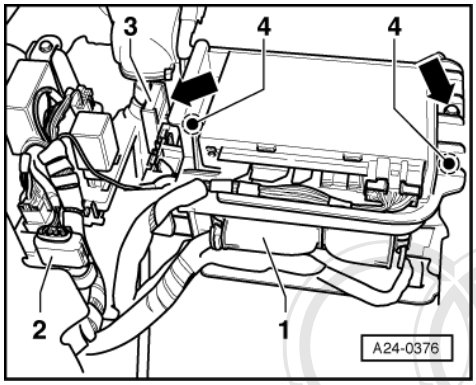

- -> Unplug 4-pin connector for lambda probe (G130) -2-.

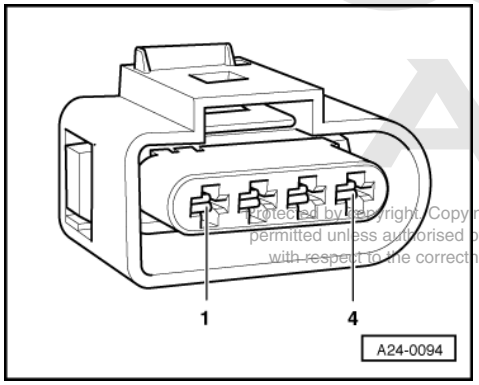

Protected by copyright. Copying for private or commercial purposes, in part or in whole, is not permitted unless authorised by AUDI AG. AUDI AG does not guarantee or accept any liability with respect to the correctness of information in this document. Copyright by AUDI AG.

- -> Check wiring for open circuit between test box and 4-pin connector (to control unit) using current flow diagram.
  Contact 3+socket 68
  Contact 4+socket 69
  Wire resistance: Max. 1.5 ω

- Check the wiring at connector contacts 3+4 for short circuit to contacts 1+2.

If no fault is detected in the wiring:

- Renew the lambda probe after catalytic converter (G130).

3.5 - Checking ageing of lambda probe before catalytic converter

Special tools, workshop equipment, testers, measuring instruments and auxiliary items required

- Fault reader V.A.G 1551 or vehicle system tester V.A.G 1552 with cable V.A.G 1551/3A

Test conditions

- Exhaust system between catalytic converter and cylinder head must be free of leaks
- Coolant temperature must be at least 80 °C, =>display group 04, display zone 3.

Functional check

- Connect fault reader V.A.G 1551 (V.A.G 1552). Start engine and select "Address word" 01 of engine control unit. When doing this the engine must be running at idling speed.
  (Connecting fault reader and selecting engine control unit
  => Page 7 .)

-> Indicated on display:

```
Rapid data transfer     HELP
Select function XX
```

- Press keys 0 and 4 for the function "Introduction of basic setting" and confirm entry with Q key.

-> Indicated on display:

```
Basic setting
Input display group number XXX
```

- Press keys 0, 3 and 4 for "Display group number 34" and confirm entry with Q key.

-> Indicated on display:
(1...4 = Display zones)

```
System in basic setting      34
     1     2     3     4
```

- Rev. up twice to over 5,000 rpm.
- Set engine speed to 1500...3900 rpm using speed regulator V.A.G 1788/10:
- Maintain the engine speed at 1500...3900 rpm until the display in display zone 4 jumps from "Test OFF" to "Test ON".

Note:

This process can take a few minutes.

- Check dwell time in display zone 3:
  Specification: maximum 1.0 s
- Continue to maintain the speed at 1500...3900 rpm until the specification "B1-P1 OK" appears in display zone 4.
- Press ⇒key.
- Press keys 0 and 6 for the function "End output" and confirm entry with the Q key.

If the specifications are not attained:

- Carry out a road test to free lambda probe of possible residues and repeat the test.

Protected by copyright. Copying for private or commercial purposes, in part or in whole, is not permitted unless authorised by AUDI AG. AUDI AG does not guarantee or accept any liability with respect to the correctness of information in this document. Copyright by AUDI AG.

Observe the valid safety precautions when carrying out a road test
=> Page 84 .

If the specifications are again not attained:

- Replace lambda probe before catalytic converter (G39).

3.6 - Checking engine operating mode

Note:

Checks whether engine control unit recognises the engine operating modes idling, overrun, part throttle, enrichment, full throttle.

Special tools, workshop equipment, testers, measuring instruments and auxiliary items required

- Fault reader V.A.G 1551 or vehicle system tester V.A.G 1552 with cable V.A.G 1551/3

Test conditions

Protected by copyright. Copying for private or commercial purposes, in part or in whole, is not permitted unless authorised by AUDI AG. AUDI AG does not guarantee or accept any liability with respect to the correctness of information in this document. Copyright by AUDI AG.

- Coolant temperature must be at least 80 °C. =>display group 04, display zone 3.

Test sequence

- Connect fault reader V.A.G 1551 (V.A.G 1552). Start engine and select "Address word" 01 of engine control unit. When doing this the engine must be running at idling speed.
  (Connecting fault reader and selecting engine control unit
  => Page 7 .)

-> Indicated on display:

```
Rapid data transfer     HELP
Select function XX
```

- Press keys 0 and 8 for the function "Read measured value block" and confirm entry with Q key.

-> Indicated on display:

```
Read measured value block
Input display group number XXX
```

- Press keys 0, 0 and 5 for "Display group number 5" and confirm entry with Q key.

-> Indicated on display:
(1...4 = Display zones)

```
Read measured value block 5
     1     2     3     4
```

- Check whether the control unit recognises the operating mode (display zone 4):

- Idling:

  As long as the engine is running at idling speed the display should show "idling"
  Display: Idling

- Overrun mode:

- Increase engine speed to above 3000 rpm.
- Close throttle abruptly (release accelerator).

  As long as the enginespeedis above 1400 rpm the display should show "overrun"

Display: Overrun

Note:

Below 1400 rpm idling speed will be recognised.

- Part throttle:

- Rev up evenly.

  As long as the engine is being revved up evenly, the display should show part throttle
  Display: Part throt.

- Enrichment:

- Depress accelerator pedal completely (throttle burst)

  Acceleration enrichment shouldbe displayed briefly
  Display: Enrichment

Protected by copyright. Copying for private or commercial purposes, in part or in whole, is not permitted unless authorised by AUDI AG. AUDI AG does not guarantee or accept any liability with respect to the correctness of information in this document. Copyright by AUDI AG.

Observe the valid safety precautions when carrying out a road test
=> Page 84 .

- Press ⇒key.
- Press keys 0 and 6 for the "End data transfer" function and confirm input with the Q key.

If the specifications are not attained:

- Interrogate fault memory, if necessary, repair any faults and then erase fault memory => Page 9 , interrogating and erasing fault memory.
- Check throttle valve control part
  => Page 95 .

4 - Engine control unit

4.1 - Engine control unit

4.2 - Checking control unit voltage supply

Special tools, workshop equipment, testers, measuring instruments and auxiliary items required

- Fault reader V.A.G 1551 or vehicle system tester V.A.G 1552 with cable V.A.G 1551/3
- Test box V.A.G 1598/31
- Hand multimeter V.A.G 1526 or multimeter V.A.G 1715
- Adapter set V.A.G 1594

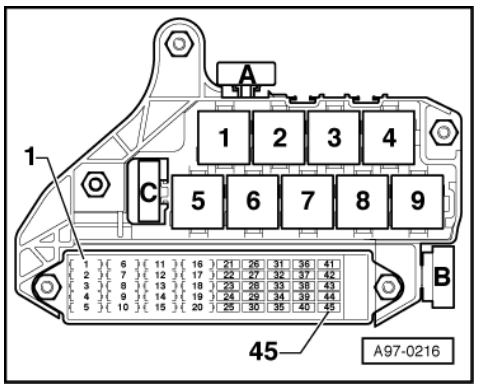

◆ Current flow diagram

Check conditions

- The battery voltage must be at least 11.5 V.
- -> Fuses must be OK.

=> Current flow diagrams, Electrical fault finding and Fitting locations binder

- Alternator OK, checking:

=> Current flow diagrams, Electrical fault finding and fitting locations binder

Test sequence

- Connect fault reader V.A.G 1551 (V.A.G 1552). Start engine and select "Address word" 01 of engine control unit. When doing this the engine must be running at idling speed.
  (Connecting fault reader and selecting engine control unit
  => Page 7 .)

-> Indicated on display:

```
Rapid data transfer      HELP
Select function XX
```

- Press keys 0 and 8 for the function "Read measured value block" and confirm entry with Q key.

-> Indicated on display:

```
Read measured value block      HELP
Input display group number XXX
```

- Press keys 0, 0 and 4 for "Display group number 4" and confirm entry with Q key.

-> Indicated on display:
(1...4 = Display zones)

```
Read measured value block 4
     1     2     3     4
```

- Read off figure displayed in display zone 2.
  Specification: At least 11.5 V
- Press the ⇒key.
- Press keys 0 and 6 for the "End data transfer" function and confirm input with the Q key.
- Switch off ignition.

If the specification is not attained:

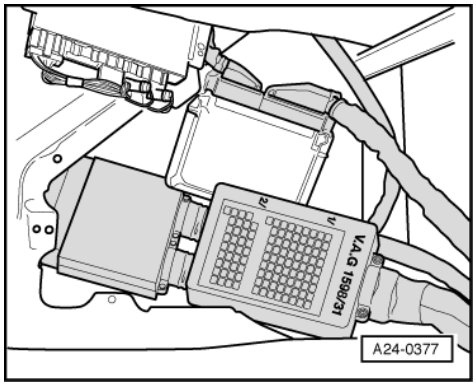

Protected by copyright. Copying for private or commercial purposes, in part or in whole, is not permitted unless authorised by AUDI AG. AUDI AG does not guarantee or accept any liability with respect to the correctness of information in this document. Copyright by AUDI AG.

- -> Connect test box V.A.G 1598/31 to control unit wiring harness. The engine control unit remains disconnected => Page 66 .

Checking voltage supply terminal 30

- Measure supply voltage between test box sockets 1 (earth) + 3 (terminal 30) using multimeter and adapter leads from V.A.G 1594:
  Specification: at least 11.5 V

If the specification is not attained:

- Check wiring connections to relay plate (or earth) according to current flow diagram.

=> Current flow diagrams, Electrical fault finding and Fitting locations binder

Checking voltage supply terminal 15

- Measure supply voltage between test box sockets 2 (earth) + 4 (terminal 15) using multimeter and adapter leads from V.A.G 1594:
- Switch on ignition.
  Specification: min. 11.5 V

If the specification is not attained:

- Check wiring connections to relay plate according to current flow diagram.

=> Current flow diagrams, Electrical fault finding and Fitting locations binder

4.3 - Procedure after voltage supply open circuit

All values learnt by the engine control unit and the basic setting values as well as the readiness code will be erased if the voltage supply is interrupted. Therefore, depending upon the vehicle mileage it can lead to serious engine running problems.

Protected by copyright. Copying for private or commercial purposes, in part or in whole, is not permitted unless authorised by AUDI AG. AUDI AG does not guarantee or accept any liability with respect to the correctness of information in this document. Copyright by AUDI AG.

Special tools, workshop equipment, testers, measuring instruments and auxiliary items required

- Fault reader V.A.G 1551 or vehicle system tester V.A.G 1552 with cable V.A.G 1551/3

Work sequence

Perform the following operations after voltage supply open circuit:

- Switch ignition on for at least 10 seconds.
- Switch ignition off for at least 30 seconds.
- Adapt the engine control unit to the throttle valve control part => Page 136
- Perform idling check
  => Page 119
- Perform a longer test drive until the poor driving characteristics are eliminated.

  During the road test the following operating conditions must be fulfilled:
  - The coolant temperature must exceed 80 °C .
  - When the temperature is reached, the operating conditions
    Idling
    Part throttle
    Full throttle
    Overrun
    must be attained several times.
  - At full throttle the speed must exceed 3500 rpm.

4.4 - Replacing engine control unit

Special tools, workshop equipment, testers, measuring instruments and auxiliary items required

- Fault reader V.A.G 1551 with cable V.A.G 1551/3

Work sequence

- First print out the control unit identification and thereby the previous control unit coding as follows:
- Connect the fault reader V.A.G 1551 (V.A.G 1552). Then switch ignition on and select engine control unit with the "Address word" 01.
  (Connecting fault reader and selecting engine control unit
  => Page 7 .)

-> The control unit identification and the coding will appear on the display, as in this example.

```
036 906034Q     MARELLI 4LV     2615
Coding 00031     WSC XXXXX
```

- Print out the control unit identification by pressing the fault reader print button.
- Press the ⇒key.
- Press keys 0 and 6 for the "End data transfer" function and confirm input with the Q key.

-> Indicated on display:

```
Rapid data transfer     HELP
Select function XX
```

- Switch off ignition.
- Lift up floor mat in left footwell:

=> General body repairs; Repair group 70; Removing and installing floor mats Removing and installing floor mats

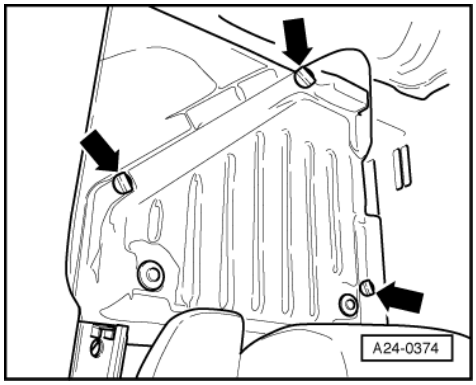

- -> Loosen screws -arrow- securing cover.
- Take off cover.

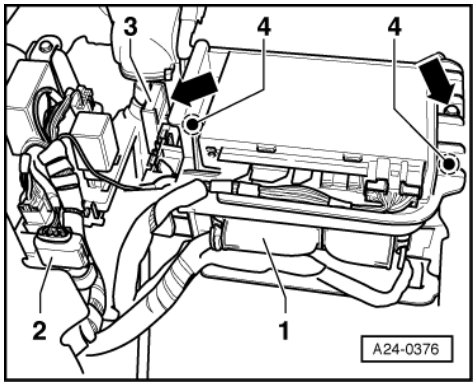

Protected by copyright. Copying for private or commercial purposes, in part or in whole, is not permitted unless authorised by AUDI AG. AUDI AG does not guarantee or accept any liability with respect to the correctness of information in this document. Copyright by AUDI AG.

- Remove fuse holder -3-.
- -> Loosen screws -arrow- and carefully take out control unit retaining frame.

- -> Carefully pull out engine control unit -1-; at the same time press retaining clips -4- in direction of arrow (see illustration below).

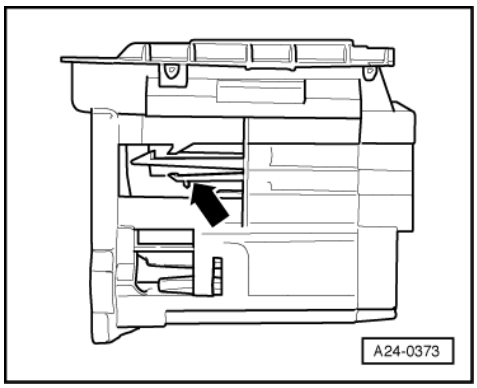

- -> Retaining clips for engine control unit.
- Release and unplug connectors on control unit.

- Insert new control unit and press to the left.
- Check the previous coding and the coding of the new control unit => Page 134 .
- Perform adaption of immobilizer to engine control unit

=> Electrical system; Repair group 01; Self-diagnosis of immobilizer; Adaptation procedure when engine control unit is replaced Self-diagnosis of immobilizer Adaptation procedure when engine control unit is replaced

- On vehicles with cruise control (identifiable by controls on steering column), activate the cruise control via the engine control unit => Page 146 .

- Match engine control unit to throttle valve control part: adaption procedure=> Page 136
- Perform adaption of exhaust gas recirculation potentiometer.
  Perform basic setting (measured value block 74)
  => Page 58 .
- Generate readiness code => Page 36

- Perform idling check
  => Page 119

4.5 - Coding engine control unit

Notes:

- A 5-character code must always be displayed during the control unit identification.
- The control unit must be re-coded as follows if the tester does not show the correct code for the vehicle, or if the control unit has been renewed.

permitted unless authorised by AUDI AG. AUDI AG does not guarantee or accept any liability with respect to the correctness of information in this document. Copyright by AUDI AG.

Special tools, workshop equipment, testers, measuring instruments and auxiliary items required

- Fault reader V.A.G 1551 with cable V.A.G 1551/3

Work sequence

- Connect the fault reader V.A.G 1551 (V.A.G 1552). Then switch ignition on and select engine control unit with the "Address word" 01.
  (Connecting fault reader and selecting engine control unit

=> Page 7 .)

-> Indicated on display:

```
Rapid data transfer     HELP
Select function XX
```

- Press keys 0 and 7 for the function "Code control unit" and confirm entry with Q key.

-> Indicated on display:

```
Coding control unit     Q
Enter code number XXXXX     (0-32000)
```

- Enter the relevant code number for this vehicle and confirm with Q key.

Coding variants => Page 135 .

-> The control unit identification and the coding will appear on the display, e.g.:

```
036 906034F     MARELLI 4LV     2615
Coding 00031     WSC XXXXX
```

-> Indicated on display when a non-authorised code number has been entered.

```
Function is not recognised or cannot
□
be performed at the moment.
```

- Press the ⇒key.
- Press keys 0 and 6 for the "End output" function and confirm input with the Q key.
- Switch off ignition.

Note:

The code unit entered and shown on the display will not be used by the engine control unit until the ignition has been switched off once.

An incorrect coding leads to:

- Engine running faults (gear change jerks, load change jerks, etc.)
- Increased fuel consumption
- Increased exhaust gas emissions
- Faults stored in fault memory which are not actually present
- Functions will not be performed (Lambda regulation, activation of the activated charcoal filter system, etc.).
- On front wheel drive vehicles the traction control will not function (TC warning lamp comes on)
- Reduced gearbox life

Protected by copyright. Copying for private or commercial purposes, in part or in whole, is not permitted unless authorised by AUDI AG. AUDI AG does not guarantee or assume any liability for the use of information in this document. Copyright by AUDI AG.

4.6 - Coding variants of engine control unit

For vehicles with front wheel drive the engine control unit is coded as follows:

Code number	Vehicles with
00001	Manual gearbox without ABS, without air conditioner
00011	Manual gearbox with ABS, without air conditioner
00051	Manual gearbox with ABS and air conditioner

4.7 - Adapting engine control unit to throttle valve control part

The adaption teaches the engine control unit the various positions of the throttle unit when the ignition is switched on and the engine is not running. These positions are stored in the control unit. The feedback of the throttle valve position is via both angle senders for throttle valve drive.

Adapting sequence must be performed if:

- The voltage supply is interrupted
- The throttle valve control unit is removed and installed
- The throttle valve control unit is renewed
- If when installing another engine another throttle valve control unit is installed

Special tools, workshop equipment, testers, measuring instruments and auxiliary items required

- Fault reader V.A.G 1551 or vehicle system tester V.A.G 1552 with cable V.A.G 1551/3

Test conditions

- No faults must be stored in fault memory
  => Page 9 , interrogating fault memory
- The battery voltage must be at least 11.5 V.
- Engine not running; ignition switched on.
- The accelerator pedal must not be depressed.
- The throttle valve must be at idling speed position.
- Coolant temperature must be 5...95 °C =>display group 04, display zone 3.
- The cruise control system must be functioning correctly if installed.

Work sequence

- Connect the fault reader V.A.G 1551 (V.A.G 1552). Then switch ignition on and select engine control unit with the "Address word" 01.
  (Connecting fault reader and selecting engine control unit
  => Page 7 .)

-> Indicated on display:

```
Rapid data transfer     HELP
Select function XX
```

- Press keys 0 and 4 for the function "Introduction of basic setting" and confirm entry with Q key.

-> Indicated on display:

```
Basic setting     HELP
Input display group number XXX
```

- Press keys 0, 6 and 0 for the "Display group number 60" and confirm entry with Q key.

-> Indicated on display:
(1...4 = display zones)

```
Basic setting     60
     xxx %     xxx %     x     ADP. runs
```

Protected by copyright. Copying for private or commercial purposes, in part or in whole, is not permitted unless authorised by AUDI AG. AUDI AG does not guarantee or accept any liability with respect to the correctness of information in this document. Copyright by AUDI AG.

After pressing the Q key the throttle valve positioner is switched so that it is not supplied with voltage at start of test.

In this condition the throttle valve is pulled into an emergency running position by a mechanical spring in the throttle valve control part. The values that both angle senders provide in the emergency running position are stored by the engine control unit.

Thereafter the throttle valve is opened a predetermined value. If this value is achieved, the throttle valve is again switched so that it is not supplied with voltage. Now the mechanical spring must pull the throttle valve to the previously learnt emergency running position within a predetermined period (spring test).

Then the throttle valve is closed by the throttle valve positioner and the values which are supplied by the angle senders in the throttle valve control part are stored by the engine control unit.

If the engine control unit switches the throttle valve positioner so that it is without voltage during normal operation, this is indicated by the increased and hunting idling speed. The engine reacts slowly to accelerator changes.

-> Indicated on display:
(1...4 = display zones)

```
Basic setting     60
     xxx %     xxx %     12     ADP. OK.
```

Adapting has been performed successfully.

To store the values:

- Switch ignition off for at least 30 seconds.

Note:

If the basic setting of the control unit is interrupted, the cause could be one of the following:

- Throttle valve cannot reach the mechanical idling stop because of obstructions such as oil deposits.
- Battery voltage too low.
- Throttle valve control unit or wiring is defective. Check => Page 95 .

A fault will be stored in the fault memory if the adaption procedure is interrupted. However, you should still check whether the basic setting or adaption of the throttle valve control part has been performed successfully. The basic setting will be performed again automatically the next time the ignition is switched on.

- End the engine basic setting by pressing the⇒ key.
- Press keys 0 and 6 for the function "End output" and confirm entry with the Q key.

Protected by copyright. Copying for private or commercial purposes, in part or in whole, is not permitted unless authorised by AUDI AG. AUDI AG does not guarantee or accept any liability with respect to the correctness of information in this document. Copyright by AUDI AG.

4.8 - Testing fuel pump relay -J17 and activation

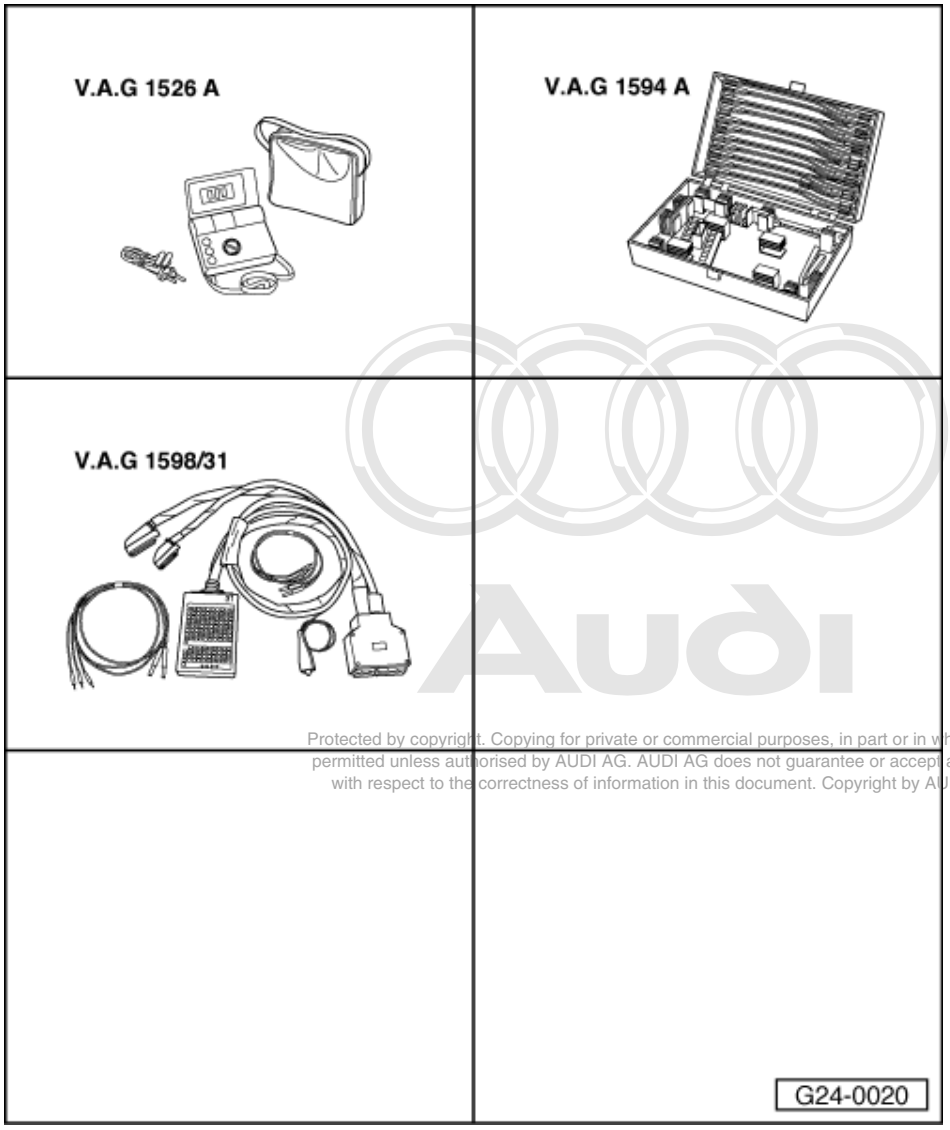

Protected by copyright. Copying for private or commercial purposes, in part or in whole, is not permitted unless authorised by AUDI AG. AUDI AG does not guarantee or accept any liability with respect to the correctness of information in this document. Copyright by AUDI AG.

Special tools and workshop equipment required

- V.A.G 1526 A
- V.A.G 1594 A
- V.A.G 1598/31

The fuel pump and some of the injection system components receive their voltage supply via fuel pump relay -J17.

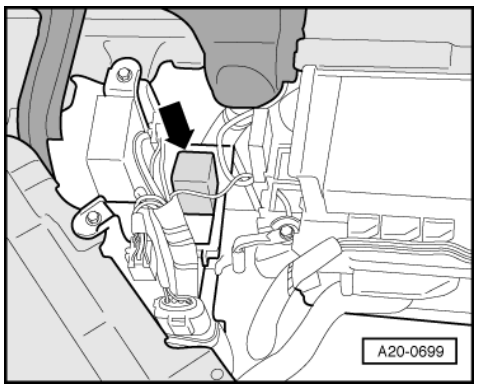

Fuel pump relay -J17 will only close if the engine is turning over. In other words, the relay is only earthed (via the engine control unit) when the engine control unit is receiving engine revolution impulses.

Note:

-> The fuel pump relay is located on the 6-way relay carrier on the left of the driver's footwell, relay position 5.

Test requirement:

- Battery voltage not less than 11 V

Testing operation of fuel pump relay

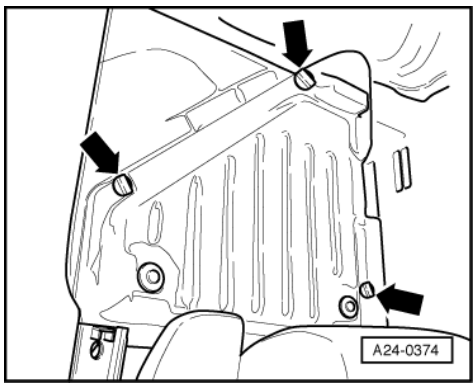

- Pull up floor covering in driver's footwell.
- -> Open cover on electronics box -arrows-.

- Start final control diagnosis and activate fuel pump relay -J17:

=> Injection and ignition system; Repair group 01; Final control diagnosis Final control diagnosis

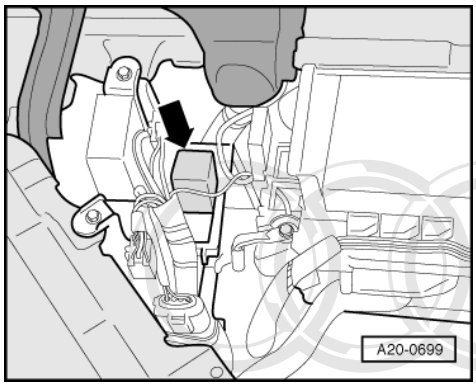

- -> The fuel pump relay should pick up and the fuel pump should run at intervals. (Relay is located on 6-way relay carrier on left side of driver's footwell, relay position 5).

A - If the relay does not pick up:

- Test voltage supply to fuel pump relay.
- Test activation of fuel pump relay.

Protected by copyright. Copying for private or commercial purposes, in part or in whole, is not permitted unless authorised by AUDI AG. AUDI AG does not guarantee or accept any liability with respect to the correctness of information in this document. Copyright by AUDI AG.

B - If the relay picks up but the fuel pump does not run:

- Test voltage supply to fuel pump and other components (via fuel pump relay) =>Page 142 .

Testing voltage supply to fuel pump relay

- Switch off ignition.

- Disconnect fuel pump relay.

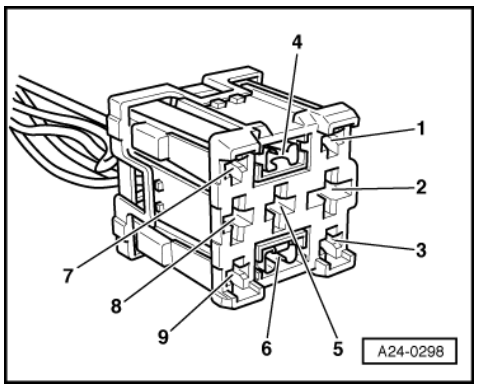

- -> Connect multimeter (voltage measurement range) as follows:

6-way relay carrier on left of driver's footwell, relay position 5, contact	Measure against
2	Engine earth
6	Battery positive

- Specification: approx. battery voltage

6-way relay carrier on left of driver's footwell, relay position 5, contact	Measure against
4	Engine earth

- Switch ignition on.
  - Specification: approx. battery voltage

Protected by copyright. Copying for private or commercial purposes, in part or in whole, is not permitted unless authorised by AUDI AG. AUDI AG does not guarantee or accept any liability with respect to the correctness of information in this document. Copyright by AUDI AG.

If a specification is not met:

- Check the wiring.

=> Current flow diagrams, Electrical fault finding and Fitting locations binder

- Re-insert fuel pump relay.

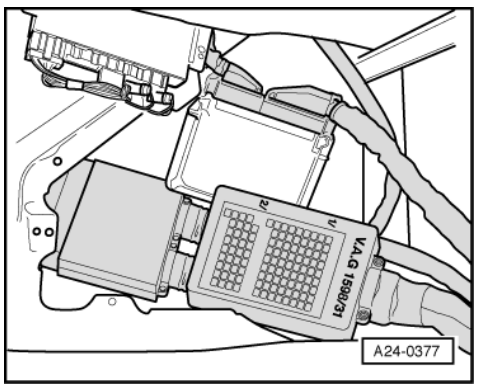

Testing activation of fuel pump relay

- Switch off ignition.
- -> Connect test box V.A.G 1598/31 to control unit wiring harness. The engine control unit remains disconnected => Page 66 .
- Bridge contacts 1 and 65 on the test box using test leads from adapter set V.A.G 1594 A.

- Switch ignition on.

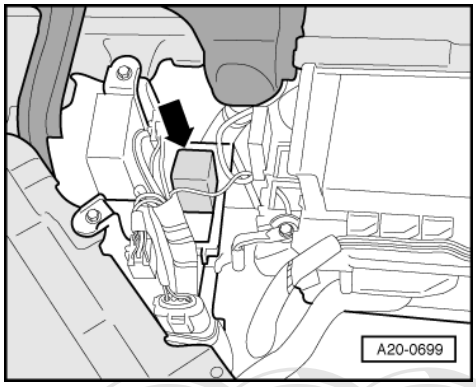

  - -> The fuel pump relay should pick up. (Relay is located on 6-way relay carrier on left side of driver's footwell, relay position 5).

If the relay picks up now but not during the final control diagnosis:

- Fit a new engine control unit

=> Injection and ignition system; Repair group 24; Servicing injection system; Replacing engine control unit Servicing injection system Replacing engine control unit

If the relay does not pick up:

- Switch off ignition.
- Disconnect fuel pump relay.

Protected by copyright. Copying for private or commercial purposes, in part or in whole, is not permitted unless authorised by AUDI AG. AUDI AG does not guarantee or accept any liability with respect to the correctness of information in this document. Copyright by AUDI AG.

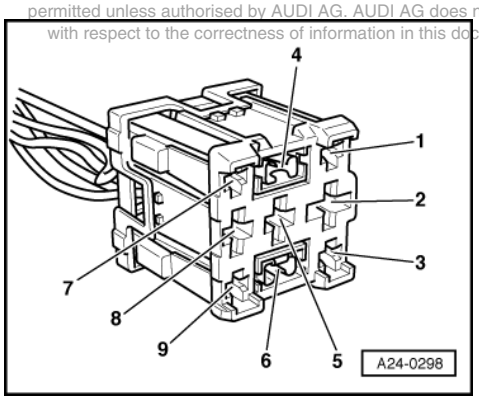

- -> Test for open circuit and short to positive or earth in the following wiring connections:

6-way relay carrier on left of driver's footwell, relay position 5, Contact	Test box V.A.G 1598/31 Socket
1	65

- Rectify any open/short circuit as necessary.

If no fault is found:

- Fit a new fuel pump relay -J17.
- Reconnect the engine control unit.

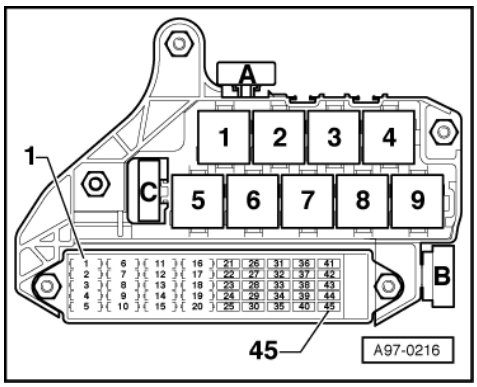

Testing voltage supply to fuel pump and other components

- -> Remove fuse Nos. S18, S19 and S245 (sockets 18, 19 and 45) from fuse holder.
- Start final control diagnosis and activate fuel pump relay -J17:

=> Injection and ignition system; Repair group 01; Final control diagnosis Final control diagnosis

- For each of the following fuse positions in the fuse holder, connect the multimeter (voltage measurement range) between earth and one of the fuse contacts:

Fuse	Specification (for one contact)
S18	Approx. battery voltage 1)
S19	Approx. battery voltage 1)
S245	Approx. battery voltage 1)

1) at intervals

If the specifications are not obtained:

- Repeat the test on the other fuse contact.

If the specifications are again not attained:

- Check wiring

Protected by copyright. Copying for private or commercial purposes, in part or in whole, is not permitted unless authorised by AUDI AG. AUDI AG does not guarantee or accept any liability with respect to the correctness of information in this document. Copyright by AUDI AG.

=> Current flow diagrams, Electrical fault finding and Fitting locations binder

If no fault is found:

- Fit a new fuel pump relay -J17.
- Refit fuses.

5 - Checking additional signals

5.1 - Checking additional signals

5.2 - Checking speed signal

Special tools, workshop equipment, testers, measuring instruments and auxiliary items required

- Fault reader V.A.G 1551 or vehicle system tester V.A.G 1552 with cable V.A.G 1551/3
- Test box V.A.G 1598/31

- Hand multimeter V.A.G 1526 or multimeter V.A.G 1715
- Adapter set V.A.G 1594
- Current flow diagram

Check conditions

- The battery voltage must be at least 11.5 V.
- Speedometer OK., checking:

=> Repair group 01; Electrical system self-diagnosis Electrical system self-diagnosis

Test sequence

Note:

To check the speed signal the vehicle must be driven. To do this a second person is necessary.

Warning! Secure fault reader to rear seat and operate from this position.

- Connect fault reader V.A.G 1551 (V.A.G 1552). Start engine and select "Address word" 01 of engine control unit. When doing this the engine must be running at idling speed.
  (Connecting fault reader and selecting engine control unit
  => Page 7 .)

-> Indicated on display:

```
Rapid data transfer      HELP
Select function XX
```

Protected by copyright. Copying for private or commercial purposes, in part or in whole, is not permitted unless authorised by AUDI AG. AUDI AG does not guarantee or accept any liability with respect to the correctness of information in this document.

- Press keys 0 and 8 for the function "Read measured value block" and confirm entry with Q key.

-> Indicated on display:

```
Read measured value block      HELP
Input display group number XXX
```

- Press keys 0, 0 and 5 for "Display group number 5" and confirm entry with Q key.

-> Indicated on display:
(1...4 = Display zones)

```
Read measured value block 5
     1     2     3     4
```

- Carry out test drive with a 2nd person to observe display.
- Observe figure displayed in display zone 3:
  Specification: approx. road speed
- Press the ⇒key.
- Press keys 0 and 6 for the "End output" function and confirm input with the Q key.
- Switch off ignition.

If no speed is displayed:

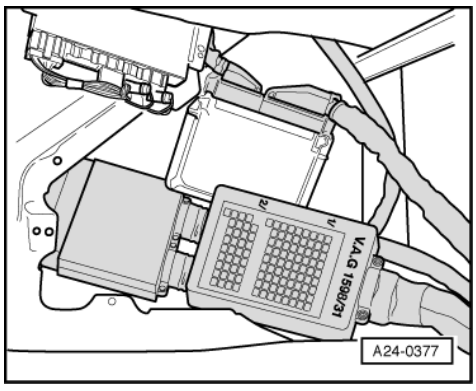

- -> Connect test box V.A.G 1598/31 to control unit wiring harness. The engine control unit remains disconnected => Page 66 .
- Connect multimeter to measure voltage between test box sockets 4 (terminal 15) + 54 (speed signal).
- Switch on ignition.
- Lift vehicle at front left.
- Rotate front wheel and observe voltage display.
  Specification: between 0 and at least 4 Volt fluctuating

If the display does not fluctuate:

- Check wiring to speedometer/speedometer sender.

=> Current flow diagrams, Electrical fault finding and Fitting locations binder

5.3 - Testing cruise control system (CCS)

The CCS has no components of its own (except for the operating switch). All CCS functions are carried out by the Diesel direct injection system.

Test sequence

Protected by copyright. Copying for private or commercial purposes, in part or in whole, is not permitted unless authorised by AUDI AG. AUDI AG does not guarantee or accept any liability with respect to the correctness of information in this document. Copyright by AUDI AG.

- Connect fault reader V.A.G 1551 (V.A.G 1552). Start engine and select "Address word" 01 of engine control unit. When doing this the engine must be running at idling speed.
  (Connecting fault reader and selecting engine control unit
  => Page 7 .)
- Press keys 0 and 8 for the function "Read measured value block" and confirm entry with Q key.

-> Indicated on display:

```
Read measured value block
Enter display group number XXX
```

- Enter display group number 066
  (with engine running at idling speed).
- Confirm entry with key Q.

The measured value block which has been selected will appear in the standard format.

Content of displaygroup:

Display Group	Indicated on display
066	1 = actual road speed (km/h) 2 = switch positions for brake, clutch and "CCS enabled" 3 = specified road speed (km/h) 4 = positions of CCS operating switch

Measured value block 066

Read measured value block 66 ⇒				Indicated on display
km/h	X X X X	km/h	X X X X	
				Switch positions (driver-operated control switch) 0000= cruise control switched off (switch engaged) 0011= cruise control switched on 0001= cruise control switched off (switch not engaged) 0111= "SET/FIX" button pressed in 1011= switch moved to "RES/AUFN" ("resume") position

		Specified road speed The display will continue to show the speed that was last stored until: - the cruise control function is switched off via the operating switch (i.e. switch engaged in "OFF" position) - the engine is switched off
	Brake and clutch switch positions; cruise control status (enabled or not enabled) 1000=cruise control enabled 1011=brake depressed (brake pedal switch) 1100=clutch depressed	
Actual road speed		

-> Indicated on display

```
Read measured value block 66
     0 km/h     1 0 0 0     0 km/h     0
0 0 0
```

Check displays in display zones 2 and 4.

-> Checking display in display zone 2:

```
Read measured value block 66
     0 km/h     1 0 0 0     0 km/h     0
0 0 0
```

Test condition	Display zone 2
CCS enabled (activated)	1000
Brake depressed (brake pedal switch)	1011
Clutch depressed	1100

If display zone 2 does not read "1000" (CCS activated):

- Check control unit identification of engine control unit:
  Connect fault reader V.A.G 1551 (V.A.G 1552). Start engine and select "Address word" 01 of engine control unit.
  (Connecting fault reader and selecting engine control unit
  => Page 7 .)

Protected by copyright. Copying for private or commercial purposes, in part or in whole, is not permitted unless authorised by AUDI AG. AUDI AG does not guarantee or accept any liability with respect to the correctness of information in this document. Copyright by AUDI AG.

- If the letter "G" does not appear after the component designation, this means the cruise control system first has to be activated => Page 146 .

Only for vehicles with automatic gearbox:

- Take vehicle for a test drive and go beyond a speed of 30 km/h once. After completing the test drive, leave the engine running and engage the selector lever in position 2, 3 or D.
- Apply the handbrake.

Note:

On vehicles with automatic gearbox the power supply for the CCS switch only cuts in when the road speed exceeds 30 km/h and when the selector lever is in position 2, 3 or D. The power supply is then maintained even during idling, as long as one of the drive positions (except 1 or R) is engaged.

-> Checking display in display zone 4:

```
Read measured value block 66
     0 km/h     1 0 0 0     0 km/h     0
0 0 0
```

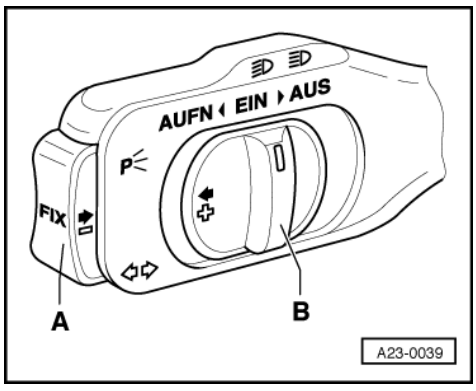

Test condition	Display zone 4
Switch B engaged in "OFF/AUS" position	0000
Switch B at "ON/EIN"	0011
Memory set, switch B in "OFF/AUS" position but before engagement point	0001
Button A pressed in ("SET/FIX")	0111
Switch B held at "RES/AUFN"	1011

If the specifications for display zone 4 are not obtained when switch B is in the "ON/EIN" position (0011):

Check wiring => Page 146 .

Activating cruise control system

- Connect fault reader V.A.G 1551 (V.A.G 1552). Start engine and select "Address word" 01 of engine control unit. When doing this the engine must be running at idling speed.
  (Connecting fault reader and selecting engine control unit
  => Page 7 .)

-> Indicated on display:

```
Rapid data transfer      HELP
Select function XX
```

- Press key 1 twice for the function "Log-in procedure" and confirm entry with Q key.

-> Indicated on display:

```
Log-in procedure     Q
Feed in code number XXXXX
```

Protected by copyright. Copying for private or commercial purposes, in part or in whole, is not permitted unless authorised by AUDI AG. AUDI AG does not guarantee or accept any liability with respect to the correctness of information in this document. Copyright by AUDI AG.

- Enter code number 11463 and confirm entry with Q key.
- Press the ⇒key.
- Press keys 0 and 6 for the function "End output" and confirm entry with the Q key.
- Switch off ignition.

Checking wiring

- Connect test box V.A.G 1598/31 to wiring harness for engine control unit and to engine control unit
  => Page 66 .
- Check wiring for short to earth, short to positive and open circuit.
- Rectify any open/short circuit as necessary.

=> Current flow diagrams, Electrical fault finding and Fitting locations

Renew cruise control switch if no fault is found in the wiring.

5.4 - Checking signal from brake light switch and brake pedal switch

Special tools, workshop equipment, testers, measuring instruments and auxiliary items required

- Fault reader V.A.G 1551 or vehicle system tester V.A.G 1552 with cable V.A.G 1551/3
- Test box V.A.G 1598/31
- Hand multimeter V.A.G 1526 or multimeter V.A.G 1715
- Adapter set V.A.G 1594
- Current flow diagram

Test sequence

- Connect the fault reader V.A.G 1551 (V.A.G 1552). Then switch ignition on and select engine control unit with the "Address word" 01.

(Connecting fault reader and selecting engine control unit
=> Page 7 .)

-> Indicated on display:

```
Rapid data transfer      HELP
Select function XX
```

- Press keys 0 and 8 for the function "Read measured value block" and confirm entry with Q key.

-> Indicated on display:

```
Read measured value block      HELP
Input display group number XXX
```

- Press keys 0, 6 and 6 for "display group 66" and confirm with Q key.

Protected by copyright. Copying for private or commercial purposes, in part or in whole, is not permitted unless authorised by AUDI AG. AUDI AG does not guarantee or accept any liability with respect to the correctness of information in this document. Copyright by AUDI AG.

-> Indicated on display:

```
Read measured value block 66
     1     2     3     4
```

- Observe display in display zone 2:
  (3rd and 4th positions from left)
  Specification: x x 0 0
- Depress brake pedal fully and observe display in display zone 2.
  Specification: x x 1 1
- Press the ⇒key.
- Press keys 0 and 6 for the "End output" function and confirm input with the Q key.
- Switch off ignition.

If the specification is not obtained:

- Remove the shelf on driver's side:

=> General body repairs, interior; Repair group 68; Dash panel; Removing driver's side shelf Dash panel Removing driver's side shelf

- Pull the connector off brake light/brake pedal switch.

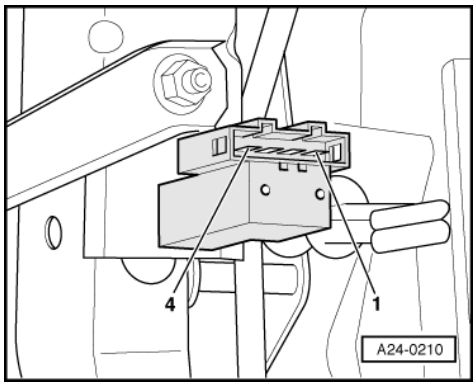

- -> Connect the multimeter to measure resistance between contacts 1 and 4.
  Specification: ∞ ω (no continuity)
- Depress brake pedal.
  Specification: approx. 0 ω
- Connect the multimeter to measure resistance between contacts 2 and 3.
  Specification: approx. 0 ω
- Depress the brake pedal.
  Specification: ∞ ω (no continuity)

If the specifications are not attained:

- Replace the brake light/brake pedal switch.

If the specifications are obtained:

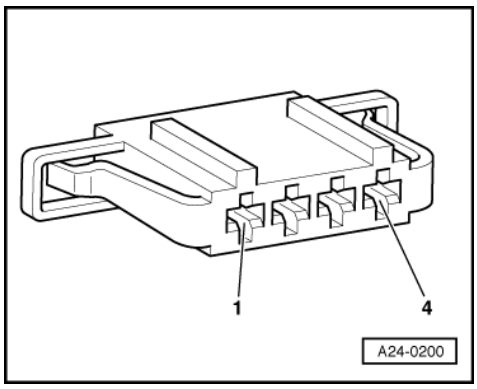

- -> Connect multimeter to measure voltage between contact 1 and earth.
  Specification: at least 11.5 V
- Switch ignition on.
- Connect the multimeter to measure voltage between contact 2 and earth.
  Specification: at least 11.5 V

If the specifications are not obtained:

- Check the wire between 4-pin connector contacts 1 and 2 to central electrics unit using current flow diagram.

=> Current flow diagrams, Electrical fault finding and Fitting locations binder

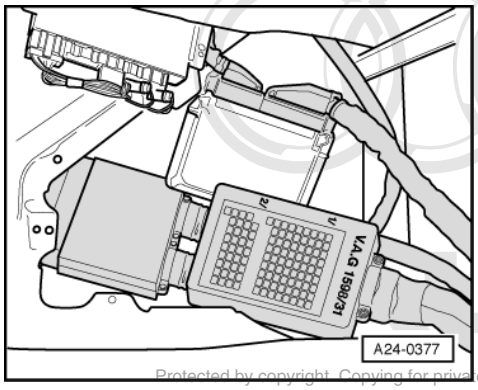

Protected by copyright. Copying for private or commercial purposes, in part or in whole, is not permitted unless authorised by AUDI AG. AUDI AG does not guarantee or accept any liability with respect to the correctness of information in this document. Copyright by AUDI AG.

If the specification is obtained:

- -> Connect test box V.A.G 1598/31 to control unit wiring harness. The engine control unit remains disconnected => Page 66 .

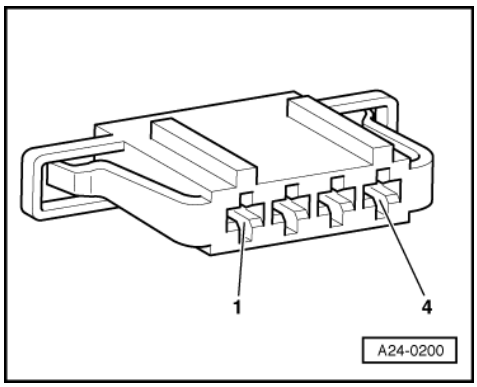

- -> Check wiring for open circuit between test box and 4-pin connector for open circuit using current flow diagram.
  Contact 3+socket 55
  Contact 4+socket 56

Wire resistance: Max. 1.5 ω
- Additionally check wires for short to one another.
- Additionally check the wiring for short to battery positive or earth.
- Rectify short circuit or open circuit if necessary.

=> Current flow diagrams, Electrical fault finding and Fitting locations binder

If no fault is found:

- Replace engine control unit
  => Page 133 .

5.5 - Testing clutch pedal switch -F36

Note:

This signal is used to avoid over-revving and load change jolts when disengaging the clutch. It is also needed for the cruise control system.

Protected by copyright. Copying for private or commercial purposes, in part or in whole, is not permitted unless authorised by AUDI AG. AUDI AG does not guarantee or accept any liability with respect to the correctness of information in this document. Copyright by AUDI AG.

Test sequence

- Connect the fault reader V.A.G 1551 (V.A.G 1552). Then switch ignition on and select engine control unit with the "Address word" 01.
  (Connecting fault reader and selecting engine control unit
  => Page 7 .)

-> Indicated on display:

```
Rapid data transfer      HELP
Select function XX
```

- Press keys 0 and 8 for the function "Read measured value block" and confirm entry with Q key.

-> Indicated on display:

```
Read measured value block
Enter display group number XXX
```

- Press keys 0, 0 and 6 for "Display group 6" and confirm with Q key.

-> Indicated on display:

```
Read measured value block 6
    0 km/h     0     0     0     0.0 %
255
```

- Observe display in display zone 2.

  Specification: 0 0 0

- Operate clutch pedal. The left-hand position must change to 1.

-> Indicated on display:

```
Read measured value block 6
    0 km/h     1     0     0     0.0 %
255
```

  Specification: 1 0 0

If the specifications are not obtained:

- Press the ⇒key.
- Press keys 0 and 6 for the "End output" function and confirm input with the Q key.

- Switch off ignition.

If the specifications are not obtained:

Testing switches

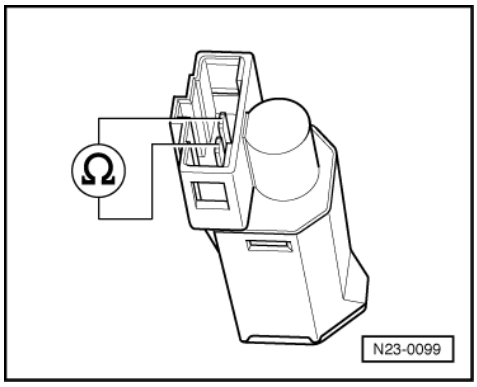

- Remove storage compartment (shelf) on driver's side.

=> General body repairs, Interior; Repair group 68; Storage compartments, covers; Removing driver's storage compartment Storage compartments, covers Removing driver's storage compartment

- Unplug connector from clutch pedal switch.
- -> Connect multimeter to switch (resistance measurement range)

  Specification: approx. 0 ω

- Depress the clutch pedal.

  Specification: ∞ ω (no continuity)

Protected by copyright. Copying for private or commercial purposes, in part or in whole, is not permitted unless authorised by AUDI AG. AUDI AG does not guarantee or accept any liability with respect to the correctness of information in this document. Copyright by AUDI AG.

If the specifications are not obtained:

- Renew clutch pedal switch.

=> Running gear, Front-wheel drive and four-wheel drive; Repair group 46

If the specifications are obtained:

Testing voltage supply

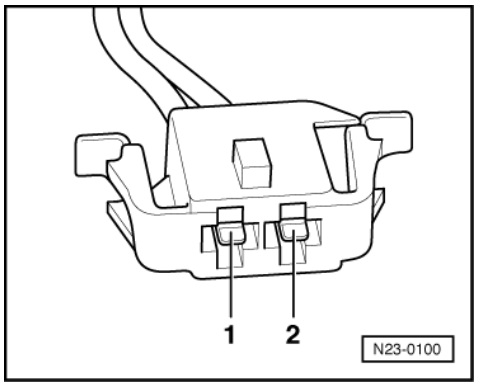

- -> Connect voltage tester V.A.G 1527 B as follows:

Connector Contact	Measure against
1	Body earth

- Switch on ignition.

  Specification: the LED should light up.

- Switch off ignition.

If the LED does not light up:

- Test wiring for open circuits and rectify if necessary.

=> Current flow diagrams, Electrical fault finding and Fitting locations binder

If the LED lights up:

Testing wiring

- Connect test box V.A.G 1598/31 to wiring harness for engine control unit. Do not connect to the engine control unit itself.
  => Page 66 .

Protected by copyright. Copying for private or commercial purposes, in part or in whole, is not permitted unless authorised by AUDI AG. AUDI AG does not guarantee or accept any liability with respect to the correctness of information in this document. Copyright by AUDI AG.

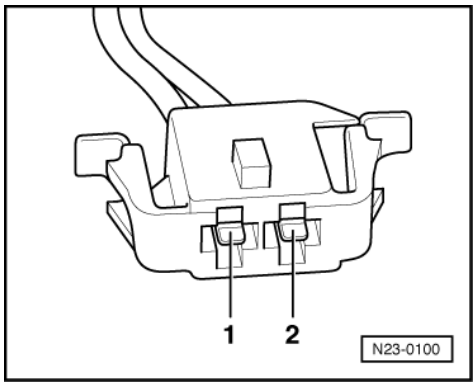

- -> Test for open circuit and short to positive or earth in the following wiring connections:

Connector Contact	Test box V.A.G 1598/31 Socket
2	39

  Resistance in wiring: max. 1.5 ω

- Rectify short circuit or open circuit if necessary.

=> Current flow diagrams, Electrical fault finding and Fitting locations binder

If no fault is found:

- Replace engine control unit
  => Page 133 .

5.6 - Checking rpm signal

Note:

The engine speed signal is output on contact 37 of engine control unit. The signal is necessary amongst other things for the automatic gearbox control unit to calculate the shift points and for the rev counter in dash panel insert.

Special tools, workshop equipment, testers, measuring instruments and auxiliary items required

- Test box V.A.G 1598/31

- Adapter set V.A.G 1594
- Hand multimeter V.A.G 1526 or multimeter V.A.G 1715
- Current flow diagram

Test conditions

- No faults must be stored in fault memory => Page 9 , interrogating and erasing fault memory.

Test sequence

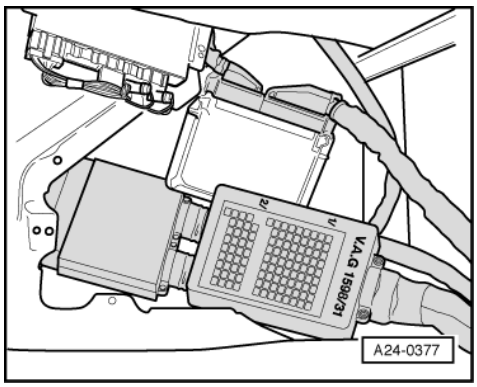

- -> Connect test box V.A.G 1598/31 to control unit wiring harness. The engine control unit remains disconnected => Page 66 .
- Check the wiring from test box contact 37 to dash panel insert for open circuit using current flow diagram:

=> Current flow diagrams, Electrical fault finding and Fitting locations

5.7 - Checking data bus

Notes:

- The data exchange between the various control units is carried out via a data bus.
- The term "CAN data bus" refers to a system for transmitting and distributing data.
- The wires which connect the control units and convey the data between them are called data wires.
- Data is transmitted via data wires in sequence, i.e. in a specific order to the connected control units (e.g. engine rpm and accelerator pedal position).

Protected by copyright. Copying for private or commercial purposes, in part or in whole, is not permitted unless authorised by AUDI AG. AUDI AG does not guarantee or accept any liability with respect to the correctness of information in this document. Copyright by AUDI AG.

Testing bus system

The fault table indicates that the data exchange between the engine control unit, gearbox control unit, ABS/ EDL control unit and airbag control unit or the dash panel insert should be tested.

- Connect vehicle diagnostic, testing and information system VAS 5051 (or fault reader V.A.G 1551) and select engine electronics control unit by entering address word "01" (=> Page 7 .)
  When doing this the ignition must be switched on.

-> Indicated on display:

```
Rapid data transfer      HELP
Select function XX
```

- Enter "08" to select the function "Read measured value block" and confirm entry with Q key.

-> Indicated on display:

```
Read measured value block     Q
Enter display group number XXX
```

- Enter "125" for "Display group 125" and confirm with Q key.

- Check display in display zones 1 ... 3.

	Display zones			
	1	2	3	4
Display group 125: CAN bus				
Display	---	---	---	
Indicates	Anti-lock brake system	Gearbox	Dash panel insert ("Combi")	Airbag
Range	ABS 1 ABS 0	Gear. 0	Combi 1 Combi 0	Airbag 1 Airbag 0
Specification	ABS 1	Gear. 0	Combi 1	Airbag 1

- Press C key.

-> Indicated on display:

```
Read measured value block     Q
Enter display group number XXX
```

- Enter "126" for "Display group 126" and confirm with Q key.
- Check display in display zone 3.

	Display zones			
	1	2	3	4
Display group 126: CAN bus				
Display			---	
Indicates			Air conditioner	
Range			Air cond.1 Air cond.0	
Specification			Air cond.1	

- Press the ⇒key.

If a specification is not met:

- Enter "06" to select the function "End output" and confirm entry with Q key.

-> When this display appears:

```
Rapid data transfer      HELP
Enter address word XX
```

- Press key 0 twice for address word "Automatic test sequence" and confirm entry with Q key.
  - The fault memory of all on-board systems with self-diagnostic capability will be read.

When a control unit answers with its identification the number of stored faults appears on the display or "No fault recognised".

Any system faults that are stored will be displayed one after the other and printed out. The V.A.G 1551 will then transmit the next address word.

-> The automatic test sequence has ended when the following appears on the display:

```
V.A.G - SELF-DIAGNOSIS      HELP
1 - Rapid data transfer*
2 - Flash code output*
```

If faults have been stored relating to the "Drive train data bus" or to the "CAN data bus":

- Check that the engine control unit, gearbox control unit, ABS/EDL control unit and airbag control unit or the dash panel insert are the correct versions for the vehicle (check Part No. and coding).

Copyright by AUDI AG. Reproduction, duplication or transmission to third parties as well as any other use of this document, in whole or in part, is not permitted without the written permission of AUDI AG. AUDI AG does not guarantee or accept any liability with respect to the correctness of information in this document. Copyright by AUDI AG.

If the correct control units are installed:

- Check that multi-pin connectors for control units are properly seated.

If the multi-pin connectors are properly seated:

- Test CAN bus system.

Testing a "two-wire bus system"

Three or more control units communicating via a "two-wire bus system"

- Read out the faults stored in the control units.

Note:

This will help to trace a fault in the wiring.

Example 1:

From the faults present in the fault memories, you can see that control unit 1 has no connection to control units 2 or 3.

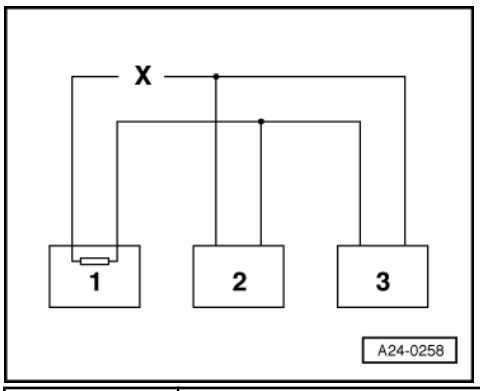

Control unit	Faults present in fault memory:
1	- No message from control unit 2 - No message from control unit 3
2	- No message from control unit 1
3	- No message from control unit 1

- Switch off ignition.
- Disconnect the control units which are linked by the bus wires and check whether there is an open circuit in one of the bus wires

=> Current flow diagrams, Electrical fault finding and Fitting locations

- If no fault can be found in the bus wires replace control unit 1.

Example 2:

From the faults present in the fault memories, you can see that control unit 2 has no connection to control units 1 or 3.

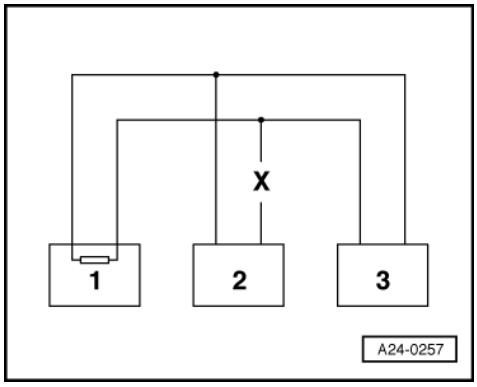

Protected by copyright. Copying for private or commercial purposes, in part or in whole, is not permitted unless authorised by AUDI AG. AUDI AG does not guarantee or accept any liability with respect to the correctness of information in this document. Copyright by AUDI AG.

Control unit	Faults present in fault memory:
1	- No message from control unit 2
2	- No message from control unit 1 - No message from control unit 3
3	- No message from control unit 2

- Switch off ignition.
- Disconnect the control units which are linked by the bus wires and check whether there is an open circuit in one of the bus wires

=> Current flow diagrams, Electrical fault finding and Fitting locations

- If no fault can be found in the bus wires replace control unit 2.

Example 3:

From the faults present in the fault memories, you can see that none of the control units are able to transmit or receive signals.

Control unit	Faults present in fault memory:
1	- Data bus drive defective
2	- Data bus drive defective
3	- Data bus drive defective

- Switch off ignition.

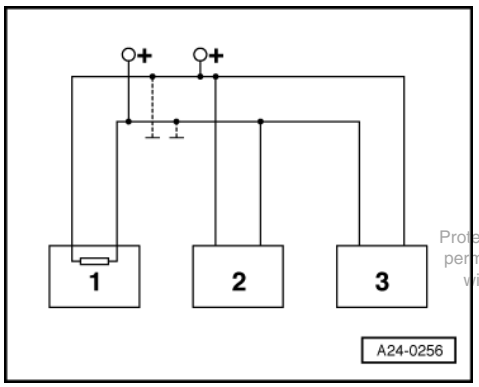

Protected by copyright. Copying for private or commercial purposes, in part or in whole, is not permitted unless authorised by AUDI AG. AUDI AG does not guarantee or accept any liability with respect to the correctness of information in this document. Copyright by AUDI AG.

- -> Disconnect the control units which are linked by the bus wires and check for a short circuit to positive or earth in the bus wires

=> Current flow diagrams, Electrical fault finding and Fitting locations

If the cause of the fault "Data bus drive defective" cannot be found in the data bus wires, check whether one of the control units is causing the fault.

At this stage all the control units which communicate via the CAN data bus are disconnected. The ignition is switched off.

- Connect one of the control units.
- Connect fault reader V.A.G 1551. Switch on the ignition and erase the fault memory of the control unit which has just been connected. End output from fault reader with function 06 "End output".
- Switch the ignition off and then on again.
- Leave the ignition switched on for 10 seconds. Then interrogate the fault memory of the control unit that has just been connected, using the fault reader.
- If the fault "Data bus drive defective" is now indicated, replace the control unit which has just been connected.
- If the fault "Data bus drive defective" is not indicated, connect the next control unit, and repeat the above procedure.

28 - Ignition system

1 - Servicing ignition system

1.1 - Servicing ignition system

1.2 - General notes on ignition system

- Only the components which specifically relate to the ignition system are dealt with here. For the other components of the injection and ignition system => Repair group 24.
- Disconnecting and connecting the battery must only be done with the ignition switched off, otherwise the engine control unit could be damaged.
- The engine control unit is equipped with self diagnosis.
- Components marked with * are checked via the self diagnosis
  => Page 9 , interrogating and erasing fault memory.
- For trouble-free operation of the electrical components a voltage of at least 11.5 V is necessary.
- Before carrying out repairs and for fault finding, interrogate fault memory => Page 9 , interrogating and erasing fault memory
- During some checks it is possible that the control unit will recognise and store a fault. Therefore after completing all checks and repairs the fault memory must be interrogated and if necessary erased.
  => Page 9 , interrogating and erasing fault memory

- If the engine starts, runs for a short period and then stops after fault finding, repairs or component tests, this may be because the immobilizer has disabled the engine control unit. The fault memory must be interrogated and if necessary the control unit matched (adaption procedure).

=> Electrical system; Repair group 01; Self-diagnosis of immobilizer

Safety precautions => Page 159

Test data, spark plugs => Page 160

Protected by copyright. Copying for private or commercial purposes, in part or in whole, is not permitted unless authorised by AUDI AG. AUDI AG does not guarantee or accept any liability with respect to the correctness of information in this document. Copyright by AUDI AG.

1.3 - Removing and installing parts of the ignition system

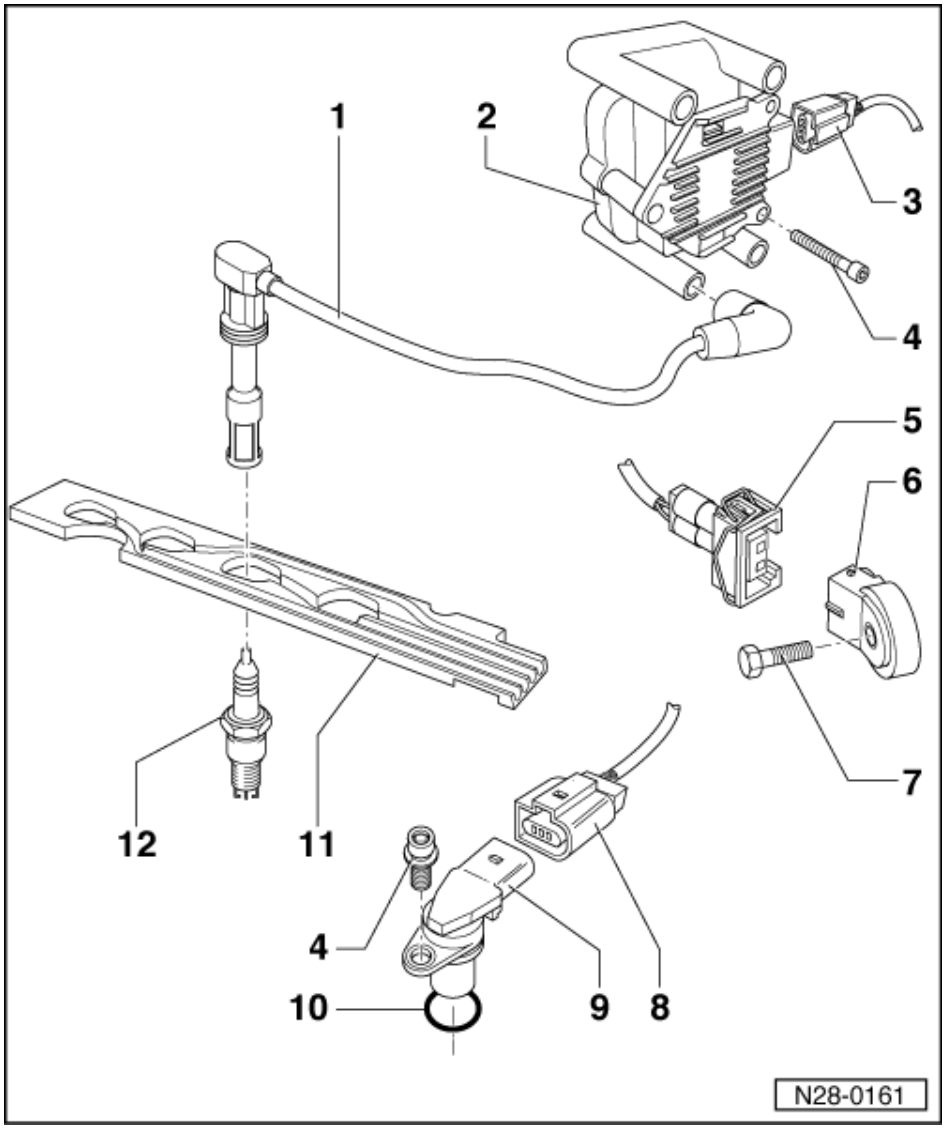

1 H.T. cable
- With suppression connector and spark plug connector
- Resistance 4.8...7.2 kω

2 Ignition transformer (N152)
- Marked for H.T. cables:
  A = Cylinder 1
  B = Cylinder 2
  C = Cylinder 3
  D = Cylinder 4
- Checking => Page 162
- Fitting location => Page 63 , engine compartment overview

Protected by copyright. Copying for private or commercial purposes, in part or in whole, is not permitted unless authorised by AUDI AG. AUDI AG does not guarantee or accept any liability with respect to the correctness of information in this document. Copyright by AUDI AG.

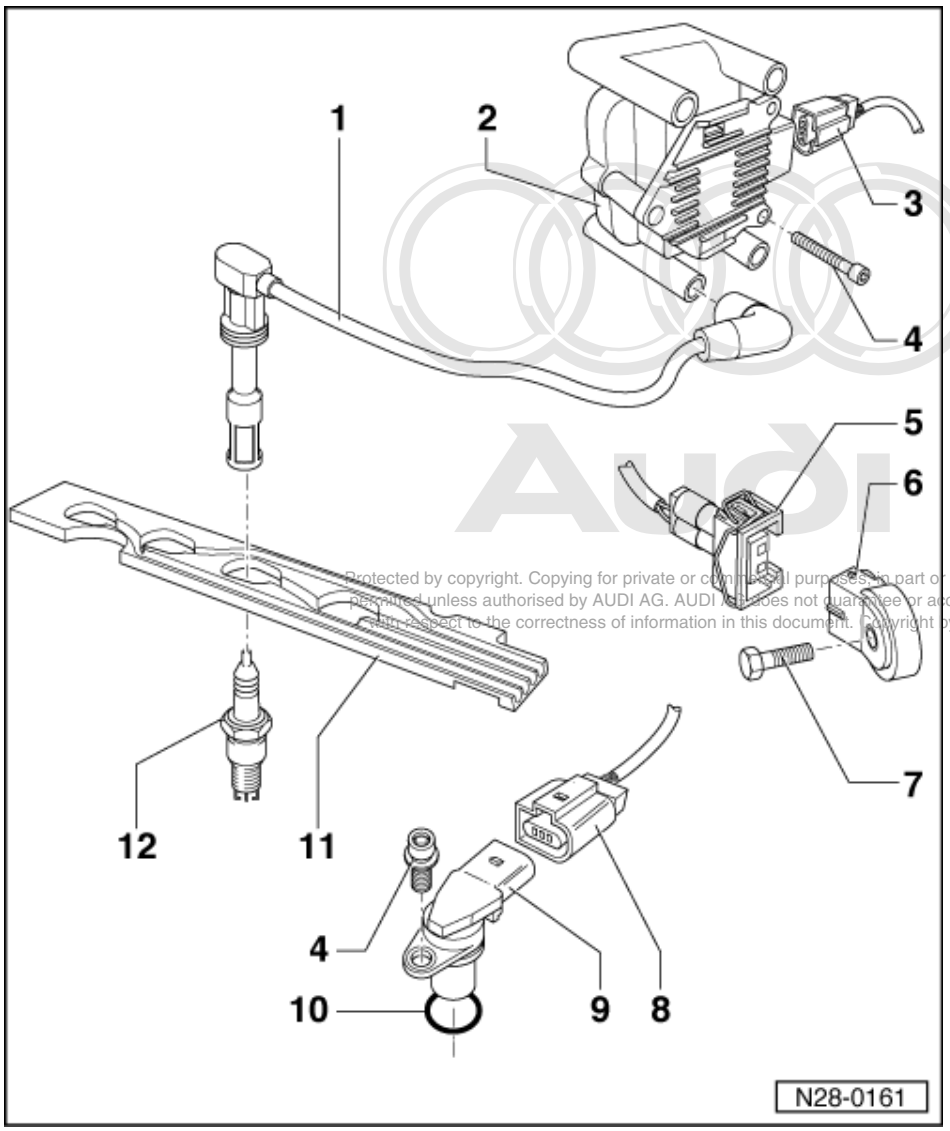

Protected by copyright. Copying for private or commercial purposes, in part or in whole, is not permitted unless authorised by AUDI AG. AUDI AG does not guarantee or accept any liability with respect to the correctness of information in this document. Copyright by AUDI AG.

3 Connector

- Black, 4 pin
- For ignition transformer (N152)

4 10 Nm

5 Connector

- Black, 2-pin
- For knock sensor 1 (G61)
- Connector contacts are gold-plated

6 Knock sensor 1 (G61)*

- Checking => Page 166
- Fitting location => Page 63 , engine compartment overview

7 20 Nm

- Tightening torque influences the function of the knock sensor

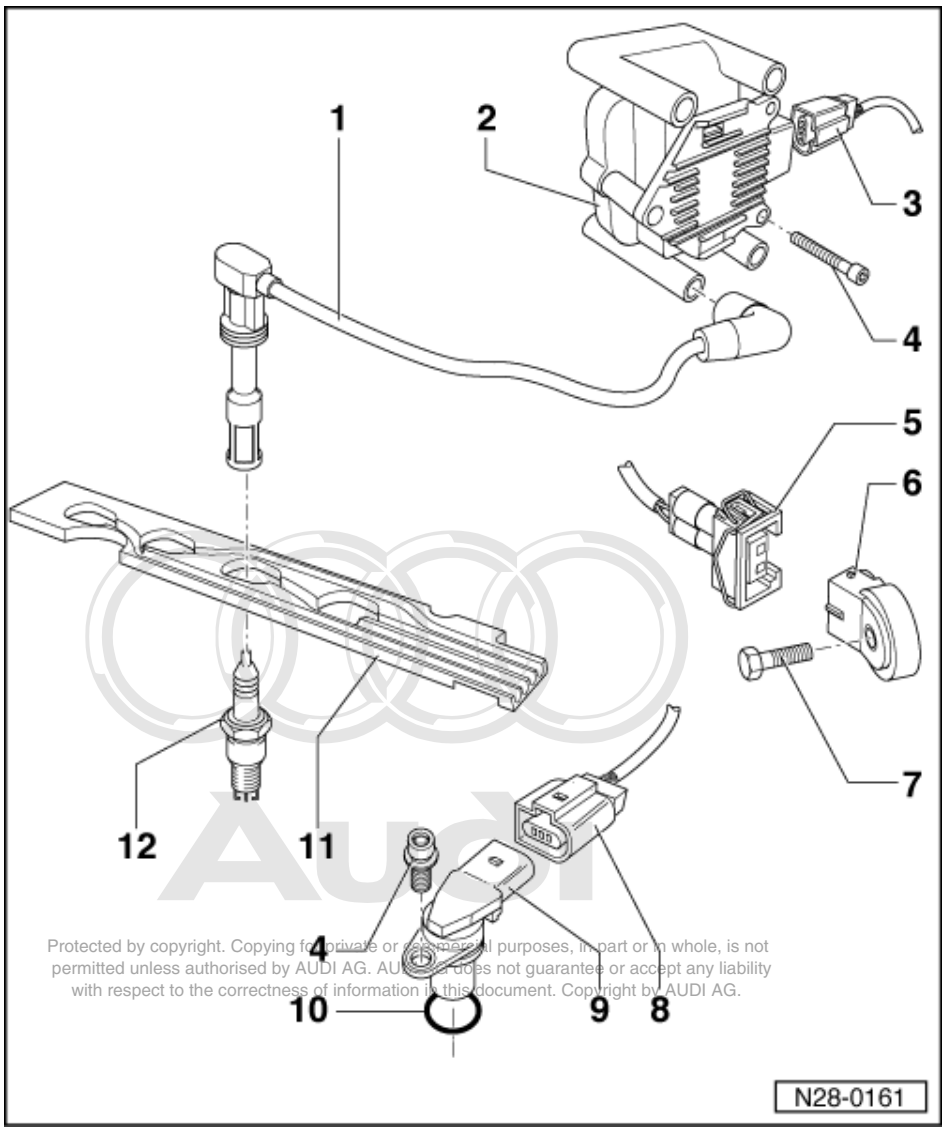

Protected by copyright. Copying for private or commercial purposes, in part or in whole, is not permitted unless authorised by AUDI AG. AUDI AG does not guarantee or accept any liability with respect to the correctness of information in this document. Copyright by AUDI AG.

8 Connector

- Black, 3-pin
- Hall sender (G40)

9 Hall sender (G40)*

- Checking => Page 161
- Fitting location => Page 63 , engine compartment overview

10 O-ring

- Renew if damaged

11 H.T. cable guide

12 Spark plug, 30 Nm

- Remove and install with spark plug spanner 3122B
- Type and electrode gap
  => Page 160 , test data, spark plugs

1.4 - Safety precautions

To prevent injuries to persons and/or damage to the fuel injection and ignition system, the following must be noted:

- Do not touch or disconnect ignition wiring when the engine is running or being turned at starter speed.
- The ignition must be switched off before connecting or disconnecting injection or ignition system wiring or tester cables.

Observe following if test and measuring instruments are required during a test drive:

- Test and measuring instruments must be secured to rear seat and operated by a 2nd person from this location.

  If test and measuring instruments are operated from front passenger's seat and the vehicle is involved in an accident, there is a possibility that the person sitting in this seat may receive serious injuries when the airbag is triggered.

- If the engine is to be turned at starter speed, without starting:

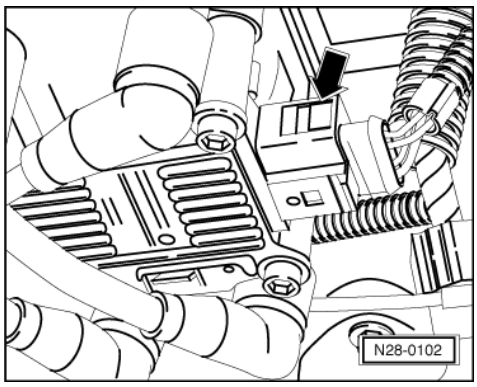

- -> Pull 4 pin connector off ignition transformer -arrow-.

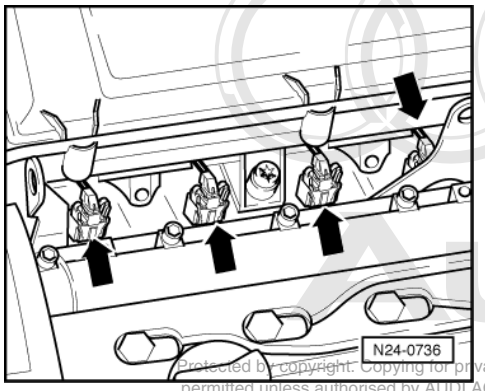

- -> Pull plugs -arrows- off all injectors.

Protected by copyright. Copying for private or commercial purposes, in part or in whole, is not permitted unless authorised by AUDI AG. AUDI AG does not guarantee or accept any liability with respect to the correctness of information in this document. Copyright by AUDI AG.

1.5 - Test data, spark plugs

Engine code	AUA
Firing order	1-3-4-2
Spark plugs1)	
VW/Audi	101 000 033 AA
Manufacturer's designation	NGK BKUR 6 ET-10
Electrode gap	0.9...1.1 mm

Engine code	AUA
Tightening torque	30 Nm

1) The up-to-date figures and the spark plug change intervals:

=> Exhaust emissions test binder

1.6 - Checking Hall sender

Fitting locations overview: =>Page 63

Special tools, workshop equipment, testers, measuring instruments and auxiliary items required

- Test box V.A.G 1598/31
- Hand multimeter V.A.G 1526 or multimeter V.A.G 1715
- Adapter set V.A.G 1594
- Current flow diagram

Test conditions

- The battery voltage must be at least 11.5 V.

Test sequence

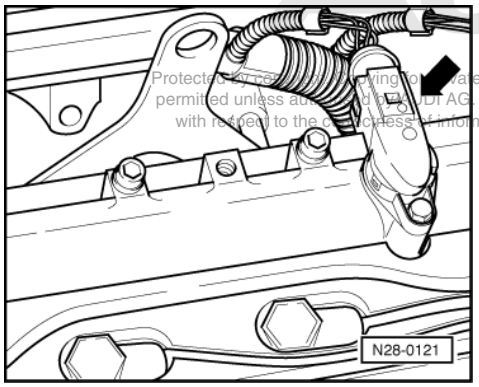

- -> Pull 3-pin connector off Hall sender -arrow-.

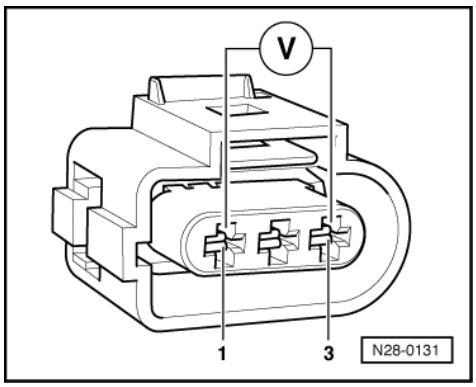

- -> Connect multimeter to measure voltage with adapter cables from V.A.G 1594 to contacts 1 (positive) and 3 (earth) on the Hall sender connector.
- Switch on ignition.
  Specification: min. 4.5 V
- Switch off ignition.

Protected by copyright. Passing to private or commercial purposes, in part or in whole, is not permitted unless authorised by AUDI AG. AUDI AG does not guarantee or accept any liability with respect to the correctness of information in this document. Copyright by AUDI AG.

If no voltage is present:

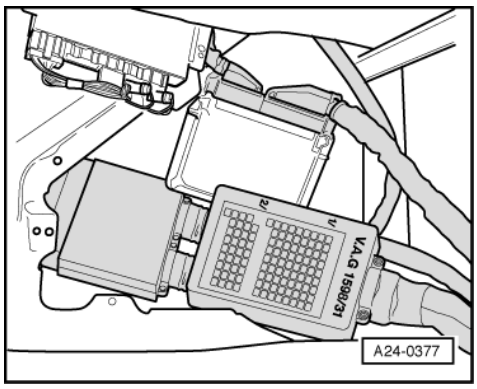

- -> Connect test box V.A.G 1598/31 to control unit wiring harness => Page 66 .

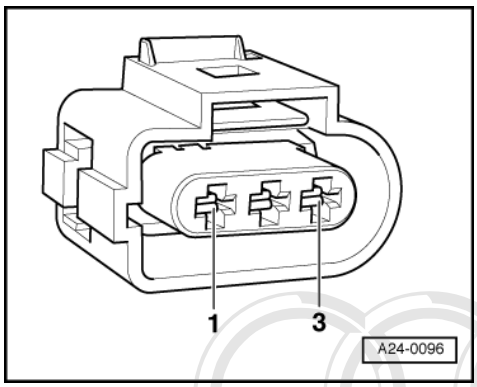

- -> Check wiring for open circuit between test box and 3-pin connector using current flow diagram.
  Contact 1+socket 98
  Contact 2+socket 86
  Contact 3+socket 108
  Wire resistance: Max. 1.5 ω
- Additionally check wires for short to one another.
  Specification: ∞ω

If no wiring fault is detected and voltage was present between contacts 1+3:

- Renew Hall sender (G40)
  => Page 159, item 9.

Protected by copyright. Copying for private or commercial purposes, in part or in whole, is not permitted unless authorised by AUDI AG. AUDI AG does not guarantee or accept any liability with respect to the correctness of information in this document. Copyright by AUDI AG.

If no wiring fault is detected and no voltage was present between contacts 1+3:

- Replace engine control unit
  => Page 133 .

1.7 - Checking ignition transformer

Special tools, workshop equipment, testers, measuring instruments and auxiliary items required

- Test box V.A.G 1598/31
- Hand multimeter V.A.G 1526 or multimeter V.A.G 1715
- Adapter set V.A.G 1594
- Diode test lamp V.A.G 1527
- Current flow diagram

Test conditions

- The battery voltage must be at least 11.5 V.
- Hall sender must be OK, checking
  =>Page 161 .
- Engine speed sender must be OK, checking Page 107 .

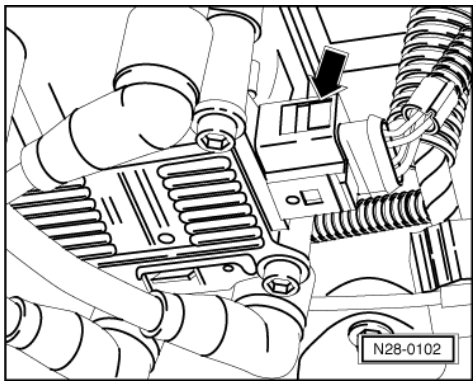

Test sequence

- -> Pull 4 pin connector off ignition transformer -arrow-.

Checking voltage supply

Test conditions

- Fuses for ignition system must be OK.

=> Current flow diagrams, Electrical fault finding and Fitting locations binder

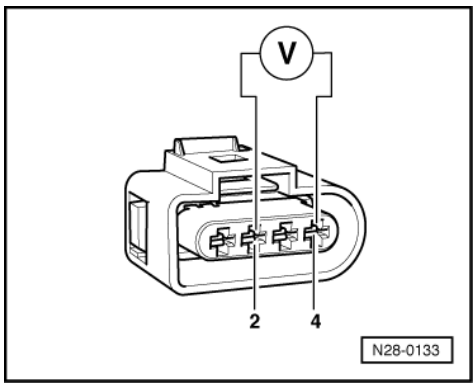

- -> Using multimeter and adapter cables from V.A.G 1594 measure the supply voltage between contacts 2 +4 of disconnected connector.
- Switch on ignition.
  Specification: min. 11.5 V
- Switch off ignition.

Protected by copyright. Copying for private or commercial purposes, in part or in whole, is not permitted unless authorised by AUDI AG. AUDI AG does not guarantee or accept any liability with respect to the correctness of information in this document. Copyright by AUDI AG.

If no voltage is present:

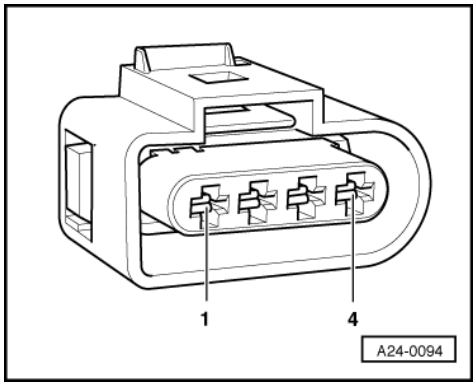

- -> Check wire between 4 pin connector contact 2 and relay plate for open circuit according to current flow diagram.
  Wire resistance: max. 1.5 ω
- Check wire between 4 pin connector contact 4 and earth for open circuit according to current flow diagram.
  Wire resistance: max. 1.5 ω

Checking activation

Warning!
During the following test do not touch the terminals of the ignition transformer or test cables.

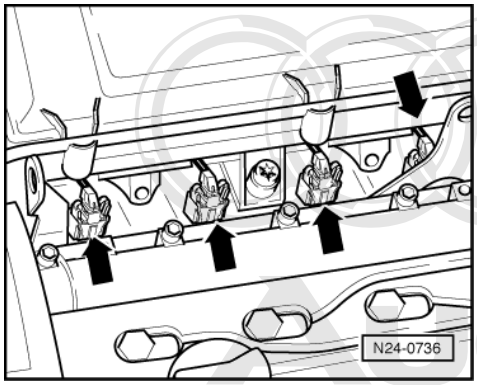

- -> Pull plugs -arrows- off all injectors.

Protected by copyright. Copying for private or commercial purposes, in part or in whole, is not permitted unless authorised by AUDI AG. AUDI AG does not guarantee or accept any liability with respect to the correctness of information in this document. Copyright by AUDI AG.

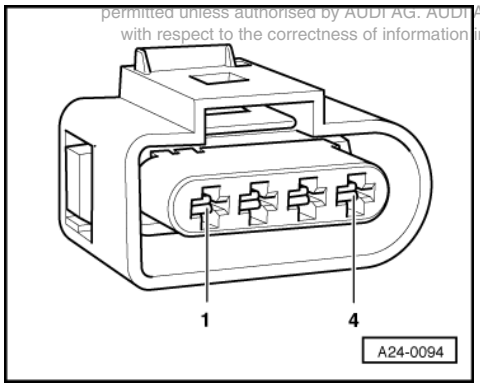

- -> Connect diode test lamp V.A.G 1527 with adapter cables from V.A.G 1594 to
  contacts 1 + 4 (ignition output 1),
  contacts 3 + 4 (ignition output 2)
  of disconnected connector.
- Operate starter and check the ignition signal from engine control unit.
  The LED must flicker
- Switch off ignition.

If the LED flickers and there is voltage between contacts 2 + 4:

- Replace ignition transformer (N152)
  => Page 157 , item 2 .

If the LED does not flicker:

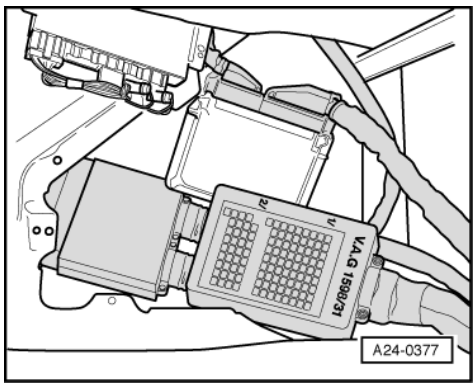

- Check wiring => Page 165

Checking wiring

- -> Connect test box V.A.G 1598/31 to control unit wiring harness. The engine control unit remains disconnected => Page 66 .

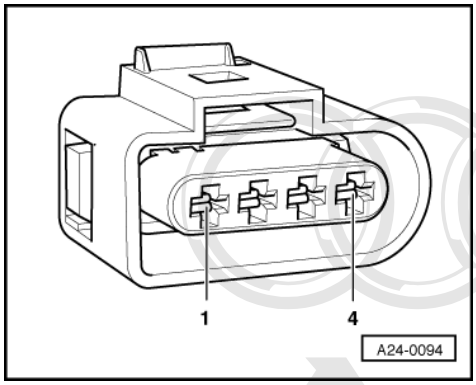

- -> Check wiring for open circuit between test box and 4-pin connector using current flow diagram.
  Contact 1+socket 102
  Contact 3+socket 103
  Wire resistance: Max. 1.5 ω
- Additionally check wires for short to one another.
  Specification: ∞ ω

Protected by copyright. Copying for private or commercial purposes, in part or in whole, is not permitted unless authorised by AUDI AG. AUDI AG does not guarantee or accept any liability with respect to the correctness of information in this document. Copyright by AUDI AG.

If no wiring fault is detected and voltage was present between contacts 2+4:

- Replace engine control unit
  => Page 133 .

Checking secondary resistance

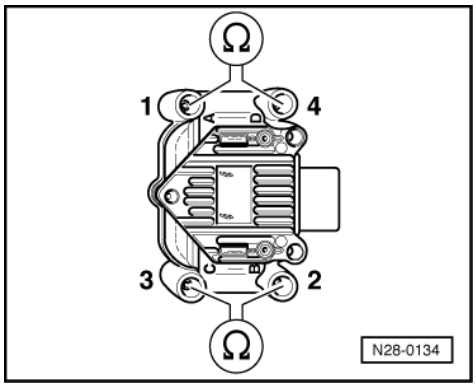

- -> Check the secondary winding on terminal 4 between
  Cyl. 1+Cyl. 4,
  Cyl. 2+Cyl. 3.

Specification: 4.0... 6.0 kω (at 20 °C)

If the specifications are not attained:

- Replace ignition transformer (N152)
  => Page 157 , item 2 .

1.8 - Checking knock sensor

Fitting locations overview:=>Page 63

Notes:

- It is extremely important to keep to the tightening torque of 20 Nm to ensure the knock sensors perform perfectly.
- Only gold-plated contacts may be used when servicing the knock sensor connector contacts.

Special tools, workshop equipment, testers, measuring instruments and auxiliary items required

- Test box V.A.G 1598/31
- Hand multimeter V.A.G 1526 or multimeter V.A.G 1715
- Adapter set V.A.G 1594
- Current flow diagram

Test conditions

- Knock sensor fault recognised by self-diagnosis =>Page 9 , interrogating and erasing fault memory.

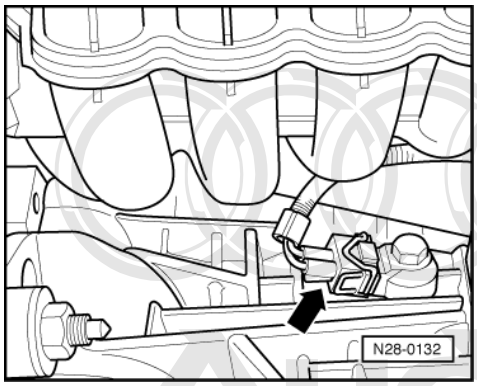

Test sequence

- => Pull 2 pin connector off knock sensor -arrow-.

Protected by copyright. Copying for private or commercial purposes, in part or in whole, is not permitted unless authorised by AUDI AG. AUDI AG does not guarantee or accept any liability with respect to the correctness of information in this document. Copyright by AUDI AG.

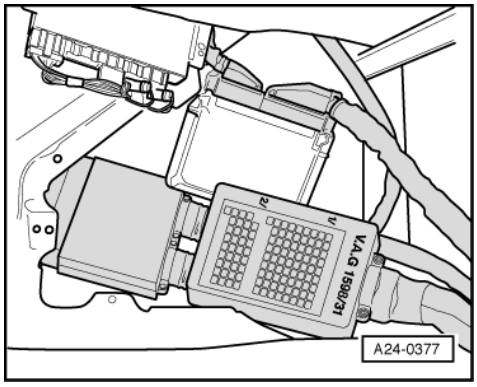

- -> Connect test box V.A.G 1598/31 to control unit wiring harness. The engine control unit remains disconnected => Page 66 .

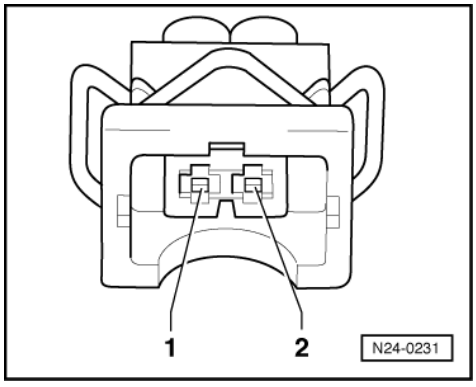

- -> Check wiring for open circuit between test box and 2-pin connector using current flow diagram.
  Contact 1+socket 106
  Contact 2+socket 99
  Wire resistance: Max. 1.5 ω
- Additionally check wires for short to one another.
  Specification: ∞ω

If no fault is detected in the wiring:

- Loosen knock sensor and tighten again to 20 Nm.
- Carry out test drive.

Observe the valid safety precautions when carrying out a test drive => Page 159 .

During the road test the following operating conditions must be fulfilled:
- The coolant temperature must exceed 80 °C .

- When the temperature is reached, the operating conditions
  Idling
  Part throttle
  Full throttle
  Overrun
  must be attained several times.
- At full throttle the speed must exceed 3500 rpm.

Again interrogate the control unit fault memory.

If the fault is still present:

- Replace knock sensor (G61) =>Page 158 , item 6 .

1.9 - Checking misfiring recognition

Special tools, workshop equipment, testers, measuring instruments and auxiliary items required

- Fault reader V.A.G 1551 or vehicle system tester V.A.G 1552 with cable V.A.G 1551/3A

Protected by copyright. Copying for private or commercial purposes, in part or in whole, is not permitted unless authorised by AUDI AG. AUDI AG does not guarantee or accept any liability with respect to the correctness of information in this document. Copyright by AUDI AG.

Test sequence

- Connect fault reader V.A.G 1551 (V.A.G 1552). Start engine and select "Address word" 01 of engine control unit. When doing this the engine must be running at idling speed.
  (Connecting fault reader and selecting engine control unit
  => Page 7 .)

-> Indicated on display:

```
Rapid data transfer     HELP
Select function XX
```

- Press keys 0 and 8 for the function "Read measured value block" and confirm entry with Q key.

-> Indicated on display:

```
Read measured value block
Input display group number XXX
```

- Press keys 0, 1 and 4 for "Display group number 14" and confirm entry with Q key.

-> Indicated on display:
(1...4 = Display zones)

```
Read measured value block 14
     1     2     3     4
```

- Check the misfire recognition status in display zone 4.
  Specification: "activated"
- Check total misfires in display zone 3.
  Specification: 0

Protected by copyright. Copying for private or commercial purposes, in part or in whole, is not permitted unless authorised by AUDI AG. AUDI AG does not guarantee or accept any liability with respect to the correctness of information in this document. Copyright by AUDI AG.

If the specifications are obtained:

- Press ⇒key.
- Press keys 0 and 6 for the "End output" function and confirm input with the Q key.
- Switch off ignition.

If the specifications are not attained:

- Change to display group 15 as follows:
  V.A.G 1551: Press key 3
  V.A.G 1552: Press key ↑

-> Indicated on display:
(1...4 = Display zones)

```
Read measured value block 15
     1     2     3     4
```

- Check the misfire recognition status in display zone 4.
  Specification: "activated"
- Check misfiring of Cyl. 1...Cyl. 3 in display zones 1...3.
  Specification: 0

If the specifications are not attained:

- Press ⇒key.
- Press keys 0 and 6 for the "End output" function and confirm input with the Q key.
- Switch off ignition.
- =>Page 49 , Evaluating display group 15 and display group 16.

If the specifications are obtained:

- Change to display group 16 as follows:
  V.A.G 1551: Press key 3
  V.A.G 1552: Press key ↑

-> Indicated on display:
(1 and 4 = Display zones)

```
Read measured value block 16
     1               4
```

- Check misfire recognition status in display zone 4.
  Specification: "activated"
- Check misfiring of Cyl. 4 in display zone 1
  Specification: 0

- Press ⇒key.
- Press keys 0 and 6 for the "End output" function and confirm input with the Q key.
- Switch off ignition.

If the specification is not attained:

- =>Page 49 , Evaluating display group 15 and display group 16.

Protected by copyright. Copying for private or commercial purposes, in part or in whole, is not permitted unless authorised by AUDI AG. AUDI AG does not guarantee or accept any liability with respect to the correctness of information in this document. Copyright by AUDI AG.