SPECIFICATIONS

TEMPERATURE VS RESISTANCE

Temperature vs Resistance

°C	°F	OHMS
Temperature vs Resistance Values (Approximate)		
150	302	47
140	284	60
130	266	77
120	248	100
110	230	132
100	212	177
90	194	241
80	176	332
70	158	467
60	140	667
50	122	973
45	113	1188
40	104	1459
35	95	1802
30	86	2238
25	77	2796
20	68	3520
15	59	4450
10	50	5670
5	41	7280
0	32	9420
-5	23	12300
-10	14	16180
-15	5	21450
-20	-4	28680
-30	-22	52700
-40	-40	100700

ALTITUDE VS BAROMETRIC PRESSURE

Altitude vs Barometric Pressure

Altitude Measured in Meters (m)	Altitude Measured in Feet (ft)	Barometric Pressure Measured in Kilopascals (kPa)
Determine your altitude by contacting a local weather station or by using another reference source.		
4 267	14,000	56-64
3 962	13,000	58-66
3 658	12,000	61-69
3 353	11,000	64-72
3 048	10,000	66-74
2 743	9,000	69-77
2 438	8,000	71-79
2 134	7,000	74-82
1 829	6,000	77-85
1 524	5,000	80-88
1 219	4,000	83-91
914	3,000	87-95
610	2,000	90-98
305	1,000	94-102
0	0 Sea Level	96-104
-305	-1,000	101-105

IGNITION SYSTEM SPECIFICATIONS

Ignition System Specifications

Application	Specification	
	Metric	English
Firing Order	1-8-7-2-6-5-4-3	
Spark Plug Wire Resistance	700 ohms per ft	
Spark Plug Torque	15 N.m	11 lb ft
Spark Plug Gap	1.01 mm	0.040 in
Spark Plug Type	P/N 12571164	

FASTENER TIGHTENING SPECIFICATIONS

Fastener Tightening Specifications

Application	Specifications	
	Metric	English
Accelerator Control Assembly to Floor Fasteners	20 N.m	15 lb ft
Camshaft Position (CMP) Sensor Bolt	25 N.m	18 lb ft
Crankshaft Position (CKP) Sensor Bolt	25 N.m	18 lb ft
Engine Coolant Temperature (ECT) Sensor	20 N.m	15 lb ft
EVAP Canister Bracket Bolt	7 N.m	62 lb in

Fuel and EVAP Pipe Retainer Nut	6 N.m	53 lb in
Fuel Crossover Hose Clamps	4 N.m	35 lb in
Fuel Filter and Fuel Pressure Regulator Bracket Nut	5 N.m	44 lb in
Fuel Pipe Assembly Clip Nuts	3 N.m	27 lb in
Fuel Rail Attaching Bolts	10 N.m	89 lb in
Fuel Tank Fill and Vent Pipe Bolts	3 N.m	22 lb in
Fuel Tank Fill Hose Clamp	4 N.m	35 lb in
Fuel Tank Fill Pipe Ground Strap Bolt	8 N.m	71 lb in
Fuel Tank Shield Mount Bolt	25 N.m	18 lb in
Fuel Tank Shield Nut	12 N.m	106 lb in
Fuel Tank Strap and Shield Bolts	25 N.m	18 lb ft
Heated Oxygen Sensor (HO2S)	41 N.m	30 lb ft
Ignition Coil Harness Mounting Bolt	12 N.m	106 lb in
Ignition Coil Mounting Bolts	12 N.m	106 lb in
Knock Sensor (KS)	20 N.m	15 lb ft
PCV Hose Assembly Mounting Cable Nut	12 N.m	106 lb in
Powertrain Control Module (PCM) Electrical Connector Fasteners	8 N.m	70 lb in
Powertrain Control Module (PCM) Retaining Fastener	2 N.m	17 lb in
Secondary Air Injection (AIR) Check Valves	23 N.m	17 lb ft
Secondary Air Injection (AIR) Check Valve to the AIR Pipe	23 N.m	17 lb ft
Secondary Air Injection (AIR) Pipe To Exhaust Manifold Bolts	20 N.m	15 lb ft
Secondary Air Injection (AIR) Pump to Bracket	9 N.m	80 lb in
Secondary Air Injection (AIR) Solenoid Valve Retaining Nut	7 N.m	62 lb in
Spark Plug	15 N.m	11 lb ft
Spark Plug in New Cylinder Head	20 N.m	15 lb ft
Tank Crossover Hose Clamp	4 N.m	35 lb in
Throttle Actuator Control (TAC) Module to PCM Bracket	2 N.m	17 lb in
Throttle Actuator Control (TAC) Module to PCM Bracket Fasteners	2 N.m	17 lb in
Throttle Body Attaching Bolts	10 N.m	189 lb in

DIAGNOSTIC TROUBLE CODE (DTC) TYPE DEFINITIONS

Emissions Related DTCs

Action Taken When the DTC Sets - Type A

The control module illuminates the malfunction indicator lamp (MIL) when the diagnostic runs and fails.

Action Taken When the DTC Sets - Type B

The control module illuminates the MIL on the second consecutive ignition cycle that the diagnostic runs and fails.

Conditions for Clearing the MIL/DTC - Type A or Type B

- The control module turns OFF the MIL after 3 consecutive ignition cycles that the diagnostic runs and does not fail.
- A current DTC Last Test Failed clears when the diagnostic runs and passes.
- Use a scan tool in order to clear the MIL and the DTC.

Non-Emissions Related DTCs

Action Taken When the DTC Sets - Type C

- The control module stores the DTC information into memory when the diagnostic runs and fails.
- The MIL will not illuminate.
- The driver information center, if equipped, may display a message.

Conditions for Clearing the DTC - Type C

- A last test failed, or current DTC, clears when the diagnostic runs and passes.
- Use a scan tool in order to clear the DTC.

Conditions for Clearing the DTC - Type X

This DTC is available in the PCM software, but has been disabled, or turned OFF. In this case, the diagnostic does not run, no DTCs are stored, and the MIL does not illuminate. Type X DTCs are used primarily for export vehicles that do not require MIL illumination or DTC storing.

DIAGNOSTIC TROUBLE CODE (DTC) TYPE(S)

Diagnostic Trouble Code (DTC) Type(s)

DTC Description	Domestic	Export Unleaded Fuel Japan and Europe	Export Unleaded Fuel Except Japan and Europe
DTC P0068	A	A	A
DTC P0101	B	B	B
DTC P0102	B	B	B
DTC P0103	B	B	B
DTC P0106	B	B	B
DTC P0107	B	B	B
DTC P0108	B	B	B
DTC P0112	B	B	B
DTC P0113	B	B	B
DTC P0116	B	B	B
DTC P0117	B	B	B
DTC P0118	B	B	B

DTC P0120	A	A	A
DTC P0125	B	B	B
DTC P0128	B	B	B
DTC P0131	B	B	B
DTC P0132	B	B	B
DTC P0133	B	B	B
DTC P0134	B	B	B
DTC P0135	B	B	B
DTC P0136	B	B	B
DTC P0137	B	B	B
DTC P0138	B	B	B
DTC P0140	B	B	B
DTC P0141	B	B	B
DTC P0151	B	B	B
DTC P0152	B	B	B
DTC P0153	B	B	B
DTC P0154	B	B	B
DTC P0155	B	B	B
DTC P0156	B	B	B
DTC P0157	B	B	B
DTC P0158	B	B	B
DTC P0160	B	B	B
DTC P0161	B	B	B
DTC P0171	B	B	B
DTC P0172	B	B	B
DTC P0174	B	B	B
DTC P0175	B	B	B
DTC P0200	B	B	B
DTC P0218	C	C	C
DTC P0220	A	A	A
DTC P0230	B	B	B
DTC P0300	B	B	B
DTC P0315	A	A	A
DTC P0325	B	B	B
DTC P0327	B	B	B
DTC P0332	B	B	B
DTC P0335	B	B	B
DTC P0336	B	B	B
DTC P0341	B	B	B
DTC P0342	B	B	B
DTC P0343	B	B	B

DTC P0351-P0358	B	B	B
DTC P0410	B	B	B
DTC P0412	B	B	B
DTC P0418	B	B	B
DTC P0420	A	A	A
DTC P0430	A	A	A
DTC P0442	A	X	A
DTC P0443	B	B	B
DTC P0446	A	A	A
DTC P0449	B	B	B
DTC P0452	B	B	B
DTC P0453	B	B	B
DTC P0455	A	A	A
DTC P0461	C	C	C
DTC P0462	C	C	C
DTC P0463	C	C	C
DTC P0480	B	B	B
DTC P0481	B	B	B
DTC P0491	B	B	B
DTC P0492	B	B	B
DTC P0496	B	B	B
DTC P0500	B	B	B
DTC P0502	B	B	B
DTC P0503	B	B	B
DTC P0506	B	B	B
DTC P0507	B	B	B
DTC P0522	C	C	C
DTC P0523	C	C	C
DTC P0530	C	C	C
DTC P0562	C	C	C
DTC P0563	C	C	C
DTC P0567	C	C	C
DTC P0568	C	C	C
DTC P0571	C	C	C
DTC P0601	A	A	A
DTC P0602	A	A	A
DTC P0604	A	A	A
DTC P0606	A	A	A
DTC P0608	C	C	C
DTC P0622	C	C	C

DTC P0641	B	B	B
DTC P0645	C	C	C
DTC P0650	B	B	B
DTC P0651	B	B	B
DTC P0654	C	C	C
DTC P0706	C	C	C
DTC P0711	C	C	C
DTC P0712	C	C	C
DTC P0713	C	C	C
DTC P0719	C	C	C
DTC P0724	C	C	C
DTC P0740	B	B	B
DTC P0742	B	B	B
DTC P0748	C	C	C
DTC P0751	B	B	B
DTC P0752	B	B	B
DTC P0753	B	B	B
DTC P0756	A	A	A
DTC P0757	A	A	A
DTC P0758	A	A	A
DTC P0785	B	B	B
DTC P0801	C	C	C
DTC P0803	B	X	B
DTC P0804	C	X	C
DTC P0833	C	C	C
DTC P0856	C	C	C
DTC P0894	B	B	X
DTC P1111	C	C	C
DTC P1112	C	C	C
DTC P1114	C	C	C
DTC P1115	C	C	C
DTC P1125	A	A	A
DTC P1133	B	B	B
DTC P1134	B	B	B
DTC P1153	B	B	B
DTC P1154	B	B	B
DTC P1258	A	A	A
DTC P1380	C	C	X
DTC P1381	C	C	X
DTC P1516	A	A	A
DTC P1539	C	C	C

DTC P1546	C	C	C
DTC P1574	C	C	C
DTC P1575	C	C	C
DTC P1626	C	C	C
DTC P1630	C	C	C
DTC P1631	C	C	C
DTC P1637	C	C	C
DTC P1652	C	C	C
DTC P1689	C	C	C
DTC P1810	B	B	B
DTC P2066	C	C	C
DTC P2067	C	C	C
DTC P2068	C	C	C
DTC P2101	A	A	A
DTC P2108	A	A	A
DTC P2120	C	C	C
DTC P2121	C	C	C
DTC P2125	C	C	C
DTC P2126	C	C	C
DTC P2130	C	C	C
DTC P2131	C	C	C
DTC P2135	A	A	A
DTC P2610	B	B	B
DTC P2761	B	B	B
DTC U0107	A	A	A

SCHEMATIC AND ROUTING DIAGRAMS

EMISSION HOSE ROUTING DIAGRAM

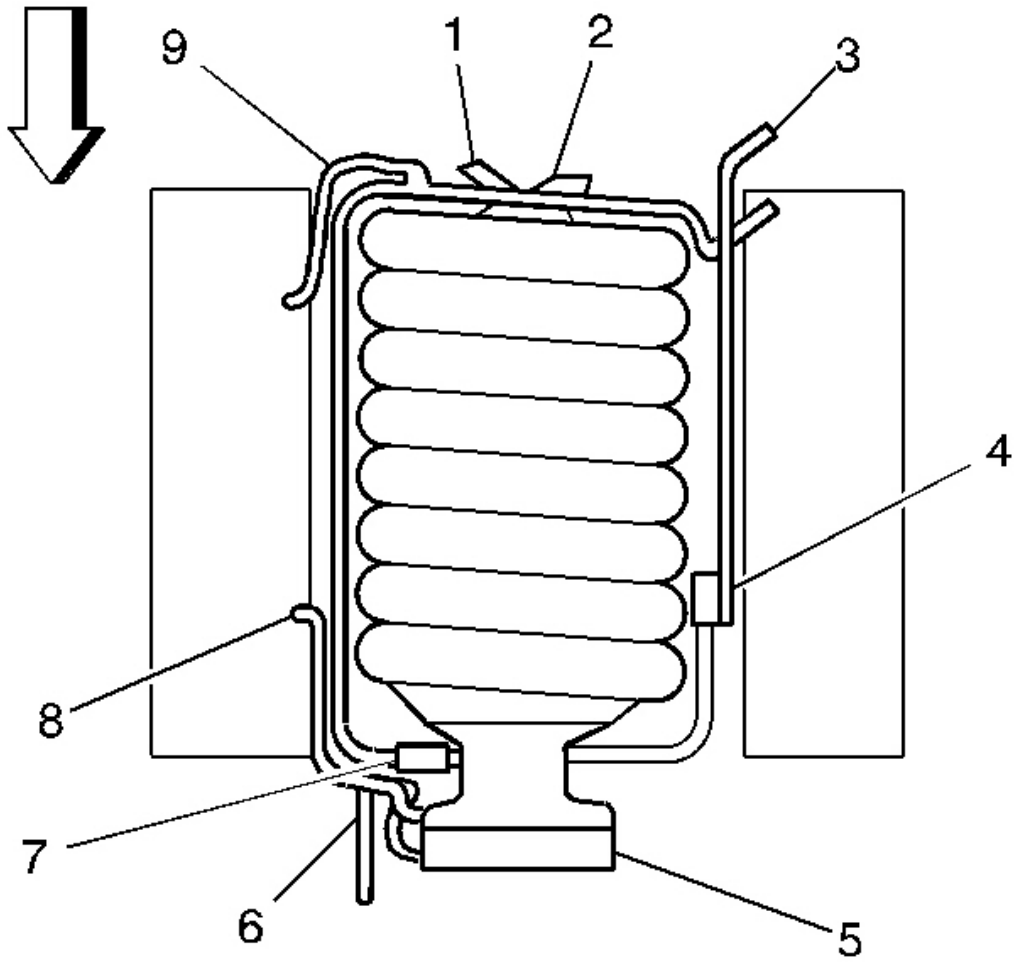

Fig. 1: Emission Hose Routing Diagram Schematics
Courtesy of GENERAL MOTORS CORP.

Callouts For Fig. 1

Callout	Component Name
1	To HVAC
2	To Power Brake Vacuum Assist
3	To EVAP Canister
4	EVAP Canister Purge Solenoid Valve
5	Throttle Body
6	Engine Coolant Hoses
7	Positive Crankcase Ventilation (PCV) Valve

8	Crankcase Ventilation Hose
9	Crankcase Ventilation Hose

EVAPORATIVE EMISSIONS (EVAP) HOSE ROUTING DIAGRAM

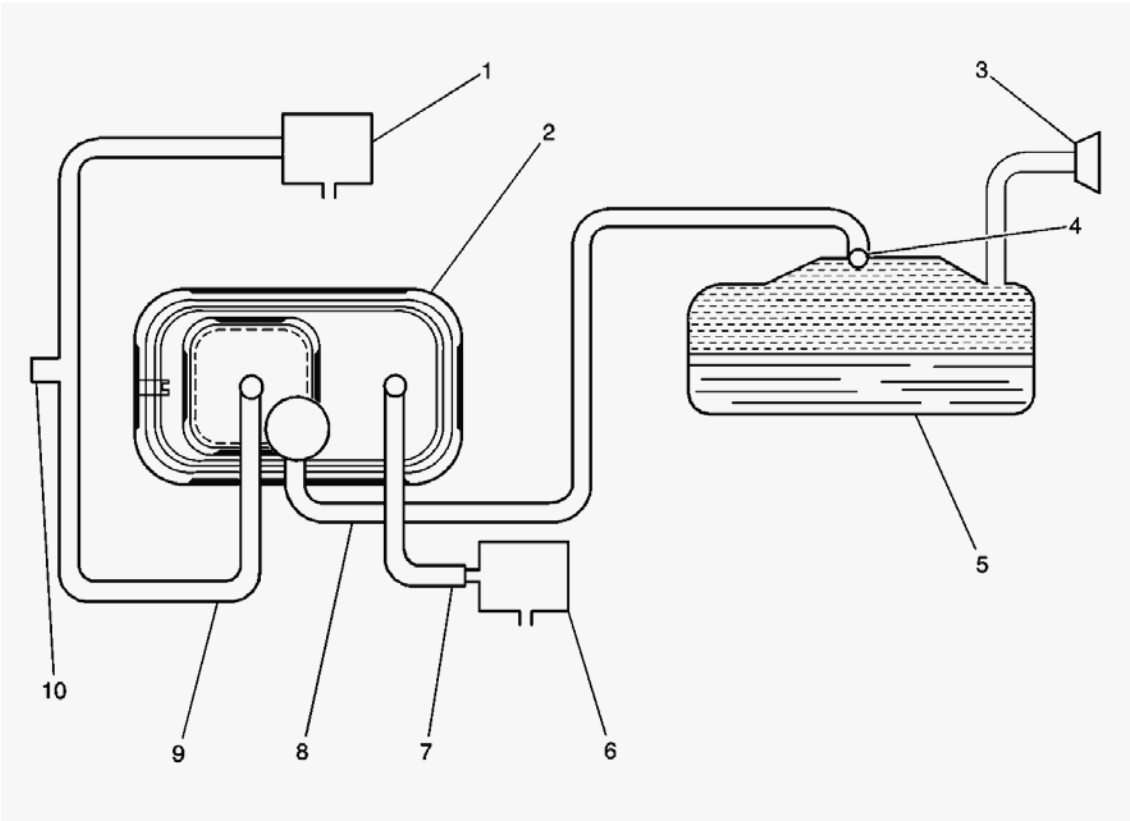

Fig. 2: EVAP System Overview Schematics
Courtesy of GENERAL MOTORS CORP.

Callouts For Fig. 2

Callout	Component Name
1	EVAP Canister Purge Solenoid Valve
2	EVAP Canister
3	Fuel Fill Neck/Fill Cap
4	Rollover Valve/Fuel Tank Pressure (FTP) Sensor
5	Fuel Tank
6	EVAP Canister Vent Solenoid Valve
7	Vent Hose/Pipe
8	EVAP Vapor Pipe
9	EVAP Purge Pipe
10	EVAP Service Port

FUEL HOSE/PIPES ROUTING DIAGRAM

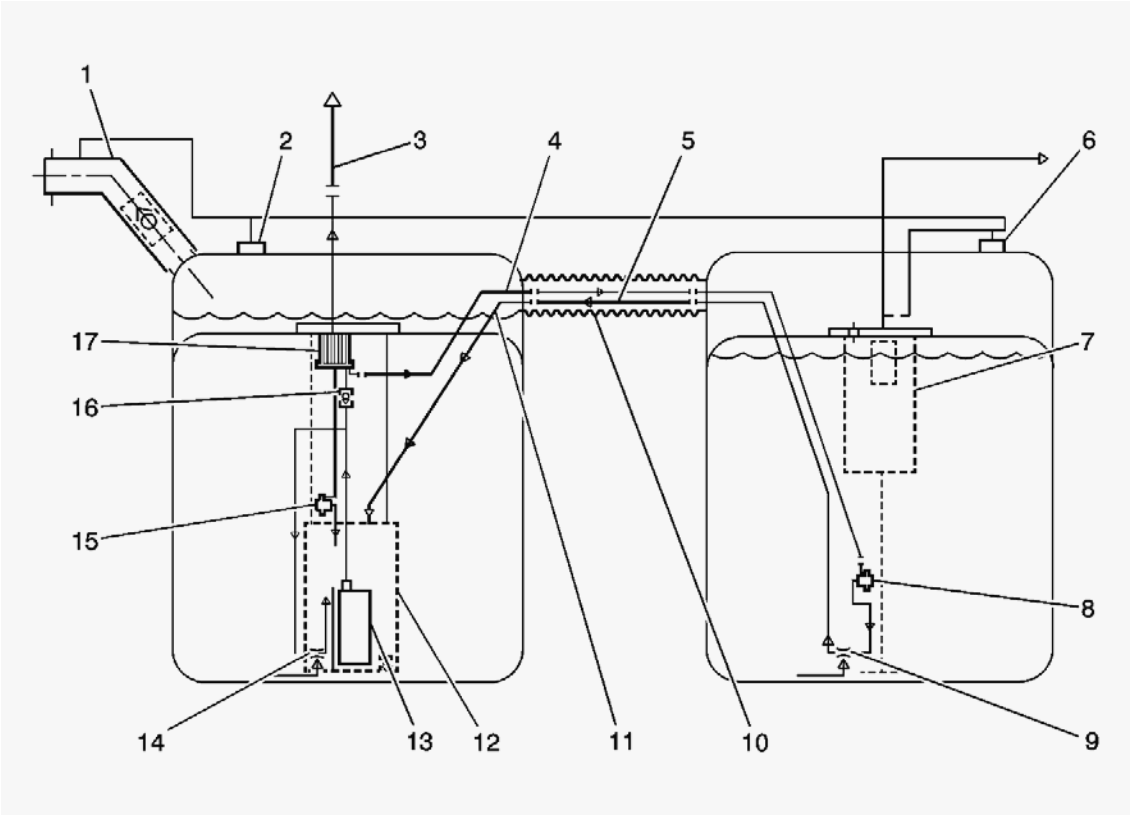

Fig. 3: Fuel Tank Assembly Schematics
Courtesy of GENERAL MOTORS CORP.

Callouts For Fig. 3

Callout	Component Name
1	Fuel Fill Hose
2	Left Fuel Tank Grade Vent Valve
3	Fuel Feed Pipe to Engine
4	5/16 Inch Auxiliary Fuel Feed Pipe
5	3/8 Inch Auxiliary Fuel Return Pipe
6	Right Fuel Tank Grade Vent Valve
7	Fill Limiter Vent Valve (FLVV)
8	Secondary Fuel Pressure Regulator
9	Siphon Jet Pump
10	Convoluted Crossover Hose
11	Anti-Siphon Hole
12	Fuel Sender Reservoir
13	Turbine Fuel Pump
14	Venturi Pump
15	Primary Fuel Pressure Regulator
16	Reverse Flow Check Valve

17	Fuel Filter

ENGINE CONTROLS SCHEMATIC ICONS

Engine Controls Schematic Icons

Icon	Icon Definition
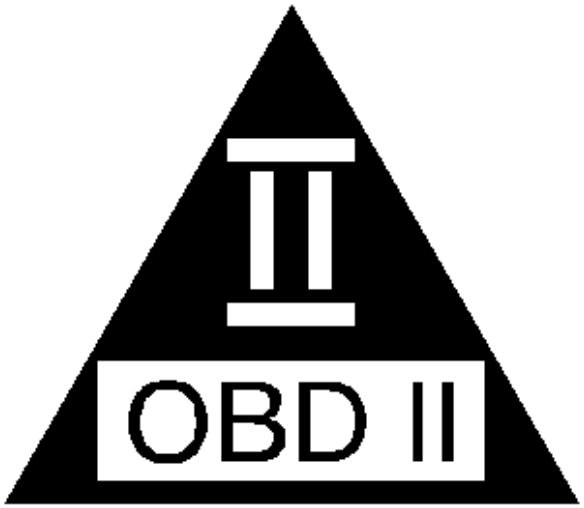	**NOTE:** **The OBD II symbol is used on the circuit diagrams in order to alert the technician that the circuit is essential for proper OBD II emission control circuit operation. Any circuit which fails and causes the malfunction indicator lamp (MIL) to turn ON, or causes emissions-related component damage, is identified as an OBD II circuit.**

ENGINE CONTROLS SCHEMATICS

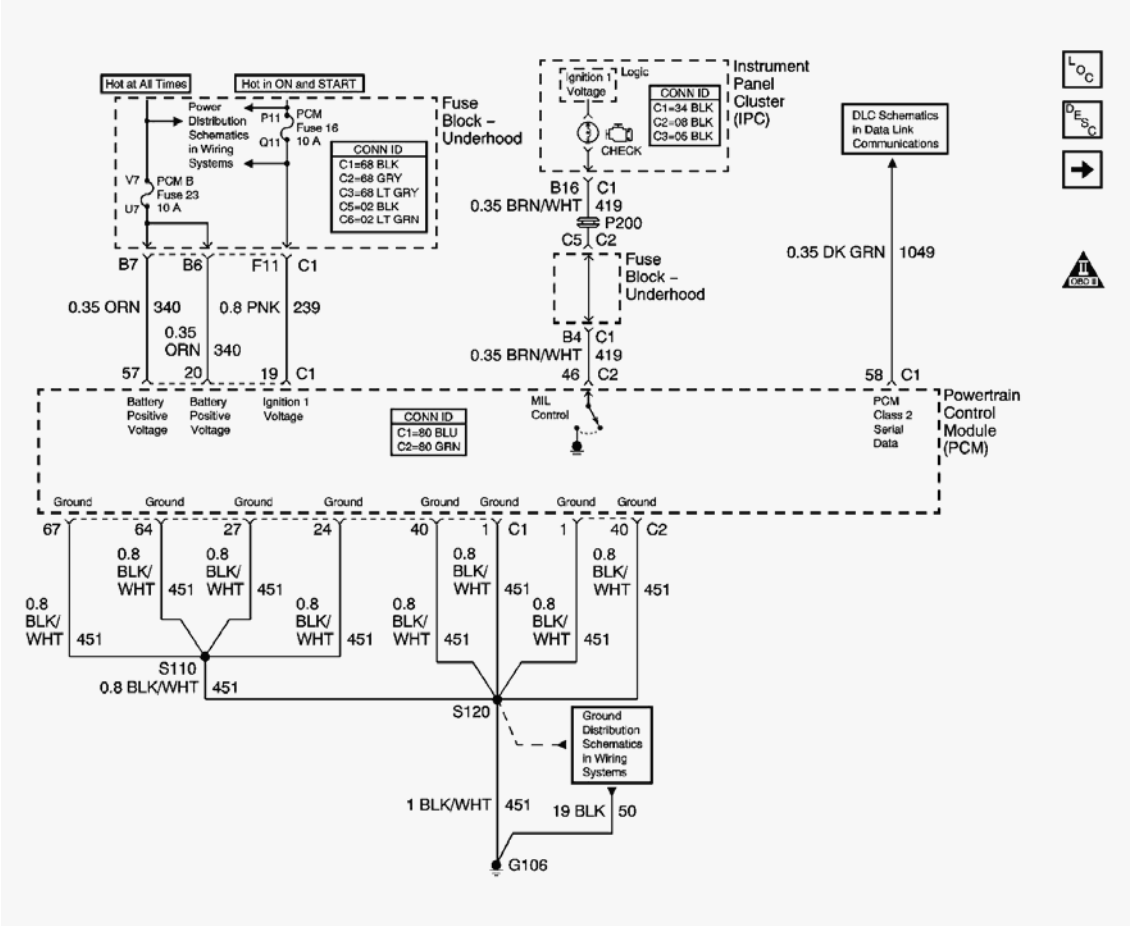

Fig. 4: Module Power, Ground, Serial Data And MIL Schematics
Courtesy of GENERAL MOTORS CORP.

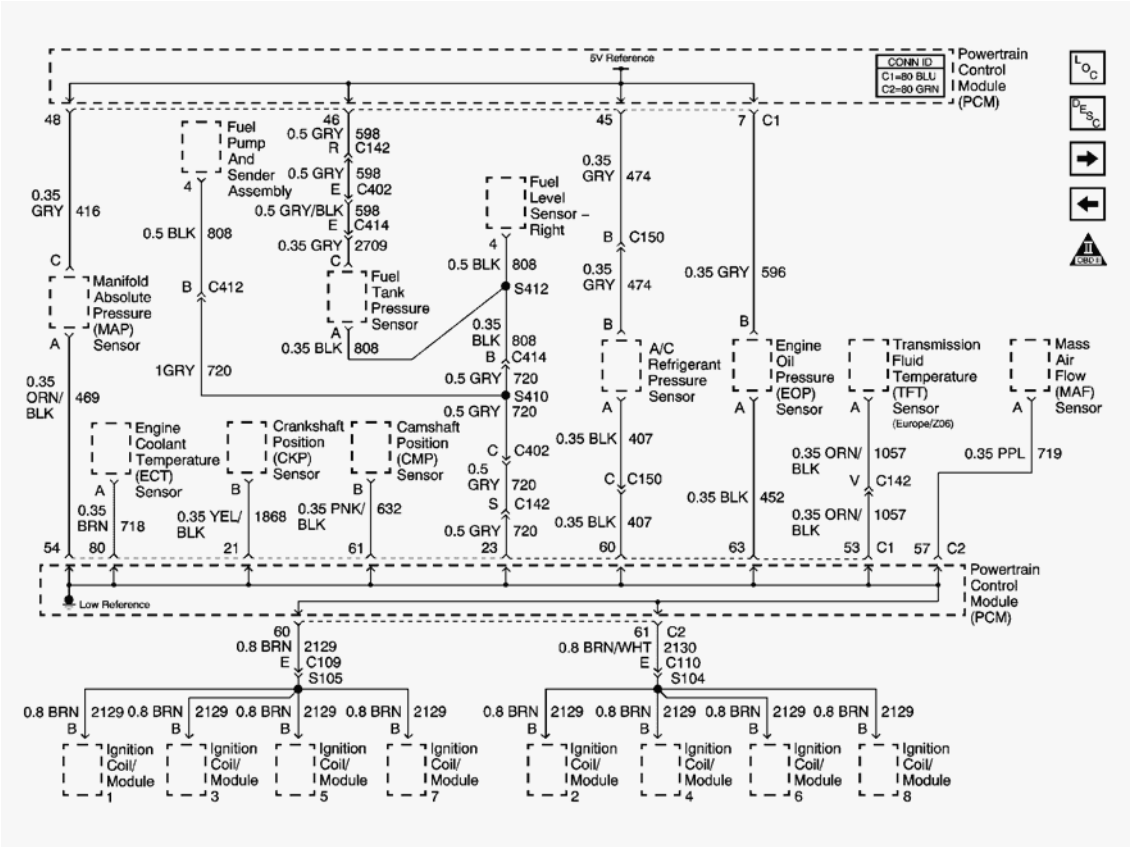

Fig. 5: Engine Data Sensors Schematics - 5-Volt And Low Reference
Courtesy of GENERAL MOTORS CORP.

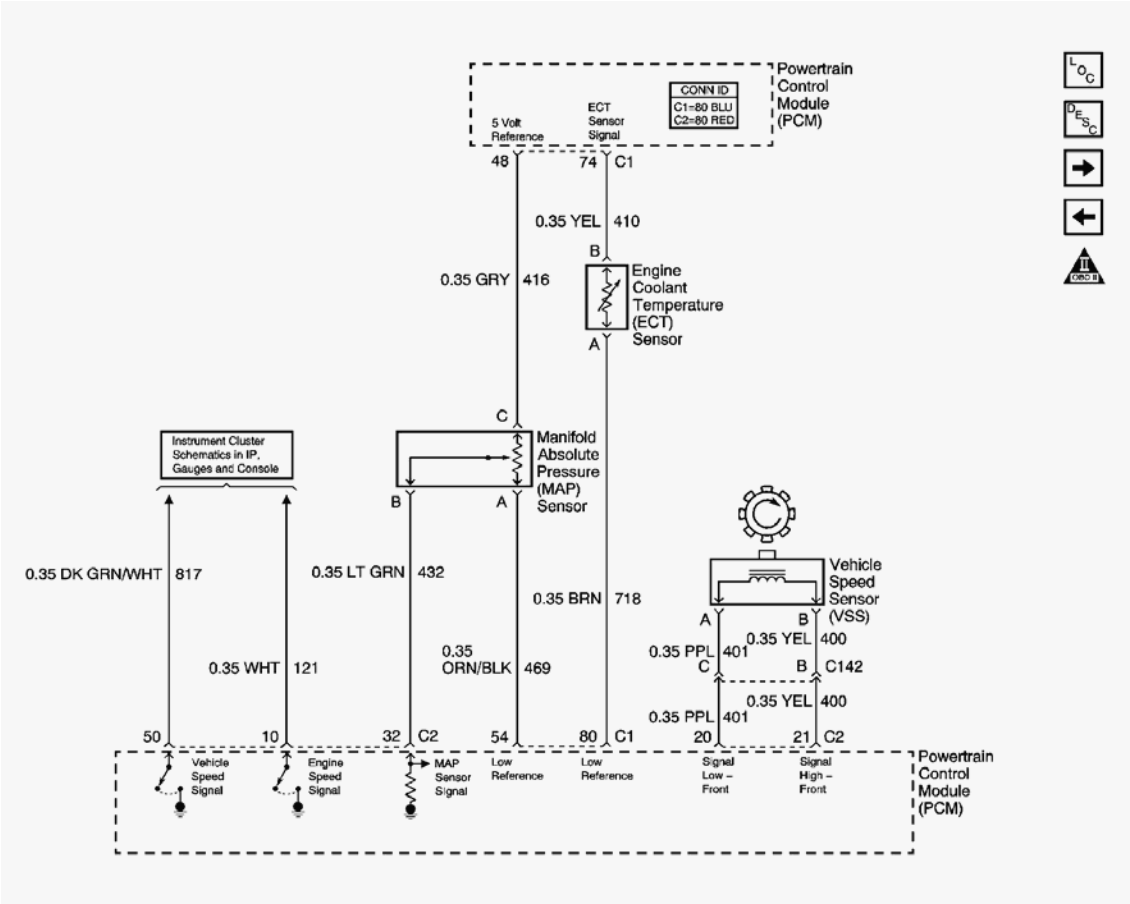

Fig. 6: Engine Data Sensors Schematics - Pressure, Temperature And VSS
Courtesy of GENERAL MOTORS CORP.

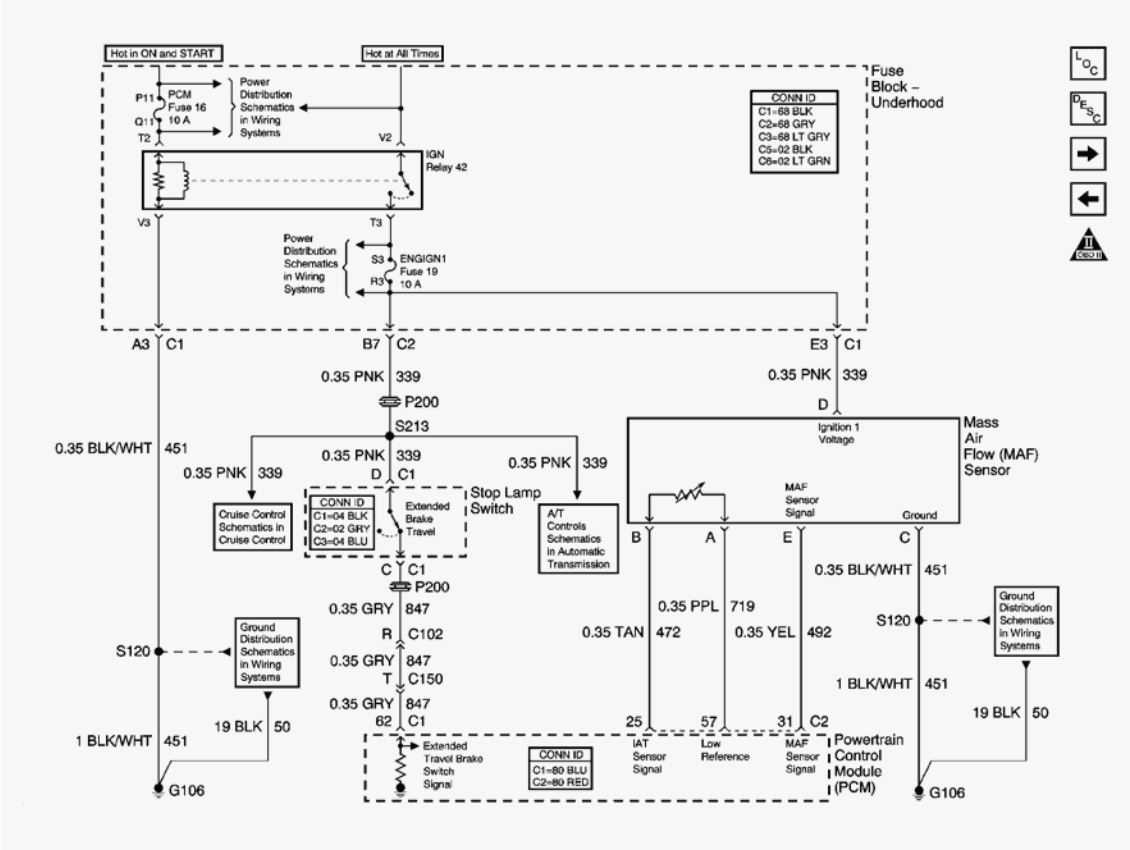

Fig. 7: Engine Data Sensors Schematics - MAF And Extended Brake Travel Switch
Courtesy of GENERAL MOTORS CORP.

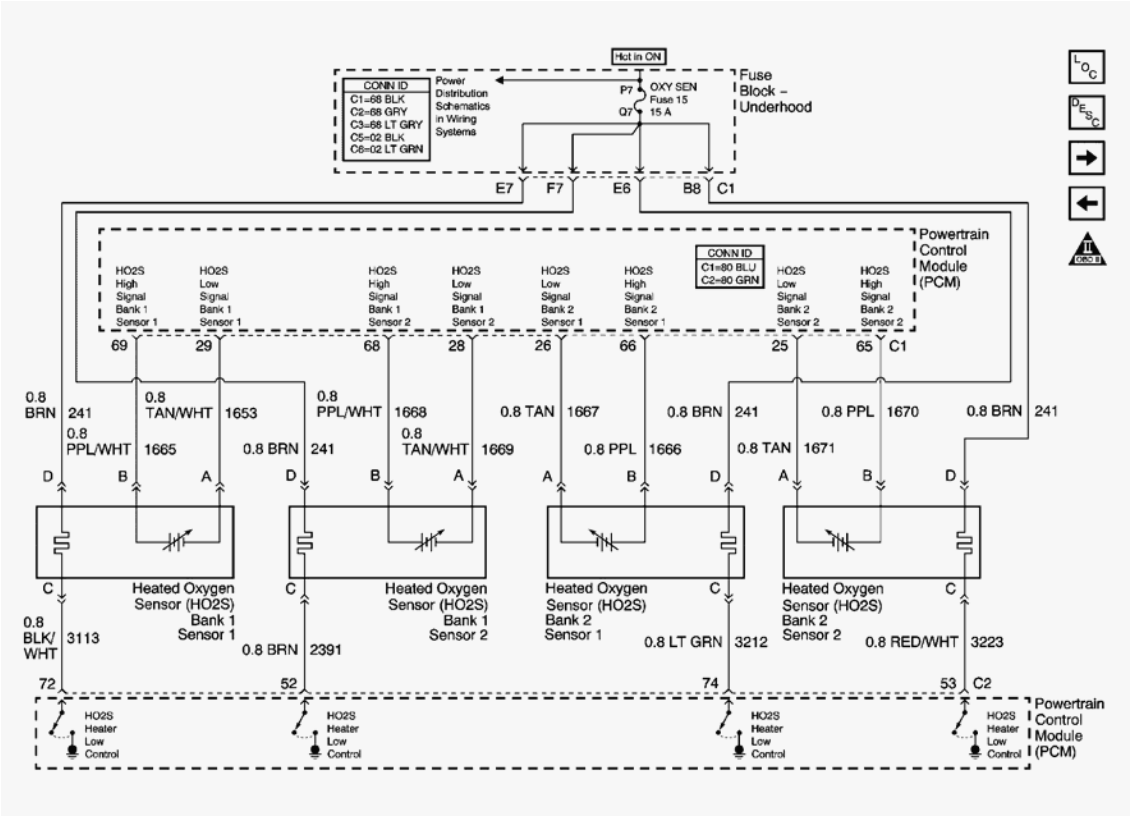

Fig. 8: Engine Data Sensors Schematics - HO2S
Courtesy of GENERAL MOTORS CORP.

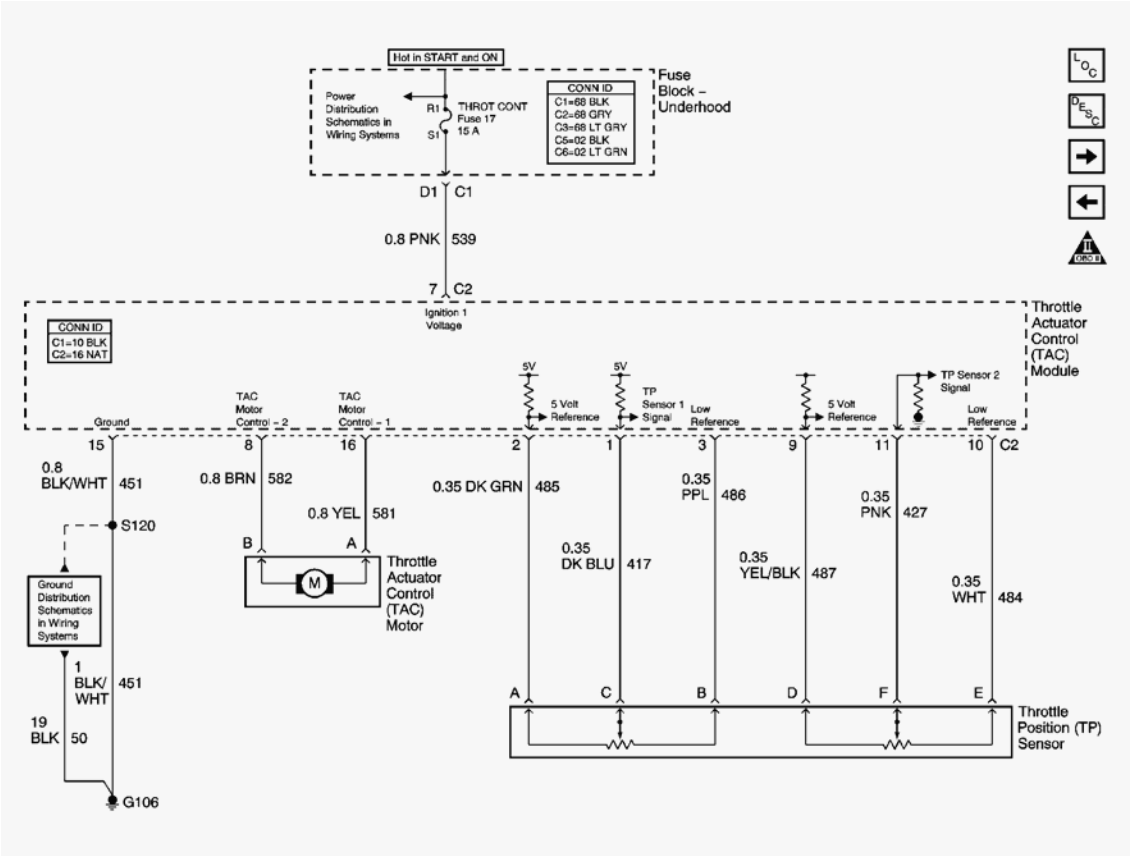

Fig. 9: Power, Ground TAC Motor, Module And TP Sensor Schematics
Courtesy of GENERAL MOTORS CORP.

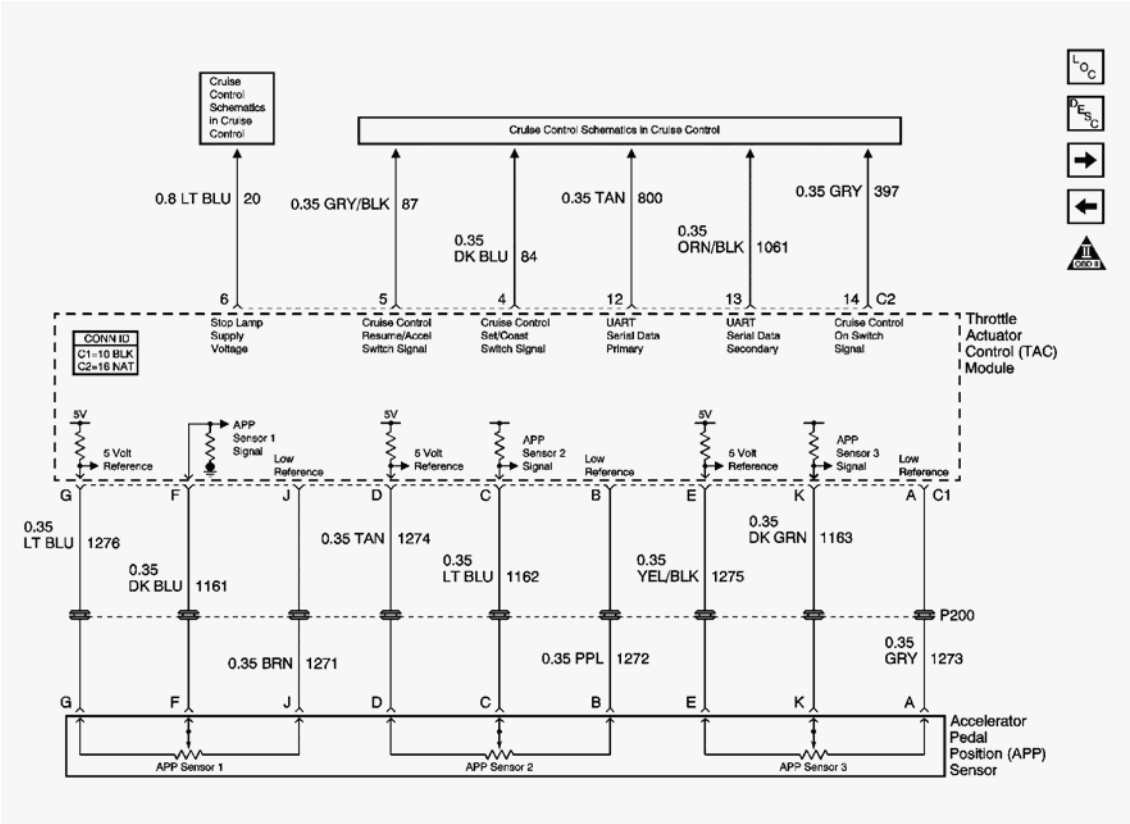

Fig. 10: TAC Module APP Sensor And Cruise Reference Schematics
Courtesy of GENERAL MOTORS CORP.

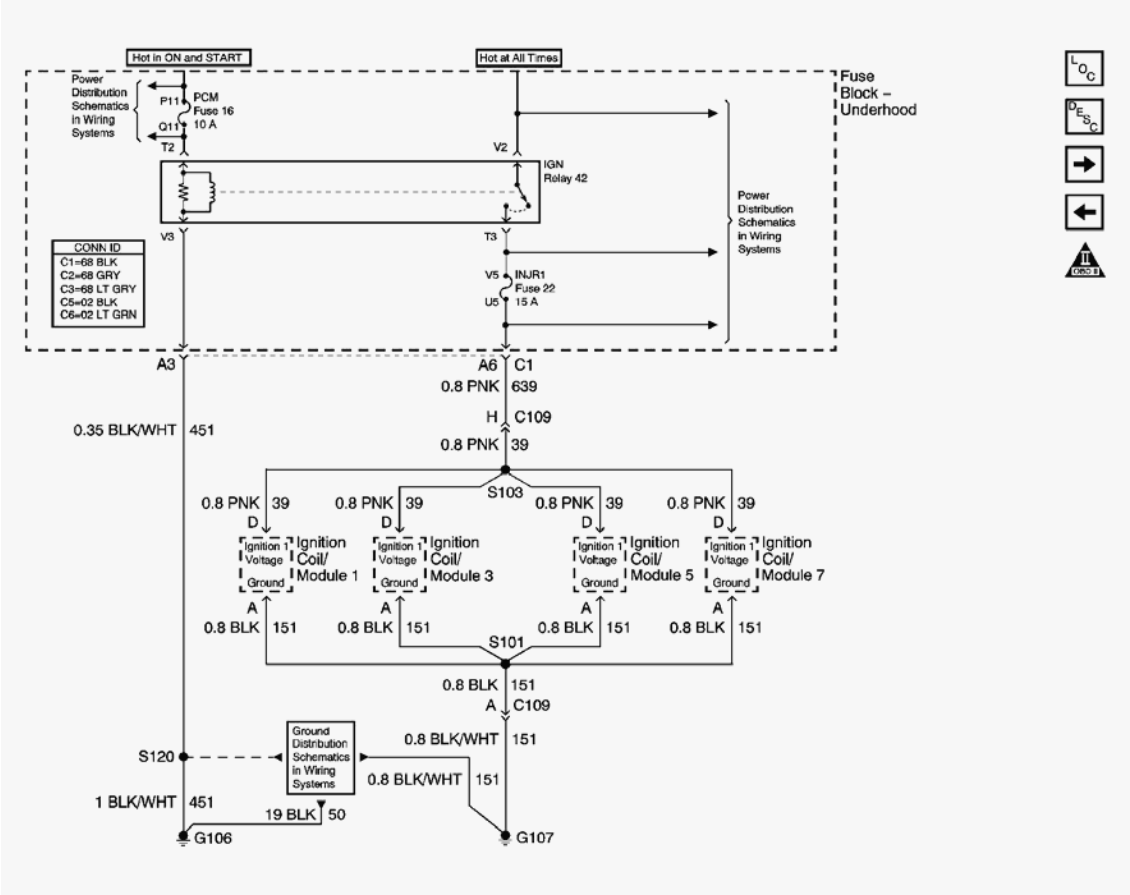

Fig. 11: Ignition Controls Schematics - Ignition System 1,3,5,7
Courtesy of GENERAL MOTORS CORP.

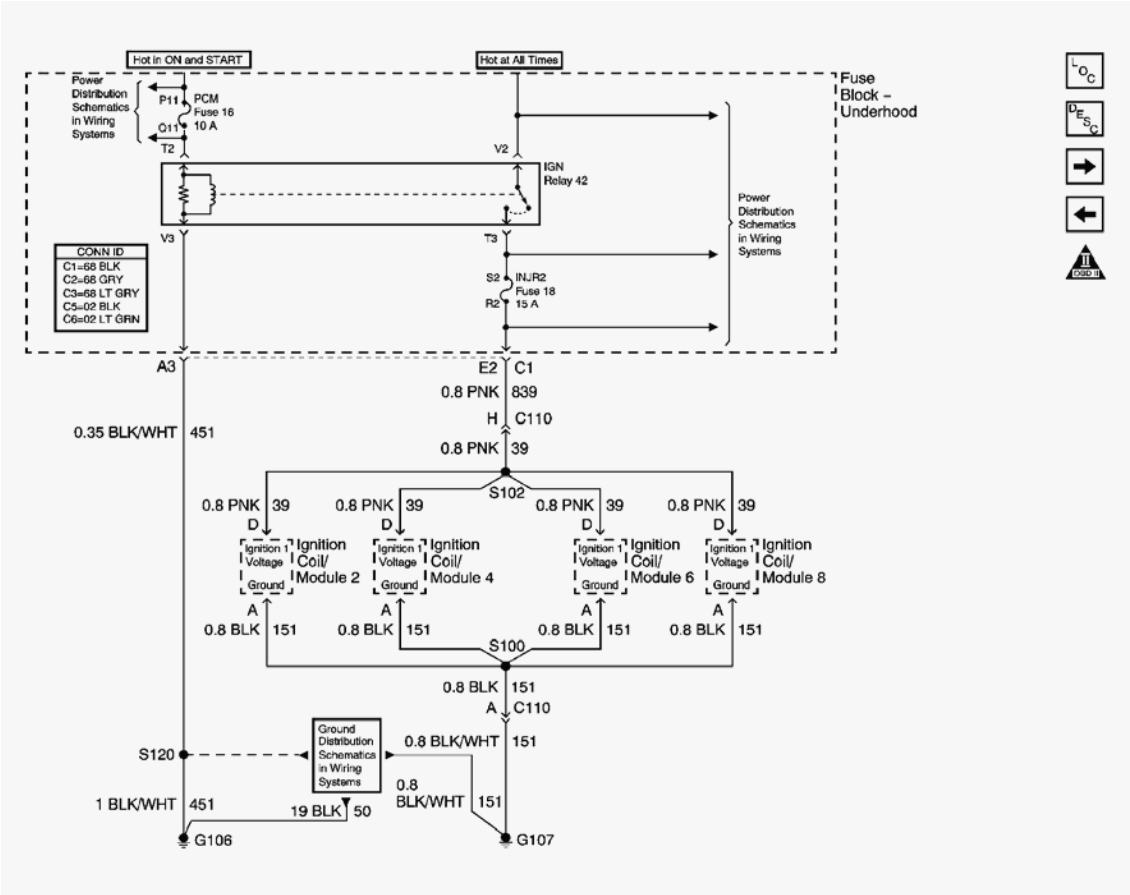

Fig. 12: Ignition Controls Schematics - Ignition System 2,4,6,8
Courtesy of GENERAL MOTORS CORP.

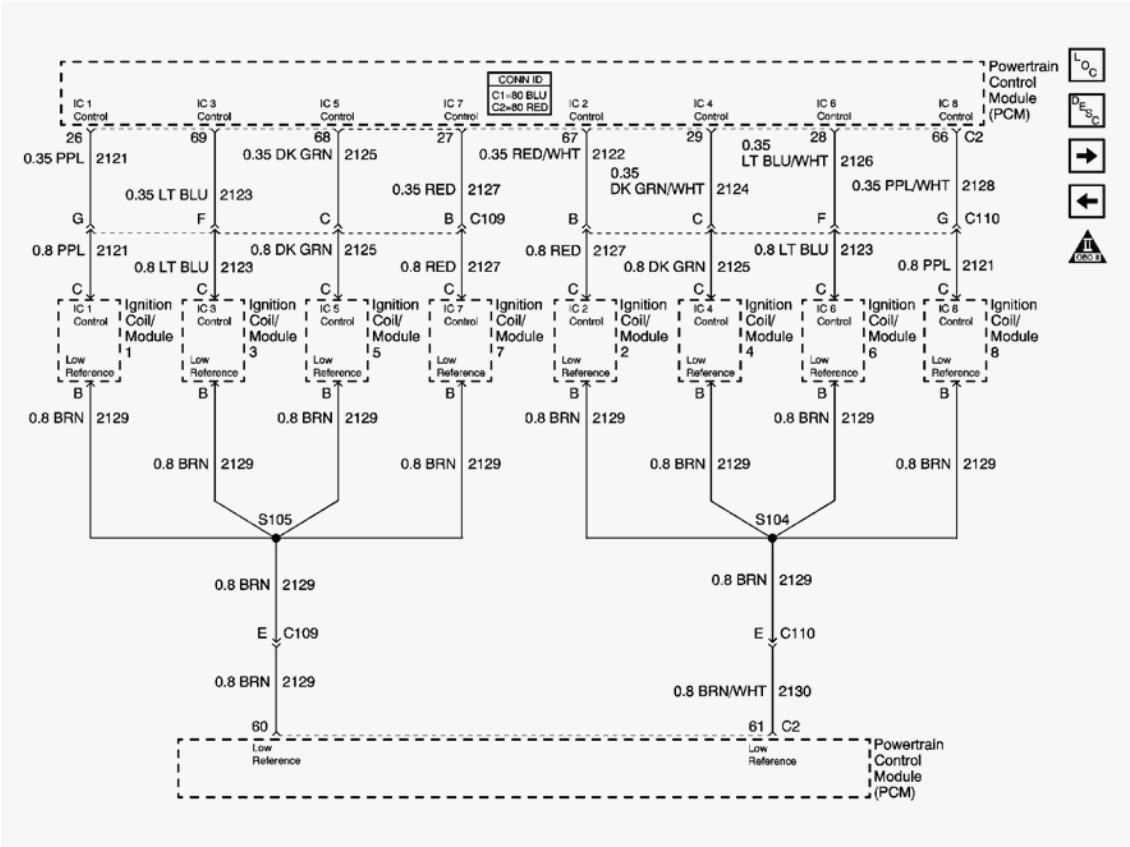

Fig. 13: Ignition Controls Schematics - Ignition System Controls
Courtesy of GENERAL MOTORS CORP.

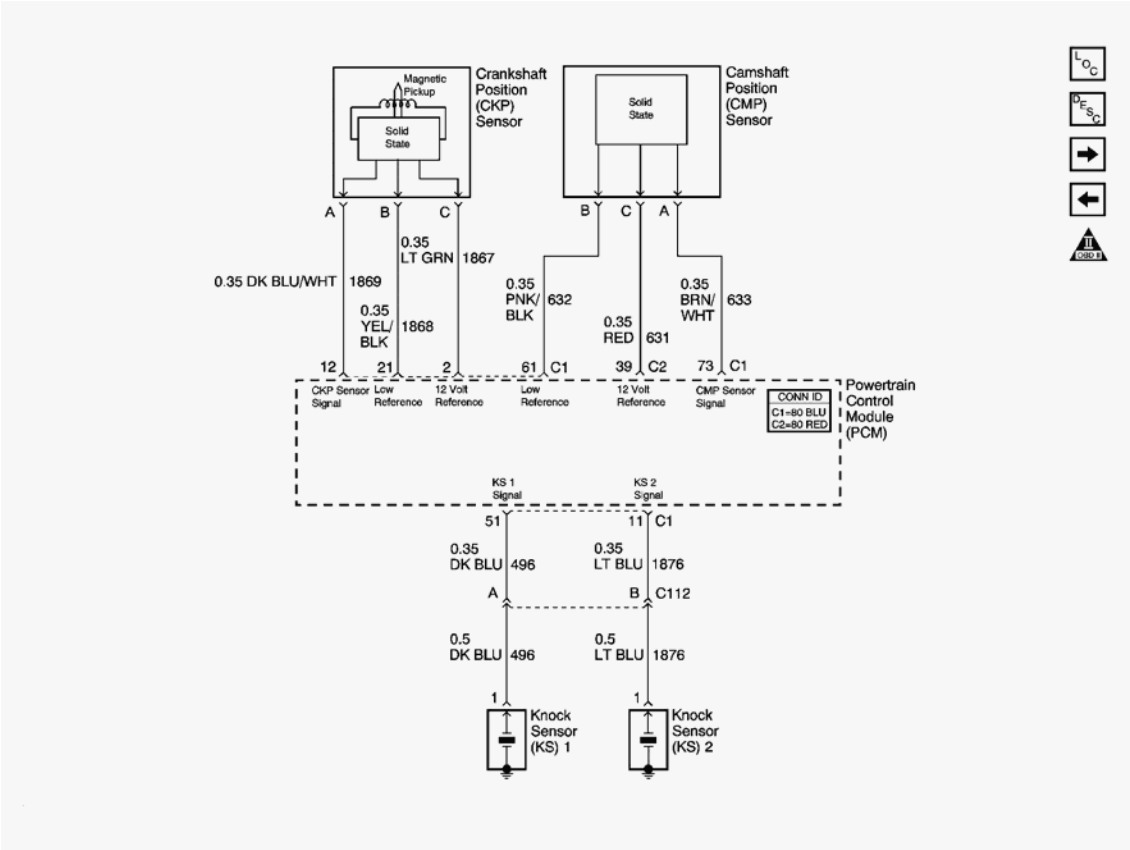

Fig. 14: Ignition Controls Schematics - Sensors
Courtesy of GENERAL MOTORS CORP.

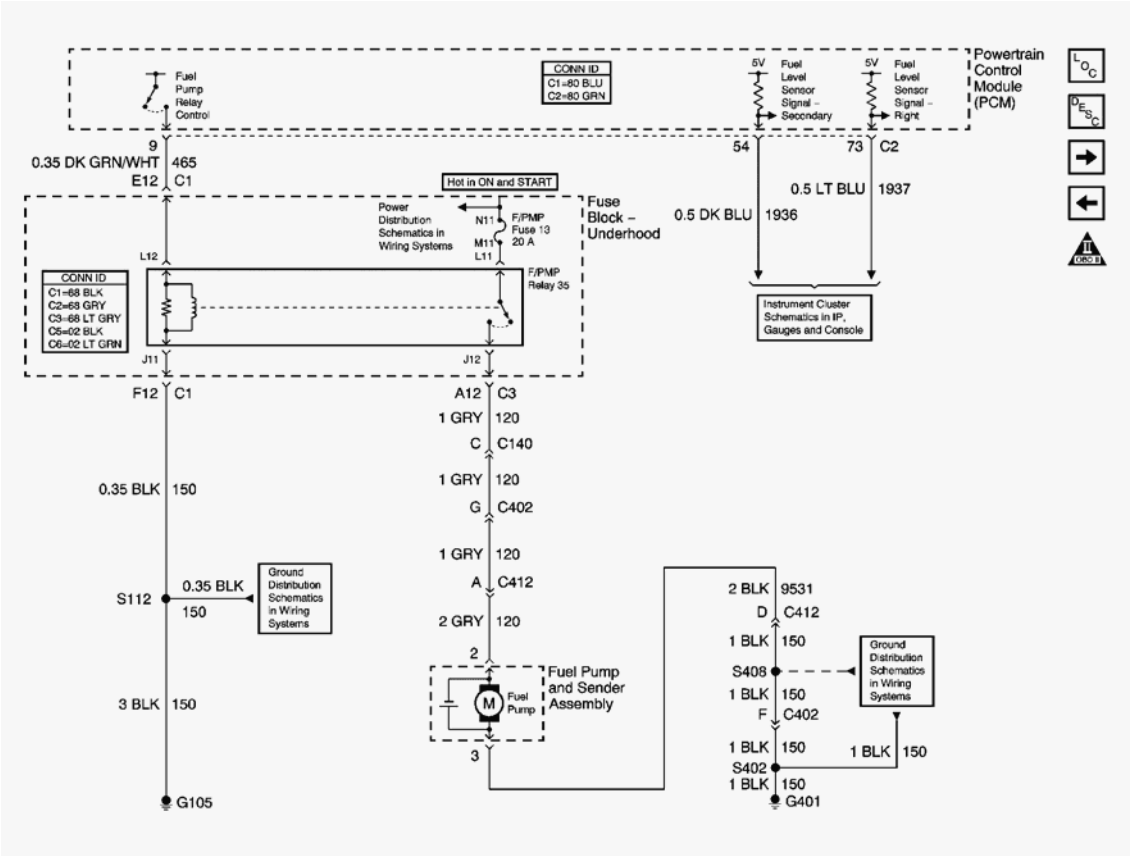

Fig. 15: Fuel Controls Schematics - Fuel Pump Controls
Courtesy of GENERAL MOTORS CORP.

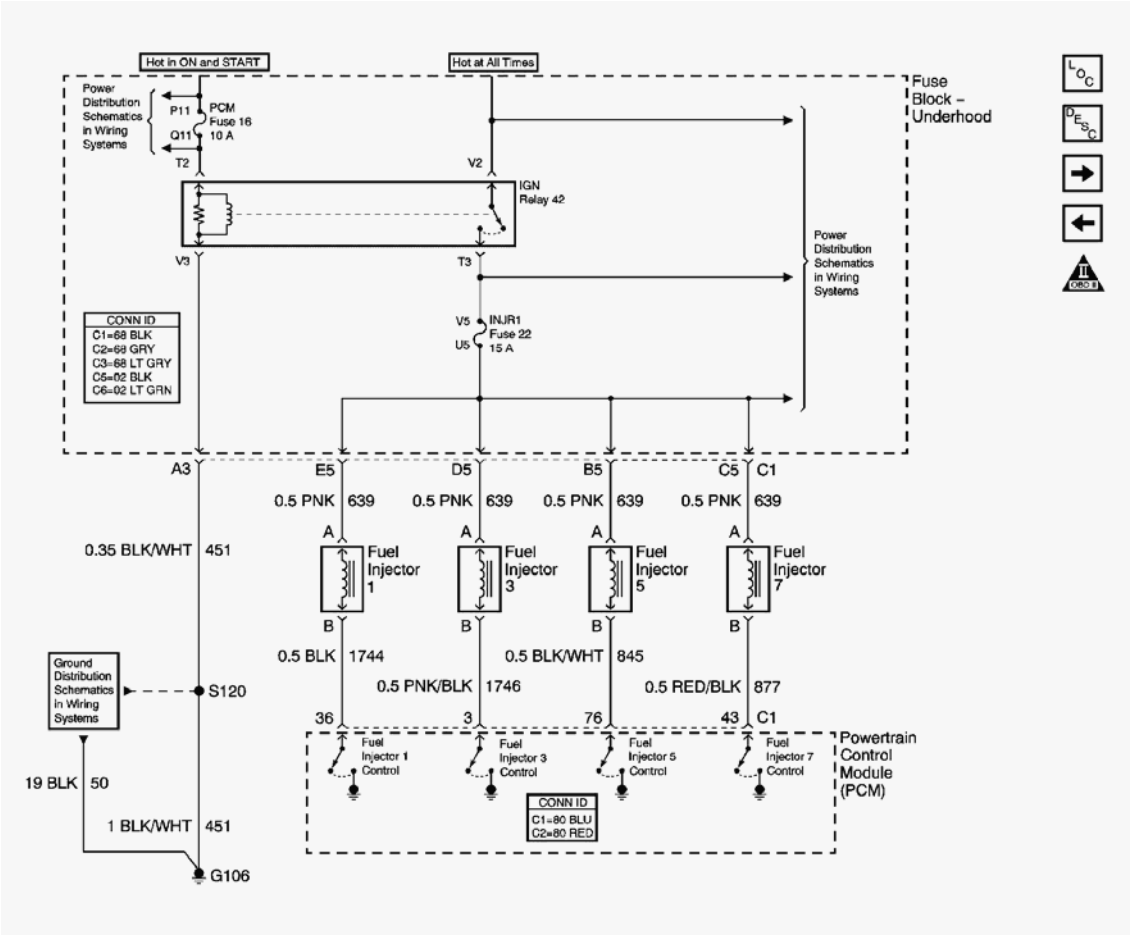

Fig. 16: Fuel Controls Schematics - Fuel Injectors 1,3,5,7
Courtesy of GENERAL MOTORS CORP.

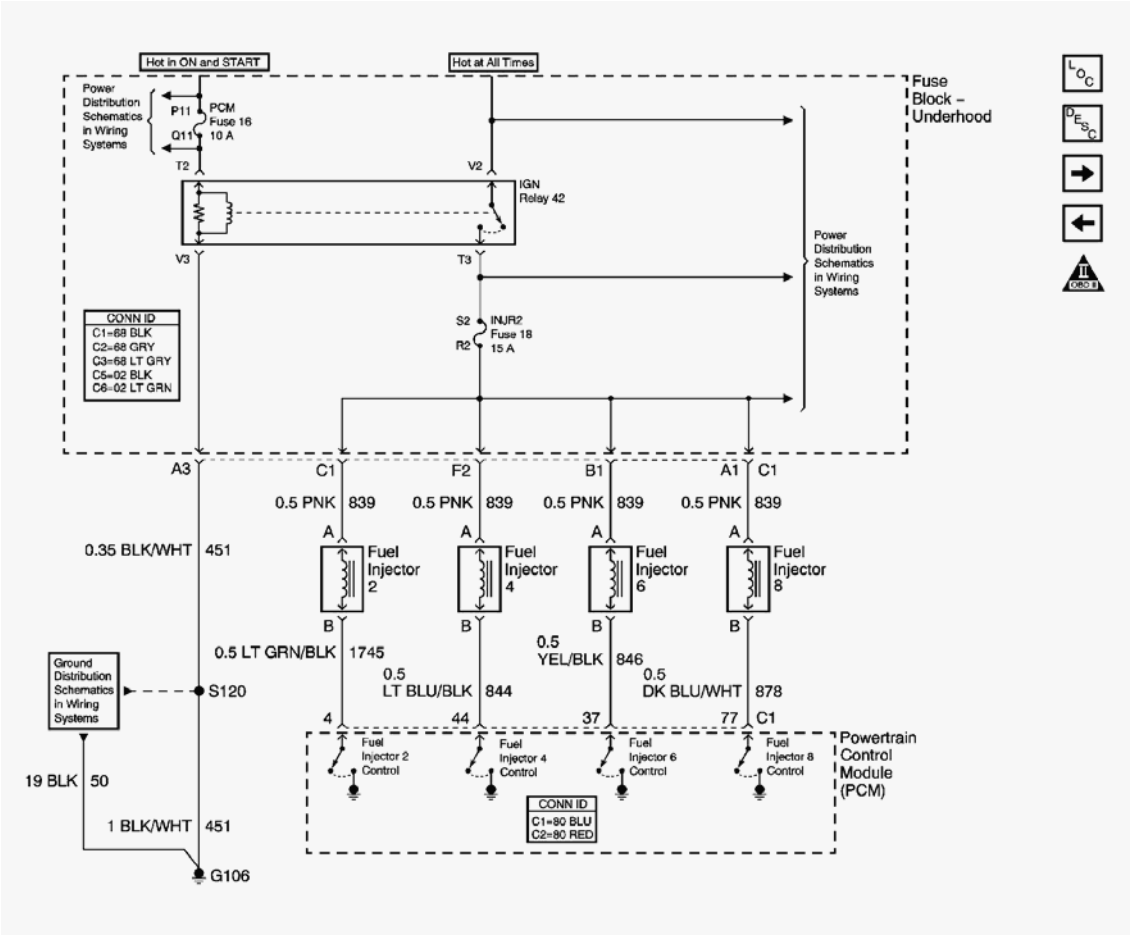

Fig. 17: Fuel Controls Schematics - Fuel Injectors 2,4,6,8
Courtesy of GENERAL MOTORS CORP.

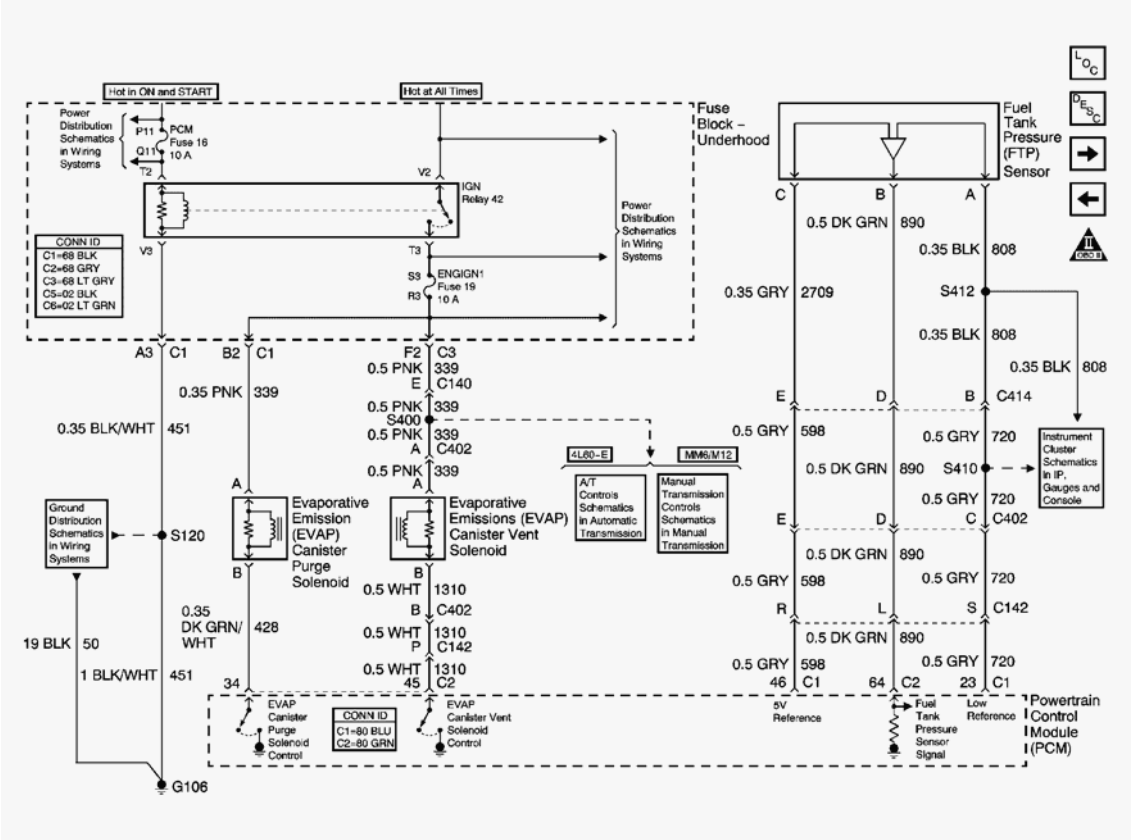

Fig. 18: Fuel Controls Schematics - EVAP Controls
Courtesy of GENERAL MOTORS CORP.

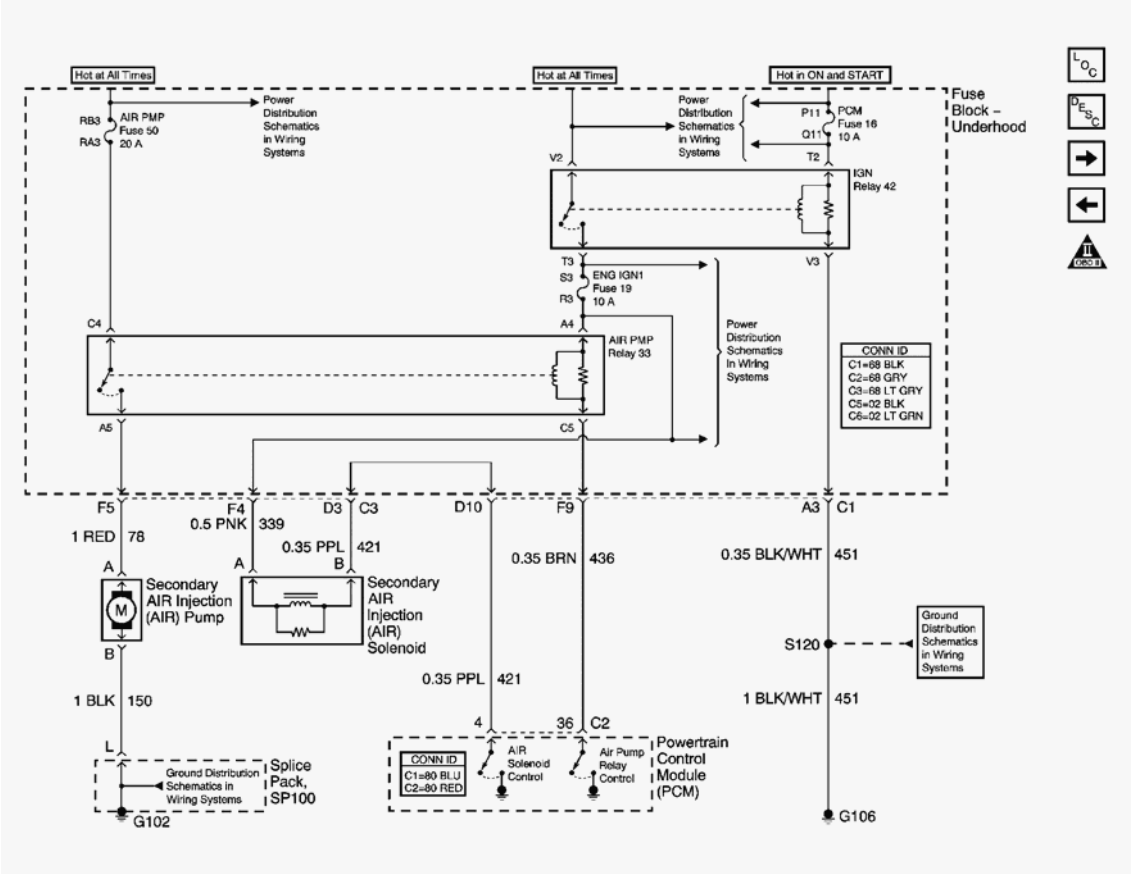

Fig. 19: Device Controls Schematics
Courtesy of GENERAL MOTORS CORP.

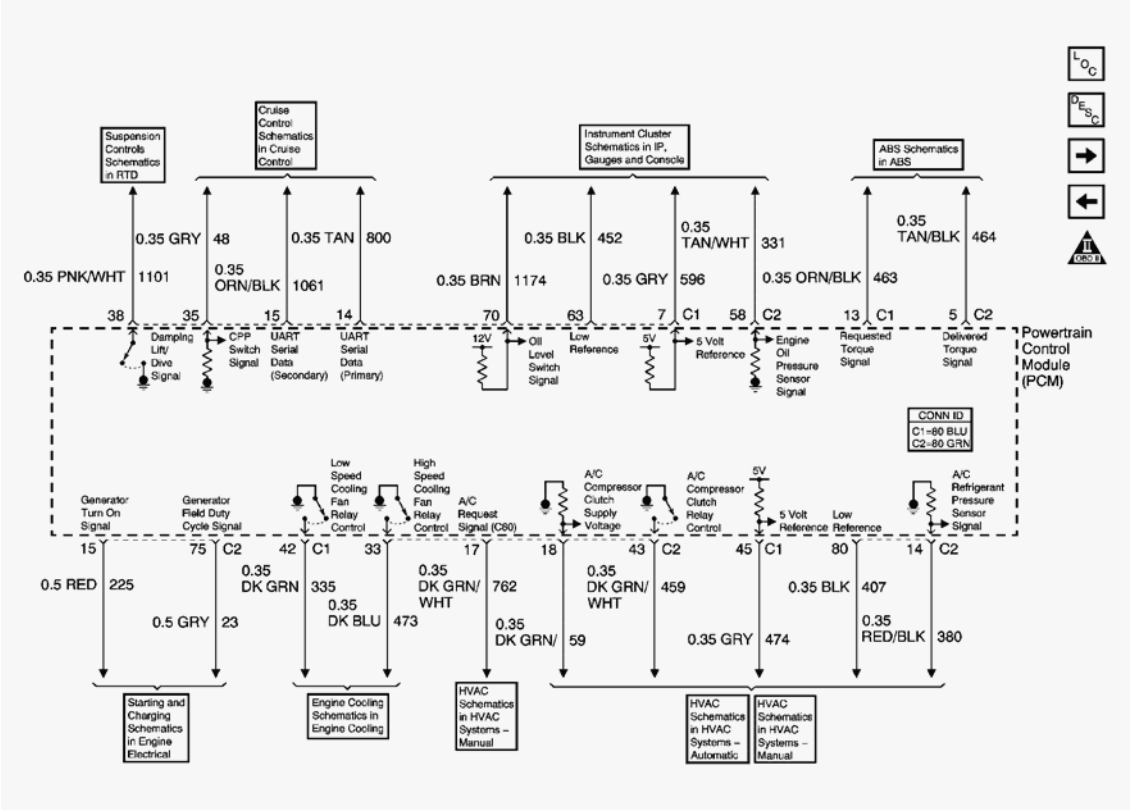

Fig. 20: Controled/Monitored Subsystem References Schematics
Courtesy of GENERAL MOTORS CORP.

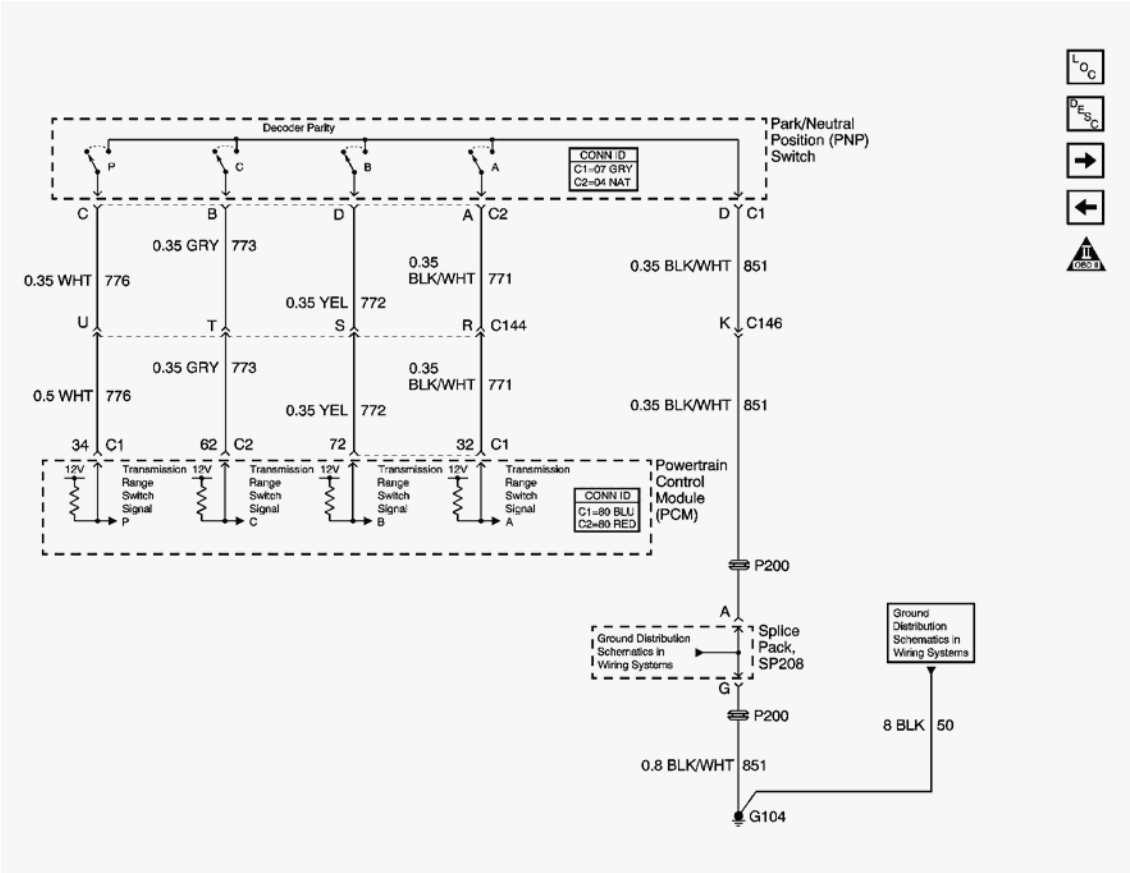

Fig. 21: Transmission Controls Schematics - PNP Switch
Courtesy of GENERAL MOTORS CORP.

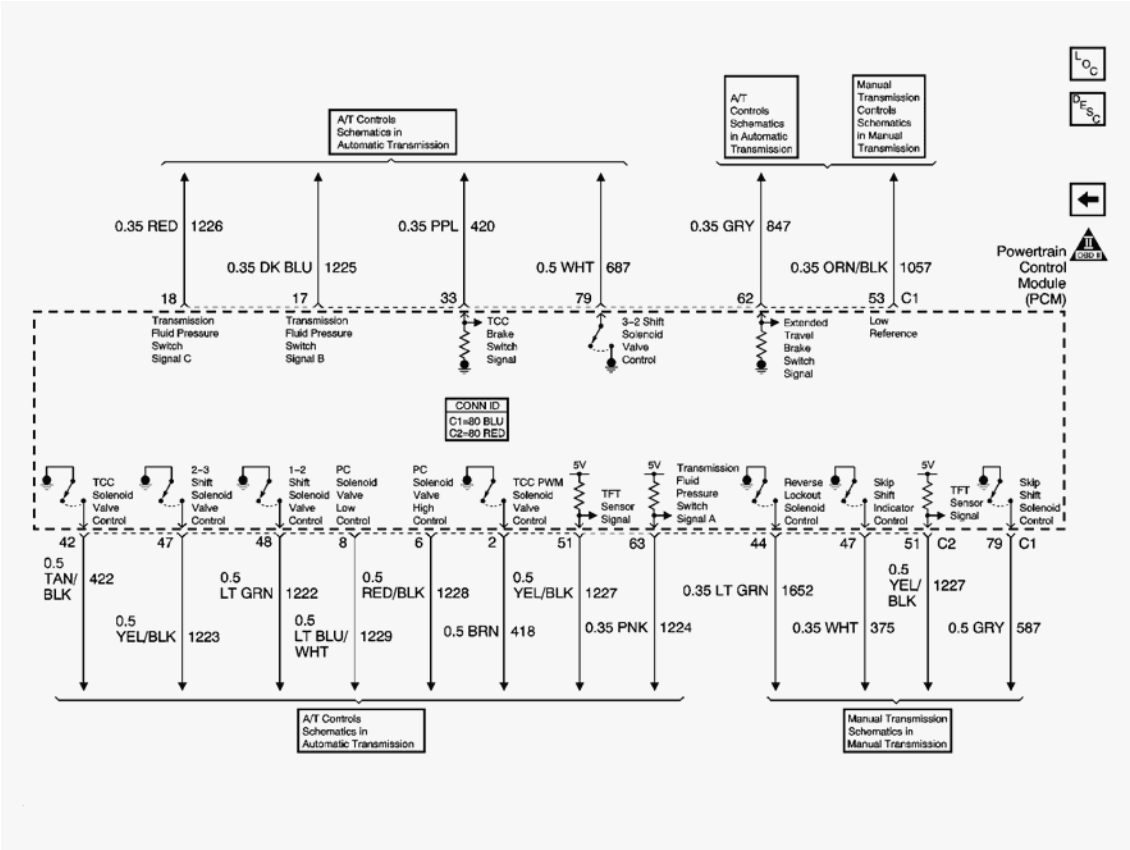

Fig. 22: Transmission Controls Schematics - M/T And A/T
Courtesy of GENERAL MOTORS CORP.

COMPONENT LOCATOR

ENGINE CONTROLS COMPONENT VIEWS

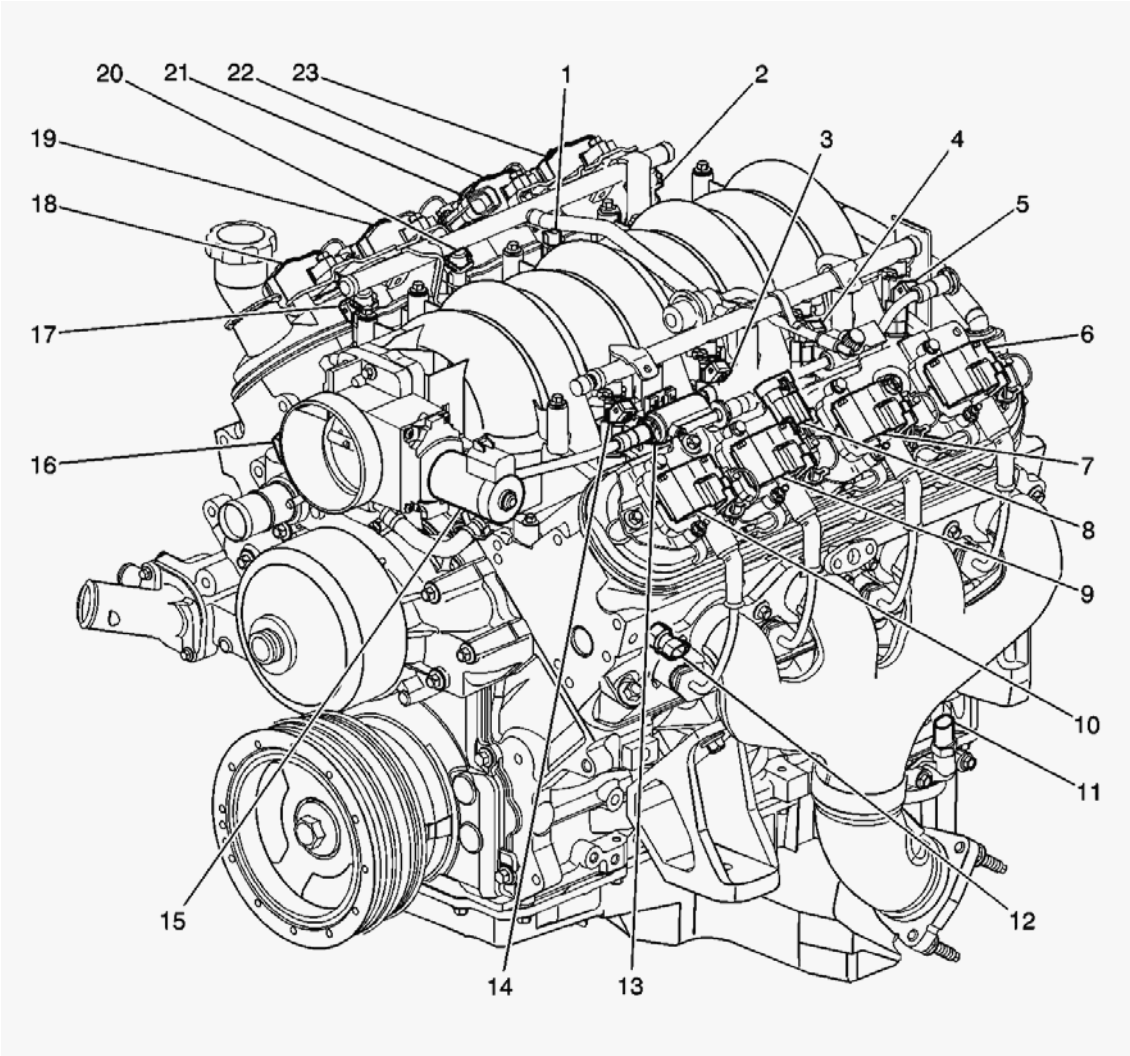

Fig. 23: Engine Component View
Courtesy of GENERAL MOTORS CORP.

Callouts For Fig. 23

Callout	Component Name
1	Fuel Injector 6
2	Fuel Injector 8
3	Fuel Injector 3
4	Fuel Injector 5
5	Fuel Injector 7
6	Ignition Coil/Module 7
7	Ignition Coil/Module 5
8	C109
9	Ignition Coil/Module 3
10	Ignition Coil/Module 1

11	Engine Oil Temperature (EOT) Sensor
12	Engine Coolant Temperature (ECT) Sensor
13	Evaporative Emission (EVAP) Canister Purge Solenoid
14	Fuel Injector 1
15	Throttle Actuator Control (TAC) Motor
16	Throttle Position (TP) Sensor
17	Fuel Injector 2
18	Ignition Coil/Module 2
19	Ignition Coil/Module 4
20	Fuel Injector 4
21	C110
22	Ignition Coil/Module 6
23	Ignition Coil/Module 8

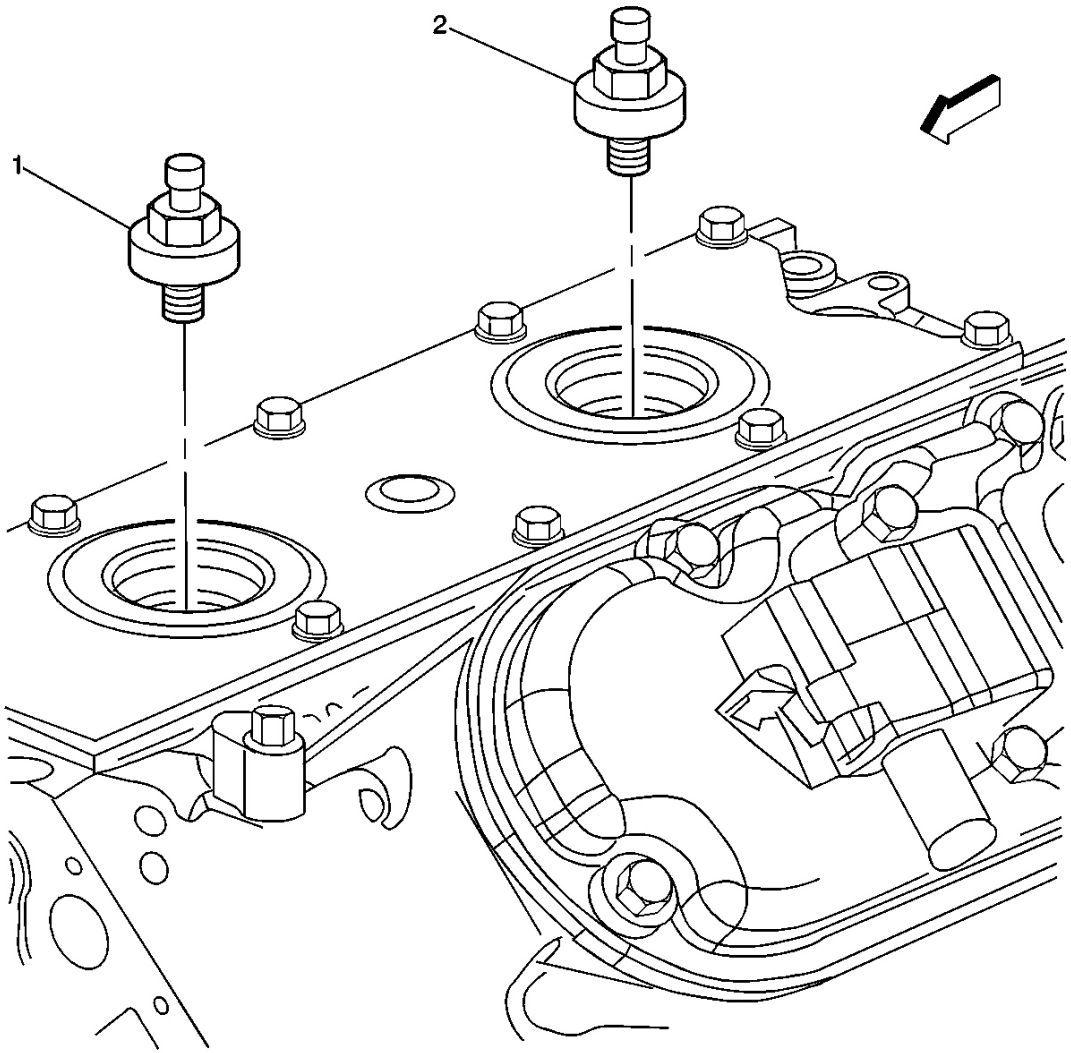

Fig. 24: Knock Sensors Component View
Courtesy of GENERAL MOTORS CORP.

Callouts For Fig. 24

Callout	Component Name
1	Knock Sensor (KS) 1
2	Knock Sensor (KS) 2

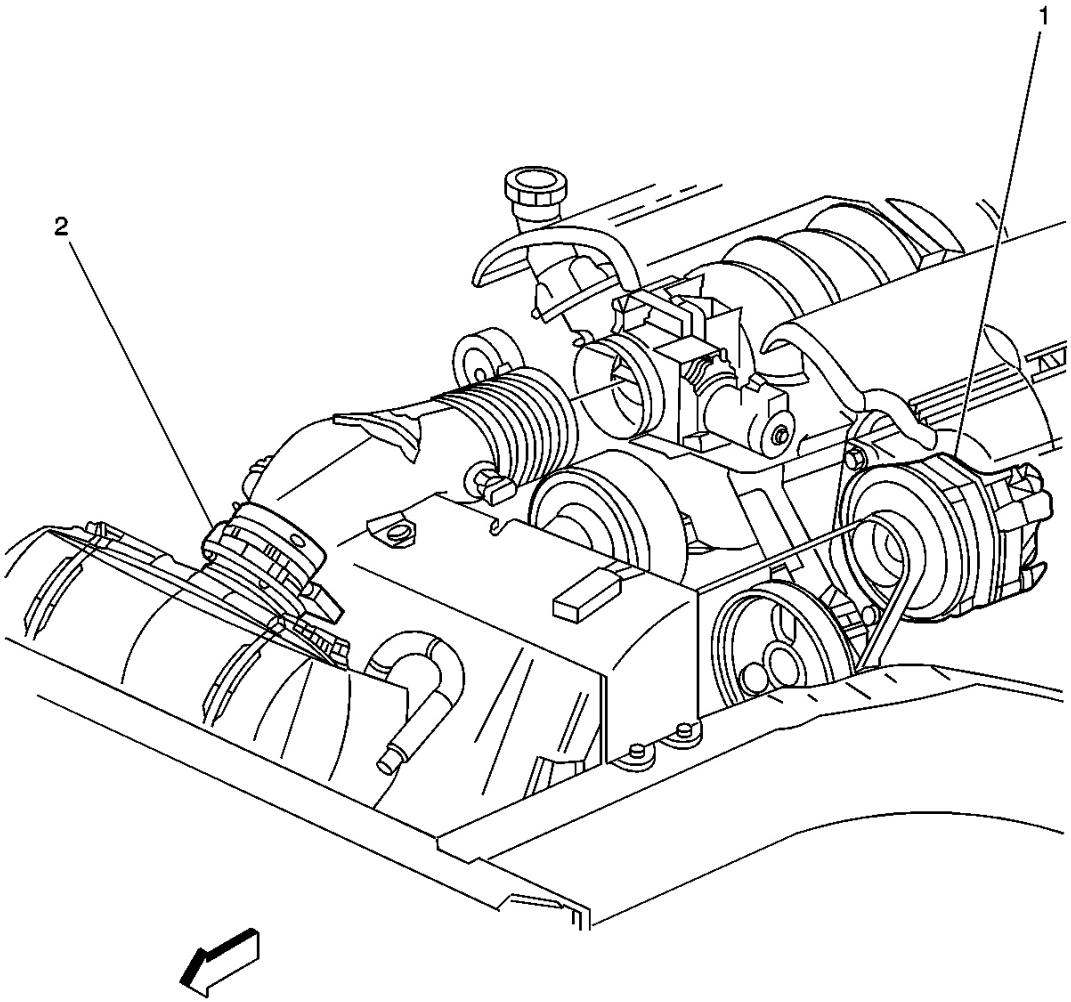

Fig. 25: Front Of Engine Compartment Component View
Courtesy of GENERAL MOTORS CORP.

Callouts For Fig. 25

Callout	Component Name
1	Generator
2	Mass Air Flow (MAF) Sensor

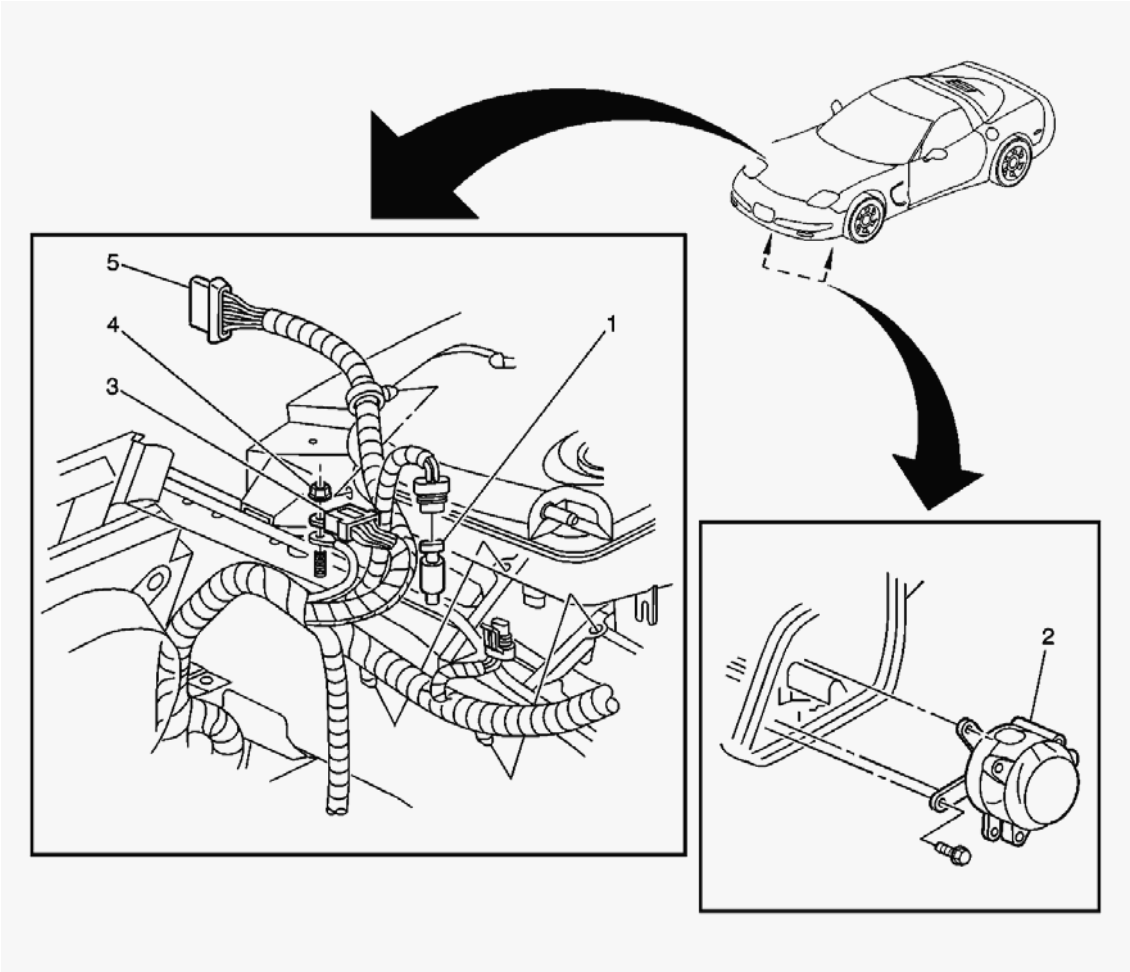

Fig. 26: Front Of Engine Compartment Component View
Courtesy of GENERAL MOTORS CORP.

Callouts For Fig. 26

Callout	Component Name
1	A/C Refrigerant Pressure Sensor
2	Secondary Air Injection (AIR) Pump
3	SP100
4	G102
5	Headlamp Door Assembly-Right Connector

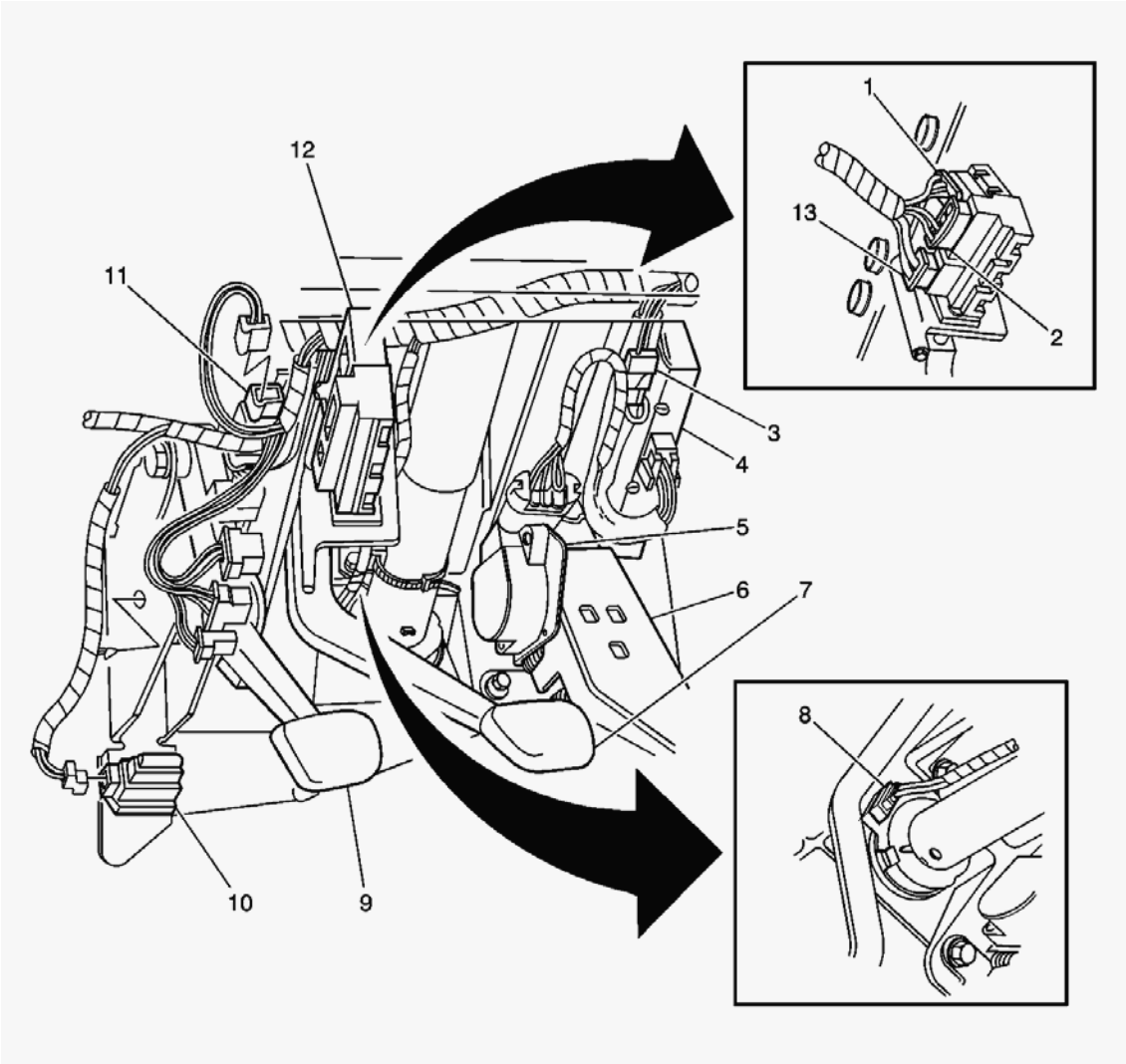

Fig. 27: Under Side Of The Dash Component View - Left
Courtesy of GENERAL MOTORS CORP.

Callouts For Fig. 27

Callout	Component Name
1	Stop Lamp Switch C1
2	Stop Lamp Switch C3
3	C213
4	Bose Signal Processor
5	Accelerator Pedal Position (APP) Sensor
6	Accelerator Pedal
7	Brake Pedal
8	Steering Wheel Position Sensor
9	Clutch Pedal
10	Clutch Pedal Start Switch

11	Clutch Pedal Position Switch
12	Stop Lamp Switch
13	Stop Lamp Switch Connector C2

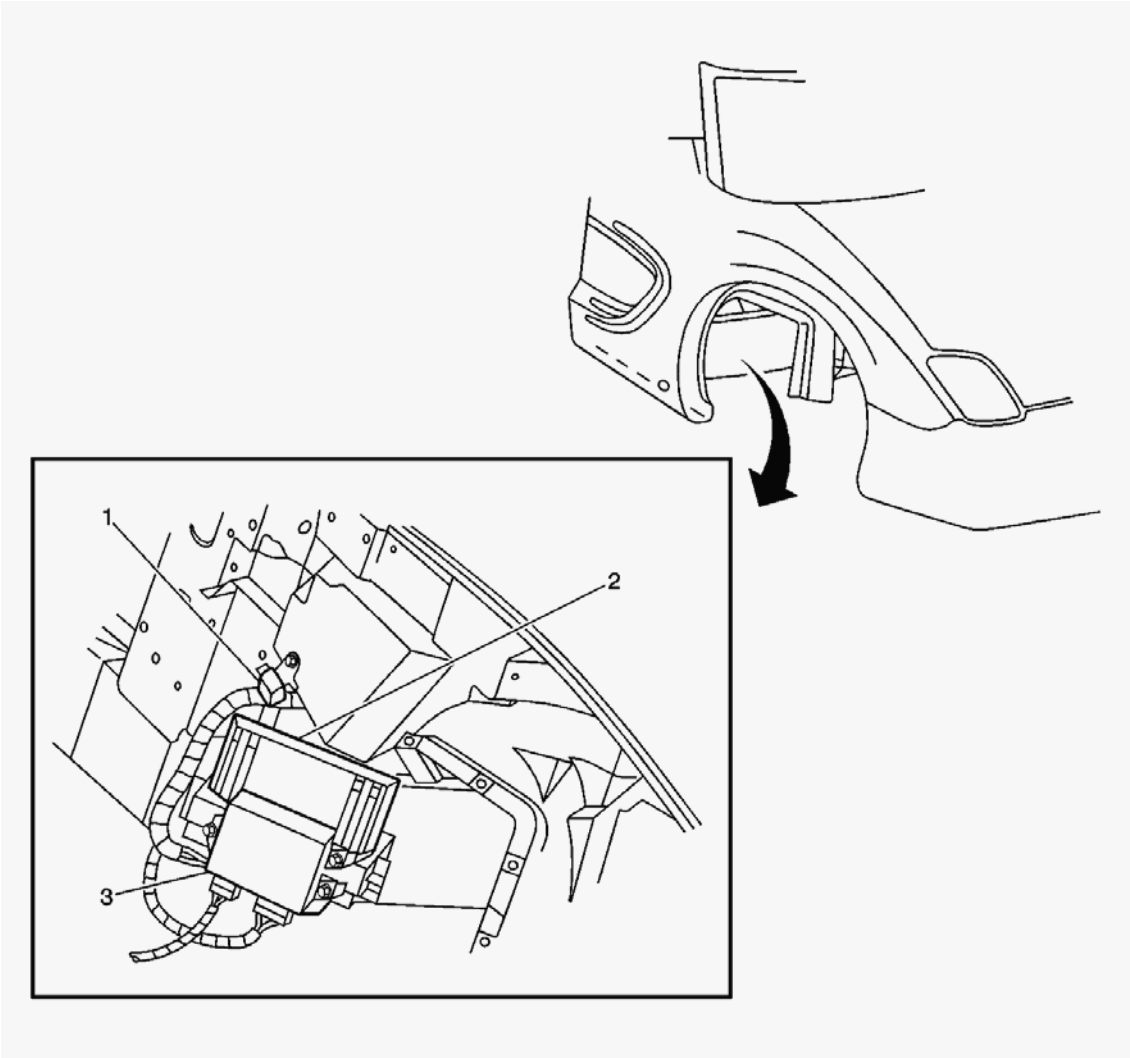

Fig. 28: RH Wheel Well Component View
Courtesy of GENERAL MOTORS CORP.

Callouts For Fig. 28

Callout	Component Name
1	Secondary Air Injection (AIR) Solenoid
2	Powertrain Control Module (PCM)
3	Throttle Actuator Control (TAC) Module

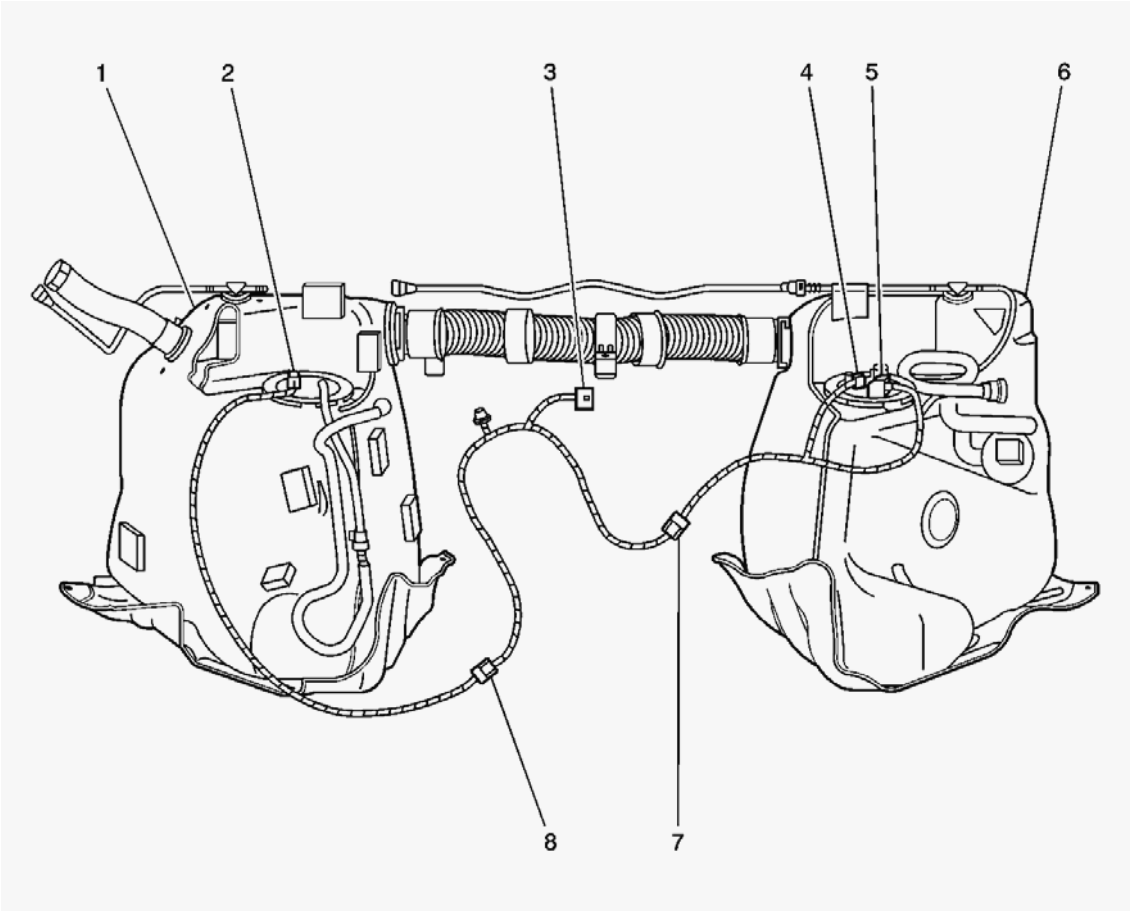

Fig. 29: Fuel Tanks Component View
Courtesy of GENERAL MOTORS CORP.

Callouts For Fig. 29

Callout	Component Name
1	Fuel Tank - Left
2	Fuel Pump and Sender Assembly
3	C402
4	Fuel Tank Pressure (FTP) Sensor
5	Fuel Level Sensor - Right
6	Fuel Tank - Right
7	C414
8	C412

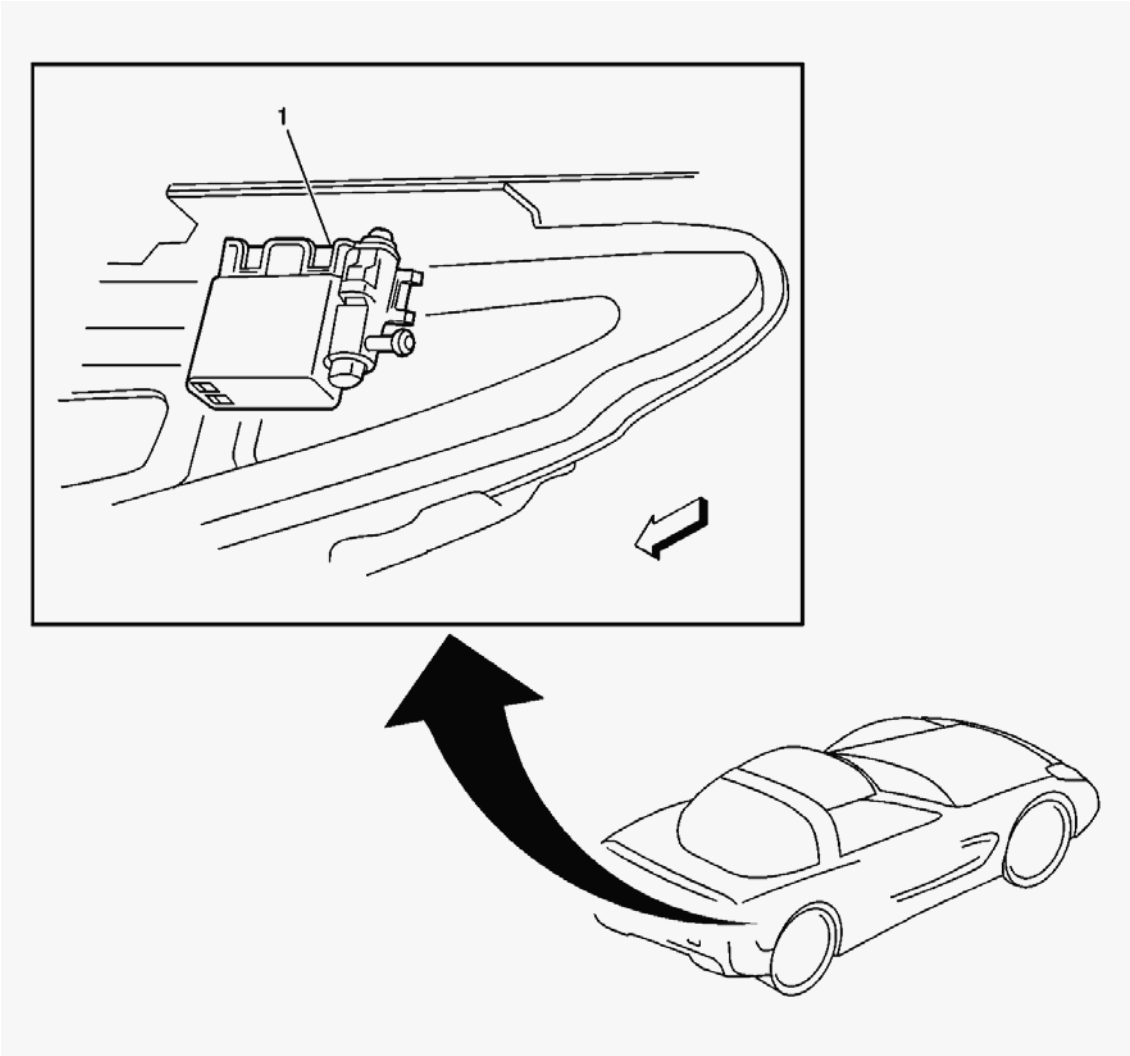

Fig. 30: Evaporative Emission (EVAP) Canister Vent Solenoid
Courtesy of GENERAL MOTORS CORP.

Callouts For Fig. 30

Callout	Component Name
1	Evaporative Emission (EVAP) Canister Vent Solenoid

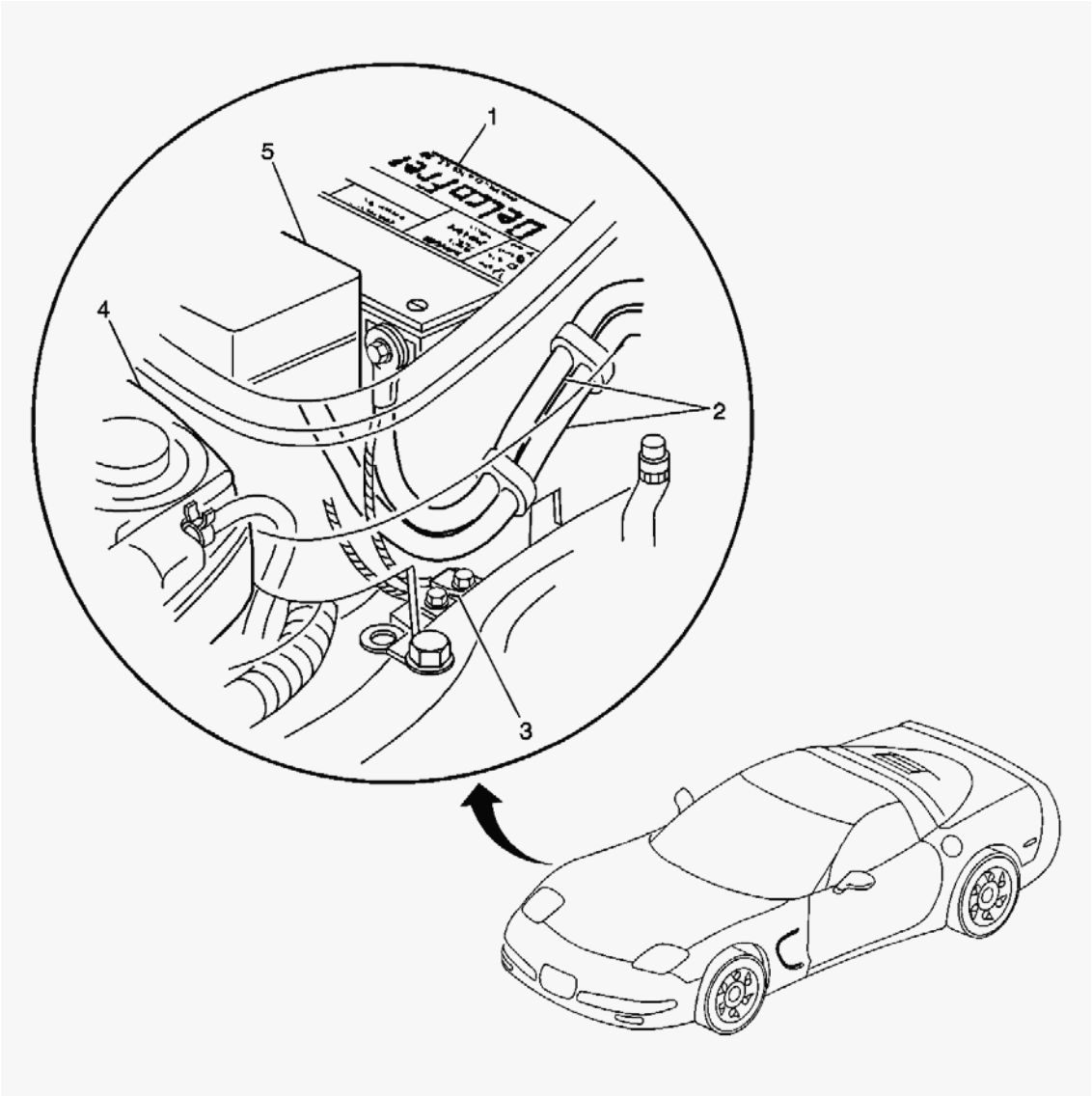

Fig. 31: Engine Compartment Under The Battery Component View
Courtesy of GENERAL MOTORS CORP.

Callouts For Fig. 31

Callout	Component Name
1	Battery
2	Battery Cables
3	G104
4	Engine Coolant Reservoir
5	Fuse Block-Underhood

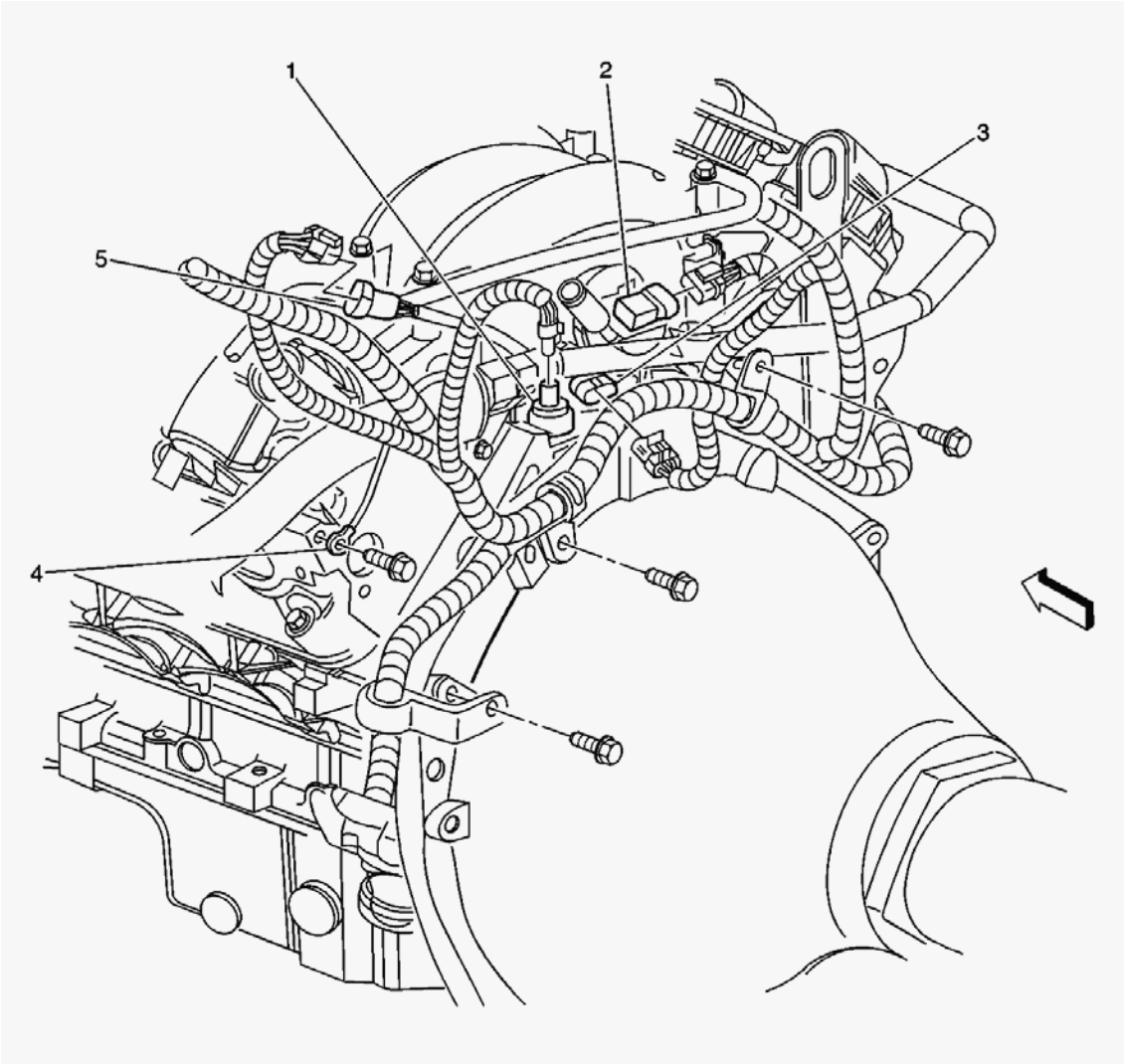

Fig. 32: Rear Of Engine Component View
Courtesy of GENERAL MOTORS CORP.

Callouts For Fig. 32

Callout	Component Name
1	Engine Oil Pressure (EOP) Sensor
2	Manifold Absolute Pressure (MAP) Sensor
3	Camshaft Position (CMP) Sensor
4	G107
5	C112

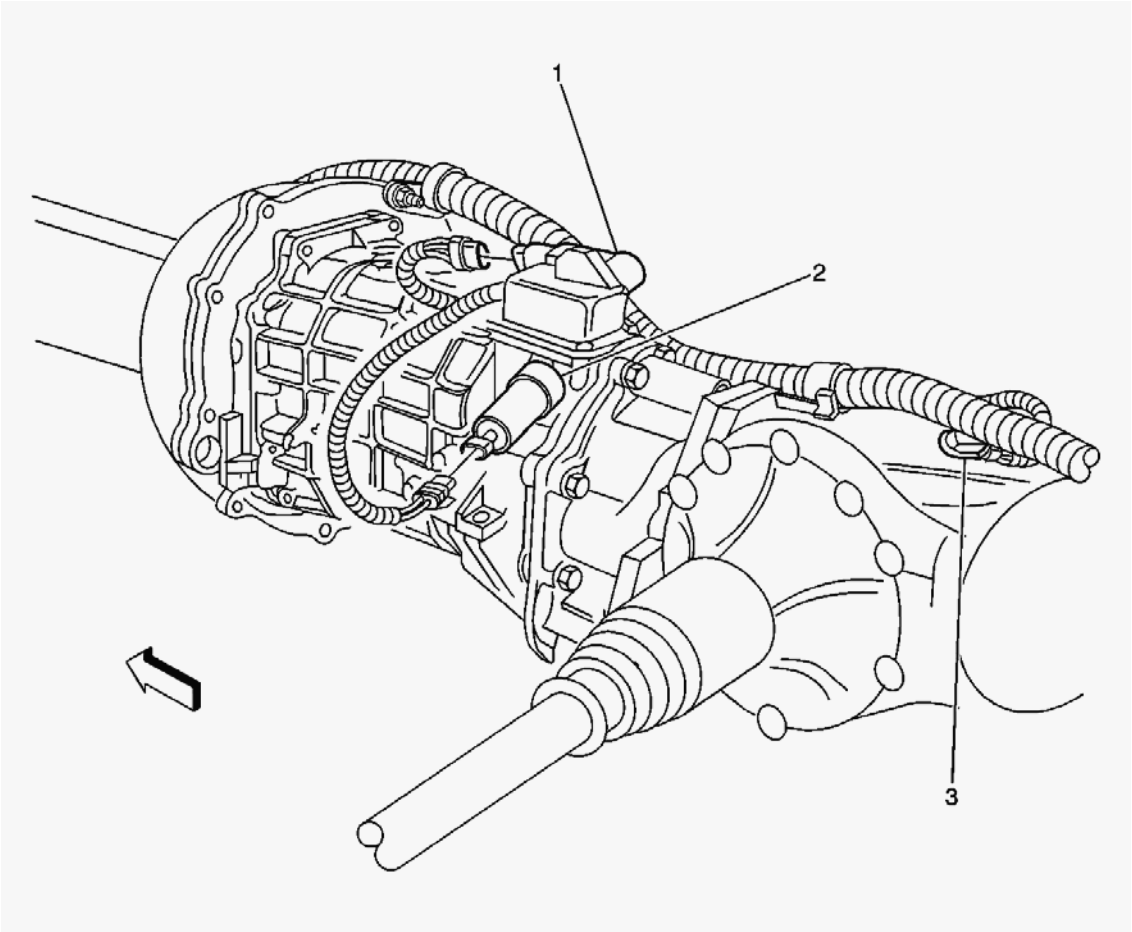

Fig. 33: Manual Transmission Component View
Courtesy of GENERAL MOTORS CORP.

Callouts For Fig. 33

Callout	Component Name
1	Reverse Inhibit Solenoid
2	Skip Shift Solenoid
3	Vehicle Speed Sensor (VSS)

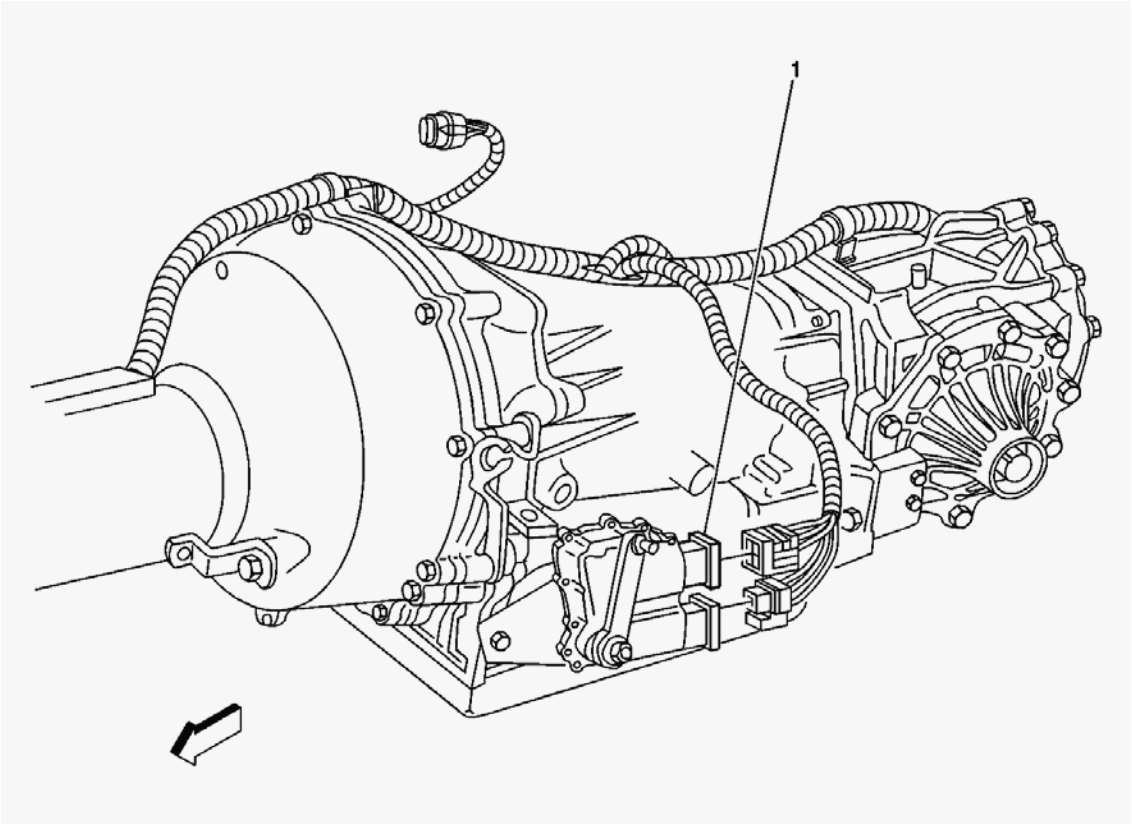

Fig. 34: Automatic Transmission Component View
Courtesy of GENERAL MOTORS CORP.

Callouts For Fig. 34

Callout	Component Name
1	Park/Neutral Position (PNP) Switch

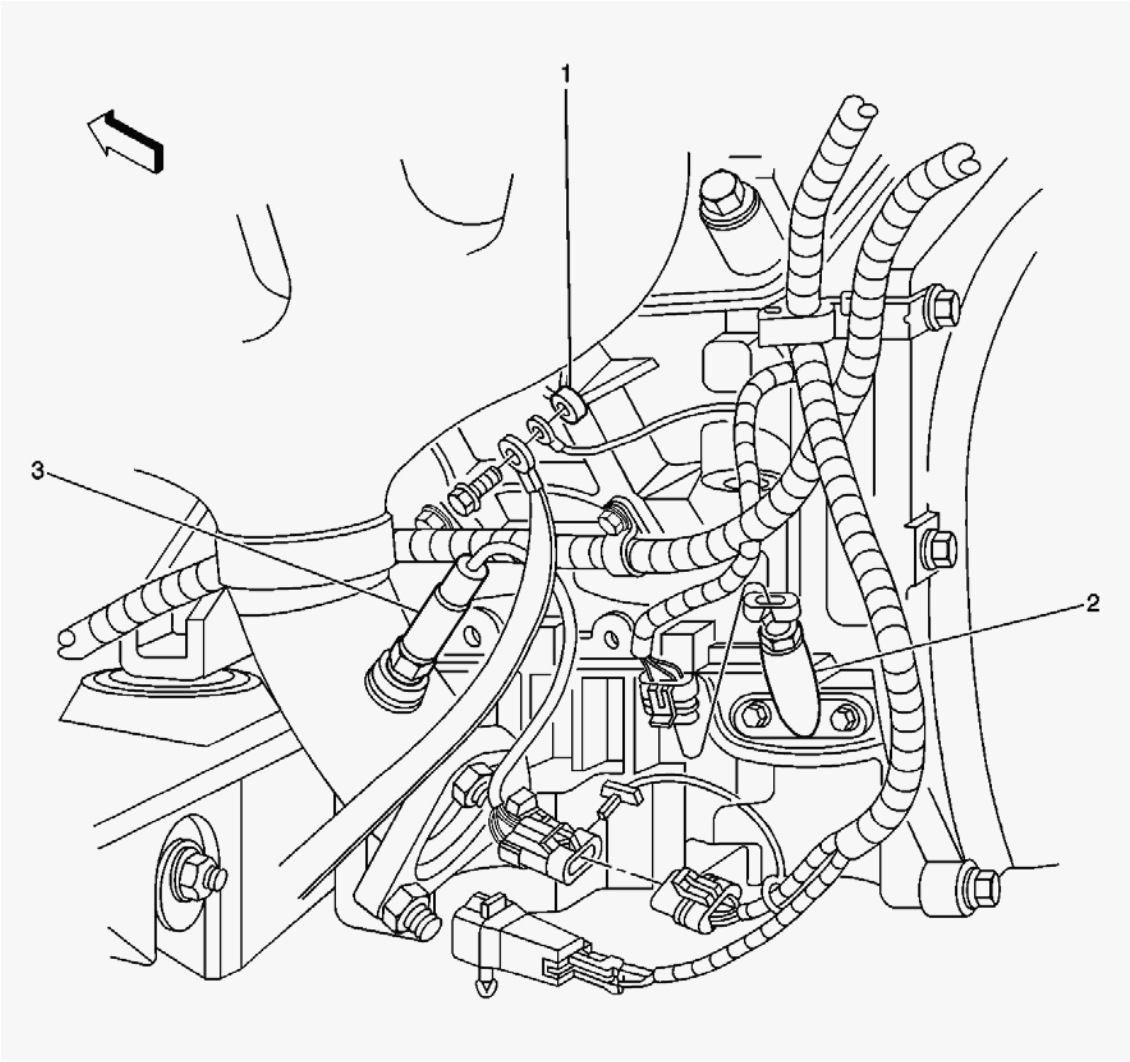

Fig. 35: Lower Side Of Engine Component View - Left
Courtesy of GENERAL MOTORS CORP.

Callouts For Fig. 35

Callout	Component Name
1	G105
2	Engine Oil Temperature (EOT) Sensor
3	Heated Oxygen Sensor (HO2S) Bank 1 Sensor 1

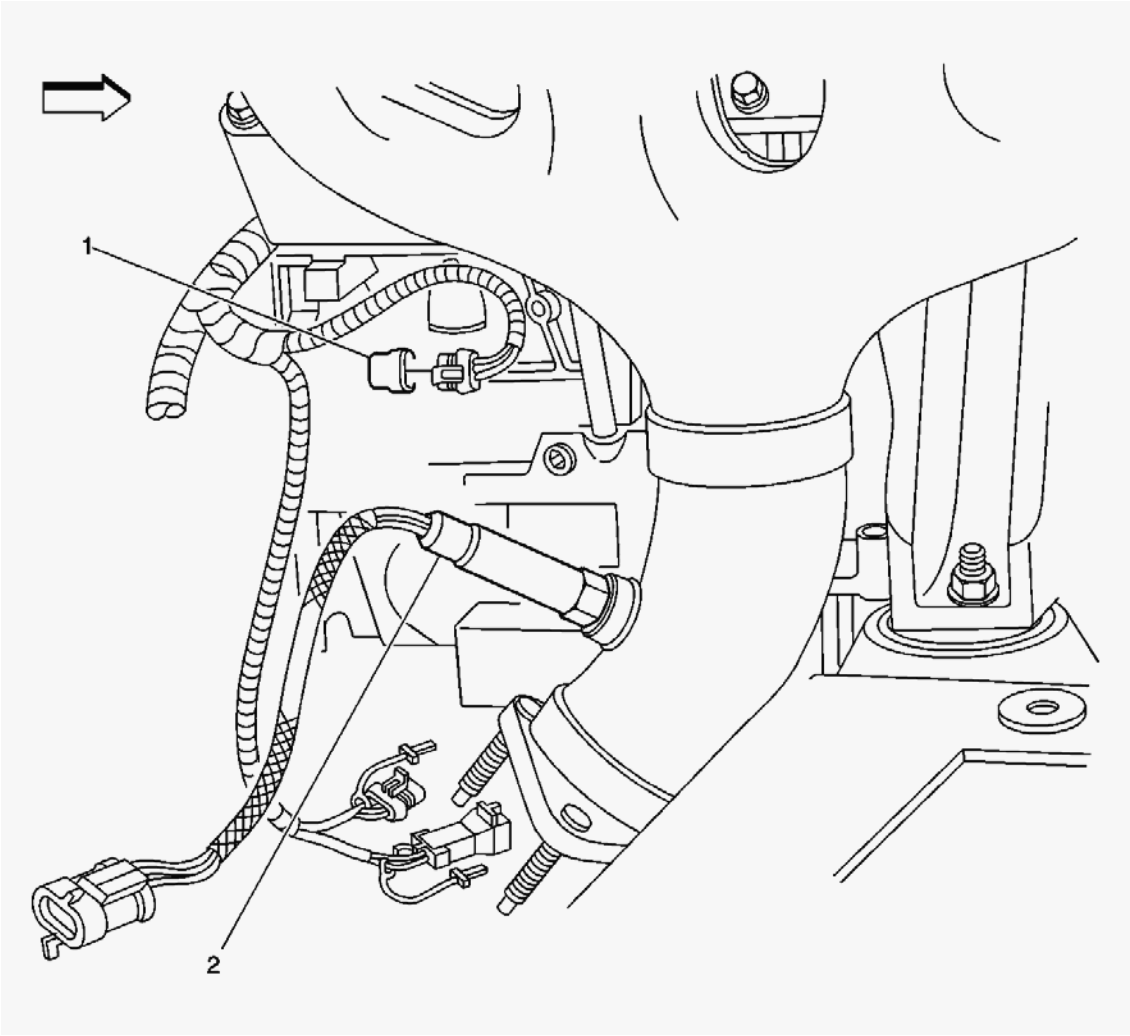

Fig. 36: Lower Side Of Engine Component View - Right
Courtesy of GENERAL MOTORS CORP.

Callouts For Fig. 36

Callout	Component Name
1	Crankshaft Position (CKP) Sensor
2	Heated Oxygen Sensor (HO2S) Bank 2 Sensor 1

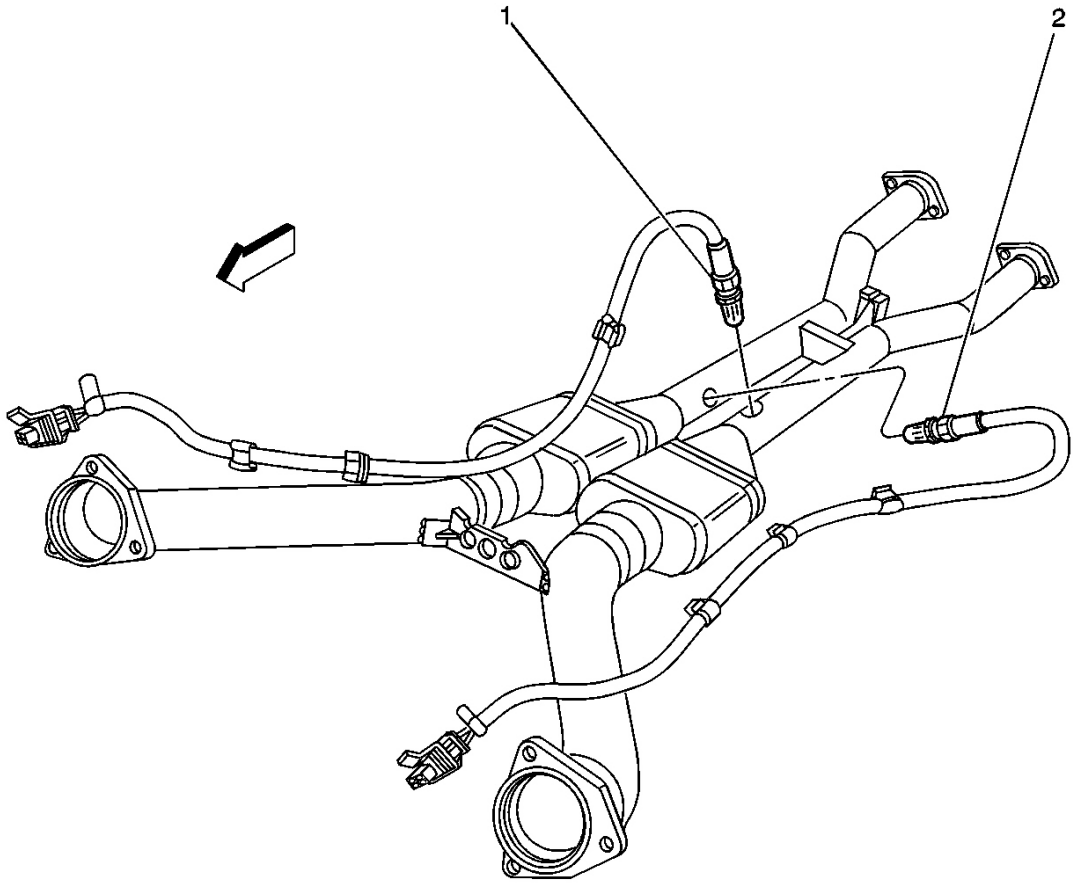

Fig. 37: Oxygen Sensors Component View - Rear
Courtesy of GENERAL MOTORS CORP.

Callouts For Fig. 37

Callout	Component Name
1	Heated Oxygen Sensor (HO2S) Bank 1 Sensor 2
2	Heated Oxygen Sensor (HO2S) Bank 2 Sensor 2

POWERTRAIN CONTROL MODULE (PCM) CONNECTOR END VIEWS

PCM Connector Terminal Identification C1

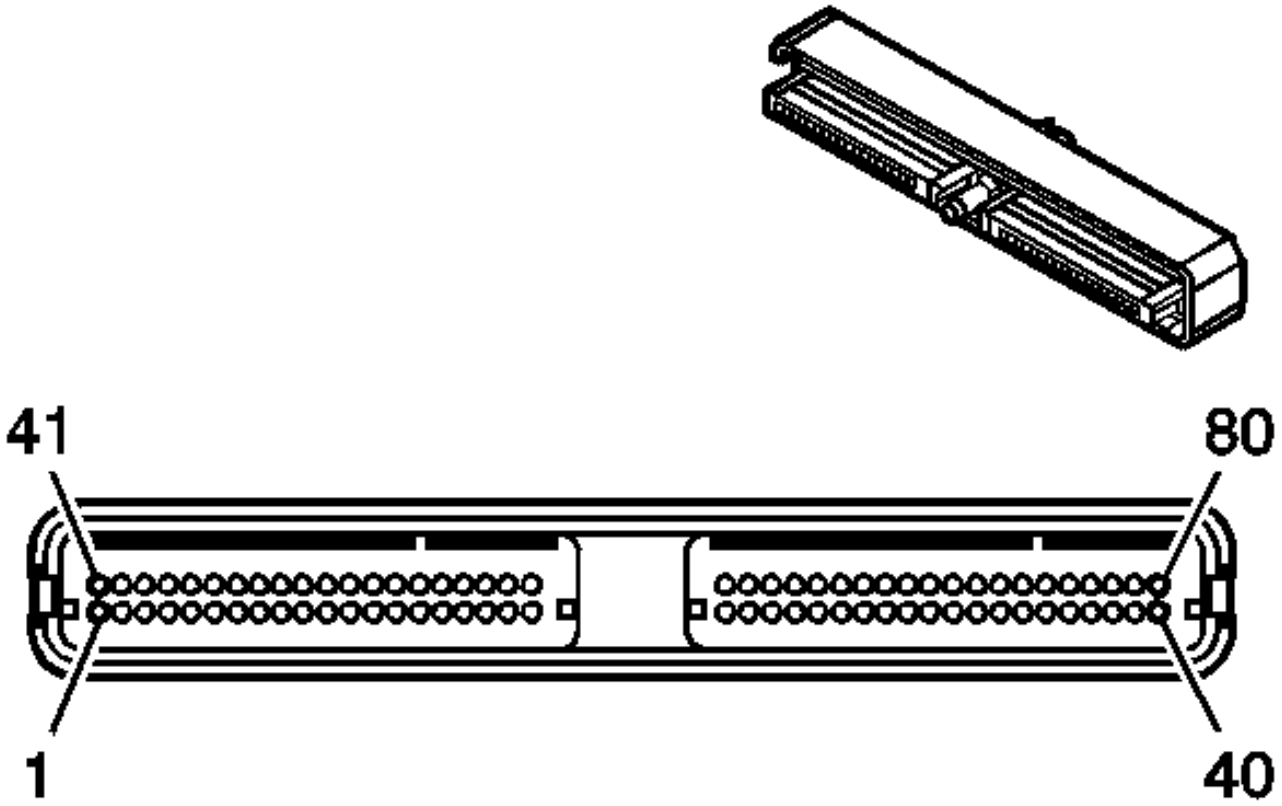

Connector Part Information		• **12191489** • **80-Way F Micro-Pack 100W Series Sealed (NAT) (TPA-BLU)**	
Pin	**Wire Color**	**Circuit No.**	**Function**
1	BLK/WHT	451	Ground
2	LT GRN	1867	12-Volt Reference
3	PNK/BLK	1746	Fuel Injector 3 Control
4	LT GRN/BLK	1745	Fuel Injector 2 Control
5-6	-	-	Not Used
7	GRY	596	5-Volt Reference
8-10	-	-	Not Used
11	LT BLU	1876	Knock Sensor 2 Signal
12	DK BLU/WHT	1869	Crankshaft Position (CKP) Sensor Signal

13	ORN/BLK	463	Requested Torque Signal
14	TAN	800	Throttle Actuator Control Serial Data
15	ORN/BLK	1061	Throttle Actuator Control Serial Data
16	-	-	Not Used
17	DK BLU	1225	Transmission Fluid Pressure Switch Signal B
18	RED	1226	Transmission Fluid Pressure Switch Signal C
19	PNK	239	Ignition 1 Voltage
20	ORN	340	Battery Positive Voltage
21	YEL/BLK	1868	Low Reference
22	-	-	Not Used
23	GRY	720	Low Reference
24	BLK/WHT	451	Ground
25	TAN	1671	HO2S Low Signal Bank 2 Sensor 2
26	TAN	1667	HO2S Low Signal Bank 2 Sensor 1
27	BLK/WHT	451	Ground
28	TAN/WHT	1669	HO2S Low Signal Bank 1 Sensor 2
29	TAN/WHT	1653	HO2S Low Signal Bank 1 Sensor 1
30-31	-	-	Not Used
32	BLK/WHT	771	Transmission Range Switch Signal A
33	PPL	420	TCC Brake Switch Signal
34	WHT	776	Transmission Range Switch Signal P
35	GRY	48	CPP Switch Signal
36	BLK	1744	Fuel Injector 1 Control
37	YEL/BLK	846	Fuel Injector 6 Control
38	PNK/WHT	1101	Damping Lift/Dive Signal
39	-	-	Not Used
40	BLK/WHT	451	Ground
41	-	-	Not Used
42	DK GRN	335	Low Speed Cooling Fan Relay Control
43	RED/BLK	877	Fuel Injector 7 Control
44	LT BLU/BLK	844	Fuel Injector 4 Control
45	GRY	474	5-Volt Reference
46	GRY	598	5-Volt Reference
47	-	-	Not Used
48	GRY	416	5-Volt Reference
49-50	-	-	Not Used
51	DK BLU	496	Knock Sensor 1 Signal
52	-	-	Not Used
53	ORN/BLK	1057	Low Reference
54	ORN/BLK	469	Low Reference
55-56	-	-	Not Used

57	ORN	340	Battery Positive Voltage
58	DK GRN	1049	PCM Class 2 Serial Data
59	-	-	Not Used
60	BLK	407	Low Reference
61	PNK/BLK	632	Low Reference
62	GRY	847	Extended Travel Brake Switch Signal
63	BLK	452	Low Reference
64	BLK/WHT	451	Ground
65	PPL	1670	HO2S High Signal Bank 2 Sensor 2
66	PPL	1666	HO2S High Signal Bank 2 Sensor 1
67	BLK/WHT	451	Ground
68	PPL/WHT	1668	HO2S High Signal Bank 1 Sensor 2
69	PPL/WHT	1665	HO2S High Signal Bank 1 Sensor 1
70	BRN	1174	Oil Level Switch Signal
71	-	-	Not Used
72	YEL	772	Transmission Range Switch Signal B
73	BRN/WHT	633	Camshaft Position (CMP) Sensor Signal
74	YEL	410	Engine Coolant Temperature (ECT) Sensor Signal
75	-	-	Not Used
76	BLK/WHT	845	Fuel Injector 5 Control
77	DK BLU/WHT	878	Fuel Injector 8 Control
78	-	-	Not Used
79	GRY	587	Skip Shift Solenoid Control
79	WHT	687	3-2 Shift Solenoid Valve Control
80	BRN	718	Low Reference

PCM Connector Terminal Identification C2

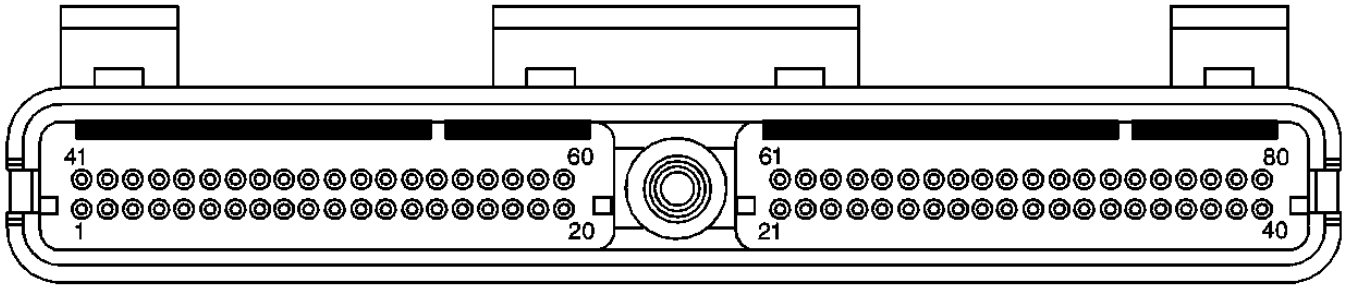

Connector Part Information	• **12191488** • **80-Way F Micro-Pack 100W Series Sealed (NAT) (TPA-GRN)**

Pin	Wire Color	Circuit No.	Function
1	BLK/WHT	451	Ground
2	BRN	418	TCC PWM Solenoid Valve Control
3	-	-	Not Used
4	PPL	421	AIR Solenoid Control
5	TAN/BLK	464	Delivered Torque Signal
6	RED/BLK	1228	PC Solenoid valve High Control
7	-	-	Not Used
8	LT BLU/WHT	1229	PC Solenoid Valve Low Control
9	DK GRN/WHT	465	Fuel Pump Relay Control
10	WHT	121	Engine Speed Signal
11-13	-	-	Not Used
14	RED/BLK	380	A/C Refrigerant Pressure Sensor Signal
15	RED	225	Generator Turn On Signal
16	-	-	Not Used
17	DK GRN/WHT	762	A/C Request Signal (C60 only)
18	DK GRN	59	A/C Compressor Clutch Supply Voltage
19	-	-	Not Used
20	PPL	401	Signal Low - Front
21	YEL	400	Signal High - Front
22-24	-	-	Not Used
25	TAN	472	IAT Sensor Signal
26	PPL	2121	IC 1 Control
27	RED	2127	IC 7 Control
28	LT BLU/WHT	2126	IC 6 Control
29	DK GRN/WHT	2124	IC 4 Control
30	-	-	Not Used
31	YEL	492	MAF Sensor Signal
32	LT GRN	432	MAP Sensor Signal
33	DK BLU	473	High Speed Cooling Fan Relay Control
34	DK GRN/WHT	428	EVAP Canister Purge Solenoid Control
35	-	-	Not Used
36	BRN	436	AIR Pump Relay Control
37-38	-	-	Not Used
39	RED	631	12-Volt Reference
40	BLK/WHT	451	Ground
41	-	-	Not Used
42	TAN/BLK	422	TCC Solenoid Valve Control
43	DK GRN/WHT	459	A/C Compressor Clutch Relay Control
44	LT GRN	1652	Reverse Lockout Solenoid Control
45	WHT	1310	EVAP Canister Vent Solenoid Control

46	BRN/WHT	419	Malfunction Indicator Lamp (MIL) Control
47	WHT	375	Skip Shift Indicator Control (MM6)
47	YEL/BLK	1223	2-3 Shift Solenoid Valve Control (M30)
48	LT GRN	1222	1-2 Shift Solenoid Valve Control
49	-	-	Not Used
50	DK GRN/WHT	817	Vehicle Speed Signal
51	YEL/BLK	1227	TFT Sensor Signal
52	BRN	2391	HO2S Heater Low Control
53	RED/WHT	3223	HO2S Heater Low Control
54	DK BLU	1936	Fuel Level Sensor Signal
55-56	-	-	Not Used
57	PPL	719	Low Reference
58	TAN/WHT	331	Oil Pressure Sensor Signal
59	-	-	Not Used
60	BRN	2129	Low Reference
61	BRN/WHT	2130	Low Reference
62	GRY	773	Transmission Range Switch Signal C
63	PNK	1224	Transmission Fluid Pressure Switch Signal A
64	DK GRN	890	Fuel Tank Pressure Sensor Signal
65	-	-	Not Used
66	PPL/WHT	2128	IC 8 Control
67	RED/WHT	2122	IC 2 Control
68	DK GRN	2125	IC 5 Control
69	LT BLU	2123	IC 3 Control
70-71	-	-	Not Used
72	BLK/WHT	3113	HO2S Heater Low Control
73	LT BLU	1937	Fuel Level Sensor Signal (Secondary)
74	LT GRN	3212	HO2S Heater Low Control
75	GRY	23	Generator Field Duty Cycle Signal
76-79	-	-	Not Used
80	BLK	407	Low Reference

THROTTLE ACTUATOR CONTROL (TAC) MODULE CONNECTOR END VIEWS

Throttle Actuator Control Terminal Identification (TAC) Module C1

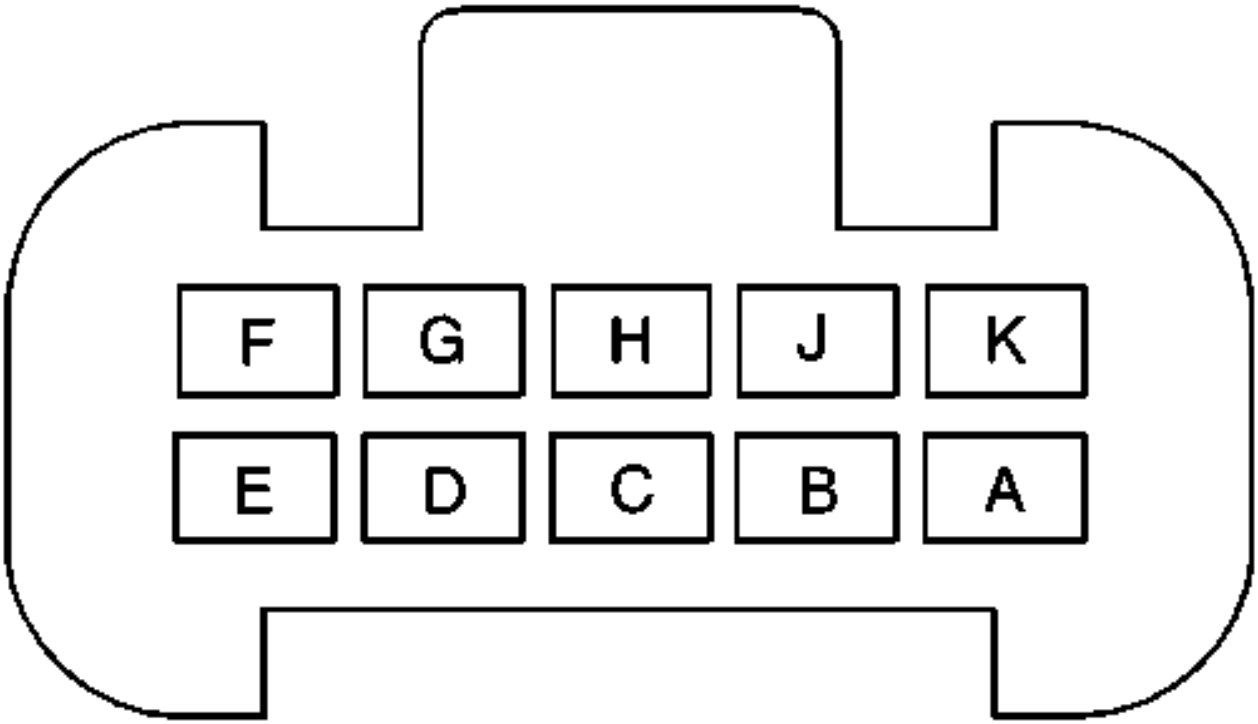

Connector Part Information		• 12186688 • 10-Way F Micro-Pack 100 Series (BLK)	
Pin	**Wire Color**	**Circuit No.**	**Function**
A	GRY	1273	Low Reference
B	PPL	1272	Low Reference
C	LT BLU	1162	APP Sensor 2 Signal
D	TAN	1274	5-Volt Reference
E	YEL/BLK	1275	5-Volt Reference
F	DK BLU	1161	APP Sensor 1 Signal
G	LT BLU	1276	5-Volt Reference
H	-	-	Not Used
J	BRN	1271	Low Reference
K	DK GRN	1163	APP Sensor 3 Signal

Throttle Actuator Control Terminal Identification (TAC) Module C2

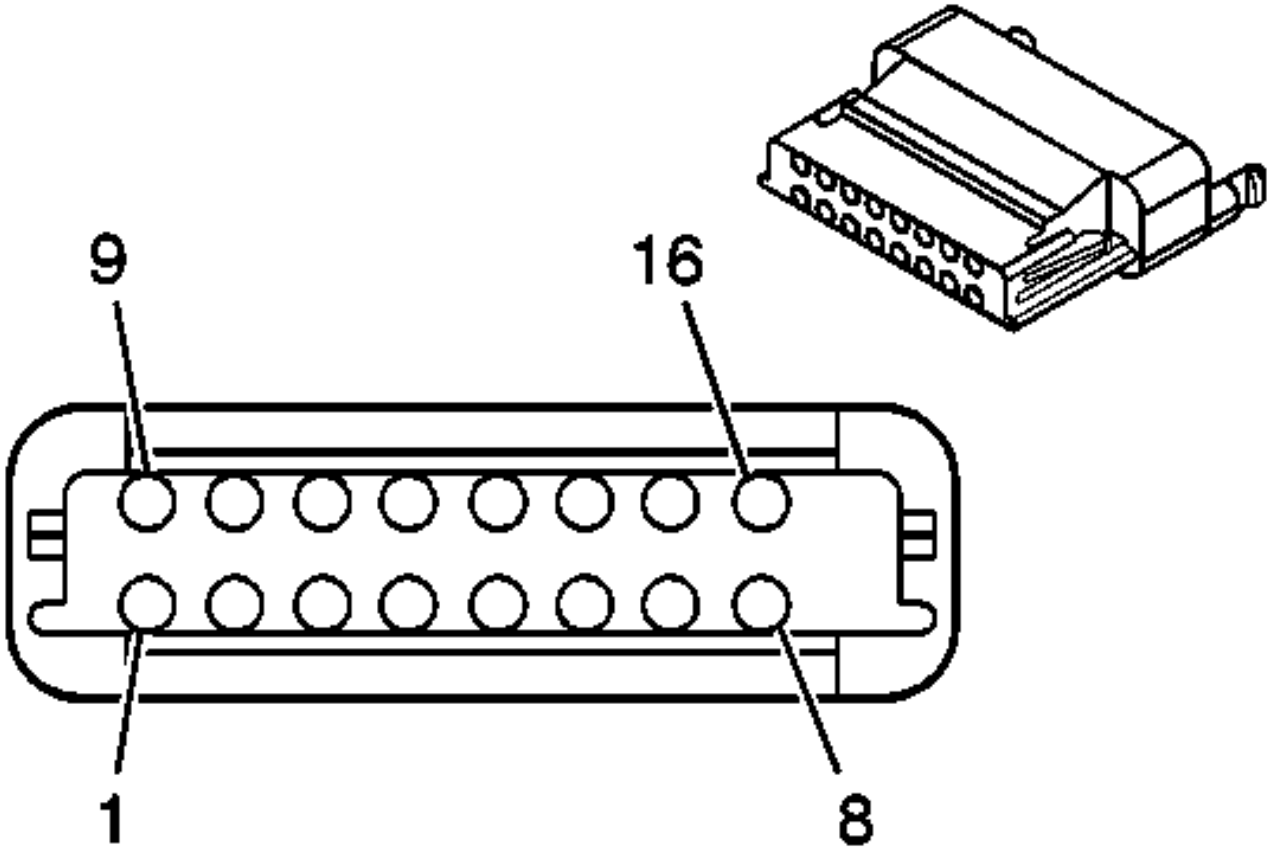

Connector Part Information		• 12191065 • 16-Way F Micro-Pack 100 Series (MD GRY)	
Pin	**Wire Color**	**Circuit No.**	**Function**
1	DK BLU	417	TP Sensor 1 Signal
2	DK GRN	485	5-Volt Reference
3	PPL	486	Low Reference
4	DK BLU	84	Cruise Control Set/Coast Switch Signal
5	GRY/BLK	87	Cruise Control Resume/Accel Switch Signal
6	LT BLU	20	Stop Lamp Supply Voltage
7	PNK	539	Ignition 1 Voltage

8	BRN	582	TAC Motor Control - 2
9	YEL/BLK	487	5-Volt Reference
10	WHT	484	Low Reference
11	PNK	427	TP Sensor 2 Signal
12	TAN	800	UART Serial Data Primary
13	ORN/BLK	1061	UART Serial Data Secondary
14	GRY	397	Cruise Control On Signal
15	BLK/WHT	451	Ground
16	YEL	581	TAC Motor Control - 1

ENGINE CONTROLS CONNECTOR END VIEWS

Accelerator Pedal Position Terminal Identification (APP) Sensor

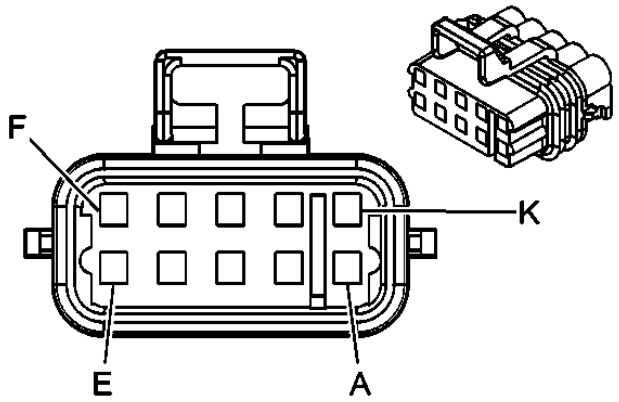

Connector Part Information		• **15318071** • **10-Way F Metri-Pack 150 Series (GRY)**	
Pin	**Wire Color**	**Circuit No.**	**Function**
A	GRY	1273	Low Reference
B	PPL	1272	Low Reference
C	LT BLU	1162	APP Sensor 2 Signal
D	TAN	1274	5-Volt Reference
E	YEL/BLK	1275	5-Volt Reference
F	DK BLU	1161	APP Sensor 1 Signal
G	LT BLU	1276	5-Volt Reference
H	-	-	Not Used
J	BRN	1271	Low Reference
K	DK GRN	1163	APP Sensor 3 Signal

Camshaft Position Terminal Identification (CMP) Sensor

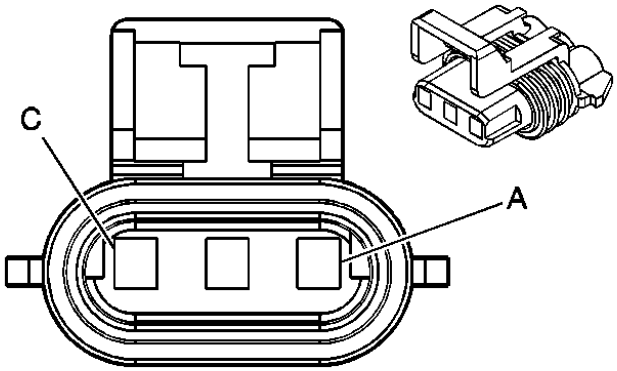

Connector Part Information		• **12186687** • **3-Way F Metri-Pack 150 Series (BLK)**	
Pin	**Wire Color**	**Circuit No.**	**Function**
A	BRN/WHT	633	CMP Sensor Signal
B	PNK/BLK	632	Low Reference
C	RED	631	12-Volt Reference

Crankshaft Position Terminal Identification (CKP) Sensor

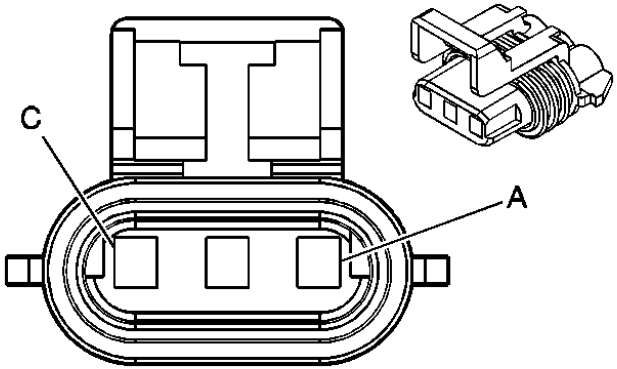

Connector Part Information		• **12186687** • **3-Way F Metri-Pack 150 Series (BLK)**	
Pin	**Wire Color**	**Circuit No.**	**Function**
A	DK BLU/WHT	1869	CKP Sensor Signal
B	YEL/BLK	1868	Low Reference
C	LT GRN	1867	12-Volt Reference

Engine Coolant Temperature Terminal Identification (ECT) Sensor

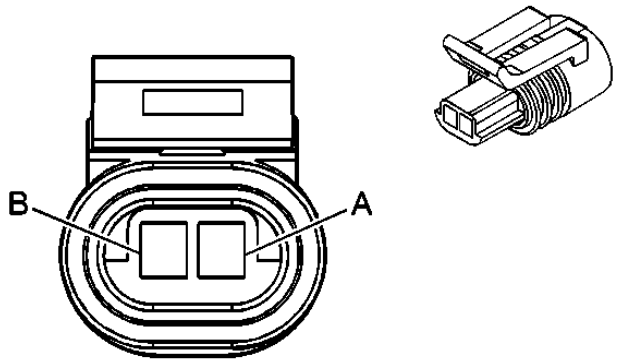

Connector Part Information		• 12162192 • 2-Way F Metri-Pack 150.2 Series (BLK)	
Pin	**Wire Color**	**Circuit No.**	**Function**
A	BRN	718	Low Reference
B	YEL	410	ECT Sensor Signal

Evaporative Emission (EVAP) Canister Purge Solenoid Terminal Identification

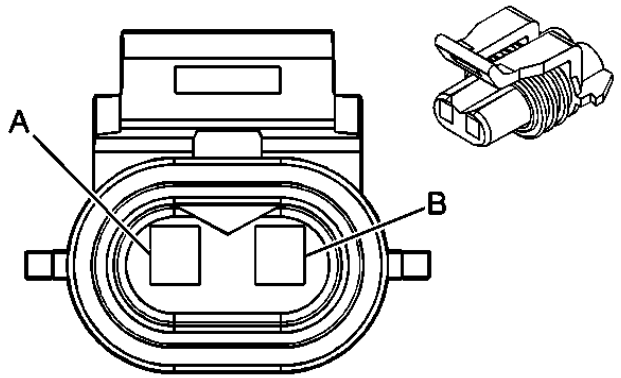

Connector Part Information		• 12052637 • 2-Way F Metri-Pack 150 Series (RED)	
Pin	**Wire Color**	**Circuit No.**	**Function**
A	PNK	339	Ignition (Hot W/IGN Relay Energized)
B	DK GRN/WHT	428	EVAP Canister Purge Solenoid Control

Evaporative Emission (EVAP) Canister Vent Solenoid Terminal Identification

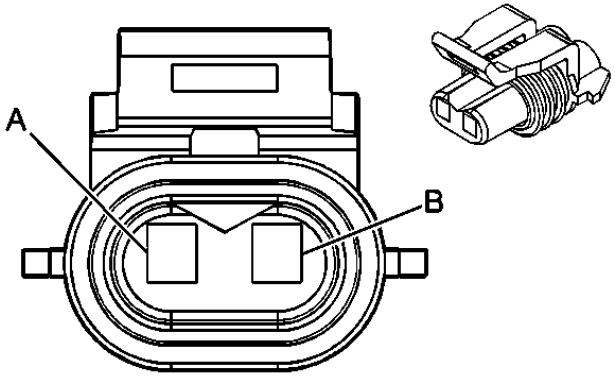

Connector Part Information		• 12052637 • 2-Way F Metri-Pack 150 Series (RED)	
Pin	**Wire Color**	**Circuit No.**	**Function**
A	PNK	339	Battery Positive Feed
B	WHT	1310	EVAP Canister Vent Solenoid Control

Fuel Injector Terminal Identification 1

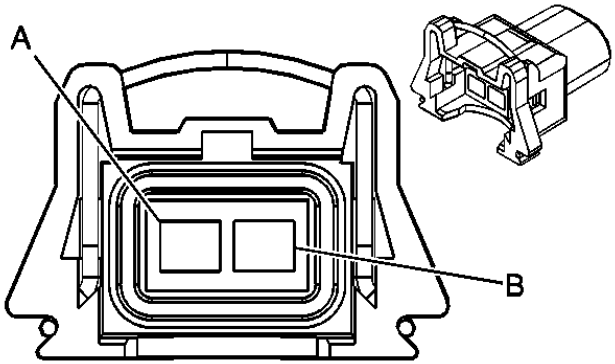

Connector Part Information		• 12129140 • 2-Way F Metri-Pack 280.1 Series (BLK)	
Pin	**Wire Color**	**Circuit No.**	**Function**
A	PNK	639	Ignition 1 Voltage
B	BLK	1744	Fuel Injector #1 Control

Fuel Injector Terminal Identification 2

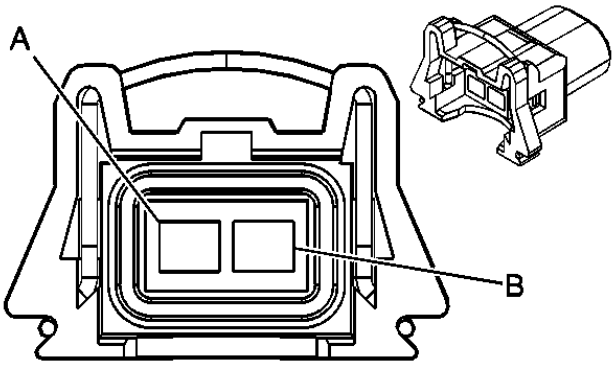

Connector Part Information		• 12129140 • 2-Way F Metri-Pack 280.1 Series (BLK)	
Pin	**Wire Color**	**Circuit No.**	**Function**
A	PNK	839	Ignition 1 Voltage
B	LT GRN/BLK	1745	Fuel Injector #2 Control

Fuel Injector Terminal Identification 3

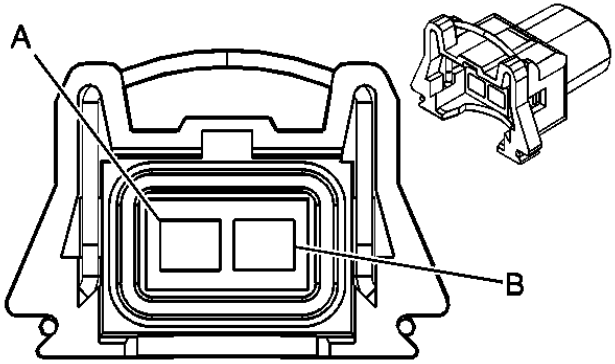

Connector Part Information		• 12129140 • 2-Way F Metri-Pack 280.1 Series (BLK)	
Pin	**Wire Color**	**Circuit No.**	**Function**
A	PNK	639	Ignition 1 Voltage
B	PNK/BLK	1746	Fuel Injector #3 Control

Fuel Injector Terminal Identification 4

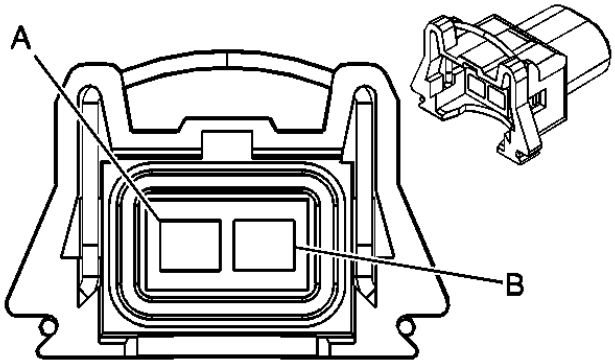

Connector Part Information		• **12129140** • **2-Way F Metri-Pack 280.1 Series (BLK)**	
Pin	**Wire Color**	**Circuit No.**	**Function**
A	PNK	839	Ignition 1 Voltage
B	LT BLU/BLK	844	Fuel Injector #4 Control

Fuel Injector Terminal Identification 5

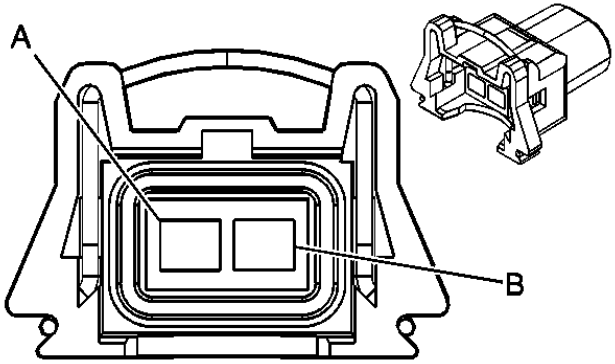

Connector Part Information		• **12129140** • **2-Way F Metri-Pack 280.1 Series (BLK)**	
Pin	**Wire Color**	**Circuit No.**	**Function**
A	PNK	639	Ignition 1 Voltage
B	BLK/WHT	845	Fuel Injector #5 Control

Fuel Injector Terminal Identification 6

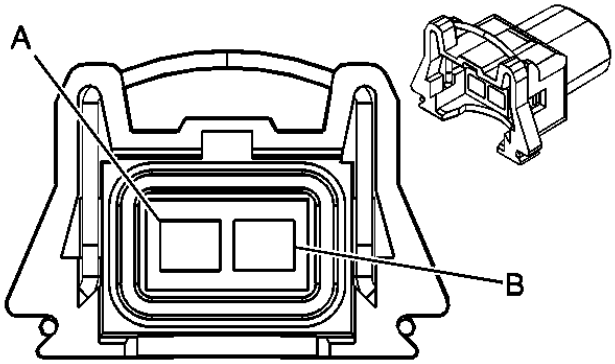

Connector Part Information		• 12129140 • 2-Way F Metri-Pack 280.1 Series (BLK)	
Pin	**Wire Color**	**Circuit No.**	**Function**
A	PNK	839	Ignition 1 Voltage
B	YEL/BLK	846	Fuel Injector #6 Control

Fuel Injector Terminal Identification 7

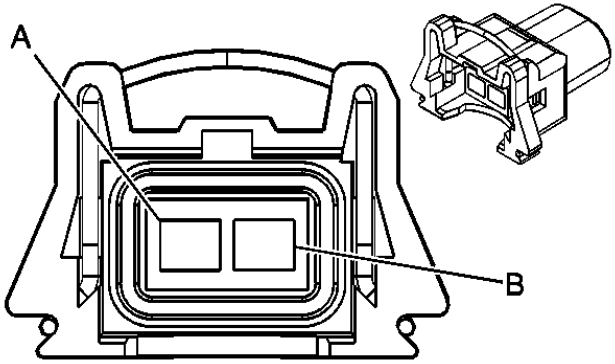

Connector Part Information		• 12129140 • 2-Way F Metri-Pack 280.1 Series (BLK)	
Pin	**Wire Color**	**Circuit No.**	**Function**
A	PNK	639	Ignition 1 Voltage
B	RED/BLK	877	Fuel Injector #7 Control

Fuel Injector Terminal Identification 8

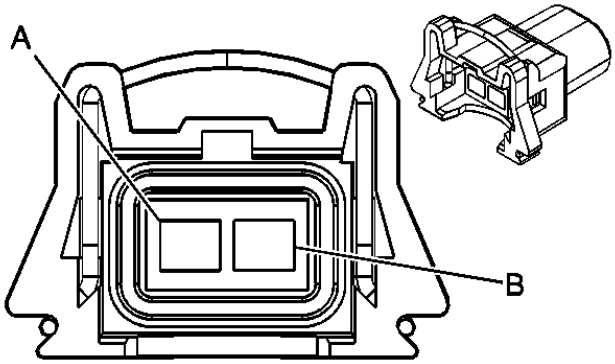

Connector Part Information		• **12129140** • **2-Way F Metri-Pack 280.1 Series (BLK)**	
Pin	**Wire Color**	**Circuit No.**	**Function**
A	PNK	839	Ignition 1 Voltage
B	DK BLU/WHT	878	Fuel Injector #8 Control

Fuel Pump And Sender Assembly Terminal Identification

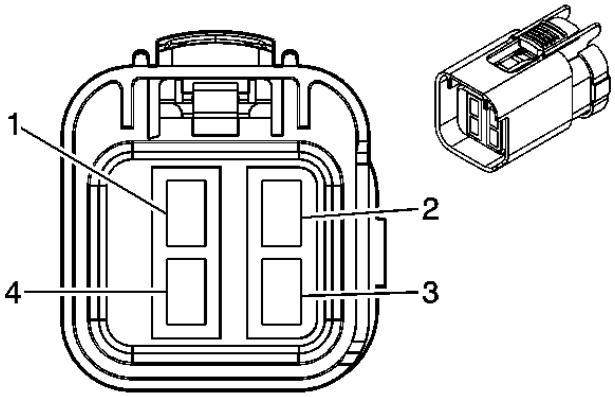

Connector Part Information		• **15324862** • **4-Way F Metri-Pack 150.2 Series (BLK)**	
Pin	**Wire Color**	**Circuit No.**	**Function**
1	DK BLU	1936	Fuel Level Sensor Signal - Secondary
2	GRY	120	Fuel Pump Supply Voltage
3	BLK	9531	Ground
4	BLK	808	Low Reference

Fuel Tank Pressure Terminal Identification (FTP) Sensor

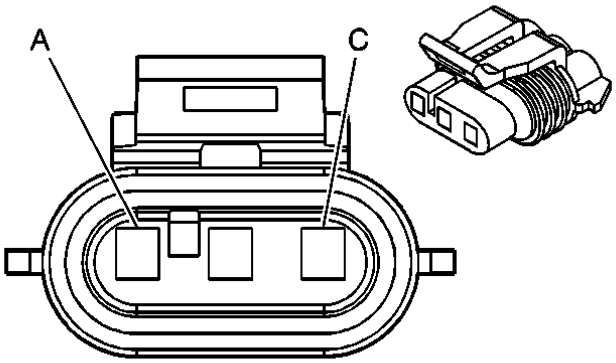

Connector Part Information		• 12059595 • 3-Way F Metri-Pack 150 Series (BLK)	
Pin	**Wire Color**	**Circuit No.**	**Function**
A	BLK	808	Low Reference
B	DK GRN	890	Fuel Tank Pressure Sensor Signal
C	BRN/ LT GRN	2709	5-Volt Reference Voltage

Heated Oxygen Sensor Terminal Identification (HO2S) Bank 1 Sensor 1

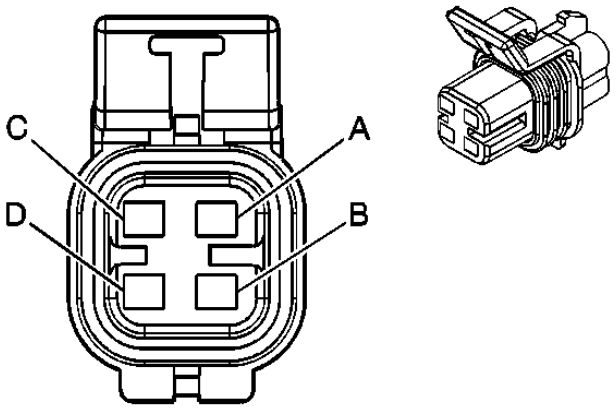

Connector Part Information		• 12176897 • 4-Way F Metri-Pack 150 Series (GRY)	
Pin	**Wire Color**	**Circuit No.**	**Function**
A	TAN/WHT	1653	HO2S Low Signal Bank 1 Sensor 1
B	PPL/WHT	1665	HO2S High Signal Bank 1 Sensor 1

C	BLK/WHT	3113	HO2S Heater Low Control
D	BRN	241	Ignition 3 Voltage

Heated Oxygen Sensor Terminal Identification (HO2S) Bank 1 Sensor 2

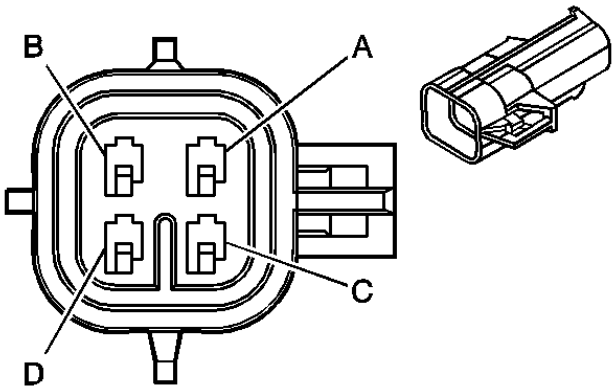

Connector Part Information		• **15326423** • **4-Way M Metri-Pack 150 Series (BLK)**	
Pin	**Wire Color**	**Circuit No.**	**Function**
A	TAN/WHT	1669	HO2S Low Signal Bank 1 Sensor 2
B	PPL/WHT	1668	HO2S High Signal Bank 1 Sensor 2
C	BRN	2391	HO2S Heater Low Control
D	BRN	241	Ignition 3 Voltage

Heated Oxygen Sensor Terminal Identification (HO2S) Bank 2 Sensor 1

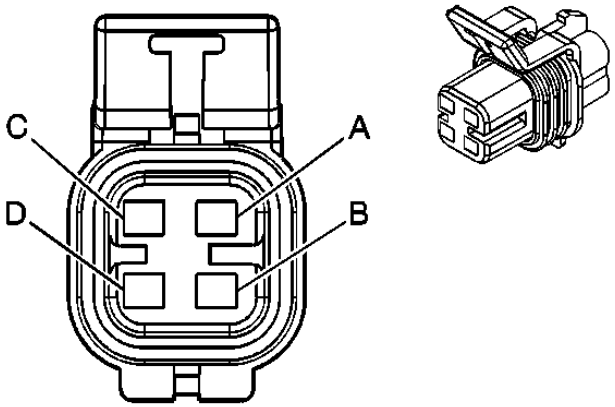

Connector Part Information		• 12176897 • 4-Way F Metri-Pack 150 Series (GRY)	
Pin	**Wire Color**	**Circuit No.**	**Function**
A	TAN	1667	HO2S Low Signal Bank 2 Sensor 1
B	PPL	1666	HO2S High Signal Bank 2 Sensor 1
C	LT GRN	3212	HO2S Heater Low Control
D	BRN	241	Ignition 3 Voltage

Heated Oxygen Sensor Terminal Identification (HO2S) Bank 2 Sensor 2

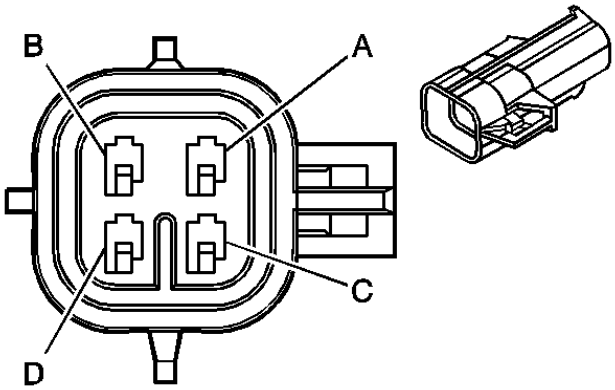

Connector Part Information		• 15326423 • 4-Way M Metri-Pack 150 Series (BLK)	
Pin	**Wire Color**	**Circuit No.**	**Function**
A	TAN	1671	HO2S Low Signal Bank 2 Sensor 2
B	PPL	1670	HO2S High Signal Bank 2 Sensor 2
C	RED/WHT	3223	HO2S Heater Low Control
D	BRN	241	Ignition 3 Voltage

Ignition Coil/Module Terminal Identification 1

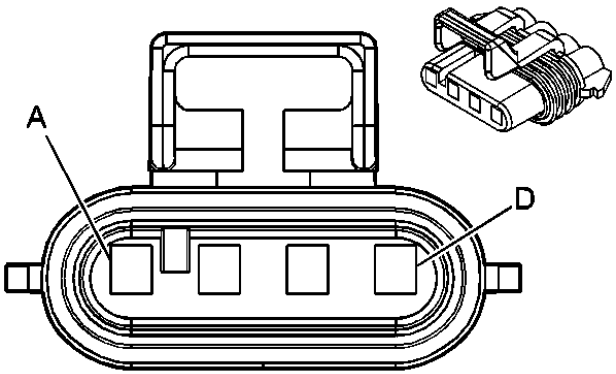

Connector Part Information		• **12162144** • **4-Way F Metri-Pack 150 Series (BLK)**	
Pin	**Wire Color**	**Circuit No.**	**Function**
A	BLK	151	Ground
B	BRN	2129	Low Reference
C	PPL	2121	IC 1 Control
D	PNK	39	Ignition 1 Voltage

Ignition Coil/Module Terminal Identification 2

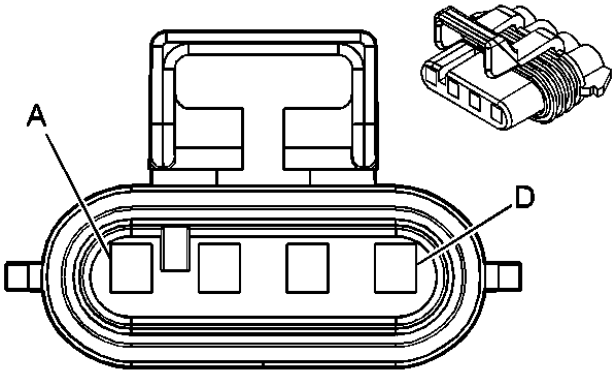

Connector Part Information		• **12162144** • **4-Way F Metri-Pack 150 Series (BLK)**	
Pin	**Wire Color**	**Circuit No.**	**Function**
A	BLK	151	Ground
B	BRN	2129	Low Reference
C	RED	2127	IC 2 Control

D	PNK	39	Ignition 1 Voltage

Ignition Coil/Module Terminal Identification 3

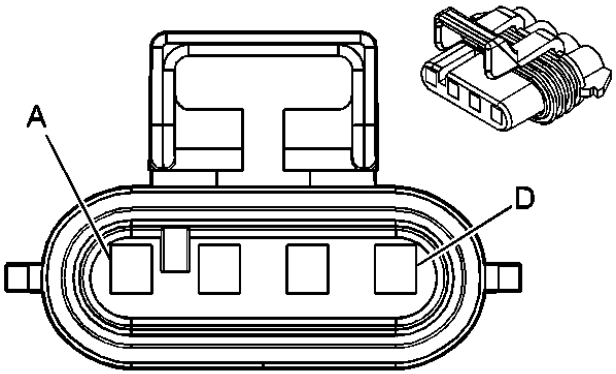

Connector Part Information		• **12162144** • **4-Way F Metri-Pack 150 Series (BLK)**	
Pin	**Wire Color**	**Circuit No.**	**Function**
A	BLK	151	Ground
B	BRN	2129	Low Reference
C	LT BLU	2123	IC 3 Control
D	PNK	39	Ignition 1 Voltage

Ignition Coil/Module Terminal Identification 4

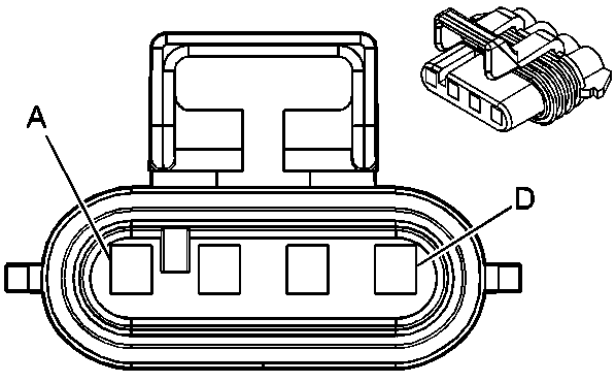

Connector Part Information		• **12162144** • **4-Way F Metri-Pack 150 Series (BLK)**	
Pin	**Wire Color**	**Circuit No.**	**Function**

A	BLK	151	Ground
B	BRN	2129	Low Reference
C	DK GRN	2125	IC 4 Control
D	PNK	39	Ignition 1 Voltage

Ignition Coil/Module Terminal Identification 5

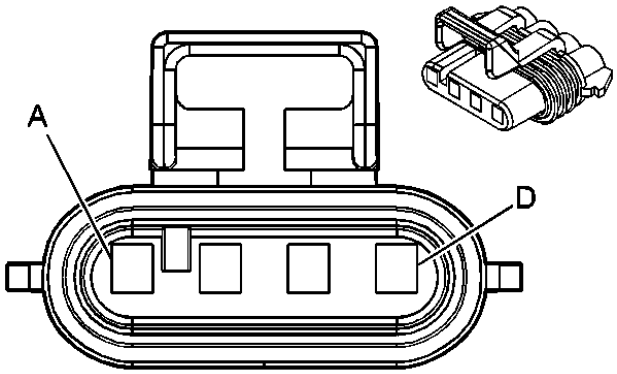

Connector Part Information		• **12162144** • **4-Way F Metri-Pack 150 Series (BLK)**	
Pin	**Wire Color**	**Circuit No.**	**Function**
A	BLK	151	Ground
B	BRN	2129	Low Reference
C	DK GRN	2125	IC 5 Control
D	PNK	39	Ignition 1 Voltage

Ignition Coil/Module Terminal Identification 6

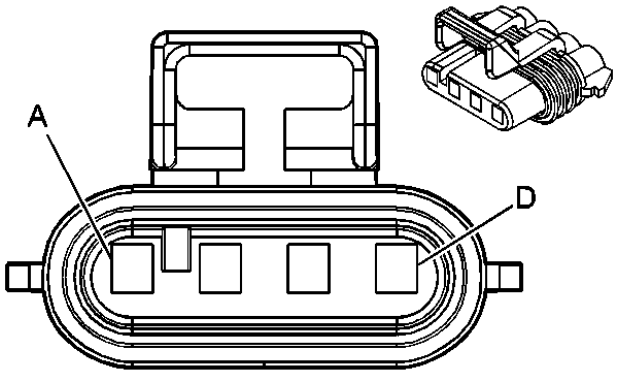

Connector Part Information		• 12162144 • 4-Way F Metri-Pack 150 Series (BLK)	
Pin	**Wire Color**	**Circuit No.**	**Function**
A	BLK	151	Ground
B	BRN	2129	Low Reference
C	LT BLU	2123	IC 6 Control
D	PNK	39	Ignition 1 Voltage

Ignition Coil/Module Terminal Identification 7

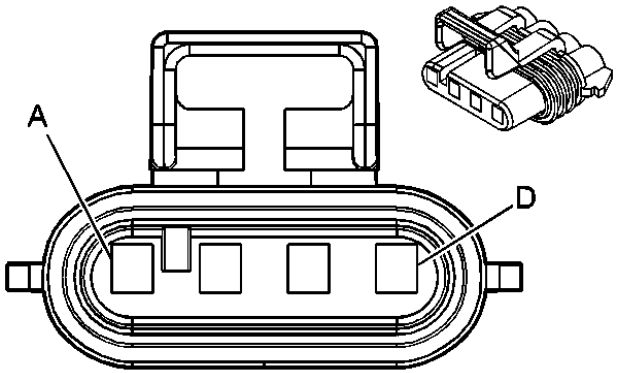

Connector Part Information		• 12162144 • 4-Way F Metri-Pack 150 Series (BLK)	
Pin	**Wire Color**	**Circuit No.**	**Function**
A	BLK	151	Ground
B	BRN	2129	Low Reference
C	RED	2127	IC 7 Control
D	PNK	39	Ignition 1 Voltage

Ignition Coil/Module Terminal Identification 8

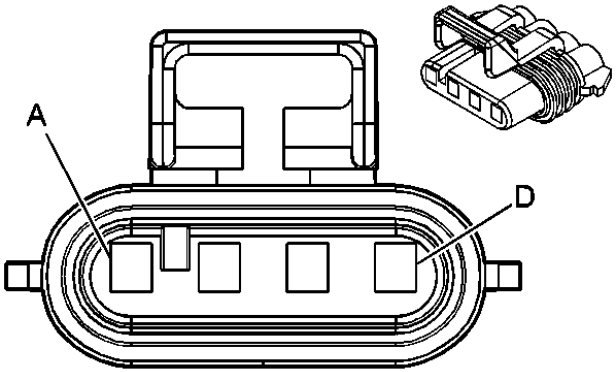

Connector Part Information		• **12162144** • **4-Way F Metri-Pack 150 Series (BLK)**	
Pin	**Wire Color**	**Circuit No.**	**Function**
A	BLK	151	Ground
B	BRN	2129	Low Reference
C	PPL	2121	IC 8 Control
D	PNK	39	Ignition 1 Voltage

Knock Sensor Terminal Identification (KS) 1

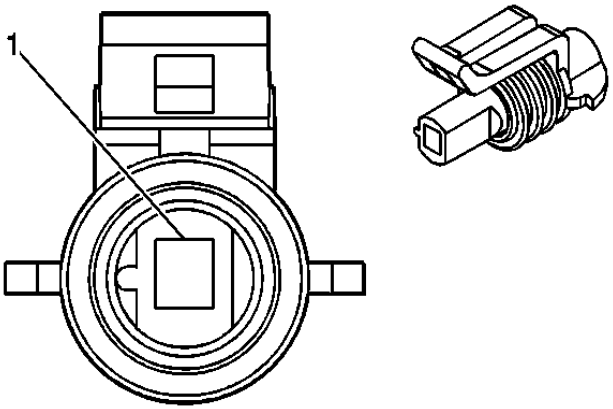

Connector Part Information		• **12176800** • **1-Way F Metri-Pack 150 Series (GRY)**	
Pin	**Wire Color**	**Circuit No.**	**Function**
1	DK BLU	496	KS 1 Signal

Knock Sensor Terminal Identification (KS) 2

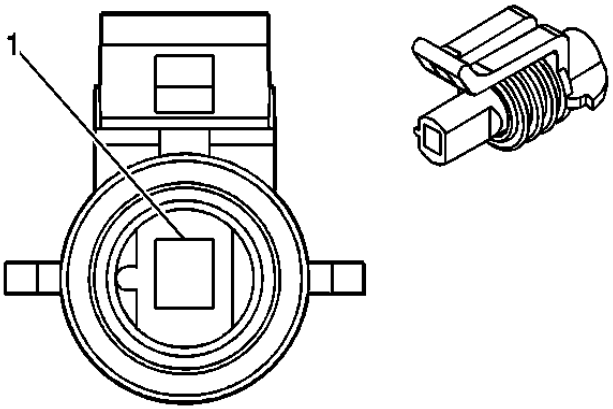

Connector Part Information		• 12176800 • 1-Way F Metri-Pack 150 Series (GRY)	
Pin	**Wire Color**	**Circuit No.**	**Function**
1	LT BLU	1876	KS 2 Signal

Manifold Absolute Pressure Terminal Identification (MAP) Sensor

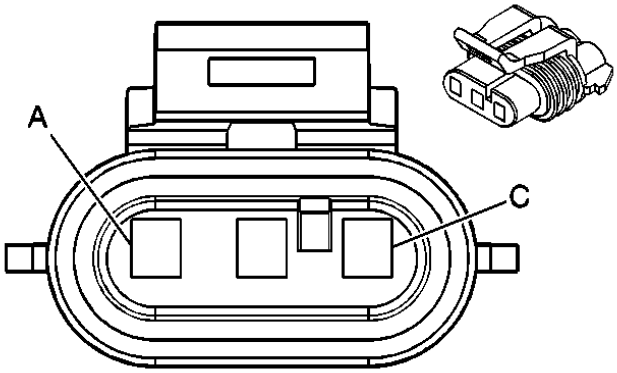

Connector Part Information		• 12129945 • 3-Way F Metri-Pack 150 Series (GRY)	
Pin	**Wire Color**	**Circuit No.**	**Function**
A	ORN/BLK	469	Low Reference
B	LT GRN	432	MAP Sensor Signal
C	GRY	416	5-Volt Reference

Mass Air Flow Terminal Identification (MAF) Sensor

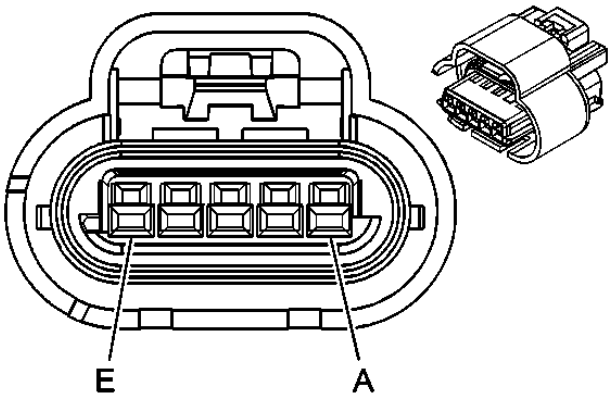

Connector Part Information		• 15305555 • 5-Way F Metri-Pack 150 Series (BLK)	
Pin	**Wire Color**	**Circuit No.**	**Function**
A	PPL	719	Low Reference
B	TAN	472	IAT Sensor Signal
C	BLK/WHT	451	Ground
D	PNK	339	Ignition 1 Voltage
E	YEL	492	Mass Air Flow (MAF) Sensor - Signal

Park/Neutral Position (PNP) Switch Terminal Identification - C1

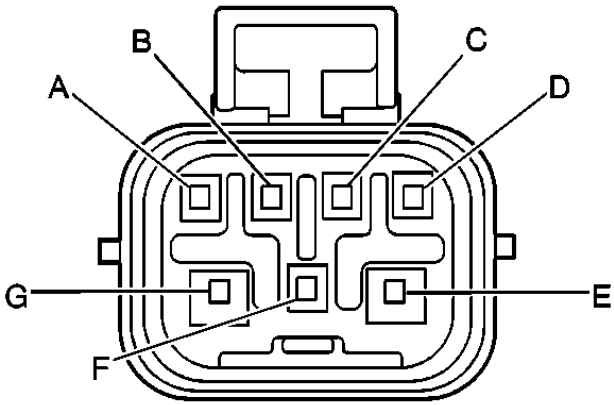

Connector Part Information		• 12129839 • 7-Way F Metri-Pack Mixed Series (GRY)	

Pin	Wire Color	Circuit No.	Function
A	-	-	Not Used
B	ORN/BLK	434	Neutral Safety Switch Signal
C	BRN	341	Ignition 3 Voltage
D	BLK/WHT	851	Ground
E	PPL	1606	Crank Voltage
F	GRY	1524	Back Up Lamp Supply Voltage
G	YEL	269	Starter Enable Relay Coil Supply Voltage

Park/Neutral Position (PNP) Switch Terminal Identification - C2

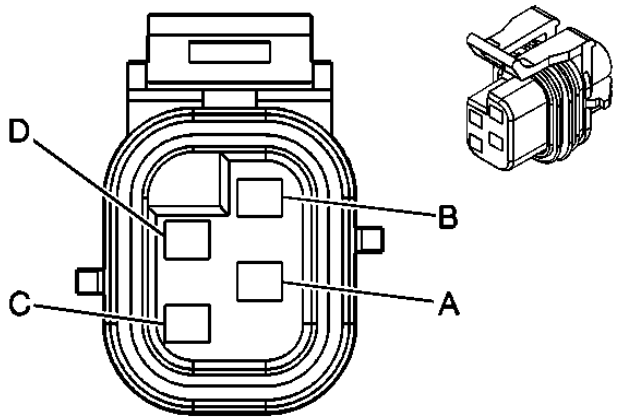

Connector Part Information		• **12191750** • **4-Way F Metri-Pack 150 Series (NAT)**	
Pin	**Wire Color**	**Circuit No.**	**Function**
A	BLK/WHT	771	Transmission Range Switch Signal A
B	GRY	773	Transmission Range Switch Signal C
C	WHT	776	Transmission Range Switch Signal P
D	YEL	772	Transmission Range Switch Signal B

Secondary Air Injection (AIR) Pump Terminal Identification

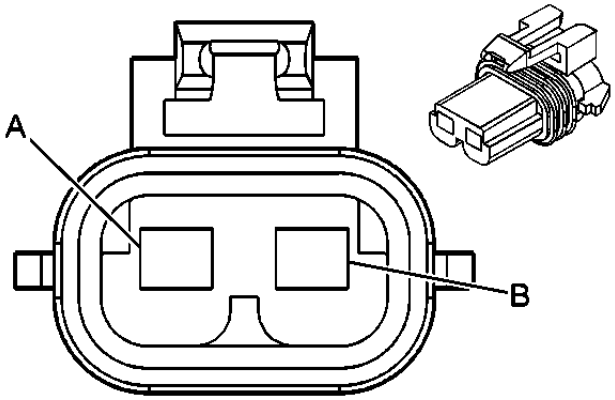

Connector Part Information		• 12191968 • 2-Way F Metri-Pack 150 Series (GRY)	
Pin	**Wire Color**	**Circuit No.**	**Function**
A	RED	78	AIR Pump Supply Voltage
B	BLK	150	Ground

Secondary Air Injection (AIR) Solenoid Terminal Identification

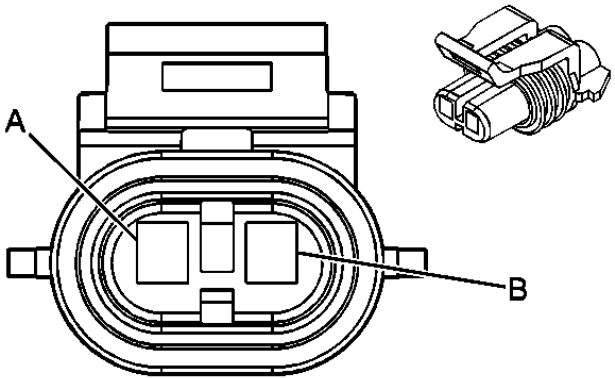

Connector Part Information		• 12052635 • 2-Way F Metri-Pack 150 Series (BLK)	
Pin	**Wire Color**	**Circuit No.**	**Function**
A	PNK	339	Ignition 1 Voltage
B	PPL	421	Air Solenoid Control

Throttle Actuator Control (TAC) Module Terminal Identification C1

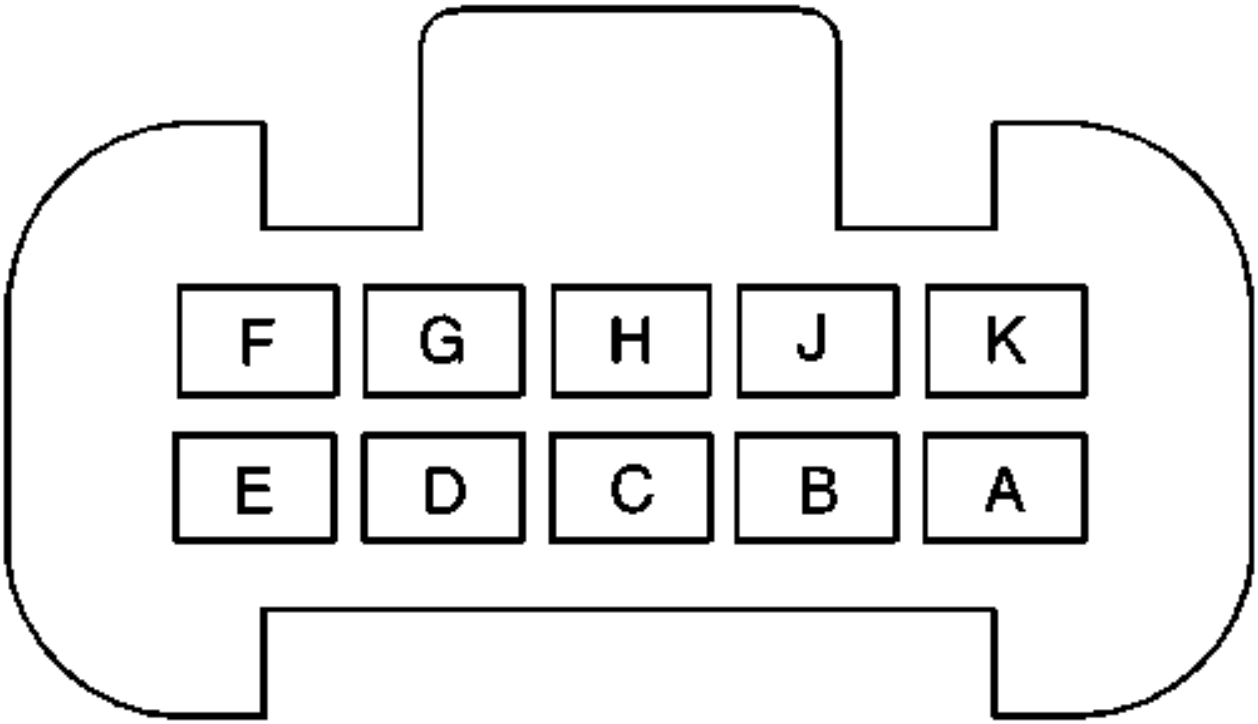

Connector Part Information		• 12186688 • 10-Way F Micro-Pack 100 Series (BLK)	
Pin	**Wire Color**	**Circuit No.**	**Function**
A	GRY	1273	Low Reference
B	PPL	1272	Low Reference
C	LT BLU	1162	APP Sensor 2 Signal
D	TAN	1274	5-Volt Reference
E	YEL/BLK	1275	5-Volt Reference
F	DK BLU	1161	APP Sensor 1 Signal
G	LT BLU	1276	5-Volt Reference
H	-	-	Not Used
J	BRN	1271	Low Reference
K	DK GRN	1163	APP Sensor 3 Signal

Throttle Actuator Control (TAC) Module Terminal Identification C2

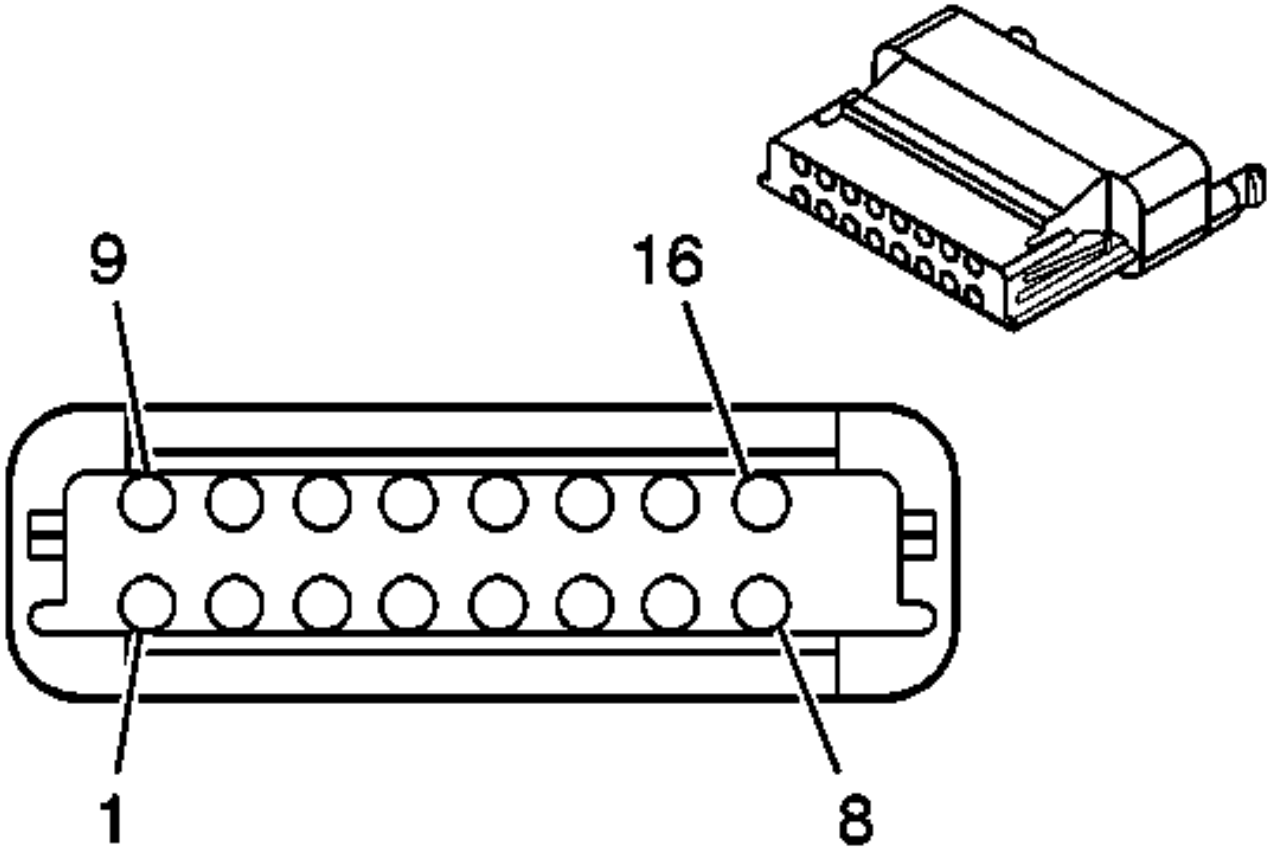

Connector Part Information		• 12191065 • 16-Way F Micro-Pack 100 Series (MD GRY)	
Pin	**Wire Color**	**Circuit No.**	**Function**
1	DK BLU	417	TP Sensor 1 Signal
2	DK GRN	485	5-Volt Reference
3	PPL	486	Low Reference
4	DK BLU	84	Cruise Control Set/Coast Switch Signal
5	GRY/BLK	87	Cruise Control Resume/Accel Switch Signal
6	LT BLU	20	Stop Lamp Supply Voltage
7	PNK	539	Ignition 1 Voltage

8	BRN	582	TAC Motor Control - 2
9	YEL/BLK	487	5-Volt Reference
10	WHT	484	Low Reference
11	PNK	427	TP Sensor 2 Signal
12	TAN	800	UART Serial Data Primary
13	ORN/BLK	1061	UART Serial Data Secondary
14	GRY	397	Cruise Control On Signal
15	BLK/WHT	451	Ground
16	YEL	581	TAC Motor Control - 1

Throttle Actuator Control (TAC) Motor Terminal Identification

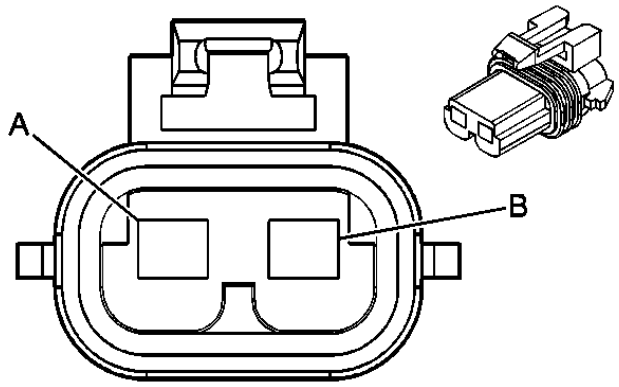

Connector Part Information		• **12077901** • **2-Way F Metri-Pack 280 Series (BLK)**	
Pin	**Wire Color**	**Circuit No.**	**Function**
A	YEL	581	TAC Motor Control - 1
B	BRN	582	TAC Motor Control - 2

Throttle Position Terminal Identification (TP) Sensor

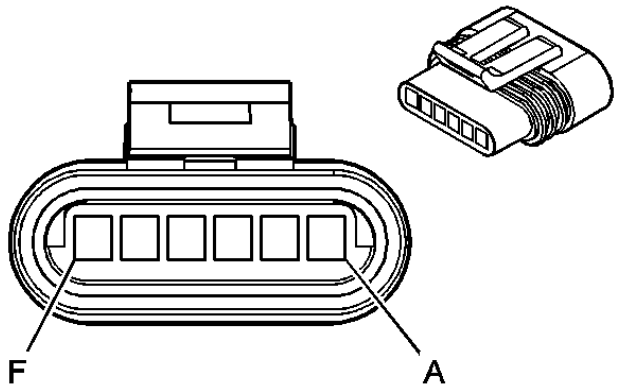

Connector Part Information		• 12162209 • 6-Way F Metri-Pack 150.2 Series (BLK)	
Pin	**Wire Color**	**Circuit No.**	**Function**
A	DK GRN	485	5-Volt Reference
B	PPL	486	Low Reference
C	DK BLU	417	TP Sensor 1 Signal
D	YEL/BLK	487	5-Volt Reference
E	WHT	484	Low Reference
F	PNK	427	TP Sensor 2 Signal

REPAIR INSTRUCTIONS

POWERTRAIN CONTROL MODULE (PCM) REPLACEMENT

Powertrain control module (PCM) service should normally consist of either PCM replacement or electrically erasable programmable read only memory (EEPROM) programming. If the diagnostic procedures require PCM replacement, check the PCM first to see if the correct part is being used.

IMPORTANT: In order to prevent internal PCM damage, the ignition must be OFF when you disconnect or reconnect the power to the PCM. For example, disconnect the power when you work with the following components:

- A battery cable
- The PCM pigtail
- The PCM fuse
- The jumper cables

IMPORTANT: When you diagnose or replace the PCM, remove any debris from the PCM

connector surfaces before servicing the PCM module connector gaskets. Ensure that the gaskets are installed correctly. The gaskets prevent intrusion into the PCM.

IMPORTANT: The replacement PCM MUST be programmed.

Removal Procedure

IMPORTANT: It is necessary to record the remaining engine oil life. If the replacement module is not programed with the remaining engine oil life, the engine oil life will default to 100%. If the replacement module is not programmed with the remaining engine oil life, the engine oil will need to be changed at 5000 km (3,000 mi) from the last engine oil change.

1. Using a scan tool, retrieve the percentage of remaining engine oil. Record the remaining engine oil life.
2. Remove the wheelhouse filler panel. Refer to **Wheelhouse Filler Replacement** in Body Front End.
3. Remove the throttle actuator control (TAC) module. Refer to **Throttle Actuator Control (TAC) Module Replacement** .

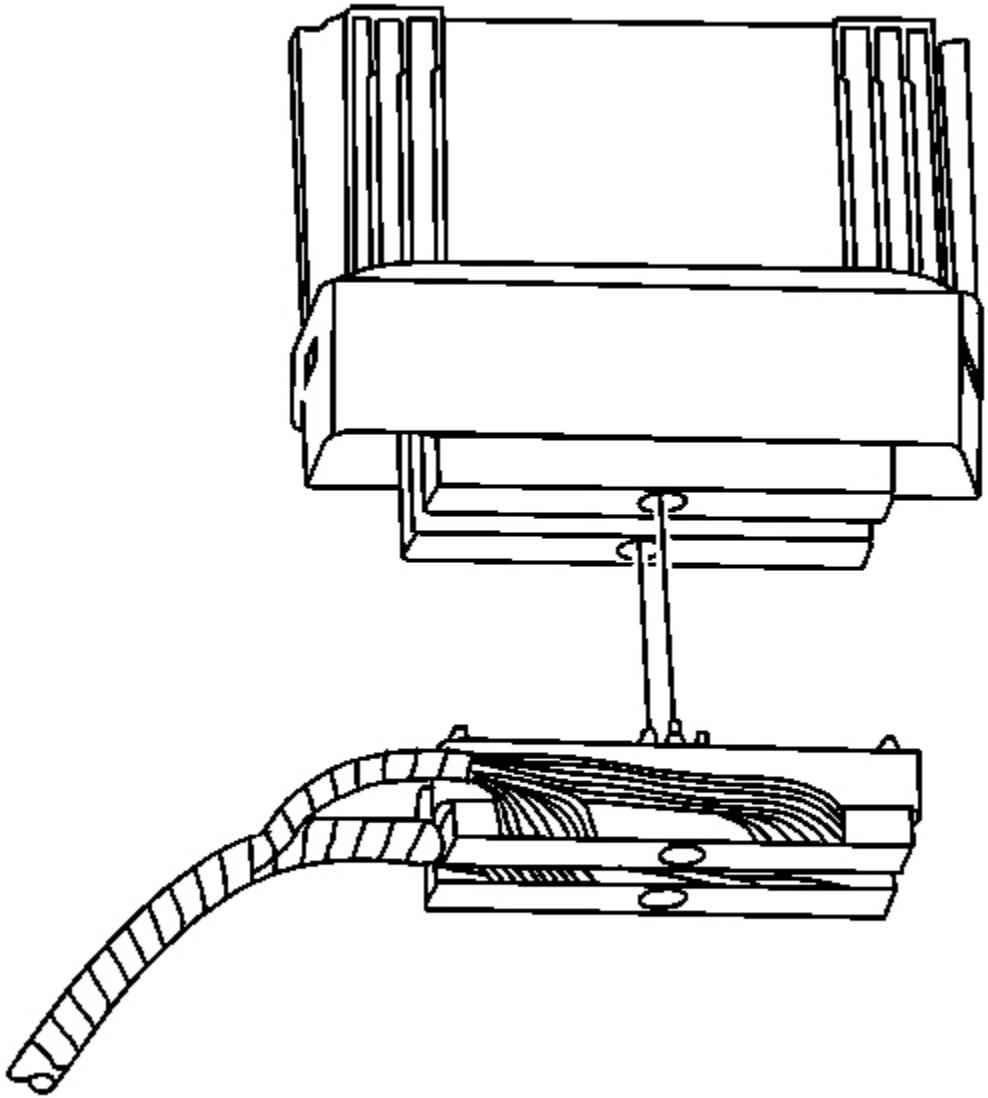

Fig. 38: PCM Electrical Harness Connectors
Courtesy of GENERAL MOTORS CORP.

4. Disconnect the PCM electrical harness connectors.
5. Loosen but do not remove the PCM rear retaining fastener. Use the rear retaining fastener as an anchor for the outer bracket.
6. Remove the front retaining fastener from the PCM.

7. Reposition the PCM outer bracket.

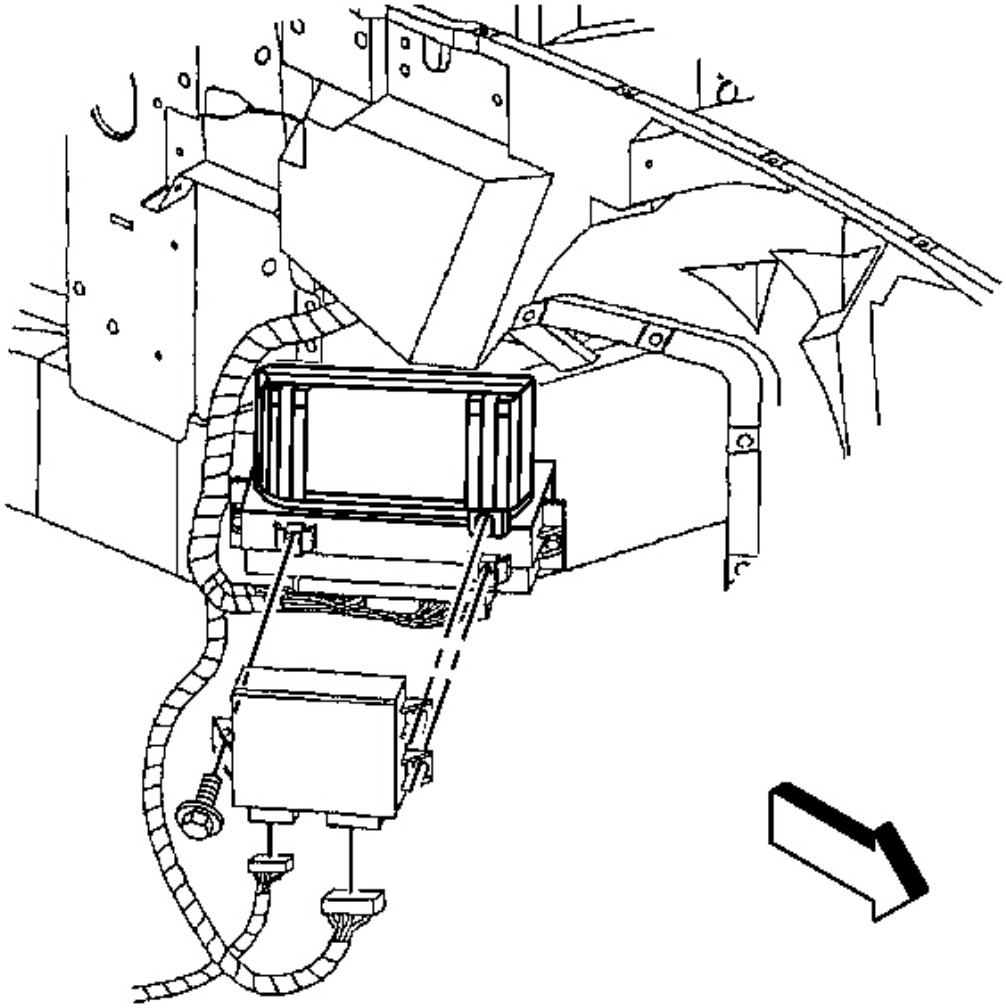

Fig. 39: PCM & Mounting Bracket
Courtesy of GENERAL MOTORS CORP.

8. Remove the PCM from the bracket and the vehicle.

Installation Procedure

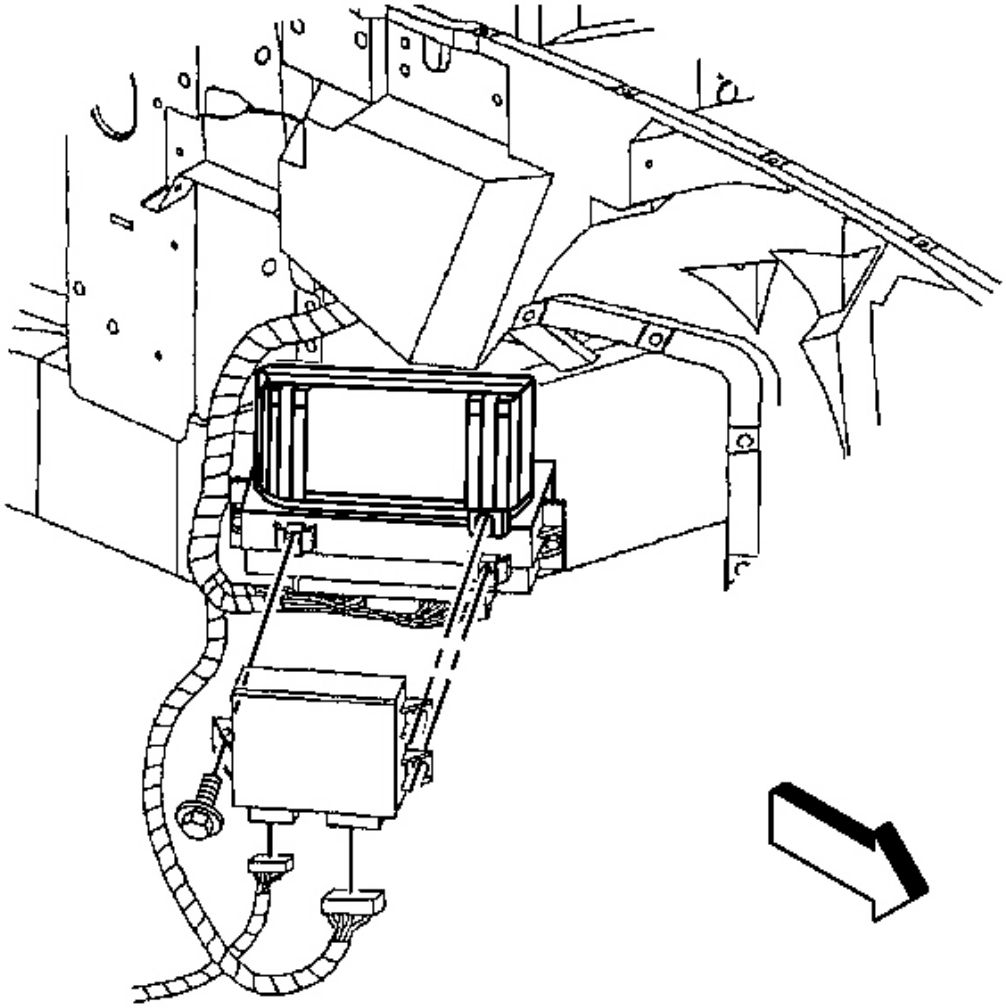

Fig. 40: PCM & Mounting Bracket
Courtesy of GENERAL MOTORS CORP.

1. Install the PCM to the PCM rear bracket.
2. Position the PCM front bracket.

NOTE: **Refer to Fastener Notice in Cautions and Notices.**

3. Install the PCM front retaining fasteners.

Tighten: Tighten the PCM retaining fasteners to 2.0 N.m (17 lb in).

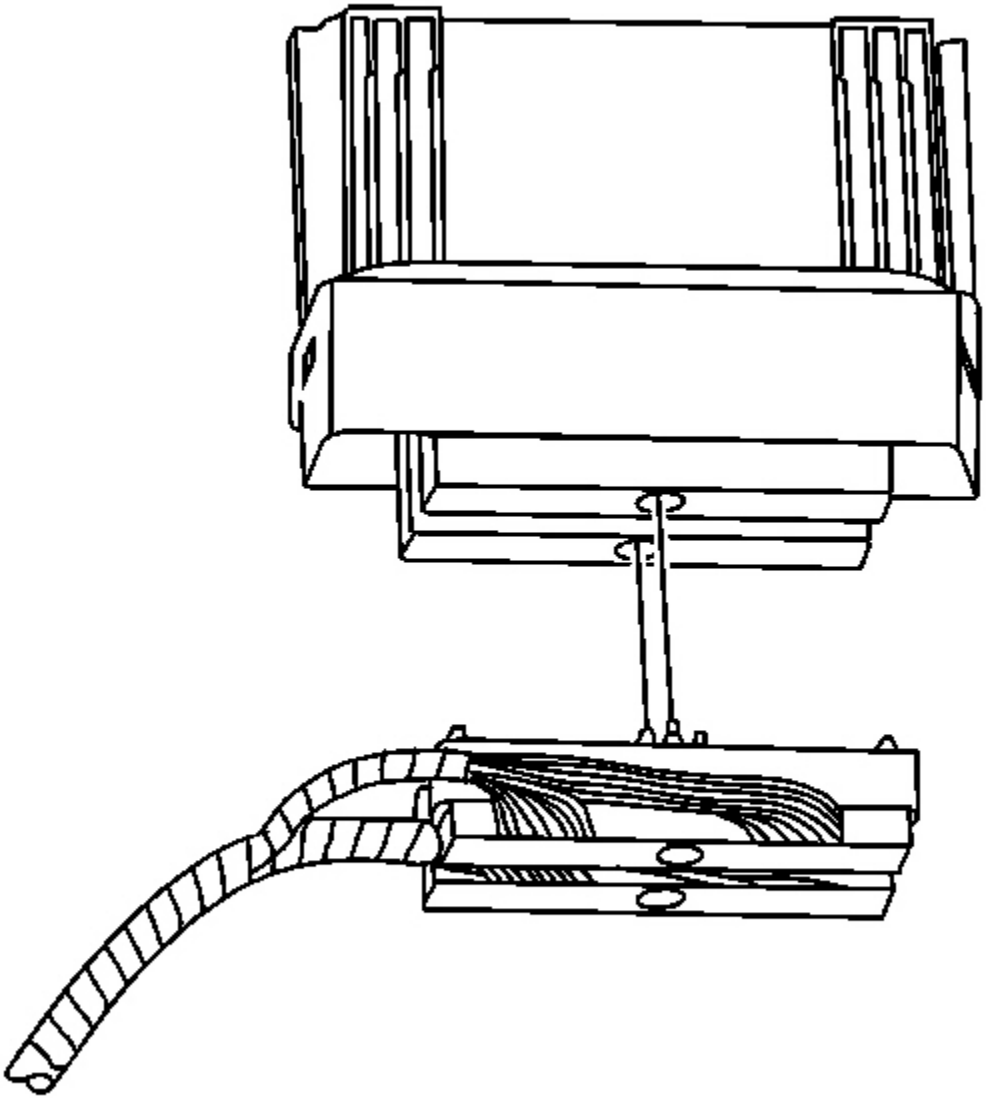

Fig. 41: PCM Electrical Harness Connectors
Courtesy of GENERAL MOTORS CORP.

4. Connect the electrical connectors to the PCM.

   Tighten: Tighten the PCM electrical connectors to 8 N.m (70 lb in).

5. Install the TAC module. Refer to **Throttle Actuator Control (TAC) Module Replacement** .

6. Install the wheelhouse filler panel. Refer to **Wheelhouse Filler Replacement** in Body Front End.
7. If a new PCM is being installed, program the PCM. Refer to **Service Programming System (SPS)** in Programming.

THROTTLE ACTUATOR CONTROL (TAC) MODULE REPLACEMENT

Removal Procedure

1. Remove the wheelhouse filler panel. Refer to **Wheelhouse Filler Replacement** in Body Front End.

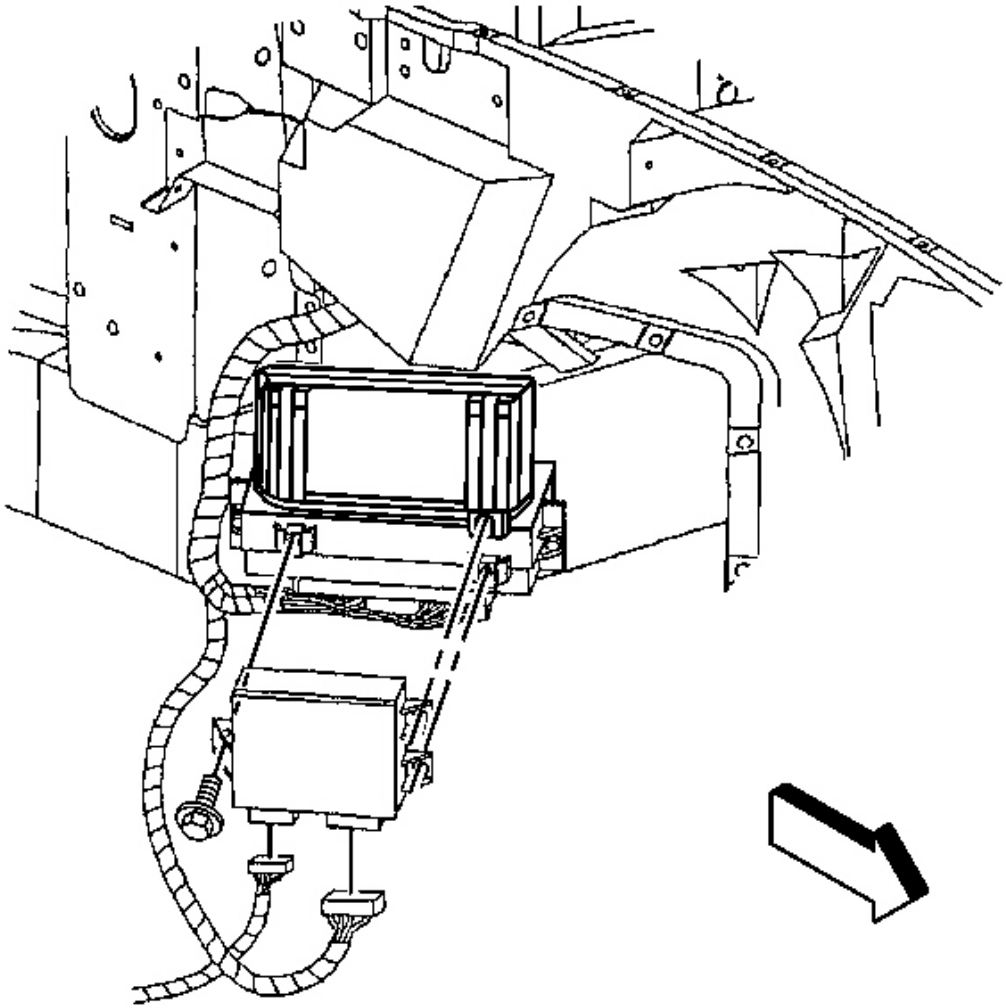

Fig. 42: PCM & Mounting Bracket

Courtesy of GENERAL MOTORS CORP.

2. Remove the fasteners retaining the throttle actuator control (TAC) module to the powertrain control module (PCM) mounting bracket.

IMPORTANT:

- **Remove any debris from the TAC module connector surfaces before servicing the TAC module. Inspect the TAC module connector gaskets if you diagnose or replace the TAC module. Verify that the gaskets are installed correctly. The gaskets prevent contaminate intrusion into the TAC module.**
- **Do not touch the connector pins in order to prevent possible electrostatic discharge (ESD) damage to the TAC module.**
- **The ignition should always be OFF if you install or remove the TAC module connectors.**

3. Remove the electrical connectors from the TAC module.
4. Remove the TAC module from the vehicle.

Installation Procedure

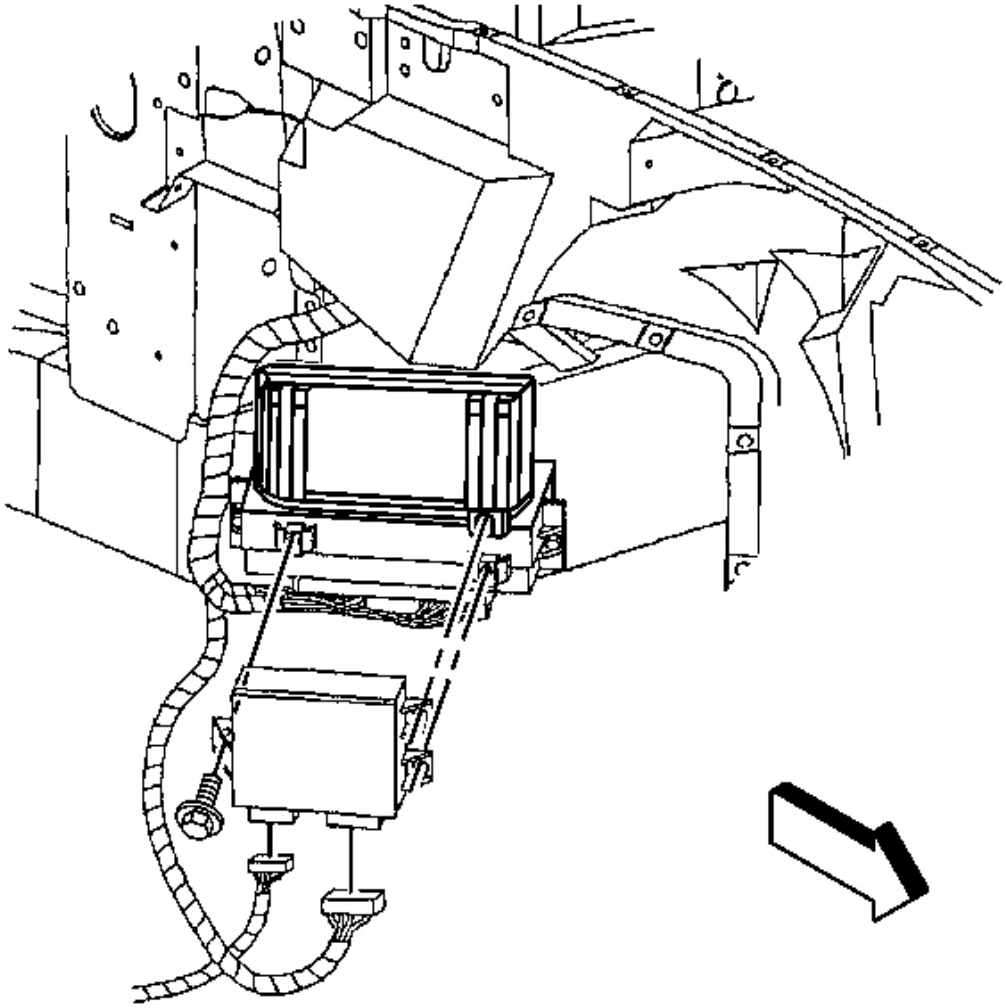

Fig. 43: PCM & Mounting Bracket
Courtesy of GENERAL MOTORS CORP.

1. Connect the electrical connectors to the TAC module.
2. Align the hole in the rear mounting tab of the TAC module to the corresponding hole in the PCM mounting bracket. Position the TAC module below the rear mounting tab for greater clearance in order to install the rear retaining fastener.
3. Install the TAC module rear retaining fastener.
4. Align the front mounting holes of the TAC module.

NOTE: **Refer to Fastener Notice in Cautions and Notices.**

5. Install the TAC module front retaining fasteners.

   Tighten: Tighten the TAC module retaining fasteners to 2.0 N.m (17 lb in).

6. Install the wheelhouse filler panel. Refer to **Wheelhouse Filler Replacement** in Body Front End.

CKP SYSTEM VARIATION LEARN PROCEDURE

1. Install a scan tool.
2. Monitor the powertrain control module (PCM) for DTCs with a scan tool. If other DTCs are set, except DTC P0315, refer to **Diagnostic Trouble Code (DTC) List** for the applicable DTC that set.
3. Select the crankshaft position (CKP) variation learn procedure with a scan tool.
4. The scan tool instructs you to perform the following:
   1. Accelerate to wide open throttle (WOT).
   2. Release throttle when fuel cut-off occurs.
   3. Observe fuel cut-off for applicable engine.
   4. Engine should not accelerate beyond calibrated RPM value.
   5. Release throttle immediately if value is exceeded.
   6. Block drive wheels.
   7. Set parking brake.
   8. DO NOT apply brake pedal.
   9. Cycle ignition from OFF to ON.
   10. Apply and hold brake pedal.
   11. Start and idle engine.
   12. Turn A/C OFF.
   13. Vehicle must remain in Park or Neutral.
   14. The scan tool monitors certain component signals to determine if all the conditions are met to continue with the procedure. The scan tool only displays the condition that inhibits the procedure. The scan tool monitors the following components:
       - Crankshaft position (CKP) sensors activity-If there is a CKP sensor condition, refer to the applicable DTC that set.
       - Camshaft position (CMP) sensor activity-If there is a CMP sensor condition, refer to the applicable DTC that set.
       - Engine coolant temperature (ECT)-If the ECT is not warm enough, idle the engine until the engine coolant temperature reaches the correct temperature.
5. Enable the CKP system variation learn procedure with a scan tool.

IMPORTANT: **While the learn procedure is in progress, release the throttle immediately when the engine starts to decelerate. The engine control is returned to the**

operator and the engine responds to throttle position after the learn procedure is complete.

6. Accelerate to WOT.
7. Release throttle when fuel cut-off occurs.
8. Test in progress.
9. The scan tool displays Learn Status: Learned this ignition. If the scan tool indicates that DTC P0315 ran and passed, the CKP variation learn procedure is complete. If the scan tool indicates DTC P0315 failed or did not run, refer to **DTC P0315** . If any other DTCs set, refer to **Diagnostic Trouble Code (DTC) List** for the applicable DTC that set.
10. Turn OFF the ignition for 30 seconds after the learn procedure is completed successfully.
11. The CKP system variation learn procedure is also required when the following service procedures have been performed, regardless of whether DTC P0315 is set:
    - An engine replacement
    - A PCM replacement
    - A harmonic balancer replacement
    - A crankshaft replacement
    - A CKP sensor replacement
    - Any engine repairs which disturb the crankshaft to CKP sensor relationship

ENGINE COOLANT TEMPERATURE (ECT) SENSOR REPLACEMENT

Removal Procedure

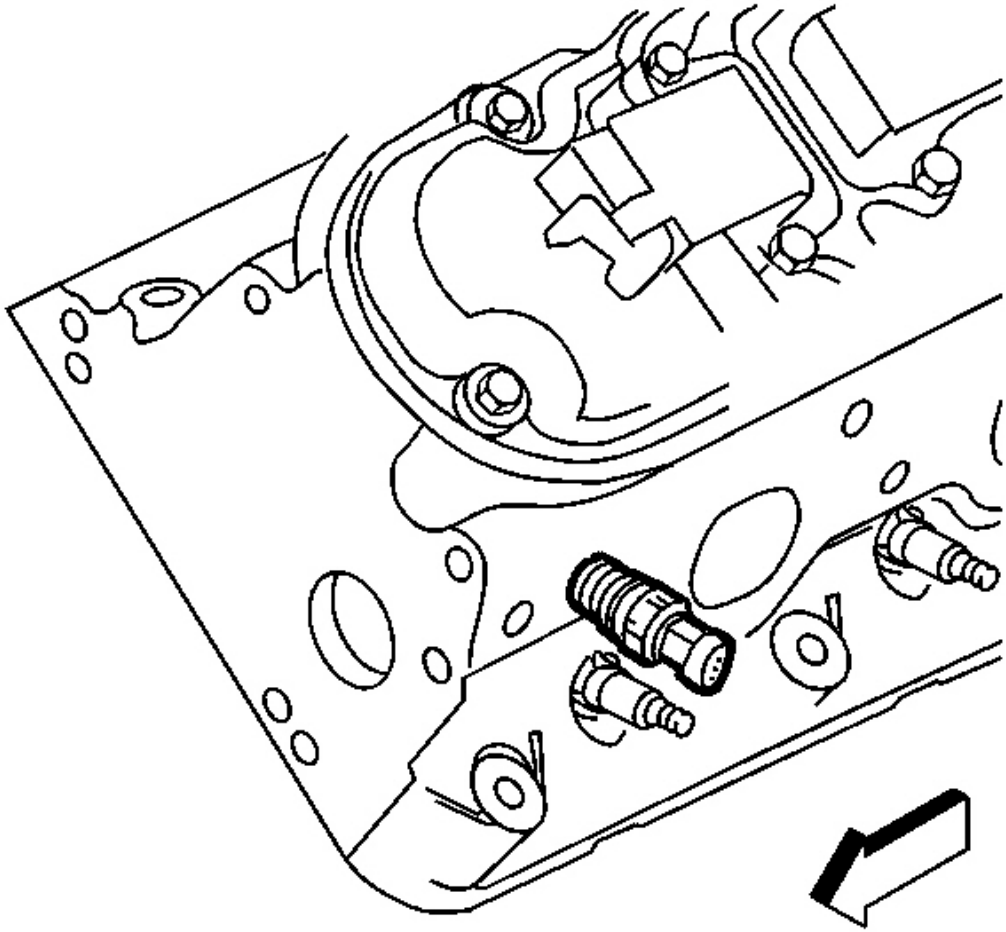

Fig. 44: ECT Sensor
Courtesy of GENERAL MOTORS CORP.

1. Turn OFF the ignition.

CAUTION: Refer to Vehicle Lifting Caution in Cautions and Notices.

2. Raise the vehicle. Refer to **Lifting and Jacking the Vehicle** in General Information.
3. Drain the engine coolant below the level of the engine coolant temperature (ECT) sensor. Refer to **Draining and Filling Cooling System** in Engine Cooling.
4. Lower the vehicle.

5. Disconnect the harness connector from the ECT sensor.

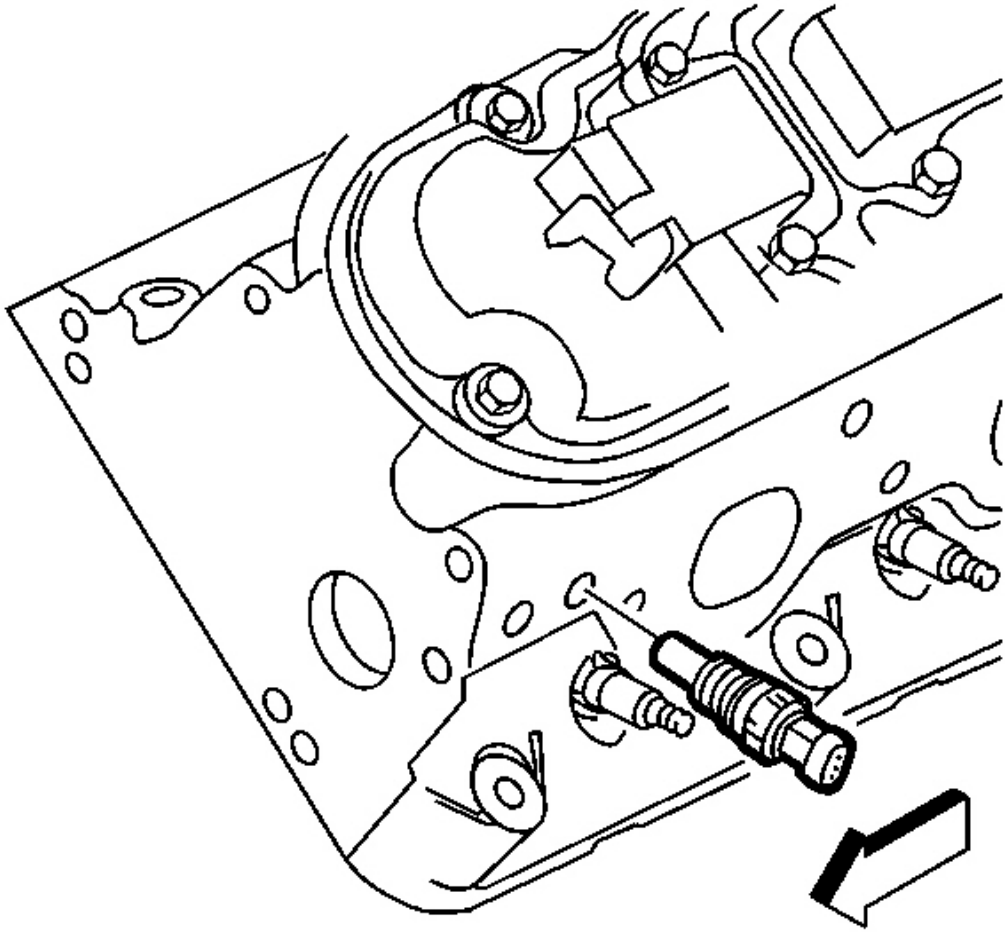

Fig. 45: ECT Sensor Removed
Courtesy of GENERAL MOTORS CORP.

NOTE: **Use care when handling the coolant sensor. Damage to the coolant sensor will affect the operation of the fuel control system.**

6. Remove the ECT sensor.

Installation Procedure

NOTE: **Replacement components must be the correct part number for the**

application. Components requiring the use of the thread locking compound, lubricants, corrosion inhibitors, or sealants are identified in the service procedure. Some replacement components may come with these coatings already applied. Do not use these coatings on components unless specified. These coatings can affect the final torque, which may affect the operation of the component. Use the correct torque specification when installing components in order to avoid damage.

NOTE: **Use care when handling the coolant sensor. Damage to the coolant sensor will affect the operation of the fuel control system.**

1. Coat the ECT sensor threads with sealer P/N 12346004 (Canadian P/N 10953480) or the equivalent.

NOTE: **Refer to Fastener Notice in Cautions and Notices.**

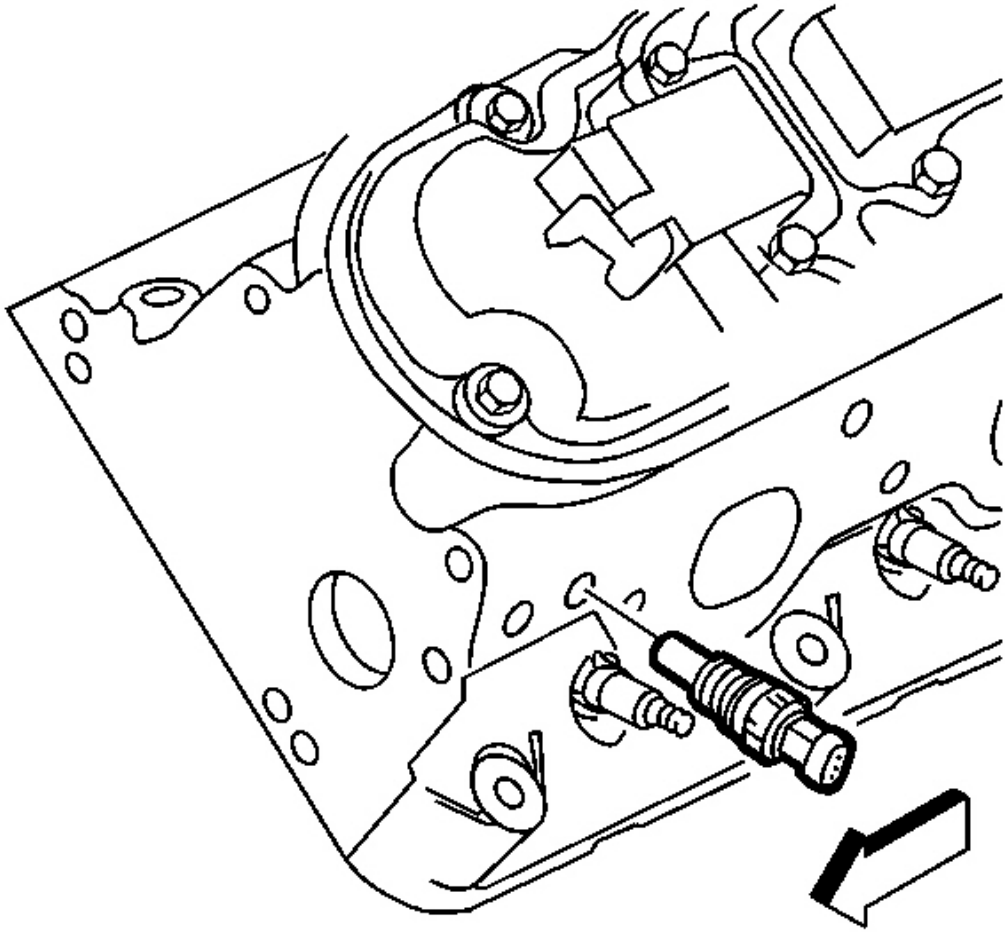

Fig. 46: ECT Sensor Removed
Courtesy of GENERAL MOTORS CORP.

2. Install the ECT sensor.

   Tighten: Tighten the ECT sensor to 20 N.m (15 lb ft).

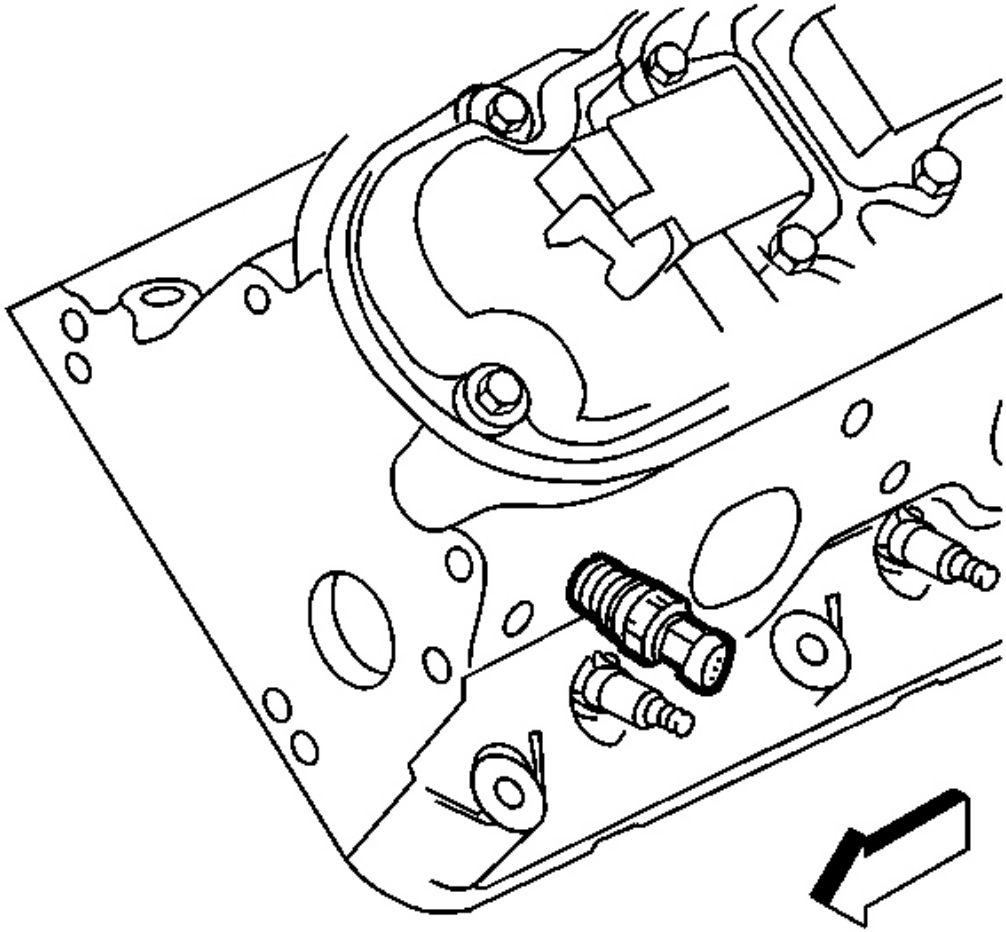

Fig. 47: ECT Sensor
Courtesy of GENERAL MOTORS CORP.

3. Connect the ECT sensor electrical connector.
4. Refill the engine coolant. Refer to **Draining and Filling Cooling System** in Engine Cooling.

MASS AIR FLOW (MAF)/INTAKE AIR TEMPERATURE (IAT) SENSOR REPLACEMENT

Tools Required

J 22610 Service Boot Clamp Installer. See **Special Tools and Equipment** .

Removal Procedure

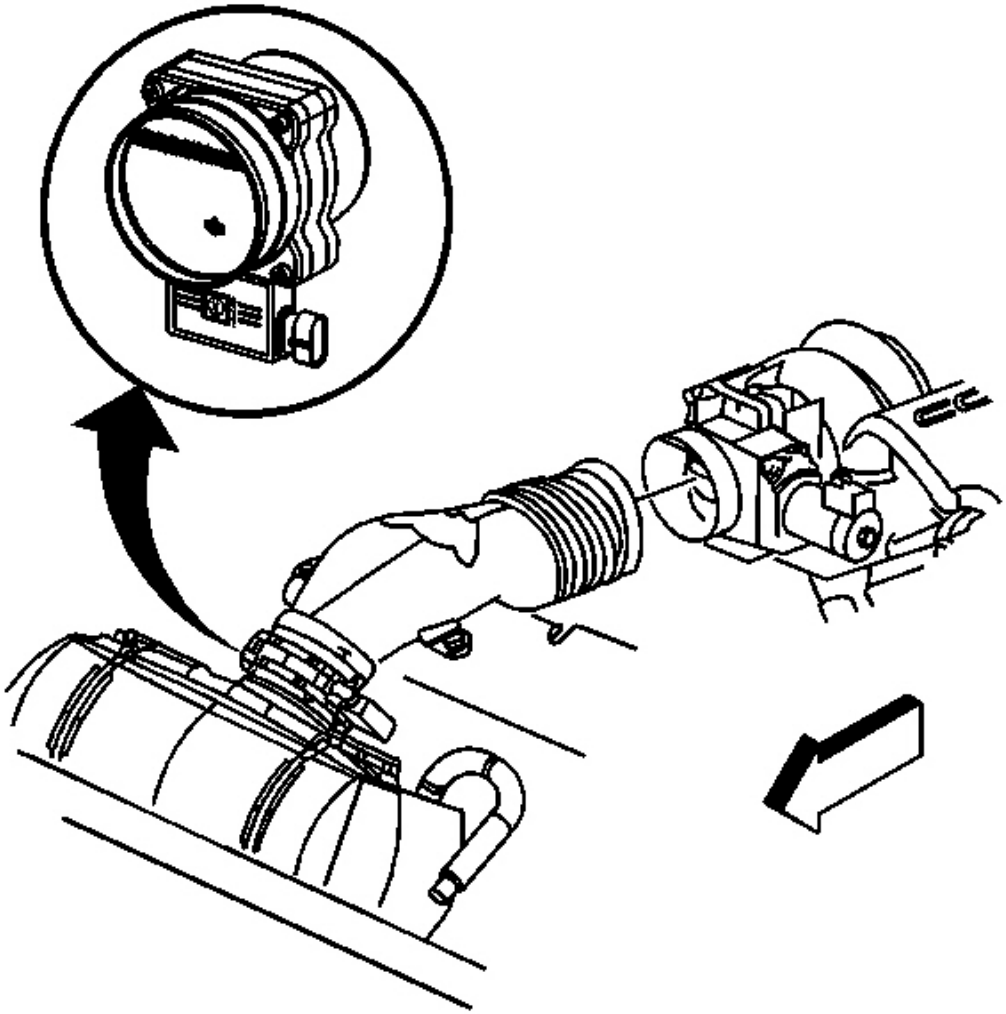

Fig. 48: Air Intake Duct Clamps, MAF/IAT Sensor & Throttle Body
Courtesy of GENERAL MOTORS CORP.

IMPORTANT: Take care when handling the mass air flow/intake air temperature (MAF/IAT) sensor. Do not dent, puncture, or otherwise damage the Honeycell located at the air inlet end of the MAF/IAT. Do not touch the sensing elements. Do not allow anything, including cleaning solvents and lubricants, to come in contact with the sensing elements. Use a small amount of a non-silicone based lubricant on the air duct only, to aid in the installation. Do not drop or roughly handle the MAF/IAT sensor.

1. Disconnect the electrical connector of the MAF/IAT sensor.
2. Remove the air intake duct clamps from the MAF/IAT sensor and the throttle body.

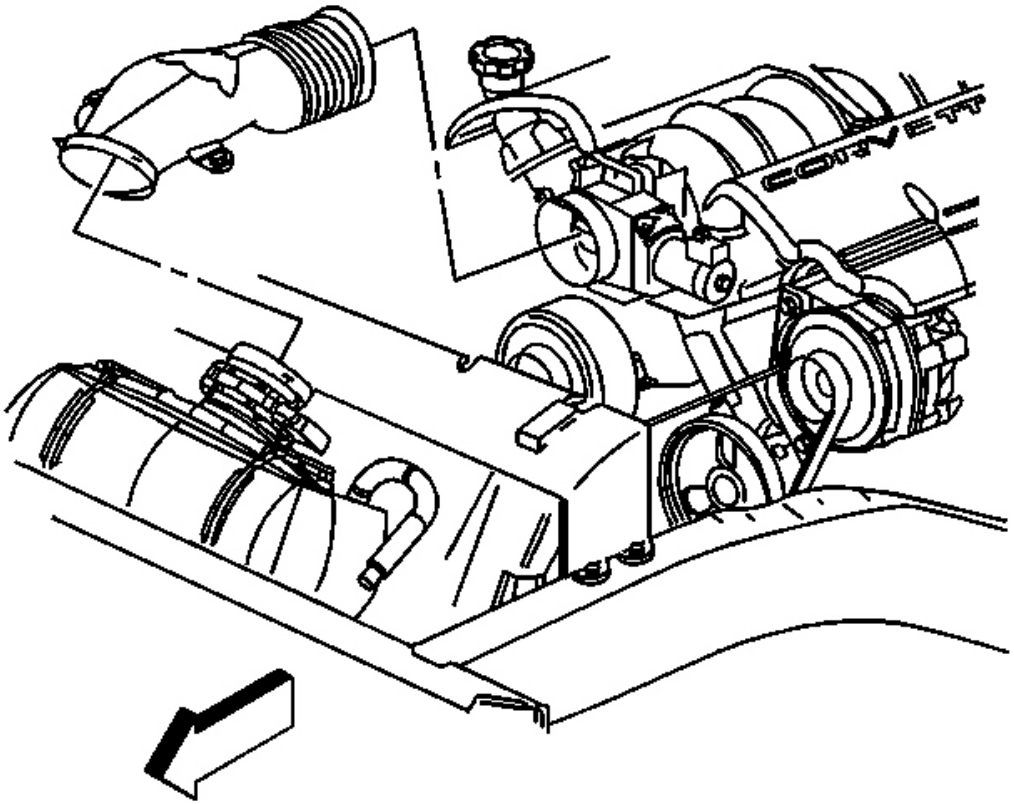

Fig. 49: Air Intake Duct & Clamp
Courtesy of GENERAL MOTORS CORP.

3. Remove the air duct clamp at the air cleaner housing.

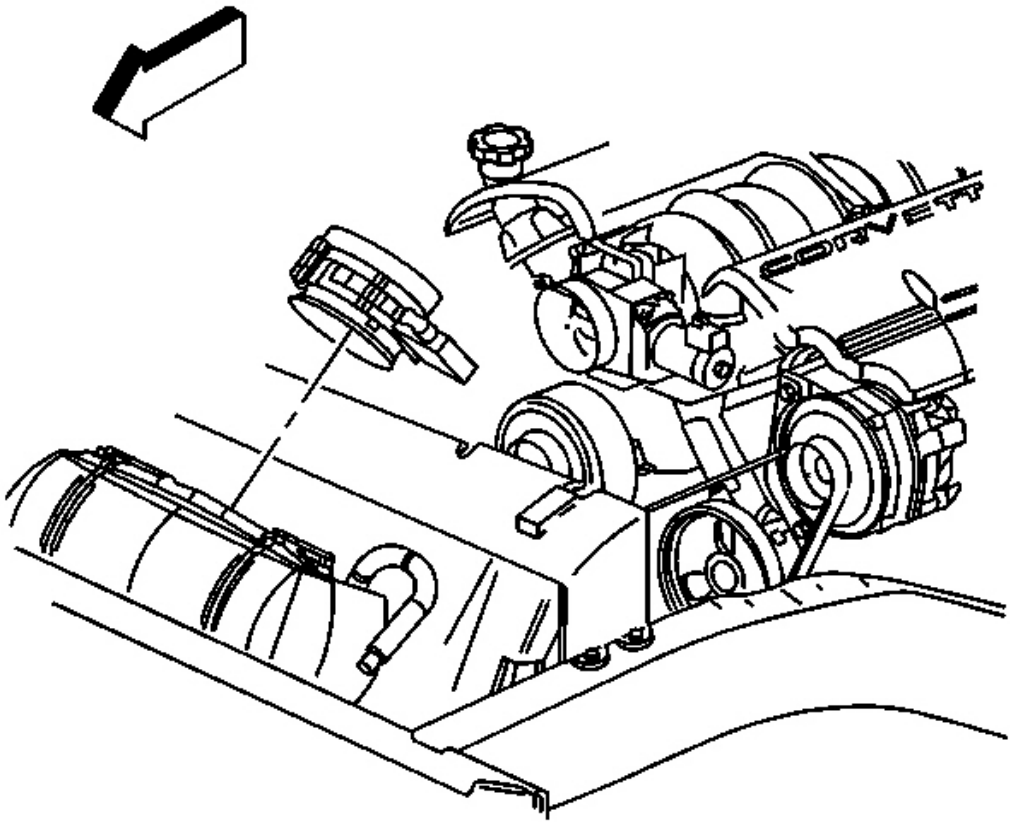

Fig. 50: MAF/IAT Sensor
Courtesy of GENERAL MOTORS CORP.

4. Remove the MAF/IAT sensor.

Installation Procedure

IMPORTANT: The embossed arrow on the MAF/IAT sensor indicate the proper air flow direction. The arrow must point toward the engine.

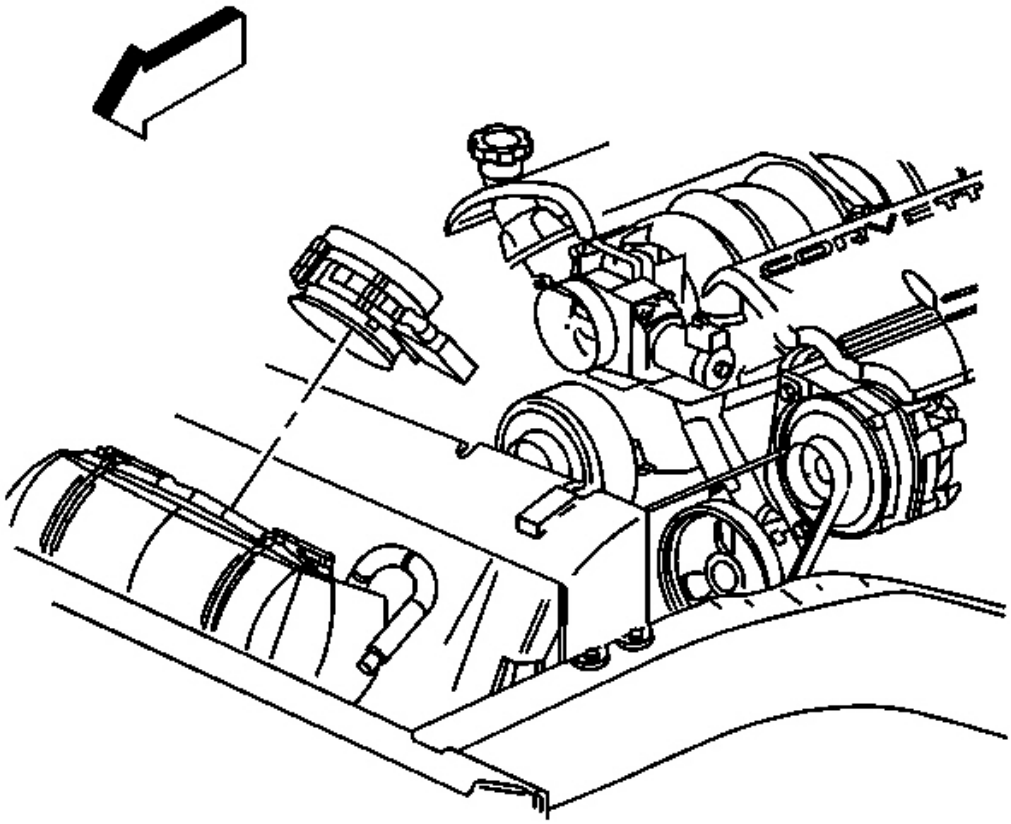

Fig. 51: MAF/IAT Sensor
Courtesy of GENERAL MOTORS CORP.

1. Install the MAF/IAT sensor into the air intake duct at the air cleaner housing.

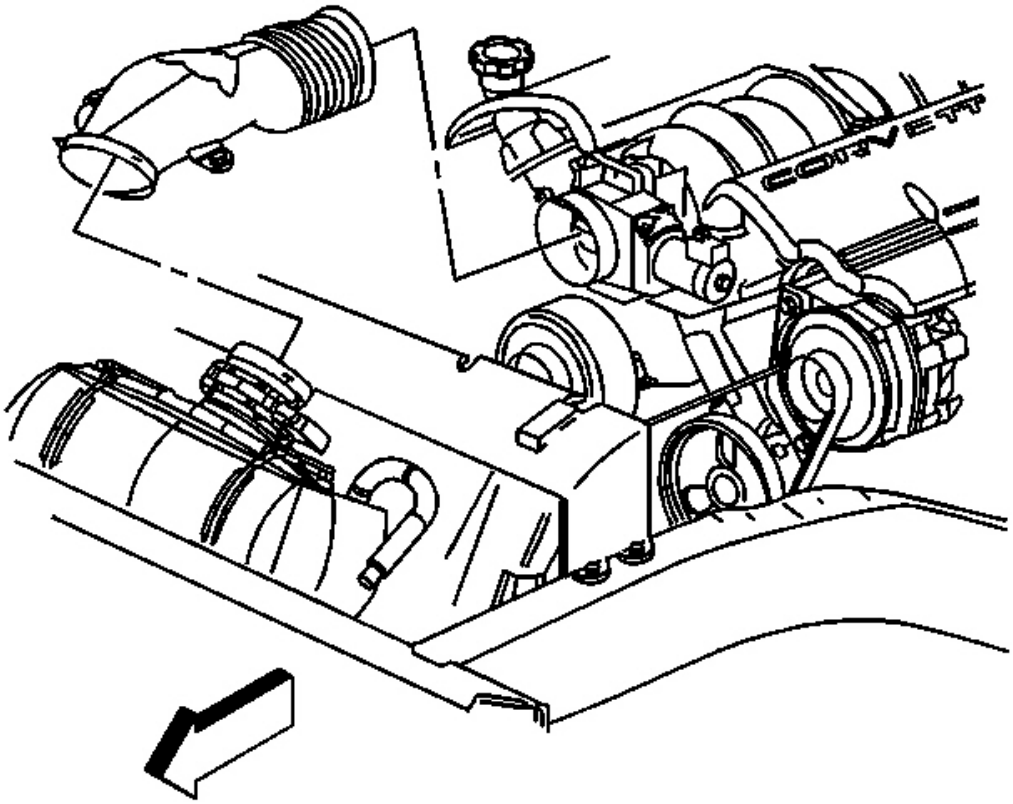

Fig. 52: Air Intake Duct & Clamp
Courtesy of GENERAL MOTORS CORP.

2. Install the new clamp using the **J 22610** . See **Special Tools and Equipment** .

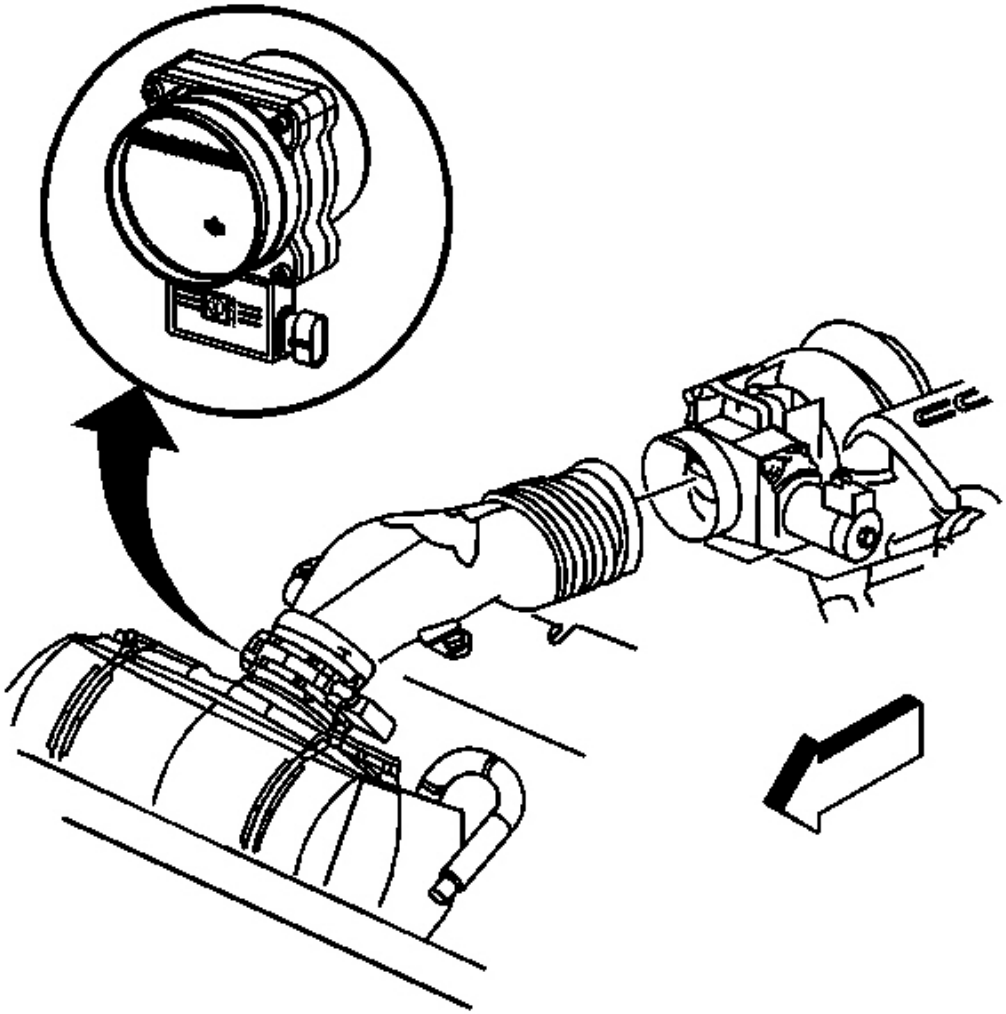

Fig. 53: MAF/IAT Sensor Electrical Connector & Air Intake Duct Clamps
Courtesy of GENERAL MOTORS CORP.

3. Install the air intake duct to the MAF/IAT sensor and the throttle body.
4. Install the clamps.
5. Connect the electrical connector of the MAF/IAT.

MANIFOLD ABSOLUTE PRESSURE (MAP) SENSOR REPLACEMENT

Removal Procedure

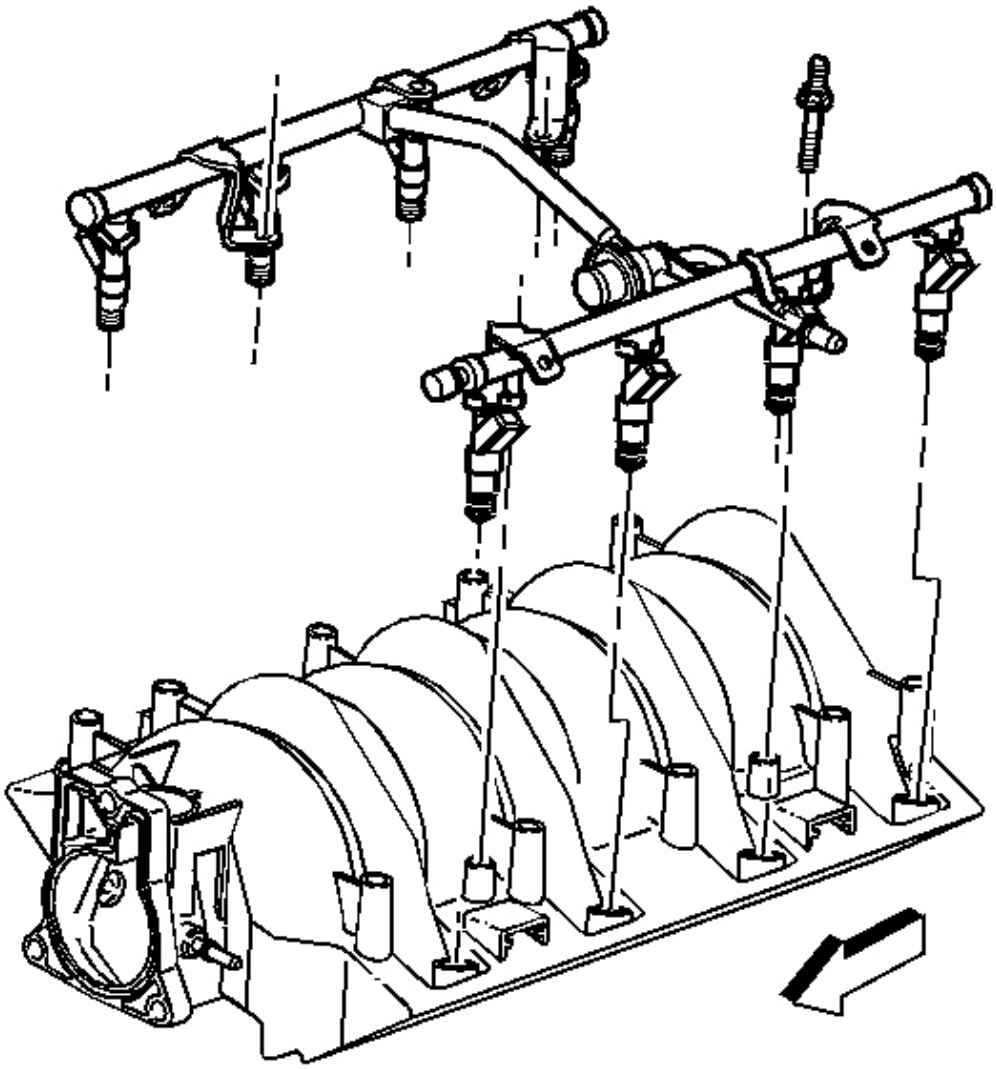

Fig. 54: Fuel Rail Assembly & Bolts
Courtesy of GENERAL MOTORS CORP.

1. Remove the engine sight shields.
2. Remove the fuel rail assembly. Refer to **Fuel Rail Assembly Replacement** .

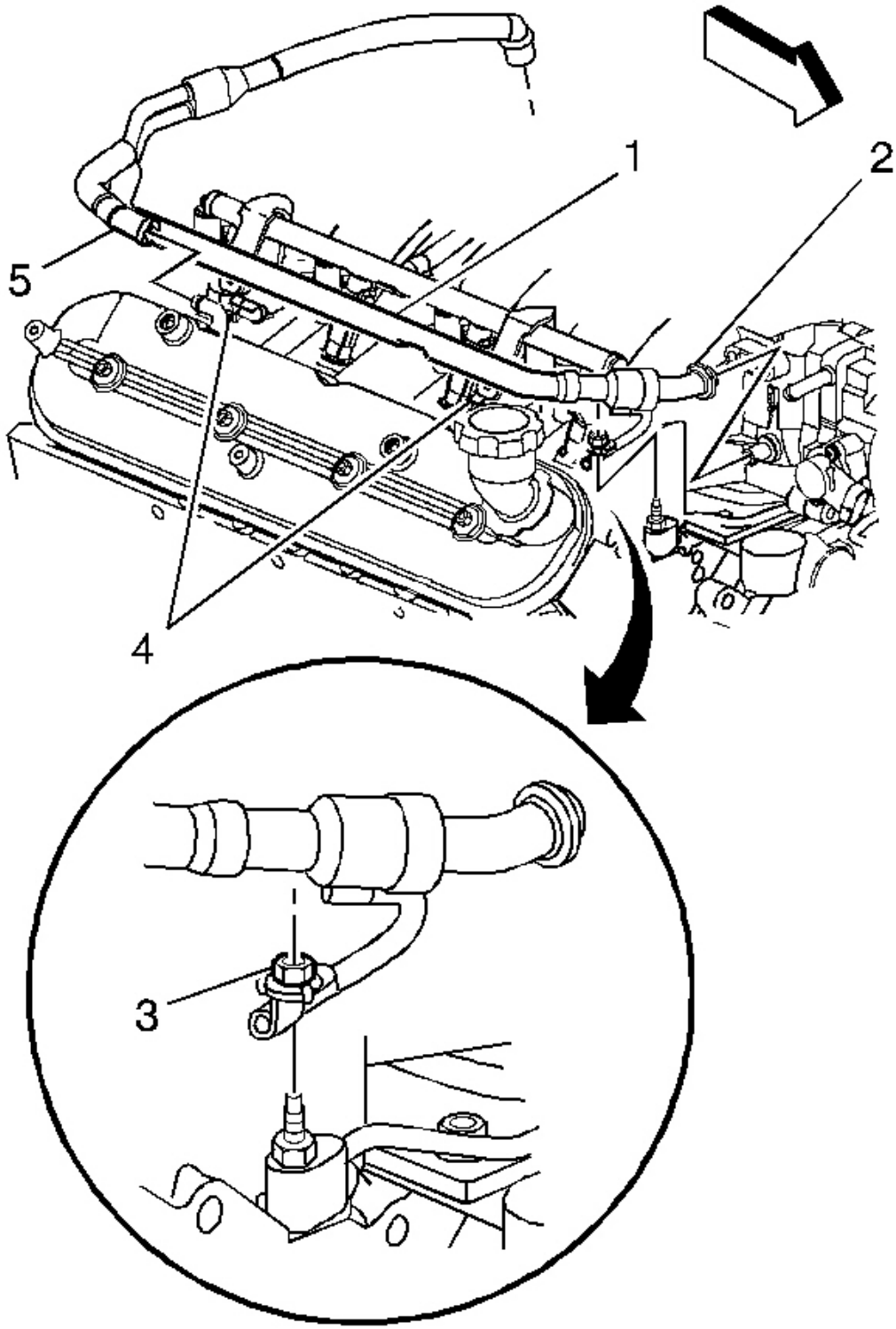
1
2
5
4
3

Fig. 55: PCV Hose Assembly & Fastners
Courtesy of GENERAL MOTORS CORP.

IMPORTANT: Access to the MAP sensor is limited, but does not require the removal of the intake manifold.

3. Remove the PCV heat exchange cable fastener (3).
4. Remove the PCV hose (2) from the throttle body.
5. Remove the PCV hose (5) from the right bank port.
6. Release the PCV hose assembly from the mounting brackets (4).
7. Move the PCV hose assembly (1) aside.

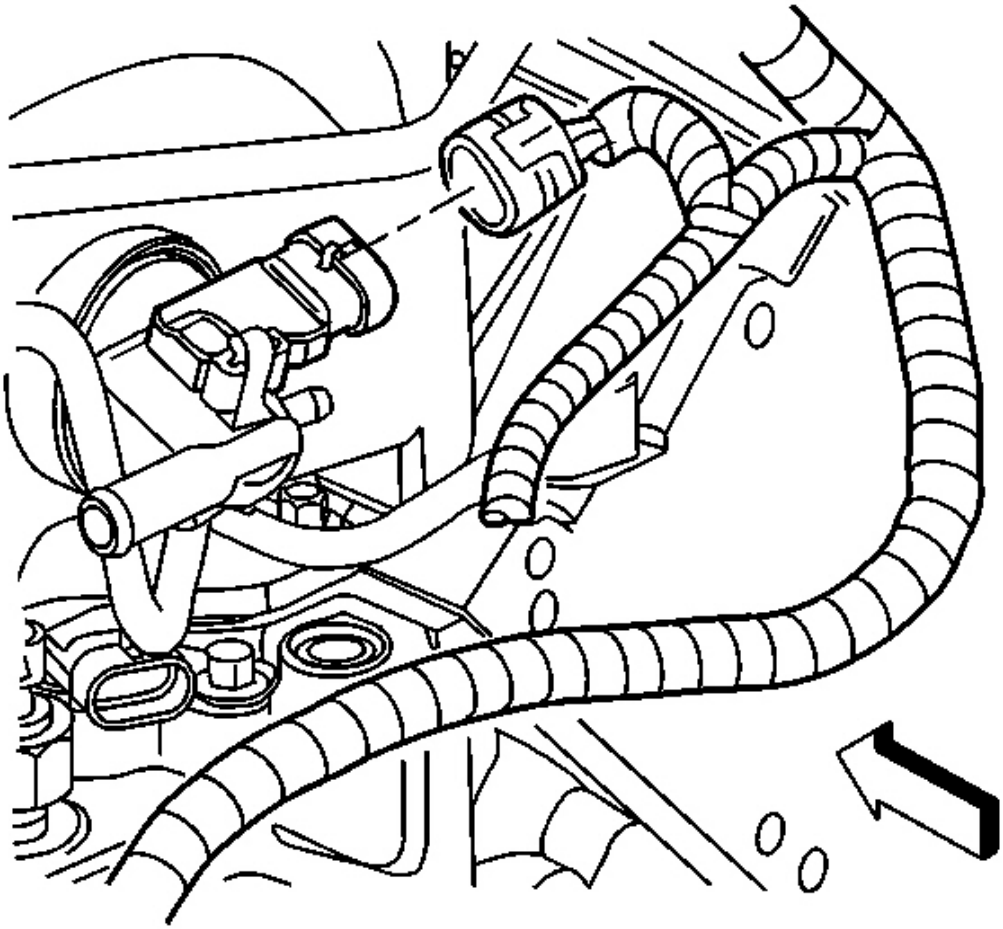

Fig. 56: MAP Sensor Harness Connector
Courtesy of GENERAL MOTORS CORP.

8. Disconnect the MAP sensor harness connector.

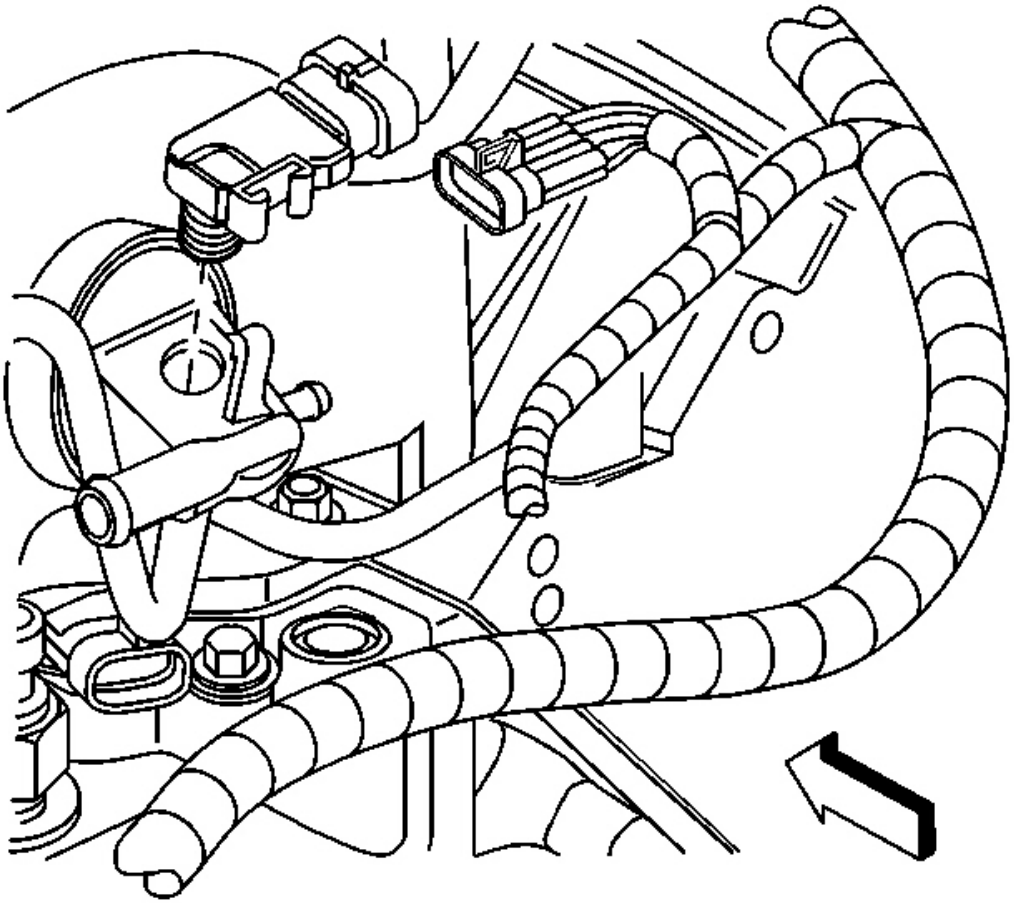

Fig. 57: MAP Sensor
Courtesy of GENERAL MOTORS CORP.

9. Pull the MAP sensor forward in order to release the sensor from the retainer.
10. Lift the MAP sensor upward.

Installation Procedure

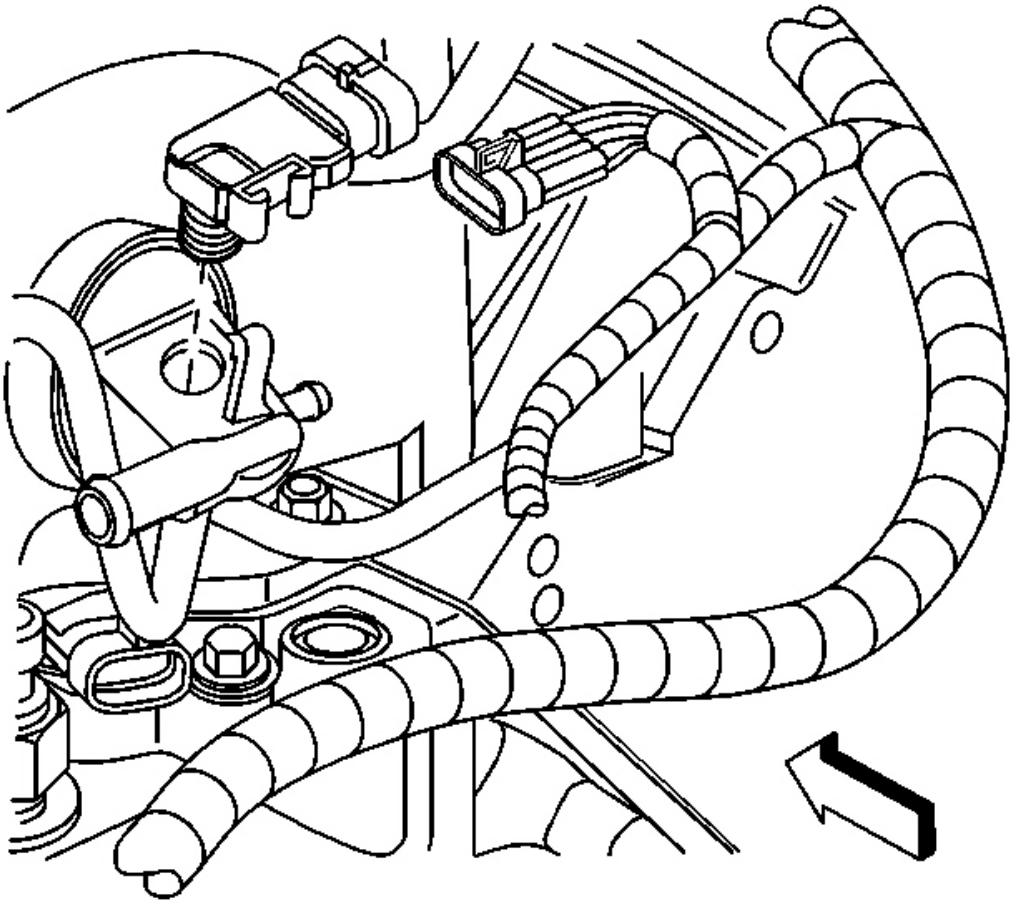

Fig. 58: MAP Sensor
Courtesy of GENERAL MOTORS CORP.

IMPORTANT:

- **Inspect the MAP sensor seal for damage. Replace the seal if necessary.**
- **Lightly coat the MAP sensor seal with clean engine oil before installing the sensor.**

1. Install the MAP sensor. Push down the sensor in order to engage the sensor into the retainer.

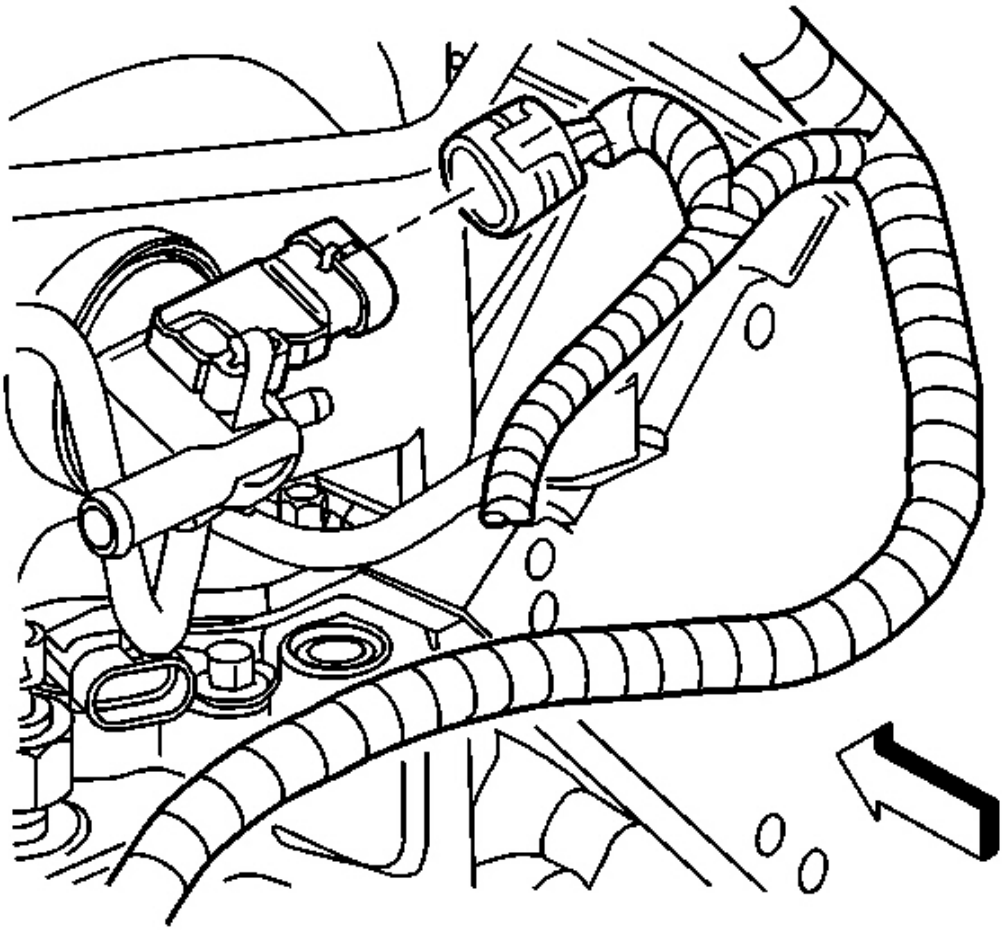

Fig. 59: MAP Sensor Harness Connector
Courtesy of GENERAL MOTORS CORP.

2. Connect the MAP sensor harness connector.

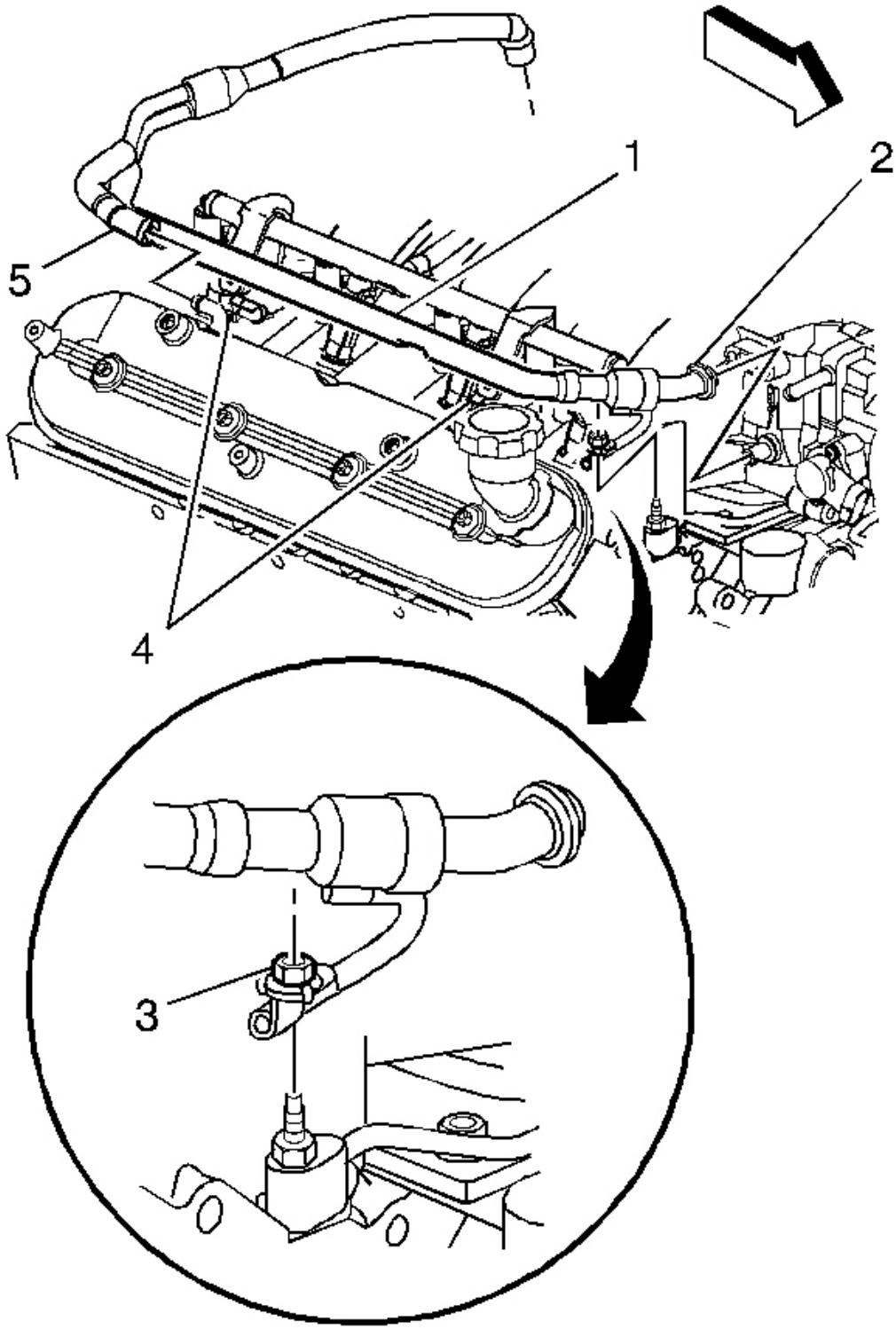
1
2
5
4
3

Fig. 60: PCV Hose Assembly & Fastners
Courtesy of GENERAL MOTORS CORP.

3. Position the PCV hose assembly (1) for reassembly.
4. Insert the PCV hose assembly to the mounting brackets (4).
5. Install the PCV hose (5) to the right bank port.
6. Install the PCV hose (2) to the throttle body.

NOTE: Refer to Fastener Notice in Cautions and Notices.

7. Install the PCV heat exchange cable fastener (3).

Tighten: Tighten the PCV heat exchange cable fastener to 12 N.m (106 lb in).

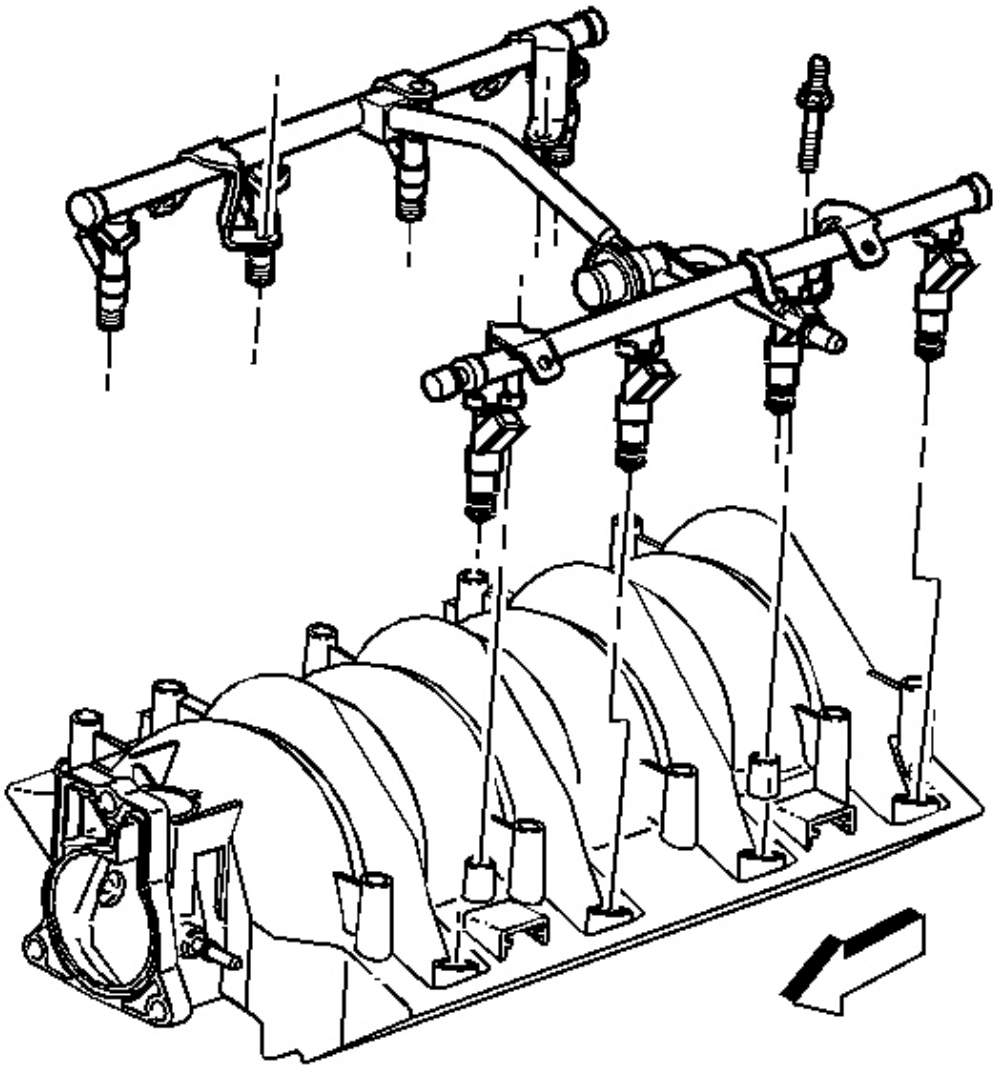

Fig. 61: Fuel Rail Assembly & Bolts
Courtesy of GENERAL MOTORS CORP.

8. Install the fuel rail. Refer to **Fuel Rail Assembly Replacement** .
9. Install the engine sight shields.

HEATED OXYGEN SENSOR (HO2S) REPLACEMENT BANK 1 SENSOR 1

Removal Procedure (Bank 1 Sensor 1)

NOTE: **Refer to Heated Oxygen and Oxygen Sensor Notice in Cautions and Notices.**

NOTE: **Refer to Excessive Force and Oxygen Sensor Notice in Cautions and Notices.**

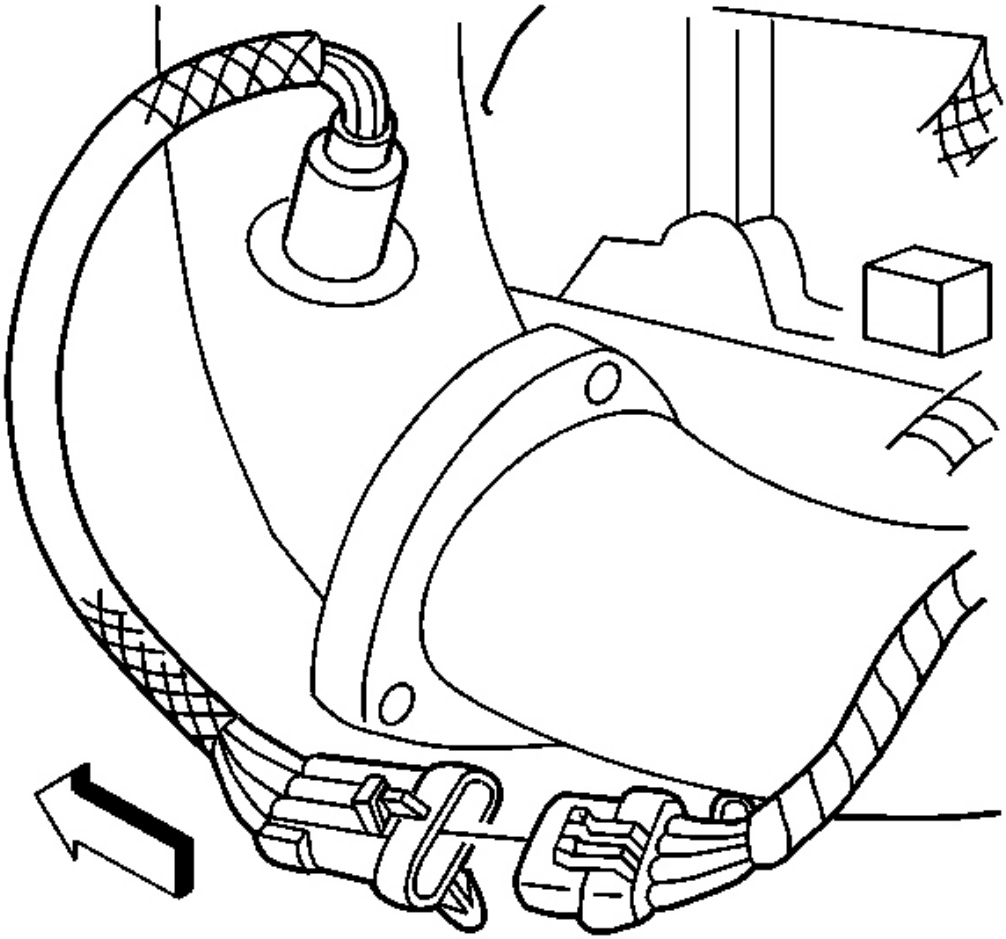

Fig. 62: HO2S Electrical Connector Bank 1 Sensor 1
Courtesy of GENERAL MOTORS CORP.

1. Raise the vehicle. Refer to **Lifting and Jacking the Vehicle** in General Information.
2. Disconnect the HO2S electrical connector.

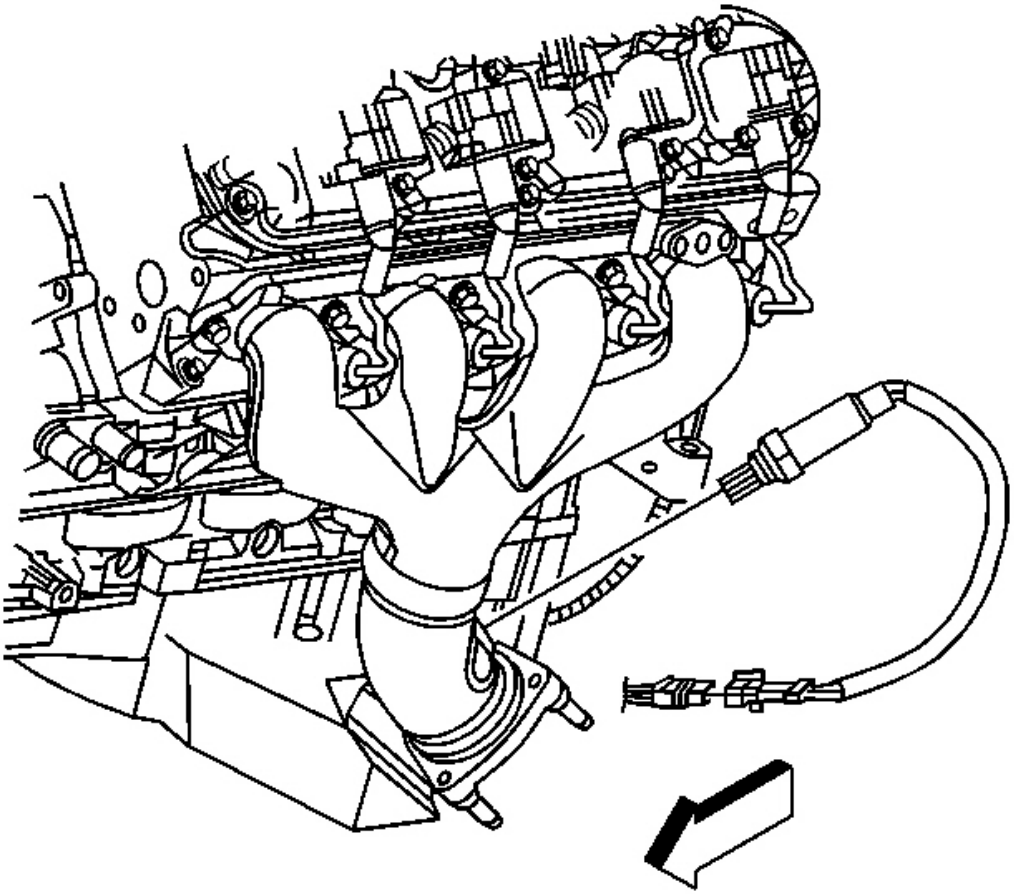

Fig. 63: HO2S Bank 1 Sensor 1
Courtesy of GENERAL MOTORS CORP.

3. Carefully back out the heated oxygen sensor.

Installation Procedure (Bank 1 Sensor 1)

IMPORTANT: Use special anti-seize compound on the heated oxygen sensor threads. The compound consists of graphite suspended in fluid and glass beads. The graphite burns away, but the glass beads remain, making the sensor easier to remove. New or service sensors already have the compound applied to the threads. If you remove an oxygen sensor and if for any reason you must reinstall the same oxygen sensor, apply the anti-seize compound to the threads before reinstallation.

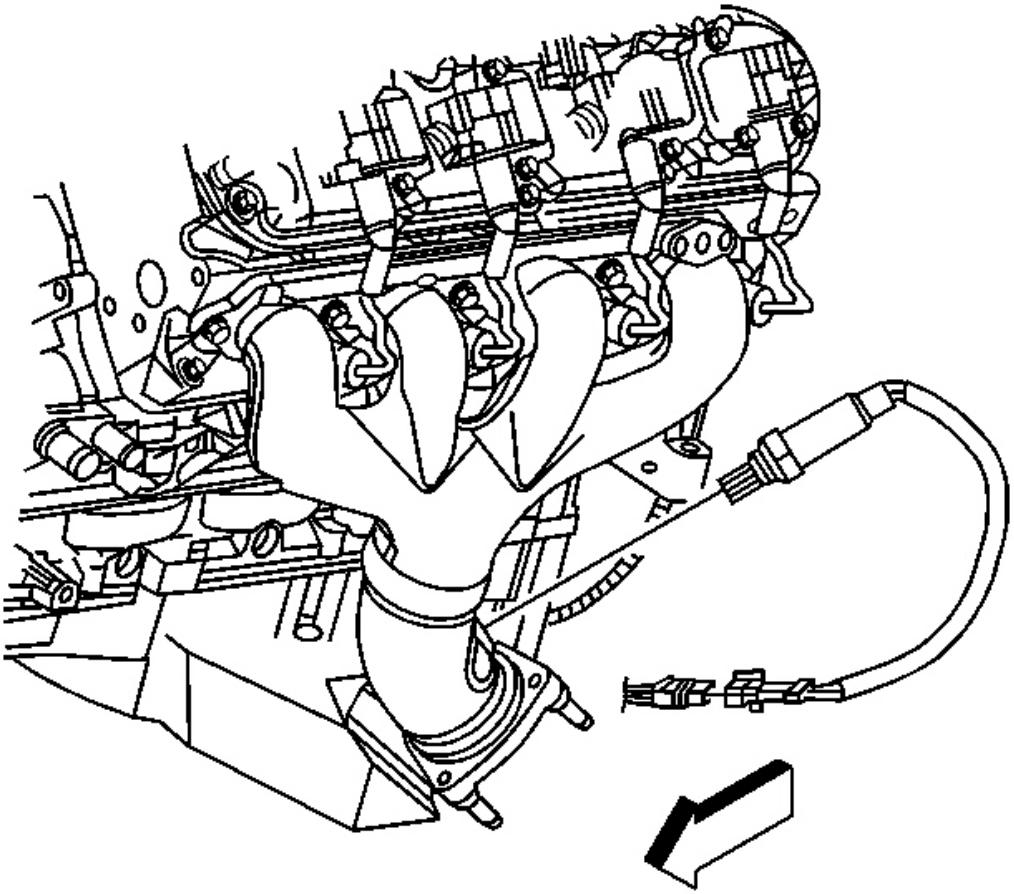

Fig. 64: HO2S Bank 1 Sensor 1
Courtesy of GENERAL MOTORS CORP.

1. Coat the threads of the heated oxygen sensor with the anti-seize compound P/N 5613695, or the equivalent if necessary.

NOTE: **Refer to Fastener Notice in Cautions and Notices.**

2. Install the heated oxygen sensor.

   Tighten: Tighten the HO2S to 41 N.m (30 lb ft).

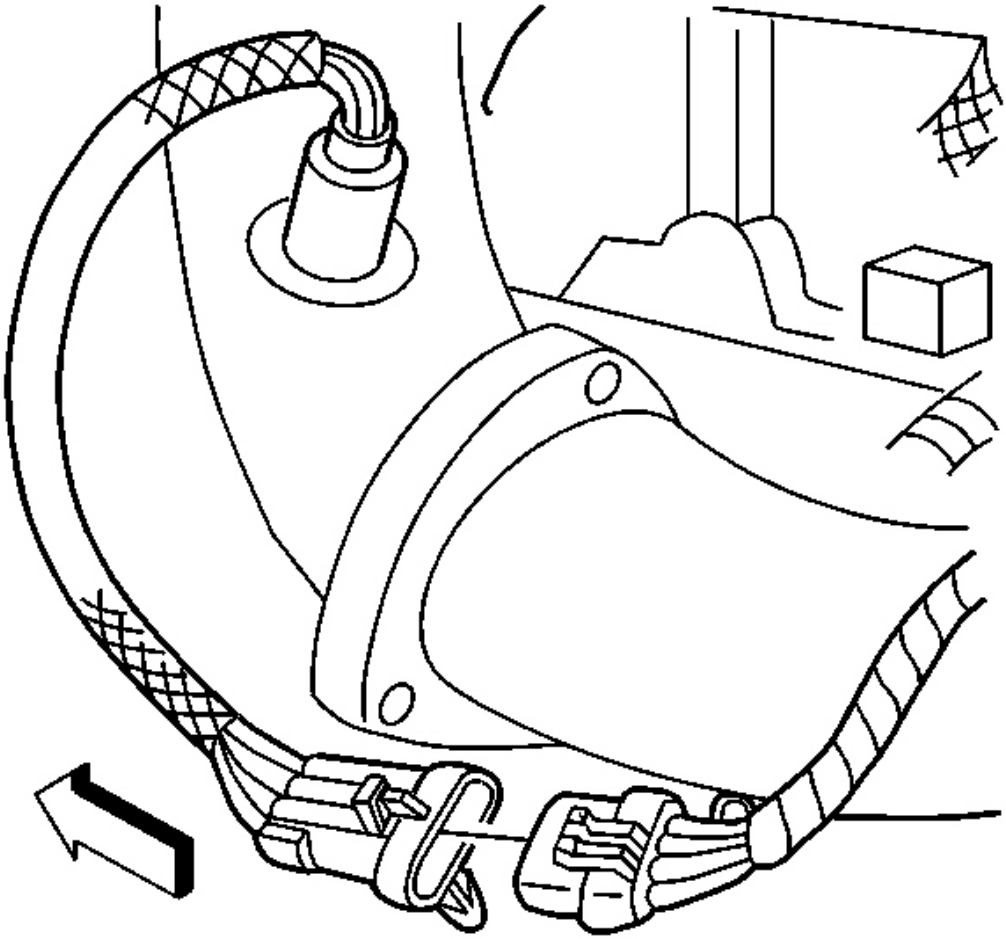

Fig. 65: HO2S Electrical Connector Bank 1 Sensor 1
Courtesy of GENERAL MOTORS CORP.

3. Connect the HO2S electrical connector.
4. Lower the vehicle.

HEATED OXYGEN SENSOR (HO2S) REPLACEMENT BANK 1 SENSOR 2

Removal Procedure (Bank 1 Sensor 2)

NOTE: **Refer to Heated Oxygen and Oxygen Sensor Notice in Cautions and Notices.**

NOTE: **Refer to Excessive Force and Oxygen Sensor Notice in Cautions and Notices.**

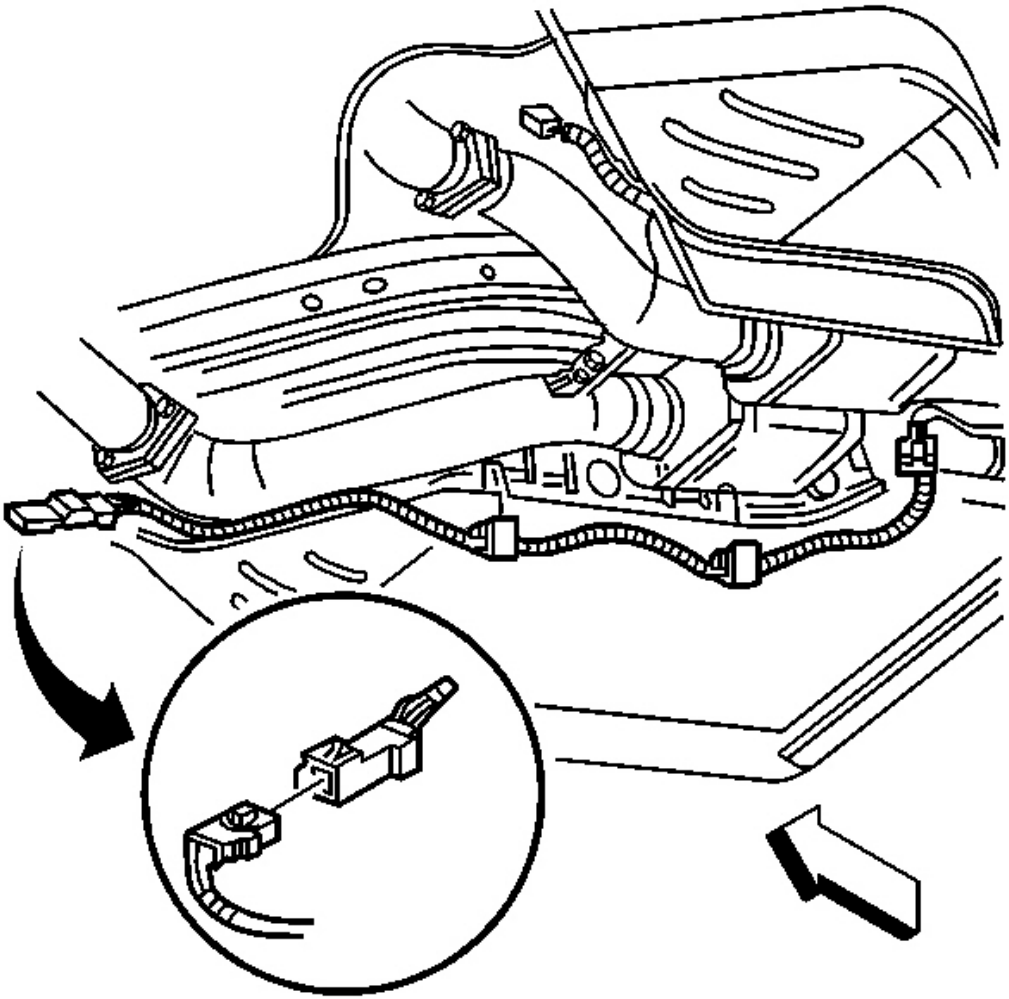

Fig. 66: HO2S Electrical Connector Bank 1 Sensor 2
Courtesy of GENERAL MOTORS CORP.

1. Raise the vehicle. Refer to **Lifting and Jacking the Vehicle** in General Information.
2. Disconnect the HO2S electrical connector.

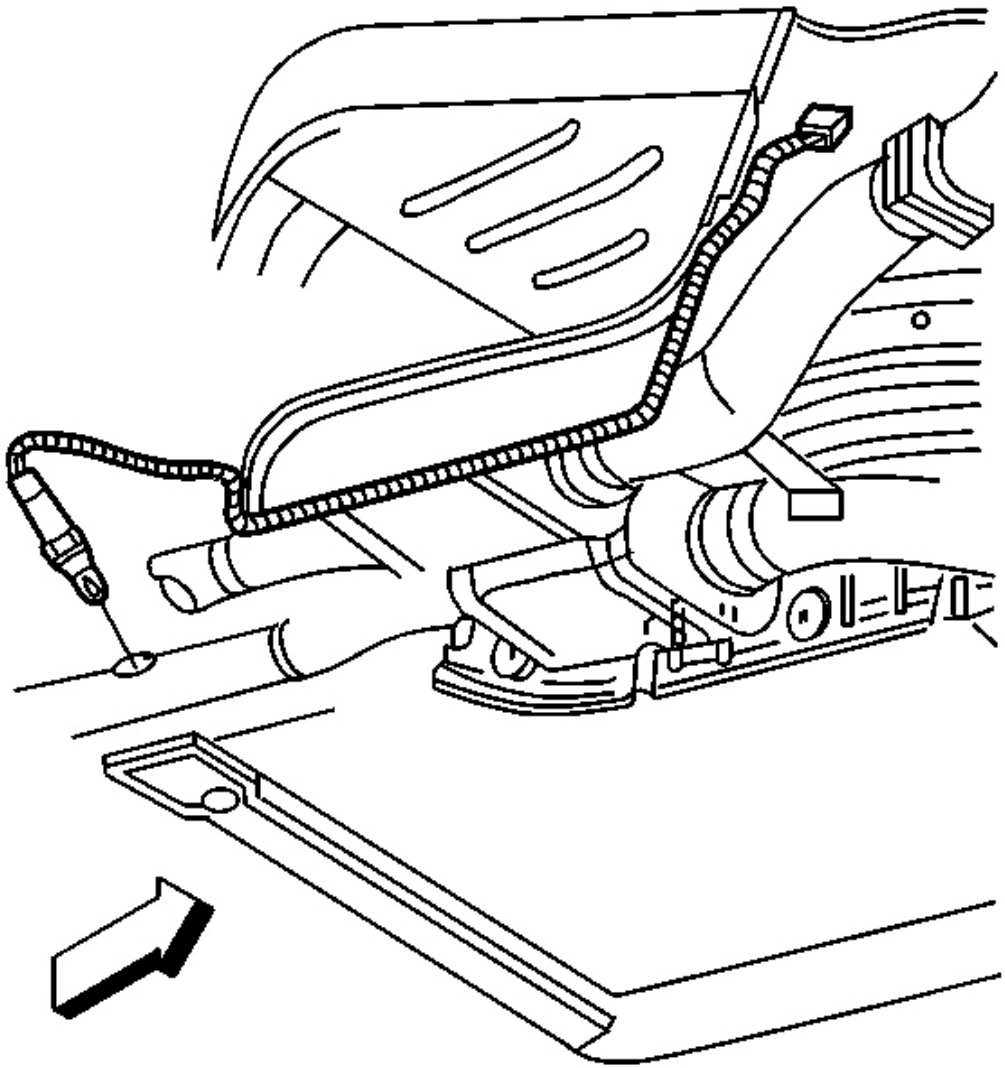

Fig. 67: HO2S Bank 1 Sensor 2
Courtesy of GENERAL MOTORS CORP.

3. Carefully back out the heated oxygen sensor.

Installation Procedure (Bank 1 Sensor 2)

IMPORTANT: Use special anti-seize compound on the heated oxygen sensor threads. The compound consists of graphite suspended in fluid and glass beads. The graphite burns away, but the glass beads remain, making the sensor easier to

remove. New or service sensors already have the compound applied to the threads. If you remove an oxygen sensor and if for any reason you must reinstall the same oxygen sensor, apply the anti-seize compound to the threads before reinstallation.

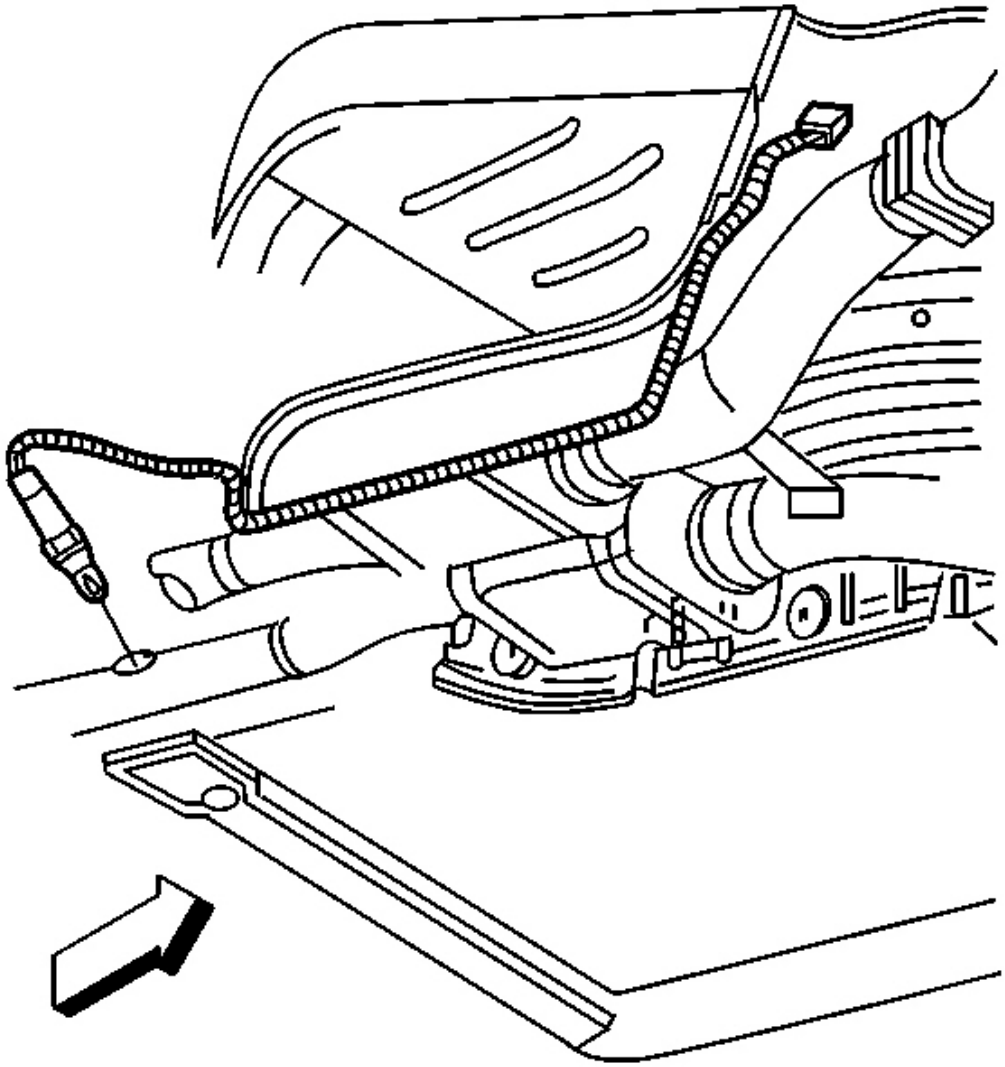

Fig. 68: HO2S Bank 1 Sensor 2
Courtesy of GENERAL MOTORS CORP.

1. Coat the threads of the heated oxygen sensor with the anti-seize compound P/N 5613695, or the

equivalent if necessary.

NOTE: Refer to Fastener Notice in Cautions and Notices.

2. Install the heated oxygen sensor.

   Tighten: Tighten the HO2S to 41 N.m (30 lb ft).

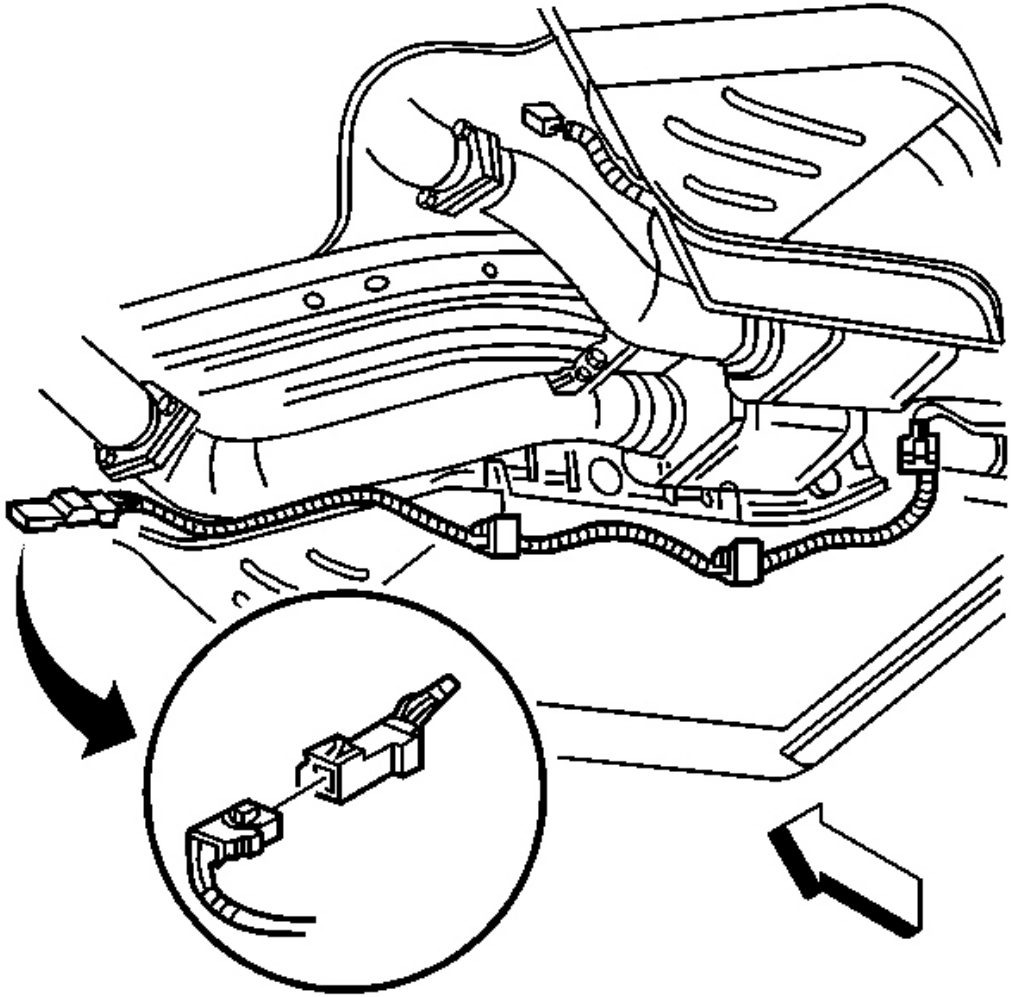

Fig. 69: HO2S Electrical Connector Bank 1 Sensor 2
Courtesy of GENERAL MOTORS CORP.

3. Connect the HO2S electrical connector.

4. Lower the vehicle.

HEATED OXYGEN SENSOR (HO2S) REPLACEMENT BANK 2 SENSOR 1

Removal Procedure (Bank 2 Sensor 1)

NOTE: **Refer to Heated Oxygen and Oxygen Sensor Notice in Cautions and Notices.**

NOTE: **Refer to Excessive Force and Oxygen Sensor Notice in Cautions and Notices.**

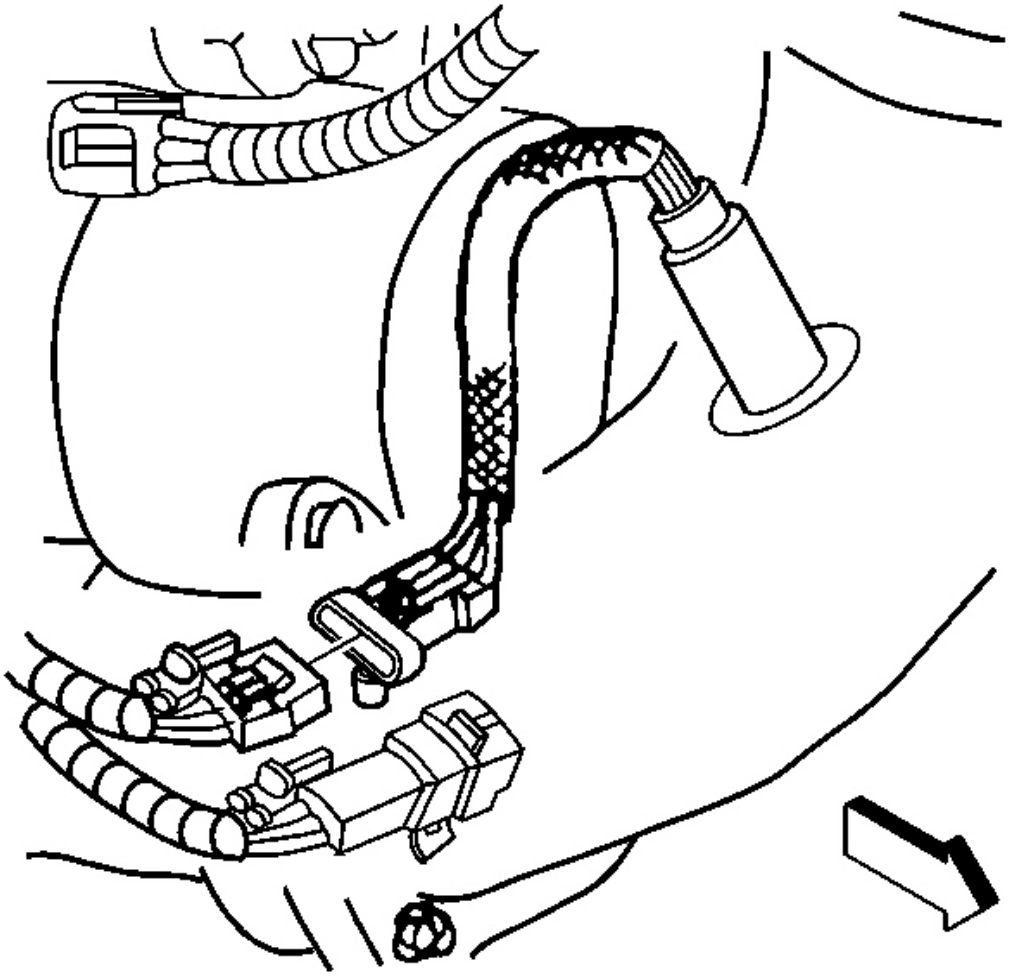

Fig. 70: HO2S Electrical Connector Bank 2 Sensor 1
Courtesy of GENERAL MOTORS CORP.

1. Raise the vehicle. Refer to **Lifting and Jacking the Vehicle** in General Information.
2. Disconnect the HO2S electrical connector.

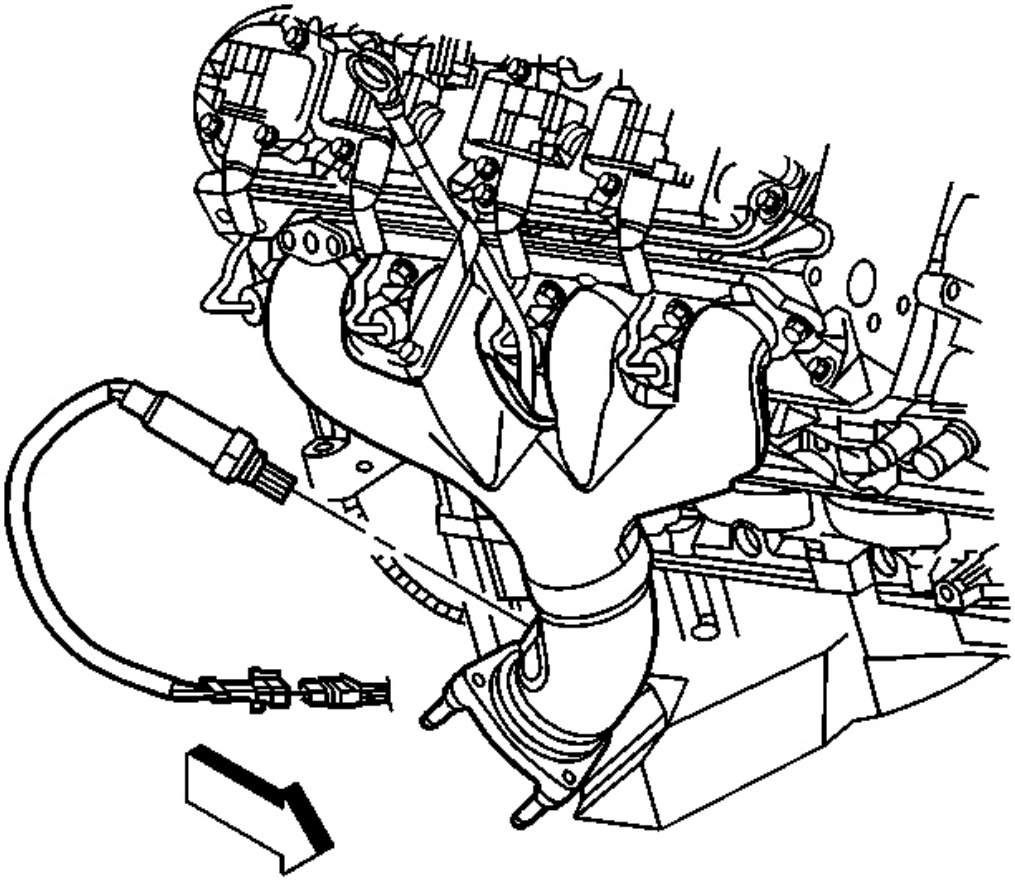

Fig. 71: HO2S Bank 2 Sensor 1
Courtesy of GENERAL MOTORS CORP.

3. Carefully back out the heated oxygen sensor.

Installation Procedure (Bank 2 Sensor 1)

IMPORTANT: Use special anti-seize compound on the heated oxygen sensor threads. The compound consists of graphite suspended in fluid and glass beads. The graphite burns away, but the glass beads remain, making the sensor easier to remove. New or service sensors already have the compound applied to the threads. If you remove an oxygen sensor and if for any reason you must

reinstall the same oxygen sensor, apply the anti-seize compound to the threads before reinstallation.

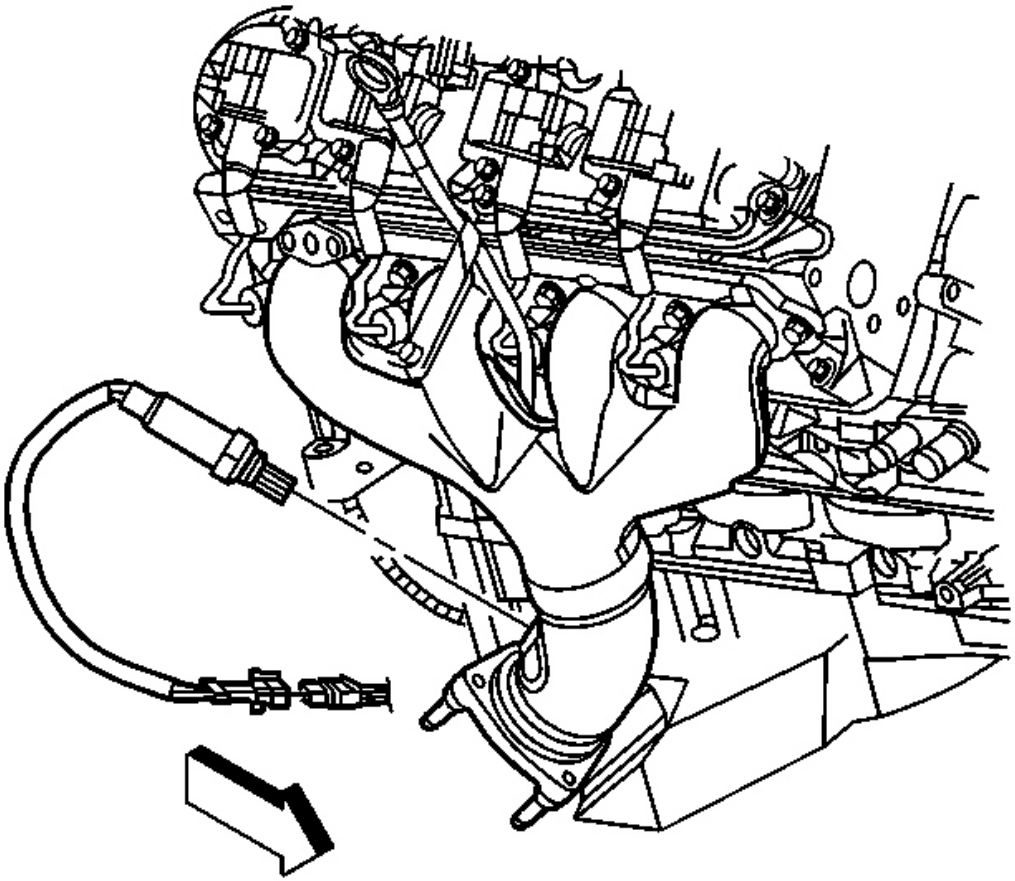

Fig. 72: HO2S Bank 2 Sensor 1
Courtesy of GENERAL MOTORS CORP.

1. Coat the threads of the heated oxygen sensor with the anti-seize compound P/N 5613695, or the equivalent if necessary.

NOTE: **Refer to Fastener Notice in Cautions and Notices.**

2. Install the heated oxygen sensor.

Tighten: Tighten the HO2S to 41 N.m (30 lb ft).

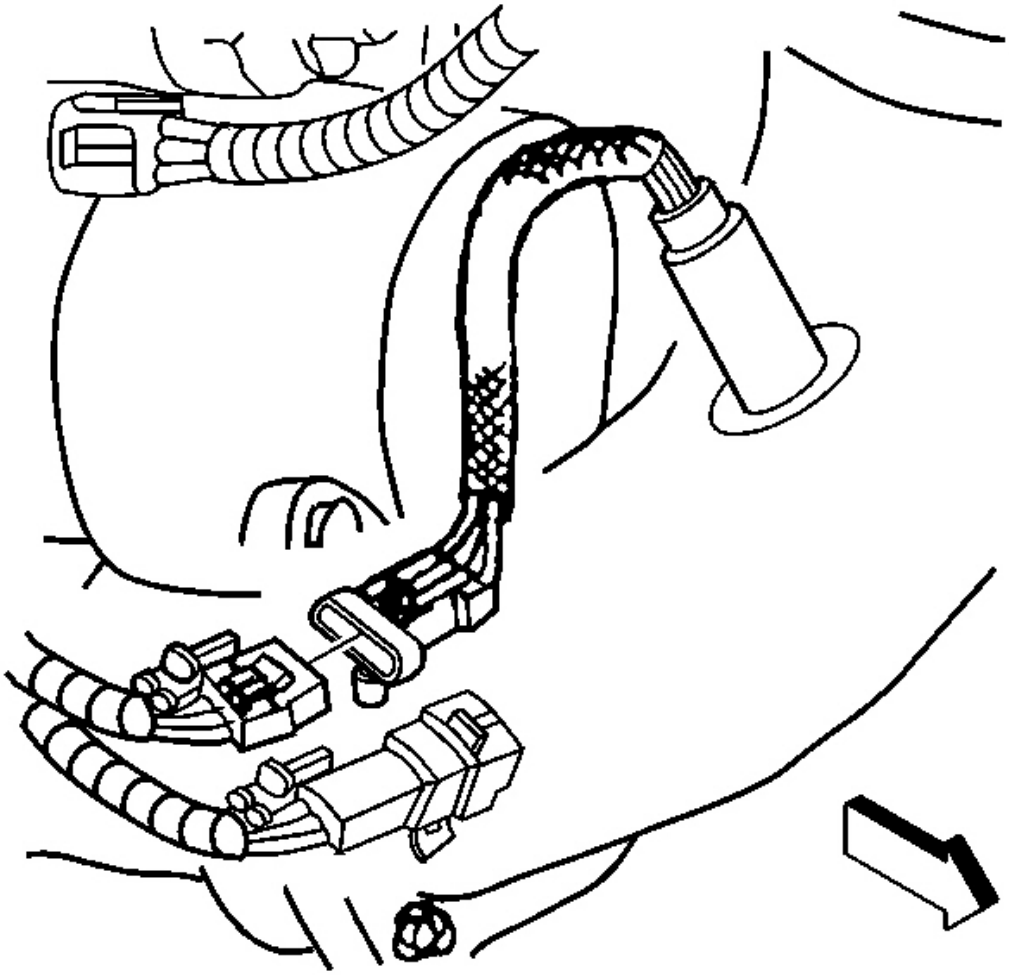

Fig. 73: HO2S Electrical Connector Bank 2 Sensor 1
Courtesy of GENERAL MOTORS CORP.

3. Connect the HO2S electrical connector.
4. Lower the vehicle.

HEATED OXYGEN SENSOR (HO2S) REPLACEMENT BANK 2 SENSOR 2

Removal Procedure (Bank 2 Sensor 2)

NOTE: Refer to Heated Oxygen and Oxygen Sensor Notice in Cautions and Notices.

NOTE: **Refer to Excessive Force and Oxygen Sensor Notice in Cautions and Notices.**

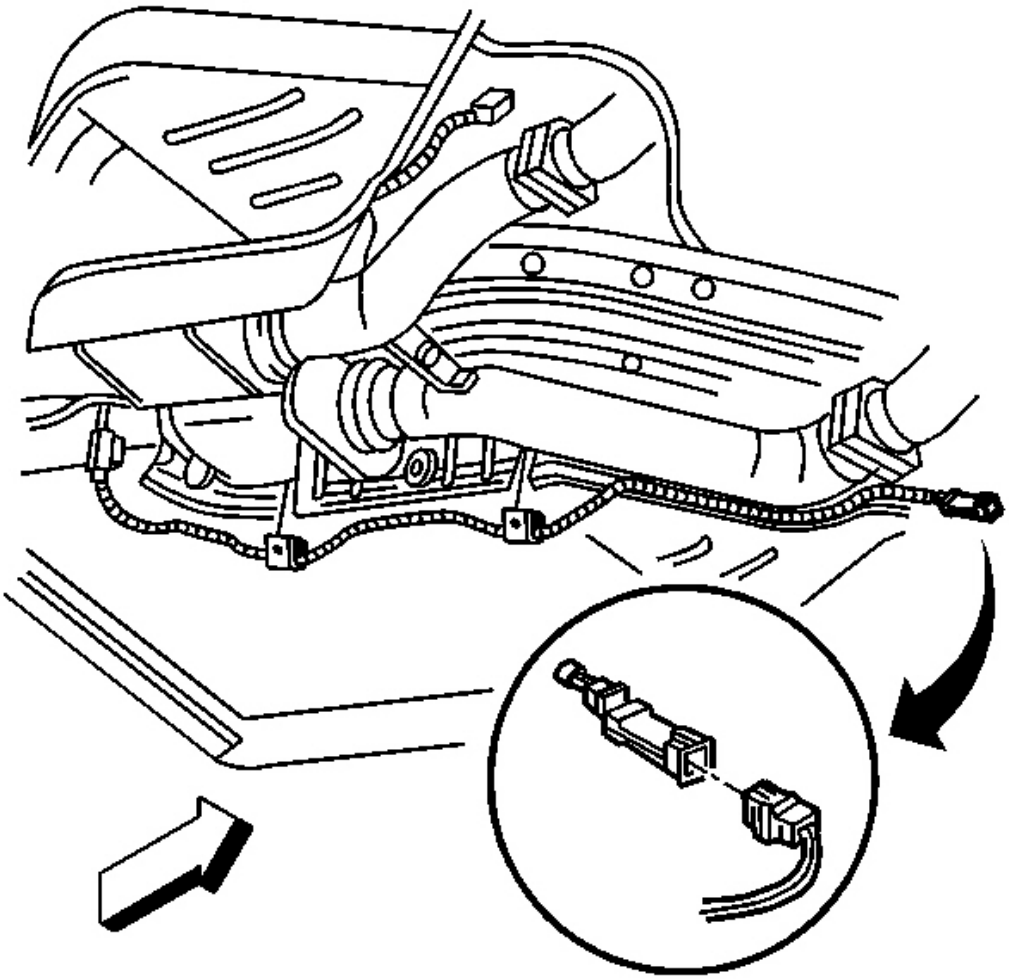

Fig. 74: HO2S Electrical Connector Bank 2 Sensor 2
Courtesy of GENERAL MOTORS CORP.

1. Raise the vehicle. Refer to **Lifting and Jacking the Vehicle** in General Information.
2. Disconnect the HO2S electrical connector.

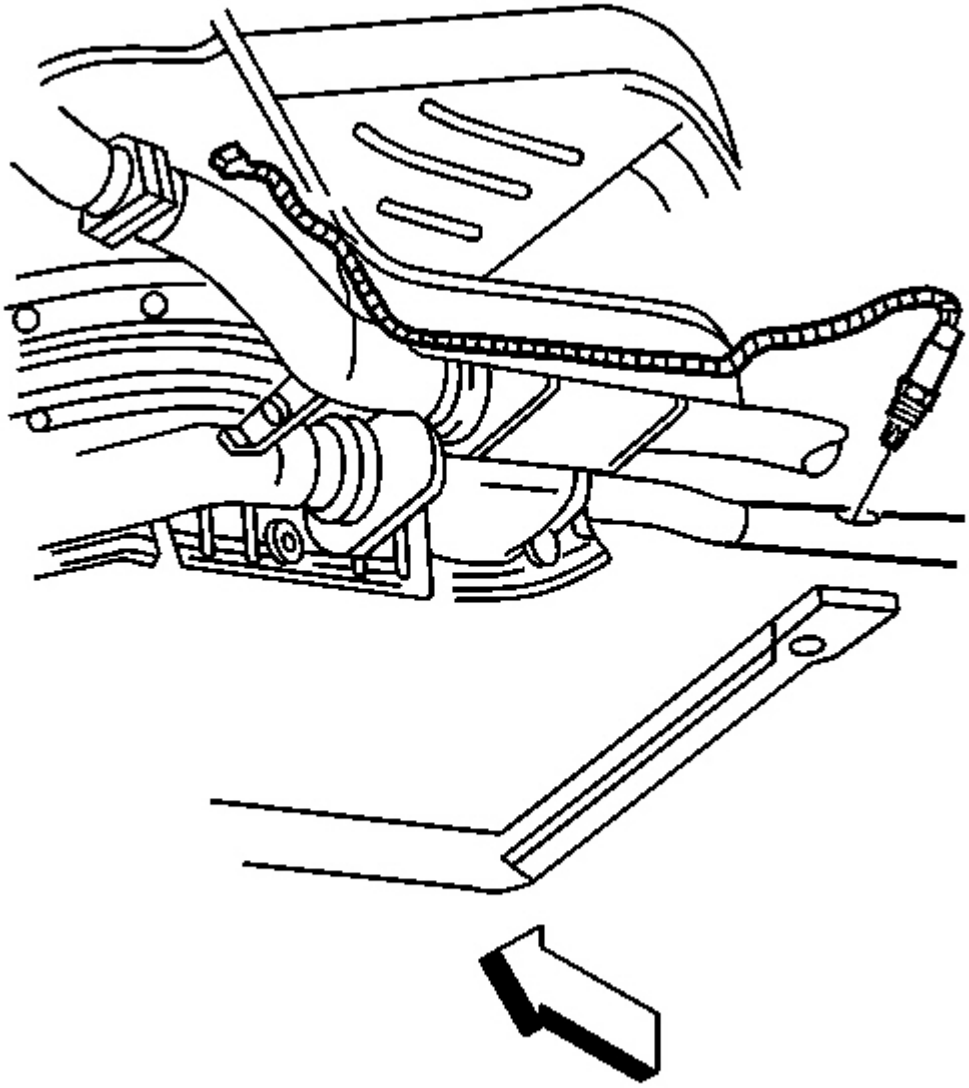

Fig. 75: HO2S Bank 2 Sensor 2
Courtesy of GENERAL MOTORS CORP.

3. Carefully back out the heated oxygen sensor.

Installation Procedure (Bank 2 Sensor 2)

IMPORTANT: Use special anti-seize compound on the heated oxygen sensor threads. The

compound consists of graphite suspended in fluid and glass beads. The graphite burns away, but the glass beads remain, making the sensor easier to remove. New or service sensors already have the compound applied to the threads. If you remove an oxygen sensor and if for any reason you must reinstall the same oxygen sensor, apply the anti-seize compound to the threads before reinstallation.

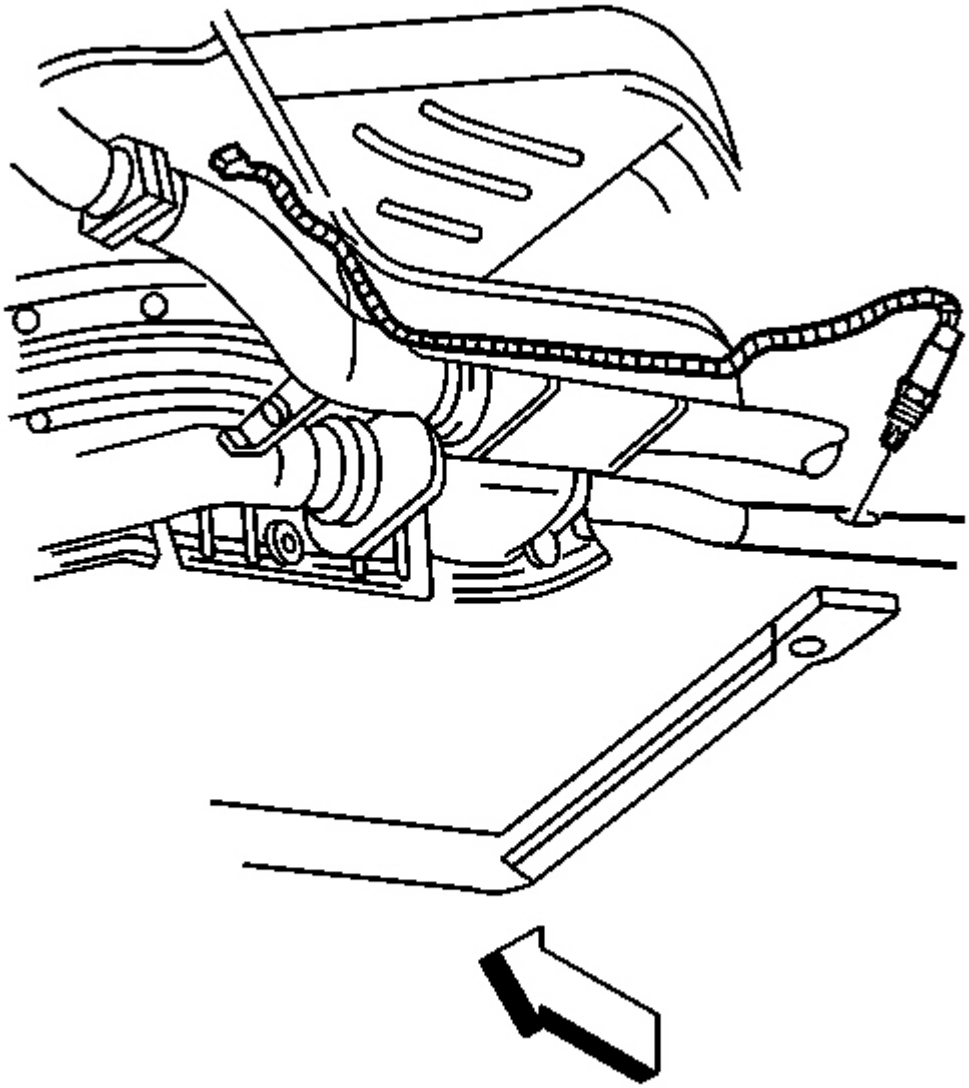

Fig. 76: HO2S Bank 2 Sensor 2

Courtesy of GENERAL MOTORS CORP.

1. Coat the threads of the heated oxygen sensor with the anti-seize compound P/N 5613695, or the equivalent if necessary.

NOTE: Refer to Fastener Notice in Cautions and Notices.

2. Install the heated oxygen sensor.

Tighten: Tighten the HO2S to 41 N.m (30 lb ft).

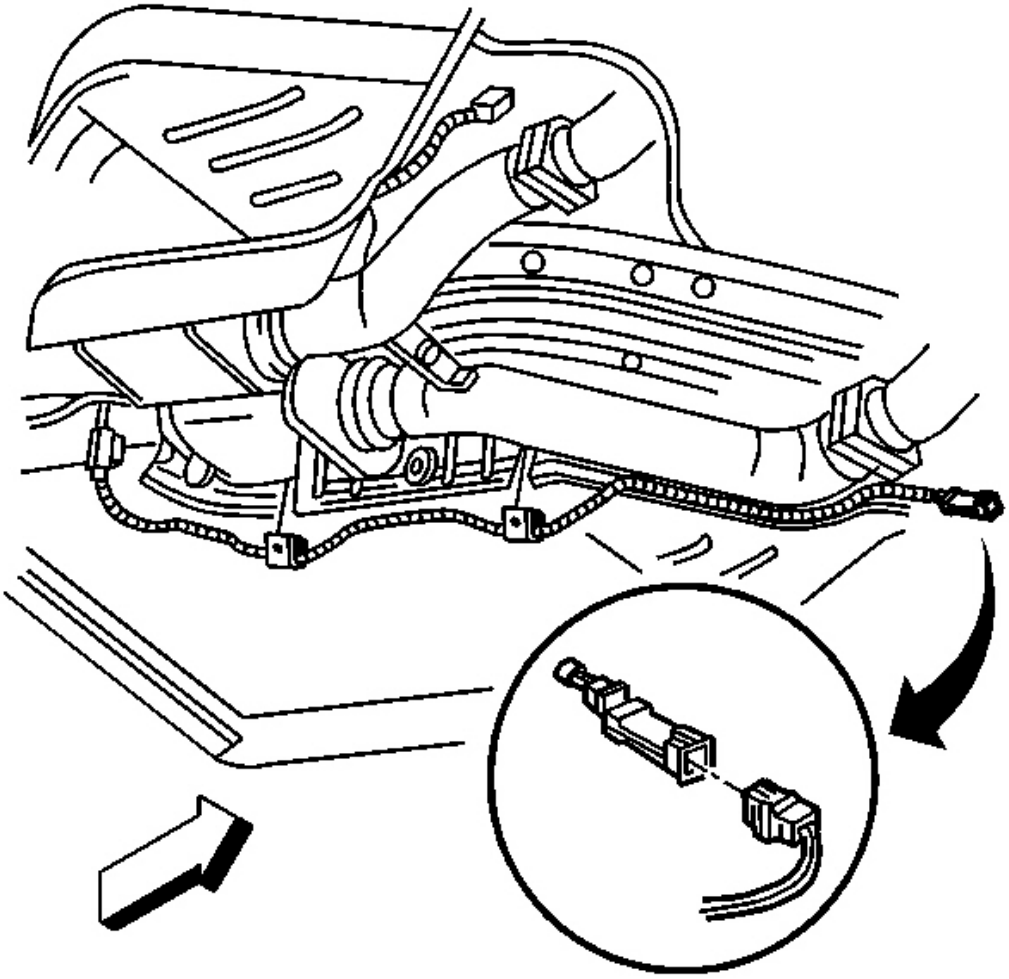

Fig. 77: HO2S Electrical Connector Bank 2 Sensor 2

Courtesy of GENERAL MOTORS CORP.

3. Connect the HO2S electrical connector.
4. Lower the vehicle.

ACCELERATOR PEDAL POSITION (APP) SENSOR REPLACEMENT

Removal Procedure

NOTE: **Handle the electronic throttle control components carefully. Use cleanliness in order to prevent damage. Do not drop the electronic throttle control components. Do not roughly handle the electronic throttle control components. Do not immerse the electronic throttle control components in cleaning solvents of any type.**

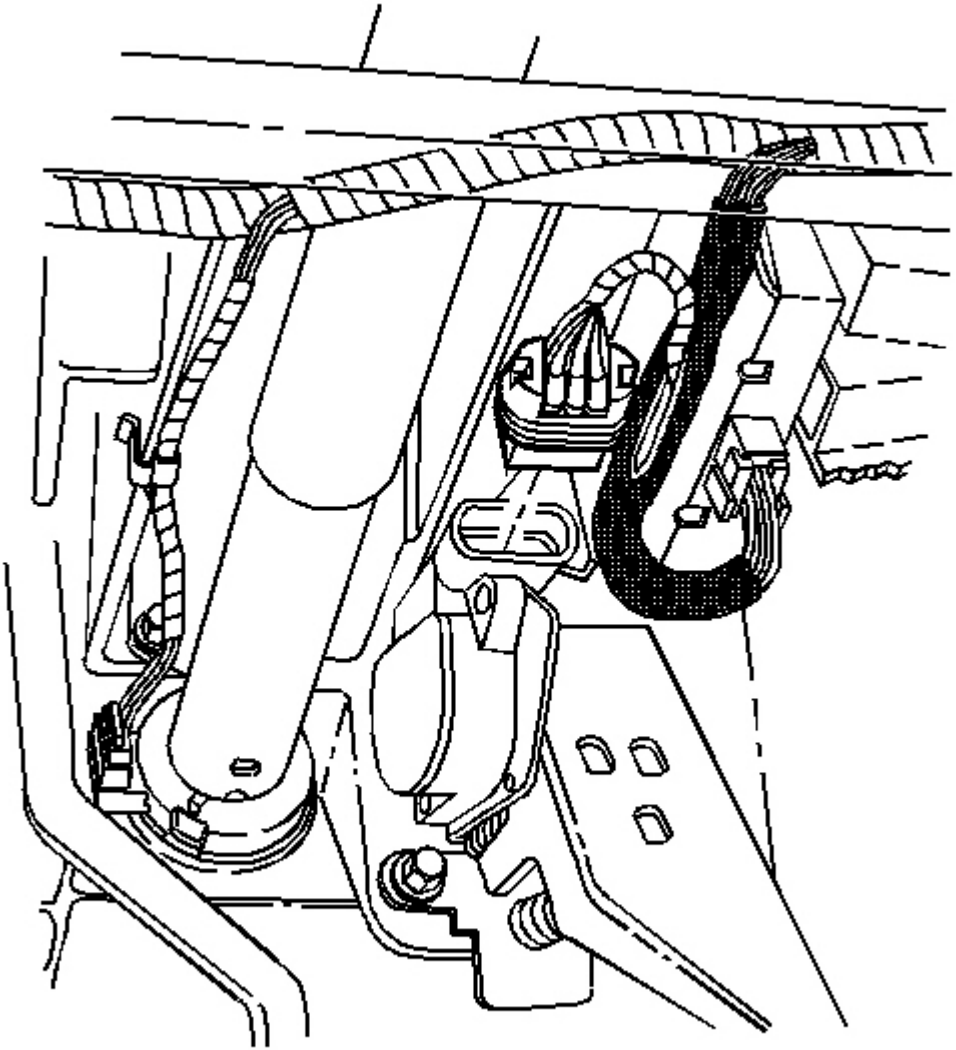

Fig. 78: Accelerator Pedal Sensor Module Electrical Connector
Courtesy of GENERAL MOTORS CORP.

1. Remove the left instrument panel (IP) on the lower closeout insulator panel. Refer to **Closeout/Insulator Panel Replacement - Left** in Instrument Panel, Gages and Console.
2. Disconnect the electrical connector of the accelerator pedal sensor module.

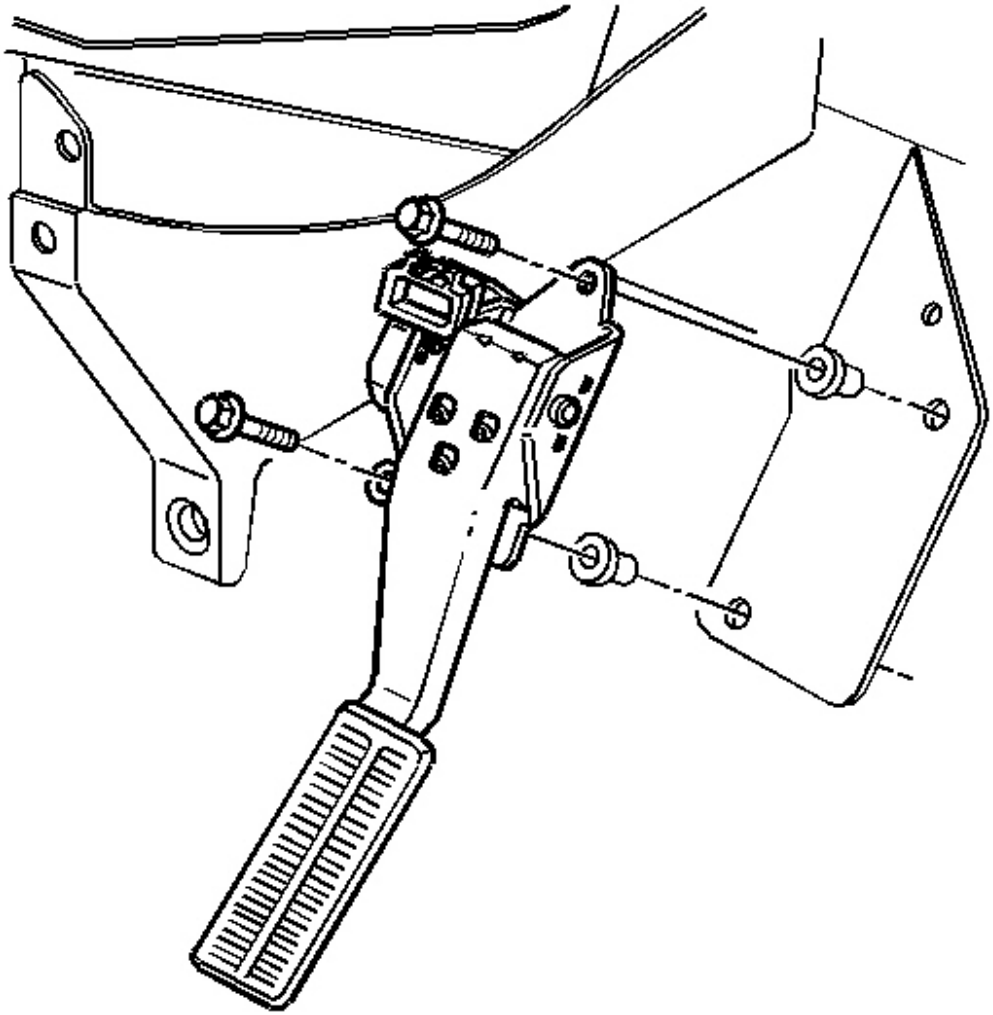

Fig. 79: Accelerator Pedal Mounting & Bolts
Courtesy of GENERAL MOTORS CORP.

3. Remove the accelerator pedal mounting bolts.
4. Remove the accelerator pedal.

Installation Procedure

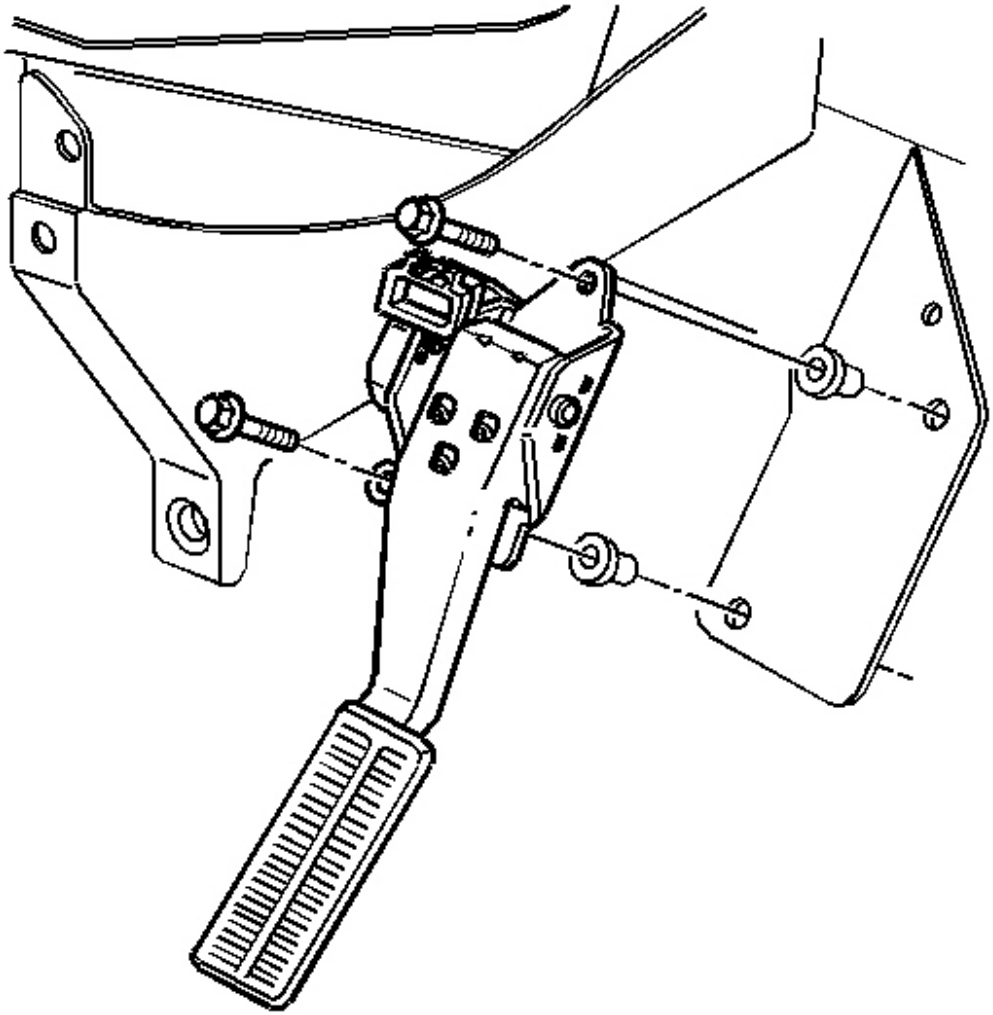

Fig. 80: Accelerator Pedal Mounting & Bolts
Courtesy of GENERAL MOTORS CORP.

1. Install the accelerator pedal to the steering column support bracket.

NOTE: **Refer to the Fastener Notice in Cautions and Notices.**

IMPORTANT: Always use a torque wrench in order to obtain the proper torque.

2. Install the accelerator pedal mounting bolts.

Tighten: Tighten the accelerator pedal mounting bolts to 20 N.m (15 lb ft).

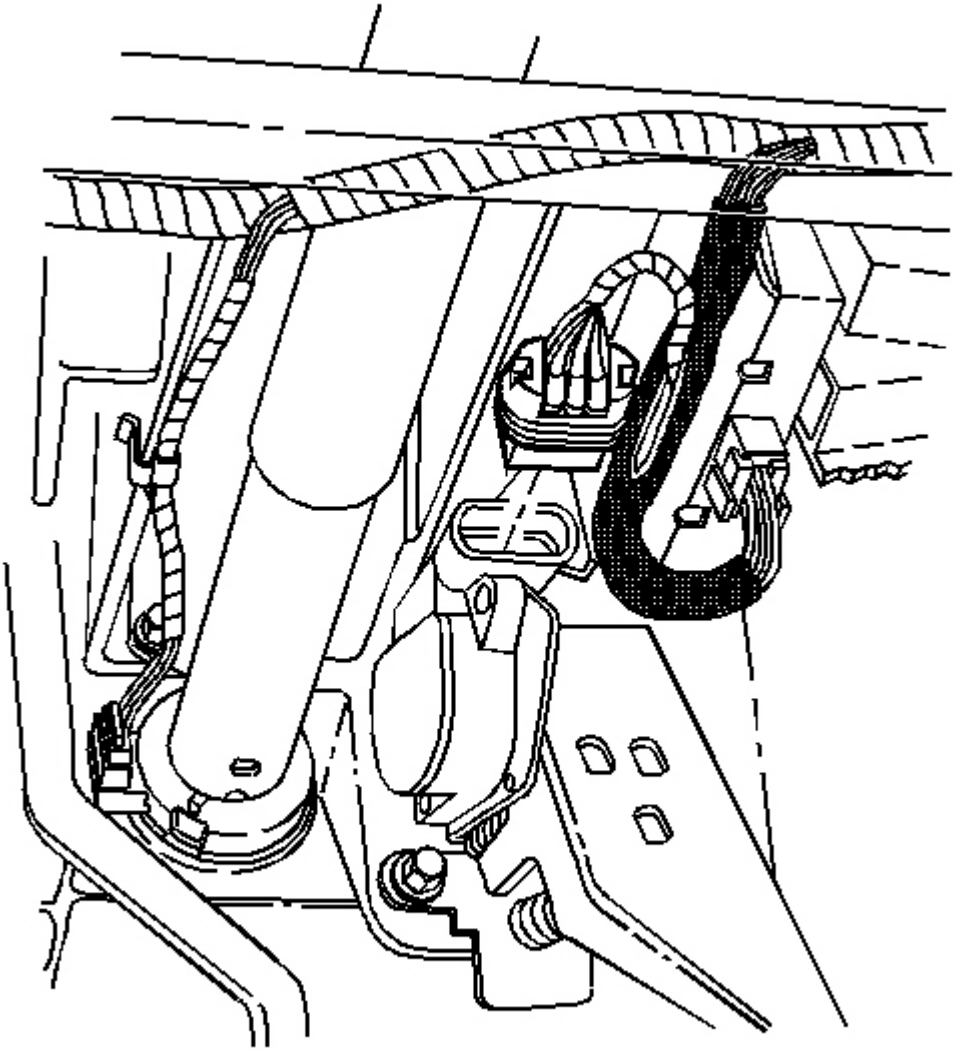

Fig. 81: Accelerator Pedal Sensor Module Electrical Connector
Courtesy of GENERAL MOTORS CORP.

3. Connect the accelerator pedal sensor module electrical connector.
4. Check for complete throttle opening, and throttle closing positions by operating the accelerator pedal. Monitor the throttle angles using a scan tool. The accelerator pedal should operate freely without binding between full closed throttle, and wide open throttle.

5. Check for an incorrect carpet fit under the accelerator pedal.
6. Install the left IP on the lower closeout insulator panel. Refer to **Closeout/Insulator Panel Replacement - Left** in Instrument Panel, Gages and Console.

THROTTLE BODY ASSEMBLY REPLACEMENT

Removal Procedure

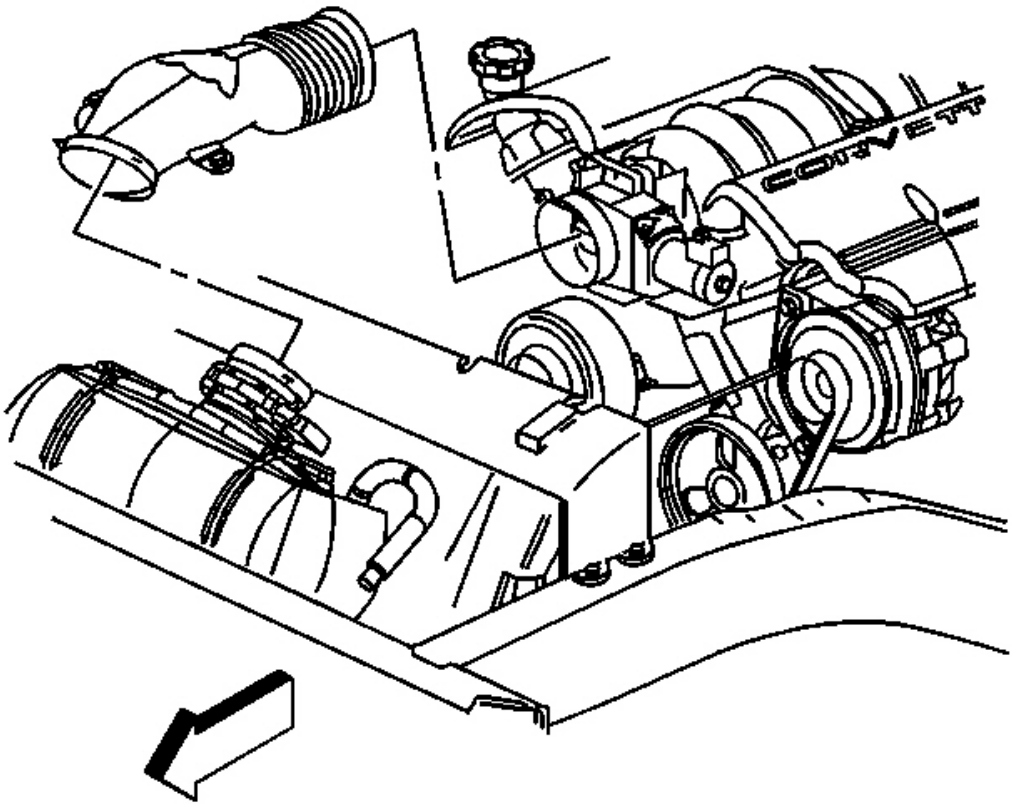

Fig. 82: Air Intake Duct & Clamp
Courtesy of GENERAL MOTORS CORP.

NOTE: **Handle the electronic throttle control components carefully. Use cleanliness in order to prevent damage. Do not drop the electronic throttle control components. Do not roughly handle the electronic throttle control components. Do not immerse the electronic throttle control components in cleaning solvents of any type.**

1. An 8-digit part identification number is stamped on the throttle body casting. Refer to this number if servicing, or if a part replacement is required.
2. Raise the vehicle. Refer to **Lifting and Jacking the Vehicle** in General Information.
3. Partially drain the cooling system in order to allow the hoses at the throttle body to be removed. Refer to **Draining and Filling Cooling System** in Engine Cooling.
4. Lower the vehicle.

IMPORTANT: Cover or plug any openings when servicing the throttle body in order to prevent possible contamination.

5. Disconnect the intake air temperature sensor electrical connector.
6. Remove the air intake duct.

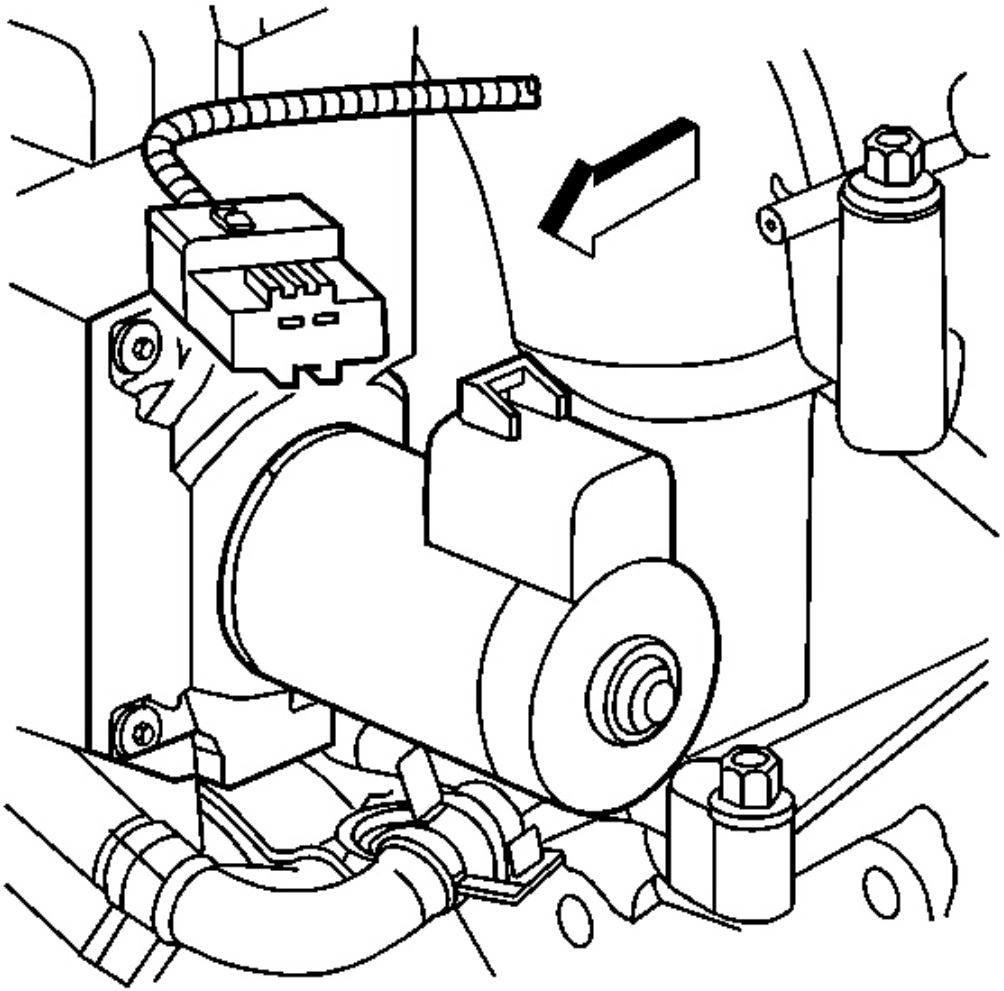

Fig. 83: Air Control Valve Electrical Connector
Courtesy of GENERAL MOTORS CORP.

7. Disconnect the air control valve electrical connector.

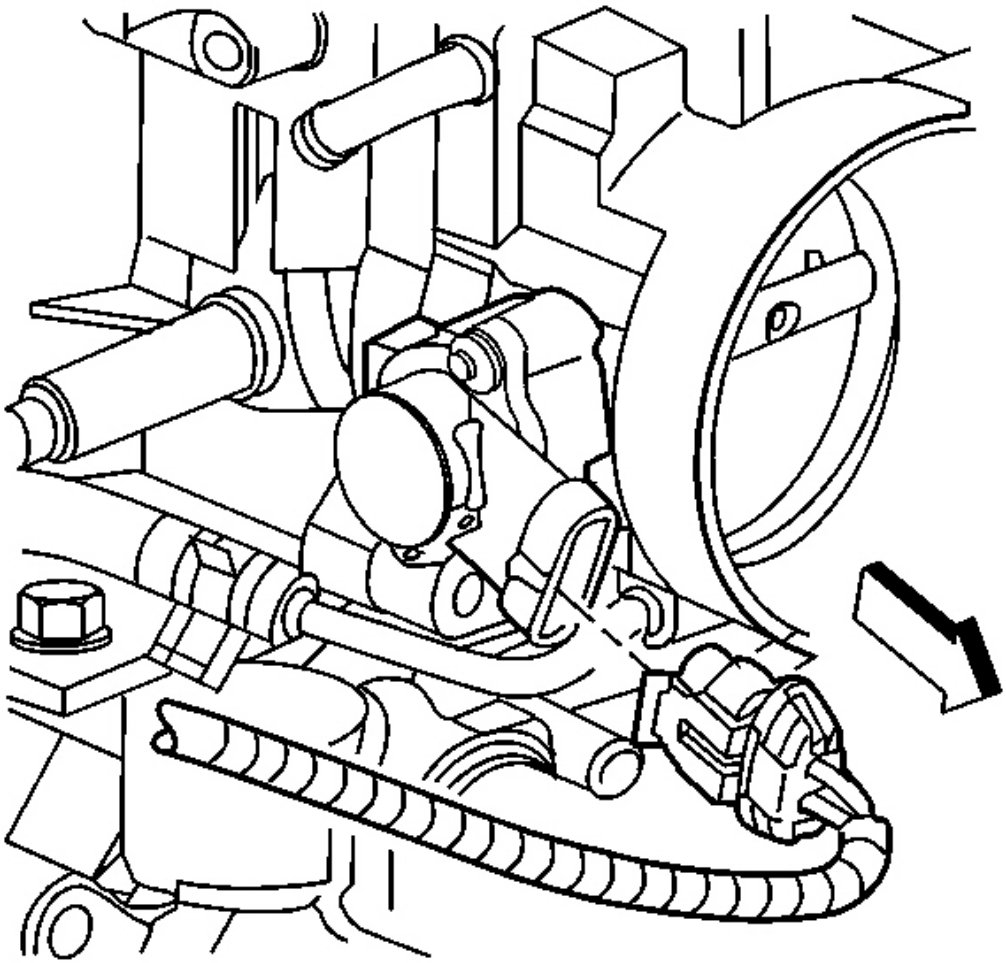

Fig. 84: TP Sensor & Electrical Connector
Courtesy of GENERAL MOTORS CORP.

8. Disconnect the TP sensor electrical connector.
9. Disconnect the crankcase ventilation hose from the throttle body.

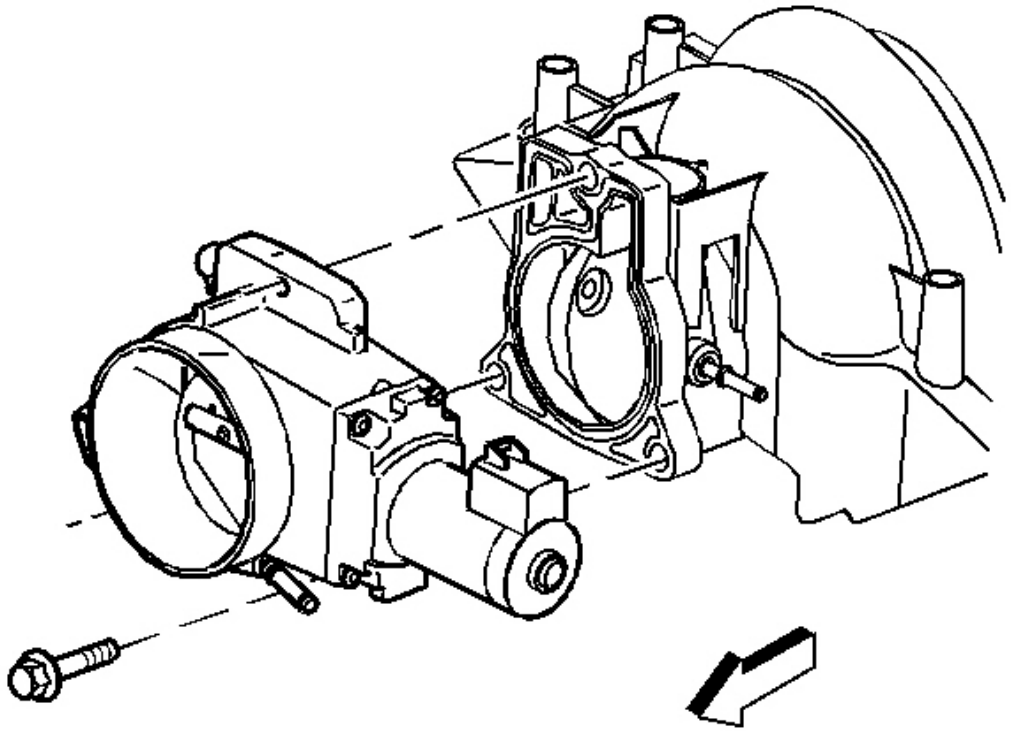

Fig. 85: View Of Throttle Body
Courtesy of GENERAL MOTORS CORP.

10. Remove the throttle body attaching bolts.
11. Disconnect the coolant hoses from the throttle body.
12. Remove the throttle body and the gasket.

IMPORTANT: Do not reuse the throttle body gasket. Install a new gasket during assembly.

13. Discard the throttle body gasket.
14. Inspect the crankcase ventilation hose and the tube. Replace any damaged components.

Installation Procedure

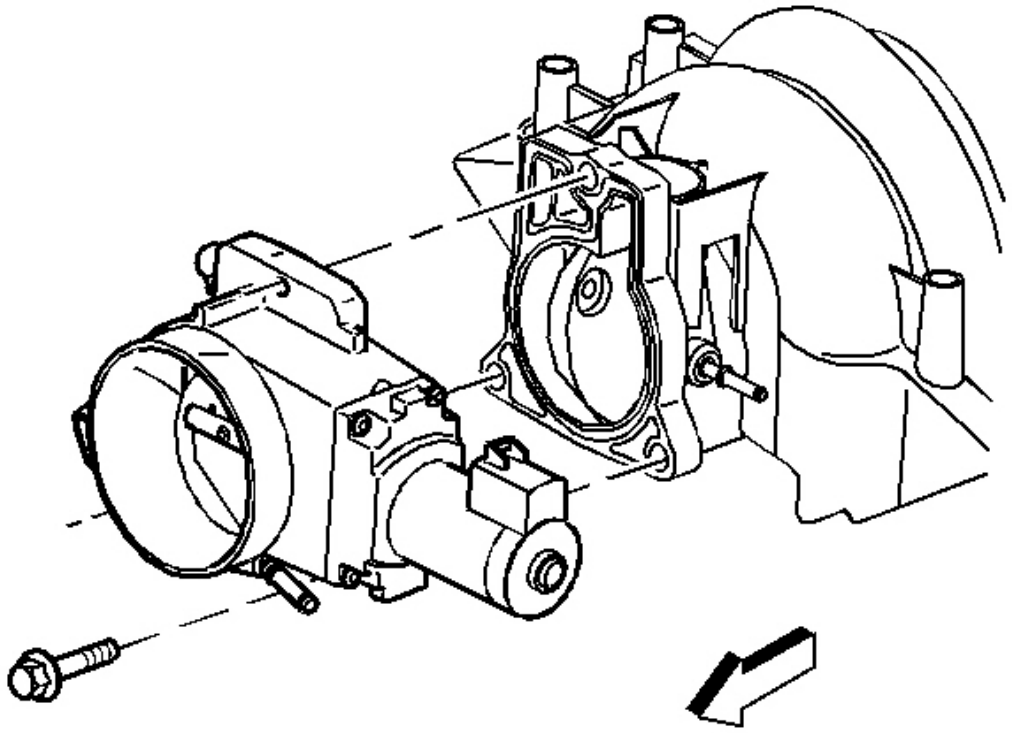

Fig. 86: View Of Throttle Body
Courtesy of GENERAL MOTORS CORP.

1. Install a new throttle body gasket.
2. Connect the coolant hoses to the throttle body.
3. Install the throttle body assembly.

NOTE: **Refer to the Fastener Notice in Cautions and Notices.**

IMPORTANT: Always use a torque wrench in order to obtain the proper torque.

4. Install the throttle body attaching bolts.

Tighten: Tighten the throttle body bolts to 10 N.m (89 lb in).

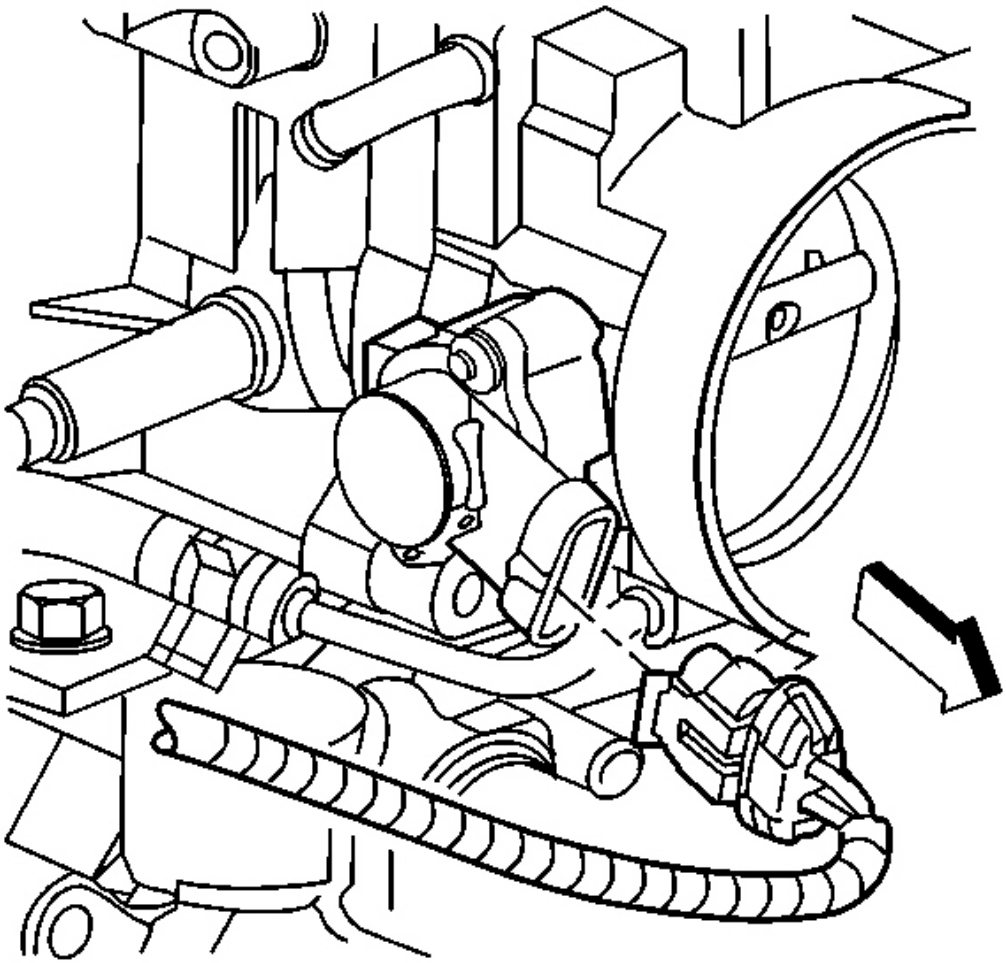

Fig. 87: TP Sensor & Electrical Connector
Courtesy of GENERAL MOTORS CORP.

5. Connect the TP sensor electrical connector.
6. Connect the crankcase ventilation hose to the throttle body.

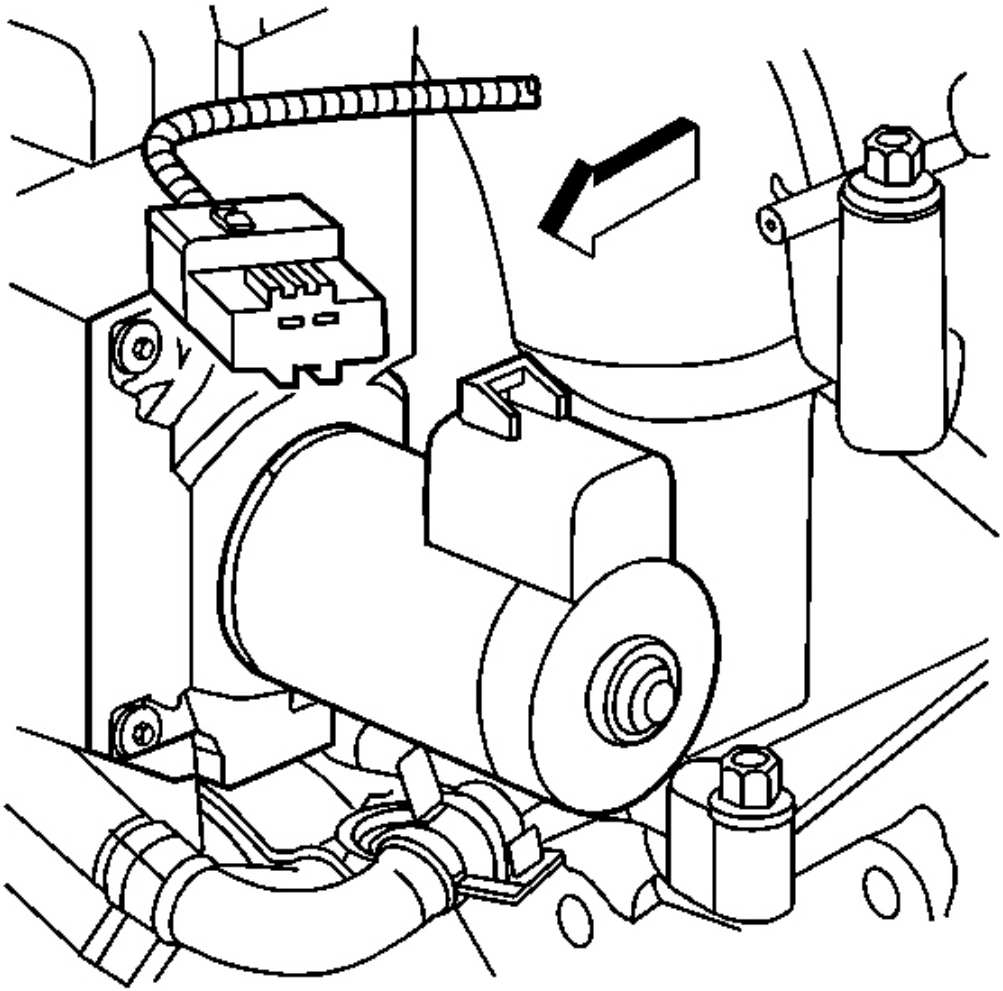

Fig. 88: Air Control Valve Electrical Connector
Courtesy of GENERAL MOTORS CORP.

IMPORTANT: Ensure that the air control valve electrical connector and the connector seal are properly installed and not damaged.

7. Connect the air control valve electrical connector.

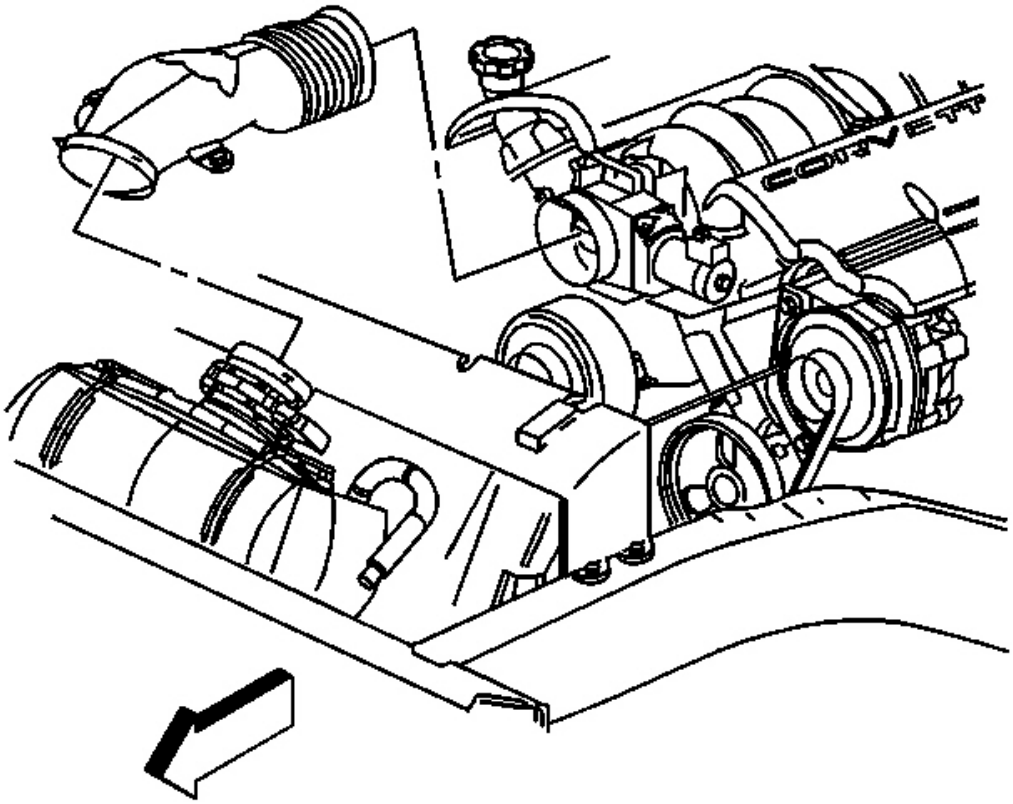

Fig. 89: Air Intake Duct & Clamp
Courtesy of GENERAL MOTORS CORP.

8. Install the air intake duct.
9. Connect the intake air temperature sensor electrical connector.
10. Refill the cooling system. Refer to **Draining and Filling Cooling System** in Engine Cooling.
11. Check for complete throttle opening and closing positions by operating the accelerator pedal. Monitor the throttle angles, using a scan tool. The accelerator pedal should operate freely without binding between full closed throttle and wide open throttle.
12. Start the engine.
13. Check for coolant leaks.

THROTTLE BODY CLEANING PROCEDURE

IMPORTANT: Over extended time and mileage, deposits may accumulate on the back of the throttle valve plate. The source of the deposit is EGR gas. Occasionally the

deposit may accumulate to a point where throttle valve movement is effected. This procedure should not be performed on vehicles with low mileage, under 80,450 kilometers (50,000 miles).

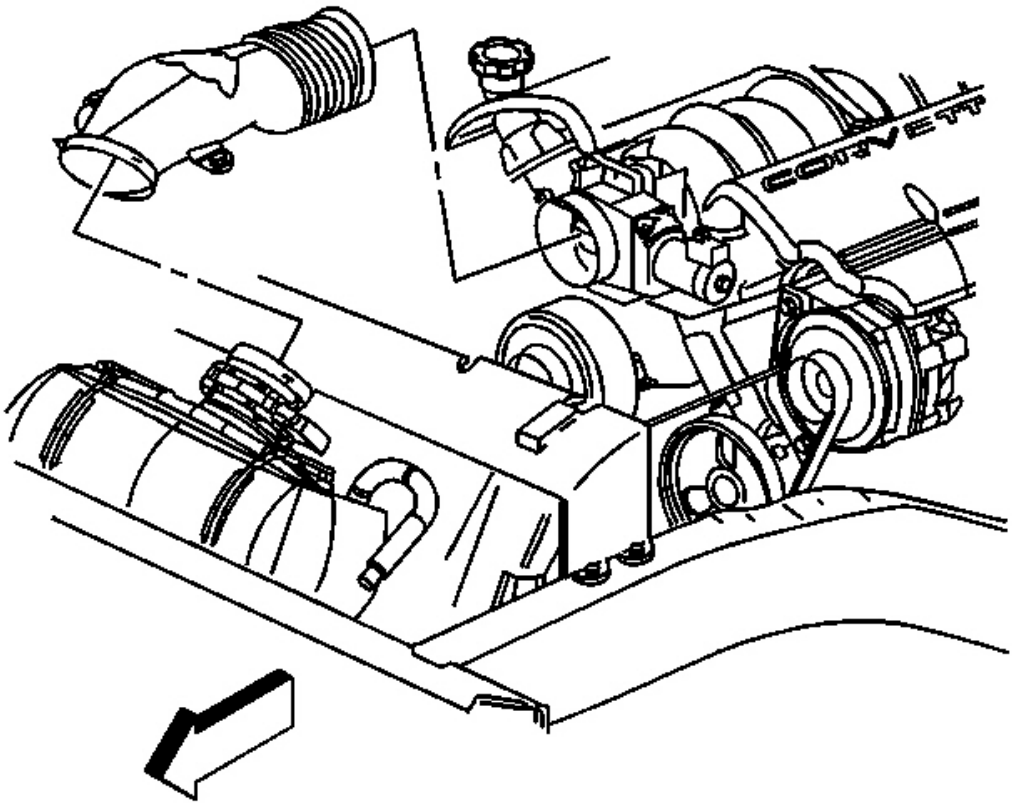

Fig. 90: Air Intake Duct & Clamp
Courtesy of GENERAL MOTORS CORP.

CAUTION: Turn OFF the ignition before inserting fingers into the throttle bore. Unexpected movement of the throttle blade could cause personal injury.

1. Remove the air intake duct.

NOTE: Do not insert any tools into the throttle body bore in order to avoid damage to the throttle valve plate.

2. Inspect the throttle body bore and the throttle valve plate for deposits. If necessary, open the throttle valve

to inspect all surfaces.

NOTE: **Do not use any solvent that contains Methyl Ethyl Ketone (MEK). This solvent may damage fuel system components.**

3. Clean the throttle body bore and the throttle valve plate using a clean shop towel with an appropriate cleaning substance, such one of the following:
   - GM Top Engine Cleaner
   - P/N 1052626
   - AC-Delco Carburetor Tune-Up Conditioner
   - P/N X66-P
4. Install the air intake duct.

FUEL PRESSURE RELIEF PROCEDURE

Tool Required

J 34730-1A Fuel Pressure Gage. See **Special Tools and Equipment** .

CAUTION: **Remove the fuel tank cap and relieve the fuel system pressure before servicing the fuel system in order to reduce the risk of personal injury. After you relieve the fuel system pressure, a small amount of fuel may be released when servicing the fuel lines, the fuel injection pump, or the connections. In order to reduce the risk of personal injury, cover the fuel system components with a shop towel before disconnection. This will catch any fuel that may leak out. Place the towel in an approved container when the disconnection is complete.**

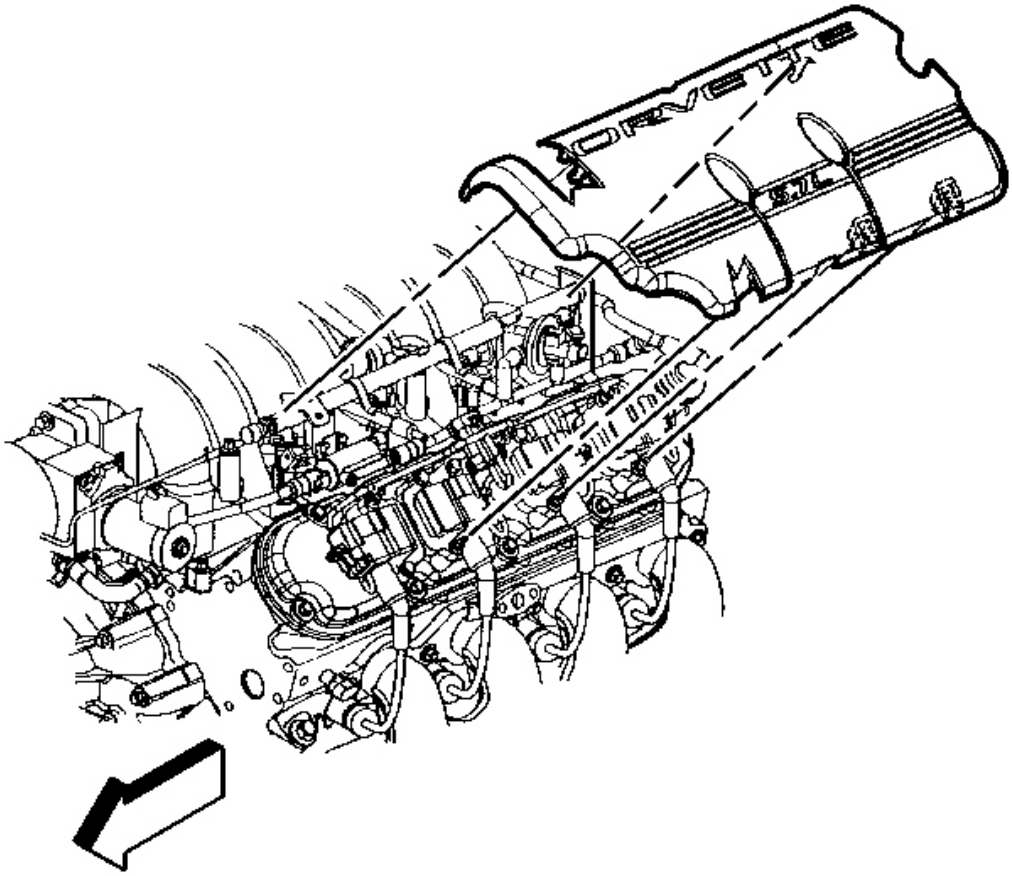

Fig. 91: Left Fuel Rail Cover
Courtesy of GENERAL MOTORS CORP.

CAUTION: Refer to the Battery Disconnect Caution in Cautions and Notices.

1. Turn the ignition OFF.
2. Disconnect the negative battery cable in order to avoid possible fuel discharge if an accidental attempt is made to start the engine.
3. Loosen the fuel filler cap in order to relieve the fuel tank vapor pressure.
4. Remove the left fuel rail cover.

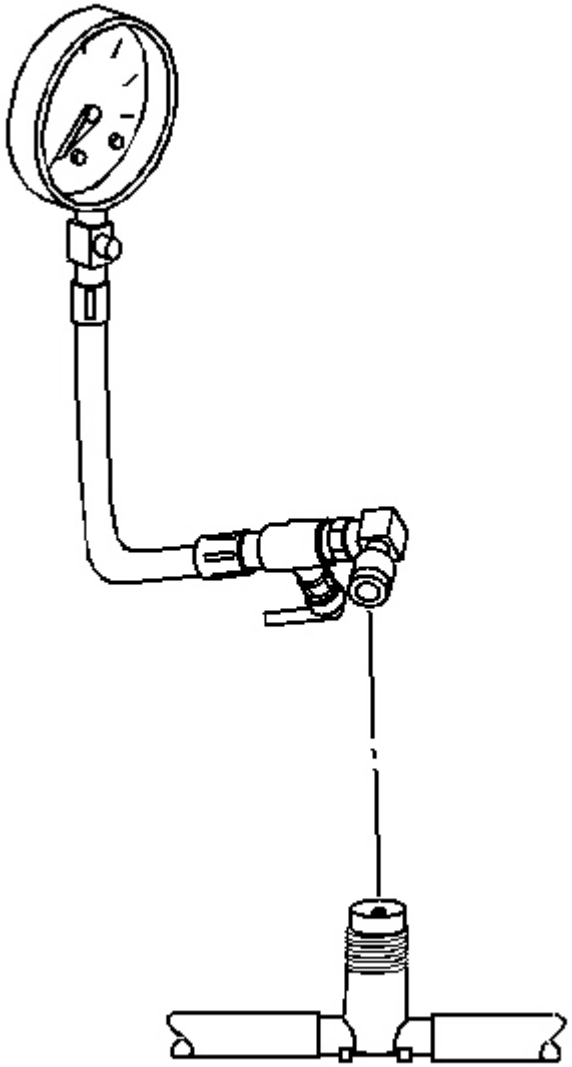

Fig. 92: Identifying Fuel Pressure Gauge J 34730-1A
Courtesy of GENERAL MOTORS CORP.

5. Connect the **J 34730-1A** to the fuel pressure connection. See **Special Tools and Equipment** . Wrap a shop towel around the fitting while connecting the gauge in order to avoid spillage.
6. Install the bleed hose of the gauge into an approved container.
7. Open the valve on the gauge to bleed the system pressure. The fuel connections are now safe for servicing.

8. Drain any fuel remaining in the gauge into an approved container.

FUEL PRESSURE GAGE INSTALLATION AND REMOVAL

Installation Procedure

CAUTION: Refer to Gasoline/Gasoline Vapors Caution in Cautions and Notices.

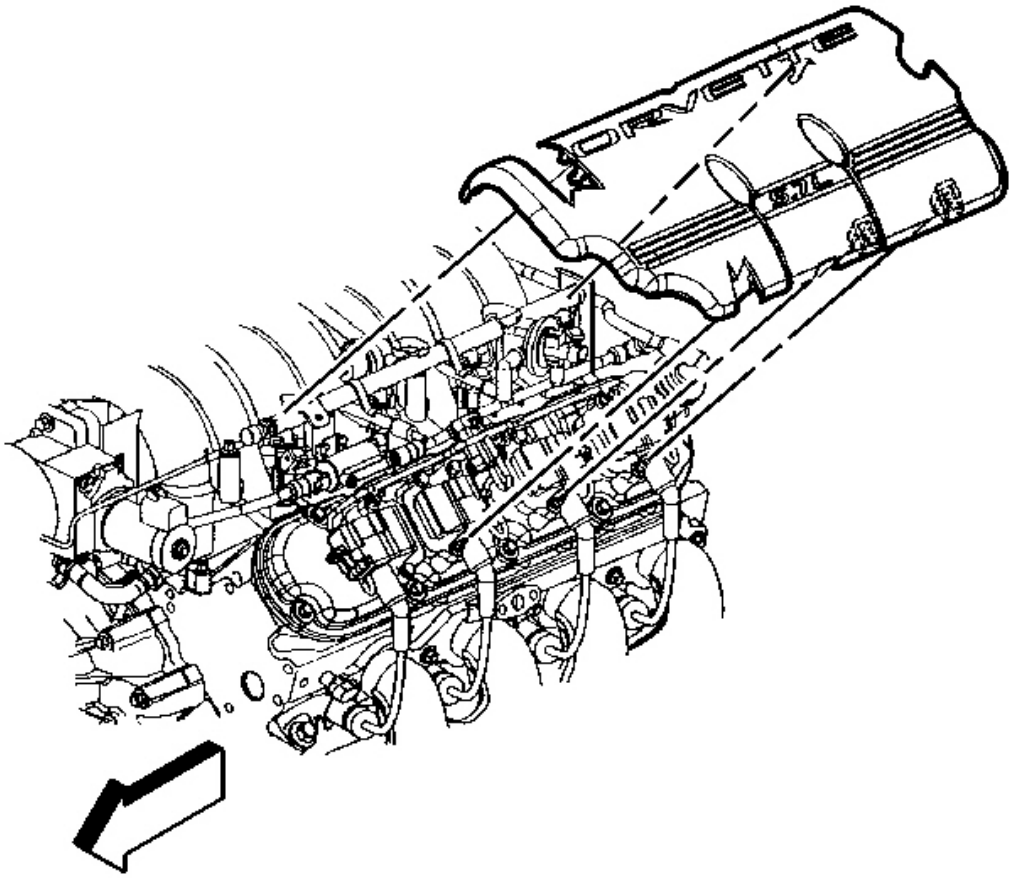

Fig. 93: Left Fuel Rail Cover
Courtesy of GENERAL MOTORS CORP.

1. Remove the left fuel rail cover.

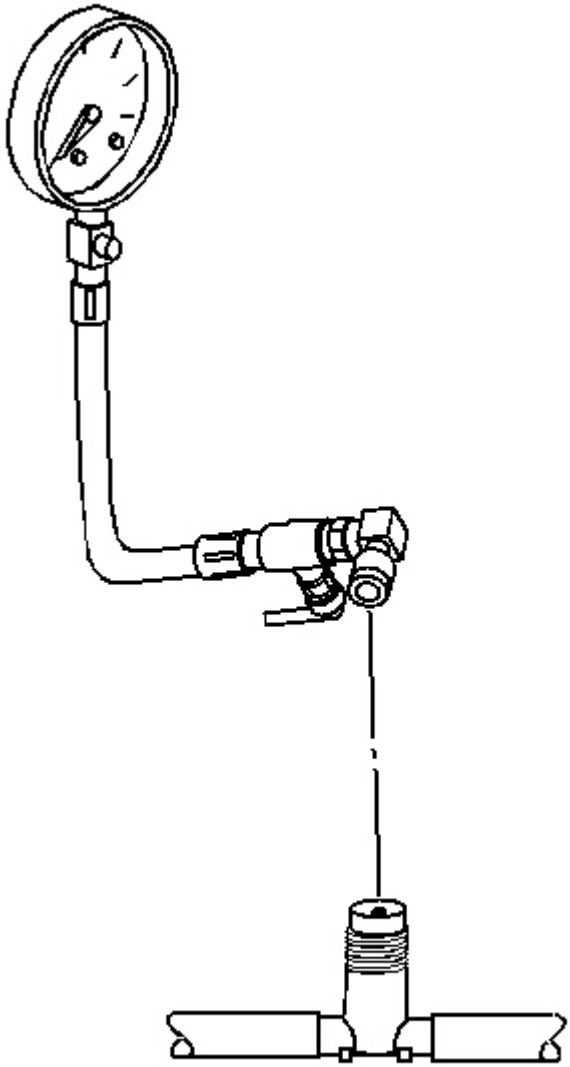

Fig. 94: Identifying Fuel Pressure Gauge J 34730-1A
Courtesy of GENERAL MOTORS CORP.

CAUTION: Refer to Fuel Gage Leak Caution in Cautions and Notices.

NOTE: **Refer to Fuel and Evaporative Emission (EVAP) Hose/Pipe Connection Cleaning Notice in Cautions and Notices.**

2. Install the fuel pressure gage to the fuel pressure service connection, located on the fuel rail.
3. Turn ON the ignition.

CAUTION: Refer to Fuel Storage Caution in Cautions and Notices.

4. Place the bleed hose of the fuel pressure gage into an approved gasoline container.
5. Open the bleed valve on the fuel pressure gage in order to bleed the air from the fuel pressure gage.
6. Command the fuel pump ON with a scan tool.
7. Close the bleed valve on the fuel pressure gage.
8. Inspect for fuel leaks.

QUICK CONNECT FITTING(S) SERVICE (METAL COLLAR)

Tools Required

- **J 34730-1A** Fuel Pressure Gage. See **Special Tools and Equipment** .
- **J 37088-A** Tool Set, Fuel Line Quick-Connect Separator. See **Special Tools and Equipment** .

Removal Procedure

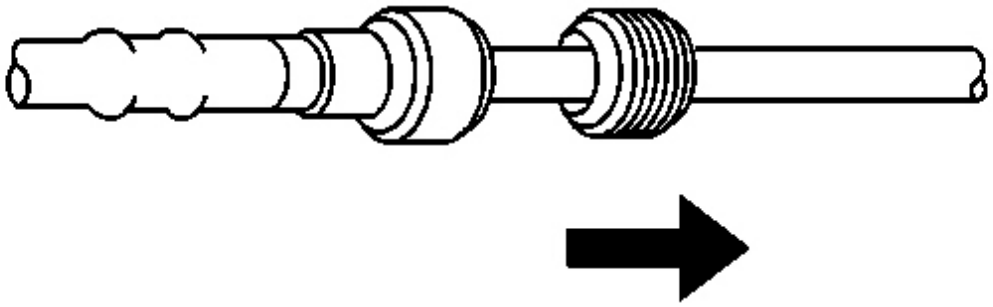

Fig. 95: Sliding Dust Cover From Quick-Connect Fitting
Courtesy of GENERAL MOTORS CORP.

1. Relieve the fuel system pressure before servicing any fuel system connection. Refer to the **Fuel Pressure Relief Procedure** .
2. Slide the dust cover from the quick-connect fitting.

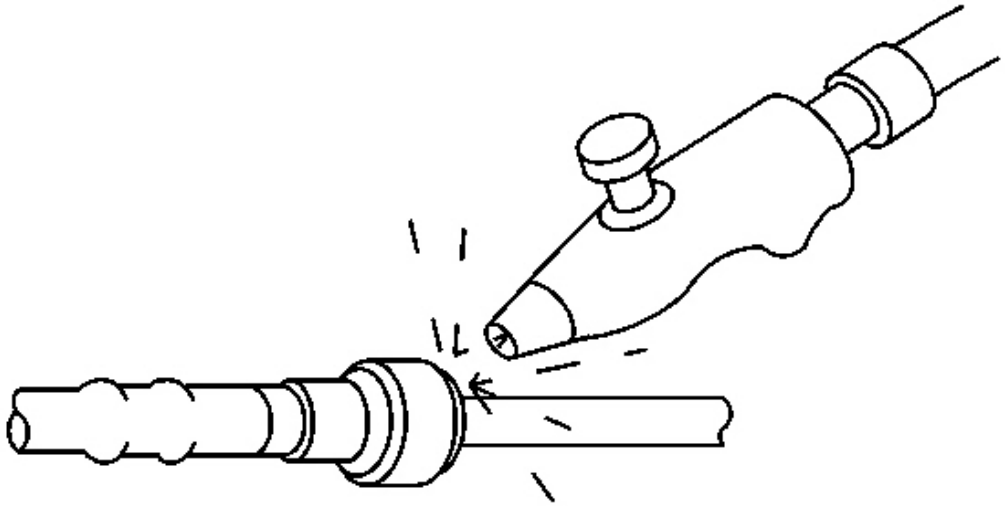

Fig. 96: Blowing Dirt Out Of Fitting (Metal Collar)
Courtesy of GENERAL MOTORS CORP.

CAUTION: Wear safety glasses when using compressed air in order to prevent eye injury.

3. Blow any dirt out of the fitting, using compressed air.

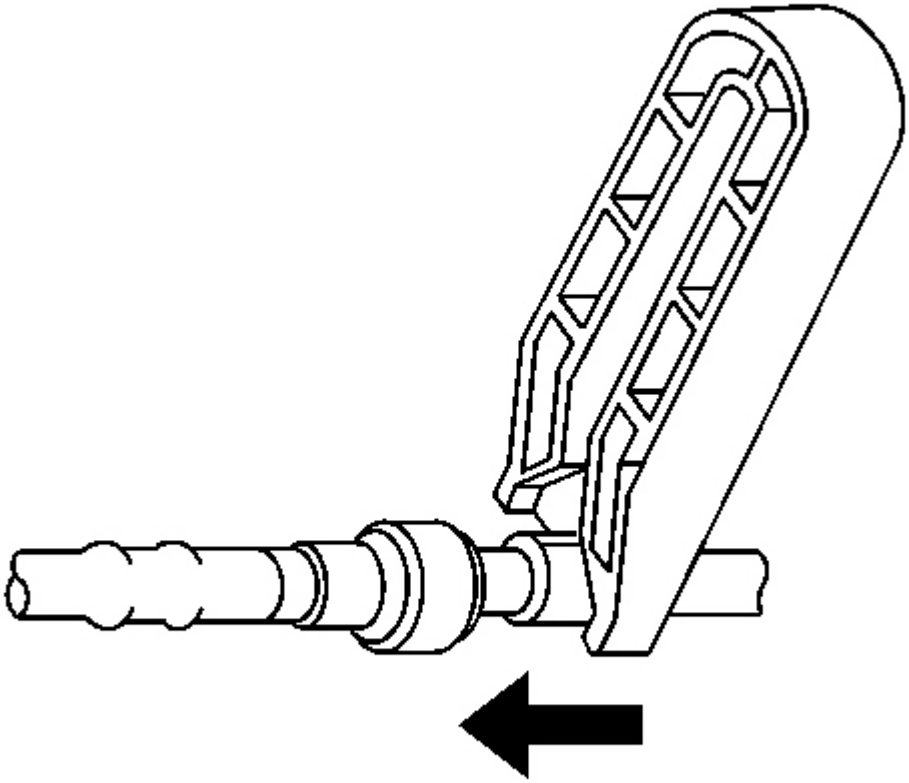

Fig. 97: Releasing Locking Tabs (Metal Collar)
Courtesy of GENERAL MOTORS CORP.

4. Choose the correct tool from the **J 37088-A** Tool Set for the size of the fitting. See **Special Tools and Equipment** . Insert the tool into the female connector, then push inward in order to release the locking tabs.

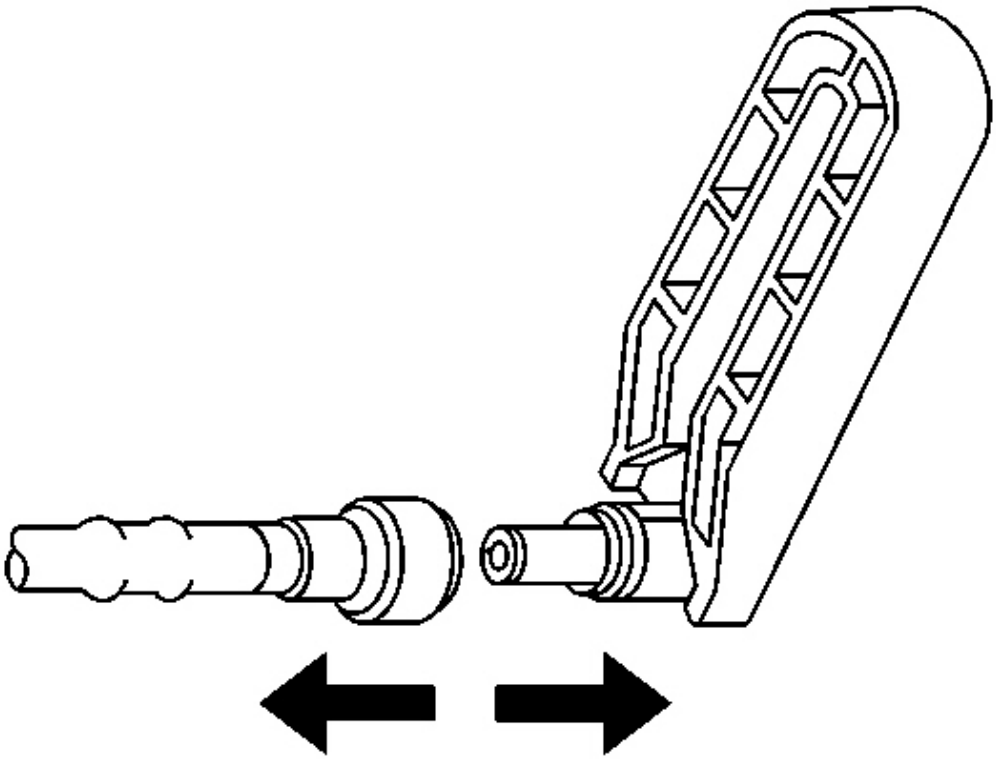

Fig. 98: Pulling Connection Apart (Metal Collar)
Courtesy of GENERAL MOTORS CORP.

5. Pull the connection apart.

NOTE: **If necessary, remove rust or burrs from the fuel pipes with an emery cloth. Use a radial motion with the fuel pipe end in order to prevent damage to the O-ring sealing surface. Use a clean shop towel in order to wipe off the male tube ends. Inspect all the connections for dirt and burrs. Clean or replace the components and assemblies as required.**

6. Using a clean shop towel, wipe off the male pipe end.
7. Inspect both ends of the fitting for dirt and burrs. Clean or replace the components as required.

Installation Procedure

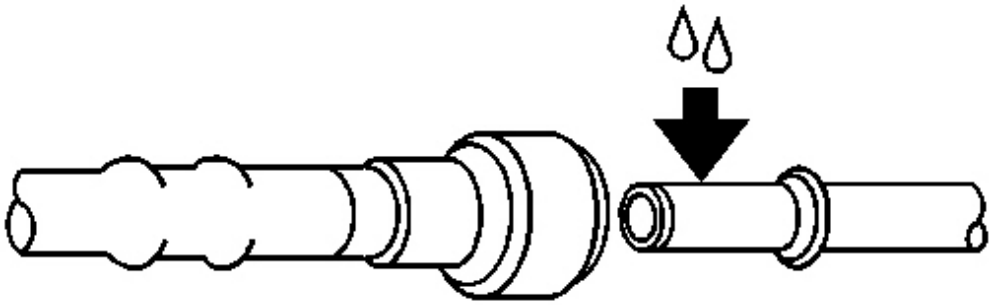

Fig. 99: Oiling Male Pipe Ends (Metal Collar)
Courtesy of GENERAL MOTORS CORP.

CAUTION: Always apply a few drops of clean engine oil to the male pipe ends before connecting the fuel pipe fittings in order to reduce the risk of fire and personal injury. This will ensure proper reconnection and prevent a possible fuel leak. During normal operation, the O-rings located in the female connector will swell and may prevent proper reconnection if not lubricated.

1. Apply a few drops of clean engine oil to the male pipe end.

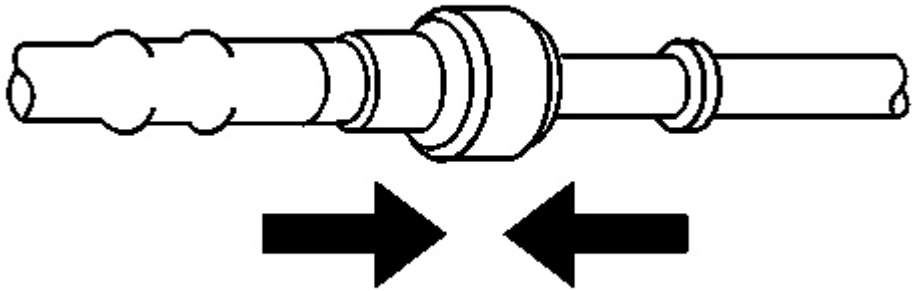

Fig. 100: Connecting Fittings (Metal Collar)
Courtesy of GENERAL MOTORS CORP.

2. Push both sides of the fitting together in order to cause the retaining tabs to snap into place.

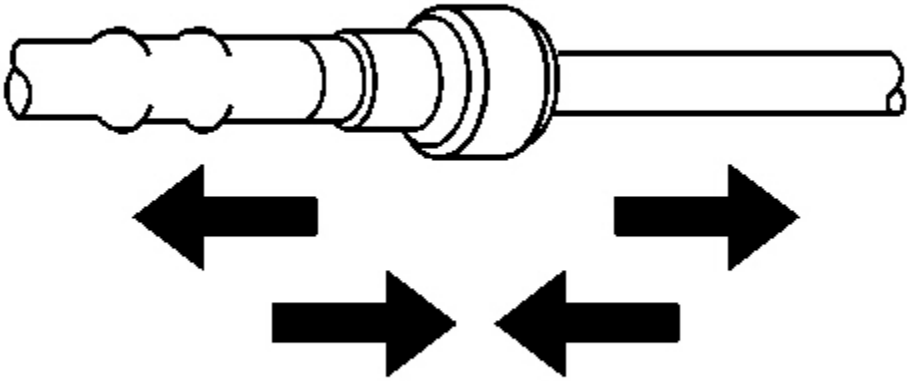

Fig. 101: Ensuring Secure Connection (Metal Collar)
Courtesy of GENERAL MOTORS CORP.

3. Once installed, pull on both sides of the fitting in order to make sure the connection is secure.

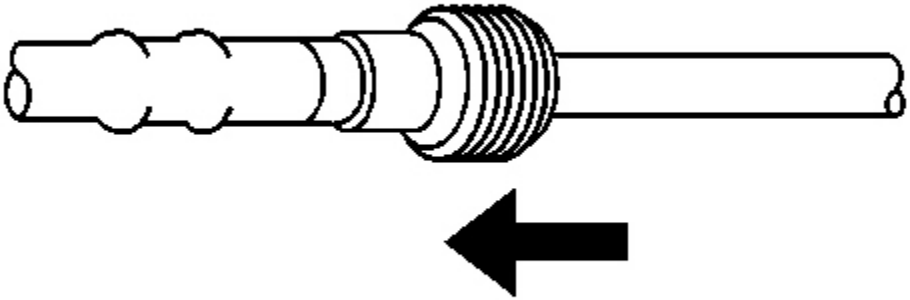

Fig. 102: Quick-Connect Fitting Dust Cover
Courtesy of GENERAL MOTORS CORP.

4. Reposition the dust cover over the quick-connect fitting.

QUICK CONNECT FITTING(S) SERVICE (PLASTIC COLLAR)

Tool Required

J 34730-1A Fuel Pressure Gauge. See **Special Tools and Equipment** .

Removal Procedure

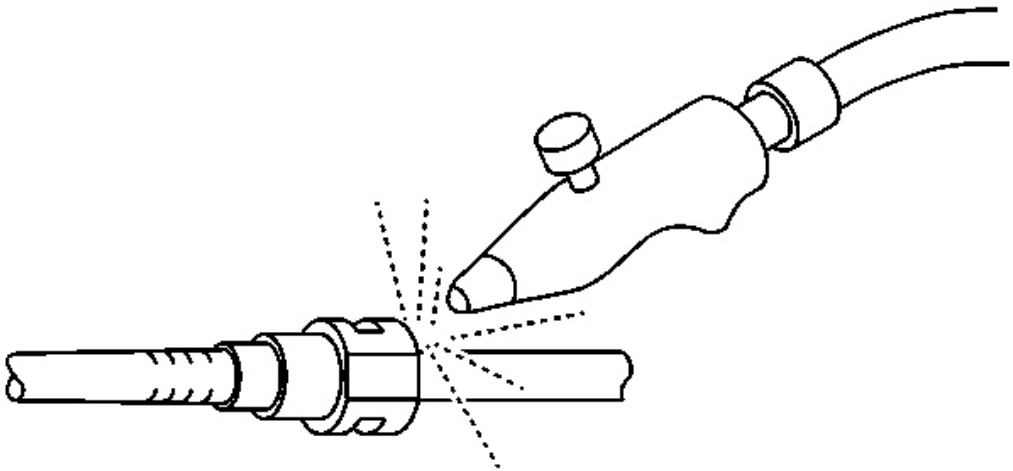

Fig. 103: Blowing Out Dirt (Plastic Collar)
Courtesy of GENERAL MOTORS CORP.

1. Relieve the fuel system pressure before servicing any fuel system connection. Refer to the **Fuel Pressure Relief Procedure** .

   CAUTION: Wear safety glasses when using compressed air in order to prevent eye injury.

2. Using compressed air, blow any dirt out of the quick-connect fitting.

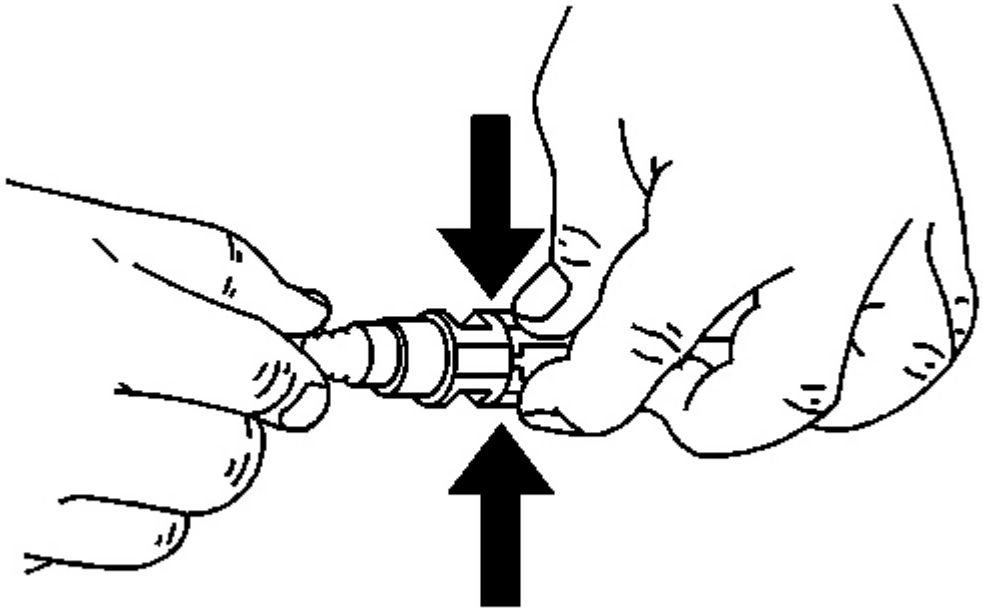

Fig. 104: Squeezing Plastic Tabs Of Male End Connector (Plastic Collar)
Courtesy of GENERAL MOTORS CORP.

IMPORTANT: Plastic quick connect fittings can be released either by squeezing the plastic retainer release tabs (step 3) or by using the appropriate J 37088-A Fuel Line Quick Connect Separator Tool (step 4). See Special Tools and Equipment .

3. Squeeze the plastic retainer release tabs.

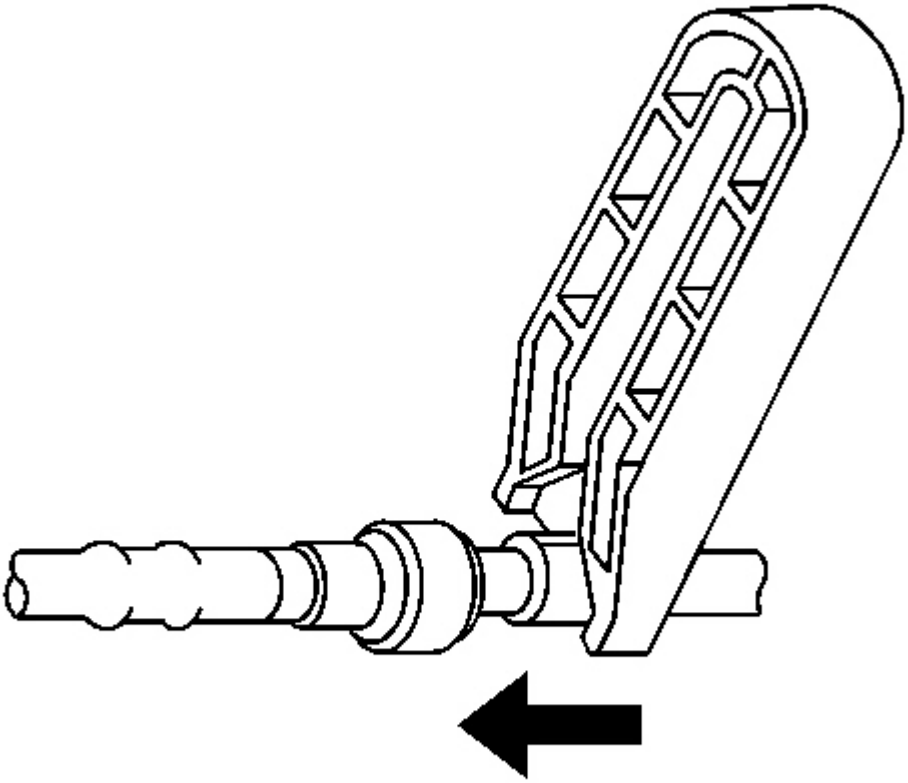

Fig. 105: Releasing Locking Tabs (Metal Collar)
Courtesy of GENERAL MOTORS CORP.

4. Choose the correct tool from the **J 37088-A** Tool Set for the size of the fitting. See **Special Tools and Equipment** . Insert the tool into the female connector, then push inward in order to release the locking tabs. The plastic retainer will remain on the female connector.

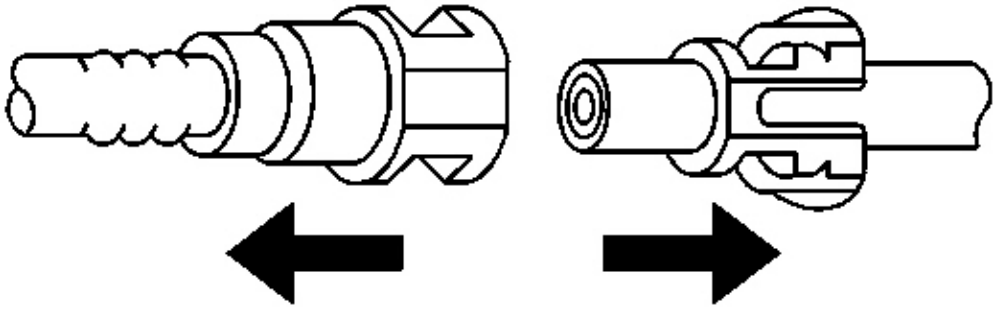

Fig. 106: Pulling Connection Apart (Plastic Collar)
Courtesy of GENERAL MOTORS CORP.

5. Pull the connection apart.

Installation Procedure

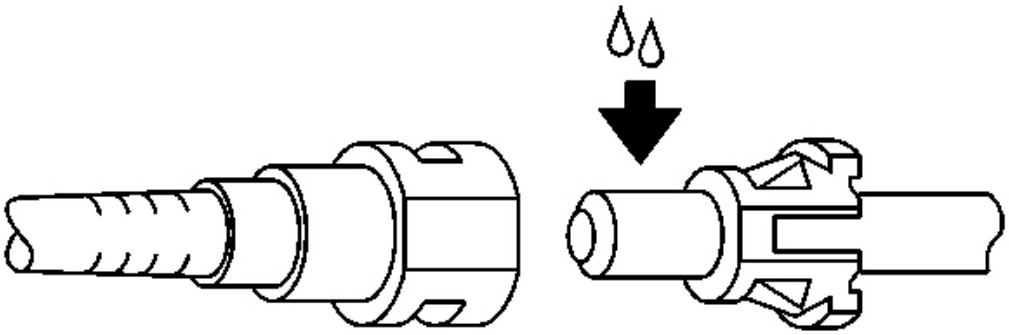

Fig. 107: Oiling Male Pipe End (Plastic Collar)
Courtesy of GENERAL MOTORS CORP.

CAUTION: Always apply a few drops of clean engine oil to the male pipe ends before connecting the fuel pipe fittings in order to reduce the risk of fire and personal injury. This will ensure proper reconnection and prevent a possible fuel leak. During normal operation, the O-rings

located in the female connector will swell and may prevent proper reconnection if not lubricated.

1. Apply a few drops of clean engine oil to the male fuel pipe end.

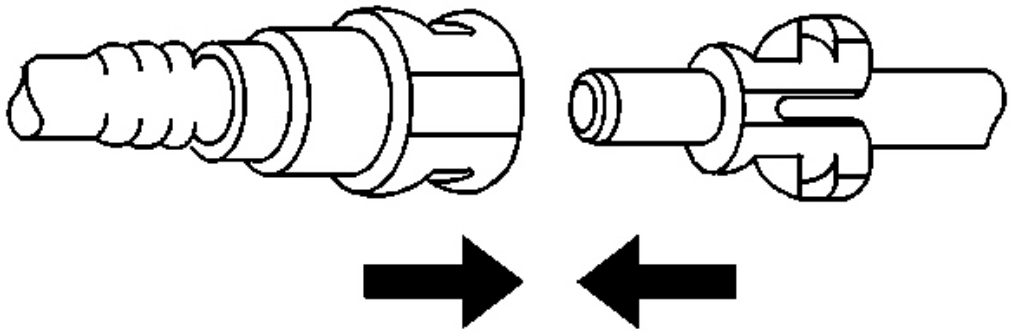

Fig. 108: Connecting Quick-Connect Fittings (Plastic Collar)
Courtesy of GENERAL MOTORS CORP.

2. Push both sides of the quick-connect fitting together in order to cause the retaining tabs/fingers to snap into place.

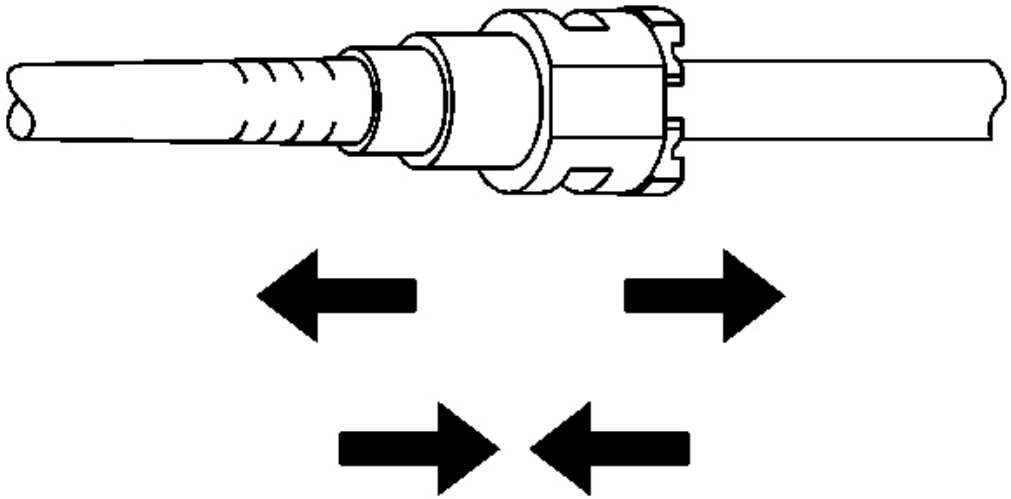

Fig. 109: Ensuring Secure Connection (Plastic Collar)
Courtesy of GENERAL MOTORS CORP.

3. Once installed, pull on both sides of the quick-connect fitting in order to make sure the connection is secure.

FUEL TANK DRAINING PROCEDURE

Tools Required

J 45004 Fuel Tank Drain Hose. See **Special Tools and Equipment** .

Draining Procedure

CAUTION: Never drain or store fuel in an open container. Always use an approved fuel storage container in order to reduce the chance of fire or explosion.

CAUTION: Drain the fuel tank to at least 3/4 of a tank before removing the fuel sender retaining ring or fuel sender access panel in order to avoid possible fuel spillage. Failing to follow this procedure could result in personal injury.

NOTE: Drain the fuel tank with a hose which has a 13 mm (0.5 in) or smaller diameter in order to prevent the drain hose from getting stuck inside the fuel tank filler neck pipe check valve. Damage to the check valve may result.

NOTE: **Drain the fuel from the complete system, including injector nozzle(s), the fuel pump, all fuel pipes, and the fuel tank if a vehicle is to be stored for any appreciable length of time. Draining the fuel will prevent the formations of fuel system deposits.**

1. Relieve the fuel system pressure. Refer to **Fuel Pressure Relief Procedure** .
2. Remove the fuel tank filler pipe cap.
3. Drain the fuel through the fuel tank filler pipe using a hand or air operated fuel pump device and the **J 45004** . See **Special Tools and Equipment** .
4. Remove the driveline support assembly. Refer to **Driveline Support Assembly Replacement (Automatic Transmission)** or **Driveline Support Assembly Replacement (Manual Transmission)** in Propeller Shaft.
5. Remove the crossover tube/hose from the RH fuel tank.
6. Drain the fuel through the fuel tank crossover connection using a hand or air operated fuel pump device and the **J 45004** . See **Special Tools and Equipment** .

FUEL TANK REPLACEMENT (RIGHT)

Tools Required

J 37088-A Fuel Line Disconnect tool. See **Special Tools and Equipment** .

Removal Procedure

1. Disconnect the negative battery cable. Refer to **Battery Negative Cable Disconnect/Connect Procedure** in Engine Electrical.
2. Drain the fuel tank. Refer to **Fuel Tank Draining Procedure** .
3. Raise and support the vehicle. Refer to **Lifting and Jacking the Vehicle** in General Information.
4. Remove the right rear tire. Refer to **Tire and Wheel Removal and Installation** in Tires and Wheels.
5. Remove the right rear wheelhouse panel. Refer to **Wheelhouse Filler Replacement** in Body Rear End.
6. Remove the evaporative emission (EVAP) canister access cover.

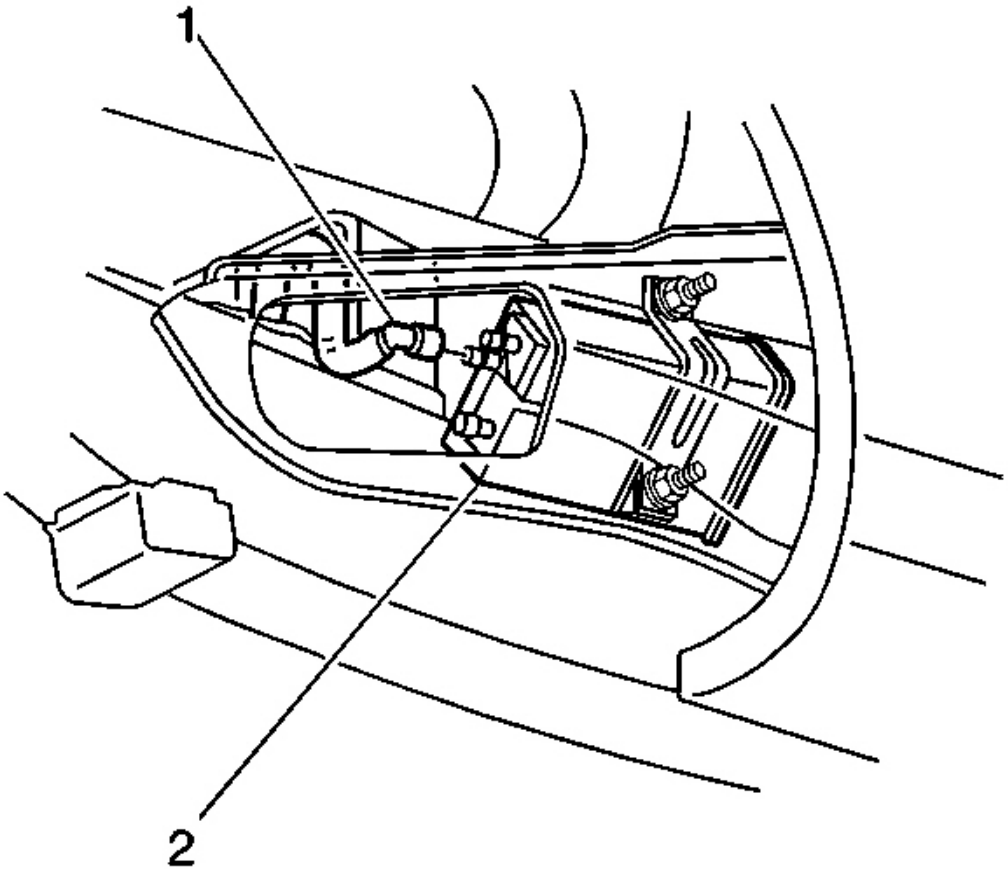

Fig. 110: EVAP Canister & FLVV Hose
Courtesy of GENERAL MOTORS CORP.

7. Disconnect the fill limit vent valve (FLVV) hose (1) at the EVAP canister (2).
8. Disconnect the fuel pump module harness connector.
9. Remove the crossover tube from the clamp located above the transmission.

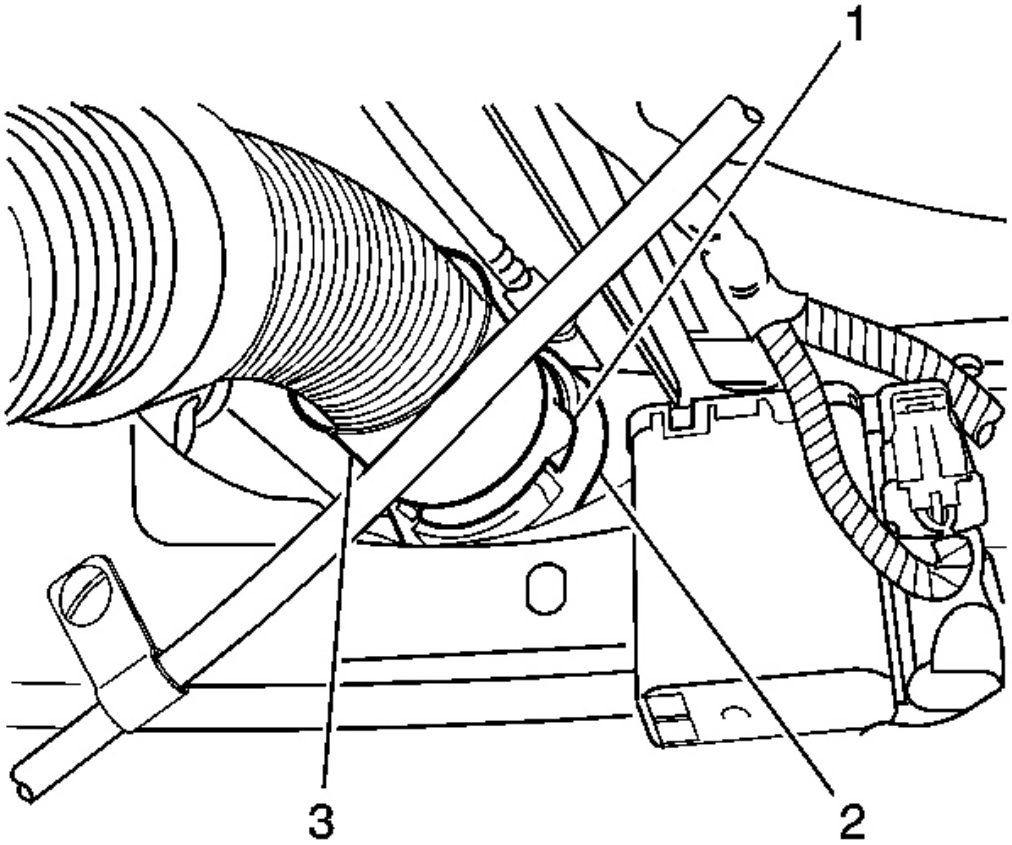

Fig. 111: Locating Air Inlet Hose
Courtesy of GENERAL MOTORS CORP.

10. Disengage the crossover tube connector position assurance (CPA) retainer by pulling the tab (1) outward and rotate.

IMPORTANT: The crossover tube CPA is released when the latch disengages from the tank connection groove.

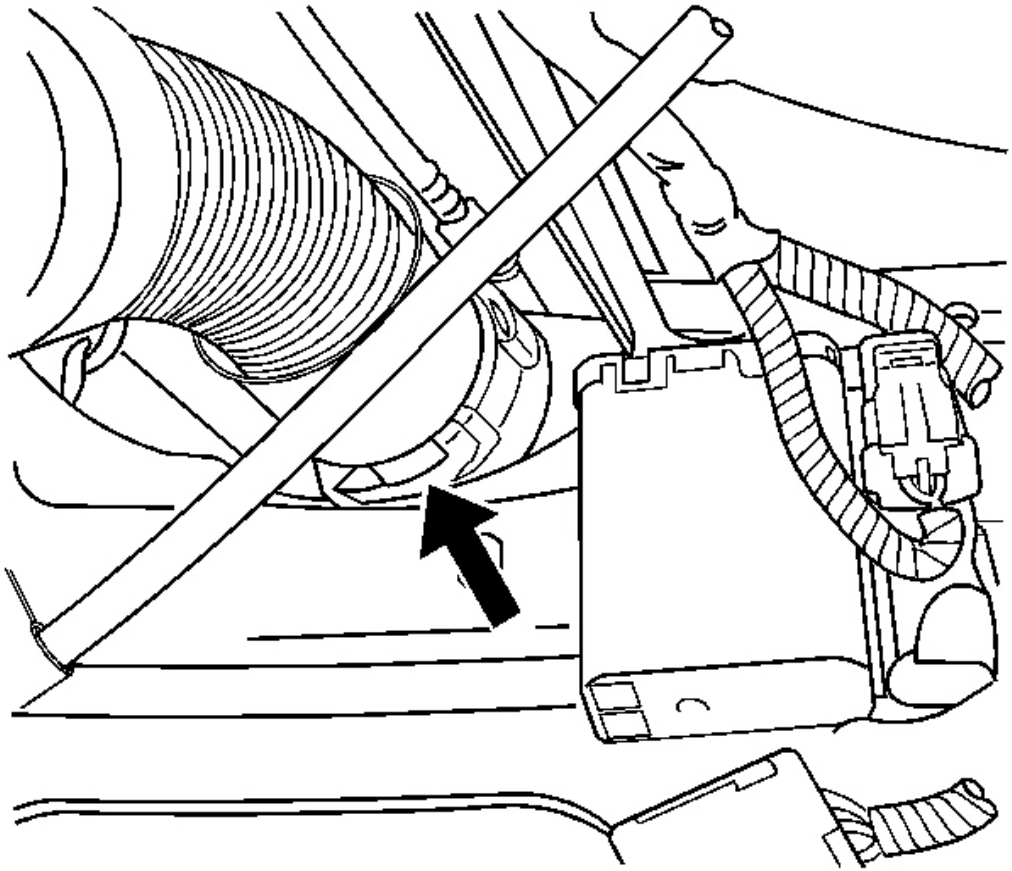

Fig. 112: Locating Crossover Tube Collar
Courtesy of GENERAL MOTORS CORP.

11. Rotate crossover tube collar (3) counterclockwise to disengage.

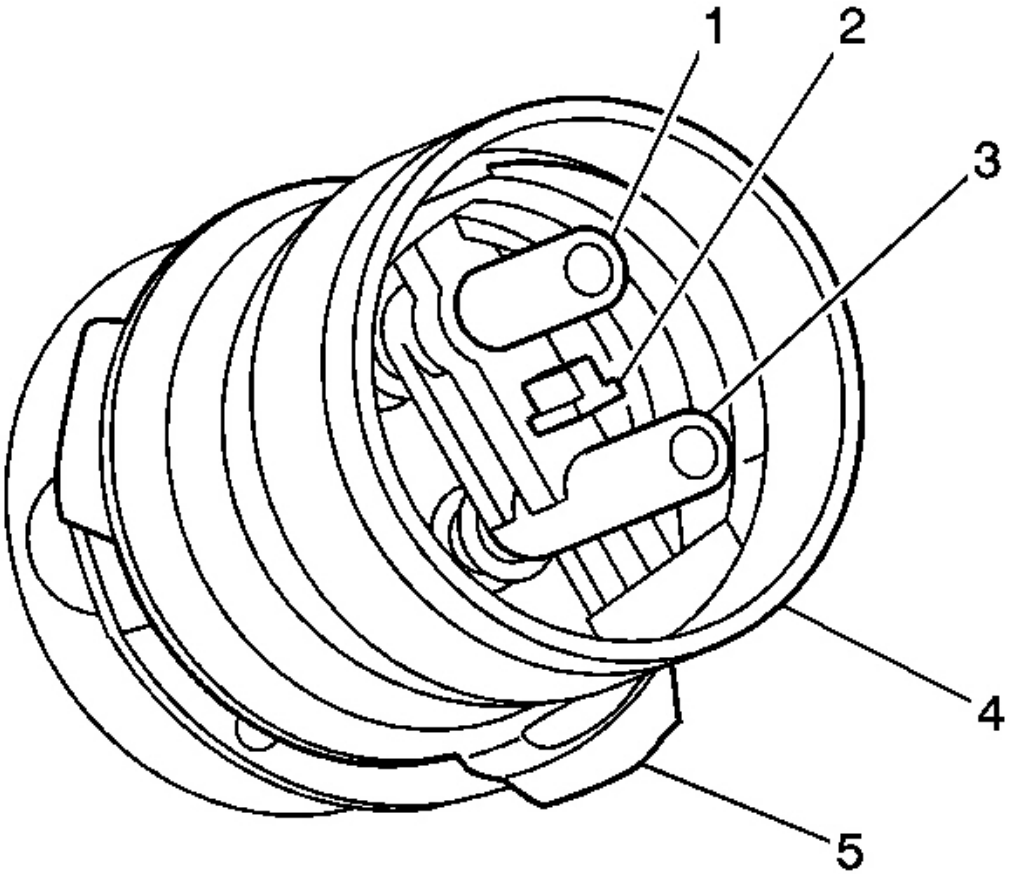

Fig. 113: Fuel Tank Crossover Tube & Mating Surfaces
Courtesy of GENERAL MOTORS CORP.

12. Disconnect the crossover tube from the right fuel tank by pulling the tube straight out of the fuel tank connection.

IMPORTANT: Take care not to disturb the internal O-rings in the fuel tank connections.

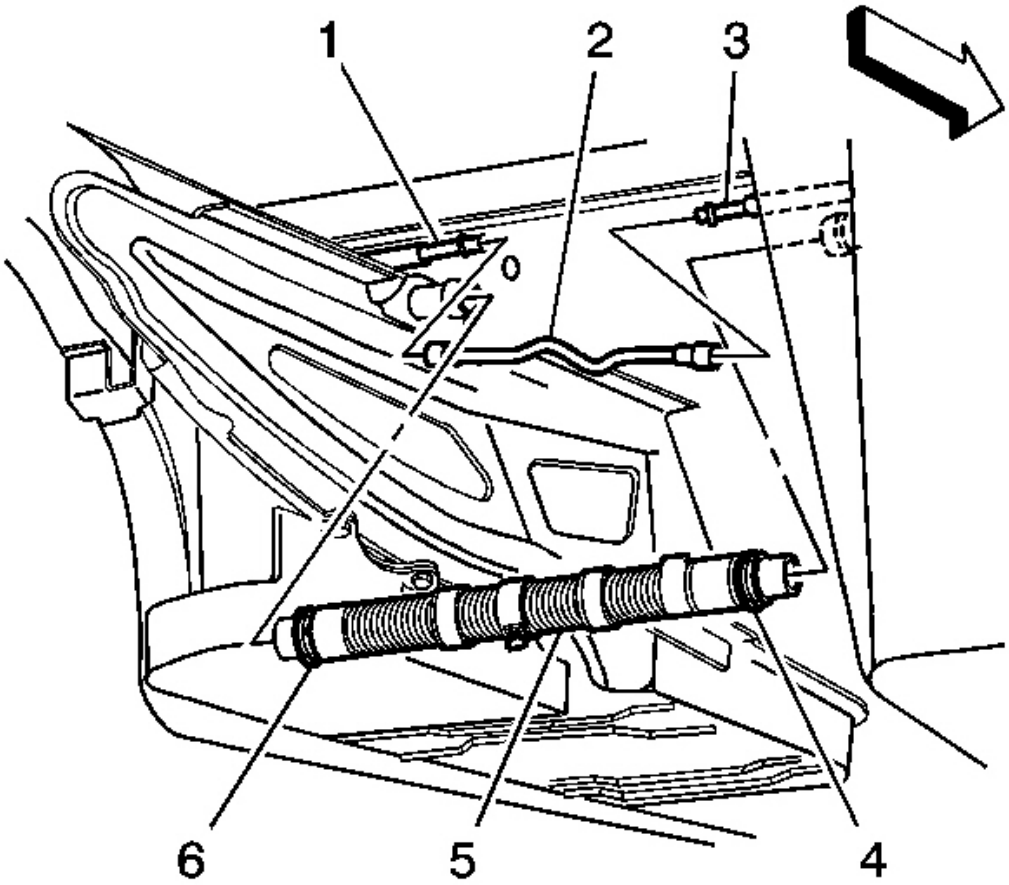

Fig. 114: EVAP Crossover Pipe & Tank Crossover Hose
Courtesy of GENERAL MOTORS CORP.

13. Disconnect the EVAP crossover pipe (2) quick connect fitting at the right fuel tank.
14. Cap the EVAP pipe to prevent system contamination.

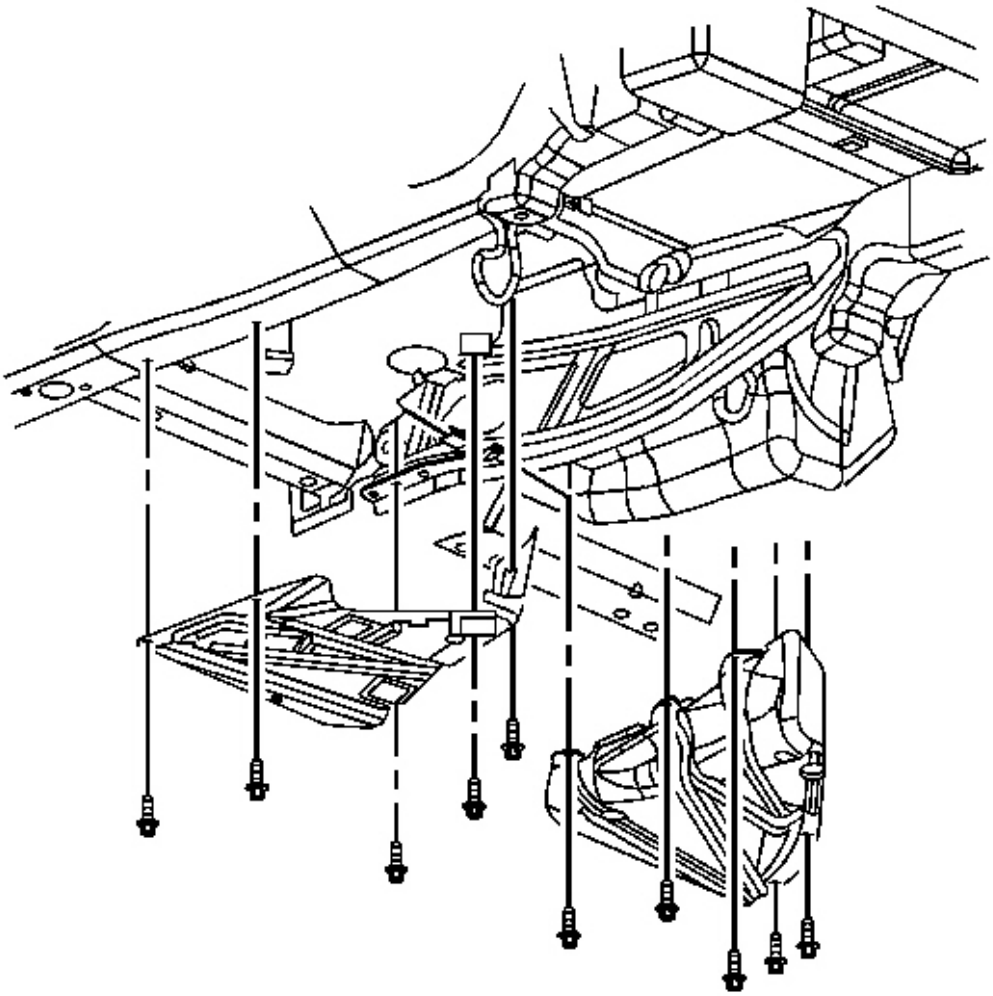

Fig. 115: Fuel Tank Strap Mount & Bolts
Courtesy of GENERAL MOTORS CORP.

15. Remove the fuel tank strap mount bolts.
16. Remove the fuel tank strap from the vehicle.

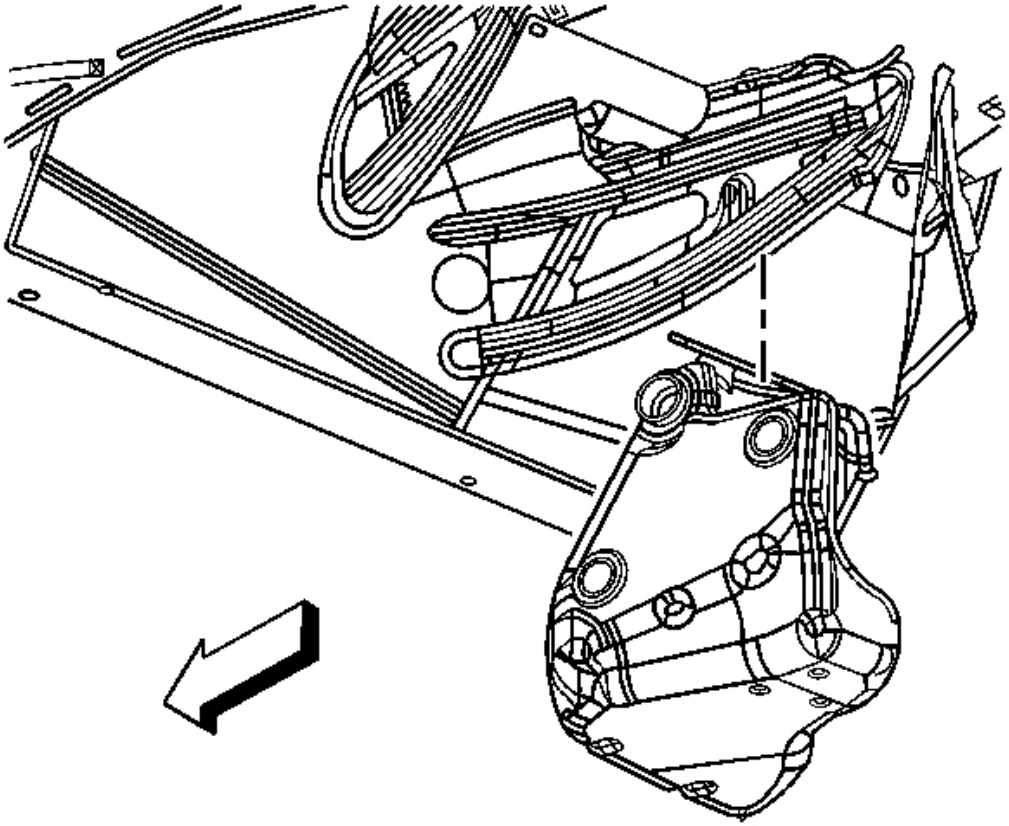

Fig. 116: Fuel Tank (Right)
Courtesy of GENERAL MOTORS CORP.

17. Remove the fuel tank.

Installation Procedure

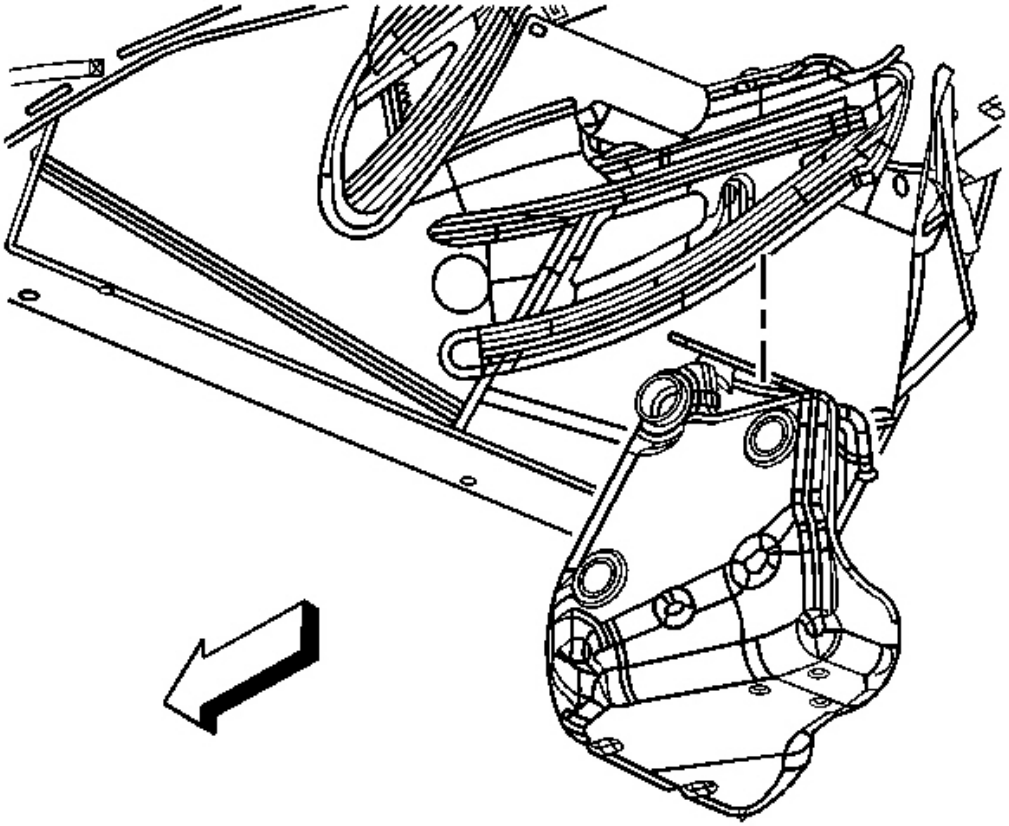

Fig. 117: Fuel Tank (Right)
Courtesy of GENERAL MOTORS CORP.

1. Install the fuel tank.
2. Install the fuel tank strap to the vehicle.

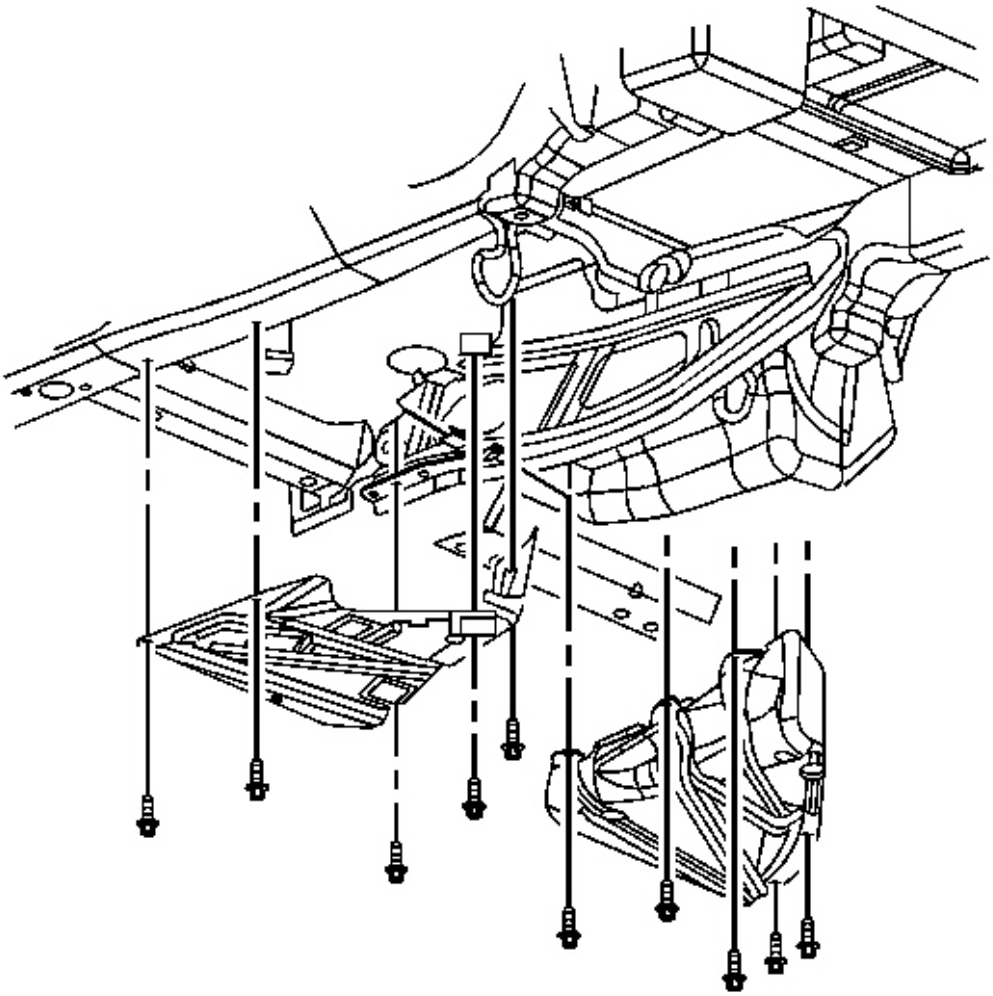

Fig. 118: Fuel Tank Strap Mount & Bolts
Courtesy of GENERAL MOTORS CORP.

3. Install the fuel tank strap bolts.
4. Remove the cap from the EVAP pipe.

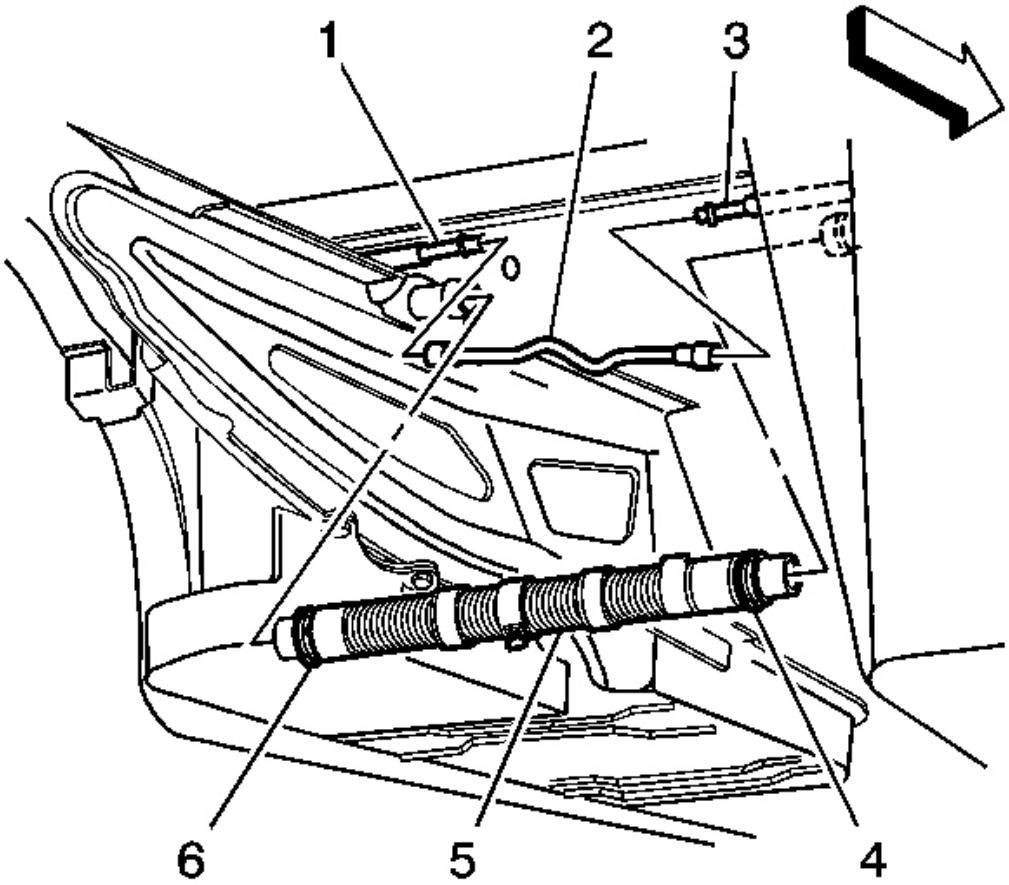

Fig. 119: EVAP Crossover Pipe & Tank Crossover Hose
Courtesy of GENERAL MOTORS CORP.

5. Connect the EVAP crossover pipe (2) quick connect fitting at the right fuel tank.

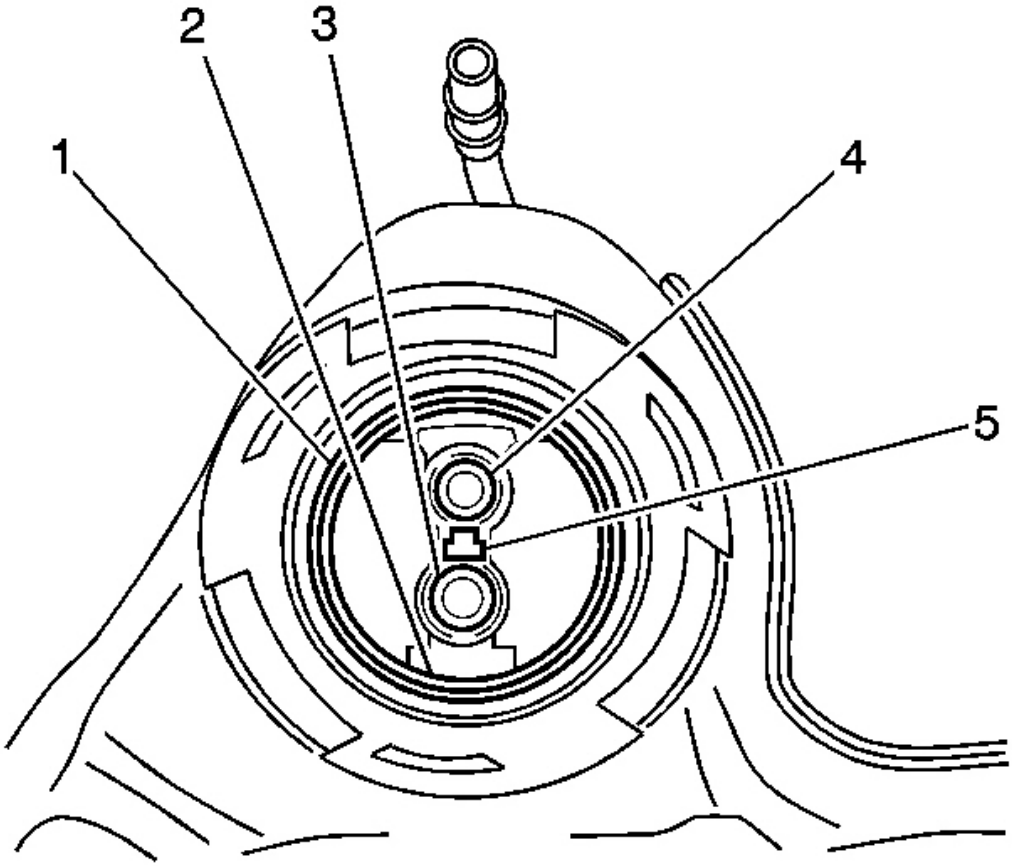

Fig. 120: Crossover Tube To Fuel Tank O-Rings & Alignment Feature
Courtesy of GENERAL MOTORS CORP.

6. Lubricate the crossover tube to fuel tank connection O-rings (1-4) with GM P/N 1051717 (Canadian P/N 5728223) rubber lubricant.

IMPORTANT: Note the location of the T-shaped alignment feature (5) between the jet pump feed/return pipes connector.

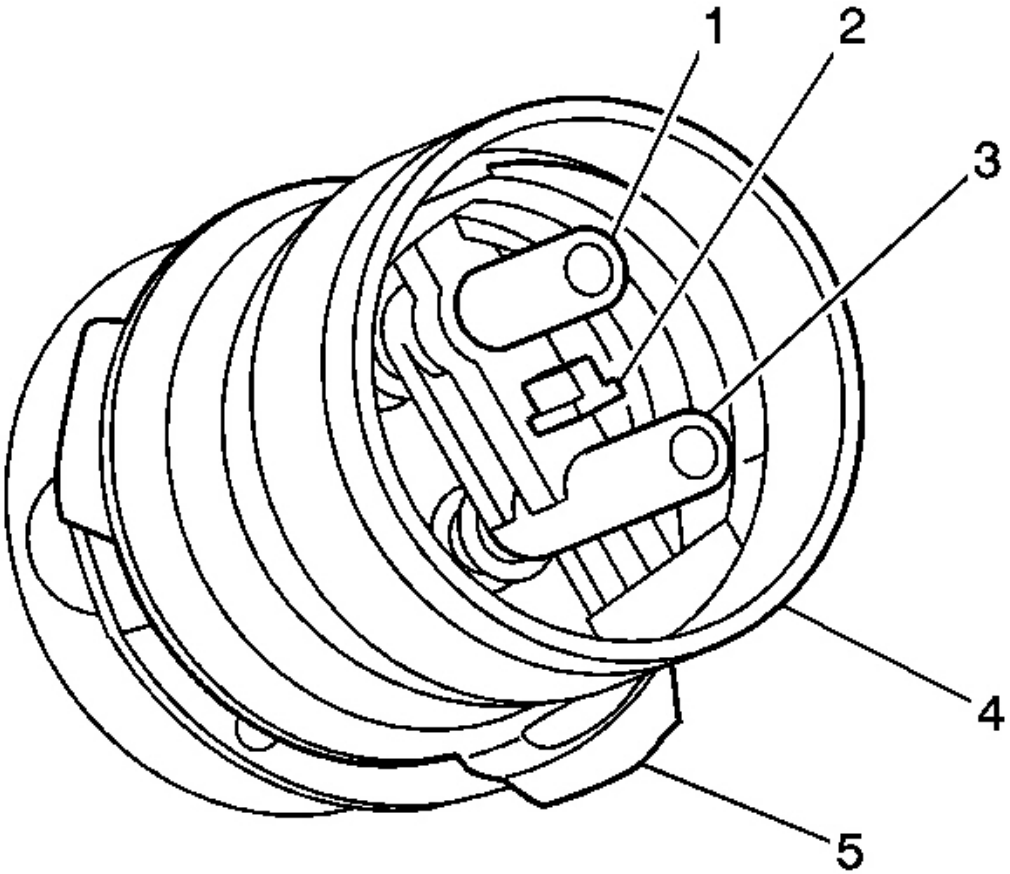

Fig. 121: Fuel Tank Crossover Tube & Mating Surfaces
Courtesy of GENERAL MOTORS CORP.

7. Lubricate the crossover tube O-ring mating surfaces (1-4) with GM P/N 1051717 (Canadian P/N 5728223) rubber lubricant.

IMPORTANT: Note the T-shaped alignment feature on the crossover tube.

IMPORTANT: The crossover tube will not fully seat into the fuel tank if the jet pump lines are misaligned.

8. Connect the crossover tube to the right fuel tank using the features previously noted.

IMPORTANT: The crossover tube collar tangs will not latch if misalignment exists.

9. Rotate the crossover tube collar (3) clockwise to engage the tangs.

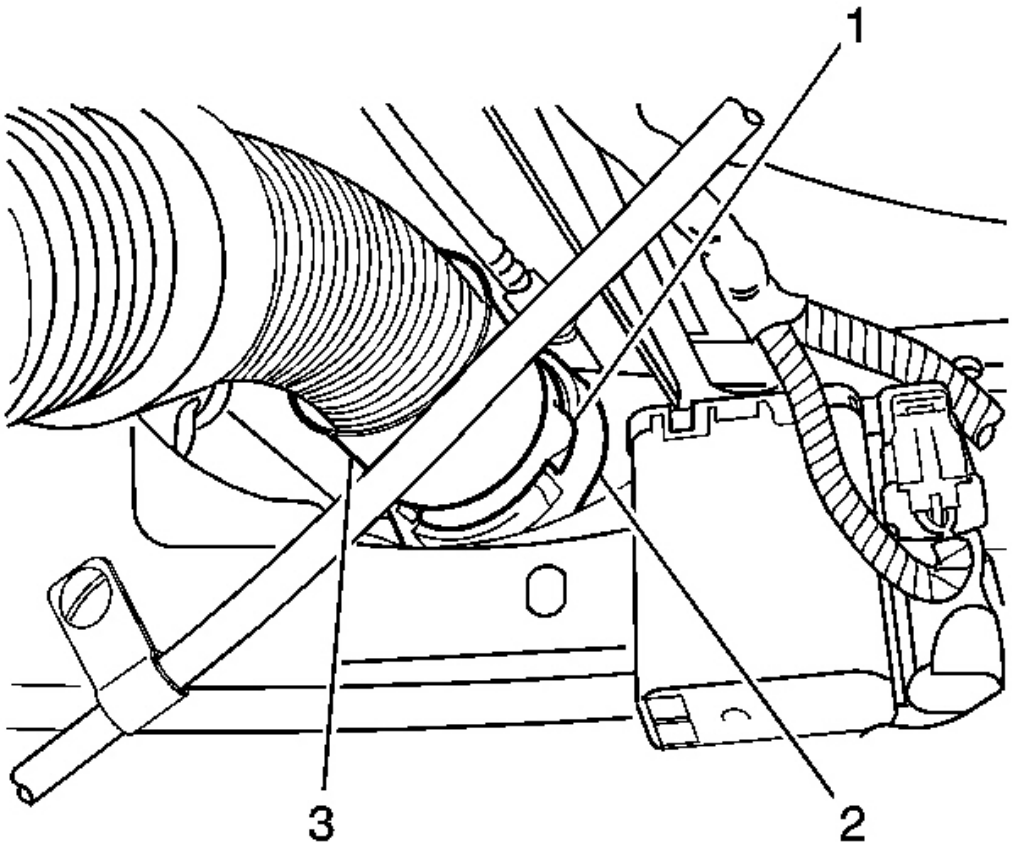

Fig. 122: Locating Air Inlet Hose
Courtesy of GENERAL MOTORS CORP.

10. Rotate the crossover tube CPA retainer counterclockwise past the collar latching tang and push the tab (1) into the locked position.

IMPORTANT: If the CPA retainer is locked into position, the crossover tube collar will not rotate.

11. Test the crossover tube to fuel tank connection by attempting to rotate the crossover tube collar counterclockwise.

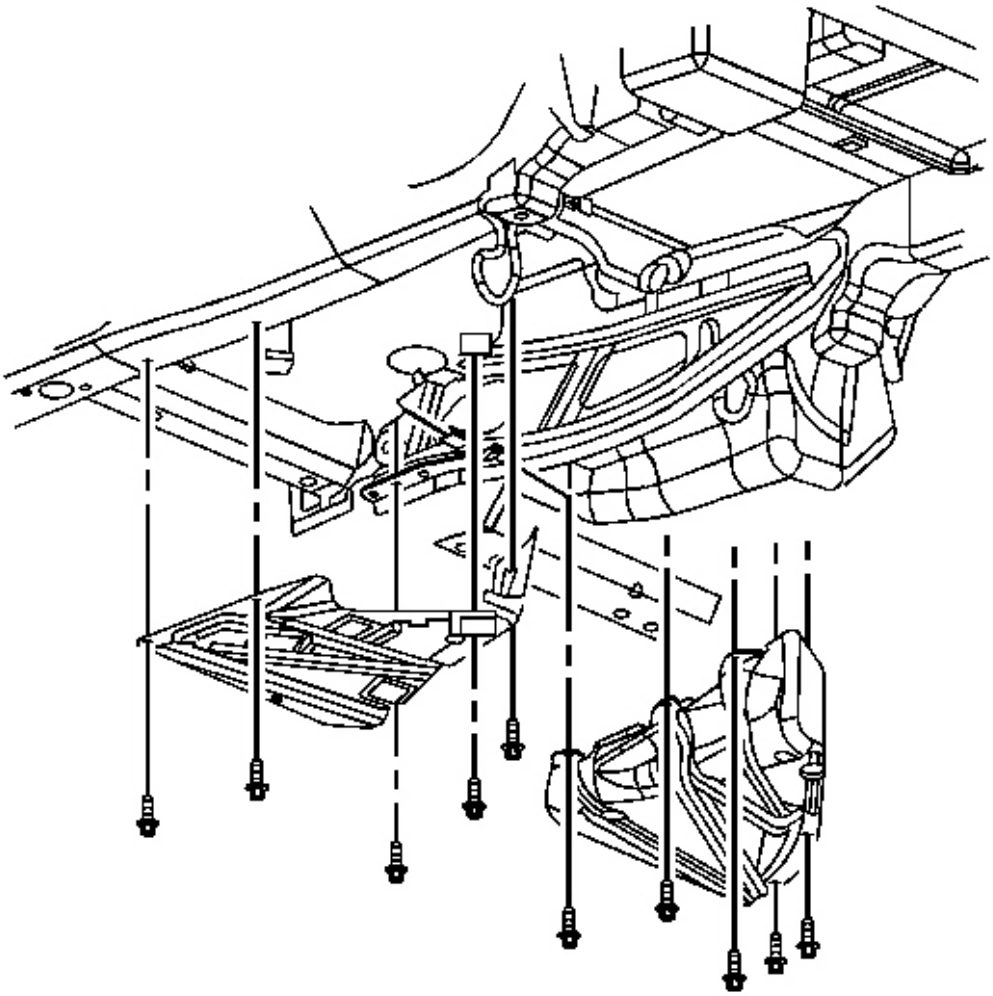

Fig. 123: Fuel Tank Strap Mount & Bolts
Courtesy of GENERAL MOTORS CORP.

NOTE: Refer to Fastener Notice in Cautions and Notices.

12. Tighten the fuel tank strap bolts.

    Tighten: Tighten the bolts to 25 N.m (18 lb in).

13. Snap the crossover tube into the clamp located above the transmission.
14. Connect the fuel pump module harness connector.

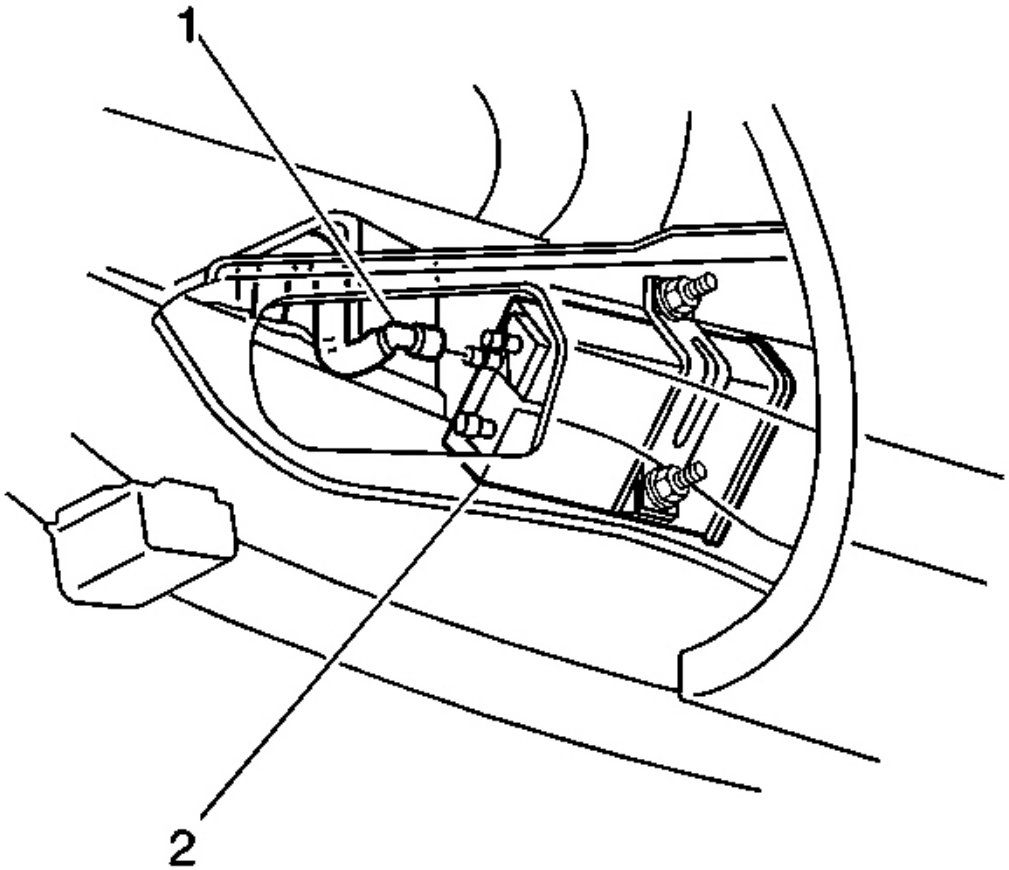

Fig. 124: EVAP Canister & FLVV Hose
Courtesy of GENERAL MOTORS CORP.

15. Connect the FLVV hose (1) at the EVAP canister (2).
16. Install the EVAP canister access cover.
17. Install the driveline support assembly. Refer to **Driveline Support Assembly Replacement (Automatic Transmission)** or **Driveline Support Assembly Replacement (Manual Transmission)** in Propeller Shaft.
18. Install the right rear wheelhouse panel. Refer to **Wheelhouse Filler Replacement** in Body Rear End.
19. Install the right rear tire. Refer to **Tire and Wheel Removal and Installation** in Tires and Wheels.
20. Install the left fuel tank. Refer to **Fuel Tank Replacement (Right)** or **Fuel Tank Replacement (Left)** .

FUEL TANK REPLACEMENT (LEFT)

Tools Required

J 37088-A Fuel Line Disconnect tool. See **Special Tools and Equipment** .

Removal Procedure

1. Disconnect the negative battery cable. Refer to **Battery Negative Cable Disconnect/Connect Procedure** in Engine Electrical.
2. Drain the fuel tank. Refer to **Fuel Tank Draining Procedure** .
3. Raise and support the vehicle. Refer to **Lifting and Jacking the Vehicle** in General Information.
4. Remove the left rear tire. Refer to **Tire and Wheel Removal and Installation** in Tires and Wheels.
5. Remove the left rear wheelhouse panel. Refer to **Wheelhouse Panel Replacement** in Body Rear End.
6. Remove both mufflers. Refer to **Muffler Replacement - Left** and **Muffler Replacement - Right** in Engine Exhaust.
7. Remove the driveline support assembly. Refer to **Driveline Support Assembly Replacement (Automatic Transmission)** or **Driveline Support Assembly Replacement (Manual Transmission)** in Propeller Shaft.
8. Disconnect the fuel fill hose and recirc line from the fill pipe.

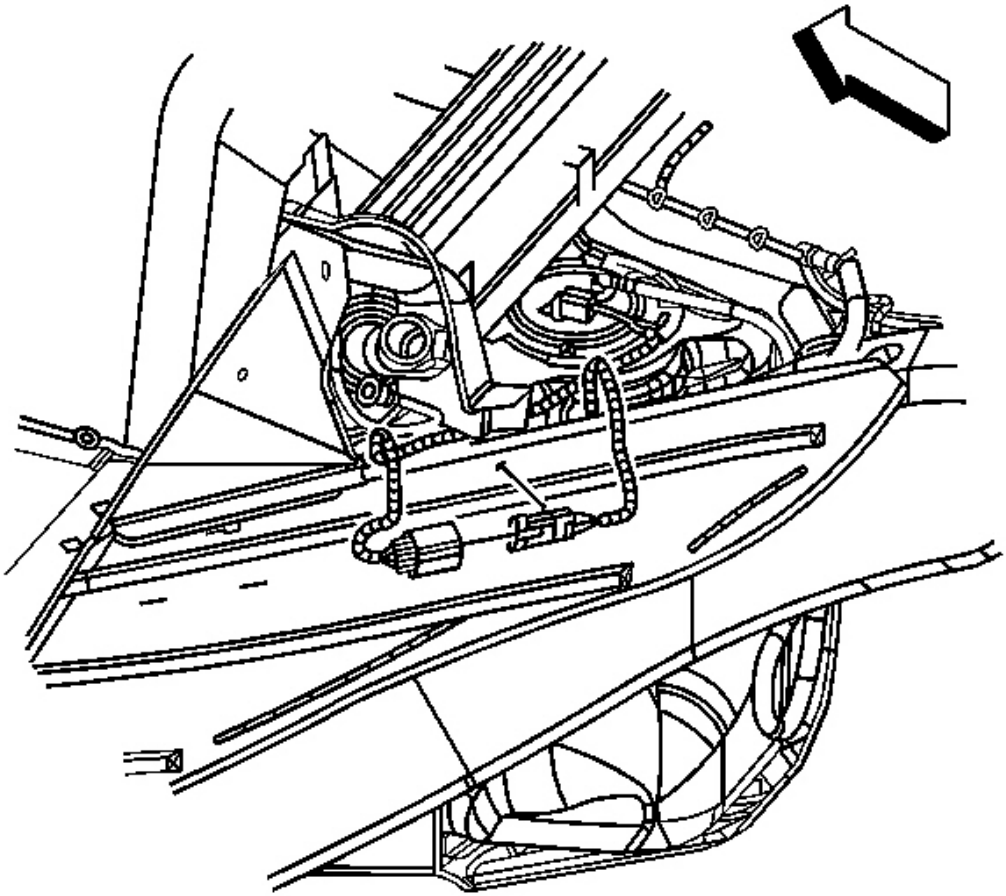

Fig. 125: Fuel Pump Jumper Harness Connector
Courtesy of GENERAL MOTORS CORP.

9. Disconnect the fuel pump jumper harness connector.

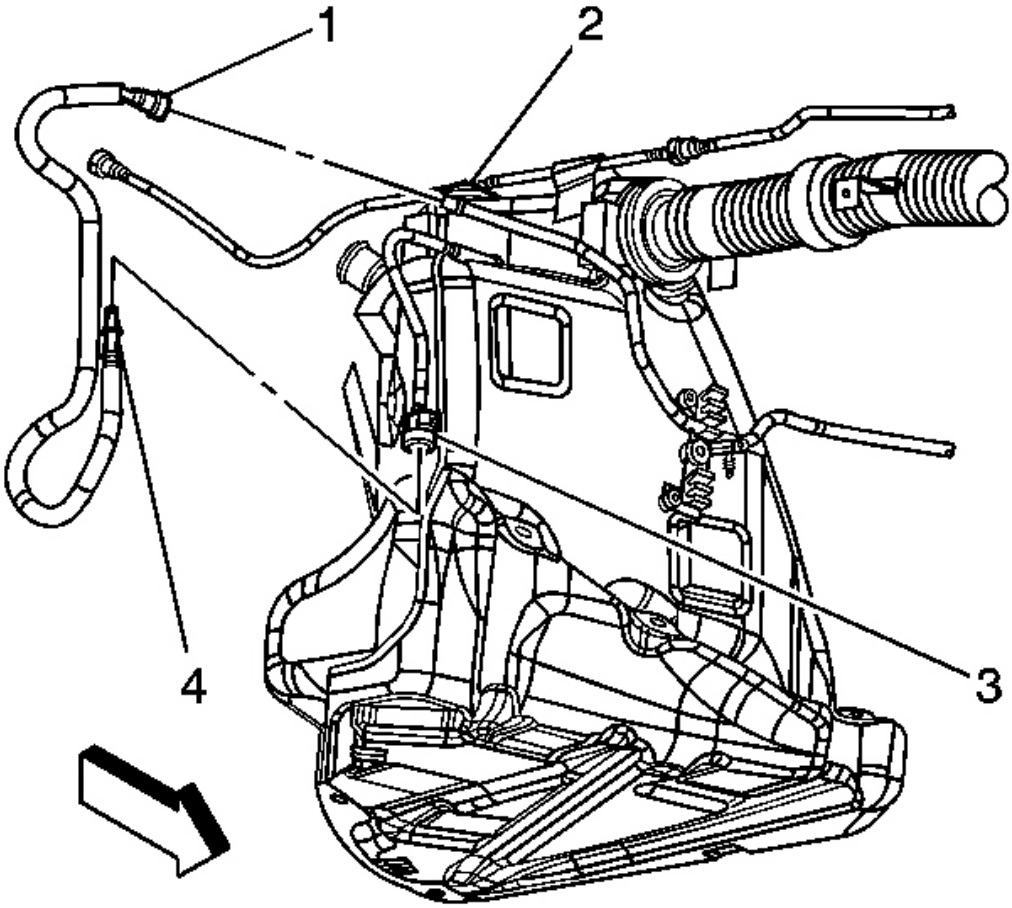

Fig. 126: Fuel Feed Pipe At Rear Of Left Fuel Tank
Courtesy of GENERAL MOTORS CORP.

10. Disconnect the fuel feed pipe (4) at the rear of the left fuel tank. Refer to **Quick Connect Fitting(s) Service (Plastic Collar)** .
11. Cap the fuel pipes to prevent fuel system contamination.

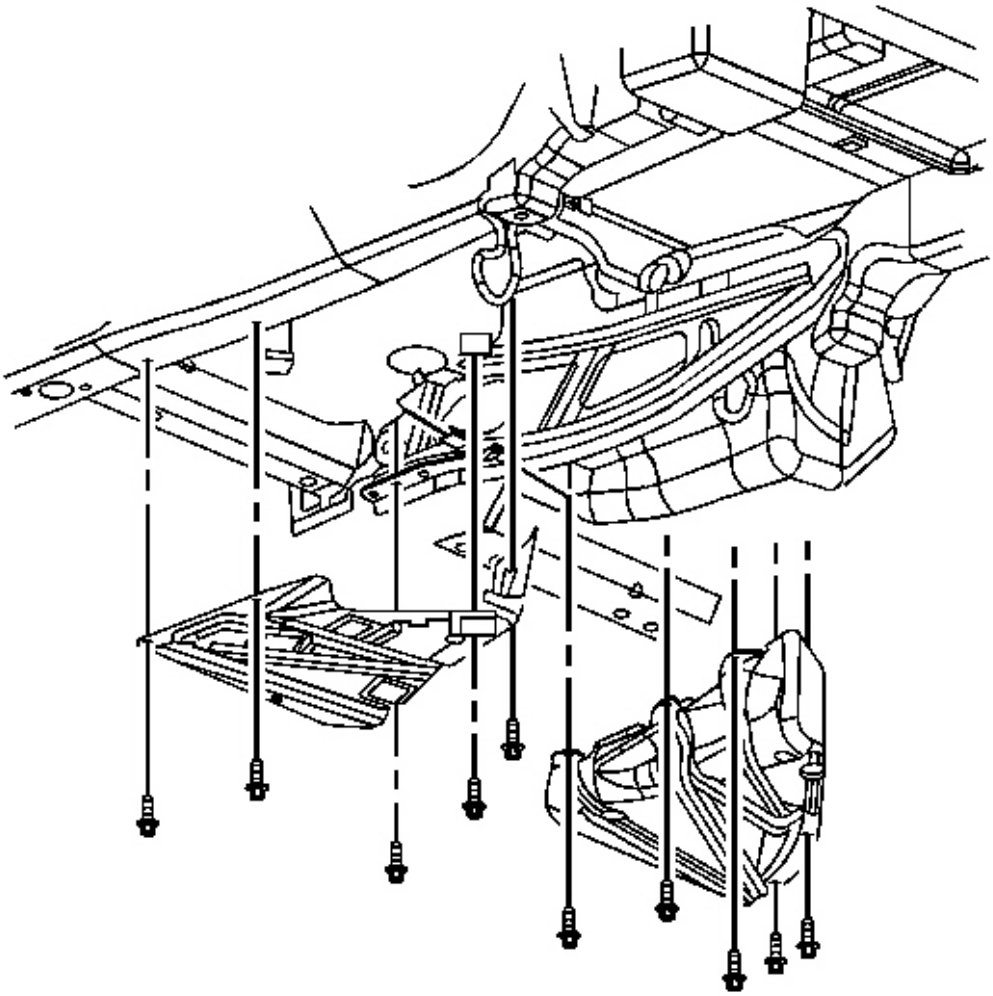

Fig. 127: Fuel Tank Strap Mount & Bolts
Courtesy of GENERAL MOTORS CORP.

12. Loosen the fuel tank strap in order to drop the tank approximately one inch.

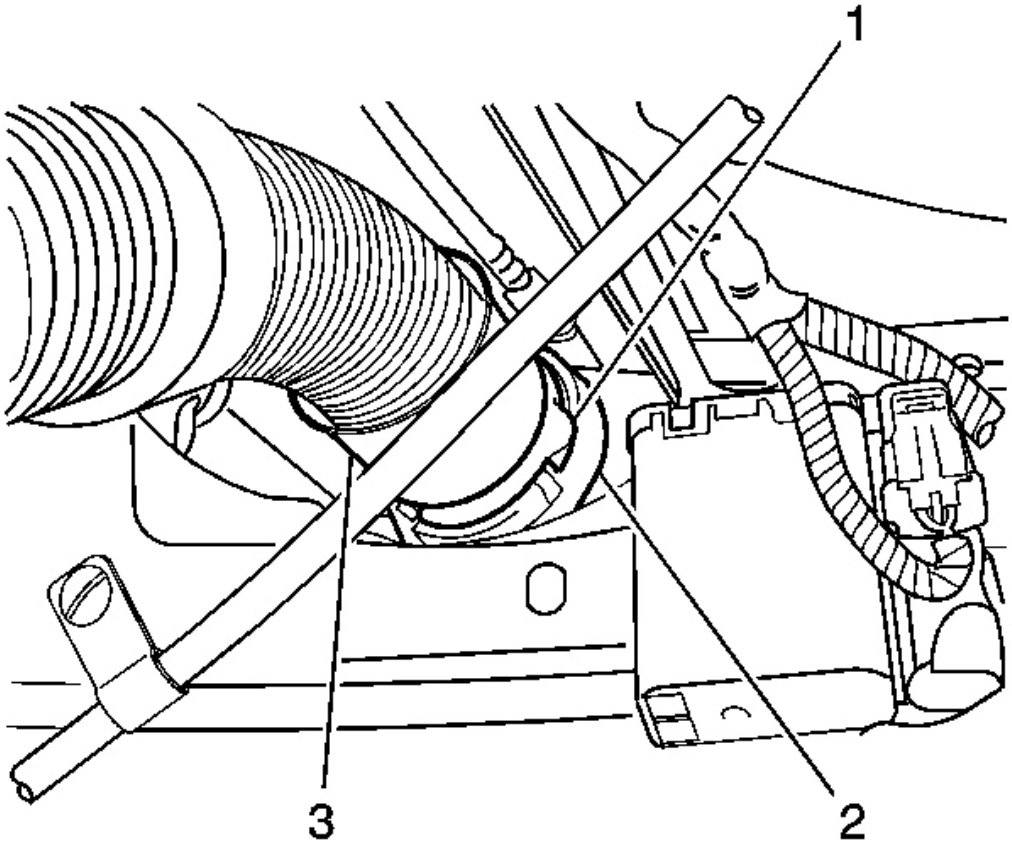

Fig. 128: Locating Air Inlet Hose
Courtesy of GENERAL MOTORS CORP.

13. Disengage the crossover tube connector position assurance (CPA) retainer by pulling the tab (1) outward and rotate.

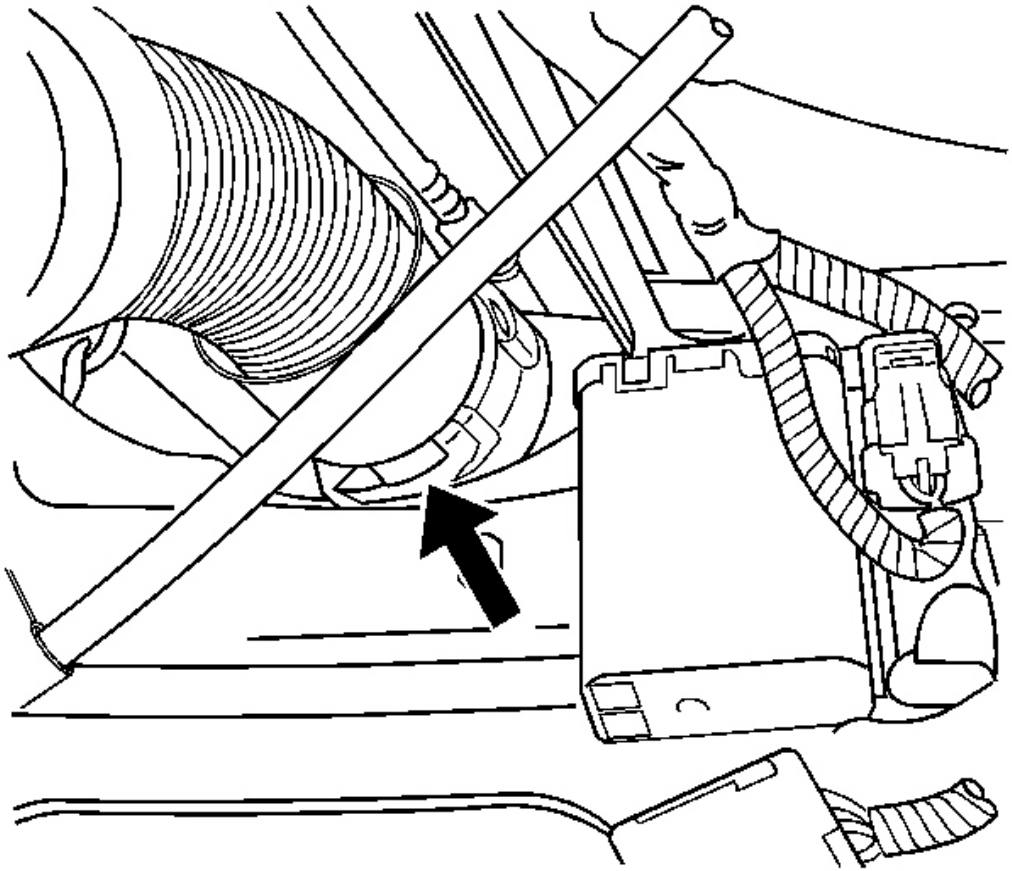

Fig. 129: Locating Crossover Tube Collar
Courtesy of GENERAL MOTORS CORP.

IMPORTANT: The crossover tube CPA is released when the latch disengages from the tank connection groove.

14. Rotate crossover tube collar (3) counterclockwise to disengage.

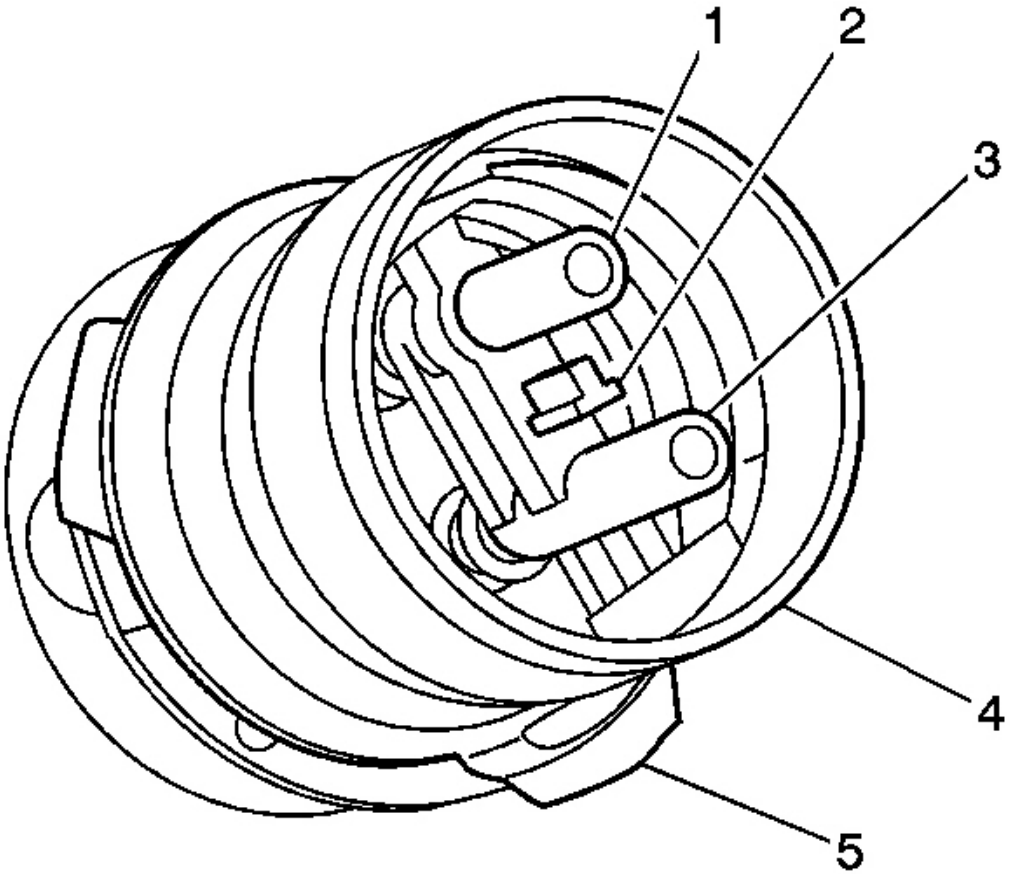

Fig. 130: Fuel Tank Crossover Tube & Mating Surfaces
Courtesy of GENERAL MOTORS CORP.

15. Disconnect the crossover tube from the left fuel tank by pulling straight out.

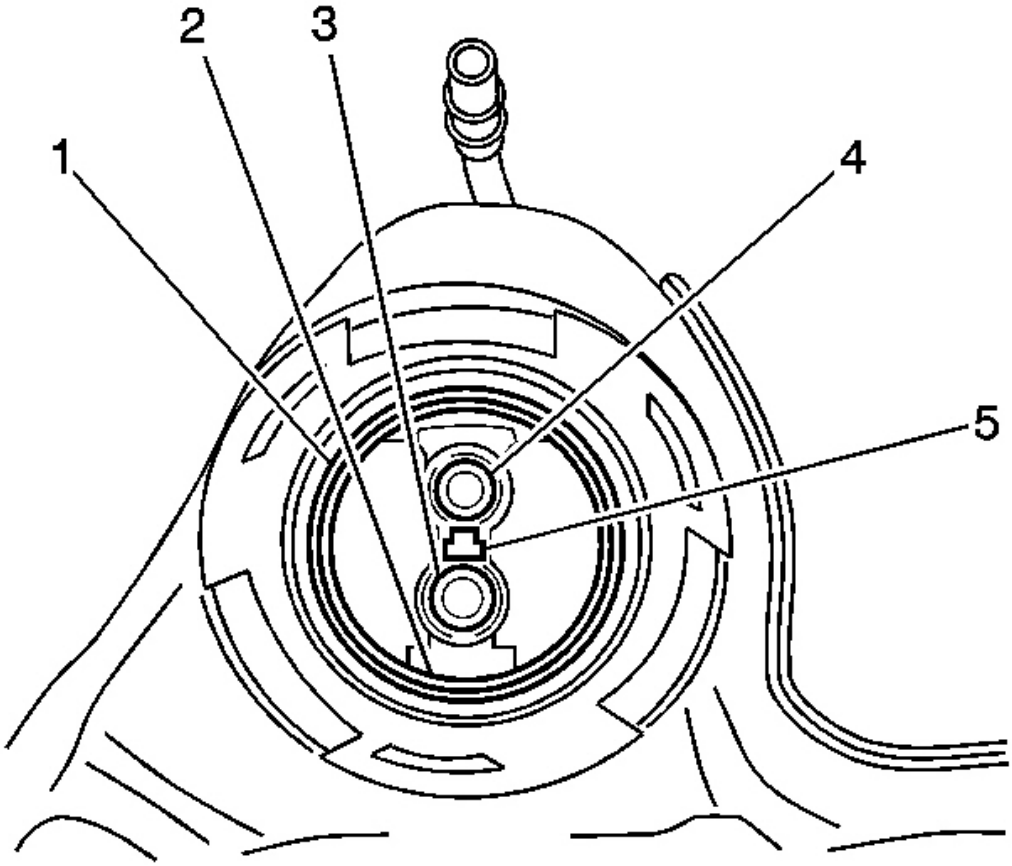

Fig. 131: Crossover Tube To Fuel Tank O-Rings & Alignment Feature
Courtesy of GENERAL MOTORS CORP.

IMPORTANT: Take care not to disturb the internal O-rings in the fuel tank connections.

16. Disconnect the evaporative emission (EVAP) crossover pipe (2) quick connect fitting at the left fuel tank.

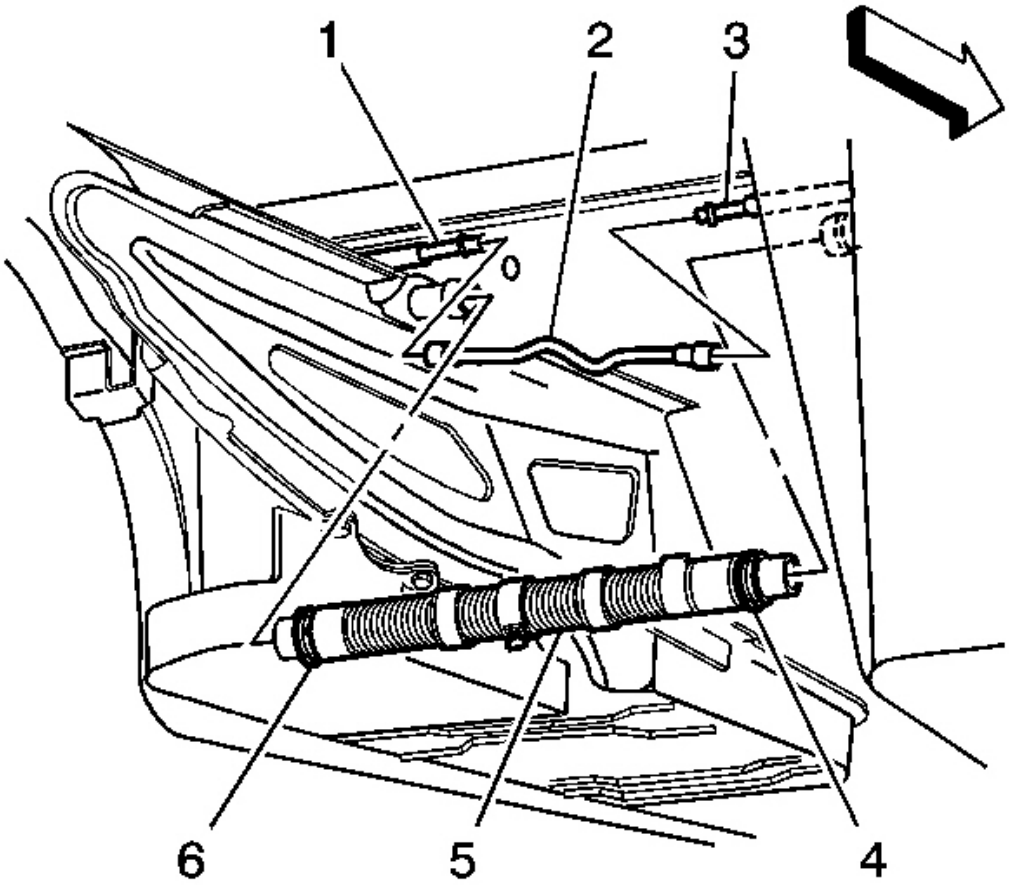

Fig. 132: EVAP Crossover Pipe & Tank Crossover Hose
Courtesy of GENERAL MOTORS CORP.

17. Cap the EVAP pipe to prevent system contamination.

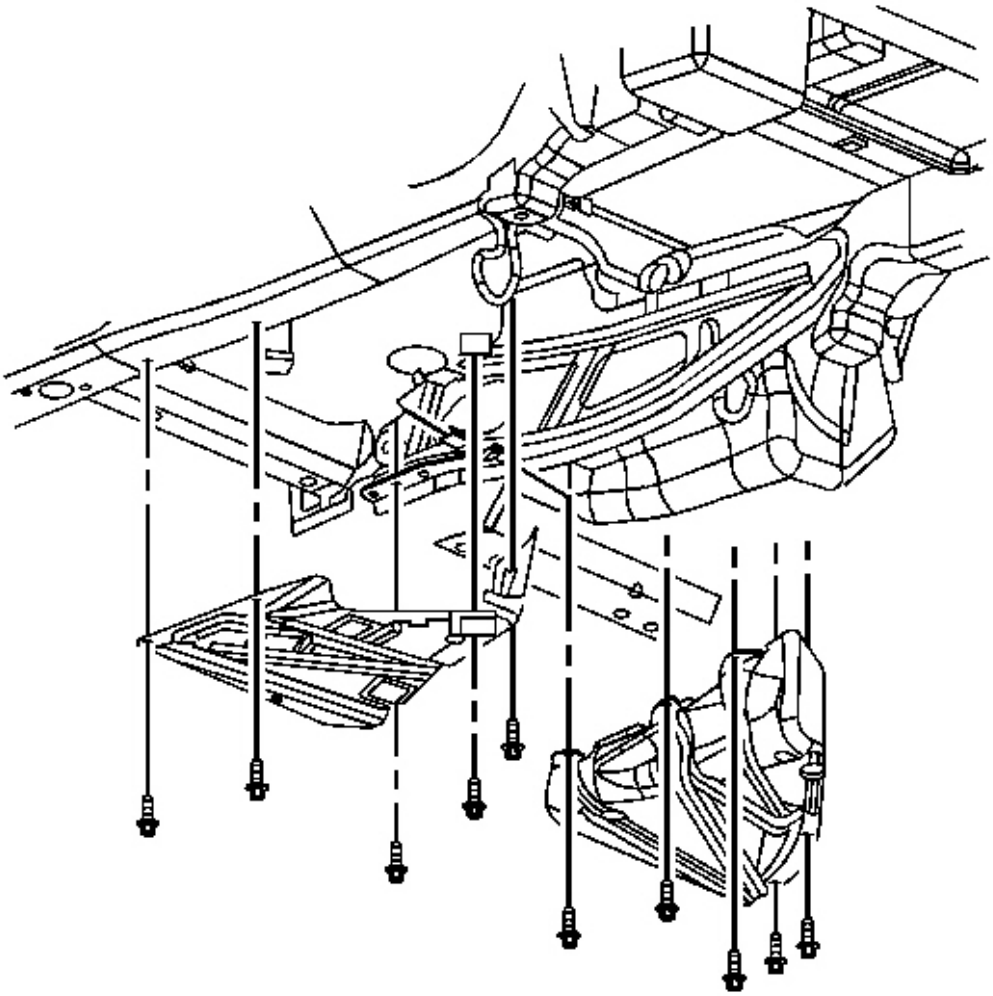

Fig. 133: Fuel Tank Strap Mount & Bolts
Courtesy of GENERAL MOTORS CORP.

18. Remove the fuel tank strap mount bolts.
19. Remove the fuel tank strap from the vehicle.

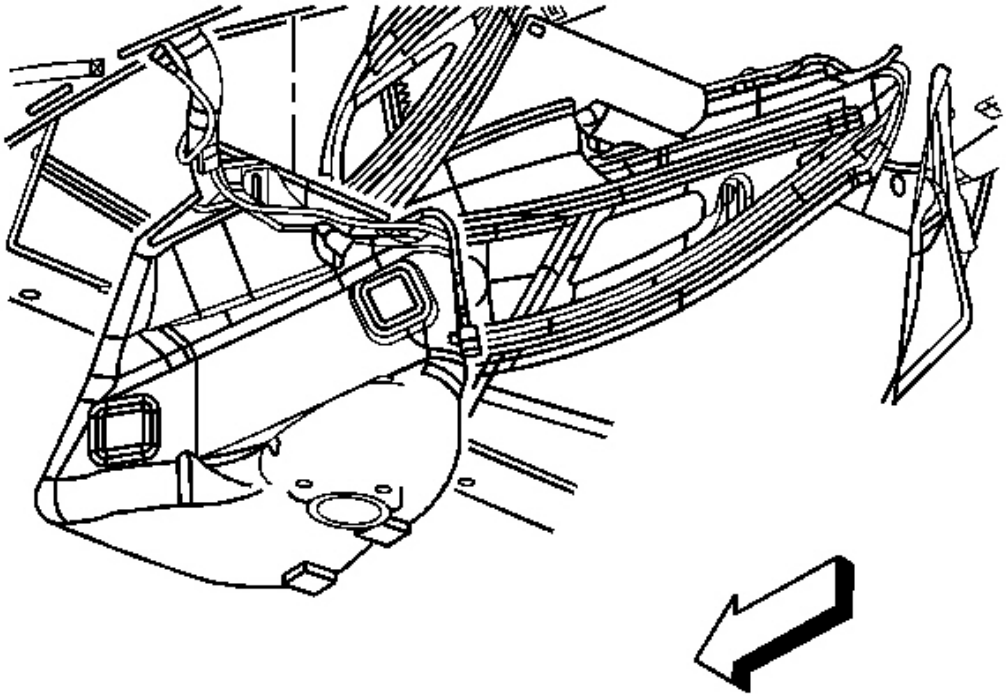

Fig. 134: Fuel Tank (Left)
Courtesy of GENERAL MOTORS CORP.

20. Remove the fuel tank.

Installation Procedure

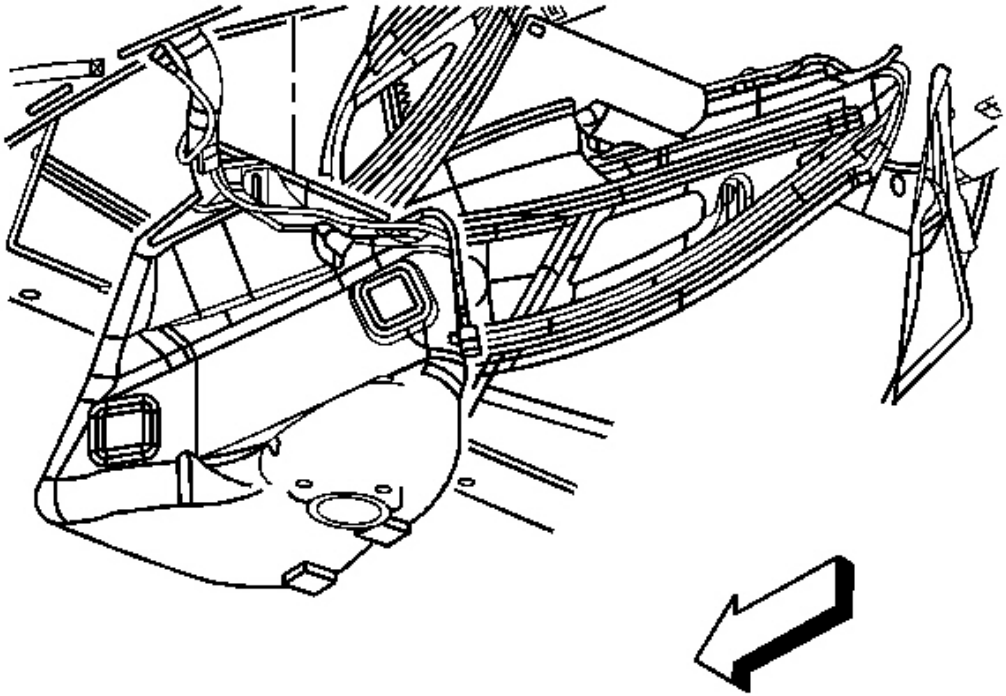

Fig. 135: Fuel Tank (Left)
Courtesy of GENERAL MOTORS CORP.

1. Install the fuel tank.
2. Install the fuel tank strap to the vehicle.

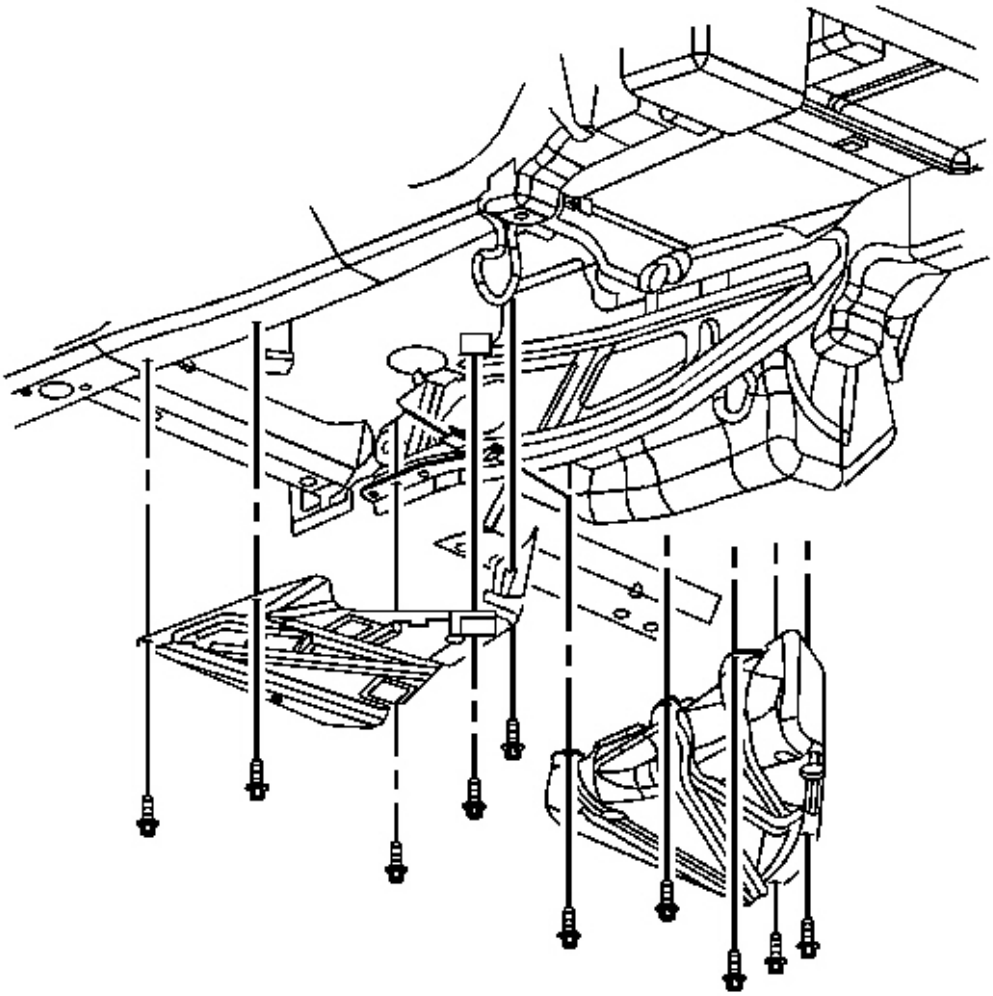

Fig. 136: Fuel Tank Strap Mount & Bolts
Courtesy of GENERAL MOTORS CORP.

3. Install the fuel tank strap bolts loosely leaving the tank hanging approximately 1 inch.
4. Remove the cap from the EVAP pipe.

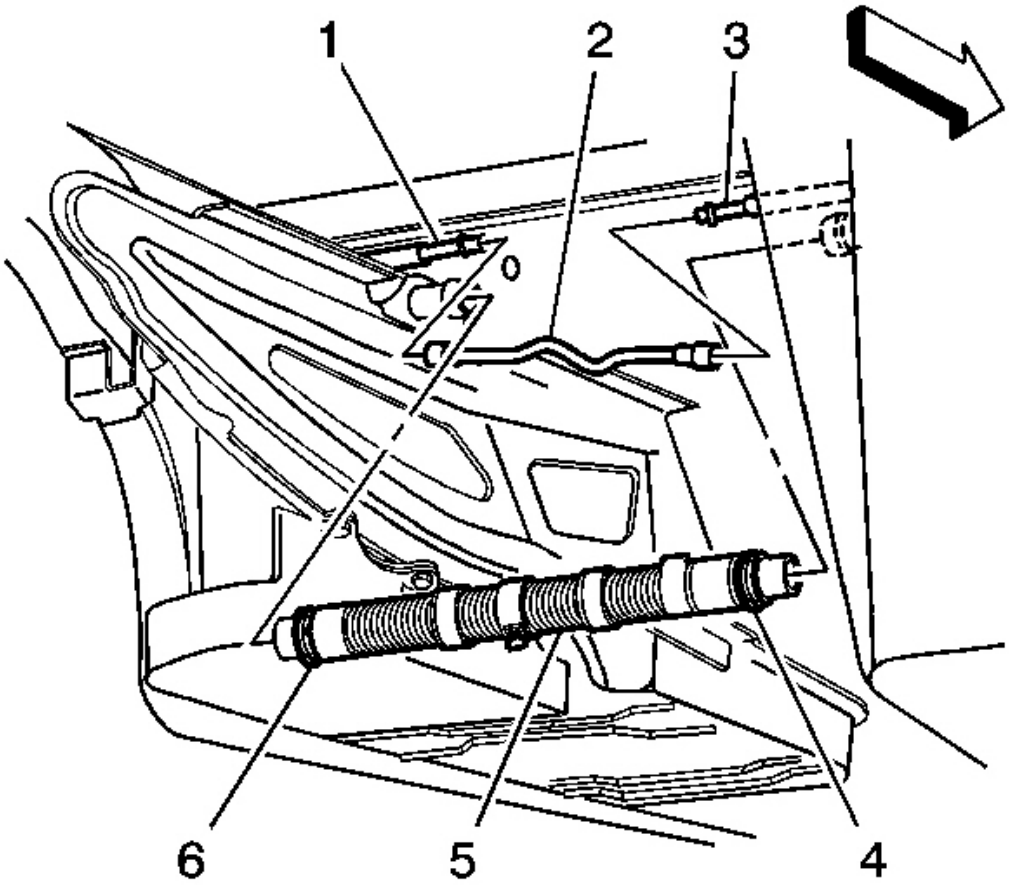

Fig. 137: EVAP Crossover Pipe & Tank Crossover Hose
Courtesy of GENERAL MOTORS CORP.

5. Connect the EVAP crossover pipe (2) quick connect fitting at the left fuel tank.

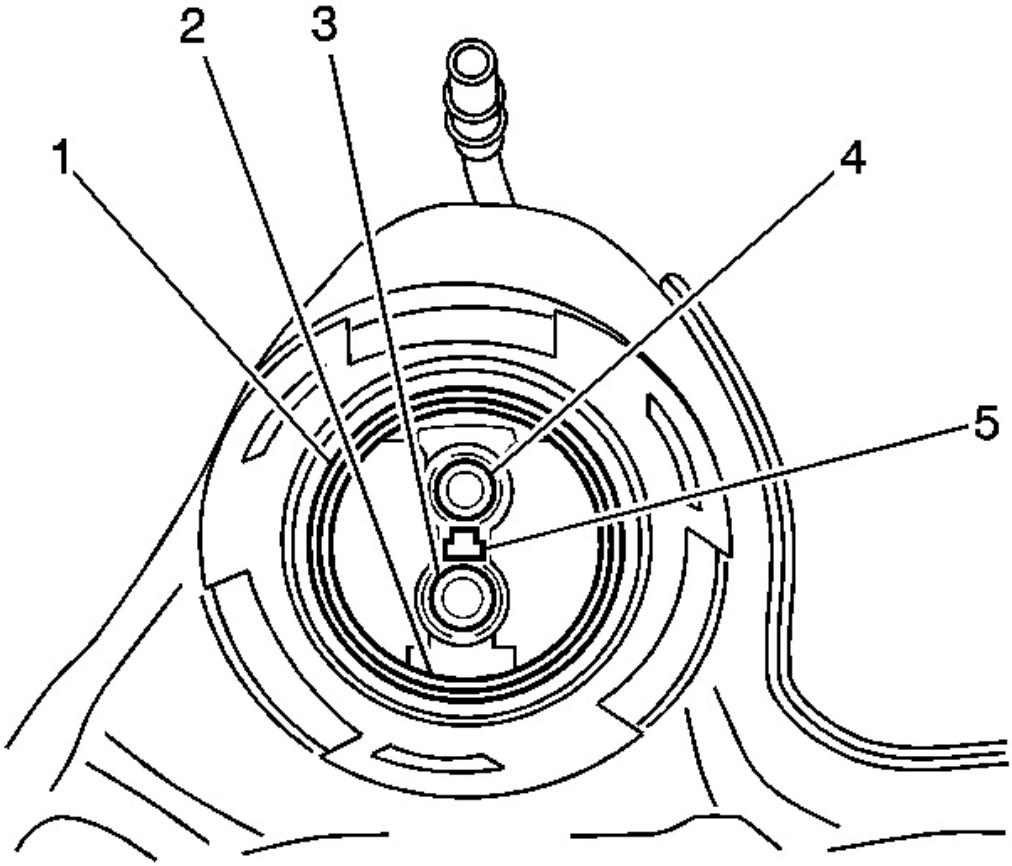

Fig. 138: Crossover Tube To Fuel Tank O-Rings & Alignment Feature
Courtesy of GENERAL MOTORS CORP.

6. Lubricate the crossover tube to fuel tank connection O-rings (1-4) with GM P/N 1051717 (Canadian P/N 5728223) rubber lubricant.

IMPORTANT: Note the location of the T-shaped alignment feature (5) between the jet pump feed/return pipes connector.

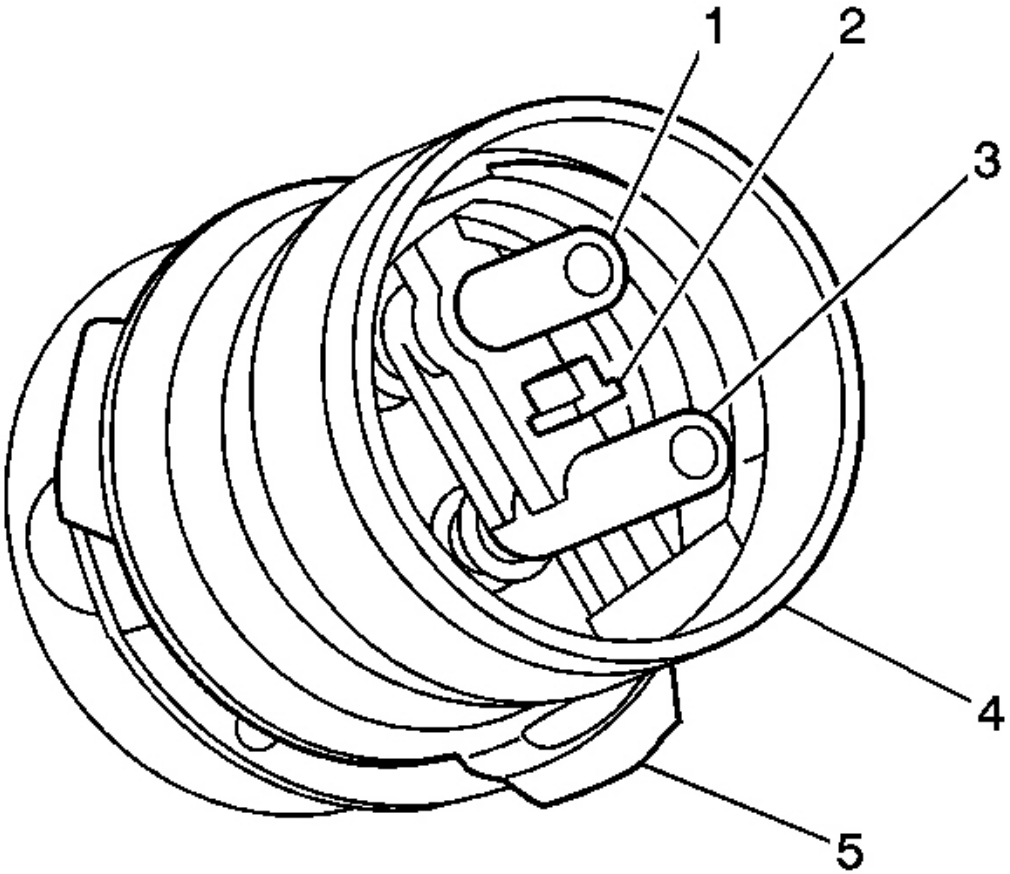

Fig. 139: Fuel Tank Crossover Tube & Mating Surfaces
Courtesy of GENERAL MOTORS CORP.

IMPORTANT: Note the T-shaped alignment feature on the crossover tube.

7. Lubricate the crossover tube O-ring mating surfaces (1-4) with GM P/N 1051717 (Canadian P/N 5728223) rubber lubricant.

IMPORTANT: The crossover tube will not fully seat into the fuel tank if the jet pump lines are misaligned.

8. Connect the crossover tube to the left fuel tank using the features previously noted.

IMPORTANT: The crossover tube collar tangs will not latch if misalignment exists.

9. Rotate the crossover tube collar (3) clockwise to engage the tangs.

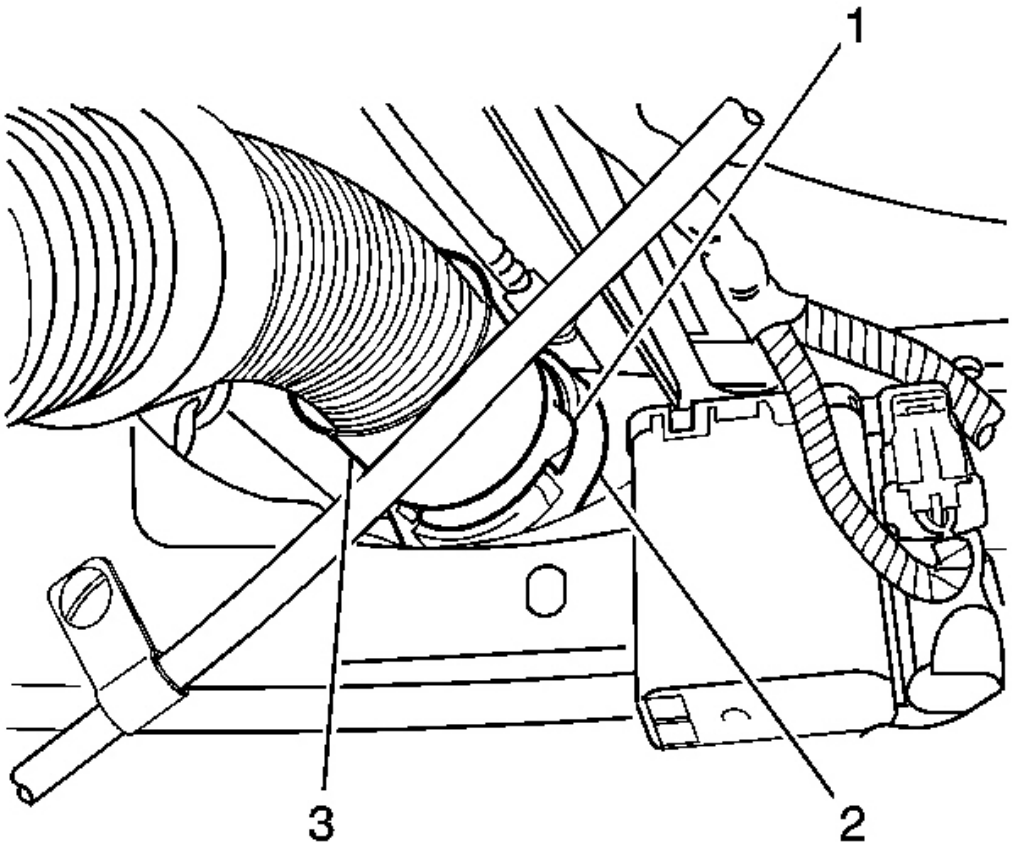

Fig. 140: Locating Air Inlet Hose
Courtesy of GENERAL MOTORS CORP.

10. Rotate the crossover tube CPA retainer counterclockwise past the collar latching tang and push the tab (1) into the locked position.

IMPORTANT: If the CPA retainer is locked into position, the crossover tube collar will not rotate.

11. Test the crossover tube to fuel tank connection by attempting to rotate the crossover tube collar counterclockwise.

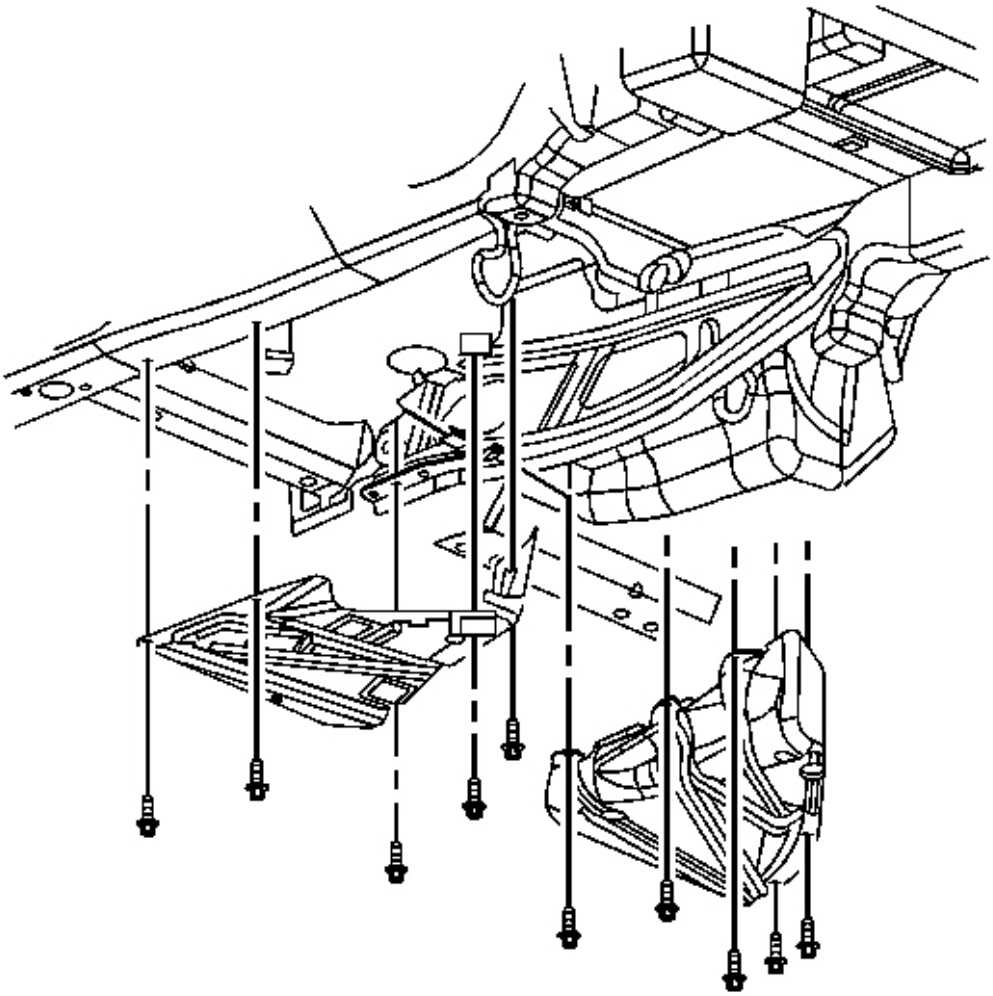

Fig. 141: Fuel Tank Strap Mount & Bolts
Courtesy of GENERAL MOTORS CORP.

NOTE: Refer to Fastener Notice in Cautions and Notices.

12. Tighten the fuel tank strap bolts.

    Tighten: Tighten the bolts to 25 N.m (18 lb in).

13. Remove the cap from the fuel pipes.

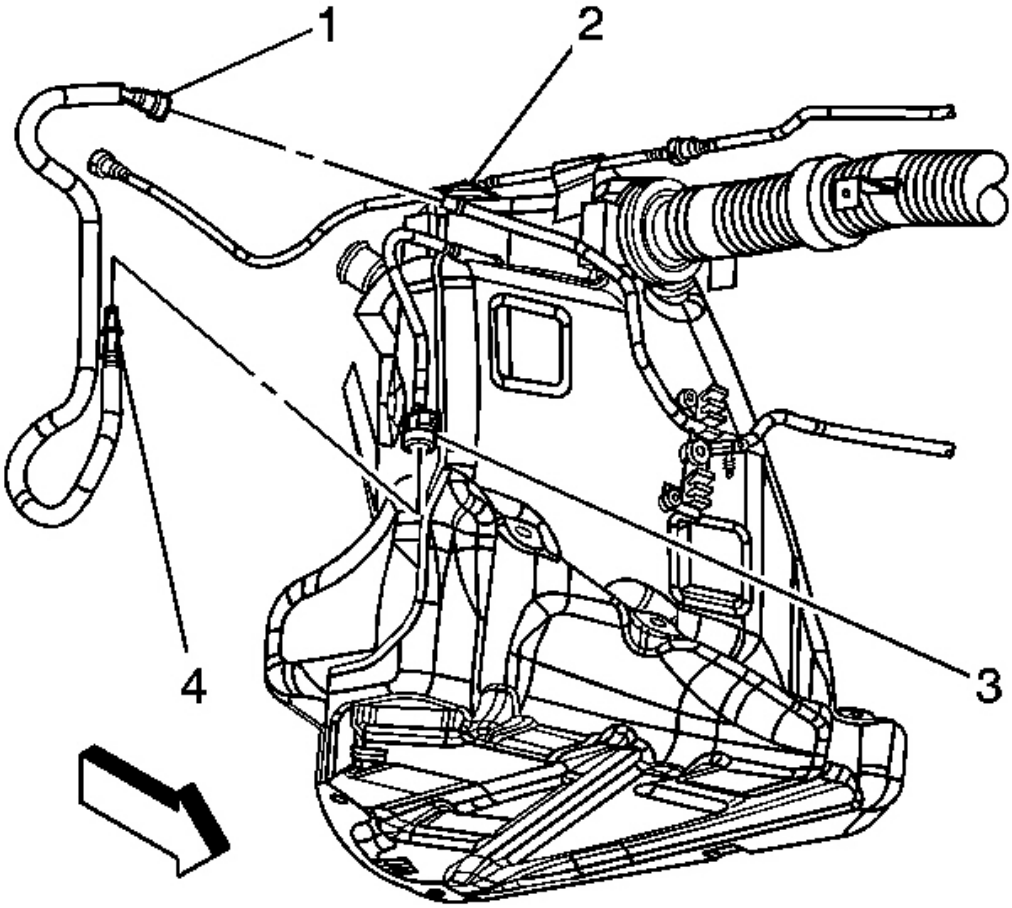

Fig. 142: Fuel Feed Pipe At Rear Of Left Fuel Tank
Courtesy of GENERAL MOTORS CORP.

14. Connect the fuel feed pipe (4) at the rear of the left fuel tank. Refer to **Quick Connect Fitting(s) Service (Plastic Collar)** .

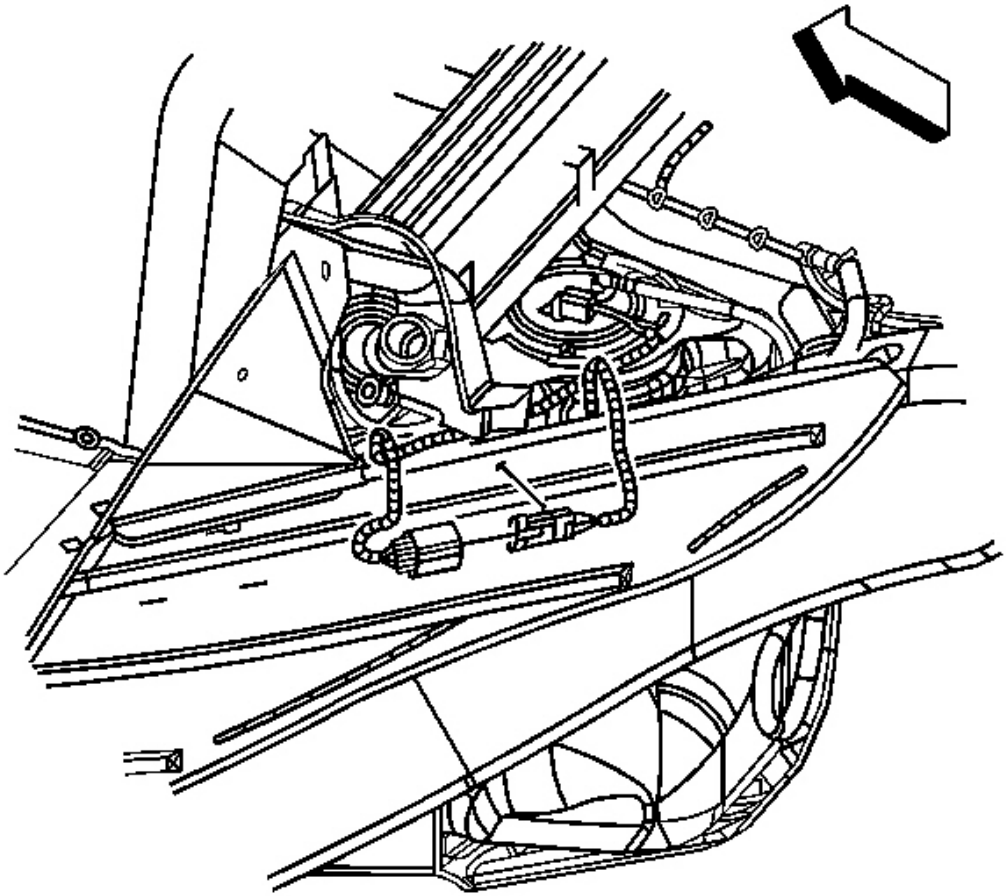

Fig. 143: Fuel Pump Jumper Harness Connector
Courtesy of GENERAL MOTORS CORP.

15. Connect the fuel pump jumper harness connector.
16. Connect the fuel fill hose and recirc line to the fill tube.

    Tighten: Tighten the clamp to 4 N.m (35 lb in).

17. Install the driveline support assembly. Refer to **Driveline Support Assembly Replacement (Automatic Transmission)** or **Driveline Support Assembly Replacement (Manual Transmission)** in Propeller Shaft.
18. Install both mufflers. Refer to **Muffler Replacement - Left** and **Muffler Replacement - Right** in Engine Exhaust.
19. Install the left rear wheelhouse panel. Refer to **Wheelhouse Panel Replacement** in Body Rear End.

20. Install the Left rear tire. Refer to **Tire and Wheel Removal and Installation** in Tires and Wheels.
21. Lower the vehicle.
22. Refuel the fuel tank.
23. Connect the negative battery cable. Refer to **Battery Negative Cable Disconnect/Connect Procedure** in Engine Electrical.
24. Perform the following procedure in order to test for leaks:
    1. Turn ON the Ignition switch, for 2 seconds.
    2. Turn OFF the ignition, for 10 seconds.
    3. Turn ON the ignition.
    4. Inspect for fuel leaks.
25. Program the transmitters. Refer to **Transmitter Programming** in Keyless Entry.

FUEL TANK CROSSOVER TUBE/HOSE REPLACEMENT

Tools Required

J 37088-A Fuel Line Disconnect Tool. See.

Removal Procedure

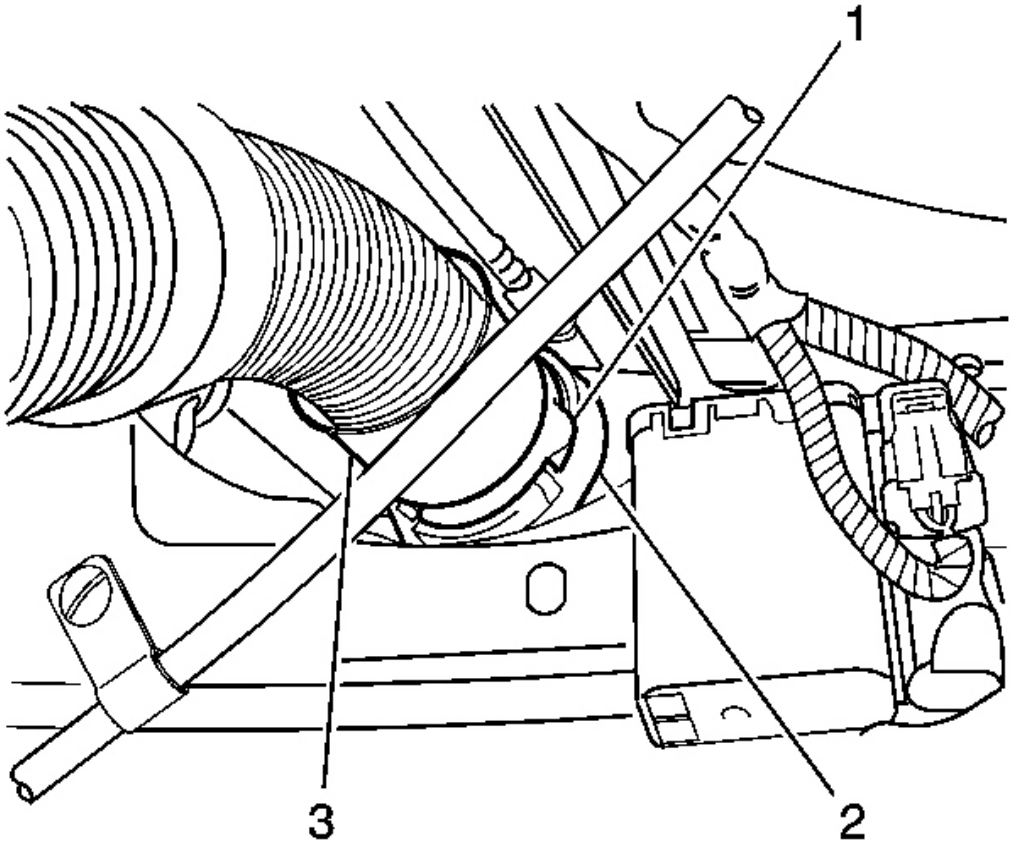

Fig. 144: Locating Air Inlet Hose
Courtesy of GENERAL MOTORS CORP.

1. Remove the driveline support assembly. Refer to **Driveline Support Assembly Replacement (Automatic Transmission)** or **Driveline Support Assembly Replacement (Manual Transmission)** in Propeller Shaft.
2. Remove the crossover tube from the clamp located above the transmission.
3. Disengage the left crossover tube connector position assurance (CPA) retainer by pulling the tab (1) outward and rotate.

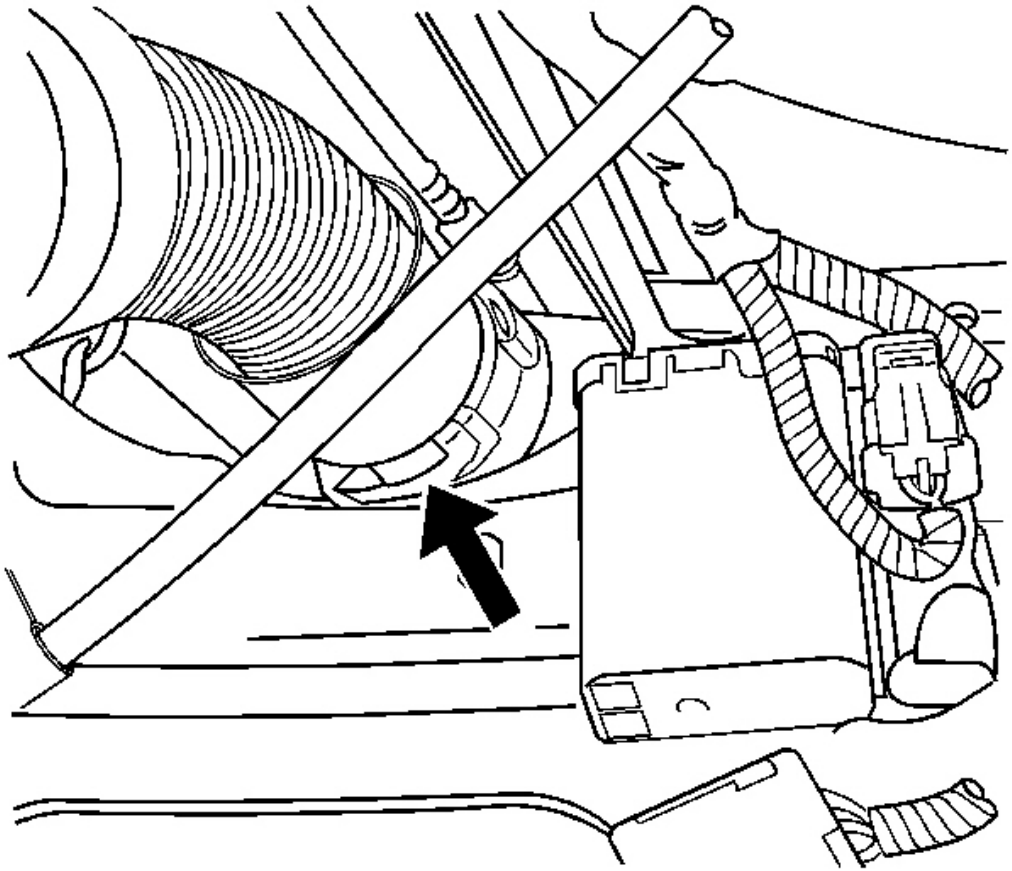

Fig. 145: Locating Crossover Tube Collar
Courtesy of GENERAL MOTORS CORP.

IMPORTANT: The crossover tube CPA is released when the latch disengages from the tank connection groove.

4. Rotate crossover tube collar (3) counterclockwise to disengage.

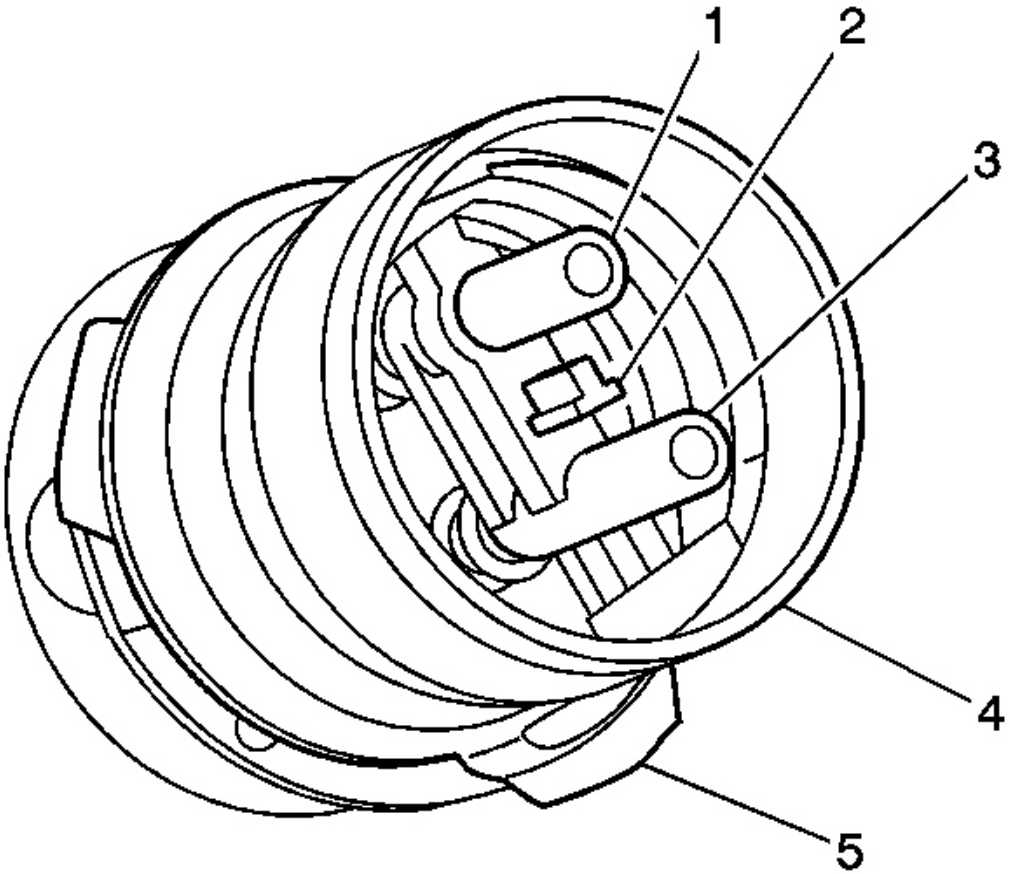

Fig. 146: Fuel Tank Crossover Tube & Mating Surfaces
Courtesy of GENERAL MOTORS CORP.

5. Disconnect the crossover tube from the left fuel tank by pulling the tube straight out of the fuel tank connection.
6. Repeat steps 3 through 5 for the right side tank.

Installation Procedure

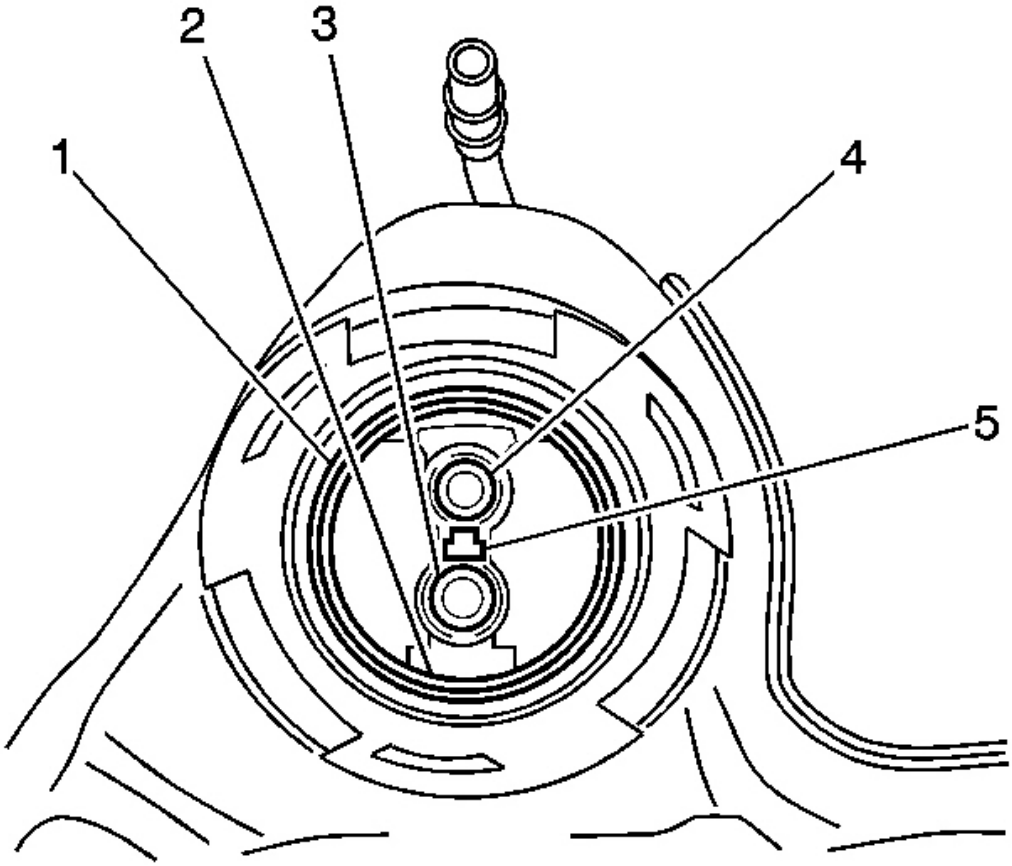

Fig. 147: Crossover Tube To Fuel Tank O-Rings & Alignment Feature
Courtesy of GENERAL MOTORS CORP.

1. Lubricate the right crossover tube to fuel tank connection O-rings (1-4) with GM P/N 1051717 (Canadian P/N 5728223) rubber lubricant.

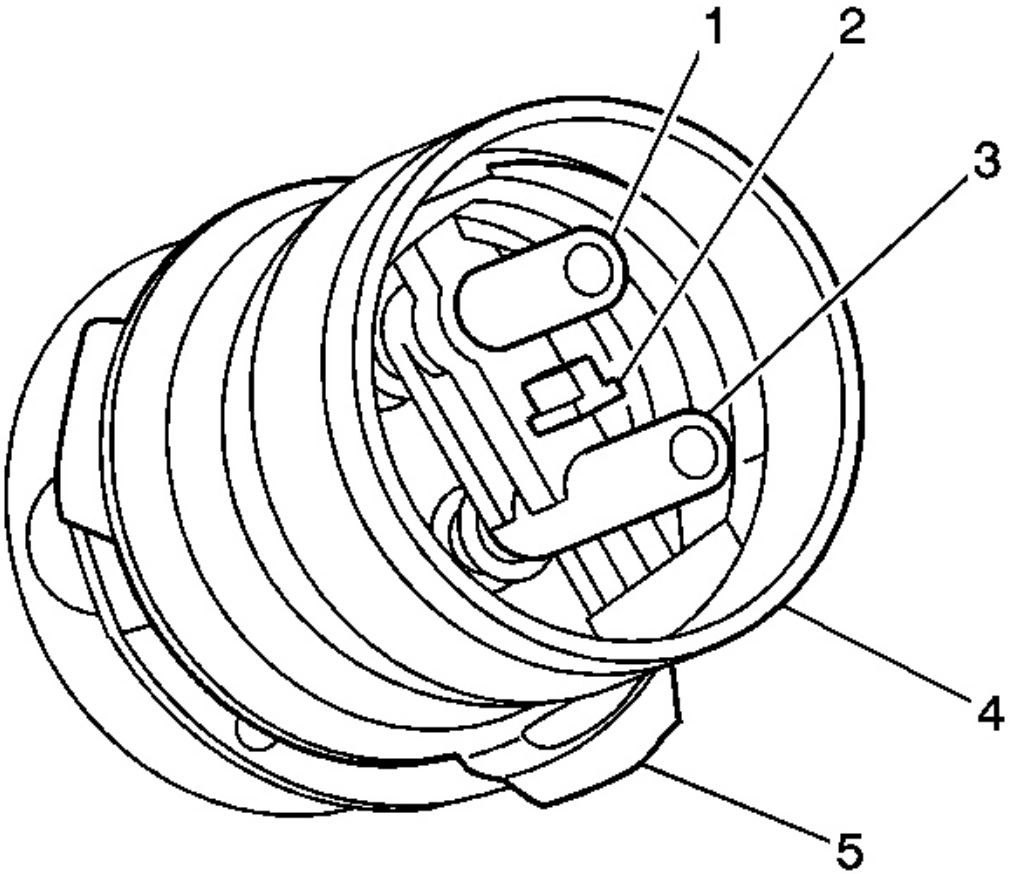

Fig. 148: Fuel Tank Crossover Tube & Mating Surfaces
Courtesy of GENERAL MOTORS CORP.

IMPORTANT: Note the location of the T-shaped alignment feature (5) between the jet pump feed/return pipes connector.

2. Lubricate the crossover tube O-ring mating surfaces (1-4) with GM PN 1051717 (Canadian P/N 5728223) rubber lubricant.

IMPORTANT:
- **Note the T-shaped alignment feature on the crossover tube.**
- **The crossover tube will not fully seat into the fuel tank if the jet pump lines are misaligned.**

3. Connect the crossover tube to the right fuel tank using the features previously noted.

IMPORTANT: The crossover tube collar tangs will not latch if misalignment exists.

4. Rotate the crossover tube collar (3) clockwise to engage the tangs.

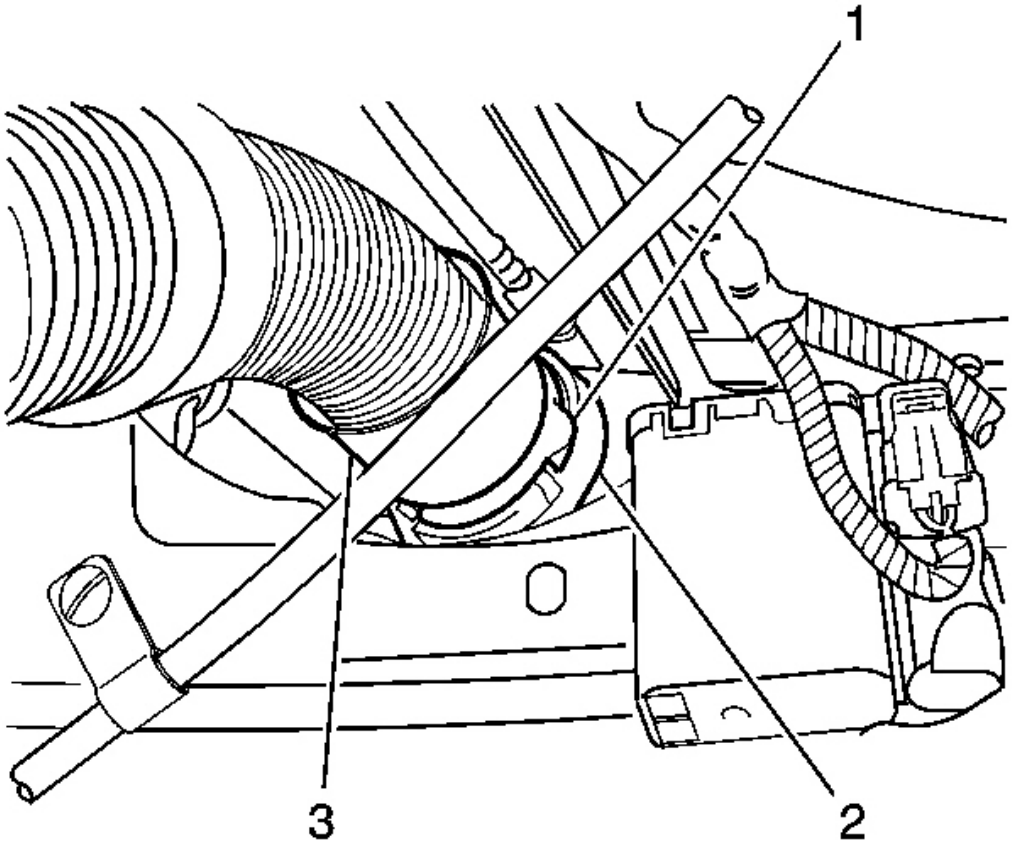

Fig. 149: Locating Air Inlet Hose
Courtesy of GENERAL MOTORS CORP.

5. Rotate the crossover tube CPA retainer counterclockwise past the collar latching tang and push the tab (1) into the locked position.

IMPORTANT: If the CPA retainer is locked into position, the crossover tube collar will not rotate.

6. Test the crossover tube to fuel tank connection by attempting to rotate the crossover tube collar counterclockwise.

7. Repeat steps 1 through 6 for the left side fuel tank.
8. Snap the crossover tube into the clamp located above the transmission.
9. Install the driveline support assembly. Refer to **Driveline Support Assembly Replacement (Automatic Transmission)** or **Driveline Support Assembly Replacement (Manual Transmission)** in Propeller Shaft.

FUEL TANK REPLACEMENT - LEFT

Tools Required

J 37088-A Fuel Line Disconnect tool

Removal Procedure

1. Disconnect the negative battery cable. Refer to **Battery Negative Cable Disconnect/Connect Procedure** in Engine Electrical.
2. Drain the fuel tank. Refer to **Fuel Tank Draining Procedure** .
3. Raise and support the vehicle. Refer to **Lifting and Jacking the Vehicle** in General Information.
4. Remove the left rear tire. Refer to **Tire and Wheel Removal and Installation** in Tires and Wheels.
5. Remove the left rear wheelhouse panel. Refer to **Wheelhouse Panel Replacement** in Body Rear End.
6. Remove both mufflers. Refer to **Muffler Replacement - Left** and **Muffler Replacement - Right** in Engine Exhaust.
7. Remove the driveline support assembly. Refer to **Driveline Support Assembly Replacement (Automatic Transmission)** or **Driveline Support Assembly Replacement (Manual Transmission)** in Propeller Shaft.
8. Disconnect the fuel fill hose and recirc line from the fill pipe.

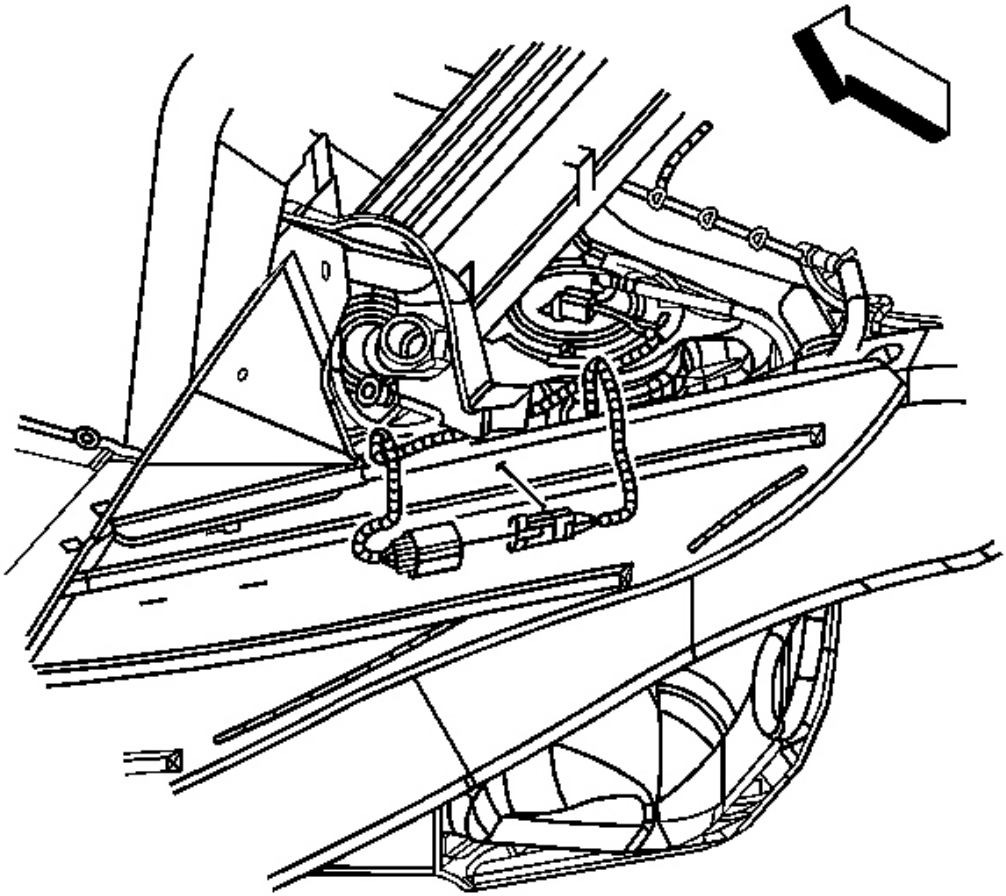

Fig. 150: Fuel Pump Jumper Harness Connector
Courtesy of GENERAL MOTORS CORP.

9. Disconnect the fuel pump jumper harness connector.

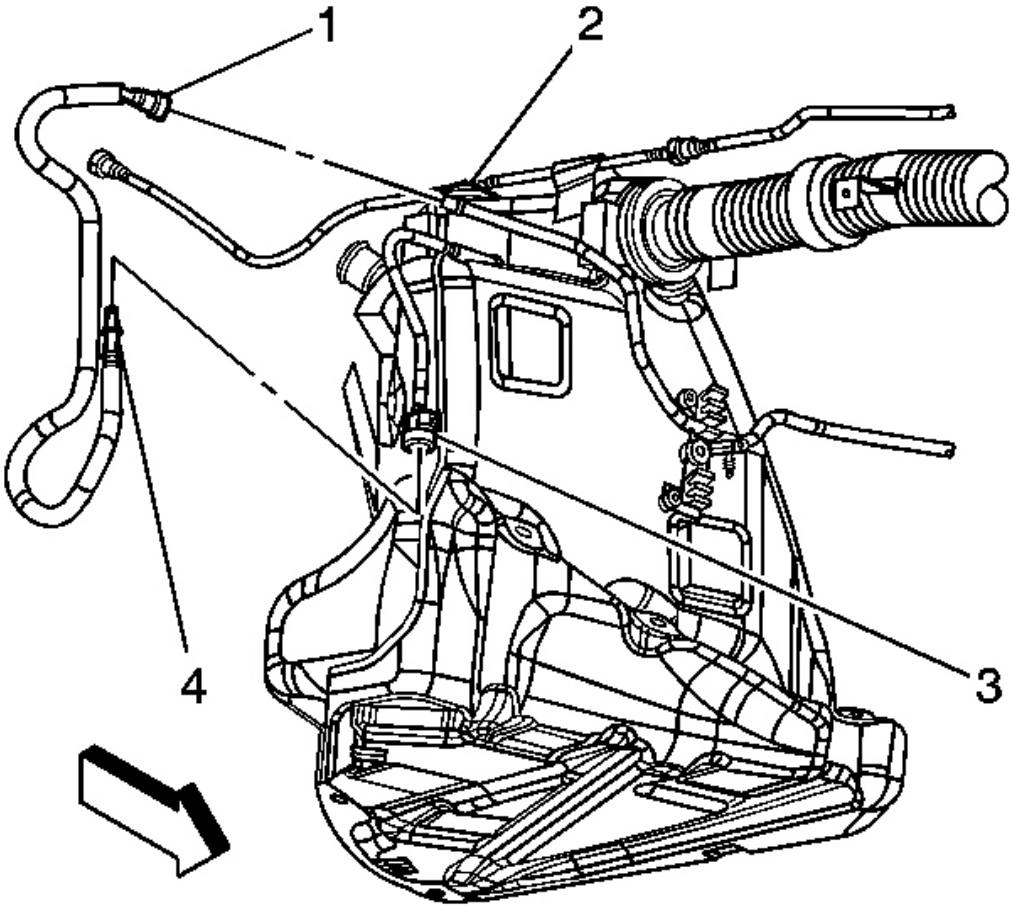

Fig. 151: Fuel Feed Pipe At Rear Of Left Fuel Tank
Courtesy of GENERAL MOTORS CORP.

10. Disconnect the fuel feed pipe (4) at the rear of the left fuel tank. Refer to **Quick Connect Fitting(s) Service (Plastic Collar)** .
11. Cap the fuel pipes to prevent fuel system contamination.

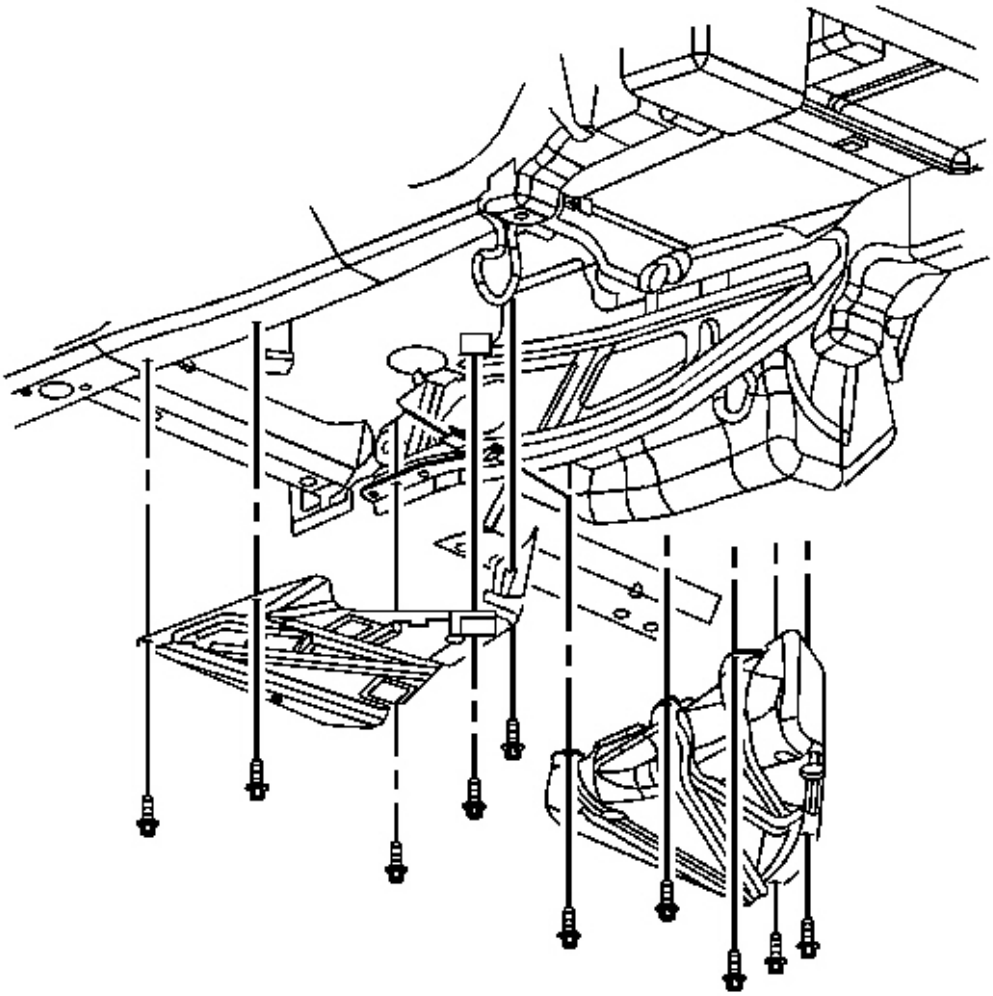

Fig. 152: Fuel Tank Strap Mount & Bolts
Courtesy of GENERAL MOTORS CORP.

12. Loosen the fuel tank strap in order to drop the tank approximately one inch.

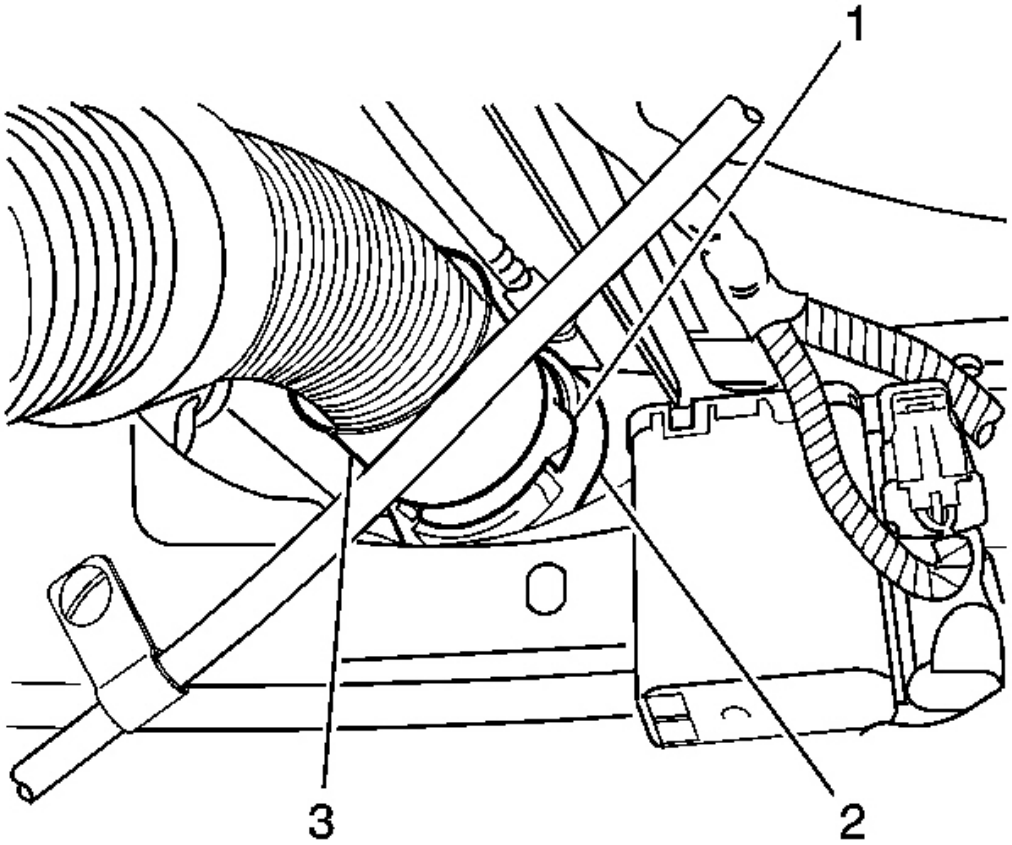

Fig. 153: Locating Air Inlet Hose
Courtesy of GENERAL MOTORS CORP.

13. Disengage the crossover tube connector position assurance (CPA) retainer by pulling the tab (1) outward and rotate.

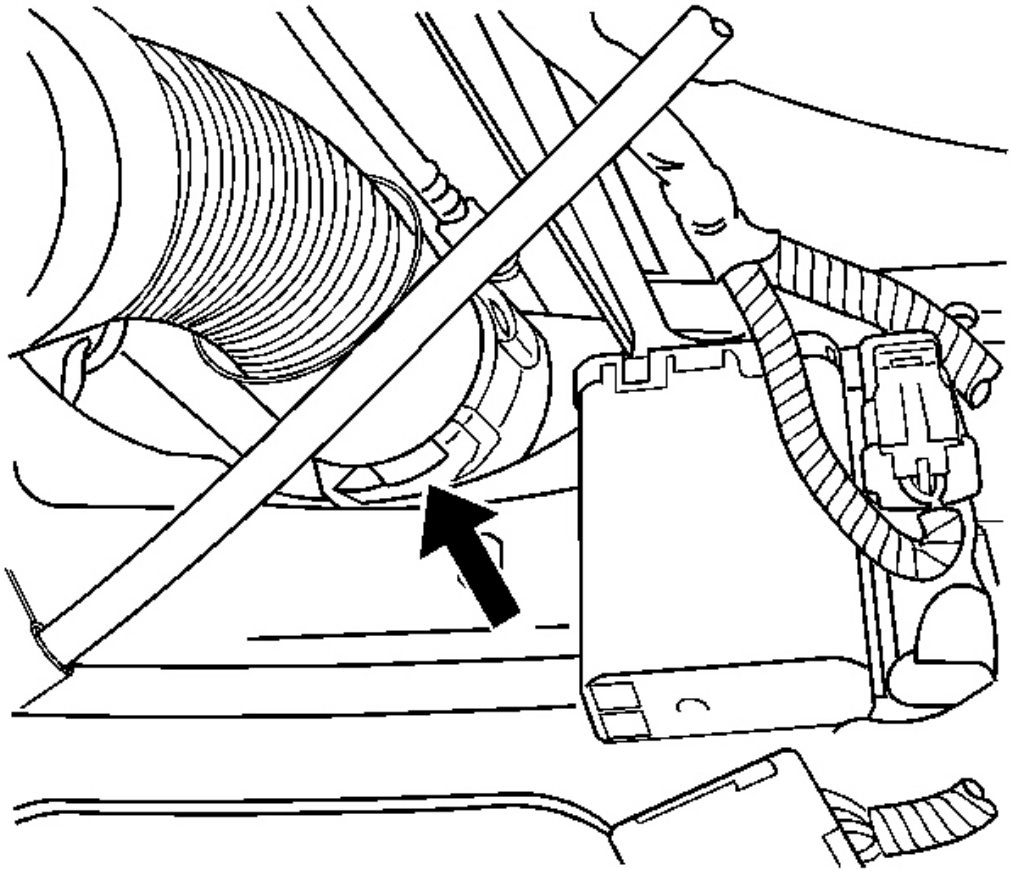

Fig. 154: Locating Crossover Tube Collar
Courtesy of GENERAL MOTORS CORP.

IMPORTANT: The crossover tube CPA is released when the latch disengages from the tank connection groove.

14. Rotate crossover tube collar (3) counterclockwise to disengage.

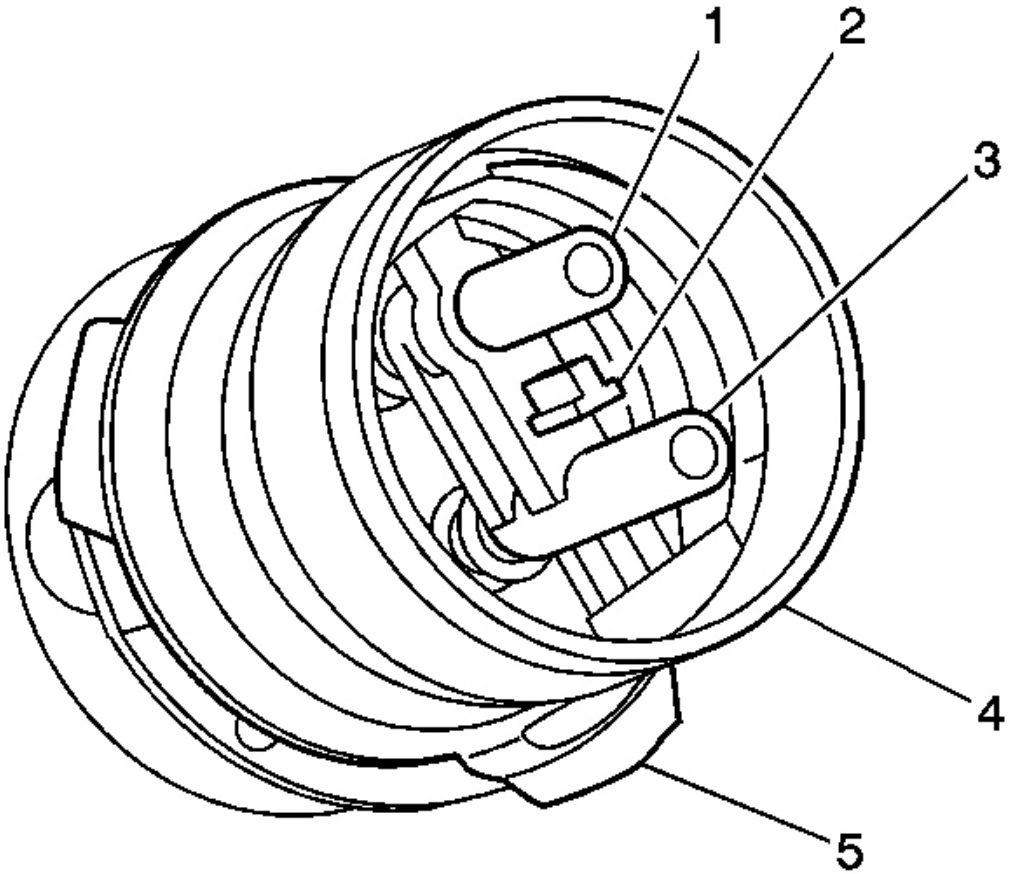

Fig. 155: Fuel Tank Crossover Tube & Mating Surfaces
Courtesy of GENERAL MOTORS CORP.

15. Disconnect the crossover tube from the left fuel tank by pulling straight out.

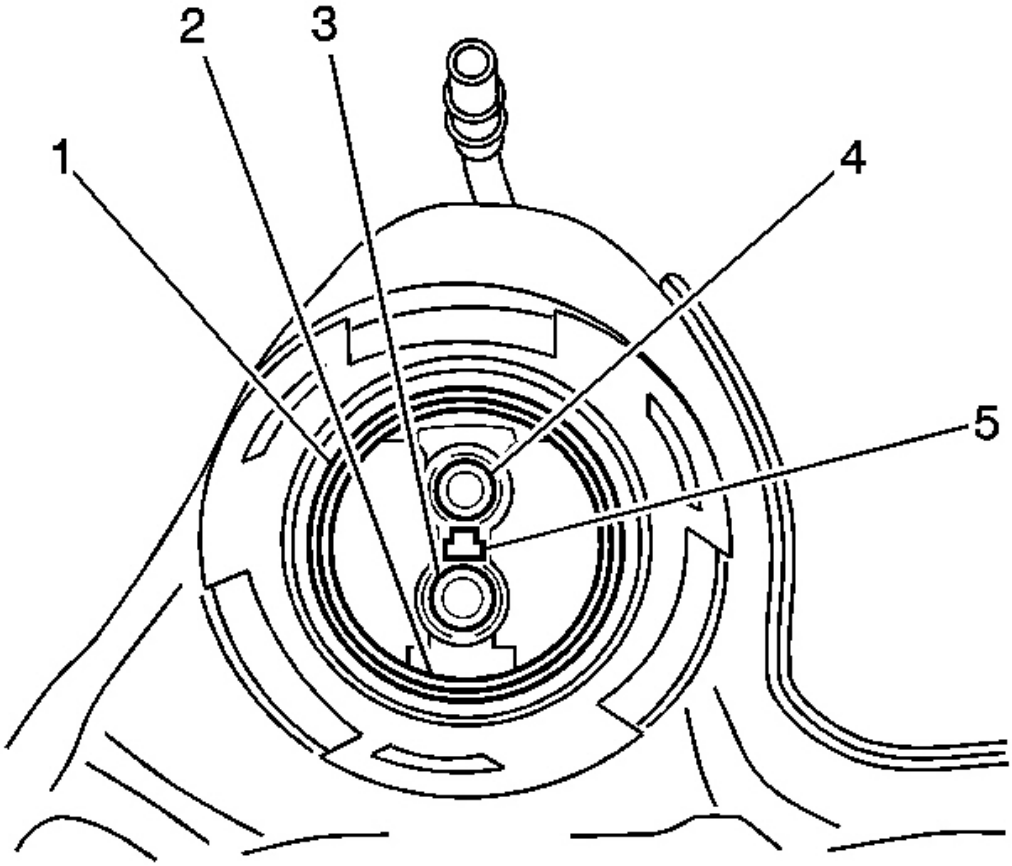

Fig. 156: Crossover Tube To Fuel Tank O-Rings & Alignment Feature
Courtesy of GENERAL MOTORS CORP.

IMPORTANT: Take care not to disturb the internal O-rings in the fuel tank connections.

16. Disconnect the evaporative emission (EVAP) crossover pipe (2) quick connect fitting at the left fuel tank.

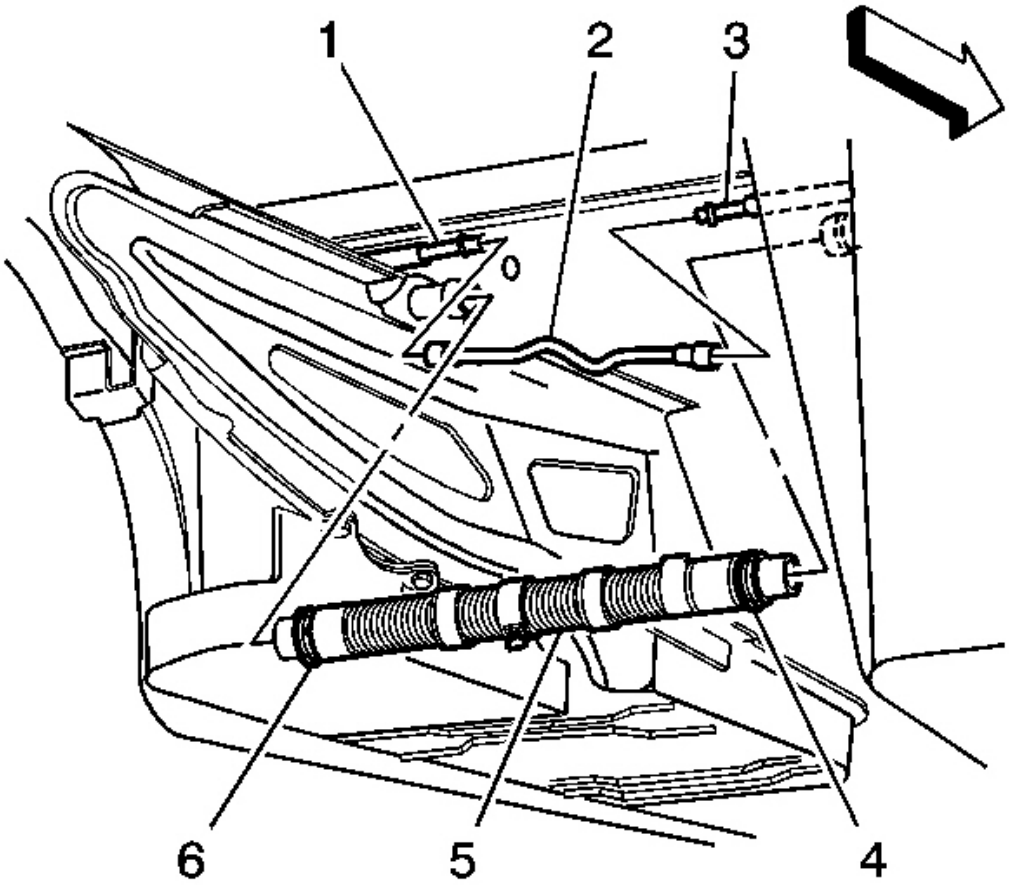

Fig. 157: EVAP Crossover Pipe & Tank Crossover Hose
Courtesy of GENERAL MOTORS CORP.

17. Cap the evaporative emission (EVAP) pipe to prevent system contamination.

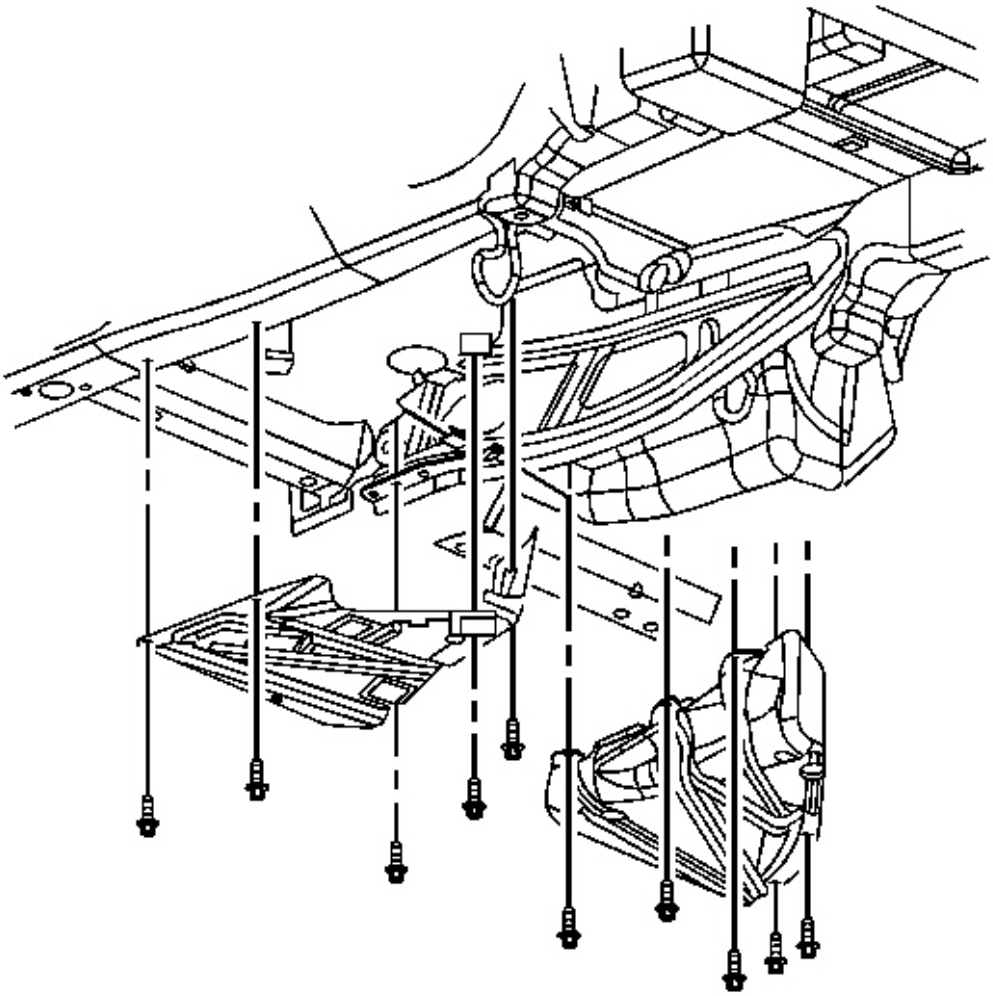

Fig. 158: Fuel Tank Strap Mount & Bolts
Courtesy of GENERAL MOTORS CORP.

18. Remove the fuel tank strap mount bolts.
19. Remove the fuel tank strap from the vehicle.

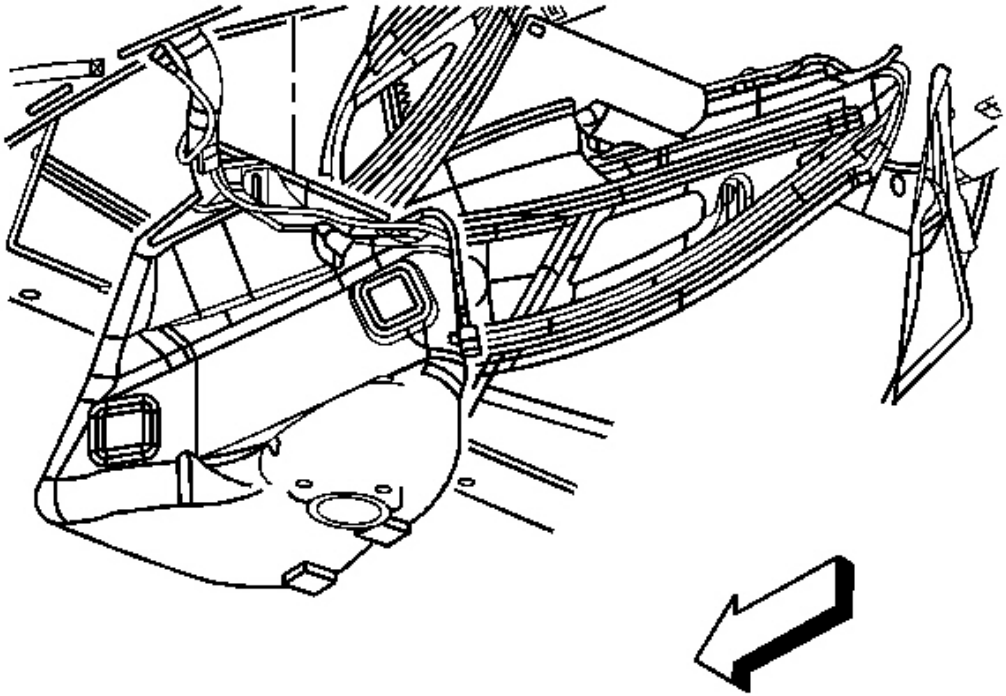

Fig. 159: Fuel Tank (Left)
Courtesy of GENERAL MOTORS CORP.

20. Remove the fuel tank.

Installation Procedure

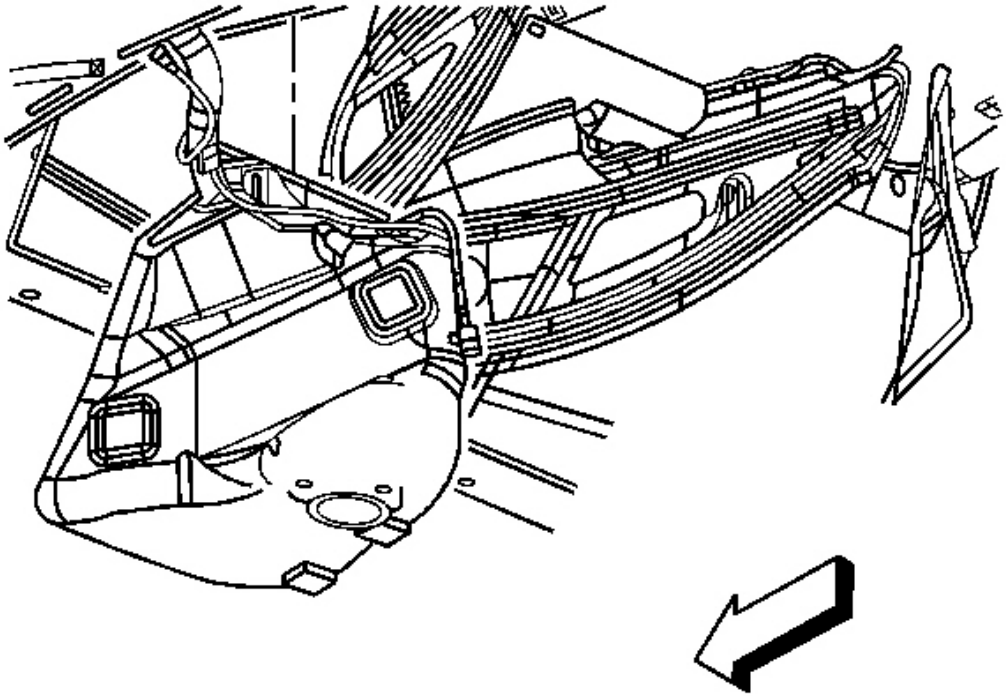

Fig. 160: Fuel Tank (Left)
Courtesy of GENERAL MOTORS CORP.

1. Install the fuel tank.
2. Install the fuel tank strap to the vehicle.

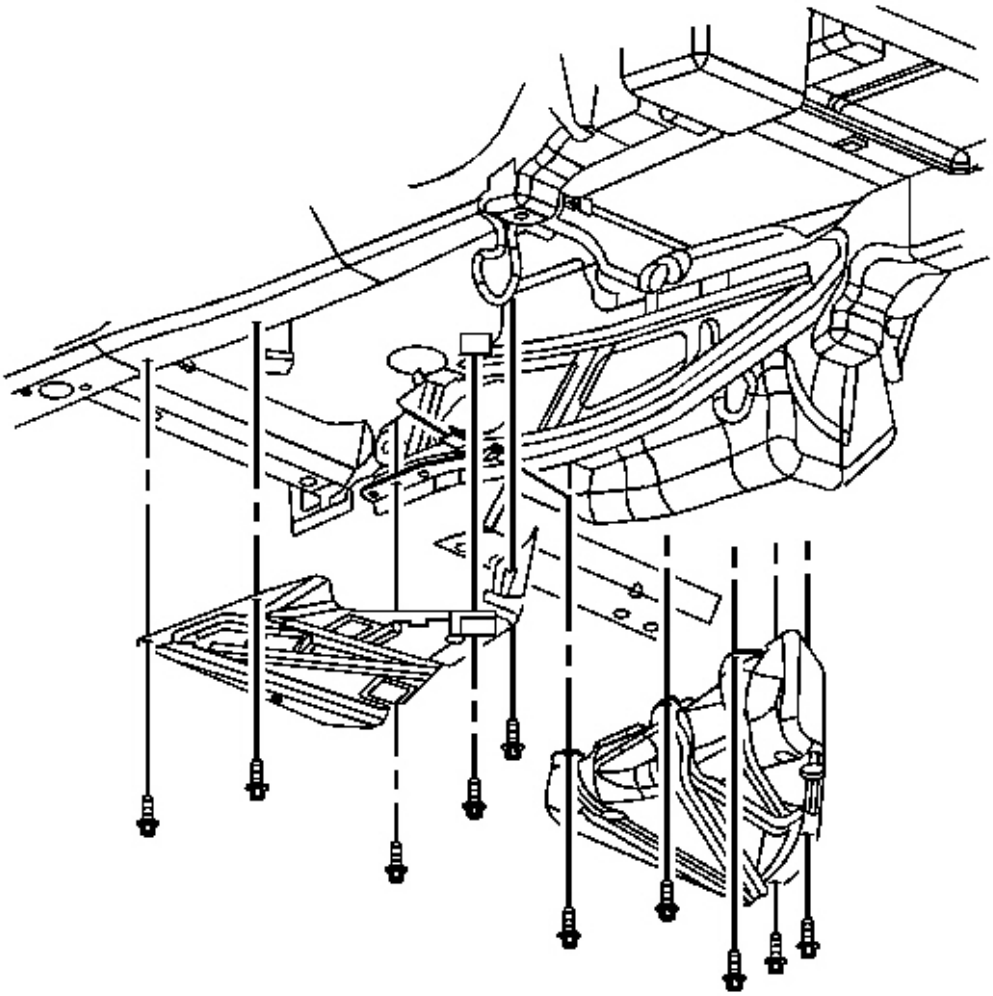

Fig. 161: Fuel Tank Strap Mount & Bolts
Courtesy of GENERAL MOTORS CORP.

3. Install the fuel tank strap bolts loosely leaving the tank hanging approximately one inch.
4. Remove the cap from the EVAP pipe.

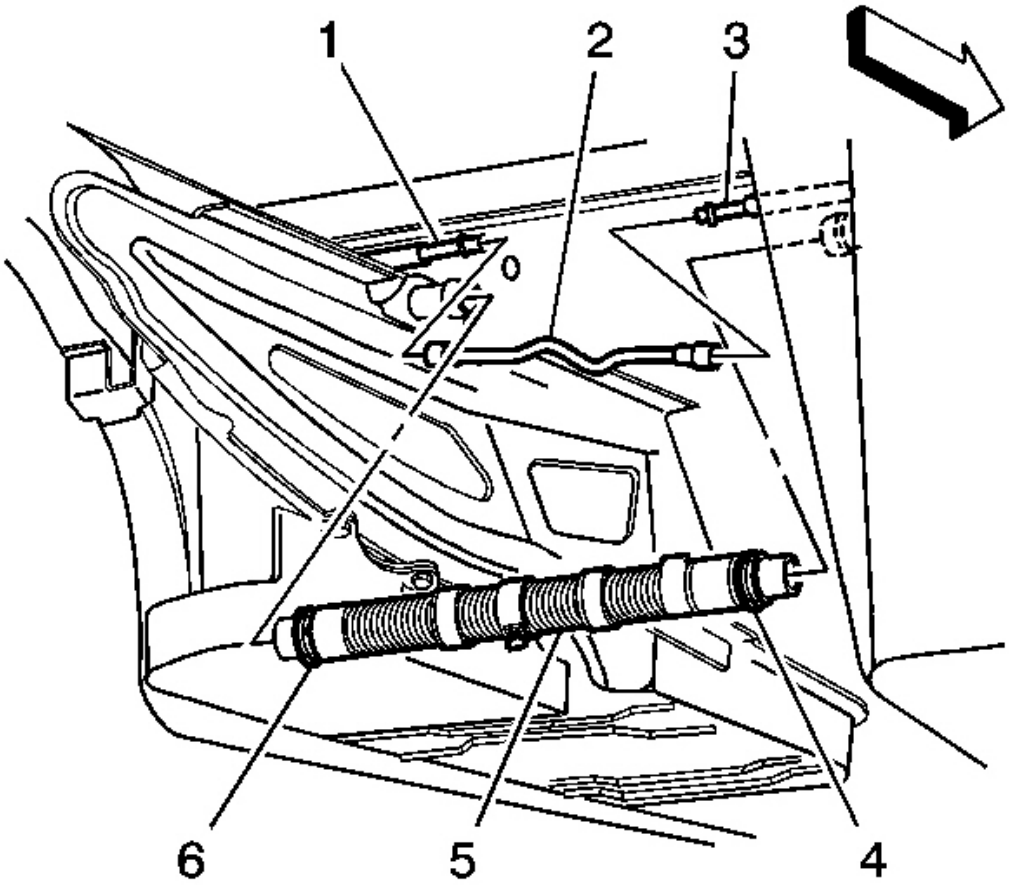

Fig. 162: EVAP Crossover Pipe & Tank Crossover Hose
Courtesy of GENERAL MOTORS CORP.

5. Connect the EVAP crossover pipe (2) quick connect fitting at the left fuel tank.

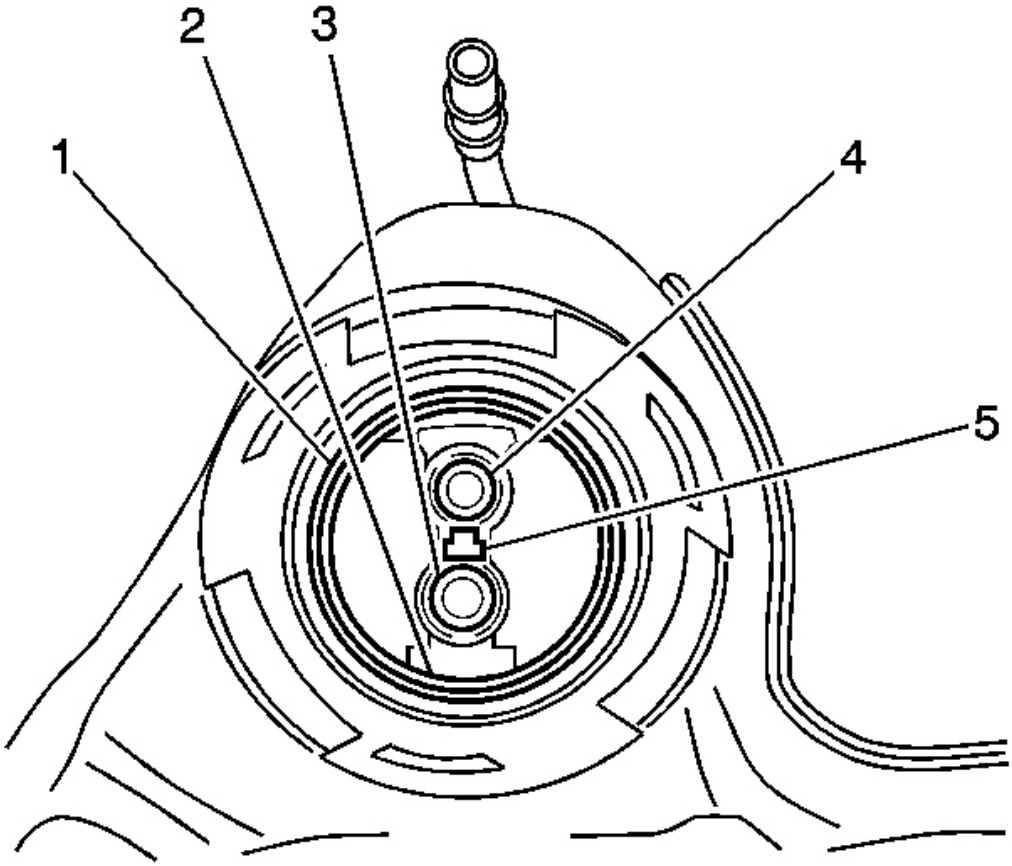

Fig. 163: Crossover Tube To Fuel Tank O-Rings & Alignment Feature
Courtesy of GENERAL MOTORS CORP.

6. Lubricate the crossover tube to fuel tank connection O-rings (1-4) with GM P/N 1051717 (Canadian P/N 5728223) rubber lubricant.

IMPORTANT: Note the location of the T-shaped alignment feature (5) between the jet pump feed/return pipes connector.

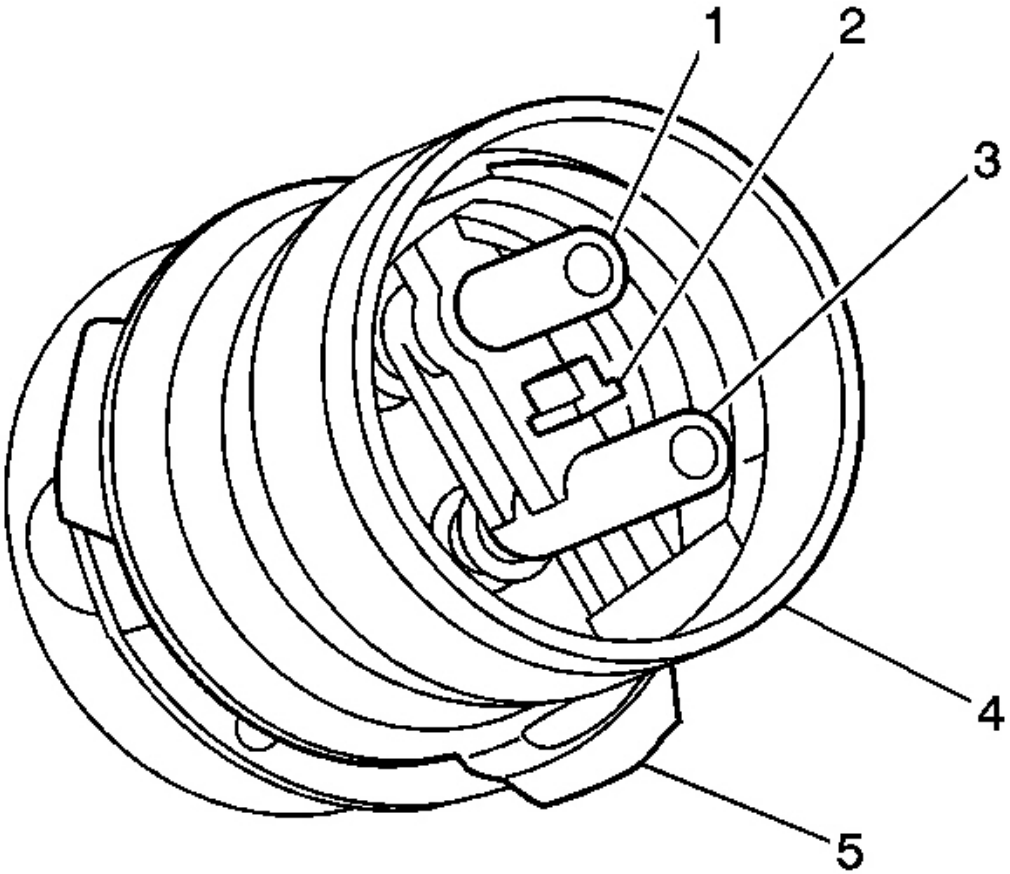

Fig. 164: Fuel Tank Crossover Tube & Mating Surfaces
Courtesy of GENERAL MOTORS CORP.

7. Lubricate the crossover tube O-ring mating surfaces (1-4) with GM P/N 1051717 (Canadian P/N 5728223) rubber lubricant.

IMPORTANT: Note the T-shaped alignment feature on the crossover tube.

IMPORTANT: The crossover tube will not fully seat into the fuel tank if the jet pump lines are misaligned.

8. Connect the crossover tube to the left fuel tank using the features previously noted.

IMPORTANT: The crossover tube collar tangs will not latch if misalignment exists.

9. Rotate the crossover tube collar (3) clockwise to engage the tangs.

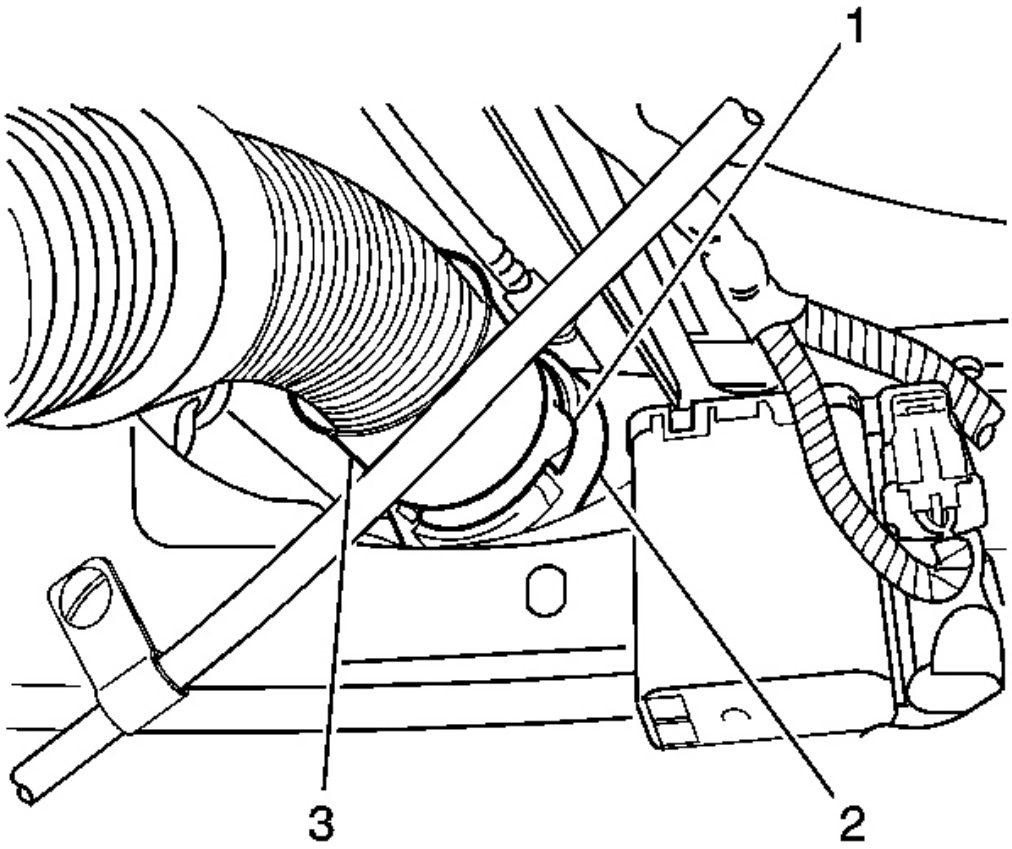

Fig. 165: Locating Air Inlet Hose
Courtesy of GENERAL MOTORS CORP.

10. Rotate the crossover tube CPA retainer counterclockwise past the collar latching tang and push the tab (1) into the locked position.

IMPORTANT: If the CPA retainer is locked into position, the crossover tube collar will not rotate.

11. Test the crossover tube to fuel tank connection by attempting to rotate the crossover tube collar counterclockwise.

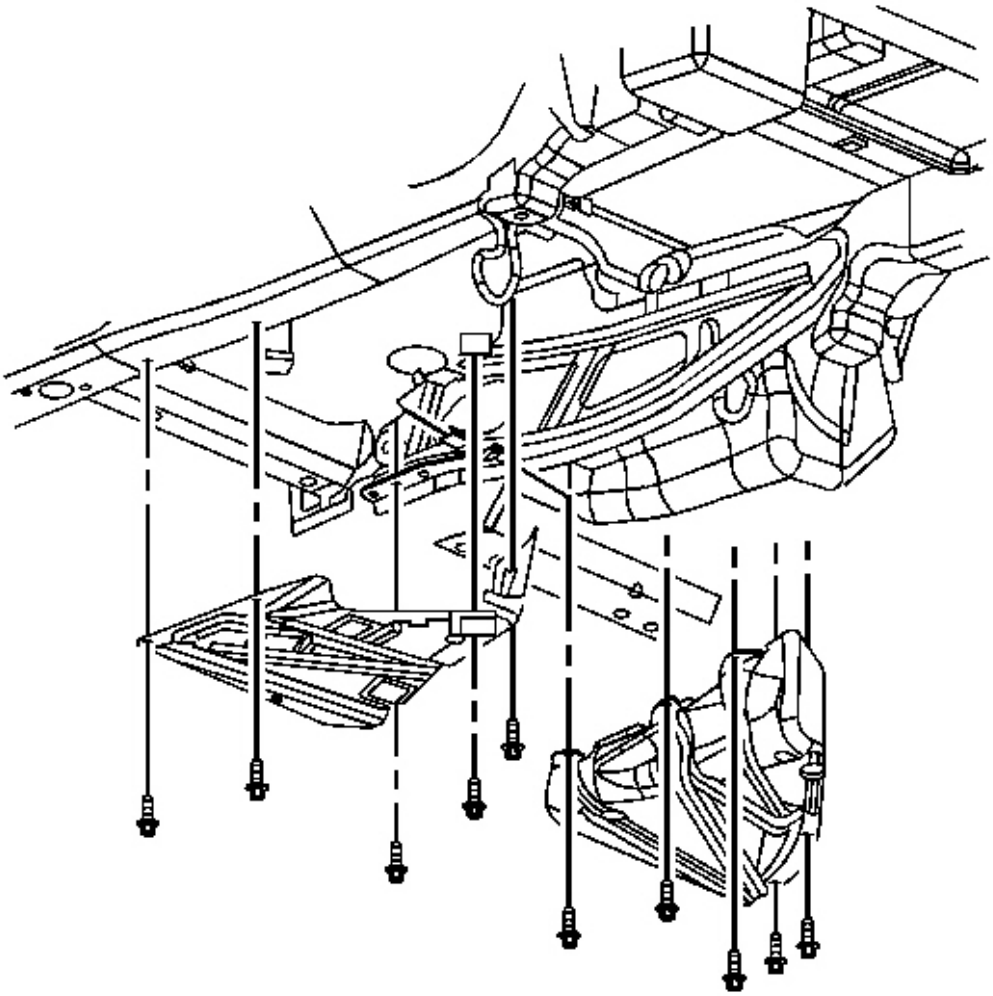

Fig. 166: Fuel Tank Strap Mount & Bolts
Courtesy of GENERAL MOTORS CORP.

NOTE: Refer to Fastener Notice in Cautions and Notices.

12. Tighten the fuel tank strap bolts.

    Tighten: Tighten the bolts to 25 N.m (18 lb in).

13. Remove the cap from the fuel pipes.

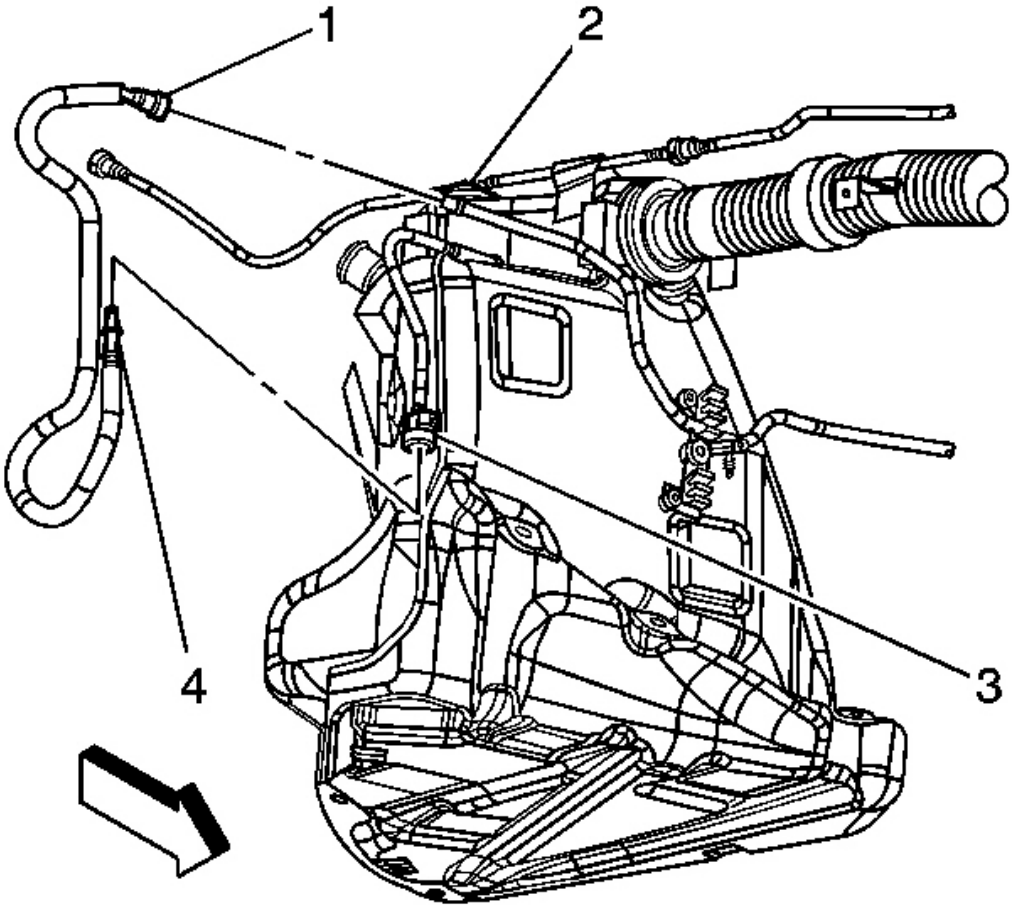

Fig. 167: Fuel Feed Pipe At Rear Of Left Fuel Tank
Courtesy of GENERAL MOTORS CORP.

14. Connect the fuel feed pipe (4) at the rear of the left fuel tank. Refer to **Quick Connect Fitting(s) Service (Plastic Collar)** .

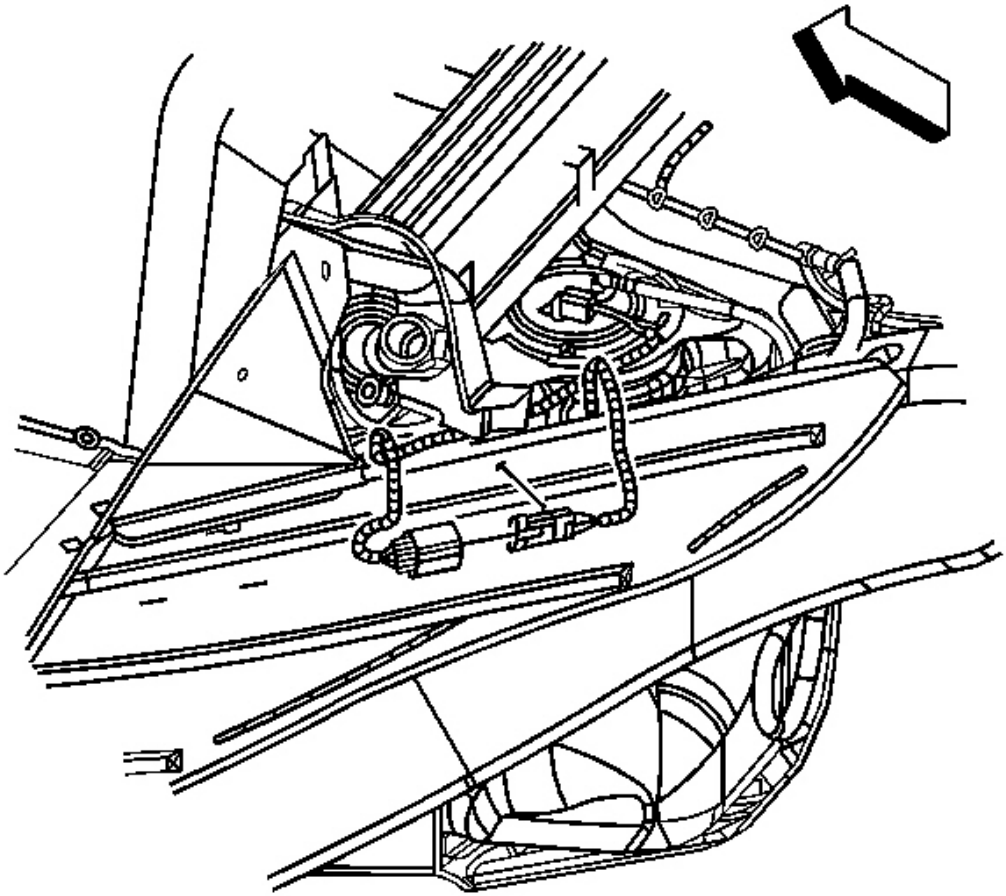

Fig. 168: Fuel Pump Jumper Harness Connector
Courtesy of GENERAL MOTORS CORP.

15. Connect the fuel pump jumper harness connector.
16. Connect the fuel fill hose and recirc line to the fill tube.

    Tighten: Tighten the clamp to 4 N.m (35 lb in).

17. Install the driveline support assembly. Refer to **Driveline Support Assembly Replacement (Automatic Transmission)** or **Driveline Support Assembly Replacement (Manual Transmission)** in Propeller Shaft.
18. Install both mufflers. Refer to **Muffler Replacement - Left** and **Muffler Replacement - Right** in Engine Exhaust.
19. Install the left rear wheelhouse panel. Refer to **Wheelhouse Panel Replacement** in Body Rear End.

20. Install the Left rear tire. Refer to **Tire and Wheel Removal and Installation** in Tires and Wheels.
21. Lower the vehicle.
22. Refuel the fuel tank.
23. Connect the negative battery cable. Refer to **Battery Negative Cable Disconnect/Connect Procedure** in Engine Electrical.
24. Perform the following procedure in order to test for leaks:
    1. Turn ON the Ignition switch, for 2 seconds.
    2. Turn OFF the ignition, for 10 seconds.
    3. Turn ON the ignition.
    4. Inspect for fuel leaks.
25. Program the transmitters. Refer to **Transmitter Programming** in Keyless Entry.

FUEL TANK REPLACEMENT - RIGHT

Tools Required

J 37088-A Fuel Line Disconnect tool

Removal Procedure

1. Disconnect the negative battery cable. Refer to **Battery Negative Cable Disconnect/Connect Procedure** in Engine Electrical.
2. Drain the fuel tank. Refer to **Fuel Tank Draining Procedure** .
3. Raise and support the vehicle. Refer to **Lifting and Jacking the Vehicle** in General Information.
4. Remove the right rear tire. Refer to **Tire and Wheel Removal and Installation** in Tires and Wheels.
5. Remove the right rear wheelhouse panel. Refer to **Wheelhouse Panel Replacement** in Body Rear End.
6. Remove the evaporative emission (EVAP) canister access cover.

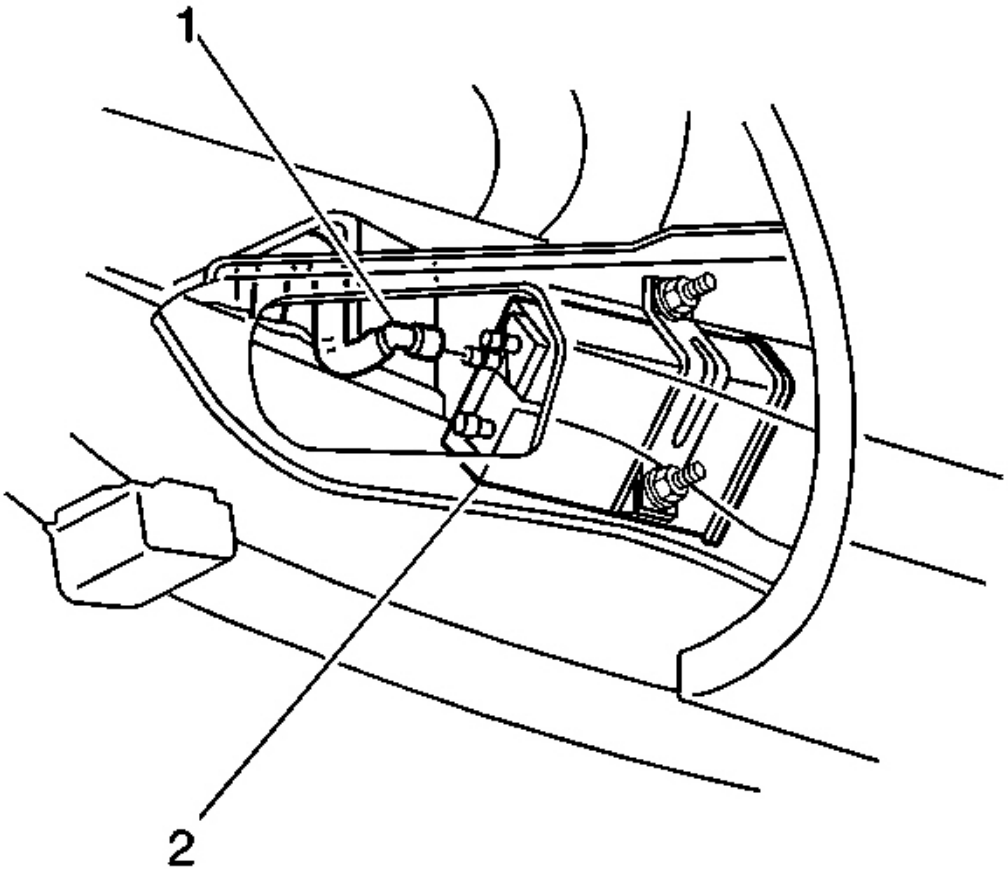

Fig. 169: EVAP Canister & FLVV Hose
Courtesy of GENERAL MOTORS CORP.

7. Disconnect the fill limit vent valve (FLVV) hose (1) at the EVAP canister (2).
8. Disconnect the fuel pump module harness connector.
9. Remove the crossover tube from the clamp located above the transmission.

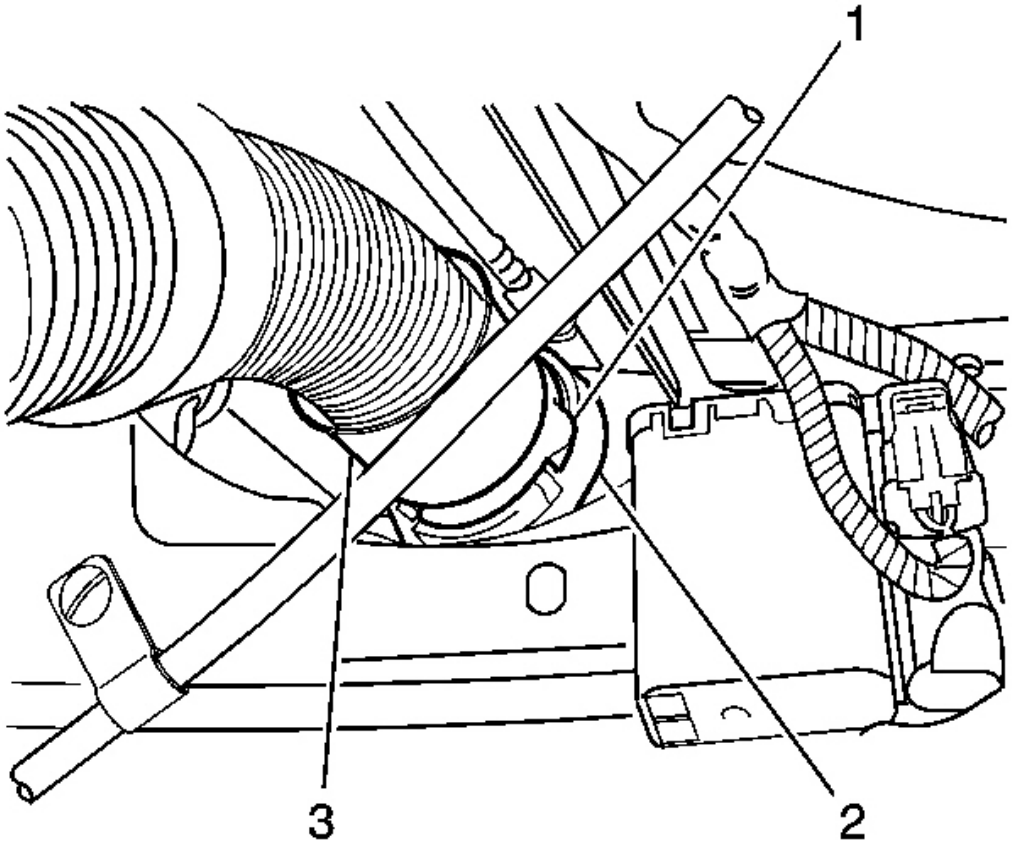

Fig. 170: Locating Air Inlet Hose
Courtesy of GENERAL MOTORS CORP.

10. Disengage the crossover tube connector position assurance (CPA) retainer by pulling the tab (1) outward and rotate.

IMPORTANT: The crossover tube CPA is released when the latch disengages from the tank connection groove.

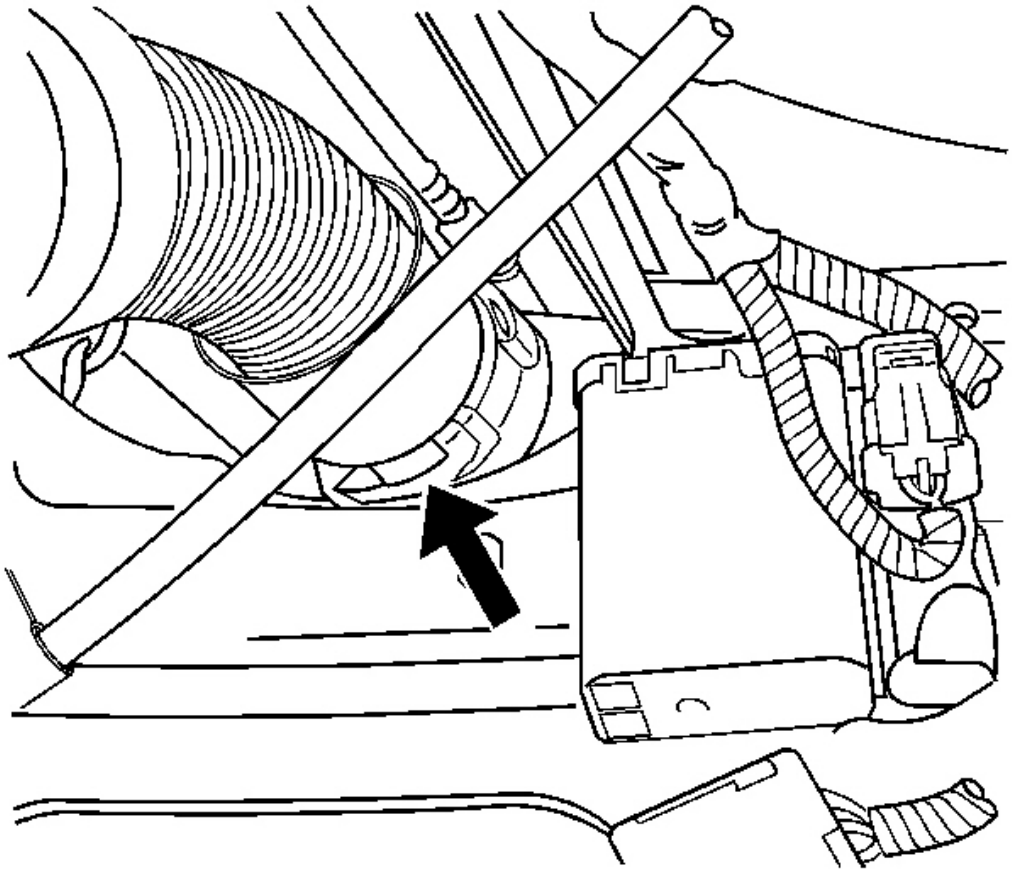

Fig. 171: Locating Crossover Tube Collar
Courtesy of GENERAL MOTORS CORP.

11. Rotate crossover tube collar counterclockwise to disengage.

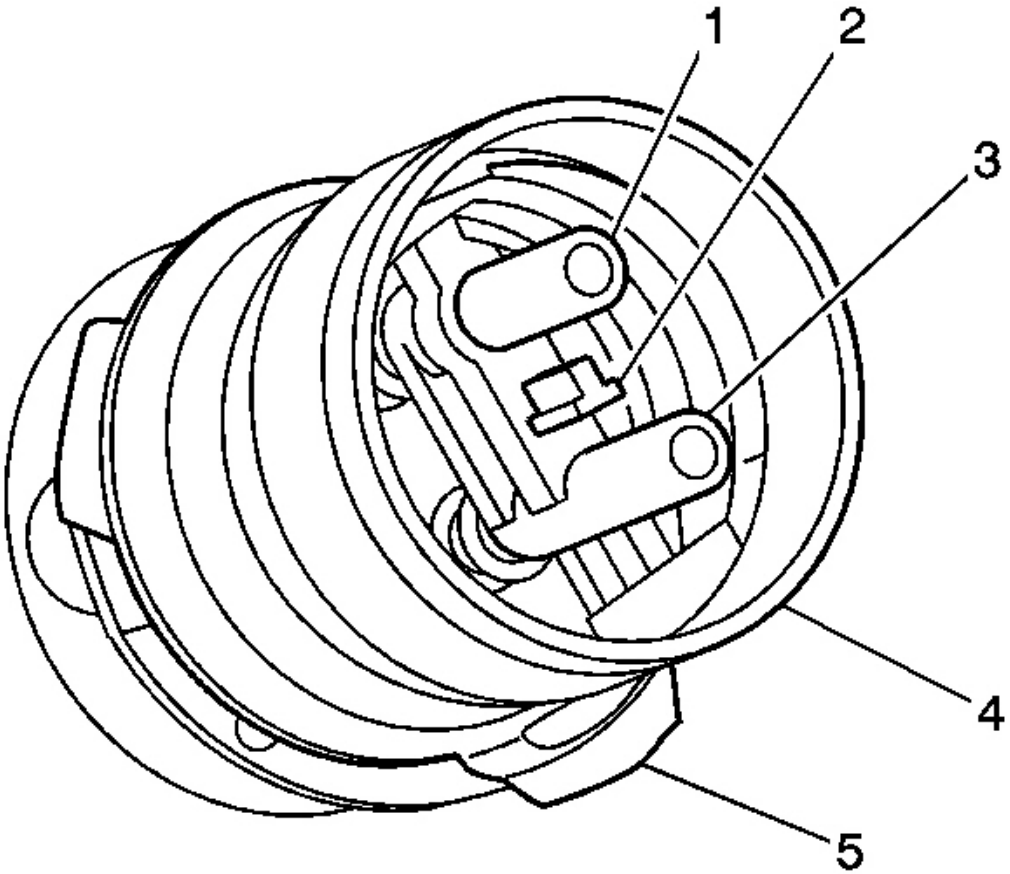

Fig. 172: Fuel Tank Crossover Tube & Mating Surfaces
Courtesy of GENERAL MOTORS CORP.

12. Disconnect the crossover tube from the right fuel tank by pulling the tube straight out of the fuel tank connection.

IMPORTANT: Take care not to disturb the internal O-rings in the fuel tank connections.

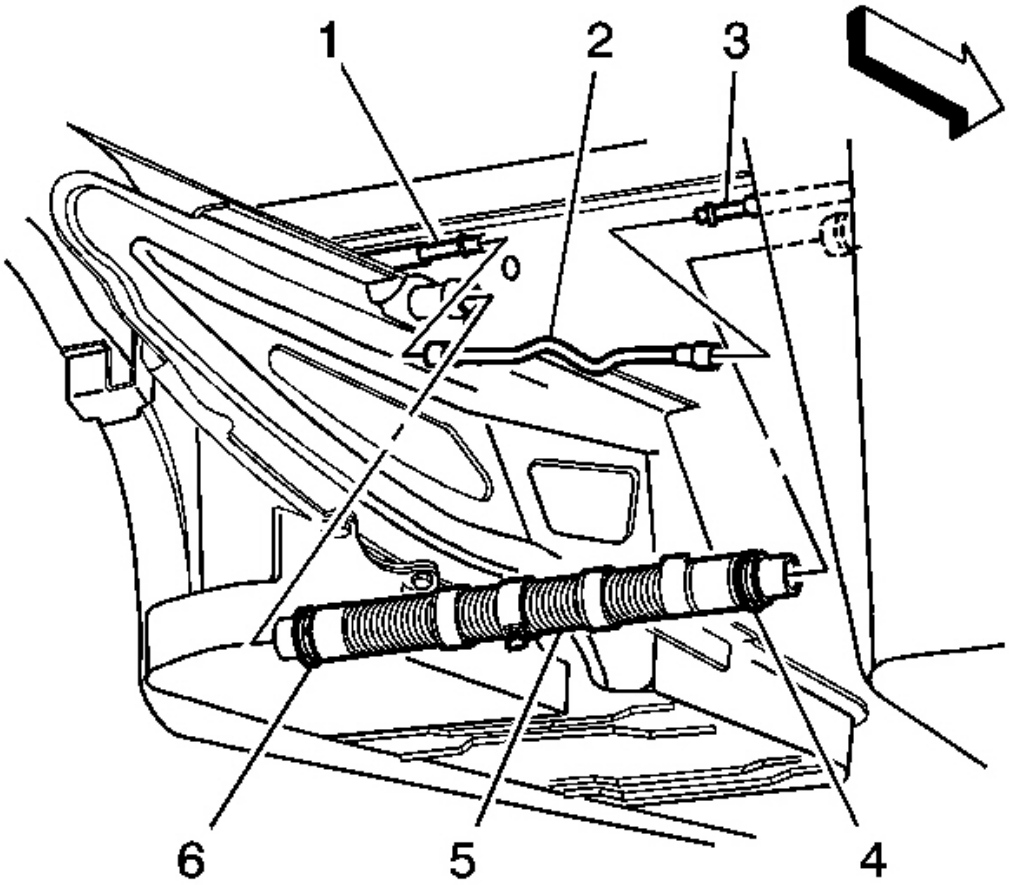

Fig. 173: EVAP Crossover Pipe & Tank Crossover Hose
Courtesy of GENERAL MOTORS CORP.

13. Disconnect the EVAP crossover pipe (2) quick connect fitting at the right fuel tank.
14. Cap the EVAP pipe to prevent system contamination.

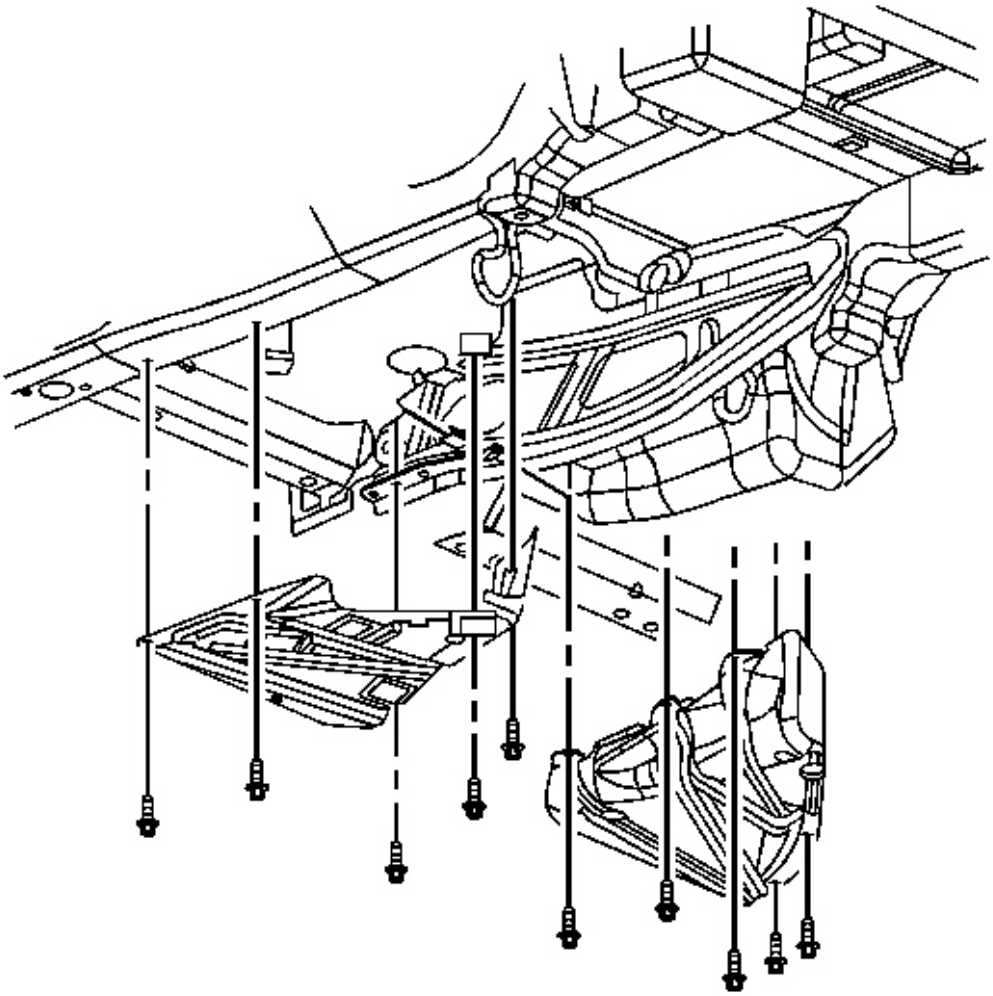

Fig. 174: Fuel Tank Strap Mount & Bolts
Courtesy of GENERAL MOTORS CORP.

15. Remove the fuel tank strap mount bolts.
16. Remove the fuel tank strap from the vehicle.

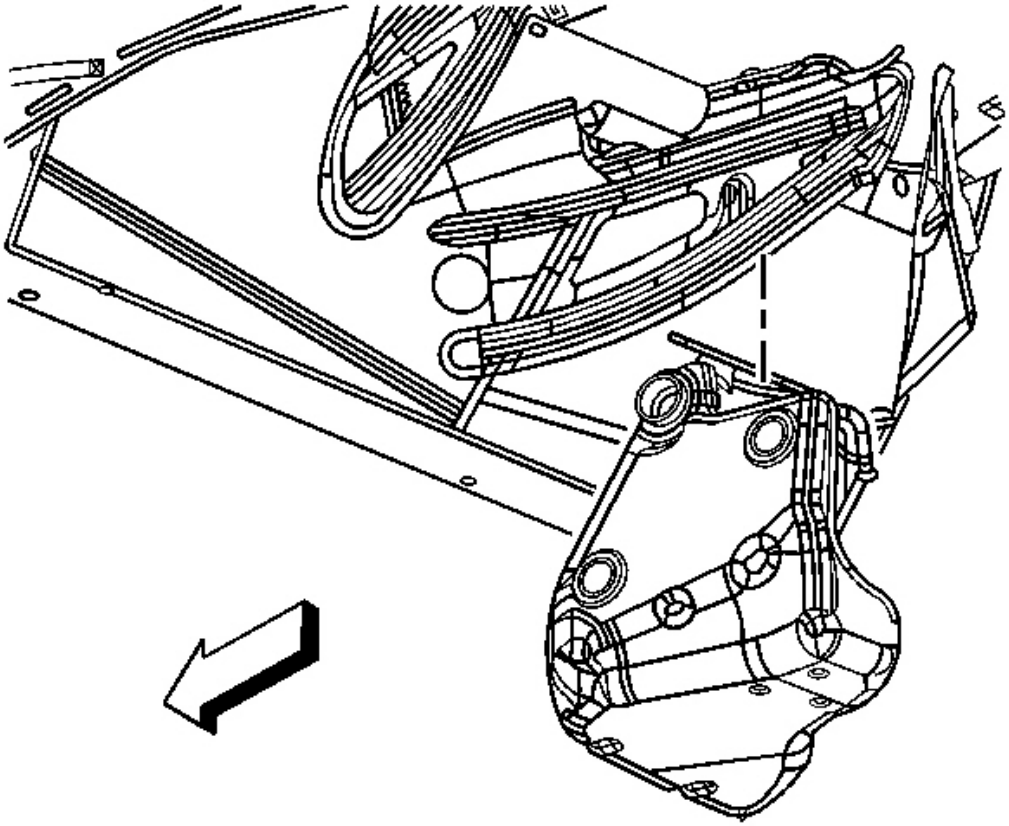

Fig. 175: Fuel Tank (Right)
Courtesy of GENERAL MOTORS CORP.

17. Remove the fuel tank.

Installation Procedure

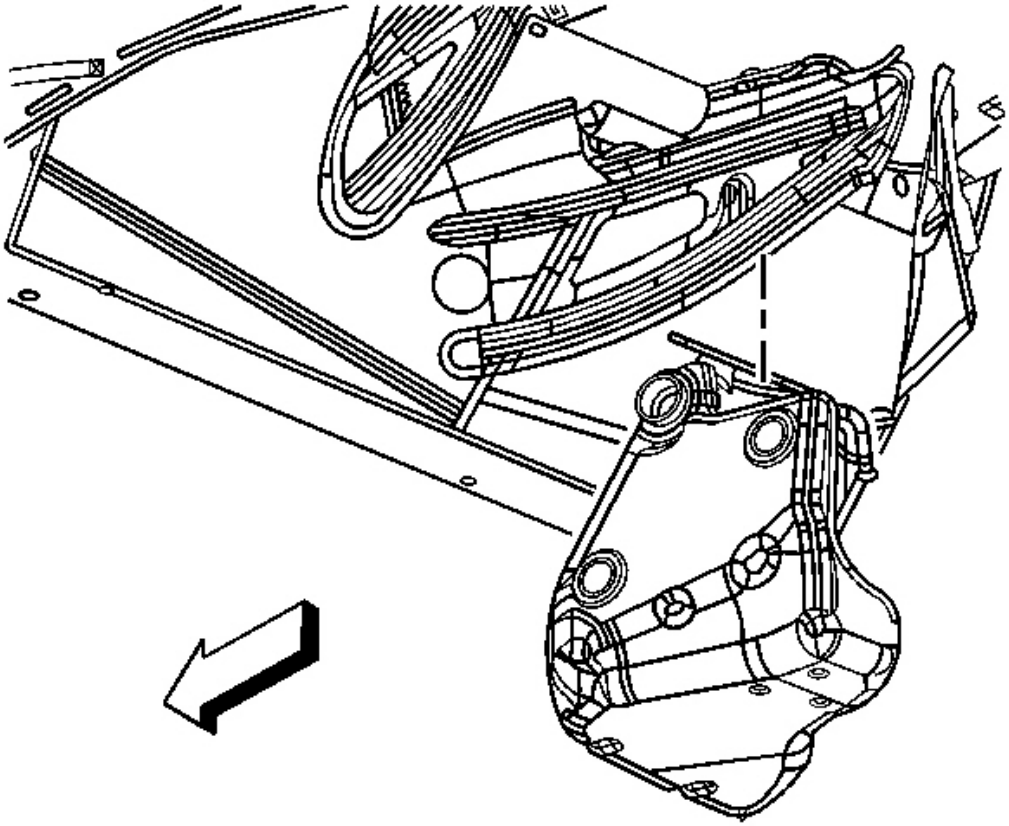

Fig. 176: Fuel Tank (Right)
Courtesy of GENERAL MOTORS CORP.

1. Install the fuel tank.
2. Install the fuel tank strap to the vehicle.

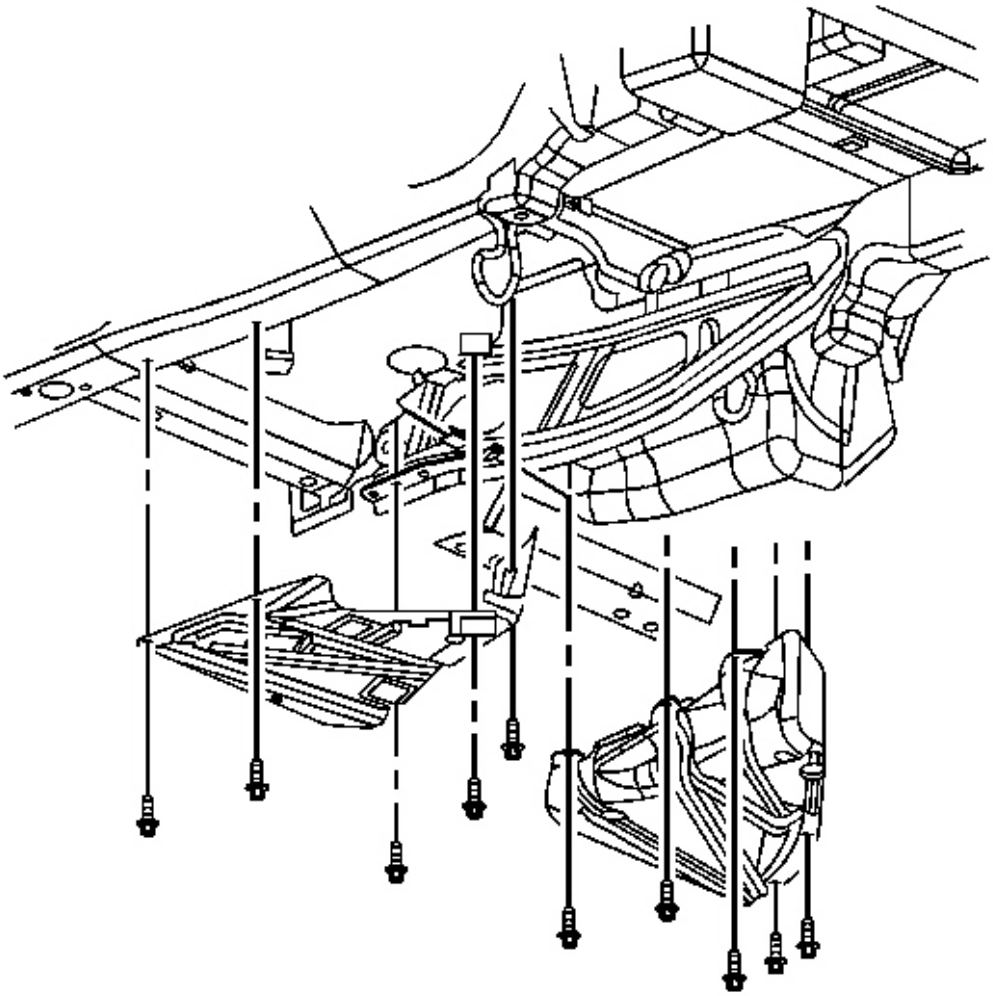

Fig. 177: Fuel Tank Strap Mount & Bolts
Courtesy of GENERAL MOTORS CORP.

3. Install the fuel tank strap bolts.
4. Remove the cap from the EVAP pipe.

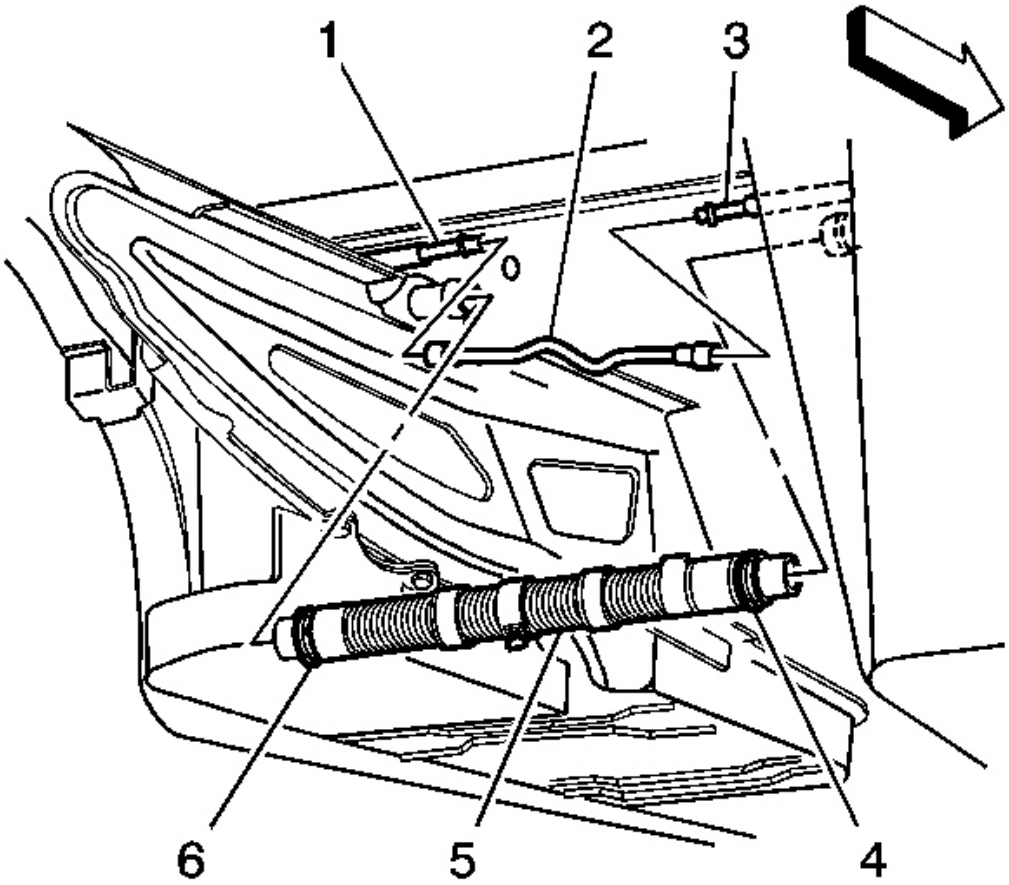

Fig. 178: EVAP Crossover Pipe & Tank Crossover Hose
Courtesy of GENERAL MOTORS CORP.

5. Connect the EVAP crossover pipe (2) quick connect fitting at the right fuel tank.

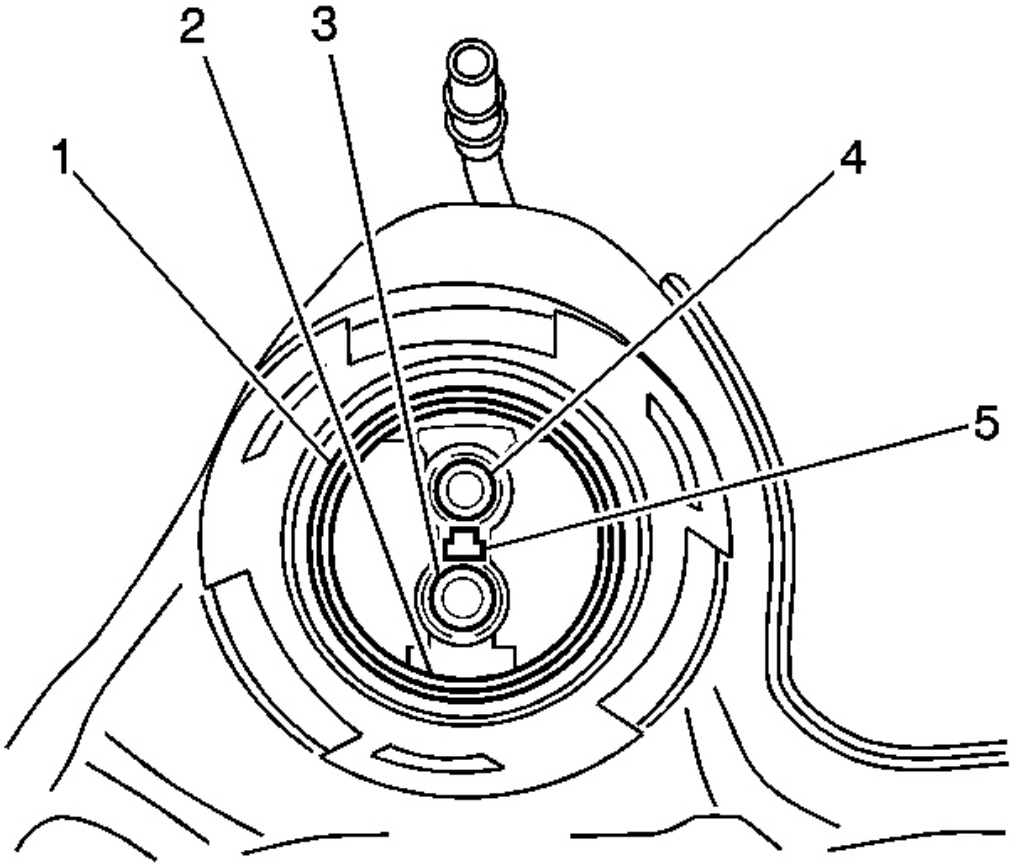

Fig. 179: Crossover Tube To Fuel Tank O-Rings & Alignment Feature
Courtesy of GENERAL MOTORS CORP.

6. Lubricate the crossover tube to fuel tank connection O-rings (1-4) with GM PN 1051717 (Canadian P/N 5728223) rubber lubricant.

IMPORTANT: Note the location of the T-shaped alignment feature (5) between the jet pump feed/return pipes connector.

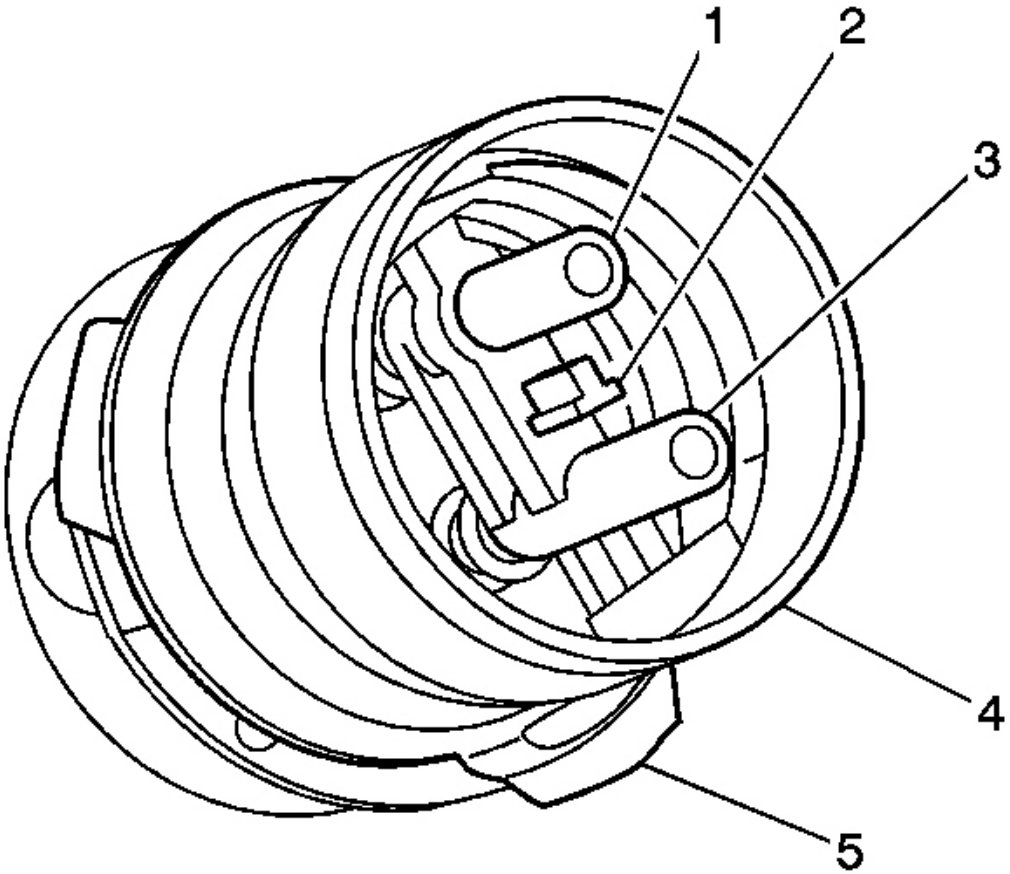

Fig. 180: Fuel Tank Crossover Tube & Mating Surfaces
Courtesy of GENERAL MOTORS CORP.

7. Lubricate the crossover tube O-ring mating surfaces (1-4) with GM PN 1051717 (Canadian P/N 5728223) rubber lubricant.

IMPORTANT: Note the T-shaped alignment feature on the crossover tube.

IMPORTANT: The crossover tube will not fully seat into the fuel tank if the jet pump lines are misaligned.

8. Connect the crossover tube to the right fuel tank using the features previously noted.

IMPORTANT: The crossover tube collar tangs will not latch if misalignment exists.

9. Rotate the crossover tube collar (3) clockwise to engage the tangs.

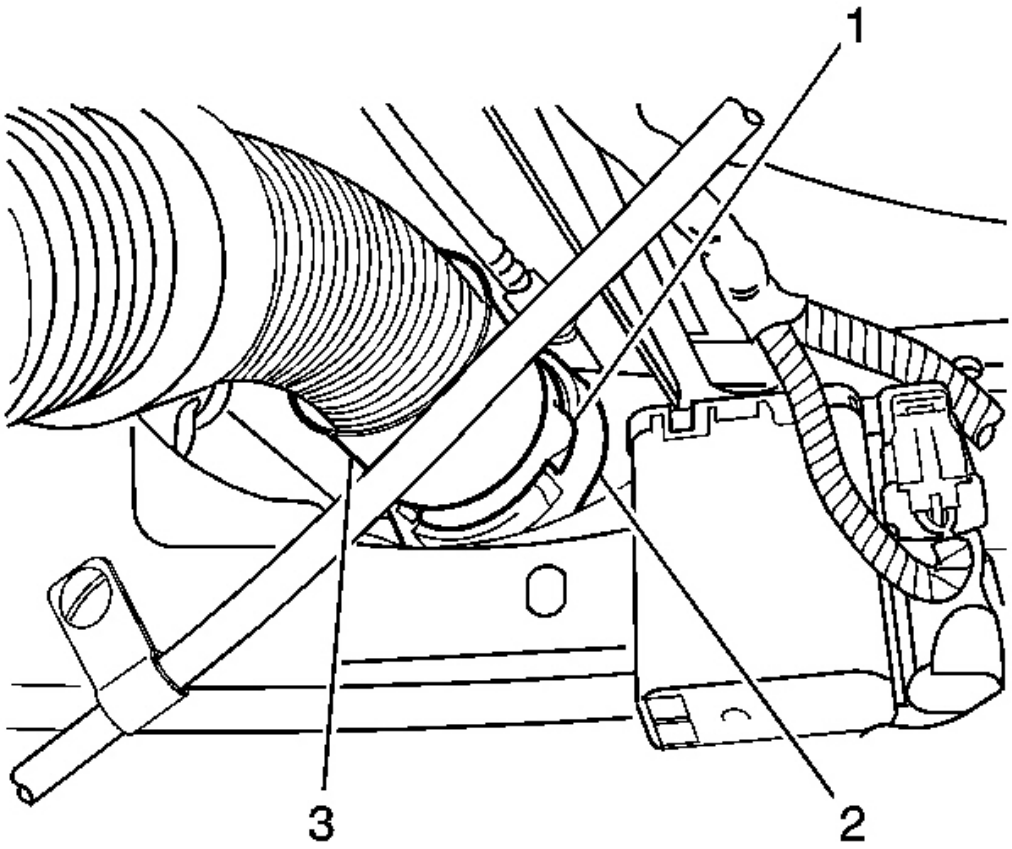

Fig. 181: Locating Air Inlet Hose
Courtesy of GENERAL MOTORS CORP.

10. Rotate the crossover tube CPA retainer counterclockwise past the collar latching tang and push the tab (1) into the locked position.

IMPORTANT: If the CPA retainer is locked into position, the crossover tube collar will not rotate.

11. Test the crossover tube to fuel tank connection by attempting to rotate the crossover tube collar counterclockwise.

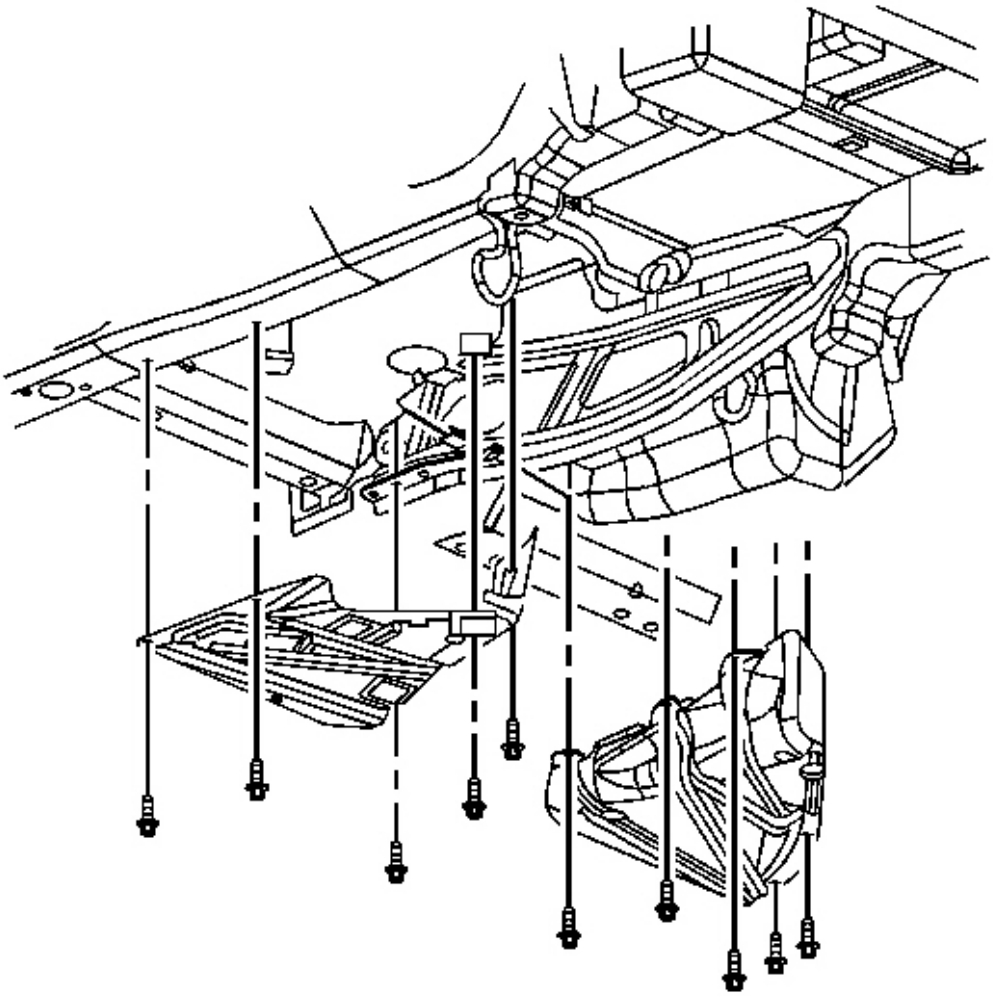

Fig. 182: Fuel Tank Strap Mount & Bolts
Courtesy of GENERAL MOTORS CORP.

NOTE: Refer to Fastener Notice in Cautions and Notices.

12. Tighten the fuel tank strap bolts.

    Tighten: Tighten the bolts to 25 N.m (18 lb in).

13. Snap the crossover tube into the clamp located above the transmission.
14. Connect the fuel pump module harness connector.

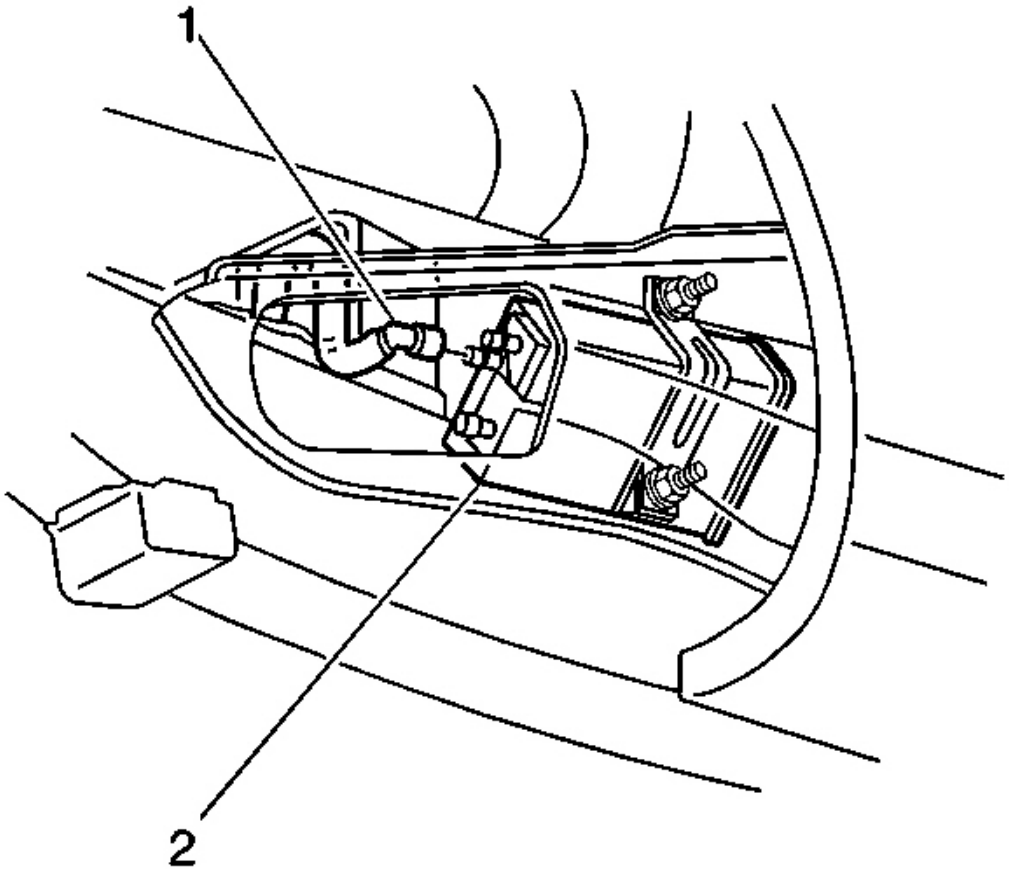

Fig. 183: EVAP Canister & FLVV Hose
Courtesy of GENERAL MOTORS CORP.

15. Connect the FLVV hose (1) at the EVAP canister (2).
16. Install the EVAP canister access cover.
17. Install the driveline support assembly. Refer to **Driveline Support Assembly Replacement (Automatic Transmission)** or **Driveline Support Assembly Replacement (Manual Transmission)** in Propeller Shaft.
18. Install the right rear wheelhouse panel. Refer to **Wheelhouse Panel Replacement** in Body Rear End.
19. Install the right rear tire. Refer to **Tire and Wheel Removal and Installation** in Tires and Wheels.
20. Install the left fuel tank. Refer to **Fuel Tank Replacement (Right)** or **Fuel Tank Replacement (Left)** .

FUEL TANK PRESSURE SENSOR REPLACEMENT

Removal Procedure

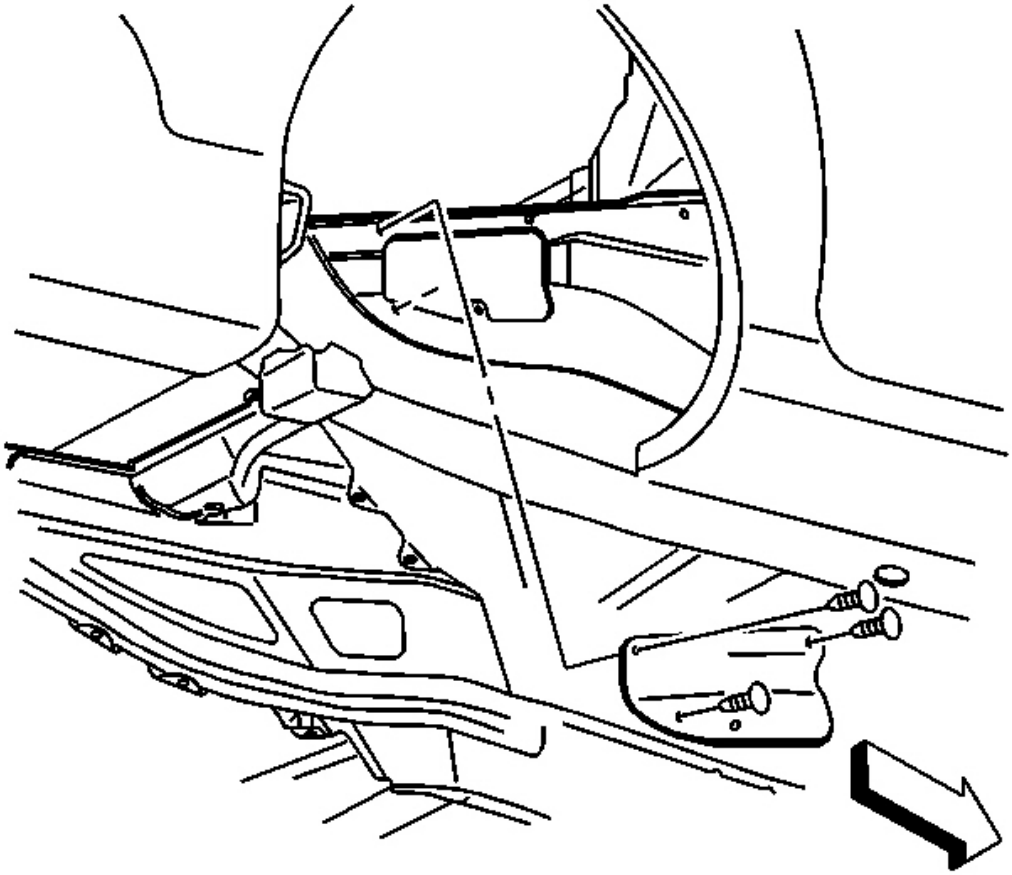

Fig. 184: EVAP Canister Access Cover In Right Rear Wheelhouse Panel
Courtesy of GENERAL MOTORS CORP.

1. Remove the right rear wheelhouse panel. Refer to **Wheelhouse Panel Replacement** in Body Rear End.
2. Remove the evaporative emission (EVAP) canister access cover.
3. Disconnect the fuel tank pressure sensor electrical connector.
4. Remove the fuel tank pressure sensor by carefully prying the sensor out of the fuel tank with a screwdriver.

Installation Procedure

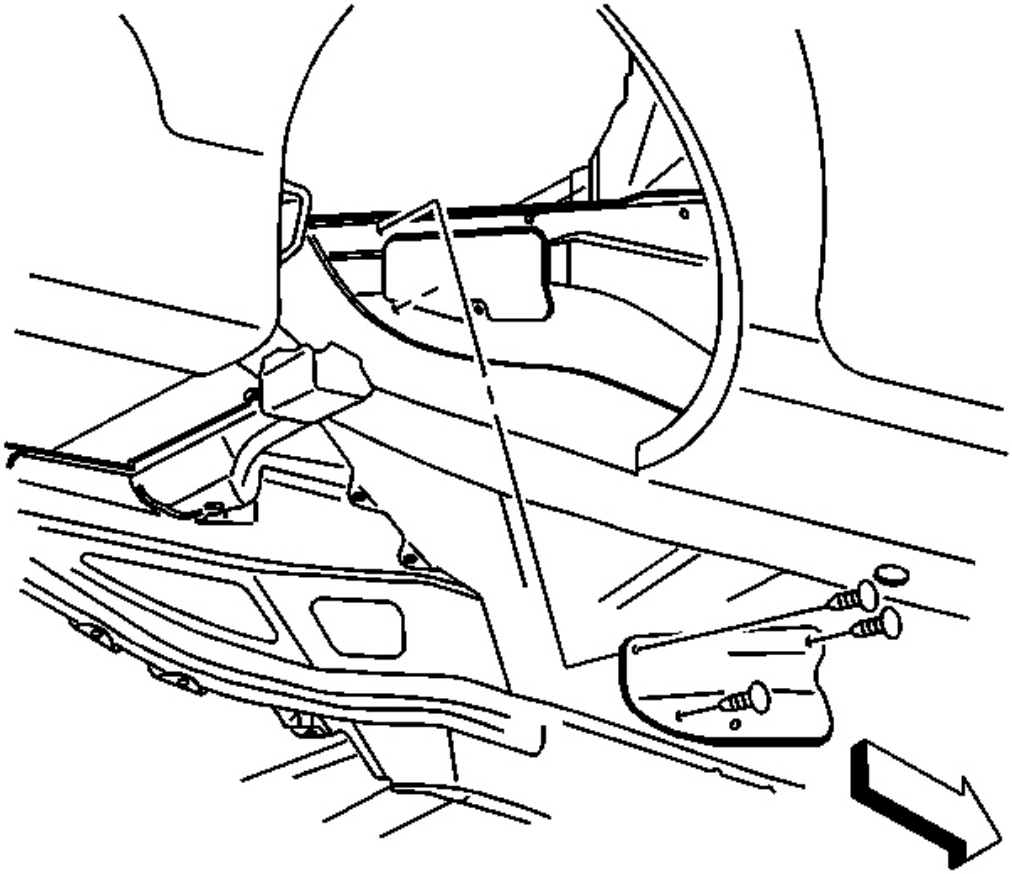

Fig. 185: EVAP Canister Access Cover In Right Rear Wheelhouse Panel
Courtesy of GENERAL MOTORS CORP.

1. Lubricate the fuel tank pressure sensor rubber grommet with clean engine oil in order to aid in installation.
2. Install the fuel tank pressure sensor into the top of the fuel tank.
3. Connect the fuel tank pressure sensor electrical connector.
4. Install the EVAP canister access cover.
5. Install the right rear wheelhouse panel. Refer to **Wheelhouse Panel Replacement** in Body Rear End.

FUEL LEVEL SENSOR REPLACEMENT - LEFT

Removal Procedure

IMPORTANT: DO NOT handle the level sender on the resistor card. Oils from human contact can damage the card.

1. Remove the module from the fuel tank. Refer to **Fuel Tank Module Replacement - Left** .
2. Press on the connector position assurance (CPA) with thumb and slide toward downward.
3. Disconnect the electrical connector from the module.
4. Remove the sender wires from the connector.
5. Push in the locktab above the level sender body and slide the level sender out of the slot.
6. Remove the level sender from the module. Ensure wires are routed into the slot in the back of the level sender body.

Installation Procedure

1. Insert NEW level sender assembly into slot and slide down until lock tab engages.
2. Route wires next to regulator ground wire and up to electrical connector.
3. Slide the level sender wires into the open slots in the electrical connector.
4. Connect the electrical connector into the flange.
5. Test the level sender resistance with an ohmmeter.
    1. Empty stop = 38.5-41.5 ohms.
    2. Full stop = 247-253 ohms.
    3. No open circuits along the full sweep.
6. Install module into tank. Refer to **Fuel Tank Module Replacement - Left** .
7. Measure the resistance across the level sender with tank upright. Should read empty tank.
8. Roll tank over. Resistance should read full stop.
9. Return tank to upright position. Ensure proper empty stop resistance. This is done to ensure the level sender operates freely inside the tank and is not hung up on any of the internal lines.

FUEL LEVEL SENSOR REPLACEMENT - RIGHT

Removal Procedure

IMPORTANT: DO NOT handle the level sender on the resistor card. Oils from human contact can damage the card.

1. Remove the module from the fuel tank. Refer to **Fuel Tank Module Replacement - Right** .
2. Press on the connector position assurance (CPA) with thumb and slide toward downward.
3. Disconnect the electrical connector from the module.
4. Remove the sender wires from the electrical connector.
5. Push in the locktab above the level sender body and slide the level sender out of the slot.
6. Remove the level sender from the module. Ensure wires are routed into the slot in the back of the level sender body.

Installation Procedure

1. Insert NEW level sender assembly into slot and slide down until lock tab engages.
2. Route wires next to regulator ground wire and up to electrical connector.
3. Slide the level sender wires into the open slots in the electrical connector.
4. Connect the electrical connector into the flange.
5. Test the level sender resistance with an ohmmeter.
    1. Empty stop = 38.5-41.5 ohms.
    2. Full stop = 247-253 ohms.
    3. No open circuits along the full sweep.
6. Install module into tank. Refer to **Fuel Tank Module Replacement - Right** .
7. Measure the resistance across the level sender with tank upright. Should read empty tank.
8. Roll tank over. Resistance should read full stop.
9. Return tank to upright position. Ensure proper empty stop resistance. This is done to ensure the level sender operates freely inside the tank and is not hung up on any of the internal lines.

FUEL TANK MODULE REPLACEMENT - LEFT

Tools Required

J39765-A Fuel Sender Lock Ring Tool

Removal Procedure

1. Disconnect the negative battery cable. Refer to **Battery Negative Cable Disconnect/Connect Procedure** in Engine Electrical.
2. Remove the left fuel tank. Refer to **Fuel Tank Replacement (Right)** or **Fuel Tank Replacement (Left)** .
3. Place the fuel tank on a suitable work surface.

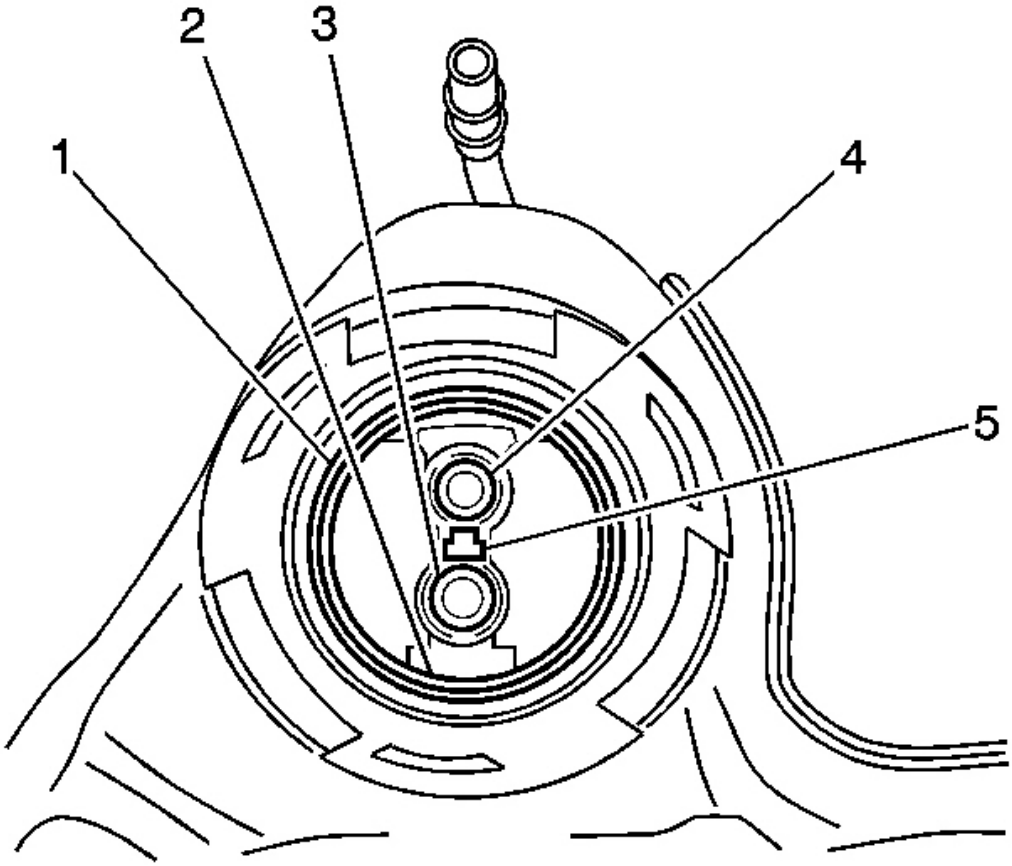

Fig. 186: Crossover Tube To Fuel Tank O-Rings & Alignment Feature
Courtesy of GENERAL MOTORS CORP.

4. Disconnect the fuel pump jumper harness from the fuel pump module.
5. Disconnect the jet line insert connector from the crossover tube to fuel tank opening.
6. Disconnect the fuel feed line from the welded clip on the side of the fuel tank.

IMPORTANT: The fuel pump module is spring loaded and will spring upward when the locking ring is removed.

7. Using the J39765-A , remove the fuel pump module locking ring.

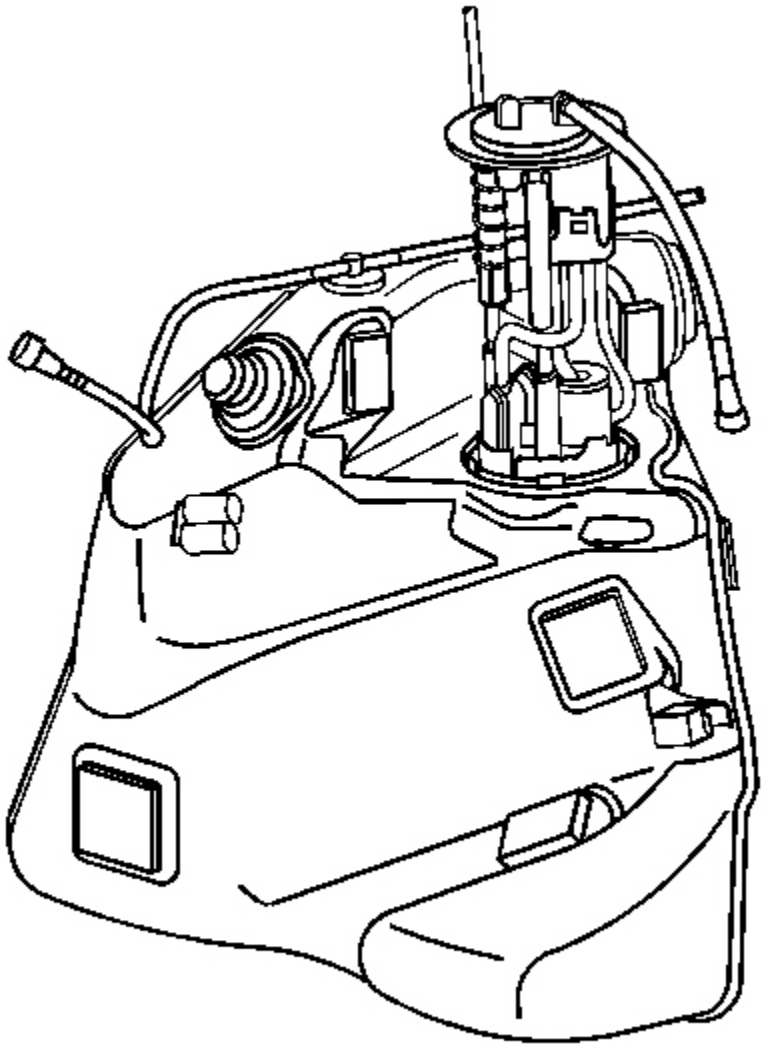

Fig. 187: Fuel Pump Module (Left Tank)
Courtesy of GENERAL MOTORS CORP.

8. Carefully remove the fuel pump module from the fuel tank, with the jet lines connected. Take care not to damage the fuel sender float arm.
9. Disconnect the jet line quick-connect connectors from the fuel pump module inner port.
10. Remove the jet line from the module retainer cup. This line has no attached connector.
11. Remove the fuel pump module O-ring from the fuel tank opening.
12. Remove the jet line insert through the crossover tube to fuel tank opening.

Installation Procedure

1. Inspect the jet line insert for damage and replace if necessary.
2. Install the jet line insert through the crossover tube to fuel tank opening.
3. Install a new fuel pump module O-ring to the fuel tank opening.
4. Place tape around the jet line with the connector. This will permit line access once the pump module is inserted into the fuel tank.

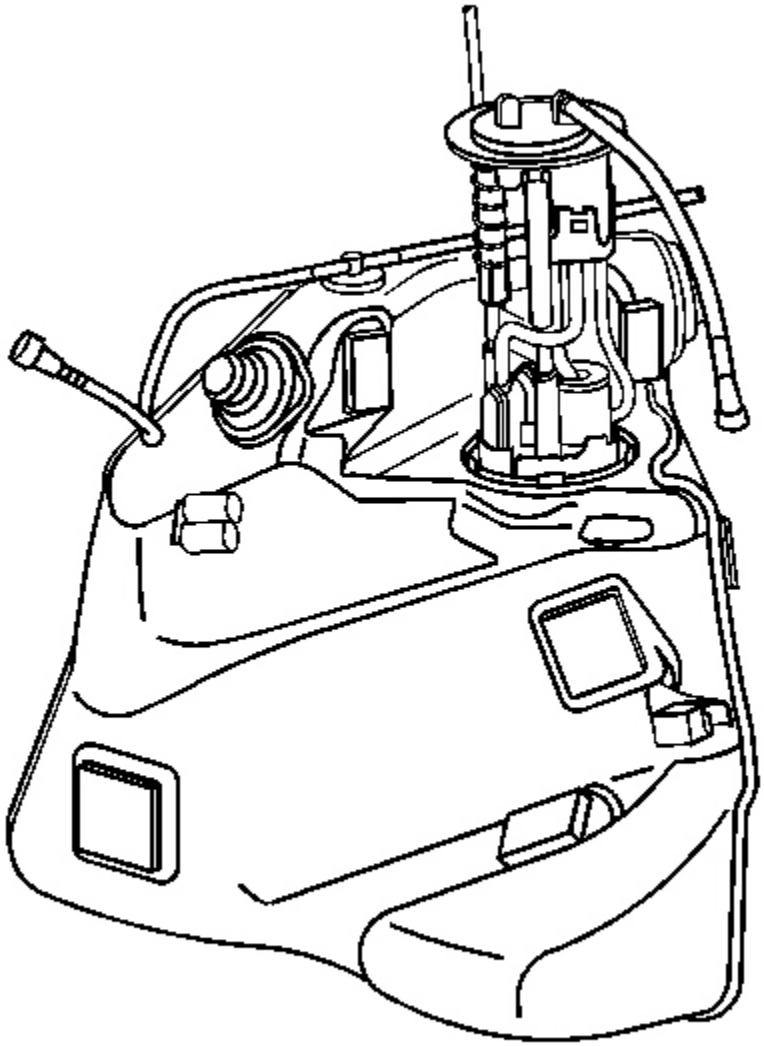

Fig. 188: Fuel Pump Module (Left Tank)

Courtesy of GENERAL MOTORS CORP.

5. Install the pump module into the fuel tank half way, taking care not to damage the float arm.
6. Using the tape as a guide, gently pull the jet line up through the fuel pump module opening.
7. Place the jet line with no connector in the module retainer cup.
8. Secure the line into the module retaining clip.
9. Remove the tape from the jet line with a connector.

IMPORTANT: Pull on each connector to ensure that the connectors are properly latched.

10. Connect the jet line quick-connect connectors to the fuel pump module inner port.
11. Compress and align the fuel pump module into the fuel tank, while taking care not to damage the float arm.
12. Install the fuel pump module lock ring.
13. Using the J39765-A , fully lock the fuel pump module lock ring in place.
14. Connect the fuel supply line into the weld clip on the side of the fuel tank.
15. Using a DMM, verify the full and empty readings resistance reading of the fuel pump module. Turn the fuel tank upside down to achieve the full tank reading.

Resistance:

- Empty tank reading 40 ohms resistance
- Full tank reading 250 ohms resistance

IMPORTANT: Pull the jet line insert connector to ensure that the insert is properly attached.

16. Connect the jet line insert connector into the crossover tube to fuel tank opening.

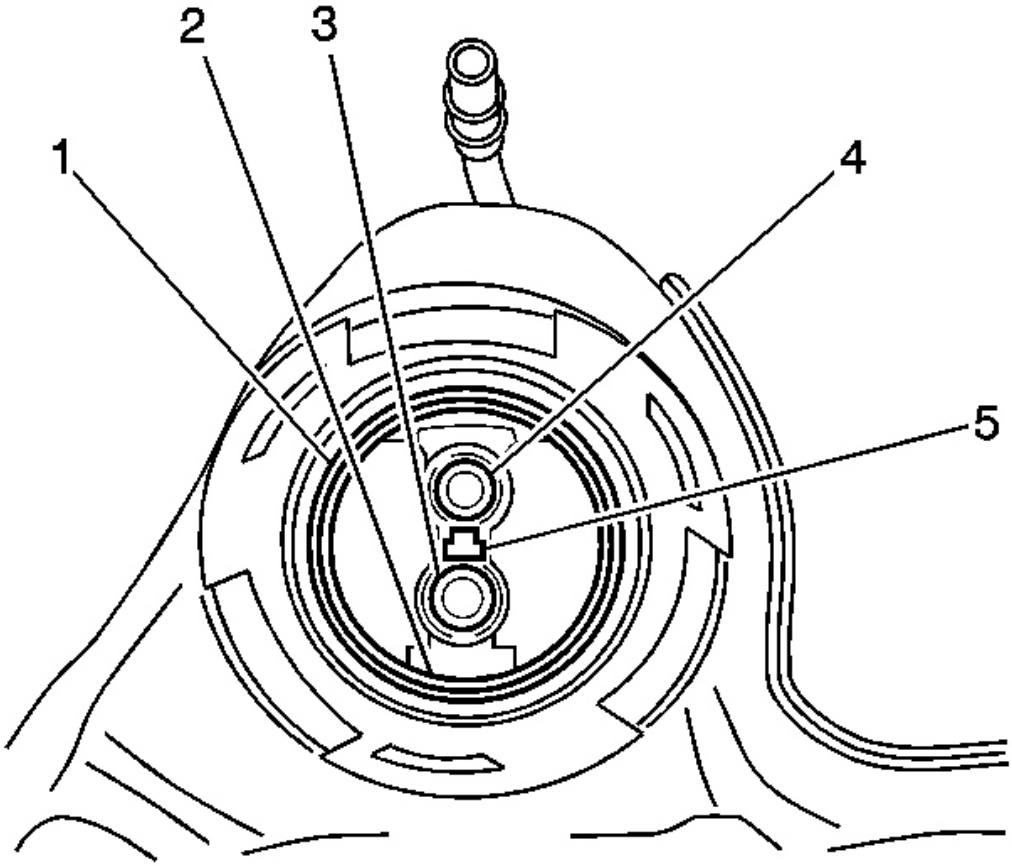

Fig. 189: Crossover Tube To Fuel Tank O-Rings & Alignment Feature
Courtesy of GENERAL MOTORS CORP.

17. Connect the fuel pump jumper harness to the fuel pump module.
18. Install the left fuel tank. Refer to **Fuel Tank Replacement (Right)** or **Fuel Tank Replacement (Left)** .

FUEL TANK MODULE REPLACEMENT - RIGHT

Tools Required

J39765-A Fuel Sender Lock Ring Tool

Removal Procedure

1. Disconnect the negative battery cable. Refer to **Battery Negative Cable Disconnect/Connect Procedure** in Engine Electrical.

2. Remove the right fuel tank. Refer to **Fuel Tank Replacement (Right)** or **Fuel Tank Replacement (Left)** .
3. Place the fuel tank on a suitable work surface.

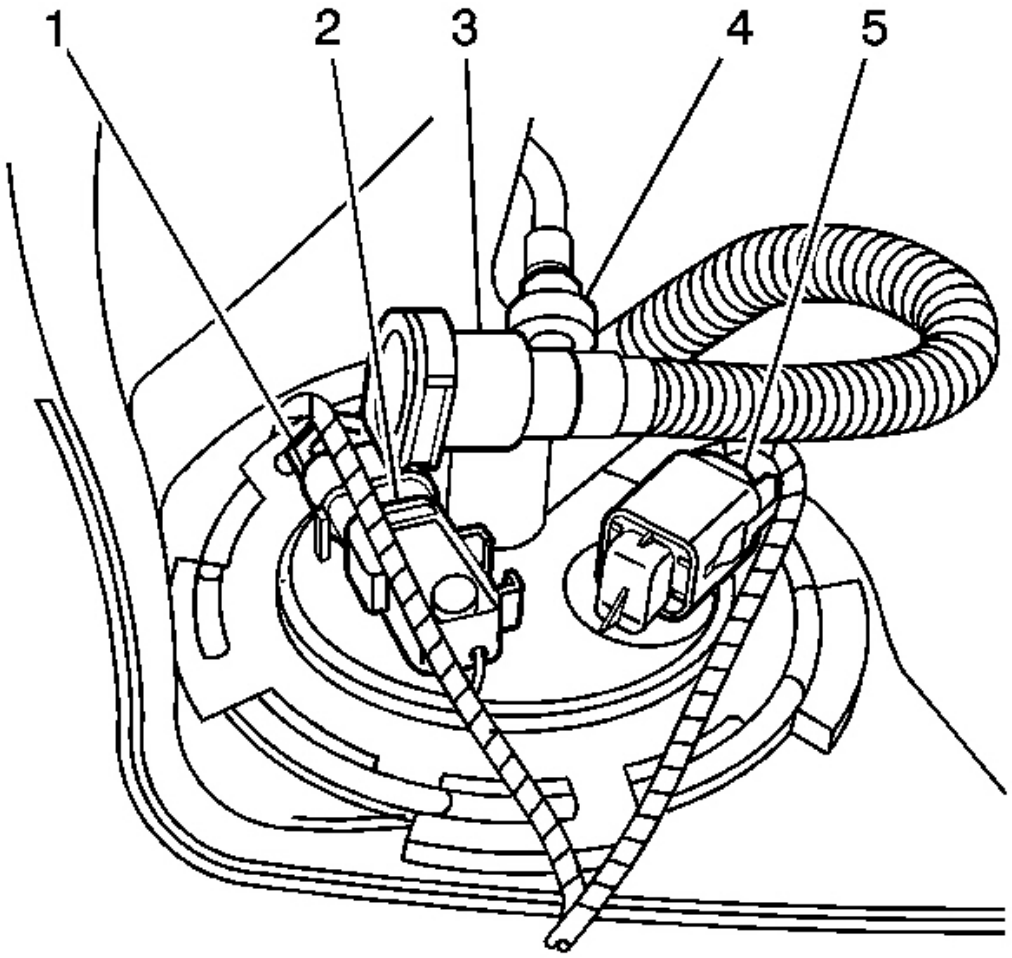

Fig. 190: Right Fuel Tank Module Components
Courtesy of GENERAL MOTORS CORP.

4. Disconnect the evaporative emission (EVAP) purge line (4) from the fuel pump module.
5. Disconnect the fuel pump module harness connector (5).
6. Disconnect the fuel tank pressure (FTP) sensor harness connector (1).
7. If replacing the fuel pump module, remove the FTP sensor (2). Refer to **Fuel Tank Pressure Sensor Replacement** .

8. Disconnect the jet line insert connector from the crossover tube to fuel tank opening.

IMPORTANT: The fuel pump module is spring loaded and will spring upward when the locking ring is removed.

9. Using the J39765-A , remove the fuel pump module locking ring.

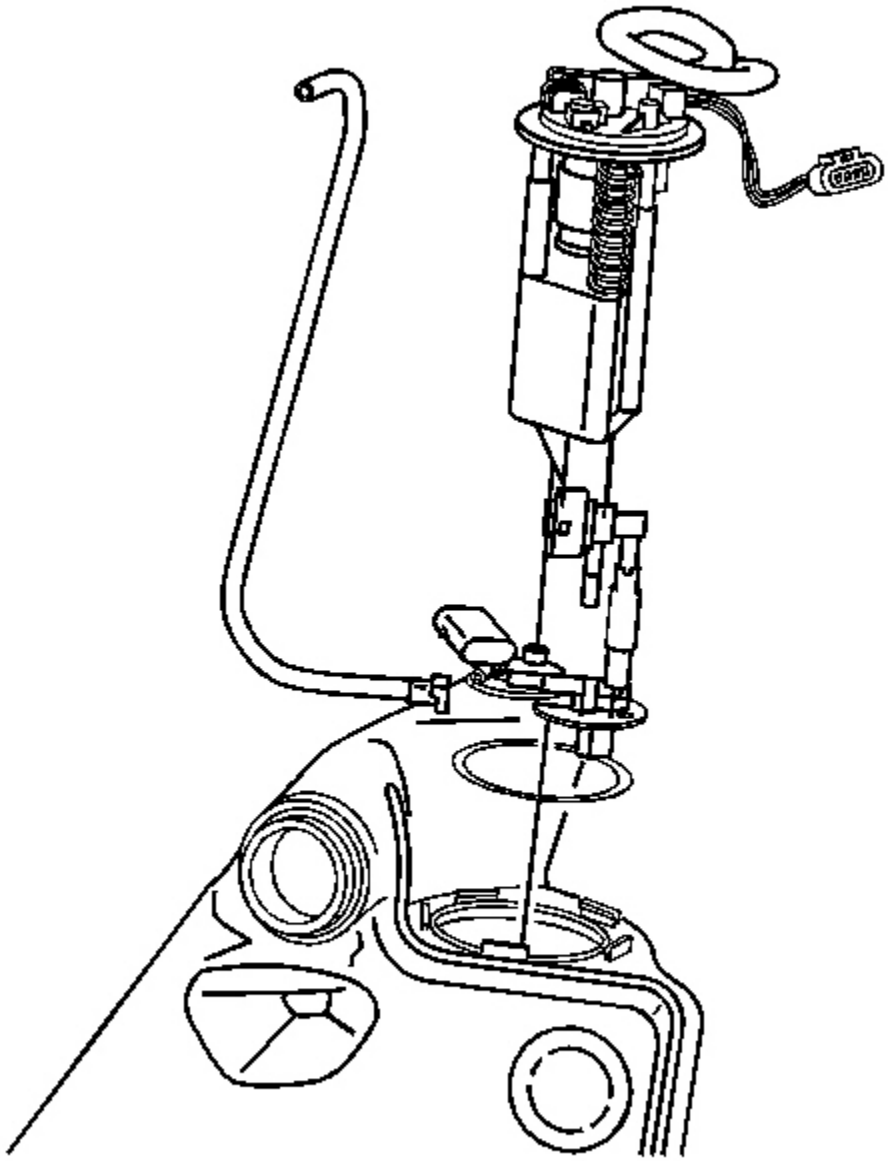

Fig. 191: Fuel Pump Module (Right Tank)
Courtesy of GENERAL MOTORS CORP.

10. Carefully remove the fuel pump module from the fuel tank, with the jet lines connected. Take care not to damage the fuel sender float arm.
11. Disconnect the jet line quick-connect connectors from the fuel pump module, noting the location of the

lines for installation.

12. Remove the fuel pump module O-ring from the fuel tank opening.
13. Remove the jet line insert through the crossover tube to fuel tank opening.

Installation Procedure

1. Inspect the jet line insert for damage and replace if necessary.
2. Install the jet line insert through the crossover tube to fuel tank opening.

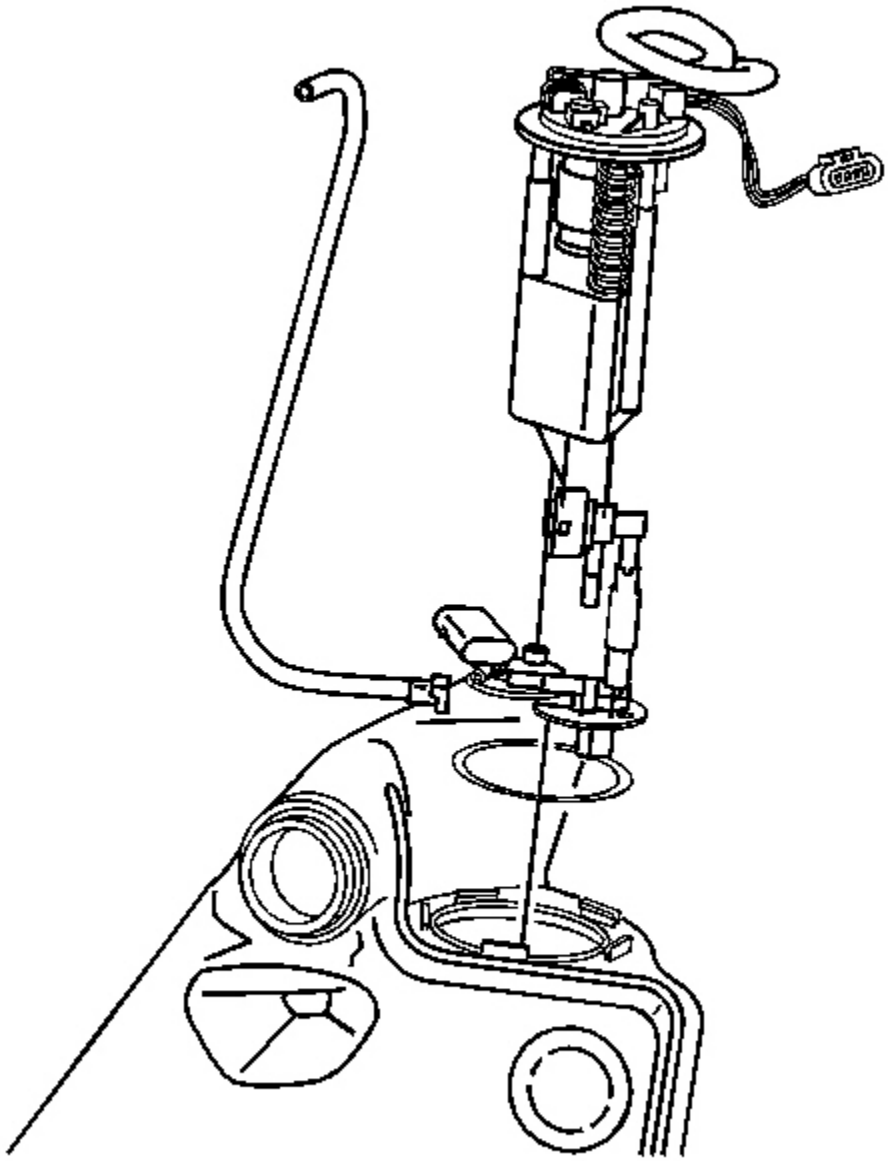

Fig. 192: Fuel Pump Module (Right Tank)
Courtesy of GENERAL MOTORS CORP.

3. Install a new fuel pump module O-ring to the fuel tank opening.

IMPORTANT: Pull on each connector to ensure that the connectors are properly

latched.

4. Pull the jet line quick-connectors up through the pump module opening, connecting the lines to the pump module as previously noted.
5. Install the pump module into the fuel tank, taking care not to damage the float arm.
6. Compress and align the fuel pump module, while installing the lock ring.
7. Using the J39765-A , fully lock the fuel pump module lock ring in place.
8. Using a DMM, verify the full and empty readings resistance reading of the fuel pump module. Turn the fuel tank upside down to achieve the full tank reading.

   Resistance:

   - Empty 40 ohms resistance
   - Full 250 ohms resistance

   IMPORTANT: Pull the jet line insert connector to ensure that the insert is properly attached.

9. Connect the jet line insert connector into the crossover tube to fuel tank opening.

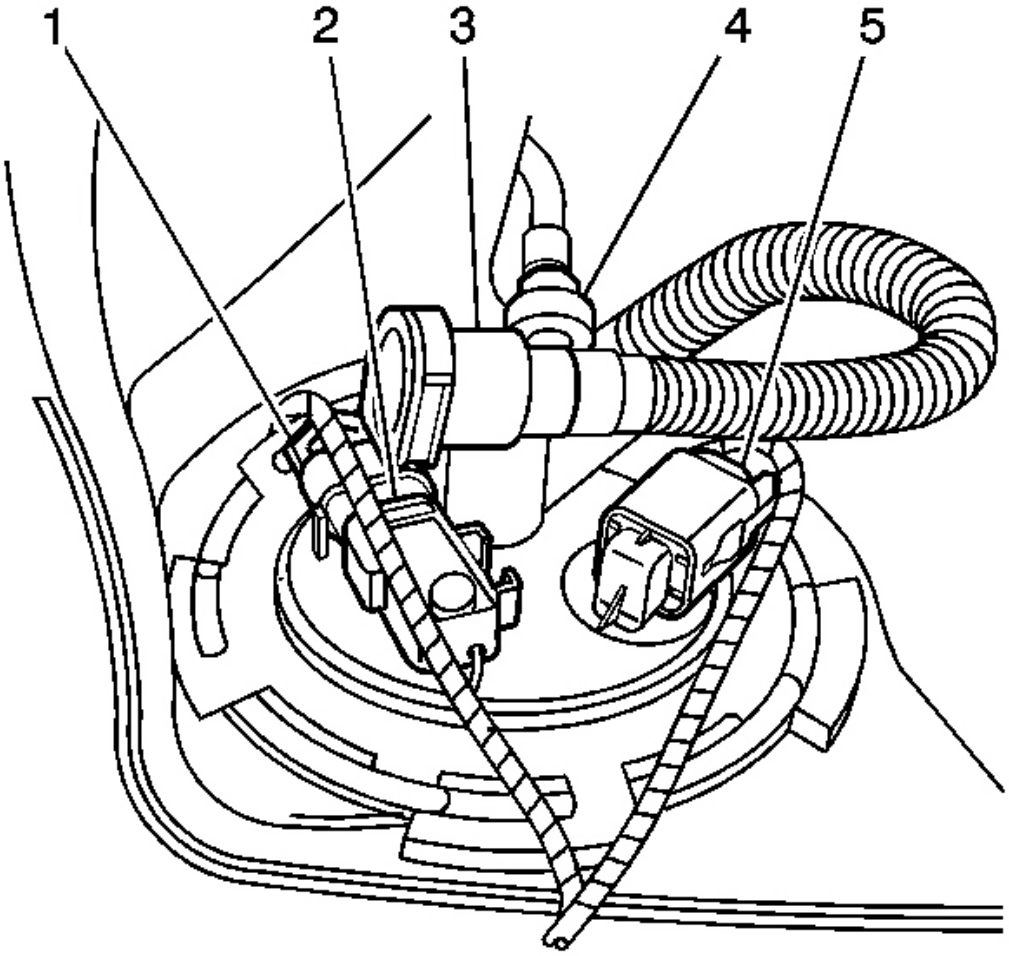

Fig. 193: Right Fuel Tank Module Components
Courtesy of GENERAL MOTORS CORP.

10. If replacing the fuel pump module, install the FTP sensor (2). Refer to **Fuel Tank Pressure Sensor Replacement** .
11. Connect the FTP sensor harness connector (1).
12. Connect the fuel pump module harness connector (5).
13. Connect the EVAP purge line (4) from the fuel pump module.
14. Install the right fuel tank. Refer to **Fuel Tank Replacement (Right)** or **Fuel Tank Replacement (Left)** .

FUEL PULSE DAMPENER REPLACEMENT

Tool Required

J 34730-1A Fuel Pressure Gage. See **Special Tools and Equipment** .

Removal Procedure

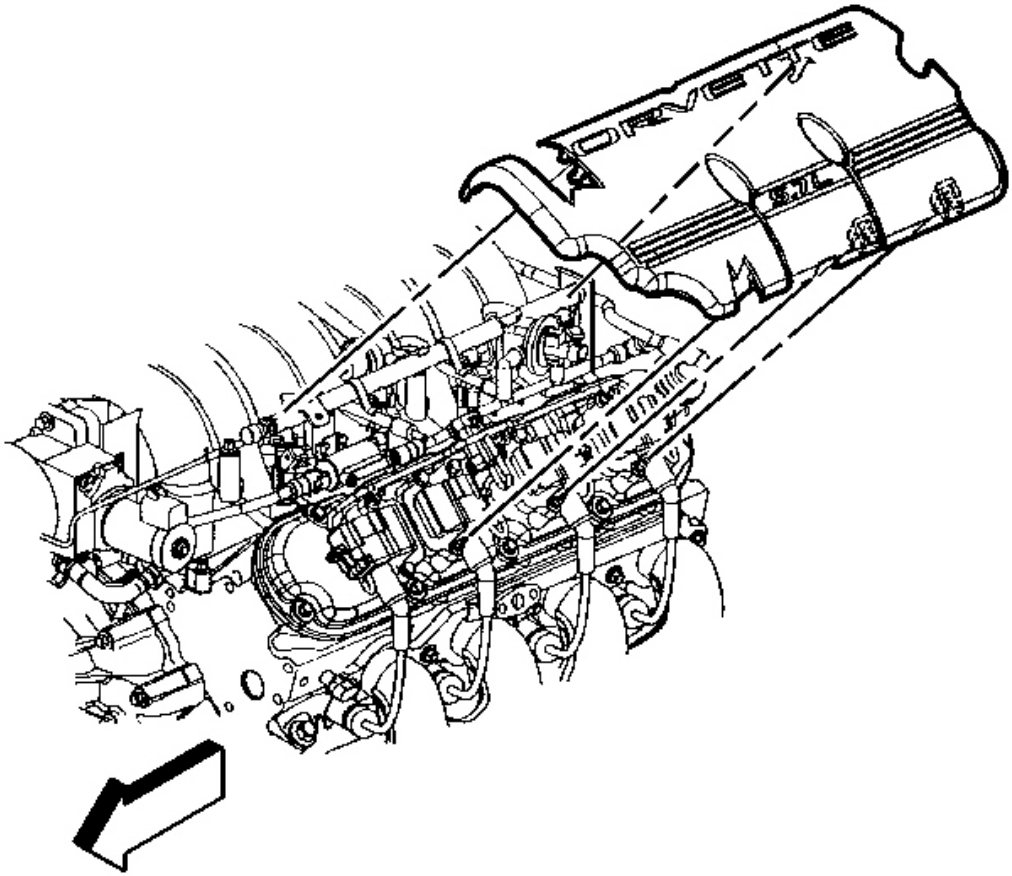

Fig. 194: Left Fuel Rail Cover
Courtesy of GENERAL MOTORS CORP.

CAUTION: Refer to Battery Disconnect Caution in Cautions and Notices.

1. Disconnect the negative battery cable.
2. Remove the left fuel rail cover.

3. Relieve the fuel system pressure. Refer to **Fuel Pressure Relief Procedure** .

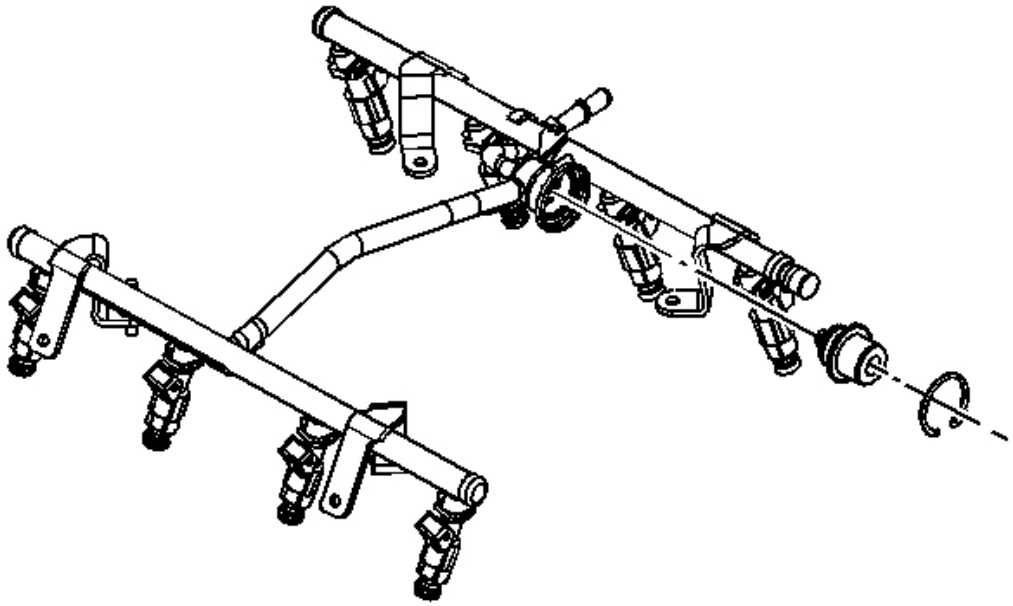

Fig. 195: Fuel Rail, Fuel Pulse Dampener & Retaining Ring
Courtesy of GENERAL MOTORS CORP.

4. Clean any dirt from the fuel pulse dampener retaining ring.
5. Remove the fuel pulse dampener retaining ring.
6. Remove the fuel pulse dampener from the fuel rail.

Installation Procedure

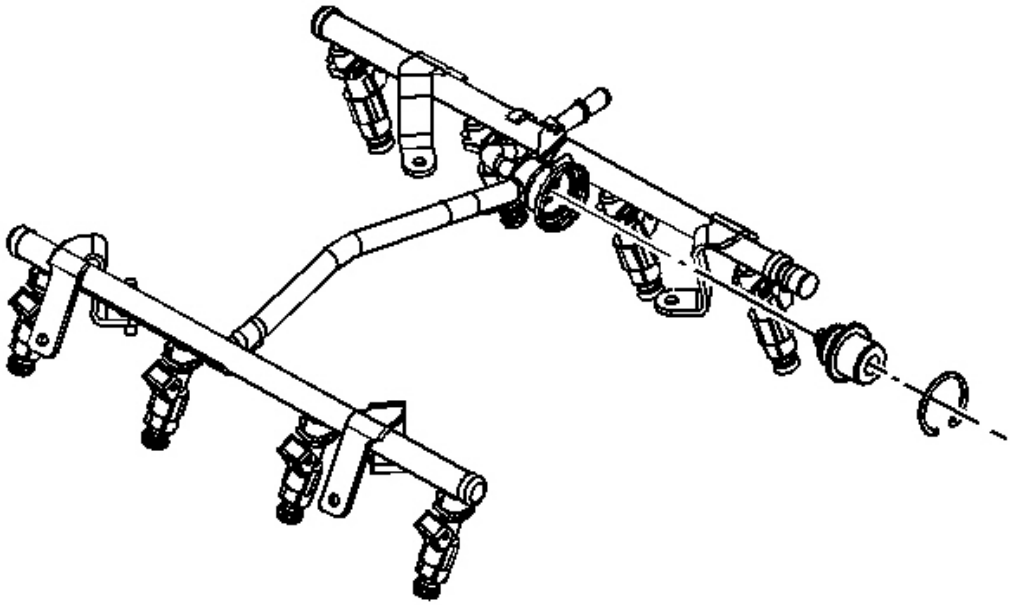

Fig. 196: Fuel Rail, Fuel Pulse Dampener & Retaining Ring
Courtesy of GENERAL MOTORS CORP.

1. Install the new O-ring on the fuel pulse dampener.
2. Lubricate the fuel pulse dampener O-ring with clean engine oil.
3. Push the fuel pulse dampener into the fuel rail.
4. Install the new fuel pulse dampener retaining ring.
5. Tighten the fuel filler cap.
6. Connect the negative battery cable.
7. Inspect for leaks.
    1. Turn the ignition switch ON for 2 seconds.
    2. Turn the ignition switch OFF for 10 seconds.
    3. Turn the ignition switch ON.
    4. Inspect for fuel leaks.

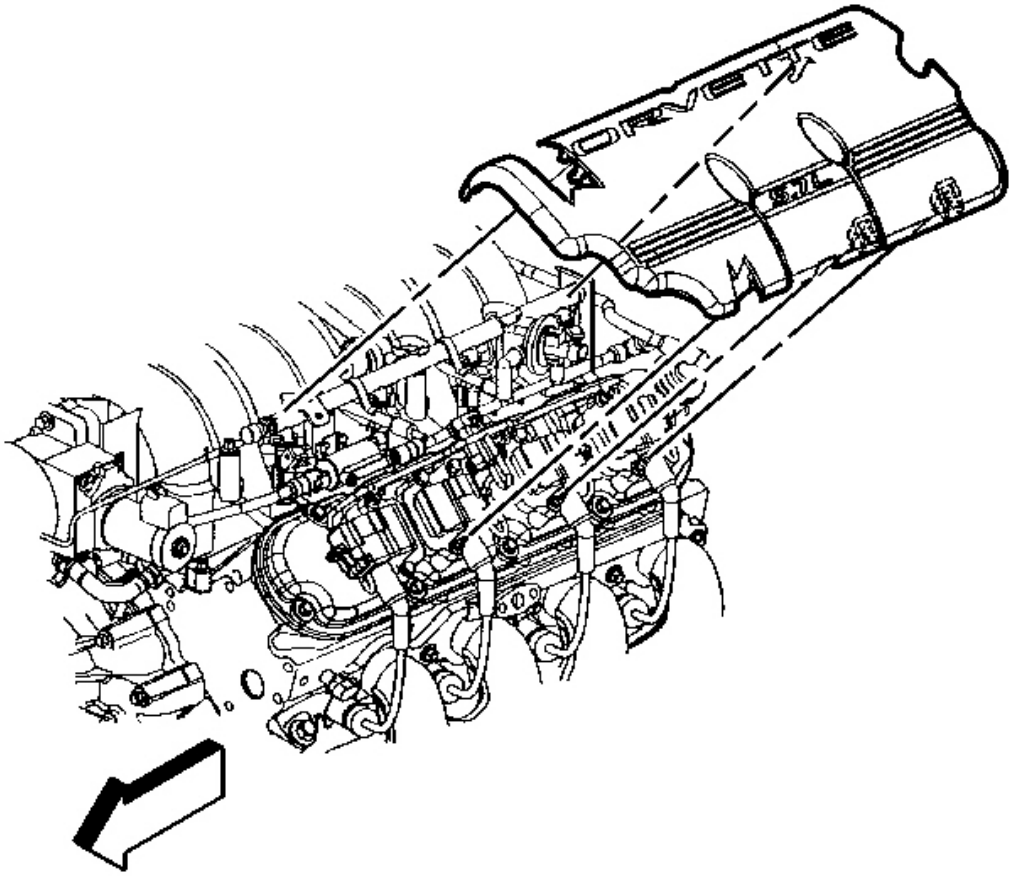

Fig. 197: Left Fuel Rail Cover
Courtesy of GENERAL MOTORS CORP.

8. Install the left fuel rail cover.
9. Program the transmitters. Refer to **Transmitter Programming** in Keyless Entry.

FILLER TUBE REPLACEMENT

Removal Procedure

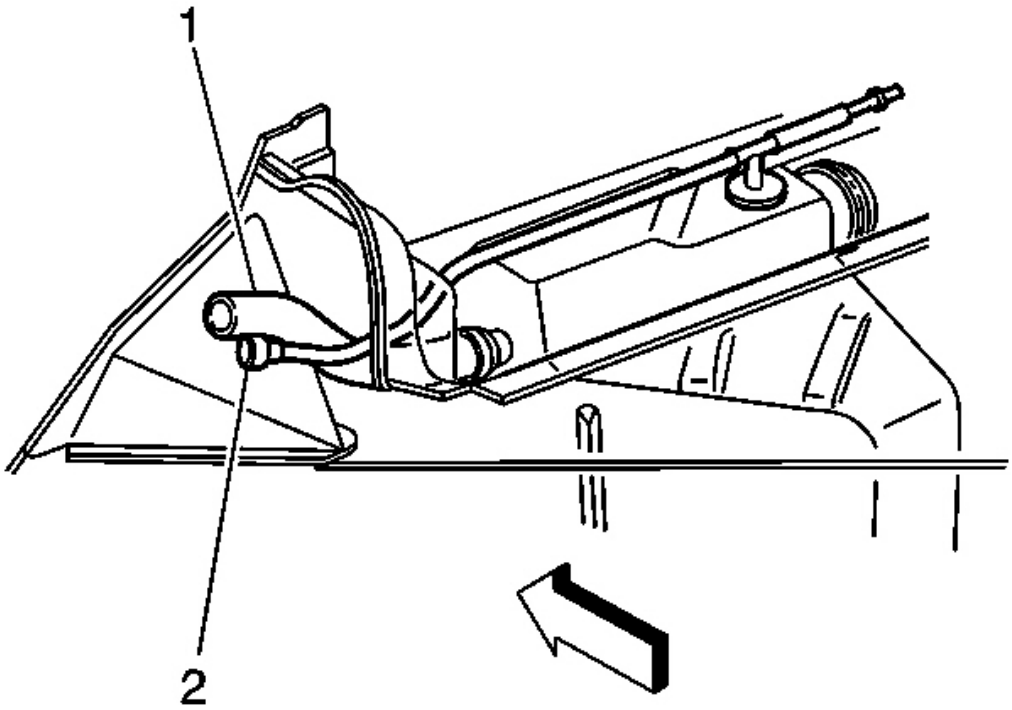

Fig. 198: Fuel Tank Fill & Vent Pipe, Fuel Fill Hose & Vent Hose
Courtesy of GENERAL MOTORS CORP.

1. Remove the fuel filler cap.
2. Remove the left rear wheelhouse panel. Refer to **Wheelhouse Panel Replacement** in Body Rear End.
3. Disconnect the fuel fill hose (1) and the vent hose (2) from the fuel tank fill and vent pipe.
4. Cap the open ends of the fuel fill hose (1) and the vent hose (2).

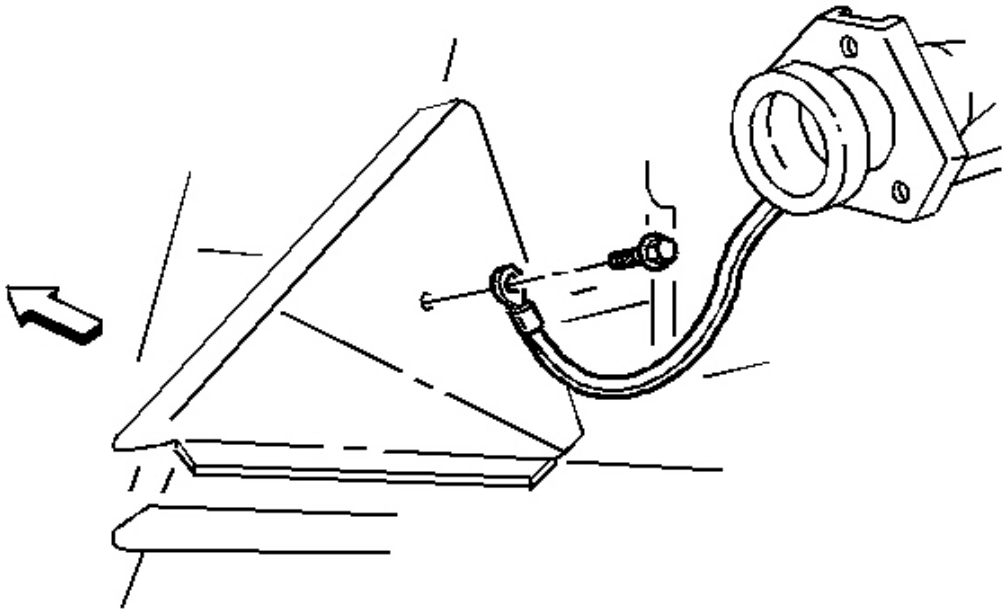

Fig. 199: Fuel Pipe Ground Strap
Courtesy of GENERAL MOTORS CORP.

5. Disconnect the fuel system ground strap.

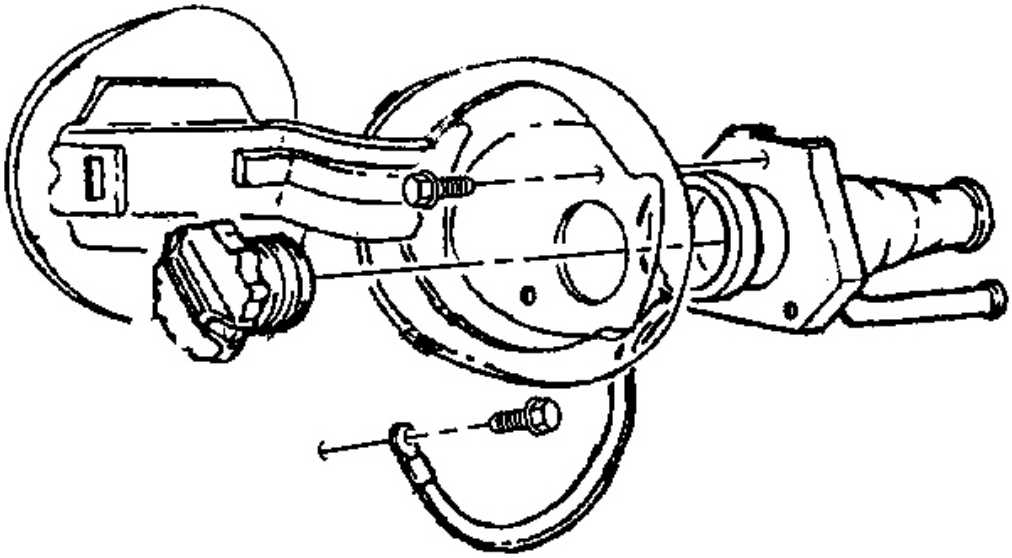

Fig. 200: Fuel Filler Pocket, Fuel Tank Fill & Vent Pipe
Courtesy of GENERAL MOTORS CORP.

6. Remove the fuel tank fill and vent pipe from the fuel filler pocket.

Installation Procedure

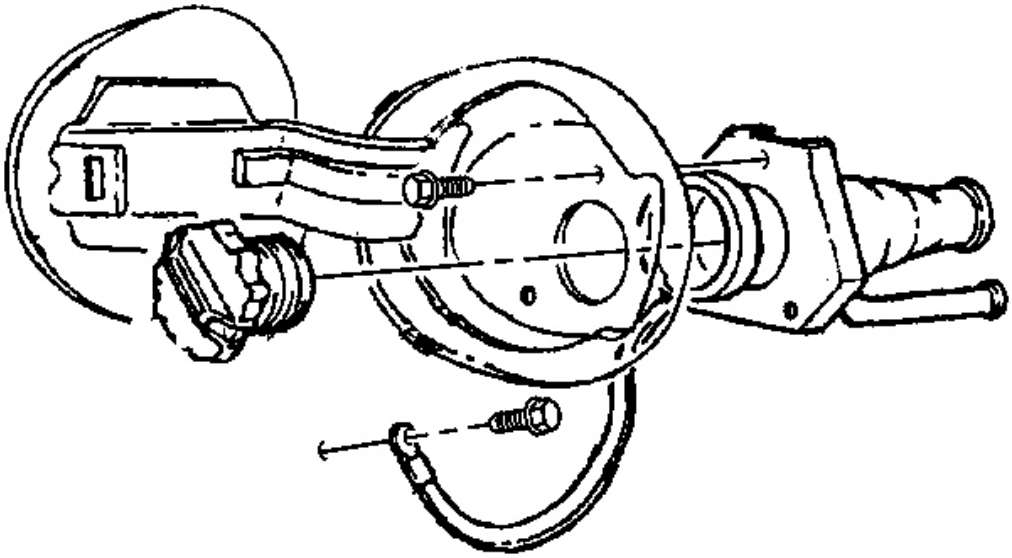

Fig. 201: Fuel Filler Pocket Fuel, Tank Fill & Vent Pipe
Courtesy of GENERAL MOTORS CORP.

NOTE: Refer to the Fastener Notice in Cautions and Notices.

1. Install the fuel tank fill and vent pipe to the fuel filler pocket.

   Tighten: Tighten the fuel tank fill and vent pipe bolts to 3.0 N.m (22 lb in).

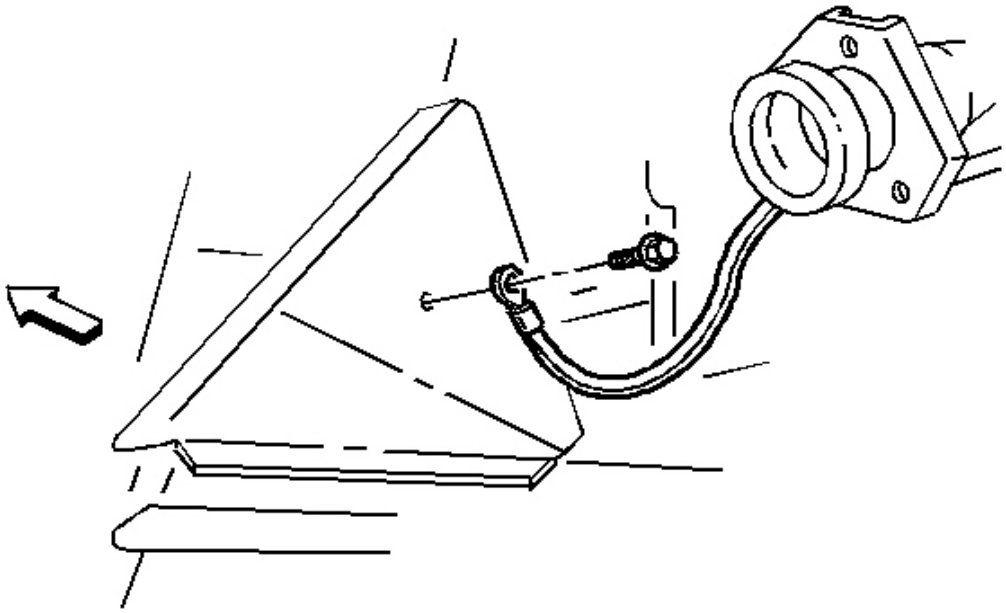

Fig. 202: Fuel Pipe Ground Strap
Courtesy of GENERAL MOTORS CORP.

2. Connect the fuel fill pipe ground strap.

   Tighten: Tighten the fuel fill pipe ground strap bolt to 8 N.m (71 lb in).

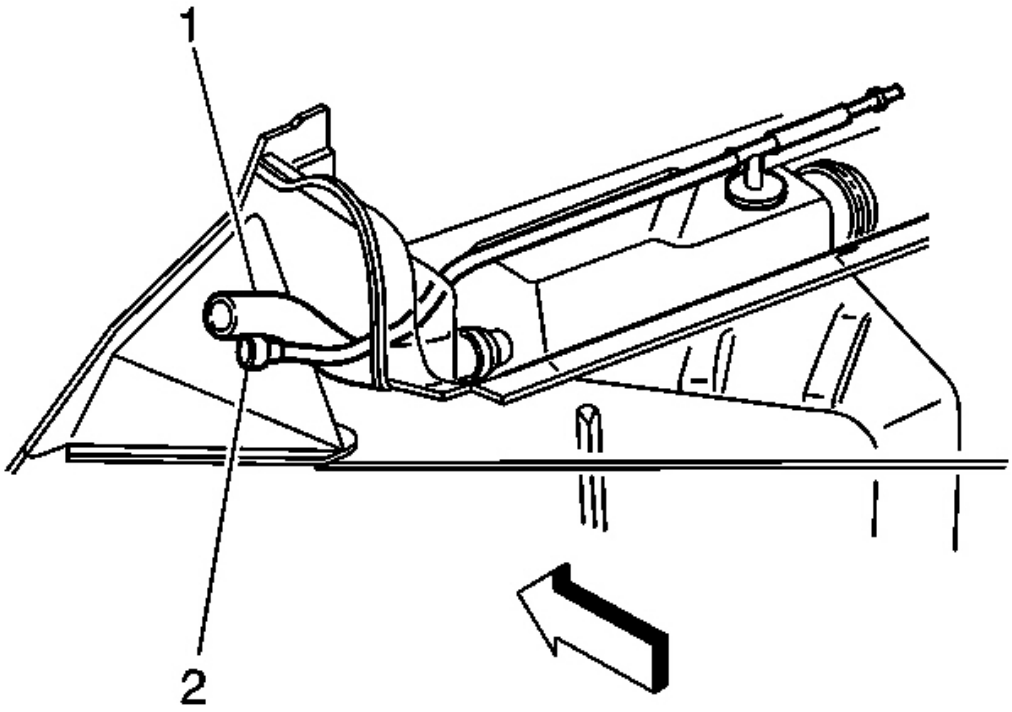

Fig. 203: Fuel Tank Fill & Vent Pipe, Fuel Fill Hose & Vent Hose
Courtesy of GENERAL MOTORS CORP.

3. Uncap the openings on the fuel fill hose (1) and the vent hose (2).
4. Connect the fuel fill hose (1) and the vent hose (2) to the fuel tank fill and vent pipe.

   Tighten: Tighten the fuel fill hose clamp to 4 N.m (35 lb in).

5. Install the left rear wheelhouse panel. Refer to **Wheelhouse Panel Replacement** in Body Rear End.
6. Install the fuel filler cap.

FUEL SENDER ASSEMBLY REPLACEMENT (RH)

Tools Required

J39765-A Fuel Sender Lock Ring Tool

Removal Procedure

1. Disconnect the negative battery cable. Refer to **Battery Negative Cable Disconnect/Connect Procedure**

in Engine Electrical.

2. Remove the right fuel tank. Refer to **Fuel Tank Replacement (Right)** or **Fuel Tank Replacement (Left)** .
3. Place the fuel tank on a suitable work surface.

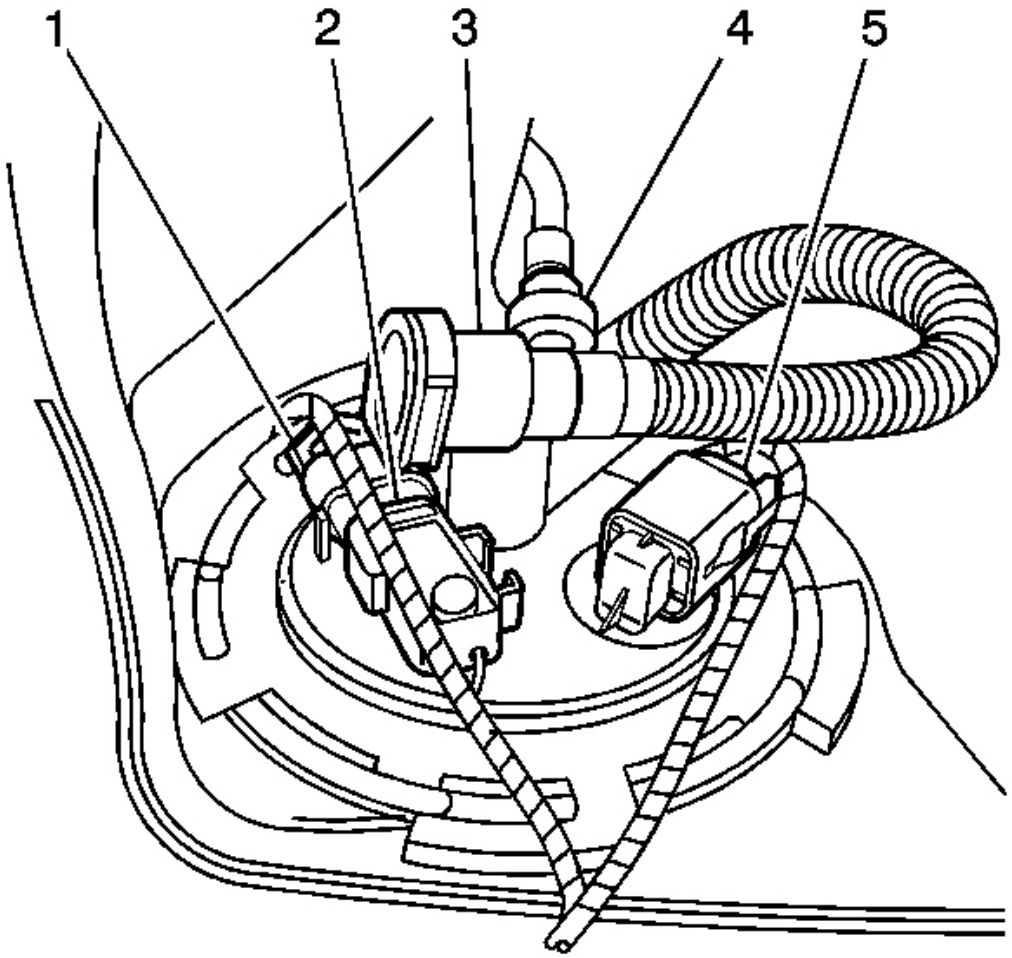

Fig. 204: Right Fuel Tank Module Components
Courtesy of GENERAL MOTORS CORP.

4. Disconnect the evaporative emission (EVAP) purge line (4) from the fuel pump module.
5. Disconnect the fuel pump module harness connector (5).
6. Disconnect the fuel tank pressure (FTP) sensor harness connector (1).
7. If replacing the fuel pump module, remove the FTP sensor (2). Refer to **Fuel Tank Pressure Sensor**

Replacement .

8. Disconnect the jet line insert connector from the crossover tube to fuel tank opening.

IMPORTANT: The fuel pump module is spring loaded and will spring upward when the locking ring is removed.

9. Using the J39765-A , remove the fuel pump module locking ring.

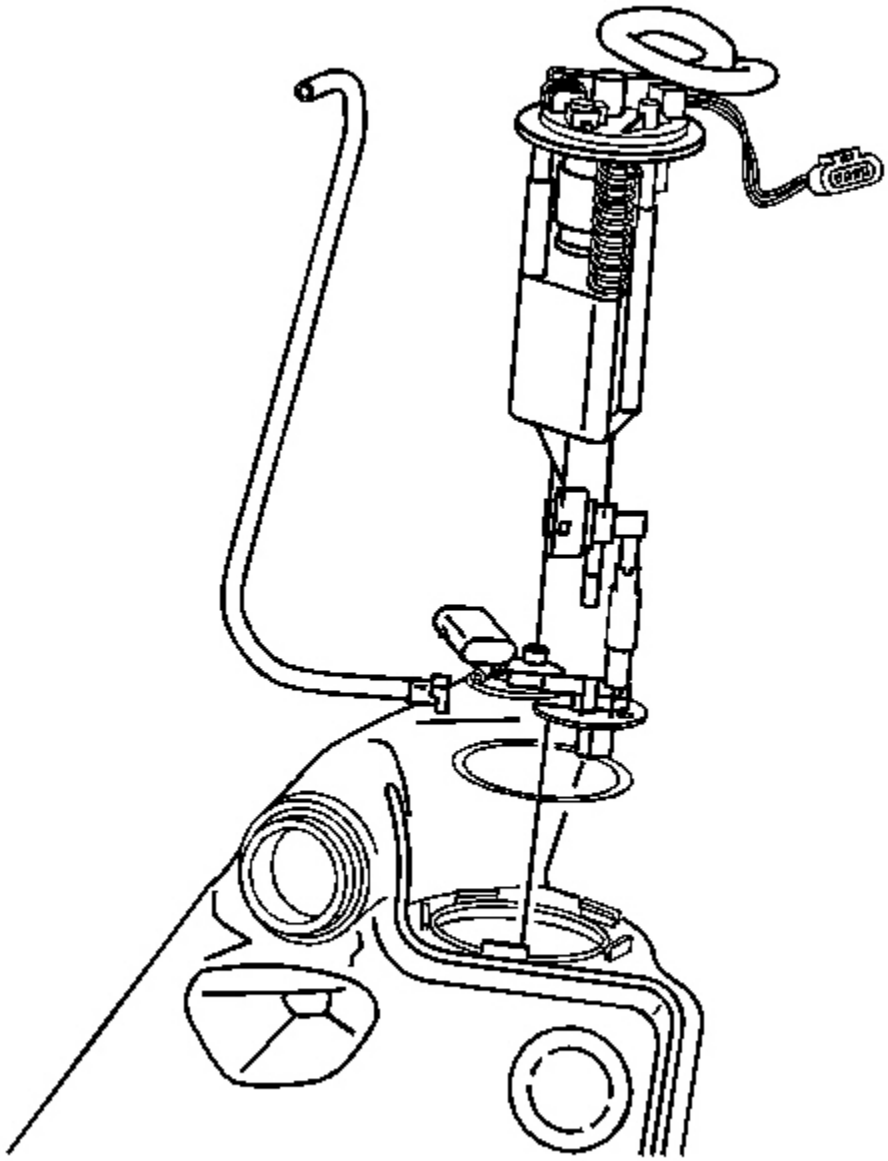

Fig. 205: Fuel Pump Module (Right Tank)
Courtesy of GENERAL MOTORS CORP.

10. Carefully remove the fuel pump module from the fuel tank, with the jet lines connected. Take care not to damage the fuel sender float arm.
11. Disconnect the jet line quick-connect connectors from the fuel pump module, noting the location of the

lines for installation.

12. Remove the fuel pump module O-ring from the fuel tank opening.
13. Remove the jet line insert through the crossover tube to fuel tank opening.

Installation

1. Inspect the jet line insert for damage and replace if necessary.
2. Install the jet line insert through the crossover tube to fuel tank opening.

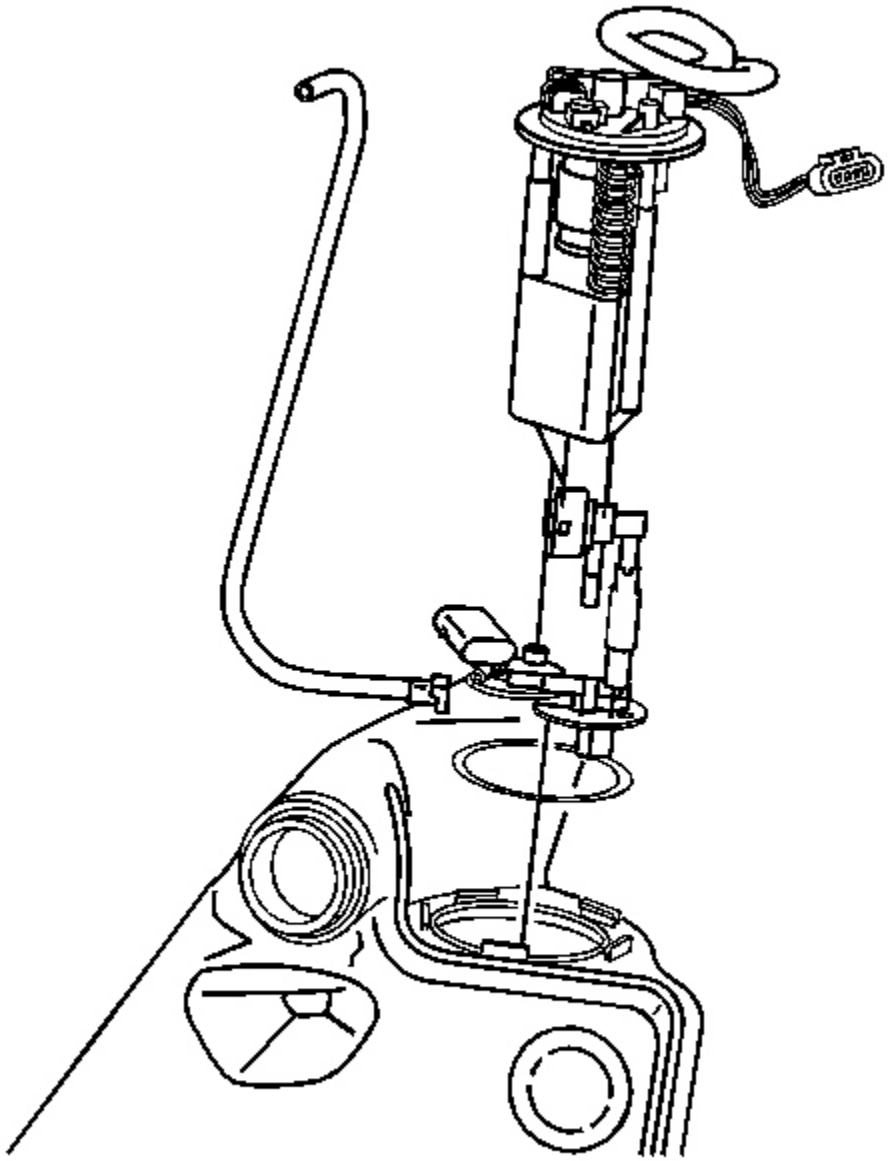

Fig. 206: Fuel Pump Module (Right Tank)
Courtesy of GENERAL MOTORS CORP.

3. Install a new fuel pump module O-ring to the fuel tank opening.

IMPORTANT: Pull on each connector to ensure that the connectors are properly

latched.

4. Pull the jet line quick-connectors up through the pump module opening, connecting the lines to the pump module as previously noted.
5. Install the pump module into the fuel tank, taking care not to damage the float arm.
6. Compress and align the fuel pump module, while installing the lock ring.
7. Using the J39765-A , fully lock the fuel pump module lock ring in place.
8. Using a DMM, verify the full and empty readings resistance reading of the fuel pump module. Turn the fuel tank upside down to achieve the full tank reading.

   Resistance:

   - Empty 40 ohms resistance
   - Full 250 ohms resistance

   IMPORTANT: Pull the jet line insert connector to ensure that the insert is properly attached.

9. Connect the jet line insert connector into the crossover tube to fuel tank opening.

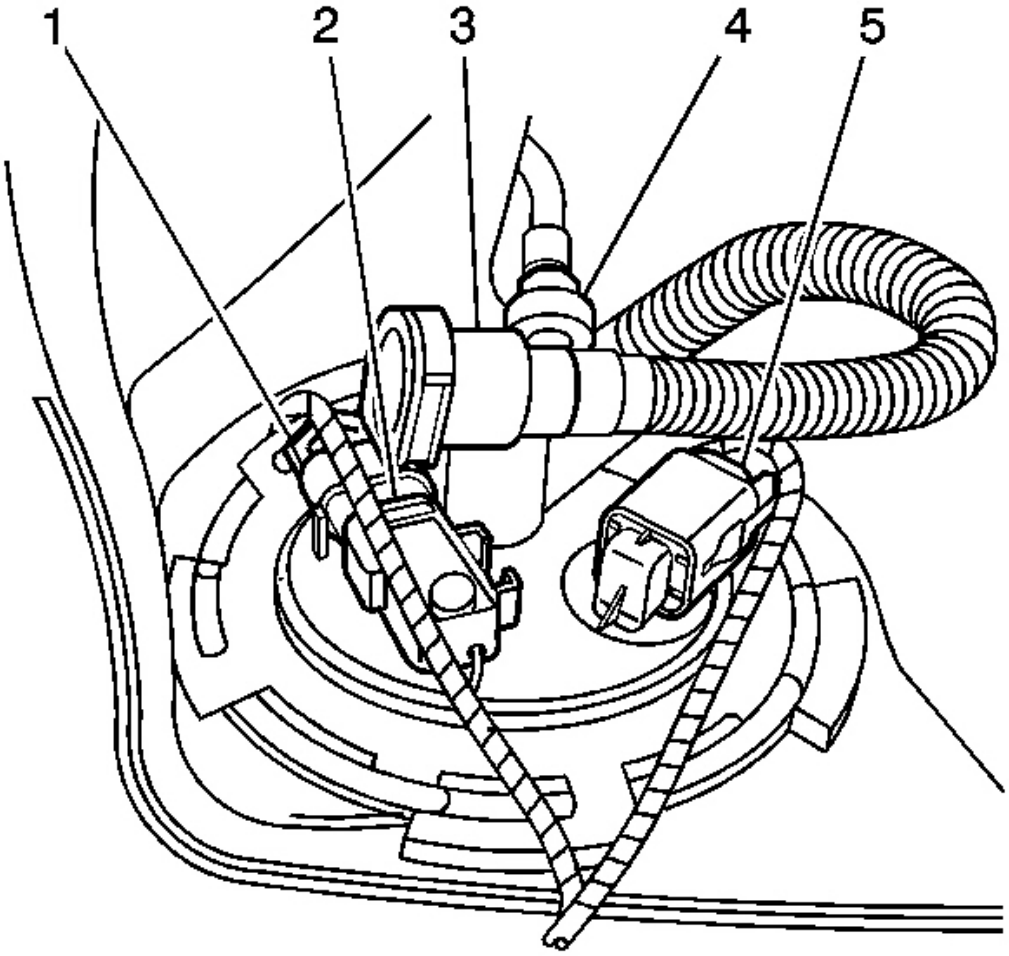

Fig. 207: Right Fuel Tank Module Components
Courtesy of GENERAL MOTORS CORP.

10. If replacing the fuel pump module, install the FTP sensor (2). Refer to **Fuel Tank Pressure Sensor Replacement** .
11. Connect the FTP sensor harness connector (1).
12. Connect the fuel pump module harness connector (5).
13. Connect the EVAP purge line (4) from the fuel pump module.
14. Install the right fuel tank. Refer to **Fuel Tank Replacement (Right)** or **Fuel Tank Replacement (Left)** .

FUEL SENDER ASSEMBLY REPLACEMENT (LH)

Tools Required

J39765-A Fuel Sender Lock Ring Tool

Removal Procedure

1. Disconnect the negative battery cable. Refer to **Battery Negative Cable Disconnect/Connect Procedure** in Engine Electrical.
2. Remove the left fuel tank. Refer to **Fuel Tank Replacement (Right)** or **Fuel Tank Replacement (Left)** .
3. Place the fuel tank on a suitable work surface.

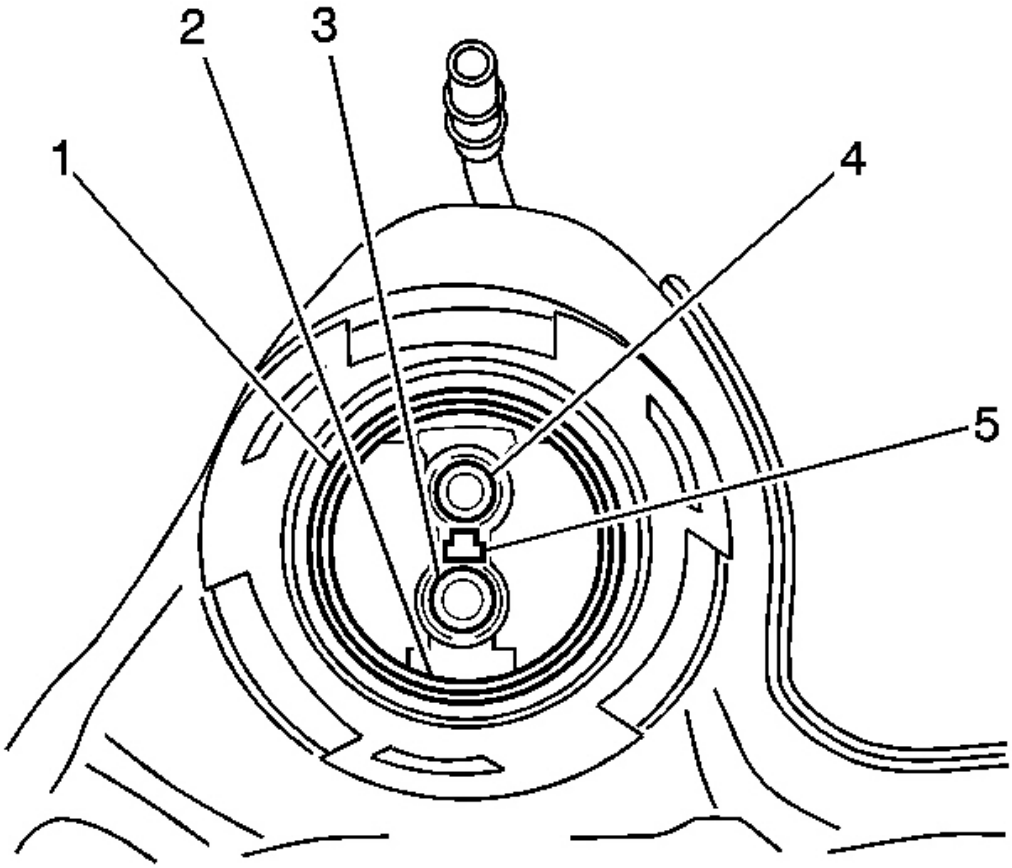

Fig. 208: Crossover Tube To Fuel Tank O-Rings & Alignment Feature
Courtesy of GENERAL MOTORS CORP.

4. Disconnect the fuel pump jumper harness from the fuel pump module.

5. Disconnect the jet line insert connector from the crossover tube to fuel tank opening.
6. Disconnect the fuel feed line from the welded clip on the side of the fuel tank.

IMPORTANT: The fuel pump module is spring loaded and will spring upward when the locking ring is removed.

7. Using the J39765-A , remove the fuel pump module locking ring.

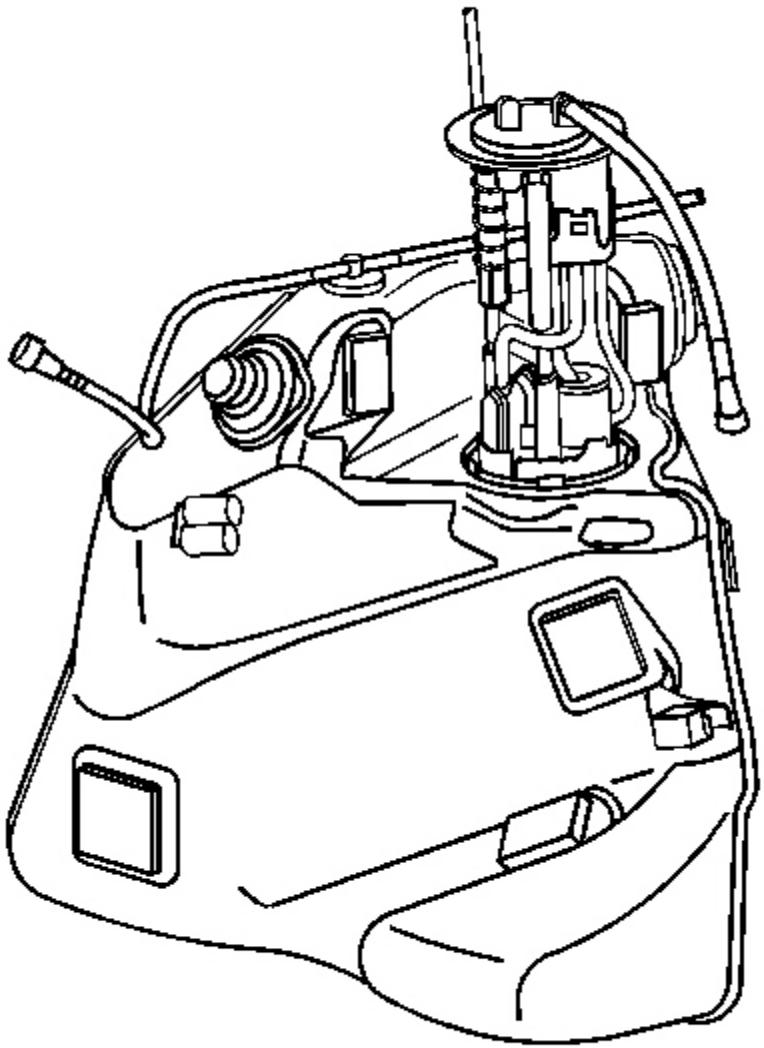

Fig. 209: Fuel Pump Module (Left Tank)

Courtesy of GENERAL MOTORS CORP.

8. Carefully remove the fuel pump module from the fuel tank, with the jet lines connected. Take care not to damage the fuel sender float arm.
9. Disconnect the jet line quick-connect connectors from the fuel pump module inner port.
10. Remove the jet line from the module retainer cup. This line has no attached connector.
11. Remove the fuel pump module O-ring from the fuel tank opening.
12. Remove the jet line insert through the crossover tube to fuel tank opening.

Installation

1. Inspect the jet line insert for damage and replace if necessary.
2. Install the jet line insert through the crossover tube to fuel tank opening.
3. Install a new fuel pump module O-ring to the fuel tank opening.
4. Place tape around the jet line with the connector. This will permit line access once the pump module is inserted into the fuel tank.

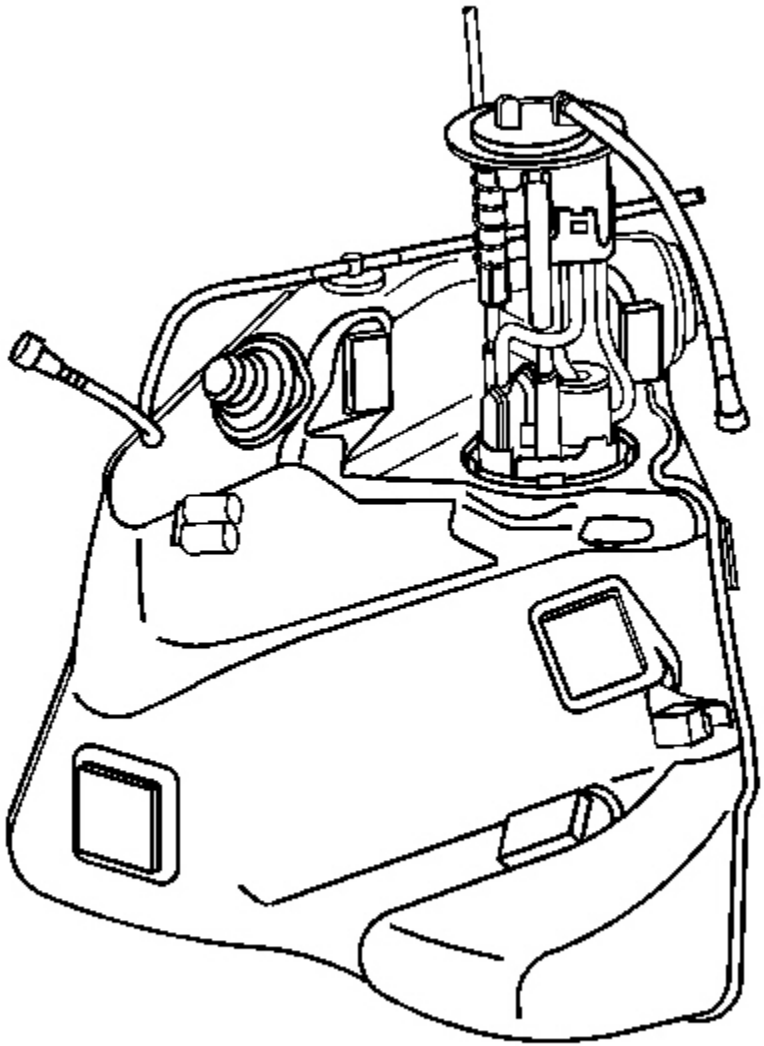

Fig. 210: Fuel Pump Module (Left Tank)
Courtesy of GENERAL MOTORS CORP.

5. Install the pump module into the fuel tank half way, taking care not to damage the float arm.
6. Using the tape as a guide, gently pull the jet line up through the fuel pump module opening.
7. Place the jet line with no connector in the module retainer cup.
8. Secure the line into the module retaining clip.
9. Remove the tape from the jet line with a connector.

IMPORTANT: Pull on each connector to ensure that the connectors are properly latched.

10. Connect the jet line quick-connect connectors to the fuel pump module inner port.
11. Compress and align the fuel pump module into the fuel tank, while taking care not to damage the float arm.
12. Install the fuel pump module lock ring.
13. Using the J39765-A , fully lock the fuel pump module lock ring in place.
14. Connect the fuel supply line into the weld clip on the side of the fuel tank.
15. Using a DMM, verify the full and empty readings resistance reading of the fuel pump module. Turn the fuel tank upside down to achieve the full tank reading.

    Resistance:

    - Empty tank reading 40 ohms resistance
    - Full tank reading 250 ohms resistance

IMPORTANT: Pull the jet line insert connector to ensure that the insert is properly attached.

16. Connect the jet line insert connector into the crossover tube to fuel tank opening.

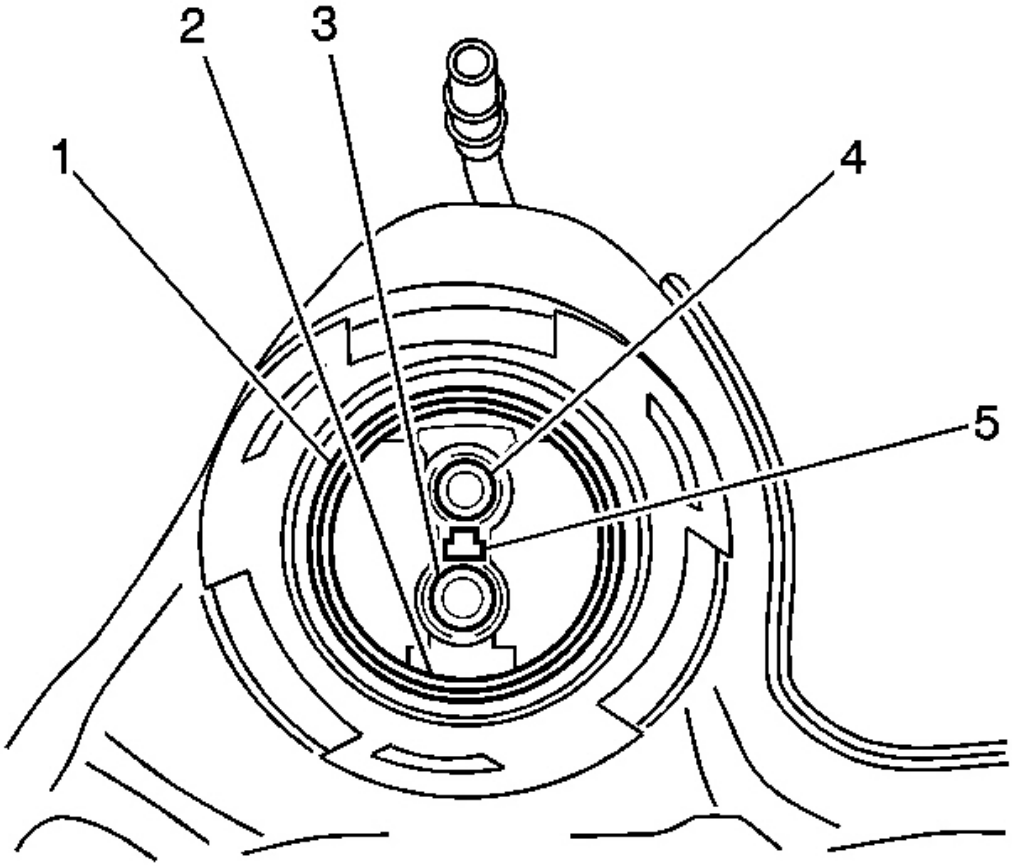

Fig. 211: Crossover Tube To Fuel Tank O-Rings & Alignment Feature
Courtesy of GENERAL MOTORS CORP.

17. Connect the fuel pump jumper harness to the fuel pump module.
18. Install the left fuel tank. Refer to **Fuel Tank Replacement (Right)** or **Fuel Tank Replacement (Left)** .

FUEL HOSE/PIPES REPLACEMENT - ENGINE COMPARTMENT

Tools Required

- **J 34730-1A** Fuel Pressure Gauge. See **Special Tools and Equipment** .
- **J 37088-A** Tool Set, Fuel Line Quick-Connect Separator. See **Special Tools and Equipment** .

Removal Procedure

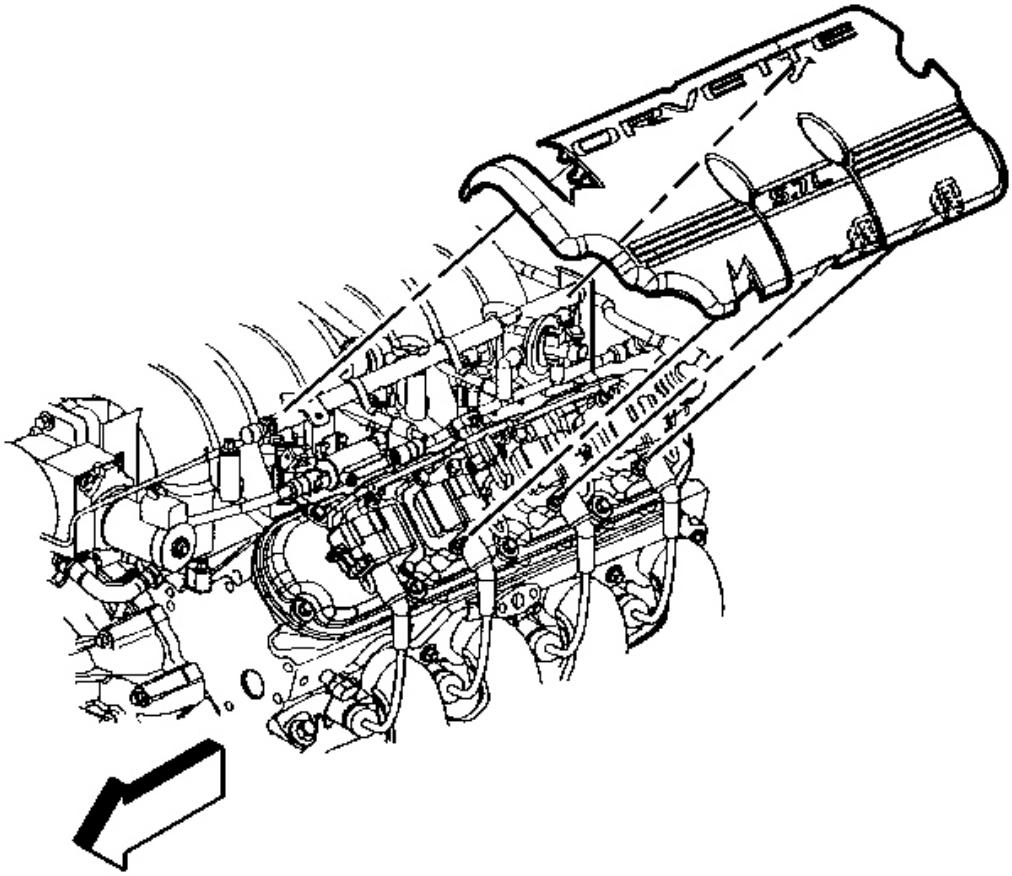

Fig. 212: Left Fuel Rail Cover
Courtesy of GENERAL MOTORS CORP.

CAUTION: Refer to Battery Disconnect Caution in Cautions and Notices.

NOTE:

- **Do not repair the fuel feed or return pipes.**
- **Replace the fuel feed and return pipes with original equipment or with parts that meet the GM specifications for those parts. The replacement pipe must have the same type of fittings as the original pipe in order to ensure the integrity of the connection.**

1. Disconnect the negative battery cable. Refer to **Battery Negative Cable Disconnect/Connect Procedure** in Engine Electrical.

2. Remove the left fuel rail cover.
3. Relieve the fuel system pressure. Refer to the **Fuel Pressure Relief Procedure** .

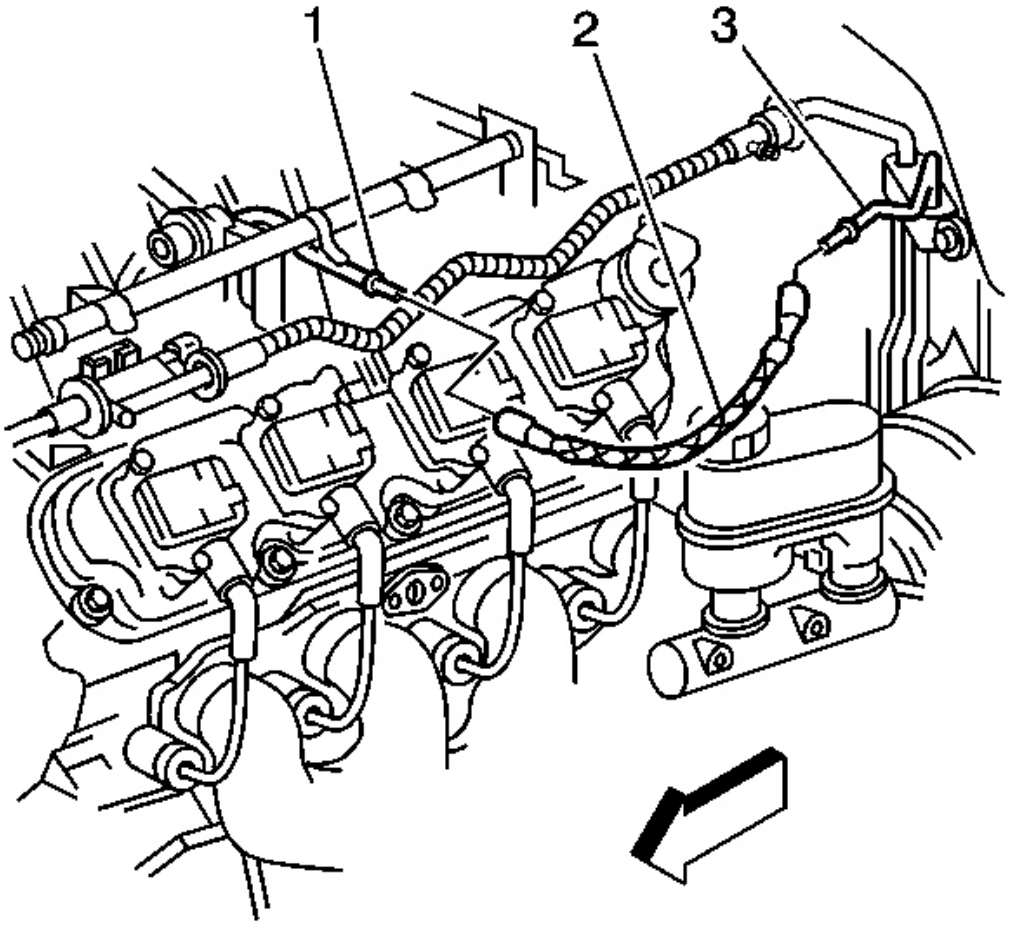

Fig. 213: Chassis Fuel Pipe, Fuel Feed Hose & Fuel Rail
Courtesy of GENERAL MOTORS CORP.

4. Disconnect the quick-connect fitting at the fuel rail (1). Refer to **Quick Connect Fitting(s) Service (Metal Collar)** .
5. Disconnect the quick-connect fitting at the chassis fuel pipe (3). Refer to **Quick Connect Fitting(s) Service (Metal Collar)** .
6. Remove the fuel feed hose (2).
7. Cap the chassis fuel pipe and the fuel rail pipe in order to prevent possible fuel system contamination.
8. Inspect the hose for bends, for kinks, for chafing, and for cracks. Replace the hose as required.

Installation Procedure

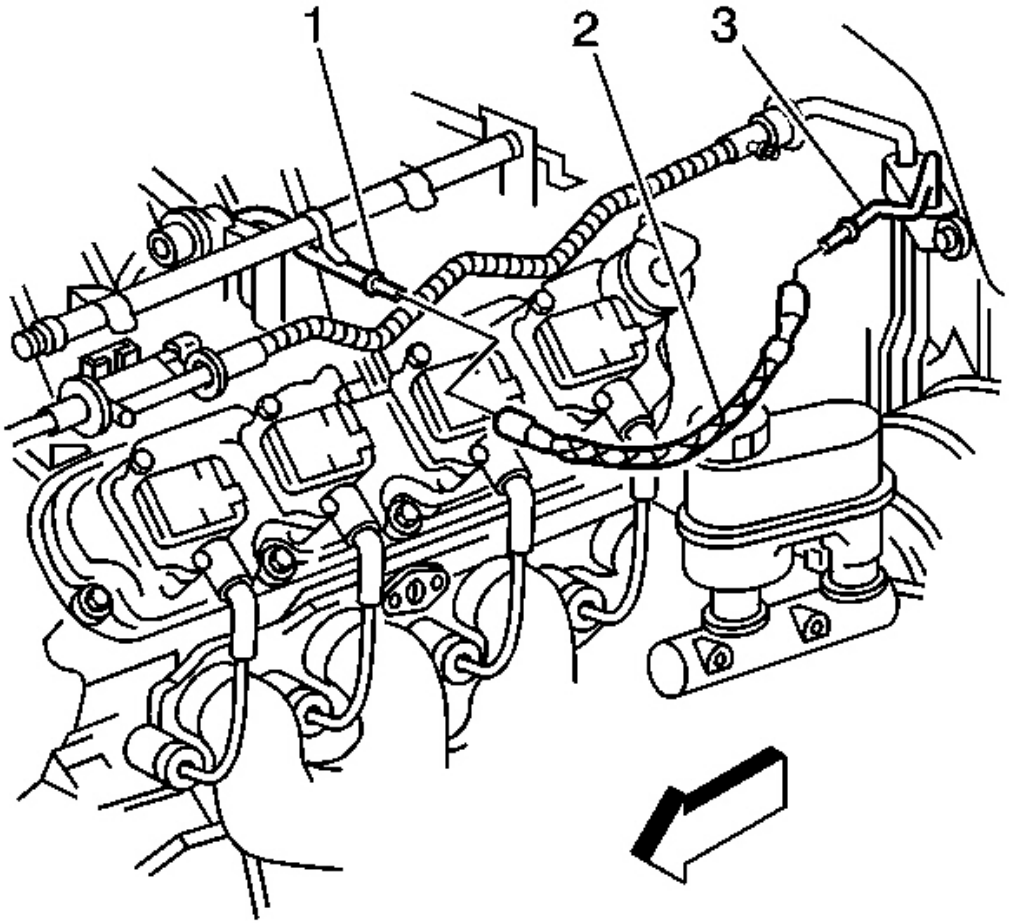

Fig. 214: Chassis Fuel Pipe, Fuel Feed Hose & Fuel Rail
Courtesy of GENERAL MOTORS CORP.

1. Remove the caps from the chassis fuel pipe and the fuel rail pipe.
2. Connect the fuel feed hose (2) to the chassis fuel pipe (3). Refer to **Quick Connect Fitting(s) Service (Metal Collar)** .
3. Connect the fuel feed hose (2) to the fuel rail (1). Refer to **Quick Connect Fitting(s) Service (Metal Collar)** .

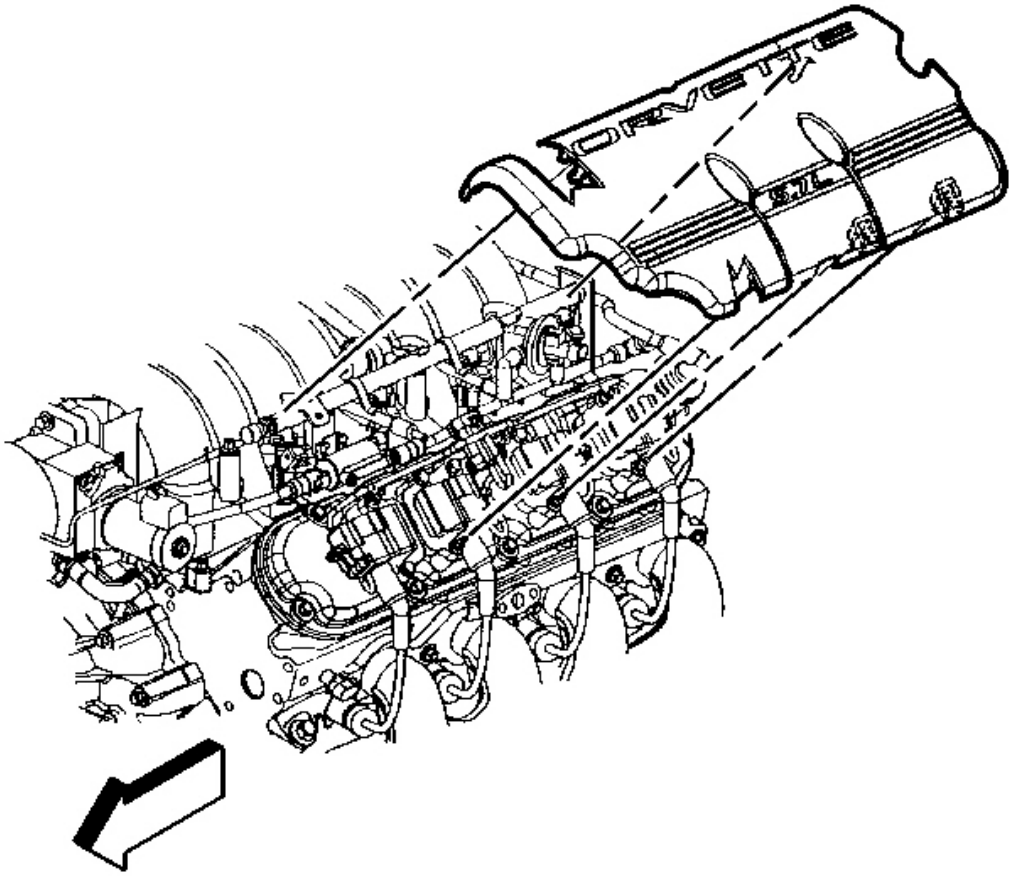

Fig. 215: Left Fuel Rail Cover
Courtesy of GENERAL MOTORS CORP.

4. Tighten the fuel filler cap.
5. Connect the negative battery cable. Refer to **Battery Negative Cable Disconnect/Connect Procedure** in Engine Electrical.
6. Perform the following procedure in order to inspect for leaks:
    1. Turn the ignition switch ON for 2 seconds.
    2. Turn the ignition switch OFF for 10 seconds.
    3. Turn the ignition switch ON.
    4. Inspect for fuel leaks.
7. Install the left fuel rail cover.
8. Program the transmitters. Refer to **Transmitter Programming** in Keyless Entry.

FUEL HOSE/PIPES REPLACEMENT - CHASSIS

Tools Required

- **J 34730-1A** Fuel Pressure Gauge. See **Special Tools and Equipment** .
- **J 37088-A** Tool Set, Fuel Line Quick-Connect Separator. See **Special Tools and Equipment** .

Removal Procedure

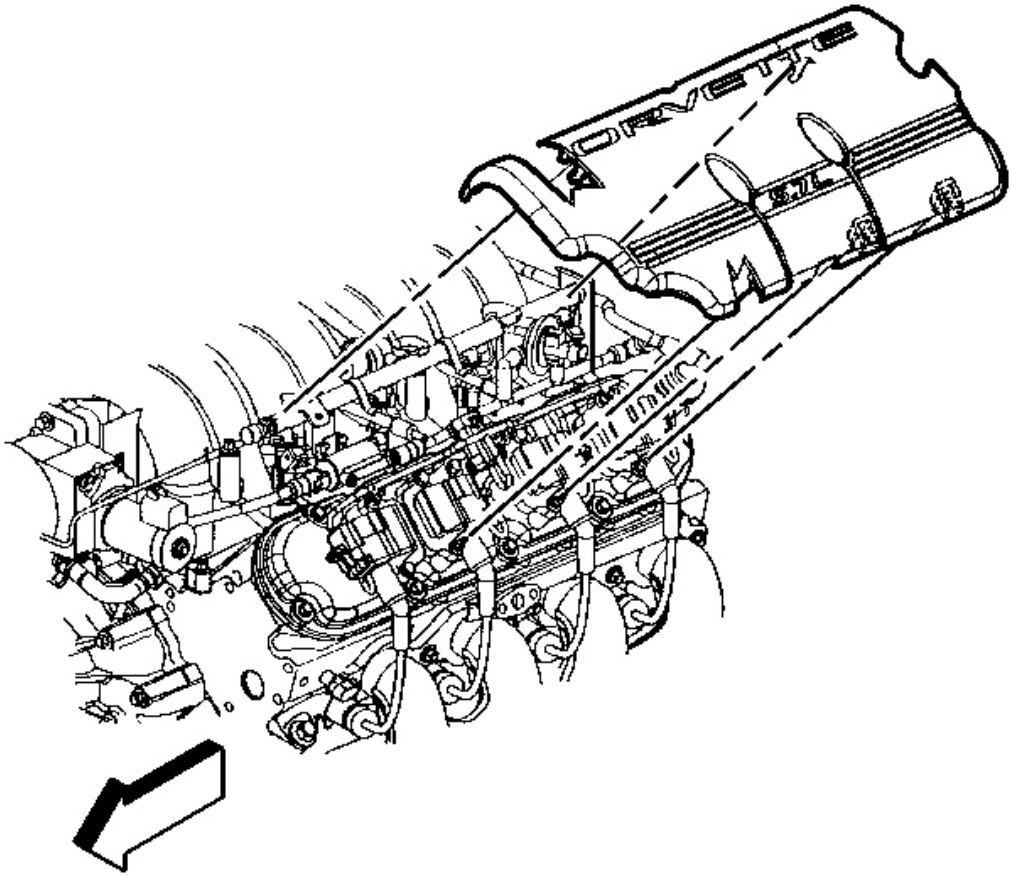

Fig. 216: Left Fuel Rail Cover
Courtesy of GENERAL MOTORS CORP.

CAUTION: Refer to Battery Disconnect Caution in Cautions and Notices.

1. Disconnect the negative battery cable. Refer to **Battery Negative Cable Disconnect/Connect Procedure** in Engine Electrical.
2. Remove the left fuel rail cover.
3. Relieve the fuel system pressure. Refer to the **Fuel Pressure Relief Procedure** .

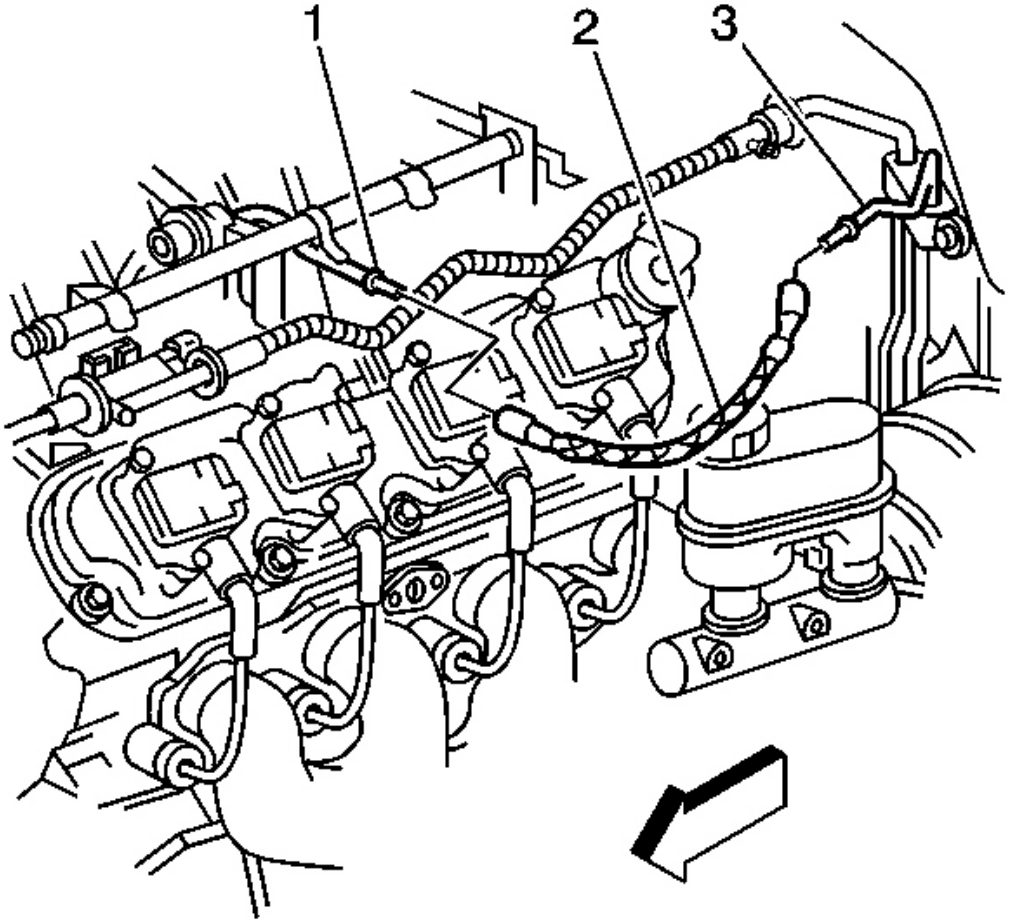

Fig. 217: Chassis Fuel Pipe, Fuel Feed Hose & Fuel Rail
Courtesy of GENERAL MOTORS CORP.

NOTE:

- **Do not repair the fuel feed or return pipes.**
- **Replace the fuel feed and return pipes with original equipment or with parts that meet the GM specifications for those parts. The replacement pipe must have the same type of fittings as the original**

pipe in order to ensure the integrity of the connection.

4. Disconnect the fuel feed hose (2) from the chassis fuel feed pipe (3). Refer to **Quick Connect Fitting(s) Service (Metal Collar)** .
5. Cap the engine compartment fuel feed pipe.

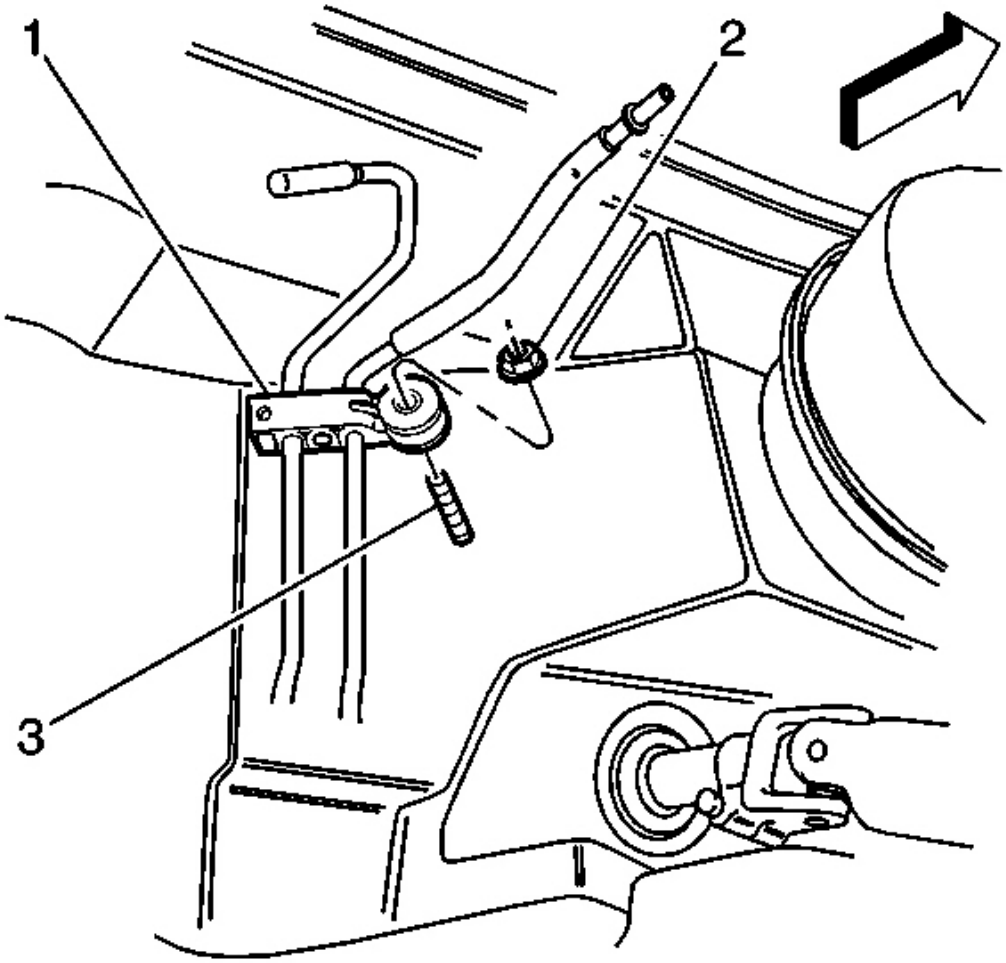

Fig. 218: EVAP Pipe Retainer & Chassis Fuel
Courtesy of GENERAL MOTORS CORP.

6. Disconnect the chassis fuel and EVAP pipe retainer (1) from the upper front of dash mounting stud (3).

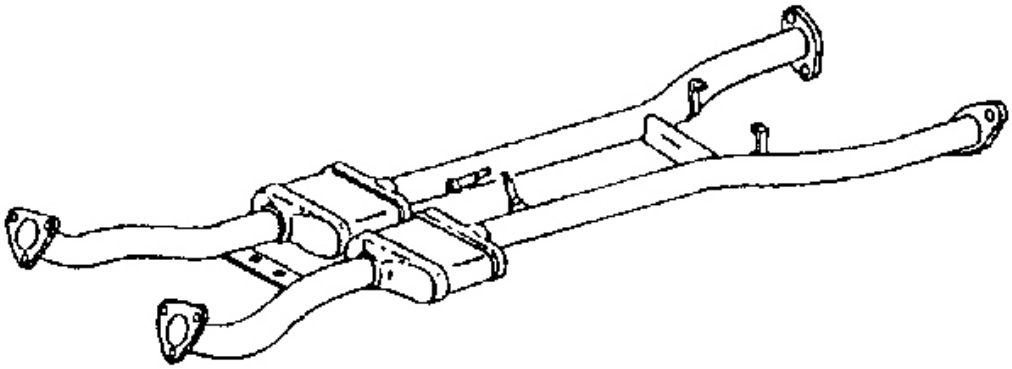

Fig. 219: Exhaust Intermediate Pipe
Courtesy of GENERAL MOTORS CORP.

CAUTION: Refer to Vehicle Lifting Caution in Cautions and Notices.

7. Raise the vehicle. Refer to **Lifting and Jacking the Vehicle** in General Information.
8. Remove the exhaust intermediate pipe.

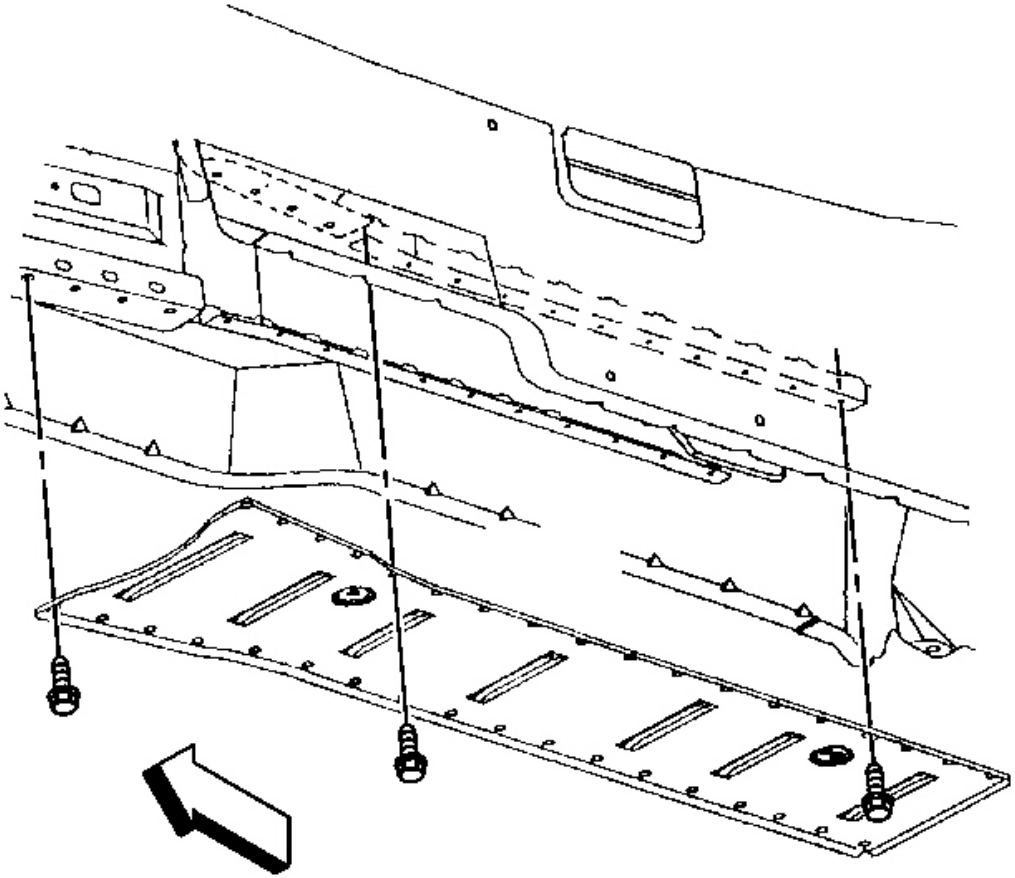

Fig. 220: Driveline Tunnel Closeout Panel
Courtesy of GENERAL MOTORS CORP.

9. Remove the driveline tunnel closeout panel. Refer to **Driveline Tunnel Closeout Panel Replacement** in Propeller Shaft.

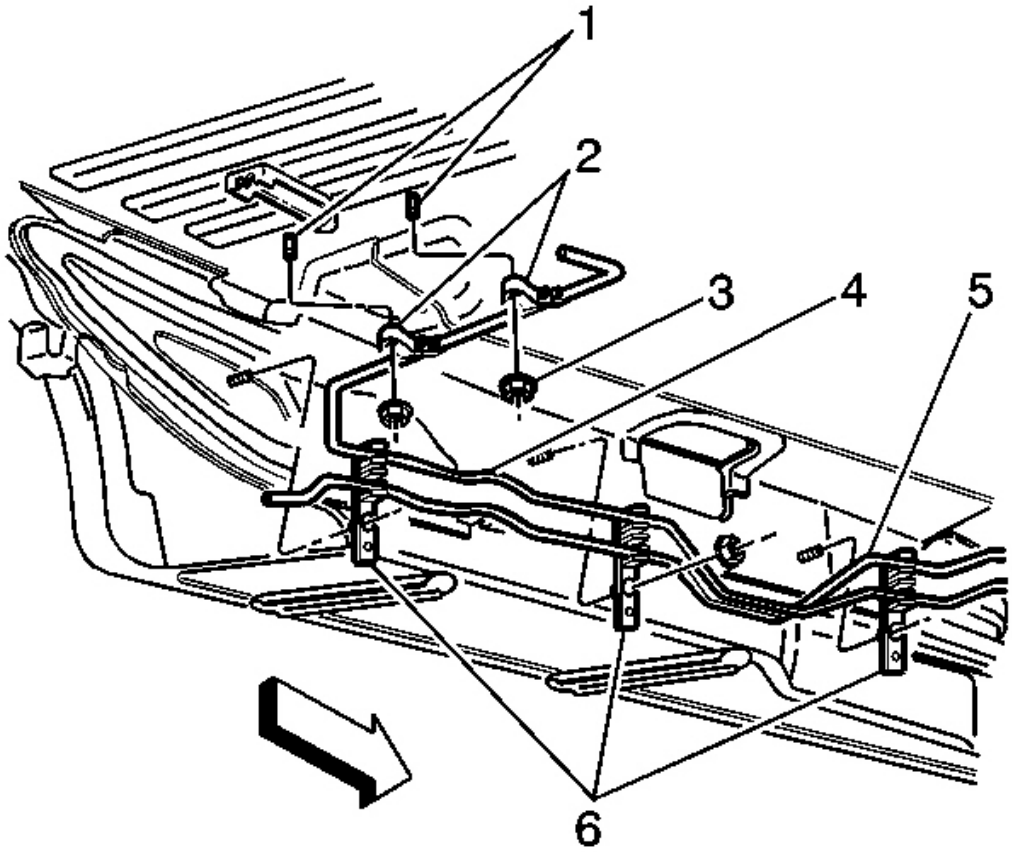

Fig. 221: Underbody Retainers, Chassis Fuel Pipe & Purge Pipe
Courtesy of GENERAL MOTORS CORP.

10. Disconnect the chassis fuel pipe (5) from the underbody retainers (6).
11. Remove the chassis fuel pipe.

Installation Procedure

IMPORTANT:

- **Follow the same routing as the original pipe.**
- **Secure the pipe in order to prevent chafing.**
- **Do not kink or bend the pipe.**

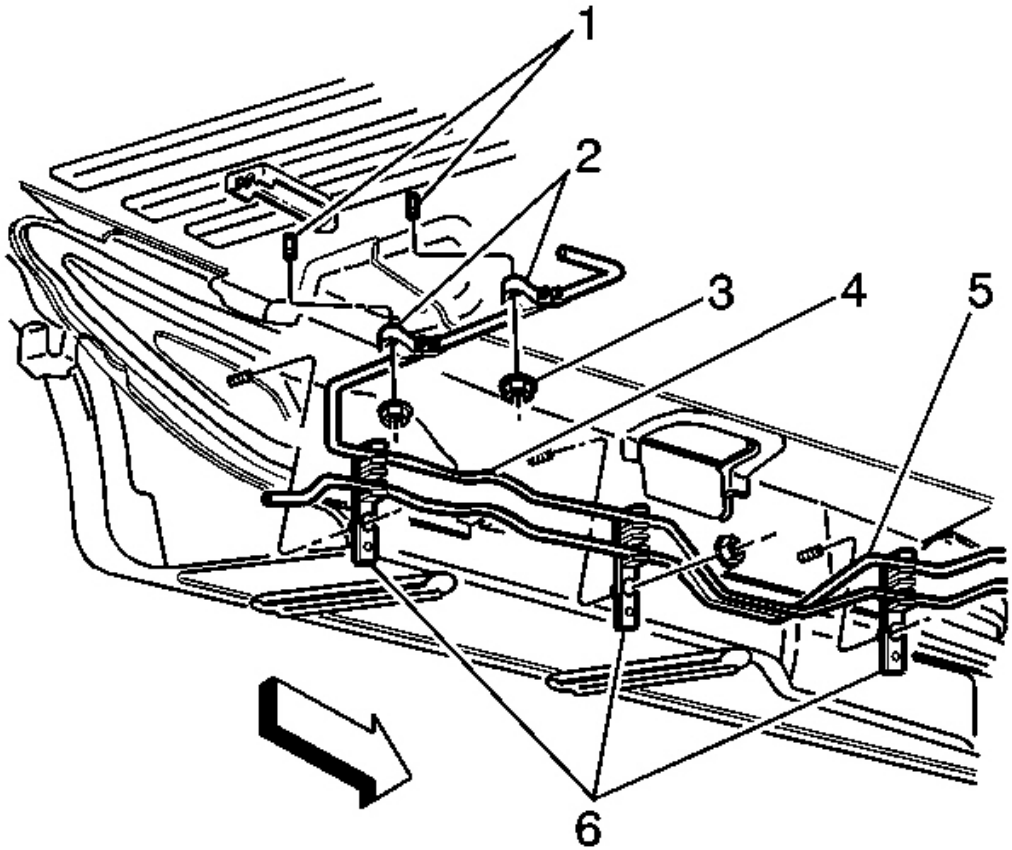

Fig. 222: Underbody Retainers, Chassis Fuel Pipe & Purge Pipe
Courtesy of GENERAL MOTORS CORP.

1. Install the chassis fuel pipe (5) into the underbody retainers (6).

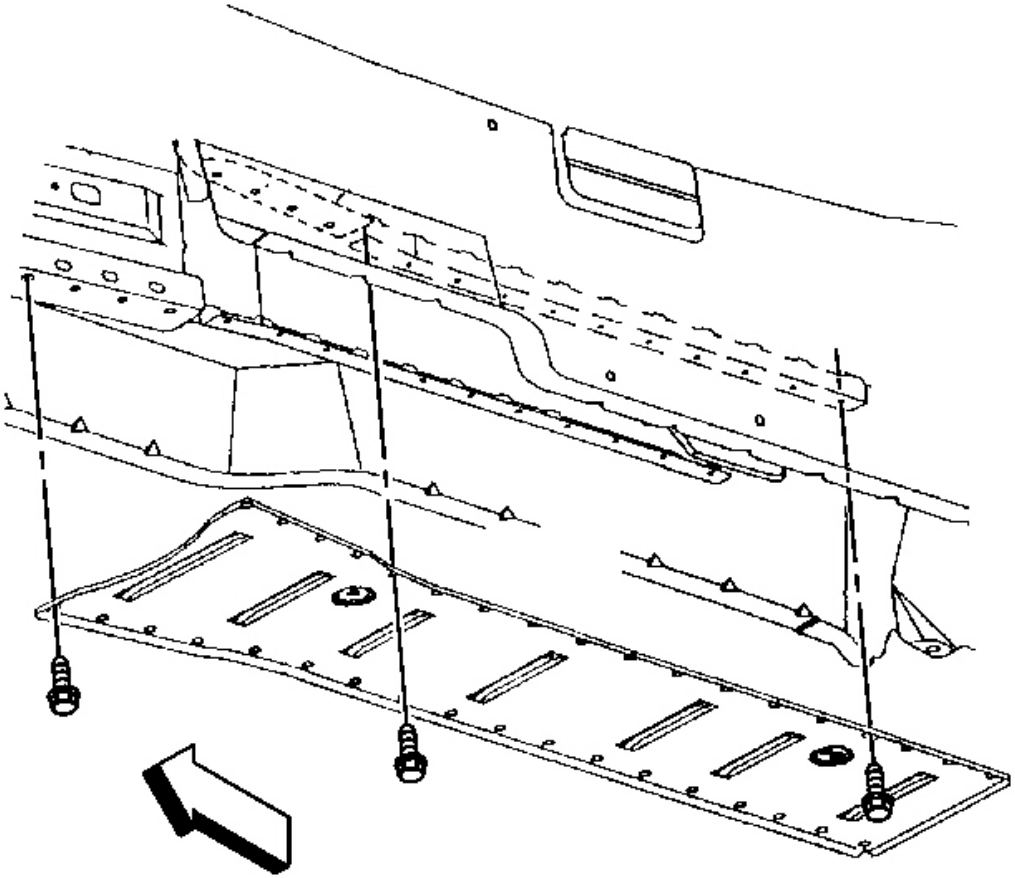

Fig. 223: Driveline Tunnel Closeout Panel
Courtesy of GENERAL MOTORS CORP.

2. Install the driveline tunnel closeout panel. Refer to **Driveline Tunnel Closeout Panel Replacement** in Propeller Shaft.

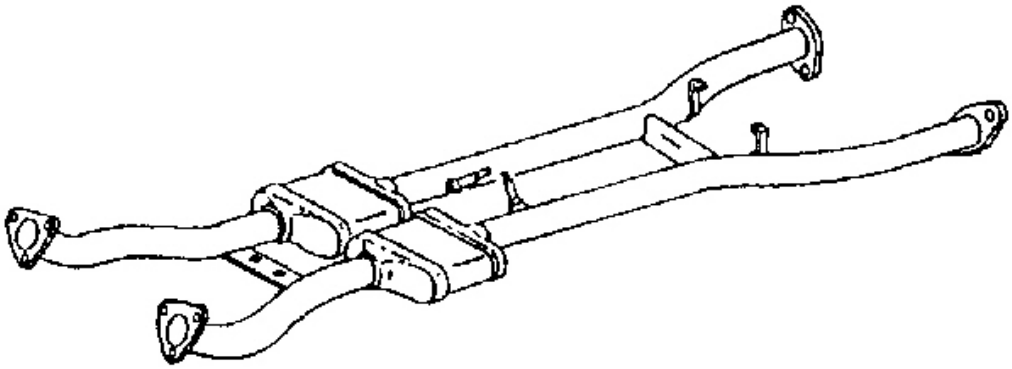

Fig. 224: Exhaust Intermediate Pipe
Courtesy of GENERAL MOTORS CORP.

3. Install the exhaust intermediate pipe.
4. Lower the vehicle.
5. Remove the cap from the engine compartment fuel feed pipe.

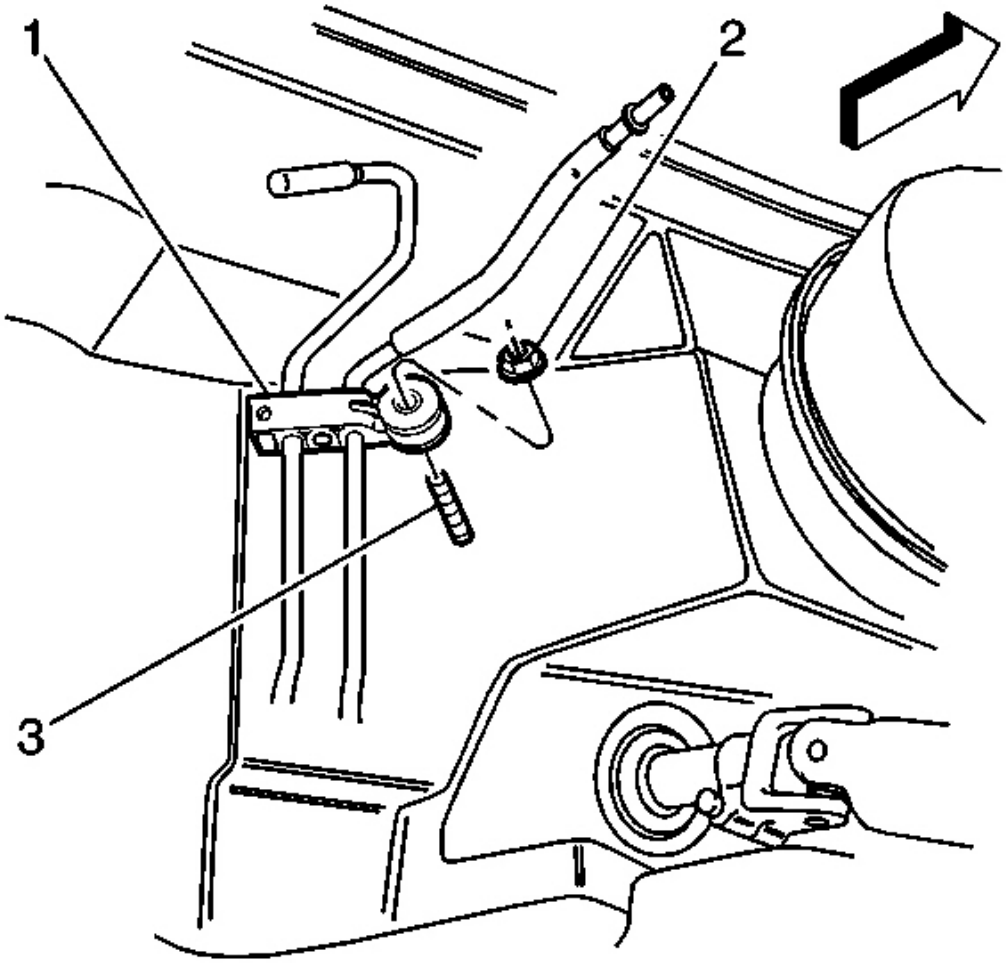

Fig. 225: EVAP Pipe Retainer & Chassis Fuel
Courtesy of GENERAL MOTORS CORP.

NOTE: Refer to the Fastener Notice in Cautions and Notices.

6. Connect the chassis fuel and EVAP pipe retainer (1) at the upper front of dash mounting stud (3).

   Tighten: Tighten the fuel and EVAP pipe retainer nut to 6 N.m (53 lb in).

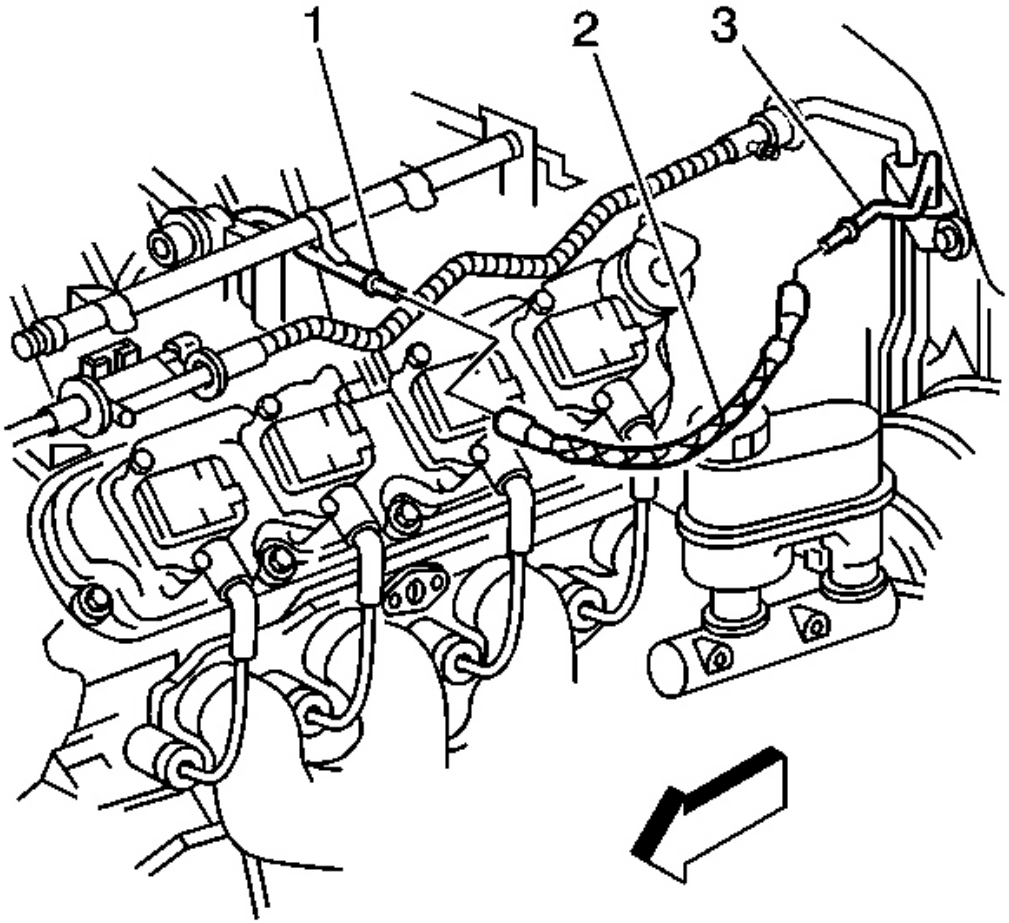

Fig. 226: Chassis Fuel Pipe, Fuel Feed Hose & Fuel Rail
Courtesy of GENERAL MOTORS CORP.

7. Connect the fuel feed hose (2) to the chassis fuel feed pipe (3). Refer to **Quick Connect Fitting(s) Service (Metal Collar)** .
8. Tighten the fuel filler cap.
9. Connect the negative battery cable. Refer to **Battery Negative Cable Disconnect/Connect Procedure** in Engine Electrical.
10. Perform the following procedure in order to inspect for leaks:
    1. Turn the ignition switch ON for 2 seconds.
    2. Turn the ignition switch OFF for 10 seconds.
    3. Turn the ignition switch ON.

4. Inspect for fuel leaks.

11. Install the left fuel rail cover.
12. Program the transmitters. Refer to **Transmitter Programming** in Keyless Entry.

FUEL HOSE/PIPES ASSEMBLY REPLACEMENT

Tool Required

J 34730-1A Fuel Pressure Gage. See **Special Tools and Equipment** .

Left Fuel Tank Pipes Removal Procedure

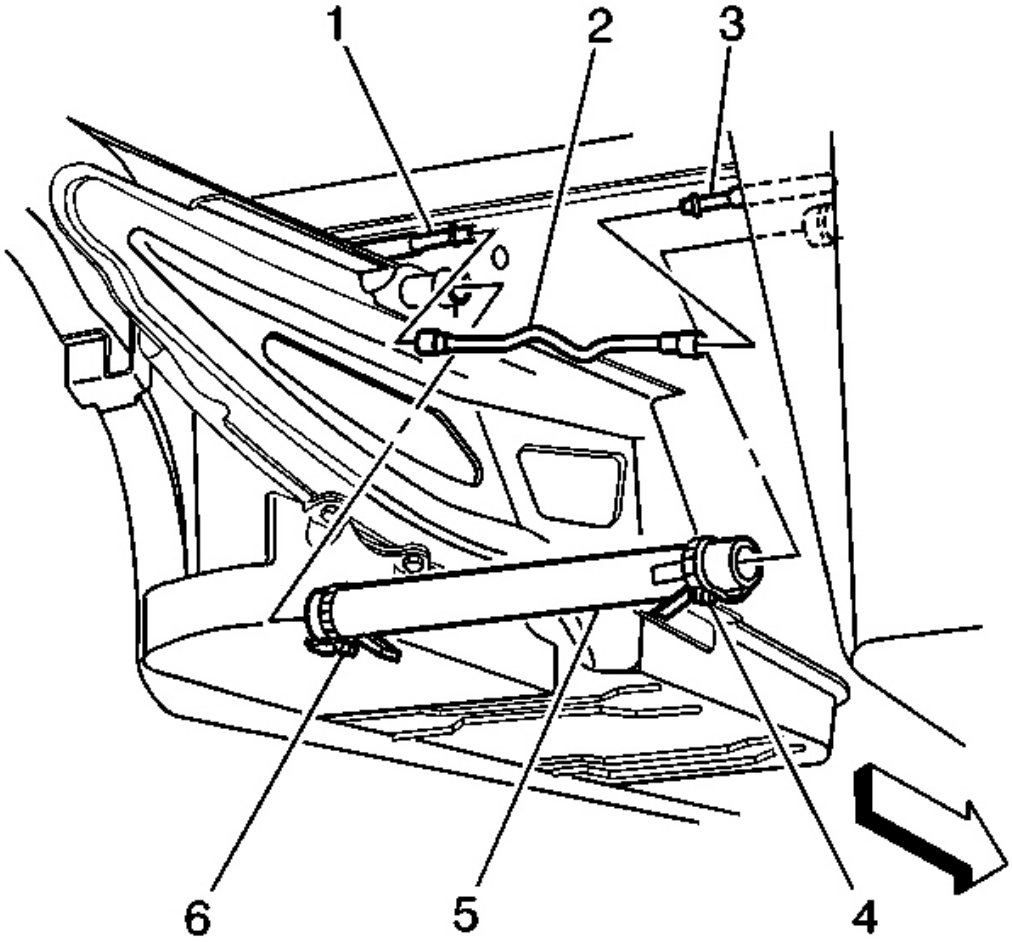

Fig. 227: Tank Crossover Hose & EVAP Pipe (Left Tank)

CAUTION: Refer to the Battery Disconnect Caution in Cautions and Notices.

1. Disconnect the negative battery cable.
2. Relieve the fuel system pressure. Refer to the **Fuel Pressure Relief Procedure** .
3. Drain the fuel tanks. Refer to **Fuel Tank Draining Procedure** .
4. Remove the left muffler. Refer to **Muffler Replacement - Left** or **Muffler Replacement - Right** in Engine Exhaust.
5. Disconnect the tank crossover hose (5) at the left fuel tank.

NOTE: Refer to EVAP Pipes and Hoses Notice in Cautions and Notices.

6. Disconnect the evaporative emission (EVAP) pipe (2) at the left tank EVAP pipe (1).
7. Cap the EVAP pipe in order to prevent possible contamination.

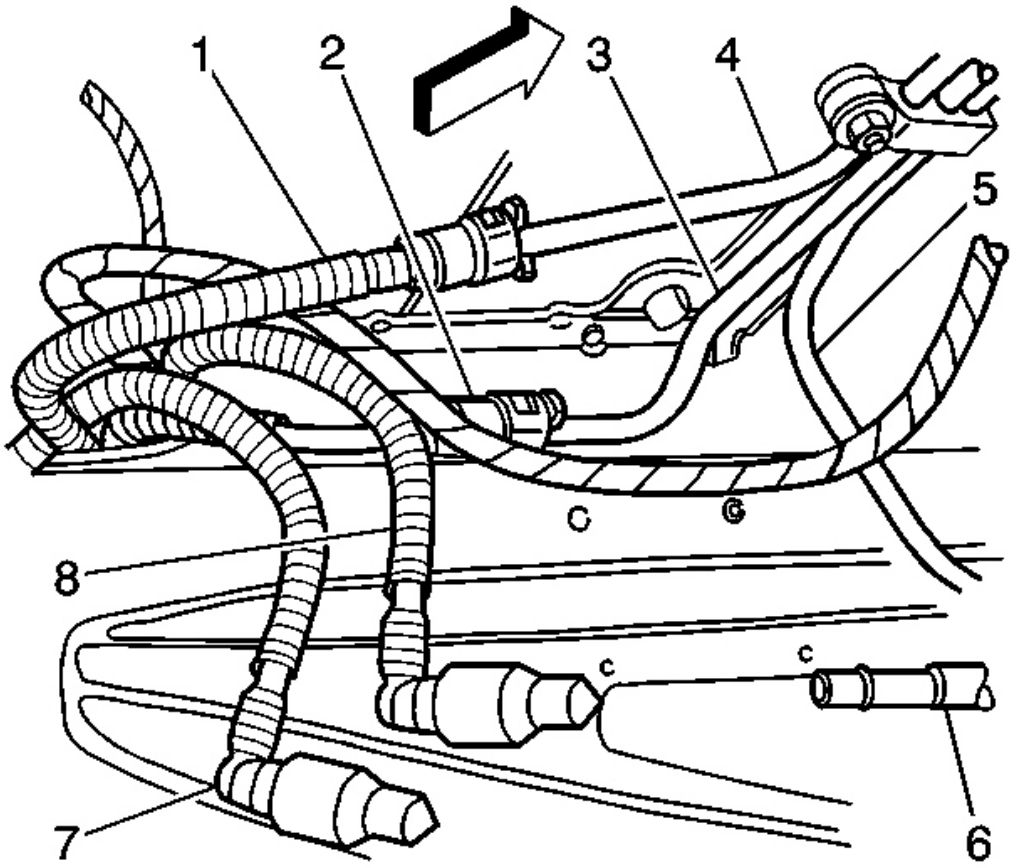

Fig. 228: Fuel Return Pipe & Fuel Feed Pipe (Left Tank)
Courtesy of GENERAL MOTORS CORP.

NOTE:

- **Do not repair the fuel feed or return pipes.**
- **Replace the fuel feed and return pipes with original equipment or with parts that meet the GM specifications for those parts. The replacement pipe must have the same type of fittings as the original pipe in order to ensure the integrity of the connection.**

IMPORTANT: Mark or identify each fuel pipe in order to aid in installing the pipes in their original positions.

8. Disconnect the auxiliary fuel return pipe (1) from the jet pump to the left tank. Refer to **Quick Connect Fitting(s) Service (Plastic Collar)** .

9. Disconnect the fuel return pipe (7) at the fuel filter and pressure regulator. Refer to **Quick Connect Fitting(s) Service (Plastic Collar)** .
10. Disconnect the fuel feed pipe (8) at the fuel filter/pressure regulator. Refer to **Quick Connect Fitting(s) Service (Plastic Collar)** .
11. Disconnect the auxiliary fuel feed rear pipe (2) from the left tank to the jet pump. Refer to **Quick Connect Fitting(s) Service (Plastic Collar)** .

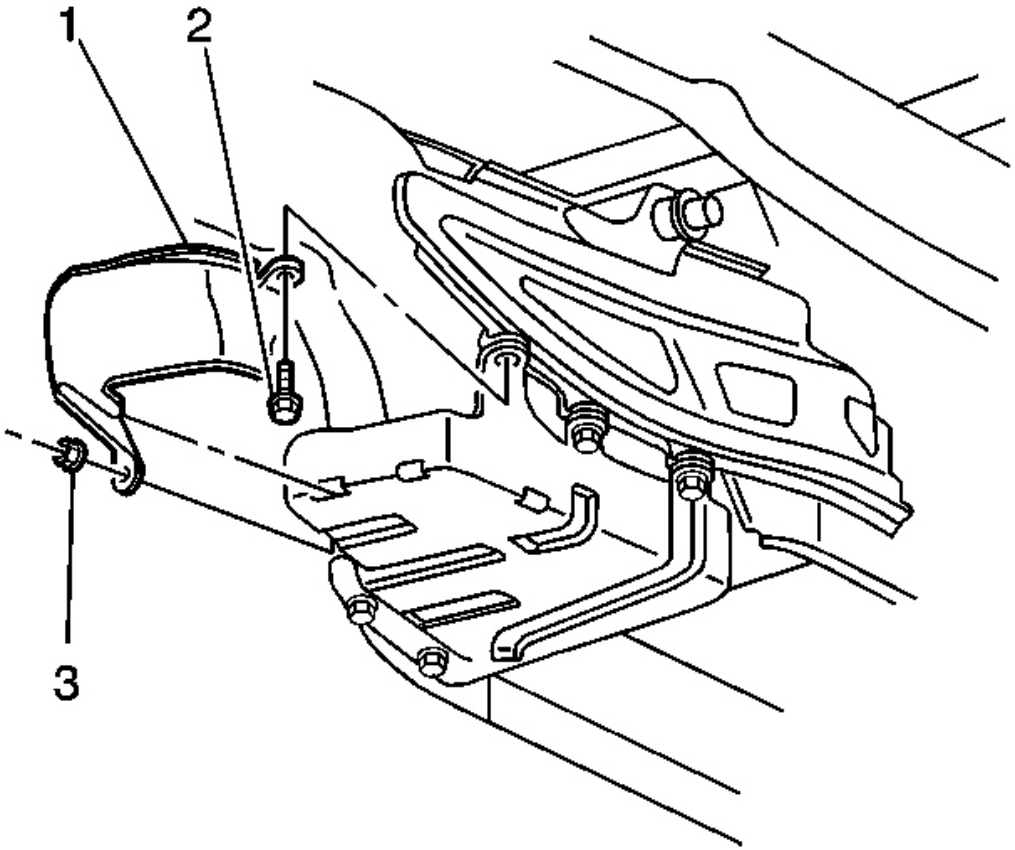

Fig. 229: Left Fuel Tank Shield Mount & Bolt
Courtesy of GENERAL MOTORS CORP.

12. Remove the left fuel tank shield mount nut (3).
13. Remove the left fuel tank shield mount bolt (2).
14. Remove the left fuel tank shield (1).

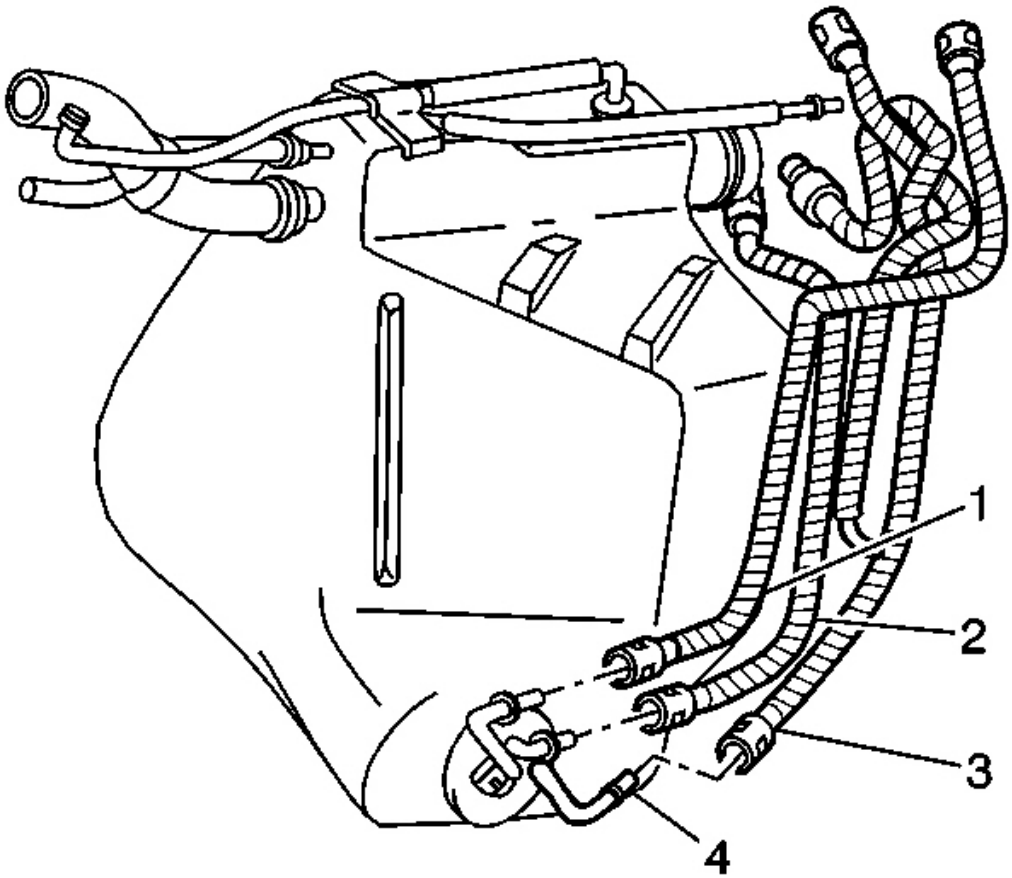

Fig. 230: Fuel Return Rear Pipe, Feed Rear Pipe & Fuel Sender
Courtesy of GENERAL MOTORS CORP.

15. Disconnect the auxiliary fuel return rear pipe (1) at the fuel sender. Refer to **Quick Connect Fitting(s) Service (Plastic Collar)** .
16. Disconnect the fuel return rear pipe (2) at the fuel sender. Refer to **Quick Connect Fitting(s) Service (Plastic Collar)** .
17. Disconnect the fuel feed rear pipe (3) at the fuel sender. Refer to **Quick Connect Fitting(s) Service (Plastic Collar)** .
18. Remove the left side rear fuel pipes.
19. Cap the fuel sender pipes.
20. Cap the fuel filter and pressure regulator.

Left Fuel Tank Pipes Installation Procedure

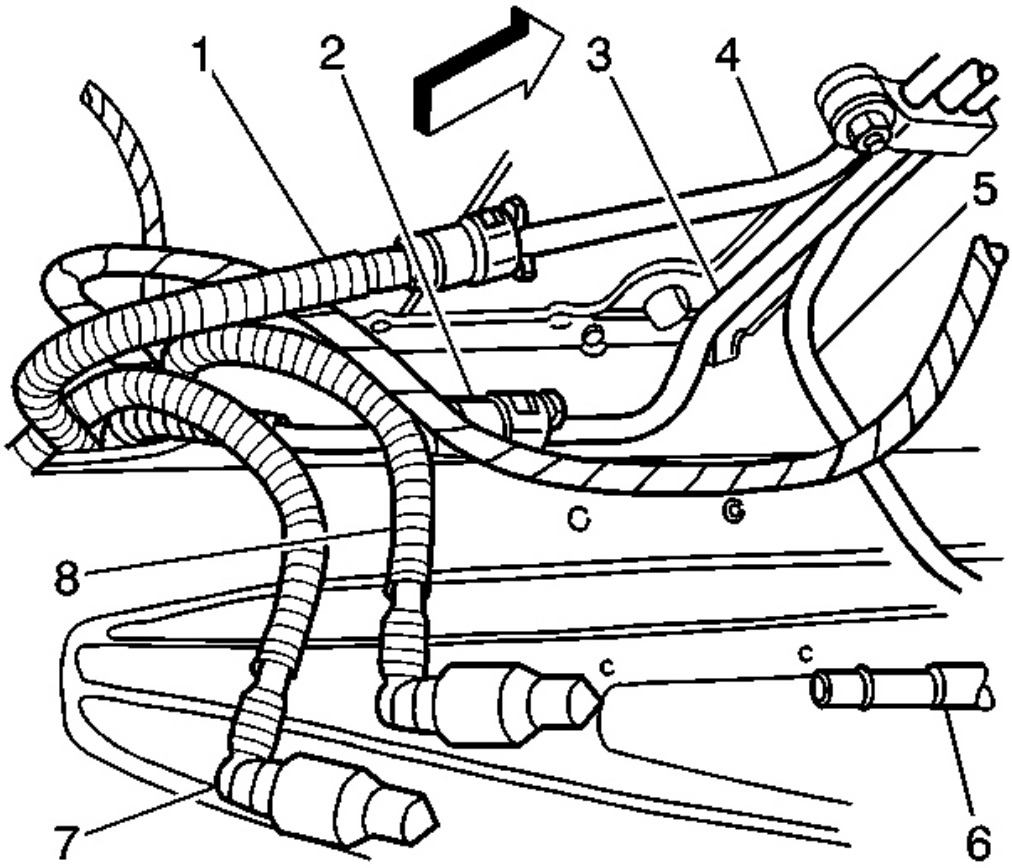

Fig. 231: Fuel Return Pipe & Fuel Feed Pipe (Left Tank)
Courtesy of GENERAL MOTORS CORP.

IMPORTANT: Lubricate the fuel pipes in order to aid in installation. Use mechanic's wire attached to the fuel sender end of the fuel pipe in order to pull the fuel pipe through the tunnel reinforcement opening. Pull the fuel pipe through from the top down.

1. Remove the caps from the fuel filter/pressure regulator.
2. Install and connect the fuel return rear pipe (7) to the fuel filter and pressure regulator. Refer to **Quick Connect Fitting(s) Service (Plastic Collar)** .
3. Install and connect the auxiliary fuel feed rear pipe (2) from the left tank to the jet pump. Refer to **Quick Connect Fitting(s) Service (Plastic Collar)** .
4. Install and connect the fuel feed pipe (8) at the fuel filter and pressure regulator. Refer to **Quick Connect Fitting(s) Service (Plastic Collar)** .

5. Install and connect the auxiliary fuel return rear pipe (1) from the jet pump to the left tank. Refer to **Quick Connect Fitting(s) Service (Plastic Collar)** .

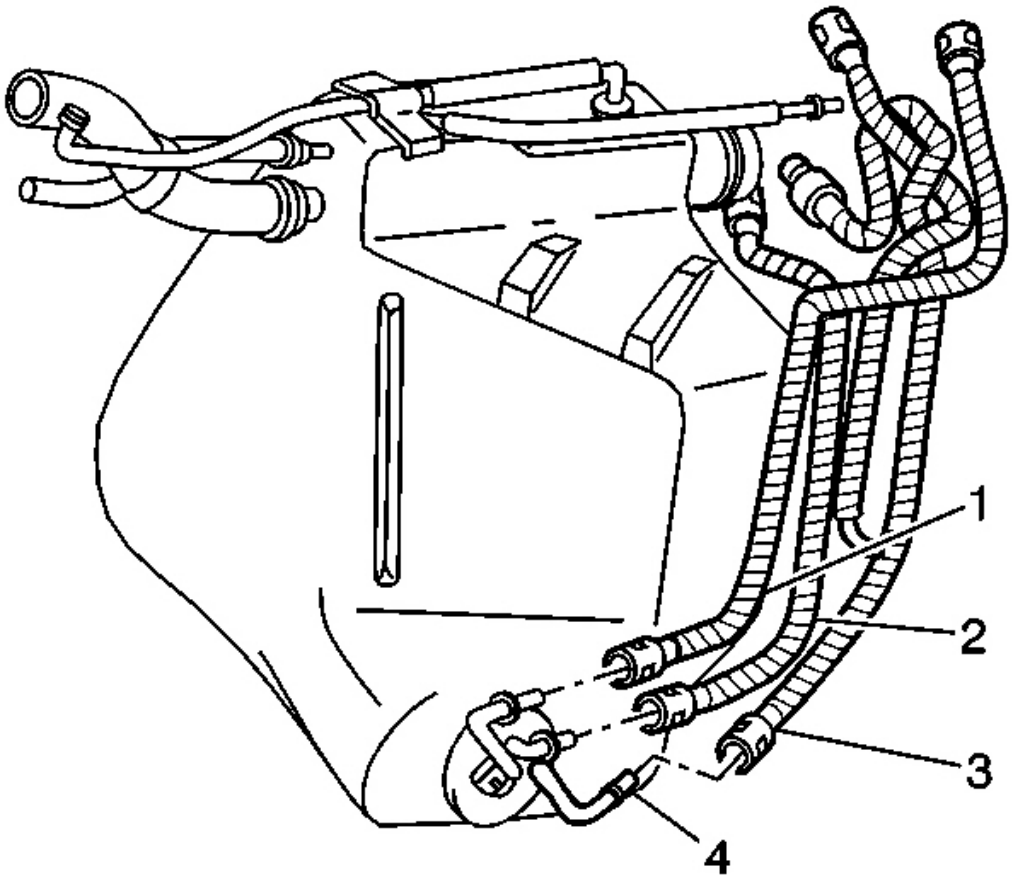

Fig. 232: Fuel Return Rear Pipe, Feed Rear Pipe & Fuel Sender
Courtesy of GENERAL MOTORS CORP.

6. Remove the caps from the fuel sender pipes.
7. Connect the fuel feed rear pipe (3) at the fuel sender. Refer to **Quick Connect Fitting(s) Service (Plastic Collar)** .
8. Connect the fuel return rear pipe (2) at the fuel sender. Refer to **Quick Connect Fitting(s) Service (Plastic Collar)** .
9. Connect the auxiliary fuel return rear pipe (1) at the fuel sender. Refer to **Quick Connect Fitting(s) Service (Plastic Collar)** .

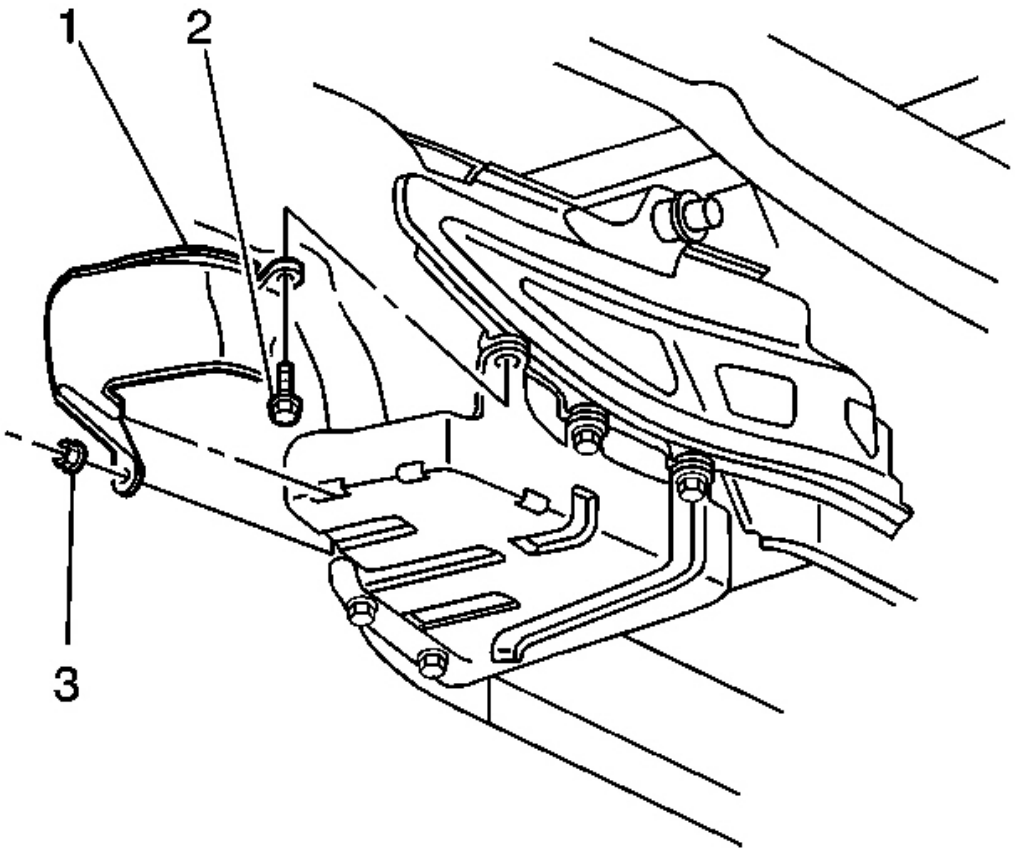

Fig. 233: Left Fuel Tank Shield Mount & Bolt
Courtesy of GENERAL MOTORS CORP.

10. Install the left fuel tank shield (1).
11. Install the mount bolt (2) for the left fuel tank shield (2).

NOTE: **Refer to the Fastener Notice in Cautions and Notices.**

12. Install the mount nut (3) for the left fuel tank shield.

Tighten:

- Tighten the fuel tank shield mount bolt to 25 N.m (18 lb ft).
- Tighten the fuel tank shield mount nut to 12 N.m (106 lb in).

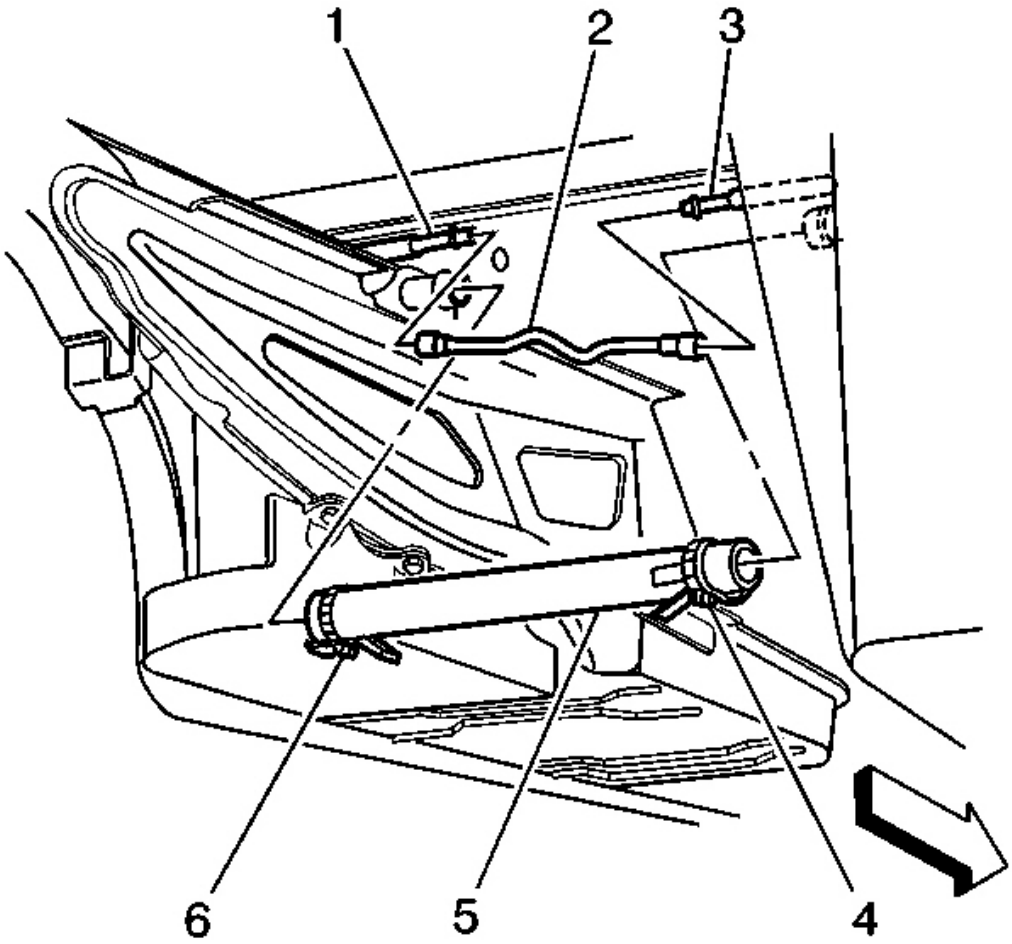

Fig. 234: Tank Crossover Hose & EVAP Pipe (Left Tank)
Courtesy of GENERAL MOTORS CORP.

13. Remove the cap from the EVAP pipe.
14. Connect the EVAP pipe (2) at the left tank EVAP pipe (1).
15. Connect the tank crossover hose (5) at the left fuel tank.
16. Push the clamp (6) outboard against the fuel tank. Keep the clamp parallel with the white stripe on the tank crossover hose.

    Tighten: Tighten the tank crossover hose clamp to 4 N.m (35 lb in).

17. Install the left muffler. Refer to **Muffler Replacement - Left** or **Muffler Replacement - Right** in Engine Exhaust.

18. Refill the fuel system.
19. Tighten the fuel filler cap.
20. Connect the negative battery cable.
21. Inspect for leaks.
    1. Turn the ignition switch ON for 2 seconds.
    2. Turn the ignition switch OFF for 10 seconds.
    3. Turn the ignition switch ON.
    4. Inspect for fuel leaks.
22. Program the transmitters. Refer to **Transmitter Programming** in Keyless Entry.

Right Fuel Tank Pipes Removal Procedure

CAUTION: Refer to the Battery Disconnect Caution in Cautions and Notices.

NOTE:

- **Do not repair the fuel feed or return pipes.**
- **Replace the fuel feed and return pipes with original equipment or with parts that meet the GM specifications for those parts. The replacement pipe must have the same type of fittings as the original pipe in order to ensure the integrity of the connection.**

IMPORTANT: Mark or identify each fuel pipe in order to aid in installing the pipes in their original positions.

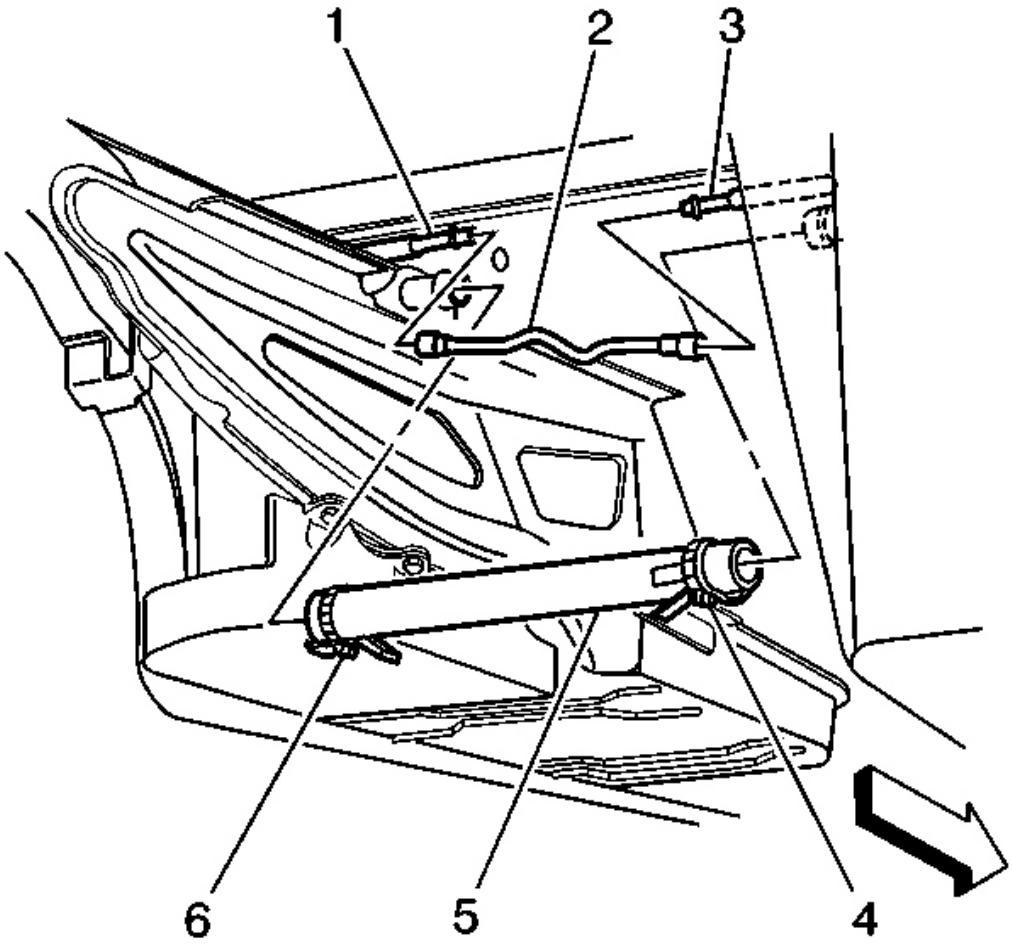

Fig. 235: Tank Crossover Hose & EVAP Pipe (Left Tank)
Courtesy of GENERAL MOTORS CORP.

1. Disconnect the negative battery cable.
2. Relieve the fuel system pressure. Refer to the **Fuel Pressure Relief Procedure** .
3. Drain the fuel tanks. Refer to **Fuel Tank Draining Procedure** .
4. Remove the left and right muffler. Refer to **Muffler Replacement - Left** or **Muffler Replacement - Right** in Engine Exhaust.
5. Disconnect the tank crossover hose (5) at the right fuel tank and the left fuel tank.
6. Disconnect the EVAP pipe (2) at the right tank EVAP pipe (3) and at the left tank EVAP pipe (1).
7. Cap the open pipes in order to prevent possible contamination.

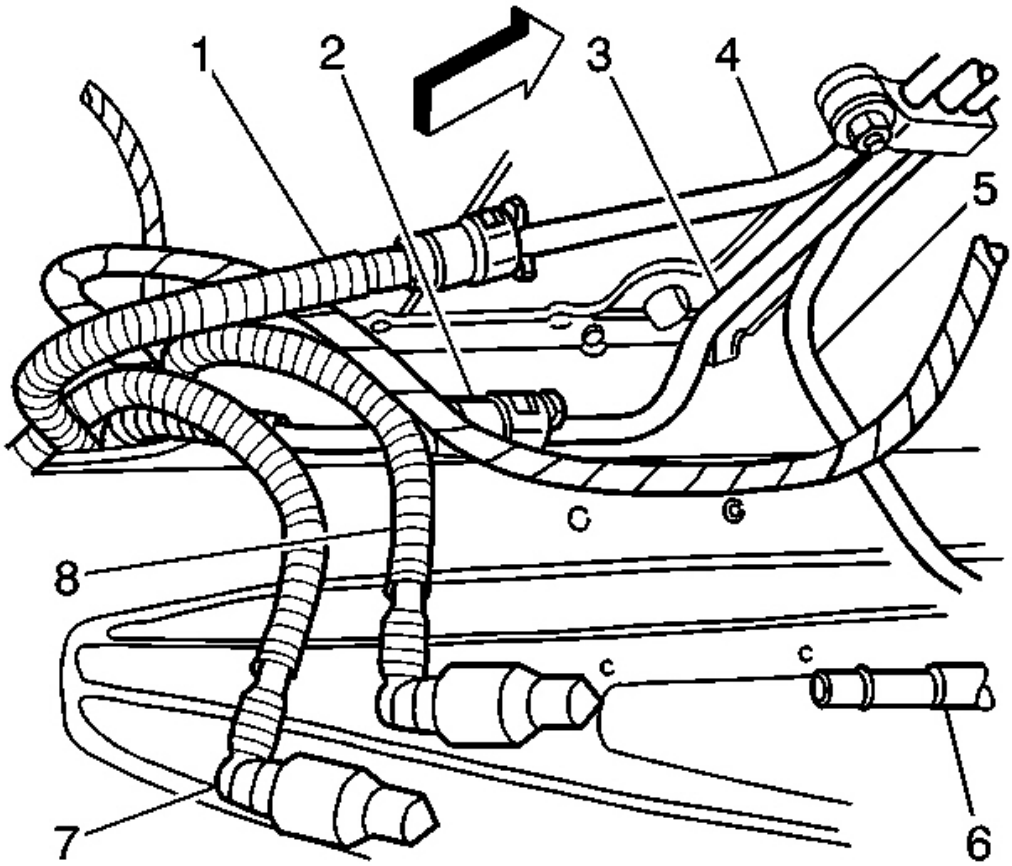

Fig. 236: Fuel Return Pipe & Fuel Feed Pipe (Left Tank)
Courtesy of GENERAL MOTORS CORP.

8. Disconnect the auxiliary fuel return rear pipe (1) from the jet pump to the left tank. Refer to **Quick Connect Fitting(s) Service (Plastic Collar)** .
9. Disconnect the auxiliary fuel feed rear pipe (2) from the left tank to the jet pump. Refer to **Quick Connect Fitting(s) Service (Plastic Collar)** .

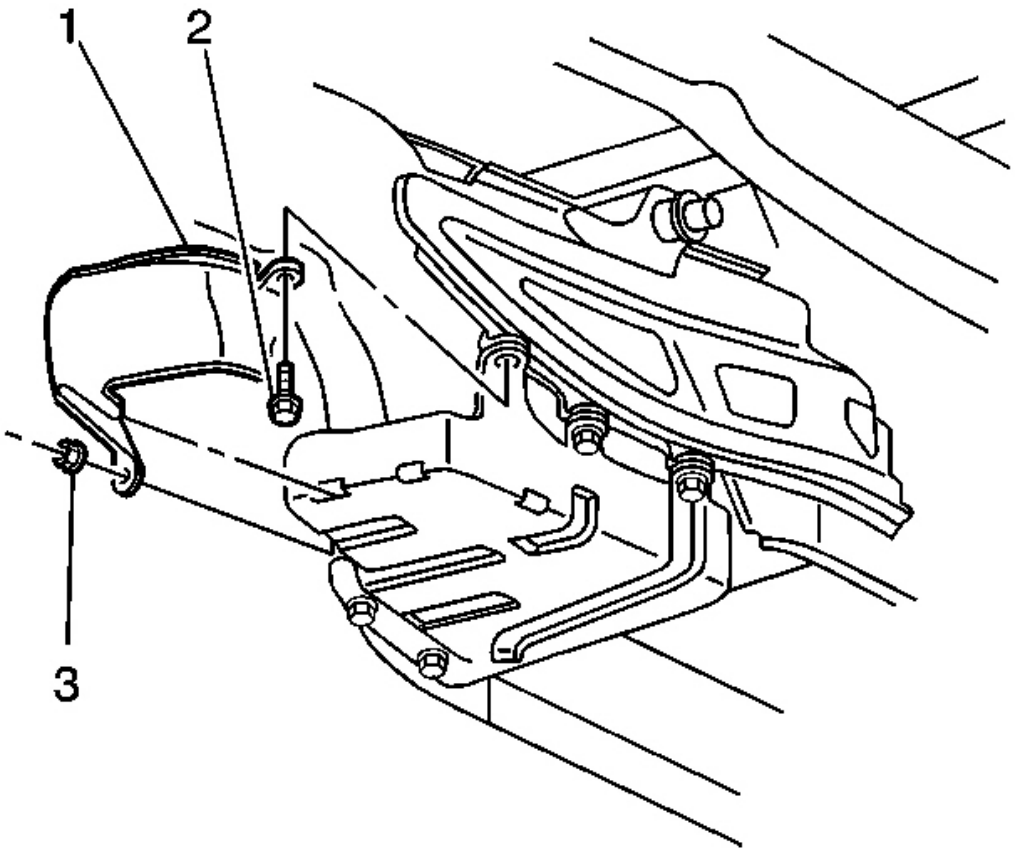

Fig. 237: Left Fuel Tank Shield Mount & Bolt
Courtesy of GENERAL MOTORS CORP.

10. Remove the right fuel tank shield mount nut (3).
11. Remove the right fuel tank shield mount bolt (2).
12. Remove the right fuel tank shield (1).

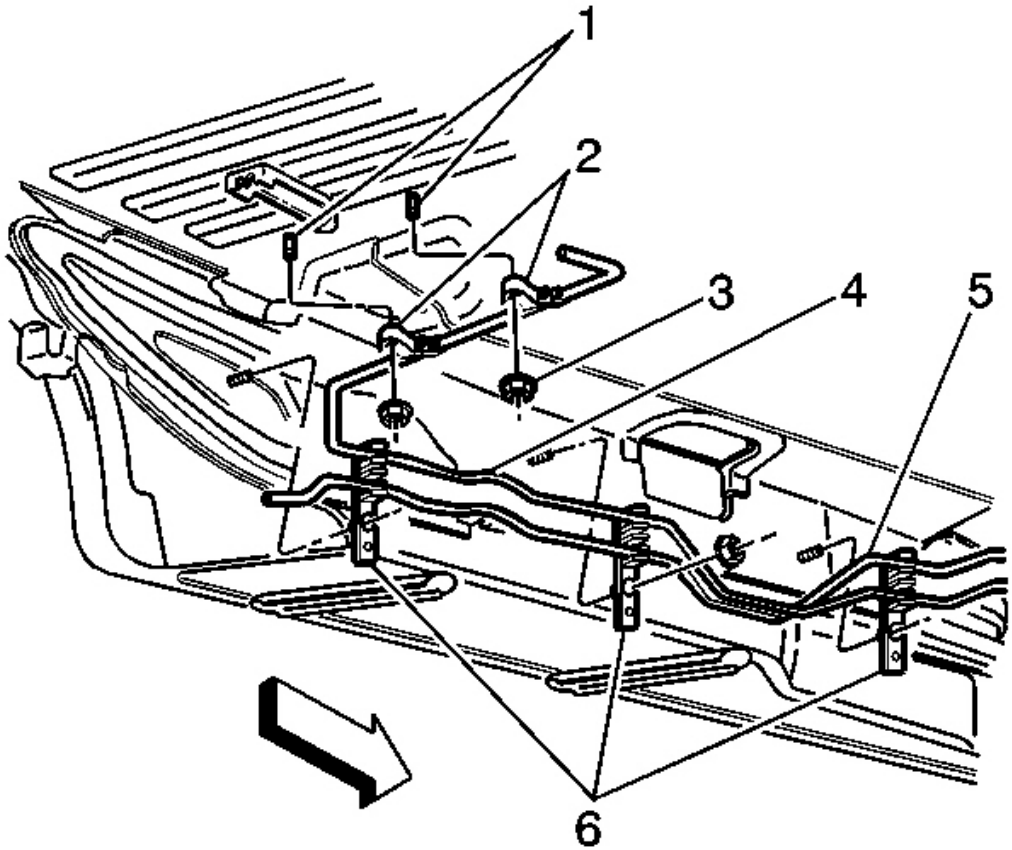

Fig. 238: Underbody Retainers, Chassis Fuel Pipe & Purge Pipe
Courtesy of GENERAL MOTORS CORP.

13. Remove the fuel pipes from the 2 rear upper fuel and EVAP pipe retainers (2).

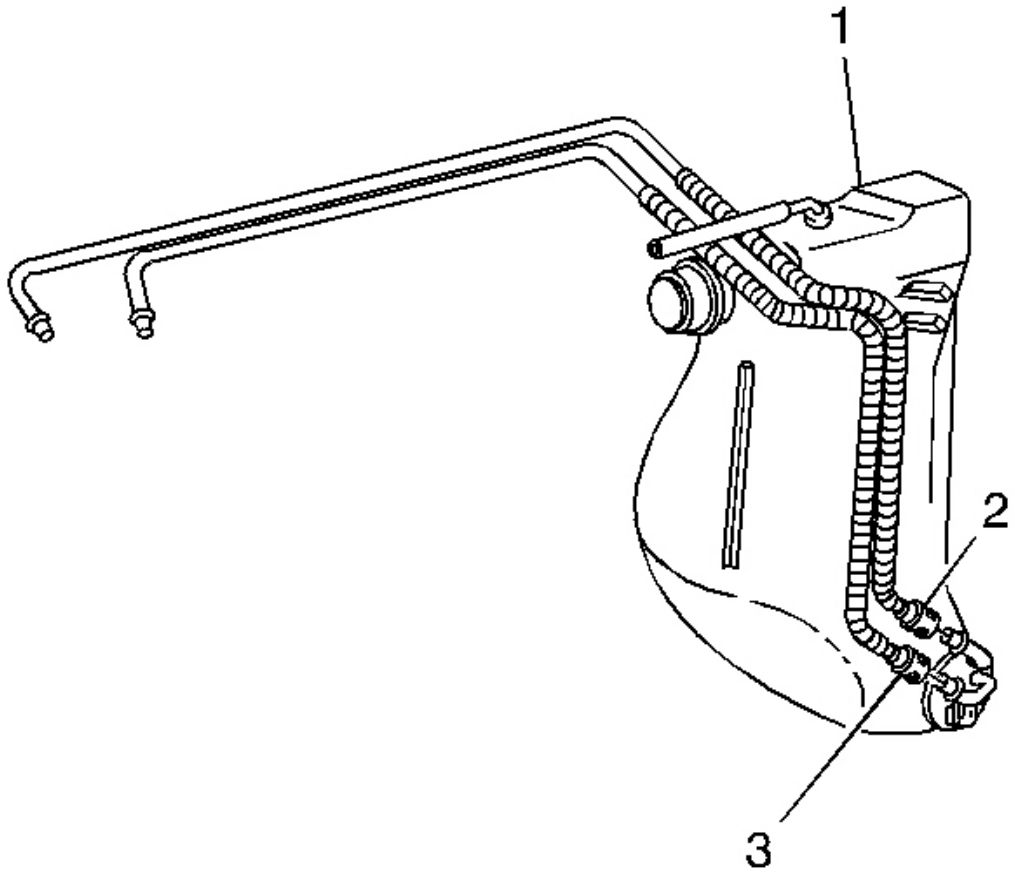

Fig. 239: Auxiliary Fuel Return Pipe & Auxillary Feed Rear Pipe (Right Tank)
Courtesy of GENERAL MOTORS CORP.

14. Disconnect the auxiliary fuel return rear pipe (3) from the jet pump to the left tank. Refer to **Quick Connect Fitting(s) Service (Plastic Collar)** .
15. Disconnect the auxiliary fuel feed rear pipe (2) from the left tank to the jet pump. Refer to **Quick Connect Fitting(s) Service (Plastic Collar)** .
16. Remove the auxiliary fuel return rear pipe from the jet pump to the left tank.
17. Remove the auxiliary fuel feed rear pipe from the left tank to the jet pump.
18. Cap the fuel sender pipes and the left tank fuel pipes.

Right Fuel Tank Pipes Installation Procedure

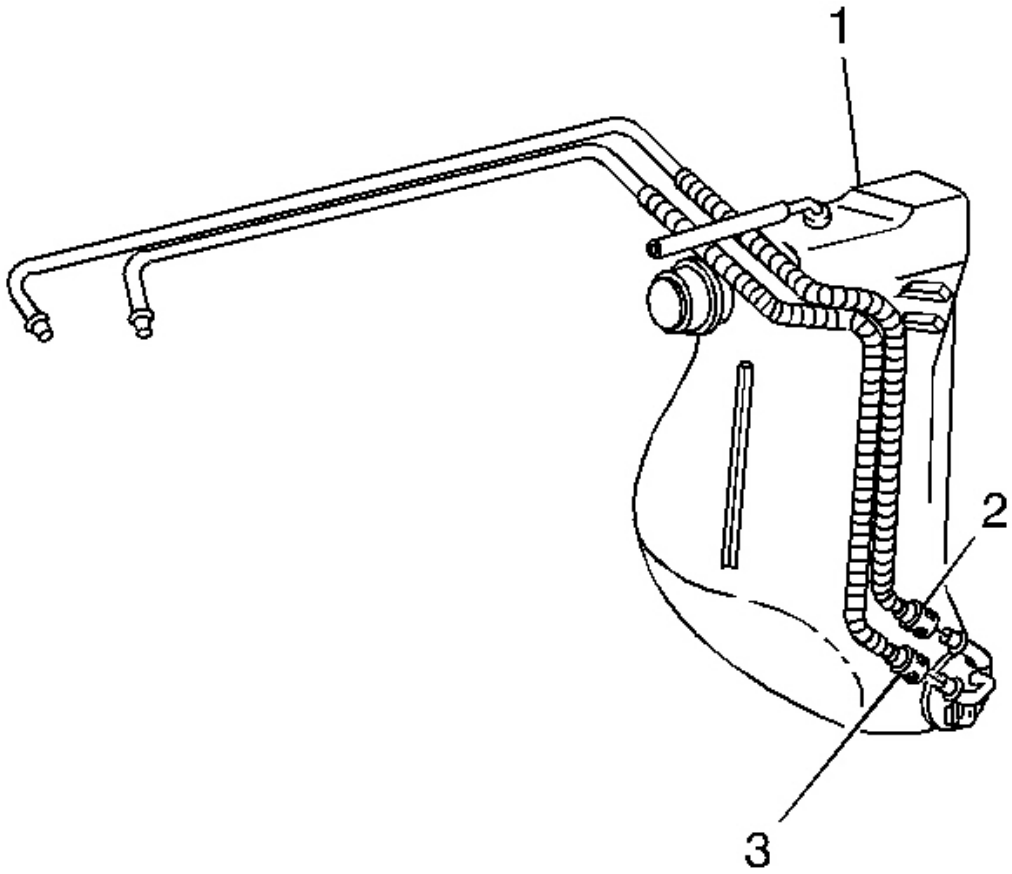

Fig. 240: Auxiliary Fuel Return Pipe & Auxillary Feed Rear Pipe (Right Tank)
Courtesy of GENERAL MOTORS CORP.

IMPORTANT: Lubricate the fuel pipes in order to aid in installation. Use mechanic's wire attached to the fuel sender end of the fuel pipe in order to pull the fuel pipe through the tunnel reinforcement opening. Pull the fuel pipe through from the top down.

1. Install the auxiliary fuel feed rear pipe (2) from the left tank to the jet pump.
2. Install the auxiliary fuel return rear pipe (3) from the jet pump to the left tank.
3. Remove the caps from the pipes.
4. Connect the auxiliary fuel return rear pipe (3) from the jet pump to the left tank. Refer to **Quick Connect Fitting(s) Service (Plastic Collar)** .
5. Connect the auxiliary fuel feed rear pipe (2) from the left tank to the jet pump. Refer to **Quick Connect**

Fitting(s) Service (Plastic Collar) .

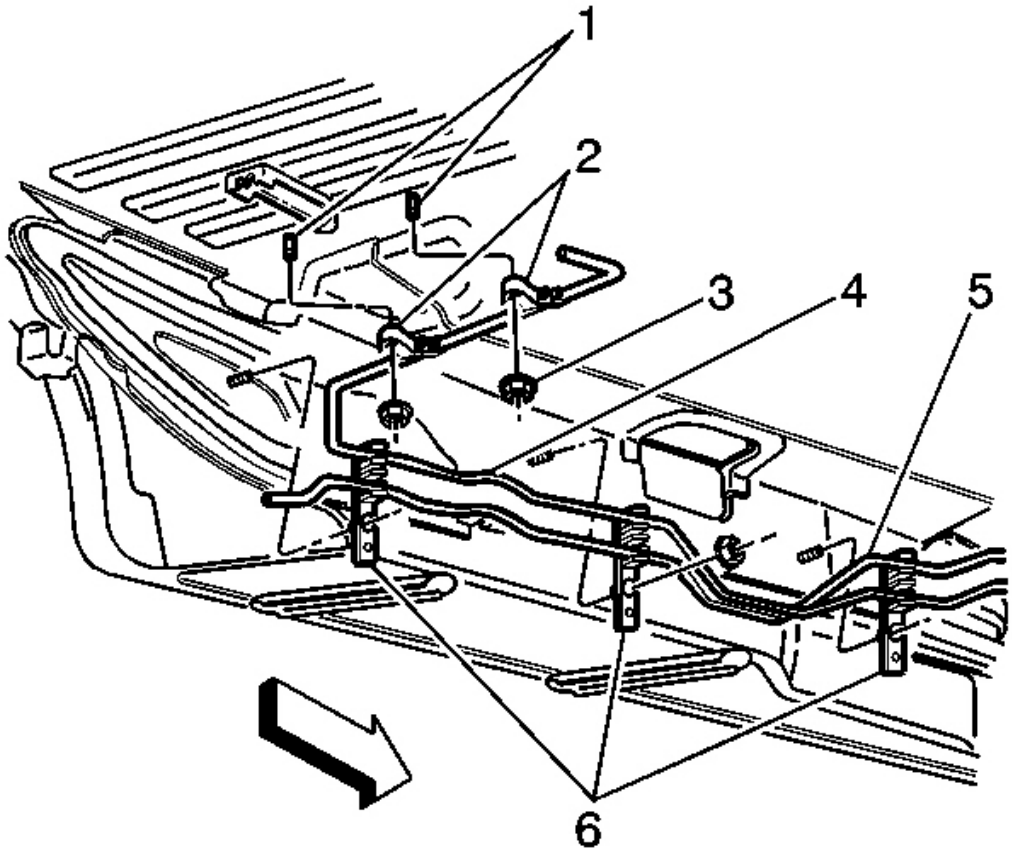

Fig. 241: Underbody Retainers, Chassis Fuel Pipe & Purge Pipe
Courtesy of GENERAL MOTORS CORP.

6. Install the fuel pipes into the 2 rear upper fuel and EVAP pipe retainers (2).

   Tighten: Tighten the fuel and EVAP pipe retainer nuts to 3 N.m (27 lb in).

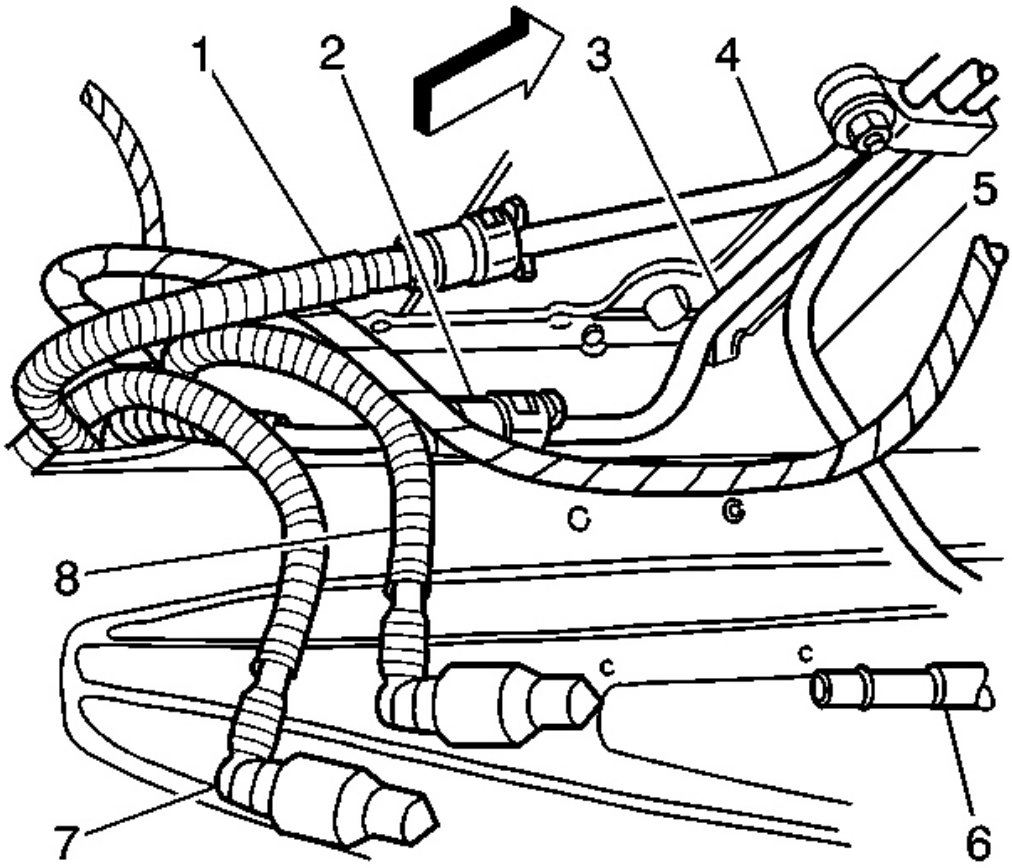

Fig. 242: Fuel Return Pipe & Fuel Feed Pipe (Left Tank)
Courtesy of GENERAL MOTORS CORP.

7. Connect the auxiliary fuel feed rear pipe (2) from the left tank to the jet pump. Refer to **Quick Connect Fitting(s) Service (Plastic Collar)** .
8. Connect the auxiliary fuel return rear pipe (1) from the jet pump to the left tank. Refer to **Quick Connect Fitting(s) Service (Plastic Collar)** .

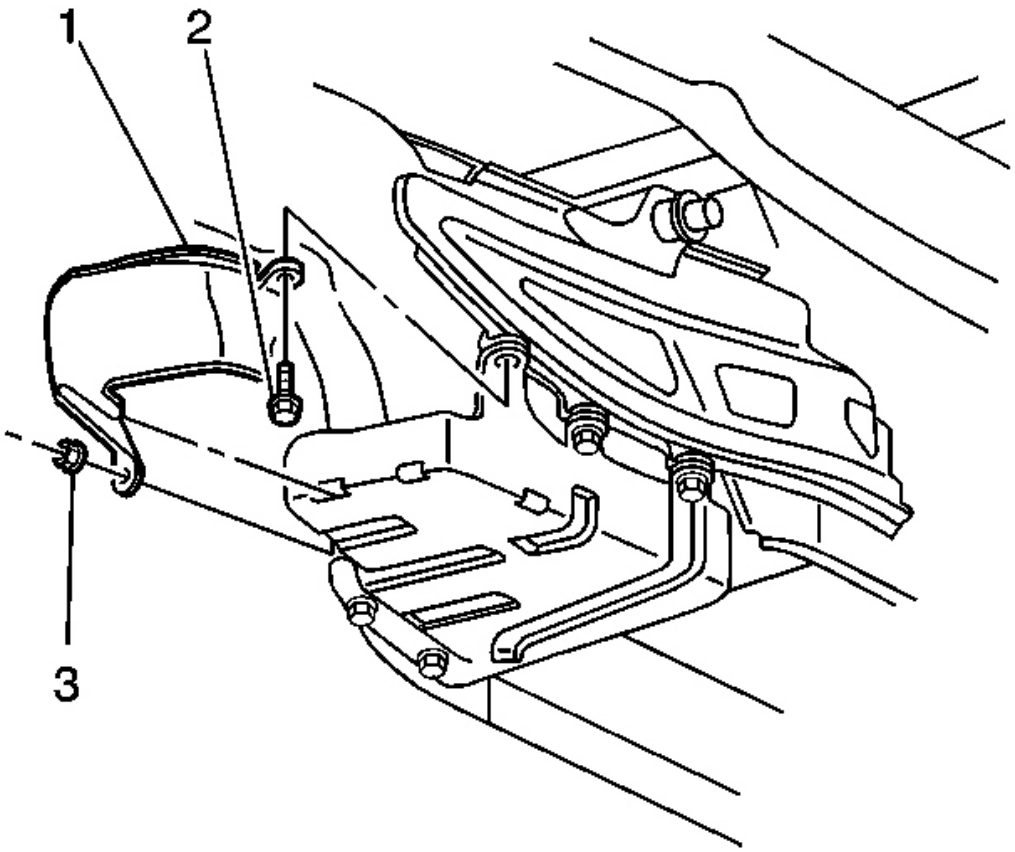

Fig. 243: Left Fuel Tank Shield Mount & Bolt
Courtesy of GENERAL MOTORS CORP.

9. Install the right fuel tank shield (1).
10. Install the right fuel tank shield mount bolt (2).
11. Install the right fuel tank shield mount nut (3).

Tighten:

- Tighten the fuel tank shield mount bolt to 25 N.m (18 lb ft).
- Tighten the fuel tank shield mount nut to 12 N.m (106 lb in).

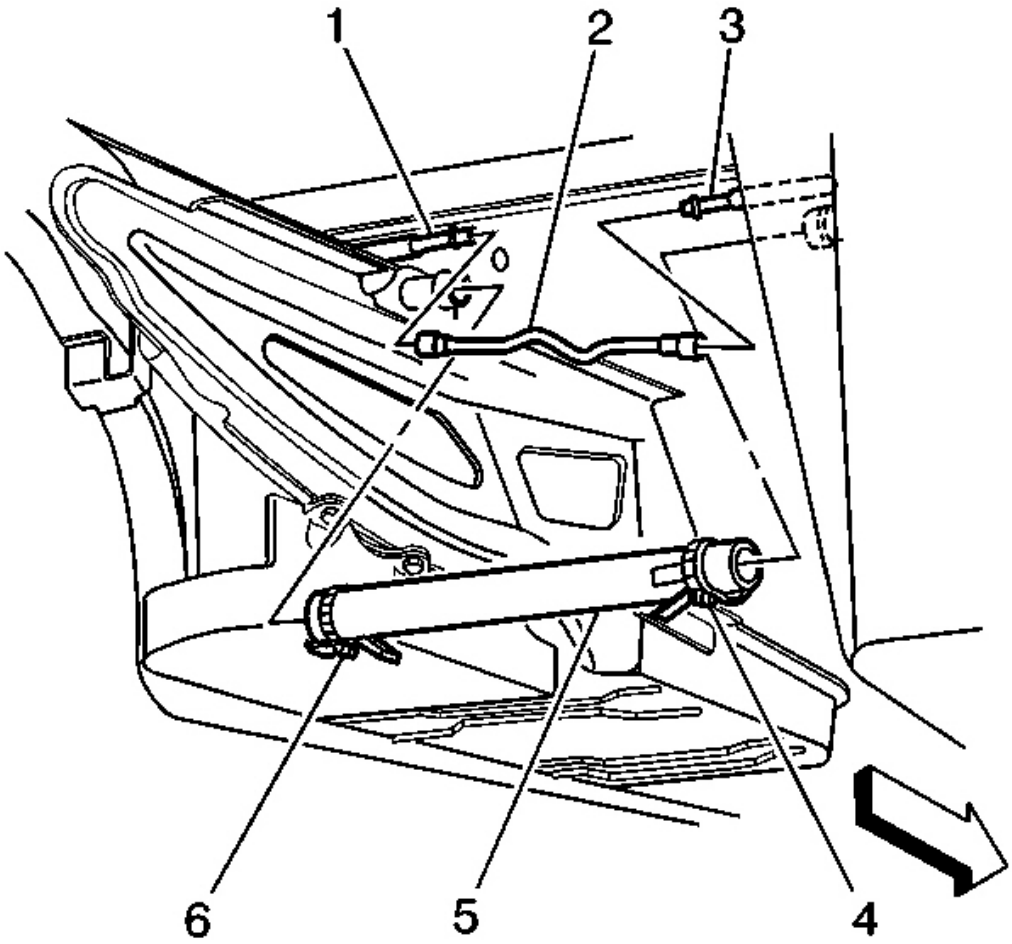

Fig. 244: Tank Crossover Hose & EVAP Pipe (Left Tank)
Courtesy of GENERAL MOTORS CORP.

12. Remove the caps from the pipes.
13. Connect the EVAP pipe (2) at the right tank EVAP pipe (3) and at the left tank EVAP pipe (1).
14. Connect the tank crossover hose (5) at the right fuel tank and at the left fuel tank.
15. Push the clamp (4) outboard against the fuel tank. Keep the clamp parallel with the white stripe on the tank crossover hose.

    Tighten: Tighten the tank crossover hose clamps to 4 N.m (35 lb in).

16. Install the right muffler and the left muffler. Refer to **Muffler Replacement - Left** or **Muffler Replacement - Right** in Engine Exhaust.

17. Refill the fuel system.
18. Tighten the fuel filler cap.
19. Connect the negative battery cable.
20. Inspect for leaks.
    1. Turn the ignition switch ON for 2 seconds.
    2. Turn the ignition switch OFF for 10 seconds.
    3. Turn the ignition switch ON.
    4. Inspect for fuel leaks.
21. Program the transmitters. Refer to **Transmitter Programming** in Keyless Entry.

FUEL FILLER HOSE REPLACEMENT

Removal Procedure

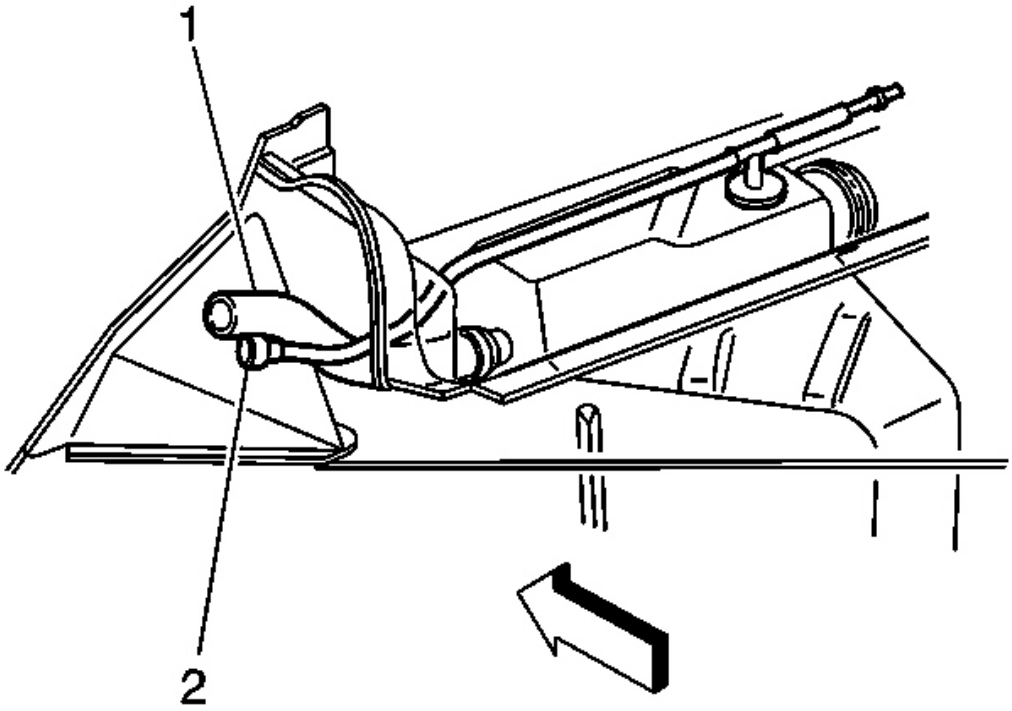

Fig. 245: Fuel Tank Fill & Vent Pipe, Fuel Fill Hose & Vent Hose
Courtesy of GENERAL MOTORS CORP.

1. Remove the left fuel tank. Refer to **Fuel Tank Replacement (Right)** or **Fuel Tank Replacement (Left)** .

2. Remove the fuel fill hose (1) from the fuel tank.
3. Cap the open end of the fuel tank.

Installation Procedure

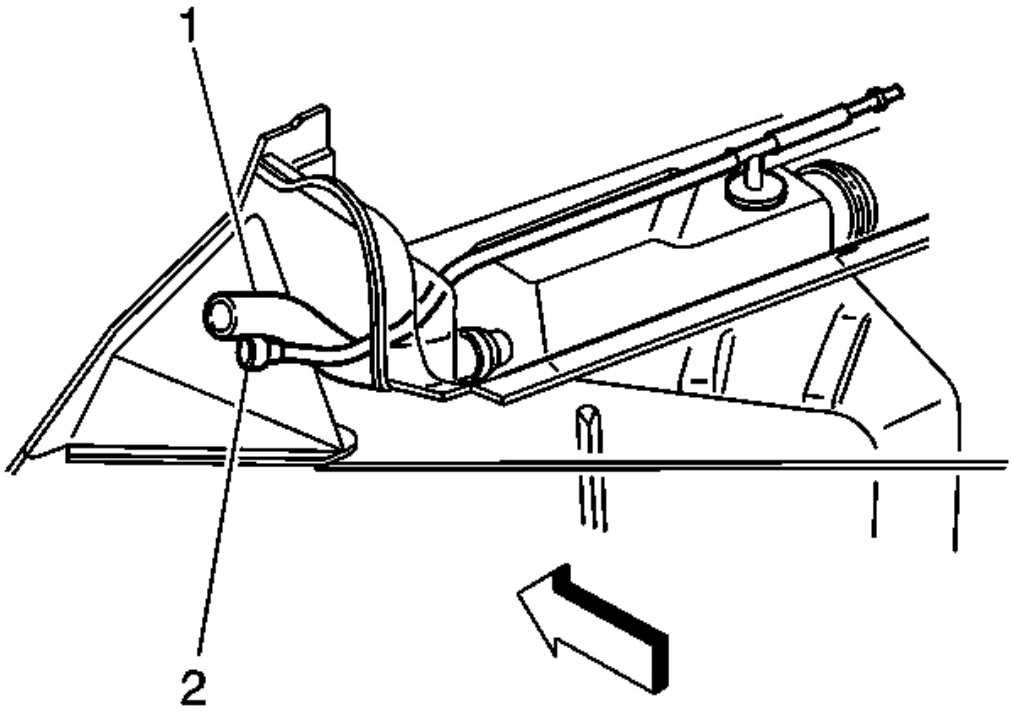

Fig. 246: Fuel Tank Fill & Vent Pipe, Fuel Fill Hose & Vent Hose
Courtesy of GENERAL MOTORS CORP.

1. Uncap the opening on the fuel tank.

NOTE: **Refer to the Fastener Notice in Cautions and Notices.**

2. Install the fuel fill hose (1) to the fuel tank.

   Tighten: Tighten the fuel fill hose clamp to 4 N.m (35 lb in).

3. Install the left fuel tank. Refer to **Fuel Tank Replacement (Right)** or **Fuel Tank Replacement (Left)** .

FUEL SYSTEM CLEANING

Tools Required

- **J 34730-1A** Fuel Pressure Gauge. See **Special Tools and Equipment** .
- **J 37088-A** Tool Set, Fuel Line Quick Connect Separator. See **Special Tools and Equipment** .

CAUTION: Refer to Battery Disconnect Caution in Cautions and Notices.

1. Disconnect the negative battery cable. Refer to **Battery Negative Cable Disconnect/Connect Procedure** in Engine Electrical.
2. Relieve the fuel system pressure. Refer to the **Fuel Pressure Relief Procedure** .
3. Drain the fuel tanks. Refer to **Fuel Tank Draining Procedure** .
4. Remove the fuel tanks. Refer to **Fuel Tank Replacement (Right)** or **Fuel Tank Replacement (Left)** .
5. Remove the fuel sender assemblies. Refer to **Fuel Sender Assembly Replacement (RH)** or **Fuel Sender Assembly Replacement (LH)** .
6. Inspect the left fuel sender strainer. Replace a contaminated strainer for the left fuel sender only, and inspect the fuel pump.
7. Inspect the left fuel sender fuel pump inlet for debris. Replace the left fuel sender assembly if you find debris in the fuel pump inlet.
8. Inspect the right fuel sender strainers. Replace the right fuel sender assembly if you find a contaminated strainer. The right fuel sender strainers are not serviced separately.

IMPORTANT: When flushing the fuel tanks, handle the fuel and water mixture as a hazardous material. Handle the fuel and water mixture in accordance with all applicable local, state, and federal laws and regulations.

9. Flush the fuel tanks with hot water.
10. Pour the water out of the fuel sender assembly openings. Rock the tanks to be sure that removal of the water from the tanks is complete.
11. Install the fuel sender assemblies. Refer to **Fuel Sender Assembly Replacement (RH)** or **Fuel Sender Assembly Replacement (LH)** .
12. Install the fuel tanks. Refer to **Fuel Tank Replacement (Right)** or **Fuel Tank Replacement (Left)** .
13. Refill the fuel system.
14. Install the fuel filler cap.
15. Connect the negative battery cable. Refer to **Battery Negative Cable Disconnect/Connect Procedure** in Engine Electrical.
16. Perform the following procedure in order to inspect for leaks:
    1. Turn the ignition switch ON for 2 seconds.
    2. Turn the ignition switch OFF for 10 seconds.
    3. Turn the ignition switch ON.
    4. Inspect for fuel leaks.

17. Program the transmitters. Refer to **Transmitter Programming** in Keyless Entry.

FUEL RAIL ASSEMBLY REPLACEMENT

Tools Required

- **J 34730-1A** Fuel Pressure Gauge. See **Special Tools and Equipment** .
- **J 37088-A** Tool Set, Fuel Line Quick Connect Separator. See **Special Tools and Equipment** .

Removal Procedure

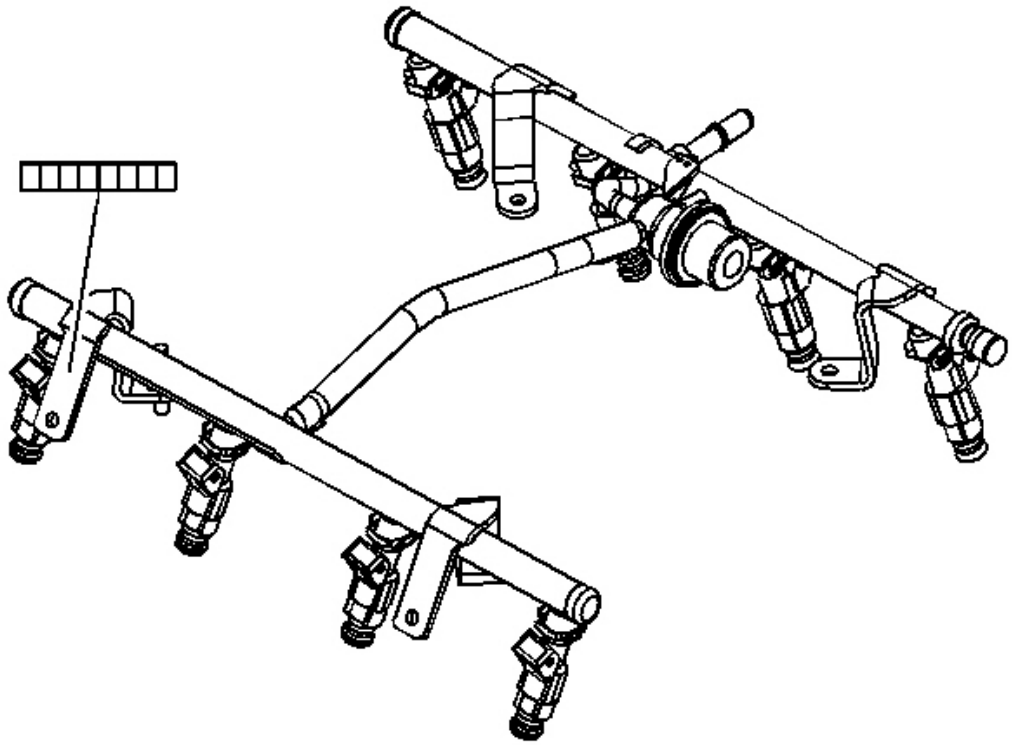

Fig. 247: Fuel Rail Assembly 8-Digit Identification Number
Courtesy of GENERAL MOTORS CORP.

An 8-digit identification number is located on the fuel rail assembly. Refer to this model identification number if servicing or part replacement is required.

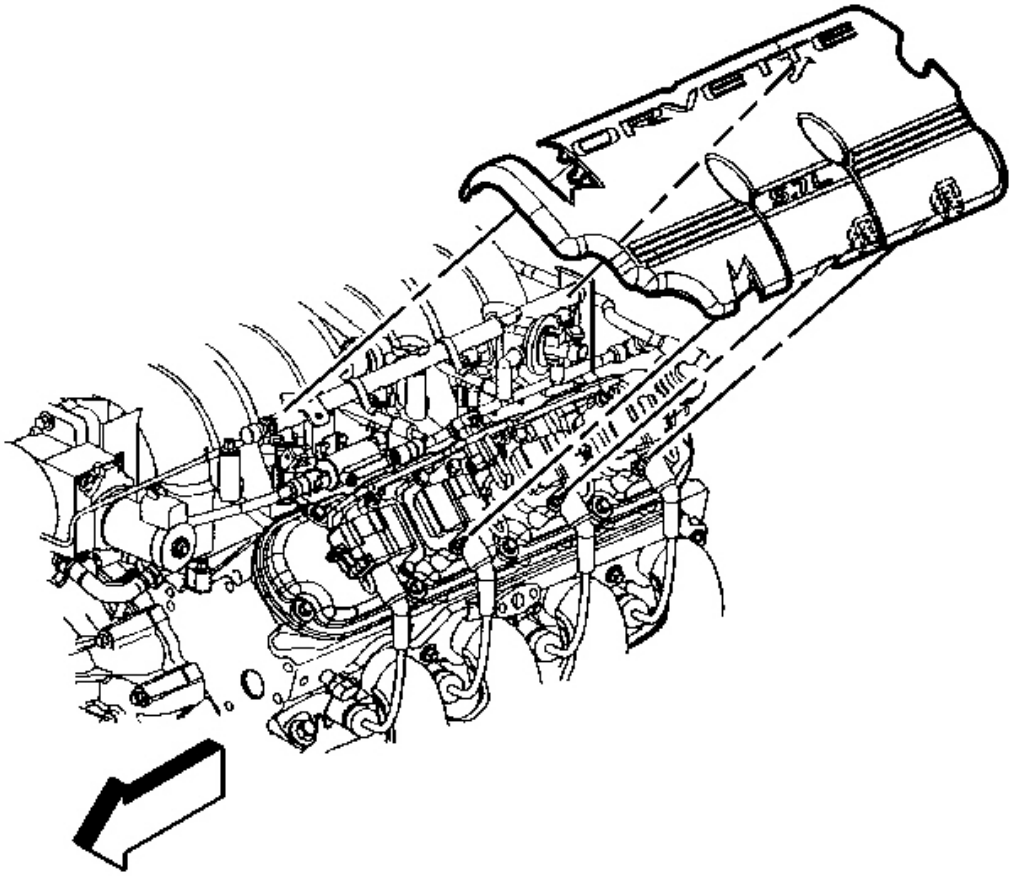

Fig. 248: Left Fuel Rail Cover
Courtesy of GENERAL MOTORS CORP.

CAUTION: Refer to Battery Disconnect Caution in Cautions and Notices.

1. Disconnect the negative battery cable. Refer to **Battery Negative Cable Disconnect/Connect Procedure** in Engine Electrical.

NOTE:

- **Carefully remove the fuel rail assembly in order to prevent damage to the injector electrical connector terminals and the injector spray tips. Support the fuel rail after the fuel rail is removed in order to avoid damaging the fuel rail components.**
- **Prevent dirt and other contaminants from entering the open pipes**

and passages. Cap the fittings and plug the holes when servicing the fuel system.

2. Remove the left fuel rail cover.
3. Relieve the fuel system pressure. Refer to the **Fuel Pressure Relief Procedure** .

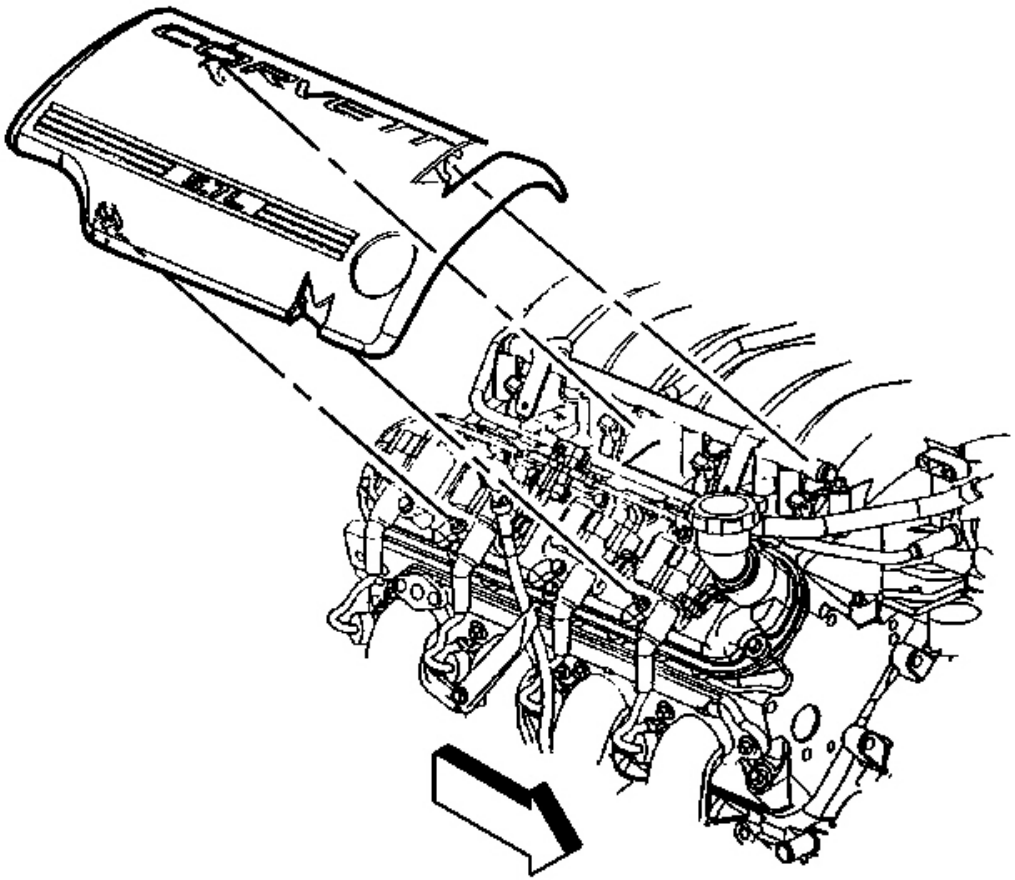

Fig. 249: Right Fuel Rail Cover
Courtesy of GENERAL MOTORS CORP.

4. Remove the right fuel rail cover.
5. Clean the fuel rail assembly with a spray type engine cleaner, GM X-30A or equivalent, if necessary. Follow the package instructions. Do not soak the fuel rail in liquid cleaning solvent.

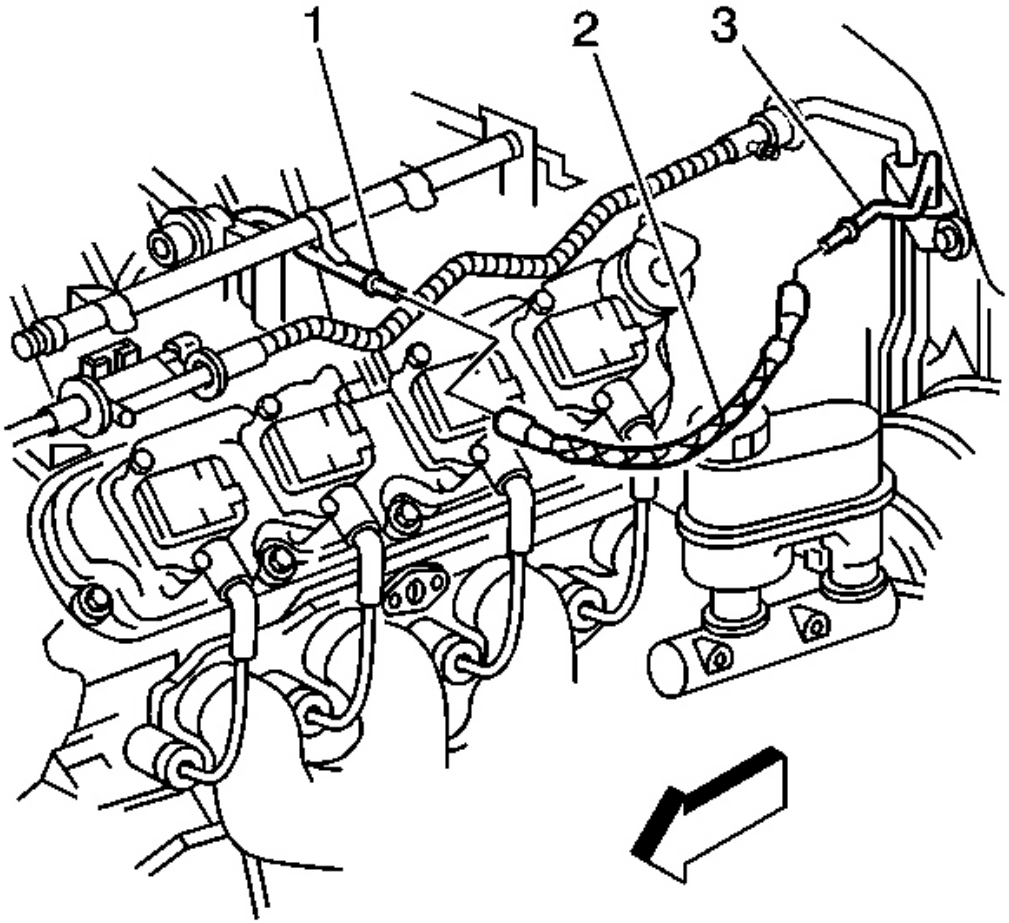

Fig. 250: Chassis Fuel Pipe, Fuel Feed Hose & Fuel Rail
Courtesy of GENERAL MOTORS CORP.

6. Disconnect the fuel feed hose (2) from the fuel rail (1). Refer to **Quick Connect Fitting(s) Service (Metal Collar)** .

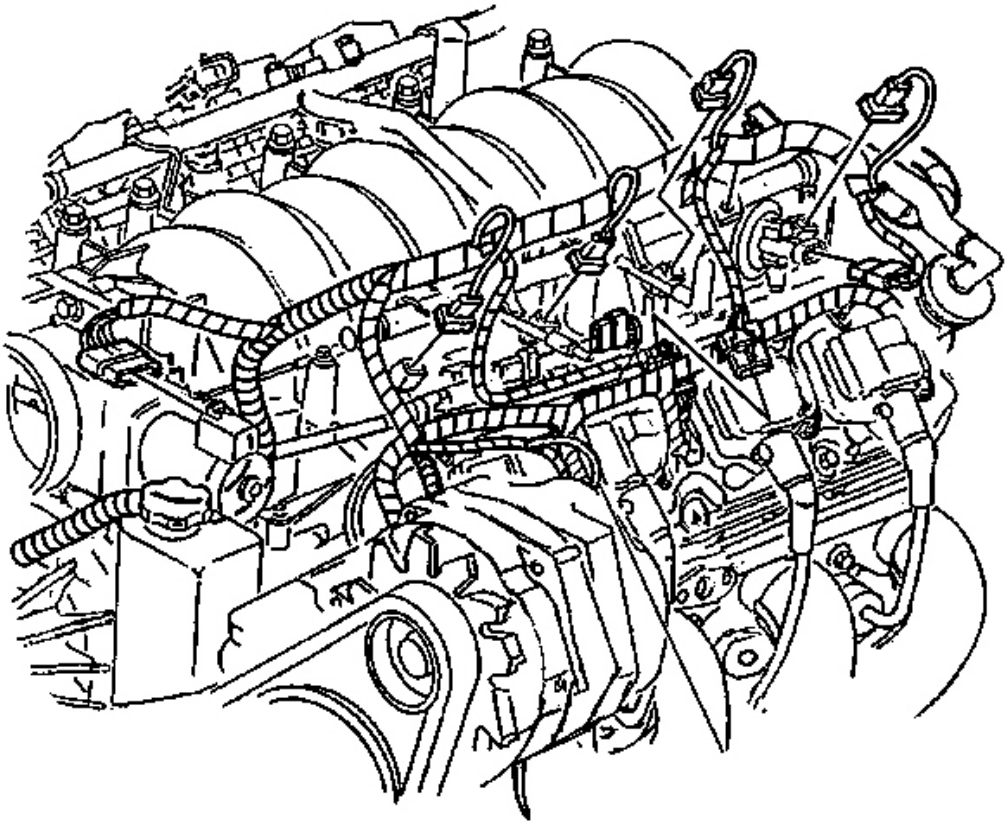

Fig. 251: Fuel Injector Electrical Connectors
Courtesy of GENERAL MOTORS CORP.

7. Disconnect the fuel injector electrical connectors. Identify the connectors to their corresponding injectors in order to ensure the correct sequential injector firing order after reassembly.

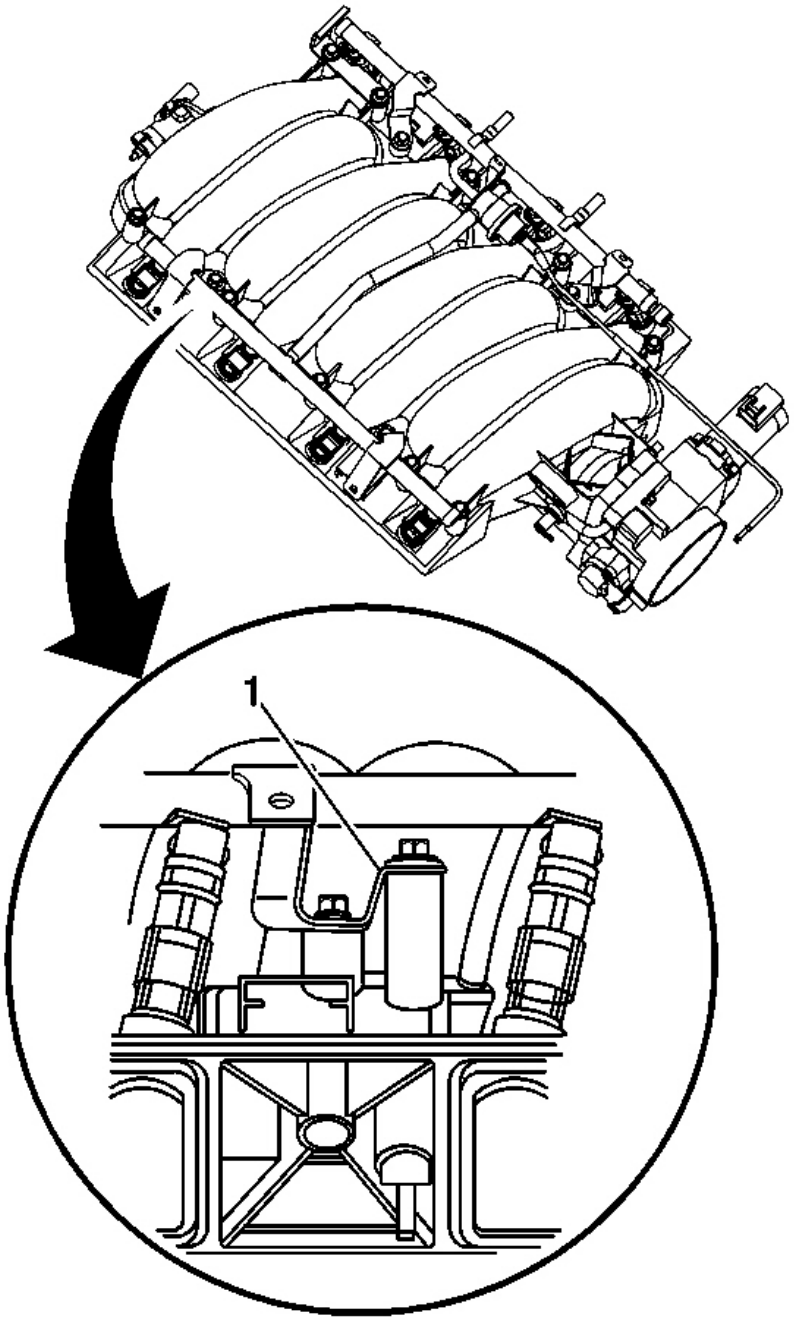

Fig. 252: Fuel Rail Ground Strap
Courtesy of GENERAL MOTORS CORP.

8. Note the location of the fuel rail ground strap (1) on the intake manifold. The fuel rail ground strap must

be installed during assembly.

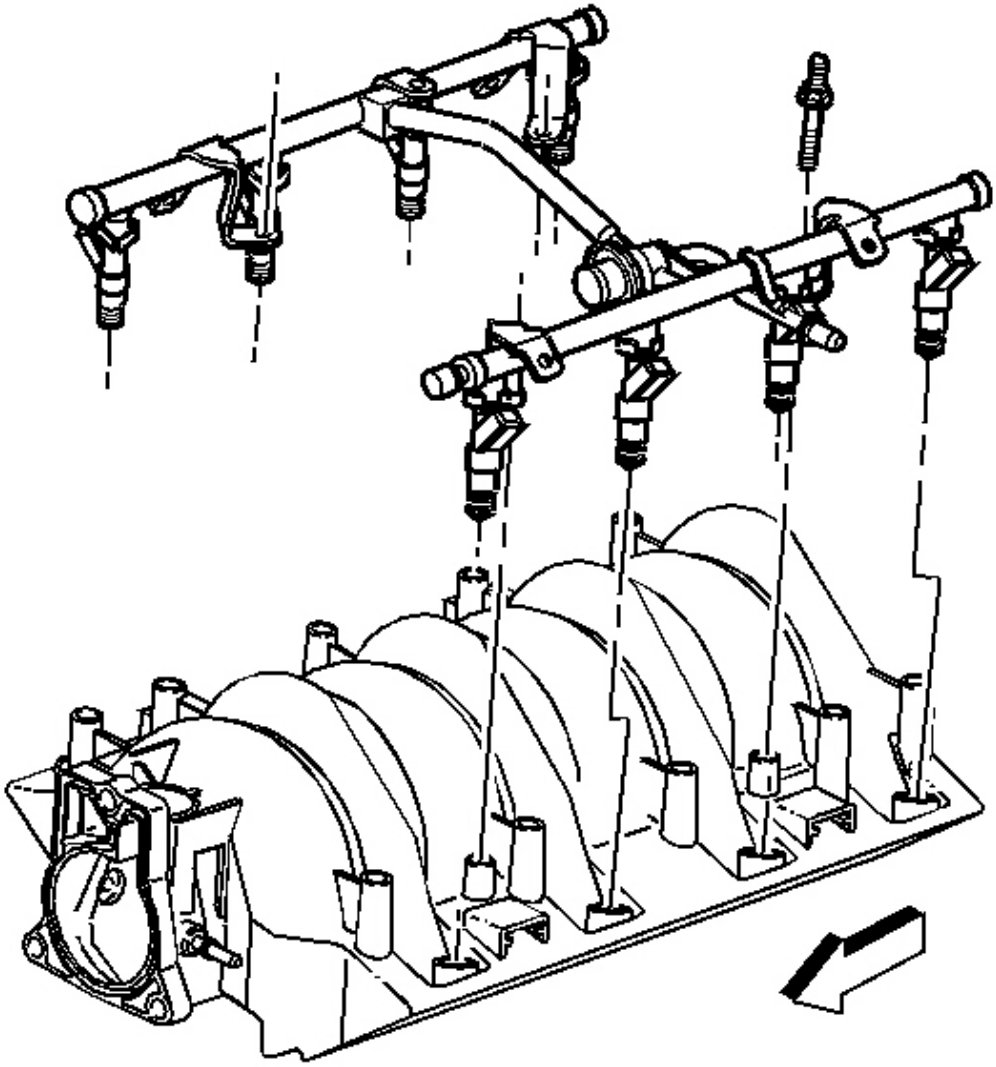

Fig. 253: Fuel Rail Assembly & Bolts
Courtesy of GENERAL MOTORS CORP.

9. Remove the fuel rail attaching bolts.
10. Remove the fuel rail assembly.
11. Remove the injector lower O-ring seal from the spray tip end of each injector.
12. Discard the lower O-ring seals.

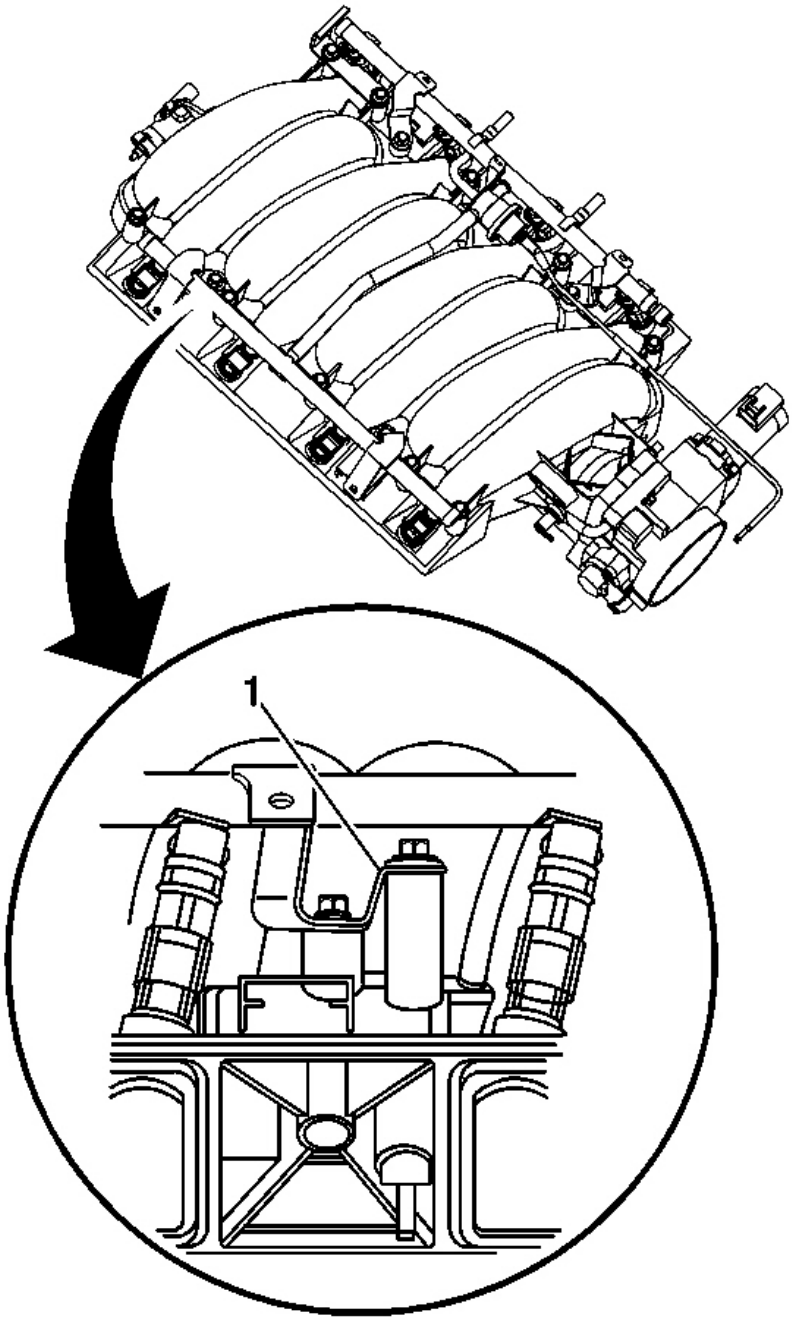

Fig. 254: Fuel Rail Ground Strap
Courtesy of GENERAL MOTORS CORP.

1. Note the location of the fuel rail ground strap (1) on the intake manifold. The fuel rail ground strap must be installed during assembly.

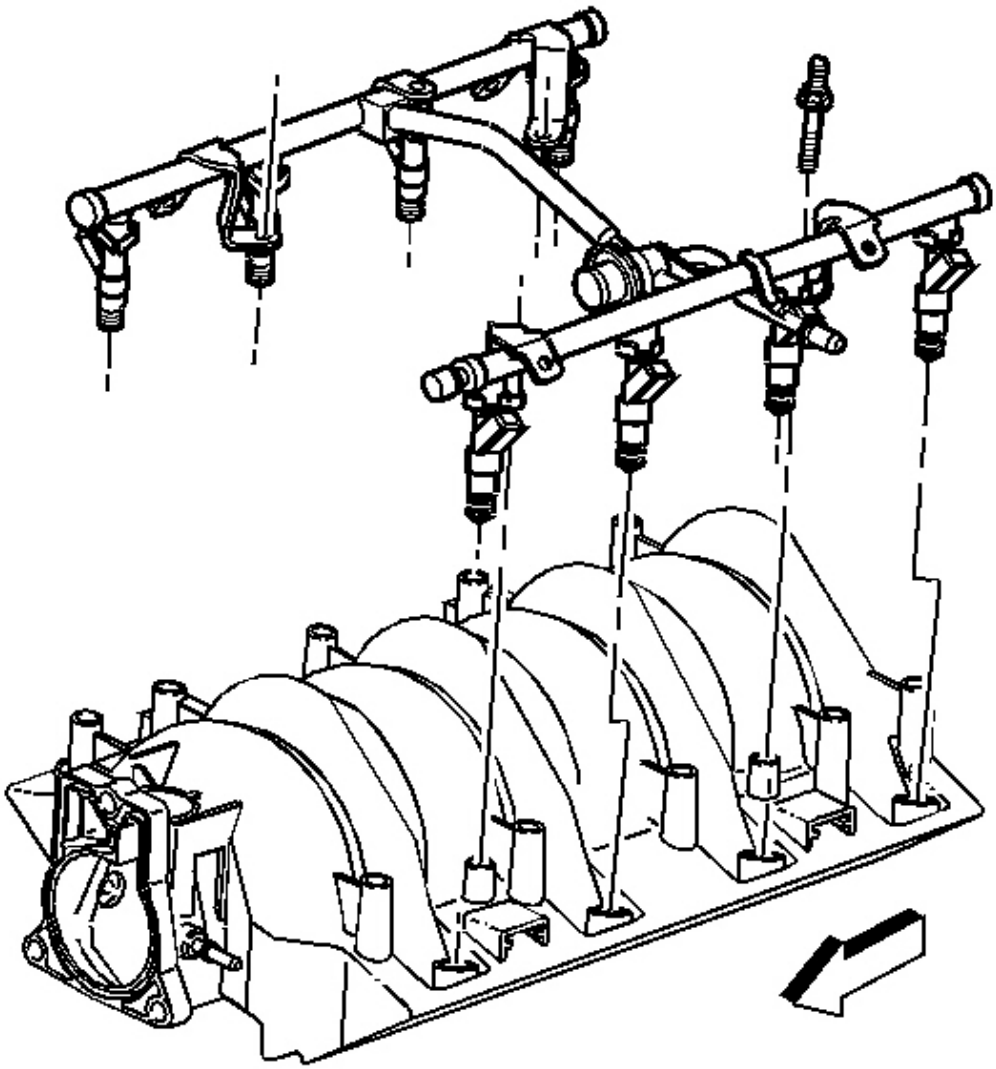

Fig. 255: Fuel Rail Assembly & Bolts
Courtesy of GENERAL MOTORS CORP.

2. Lubricate the new lower injector O-ring seals with clean engine oil.
3. Install the new O-ring seals on the spray tip end of each injector.

CAUTION: The fuel rail stop bracket must be installed onto the engine assembly. The stop bracket serves as a protective shield for the fuel rail in the event of a vehicle frontal crash. If the fuel rail stop bracket is not installed and the vehicle is involved in a frontal crash, fuel could be sprayed possibly causing a fire and personal injury from burns.

4. Install the fuel rail assembly to the intake manifold.
5. Apply a 5 mm (0.020 in) band of GM P/N 12345382 (Canadian P/N 10953489) threadlock or equivalent to the threads of the fuel rail bolts.

NOTE: Refer to Fastener Notice in Cautions and Notices.

6. Install the fuel rail attaching bolts.

   Tighten: Tighten the fuel rail attaching bolts to 10 N.m (89 lb in).

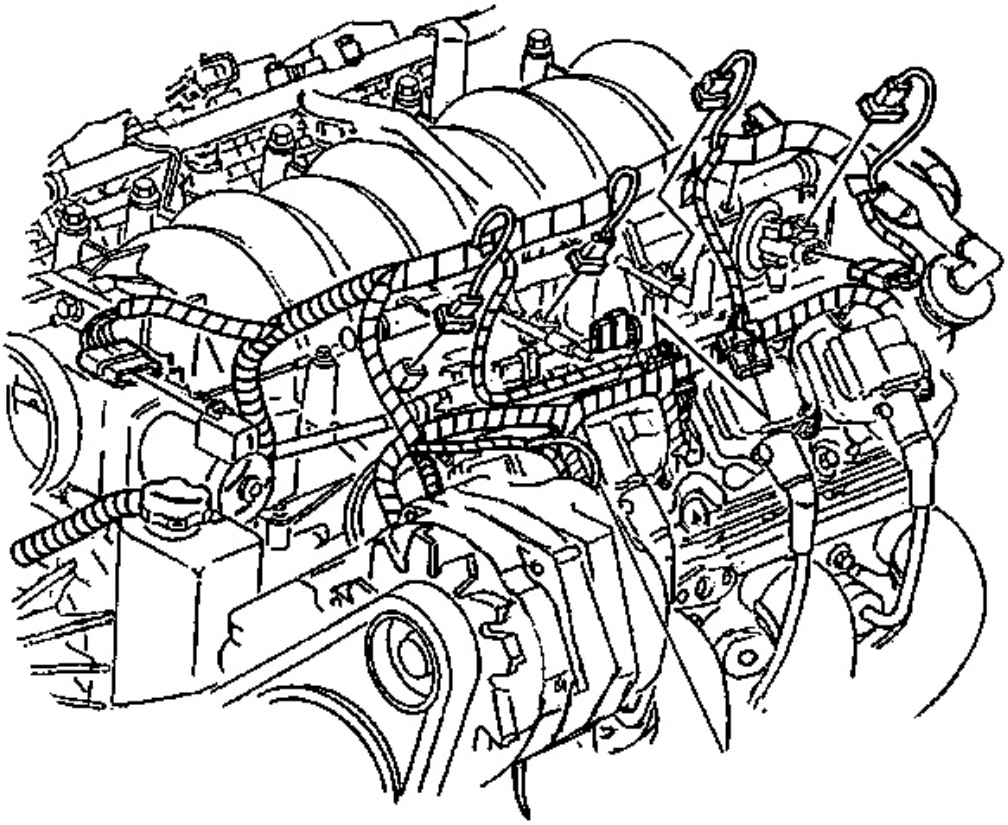

Fig. 256: Fuel Injector Electrical Connectors
Courtesy of GENERAL MOTORS CORP.

7. Connect the injector electrical connectors.
    - Install each connector on the proper injector in order to ensure the correct sequential injector firing order.
    - Rotate the injectors as required in order to avoid stretching the injector wiring harness.

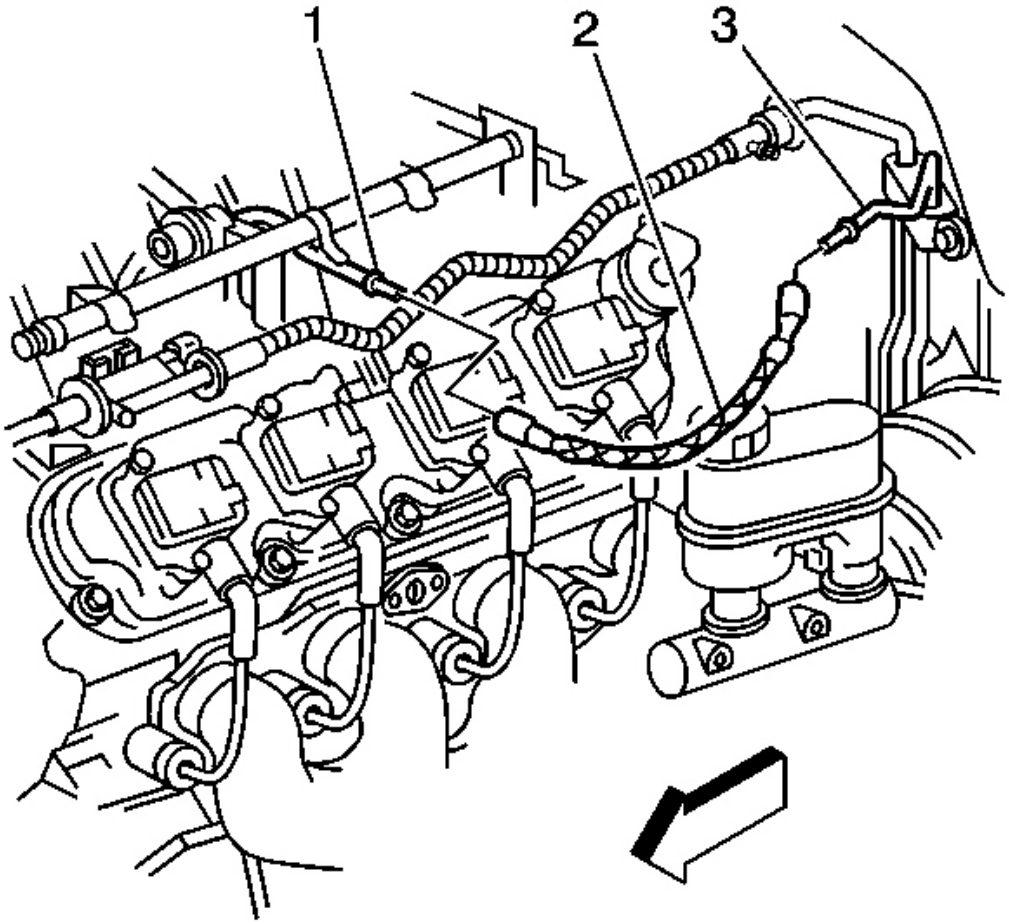

Fig. 257: Chassis Fuel Pipe, Fuel Feed Hose & Fuel Rail
Courtesy of GENERAL MOTORS CORP.

8. Connect the fuel feed hose (2) to the fuel rail (1). Refer to **Quick Connect Fitting(s) Service (Metal Collar)** .
9. Tighten the fuel filler cap.
10. Connect the negative battery cable. Refer to **Battery Negative Cable Disconnect/Connect Procedure** in Engine Electrical.
11. Perform the following procedure in order to inspect for leaks:
    1. Turn the ignition switch ON for 2 seconds.
    2. Turn the ignition switch OFF for 10 seconds.
    3. Turn the ignition switch ON.

4. Inspect for fuel leaks.

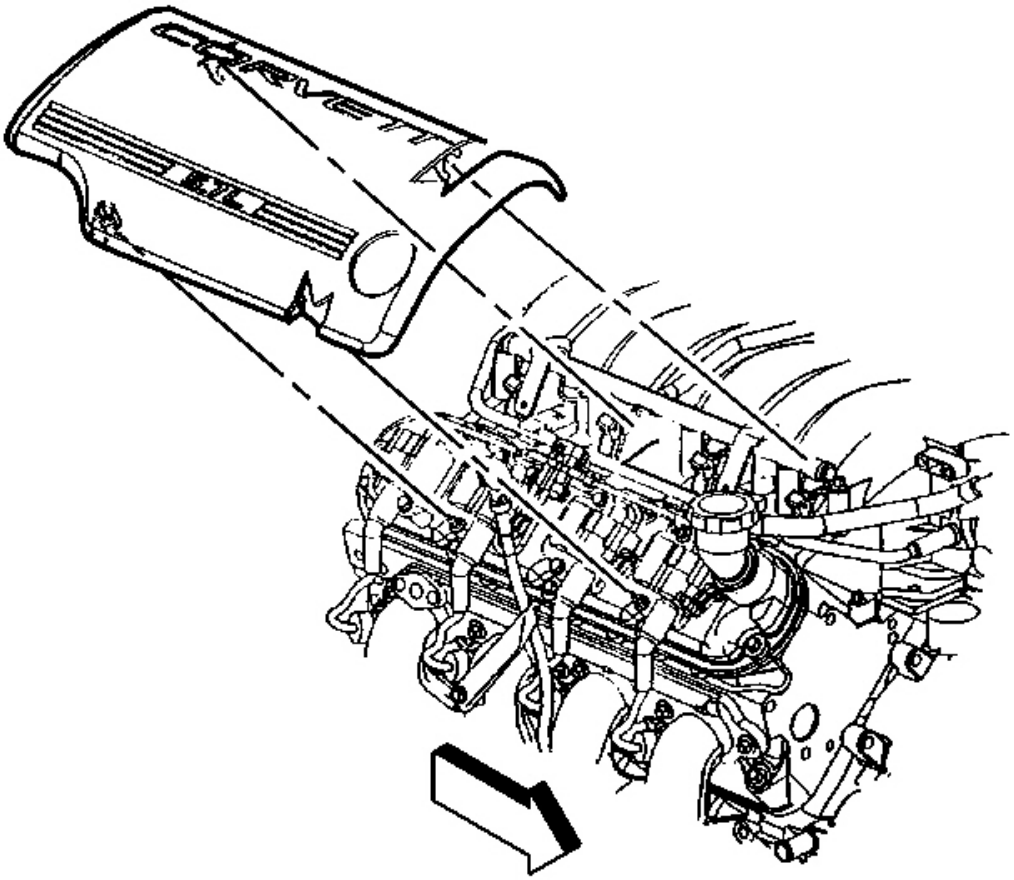

Fig. 258: Right Fuel Rail Cover
Courtesy of GENERAL MOTORS CORP.

12. Install the right fuel rail cover.

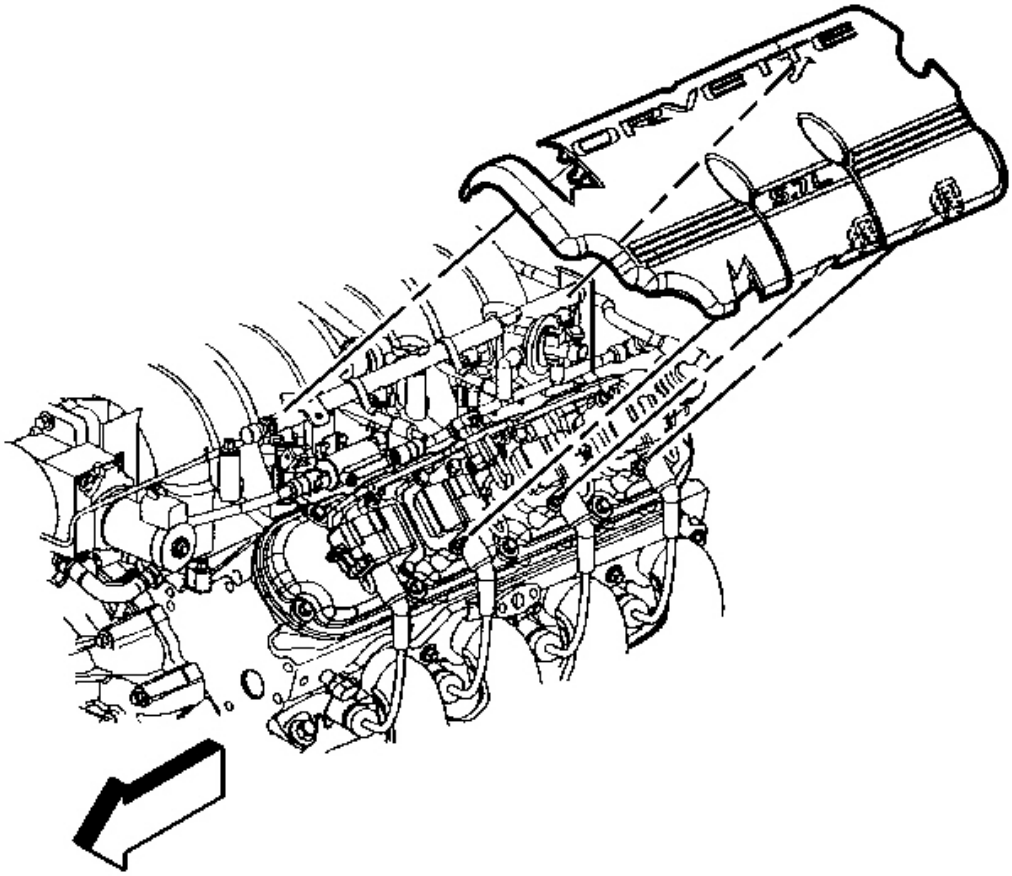

Fig. 259: Left Fuel Rail Cover
Courtesy of GENERAL MOTORS CORP.

13. Install the left fuel rail cover.
14. Program the transmitters. Refer to **Transmitter Programming** in Keyless Entry.

FUEL INJECTOR CLEANING PROCEDURE

Tools Required

- **J 37287** Fuel Line Shut-Off Adapters. See **Special Tools and Equipment** .
- **J 35800-A** Fuel Injector Cleaner. See **Special Tools and Equipment** .
- J 42873-1 3/8 Fuel Line Shut-Off Valve
- J 42873-2 5/16 Return Pipe Shut-Off Valve

- J 42964-1 3/8 Fuel Pipe Shut-Off Valve
- J 42964-2 5/16 Fuel Pipe Shut-Off Valve

NOTE:

- **GM Top-Engine Cleaner is the only injector cleaning agent recommended. Do not use other cleaning agents, as they may contain methanol which can damage fuel system components.**
- **Under NO circumstances should the top engine cleaner be added to the vehicles fuel tank, as it may damage the fuel pump and other system components.**
- **Do not exceed a 10 percent cleaning solution concentration. Higher concentrations may damage fuel system components. Testing has demonstrated that exceeding the 10 percent cleaning solution concentration does not improve the effectiveness of this procedure.**

IMPORTANT: Vehicles with less than 160 km (100 mi) on the odometer should not have the injectors cleaned. These vehicles should have the injectors replaced.

IMPORTANT: During this procedure you will need a total of 960 ml (32.4 oz) of cleaning solution. That is 2 tanks of solution for the J 35800-A . See Special Tools and Equipment . Other brands of tools may have a different capacity and would therefore require more or less tanks to complete the procedure. You must use all 960 ml (32.4 oz) of solution to ensure complete injector cleaning.

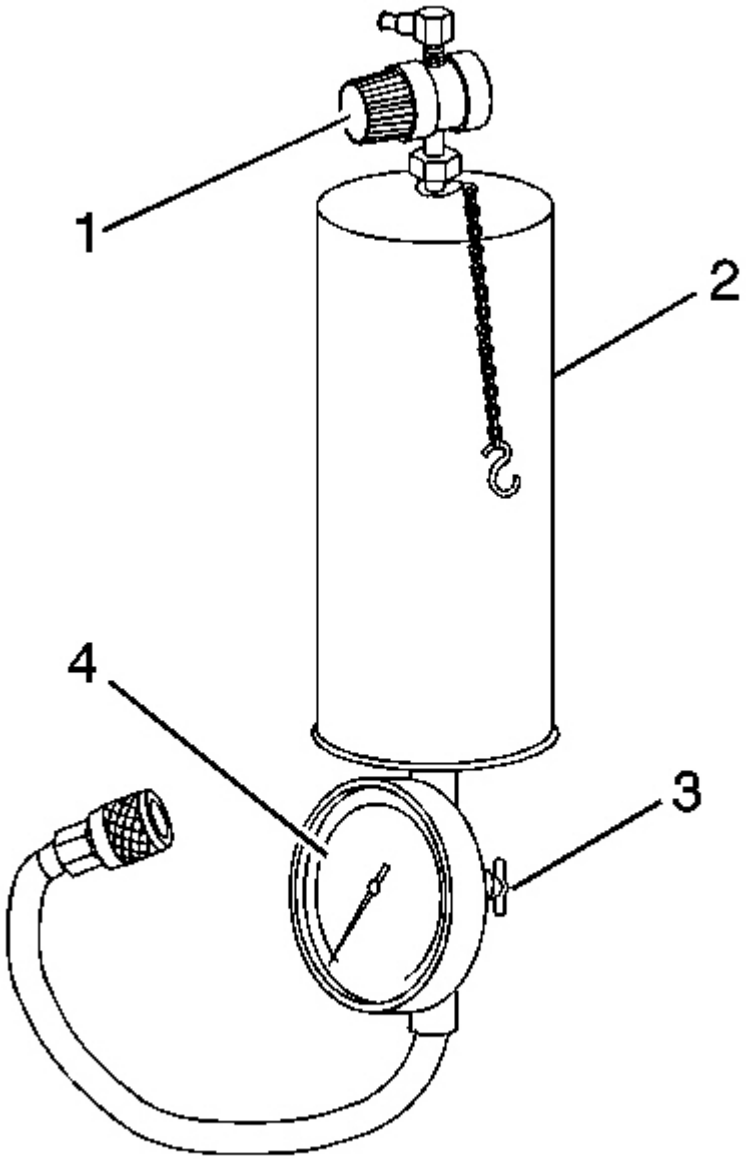

Fig. 260: Identifying Fuel Injector Cleaner J 38500-A
Courtesy of GENERAL MOTORS CORP.

1. Obtain **J 35800-A** (2). See **Special Tools and Equipment** .

IMPORTANT: Make sure the valve at the bottom of the canister (3) is closed.

2. For US dealers, empty 2 pre-measured GM Top-Engine Cleaner containers, 24 ml (0.812 oz) each, GM P/N 12346535, into the **J 35800-A** . See **Special Tools and Equipment** .
3. For Canadian dealers, measure and dispense 48 ml (1.62 oz) of Top-Engine Cleaner, Canadian P/N 992872, into the **J 35800-A** . See **Special Tools and Equipment** .
4. If you are using any other brand of tank you will need a total of 96 ml (3.24 oz) of Top-Engine Cleaner mixed with 864 ml (29.16 oz) of regular unleaded gasoline.
5. Fill the injector cleaning tank with regular unleaded gasoline. Be sure to follow all additional instructions provided with the tool.
6. Electrically disable the vehicle fuel pump by removing the fuel pump relay and disconnecting the oil pressure switch connector, if equipped.
7. Disconnect the fuel feed and return line, if equipped, at the fuel rail. Plug the fuel feed and return line, if equipped, coming off the fuel rail with **J 37287** , or. See **Special Tools and Equipment** . J 42964-1 , and J 42964-2 or J 42873-1 , and J 42873-2 as appropriate for the fuel system.
8. Connect the **J 35800-A** to the vehicle fuel rail. See **Special Tools and Equipment** .
9. Pressurize the **J 35800-A** to 510 kPa (75 psi). See **Special Tools and Equipment** .
10. Start and idle the engine until it stalls due to lack of fuel. This should take approximately 15-20 minutes.
11. Disconnect **J 35800-A** from the fuel rail. See **Special Tools and Equipment** .
12. Reconnect the vehicle fuel pump relay and oil pressure switch connector, if equipped.
13. Remove **J 37287** or. See **Special Tools and Equipment** . J 42964-1 , and J 42964-2 or J 42873-1 , and J 42873-2 and reconnect the vehicle fuel feed and return lines.
14. Start and idle the vehicle for an additional 2 minutes to ensure residual injector cleaner is flushed from the fuel rail and fuel lines.
15. Repeat steps 1-5 of the Injector Balance Test, and record the fuel pressure drop from each injector.
16. Subtract the lowest fuel pressure drop from the highest fuel pressure drop. If the value is 15 kPa (2 psi) or less, no additional action is required. If the value is greater than 15 kPa (2 psi), replace the injector with the lowest fuel pressure drop.
17. Add one ounce of Port Fuel Injector Cleaner, GM P/N 12345104 (Canadian P/N 10953467), to the vehicle fuel tank for each gallon of gasoline estimated to be in the fuel tank. Instruct the customer to add the reminder of the bottle of Port Fuel Injector Cleaner to the vehicle fuel tank at the next fill-up.
18. Advise the customer to change brands of fuel and to add GM Port Fuel Injector Cleaner every 5 000 km (3,000 mi). GM Port Fuel Injector Cleaner contains the same additives that the fuel companies are removing from the fuel to reduce costs. Regular use of GM Port Fuel Injector Cleaner should keep the customer from having to repeat the injector cleaning procedure.
19. Road test the vehicle to verify that the customer concern has been corrected.

FUEL INJECTOR REPLACEMENT

Tools Required

- **J 34730-1A** Fuel Pressure Gauge. See **Special Tools and Equipment** .
- **J 37088-A** Tool Set, Fuel Line Quick Connect Separator. See **Special Tools and Equipment** .

Removal Procedure

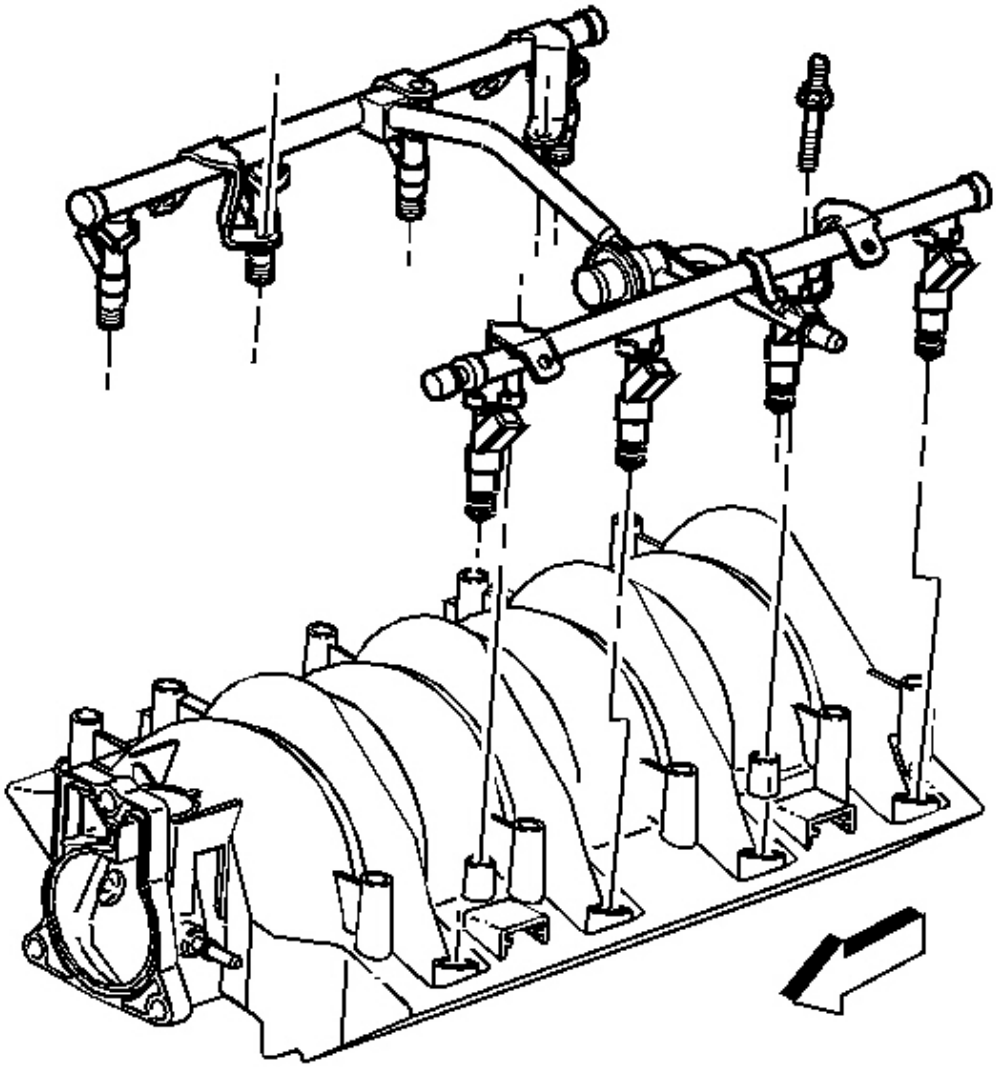

Fig. 261: Fuel Rail Assembly & Bolts
Courtesy of GENERAL MOTORS CORP.

CAUTION: Refer to Battery Disconnect Caution in Cautions and Notices.

1. Disconnect the negative battery cable. Refer to **Battery Negative Cable Disconnect/Connect Procedure**

in Engine Electrical.

IMPORTANT: Leaking fuel injectors may contaminate the engine oil with fuel.

2. Relieve the fuel system pressure. Refer to the **Fuel Pressure Relief Procedure** .
3. Remove the fuel rail assembly. Refer to **Fuel Rail Assembly Replacement** .

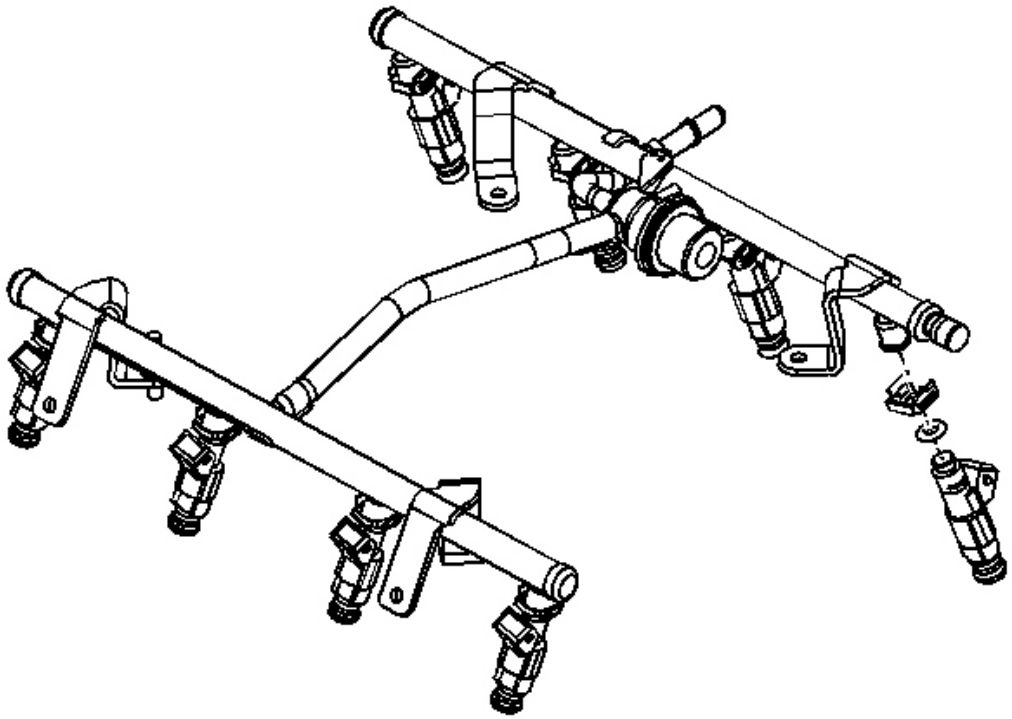

Fig. 262: Fuel Rail Injector, O-Ring Seals & Injector
Courtesy of GENERAL MOTORS CORP.

NOTE: **Use care in removing the fuel injectors in order to prevent damage to the fuel injector electrical connector pins or the fuel injector nozzles. Do not immerse the fuel injector in any type of cleaner. The fuel injector is an electrical component and may be damaged by this cleaning method.**

4. Spread the injector retainer clip to release the injector from the fuel rail.
5. Remove the fuel injector.
6. Remove the injector O-ring seals from both ends of the injector.

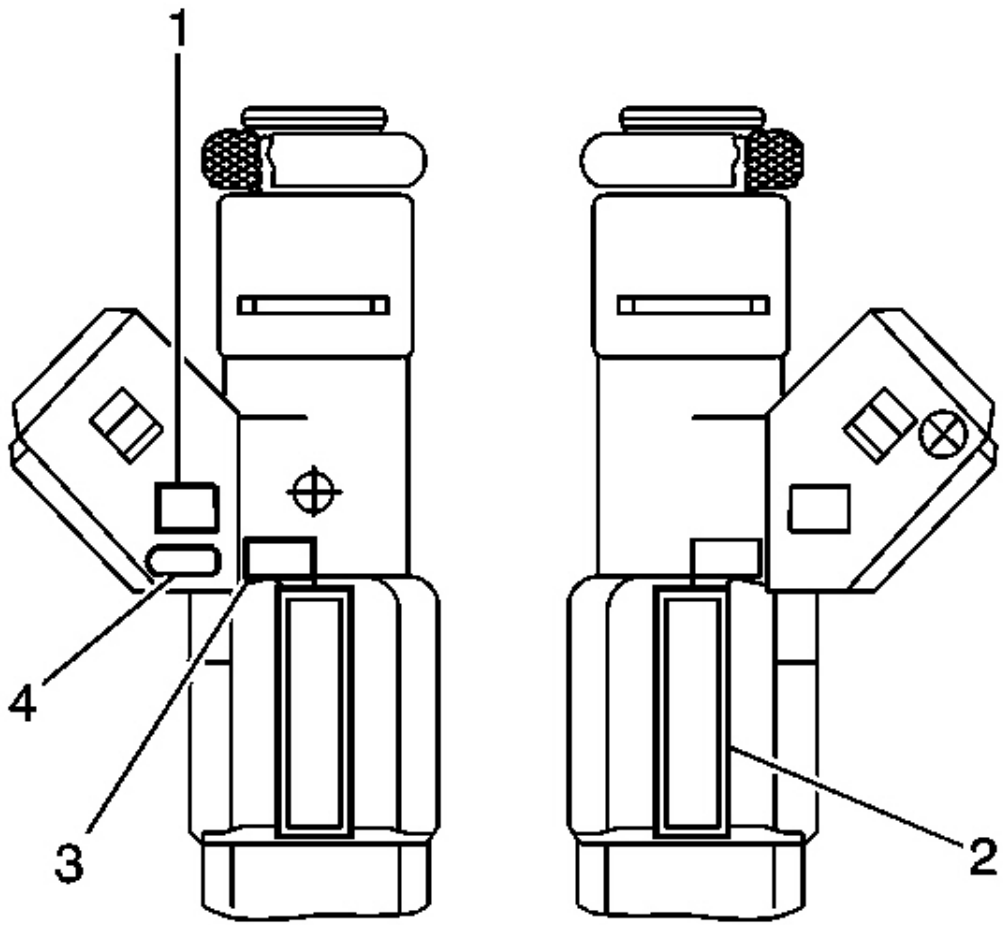

Fig. 263: Fuel Injectors Assembly
Courtesy of GENERAL MOTORS CORP.

IMPORTANT: When ordering new fuel injectors, be sure to order the correct injector for the application being serviced.

1. The fuel injector assembly is stamped with a part number identification (2), a manufacturing date (3), a week code (1), and a production plant number (4).

   Inspect the new injectors in order to ensure installation of the correct part.

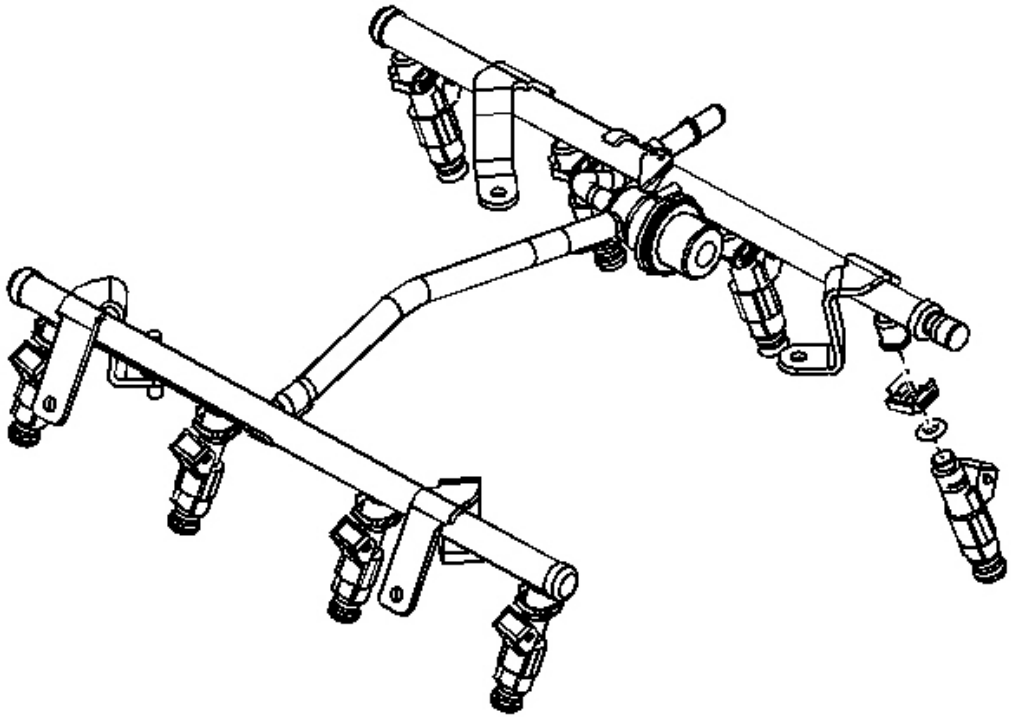

Fig. 264: Fuel Rail Injector, O-Ring Seals & Injector
Courtesy of GENERAL MOTORS CORP.

2. Lubricate the new injector O-ring seals with clean engine oil.
3. Install the new injector O-ring seals on the injector.
4. Install a new retainer clip on the injector.
5. Push the fuel injector into the fuel rail injector socket with the electrical connector facing outward.

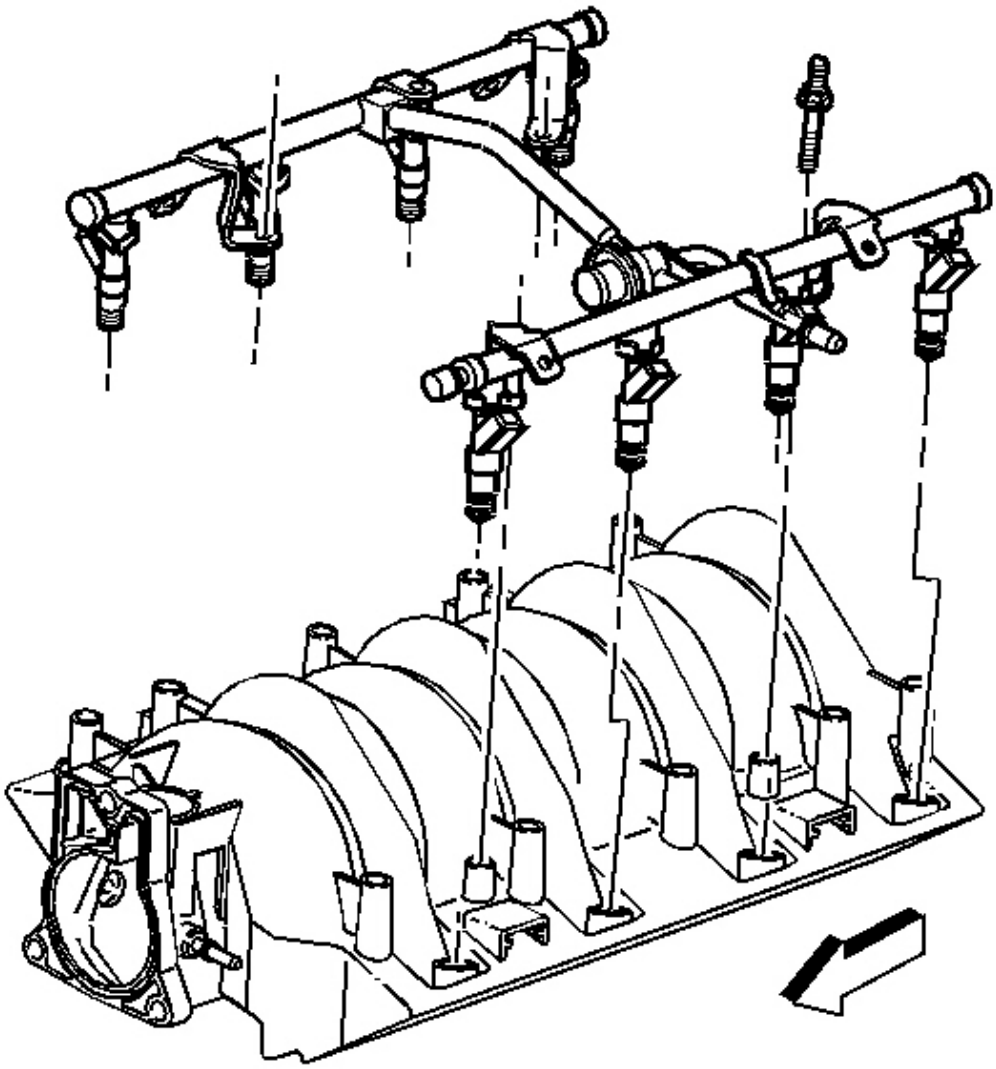

Fig. 265: Fuel Rail Assembly & Bolts
Courtesy of GENERAL MOTORS CORP.

6. Install the fuel rail assembly. Refer to **Fuel Rail Assembly Replacement** .
7. Tighten the fuel filler cap.
8. Connect the negative battery cable. Refer to **Battery Negative Cable Disconnect/Connect Procedure** in Engine Electrical.
9. Inspect for leaks.

1. Turn the ignition switch ON for 2 seconds.
2. Turn the ignition switch OFF for 10 seconds.
3. Turn the ignition switch ON.
4. Inspect for fuel leaks.

10. Program the transmitters. Refer to **Transmitter Programming** in Keyless Entry.

EVAPORATIVE EMISSION (EVAP) CANISTER PURGE SOLENOID VALVE REPLACEMENT

Removal Procedure

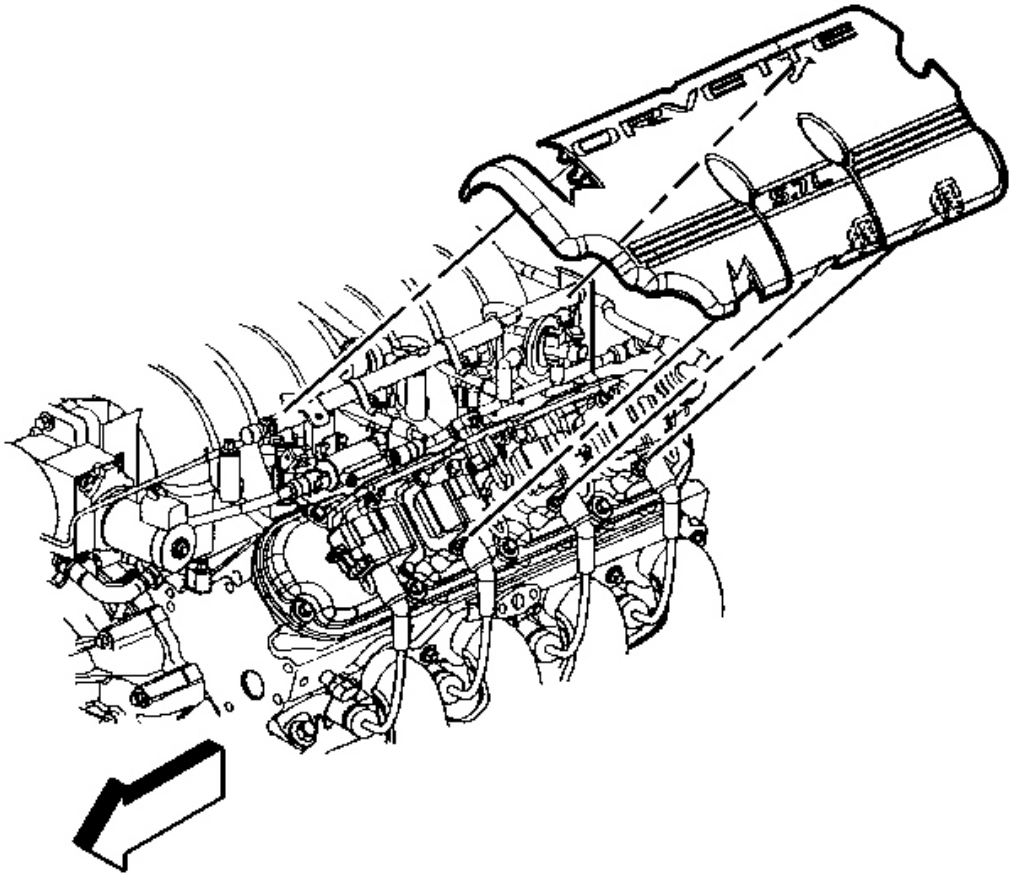

Fig. 266: Left Fuel Rail Cover
Courtesy of GENERAL MOTORS CORP.

1. Remove the left fuel rail cover.

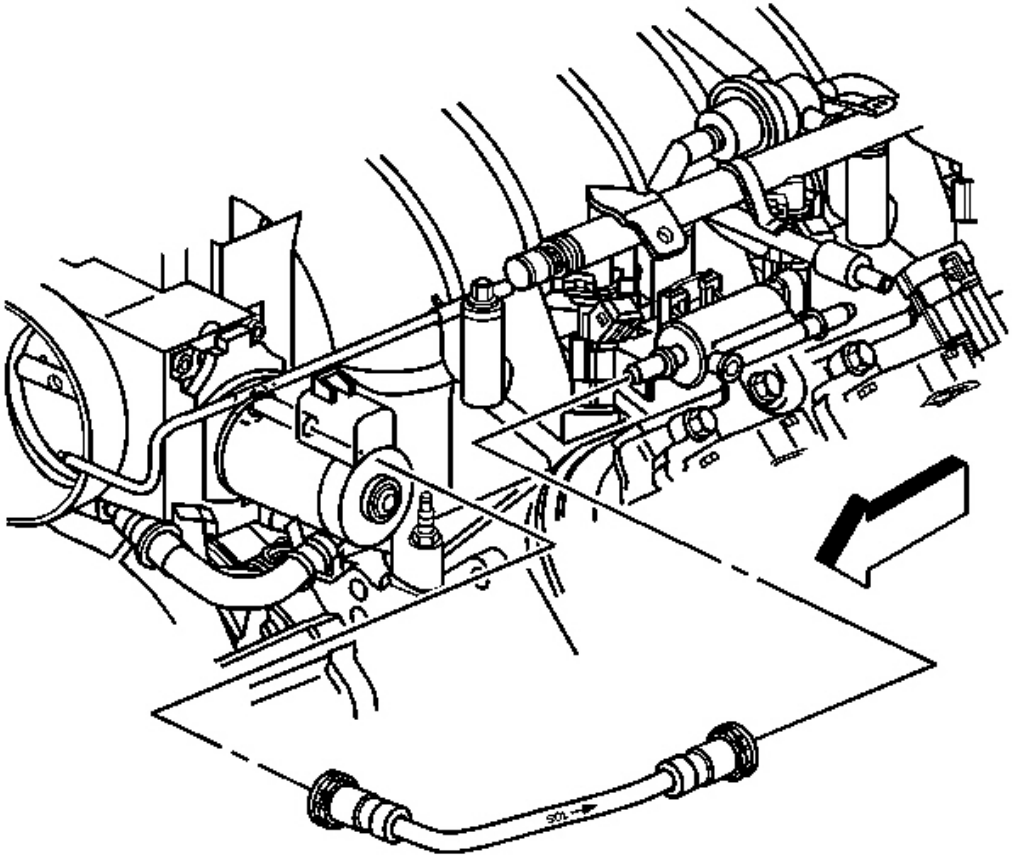

Fig. 267: Intake Manifold EVAP Pipe
Courtesy of GENERAL MOTORS CORP.

2. Disconnect the engine vacuum pipe from the EVAP canister purge solenoid valve to intake manifold EVAP pipe.

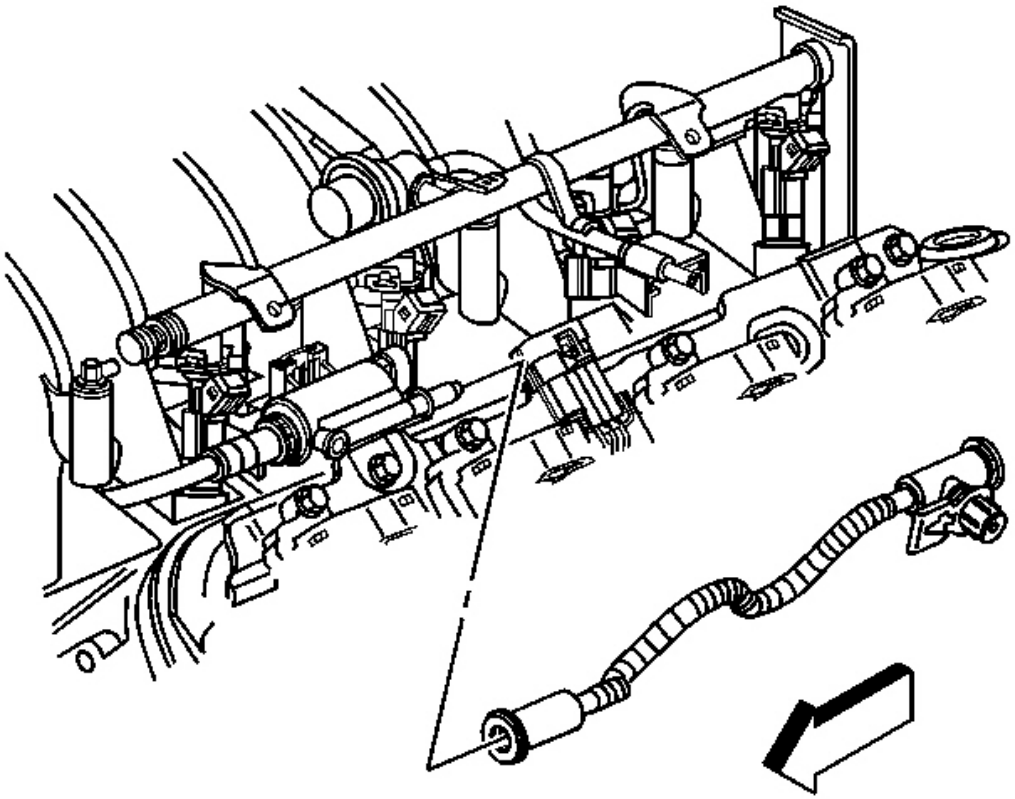

Fig. 268: EVAP Canister Purge Valve
Courtesy of GENERAL MOTORS CORP.

3. Disconnect the engine purge pipe from the EVAP canister purge valve.

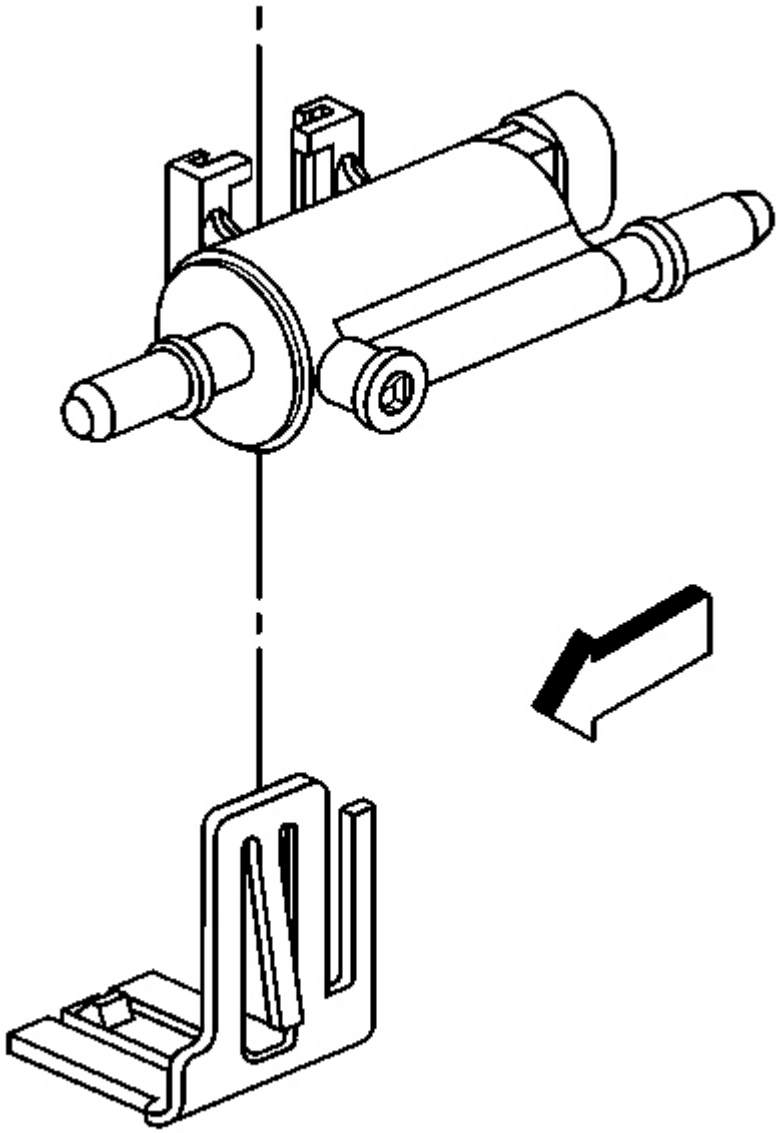

Fig. 269: EVAP Canister Purge Valve & Purge Bracket
Courtesy of GENERAL MOTORS CORP.

4. Disconnect the EVAP canister purge valve harness connector.
5. Remove the EVAP canister purge valve from the purge bracket.

Installation Procedure

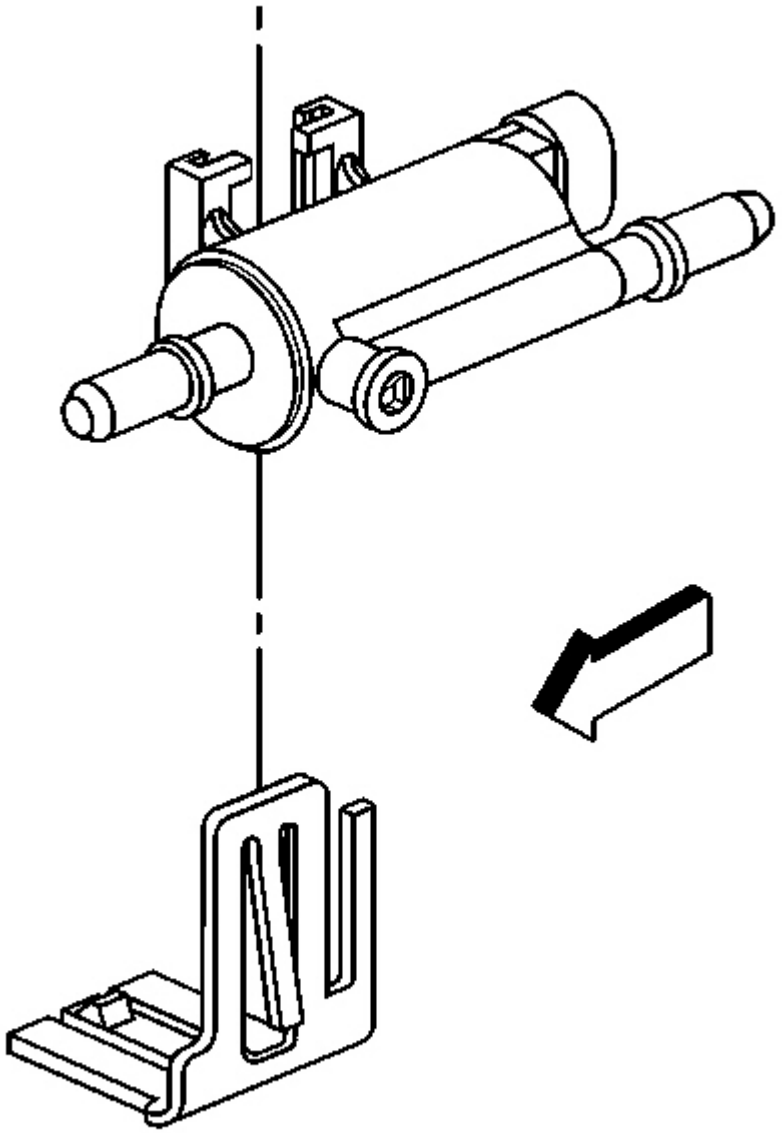

Fig. 270: EVAP Canister Purge Valve & Purge Bracket
Courtesy of GENERAL MOTORS CORP.

1. Install the EVAP canister purge valve to the purge bracket.
2. Connect the harness connector to the EVAP canister purge valve.

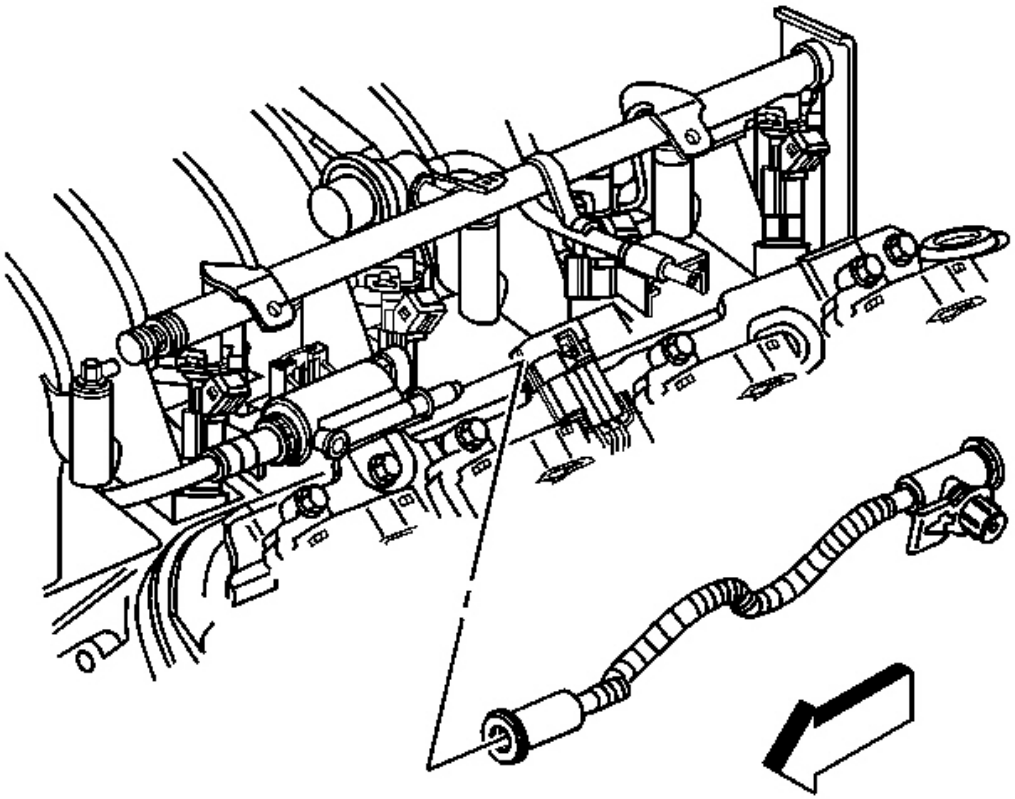

Fig. 271: EVAP Canister Purge Valve
Courtesy of GENERAL MOTORS CORP.

3. Connect the engine purge pipe to the chassis purge pipe.

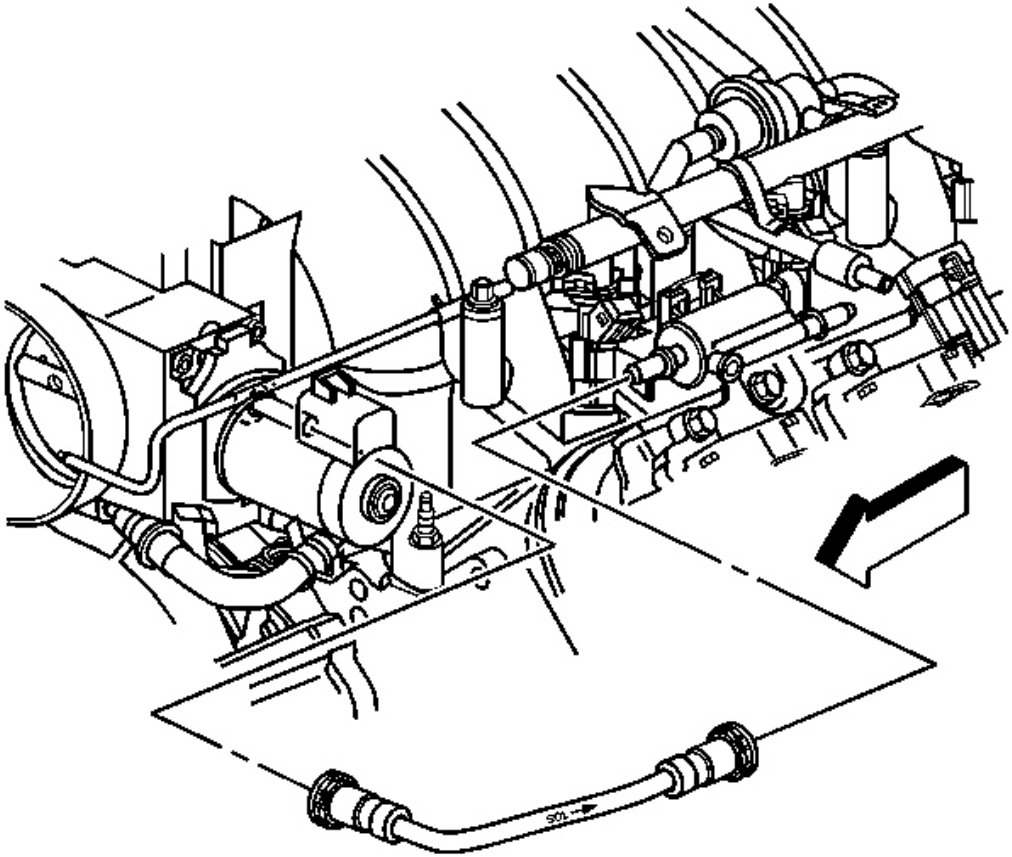

Fig. 272: Intake Manifold EVAP Pipe
Courtesy of GENERAL MOTORS CORP.

4. Connect the engine vacuum pipe to the EVAP canister purge valve.

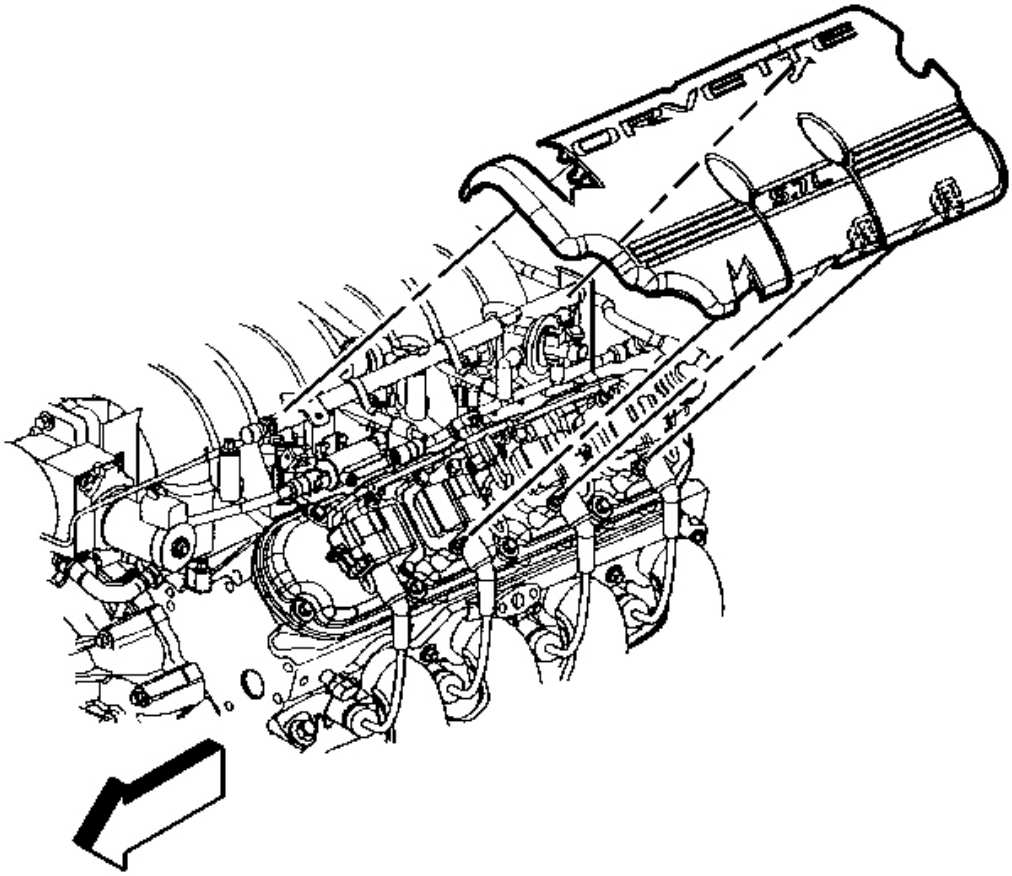

Fig. 273: Left Fuel Rail Cover
Courtesy of GENERAL MOTORS CORP.

5. Install the left fuel rail cover.

EVAPORATIVE EMISSION (EVAP) CANISTER VENT SOLENOID VALVE REPLACEMENT

Removal Procedure

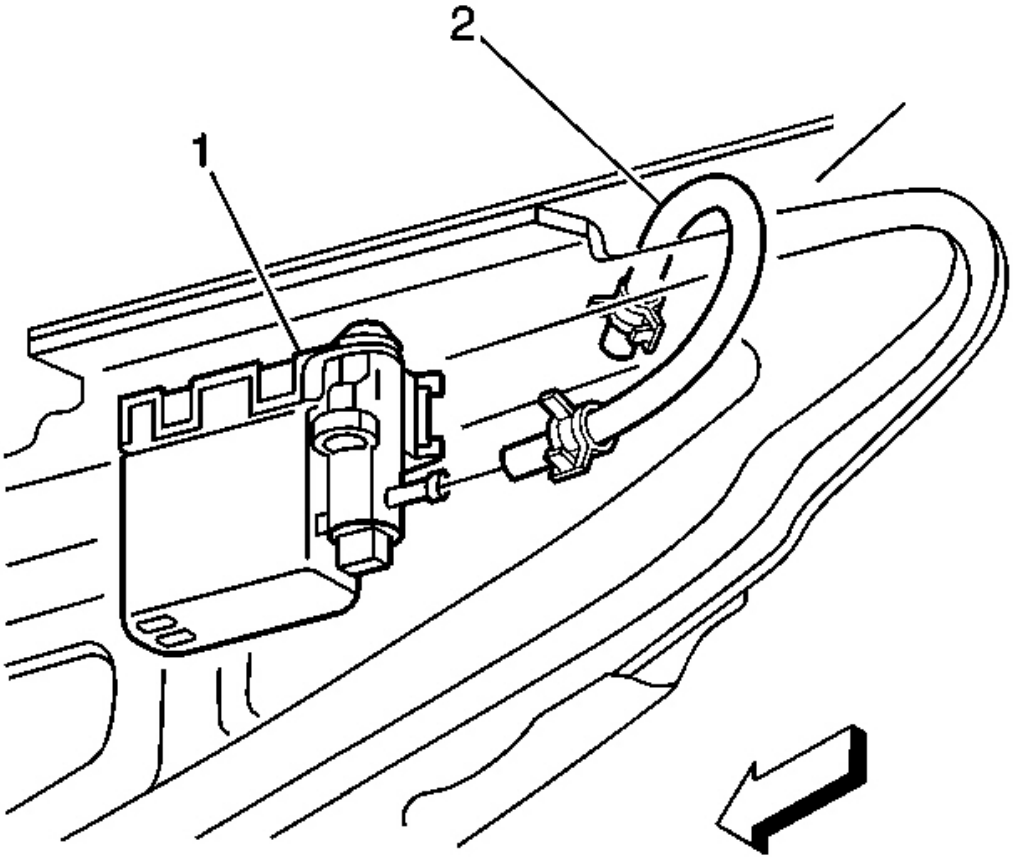

Fig. 274: EVAP Canister Vent Valve & Vent Hose
Courtesy of GENERAL MOTORS CORP.

1. Raise the vehicle. Refer to **Lifting and Jacking the Vehicle** in General Information.
2. Lower the right muffler for automatic transmission equipped vehicles only. Refer to **Muffler Replacement - Right** in Engine Exhaust.
3. Disconnect the EVAP canister valve harness connector.
4. Disconnect the vent hose (2) from the EVAP canister vent valve (1).

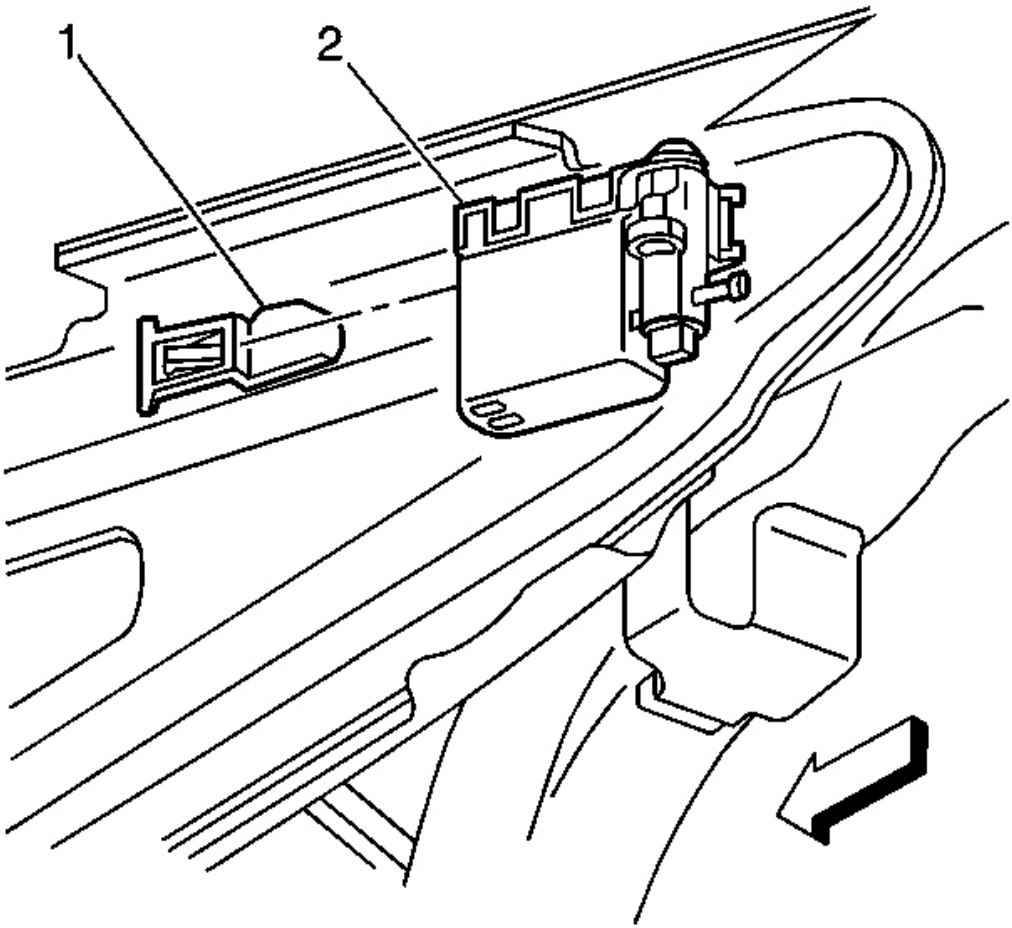

Fig. 275: EVAP Canister Vent Solenoid Valve & Bracket
Courtesy of GENERAL MOTORS CORP.

5. Remove the EVAP canister vent valve (2) from the vent bracket (1).

Installation Procedure

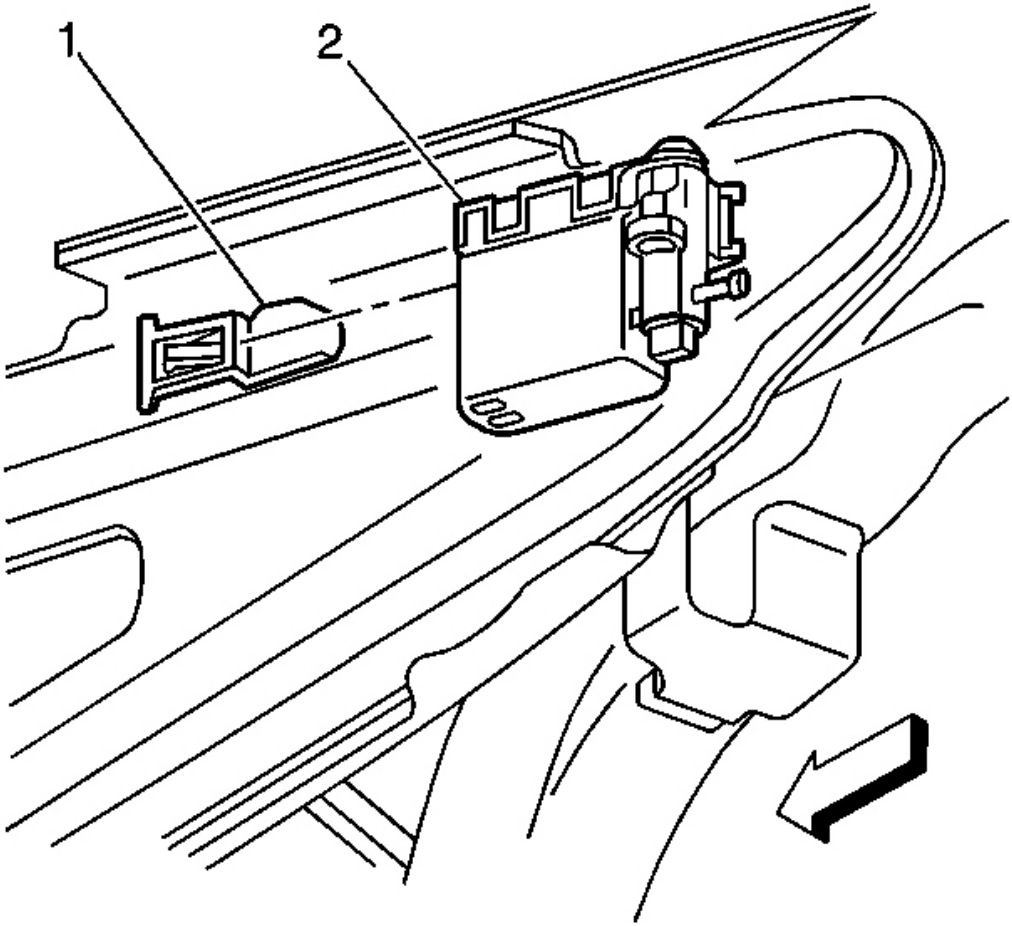

Fig. 276: EVAP Canister Vent Solenoid Valve & Bracket
Courtesy of GENERAL MOTORS CORP.

1. Install the EVAP canister vent valve (2) to the vent bracket (1).

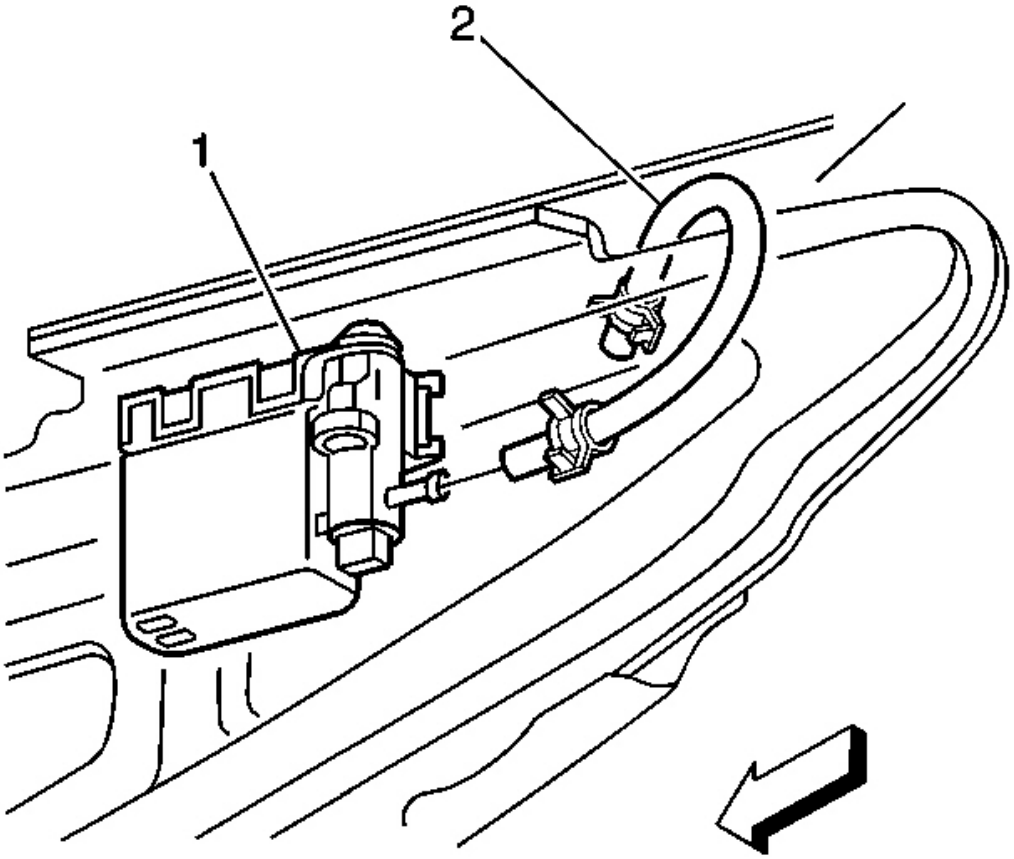

Fig. 277: EVAP Canister Vent Valve & Vent Hose
Courtesy of GENERAL MOTORS CORP.

2. Connect the vent hose (2) to the EVAP canister vent valve (1).
3. Connect the EVAP vent valve electrical connector.
4. For automatic transmission- equipped vehicles only, raise the right muffler. Refer to **Muffler Replacement - Right** in Engine Exhaust.
5. Lower the vehicle.

EVAPORATIVE EMISSION (EVAP) SYSTEM HOSES/PIPES REPLACEMENT (VACUUM SUPPLY)

Removal Procedure

CAUTION: Refer to Fuel and EVAP Pipe Caution in Cautions and Notices.

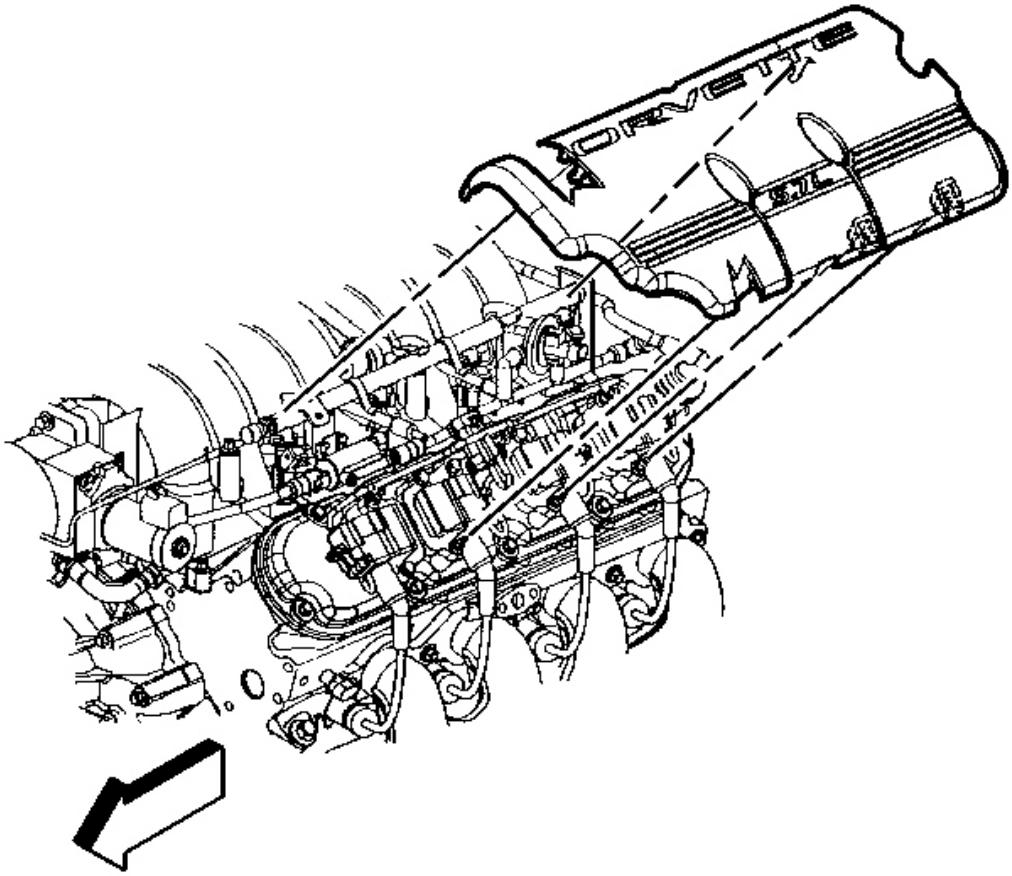

Fig. 278: Left Fuel Rail Cover
Courtesy of GENERAL MOTORS CORP.

1. Remove the left fuel rail cover.

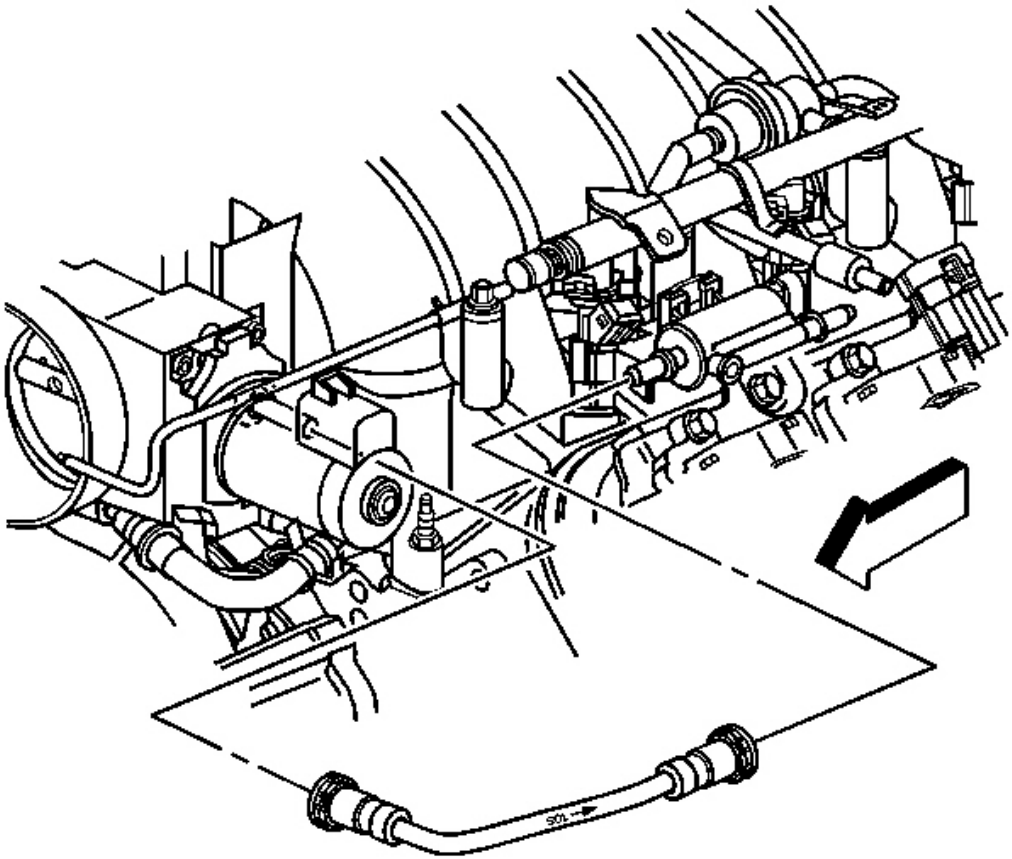

Fig. 279: Intake Manifold EVAP Pipe
Courtesy of GENERAL MOTORS CORP.

2. Disconnect the quick-connect fittings at the intake manifold and the EVAP canister purge valve. Refer to **Quick Connect Fitting(s) Service (Plastic Collar)** .
3. Remove the EVAP pipe.
4. Cap the intake manifold pipe and the EVAP canister purge valve in order to prevent possible contamination.

Installation Procedure

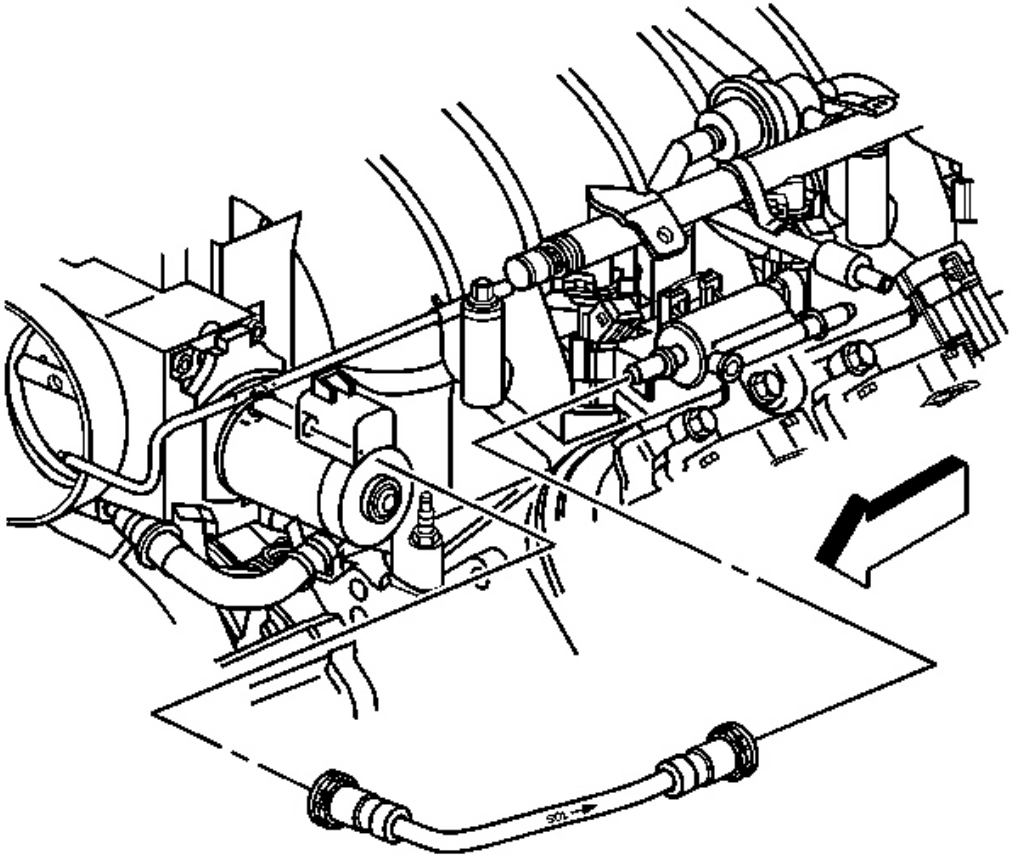

Fig. 280: Intake Manifold EVAP Pipe
Courtesy of GENERAL MOTORS CORP.

1. Remove the caps from the intake manifold pipe and the EVAP canister purge valve.
2. Install the EVAP pipe to the intake manifold and the EVAP canister purge valve.

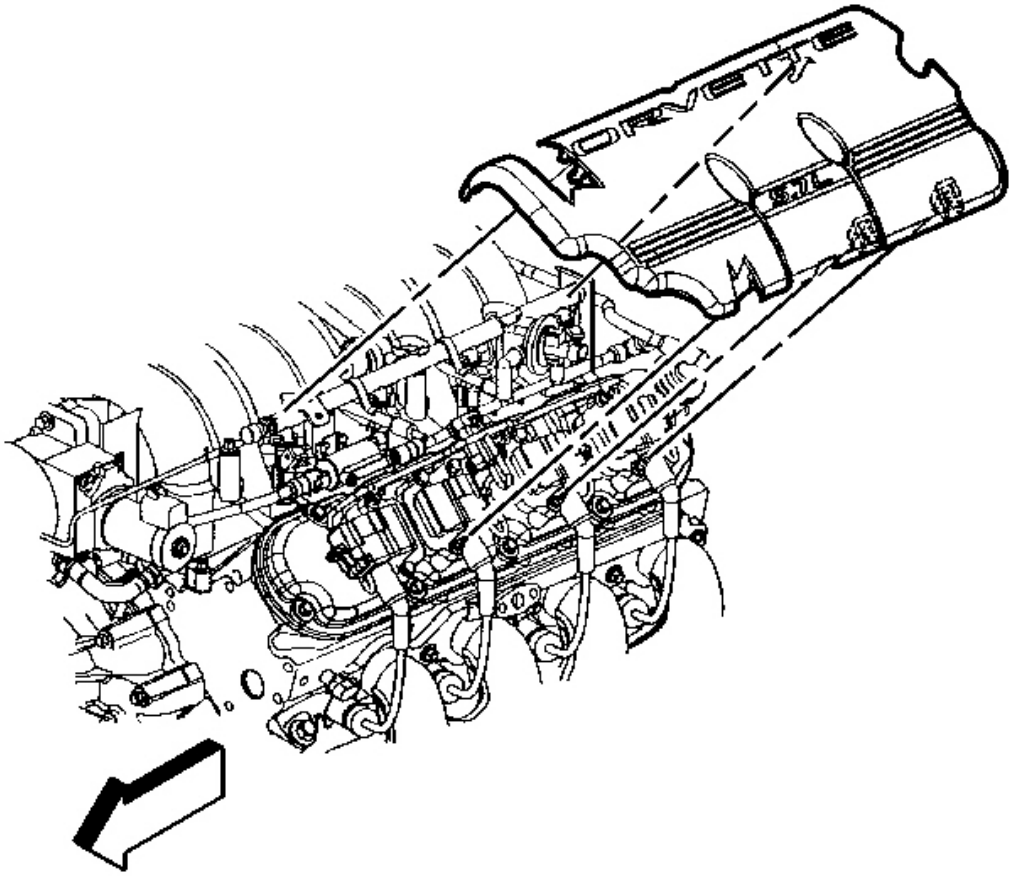

Fig. 281: Left Fuel Rail Cover
Courtesy of GENERAL MOTORS CORP.

3. Install the left fuel rail cover.

EVAPORATIVE EMISSION (EVAP) SYSTEM HOSES/PIPES REPLACEMENT (ENGINE PURGE PIPE)

Removal Procedure

CAUTION: Refer to Fuel and EVAP Pipe Caution in Cautions and Notices.

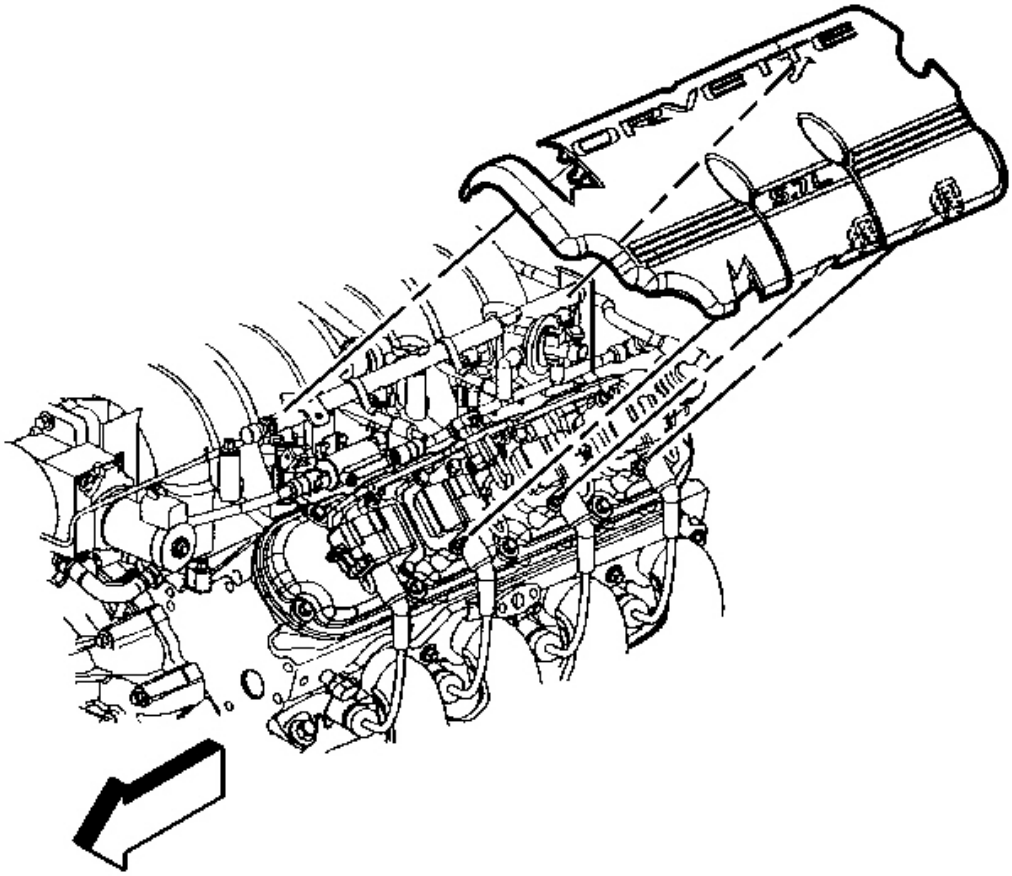

Fig. 282: Left Fuel Rail Cover
Courtesy of GENERAL MOTORS CORP.

1. Remove the left fuel rail cover.

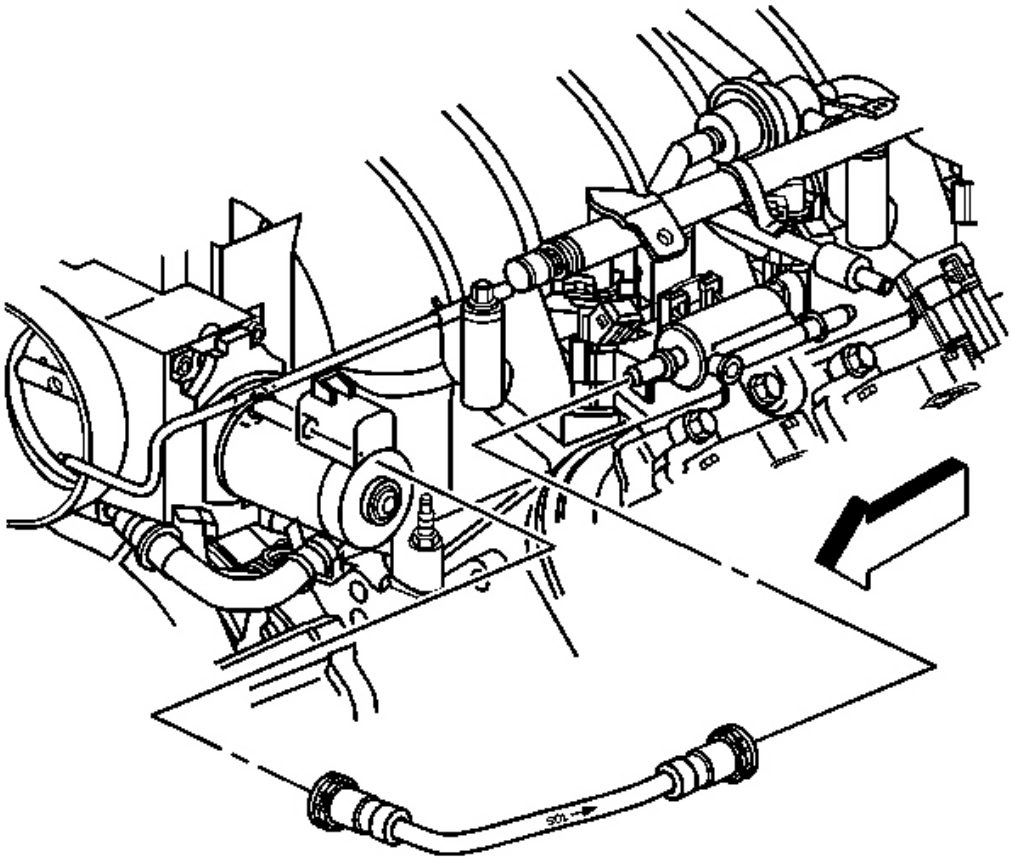

Fig. 283: Intake Manifold EVAP Pipe
Courtesy of GENERAL MOTORS CORP.

2. Disconnect the quick-connect fittings at the intake manifold and the EVAP canister purge valve. Refer to **Quick Connect Fitting(s) Service (Plastic Collar)** .
3. Remove the EVAP pipe.
4. Cap the intake manifold pipe and the EVAP canister purge valve in order to prevent possible contamination.

Installation Procedure

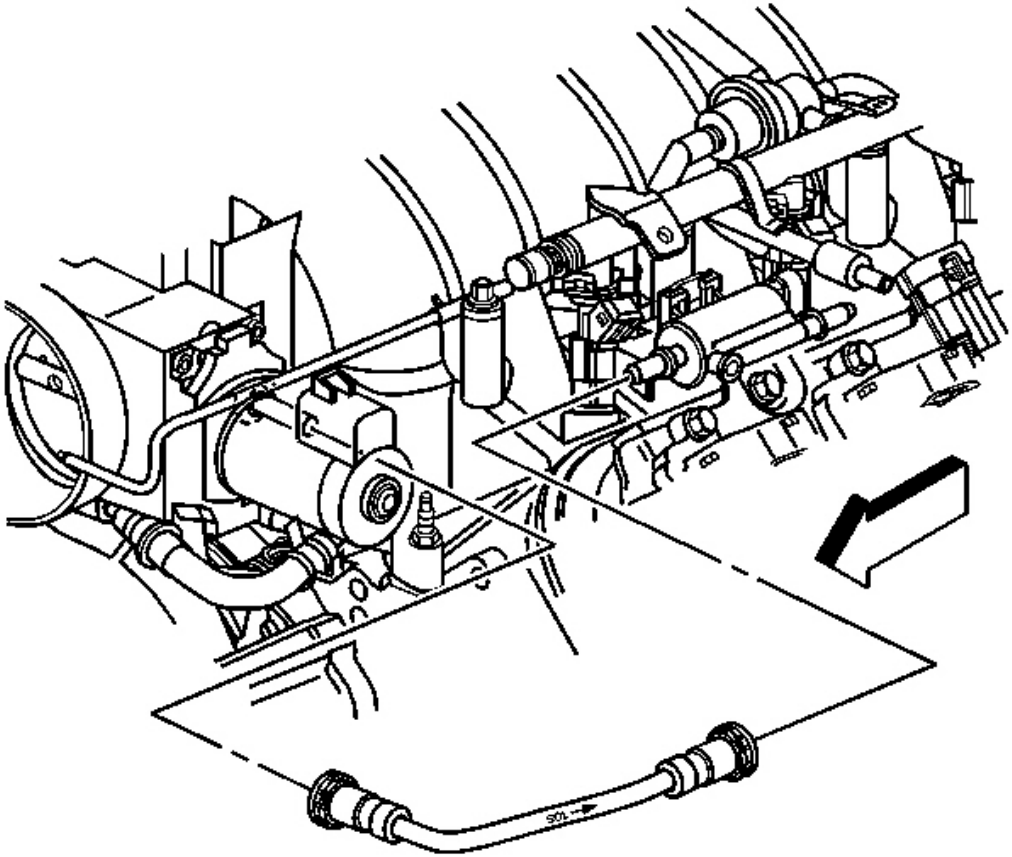

Fig. 284: Intake Manifold EVAP Pipe
Courtesy of GENERAL MOTORS CORP.

1. Remove the caps from the intake manifold pipe and the EVAP canister purge valve.
2. Install the EVAP pipe to the intake manifold and the EVAP canister purge valve.

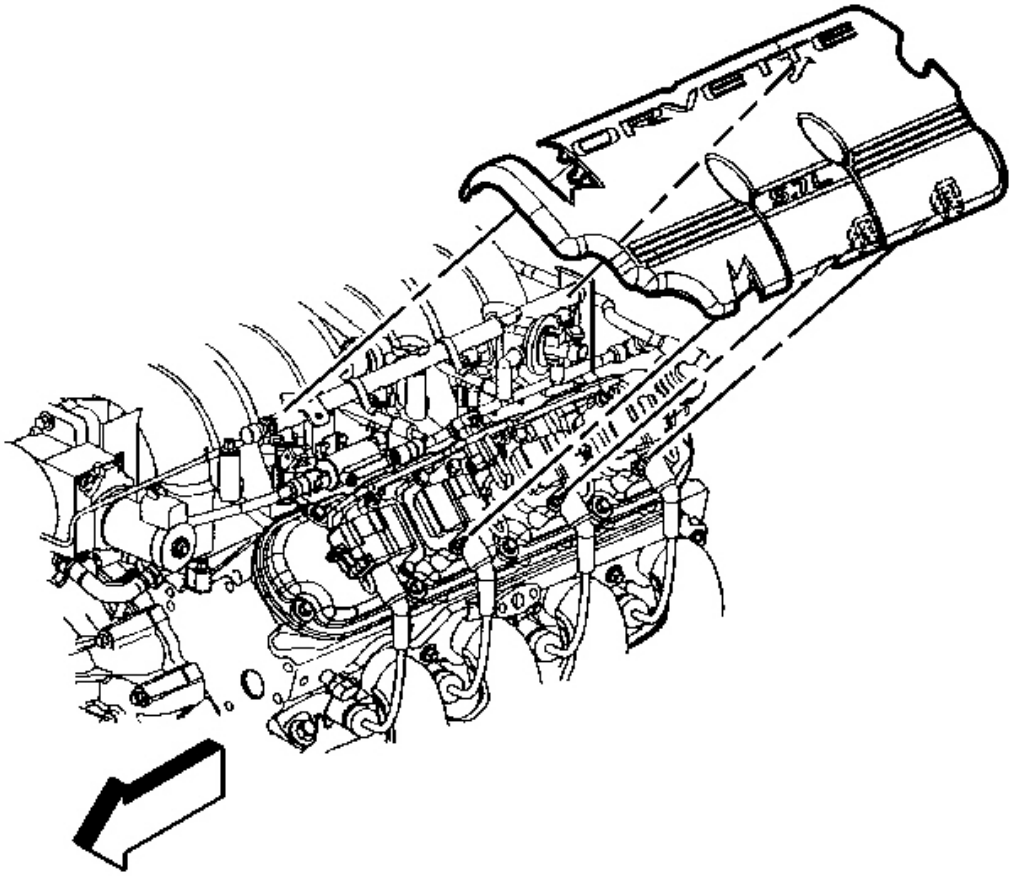

Fig. 285: Left Fuel Rail Cover
Courtesy of GENERAL MOTORS CORP.

3. Install the left fuel rail cover.

EVAPORATIVE EMISSION (EVAP) HOSES/PIPES REPLACEMENT - ENGINE (CHASSIS)

Removal Procedure

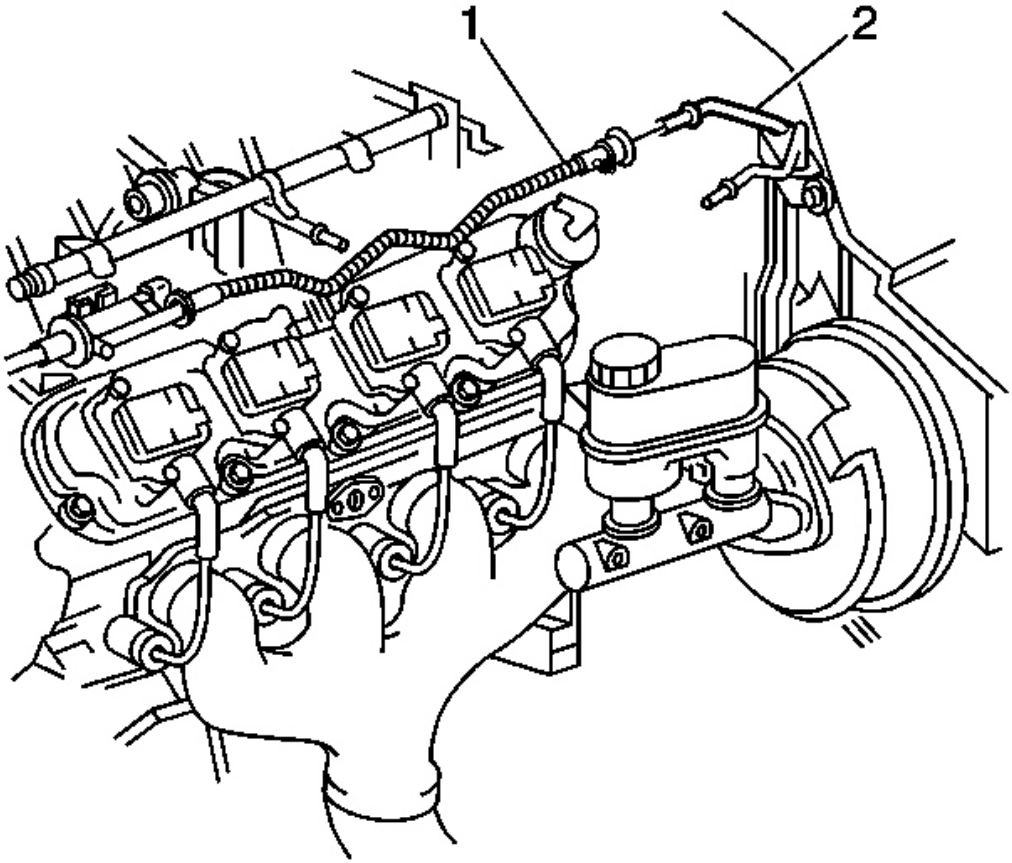

Fig. 286: Chassis Purge Pipe & Engine Purge Pipe
Courtesy of GENERAL MOTORS CORP.

1. Disconnect the engine purge pipe (1) from the chassis purge pipe (2).
2. Cap the engine purge pipe in order to prevent possible contamination.

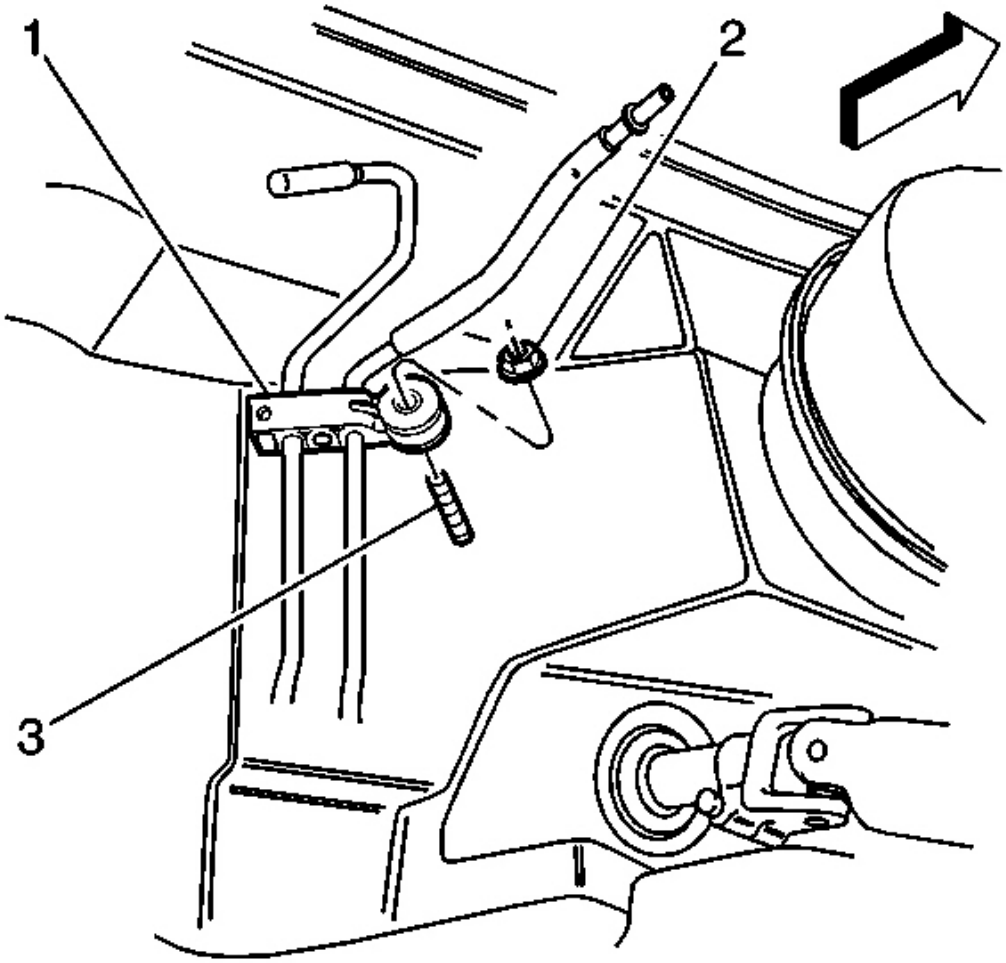

Fig. 287: EVAP Pipe Retainer & Chassis Fuel
Courtesy of GENERAL MOTORS CORP.

3. Disconnect the chassis fuel and evaporative emission (EVAP) pipe retainer (1) from the upper front of dash mounting stud (3).

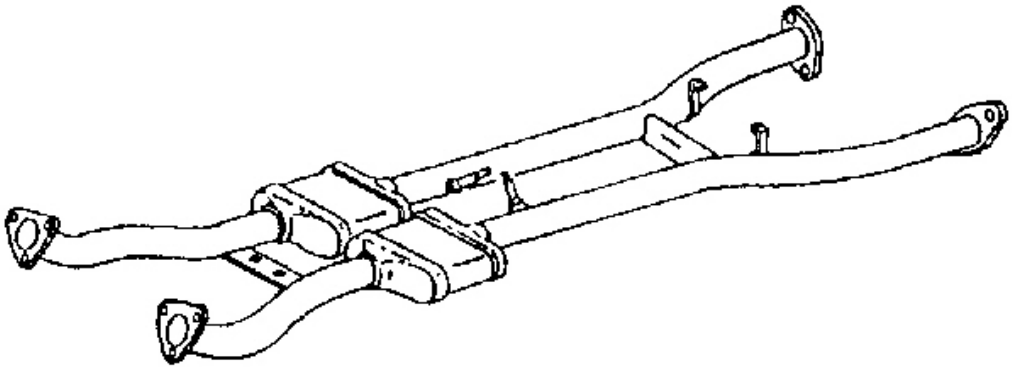

Fig. 288: Exhaust Intermediate Pipe
Courtesy of GENERAL MOTORS CORP.

4. Raise the vehicle. Refer to **Lifting and Jacking the Vehicle** in General Information.
5. Remove the exhaust intermediate pipe.

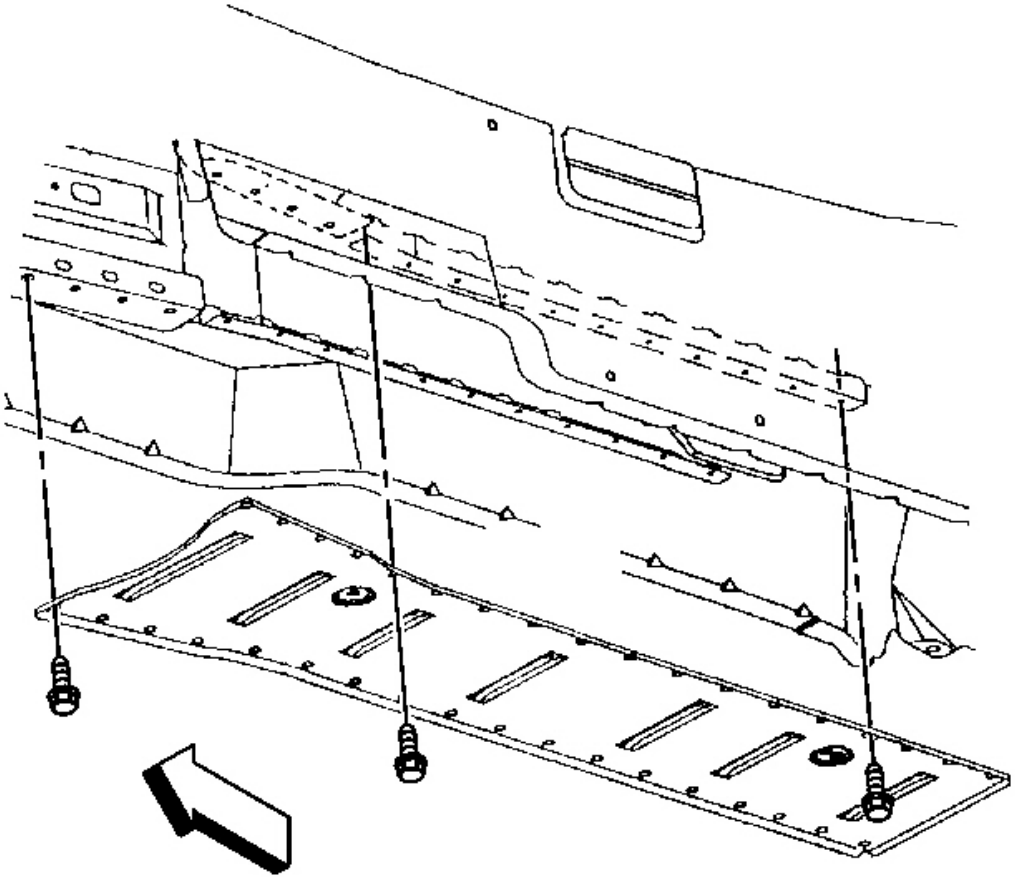

Fig. 289: Driveline Tunnel Closeout Panel
Courtesy of GENERAL MOTORS CORP.

6. Remove the driveline tunnel closeout panel. Refer to **Driveline Tunnel Closeout Panel Replacement** in Propeller Shaft.

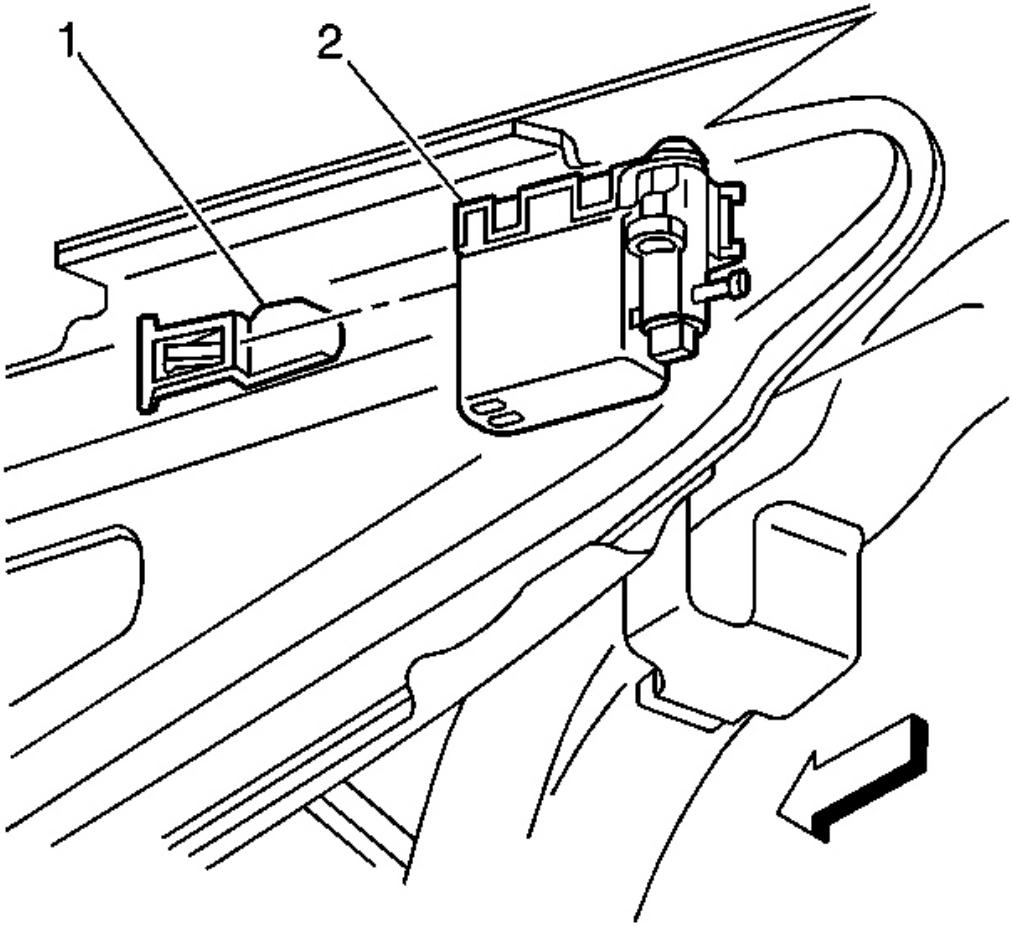

Fig. 290: EVAP Canister Vent Solenoid Valve & Bracket
Courtesy of GENERAL MOTORS CORP.

7. Remove the EVAP canister vent valve (2) from the bracket (1).

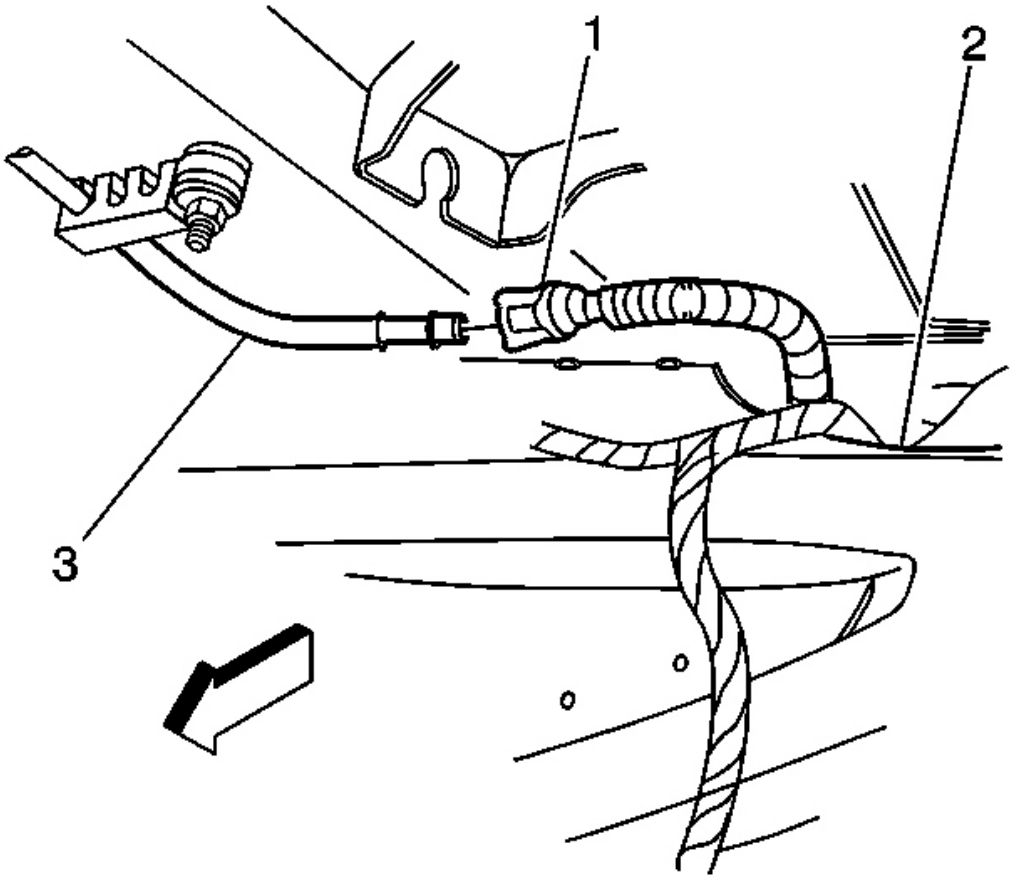

Fig. 291: Rear EVAP Purge Pipe & Chassis Purge Pipe
Courtesy of GENERAL MOTORS CORP.

8. Disconnect the rear purge pipe (1) at the chassis purge pipe (3).
9. Cap the rear purge pipe.

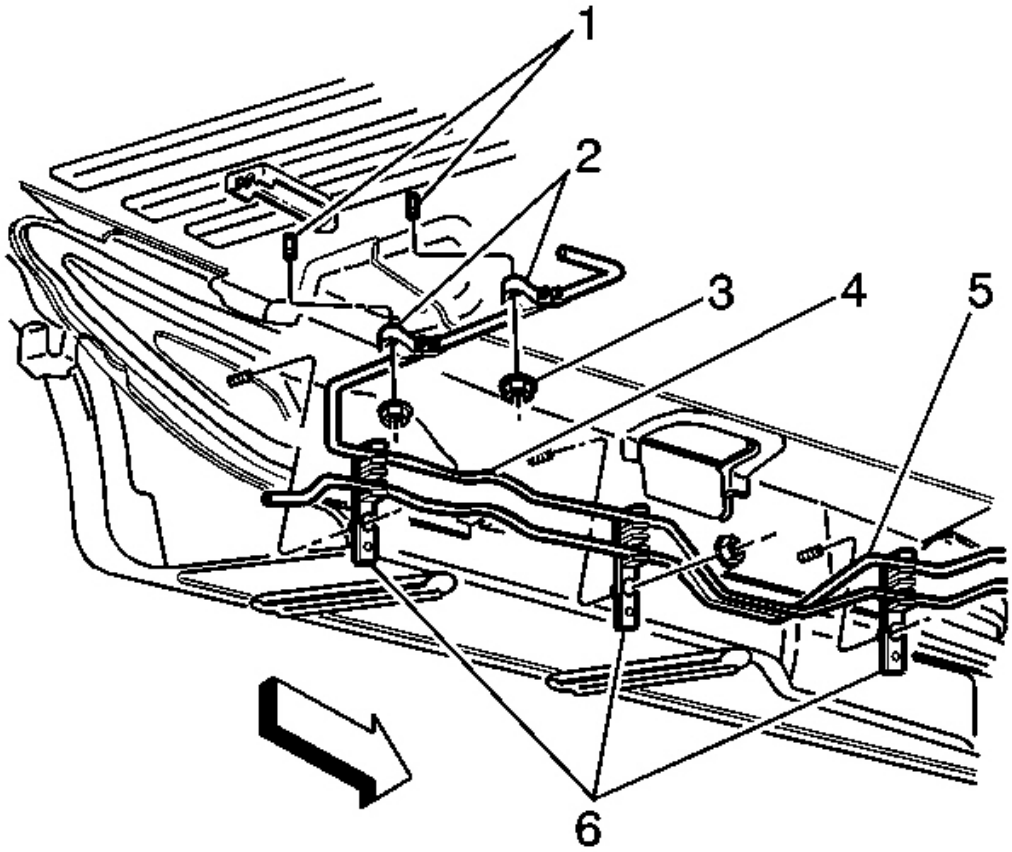

Fig. 292: Underbody Retainers, Chassis Fuel Pipe & Purge Pipe
Courtesy of GENERAL MOTORS CORP.

10. Remove the chassis purge pipe (4) rear underbody retainer nuts (3).
11. Remove the chassis purge pipe (4) from the rear underbody retainers (2).
12. Disconnect the chassis purge pipe (4) from the side underbody retainers (6).
13. Remove the chassis purge pipe.

Installation Procedure

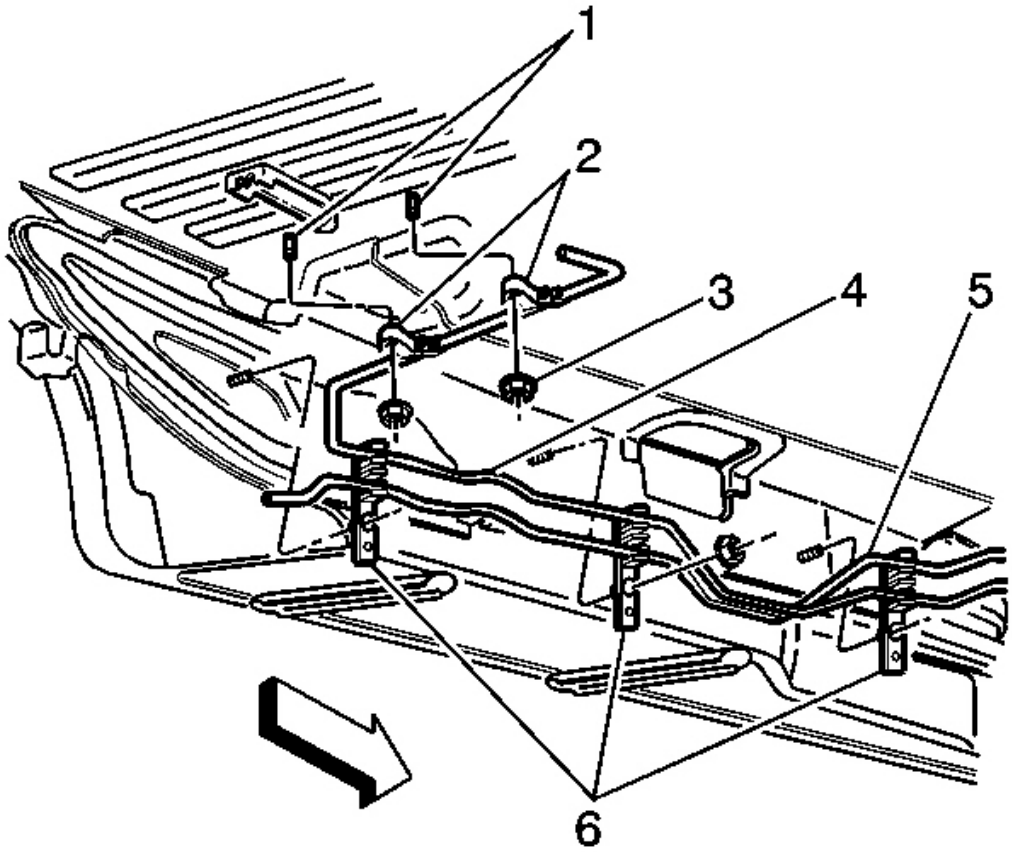

Fig. 293: Underbody Retainers, Chassis Fuel Pipe & Purge Pipe
Courtesy of GENERAL MOTORS CORP.

CAUTION: Refer to Fuel and EVAP Pipe Caution in Cautions and Notices.

IMPORTANT:

- **Follow the same routing as the original pipe.**
- **Secure the pipe in order to prevent chafing.**
- **Do not kink or bend the pipe.**

1. Install the chassis purge pipe (4) into the side underbody retainers (6).
2. Install the chassis purge pipe (4) into the rear underbody retainers (2).
3. Install the underbody retainers (2) on the mounting studs (1).

NOTE: **Refer to Fastener Notice in Cautions and Notices.**

4. Install the chassis purge pipe (4) underbody retainer nuts (3).

   Tighten: Tighten the EVAP pipe retainer bracket nuts to 6 N.m (53 lb in).

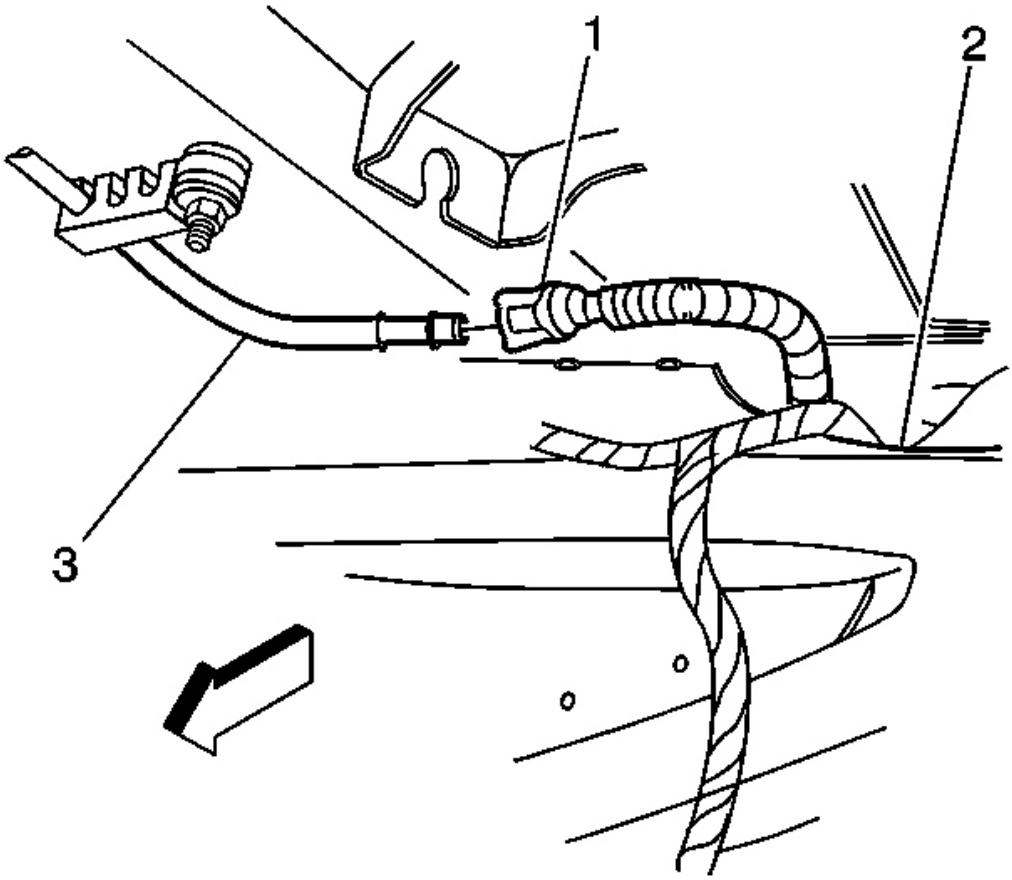

Fig. 294: Rear EVAP Purge Pipe & Chassis Purge Pipe
Courtesy of GENERAL MOTORS CORP.

5. Uncap the rear EVAP pipe.
6. Connect the rear EVAP pipe (1) to the chassis purge pipe (3).

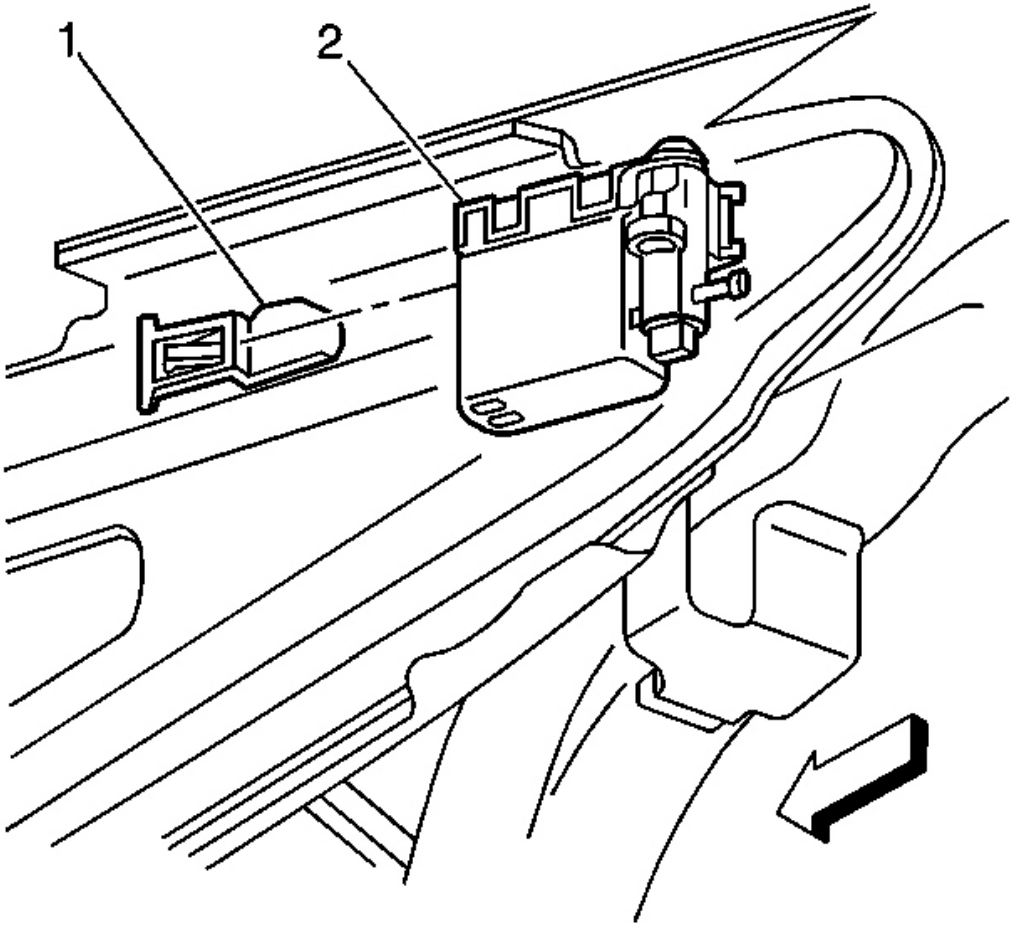

Fig. 295: EVAP Canister Vent Solenoid Valve & Bracket
Courtesy of GENERAL MOTORS CORP.

7. Install the EVAP canister vent valve (2) to the bracket (1).

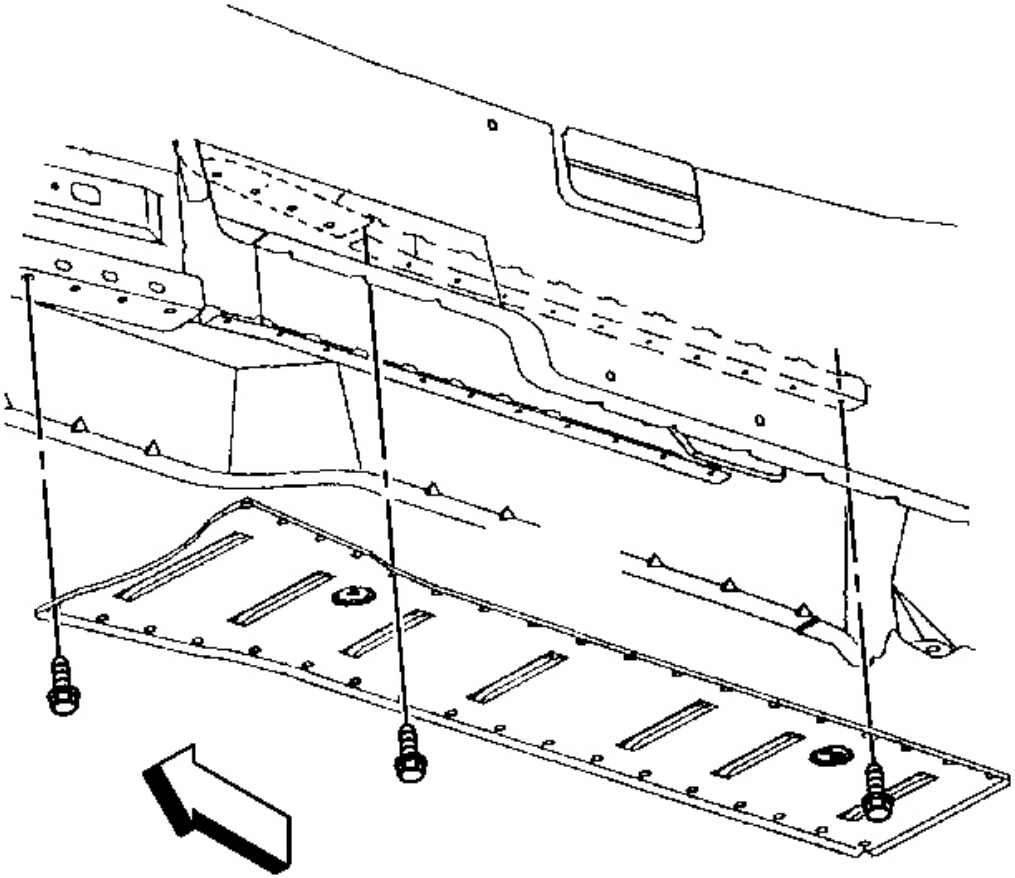

Fig. 296: Driveline Tunnel Closeout Panel
Courtesy of GENERAL MOTORS CORP.

8. Install the driveline tunnel closeout panel. Refer to **Driveline Tunnel Closeout Panel Replacement** in Propeller Shaft.

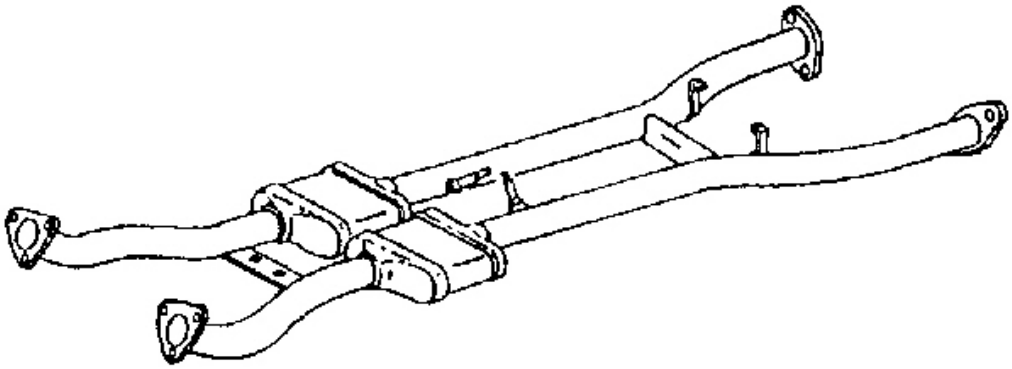

Fig. 297: Exhaust Intermediate Pipe
Courtesy of GENERAL MOTORS CORP.

9. Install the exhaust intermediate pipe.
10. Lower the vehicle.
11. Uncap the engine purge pipe.

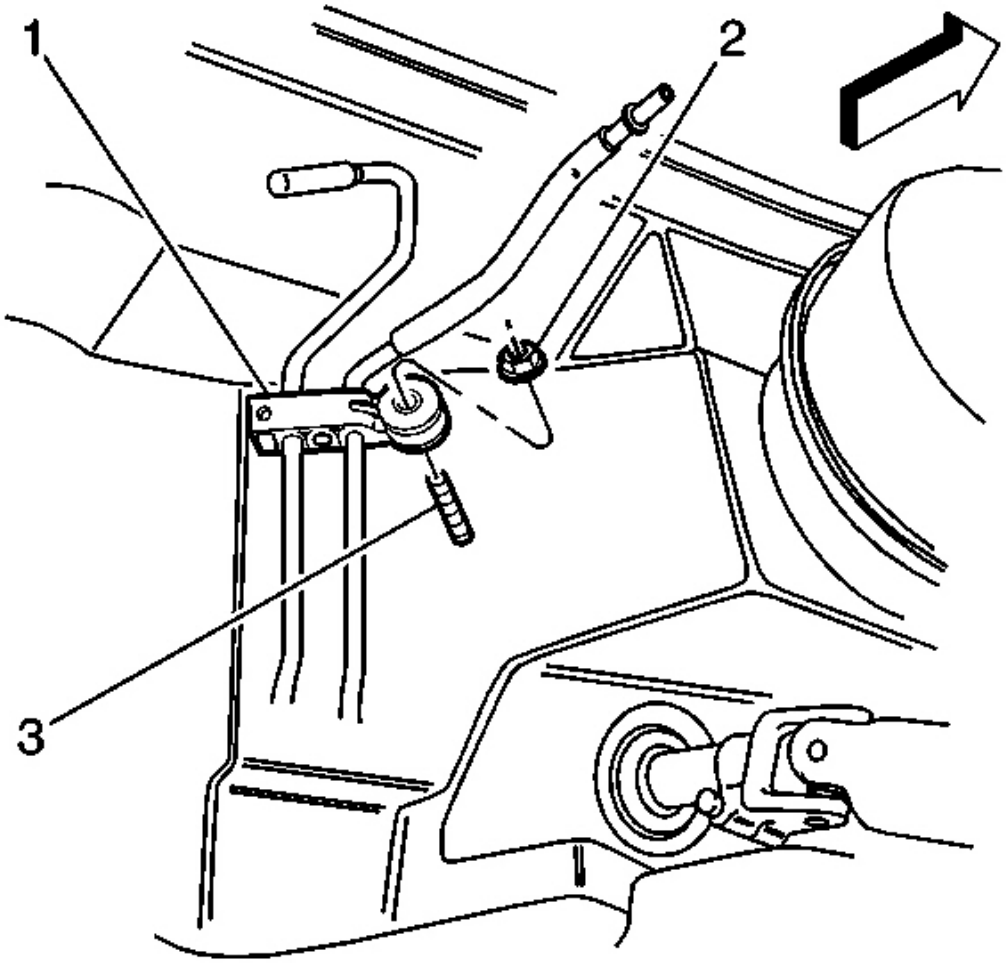

Fig. 298: EVAP Pipe Retainer & Chassis Fuel
Courtesy of GENERAL MOTORS CORP.

12. Connect the chassis fuel and EVAP pipe retainer (1) at the upper front of dash mounting stud (3).

    Tighten: Tighten the fuel and EVAP pipe bracket retainer nut to 6 N.m (53 lb in).

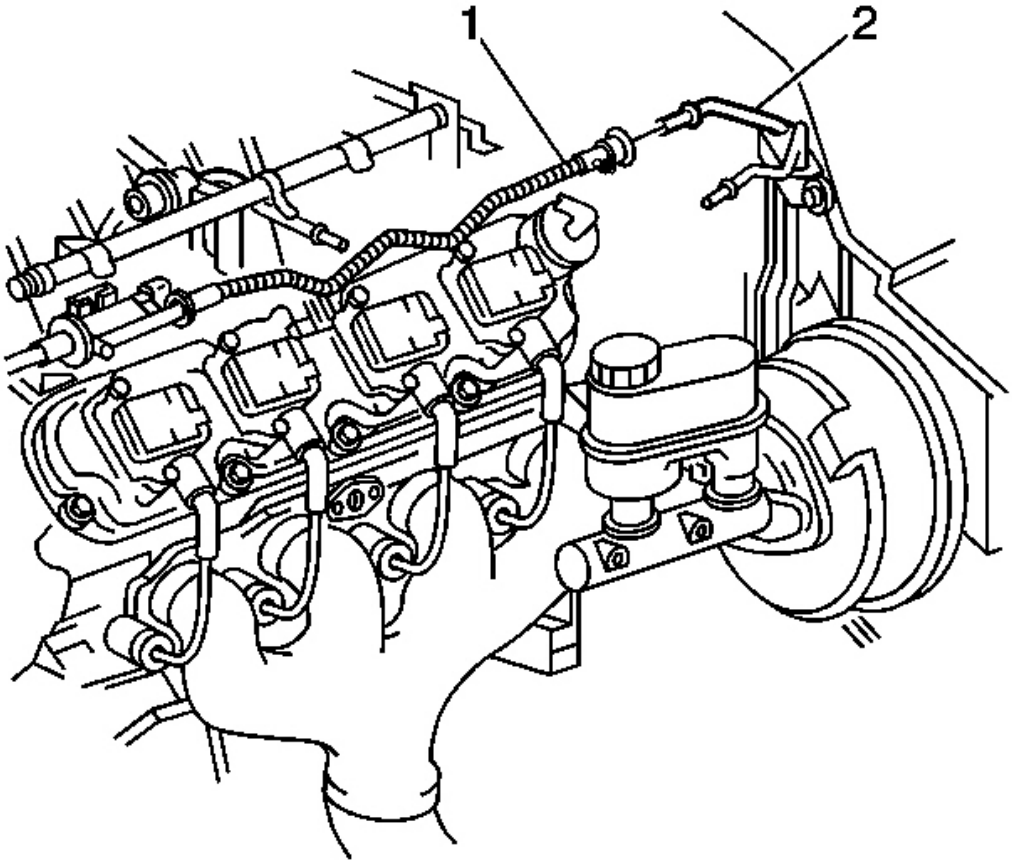

Fig. 299: Chassis Purge Pipe & Engine Purge Pipe
Courtesy of GENERAL MOTORS CORP.

13. Connect the engine purge pipe (1) to the chassis purge pipe (2).

EVAPORATIVE EMISSION (EVAP) HOSES/PIPES REPLACEMENT - ENGINE (CHASSIS/TANK)

Removal Procedure

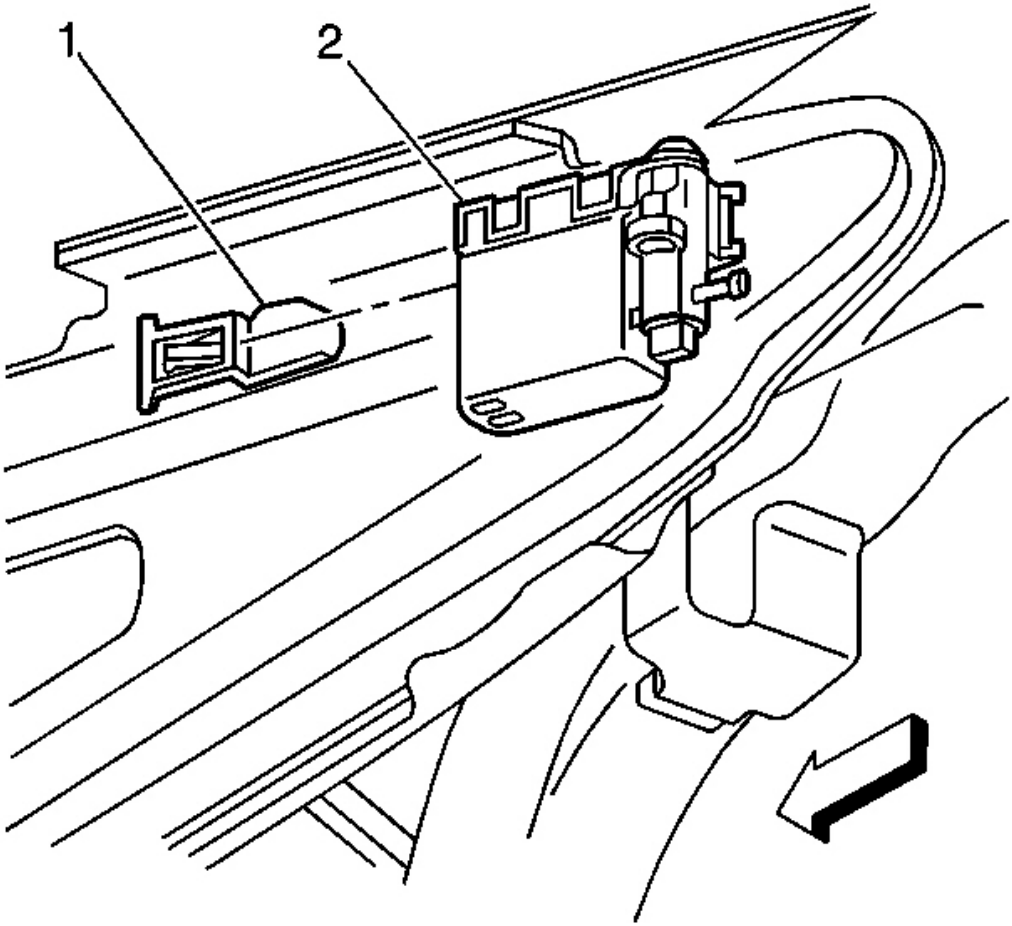

Fig. 300: EVAP Canister Vent Solenoid Valve & Bracket
Courtesy of GENERAL MOTORS CORP.

1. Raise the vehicle. Refer to **Lifting and Jacking the Vehicle** in General Information.
2. For vehicles equipped with an automatic transmission, remove the right muffler. Refer to **Muffler Replacement - Right** in Engine Exhaust.
3. Remove the evaporative emission (EVAP) vent valve (2) from the bracket (1).

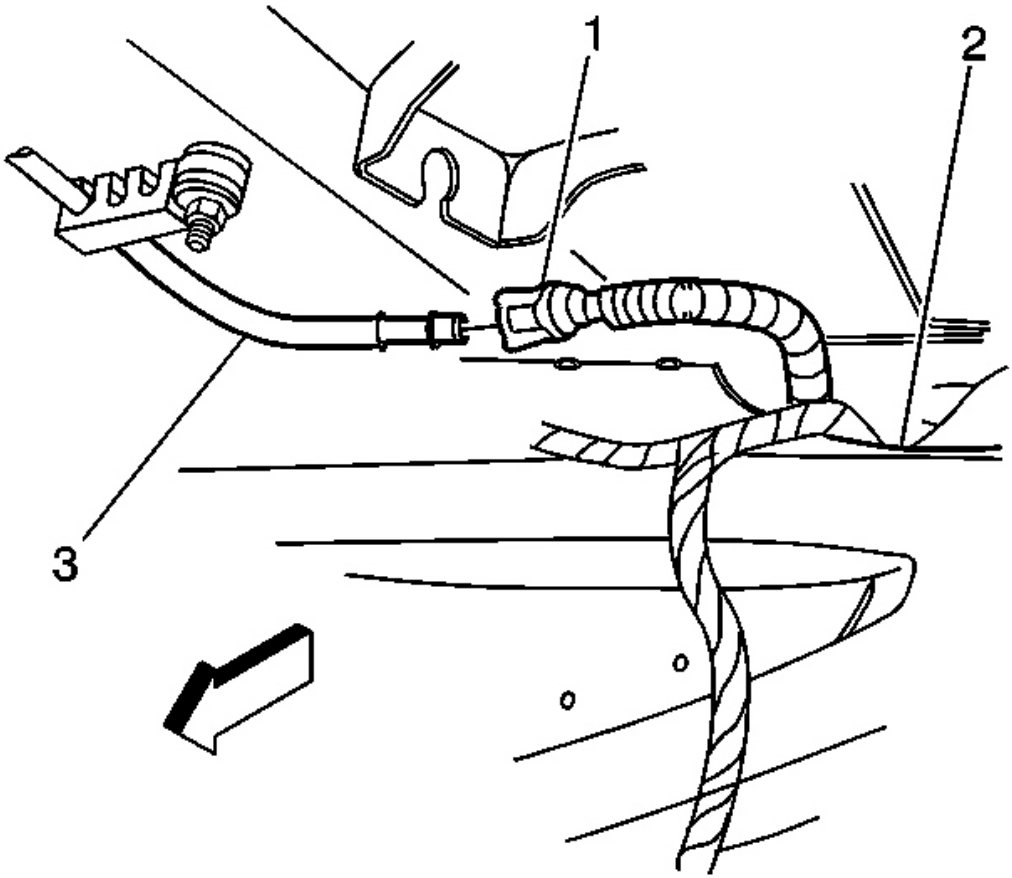

Fig. 301: Rear EVAP Purge Pipe & Chassis Purge Pipe
Courtesy of GENERAL MOTORS CORP.

4. Disconnect the rear EVAP purge pipe (1) at the chassis EVAP purge pipe (3).
5. Cap the chassis EVAP purge pipe.

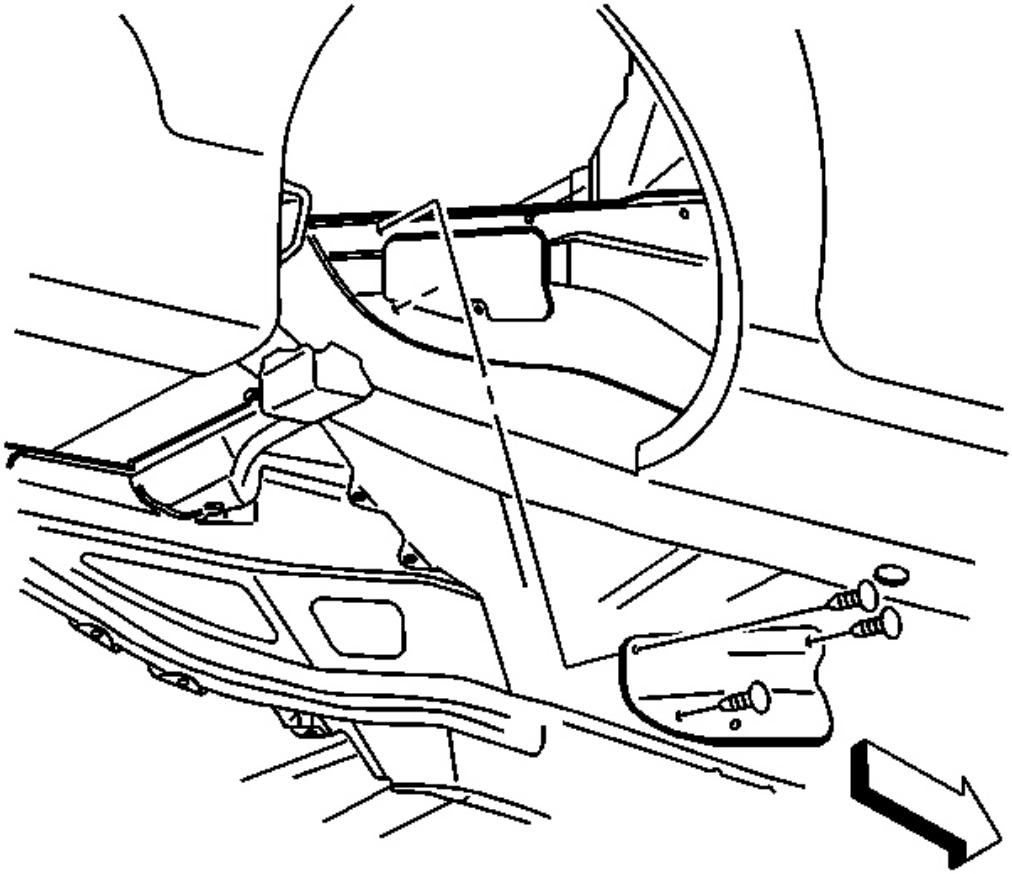

Fig. 302: EVAP Canister Access Cover In Right Rear Wheelhouse Panel
Courtesy of GENERAL MOTORS CORP.

6. Remove the right rear wheelhouse panel. Refer to **Wheelhouse Panel Replacement** in Body Rear End.
7. Remove the EVAP canister access cover.

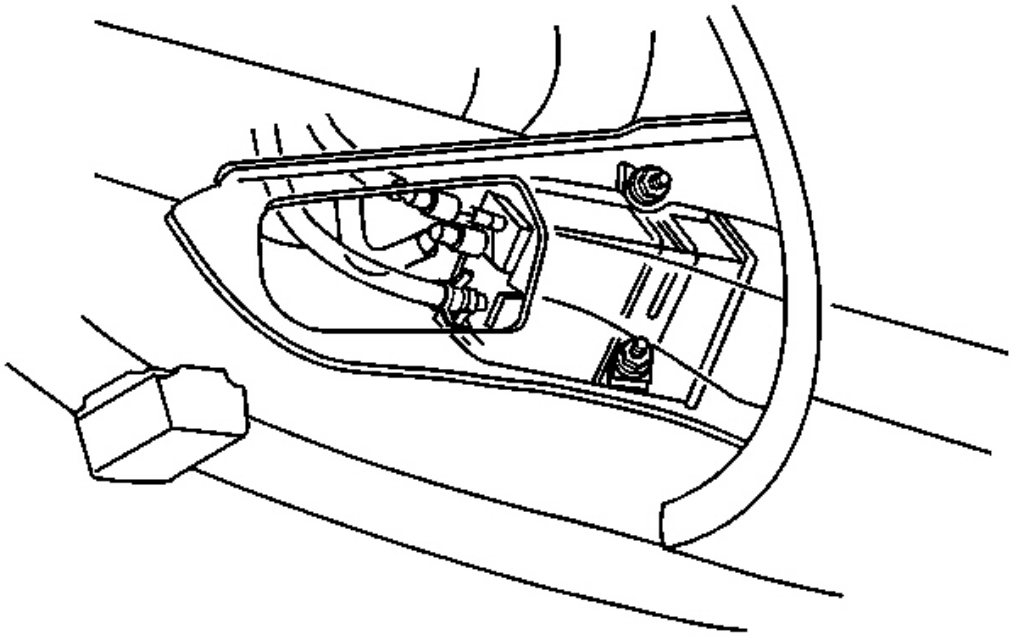

Fig. 303: EVAP Canister & Purge Pipe
Courtesy of GENERAL MOTORS CORP.

8. Disconnect the EVAP purge pipe at the canister.
9. Remove the rear EVAP purge pipe.

Installation Procedure

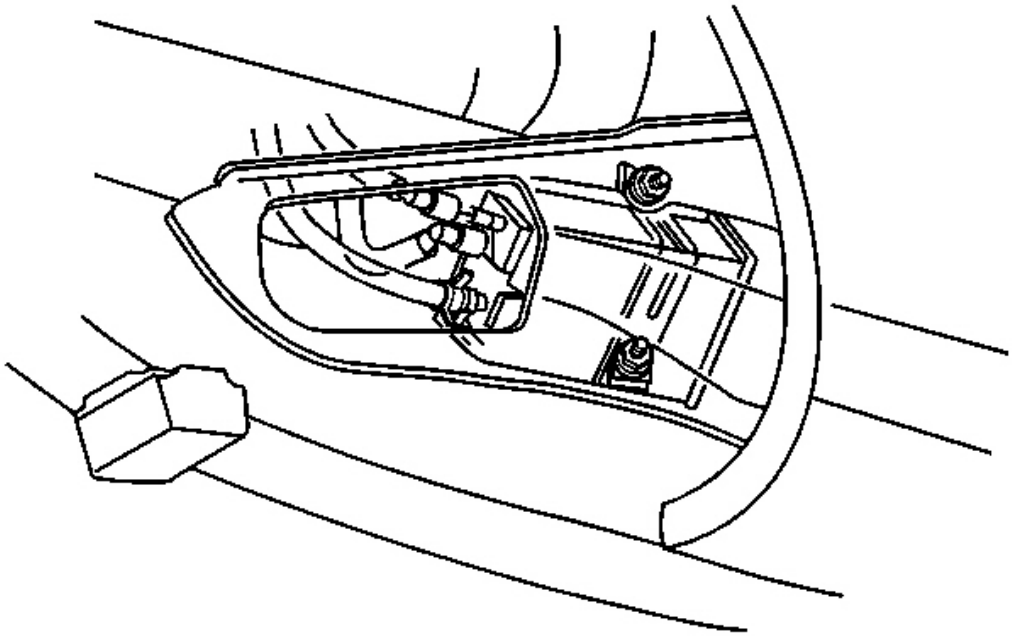

Fig. 304: EVAP Canister & Purge Pipe
Courtesy of GENERAL MOTORS CORP.

CAUTION: Refer to Fuel and EVAP Pipe Caution in Cautions and Notices.

1. Route the EVAP purge pipe through the right tunnel brace opening.
2. Connect the EVAP purge pipe to the canister.

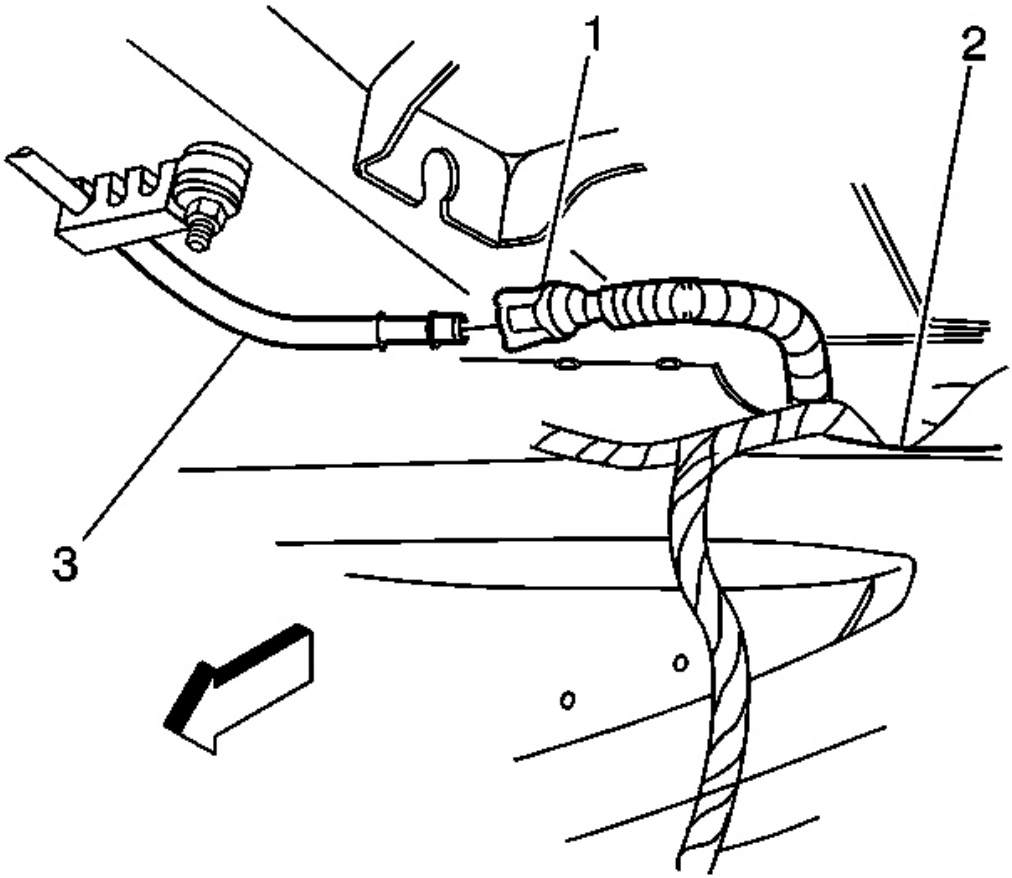

Fig. 305: Rear EVAP Purge Pipe & Chassis Purge Pipe
Courtesy of GENERAL MOTORS CORP.

3. Remove the cap from the chassis EVAP purge pipe.
4. Connect the rear EVAP purge pipe (1) to the chassis EVAP purge pipe (3).

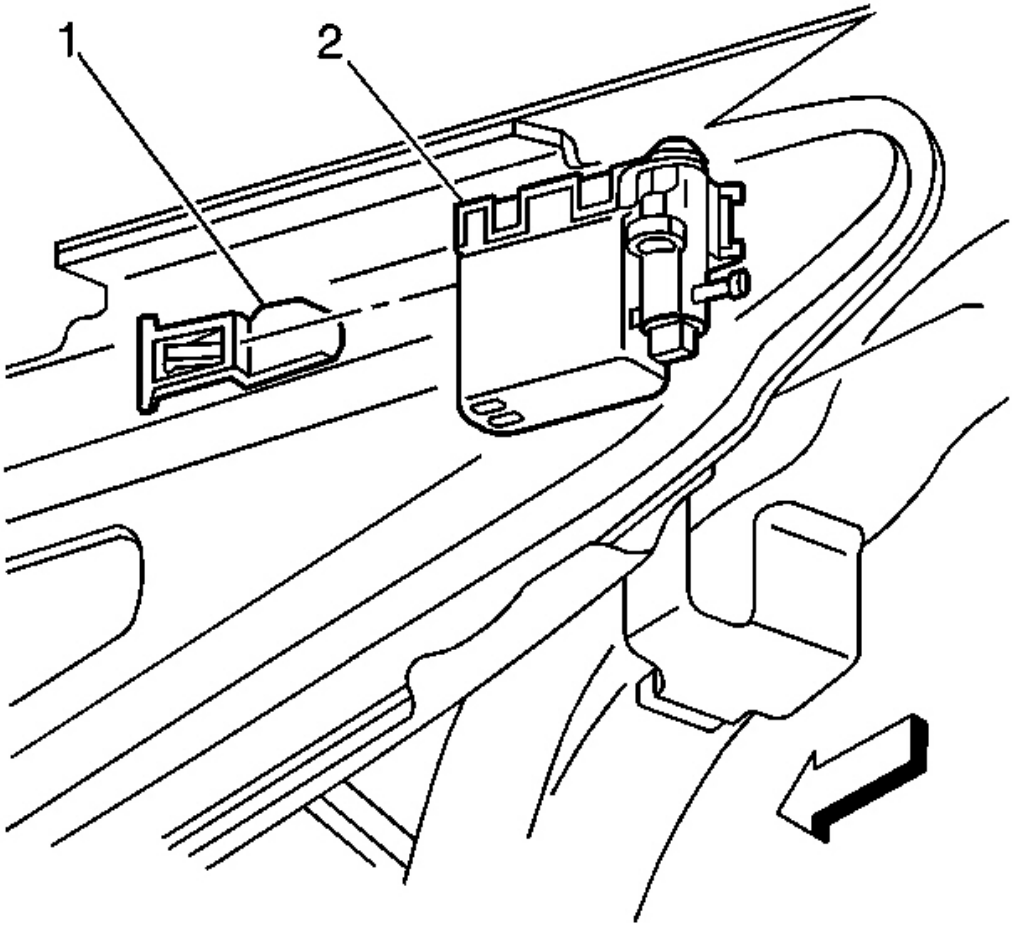

Fig. 306: EVAP Canister Vent Solenoid Valve & Bracket
Courtesy of GENERAL MOTORS CORP.

5. Install the EVAP vent valve (2) to the bracket (1).
6. For vehicles equipped with automatic transmission, install the right muffler. Refer to **Muffler Replacement - Right** in Engine Exhaust.

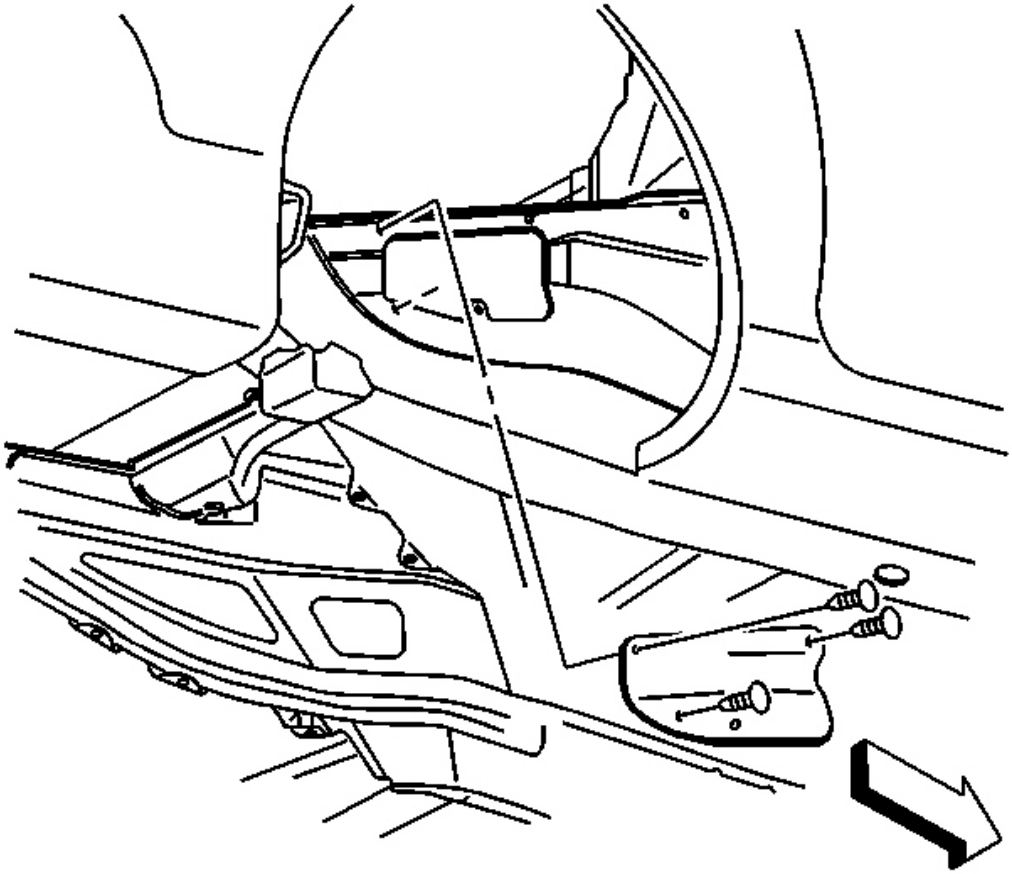

Fig. 307: EVAP Canister Access Cover In Right Rear Wheelhouse Panel
Courtesy of GENERAL MOTORS CORP.

7. Install the EVAP canister access cover.
8. Install the right rear wheelhouse panel. Refer to **Wheelhouse Panel Replacement** in Body Rear End.
9. Lower the vehicle.

EVAPORATIVE EMISSION (EVAP) HOSES/PIPES REPLACEMENT - ENGINE (TANK/TANK)

Tool Required

J 34730-1A Fuel Pressure Gage. See **Special Tools and Equipment** .

Removal Procedure

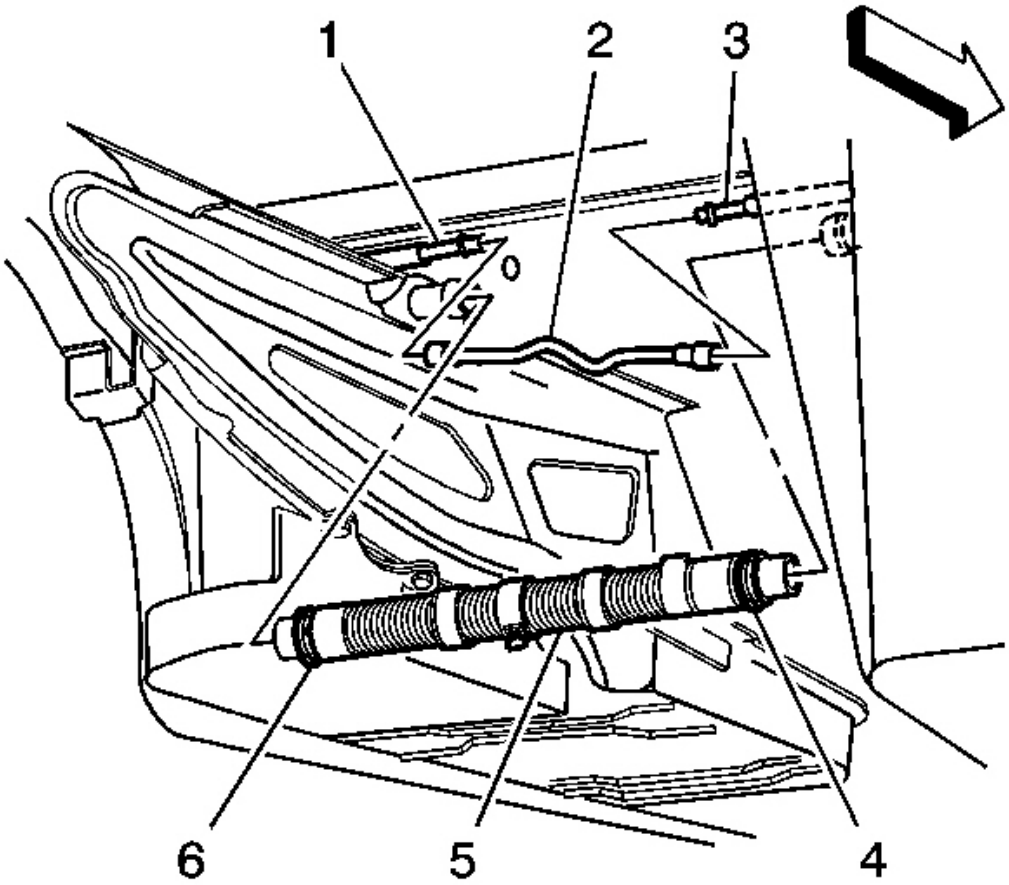

Fig. 308: EVAP Crossover Pipe & Tank Crossover Hose
Courtesy of GENERAL MOTORS CORP.

1. Disconnect the negative battery cable. Refer to **Battery Negative Cable Disconnect/Connect Procedure** in Engine Electrical.
2. Relieve the fuel system pressure. Refer to the **Fuel Pressure Relief Procedure** .
3. Drain the fuel tanks below the level of the fuel tank crossover hose. Refer to **Fuel Tank Draining Procedure** .
4. For vehicles equipped with automatic transmission, remove the left and right muffler. Refer to **Muffler Replacement - Right** , and to **Muffler Replacement - Left** in Engine Exhaust.
5. Disconnect the tank crossover hose (5) at the right fuel tank and the left fuel tank.
6. Disconnect the evaporative emission (EVAP) pipe (2) at the right tank EVAP pipe (3) and the left tank EVAP pipe (1).
7. Remove the rear EVAP pipe (2).

8. Cap the open pipes in order to prevent possible contamination.

Installation Procedure

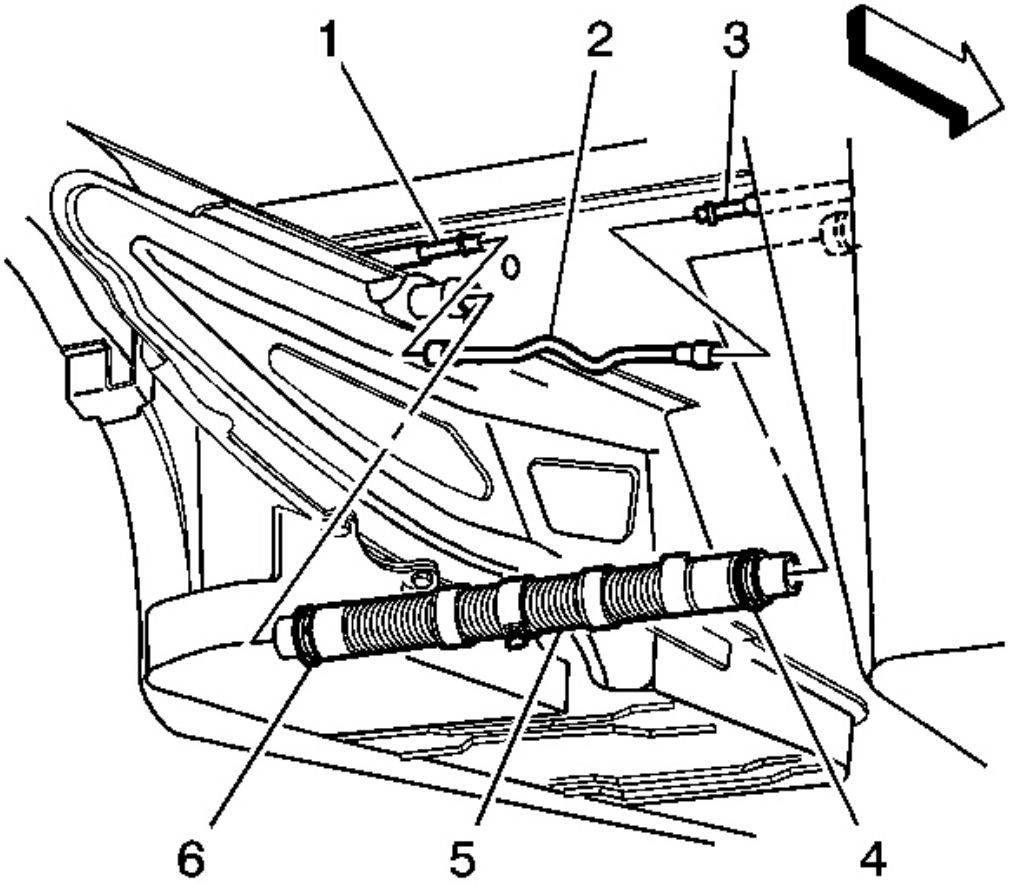

Fig. 309: EVAP Crossover Pipe & Tank Crossover Hose
Courtesy of GENERAL MOTORS CORP.

NOTE: **Replace the EVAP pipes and hoses with the original equipment or parts that meet the GM specifications for those parts. The replacement EVAP pipe must have the same type of fittings as the original pipe in order to ensure the integrity of the connection. When replacing EVAP hoses, use only reinforced fuel-resistant hose identified with the word Fluoroelastomer or GM 6163-M on the hose. The inside hose diameter must match the outside pipe diameter. Do not use rubber hose within 100 mm (4 in) of any part of the exhaust system or within 254 mm (10 in) of the**

catalytic converter.

1. Remove the caps from the pipes.
2. Connect the EVAP pipe (2) at the right tank EVAP pipe (3) and the left tank EVAP pipe (1).
3. Connect the tank crossover hose (5) at the right fuel tank and the left fuel tank.

NOTE: Refer to Fastener Notice in Cautions and Notices.

4. Push the clamp (4) outboard against the fuel tank, keeping the clamp parallel with the white stripe on the tank crossover hose.

   Tighten: Tighten the tank crossover hose clamps to 4 N.m (35 lb in).

5. Install the right and left muffler. Refer to **Muffler Replacement - Right** and to **Muffler Replacement - Left** in Engine Exhaust.
6. Refill the fuel system.
7. Tighten the fuel filler cap.
8. Connect the negative battery cable. Refer to **Battery Negative Cable Disconnect/Connect Procedure** in Engine Electrical
9. Use the following procedure in order to inspect for leaks:
   1. Turn the ignition switch ON, with the engine OFF for 2 seconds.
   2. Turn the ignition switch OFF, for 10 seconds.
   3. Turn the ignition switch ON, with the engine OFF.
   4. Inspect for fuel leaks.
10. Program the transmitters. Refer to **Transmitter Programming** in Keyless Entry.

EVAPORATIVE EMISSION (EVAP) HOSES/PIPES REPLACEMENT - ENGINE (VENT)

Removal Procedure

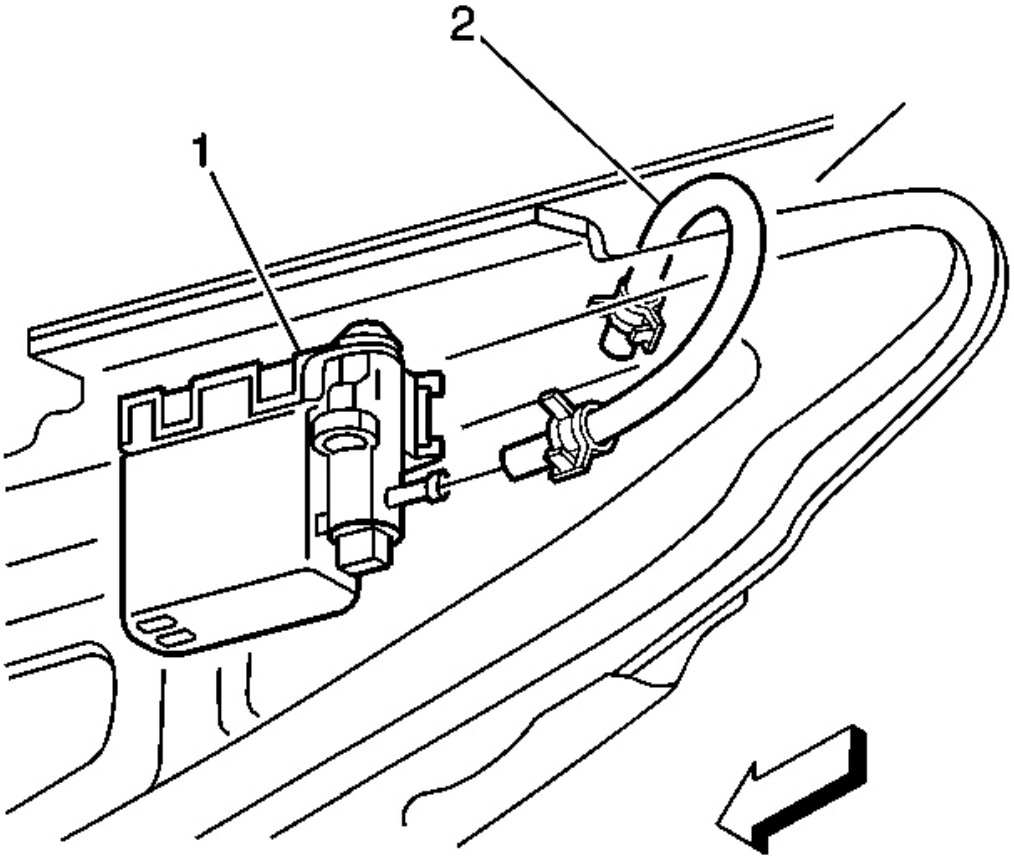

Fig. 310: EVAP Canister Vent Valve & Vent Hose
Courtesy of GENERAL MOTORS CORP.

1. Raise the vehicle. Refer to **Lifting and Jacking the Vehicle** in General Information.
2. For vehicles equipped with automatic transmission, remove the right muffler. Refer to **Muffler Replacement - Right** in Engine Exhaust.
3. Disconnect the vent hose (2) from the evaporative emission (EVAP) vent valve (1).
4. Remove the clamp from the vent hose.

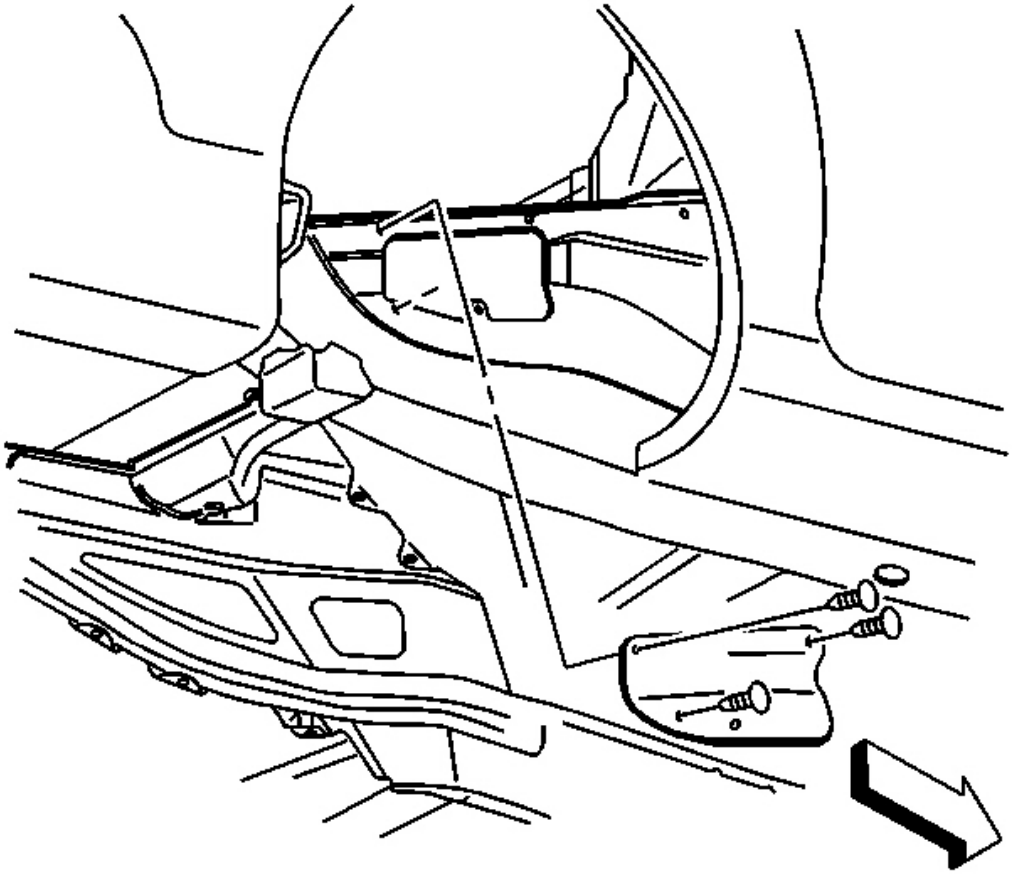

Fig. 311: EVAP Canister Access Cover In Right Rear Wheelhouse Panel
Courtesy of GENERAL MOTORS CORP.

5. Remove the right rear wheelhouse panel. Refer to **Wheelhouse Panel Replacement** in Body Rear End.
6. Remove the EVAP canister access cover.

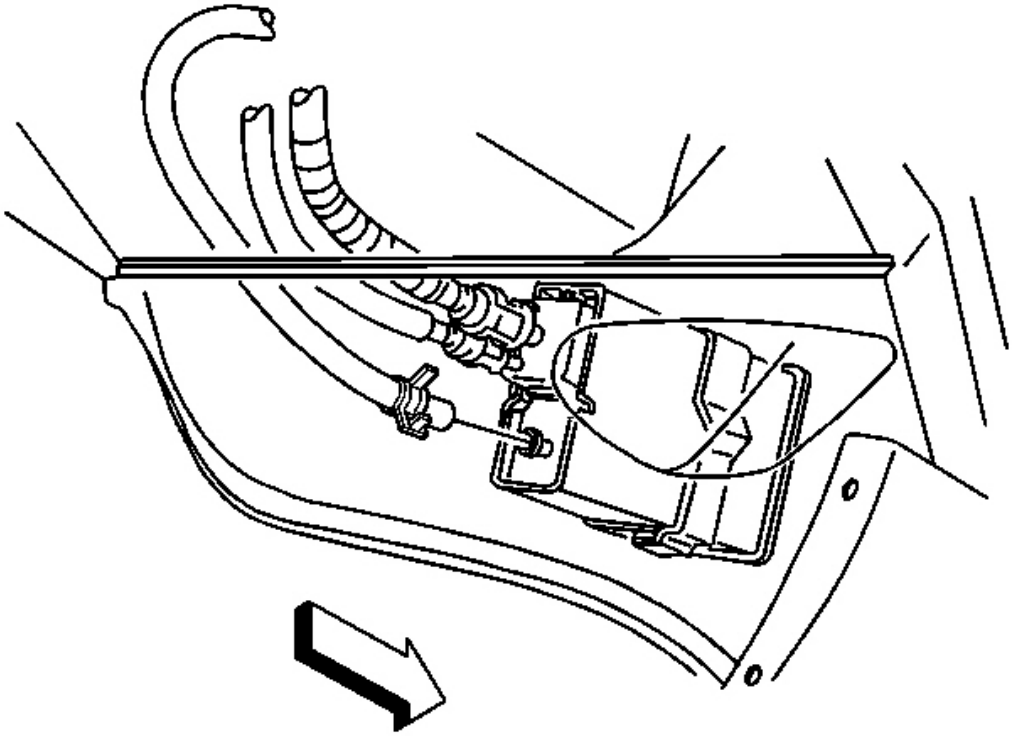

Fig. 312: EVAP Canister & Vent Hose
Courtesy of GENERAL MOTORS CORP.

7. Disconnect the vent hose from the EVAP canister.
8. Remove the vent hose.
9. Cap the EVAP vent valve and the EVAP canister in order to prevent possible EVAP system contamination.

Installation Procedure

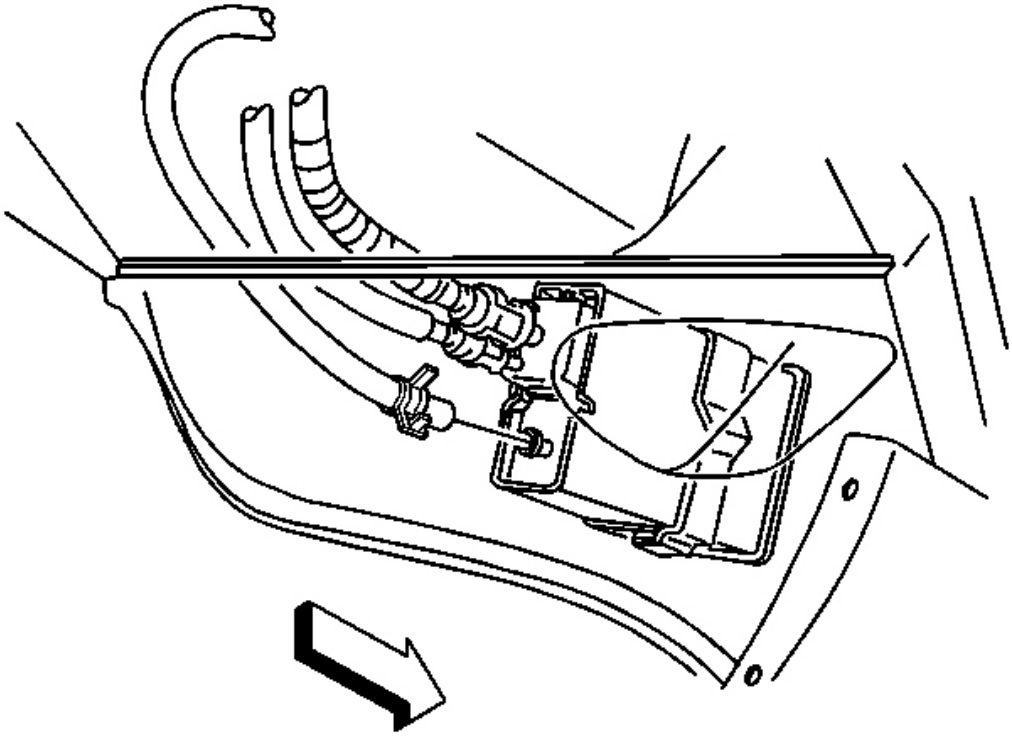

Fig. 313: EVAP Canister & Vent Hose
Courtesy of GENERAL MOTORS CORP.

CAUTION: Refer to Fuel and EVAP Pipe Caution in Cautions and Notices.

1. Remove the caps from the EVAP vent valve and the EVAP canister.
2. Route the vent hose over the floor panel tunnel panel rear brace.
3. Install the clamps on the vent hose.
4. Connect the vent hose to the EVAP canister.

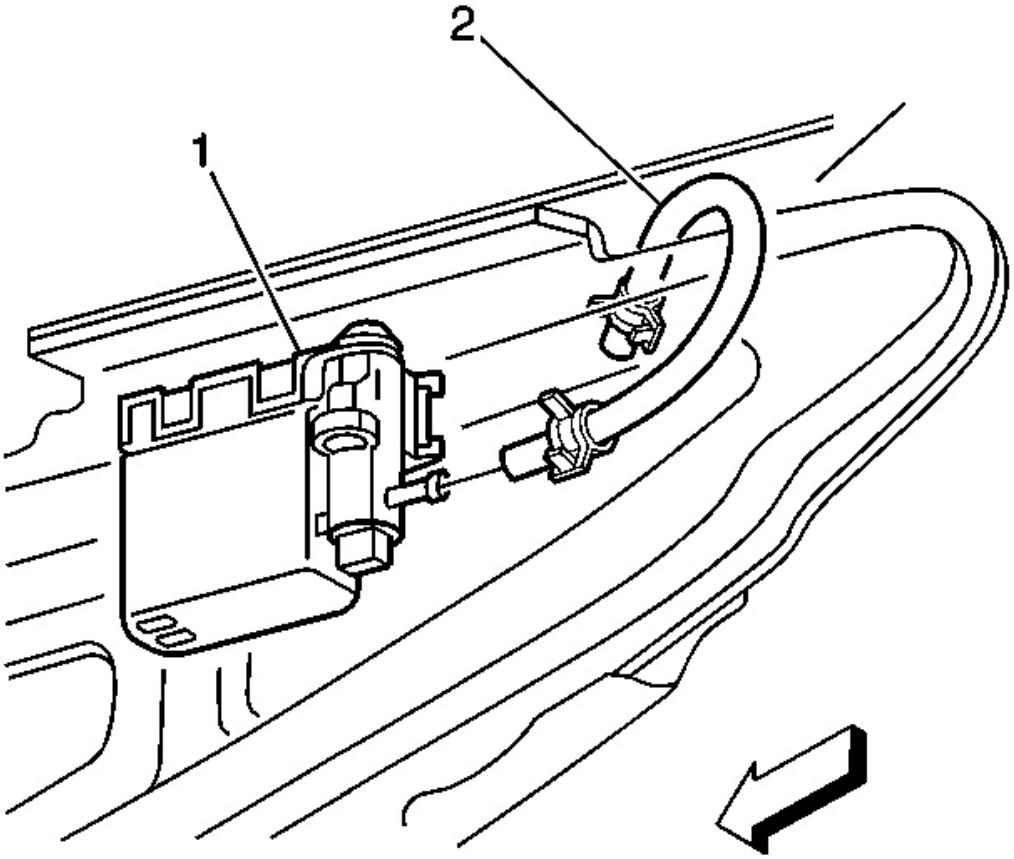

Fig. 314: EVAP Canister Vent Valve & Vent Hose
Courtesy of GENERAL MOTORS CORP.

5. Connect the vent hose (2) to the EVAP vent valve.
6. For vehicles equipped with automatic transmission, install the right muffler. Refer to **Muffler Replacement - Right** in Engine Exhaust.

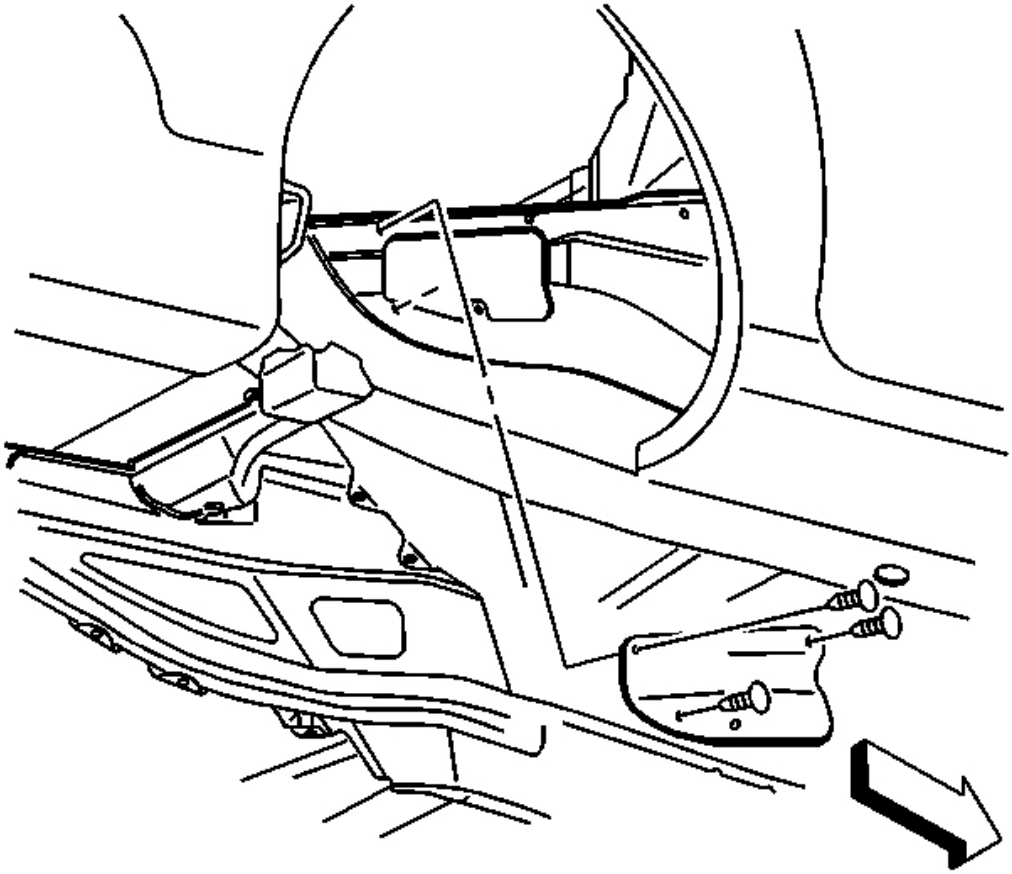

Fig. 315: EVAP Canister Access Cover In Right Rear Wheelhouse Panel
Courtesy of GENERAL MOTORS CORP.

7. Install the EVAP canister access cover.
8. Install the right rear wheelhouse panel. Refer to **Wheelhouse Panel Replacement** in Body Rear End.
9. Lower the vehicle.

EVAPORATIVE EMISSION (EVAP) CANISTER REPLACEMENT

Removal Procedure

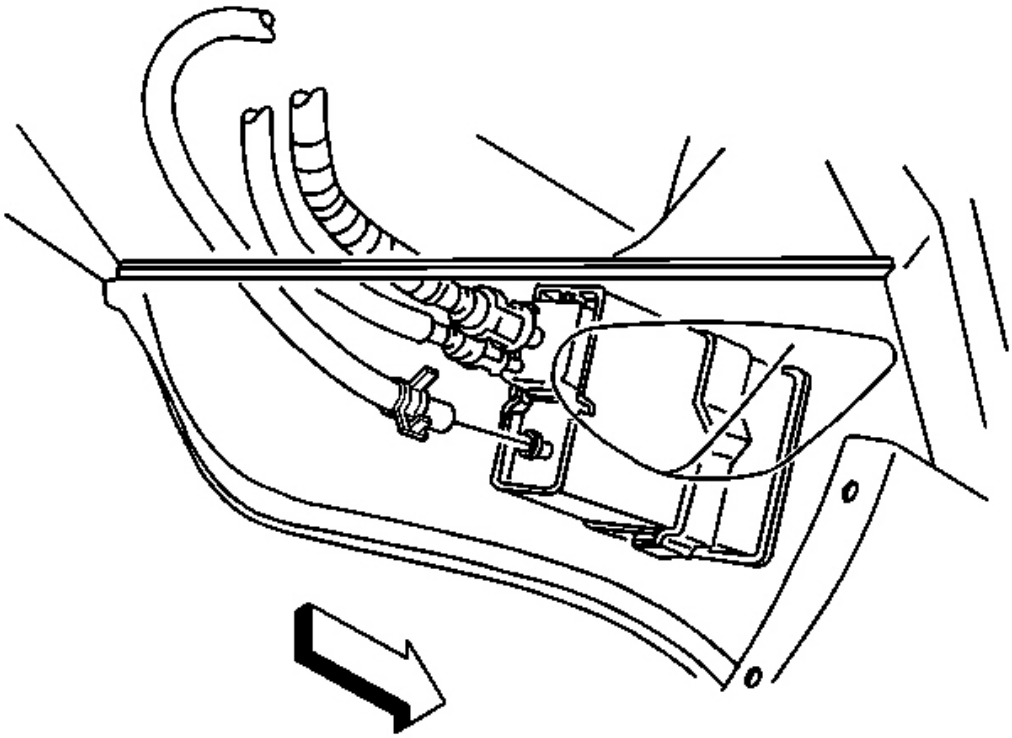

Fig. 316: EVAP Canister & Vent Hose
Courtesy of GENERAL MOTORS CORP.

1. Remove the right fuel tank. Refer to **Fuel Tank Replacement (Right)** or **Fuel Tank Replacement (Left)** .
2. Disconnect the vent hose from the EVAP canister.

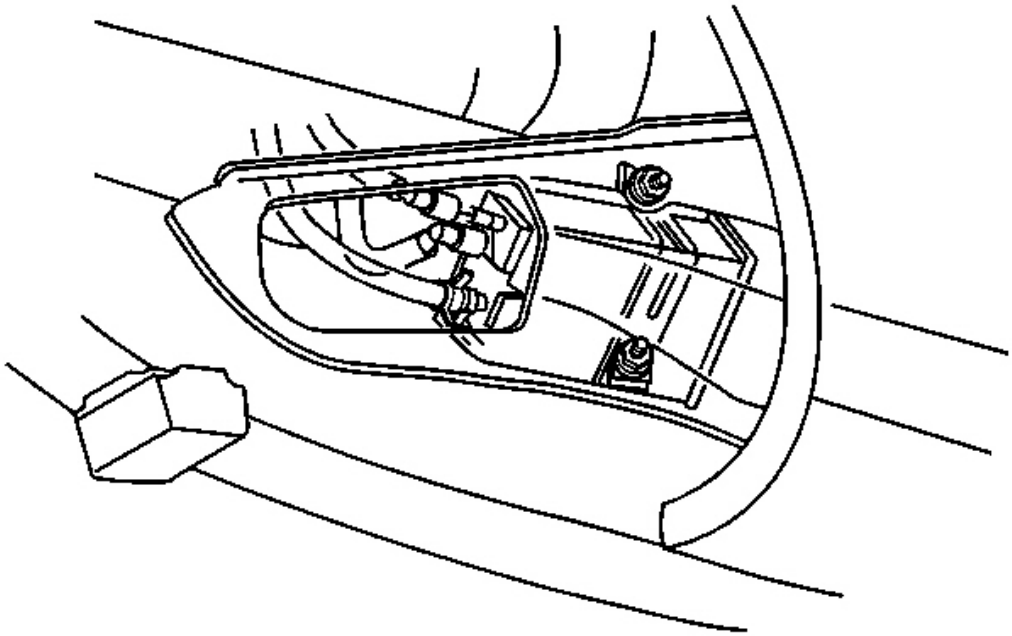

Fig. 317: EVAP Canister & Purge Pipe
Courtesy of GENERAL MOTORS CORP.

3. Disconnect the purge pipe at the EVAP canister.

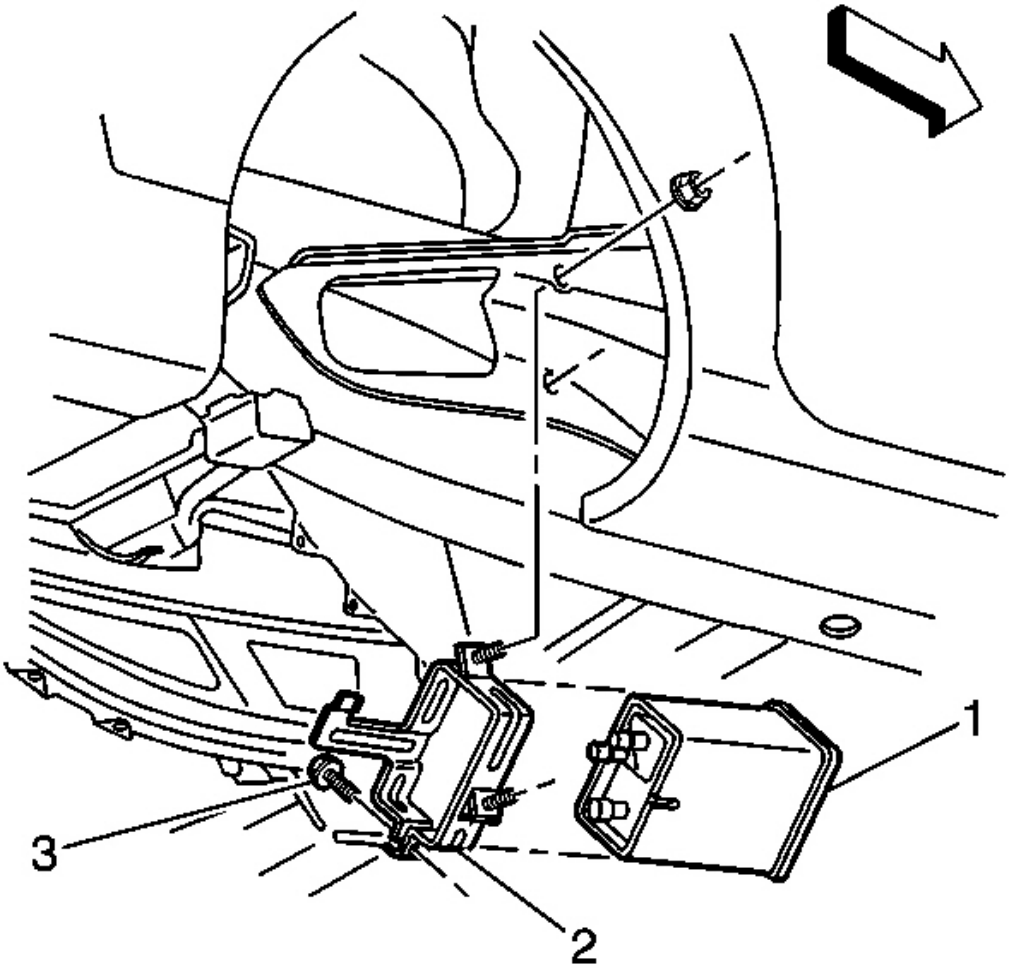

Fig. 318: EVAP Canister Bracket & Bolt
Courtesy of GENERAL MOTORS CORP.

4. Remove the EVAP canister bracket bolt (3).
5. Remove the EVAP canister (1) from the EVAP canister bracket (2).

Installation Procedure

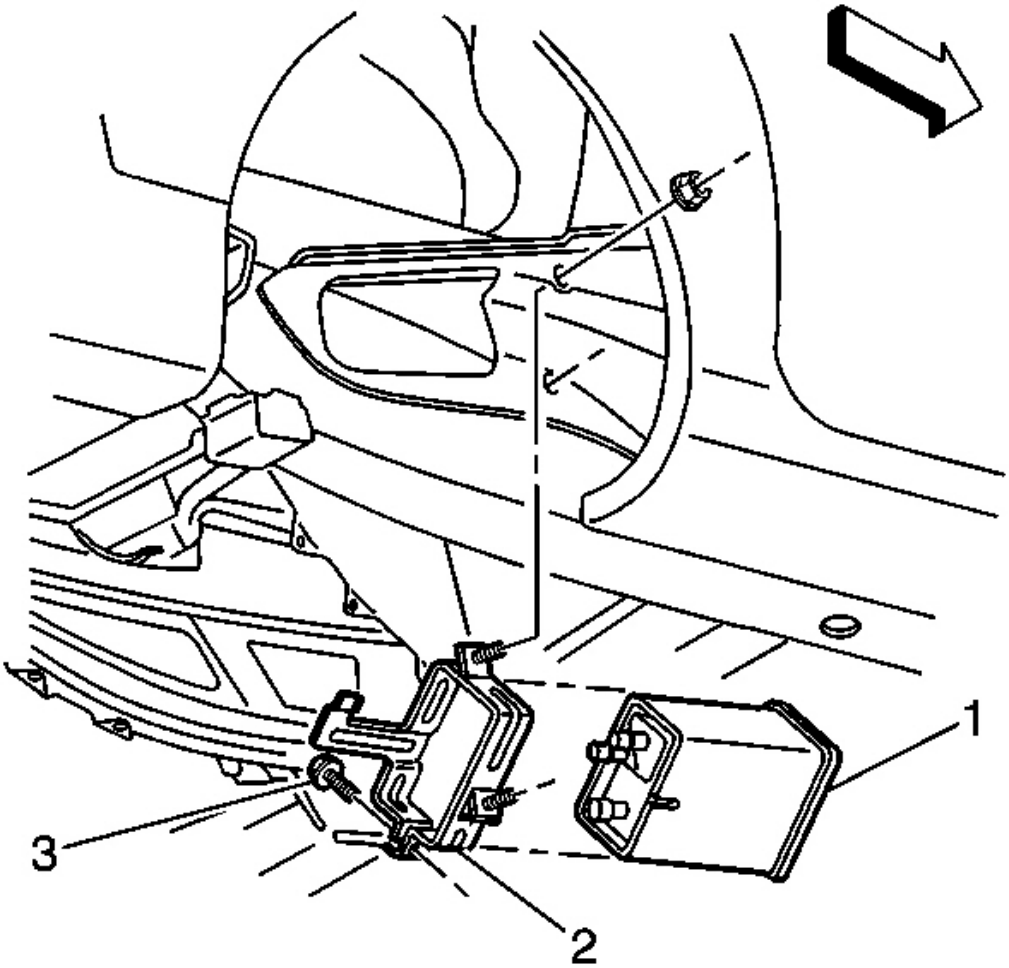

Fig. 319: EVAP Canister Bracket & Bolt
Courtesy of GENERAL MOTORS CORP.

NOTE: Refer to the Fastener Notice in Cautions and Notices.

1. Install the new EVAP canister (1) to the EVAP canister bracket (2).
2. Install the EVAP canister bracket bolt (3).

Tighten: Tighten the EVAP canister bracket bolt to 7 N.m (62 lb in).

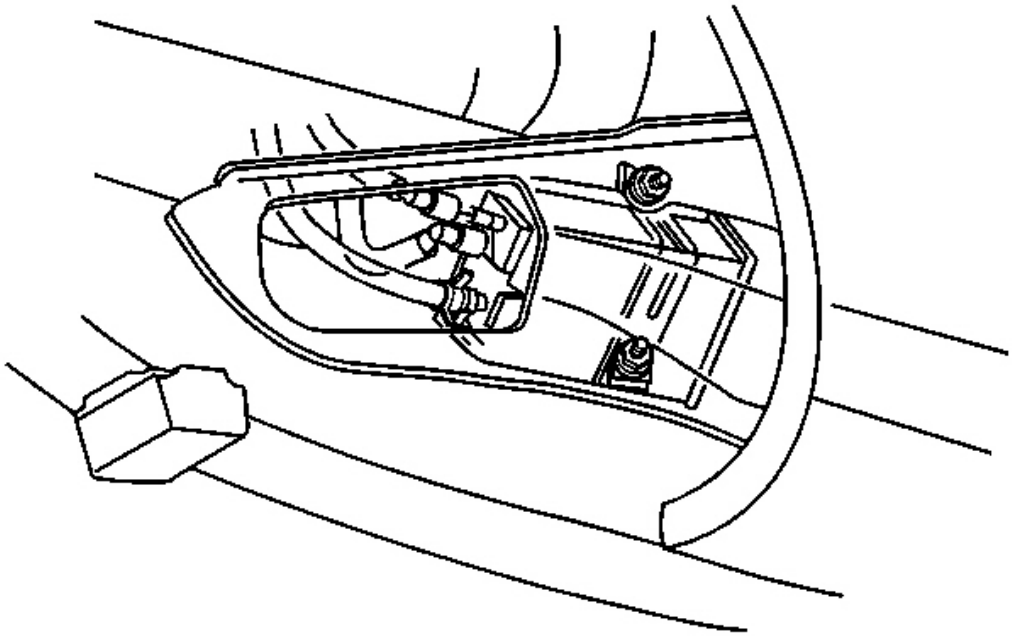

Fig. 320: EVAP Canister & Purge Pipe
Courtesy of GENERAL MOTORS CORP.

3. Connect the purge pipe at the EVAP canister.

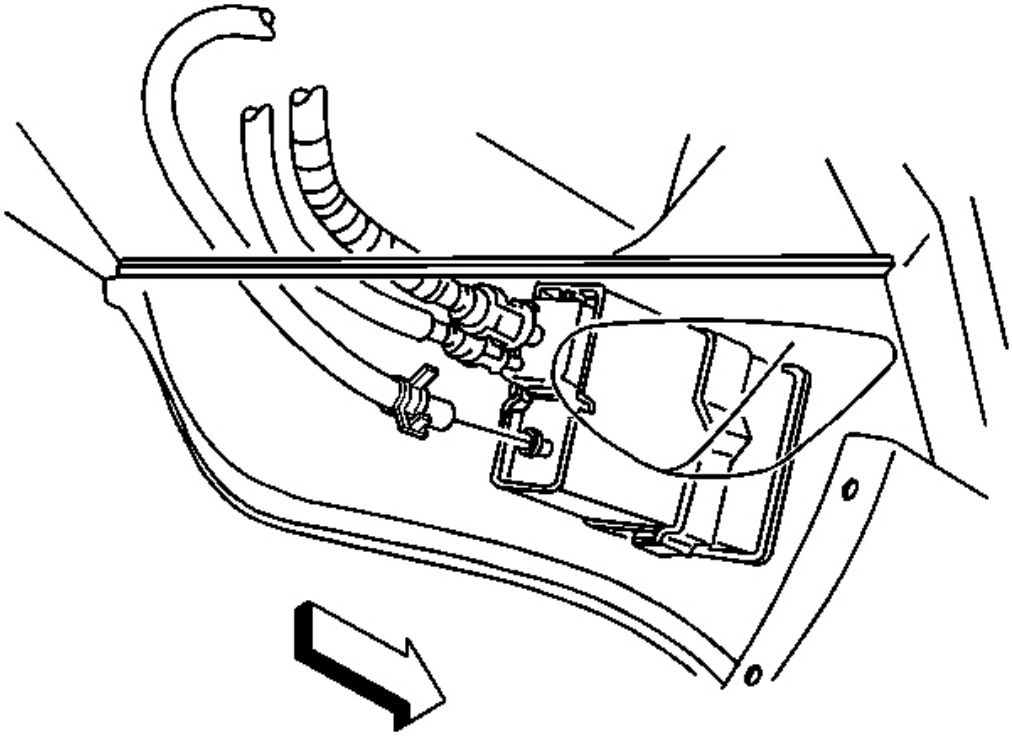

Fig. 321: EVAP Canister & Vent Hose
Courtesy of GENERAL MOTORS CORP.

4. Connect the vent hose to the EVAP canister.
5. Install the right fuel tank. Refer to **Fuel Tank Replacement (Right)** or **Fuel Tank Replacement (Left)** .

IGNITION COIL(S) REPLACEMENT

Removal Procedure

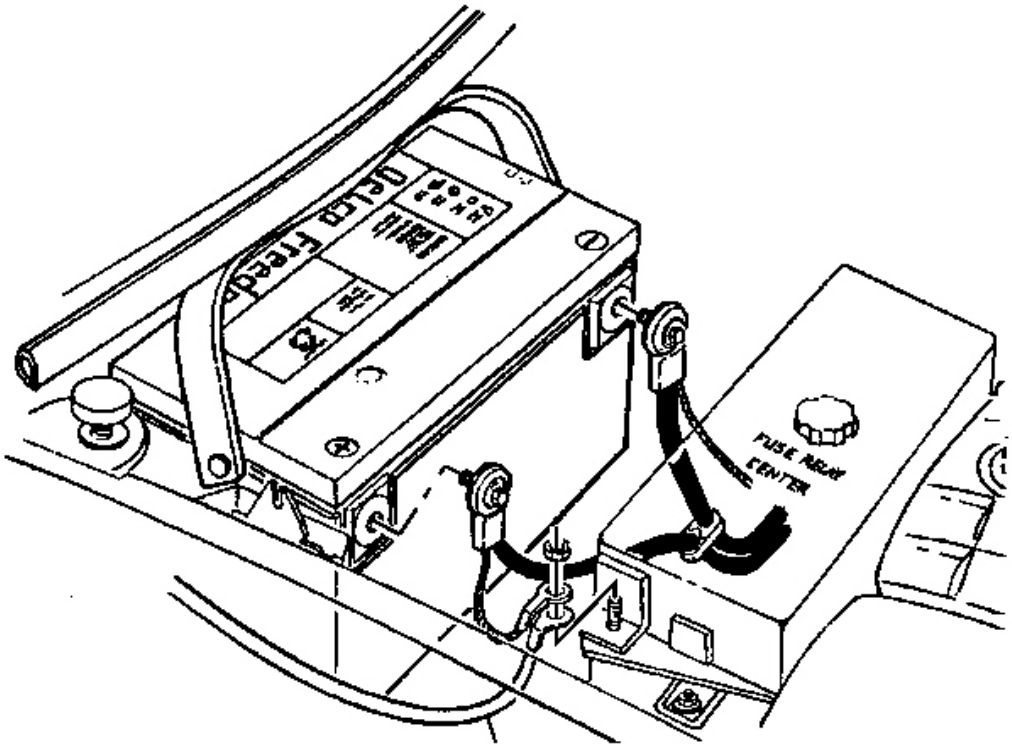

Fig. 322: Negative Battery Cable
Courtesy of GENERAL MOTORS CORP.

CAUTION: Refer to Battery Disconnect Caution in Cautions and Notices.

1. Disconnect the negative battery cable.

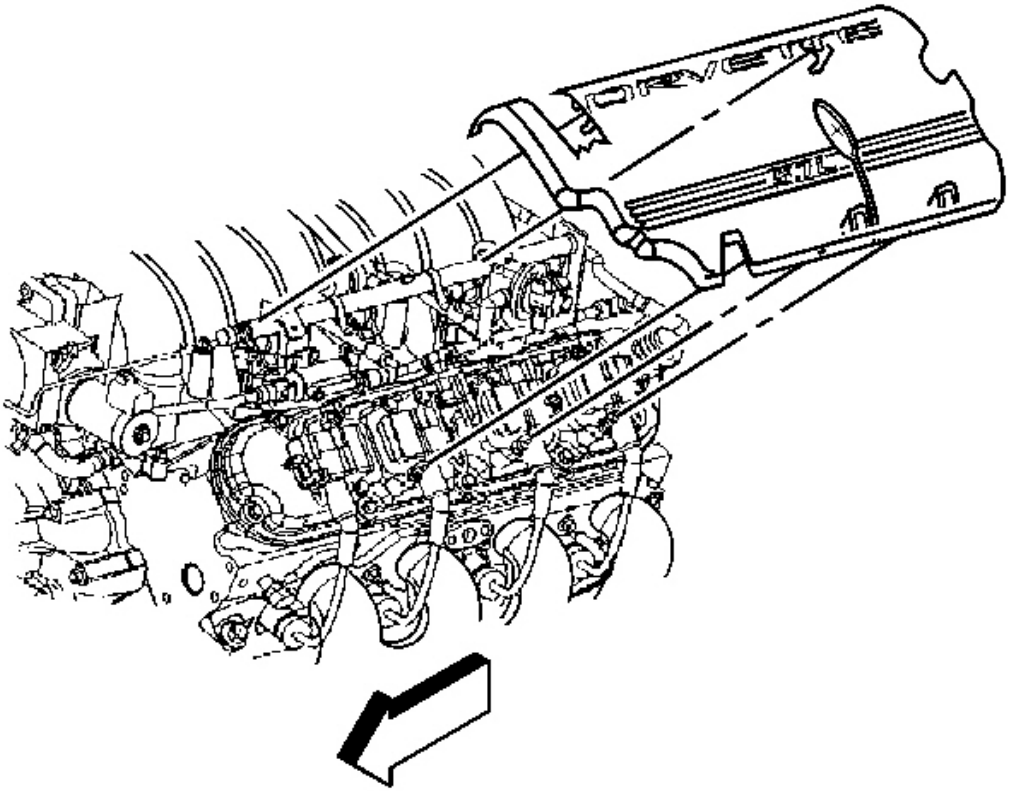

Fig. 323: Fuel Rail Cover
Courtesy of GENERAL MOTORS CORP.

2. Remove the fuel rail cover.

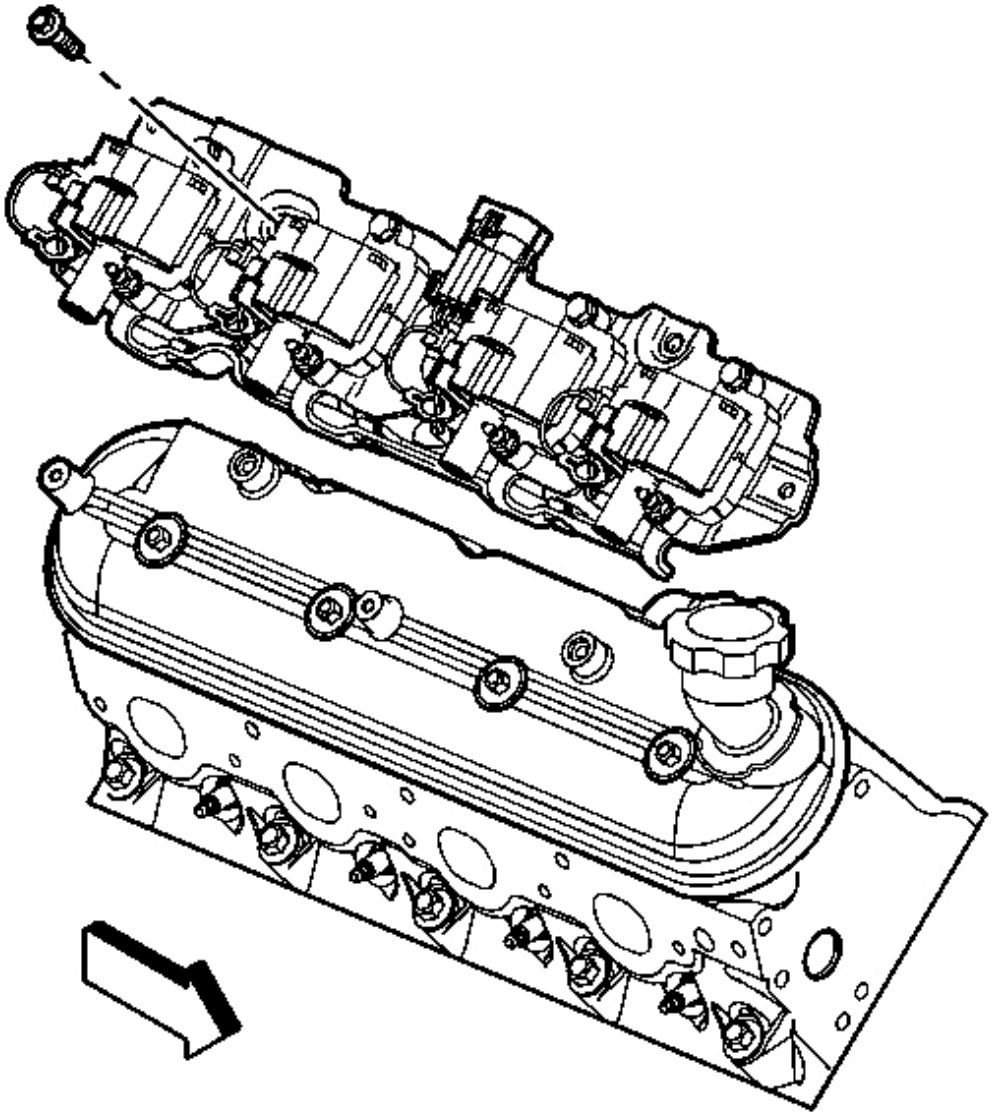

Fig. 324: Ignition Coil Mounting & Bolts
Courtesy of GENERAL MOTORS CORP.

3. Disconnect the ignition coil harness connector.
4. Disconnect the spark plug wire at the ignition coil.
5. Remove the ignition coil mounting bolts.
6. Remove the ignition coil.

Installation Procedure

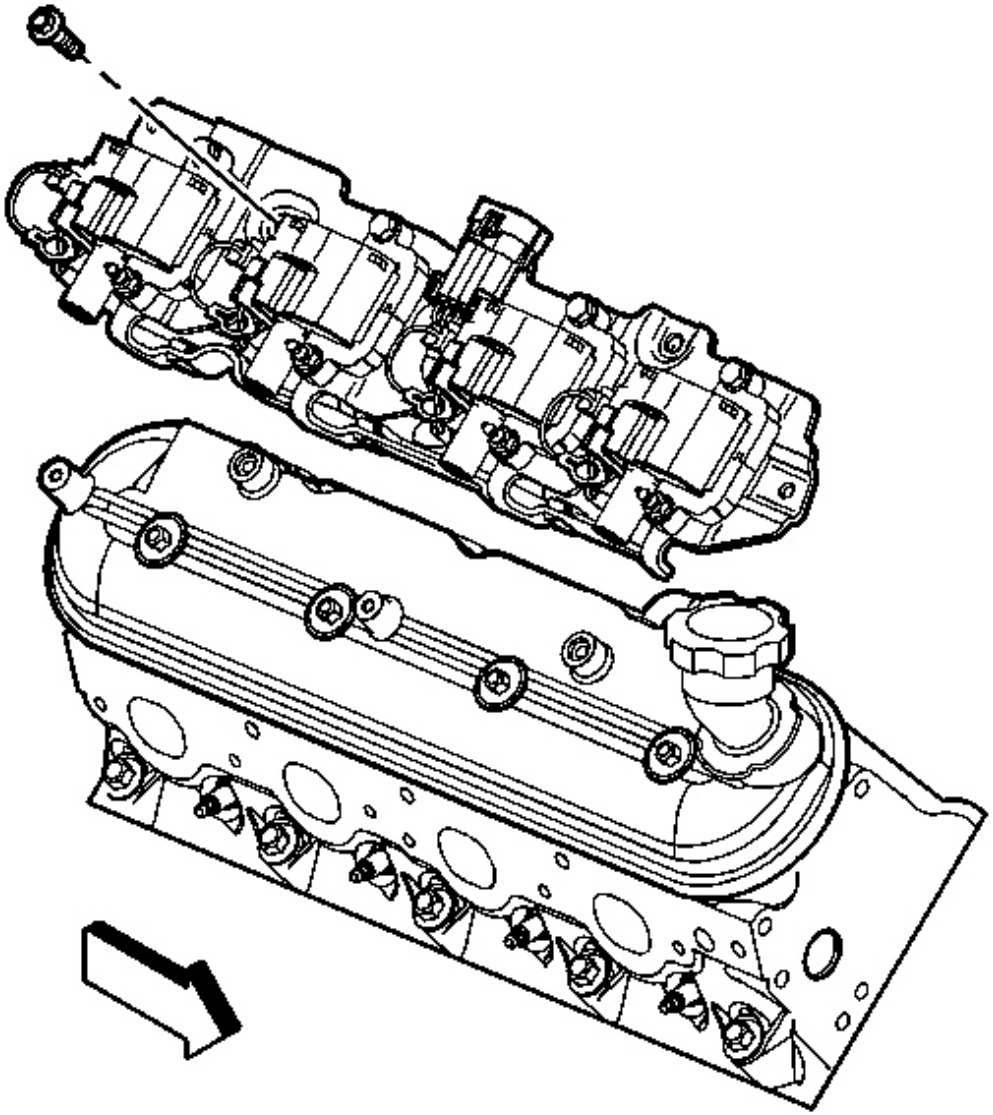

Fig. 325: Ignition Coil Mounting & Bolts
Courtesy of GENERAL MOTORS CORP.

1. Install the ignition coil.

NOTE: **Refer to Fastener Notice in Cautions and Notices.**

2. Install the ignition coil mounting bolts.

   Tighten: Tighten the ignition coil mounting bolts to 12 N.m (106 lb in).

3. Connect the spark plug wire at the ignition coil.
4. Connect the ignition coil harness connector.

   Tighten: Tighten the harness bolt to 12 N.m (106 lb in).

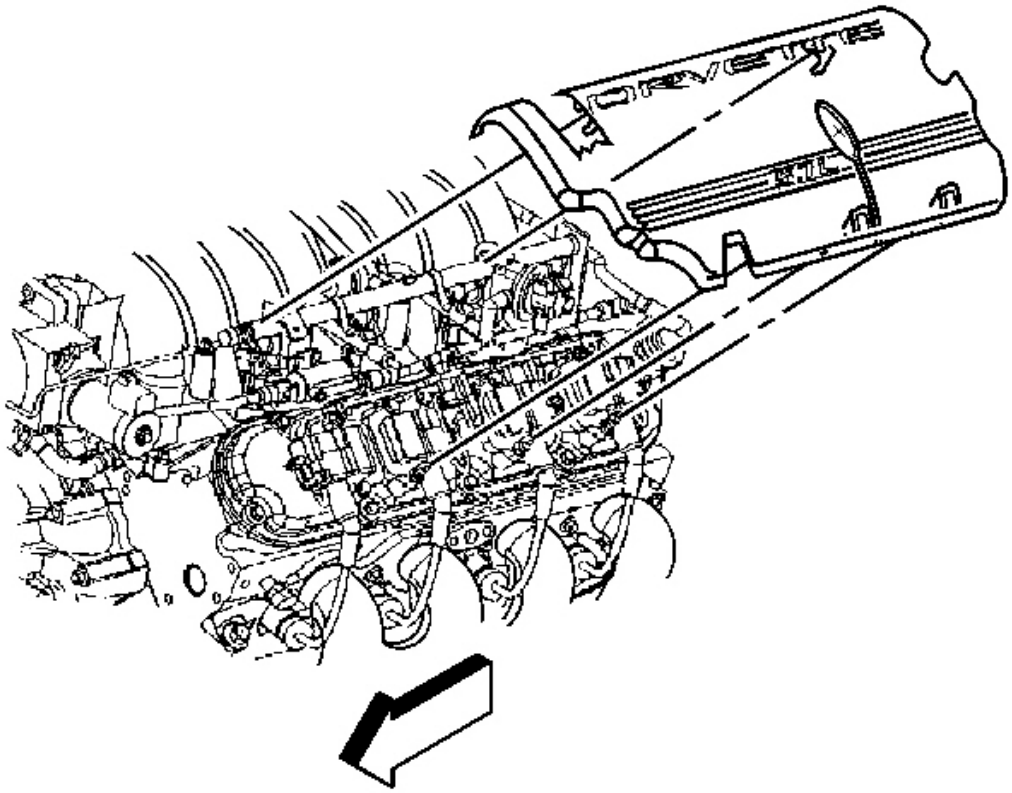

Fig. 326: Fuel Rail Cover
Courtesy of GENERAL MOTORS CORP.

5. Install the fuel rail cover.
6. Connect the negative battery cable. Refer to **Battery Negative Cable Disconnect/Connect Procedure** in Engine Electrical.

7. Program the transmitters. Refer to **Transmitter Programming** in Keyless Entry.

SPARK PLUG WIRE INSPECTION

Spark plug wire integrity is vital for proper engine operation. A thorough inspection will be necessary to accurately identify conditions that may affect engine operation. Inspect for the following conditions:

1. Correct routing of the spark plug wires. Incorrect routing may cause cross-firing.
2. Any signs of cracks or splits in the wires.
3. Inspect each boot for the following conditions:
    - Tearing
    - Piercing
    - Arcing
    - Carbon tracking
    - Corroded terminal

If corrosion, carbon tracking, or arcing are indicated on a spark plug wire boot or on a terminal, replace the wire and the component connected to the wire.

SPARK PLUG WIRE REPLACEMENT

Removal Procedure

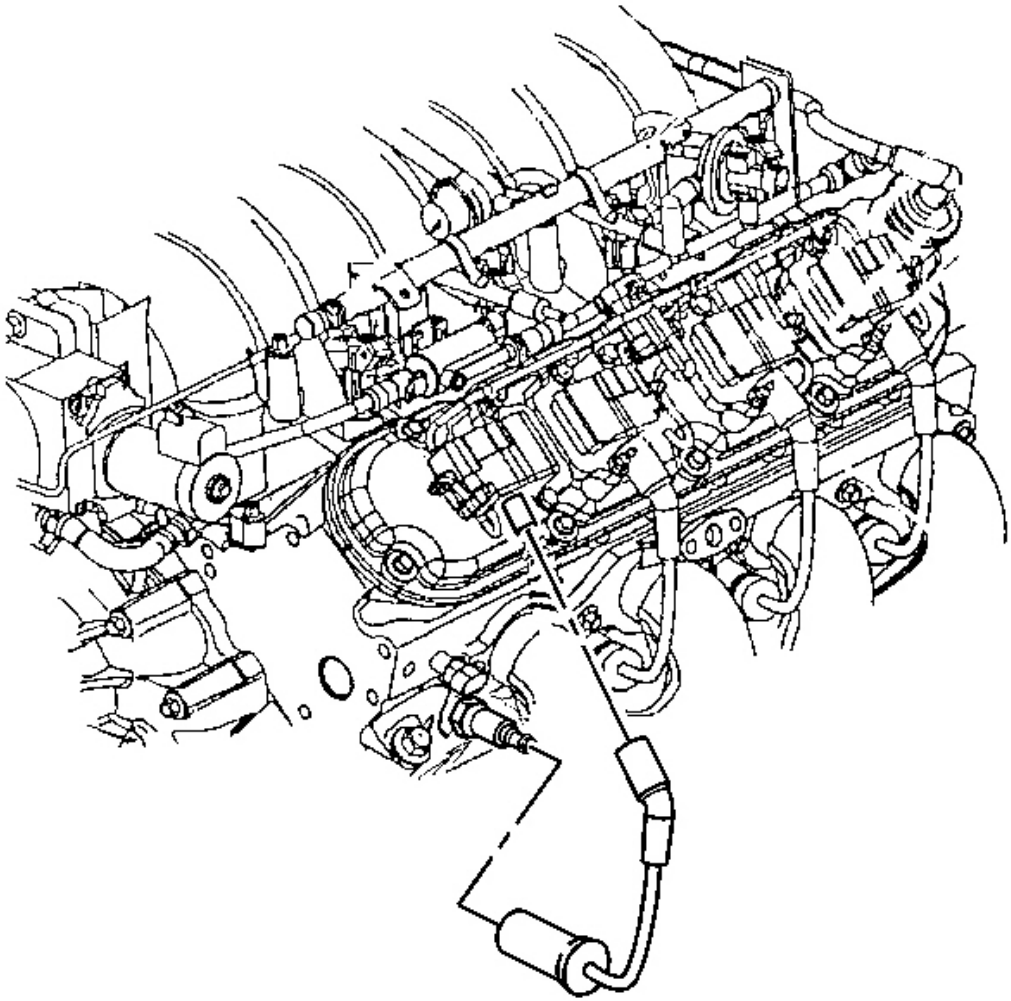

Fig. 327: Spark Plug Wire
Courtesy of GENERAL MOTORS CORP.

1. Disconnect the spark plug wires at each spark plug:
    - Twist each spark plug boot 1/2 turn.
    - Pull only on the boot in order to remove the wire from each spark plug.
2. Disconnect the spark plug wires from the ignition coil:
    - Twist each spark plug boot 1/2 turn.
    - Pull only on the boot in order to remove the wires from the ignition coil.

Installation Procedure

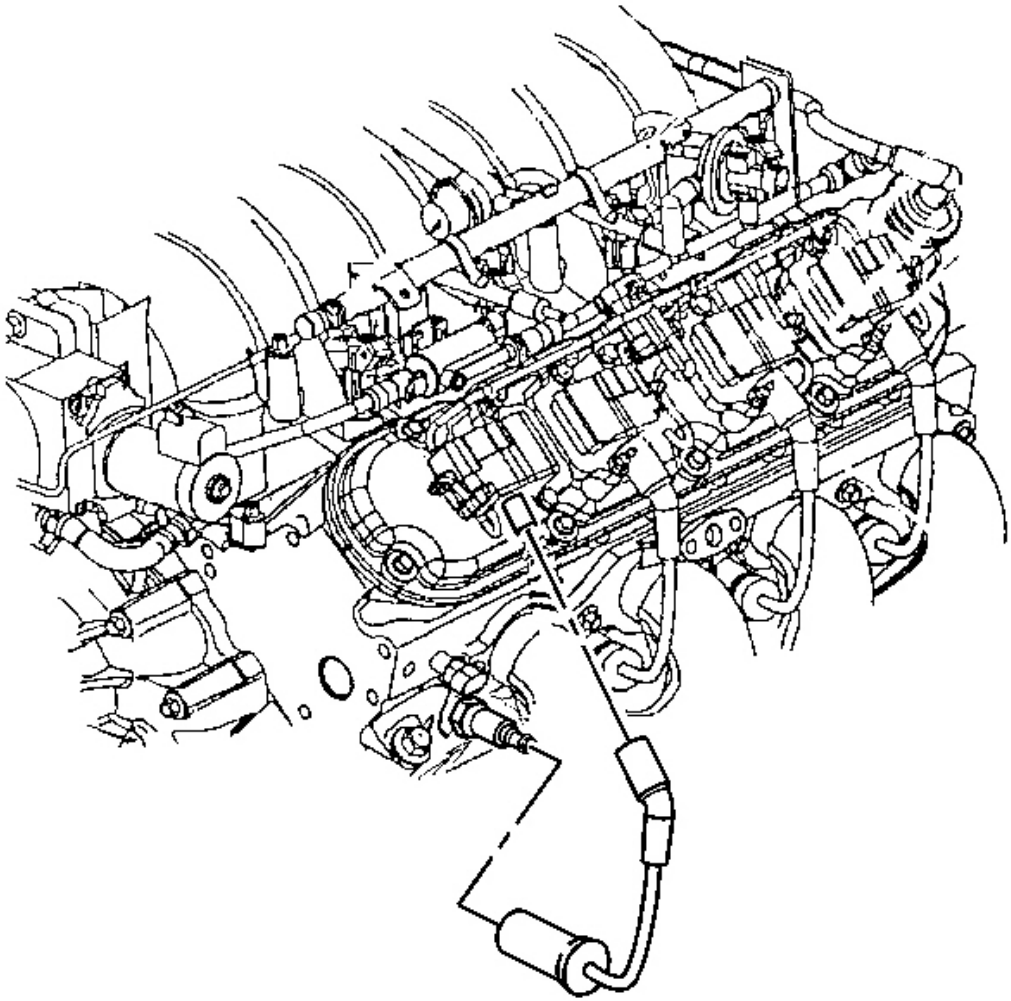

Fig. 328: Spark Plug Wire
Courtesy of GENERAL MOTORS CORP.

1. Install the spark plug wires at the ignition coil.
2. Install the spark plug wire to each spark plug.
3. Inspect the wires for proper installation:
    - Push sideways on each boot in order to inspect the seating.
    - Reinstall any loose boot.

SPARK PLUG INSPECTION

Spark Plug Usage

- Verify that the correct spark plug is installed. An incorrect spark plug causes driveability conditions. Refer to **Ignition System Specifications** for the correct spark plug.
- Ensure that the spark plug has the correct heat range. An incorrect heat range causes the following conditions:
  - Spark plug fouling - colder plug
  - Pre-ignition causing spark plug and/or engine damage - hotter plug

Spark Plug Inspection

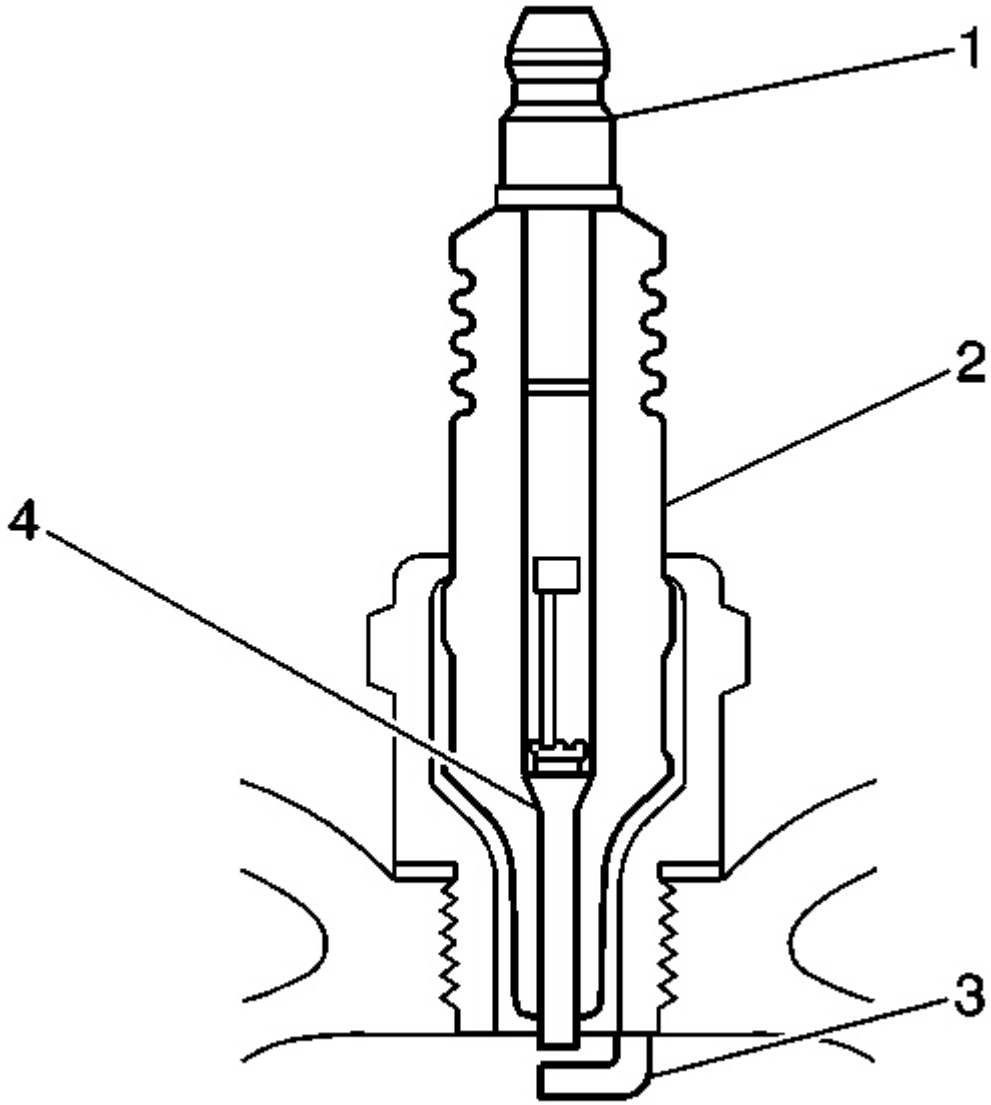

Fig. 329: Inspecting Terminal Post For Damage
Courtesy of GENERAL MOTORS CORP.

- Inspect the terminal post (1) for damage.
  - Inspect for a bent or broken terminal post (1).
  - Test for a loose terminal post (1) by twisting and pulling the post. The terminal post (1) should NOT move.

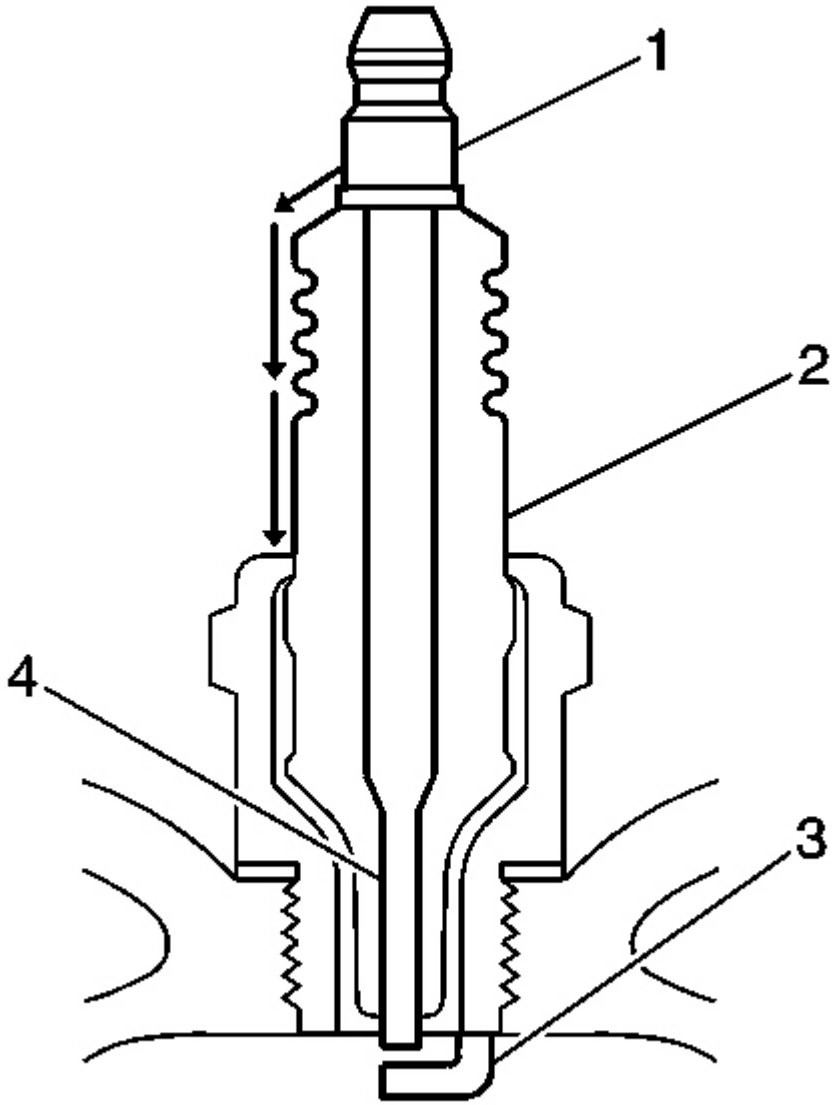

Fig. 330: Inspecting Terminal Post For Flashover
Courtesy of GENERAL MOTORS CORP.

- Inspect the insulator (2) for flashover or carbon tracking, soot. This is caused by the electrical charge traveling across the insulator (2) between the terminal post (1) and ground. Inspect for the following conditions:
    - Inspect the spark plug boot for damage.

- Inspect the spark plug recess area of the cylinder head for moisture, such as oil, coolant, or water. A spark plug boot that is saturated causes arcing to ground.

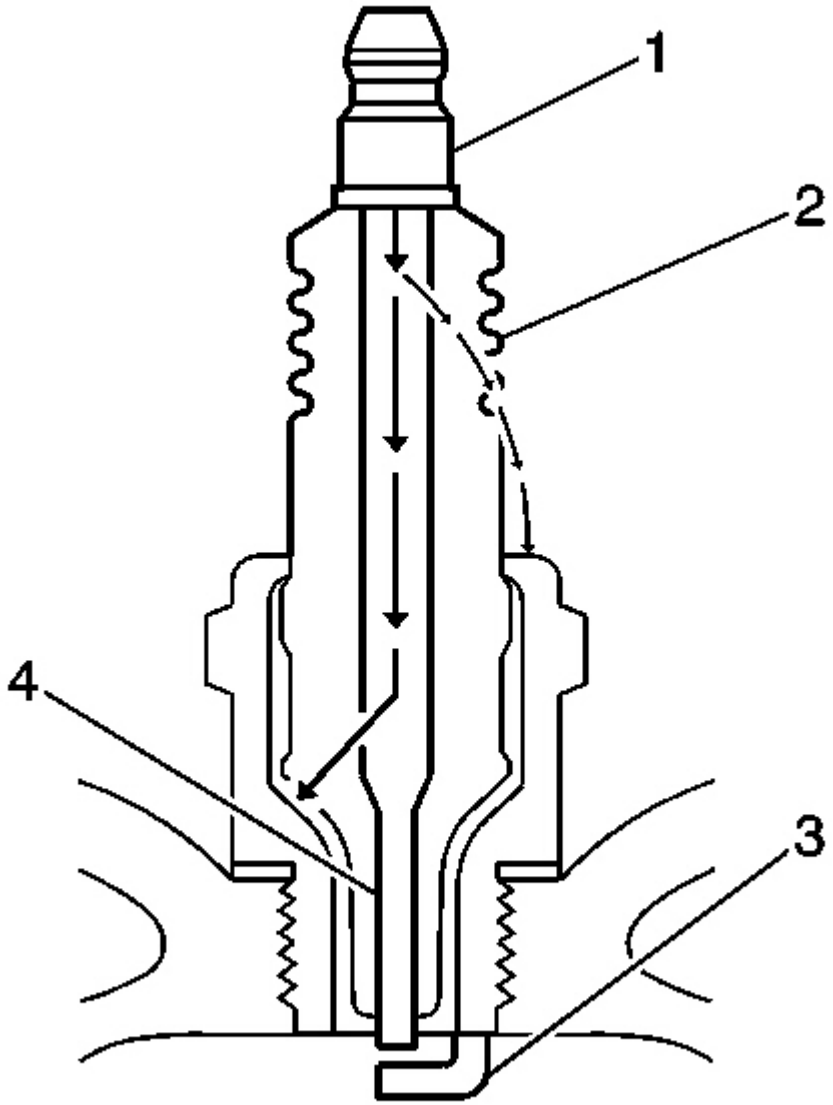

Fig. 331: Inspecting Spark Plug Insulator For Cracks
Courtesy of GENERAL MOTORS CORP.

- Inspect the insulator (2) for cracks. All or part of the electrical charge may arc through the crack instead of the electrodes (3, 4).

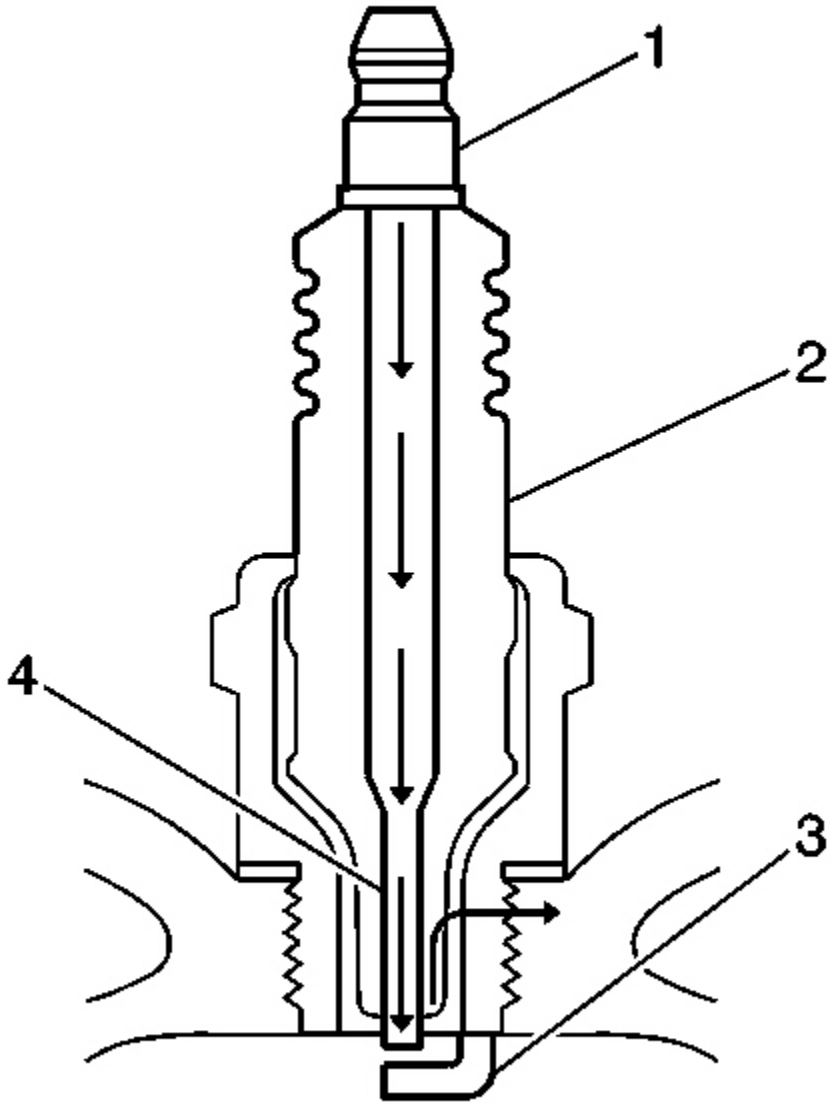

Fig. 332: Inspecting Spark Plug For Improper Arcing
Courtesy of GENERAL MOTORS CORP.

- Inspect for evidence of improper arcing.
  - Measure the gap between the center electrode (4) and the side electrode (3) terminals. Refer to **Ignition System Specifications** . An excessively-wide electrode gap can prevent correct spark plug operation.

- Inspect for the correct spark plug torque. Refer to **Ignition System Specifications** . Insufficient torque can prevent correct spark plug operation. An over-torqued spark plug, causes the insulator (2) to crack.
- Inspect for signs of tracking that occurred near the insulator tip instead of the center electrode (4).
- Inspect for a broken or worn side electrode (3).
- Inspect for a broken, worn, or loose center electrode (4) by shaking the spark plug.
  - A rattling sound indicates internal damage.
  - A loose center electrode (4) reduces the spark intensity.
- Inspect for bridged electrodes (3, 4). Deposits on the electrodes reduce or eliminates the gap.
- Inspect for worn or missing platinum pads on the electrodes (3, 4), if equipped.
- Inspect for excessive fouling.

- Inspect the spark plug recess area of the cylinder head for debris. Dirty or damaged threads can cause the spark plug not to seat correctly during installation.

Spark Plug Visual Inspection

- Normal operation - Brown to grayish-tan with small amounts of white powdery deposits are normal combustion by-products from fuels with additives.
- Carbon Fouled - Dry, fluffy black carbon, or soot caused by the following conditions:
  - Rich fuel mixtures
    - Leaking fuel injectors
    - Excessive fuel pressure
    - Restricted air filter element
    - Incorrect combustion
  - Reduced ignition system voltage output
    - Weak coils
    - Worn ignition wires
    - Incorrect spark plug gap
  - Excessive idling or slow speeds under light loads can keep spark plug temperatures so low that normal combustion deposits may not burn off.
- Deposit Fouling - Oil, coolant, or additives that include substances such as silicone, very white coating, reduces the spark intensity. Most powdery deposits will not effect spark intensity unless they form into a glazing over the electrode.

SPARK PLUG REPLACEMENT

Removal Procedure

1. Remove the fuel rail covers.

NOTE: Allow the engine to cool before removing the spark plugs. Attempting to

remove the spark plugs from a hot engine may cause the plug threads to seize, causing damage to cylinder head threads.

NOTE: **Clean the spark plug recess area before removing the spark plug. Failure to do so could result in engine damage because of dirt or foreign material entering the cylinder head, or by the contamination of the cylinder head threads. The contaminated threads may prevent the proper seating of the new plug. Use a thread chaser to clean the threads of any contamination.**

2. Remove the spark plug wires. Refer to **Spark Plug Wire Replacement** .

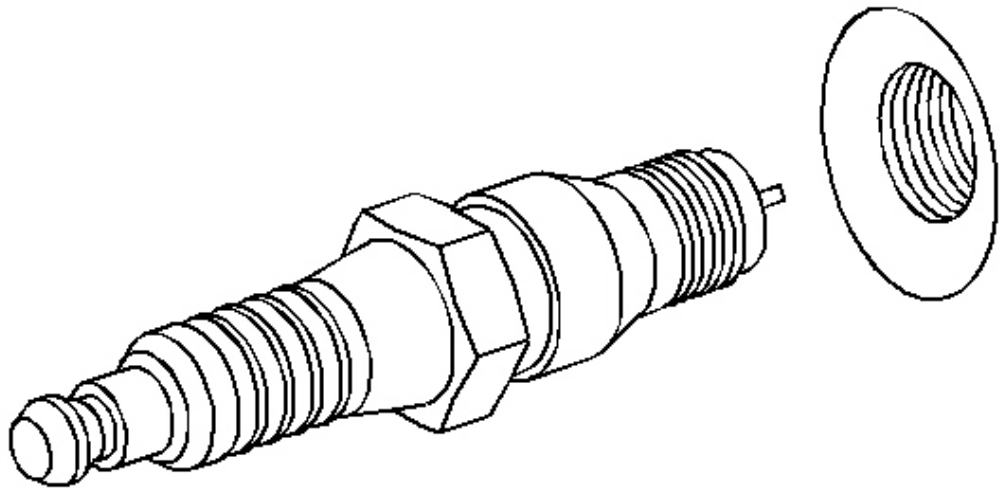

Fig. 333: View Of Spark Plug
Courtesy of GENERAL MOTORS CORP.

3. Loosen each spark plug 1 or 2 turns.
4. Brush or use compressed air to remove any dirt around the spark plugs.
5. Remove the spark plugs one at a time and place each plug in a tray marked with the corresponding cylinder numbers.

Installation Procedure

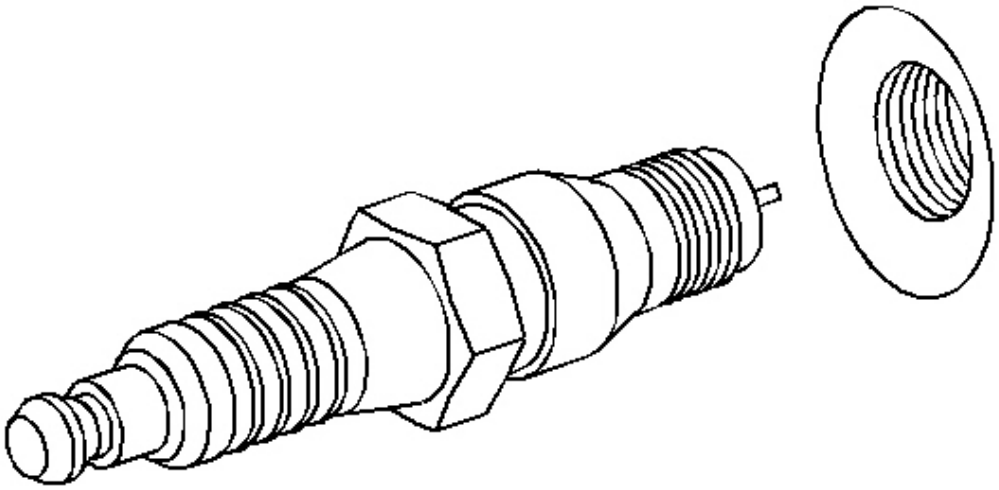

Fig. 334: View Of Spark Plug
Courtesy of GENERAL MOTORS CORP.

1. Inspect each spark plug gap. Adjust each plug as needed.

   Specification: Spark plug gap: 1.016 mm (0.040 in)

2. Hand start the spark plugs in the corresponding cylinders.

   NOTE: Refer to Fastener Notice in Cautions and Notices.

3. Tighten the spark plugs.

   Tighten:
   - For cylinder head-new: Tighten the spark plugs to 20 N.m (15 lb ft).
   - For cylinder head-all subsequent installations: Tighten the spark plugs to 15 N.m (11 lb ft).

4. Install the spark plug wires. Refer to **Spark Plug Wire Replacement** .
5. Install the fuel rail covers.

CRANKSHAFT POSITION (CKP) SENSOR REPLACEMENT

Removal Procedure

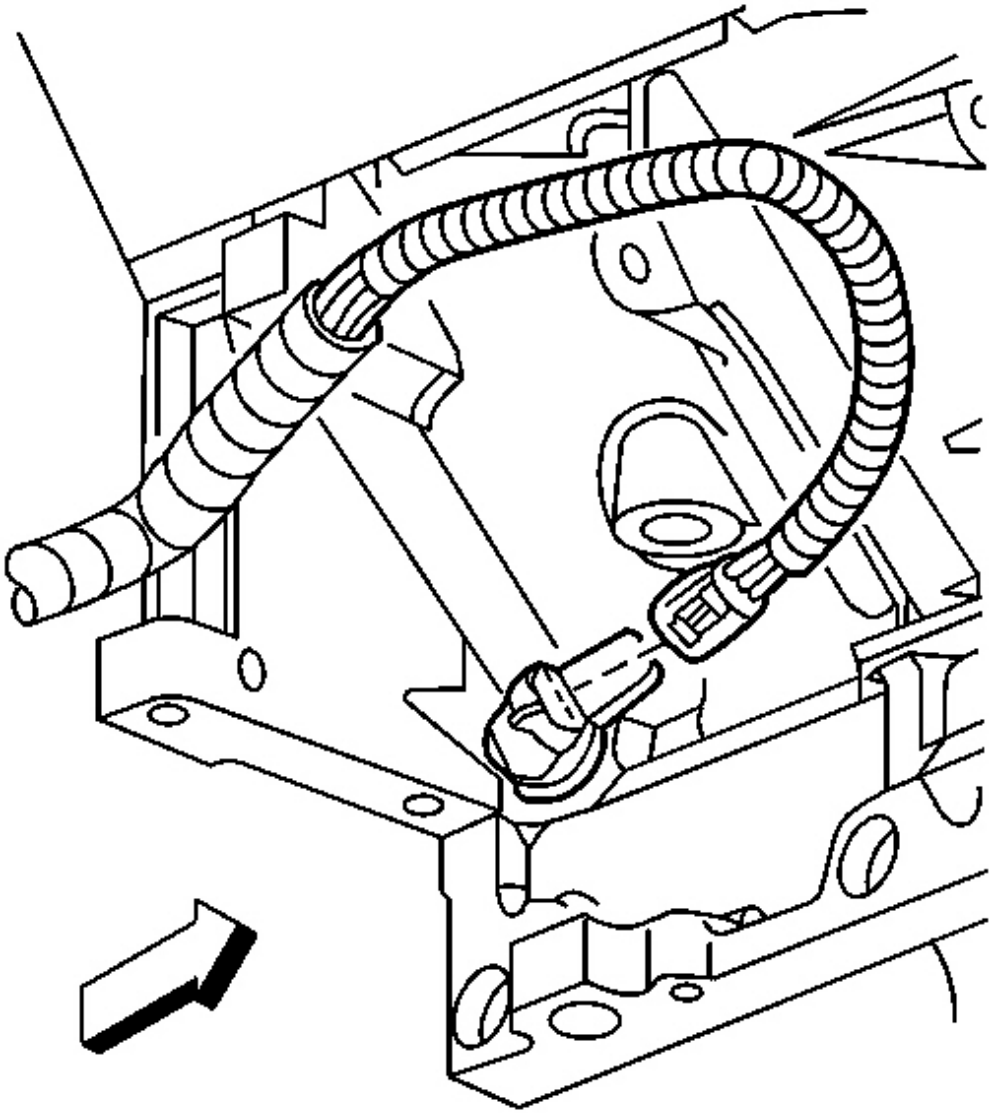

Fig. 335: CKP Sensor Electrical Connector
Courtesy of GENERAL MOTORS CORP.

CAUTION: Refer to Battery Disconnect Caution in Cautions and Notices.

1. Disconnect the negative battery cable. Refer to **Battery Negative Cable Disconnect/Connect Procedure**

in Engine Electrical.

CAUTION: Refer to Vehicle Lifting Caution in Cautions and Notices.

2. Raise the vehicle. Refer to **Lifting and Jacking the Vehicle** in General Information.
3. Remove the starter. Refer to **Starter Motor Replacement** in Engine Electrical.
4. Disconnect the crankshaft position (CKP) sensor electrical connector.

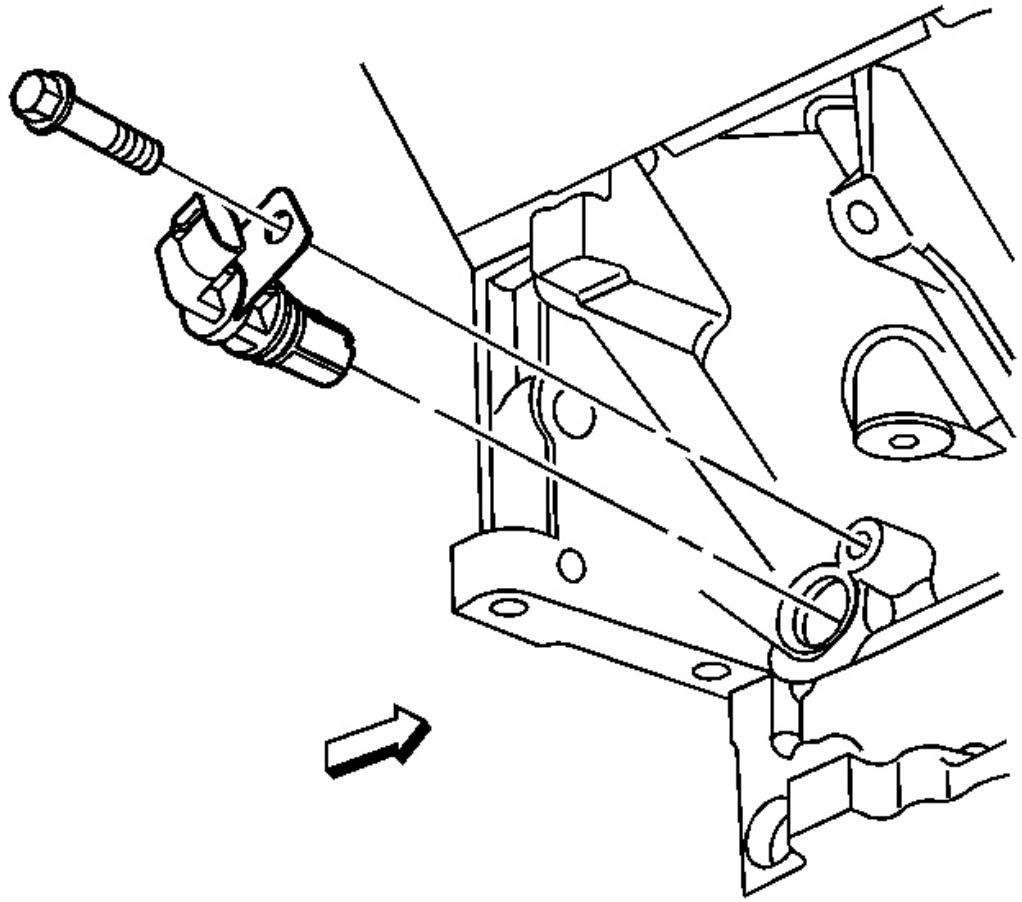

Fig. 336: View Of CKP Sensor & Bolt
Courtesy of GENERAL MOTORS CORP.

IMPORTANT: Clean the area around the CKP before removal in order to avoid debris

from entering the engine.

5. Remove the CKP sensor retaining bolt.
6. Remove the CKP sensor.

Installation Procedure

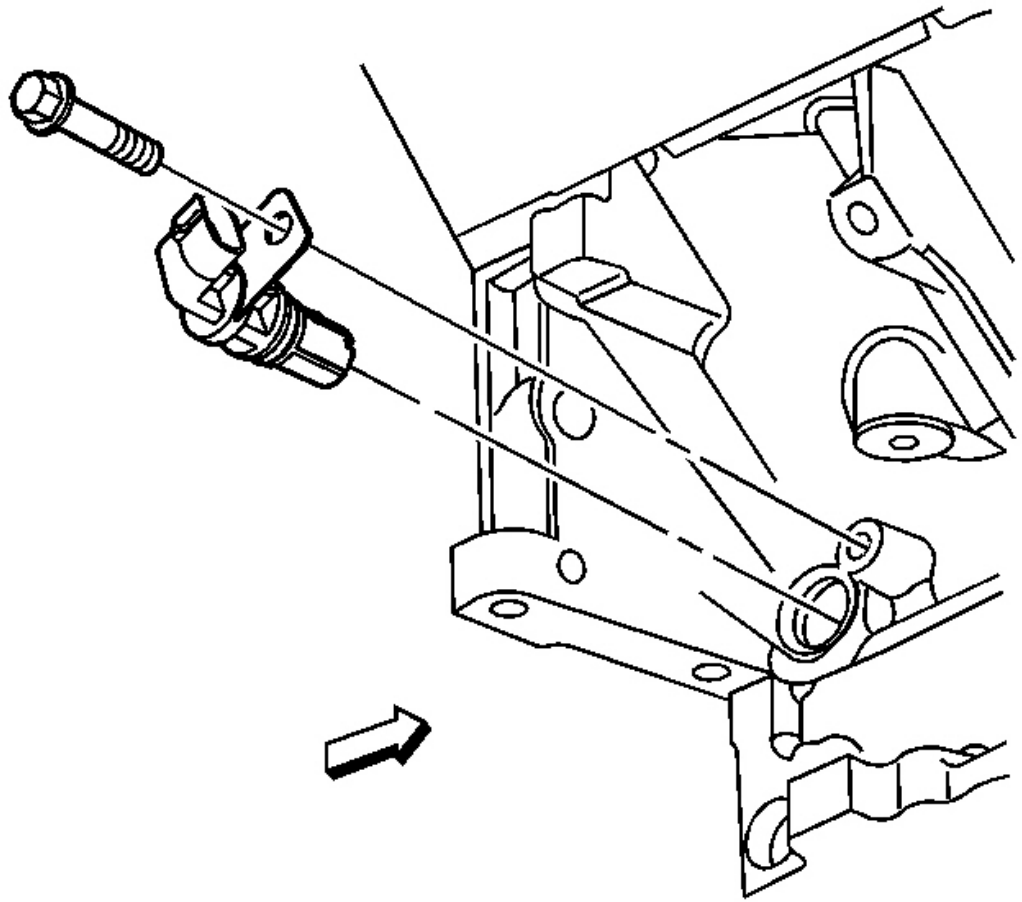

Fig. 337: View Of CKP Sensor & Bolt
Courtesy of GENERAL MOTORS CORP.

1. Install the CKP sensor.

NOTE: Refer to Fastener Notice in Cautions and Notices.

2. Install the CKP sensor retaining bolt.

   Tighten: Tighten the CKP sensor to 25 N.m (18 lb ft).

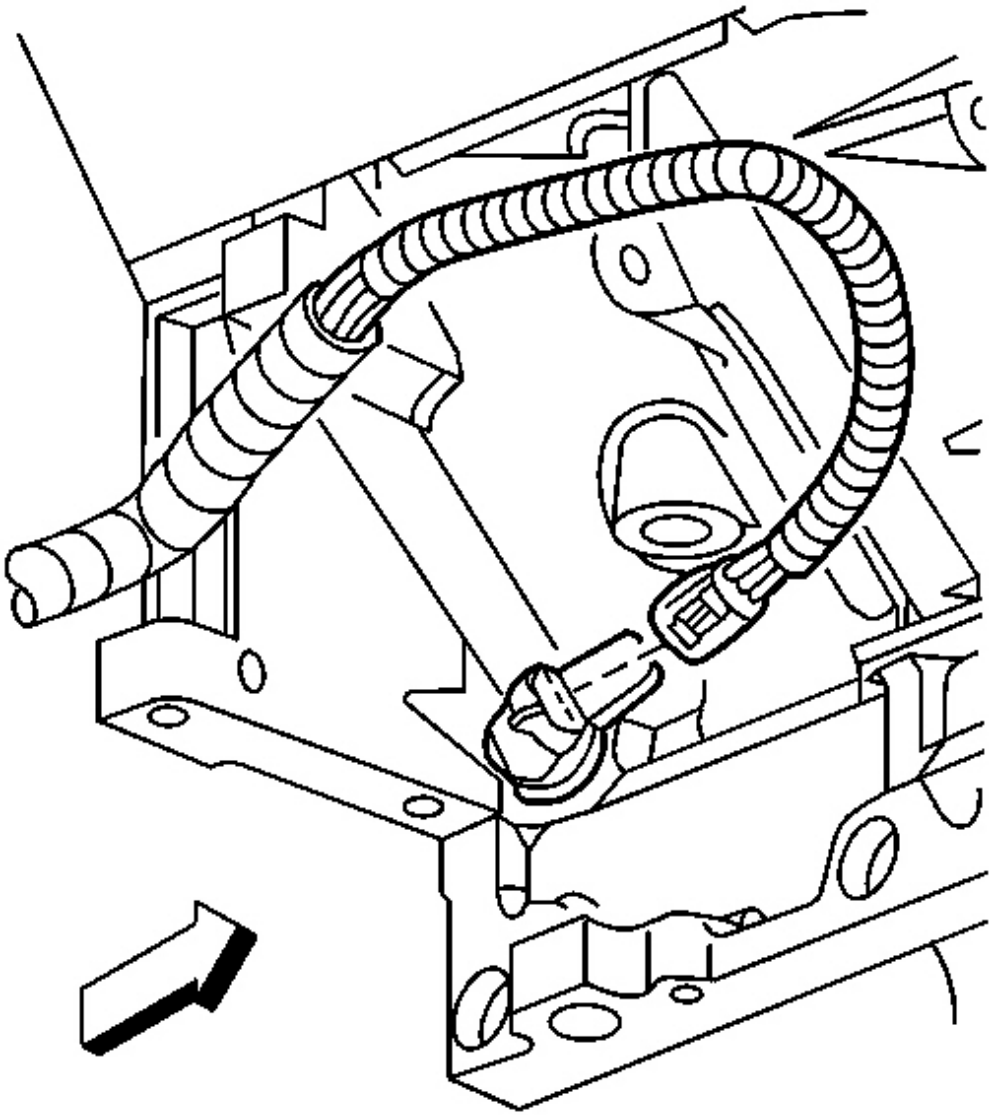

Fig. 338: CKP Sensor Electrical Connector
Courtesy of GENERAL MOTORS CORP.

3. Connect the CKP sensor electrical connector.
4. Install the starter. Refer to **Starter Motor Replacement** in Engine Electrical.
5. Lower the vehicle.
6. Connect the negative battery cable.
7. Program the transmitters. Refer to **Transmitter Programming** in Keyless Entry.
8. Perform the CKP System Variation Learn Procedure. Refer to **CKP System Variation Learn Procedure**

CAMSHAFT POSITION (CMP) SENSOR REPLACEMENT

Removal Procedure

CAUTION: Refer to Battery Disconnect Caution in Cautions and Notices.

1. Disconnect the negative battery cable.
2. Remove the intake manifold. Refer to **Intake Manifold Replacement** in Engine Mechanical - 5.7L.
3. Remove the camshaft position (CMP) sensor electrical connector.

IMPORTANT: Clean the area around the CMP before removal in order to avoid debris from entering the engine.

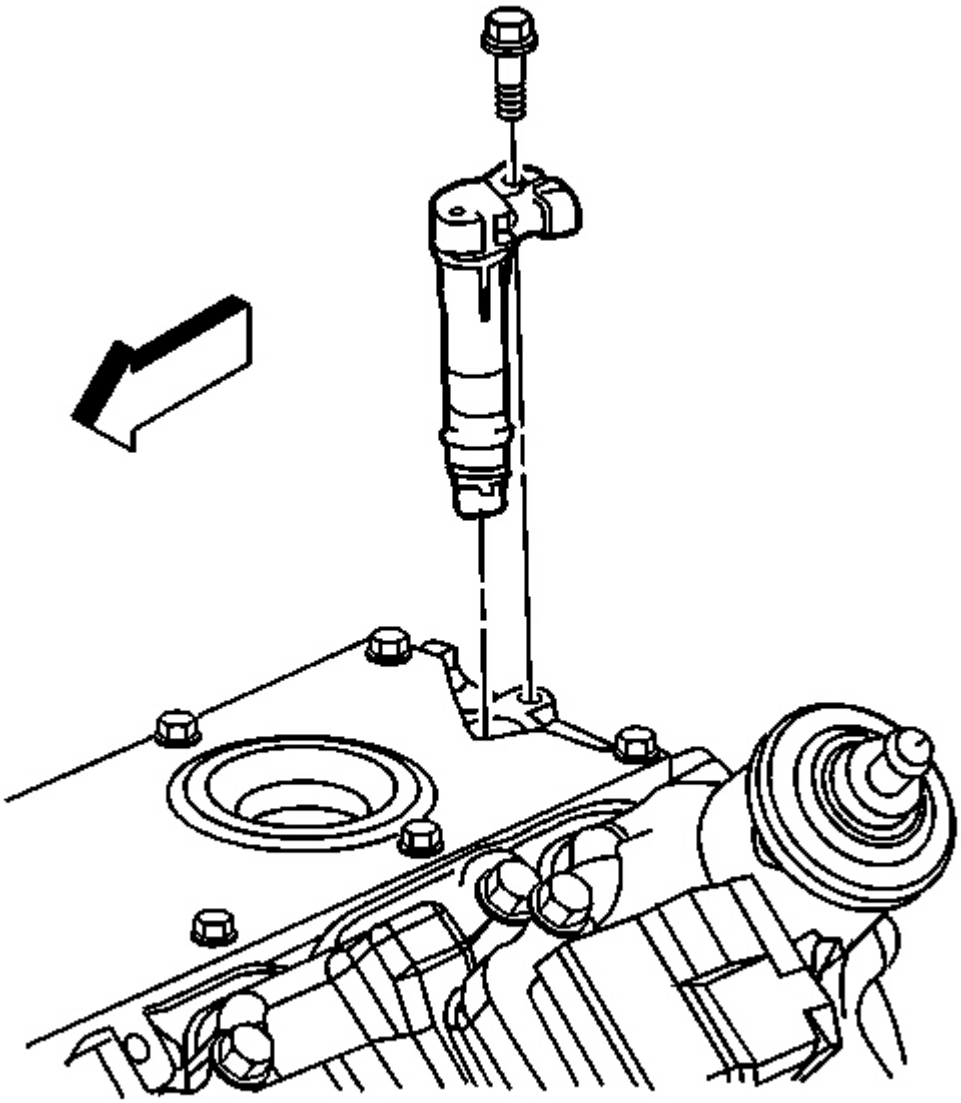

Fig. 339: CMP Sensor & Retaining Bolt
Courtesy of GENERAL MOTORS CORP.

4. Remove the CMP sensor retaining bolt.
5. Remove the CMP sensor.

Installation Procedure

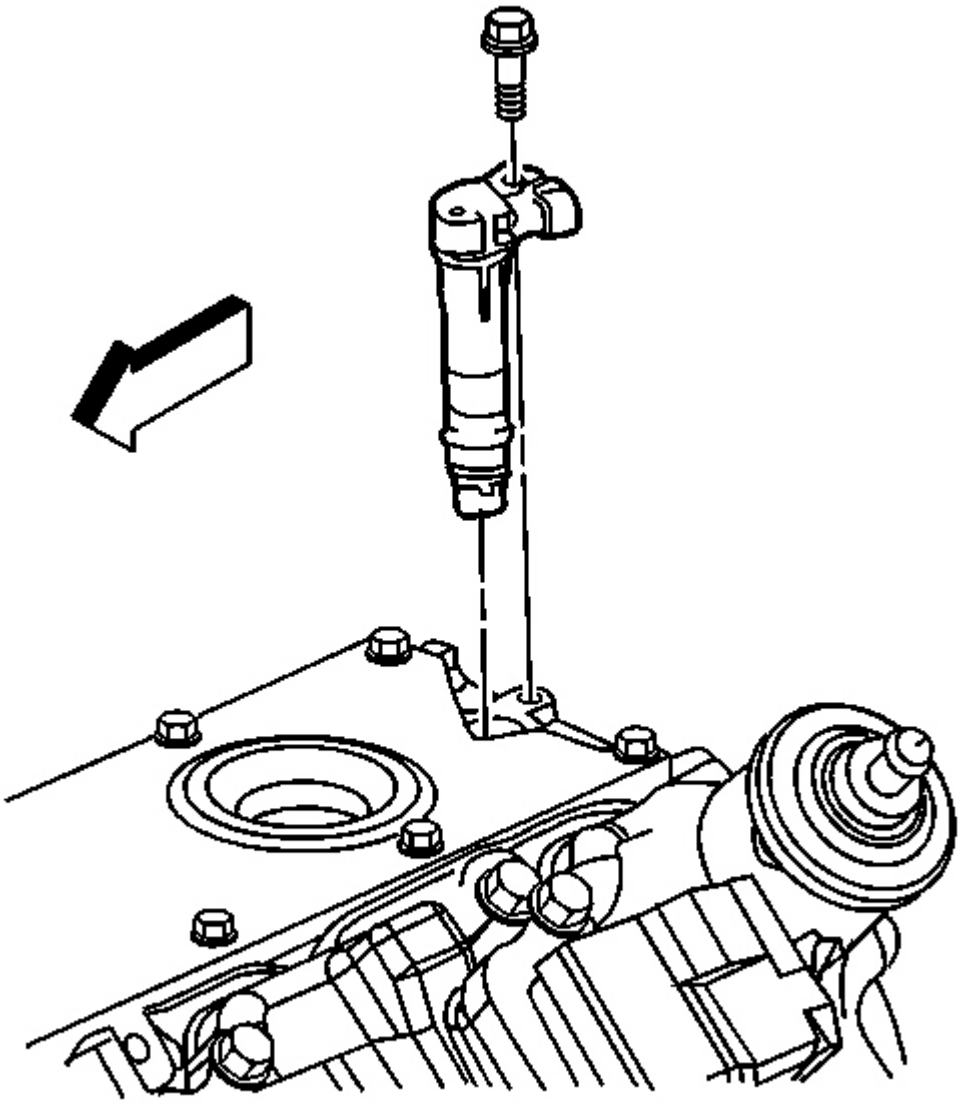

Fig. 340: CMP Sensor & Retaining Bolt
Courtesy of GENERAL MOTORS CORP.

1. Install the CMP sensor.

NOTE: **Refer to Fastener Notice in Cautions and Notices.**

2. Install the CMP sensor retaining bolt.

Tighten: Tighten the CMP to 25 N.m (18 lb ft).

3. Connect the CMP sensor electrical connector.
4. Install the intake manifold. Refer to **Intake Manifold Replacement** in Engine Mechanical - 5.7L
5. Connect the negative battery cable.
6. Program the transmitters. Refer to **Transmitter Programming** in Keyless Entry.

KNOCK SENSOR (KS) REPLACEMENT

Removal Procedure

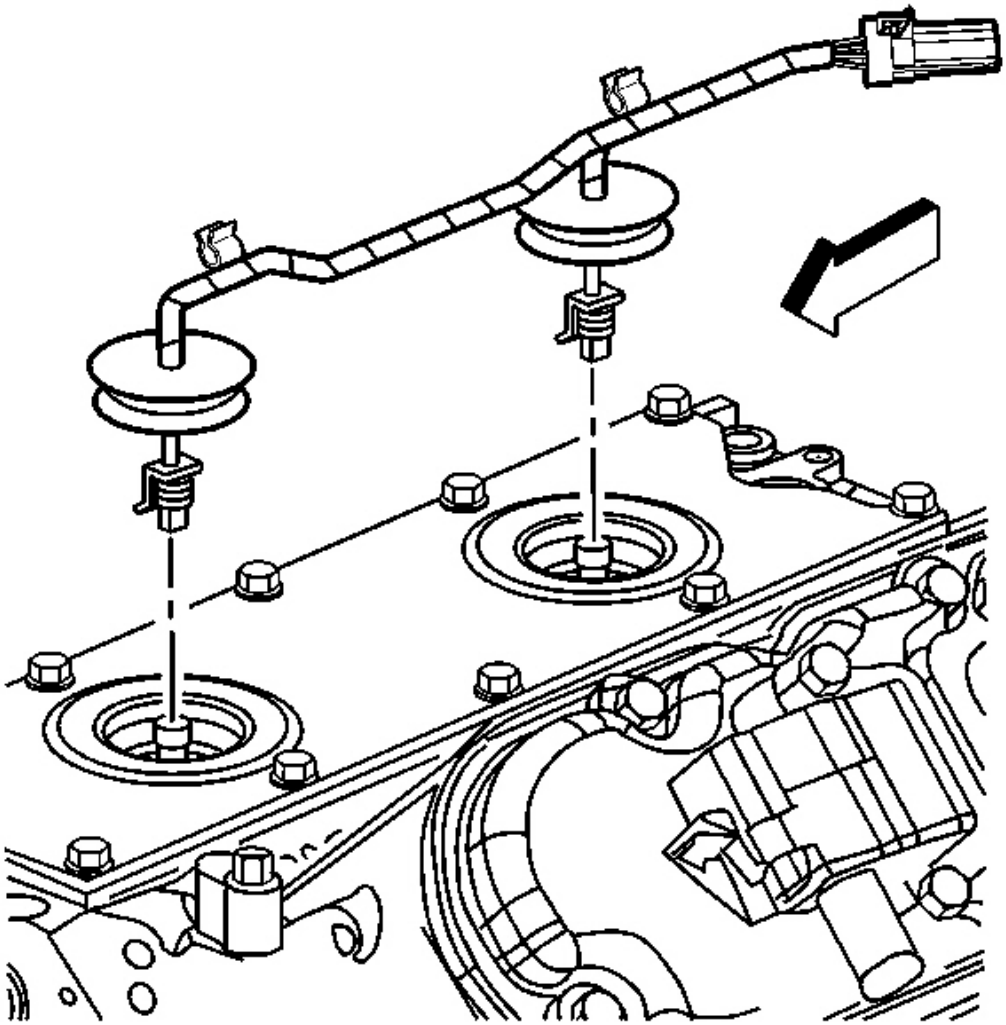

Fig. 341: Knock Sensor Wiring Harness Assembly
Courtesy of GENERAL MOTORS CORP.

1. Remove the intake manifold. Refer to **Intake Manifold Replacement** in Engine Mechanical.
2. Remove the knock sensor wiring harness assembly.

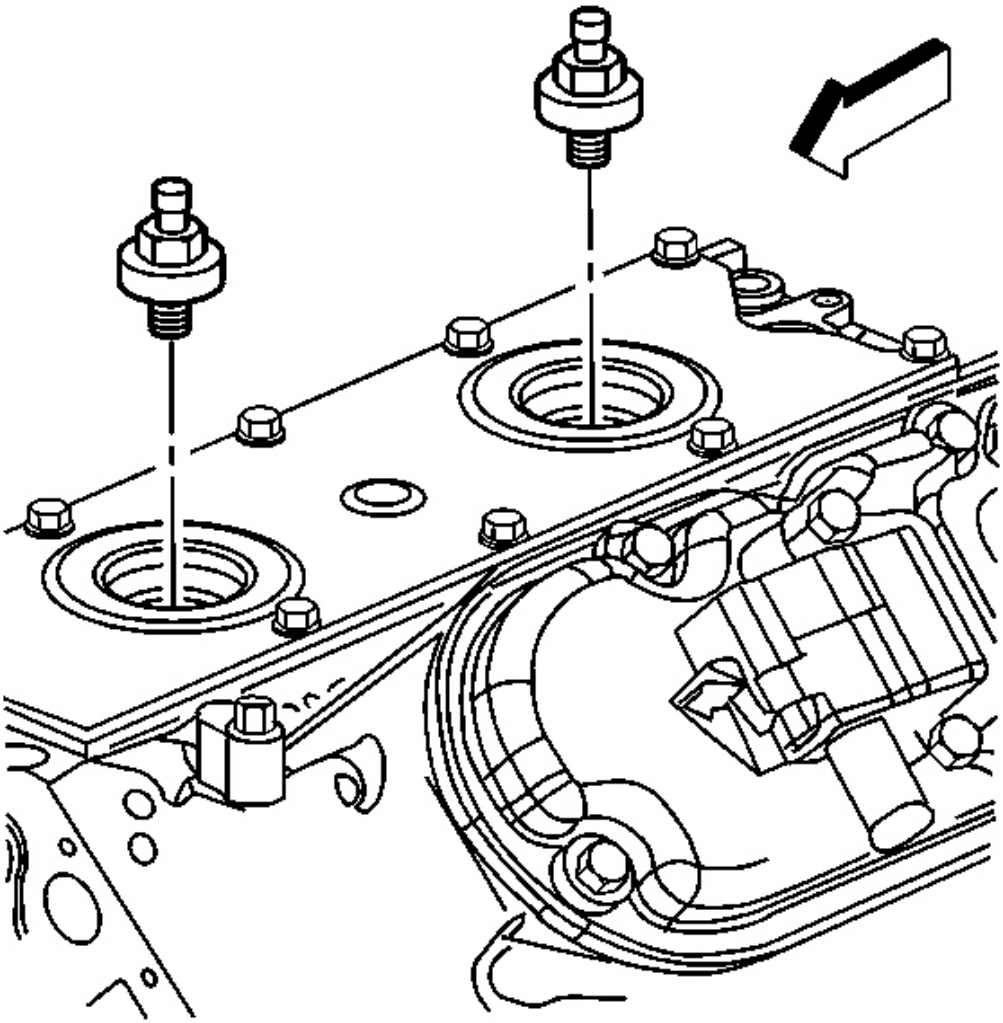

Fig. 342: Knock Sensors
Courtesy of GENERAL MOTORS CORP.

3. Remove the knock sensor.

Installation Procedure

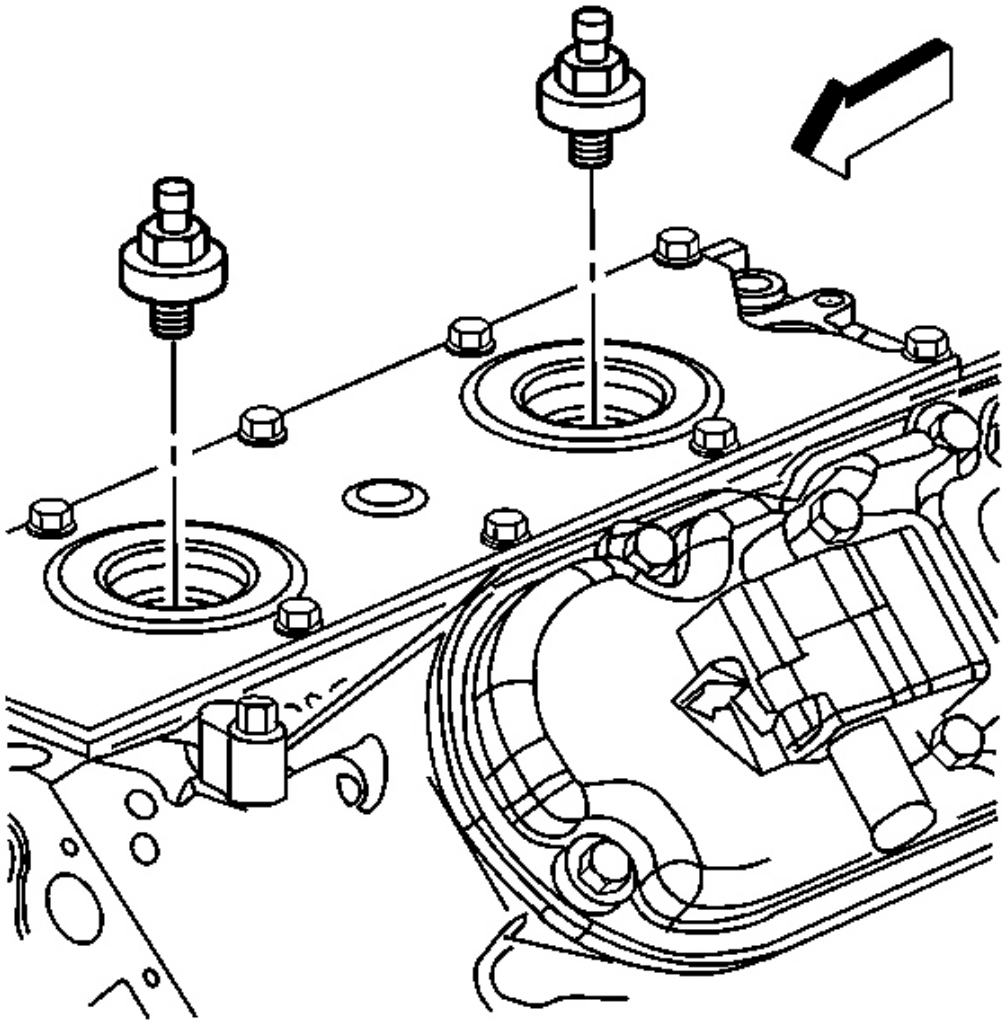

Fig. 343: Knock Sensors
Courtesy of GENERAL MOTORS CORP.

NOTE: Refer to Fastener Notice in Cautions and Notices.

1. Install the knock sensor.

   Tighten: Tighten the knock sensor to 20 N.m (15 lb ft).

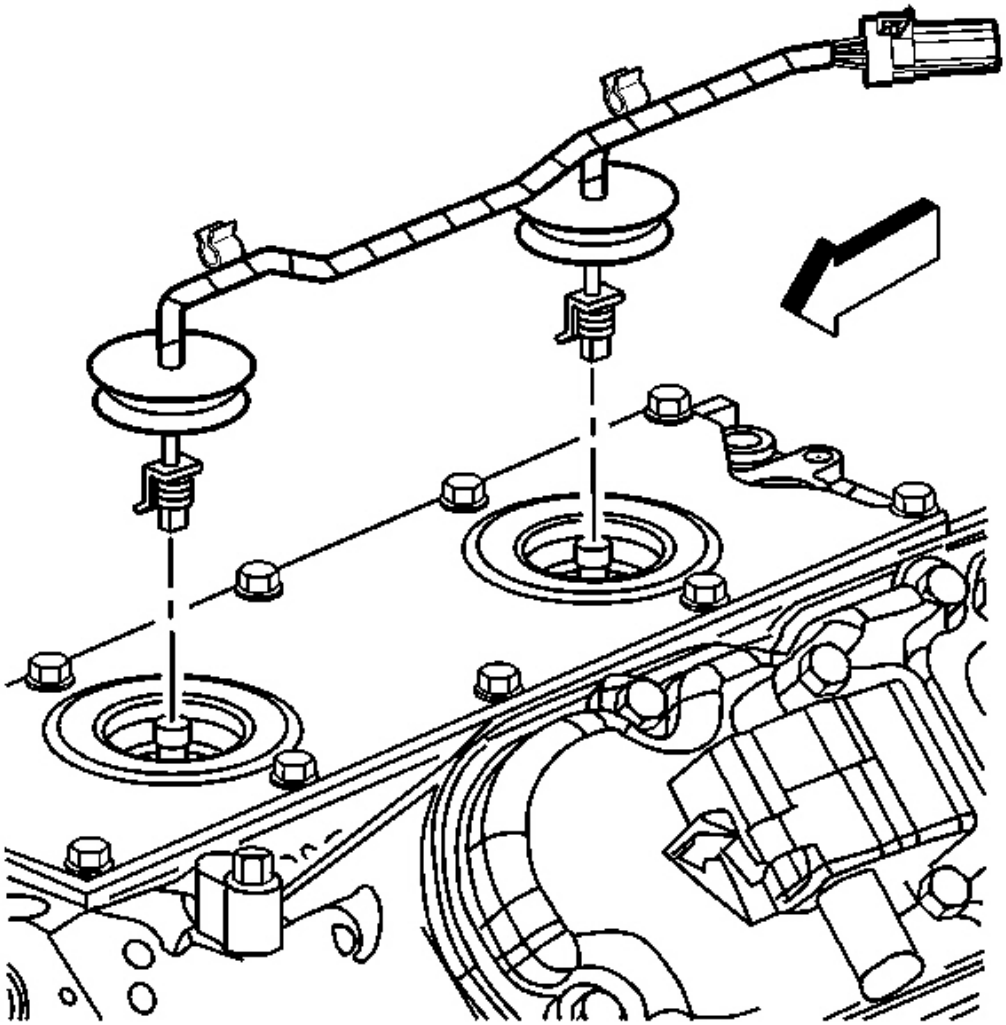

Fig. 344: Knock Sensor Wiring Harness Assembly
Courtesy of GENERAL MOTORS CORP.

2. Install the knock sensor wiring harness assembly.
3. Install the intake manifold. Refer to **Intake Manifold Replacement** in Engine Mechanical.
4. Connect the negative battery cable. Refer to **Battery Negative Cable Disconnect/Connect Procedure** in Engine Electrical.
5. Program the transmitters. Refer to **Transmitter Programming** in Keyless Entry.

SECONDARY AIR INJECTION (AIR) PUMP REPLACEMENT

Removal Procedure

CAUTION: Refer to Vehicle Lifting Caution in Cautions and Notices.

1. Raise the vehicle. Refer to **Lifting and Jacking the Vehicle** in General Information.
2. Remove the left hand side lower close-out panel.

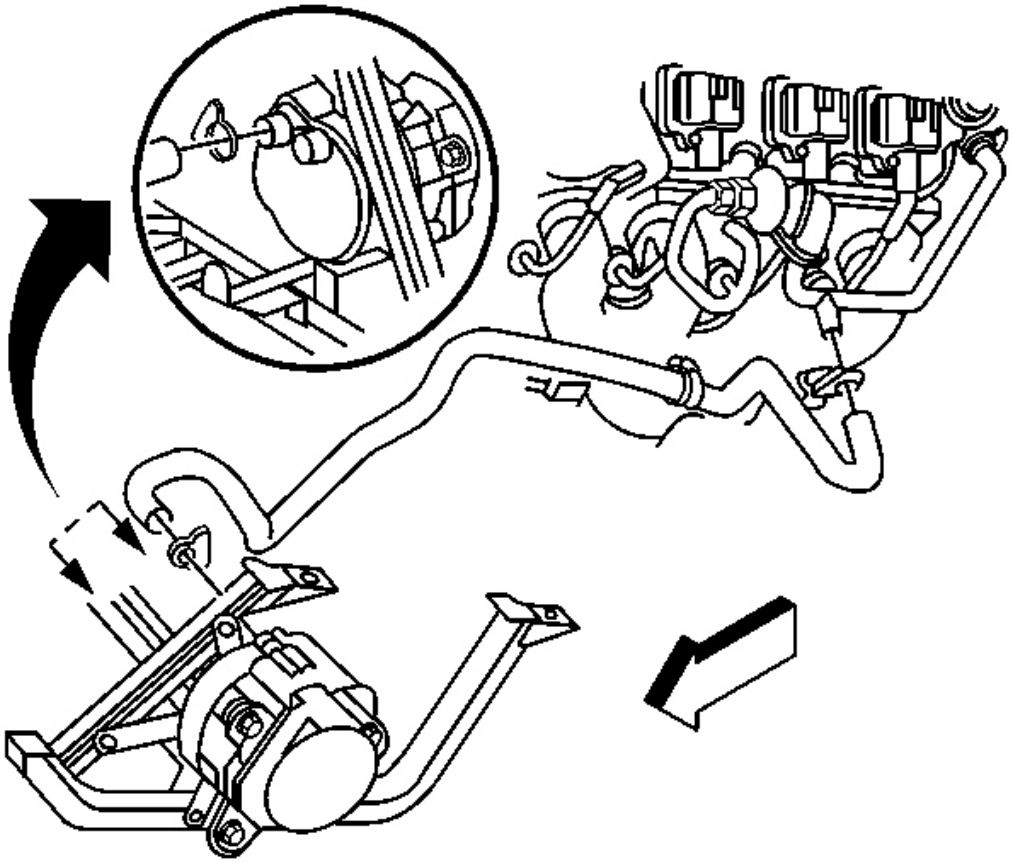

Fig. 345: AIR Pump Mounting Bolts & Bracket
Courtesy of GENERAL MOTORS CORP.

3. Remove the hoses from the AIR pump.
4. Disconnect the electrical connector from the AIR pump.
5. Remove the AIR pump mounting bolts from the bracket.

6. Remove the AIR pump.

Installation Procedure

1. Install the AIR pump.

   NOTE: Refer to Fastener Notice in Cautions and Notices.

2. Install the mounting bolts.

   Tighten: Tighten the AIR pump bolts to 9 N.m (80 lb in).

3. Connect the electric connector to AIR pump.

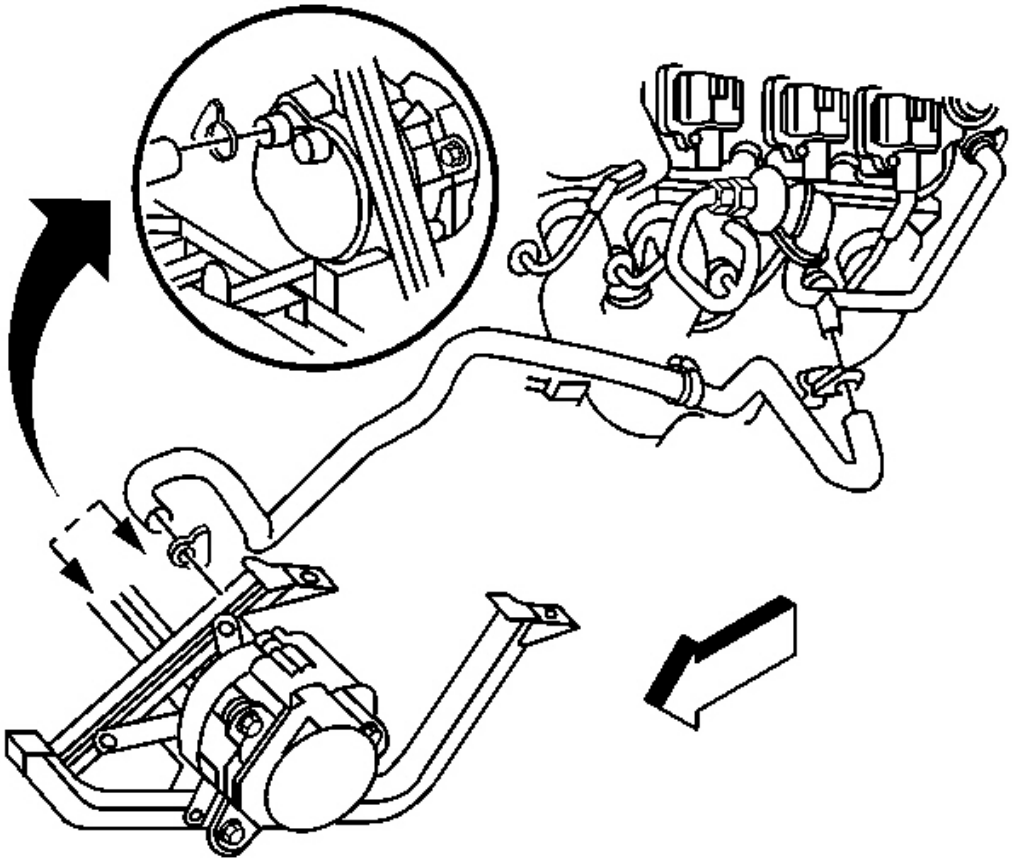

Fig. 346: AIR Pump Mounting Bolts & Bracket

Courtesy of GENERAL MOTORS CORP.

4. Connect the hoses to the AIR pump.
5. Install the left hand side close-out panel.
6. Lower the vehicle.
7. Verify the AIR system for proper operation.

SECONDARY AIR INJECTION (AIR) SHUT-OFF VALVE REPLACEMENT

Removal Procedure

1. Remove the fascia front close out panel. Refer to **Fascia Replacement - Front Bumper** in Bumpers.

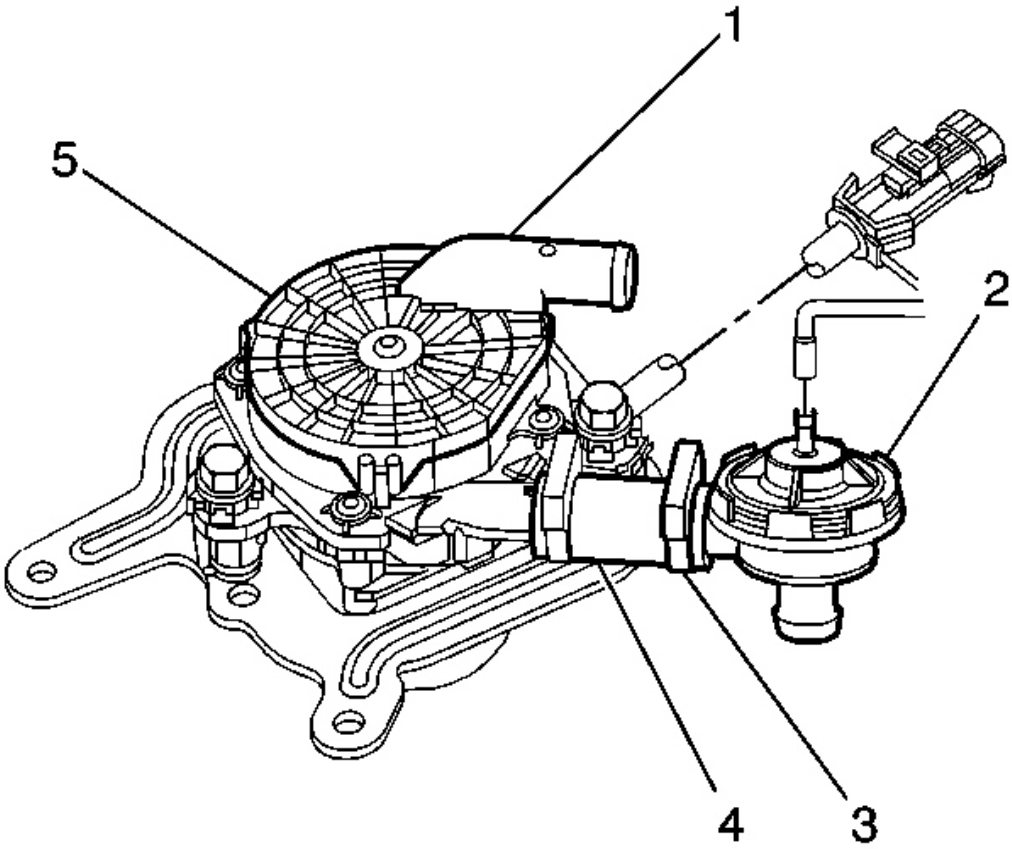

Fig. 347: Air Shut Off Valve Vacuum Hose
Courtesy of GENERAL MOTORS CORP.

2. Remove the vacuum hose from the secondary air injection (AIR) shut off valve (2).

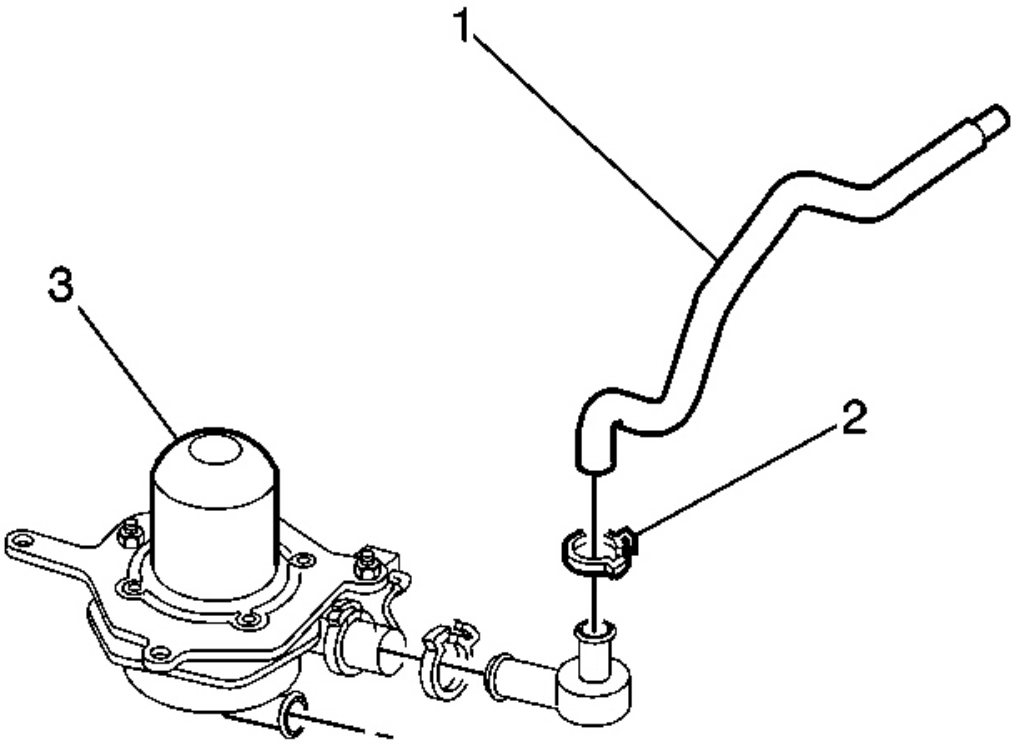

Fig. 348: AIR Shut Off Valve Hoses & Clamps
Courtesy of GENERAL MOTORS CORP.

3. Remove the clamps (2) from the AIR shut off valve hoses.
4. Remove the AIR hose (1) from the AIR shut off valve outlet port.
5. Remove the AIR shut off valve.

Installation Procedure

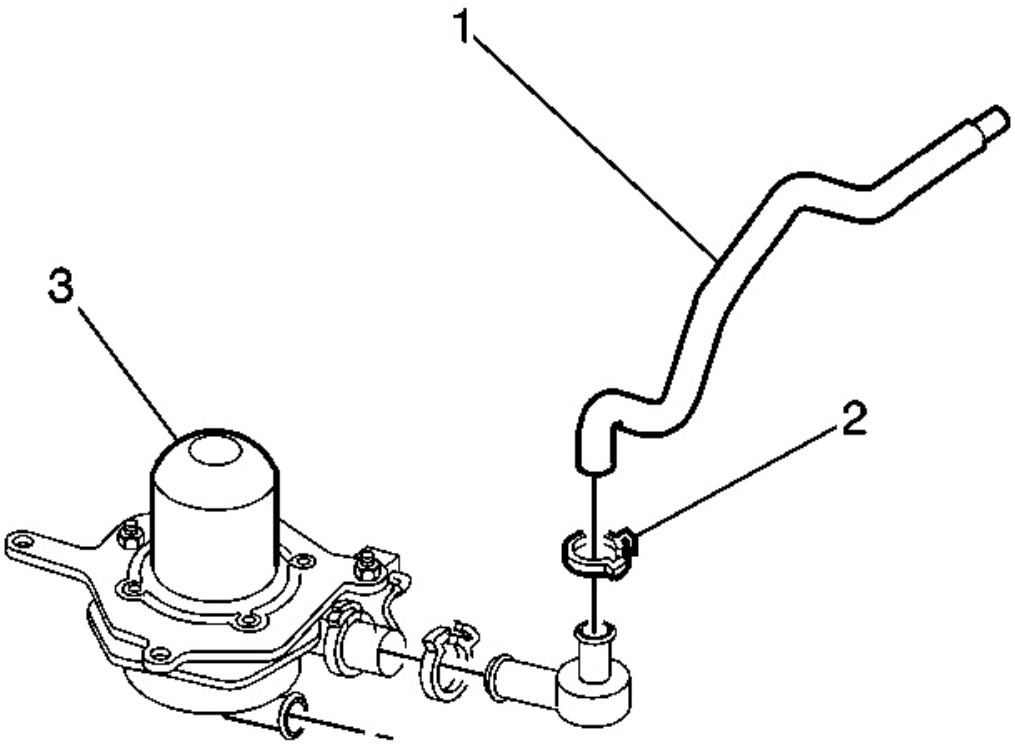

Fig. 349: AIR Shut Off Valve Hoses & Clamps
Courtesy of GENERAL MOTORS CORP.

1. Install the AIR pump shut off valve.
2. Install the AIR hose (1) to the AIR shut off valve outlet port.
3. Install the clamps (2) to the AIR shut off valve hoses.

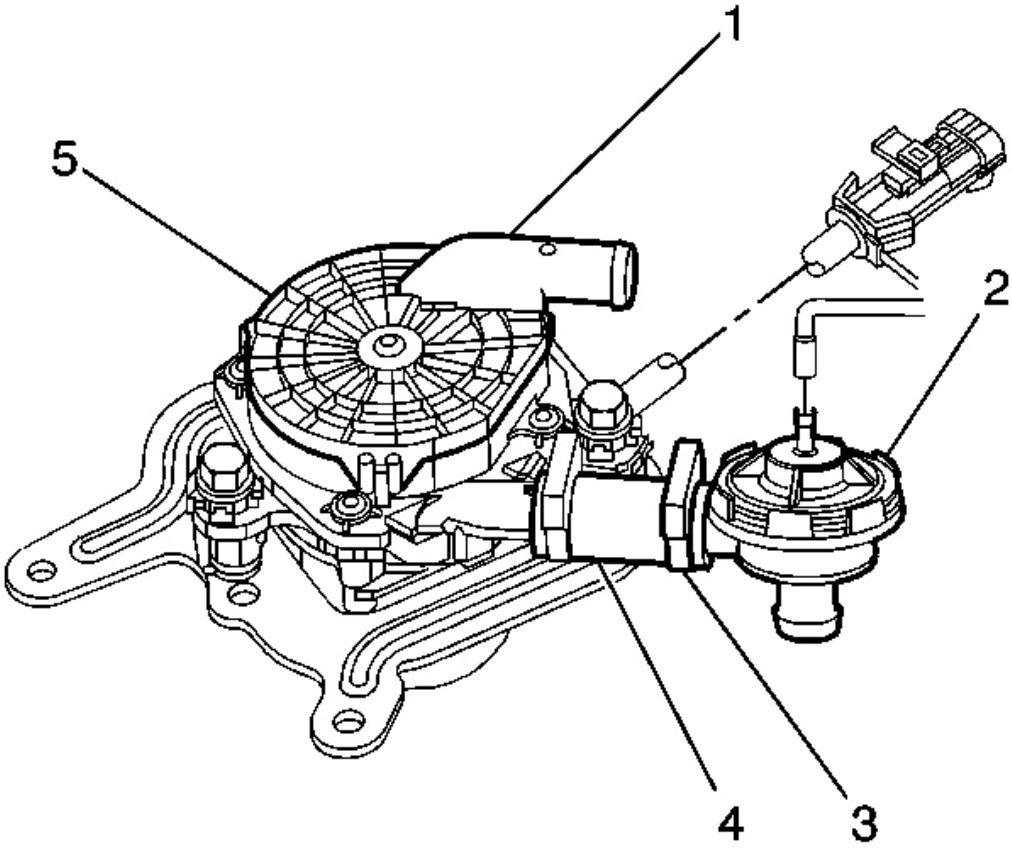

Fig. 350: Air Shut Off Valve Vacuum Hose
Courtesy of GENERAL MOTORS CORP.

4. Install the vacuum hose to the AIR shut off valve (2).
5. Install the fascia front close out panel. Refer to **Fascia Replacement - Front Bumper** in Bumpers.

SECONDARY AIR INJECTION (AIR) VACUUM CONTROL SOLENOID VALVE REPLACEMENT

Removal Procedure

1. Remove the right wheelhouse filler panel. Refer to **Wheelhouse Filler Replacement** in Body Front End.

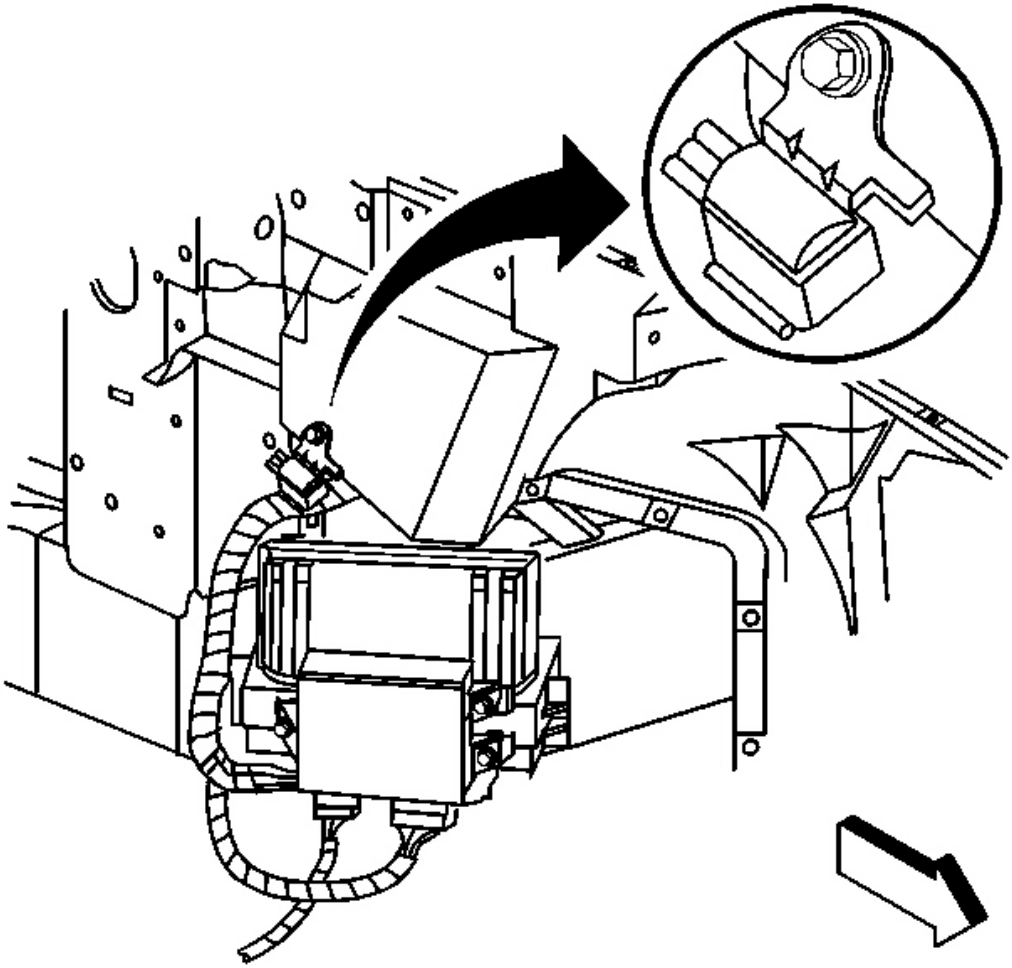

Fig. 351: AIR Solenoid Valve & Electrical Connector
Courtesy of GENERAL MOTORS CORP.

2. Remove the vacuum hoses from the secondary air injection (AIR) solenoid valve.
3. Remove the electrical connector from the AIR solenoid valve.

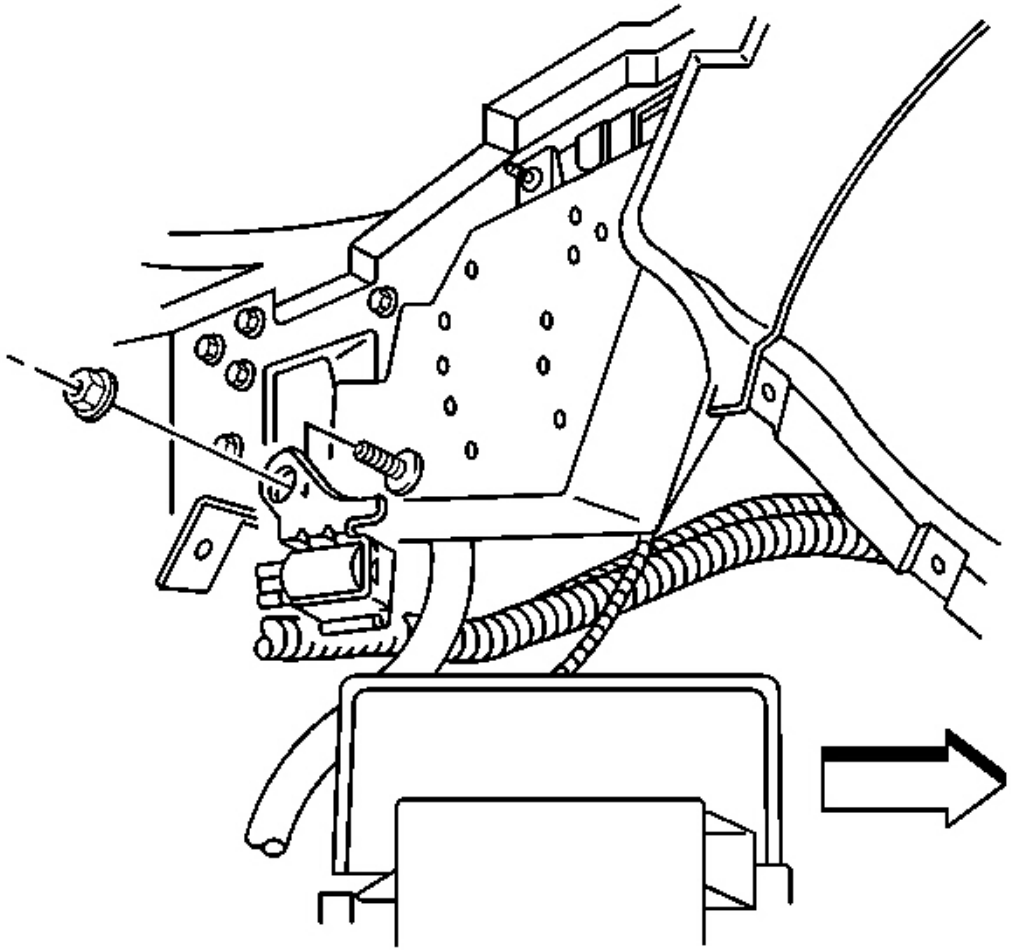

Fig. 352: AIR Solenoid Valve & Retaining Nut
Courtesy of GENERAL MOTORS CORP.

4. Remove the AIR solenoid valve retaining nut.
5. Remove the AIR solenoid valve.

Installation Procedure

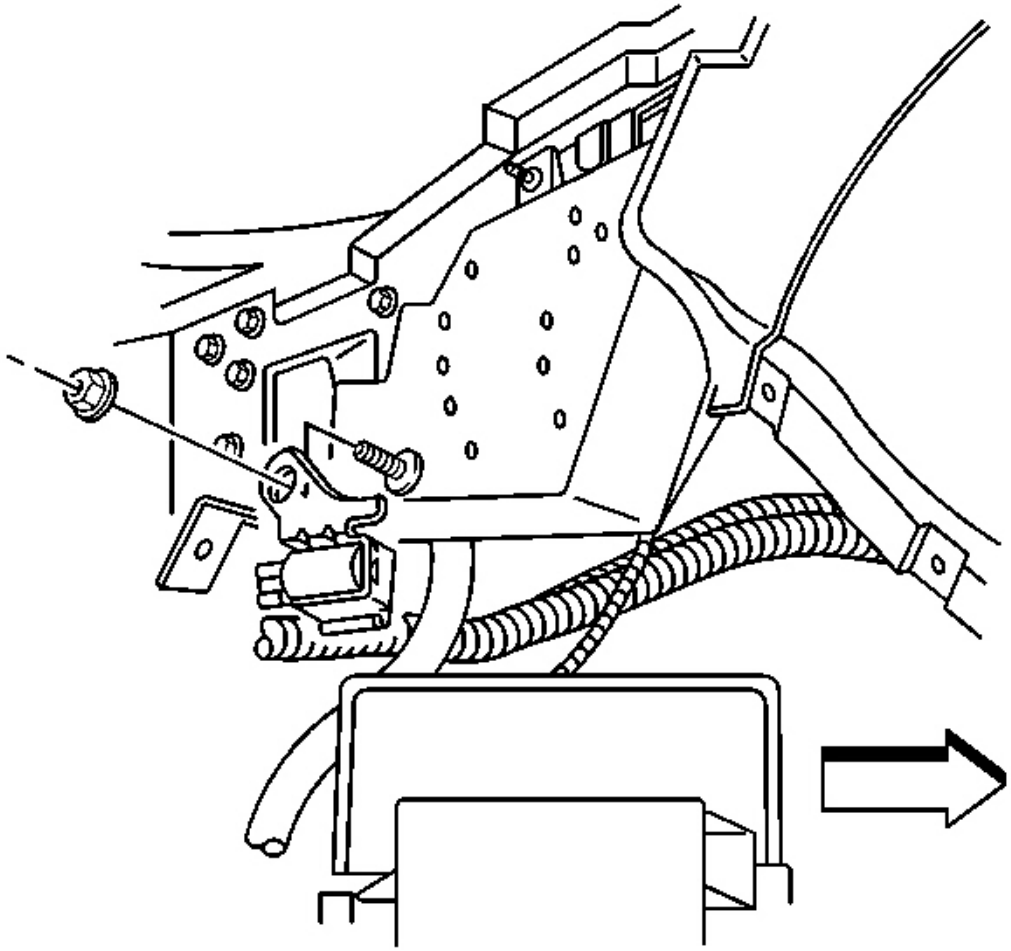

Fig. 353: AIR Solenoid Valve & Retaining Nut
Courtesy of GENERAL MOTORS CORP.

1. Install the AIR solenoid valve.

NOTE: **Refer to Fastener Notice in Cautions and Notices.**

2. Install the AIR solenoid valve retaining nut.

Tighten: Tighten the AIR solenoid valve retaining nut to 7 N.m (62 lb in).

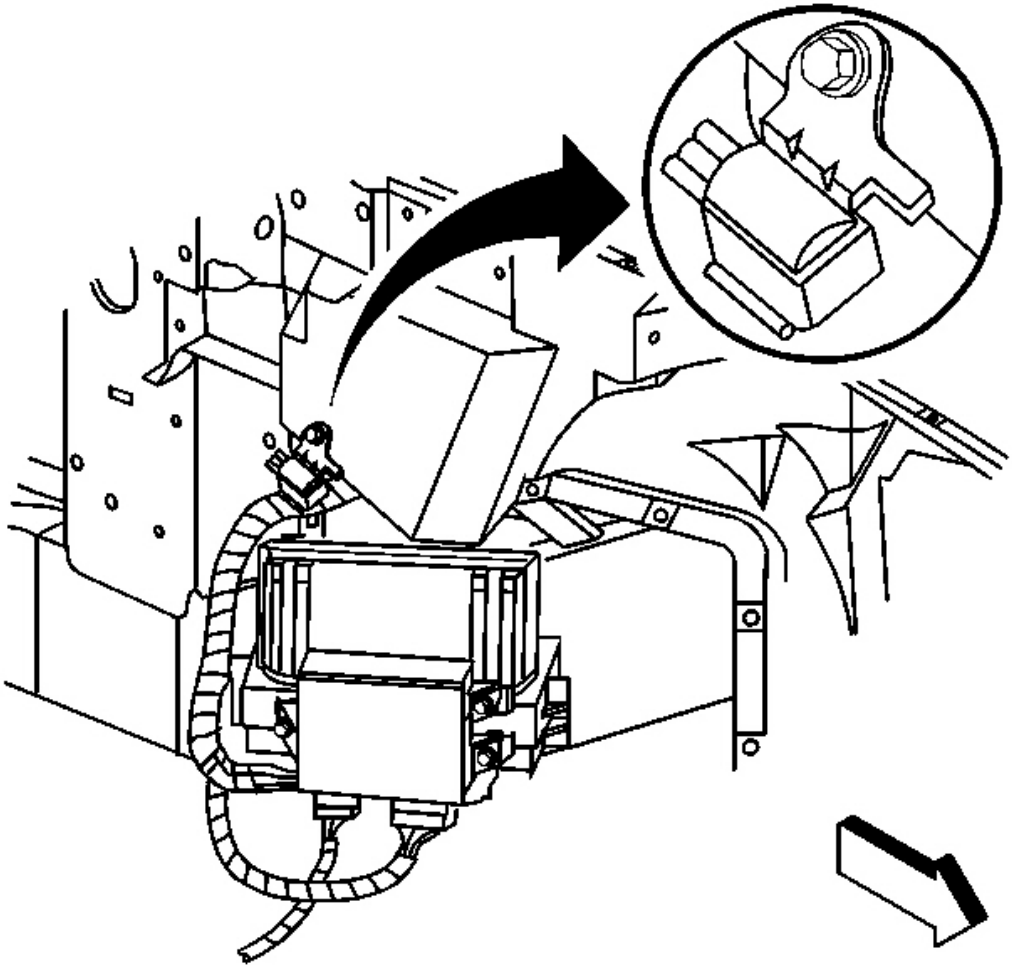

Fig. 354: AIR Solenoid Valve & Electrical Connector
Courtesy of GENERAL MOTORS CORP.

3. Install the vacuum hoses to the AIR solenoid valve.
4. Install the electrical connector to the AIR solenoid valve.
5. Install the right wheelhouse filler panel. Refer to **Wheelhouse Filler Replacement** in Body Front End.

SECONDARY AIR INJECTION (AIR) CHECK VALVE/PIPE REPLACEMENT - BANK 1

Removal Procedure

1. Remove the check valve clamp.

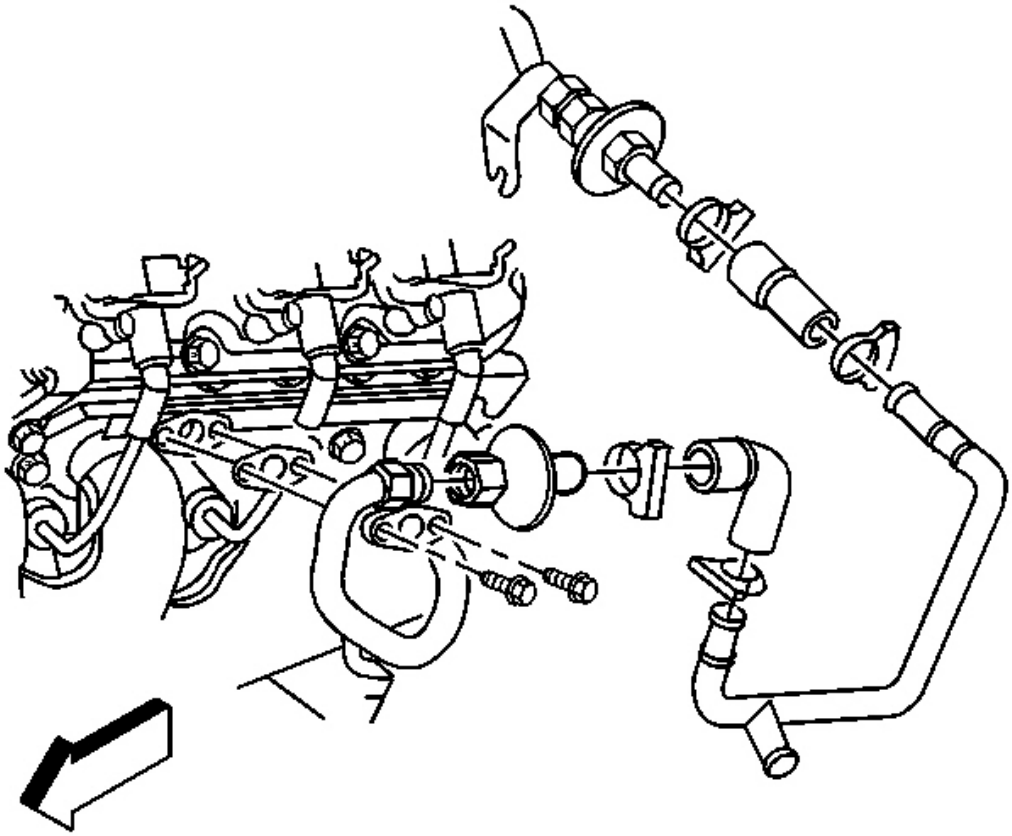

Fig. 355: AIR Hose, AIR Pipe & Check Valve
Courtesy of GENERAL MOTORS CORP.

CAUTION: Allow the engine to cool before servicing the secondary air injection AIR system in order to reduce the chance of severe burns.

2. Disconnect the secondary air injection (AIR) hose from the check valve.
3. Unscrew the check valve from the AIR pipe.
4. Remove the left AIR pipe from the manifold.
5. Before replacing a check valve, test the valve for proper operation.
    1. Install a vacuum pump to the nipple side of the check valve, AIR pump side.
    2. Pump the vacuum pump to 10 in Hg and observe the gage.
    3. Replace the check valve if the vacuum bleeds down to zero within 5 seconds.

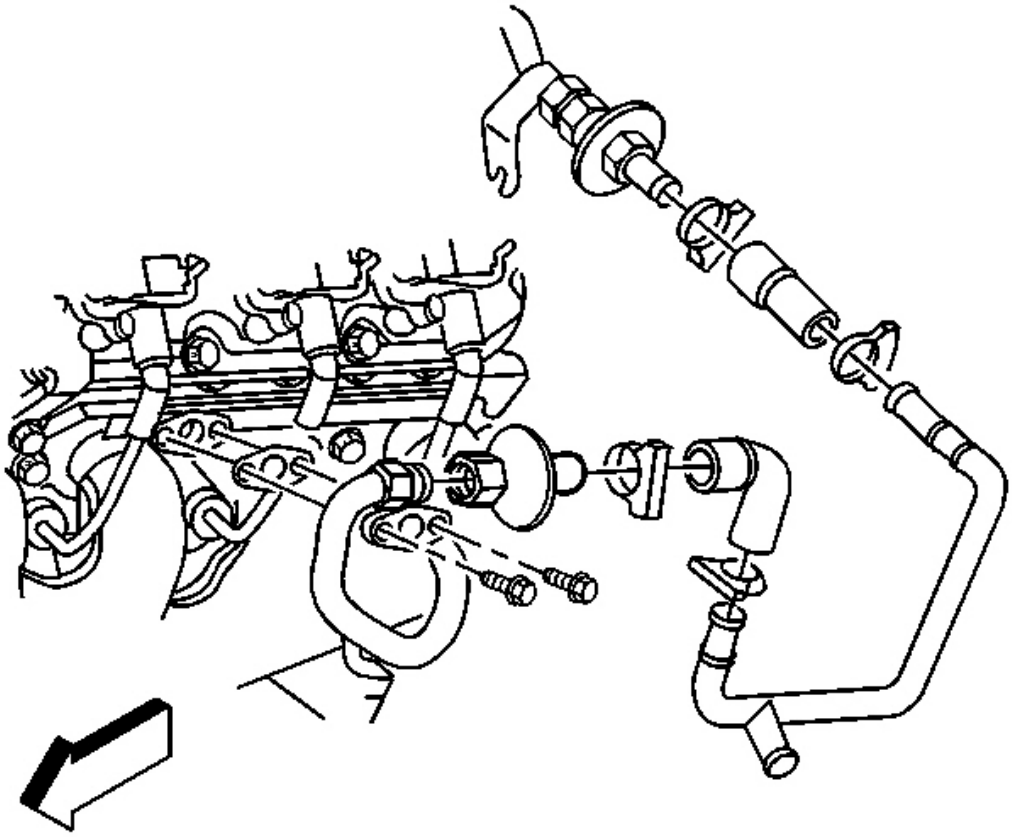

Fig. 356: AIR Hose, AIR Pipe & Check Valve
Courtesy of GENERAL MOTORS CORP.

NOTE: Refer to Fastener Notice in Cautions and Notices.

1. Screw the check valve onto the AIR pipe.

   Tighten: Tighten the check valve to the AIR pipe to 23 N.m (17 lb ft).

2. Connect the AIR pipe to the exhaust manifold.

   Tighten: Tighten the AIR pipe to the exhaust manifold to 20 N.m (15 lb ft).

3. Install the AIR hose to the check valve.

4. Install the check valve clamp.

SECONDARY AIR INJECTION (AIR) CHECK VALVE/PIPE REPLACEMENT - BANK 2

Removal Procedure

1. Remove the intake manifold. Refer to **Intake Manifold Replacement** in Engine Mechanical.

CAUTION: Allow the engine to cool before servicing the secondary air injection AIR system in order to reduce the chance of severe burns.

2. Remove the clamps and secondary air injection (AIR) hoses from the AIR system right pipe.

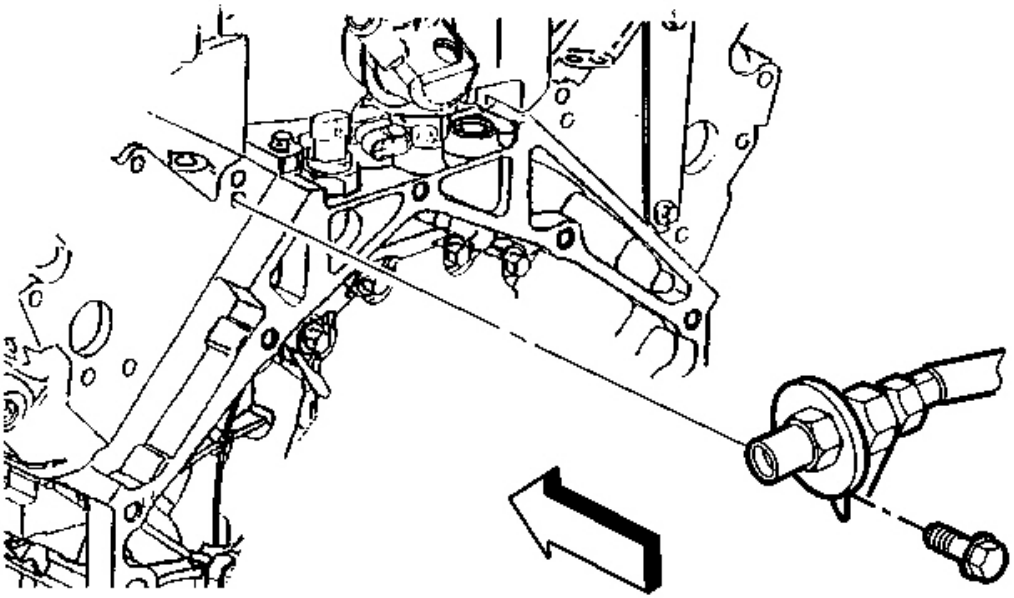

Fig. 357: Cylinder Head & Air Pipe Bolt
Courtesy of GENERAL MOTORS CORP.

3. Remove the AIR pipe bolt from the cylinder head.

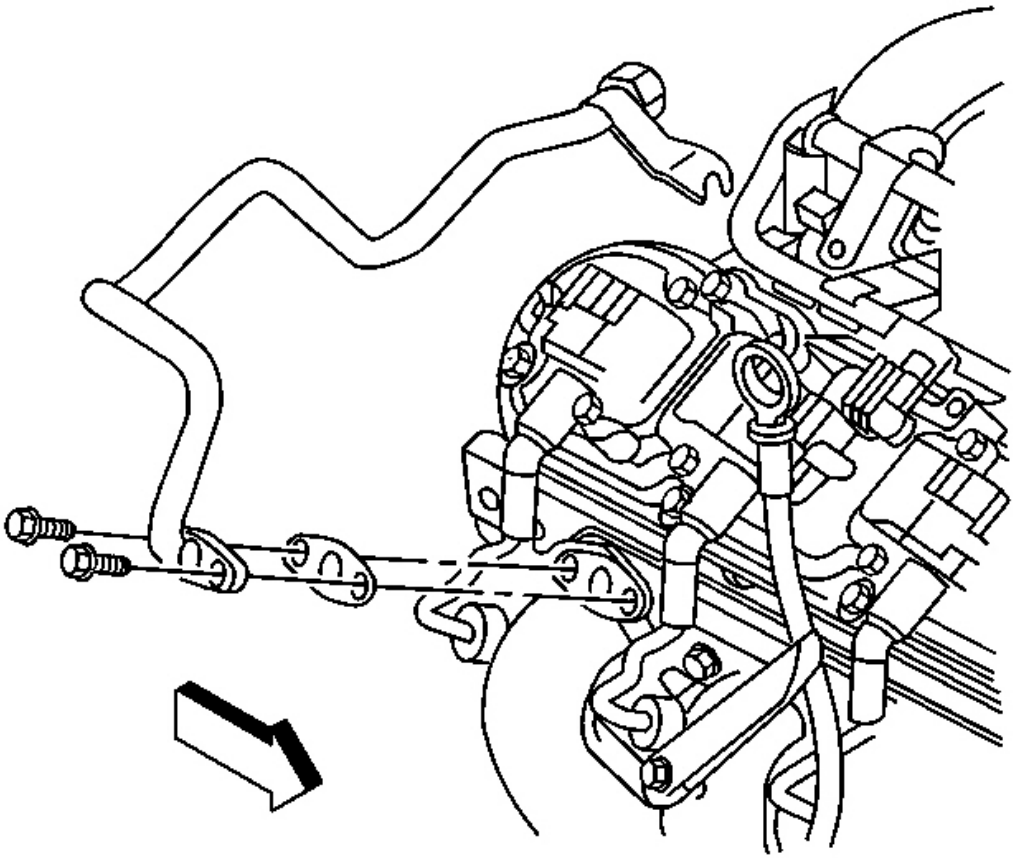

Fig. 358: Right Air Pipe
Courtesy of GENERAL MOTORS CORP.

4. Remove the right AIR pipe from the manifold.
5. Unscrew the check valve from the AIR pipe.
6. Before replacing a check valve, test the valve for proper operation.
    1. Install a vacuum pump to the nipple side of the check valve, AIR pump side.
    2. Pump the vacuum pump to 10 inches Hg and observe the gage.
    3. Replace the check valve if the vacuum bleeds down to zero within 5 seconds.

Installation Procedure

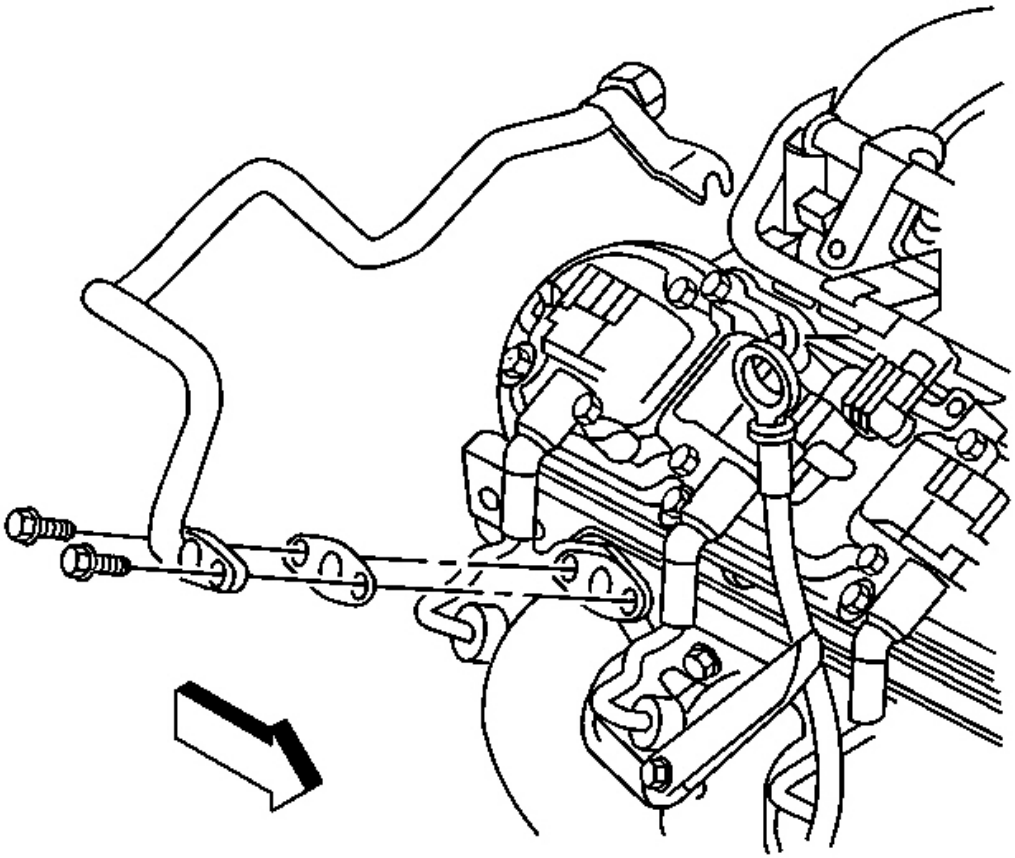

Fig. 359: Right Air Pipe
Courtesy of GENERAL MOTORS CORP.

NOTE: Refer to Fastener Notice in Cautions and Notices.

1. Screw the check valve onto the AIR pipe.

   Tighten: Tighten the check valve to 23 N.m (17 lb ft).

2. Connect the right AIR pipe to the exhaust manifold.

   Tighten: Tighten the AIR pipe to the exhaust manifold to 20 N.m (15 lb ft).

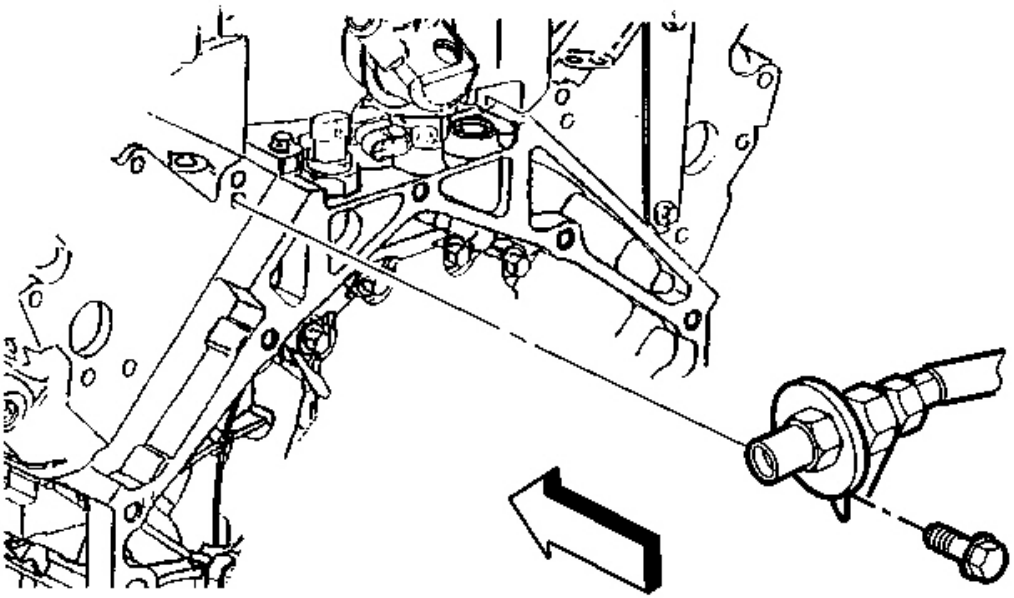

Fig. 360: Cylinder Head & Air Pipe Bolt
Courtesy of GENERAL MOTORS CORP.

3. Install the AIR pipe bolt from the cylinder head.
4. Install the hose and the clamp to the check valve.
5. Install the intake manifold. Refer to **Intake Manifold Replacement** in Engine Mechanical.
6. Check the AIR system for proper operation.
7. Connect the negative battery cable. Refer to **Battery Negative Cable Disconnect/Connect Procedure** in Engine Electrical.
8. Program the transmitters. Refer to **Transmitter Programming** in Keyless Entry.

AIR CLEANER ELEMENT REPLACEMENT

Removal Procedure

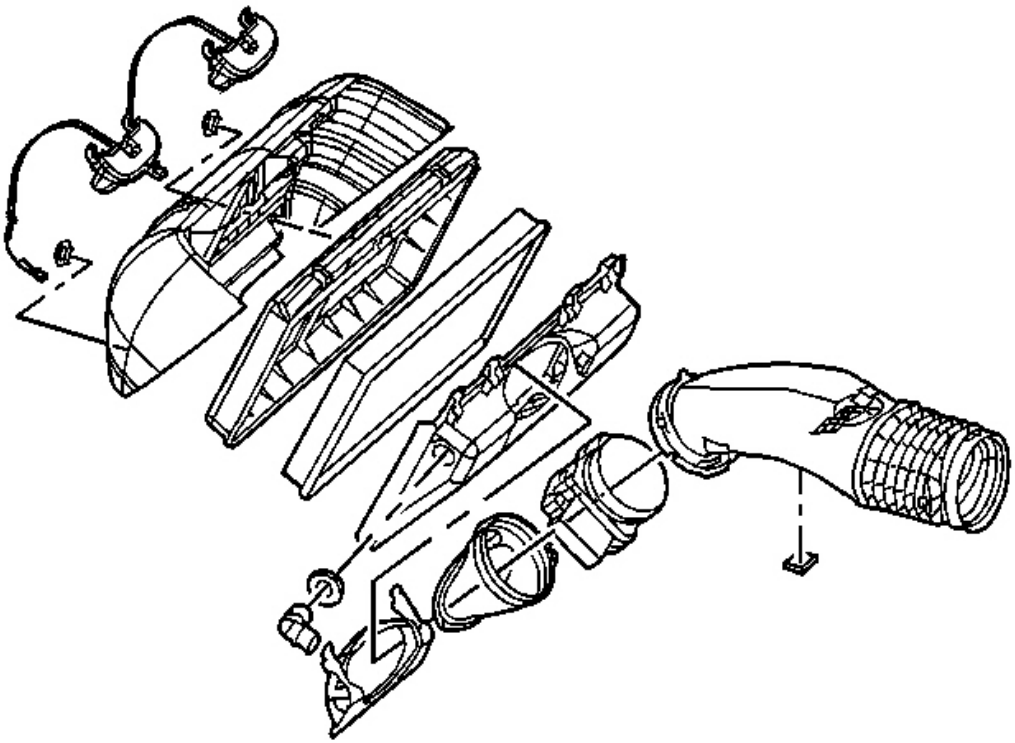

Fig. 361: Air Filter Element
Courtesy of GENERAL MOTORS CORP.

1. Release the retainer strap latches.
2. Release the air cleaner housing cover.
3. Pull out the air filter element.
4. Inspect the air filter element for dust, for dirt, and for water. Clean or replace the air filter element if necessary.

Installation Procedure

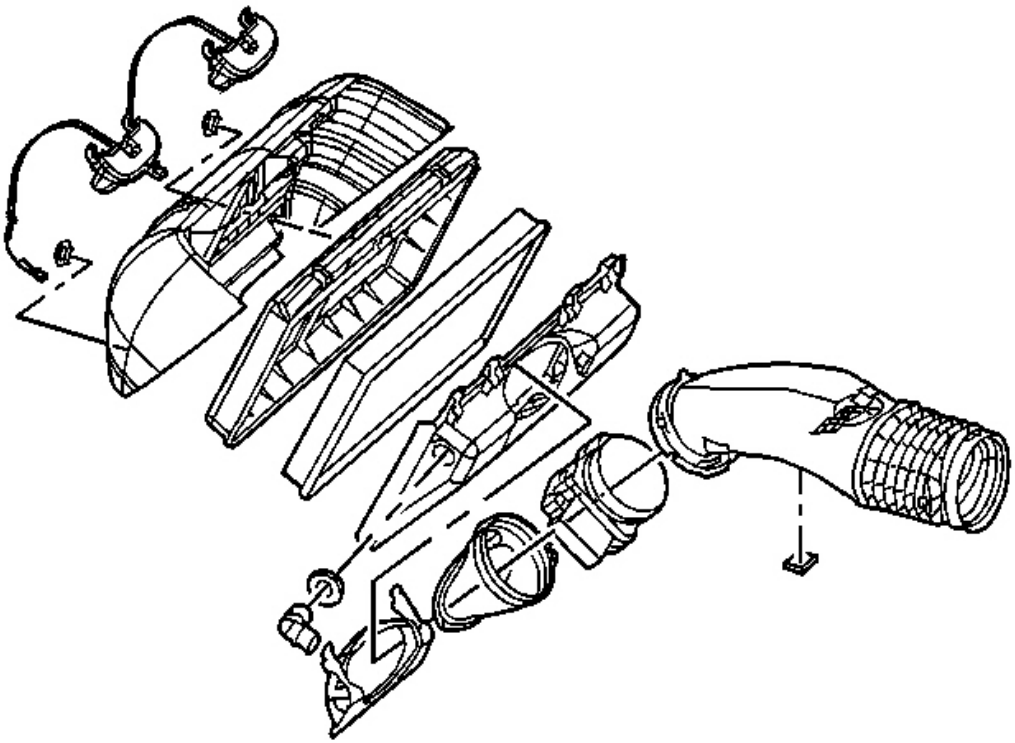

Fig. 362: Air Filter Element
Courtesy of GENERAL MOTORS CORP.

1. Install the air filter element into the air cleaner housing.
2. Secure the air cleaner housing cover.
3. Secure the retainer strap latches.

AIR CLEANER ASSEMBLY REPLACEMENT

Tools Required

J 22610 Service Boot Clamp Installer. See **Special Tools and Equipment** .

Removal Procedure

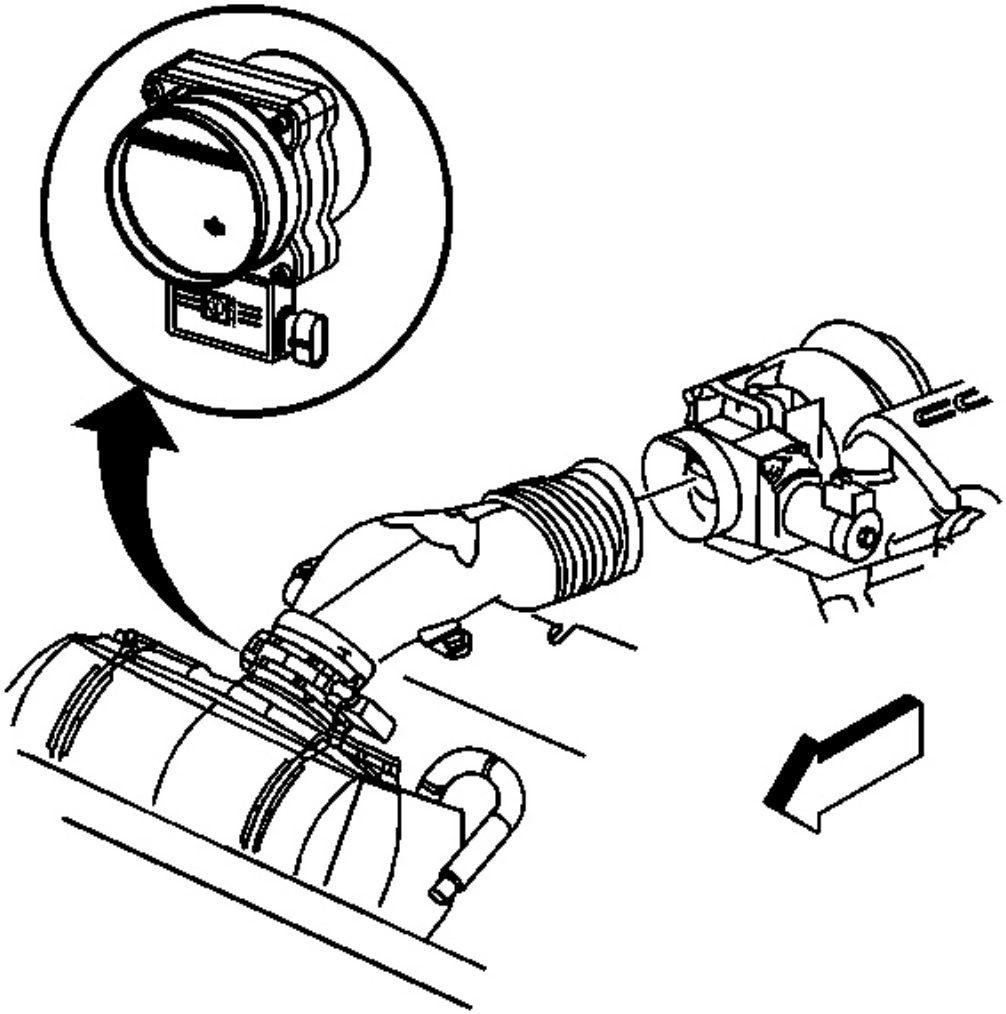

Fig. 363: MAF/IAT Sensor Electrical Connector
Courtesy of GENERAL MOTORS CORP.

1. Disconnect the mass airflow/intake air temperature (MAF/IAT) sensor electrical connector.

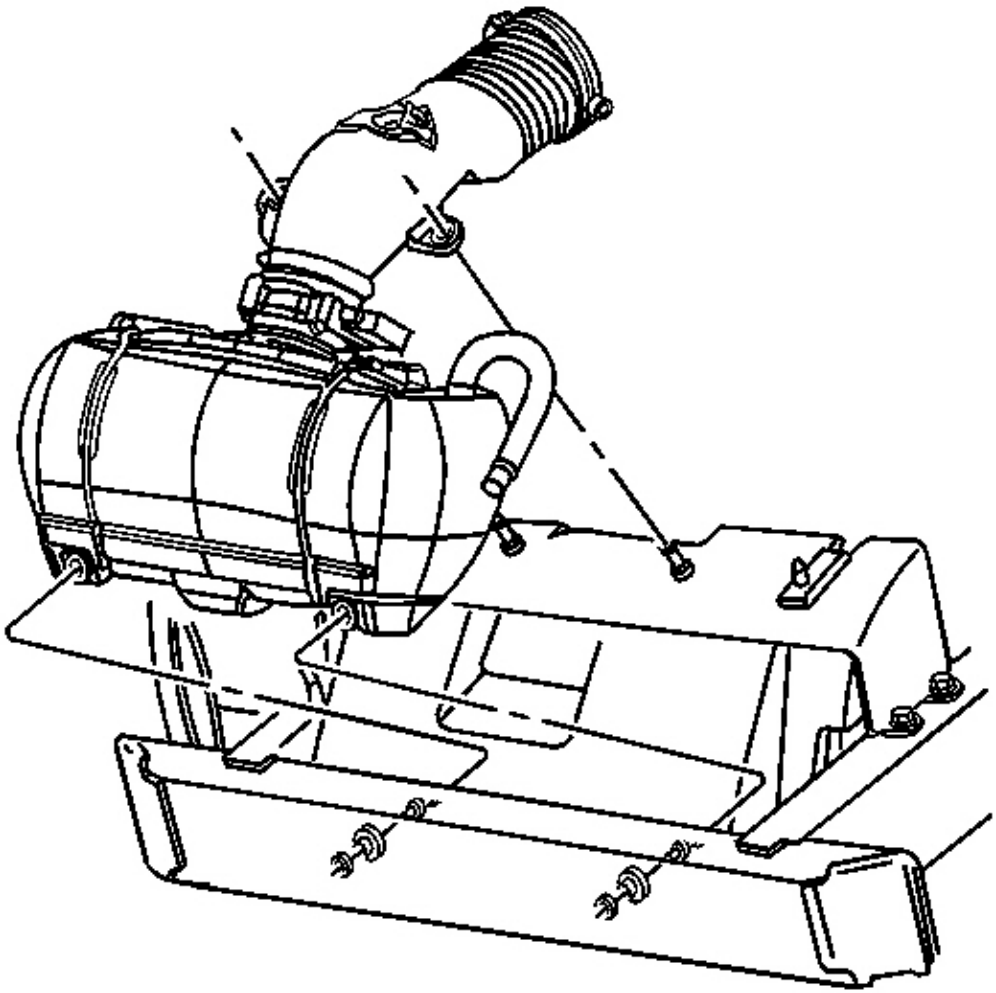

Fig. 364: Air Intake Duct Clamp At Throttle Body
Courtesy of GENERAL MOTORS CORP.

2. Loosen the air intake duct clamp at the throttle body.
3. Release the air intake duct at the throttle body.
4. Release the air intake duct from the upper support grommet studs.
5. Disconnect the AIR hose from the air cleaner assembly.
6. Release the air cleaner assembly with the grommets from the grommet mounting studs.
7. Remove the air cleaner assembly.
8. Remove the MAF/IAT sensor from the air cleaner assembly, if necessary.

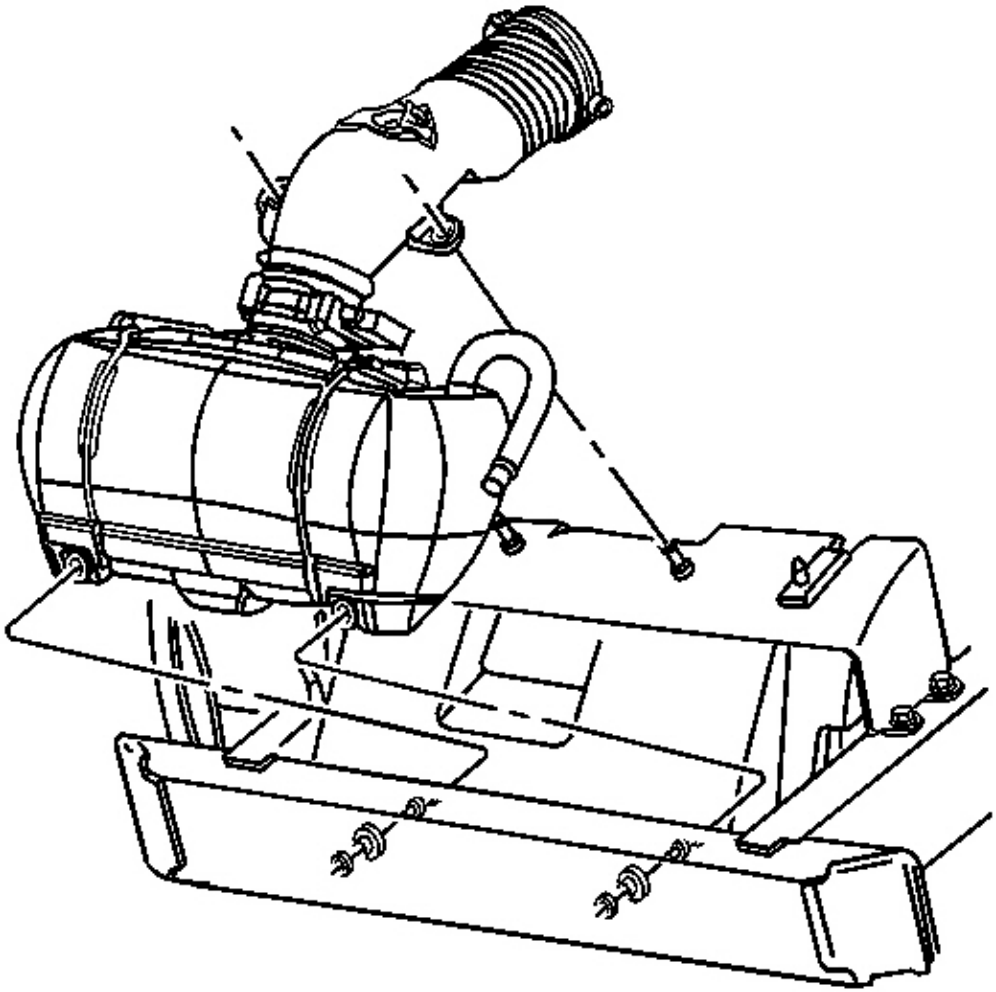

Fig. 365: Air Intake Duct Clamp At Throttle Body
Courtesy of GENERAL MOTORS CORP.

NOTE: **Verify that the radiator air deflector is in position before installing an air cleaner assembly. Improper installation may allow water intrusion which could damage the engine.**

NOTE: **If the mass air flow (MAF) sensor is installed backwards, the system will go rich. An arrow cast into the plastic portion of the sensor indicates**

proper air flow direction. The arrow must point toward the engine.

1. Install the MAF/IAT sensor to the air cleaner assembly, if necessary.
2. Install a new clamp using the **J 22610** . See **Special Tools and Equipment** .
3. Position the air intake duct to the throttle body. Ensure the air intake duct grommets are secure on the studs.
4. Tighten the air intake duct clamp at the throttle body.
5. Use a GM approved non-silicone lubricant in order to help with installation. Position the air cleaner assembly with mounting grommets to the mounting studs.
6. Secure the air cleaner assembly to the mounting studs.
7. Connect the AIR hose to the air cleaner assembly.

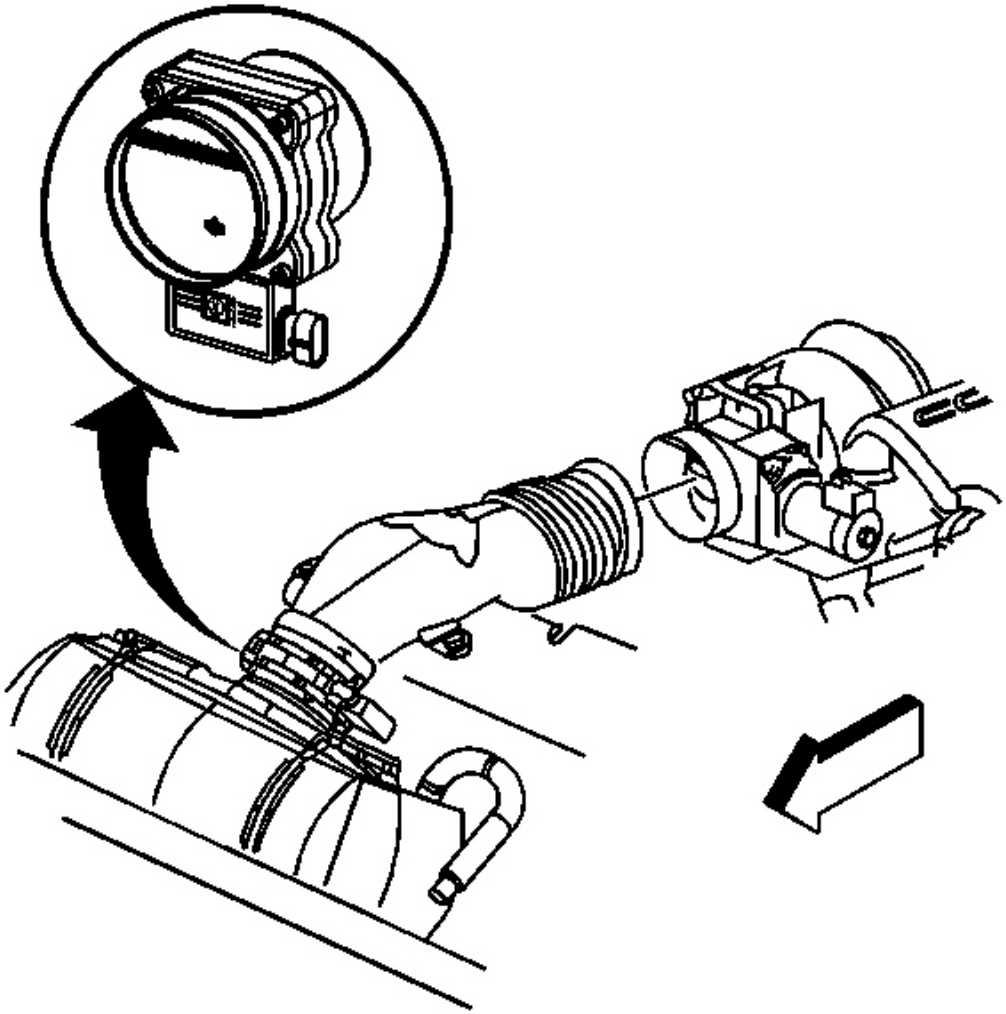

Fig. 366: MAF/IAT Sensor Electrical Connector
Courtesy of GENERAL MOTORS CORP.

8. Connect the MAF/IAT sensor electrical connector.

DESCRIPTION AND OPERATION

POWERTRAIN CONTROL MODULE (PCM) DESCRIPTION

Powertrain

The powertrain has electronic controls to reduce exhaust emissions while maintaining excellent driveability and fuel economy. The powertrain control module (PCM) is the control center of this system. The PCM monitors numerous engine and vehicle functions. The PCM constantly looks at the information from various sensors and other inputs, and controls the systems that affect vehicle performance and emissions. The PCM also performs the diagnostic tests on various parts of the system. The PCM can recognize operational problems and alert the driver via the malfunction indicator lamp (MIL). When the PCM detects a malfunction, the PCM stores a diagnostic trouble code (DTC). The problem area is identified by the particular DTC that is set. The control module supplies a buffered voltage to various sensors and switches. Review the components and wiring diagrams in order to determine which systems are controlled by the PCM.

The following are some of the functions that the PCM controls:

- The engine fueling
- The ignition control (IC)
- The knock sensor (KS) system
- The evaporative emissions (EVAP) system
- The secondary air injection (AIR) system (if equipped)
- The exhaust gas recirculation (EGR) system
- The automatic transmission functions
- The generator
- The A/C clutch control
- The cooling fan control

Powertrain Control Module Function

The powertrain control module (PCM) constantly looks at the information from various sensors and other inputs and controls systems that affect vehicle performance and emissions. The PCM also performs diagnostic tests on various parts of the system. The PCM can recognize operational problems and alert the driver via the malfunction indicator lamp (MIL). When the PCM detects a malfunction, the PCM stores a diagnostic trouble code (DTC). The problem area is identified by the particular DTC that is set. The control module supplies a buffered voltage to various sensors and switches. The input and output devices in the PCM include analog-to-digital converters, signal buffers, counters, and output drivers. The output drivers are electronic switches that complete a ground or voltage circuit when turned on. Most PCM controlled components are operated via output drivers. The PCM monitors these driver circuits for proper operation and, in most cases, can set a DTC corresponding to the controlled device if a problem is detected.

Malfunction Indicator Lamp (MIL) Operation

The malfunction indicator lamp (MIL) is located in the instrument panel cluster. The MIL will display as either SERVICE ENGINE SOON or one of the following symbols when commanded ON:

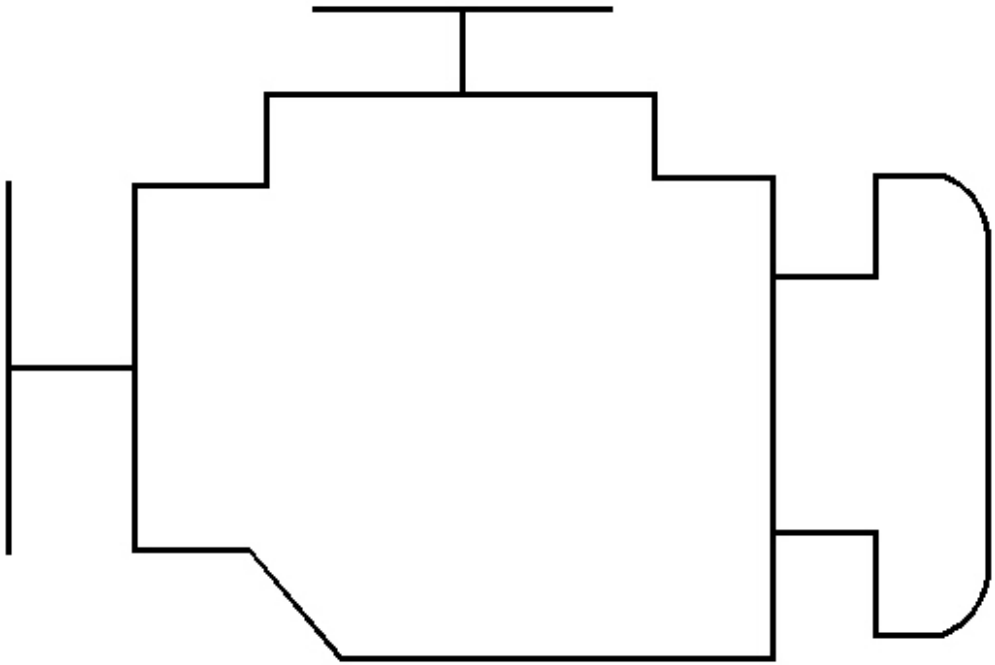

Fig. 367: Identifying MIL Symbol
Courtesy of GENERAL MOTORS CORP.

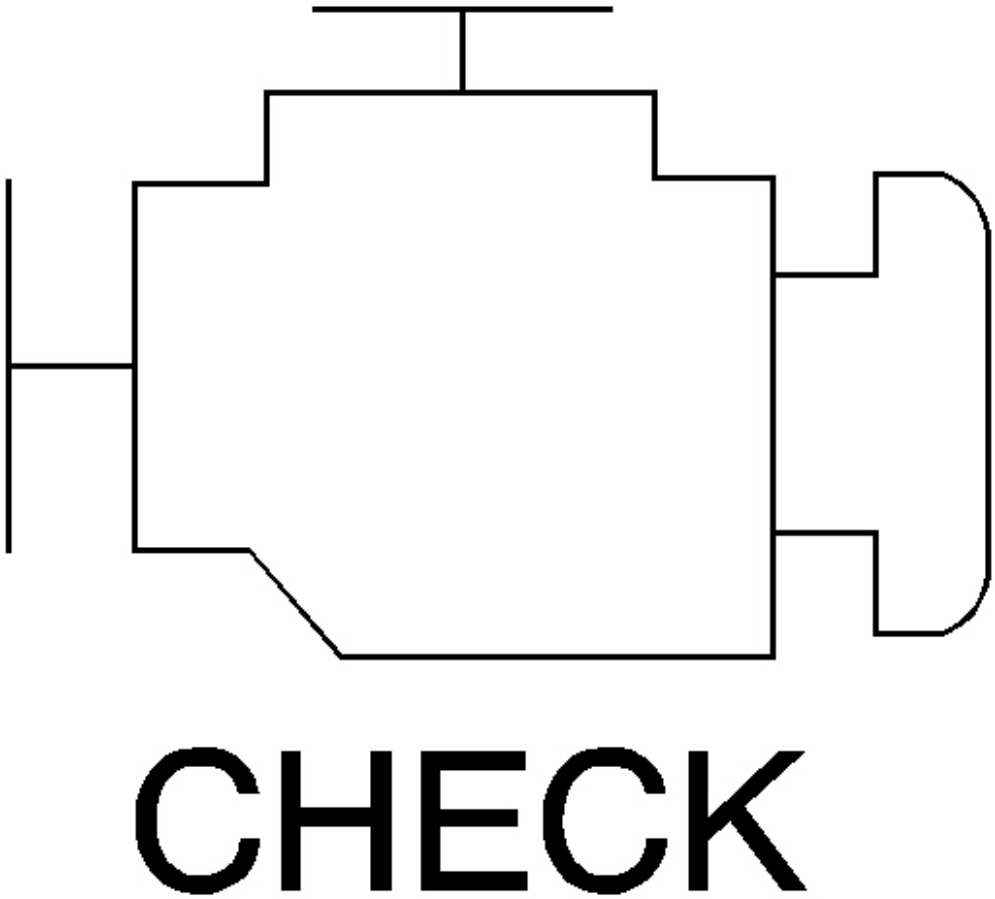

Fig. 368: MIL ON (Check)
Courtesy of GENERAL MOTORS CORP.

The MIL indicates that an emissions related fault has occurred and vehicle service is required.

The following is a list of the modes of operation for the MIL:

- The MIL illuminates when the ignition is turned ON, with the engine OFF. This is a bulb test to ensure the MIL is able to illuminate.
- The MIL turns OFF after the engine is started if a diagnostic fault is not present.
- The MIL remains illuminated after the engine is started if the control module detects a fault. A diagnostic trouble code (DTC) is stored any time the control module illuminates the MIL due to an emissions related fault. The MIL turns OFF after three consecutive ignition cycles in which a Test Passed has been reported

for the diagnostic test that originally caused the MIL to illuminate.

- The MIL flashes if the control module detects a misfire condition which could damage the catalytic converter.
- When the MIL is illuminated and the engine stalls, the MIL will remain illuminated as long as the ignition is ON.
- When the MIL is not illuminated and the engine stalls, the MIL will not illuminate until the ignition is cycled OFF and then ON.

Trip

A trip is an interval of time during which the diagnostic test runs. A trip may consist of only a key cycle to power up the powertrain control module (PCM), allow the diagnostic to run, then cycle the key off to power down the PCM. A trip may also involve a PCM power up, meeting specific conditions to run the diagnostic test, then powering down the PCM. The definition of a trip depends upon the diagnostic. Some diagnostic tests run only once per trip (i.e., catalyst monitor) while other tests run continuously during each trip (i.e., misfire).

Warm-Up Cycle

The powertrain control module (PCM) uses warm-up cycles to run some diagnostics and to clear any diagnostic trouble codes (DTCs). A warm-up cycle occurs when the engine coolant temperature increases 22°C (40°F) from the start-up temperature. The engine coolant must also achieve a minimum temperature of 71°C (160°F). The PCM counts the number of warm-up cycles in order to clear the malfunction indicator lamp (MIL). The PCM will clear the DTCs when 40 consecutive warm-up cycles occur without a malfunction.

Diagnostic Trouble Codes (DTCs)

The powertrain control module (PCM) is programmed with test routines that test the operation of the various systems the PCM controls. Some tests monitor internal PCM functions. Many tests are run continuously. Other tests run only under specific conditions, referred to as Conditions for Running the DTC. When the vehicle is operating within the conditions for running a particular test, the PCM monitors certain parameters and determines if the values are within an expected range. The parameters and values considered outside the range of normal operation are listed as Conditions for Setting the DTC. When the Conditions for Setting the DTC occur, the PCM executes the Action Taken When the DTC Sets. Some DTCs alert the driver via the malfunction indicator lamp (MIL) or a message. Other DTCs do not trigger a driver warning, but are stored in memory. The PCM also saves data and input parameters when most DTCs are set. This data is stored in the Freeze Frame and/or Failure Records.

The DTCs are categorized by type. The DTC type is determined by the MIL operation and the manner in which the fault data is stored when a particular DTC fails. In some cases there may be exceptions to this structure. Therefore, when diagnosing the system it is important to read the Action Taken When the DTC Sets and the Conditions for Clearing the DTC in the supporting text.

There are different types of DTCs and different actions taken when the DTCs set. Refer to Diagnostic Trouble Code (DTC) Type Definitions for a description of the general characteristics of each DTC type.

DTC Status

When the scan tool displays a DTC, the status of the DTC is also displayed. The following DTC statuses are indicated only when they apply to the DTC that is set.

Fail This Ign. (Fail This Ignition)

Indicates that this DTC failed during the present ignition cycle.

Last Test Fail

Indicates that this DTC failed the last time the test ran.

MIL Request

Indicates that this DTC is currently requesting the malfunction indicator lamp (MIL). This selection will report type B DTCs only when they have requested the MIL (failed twice).

Test Fail SCC (Test Failed Since Code Clear)

Indicates that this DTC that has reported a failure since the last time DTCs were cleared.

History

Indicates that the DTC is stored in the powertrain control module (PCM) History memory. Type B DTCs will not appear in History until they have requested the MIL (failed twice). History will be displayed for all type A DTCs and type B DTCs (which have requested the MIL) that have failed within the last 40 warm-up cycles. Type C DTCs that have failed within the last 40 warm-up cycles will also appear in History.

Not Run SCC (Not Run Since Code Clear)

DTCs will be listed in this category if the diagnostic has not run since DTCs were last cleared. This status is not included with the DTC display since the DTC can not be set if the diagnostic has not run. This information is displayed when DTC Info is requested using the scan tool.

THROTTLE ACTUATOR CONTROL (TAC) SYSTEM DESCRIPTION

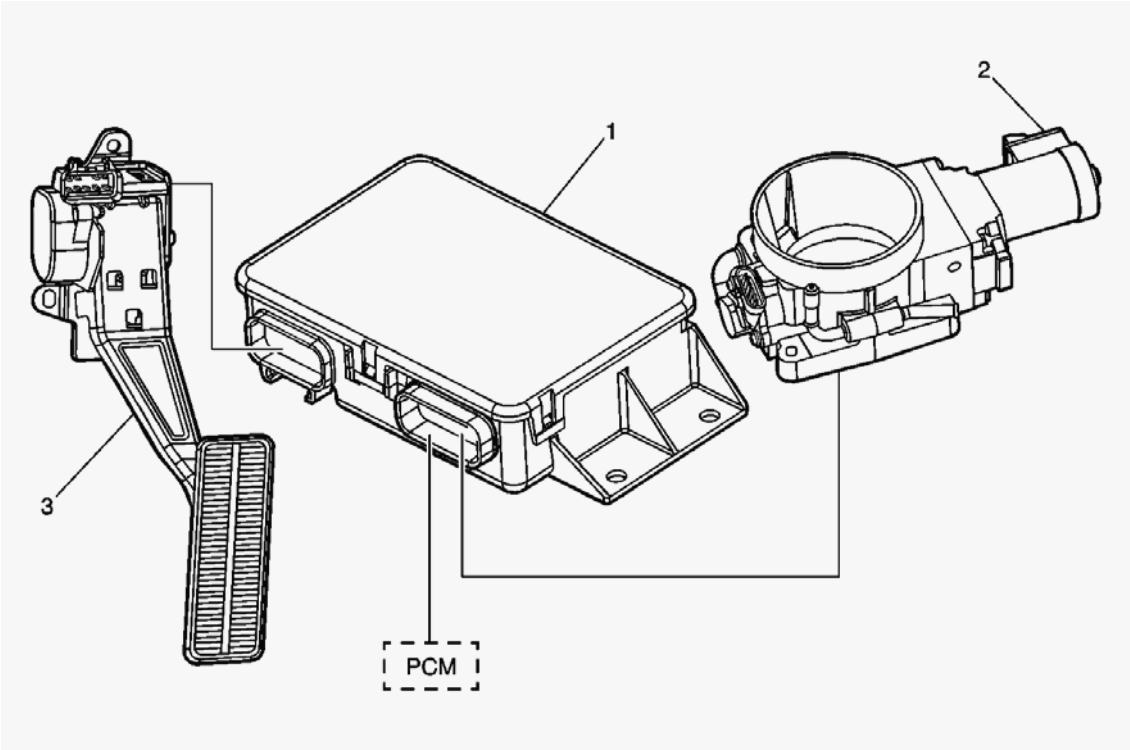

Fig. 369: Throttle Actuator Control (TAC) System
Courtesy of GENERAL MOTORS CORP.

Callouts For Fig. 369

Callout	Component Name
1	Throttle Actuator Control (TAC) Module
2	Throttle Body Assembly
3	Accelerator Pedal Position (APP) Sensor

The throttle actuator control (TAC) system uses the vehicle electronics and components in order to calculate and control the position of the throttle blade. This system eliminates the need for a mechanical cable attachment from the accelerator pedal to the throttle body. This system also performs the cruise control functions.

The TAC system components include but is not limited to the following:

- The accelerator pedal position (APP) sensor
- The throttle body
- The throttle actuator control (TAC) module
- The powertrain control module (PCM)

Each of these components interface together in order to ensure accurate calculations, and in order to control the throttle position.

Accelerator Pedal Position (APP) Sensor

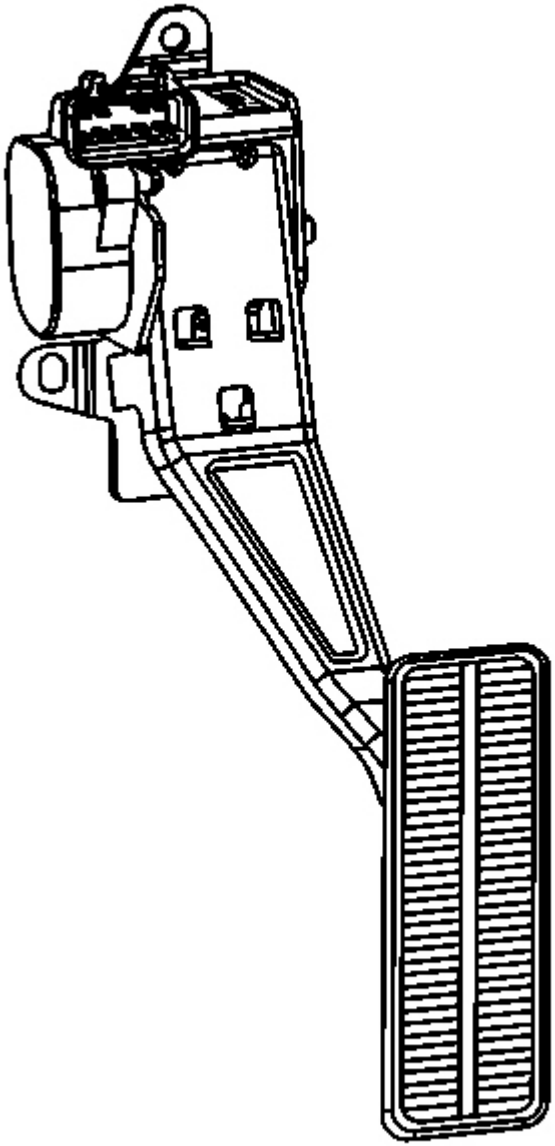

Fig. 370: Accelerator Pedal Assembly
Courtesy of GENERAL MOTORS CORP.

The accelerator pedal position (APP) sensor is mounted on the accelerator pedal assembly. The APP is actually 3 individual accelerator pedal position sensors within 1 housing. Three separate signal, low reference, and 5-volt reference circuits are used in order to connect the APP and the TAC module. The APP sensor 1 voltage should increase at the same time that the accelerator pedal is depressed, from below 1 volt at 0 percent pedal

travel to above 2 volts at 100 percent pedal travel. APP sensor 2 voltage should decrease from above 4 volts at 0 pedal travel to below 2.9 volts at 100 percent pedal travel. APP sensor 3 voltage should decrease from above 3.8 volts at 0 pedal travel to below 3.1 volts at 100 percent pedal travel.

Throttle Body Assembly

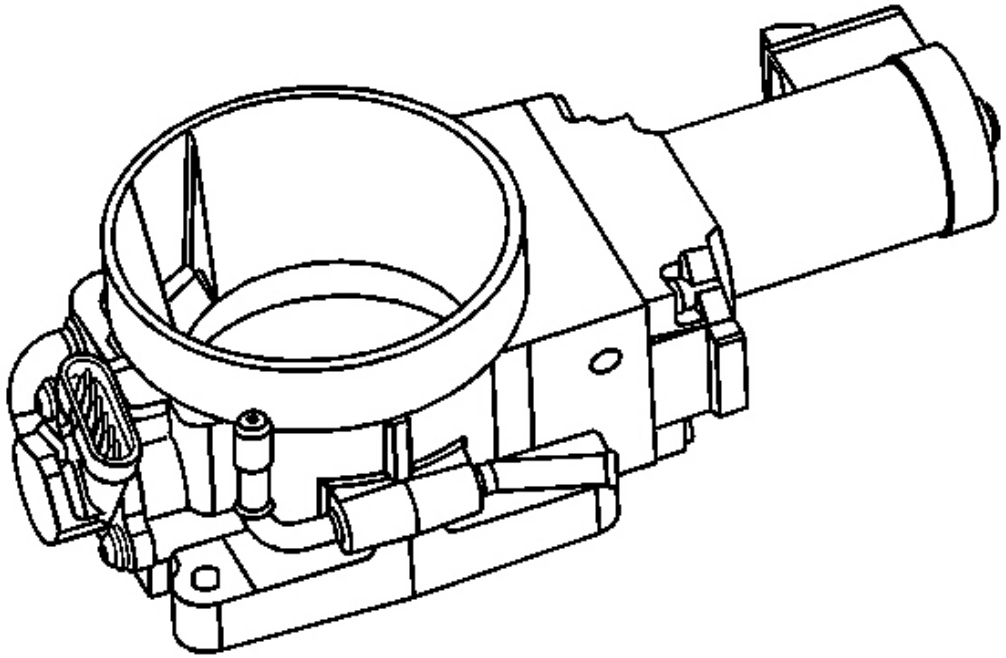

Fig. 371: Throttle Body TAC System
Courtesy of GENERAL MOTORS CORP.

The throttle body for the TAC system is similar to a conventional throttle body with some exceptions. One exception is the use of a motor to control the throttle position (TP) instead of a mechanical cable. The other exception is the new design TP sensor. The TP sensor mounts on the side of the throttle body opposite the throttle actuator motor. The TP sensor is actually 2 individual TP sensors within 1 housing. Separate low reference and 5-volt reference circuits are used in order to connect the TP sensors and the TAC module. The TP sensor 1 signal voltage increases at the same time that the throttle opens. The voltage increases, from approximately 1 volt at 0 throttle to above 3.5 volts at 100 percent throttle. TP sensor 2 signal voltage decreases at the same time that the throttle is opened. The voltage increases from approximately 3.8 volts at 0 throttle to below 1 volt at 100 percent throttle.

Throttle Actuator Control (TAC) Module

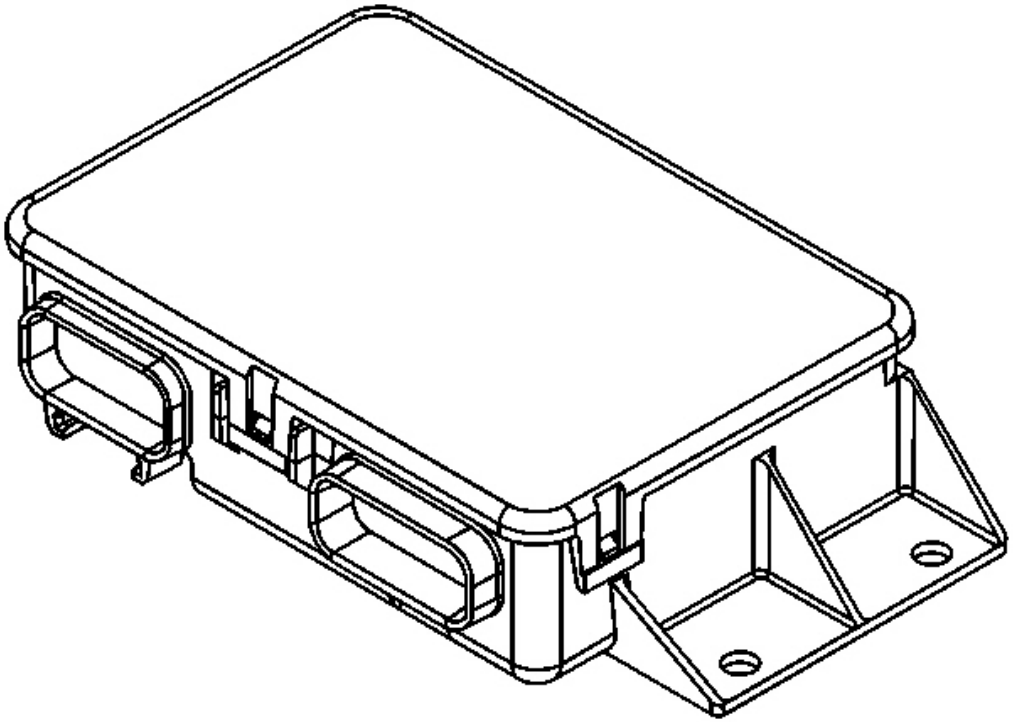

Fig. 372: TAC Module
Courtesy of GENERAL MOTORS CORP.

The TAC module is the control center for the electronic throttle system. The TAC module and the PCM communicate via a dedicated redundant serial data circuit. The TAC module and the PCM monitor the commanded throttle position and compare the commanded position to the actual throttle position. This is accomplished by monitoring the APP and the TP sensor. These 2 values must be within a calibrated value of each other. The TAC module also monitors each individual circuit of the TP sensor, and of the APP to verify proper operation.

FUEL SYSTEM DESCRIPTION

System Overview

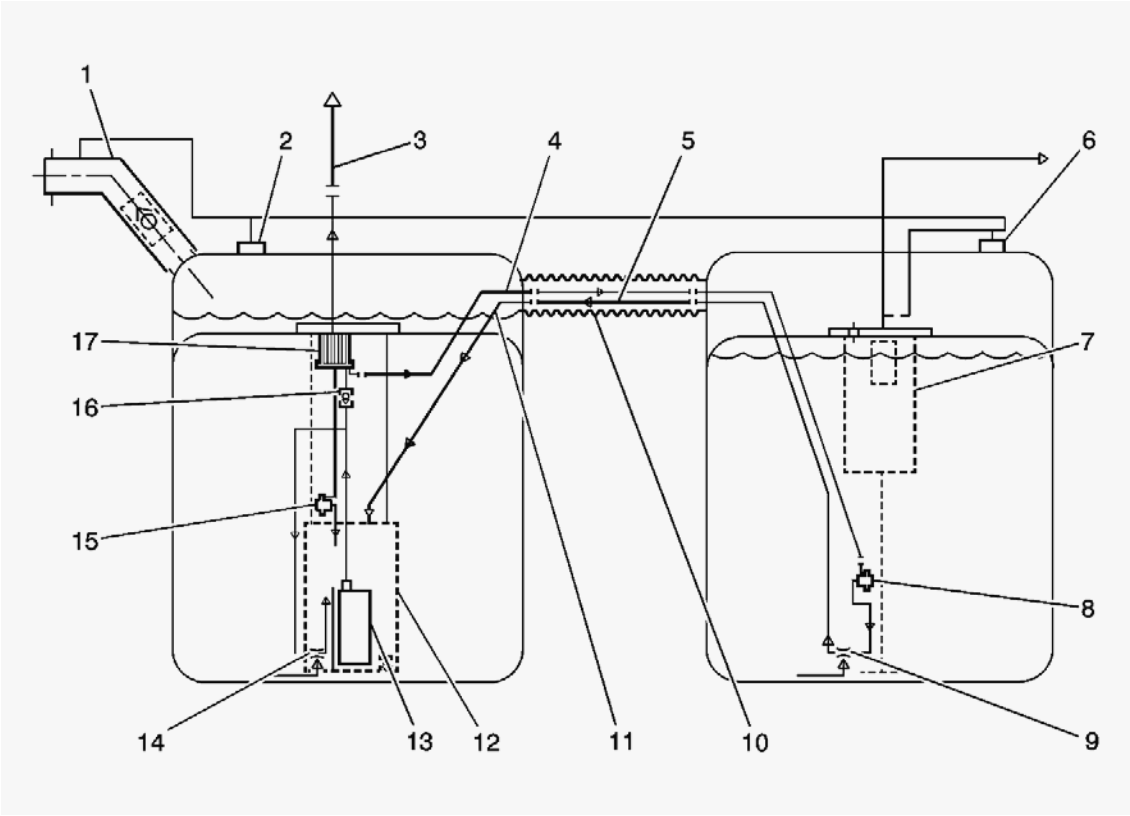

Fig. 373: Fuel Tank Assembly
Courtesy of GENERAL MOTORS CORP.

Callouts For Fig. 373

Callout	Component Name
1	Fuel Fill Hose
2	Left Fuel Tank Grade Vent Valve
3	Fuel Feed Pipe to Engine
4	5/16 Inch Auxiliary Fuel Feed Pipe
5	3/8 Inch Auxiliary Fuel Return Pipe
6	Right Fuel Tank Grade Vent Valve
7	Fill Limiter Vent Valve (FLVV)
8	Secondary Fuel Pressure Regulator
9	Siphon Jet Pump
10	Convoluted Crossover Hose
11	Anti-Siphon Hole
12	Fuel Sender Reservoir
13	Turbine Fuel Pump
14	Venturi Pump
15	Primary Fuel Pressure Regulator
16	Reverse Flow Check Valve

17	Fuel Filter

The fuel system is a returnless on-demand design. The fuel pressure regulator is a part of the fuel sender assembly, eliminating the need for a return pipe from the engine. A returnless fuel system reduces the internal temperature of the fuel tank by not returning hot fuel from the engine to the fuel tank. Reducing the internal temperature of the fuel tank results in lower evaporative emissions.

Two fuel tanks store the fuel supply. An electric turbine style fuel pump (13) attaches to the fuel sender assembly inside the left fuel tank. The fuel pump supplies high pressure fuel through the fuel filter (17) and the fuel feed pipe (3) to the fuel injection system. The fuel pump provides fuel at a higher rate of flow than is needed by the fuel injection system. The fuel pump also supplies fuel to the venturi pump (14) located on the bottom of the left fuel sender assembly. The function of the venturi pump is to fill the fuel sender assembly reservoir (12). The primary fuel pressure regulator (15), a part of the left fuel sender assembly, maintains the correct fuel pressure to the fuel injection system. The fuel pump and sender assembly contains a reverse flow check valve (16). The check valve, the primary fuel pressure regulator, and the secondary fuel pressure regulator maintain fuel pressure in the fuel feed pipe and the fuel rail in order to prevent long cranking times.

The fuel pump also supplies a small amount of pressurized fuel through the auxiliary fuel feed pipe (4) to the siphon jet pump (9) inside the right fuel tank. The pressurized fuel creates a venturi action inside the siphon jet pump. The venturi action causes the fuel to be drawn out of the right fuel tank. The fuel transfers from the right fuel tank to the left fuel tank through the auxiliary fuel return pipe (5). The auxiliary fuel return pipe inside the left fuel tank contains an anti-siphon hole (11) in order to prevent fuel from siphoning from the left fuel tank into the right fuel tank. Both the auxiliary fuel feed pipe and the auxiliary fuel return pipe are located inside the convoluted stainless steel crossover hose (10).

The right fuel sender assembly contains a secondary fuel pressure regulator (8). The secondary fuel pressure regulator has a lower set point than the primary regulator in order to allow fuel to flow to the siphon jet pump on the right fuel sender. When the engine is shut off, the pressure in the feed pipes immediately drops to the secondary regulator set point. This prevents the siphon jet pump from operating and in turn prevents the equalization of the left and right fuel tanks. The secondary fuel pressure regulator maintains fuel pressure in the auxiliary fuel feed pipe which reduces the time to prime the siphon jet pump. The pressurization also reduces fuel vaporization and boiling in the auxiliary fuel feed pipe.

Fuel Tanks

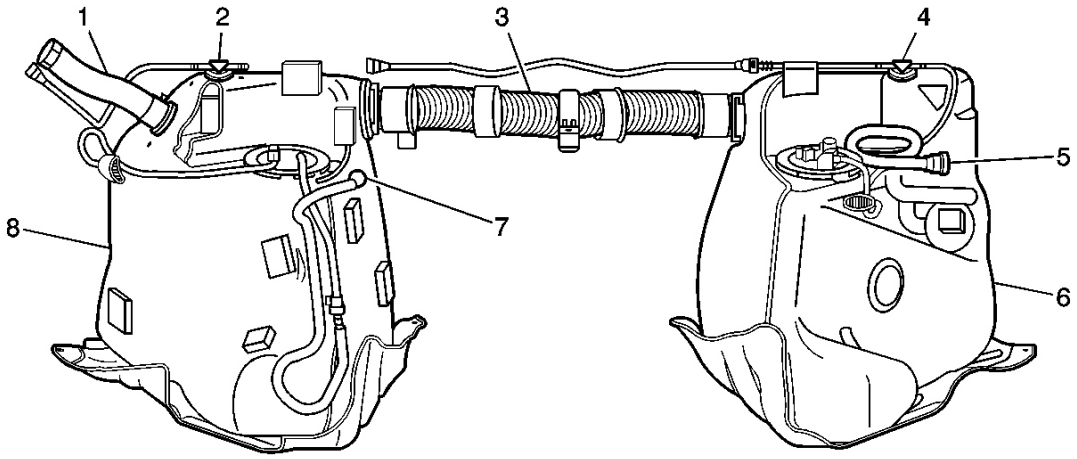

Fig. 374: Fuel Tanks
Courtesy of GENERAL MOTORS CORP.

The fuel tanks (6, 8) store the fuel for the vehicle. The fuel tanks are located on the left and right side of the vehicle in front of the rear wheels. The fuel tanks are molded from high density polyethylene.

Fuel Tank Fill Pipe and Hose

The fuel tank fill pipe is positioned at the rear of the vehicle on the left side. A built in restrictor in the fuel tank fill pipe prevents refueling with leaded fuel. The fuel tank fill pipe connects to the left fuel tank with a rubber hose. Fuel transfers to the right fuel tank during fueling by a stainless steel convoluted crossover tube/hose which connects the left fuel tank to the right fuel tank.

Fuel Filler Cap

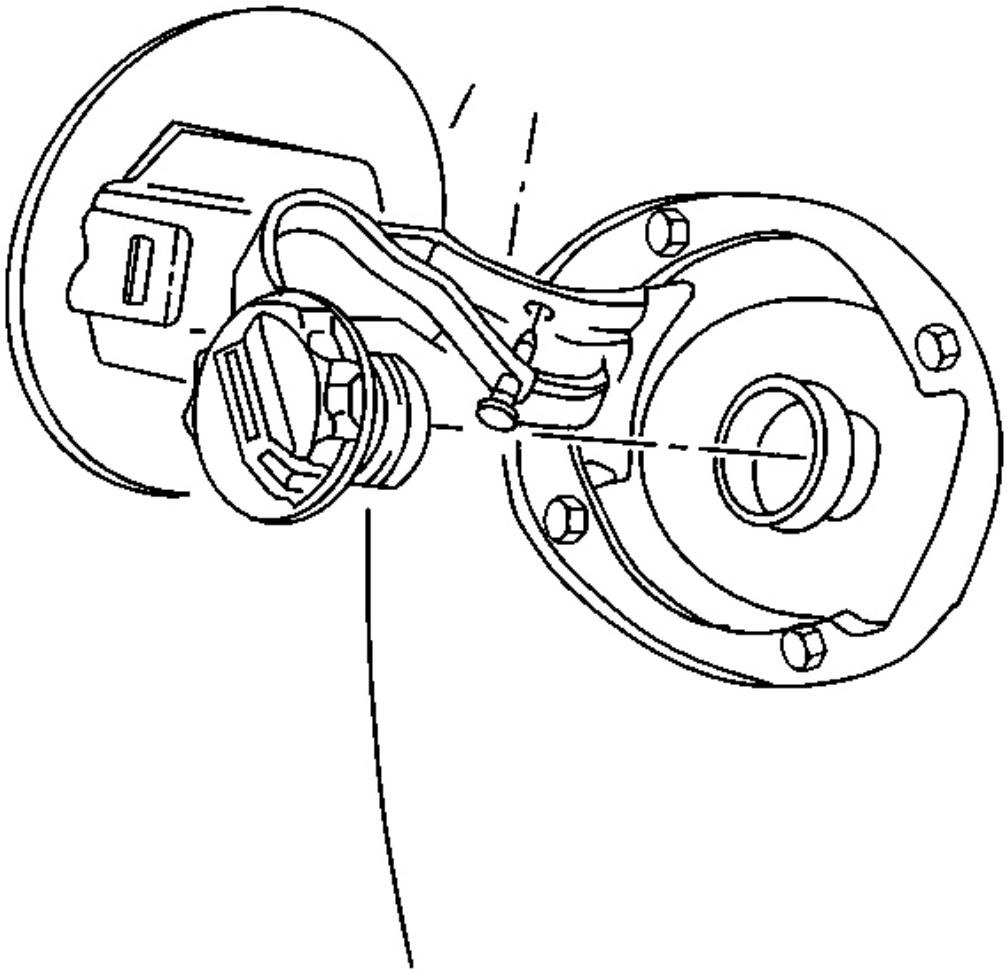

Fig. 375: Fuel Filler Cap
Courtesy of GENERAL MOTORS CORP.

NOTE: **If a fuel tank filler cap requires replacement, use only a fuel tank filler cap with the same features. Failure to use the correct fuel tank filler cap can result in a serious malfunction of the fuel and EVAP system.**

The fuel tank filler pipe has a tethered fuel tank filler cap. The fuel tank filler cap requires a quarter of a turn in order to be removed. A torque limiting device prevents the cap from being over tightened.

Fuel Sender Assembly

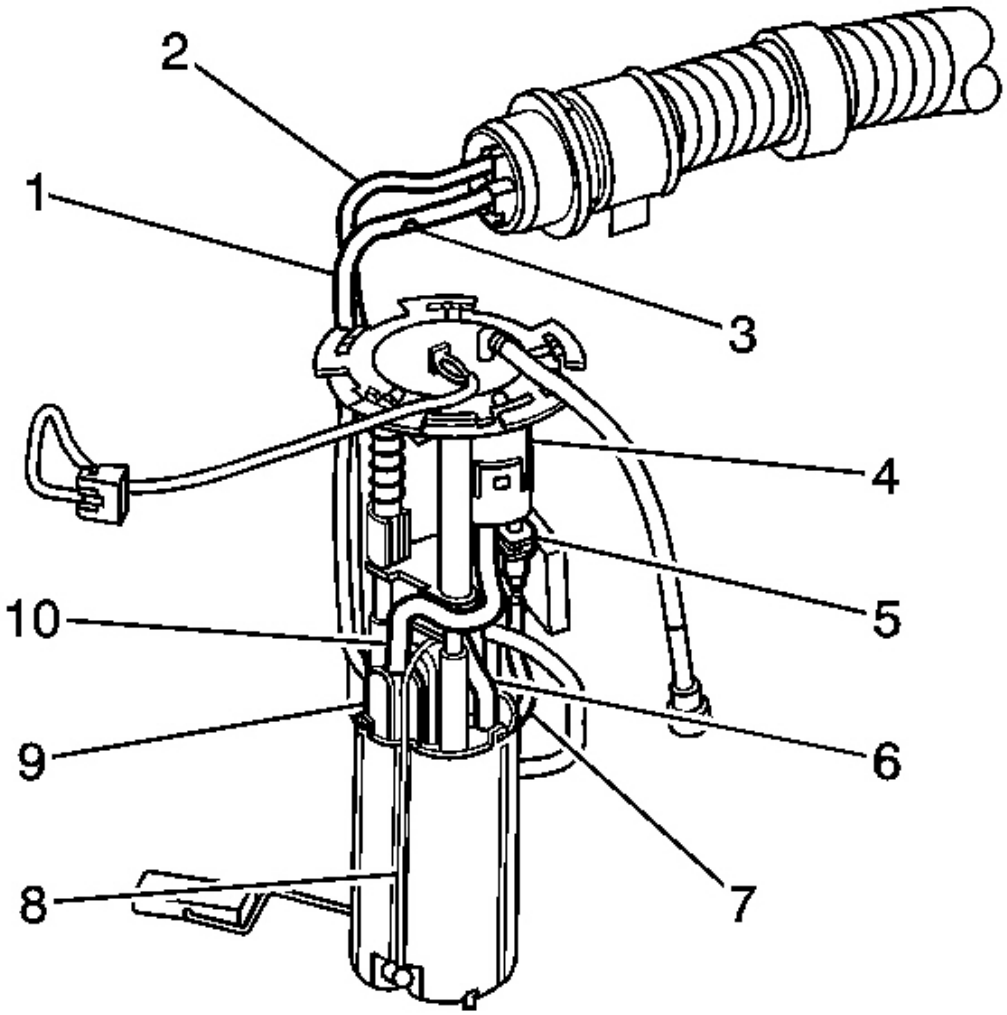

Fig. 376: Fuel Sender Assembly
Courtesy of GENERAL MOTORS CORP.

A fuel sender assembly is located inside each fuel tank. The fuel sender assembly attaches to the top of each fuel tank. The left fuel sender assembly consists of the following major components:

- The fuel level sensor
- The fuel pump and reservoir assembly
- The fuel pump strainer
- The fuel filter (4)

- The primary fuel pressure regulator (9)

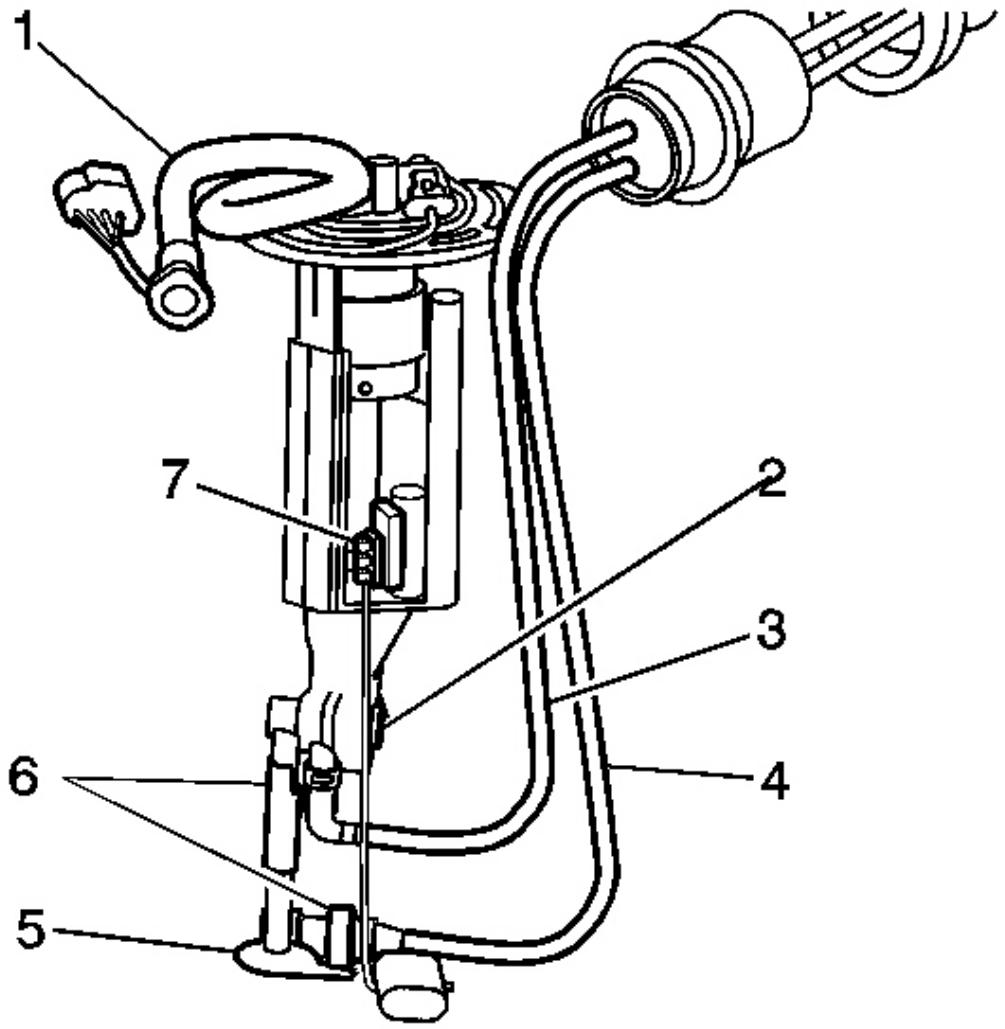

Fig. 377: Right Fuel Sender Assembly
Courtesy of GENERAL MOTORS CORP.

The right fuel sender assembly consists of the following major components:

- The fuel level sensor (7)
- The siphon jet pump (5)
- The secondary fuel pressure regulator (2)

- The fill limiter vent valve (FLVV)

Fuel Level Sensor

The fuel level sensor consists of a float, a wire float arm, and a variable resistor. The position of the float arm indicates the fuel level. The fuel level sensor contains a variable resistor, which changes the resistance corresponding to the amount of fuel in the fuel tanks. The PCM uses inputs from both fuel level sensors in order to calculate the total fuel remaining in both fuel tanks. This information is sent via a Class 2 message to the instrument panel cluster (IPC) to be displayed on the fuel gage.

Fuel Pump

An electric turbine style fuel pump attaches to the fuel sender assembly inside the left fuel tank. The fuel pump supplies fuel to the fuel rail assembly at a specified flow and pressure. The fuel pump delivers a constant flow of fuel to the engine even during low fuel conditions and aggressive vehicle maneuvers. The PCM controls the electric fuel pump operation through a fuel pump relay.

The fuel pump also supplies a small amount of pressurized fuel to the right fuel tank siphon jet pump through the auxiliary fuel feed pipe. The pressurized fuel creates a venturi action inside the siphon jet pump. The venturi action causes the fuel to be drawn out of the right fuel tank. Fuel is then transferred from the right fuel tank to the left fuel tank through the auxiliary fuel return pipe. The fuel pump also supplies fuel to a venturi pump located on the bottom of the left fuel sender assembly. The function of the venturi pump is to fill the fuel sender assembly reservoir.

Fuel Strainer

The fuel strainer is made of woven plastic. The functions of the fuel strainer are to filter the contaminants and to wick the fuel. The fuel strainer attaches to the bottom of the fuel pump inside of the fuel sender reservoir. The fuel strainer normally requires no maintenance. Fuel stoppage at this point indicates that the fuel tanks contain an abnormal amount of sediment. If the fuel strainer is plugged, refer to **Fuel System Cleaning** .

Fuel Filter

The fuel filter is contained in the fuel sender assembly inside the left fuel tank. The paper filter element of the fuel filter traps particles in the fuel that may damage the fuel injection system. The fuel filter housing is made to withstand maximum fuel system pressure, exposure to fuel additives, and changes in temperature. There is no service interval for fuel filter replacement.

Primary Fuel Pressure Regulator

The primary fuel pressure regulator is contained in the left fuel sender assembly. The fuel pressure regulator is a diaphragm relief valve. The diaphragm has fuel pressure on one side and regulator spring pressure on the other side. A software bias compensates the injector on-time because the fuel pressure regulator is not referenced to the manifold vacuum. The primary fuel pressure regulator keeps fuel available to the injectors at a regulated pressure.

Secondary Fuel Pressure Regulator

The right fuel sender assembly contains a secondary fuel pressure regulator. The secondary fuel pressure regulator has a lower set point than the primary regulator in order to allow fuel to flow to the siphon jet pump on the right fuel sender. When the engine is shut off, the pressure in the feed pipes immediately drops to the secondary regulator set point. This prevents the siphon jet pump from operating and in turn prevents the equalization of the left and right fuel tanks. The secondary fuel pressure regulator maintains fuel pressure in the auxiliary fuel feed pipe which reduces the time to prime the siphon jet pump. The pressurization also reduces fuel vaporization and boiling in the auxiliary fuel feed pipe.

Fuel Feed and Return Pipes

The engine compartment connecting fuel pipe connects the chassis fuel pipe to the fuel rail assembly. The engine compartment fuel pipe is constructed of Teflon(R) with a braided stainless steel covering.

The chassis fuel pipe is located under the vehicle on the left side of the tunnel. The chassis fuel pipe connects the rear fuel feed pipe from the left fuel sender assembly to the engine compartment connecting fuel pipe. The chassis fuel pipe is constructed of aluminum with a plastic coating.

The rear fuel feed pipe connects the left fuel sender fuel pipe to the chassis fuel pipe. The rear fuel feed pipe is constructed of nylon with a covering of heat resistant rubber hose.

The auxiliary fuel feed pipes and the auxiliary fuel return pipes are located inside of the fuel crossover hose and inside of each fuel tank. The fuel pump supplies fuel through the auxiliary fuel feed pipe to the siphon jet pump inside the right fuel tank. The siphon jet pump transfers fuel from the right fuel tank to the left fuel tank through the auxiliary fuel return pipe. The return pipe feeds returning fuel from the right fuel tank directly into the left fuel sender reservoir. The auxiliary fuel feed and return pipes are constructed of nylon.

Fuel Tank Crossover Tube/Hose

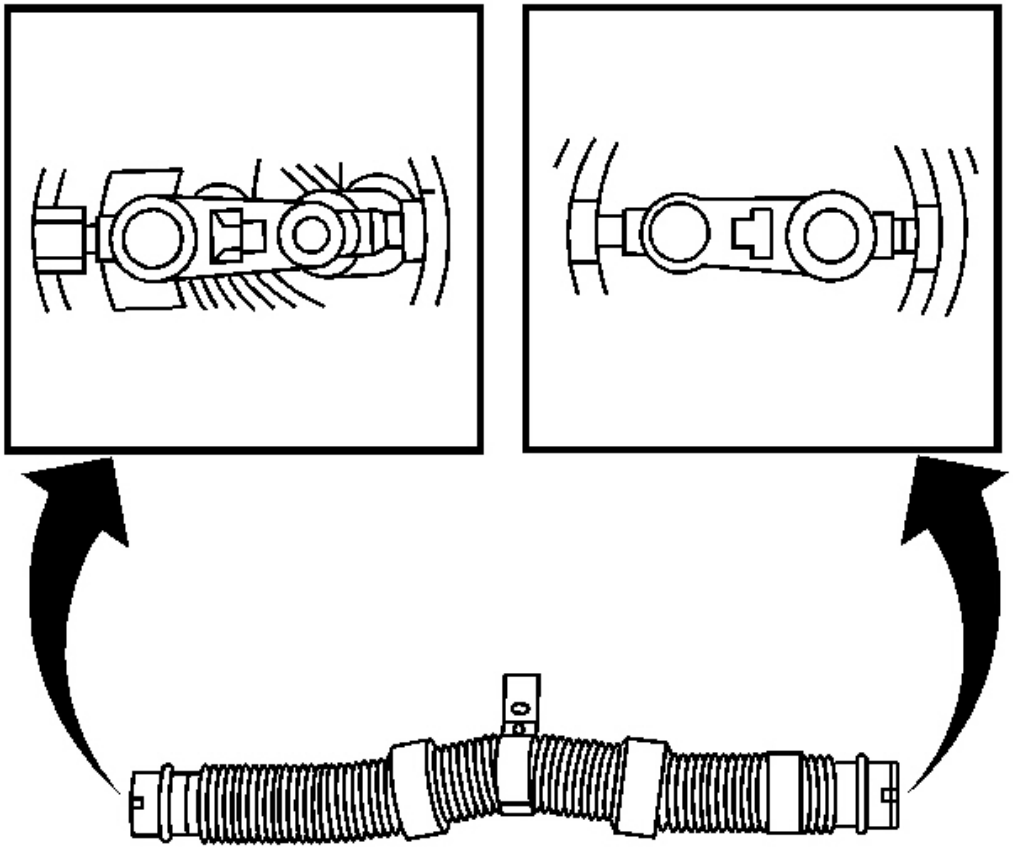

Fig. 378: Fuel Tank Crossover Tube/Hose
Courtesy of GENERAL MOTORS CORP.

The fuel tank crossover tube/hose is comprised of a convoluted stainless steel outer tubing. The crossover tube/hose internally houses the auxiliary fuel feed pipe and the auxiliary fuel return pipe. The crossover tube/hose has the following functions:

- Fuel liquid and vapor transfer during refueling
- High pressure siphon jet pump feed
- Low pressure siphon jet pump return
- Electrostatic discharge ground to body

Nylon Fuel Pipes

CAUTION: In order to reduce the risk of fire and personal injury observe the following

items:

- **Replace all nylon fuel pipes that are nicked, scratched or damaged during installation, do not attempt to repair the sections of the nylon fuel pipes**
- **Do not hammer directly on the fuel harness body clips when installing new fuel pipes. Damage to the nylon pipes may result in a fuel leak.**
- **Always cover nylon vapor pipes with a wet towel before using a torch near them. Also, never expose the vehicle to temperatures higher than 115°C (239°F) for more than one hour, or more than 90°C (194°F) for any extended period.**
- **Apply a few drops of clean engine oil to the male pipe ends before connecting fuel pipe fittings. This will ensure proper reconnection and prevent a possible fuel leak. (During normal operation, the O-rings located in the female connector will swell and may prevent proper reconnection if not lubricated.)**

Nylon pipes are constructed to withstand maximum fuel system pressure, exposure to fuel additives, and changes in temperature. There are 2 sizes of nylon fuel pipes used. A 9.53 mm (3/8 in) ID pipe is used for the fuel feed pipe and the auxiliary fuel return pipe. A 7.94 mm (5/16 in) ID pipe is used for the auxiliary fuel feed pipe. Heat resistant rubber hose protects the section of the rear fuel feed pipe that is exposed to chafing, high temperature or vibration.

Nylon fuel pipes are somewhat flexible and can be formed around gradual turns under the vehicle. However, if nylon fuel pipes are forced into sharp bends, the pipes will kink and restrict the fuel flow. Also, once exposed to the fuel, nylon pipes may become stiffer and are more likely to kink if bent too far. Take special care when working on a vehicle with nylon fuel pipes.

Quick-Connect Fittings

Quick-connect fittings provide a simplified means of installing and connecting fuel system components. The fittings consist of a unique female connector and a compatible male pipe end. O-rings located inside the female connector provide the fuel seal. Integral locking tabs located inside the female connector hold the fittings together.

On-Board Refueling Vapor Recovery System (ORVR)

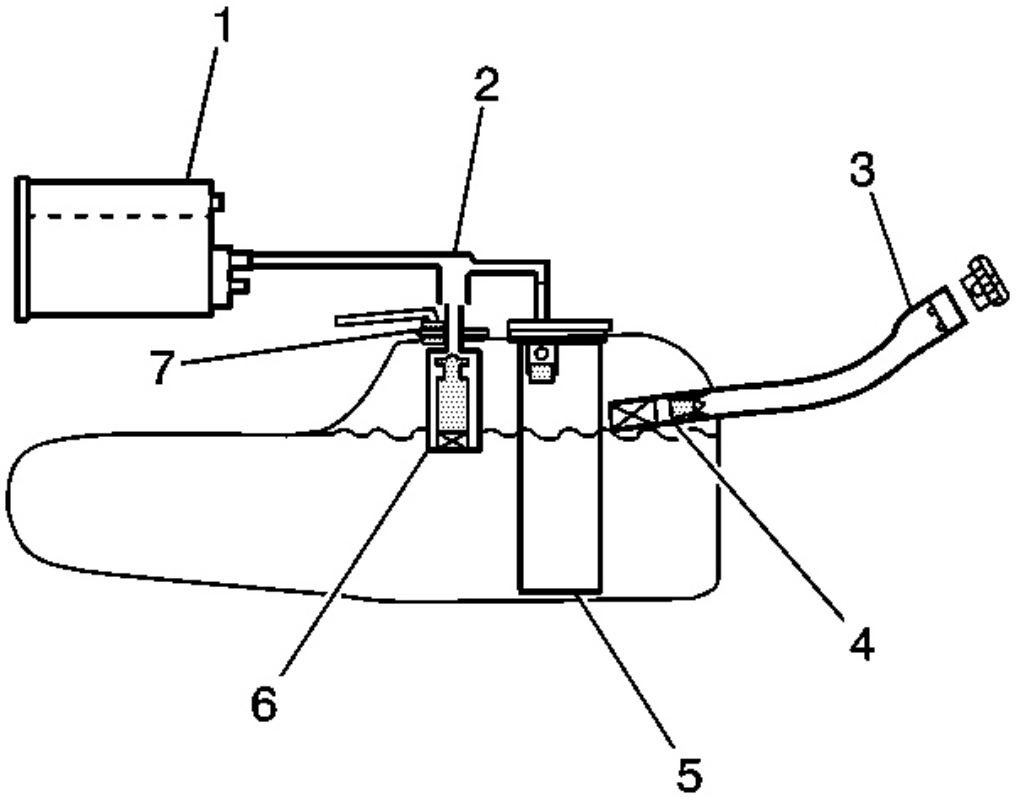

Fig. 379: Modular Fuel Sender Assembly & FLVV
Courtesy of GENERAL MOTORS CORP.

The on-board refueling vapor recovery system (ORVR) is an on board vehicle system designed to recover fuel vapors during the vehicle refueling operation. The flow of liquid fuel down the fuel filler pipe provides a liquid seal which prevents vapor from leaving the fuel filler pipe. An EVAP pipe transports the fuel vapor to the EVAP canister for use by the engine. Listed below are the ORVR system components with a brief description of their operation:

- The EVAP canister (1)-the EVAP canister receives refueling vapor from the fuel system, stores the vapor and releases the vapor to the engine upon demand.
- The EVAP pipes (2)-transports fuel vapor from the fuel tank to the EVAP canister.
- The fuel filler pipe (3)-the pipe which carries fuel from the fuel nozzle to the fuel tank.
- The check valve (4)-the check valve limits fuel "spit back" from the fuel tank during the refueling operation by allowing fuel flow only into the fuel tank. This check valve is located at the bottom of the fuel filler pipe.
- The modular fuel sender assembly (5)-this assembly pumps fuel to the engine from the fuel tank.

- The fill limiter vent valve (FLVV) (6)-this valve acts as a shut off valve. The FLVV is located on the right fuel sender. This valve is not serviced separately. The FLVV has the following functions:
  - Controls the fuel tank fill level by closing the primary vent from the fuel tank.
  - Prevents the fuel from exiting the fuel tank via the EVAP pipe to the canister.
  - Provides fuel-spillage protection in the event of a vehicle rollover by closing the vapor path from the fuel tank to the EVAP canister.

Fuel Rail Assembly

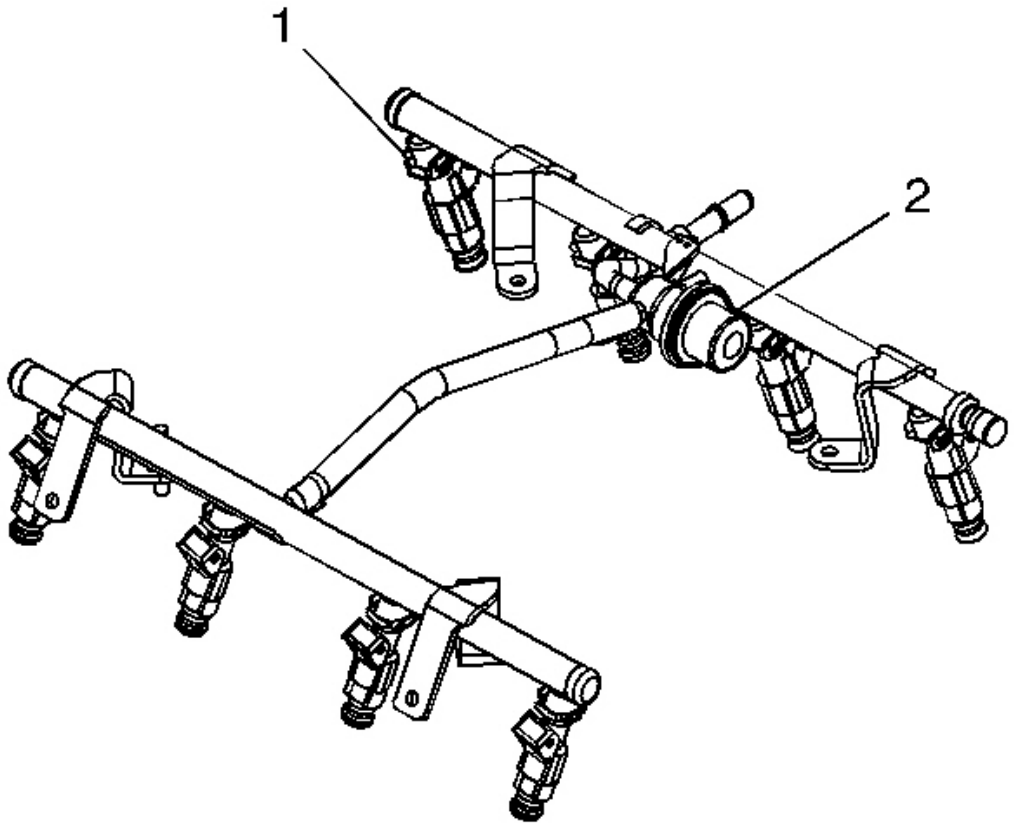

Fig. 380: Fuel Rail Assembly, Injectors & Fuel Pulse Dampener
Courtesy of GENERAL MOTORS CORP.

The fuel rail assembly attaches to the engine intake manifold. The fuel rail assembly performs the following functions:

- Positions the injectors (1) in the intake manifold

- Distributes the fuel evenly to the injectors
- Integrates the fuel pulse dampener (2) into the fuel metering system

Fuel Injectors

The fuel injector assembly is a solenoid device, controlled by the PCM, that meters pressurized fuel to a single engine cylinder. The PCM energizes the injector solenoid to open a normally closed ball valve. This allows the fuel to flow into the top of the injector, past the ball valve, and through a director plate at the injector outlet. The director plate has machined holes that control the fuel flow, generating a spray of finely-atomized fuel at the injector tip. Fuel from the injector tip is directed at the intake valve, causing the fuel to become further atomized and vaporized before entering the combustion chamber. This fine atomization improves fuel economy and emissions.

Fuel Metering Modes of Operation

The PCM monitors voltages from several sensors in order to determine how much fuel to give the engine. The PCM controls the amount of fuel delivered to the engine by changing the fuel injector pulse width. The fuel is delivered under one of several modes.

Starting Mode

When the ignition is first turned ON, the PCM energizes the fuel pump relay for 2 seconds. This allows the fuel pump to build pressure in the fuel system. The PCM calculates the air/fuel ratio based on inputs from the engine coolant temperature (ECT), mass air flow (MAF), manifold absolute pressure (MAP), and throttle position (TP) sensors. The system stays in starting mode until the engine speed reaches a predetermined RPM.

Clear Flood Mode

If the engine floods, clear the engine by pressing the accelerator pedal down to the floor and then crank the engine. When the TP sensor is at wide open throttle (WOT), the PCM reduces the fuel injector pulse width in order to increase the air to fuel ratio. The PCM holds this injector rate as long as the throttle stays wide open and the engine speed is below a predetermined RPM. If the throttle is not held wide open, the PCM returns to the starting mode.

Run Mode

The run mode has 2 conditions called Open Loop and Closed Loop. When the engine is first started and the engine speed is above a predetermined RPM, the system begins Open Loop operation. The PCM ignores the signal from the heated oxygen sensors (HO2S). The PCM calculates the air/fuel ratio based on inputs from the ECT, MAF, MAP, and TP sensors. The system stays in Open Loop until meeting the following conditions:

- Both front HO2S have varying voltage output, showing that both HO2S are hot enough to operate properly.
- The ECT sensor is above a specified temperature.
- A specific amount of time has elapsed after starting the engine.

Specific values for the above conditions exist for each different engine, and are stored in the electrically

erasable programmable read-only memory (EEPROM). The system begins Closed Loop operation after reaching these values. In Closed Loop, the PCM calculates the air/fuel ratio, injector ON time, based upon the signal from various sensors, but mainly from the HO2S. This allows the air/fuel ratio to stay very close to 14.7:1.

Acceleration Mode

When the driver pushes on the accelerator pedal, air flow into the cylinders increases rapidly. To prevent possible hesitation, the PCM increases the pulse width to the injectors to provide extra fuel during acceleration. This is also known as power enrichment. The PCM determines the amount of fuel required based upon the TP, the ECT, the MAP, the MAF, and the engine speed.

Deceleration Mode

When the driver releases the accelerator pedal, air flow into the engine is reduced. The PCM monitors the corresponding changes in the TP, the MAP, and the MAF. The PCM shuts OFF fuel completely if the deceleration is very rapid, or for long periods, such as long, closed-throttle coast-down. The fuel shuts OFF in order to prevent damage to the catalytic converters.

Battery Voltage Correction Mode

When the battery voltage is low, the PCM compensates for the weak spark delivered by the ignition system in the following ways:

- Increasing the amount of fuel delivered
- Increasing the idle RPM
- Increasing the ignition dwell time

Fuel Cutoff Mode

The PCM cuts OFF fuel from the fuel injectors when the following conditions are met in order to protect the powertrain from damage and improve driveability:

- The ignition is OFF. This prevents engine run-on.
- The ignition is ON but there is no ignition reference signal. This prevents flooding or backfiring.
- The engine speed is too high, above red line.
- The vehicle speed is too high, above rated tire speed.
- During an extended, high speed, closed throttle coast down-This reduces emissions and increases engine braking.
- During extended deceleration, in order to prevent damage to the catalytic converters

Fuel Trim

The PCM controls the air/fuel metering system in order to provide the best possible combination of driveability, fuel economy, and emission control. The PCM monitors the HO2S signal voltage while in Closed Loop and regulates the fuel delivery by adjusting the pulse width of the injectors based on this signal. The ideal fuel trim

values are around 0 percent for both short and long term fuel trim. A positive fuel trim value indicates the PCM is adding fuel in order to compensate for a lean condition by increasing the pulse width. A negative fuel trim value indicates that the PCM is reducing the amount of fuel in order to compensate for a rich condition by decreasing the pulse width. A change made to the fuel delivery changes the long and short term fuel trim values. The short term fuel trim values change rapidly in response to the HO2S signal voltage. These changes fine tune the engine fueling. The long term fuel trim makes coarse adjustments to fueling in order to re-center and restore control to short term fuel trim. A scan tool can be used to monitor the short and long term fuel trim values. The long term fuel trim diagnostic is based on an average of several of the long term speed load learn cells. The PCM selects the cells based on the engine speed and engine load. If the PCM detects an excessively lean or rich condition, the PCM will set a fuel trim diagnostic trouble code (DTC).

EVAPORATIVE EMISSION (EVAP) CONTROL SYSTEM DESCRIPTION

EVAP System Operation

The evaporative emission (EVAP) control system limits fuel vapors from escaping into the atmosphere. Fuel tank vapors are allowed to move from the fuel tank, due to pressure in the tank, through the vapor pipe, into the EVAP canister. Carbon in the canister absorbs and stores the fuel vapors. Excess pressure is vented through the vent line and EVAP vent solenoid to the atmosphere. The EVAP canister stores the fuel vapors until the engine is able to use them. At an appropriate time, the control module will command the EVAP purge solenoid ON, allowing engine vacuum to be applied to the EVAP canister. With the EVAP vent solenoid OFF, fresh air is drawn through the vent solenoid and the vent line to the EVAP canister. Fresh air is drawn through the canister, pulling fuel vapors from the carbon. The air/fuel vapor mixture continues through the EVAP purge pipe and EVAP purge solenoid into the intake manifold to be consumed during normal combustion. The control module uses several tests to determine if the EVAP system is leaking.

Large Leak Test

This tests for large leaks and blockages in the EVAP system. The control module commands the EVAP vent solenoid ON and commands the EVAP purge solenoid ON, with the engine running, allowing engine vacuum into the EVAP system. The control module monitors the fuel tank pressure (FTP) sensor voltage to verify that the system is able to reach a predetermined level of vacuum within a set amount of time. The control module then commands the EVAP purge solenoid OFF, sealing the system, and monitors the vacuum level for decay. If the control module does not detect that the predetermined vacuum level was achieved, or the vacuum decay rate is more than a calibrated level on 2 consecutive tests, DTC P0455 will set.

Small Leak Test

The engine off natural vacuum (EONV) diagnostic is the small-leak detection diagnostic for the EVAP system. While previous leak detection methods were performed with the engine running, the EONV diagnostic monitors the EVAP system pressure or vacuum with the key OFF. Because of this, it may be normal for the control module to remain active for up to 40 minutes after the engine is turned OFF. This is important to remember when performing a parasitic draw test on vehicles equipped with EONV.

The EONV utilizes the temperature changes in the fuel tank immediately following a drive cycle to use the naturally occurring vacuum or pressure in the fuel tank. When the vehicle is driven, the temperature rises in the tank. After the vehicle is parked, the temperature in the tank continues to rise for a period of time, then start to

drop. The EONV diagnostic relies on this temperature change and it's corresponding pressure change to determine if an EVAP system leak is present.

The EONV diagnostic is designed to detect leaks as small as 0.51 mm (0.020 inches). The diagnostic can determine if a small leak is present based on vacuum or pressure readings in the EVAP system. When the system is sealed, a finite amount of pressure or vacuum will be observed. When a 0.51 mm (0.020 inches) leak is present, often little or no pressure or vacuum is observed. If the test reports a failing value, DTC P0442 will set.

Canister Vent Restriction Test

If the EVAP vent system is restricted, fuel vapors will not be properly purged from the EVAP canister. The control module tests this by commanding the EVAP purge solenoid ON, commanding the EVAP vent solenoid OFF, and monitoring the FTP sensor for an increase in vacuum. If the vacuum increases more than a calibrated value, DTC P0446 will set.

Purge Solenoid Leak Test

If the EVAP purge solenoid does not seal properly fuel vapors could enter the engine at an undesired time, causing driveability concerns. The control module tests for this by commanding the EVAP purge solenoid OFF and the vent solenoid ON, sealing the system, and monitors the FTP for an increase in vacuum. If the control module detects that the EVAP system vacuum increases above a calibrated value, DTC P0496 will set.

Check Gas Cap Message

The PCM sends a class 2 message to the driver information center (DIC) illuminating the Check Gas Cap message when any of the following occur:

- A malfunction in the EVAP system and a large leak test fails
- A malfunction in the EVAP system and a small leak test fails

EVAP System Components

The EVAP system consists of the following components:

EVAP Canister

The canister is filled with carbon pellets used to absorb and store fuel vapors. Fuel vapor is stored in the canister until the control module determines that the vapor can be consumed in the normal combustion process.

EVAP Purge Solenoid

The EVAP purge solenoid controls the flow of vapors from the EVAP system to the intake manifold. The purge solenoid opens when commanded ON by the control module. This normally closed solenoid is pulse width modulated (PWM) by the control module to precisely control the flow of fuel vapor to the engine. The solenoid will also be opened during some portions of the EVAP testing, allowing engine vacuum to enter the EVAP system.

EVAP Vent Solenoid

The EVAP vent solenoid controls fresh airflow into the EVAP canister. The solenoid is normally open. The control module commands the solenoid ON, closing the solenoid during some EVAP tests, allowing the system to be tested for leaks.

Fuel Tank Pressure Sensor

The FTP sensor measures the difference between the pressure or vacuum in the fuel tank and outside air pressure. The control module provides a 5-volt reference and a ground to the FTP sensor. The FTP sensor provides a signal voltage back to the control module that can vary between 0.1-4.9 volts. A high FTP sensor voltage indicates a low fuel tank pressure or vacuum. A low FTP sensor voltage indicates a high fuel tank pressure.

EVAP Service Port

The EVAP service port is located in the EVAP purge pipe between the EVAP purge solenoid and the EVAP canister. The service port is identified by a green colored cap.

ELECTRONIC IGNITION (EI) SYSTEM DESCRIPTION

The electronic ignition (EI) system is responsible for producing and controlling a high energy secondary spark. This spark is used to ignite the compressed air/fuel mixture at precisely the correct time. This provides optimal performance, fuel economy, and control of exhaust emissions. This ignition system consists of a separate ignition coil connected to each spark plug by a short secondary wire. The driver modules within each coil assembly are commanded ON/OFF by the powertrain control module (PCM). The PCM primarily uses engine speed and position information from the crankshaft and camshaft position (CMP) sensors to control the sequence, dwell, and timing of the spark. The EI system consists of the following components:

Crankshaft Position (CKP) Sensor

The crankshaft position (CKP) sensor is a three wire sensor based on the magneto resistive principle. A magneto resistive sensor uses two magnetic pickups between a permanent magnet. As an element such as a reluctor wheel passes the magnets the resulting change in the magnetic field is used by the sensor electronics to produce a digital output pulse. The PCM supplies a 12-volt, low reference, and signal circuit to the CKP sensor. The sensor returns a digital ON/OFF pulse 24 times per crankshaft revolution.

Crankshaft Reluctor Wheel

The crankshaft reluctor wheel is mounted on the rear of the crankshaft. The wheel is comprised of four 90 degree segments. Each segment represents a pair of cylinders at TDC, and is further divided into six 15 degree segments. Within each 15 degree segment is a notch of 1 of 2 different sizes. Each 90 degree segment has a unique pattern of notches. This is known as pulse width encoding. This pulse width encoded pattern allows the PCM to quickly recognize which pair of cylinders are at top dead center (TDC). The reluctor wheel is also a dual track-or mirror image-design. This means there is an additional wheel pressed against the first, with a gap of equal size to each notch of the mating wheel. When one sensing element of the CKP sensor is reading a notch, the other is reading a set of teeth. The resulting signals are then converted into a digital square wave output by the circuitry within the CKP sensor.

Camshaft Position (CMP) Sensor

The CMP sensor is also a magneto resistive sensor, with the same type of circuits as the CKP sensor. The CMP sensor signal is a digital ON/OFF pulse, output once per revolution of the camshaft. The CMP sensor information is used by the PCM to determine the position of the valve train relative to the CKP.

Camshaft Reluctor Wheel

The camshaft reluctor wheel is either pressed onto the camshaft or part of the timing gear depending on the application. The feature-or target- is read in a radial or axial fashion respectively. The wheel is a smooth track, half of which is of a lower profile than the other half. This feature allows the CMP sensor to supply a signal as soon as the key is turned ON, since the CMP sensor reads the track profile, instead of a notch.

Ignition Coils

Each ignition coil has an ignition 1 feed and a ground. The PCM supplies a low reference and an ignition control (IC) circuit. Each ignition coil contains a solid state driver module. The PCM will command the IC circuit ON, this allows the current to flow through the primary coil windings for the appropriate time or dwell. When the PCM commands the IC circuit OFF, this will interrupt current flow through the primary coil windings. The magnetic field created by the primary coil windings will collapse across the secondary coil windings, which induces a high voltage across the spark plug electrodes. The coils are current limited to prevent overloading if the IC current is held high too long. The spark plugs are connected to their respective coils by a short secondary wire. The spark plugs are tipped with iridium for long life and efficiency.

Powertrain Control Module (PCM)

The PCM controls all ignition system functions, and constantly corrects the basic spark timing. The PCM monitors information from various sensor inputs that include the following:

- The throttle position (TP) sensor
- The engine coolant temperature (ECT) sensor
- The mass air flow (MAF) sensor
- The intake air temperature (IAT) sensor
- The vehicle speed sensor (VSS)
- The transmission gear position or range information sensors
- The engine knock sensors (KS)

Modes of Operation

There is one normal mode of operation, with the spark under PCM control. If the CKP pulses are lost the engine will not run. The loss of a CMP signal may result in a longer crank time since the PCM cannot determine which stroke the pistons are on. Diagnostic trouble codes are available to accurately diagnose the ignition system with a scan tool.

KNOCK SENSOR (KS) SYSTEM DESCRIPTION

Purpose

The knock sensor (KS) system enables the control module to control the ignition timing for the best possible performance while protecting the engine from potentially damaging levels of detonation. The control module uses the KS system to test for abnormal engine noise that may indicate detonation, also known as spark knock.

Sensor Description

This knock sensor (KS) system uses one or 2 broadband one-wire sensors. The sensor uses piezo-electric crystal technology that produces an AC voltage signal of varying amplitude and frequency based on the engine vibration, or noise, level. The amplitude and frequency are dependant upon the level of knock that the KS detects. The control module receives the KS signal through a signal circuit. The KS ground is supplied by the engine block through the sensor housing.

One way the control module monitors the system is by output of a bias voltage on the KS signal wire. The bias voltage creates a voltage drop that the control module monitors and uses to help diagnose KS faults. The KS noise signal rides along this bias voltage, and due to the constantly fluctuating frequency and amplitude of the signal, will always be outside of the bias voltage parameters.

Another way the control module monitors the system is by learning the average normal noise output from the KS. The control module learns a minimum noise level, or background noise, at idle from the KS and uses calibrated values for the rest of the RPM range. The control module uses the minimum noise level to calculate a noise channel. The control module uses this noise channel, and the KS signal that rides along the noise channel, in much the same way as the bias voltage type does. As engine speed and load change, the noise channel upper and lower parameters will change to accommodate the normal KS signal.

In order to determine which cylinders are knocking, the control module only uses KS signal information when each cylinder is near top dead center (TDC) of the firing stroke. If the control module has determined that knock is present, it will retard the ignition timing to attempt to eliminate the knock. The control module will always try to work back to a zero compensation level, or no spark retard. An abnormal KS signal will fall within the noise channel or will not be present. KS diagnostics are calibrated to detect faults with the KS circuitry inside the control module, the KS wiring, or the KS voltage output.

SECONDARY AIR INJECTION (AIR) SYSTEM DESCRIPTION

Secondary Air Injection System Description

The secondary air injection (AIR) pump system is designed to lower exhaust emission levels on engine start-up.

The powertrain control module (PCM) commands the AIR pump relay ON, by supplying a ground on the air pump relay control circuit. This action energizes the AIR pump forcing fresh air, oxygen, into the exhaust stream. The PCM also commands the secondary air injection (AIR) solenoid ON, by supplying a ground on the air solenoid control circuit. With the AIR solenoid activated engine vacuum is applied to the AIR shut-off valve. Fresh air from the AIR pump then enters into the exhaust stream, accelerating catalyst operation, reducing exhaust emission levels. When the AIR system is inactive, the AIR shut-off valve and the exhaust check valves prevent airflow in either direction.

The secondary air injection (AIR) system includes the following components:

- The AIR pump relay- The AIR pump relay supplies high current to the AIR pump. The PCM commands the AIR pump relay ON by suppling a ground on the control circuit of the relay. This action closes the internal contacts of the AIR pump relay, energizing the AIR pump.
- The AIR pump-The AIR pump supplies fresh air to the exhaust stream. The inlet hose and filter is the only serviceable part of the pump.
- The AIR injection solenoid-The AIR injection solenoid controls the AIR shut-off valve. When the AIR system is enabled, the PCM supplies a ground on the control circuit of the air solenoid. This enables the air solenoid, allowing engine vacuum to be applied to the AIR shut-off valve.
- The AIR shut-off valve-The AIR shut-off valve is vacuum operated. When the AIR system is enabled, engine vacuum is applied to the valve. The vacuum opens the shut-off valve allowing fresh air from the AIR pump to flow to the exhaust check valves. When inactive the shut-off valve prevents airflow in either direction.
- The exhaust check valves-The exhaust check valves prevent back flow of exhaust gases into the AIR system. A shut-off valve that has become inoperative, showing indications of exhaust gases in the outlet port, or heat damaged hoses may indicate an exhaust check valve failure.
- The pipes/hoses-The pipes/hoses carry the air from the AIR pump to the exhaust stream. The pipes/hoses can be tested for leaks using a soapy water solution, with the AIR pump running, bubbles will form if a leak exists.

Results of Incorrect Operation

The PCM detects a system airflow problem by monitoring the heated oxygen senors (HO2S) and Short Term Fuel Trim (FT) values during normal Open Loop system operation. This is a passive test. If the passive test indicates a pass, the PCM takes no further action. If the passive test fails or is inconclusive, the PCM diagnostic will proceed with an intrusive or active test. The PCM will command the AIR system ON, during normal Closed Loop operation and under normal operating conditions. This is an active test. The active test will pass or fail based on the response from the HO2S. A drop in the HO2S response indicates that the AIR system is functioning normally. An increasing Short Term FT value also indicates a normally functioning system. The AIR diagnostic consists of the combination of the passive and active test. It requires failure of the passive and active tests on two consecutive key cycles to illuminate the malfunction indicator lamp (MIL) and store a DTC. If the PCM detects that the HO2S and Short Term FT did not respond as expected on both of the engine banks DTC P0410 sets. If the PCM detects that the HO2S and Short Term FT did not respond as expected on only one of the engine banks DTC P0491 for bank 1 or P0492 for bank 2 sets.

If incorrect voltage is present on the AIR solenoid or the AIR pump relay control circuits the device will not operate. This condition can be detected by the PCM, DTC P0412 for the AIR solenoid or P0418 for the AIR pump relay sets.

The following DTCs can set if a secondary air injection fault is detected:

- P0410- A system flow problem has been detected.
- P0412- A secondary AIR injection solenoid control circuit problem has been detected.
- P0418- A secondary AIR pump relay control circuit problem has been detected.

- P0491-A Bank 1 airflow problem has been detected.
- P0492-A Bank 2 airflow problem has been detected.

AIR INTAKE SYSTEM DESCRIPTION

The primary function of the air intake system is to provide filtered air to the engine. The system uses a cleaner element mounted in a housing. The cleaner housing is remotely mounted and uses intake ducts to route the incoming air into the throttle body. The secondary function of the air intake system is to muffle air induction noise. This is achieved through the use of resonators attached to the air intake ducts. The resonators are tuned to the specific powertrain. The mas air flow (MAF) sensor is used to measure the air entering the engine.

SPECIAL TOOLS AND EQUIPMENT

SPECIAL TOOLS

Special Tools

Illustration	Tool Number/Description
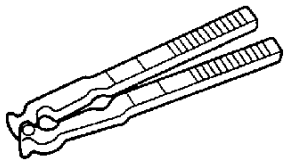	J 22610 Service Boot Clamp
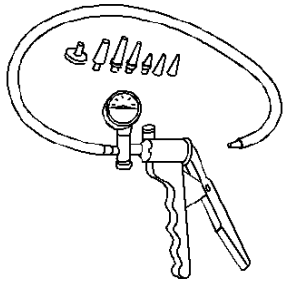	J 23738-A Vacuum Pump
	J 26792 Spark Tester

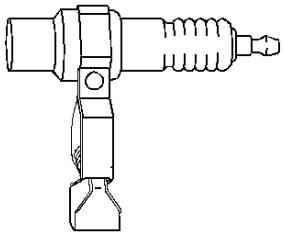	
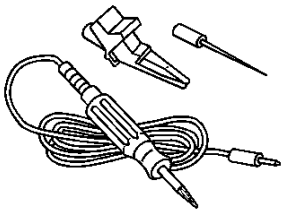	J 34142-B Test Light
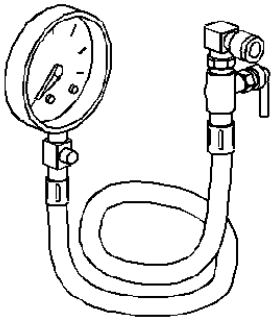	J 34730-1A Fuel Pressure Gauge
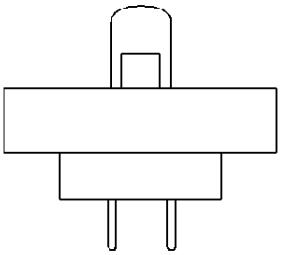	J 34730-2C Injector Test Light (EFI Lite)

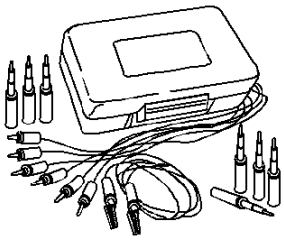	J 35616-A Connector Test Adapter Kit
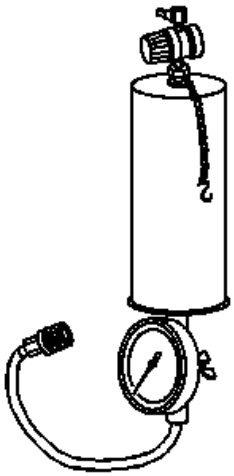	J 35800-A Fuel Injector Cleaner
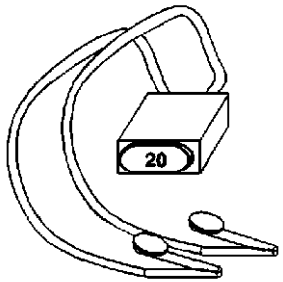	J 36169-A Fused Jumper Wire
	J 37088-A Fuel Line Quick Connect Separator

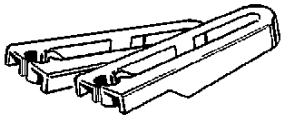	
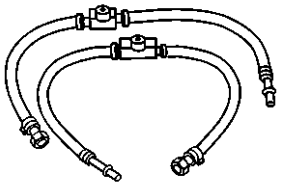	J 37287 Inlet and Return Fuel Line Shut off Adapters
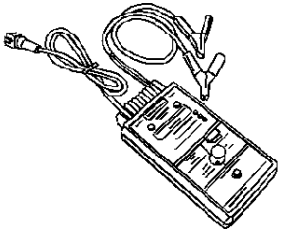	J 39021 Fuel Injector Coil/Balance Tester
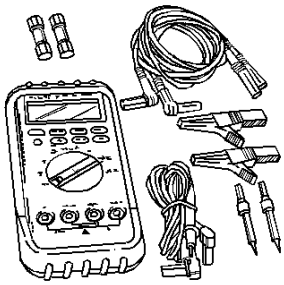	J 39200 Digital Multimeter
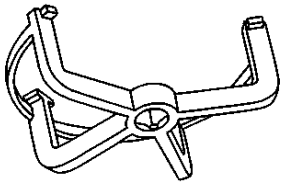	J 39765 Fuel Sender Lock Nut Wrench

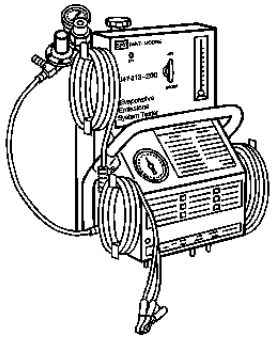	J 41413-200 Evaporative Emissions System Tester (EEST)
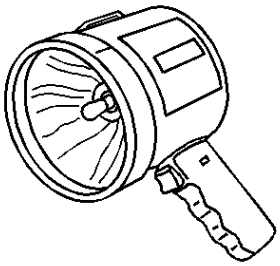	J 41413-SPT High Intensity White Light
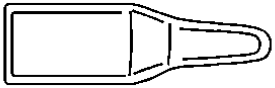	J 41413-306 EVAP Plug
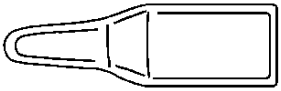	J 41413-307 EVAP Plug
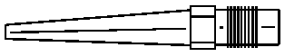	J 41413-311 EVAP Plug
	J 41413-VLV EVAP Service Port Vent Fitting

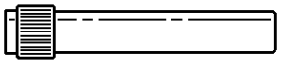	
	J 41415-40 Fuel Tank Cap Adapter
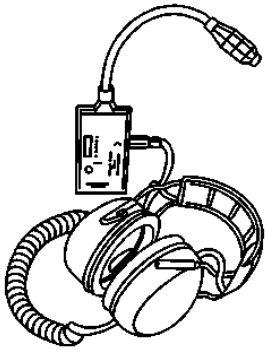	J 41416 Ultrasonic Leak Detector
	J 42236-A Serial Data Link Test

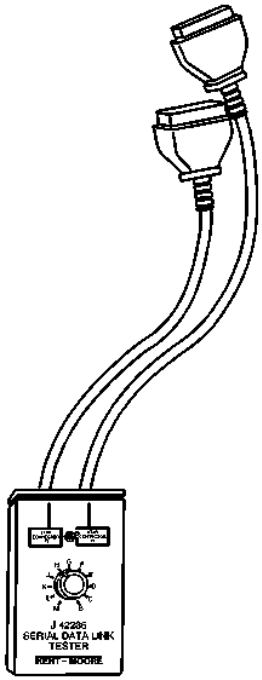	
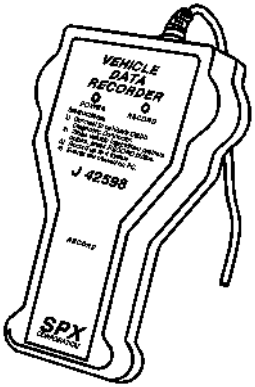	J 42598 Vehicle Data Recorder
	J 43244 Relay Puller Pliers

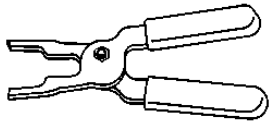	
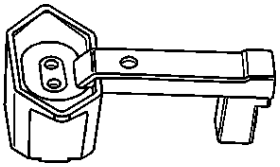	J 44175 Fuel Composition Tester
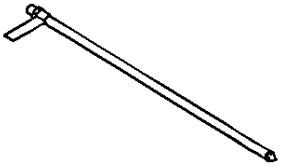	J 45004 Fuel Tank Drain Hose
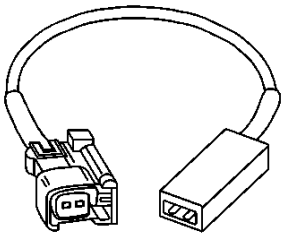	J 44602 Fuel Injector Test Adapter
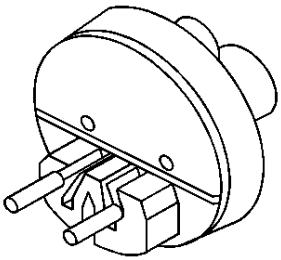	J 44603 Fuel Injector Test Lamp

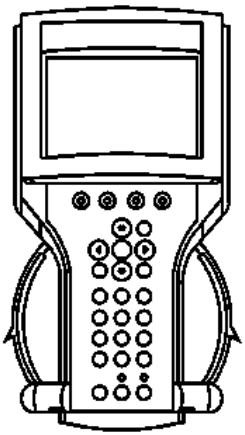	Tech 2 Kit 7000081