2004 BRAKES

Disc Brakes - C/K SUV

SPECIFICATIONS

FASTENER TIGHTENING SPECIFICATIONS

Fastener Tightening Specifications

Application	Specification	
	Metric	English
Backing Plate Bolts	135 N.m	100 lb ft
Brake Caliper Bleed Screw	12 N.m	106 lb in
Brake Hose to Caliper Bolt, Front	40 N.m	30 lb ft
Brake Hose to Caliper Bolt, Rear	40 N.m	30 lb ft
Caliper Guide Pin Bolt, Front	108 N.m	80 lb ft
Caliper Guide Pin Bolt, Rear (15 series)	42 N.m	31 lb ft
Caliper Guide Pin Bolt, Rear (25 series)	108 N.m	80 lb ft
Caliper Mounting Bracket to Backing Plate, Rear (JC5/JH5)	200 N.m	148 lb ft
Caliper Mounting Bracket to Backing Plate, Rear (JH6)	165 N.m	122 lb ft
Caliper Mounting Bracket to Knuckle, Front (15 series)	175 N.m	129 lb ft
Caliper Mounting Bracket to Knuckle, Front (25 series)	300 N.m	221 lb ft
Park Brake Bracket Bolt, Rear	61 N.m	45 lb ft
Quarter Shaft Shield Bolt	25 N.m	18 lb ft
Quarter Shaft Shield Nut	25 N.m	18 lb ft

DISC BRAKE COMPONENT SPECIFICATIONS

Disc Brake Component Specifications

Application	Specification	
	Metric	English
Front Brakes JC3/JC4		
• Rotor Discard Thickness	27.50 mm	1.083 in
• Rotor Minimum Allowable Thickness After Refinish	28.0 mm	1.102 in
• Rotor Thickness (new)	29.0 mm	1.142 in
• Rotor Maximum Allowable Lateral Runout	0.13 mm	0.005 in
• Rotor Maximum Allowable Scoring	1.50 mm	0.059 in
• Rotor Maximum Allowable Thickness Variation	0.025 mm	0.001 in
Front Brakes JH2		
• Rotor Discard Thickness	27.50 mm	1.083 in

cardiagn.com

• Rotor Minimum Allowable Thickness After Refinish	28.0 mm	1.102 in
• Rotor Thickness (new)	29.0 mm	1.142 in
• Rotor Maximum Allowable Lateral Runout	0.13 mm	0.005 in
• Rotor Maximum Allowable Scoring	1.50 mm	0.059 in
• Rotor Maximum Allowable Thickness Variation	0.025 mm	0.001 in
Front Brakes JH6		
• Rotor Discard Thickness	36.50 mm	1.437 in
• Rotor Minimum Allowable Thickness After Refinish	37.0 mm	1.457 in
• Rotor Thickness (new)	38.0 mm	1.496 in
• Rotor Maximum Allowable Lateral Runout	0.13 mm	0.005 in
• Rotor Maximum Allowable Scoring	1.50 mm	0.059 in
• Rotor Maximum Allowable Thickness Variation	0.025 mm	0.001 in
Rear Brakes JC4		
• Rotor Discard Thickness	28.5 mm	1.122 in
• Rotor Minimum Allowable Thickness After Refinish	29.0 mm	1.142 in
• Rotor Thickness (new)	30.0 mm	1.181 in
• Rotor Maximum Allowable Lateral Runout	0.13 mm	0.005 in
• Rotor Maximum Allowable Scoring	1.50 mm	0.059 in
• Rotor Maximum Allowable Thickness Variation	0.025 mm	0.001 in
Rear Brakes JH2		
• Rotor Discard Thickness	28.5 mm	1.122 in
• Rotor Minimum Allowable Thickness After Refinish	29.0 mm	1.142 in
• Rotor Thickness (new)	30.0 mm	1.181 in
• Rotor Maximum Allowable Lateral Runout	0.13 mm	0.005 in
• Rotor Maximum Allowable Scoring	1.50 mm	0.059 in
• Rotor Maximum Allowable Thickness Variation	0.025 mm	0.001 in
Rear Brakes JH6		
• Rotor Discard Thickness	27.5 mm	1.083 in
• Rotor Minimum Allowable Thickness After Refinish	28.0 mm	1.102 in
• Rotor Thickness (new)	29.0 mm	1.142 in
• Rotor Maximum Allowable Lateral Runout	0.13 mm	0.005 in
• Rotor Maximum Allowable Scoring	1.50 mm	0.059 in
• Rotor Maximum Allowable Thickness Variation	0.025 mm	0.001 in
* All brake rotors have a discard dimension cast into them. Replace any rotor that does not meet this		

cardiagn.com

specification. After refinishing the rotor, replace any rotor that does not meet the minimum thickness specifications.

DIAGNOSTIC INFORMATION AND PROCEDURES

DIAGNOSTIC STARTING POINT - DISC BRAKES

Begin the disc brake system diagnosis with **Diagnostic Starting Point - Hydraulic Brakes** in Hydraulic Brakes. The use of the Diagnostic Starting Point will lead to the identification of the correct procedure for diagnosing the system and where the procedure is located.

BRAKE ROTOR THICKNESS MEASUREMENT

CAUTION: Refer to Brake Dust Caution in Cautions and Notices.

1. If the inboard friction surface of the brake rotor is not accessible, reposition and support the caliper with the brake pads. Refer to **Brake Pads Replacement - Front** and/or **Brake Pads Replacement - Rear**.
2. Clean the friction surfaces of the brake rotor with denatured alcohol, or an equivalent approved brake cleaner.
3. Using a micrometer calibrated in thousanths-of-a-millimeter, or ten-thousanths-of-an-inch, measure and record the thickness of the brake rotor at four or more points, evenly spaced around the rotor.

   Ensure that the measurements are only taken within the friction surfaces and that the micrometer is positioned the same distance from the outer edge of the rotor, about 13 mm (1/2 in), for each measurement.

cardiagn.com

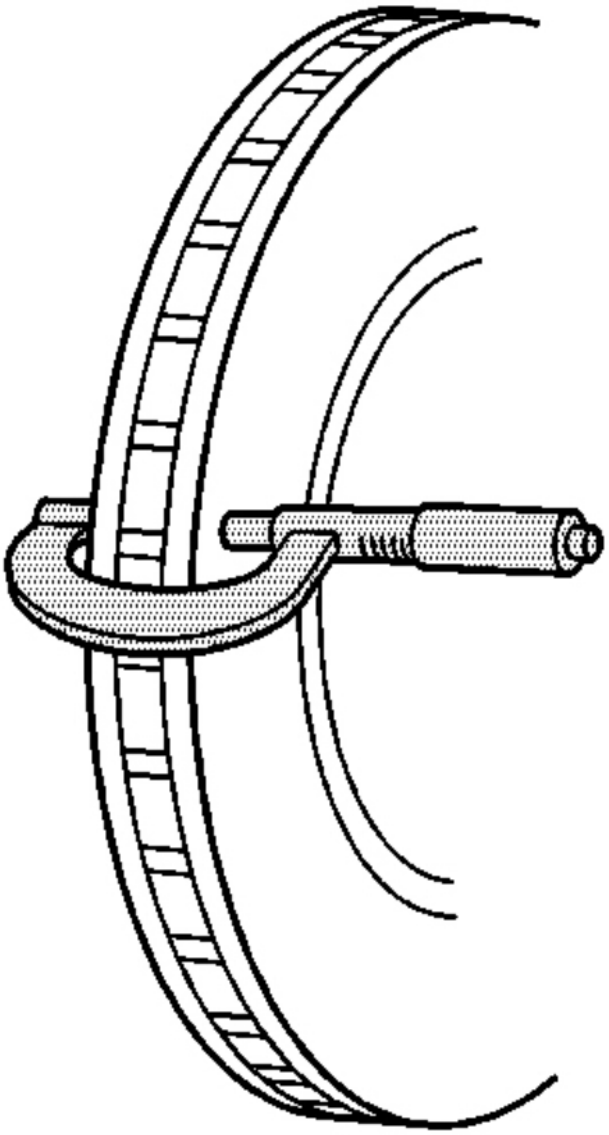

Fig. 1: Measuring Brake Rotor Thickness
Courtesy of GENERAL MOTORS CORP.

4. Compare the lowest thickness measurement recorded to the following specifications:
   - **Specification - Front Brake JC3/JC4/JH2:**
     - Brake rotor minimum allowable thickness after refinishing 28.0 mm (1.10 in)

cardiagn.com

- Brake rotor discard thickness 27.50 mm (1.082 in)

- **Specification - Front Brake JH6:**
  - Brake rotor minimum allowable thickness after refinishing 37.0 mm (1.46 in)
  - Brake rotor discard thickness 36.50 mm (1.437 in)
- **Specification - Rear Brake JC4/JH2:**
  - Brake rotor minimum allowable thickness after refinishing 29.0 mm (1.142 in)
  - Brake rotor discard thickness 28.50 mm (1.122 in)
- **Specification - Rear Brake JH6:**
  - Brake rotor minimum allowable thickness after refinishing 28.0 mm (1.102 in)
  - Brake rotor discard thickness 27.50 mm (1.082 in)

5. If the lowest thickness measurement of the brake rotor is above the minimum allowable thickness after refinishing specification, the rotor may be able to be refinished, depending upon surface and wear conditions which may be present.
6. If the lowest thickness measurement of the brake rotor is at or below the minimum allowable thickness after refinishing specification, the rotor may not be refinished.
7. If the lowest thickness measurement of the brake rotor is at or below the discard thickness specification, the rotor requires replacement.

BRAKE ROTOR THICKNESS VARIATION MEASUREMENT

CAUTION: Refer to Brake Dust Caution in Cautions and Notices.

IMPORTANT: Any disc brake rotor that exhibits thickness variation exceeding the maximum acceptable level must be refinished or replaced. Thickness variation exceeding the maximum acceptable level can cause brake pulsation.

1. If the inboard friction surface of the brake rotor is not accessible, reposition and support the caliper with the brake pads. Refer to **Brake Pads Replacement - Front** and/or **Brake Pads Replacement - Rear**.
2. Clean the friction surfaces of the brake rotor with denatured alcohol, or an equivalent approved brake cleaner.
3. Using a micrometer calibrated in thousanths-of-a-millimeter, or ten-thousanths-of-an-inch, measure and record the thickness of the brake rotor at four or more points, evenly spaced around the rotor.

   Ensure that the measurements are only taken within the friction surfaces and that the micrometer is positioned the same distance from the outer edge of the rotor, about 13 mm (1/2 in), for each measurement.

cardiagn.com

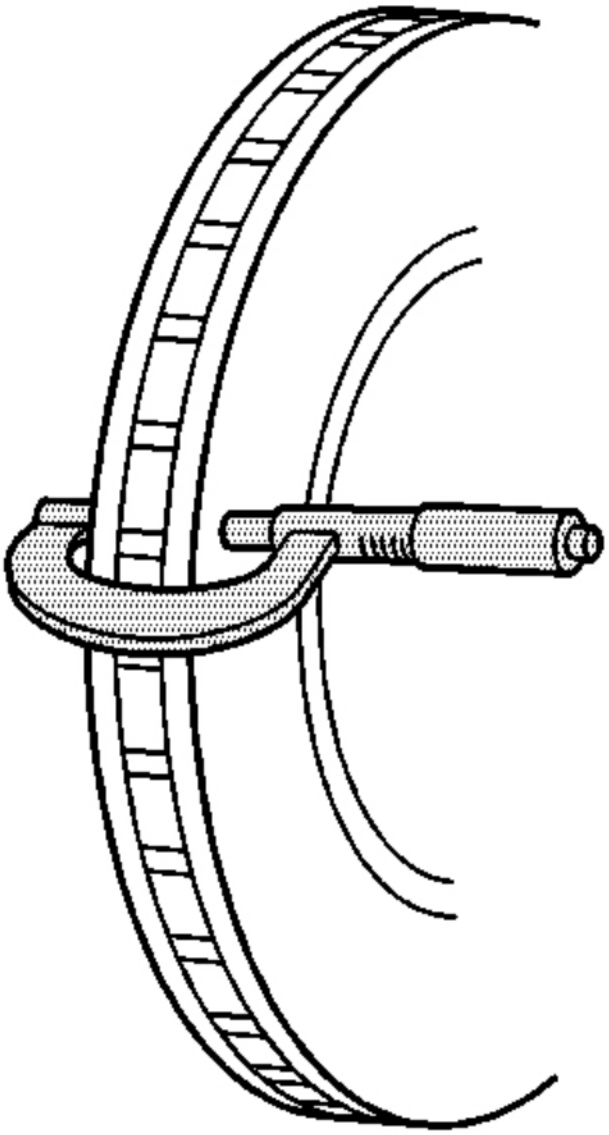

Fig. 2: Measuring Brake Rotor Thickness
Courtesy of GENERAL MOTORS CORP.

4. Calculate the difference between the highest and lowest thickness measurements recorded to obtain the amount of thickness variation.
5. Compare the thickness variation measurement to the following specification:

cardiagn.com

Specification: Brake rotor maximum allowable thickness variation: 0.025 mm (0.001 in)

IMPORTANT: Whenever a brake rotor is refinished or replaced, the assembled lateral runout (LRO) of the rotor must be measured to ensure optimum performance of the disc brakes.

6. If the brake rotor thickness variation measurement exceeds the specification, the rotor requires refinishing or replacement.

BRAKE ROTOR SURFACE AND WEAR INSPECTION

CAUTION: Refer to Brake Dust Caution in Cautions and Notices.

1. If the inboard friction surface of the brake rotor is not accessible, reposition and support the caliper with the brake pads. Refer to **Brake Pads Replacement - Front** and/or **Brake Pads Replacement - Rear**.
2. Clean the friction surfaces of the brake rotor with denatured alcohol, or an equivalent approved brake cleaner.
3. Inspect the friction surfaces of the brake rotor for the following Braking Surface Conditions:
   - Heavy rust and/or pitting

     Light surface rust can be removed with an abrasive disc. Heavy surface rust and/or pitting must be removed by refinishing the rotor.

   - Cracks and/or heat spots
   - Excessive blueing discoloration
4. If the friction surfaces of the brake rotor exhibit one or more of the Braking Surface Conditions, the rotor requires refinishing or replacement.
5. Using a micrometer calibrated in thousanths-of-a-millimeter, or ten-thousanths-of-an-inch, measure and record the scoring depth of any grooves present on the rotor friction surfaces.

cardiagn.com

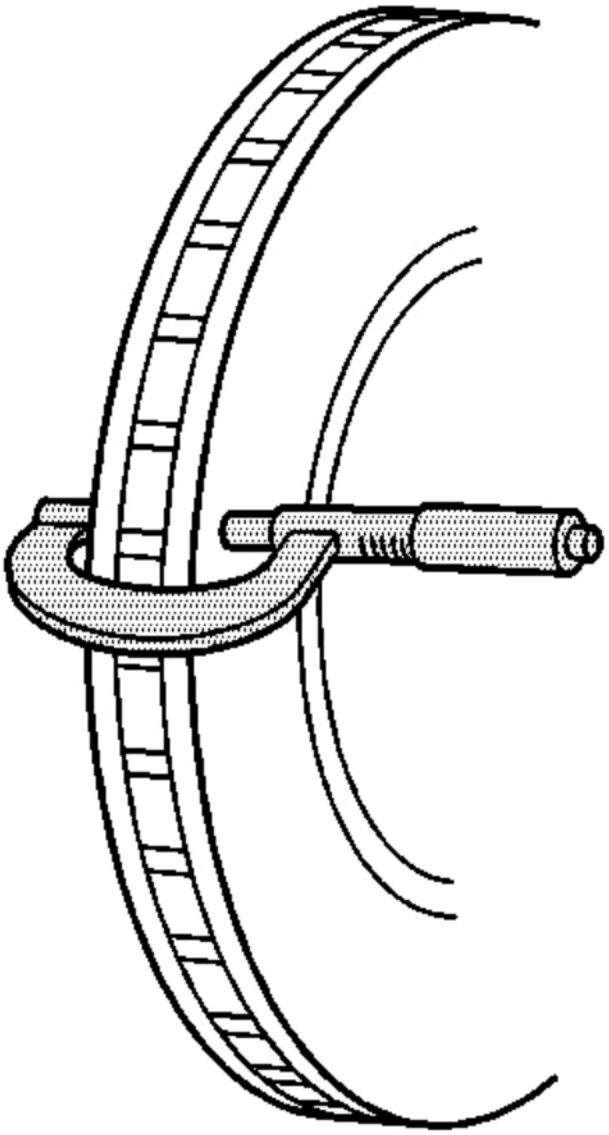

Fig. 3: Measuring Brake Rotor Thickness
Courtesy of GENERAL MOTORS CORP.

6. Compare the groove scoring depth recorded to the following specification:

   Specification: Brake rotor maximum allowable scoring: 1.50 mm (0.059 in)

cardiagn.com

7. If the brake rotor scoring depth exceeds the specification, or if an excessive amount of scoring is present, the rotor requires refinishing or replacement.

BRAKE ROTOR ASSEMBLED LATERAL RUNOUT (LRO) MEASUREMENT

Tools Required

- **J 39544-KIT** Torque-Limiting Socket Set, or equivalent. See **Special Tools and Equipment**.
- **J 41013** Rotor Resurfacing Kit
- **J 42450-A** Wheel Hub Resurfacing Kit
- **J 45101** Hub and Wheel Runout Gage
- **J 45101-100** Conical Brake Rotor Washers

CAUTION: Refer to Brake Dust Caution in Cautions and Notices.

IMPORTANT:

- **Brake rotor assembled lateral runout (LRO) exceeding the maximum allowable specification can cause thickness variation to develop in the brake rotor over time, usually between 4 800-11 300 km (3,000-7,000 mi).**
- **Brake rotor thickness variation MUST be checked BEFORE checking for assembled lateral runout (LRO). Thickness variation exceeding the maximum acceptable level can cause brake pulsation. Refer to Brake Rotor Thickness Variation Measurement.**

1. Matchmark the position of the brake rotor to the wheel studs if this has not been done already.

IMPORTANT: Whenever the brake rotor has been separated from the hub/axle flange, any rust or contaminants should be cleaned from the hub/axle flange and the brake rotor mating surfaces. Failure to do this may result in excessive assembled lateral runout (LRO) of the brake rotor, which could lead to brake pulsation.

2. Inspect the mating surface of the hub/axle flange and the brake rotor to ensure that there are no foreign particles, corrosion, rust, or debris remaining. If the wheel hub/axle flange and/or if the brake rotor mating surfaces exhibit these conditions, perform the following steps:
   1. Remove the brake rotor from the vehicle. Refer to **Brake Rotor Replacement - Front** and/or **Brake Rotor Replacement - Rear (W/NYS)** or **Brake Rotor Replacement - Rear (W/O NYS)**.
   2. Using the **J 42450-A** , thoroughly clean any rust or corrosion from the mating surface of the hub/axle flange.
   3. Using the **J 41013** , thoroughly clean any rust or corrosion from the mating surface of the brake rotor.
   4. Clean the friction surfaces of the brake rotor with denatured alcohol, or an equivalent approved brake cleaner.

cardiagn.com

3. Install the rotor to the hub/axle flange using the matchmark made prior to removal.
4. Hold the rotor firmly in place against the hub/axle flange and install one of the **J 45101-100** (1), and one lug nut (2) onto the upper-most wheel stud.
5. Continue to hold the rotor secure and tighten the lug nut firmly by hand.
6. Install the remaining **J 45101-100** and lug nuts onto the wheel studs and tighten the nuts firmly by hand in a star-pattern.

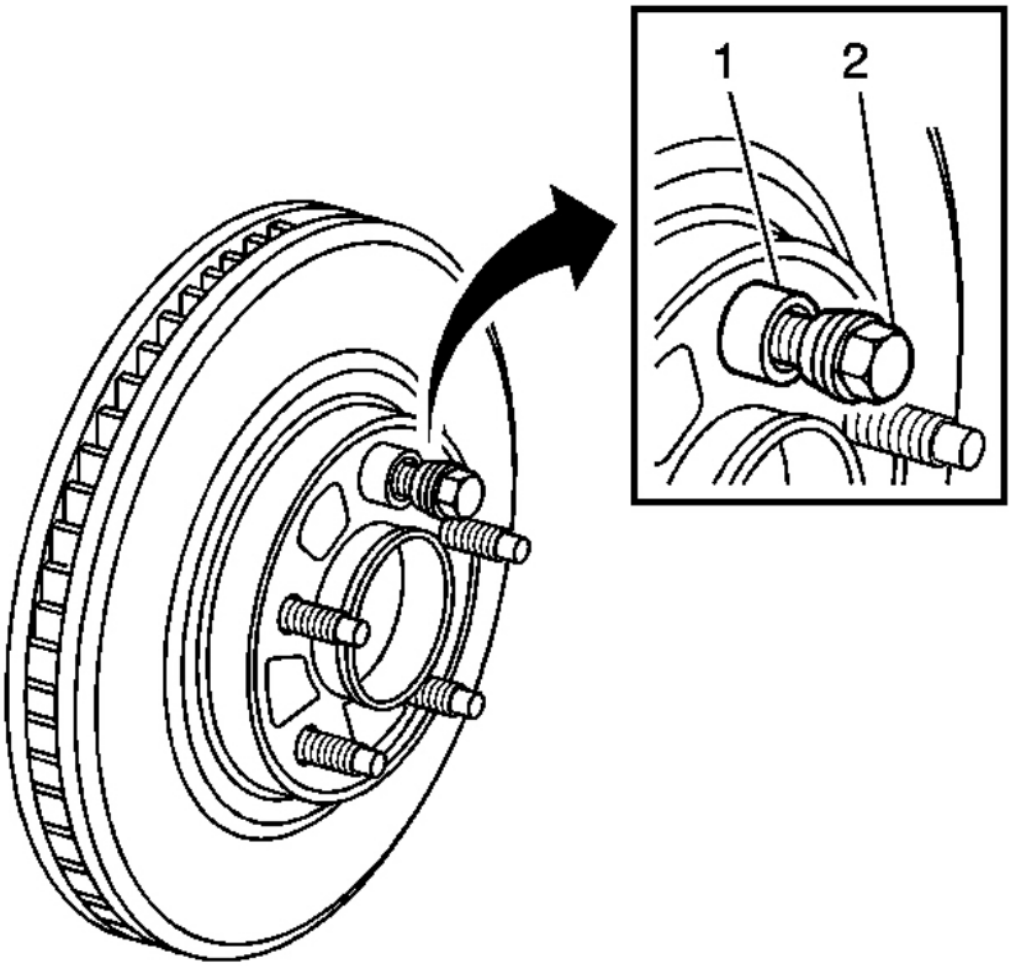

Fig. 4: Identifying J 45101-100 & Lug Nut
Courtesy of GENERAL MOTORS CORP.

7. Using the **J 39544-KIT** , or equivalent, tighten the lug nuts in a star-pattern to specification, in order to properly secure the rotor. Refer to **Tire and Wheel Removal and Installation** in Tires and Wheels.

cardiagn.com

8. If the brake rotor has been REFINISHED or REPLACED with a new rotor, proceed to step 14.
9. If the brake rotor meets the following criteria, proceed to step 10.
    - The rotor is within specifications and is being REUSED
    - The rotor has NOT been refinished
    - The rotor does NOT exhibit thickness variation exceeding the maximum allowable level

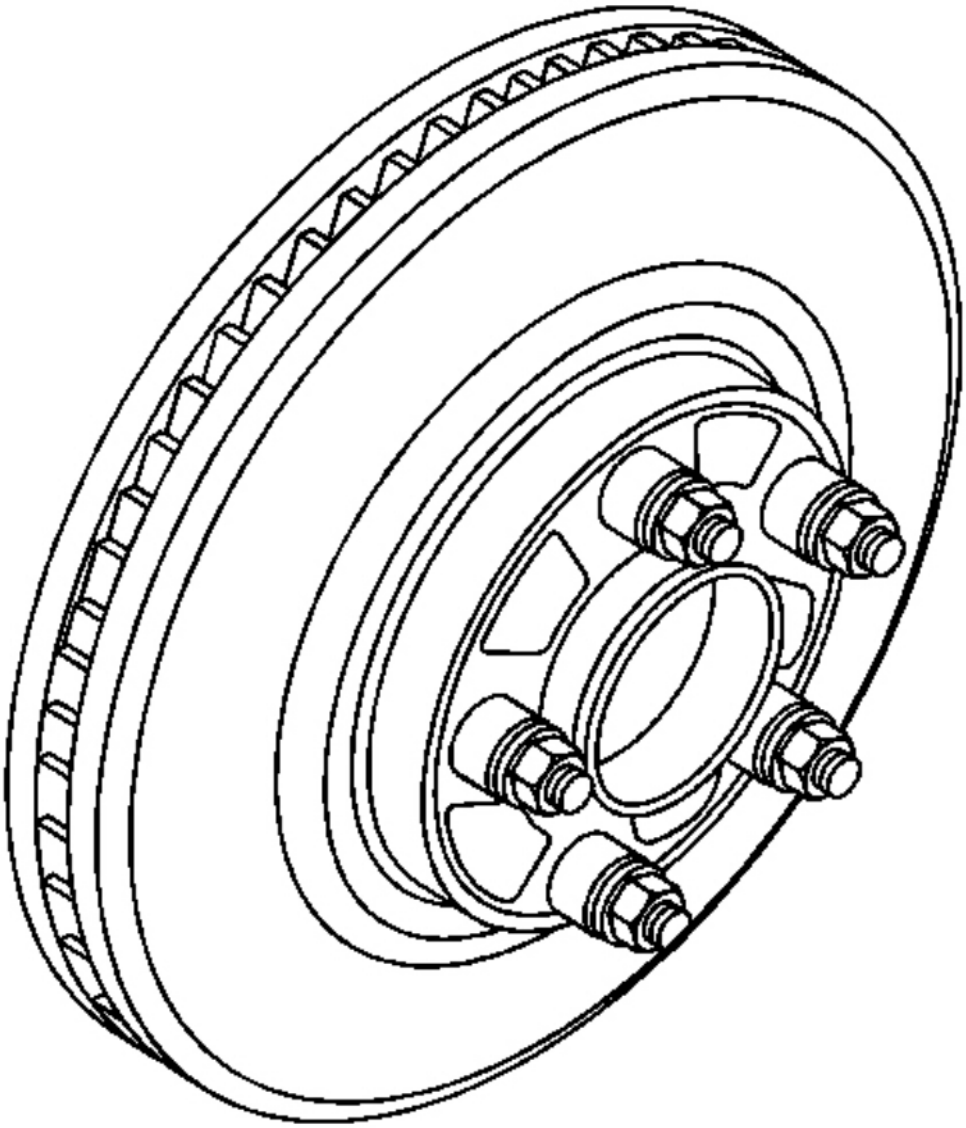

cardiagn.com

Fig. 5: Installing All J 45101-100s & Lug Nuts
Courtesy of GENERAL MOTORS CORP.

10. Mount a dial indicator, **J 45101** , or equivalent, to the steering knuckle and position the indicator button so it contacts the brake rotor friction surface at a 90 degree angle, approximately 13 mm (0.5 in) from the outer edge of the rotor.

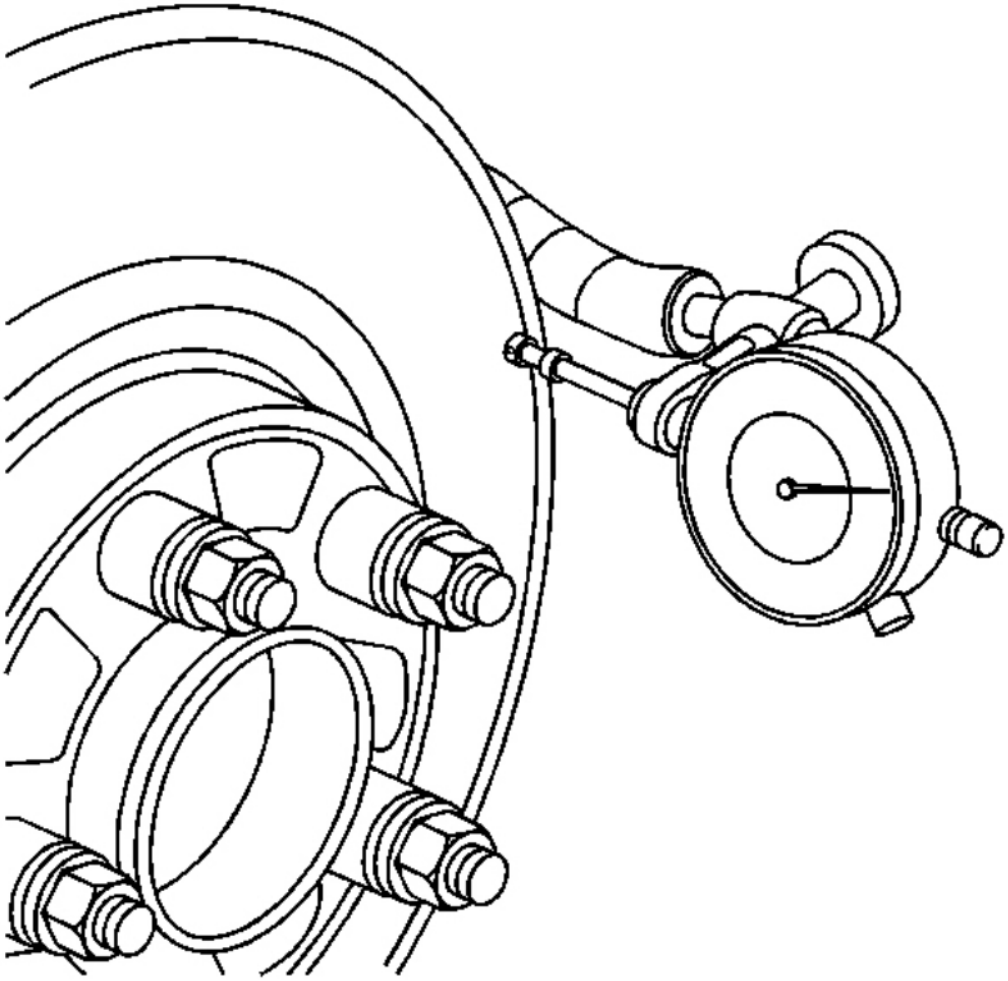

Fig. 6: Mounting Dial Indicator To Measure Lateral Runout
Courtesy of GENERAL MOTORS CORP.

11. Measure and record the assembled LRO of the brake rotor.
    1. Rotate the rotor until the lowest reading is displayed on the indicator dial, then set the dial to zero.

cardiagn.com

2. Rotate the rotor until the highest reading is displayed on the dial.
3. Mark the location of the high spot relative to the nearest wheel stud, or studs.
4. Measure and record the amount of LRO.

12. Compare the brake rotor assembled LRO to the following specification:

Specification:

- Front brake rotor maximum allowable assembled lateral runout: 0.13 mm (0.005 in)
- Rear brake rotor maximum allowable assembled lateral runout: 0.13 mm (0.005 in)

13. If the brake rotor assembled LRO is within specifications, proceed to step 18.

    If the brake rotor assembled LRO exceeds the specification, refinish the rotor to ensure true parallelism, refer to **Brake Rotor Refinishing**. After refinishing the rotor, proceed to step 14.

14. Mount a dial indicator, **J 45101** , or equivalent, to the steering knuckle and position the indicator button so it contacts the brake rotor friction surface at a 90 degree angle, approximately 13 mm (0.5 in) from the outer edge of the rotor.
15. Measure and record the assembled LRO of the brake rotor.
    1. Rotate the rotor until the lowest reading is displayed on the indicator dial, then set the dial to zero.
    2. Rotate the rotor until the highest reading is displayed on the dial.
    3. Mark the location of the high spot relative to the nearest wheel stud, or studs.
    4. Measure and record the amount of LRO.
16. Compare the brake rotor assembled LRO to the following specification:

Specification:

- Front brake rotor maximum allowable assembled lateral runout: 0.13 mm (0.005 in)
- Rear brake rotor maximum allowable assembled lateral runout: 0.13 mm (0.005 in)

17. If the brake rotor assembled LRO measurement exceeds the specification, bring the LRO to within specifications. Refer to **Brake Rotor Assembled Lateral Runout (LRO) Correction**.
18. If the brake rotor assembled LRO measurement is within specification, install the brake caliper and depress the brake pedal several times to secure the rotor in place before removing the **J 45101-100** and the lug nuts.

BRAKE PAD INSPECTION

CAUTION: Refer to Brake Dust Caution in Cautions and Notices.

- Inspect the disc brake pads at regular intervals, or whenever the tire and wheel assemblies are removed from the vehicle.
- If replacement is necessary, always replace disc brake pads in axle sets.

cardiagn.com

- Inspect both edges of the disc brake pad friction surfaces (3). The highest rate of wear normally occurs at the trailing edge of the disc brake pads.
- Inspect the thickness of the disc brake pads (3) in order to ensure that they have not worn prematurely. The disc brake pad wear should be approximately even per axle set.
- Both front and rear disc brake pads have integral, audible wear sensors (1). When the disc brake pad wear reaches the minimum allowable thickness, the wear sensor contacts the disc brake rotor (2). The wear indicator will then produce an audible, high-pitched warning noise during wheel rotation.
- Replace the disc brake pads when the friction surface (3) is worn to within 0.76 mm (0.030 in) of the mounting plates.

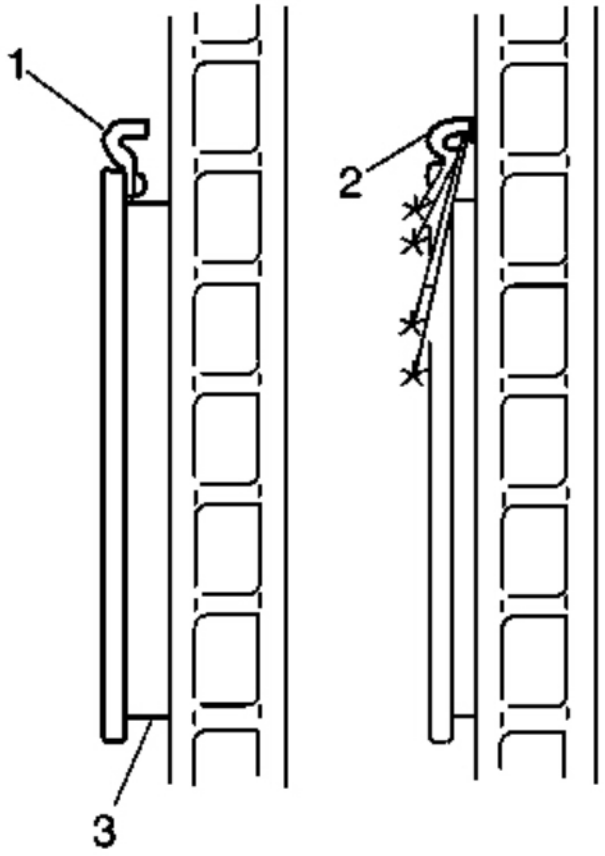

Fig. 7: View Of Brake Pads & Audible Wear Sensors
Courtesy of GENERAL MOTORS CORP.

- Remove the brake calipers and inspect the friction surfaces of the inner and outer disc brake pads to

cardiagn.com

ensure that they are level. Place the disc brake pad friction surfaces together and measure the gap between the surfaces. If more than 0.13 mm (0.005 in) gap exists midway between the length of the disc brake pads, replace the disc brake pads.

- Verify that any disc brake pad shims that may be required are in place and not damaged or excessively corroded. Replace any missing or damaged shims in order to preserve proper disc brake performance.
- Replace the disc brake pads if any have separated from the mounting plates.
- Inspect the disc brake pads friction surfaces for cracks, fractures, or damage which may cause noise or otherwise impair disc brake performance.

BRAKE CALIPER INSPECTION

CAUTION: Refer to Brake Dust Caution in Cautions and Notices.

1. Inspect the brake caliper housing for cracks, excess wear, and/or damage. If any of these conditions are present, the brake caliper requires replacement.
2. Inspect the caliper piston dust boot seals for cracks, tears, cuts, deterioration and/or improper seating in the caliper body. If any of these conditions are present, the brake caliper requires overhaul or replacement.
3. Inspect for brake fluid leakage around the caliper piston dust boot seals and on the disc brake pads. If there is any evidence of brake fluid leakage, the brake caliper requires overhaul or replacement.

cardiagn.com

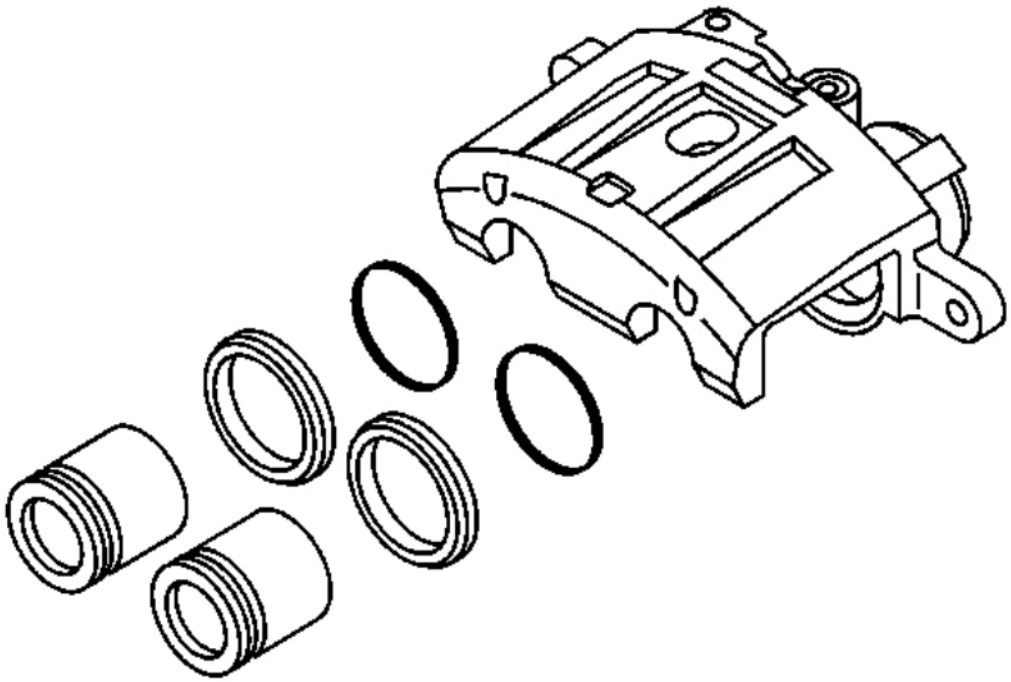

Fig. 8: View Of Brake Caliper Pistons, Boots & Seals
Courtesy of GENERAL MOTORS CORP.

4. Inspect for smooth and complete travel of the caliper pistons into the caliper bores:

   The movement of the caliper pistons into the caliper bores should be smooth and even. If the caliper piston is frozen or difficult to bottom, the caliper requires overhaul or replacement.

   Insert a discarded inner brake pad (2) or block of wood in front of the pistons. Using 2 large C-clamps (1) installed over the body of the caliper (3) and against the brake pad or block of wood, slowly bottom the pistons evenly into the bores.

cardiagn.com

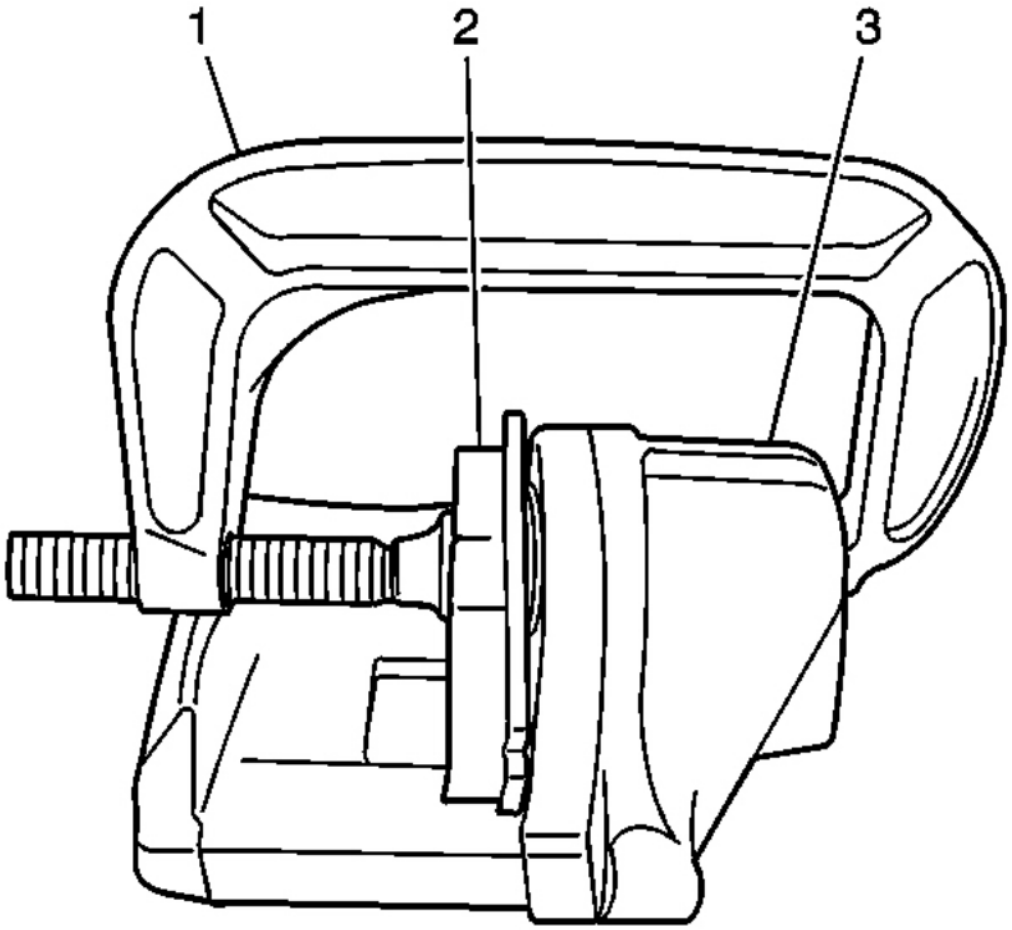

Fig. 9: Compressing Caliper Piston
Courtesy of GENERAL MOTORS CORP.

DISC BRAKE MOUNTING AND HARDWARE INSPECTION - FRONT

CAUTION: Refer to Brake Dust Caution in Cautions and Notices.

1. Inspect the fluid level in the brake master cylinder reservoir.
2. If the brake fluid level is midway between the maximum-full point and the minimum allowable level then no brake fluid needs to be removed from the reservoir before proceeding.
3. If the brake fluid level is higher than midway between the maximum-full point and the minimum allowable level then remove brake fluid to the midway point before proceeding.

cardiagn.com

4. Raise and support the vehicle. Refer to **Lifting and Jacking the Vehicle** in General Information.
5. Remove the tire and wheel assembly. Refer to **Tire and Wheel Removal and Installation** in Tires and Wheels.
6. Grasp the brake caliper housing and try to move the brake caliper housing up/down and forward/reverse in relation to the brake caliper mounting bracket. If excessive looseness is observed the brake caliper bracket bushings and/or the brake caliper mounting bolts may need to be replaced.
7. Compress the front caliper pistons.
   - Install a large C-clamp over the top of the caliper housing and against the back of the outboard pad.
   - Slowly tighten the C-clamp until the pistons are pushed completely into the caliper bores.
   - Remove the C-clamp from the caliper.
8. With the pistons compressed into the caliper bores, grasp the brake caliper housing and slide it back and forth on the brake caliper mounting bolts. Check for smooth operation. If the brake caliper housing slide force is high or the brake caliper housing does not slide smoothly, inspect the brake caliper mounting bolts and/or the brake caliper mounting bracket bushings for wear or damage. If wear or damage conditions are found, replacement of the brake caliper mounting bolts and/or the brake caliper mounting bracket bushings is necessary.
9. Remove the brake caliper mounting bolts from the brake caliper mounting bracket and support the brake caliper using heavy mechanics wire. Do Not remove the hydraulic brake hose from the caliper. Refer to **Brake Caliper Replacement - Front** in Disc Brakes.
10. Remove the disc brake pads from the brake caliper mounting bracket.

cardiagn.com

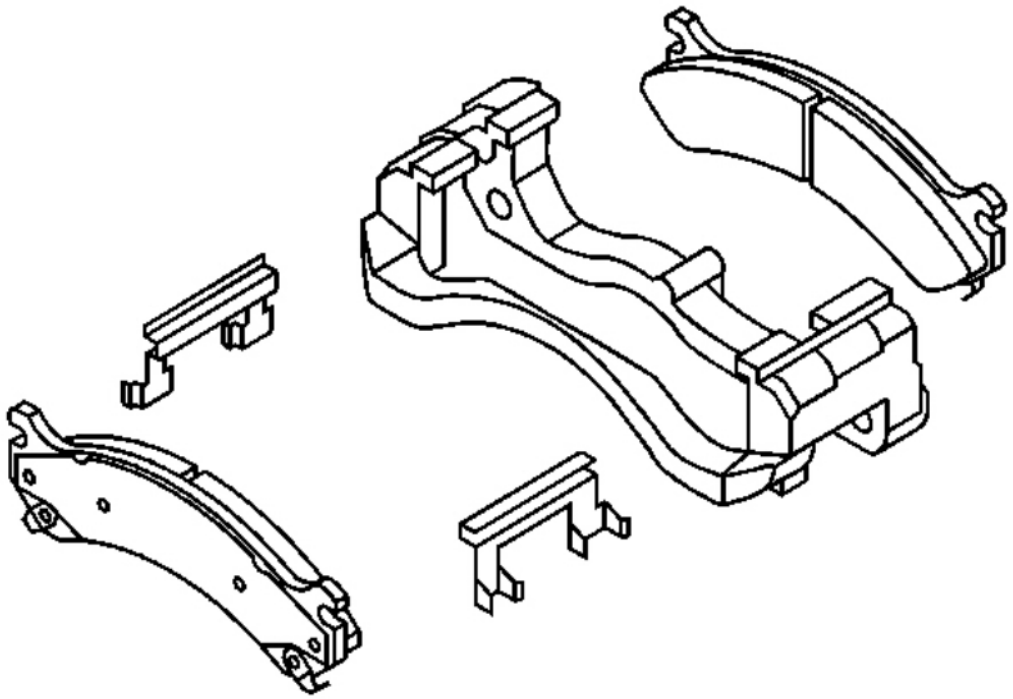

Fig. 10: View Of Disc Brake Pads & Brake Caliper Mounting Bracket
Courtesy of GENERAL MOTORS CORP.

11. Inspect the disc brake pad mounting hardware for the following:
    - Missing mounting hardware
    - Excessive corrosion
    - Bent mounting tabs
    - Looseness at the brake caliper mounting bracket
    - Looseness at the disc brake pads
    - Excessive contaminants in the brake caliper mounting bracket surface and threads.
12. If any of the conditions listed are found, the disc brake pad mounting hardware requires replacement.
13. Ensure the disc brake pads are held firmly in place on the brake caliper mounting bracket, yet slide easily on the mounting hardware without binding.
14. Inspect the caliper bolts (1) for the following:
    - Binding
    - Seizing
    - Looseness in the brake caliper mounting bracket (3)

cardiagn.com

- Bent or damaged brake caliper mounting bolts
- Cracked or torn boots (4)
- Missing boots
- Bent or damaged brake caliper mounting bracket (3)

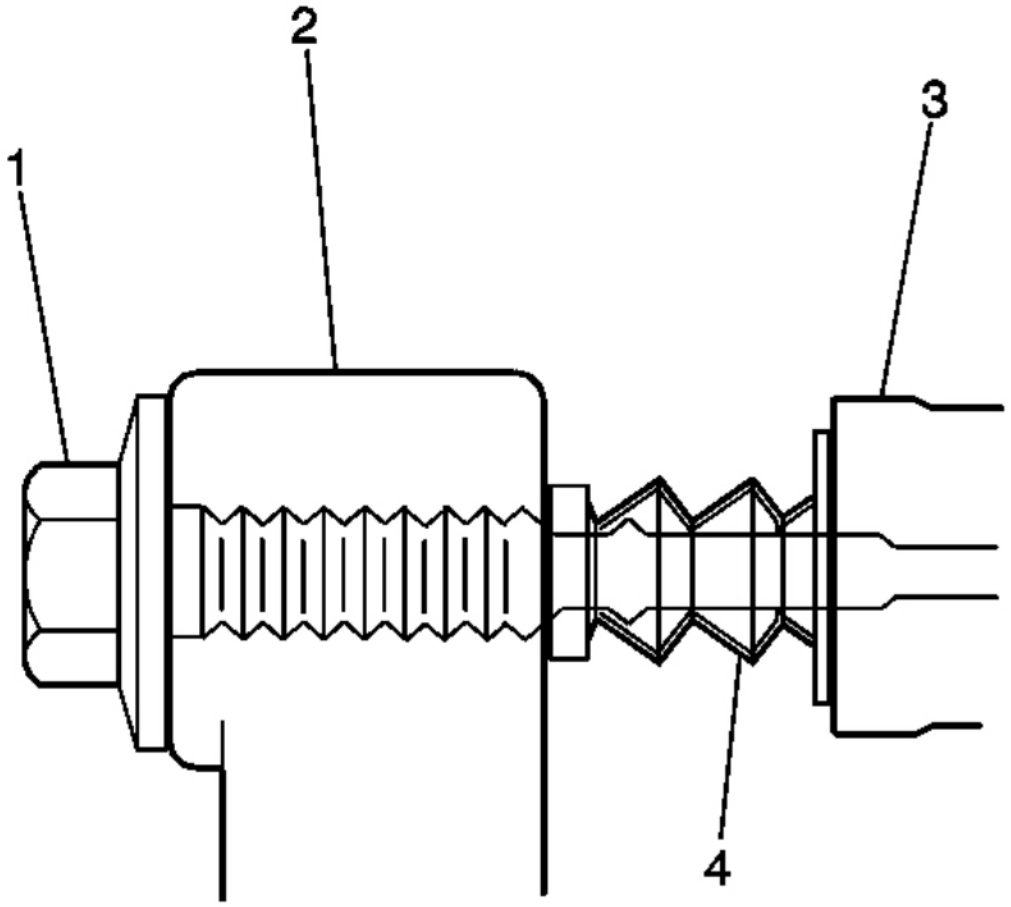

Fig. 11: View Of Caliper, Pin, Boots & Caliper Mounting Bracket
Courtesy of GENERAL MOTORS CORP.

15. If any of the conditions listed are found then the brake caliper mounting hardware requires replacement.
16. Install the disc brake pads to the brake caliper mounting bracket.
17. Install the disc brake caliper to the brake caliper mounting bracket. Refer to **Brake Caliper Replacement - Front** in Disc Brakes.

cardiagn.com

DISC BRAKE MOUNTING AND HARDWARE INSPECTION - REAR

CAUTION: Refer to Brake Dust Caution in Cautions and Notices.

1. Remove the disc brake caliper from the caliper mounting bracket.
2. Remove the disc brake pads from the caliper mounting bracket.
3. Inspect the disc brake pad mounting hardware for the following:
   - Missing mounting hardware
   - Excessive corrosion
   - Bent mounting tabs
   - Looseness at the caliper mounting bracket
   - Looseness at the disc brake pads
4. If any of the conditions listed are found, the disc brake pad mounting hardware requires replacement.
5. Ensure the disc brake pads are held firmly in place on the caliper mounting bracket, yet slide easily on the mounting hardware without binding.
6. Install the disc brake pads to the caliper mounting bracket.
7. Install the disc brake caliper to the mounting bracket.

cardiagn.com

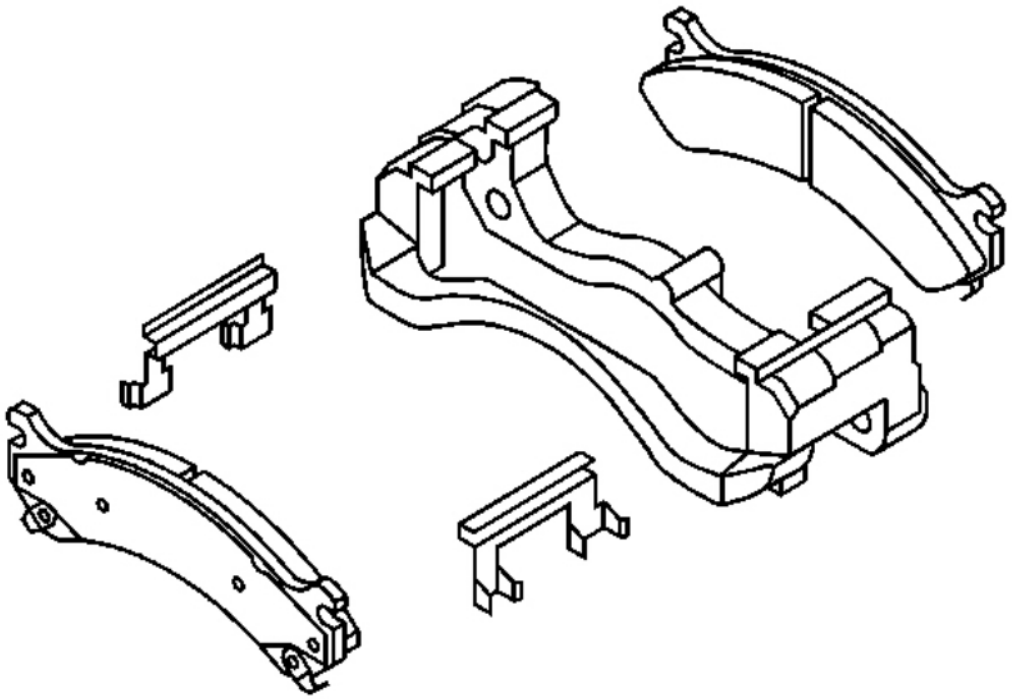

Fig. 12: View Of Disc Brake Pads & Brake Caliper Mounting Bracket
Courtesy of GENERAL MOTORS CORP.

REPAIR INSTRUCTIONS

BRAKE PADS REPLACEMENT - FRONT

Removal Procedure

CAUTION: Refer to Brake Dust Caution in Cautions and Notices.

1. Inspect the fluid level in the brake master cylinder reservoir.
2. If the brake fluid level is midway between the maximum-full point and the minimum allowable level, no brake fluid needs to be removed from the reservoir before proceeding.
3. If the brake fluid level is higher than midway between the maximum-full point and the minimum allowable level, remove brake fluid to the midway point before proceeding.
4. Raise and support the vehicle. Refer to **Lifting and Jacking the Vehicle** in General Information.

cardiagn.com

5. Remove the tire and wheel assembly. Refer to **Tire and Wheel Removal and Installation** in Tires and Wheels.
6. Inspect the caliper operation. Refer to **Brake Caliper Inspection**.

NOTE: **Support the brake caliper with heavy mechanic's wire, or equivalent, whenever it is separated from its mount and the hydraulic flexible brake hose is still connected. Failure to support the caliper in this manner will cause the flexible brake hose to bear the weight of the caliper, which may cause damage to the brake hose and in turn may cause a brake fluid leak.**

7. Remove the caliper from the mounting bracket and support the caliper with heavy mechanic's wire or equivalent. DO NOT disconnect the hydraulic brake flexible hose from the caliper. Refer to **Brake Caliper Replacement - Front**.
8. Remove the brake pads from the caliper mounting bracket.
9. Remove and discard the anti-rattle clips from the brake caliper mounting bracket.
10. Inspect the caliper and mounting bracket. Refer to **Brake Caliper Inspection**.

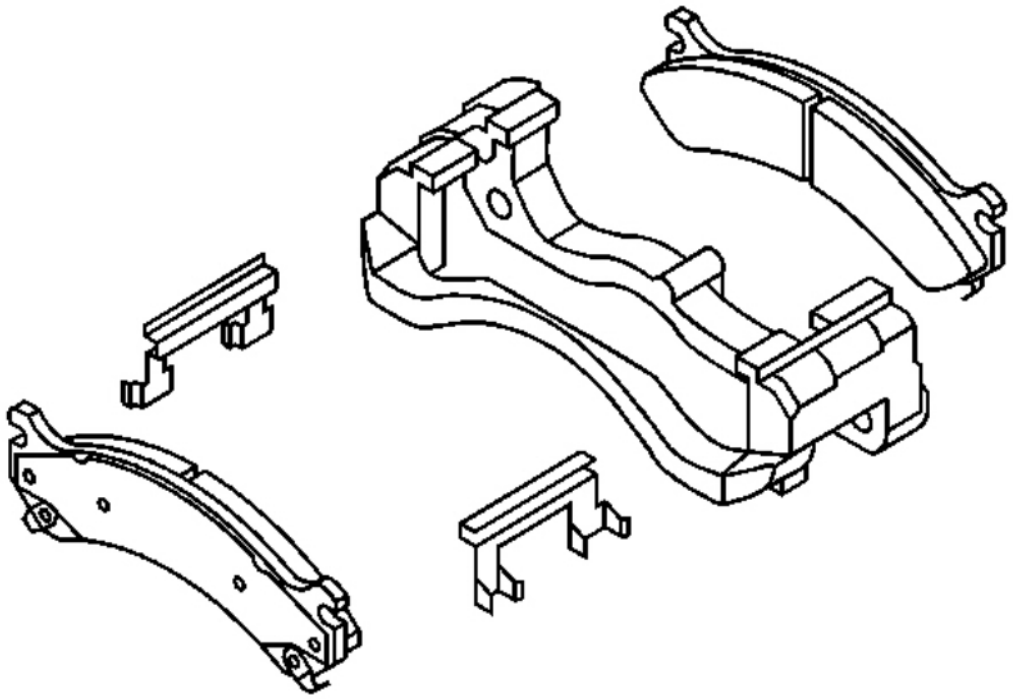

Fig. 13: View Of Disc Brake Pads & Brake Caliper Mounting Bracket
Courtesy of GENERAL MOTORS CORP.

cardiagn.com

Installation Procedure

1. Install new anti-rattle clips to the inside ends of the caliper mounting bracket.
2. Install the brake pads to the caliper mounting bracket.

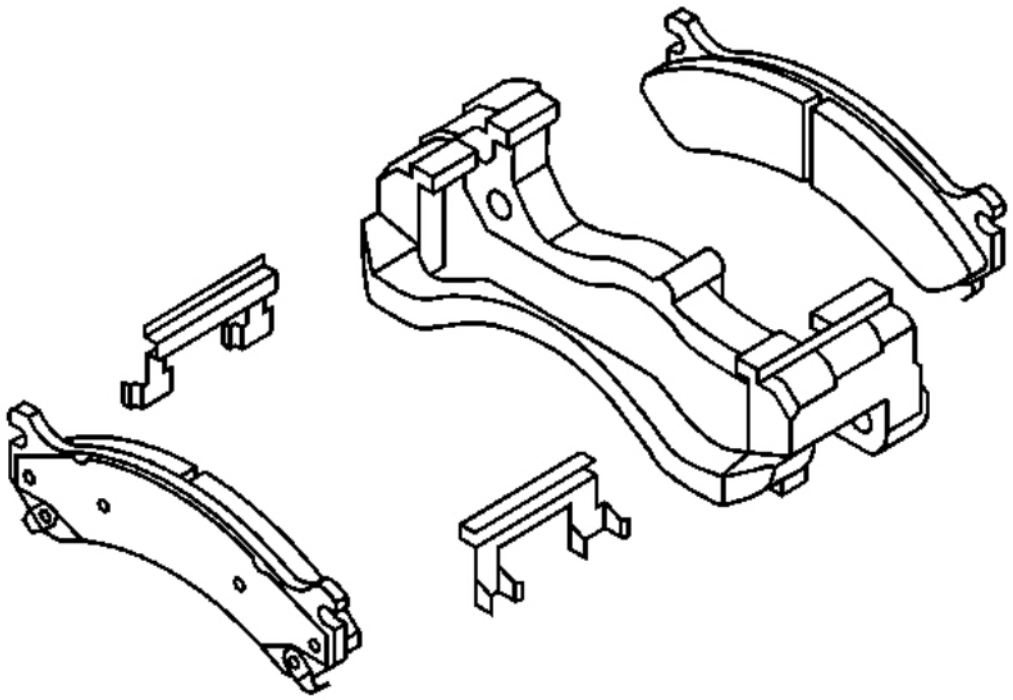

Fig. 14: View Of Disc Brake Pads & Brake Caliper Mounting Bracket
Courtesy of GENERAL MOTORS CORP.

3. Install the brake caliper. Refer to **Brake Caliper Replacement - Front**.
4. Install the tire and wheel assembly. Refer to **Tire and Wheel Removal and Installation** in Tires and Wheels.
5. Remove the safety stands.
6. Lower the vehicle.
7. With the engine OFF, gradually apply the brake pedal to approximately 2/3 of its travel distance.
8. Slowly release the brake pedal.
9. Wait 15 seconds, then repeat steps 7-8 until a firm pedal is obtained. This will properly seat the brake caliper pistons and brake pads.
10. Fill the master cylinder reservoir to the proper level with clean brake fluid. Refer to **Master Cylinder**

cardiagn.com

Reservoir Filling in Hydraulic Brakes.

11. Burnish the brake pads and rotors. Refer to **Burnishing Pads and Rotors**.

BRAKE PADS REPLACEMENT - REAR

Removal Procedure

CAUTION: Refer to Brake Dust Caution in Cautions and Notices.

NOTE: Refer to Brake Fluid Effects on Paint and Electrical Components Notice in Cautions and Notices.

1. Inspect the fluid level in the brake master cylinder reservoir.
2. If the brake fluid level is midway between the maximum-full point and the minimum allowable level, no brake fluid needs to be removed from the reservoir before proceeding.
3. If the brake fluid level is higher than midway between the maximum-full point and the minimum allowable level, remove brake fluid to the midway point before proceeding.
4. Raise and suitably support the vehicle. Refer to **Lifting and Jacking the Vehicle** in General Information.
5. Remove the tire and wheel assembly. Refer to **Tire and Wheel Removal and Installation** in Tires and Wheels.
6. Inspect the caliper operation. Refer to **Brake Caliper Inspection**.
7. Place a C-clamp as shown. Slowly bottom the pistons of the caliper. It may be necessary to reposition the C-clamp to allow both of the pistons to bottom into the caliper bores.

cardiagn.com

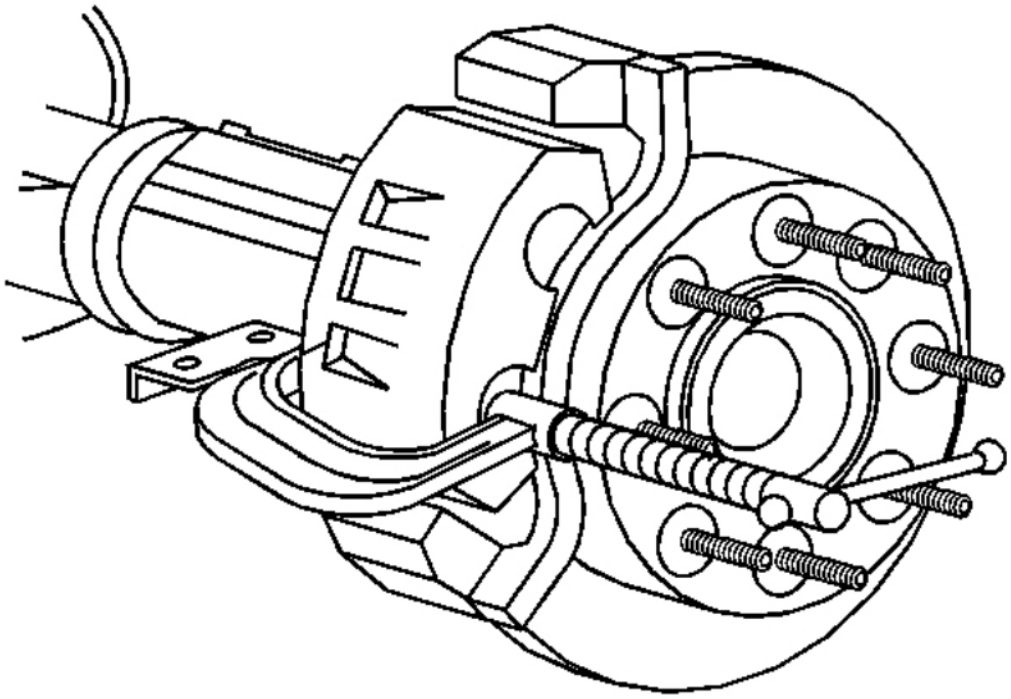

Fig. 15: Installing C-Clamp Over Brake Caliper - Rear
Courtesy of GENERAL MOTORS CORP.

NOTE: **Support the brake caliper with heavy mechanic's wire, or equivalent, whenever it is separated from its mount and the hydraulic flexible brake hose is still connected. Failure to support the caliper in this manner will cause the flexible brake hose to bear the weight of the caliper, which may cause damage to the brake hose and in turn may cause a brake fluid leak.**

8. Remove the caliper from the mounting bracket and support the caliper with heavy mechanic's wire or equivalent. DO NOT disconnect the hydraulic brake flexible hose from the caliper. Refer to **Brake Caliper Replacement - Rear (1500 Series)** or **Brake Caliper Replacement - Rear (2500 Series)**.
9. Inspect the caliper assembly. Refer to **Brake Caliper Inspection**.
10. Remove the brake pads from the brake caliper bracket.
11. Remove and discard the anti-rattle clips from the brake caliper mounting bracket.

cardiagn.com

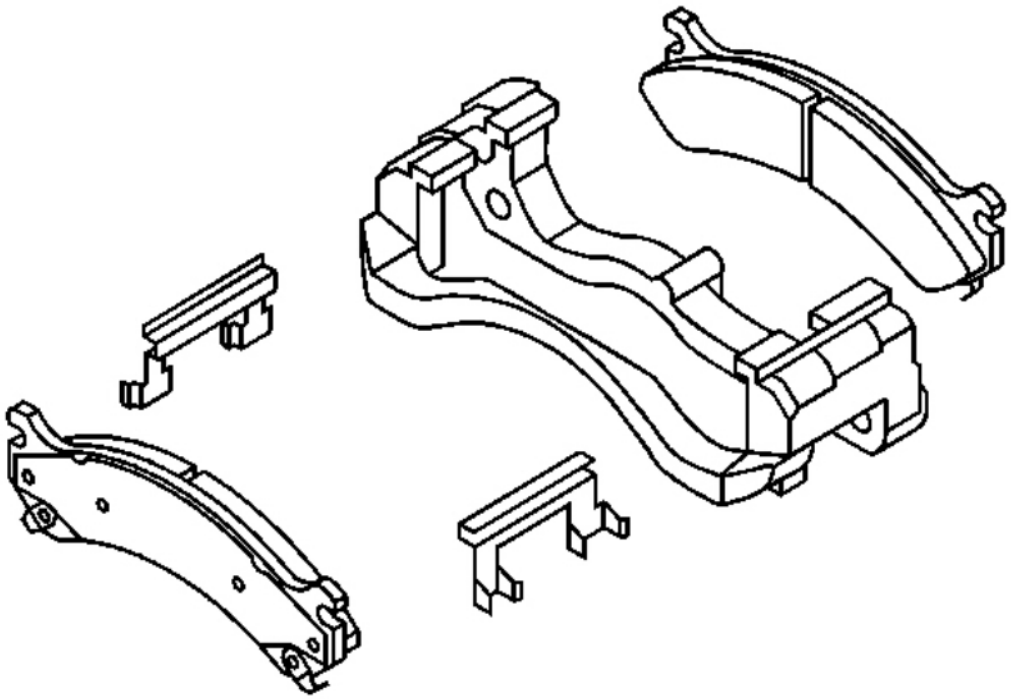

Fig. 16: View Of Disc Brake Pads & Brake Caliper Mounting Bracket
Courtesy of GENERAL MOTORS CORP.

Installation Procedure

1. Install the anti-rattle clips to the brake caliper bracket.

cardiagn.com

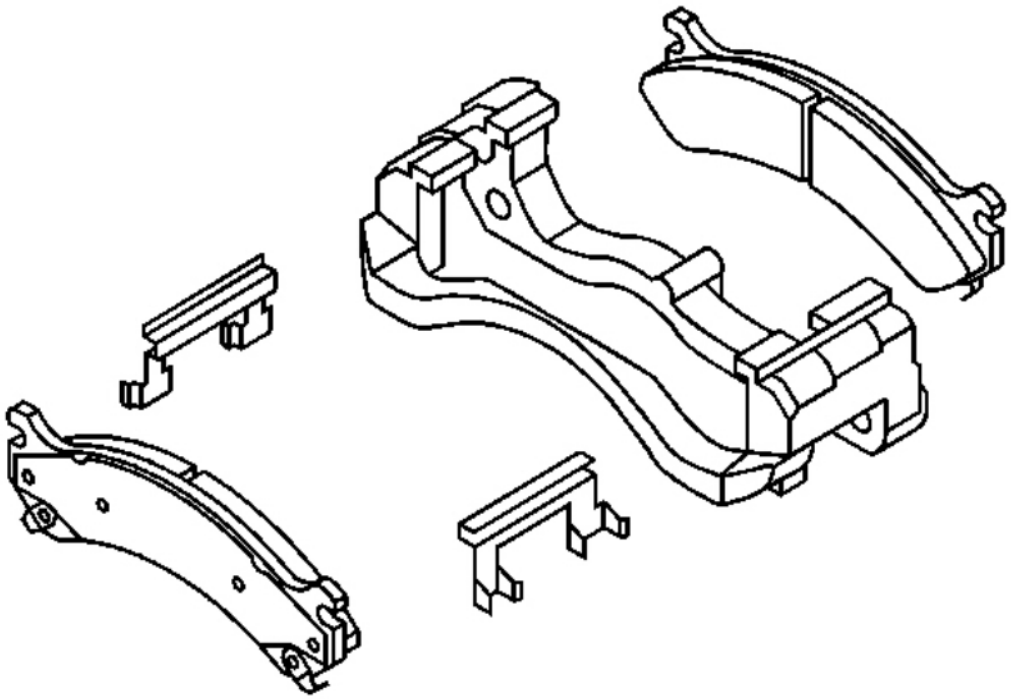

Fig. 17: View Of Disc Brake Pads & Brake Caliper Mounting Bracket
Courtesy of GENERAL MOTORS CORP.

IMPORTANT: Proper orientation of the brake pads is critical for proper pad wear.

2. If working on a 2WD 1500 series utility, install the inboard rear pad to the brake caliper bracket with the longer pad end chamfer facing down. For all other utilities, install the brake pads to the brake caliper.
3. Install the brake pads to the brake caliper bracket.

cardiagn.com

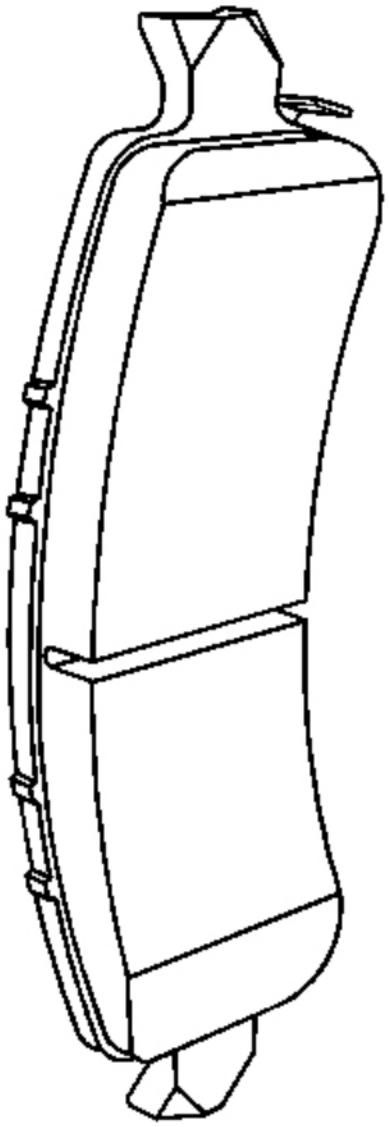

Fig. 18: View Of Brake Pad
Courtesy of GENERAL MOTORS CORP.

4. Install the brake caliper to the mounting bracket using NEW bolts. Refer to **Brake Caliper Replacement - Rear (1500 Series)** or **Brake Caliper Replacement - Rear (2500 Series)**.
5. Install the tire and wheel assembly. Refer to **Tire and Wheel Removal and Installation** in Tires and Wheels.

cardiagn.com

6. Lower the vehicle.
7. With the engine OFF, gradually apply the brake pedal to approximately 2/3 of its travel distance.
8. Slowly release the brake pedal.
9. Wait 15 seconds, then repeat steps 7- 8 until a firm pedal is obtained. This will properly seat the brake caliper pistons and brake pads.
10. Fill the master cylinder reservoir to the proper level with clean brake fluid. Refer to **Master Cylinder Reservoir Filling** in Hydraulic Brakes.
11. Burnish the brakes pads and rotors as necessary. Refer to **Burnishing Pads and Rotors**.

BURNISHING PADS AND ROTORS

CAUTION: Road test a vehicle under safe conditions and while obeying all traffic laws. Do not attempt any maneuvers that could jeopardize vehicle control. Failure to adhere to these precautions could lead to serious personal injury and vehicle damage.

CAUTION: Refer to Brake Dust Caution in Cautions and Notices.

Burnishing the brake pads and brake rotors is necessary in order to ensure that the braking surfaces are properly prepared after service has been performed on the disc brake system.

This procedure should be performed whenever the disc brake rotors have been refinished or replaced, and/or whenever the disc brake pads have been replaced.

1. Select a smooth road with little or no traffic.
2. Accelerate the vehicle to 48 km/h (30 mph).

IMPORTANT: Use care to avoid overheating the brakes while performing this step.

3. Using moderate to firm pressure, apply the brakes to bring the vehicle to a stop. Do not allow the brakes to lock.
4. Repeat steps 2 and 3 until approximately 20 stops have been completed. Allow sufficient cooling periods between stops in order to properly burnish the brake pads and rotors.

BRAKE CALIPER REPLACEMENT - FRONT

Removal Procedure

CAUTION: Refer to Brake Dust Caution in Cautions and Notices.

cardiagn.com

CAUTION: Refer to Brake Fluid Irritant Caution in Cautions and Notices.

1. Inspect the fluid level in the brake master cylinder reservoir.
2. If the brake fluid level is midway between the maximum-full point and the minimum allowable level, no brake fluid needs to be removed from the reservoir before proceeding.
3. If the brake fluid level is higher than midway between the maximum-full point and the minimum allowable level, remove brake fluid to the midway point before proceeding.
4. Raise and support the vehicle. Refer to **Lifting and Jacking the Vehicle** in General Information.
5. Remove the tire and wheel assembly. Refer to **Tire and Wheel Removal and Installation** in Tires and Wheels.
6. Compress the brake caliper pistons.
   - Install a large C-clamp over the top of the caliper housing and against the back of the outboard pad.
   - Slowly tighten the C-clamp until the pistons are pushed completely into the caliper bores.
   - Remove the C-clamp from the caliper.

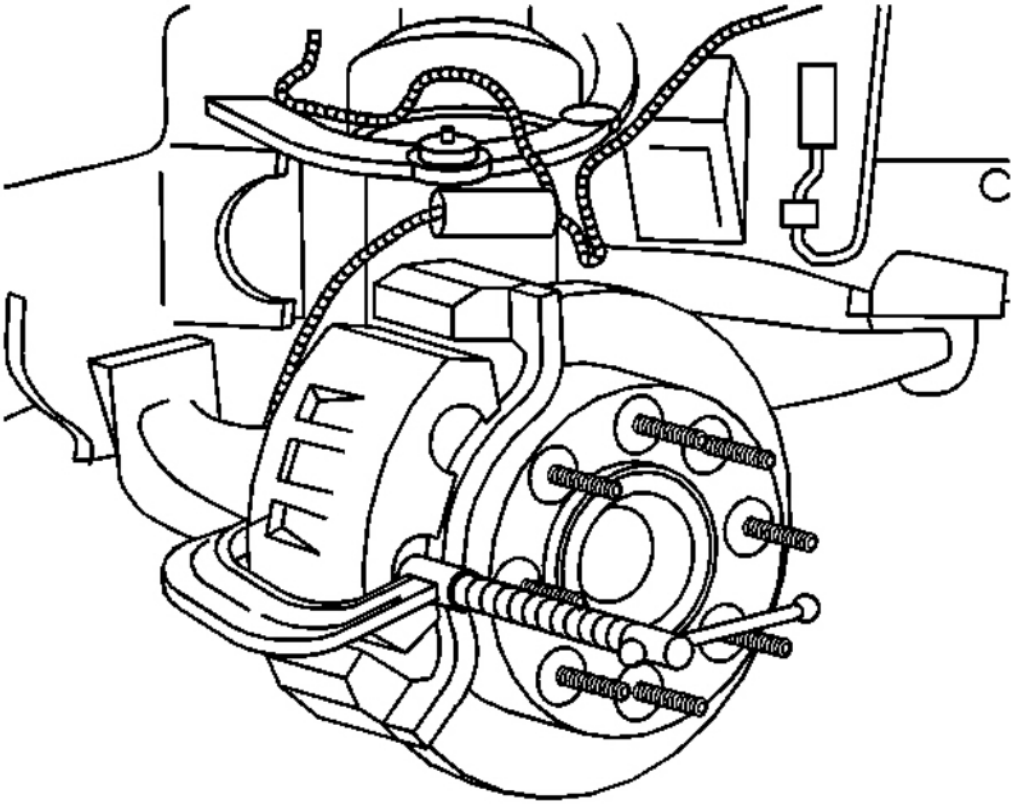

cardiagn.com

Fig. 19: Compressing Brake Caliper Pistons
Courtesy of GENERAL MOTORS CORP.

7. Clean all dirt and foreign material from the brake hose end.

IMPORTANT: Install a rubber cap or plug to the exposed brake pipe fitting end to prevent brake fluid loss and contamination.

8. Remove the brake hose to caliper bolt from the brake caliper.
9. Remove and discard the 2 copper brake hose gaskets. These gaskets may be stuck to the brake caliper housing or the brake hose end.
10. Remove the brake hose from the caliper.

cardiagn.com

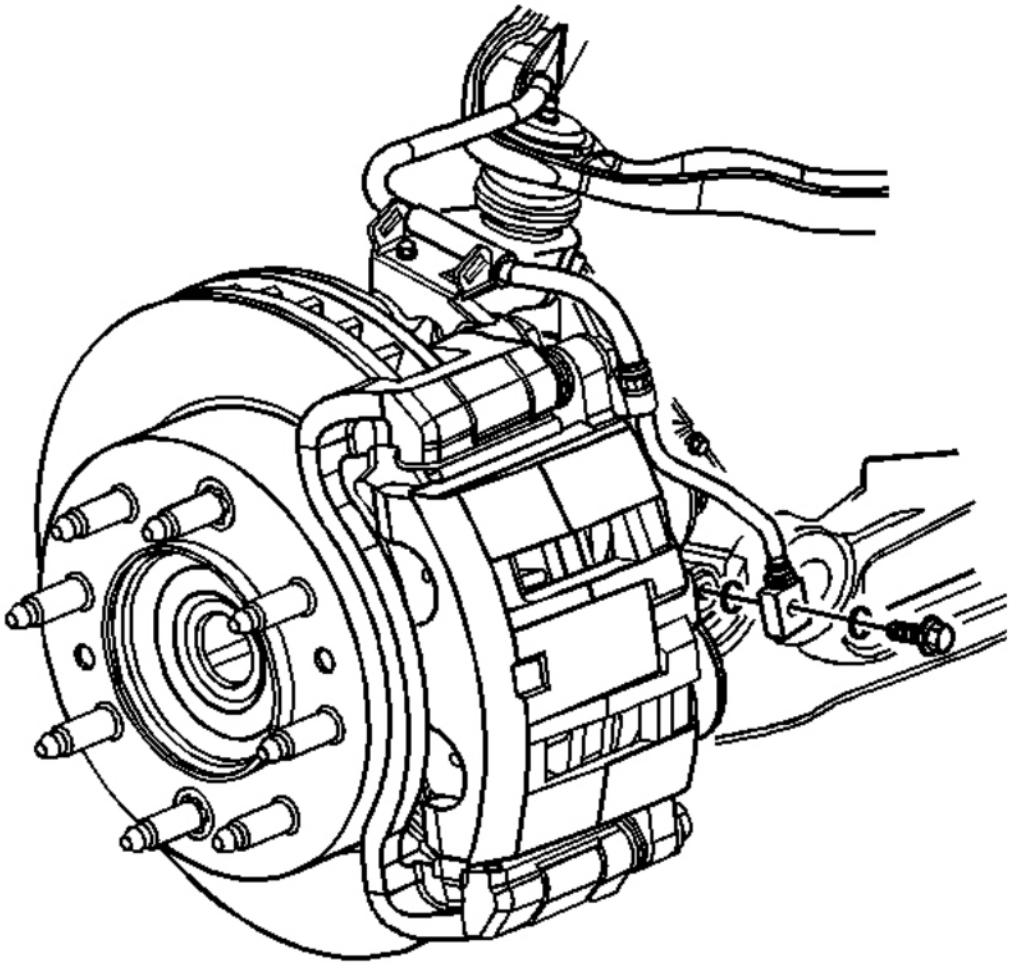

Fig. 20: View Of Brake Hose To Caliper Bolt
Courtesy of GENERAL MOTORS CORP.

11. Remove the 2 brake caliper mounting bolts.

CAUTION: Do not depress the brake pedal with the brake rotors/calipers and/or the brake drums removed. Damage to the brake system may result. If brake system damage occurs and is not repaired, vehicle damage and/or personal injury or death may result.

12. Remove the brake caliper from the brake caliper mounting bracket.

cardiagn.com

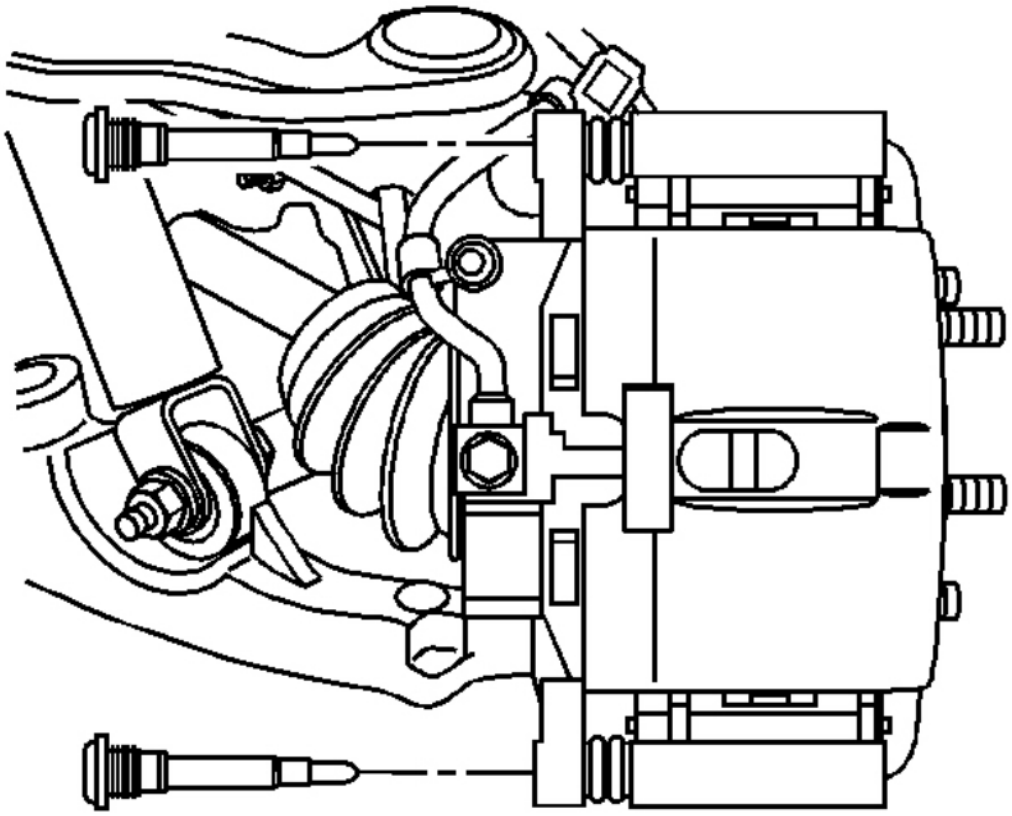

Fig. 21: View Of Brake Caliper Mounting
Courtesy of GENERAL MOTORS CORP.

Installation Procedure

1. Install the brake caliper to the brake caliper mounting bracket.
2. Perform the following procedure before installing the caliper mounting bolts.
   1. Remove all traces of the original adhesive patch.
   2. Clean the threads of the bolt with brake parts cleaner or the equivalent and allow to dry.
   3. Apply Threadlocker GM P/N 12345493 (Canadian P/N 10953488) to the threads of the bolt.

NOTE: **Refer to Fastener Notice in Cautions and Notices.**

3. Install the 2 brake caliper mounting bolts.

   Tighten: Tighten the bolts to 108 N.m (80 lb ft).

cardiagn.com

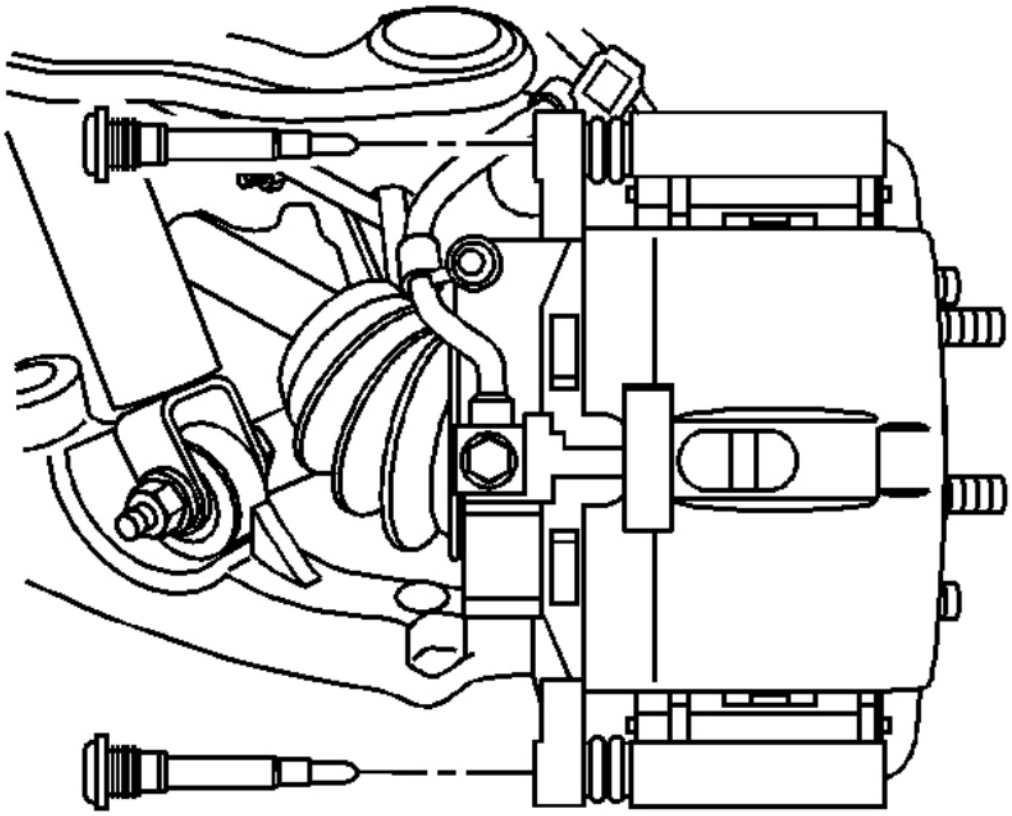

Fig. 22: View Of Brake Caliper Mounting
Courtesy of GENERAL MOTORS CORP.

4. Remove the rubber cap or plug from the exposed brake hose fitting end.

IMPORTANT: Install 2 new copper brake hose gaskets.

5. Assemble the 2 new copper brake hose gaskets and the brake hose to caliper bolt to the brake hose.
6. Install the brake hose to caliper bolt to the brake caliper.

Tighten: Tighten the brake hose to caliper bolt to 40 N.m (30 lb ft).

cardiagn.com

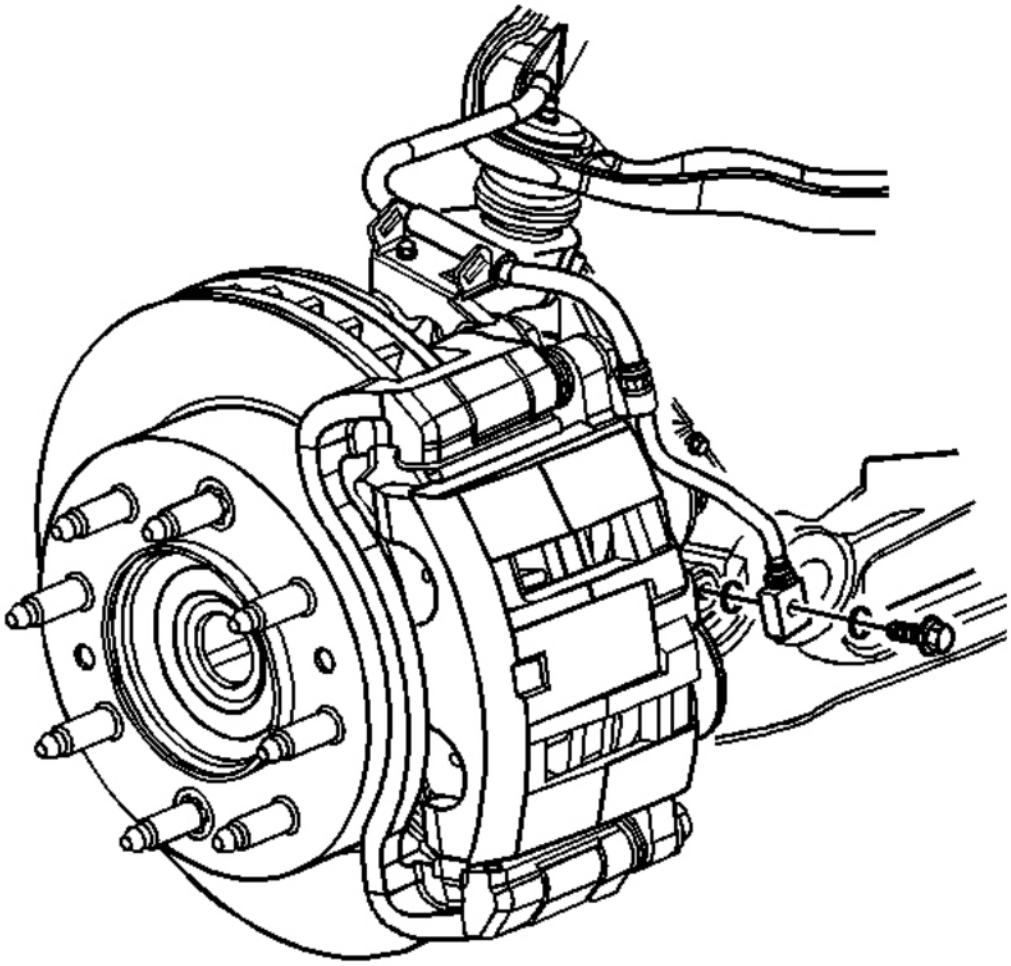

Fig. 23: View Of Brake Hose To Caliper Bolt
Courtesy of GENERAL MOTORS CORP.

7. Bleed the hydraulic brake system. Refer to **Hydraulic Brake System Bleeding (Manual)** or **Hydraulic Brake System Bleeding (Pressure)** in Hydraulic Brakes.
8. Install the tire and wheel assembly. Refer to **Tire and Wheel Removal and Installation** in Tires and Wheels.
9. Lower the vehicle.
10. Fill the master cylinder reservoir to the proper level with clean brake fluid. Refer to **Master Cylinder Reservoir Filling** in Hydraulic Brakes.

BRAKE CALIPER REPLACEMENT - REAR (1500 SERIES)

cardiagn.com

CAUTION: Refer to Brake Dust Caution in Cautions and Notices.

CAUTION: Refer to Brake Fluid Irritant Caution in Cautions and Notices.

Removal Procedure

1. Inspect the fluid level in the brake master cylinder reservoir.
2. If the brake fluid level is midway between the maximum-full point and the minimum allowable level then no brake fluid needs to be removed from the reservoir before proceeding.
3. If the brake fluid level is higher than midway between the maximum-full point and the minimum allowable level then remove brake fluid to the midway point before proceeding.
4. Raise and support the vehicle. Refer to **Lifting and Jacking the Vehicle** in General Information.
5. Remove the tire and wheel assembly. Refer to **Tire and Wheel Removal and Installation** in Tires and Wheels.
6. Compress the brake caliper pistons.
   - Install a large C-clamp over the top of the caliper housing and against the back of the outboard pad.
   - Slowly tighten the C-clamp until the pistons are pushed completely into the caliper bores.
   - Remove the C-clamp from the caliper.

cardiagn.com

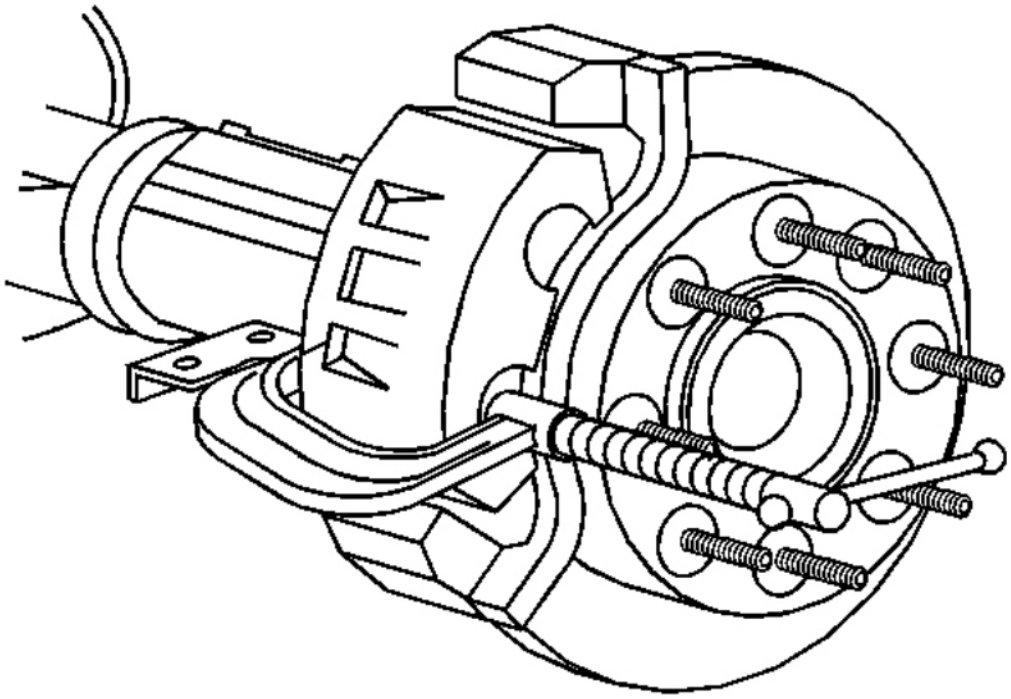

Fig. 24: Installing C-Clamp Over Brake Caliper - Rear
Courtesy of GENERAL MOTORS CORP.

7. Clean all dirt and foreign material from the brake hose end.

IMPORTANT: Install a rubber cap or plug to the exposed brake pipe fitting end to prevent brake fluid loss and contamination.

8. Remove the brake hose to caliper bolt from the brake caliper.
9. Remove and discard the 2 copper brake hose gaskets. These gaskets may be stuck to the brake caliper housing or the brake hose end.

cardiagn.com

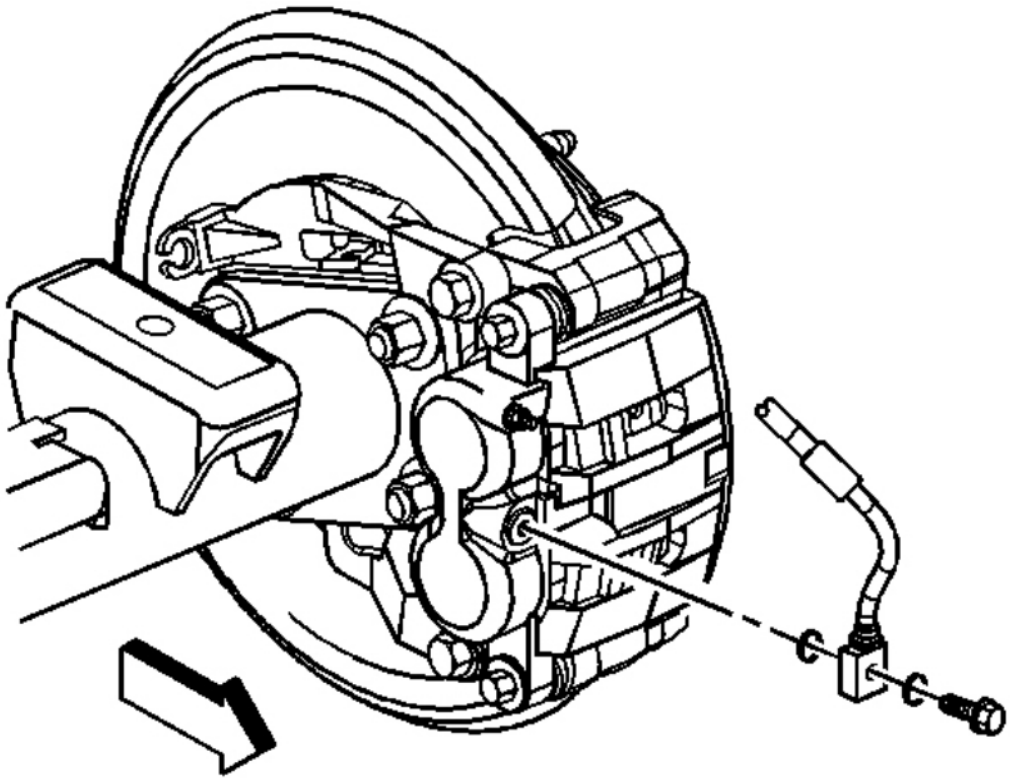

Fig. 25: View Of Brake Hose To Caliper - Rear
Courtesy of GENERAL MOTORS CORP.

10. Remove the caliper guide pin bolts.

cardiagn.com

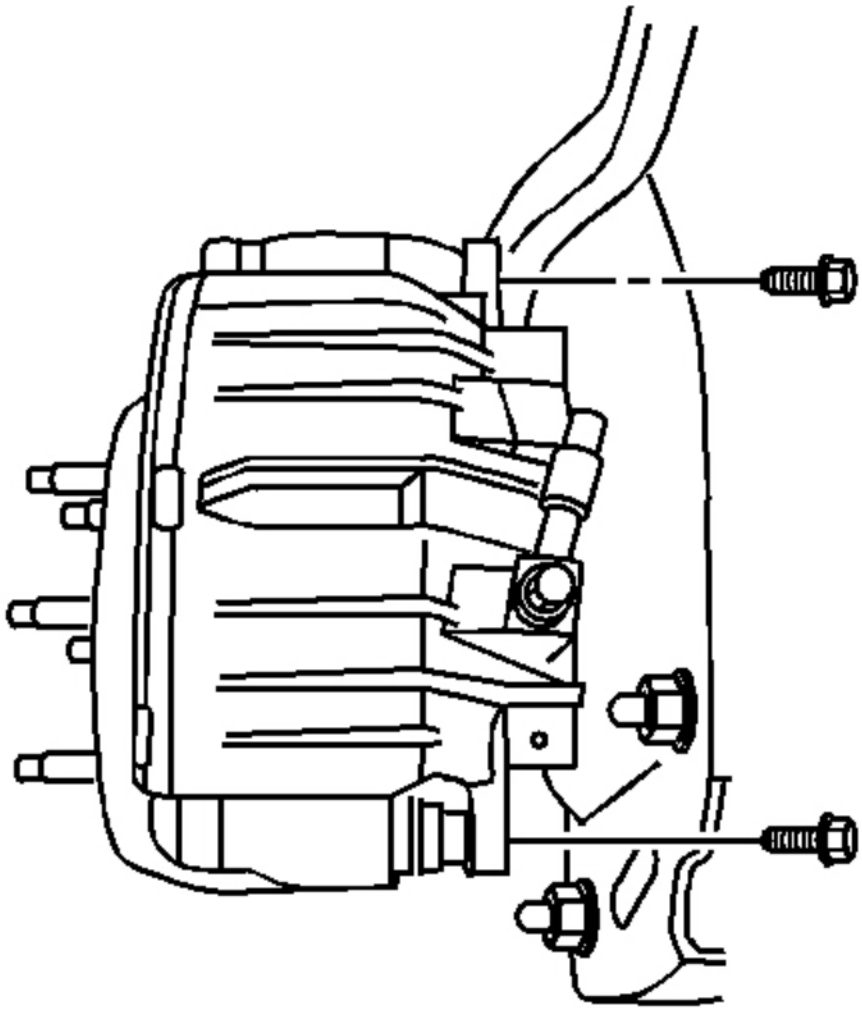

Fig. 26: View Of Caliper Guide Pin Bolts - Rear (1500 Series)
Courtesy of GENERAL MOTORS CORP.

11. Remove the brake caliper from the vehicle.
12. Inspect the caliper assembly. Refer to **Brake Caliper Inspection**.

Installation Procedure

IMPORTANT: Use denatured alcohol to clean the outside surface of caliper boots before installing new brake pads.

cardiagn.com

1. If you are installing new brake pads use a C-clamp in order to compress the pistons to the bottom of the caliper bores. Use the old brake pad, a metal plate or a wooden block across the face of the pistons in order to protect the pistons and the caliper boots.

IMPORTANT: Use a small flat-bladed tool and lift the inner edge of the caliper boots next to both pistons to release any trapped air.

2. Ensure that the caliper boots are below the level of the face of both pistons.

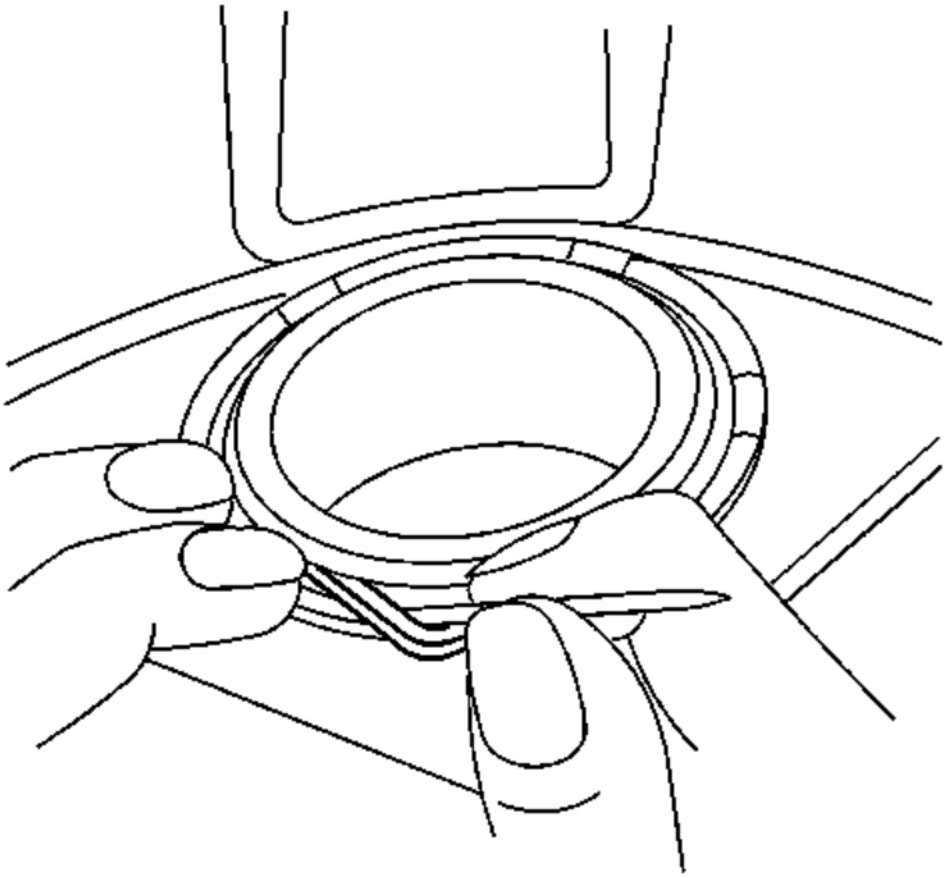

Fig. 27: Lifting Inner Edge Of Caliper Boots (1500 Series)
Courtesy of GENERAL MOTORS CORP.

3. Install the brake caliper to the brake caliper mounting bracket.

cardiagn.com

4. Perform the following procedure before installing the caliper guide pin bolts.
    1. Remove all traces of the original adhesive patch.
    2. Clean the threads of the bolt with brake parts cleaner or the equivalent and allow to dry.
    3. Apply Threadlocker GM P/N 12345493 (Canadian P/N 10953488) to the threads of the bolt.
5. Install the brake caliper mounting bolts.

NOTE: Refer to Fastener Notice in Cautions and Notices.

6. Tighten the brake caliper guide pin bolts.

Tighten: Tighten the bolts to 42 N.m (31 lb ft).

cardiagn.com

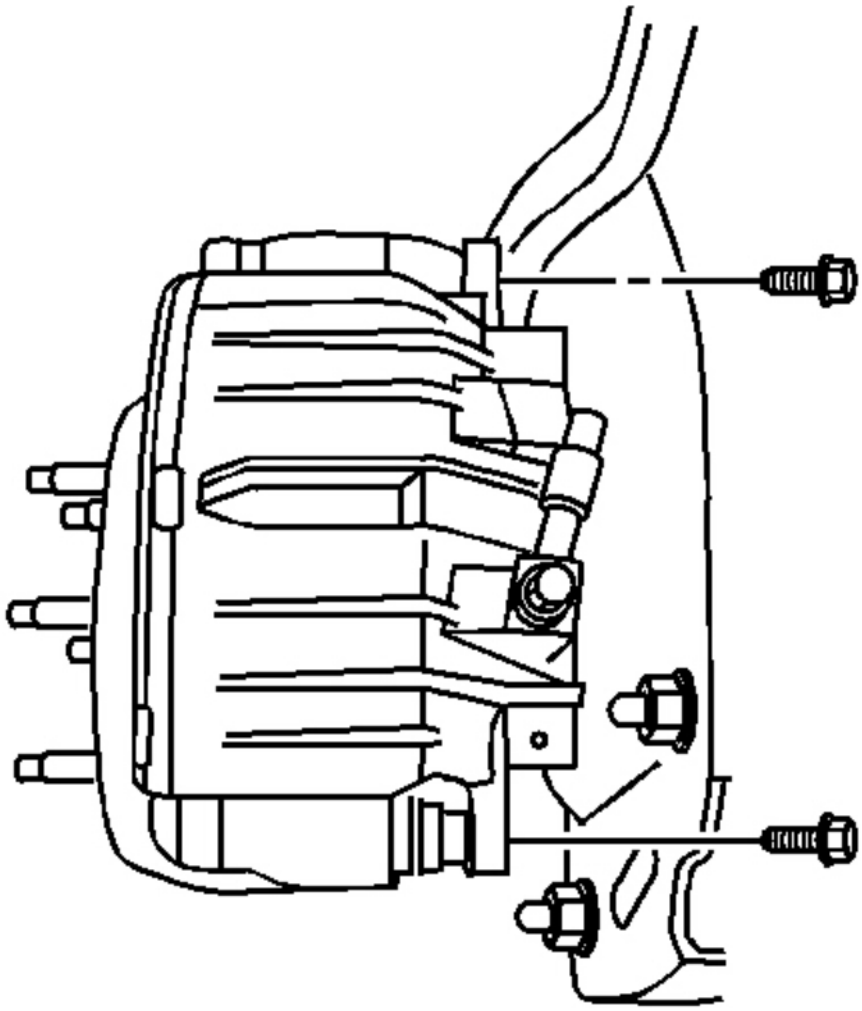

Fig. 28: View Of Caliper Guide Pin Bolts - Rear (1500 Series)
Courtesy of GENERAL MOTORS CORP.

7. Remove the rubber cap or plug from the exposed brake hose fitting end.

IMPORTANT: Install 2 New copper brake hose gaskets.

8. Assemble the 2 New copper brake hose gaskets and the brake hose to caliper bolt to the brake hose.
9. Connect the brake hose at the caliper by installing the brake hose to caliper bolt.

cardiagn.com

Tighten: Tighten the brake hose to caliper bolt to 40 N.m (30 lb ft).

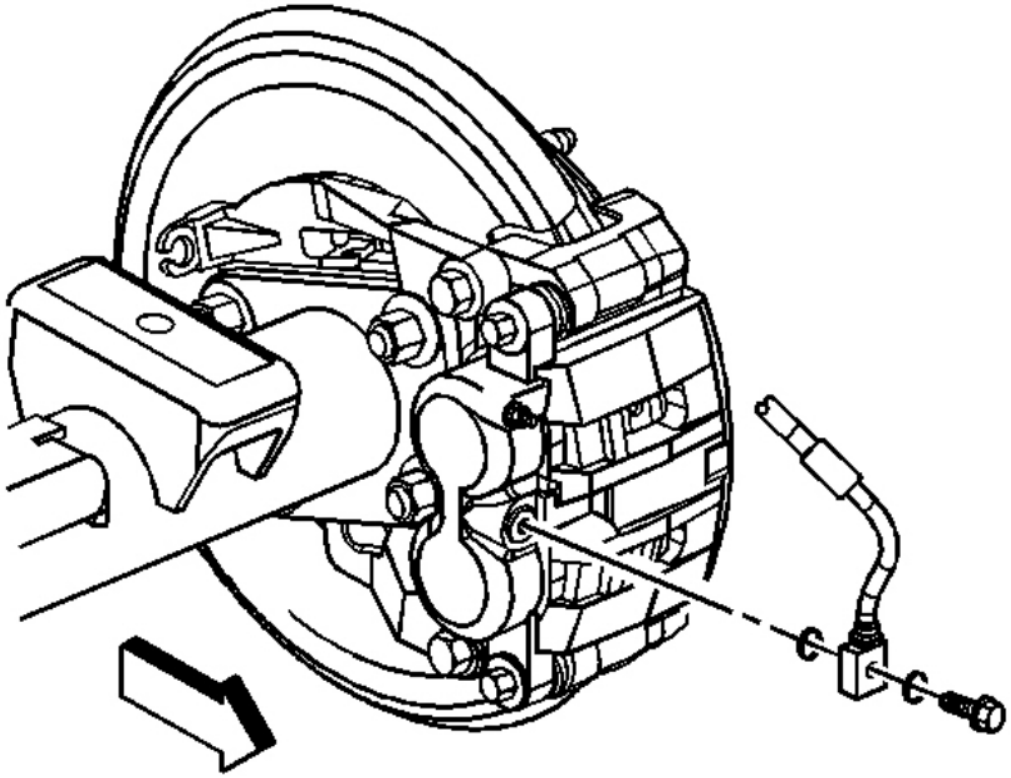

Fig. 29: View Of Brake Hose To Caliper - Rear
Courtesy of GENERAL MOTORS CORP.

10. Bleed the hydraulic brake system. Refer to **Hydraulic Brake System Bleeding (Manual)** or **Hydraulic Brake System Bleeding (Pressure)** in Antilock Brake System.
11. Install the tire and wheel assembly. Refer to **Tire and Wheel Removal and Installation** in Tires and Wheels.
12. Lower the vehicle.
13. Fill the master cylinder reservoir to the proper level with clean brake fluid. Refer to **Master Cylinder Reservoir Filling** in Hydraulic Brakes.

BRAKE CALIPER REPLACEMENT - REAR (2500 SERIES)

CAUTION: Refer to Brake Dust Caution in Cautions and Notices.

cardiagn.com

CAUTION: Refer to Brake Fluid Irritant Caution in Cautions and Notices.

Removal Procedure

1. Inspect the fluid level in the brake master cylinder reservoir.
2. If the brake fluid level is midway between the maximum full point and the minimum allowable level, no brake fluid needs to be removed from the reservoir before proceeding.
3. If the brake fluid level is higher than midway between the maximum full point and the minimum allowable level, remove brake fluid to the midway point before proceeding.
4. Raise and support the vehicle. Refer to **Lifting and Jacking the Vehicle** in General Information.
5. Remove the tire and wheel assembly. Refer to **Tire and Wheel Removal and Installation** in Tires and Wheels.
6. Inspect the caliper operation. Refer to **Brake Caliper Inspection**.
7. Install a C-clamp over the body of the brake caliper, with the C-clamp ends against the rear of the caliper body and the outboard disc brake pad.
8. Slowly tighten the C-clamp until the pistons are pushed into the caliper bores enough to remove the caliper from the pads.
9. Remove the C-clamp from the caliper.

cardiagn.com

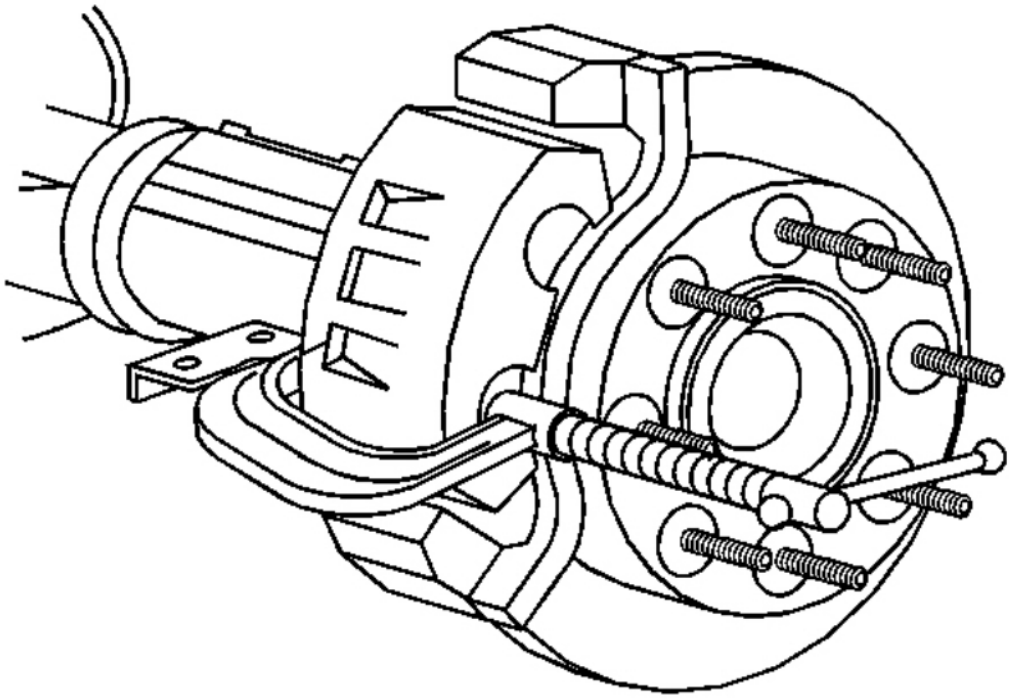

Fig. 30: Installing C-Clamp Over Brake Caliper - Rear
Courtesy of GENERAL MOTORS CORP.

10. Clean all dirt and foreign material from the brake hose end.

IMPORTANT: Install a rubber cap or plug to the exposed brake pipe fitting end to prevent brake fluid loss and contamination.

11. Remove the brake hose to caliper bolt from the brake caliper.
12. Remove the brake hose from the caliper.
13. Remove and discard the 2 copper brake hose gaskets. These gaskets may be stuck to the brake caliper housing or the brake hose end.

cardiagn.com

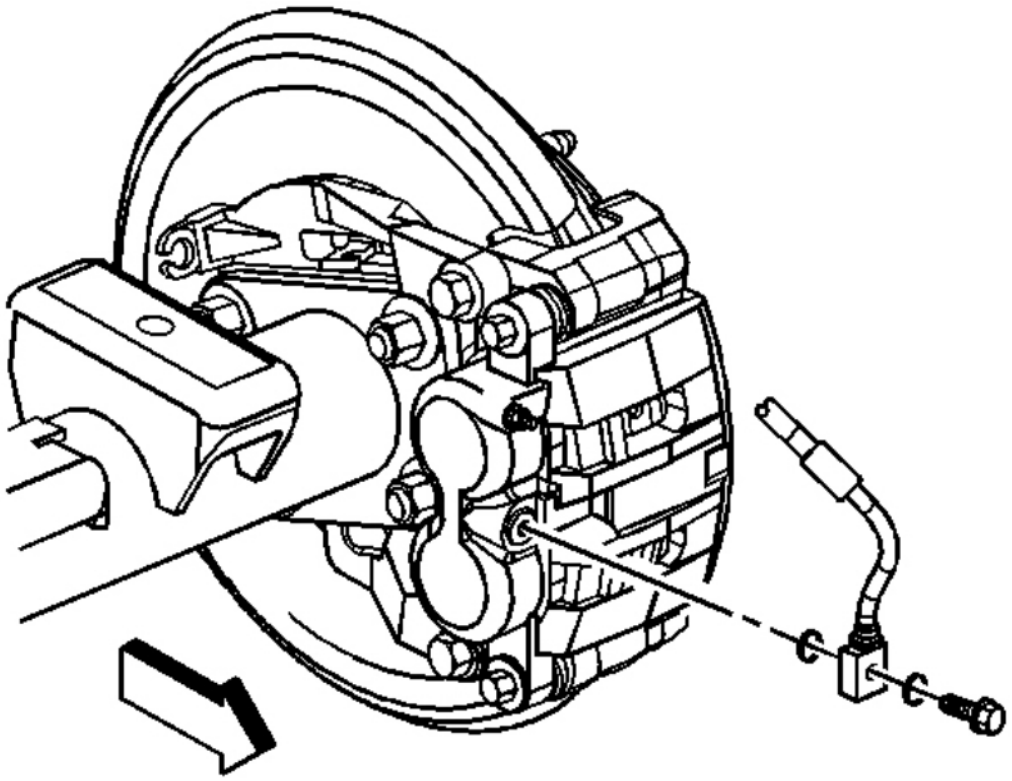

Fig. 31: View Of Brake Hose To Caliper - Rear
Courtesy of GENERAL MOTORS CORP.

14. Loosen the brake caliper mounting bolts. Do not remove.
15. Remove the brake caliper mounting bracket bolts.

CAUTION: Do not depress the brake pedal with the brake rotors/calipers and/or the brake drums removed. Damage to the brake system may result. If brake system damage occurs and is not repaired, vehicle damage and/or personal injury or death may result.

16. Remove the brake caliper and the brake caliper mounting bracket as an assembly.
17. Remove the brake caliper mounting bolts.
18. Remove the brake caliper from the brake caliper mounting bracket.

cardiagn.com

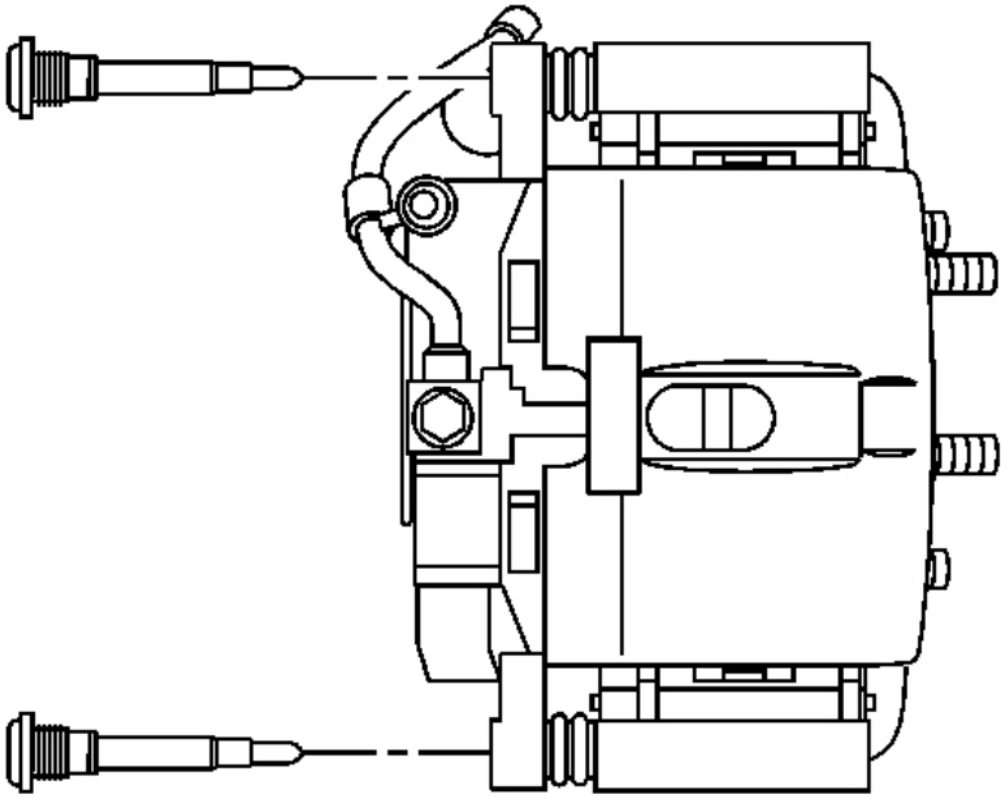

Fig. 32: View Of Rear Caliper Mounting Bolts
Courtesy of GENERAL MOTORS CORP.

19. Inspect the caliper assembly. Refer to **Brake Caliper Inspection**.
20. Remove the brake pads from the brake caliper mounting bracket.
21. Remove the anti-rattle clips from the brake caliper mounting bracket.

cardiagn.com

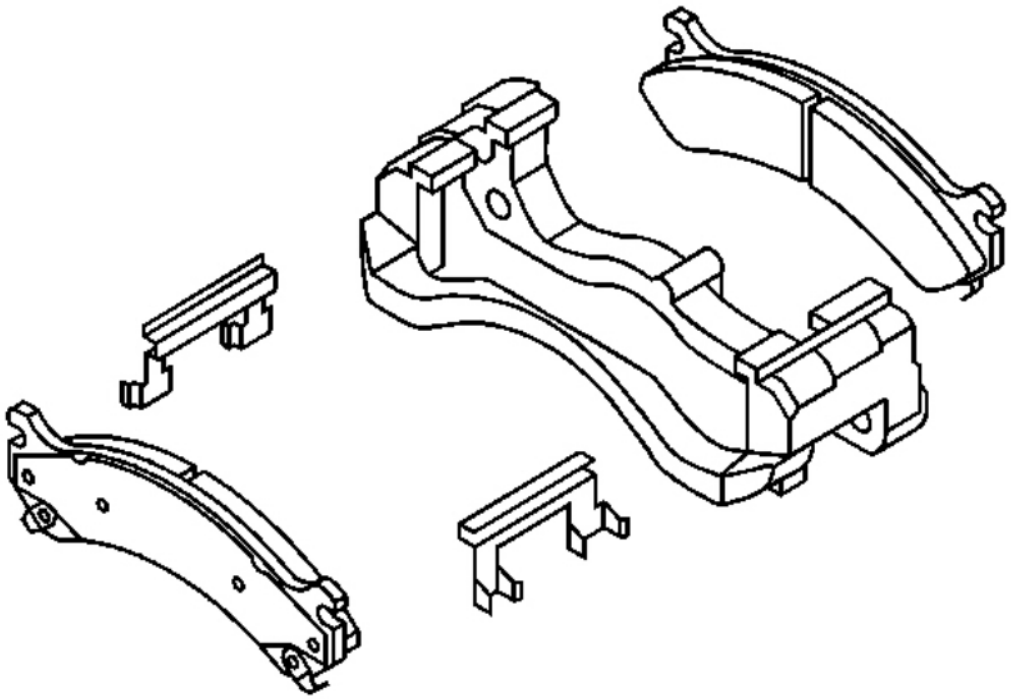

Fig. 33: View Of Disc Brake Pads & Brake Caliper Mounting Bracket
Courtesy of GENERAL MOTORS CORP.

22. Inspect the brake caliper mounting bracket for cracks and/or damage. Replace if necessary.
23. Inspect the brake caliper mounting bracket bushings for damage and/or wear. Replace the bushings if necessary.
24. Perform the following procedure to replace the brake caliper mounting bracket bushings.
    - Insert a flat bladed tool between the bushing flange and the mounting bracket.
    - Work the tool around the bushing flange and remove the bushing from the mounting bracket.
    - Place a socket over the boot onto the bushing flange and install the bushing to the mounting bracket.

Installation Procedure

1. Install the anti-rattle clips to the brake caliper mounting bracket.
2. Install the brake pads to the brake caliper mounting bracket.

cardiagn.com

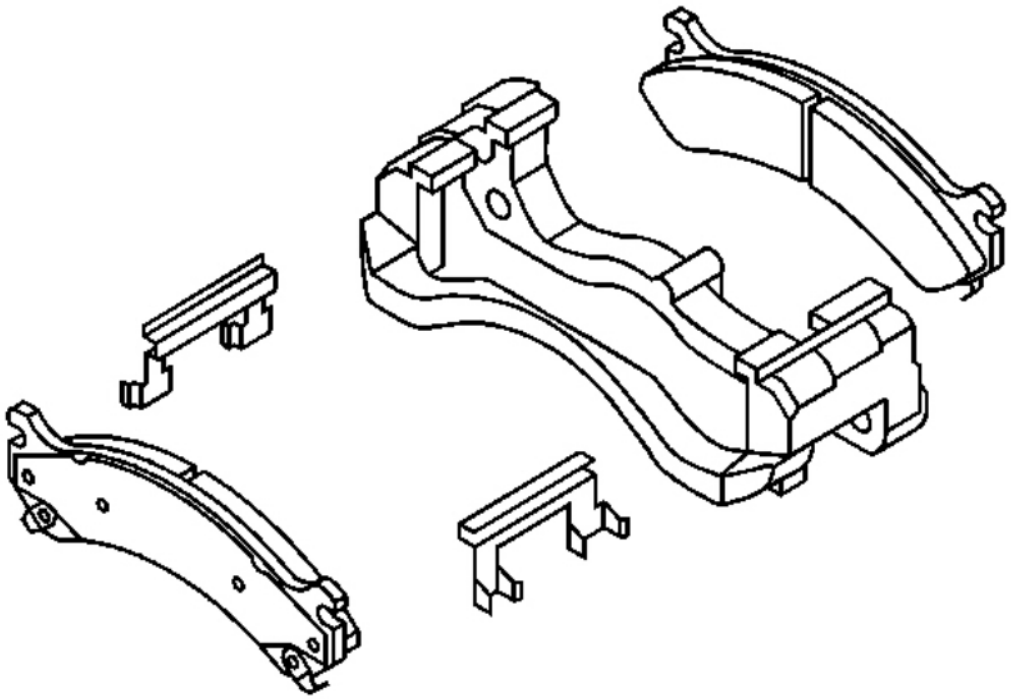

Fig. 34: View Of Disc Brake Pads & Brake Caliper Mounting Bracket
Courtesy of GENERAL MOTORS CORP.

3. Install the brake caliper to the brake caliper mounting bracket.
4. Perform the following procedure before installing the brake caliper mounting bracket bolts and the brake caliper mounting bolts:
   1. Remove all traces of the original adhesive patch.
   2. Clean the threads of the bolt with brake parts cleaner or the equivalent and allow to dry.
   3. Apply Threadlocker GM P/N 12345493 (Canadian P/N 10953488) to the threads of the bolt.
5. Install the brake caliper mounting bolts. Do not tighten.
6. Install the brake caliper mounting bracket and brake caliper as an assembly.

NOTE: **Refer to Fastener Notice in Cautions and Notices.**

7. Install the brake caliper mounting bracket bolts.

Tighten: Tighten the brake caliper mounting bracket bolts to 300 N.m (221 lb ft).

cardiagn.com

8. Tighten the brake caliper mounting bolts.

   Tighten: Tighten the brake caliper mounting bolts to 108 N.m (80 lb ft).

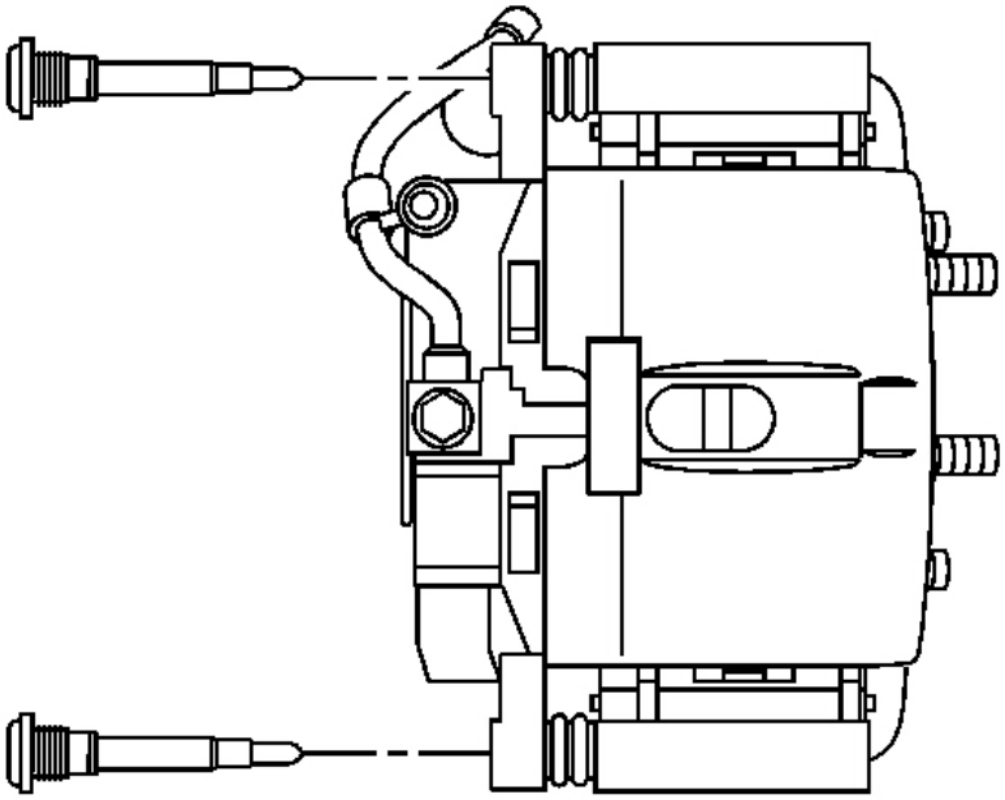

Fig. 35: View Of Rear Caliper Mounting Bolts
Courtesy of GENERAL MOTORS CORP.

9. Remove the rubber cap or plug from the exposed brake hose fitting end.

   IMPORTANT: Install 2 new copper brake hose gaskets.

10. Assemble the 2 new copper brake hose gaskets and the brake hose inlet fitting bolt to the brake hose.
11. Connect the brake hose at the caliper by installing the brake hose to caliper bolt.

    Tighten: Tighten the bolt to 40 N.m (30 lb ft).

cardiagn.com

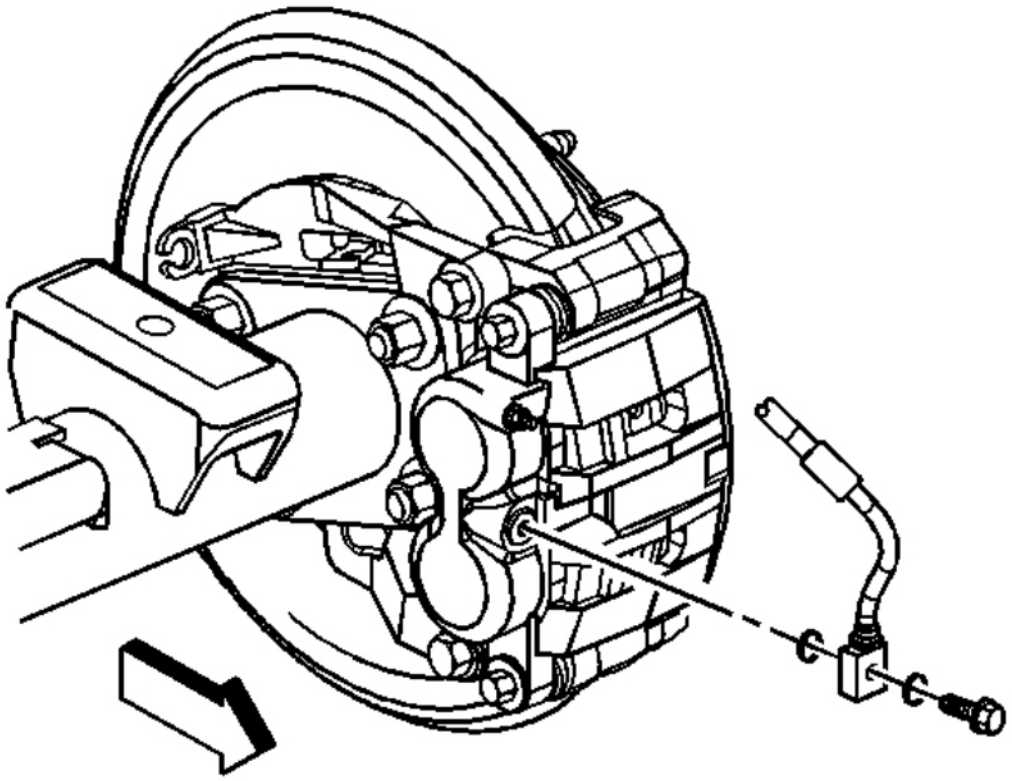

Fig. 36: View Of Brake Hose To Caliper - Rear
Courtesy of GENERAL MOTORS CORP.

12. Bleed the hydraulic brake system. Refer to **Hydraulic Brake System Bleeding (Manual)** or **Hydraulic Brake System Bleeding (Pressure)** in Hydraulic Brakes.
13. Install the tire and wheel assembly. Refer to **Tire and Wheel Removal and Installation** in Tires and Wheels.
14. Lower the vehicle.
15. Fill the master cylinder reservoir to the proper level with clean brake fluid. Refer to **Master Cylinder Reservoir Filling** in Hydraulic Brakes.

BRAKE CALIPER OVERHAUL - FRONT

Tools Required

J 45515 Brake Caliper Piston Boot Seal Installer. See **Special Tools and Equipment**.

cardiagn.com

CAUTION: Refer to Brake Dust Caution in Cautions and Notices.

CAUTION: Refer to Brake Fluid Irritant Caution in Cautions and Notices.

NOTE: Refer to Brake Fluid Effects on Paint and Electrical Components Notice in Cautions and Notices.

1. Replace all the components included in the repair kits used to service this brake caliper.
2. Lubricate the rubber parts with new Delco Supreme 11®, GM P/N 12377967 (Canadian P/N 992667) or equivalent DOT-3 brake fluid to make assembly easier.
3. If any hydraulic component is removed or disconnected, it may be necessary to bleed all or part of the brake system.
4. The torque values specified are for dry, non-lubricated fasteners.
5. Perform the service operations on a clean bench, free from all mineral oil materials.
6. Remove the brake caliper from vehicle. Refer to **Brake Caliper Replacement - Front**.
7. Drain the brake fluid from the brake caliper.

CAUTION: Do not place your fingers in front of the piston in order to catch or protect the piston while applying compressed air. This could result in serious injury.

NOTE: Use clean cloths to pad interior of caliper housing during piston removal. Use just enough air to ease the pistons out of the bores. If the pistons are blown out, even with the padding provided, it may be damaged.

8. Place a 25 mm (1 in) block of wood between the caliper and the piston.
9. Install a large C-clamp over the body of the brake caliper with the C-clamp ends against the rear of the caliper body and against the block of wood.
10. Carefully remove the brake caliper piston by directing low pressure compressed air into the brake caliper inlet hole.
11. Remove the C-clamp from the caliper.
12. Remove the block of wood from the caliper.
13. Install clean cloths to pad the interior of the caliper housing between the remaining caliper piston and the caliper body.
14. To cover the open caliper bore place a 25 mm (1 in) block of wood between the caliper body and the brake caliper dust boot seal.
15. Install a large C-clamp over the body of the brake caliper with the C-clamp ends against the rear of the caliper body and against the block of wood.
16. Carefully remove the brake caliper piston by directing low pressure compressed air into the brake caliper

cardiagn.com

inlet hole.

17. Remove the C-clamp form the caliper.
18. Remove the block of wood from the caliper.

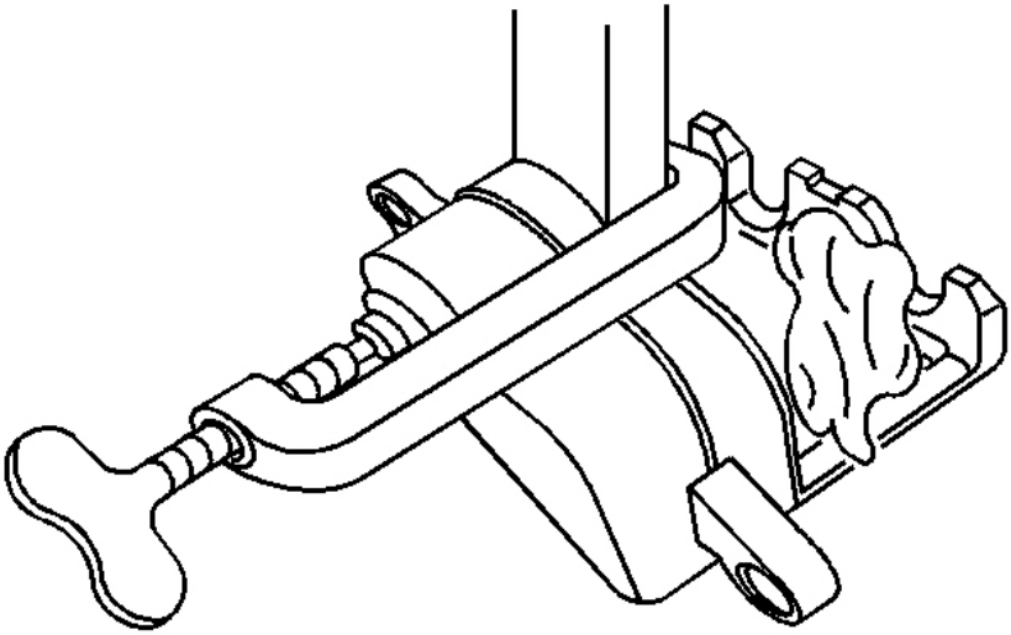

Fig. 37: Installing C-Clamp & Block Of Wood Against Front Brake Caliper
Courtesy of GENERAL MOTORS CORP.

IMPORTANT: Care must be used when removing the piston boot and seal from the caliper. Use a small plastic or wood tool for removal. Do not use a metal tool because it may damage the caliper bore or seal groove.

19. Remove the piston boots from the brake caliper.
20. Remove the piston seals from the brake caliper.

cardiagn.com

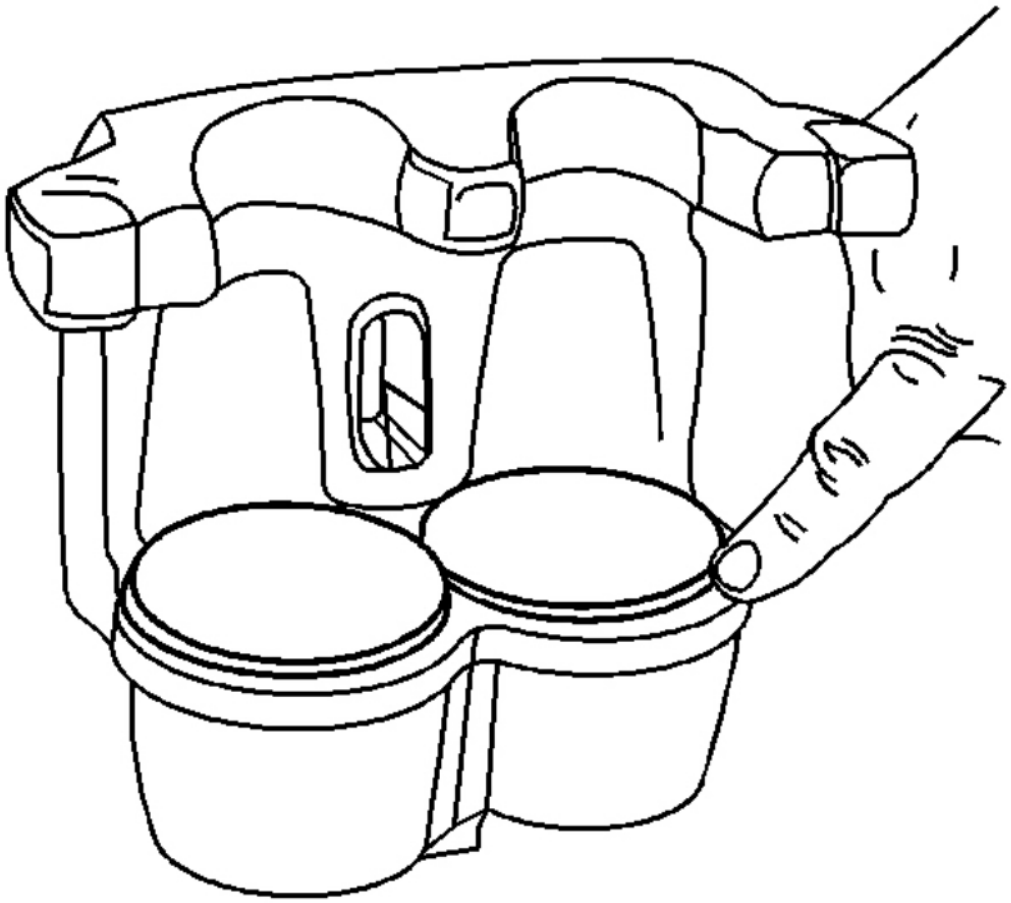

Fig. 38: View Of Piston Components - Front Caliper
Courtesy of GENERAL MOTORS CORP.

21. Remove the brake caliper bleeder valve and cap from the brake caliper.

IMPORTANT: Do not use abrasives to clean the brake caliper piston.

22. Clean the brake caliper piston bore and seal counterbore, and the caliper piston with denatured alcohol, or equivalent.
23. Dry the caliper piston bores and counterbores, and the piston with non-lubricated, filtered air.
24. Inspect all of the brake caliper parts as follows.
    - Piston-Inspect for scoring, nicks, cracks, wear, or corrosion. Replace the pistons if any damage is found.

cardiagn.com

- Caliper Bore-Inspect for scoring, nicks, cracks, wear, or corrosion. Use crocus cloth to polish out light corrosion. Otherwise, replace the caliper. Do not hone the caliper bore.
- Seal groove in the caliper bore for nicks or burrs. If found, replace the caliper.

25. Install the brake caliper bleeder valve and bleeder valve cap into the brake caliper.
26. Lubricate the new piston seal with Delco Supreme 11®, GM P/N 12377967 (Canadian P/N 10953488) or equivalent DOT-3 brake fluid from a clean, sealed brake fluid container.
27. Install the lubricated, new piston seals into the caliper bores.
28. Install the caliper piston into the caliper bore.
29. Install the new piston dust boot seal over the piston.
30. Using the **J 45515** , fully seat the piston dust boot seal in the caliper.

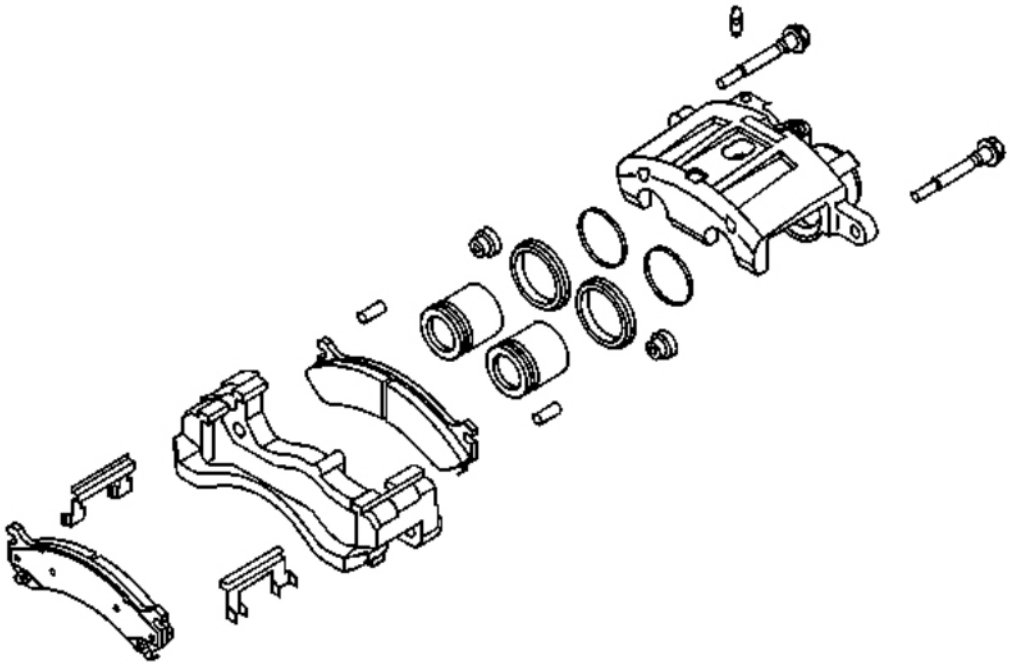

Fig. 39: Exploded View Of Brake Caliper Components
Courtesy of GENERAL MOTORS CORP.

31. Install the brake caliper to the vehicle. Refer to **Brake Caliper Replacement - Front**.

BRAKE CALIPER OVERHAUL - REAR (15 SERIES)

Disassembly Procedure

cardiagn.com

CAUTION: Refer to Brake Dust Caution in Cautions and Notices.

CAUTION: Refer to Brake Fluid Irritant Caution in Cautions and Notices.

CAUTION: Do not place your fingers in front of the piston in order to catch or protect the piston while applying compressed air. This could result in serious injury.

1. Remove the brake caliper from the vehicle. Refer to **Brake Caliper Replacement - Rear (1500 Series)** or **Brake Caliper Replacement - Rear (2500 Series)**.
2. Place a thin piece of wood in front of the piston in order to prevent damage. Remove the piston by directing compressed air into the brake hose inlet fitting port of the brake caliper housing.

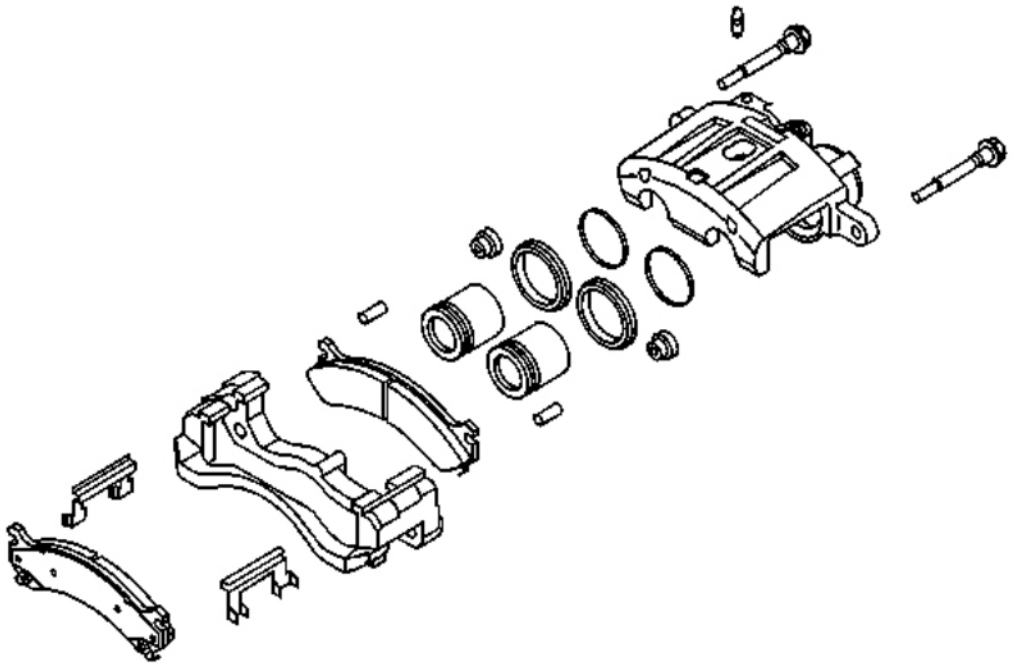

Fig. 40: Exploded View Of Brake Caliper Components
Courtesy of GENERAL MOTORS CORP.

3. Remove the piston boot.

cardiagn.com

4. Remove the piston seal.

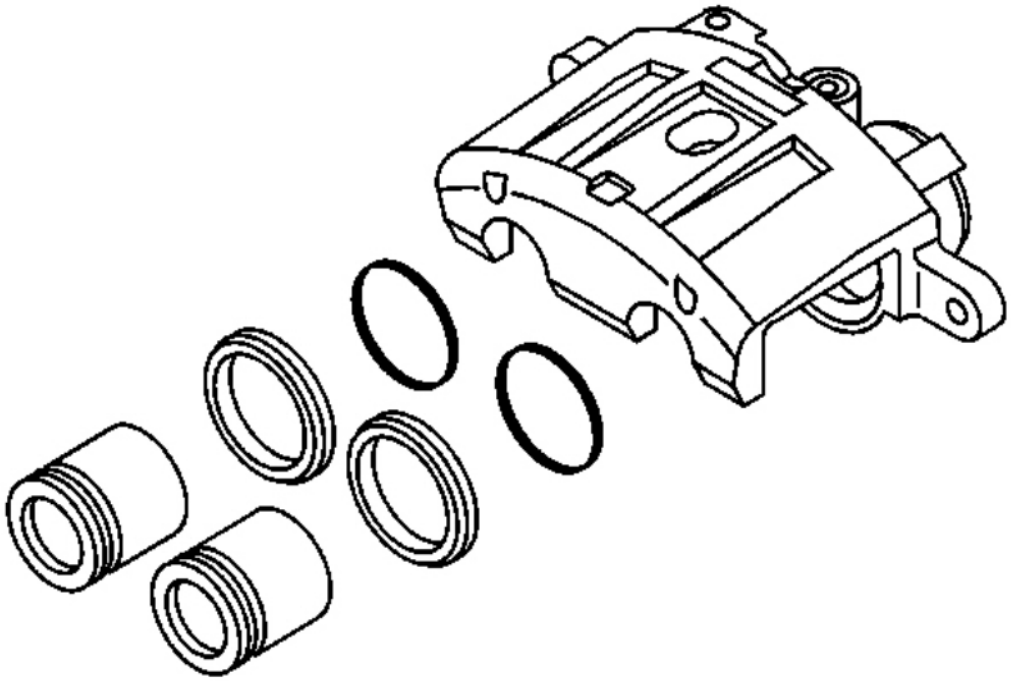

Fig. 41: View Of Brake Caliper Pistons, Boots & Seals
Courtesy of GENERAL MOTORS CORP.

5. Remove the brake caliper bleed screw cap.
6. Remove the brake caliper bleed screw.
7. Inspect the brake caliper bore and the piston seal groove for scoring and corrosion. If you find excessive scoring or corrosion around the piston seal area, replace the brake caliper housing.
8. Inspect the brake caliper mounting bracket guide surfaces for corrosion and wear. Remove and replace the brake caliper mounting bracket if needed.
9. Clean all the residue from the brake pad guiding surfaces on the brake caliper housing and the brake caliper mounting bracket.
10. Clean all the parts not included in the repair kit with denatured alcohol.
11. Dry all the parts with filtered unlubricated compressed air.
12. Blow out all passages in the brake caliper housing and the brake caliper bleeder valve.

cardiagn.com

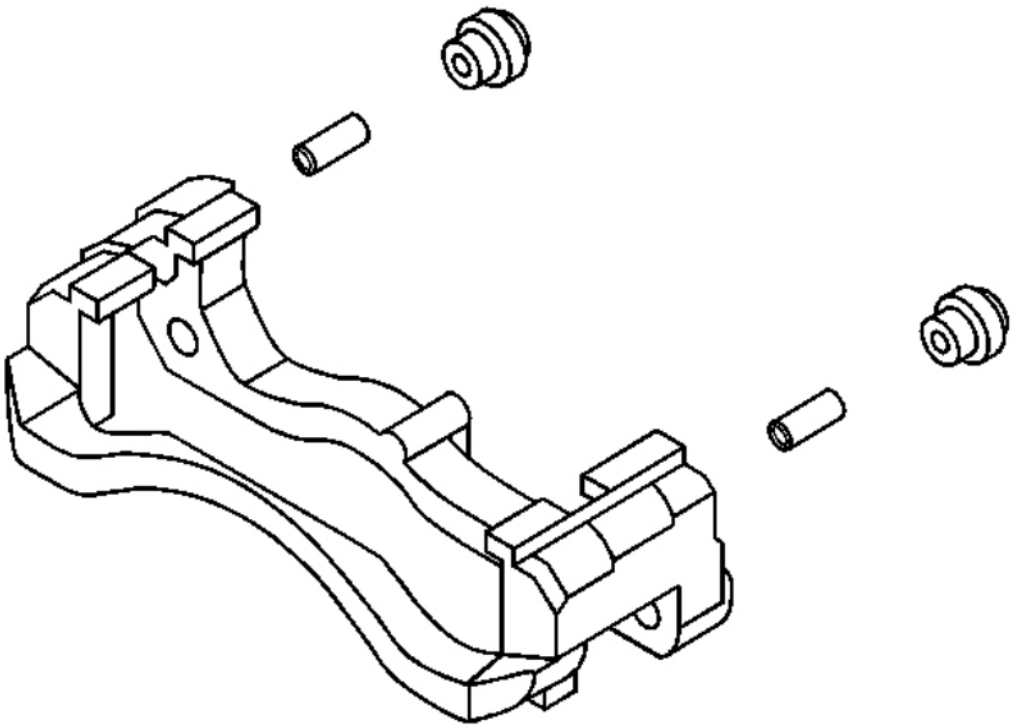

Fig. 42: View Of Brake Caliper Mounting Bracket
Courtesy of GENERAL MOTORS CORP.

Assembly Procedure

NOTE: Refer to Fastener Notice in Cautions and Notices.

1. Install the brake caliper bleed screw.

   Tighten: Tighten the brake caliper bleed screw to 12 N.m (106 lb in).

2. Install the brake caliper bleed screw cap.
3. Lubricate the new piston seal and the brake caliper bore seal groove with brake fluid.
4. Install new the seal into the brake caliper bore seal groove.
5. Ensure that the seal is not twisted.
6. Lubricate the brake caliper bore and the piston with brake fluid.
7. Install the boot and the piston.
   1. Install the boot over the end of the piston so that the fold will face toward the brake caliper housing

cardiagn.com

piston bore opening.

2. Seat the boot into the brake caliper bore groove. Slide the piston into the brake caliper bore.
3. Push down the piston to the bottom of the brake caliper bore.
4. Ensure that the boot properly seats into the piston groove and into the groove in the brake caliper bore.
5. Repeat steps 5 and 6 for the remaining piston.

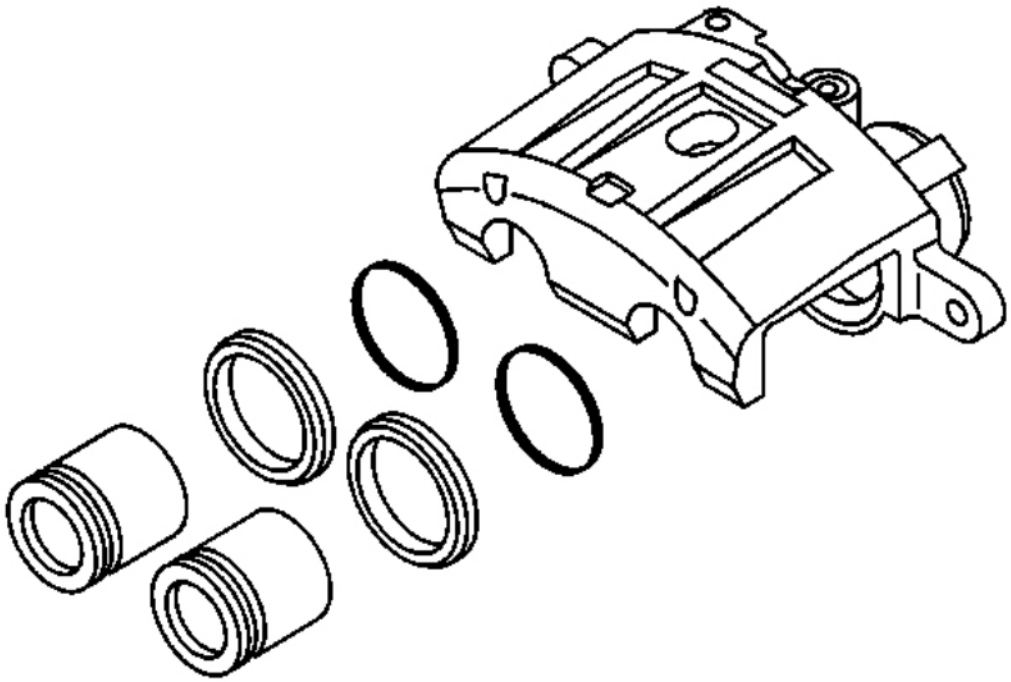

Fig. 43: View Of Brake Caliper Pistons, Boots & Seals
Courtesy of GENERAL MOTORS CORP.

8. Install the brake caliper to the vehicle. Refer to **Brake Caliper Replacement - Rear (1500 Series)** or **Brake Caliper Replacement - Rear (2500 Series)**.

BRAKE CALIPER OVERHAUL - REAR (25 SERIES)

CAUTION: Refer to Brake Dust Caution in Cautions and Notices.

CAUTION: Refer to Brake Fluid Irritant Caution in Cautions and Notices.

cardiagn.com

Disassembly Procedure

IMPORTANT:

- **Replace all the components included in the repair kits used to service this brake caliper.**
- **Lubricate the rubber parts with clean brake fluid to make assembly easier.**
- **The torque values specified are for dry, non lubricated fasteners.**
- **Perform the service operations on a clean bench, free from all mineral oil materials.**

1. Remove the brake caliper from the vehicle. Refer to **Brake Caliper Replacement - Rear (1500 Series)** or **Brake Caliper Replacement - Rear (2500 Series)**.

CAUTION: Do not place your fingers in front of the piston in order to catch or protect the piston while applying compressed air. This could result in serious injury.

2. Place a thin piece wood in front of the pistons in order to prevent damage. Remove the pistons by directing compressed air into the brake hose inlet fitting port of the brake caliper housing.
3. Remove the 2 pistons.

cardiagn.com

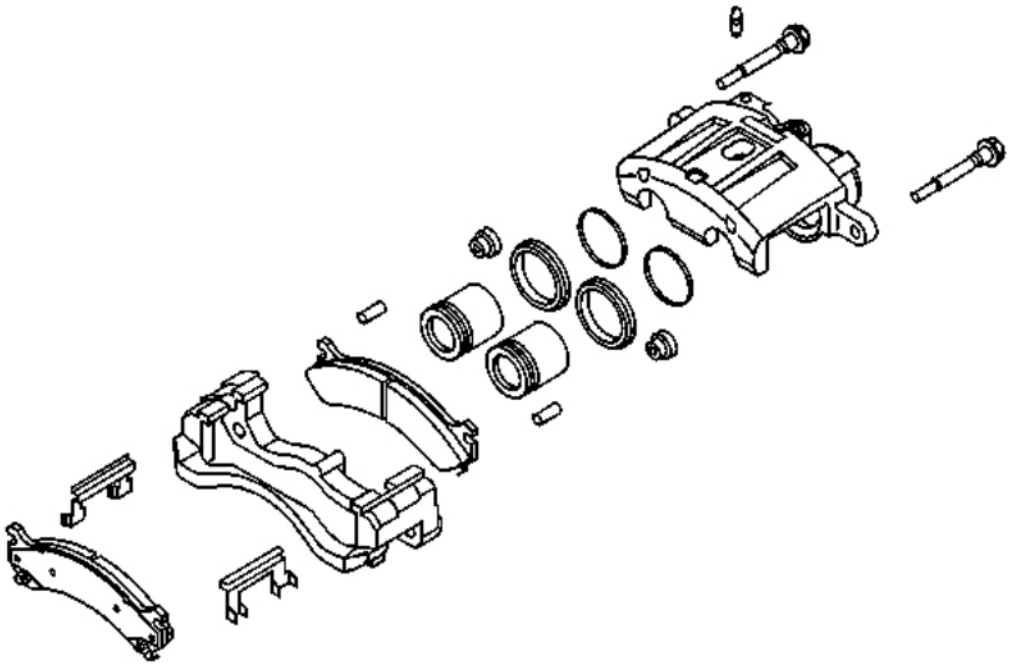

Fig. 44: Exploded View Of Brake Caliper Components
Courtesy of GENERAL MOTORS CORP.

4. Remove the 2 piston boots.
5. Remove the 2 piston seals.

cardiagn.com

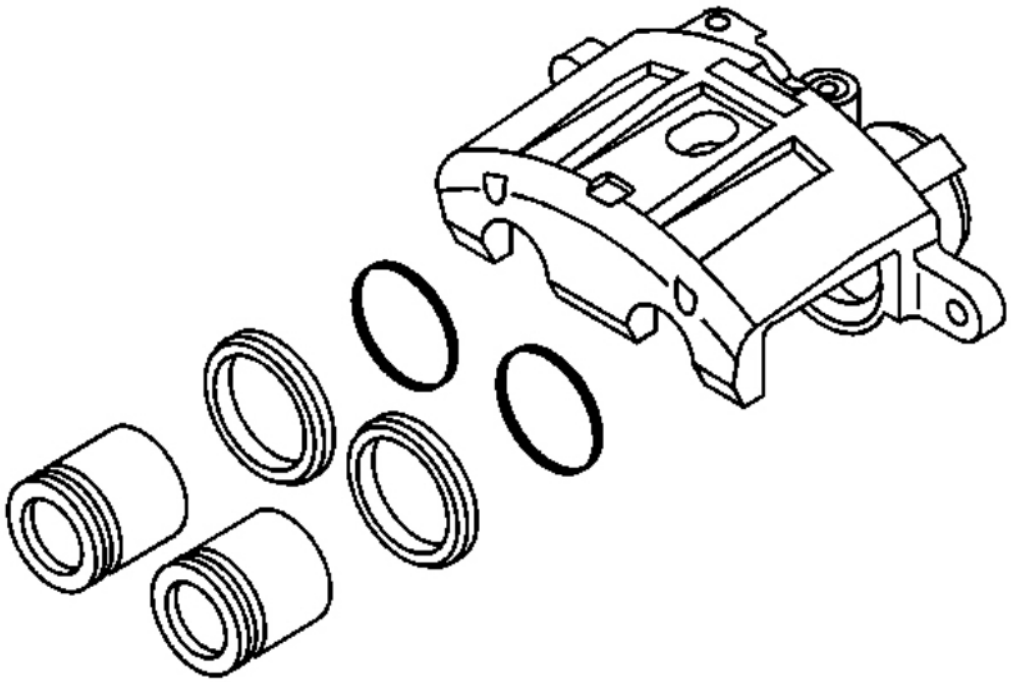

Fig. 45: View Of Brake Caliper Pistons, Boots & Seals
Courtesy of GENERAL MOTORS CORP.

6. Remove the brake caliper bleed screw cap.
7. Remove the brake caliper bleed screw.
8. Inspect the brake caliper bores and the piston seal grooves for scoring and corrosion. If you find excessive scoring or corrosion around the 2 piston seal areas replace the brake caliper housing.
9. Inspect the brake caliper mounting bracket guide surfaces for corrosion and wear. Remove and replace the brake caliper mounting bracket if needed.
10. Clean all the residue from the brake pad guiding surfaces on the brake caliper housing and the brake caliper mounting bracket.
11. Clean all the parts not included in the repair kit with denatured alcohol.
12. Dry all the parts with non lubricated filtered compressed air.
13. Blow out all passages in the brake caliper housing and the brake caliper bleeder valve.

cardiagn.com

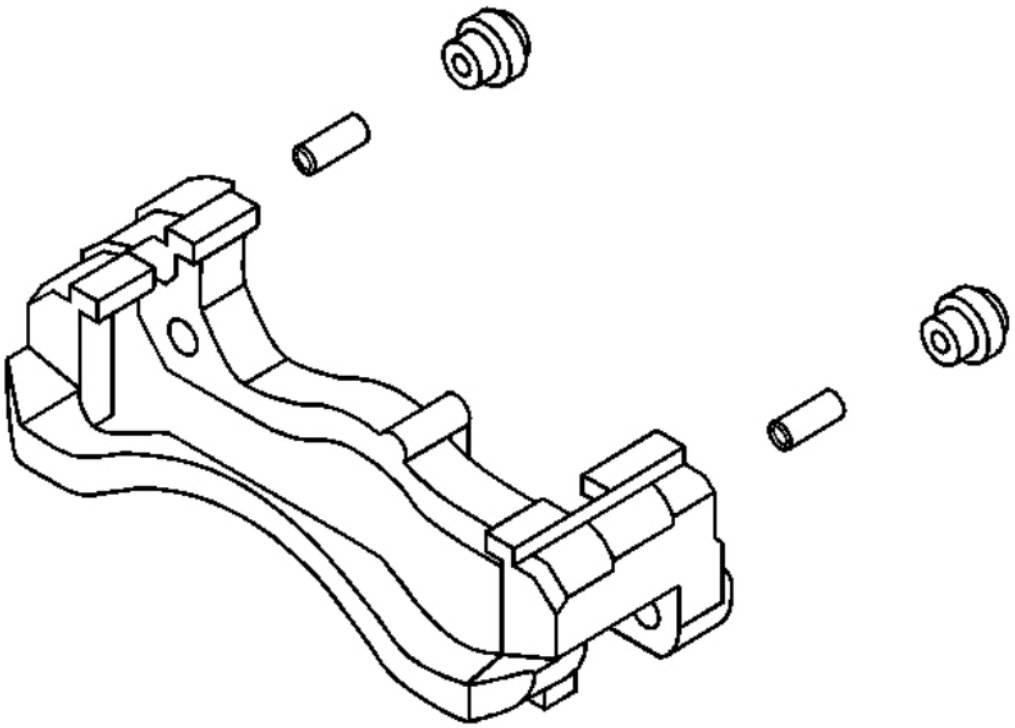

Fig. 46: View Of Brake Caliper Mounting Bracket
Courtesy of GENERAL MOTORS CORP.

Assembly Procedure

NOTE: Refer to Fastener Notice in Cautions and Notices.

1. Install the brake caliper bleed screw.

   Tighten: Tighten the brake caliper bleed screw to 12 N.m (106 lb in).

2. Install the brake caliper bleed screw cap.
3. Lubricate the new piston seal and the brake caliper bore seal groove with brake fluid.
4. Install new the seal into the brake caliper bore seal groove.
5. Ensure that the seal is not twisted.
6. Lubricate the brake caliper bore and the piston with brake fluid.
7. Install the boot and the piston.
   1. Install the boot over the end of the piston so that the fold will face toward the brake caliper housing

cardiagn.com

piston bore opening.

2. Seat the boot into the brake caliper bore groove. Slide the piston into the brake caliper bore.
3. Push down the piston to the bottom of the brake caliper bore.
4. Ensure that the boot properly seats into the piston groove and into the groove in the brake caliper bore.
5. Repeat steps 5 and 6 for the remaining piston.

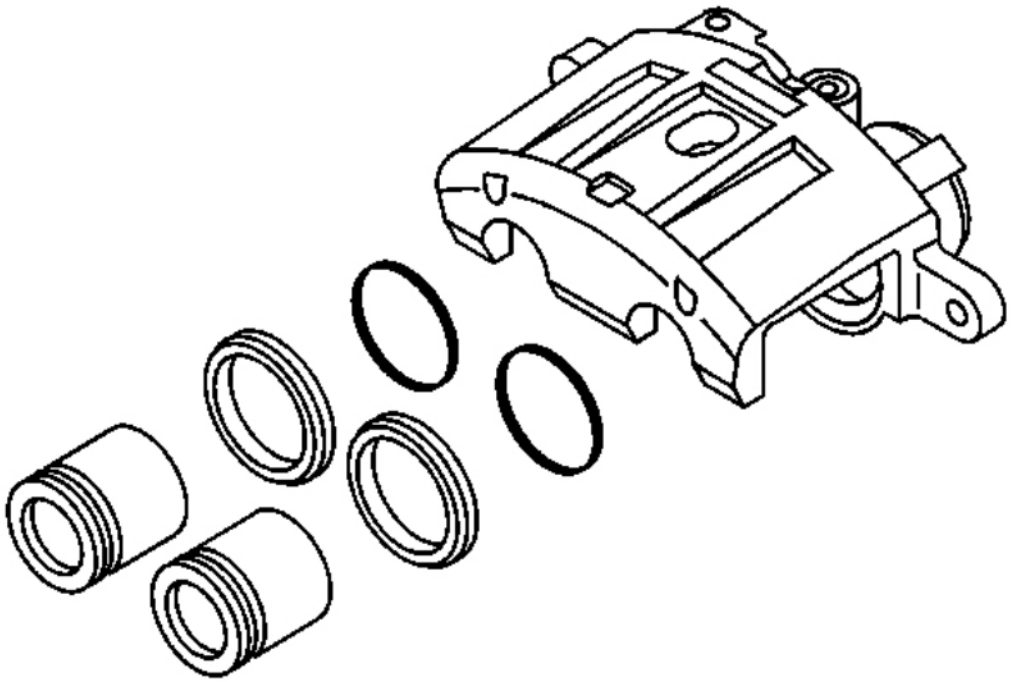

Fig. 47: View Of Brake Caliper Pistons, Boots & Seals
Courtesy of GENERAL MOTORS CORP.

8. Install the brake caliper to the vehicle. Refer to **Brake Caliper Replacement - Rear (1500 Series)** or **Brake Caliper Replacement - Rear (2500 Series)**.

DISC BRAKE HARDWARE REPLACEMENT - FRONT

Removal Procedure

CAUTION: Refer to Brake Dust Caution in Cautions and Notices.

cardiagn.com

1. Raise and support the vehicle. Refer to **Lifting and Jacking the Vehicle** in General Information.
2. Remove the tire and wheel assembly. Refer to **Tire and Wheel Removal and Installation** in Tires and Wheels.

NOTE: **Support the brake caliper with heavy mechanic's wire, or equivalent, whenever it is separated from its mount and the hydraulic flexible brake hose is still connected. Failure to support the caliper in this manner will cause the flexible brake hose to bear the weight of the caliper, which may cause damage to the brake hose and in turn may cause a brake fluid leak.**

3. Remove the caliper from the mounting bracket and support the caliper with heavy mechanic's wire or equivalent. DO NOT disconnect the hydraulic brake flexible hose from the caliper. Refer to **Brake Caliper Replacement - Front**.
4. Remove the disc brake pads from the disc brake caliper mounting bracket.
5. Remove the disc brake pad retainers from the disc brake caliper mounting bracket.

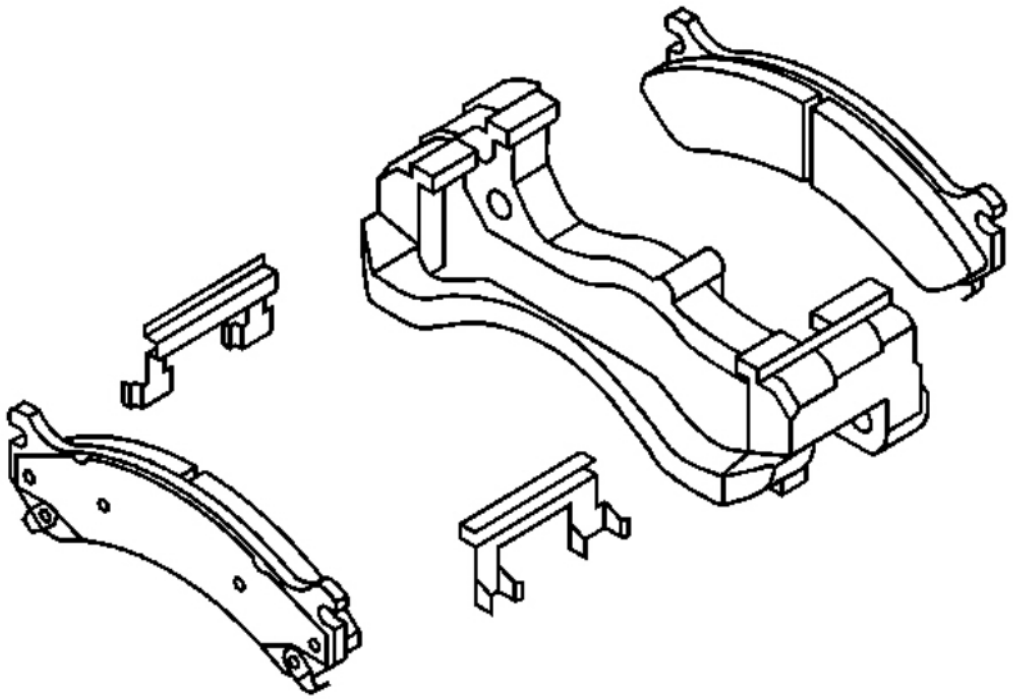

Fig. 48: View Of Disc Brake Pads & Brake Caliper Mounting Bracket
Courtesy of GENERAL MOTORS CORP.

cardiagn.com

6. Inspect the disc brake hardware. Refer to **Disc Brake Mounting and Hardware Inspection - Front**.
7. Remove the caliper pin boots (4) from the disc brake caliper mounting bracket (3).

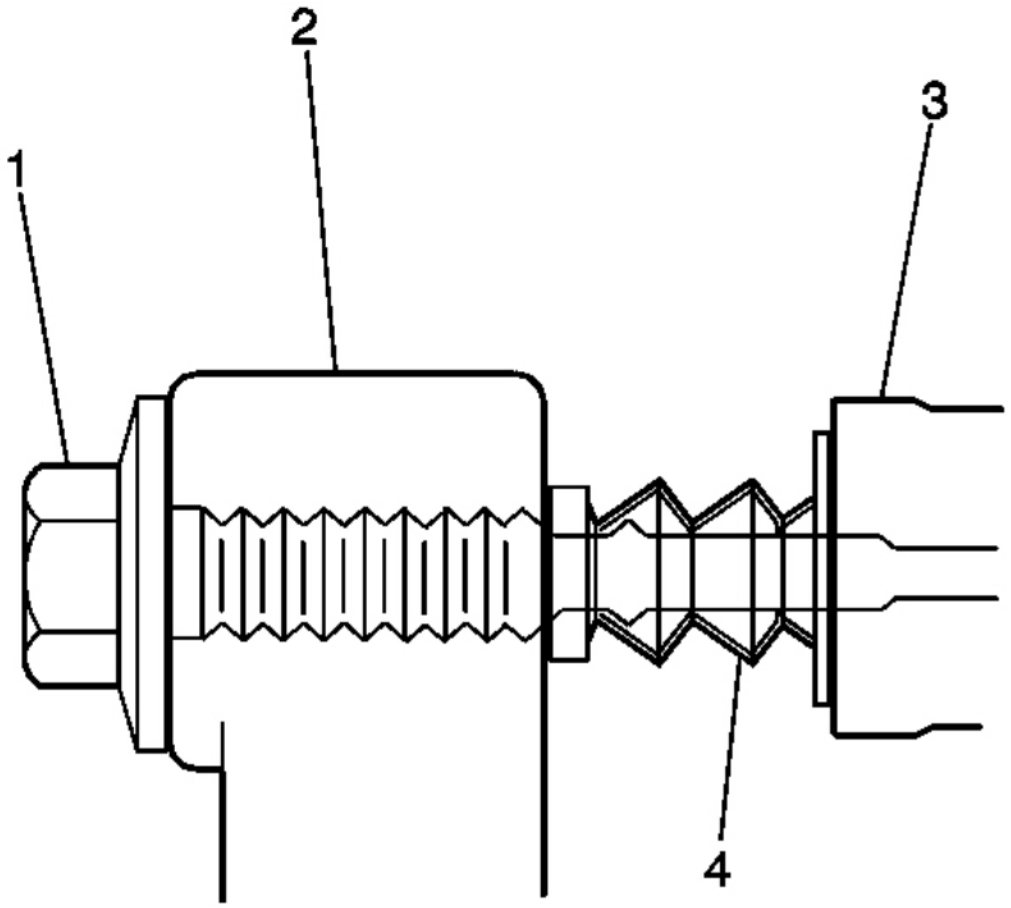

Fig. 49: View Of Caliper, Pin, Boots & Caliper Mounting Bracket
Courtesy of GENERAL MOTORS CORP.

Installation Procedure

1. Lubricate the front brake caliper bushings, bolts and seals with high temperature silicone brake lubricant.
2. Install the caliper pin boots (4) to the disc brake caliper mounting bracket (3).

cardiagn.com

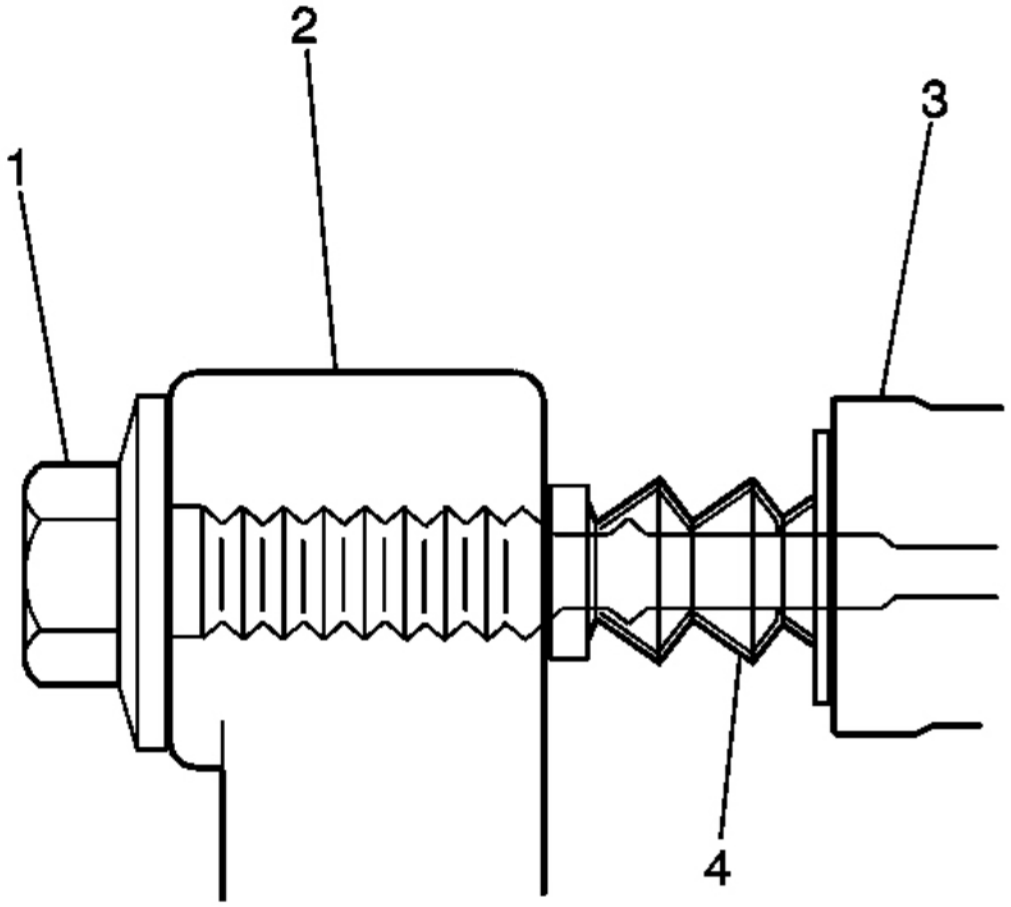

Fig. 50: View Of Caliper, Pin, Boots & Caliper Mounting Bracket
Courtesy of GENERAL MOTORS CORP.

3. Install the disc brake pad retainers to the disc brake caliper mounting bracket.
4. Install the disc brake pads to the disc brake caliper mounting bracket.

cardiagn.com

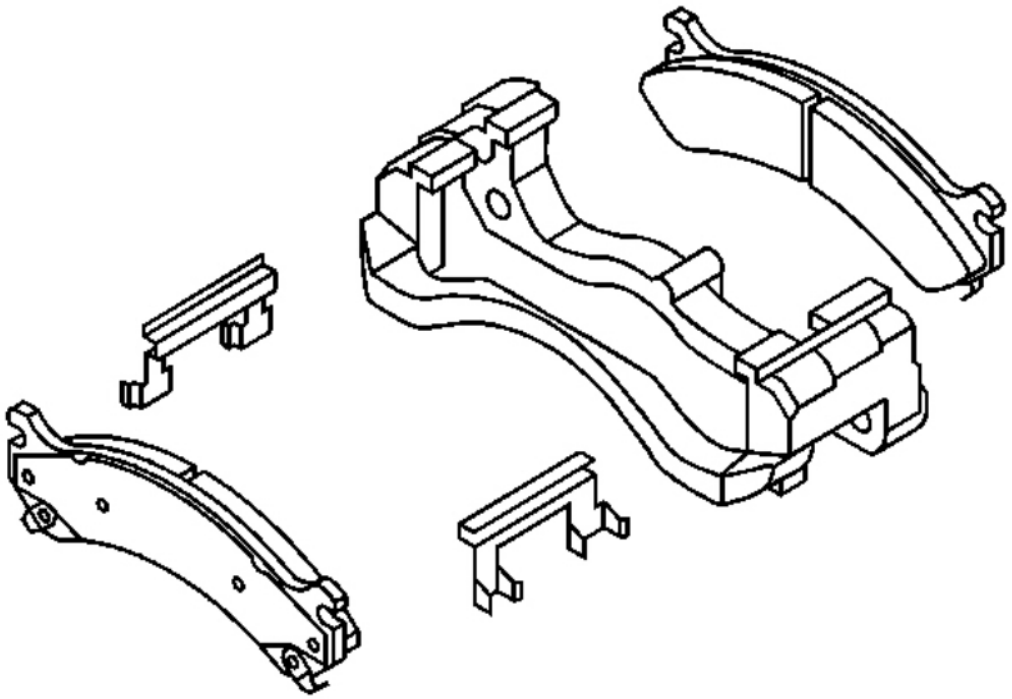

Fig. 51: View Of Disc Brake Pads & Brake Caliper Mounting Bracket
Courtesy of GENERAL MOTORS CORP.

5. Install the disc brake caliper to the caliper mounting bracket. Refer to **Brake Caliper Replacement - Front**.
6. With the engine OFF, gradually apply the brake pedal approximately 2/3 of its travel distance.
7. Slowly release the brake pedal.
8. Wait 15 seconds, then repeat steps 7-8 until a firm brake pedal is obtained. This will properly seat the brake caliper pistons and brake pads.

DISC BRAKE HARDWARE REPLACEMENT - REAR

Removal Procedure

CAUTION: Refer to Brake Dust Caution in Cautions and Notices.

1. Raise and support the vehicle. Refer to **Lifting and Jacking the Vehicle** in General Information.
2. Remove the tire and wheel assembly. Refer to **Tire and Wheel Removal and Installation** in Tires and

cardiagn.com

Wheels.

NOTE: **Support the brake caliper with heavy mechanic's wire, or equivalent, whenever it is separated from its mount and the hydraulic flexible brake hose is still connected. Failure to support the caliper in this manner will cause the flexible brake hose to bear the weight of the caliper, which may cause damage to the brake hose and in turn may cause a brake fluid leak.**

3. Remove the caliper from the mounting bracket and support the caliper with heavy mechanic's wire or equivalent. DO NOT disconnect the hydraulic brake flexible hose from the caliper. Refer to **Brake Caliper Replacement - Front**.
4. Remove the disc brake pads from the disc brake caliper bracket.
5. Remove the disc brake pad retainers from the disc brake caliper bracket.

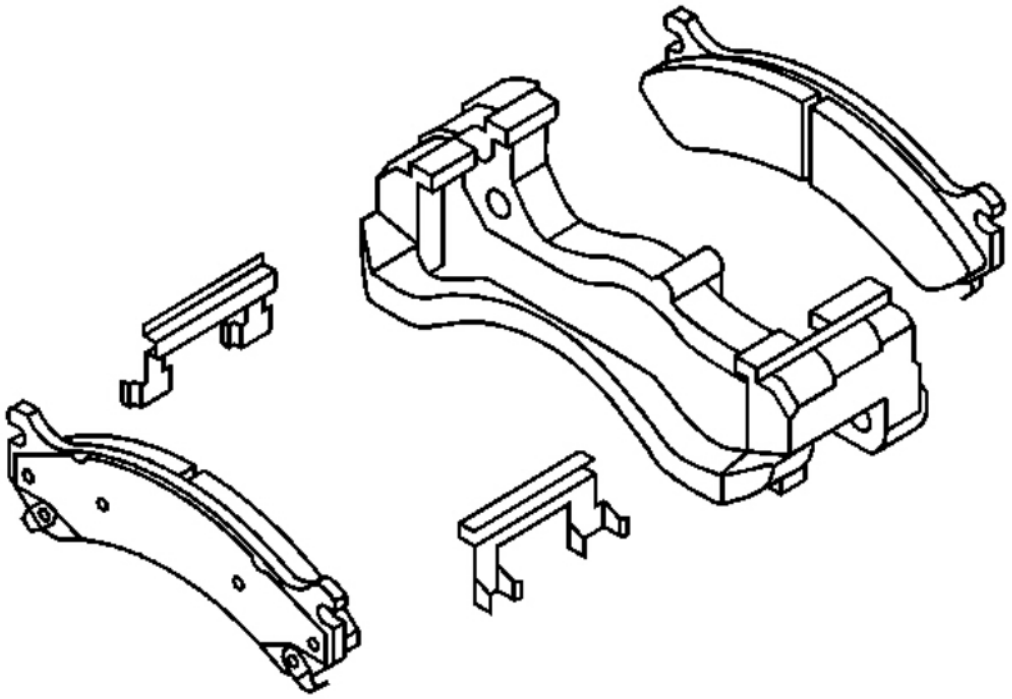

Fig. 52: View Of Disc Brake Pads & Brake Caliper Mounting Bracket
Courtesy of GENERAL MOTORS CORP.

6. Remove the caliper pins (5) from the disc brake caliper mounting bracket (3).
7. Remove the caliper pin boots (4) from the disc brake caliper mounting bracket.

cardiagn.com

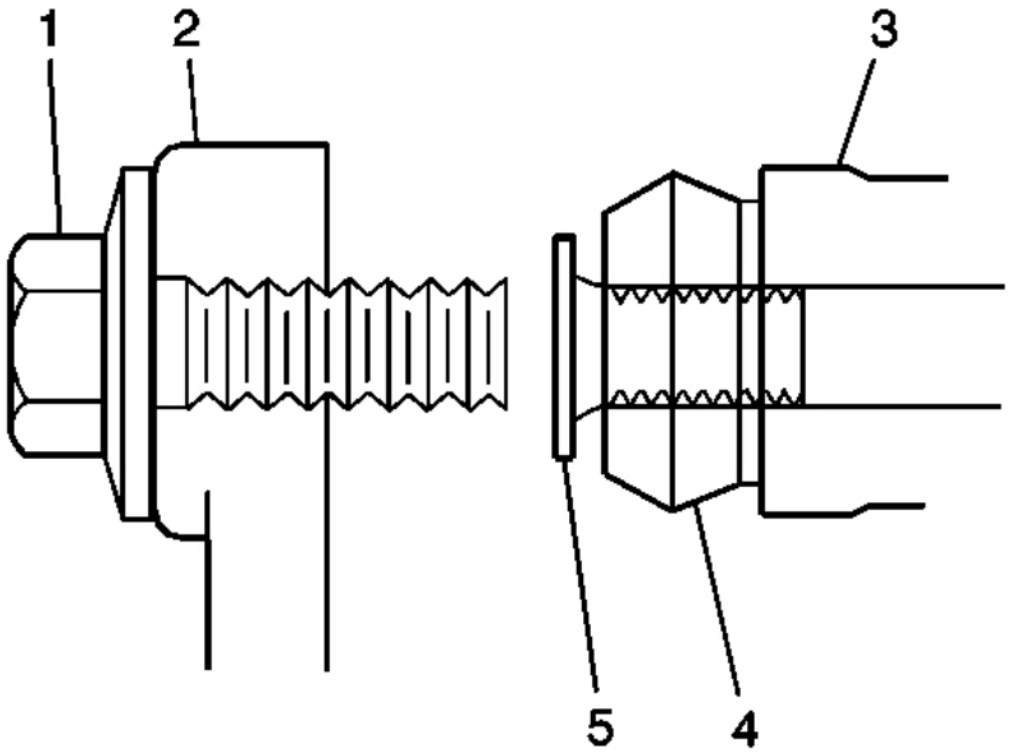

Fig. 53: Caliper Mounting Bolt, Bracket, Boot & Slid Pins
Courtesy of GENERAL MOTORS CORP.

8. Inspect the disc brake hardware. Refer to **Disc Brake Mounting and Hardware Inspection - Rear**.

Installation Procedure

1. Lubricate the brake caliper, bushings, bolts and seals with high temperature silicone brake lubricant.
2. Install the caliper pin boots (4) to the disc brake caliper mounting bracket.
3. Install the caliper pins (5) to the disc brake caliper mounting bracket (3).

cardiagn.com

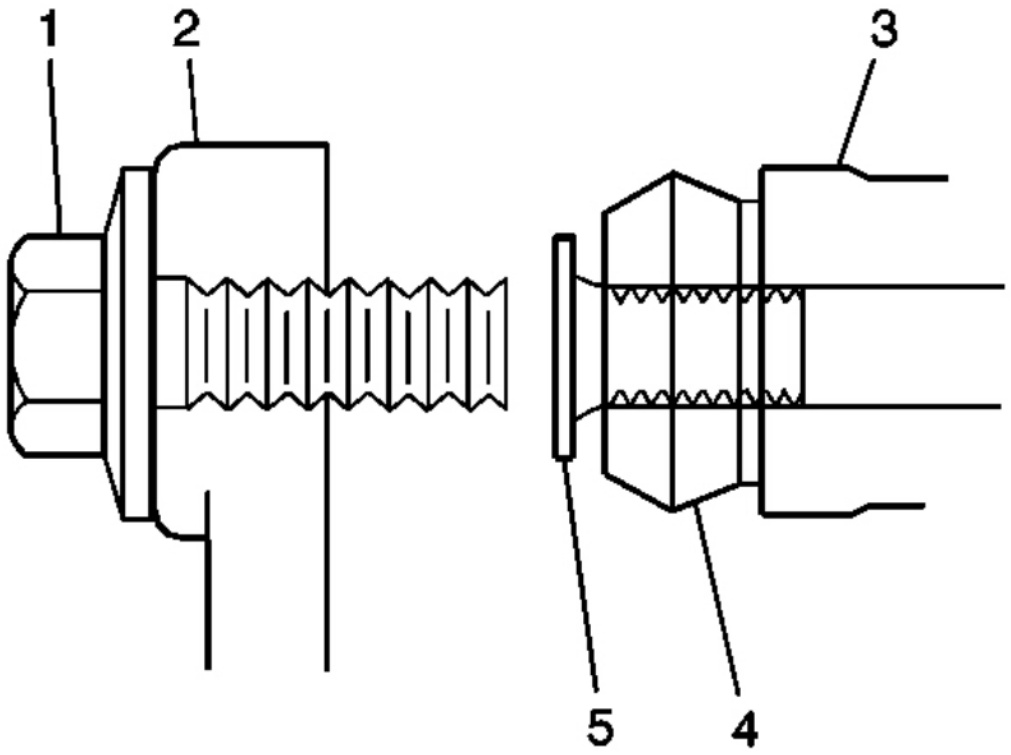

Fig. 54: Caliper Mounting Bolt, Bracket, Boot & Slid Pins
Courtesy of GENERAL MOTORS CORP.

4. Install the disc brake pad retainers to the disc brake caliper bracket.
5. Install the disc brake pads to the disc brake caliper bracket.

cardiagn.com

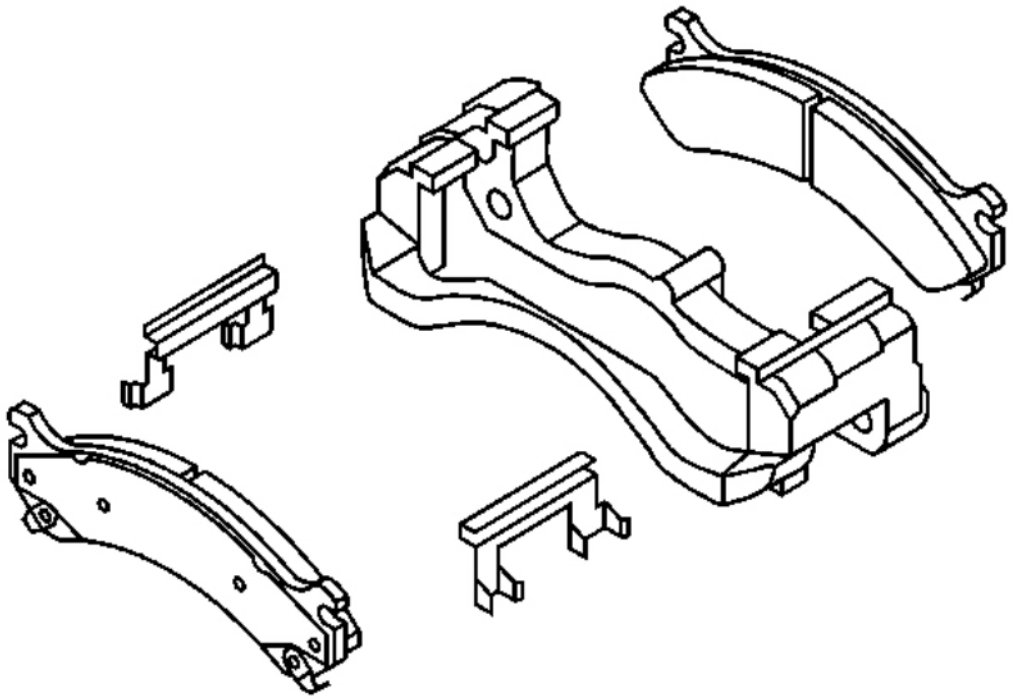

Fig. 55: View Of Disc Brake Pads & Brake Caliper Mounting Bracket
Courtesy of GENERAL MOTORS CORP.

6. Install the disc brake caliper to the mounting bracket. Refer to **Brake Caliper Replacement - Front**.
7. With the engine OFF, gradually apply the brake pedal approximately 2/3 of its travel distance.
8. Slowly release the brake pedal.
9. Wait 15 seconds, then repeat steps 7-8 until a firm brake pedal is obtained. This will properly seat the brake caliper pistons and brake pads.

BRAKE CALIPER BRACKET REPLACEMENT - FRONT

Removal Procedure

CAUTION: Refer to Brake Dust Caution in Cautions and Notices.

NOTE: Support the brake caliper with heavy mechanic's wire, or equivalent, whenever it is separated from its mount and the hydraulic flexible brake hose is still connected. Failure to support the caliper in this manner will

cardiagn.com

cause the flexible brake hose to bear the weight of the caliper, which may cause damage to the brake hose and in turn may cause a brake fluid leak.

1. Remove the caliper from the mounting bracket and support the caliper with heavy mechanic's wire or equivalent. DO NOT disconnect the hydraulic brake flexible hose from the caliper. Refer to **Brake Caliper Replacement - Front**.
2. Remove the brake pads.
3. Remove the anti-rattle clips from the brake caliper bracket.

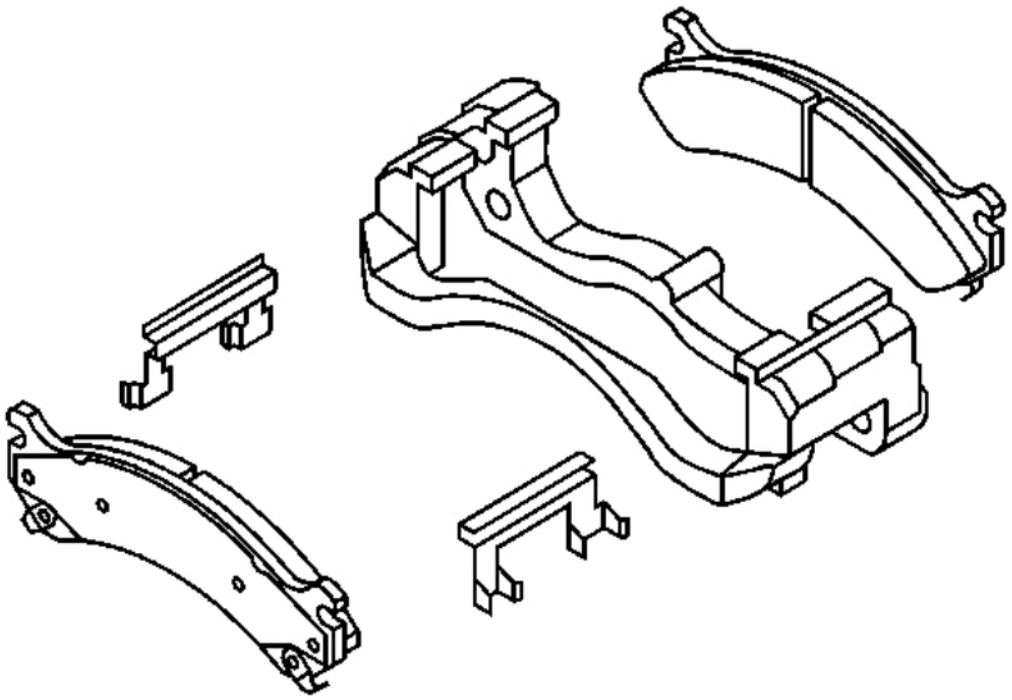

Fig. 56: View Of Disc Brake Pads & Brake Caliper Mounting Bracket
Courtesy of GENERAL MOTORS CORP.

4. Remove the brake caliper bracket mounting bolts (2).
5. Remove the brake caliper bracket (1).

cardiagn.com

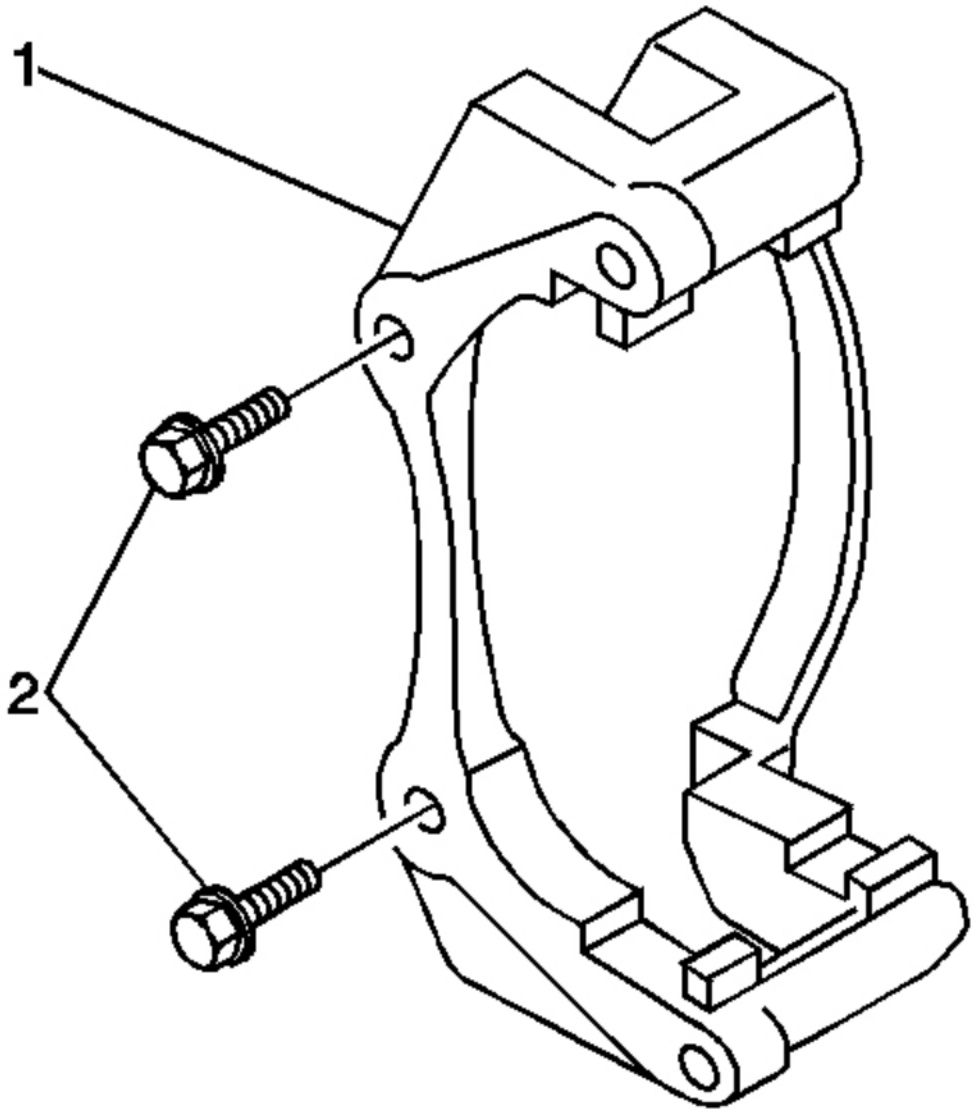

Fig. 57: Brake Caliper Bracket Mounting & Bolts
Courtesy of GENERAL MOTORS CORP.

6. Remove any contaminants or foreign material from the inside ends of the brake caliper bracket.
7. Clean the mounting surface and threads of the brake caliper bracket.

Installation Procedure

cardiagn.com

1. Install the brake caliper bracket (1).
2. Perform the following procedure before installing the brake caliper bracket mounting bolts.
   - Remove all traces of the original adhesive patch.
   - Clean the threads of the bolt with denatured alcohol or equivalent and allow to dry.
   - Apply Threadlocker GM P/N 12345493 (Canadian P/N 10953488) to the threads of the bolt.

NOTE: Refer to Fastener Notice in Cautions and Notices.

3. Install the caliper bracket mounting bolts (2).

Tighten:

- Tighten the brake caliper bracket mounting bolts to 175 N.m (121 lb ft) (15 Series).
- Tighten the brake caliper bracket mounting bolts to 300 N.m (221 lb ft) (25 Series).

cardiagn.com

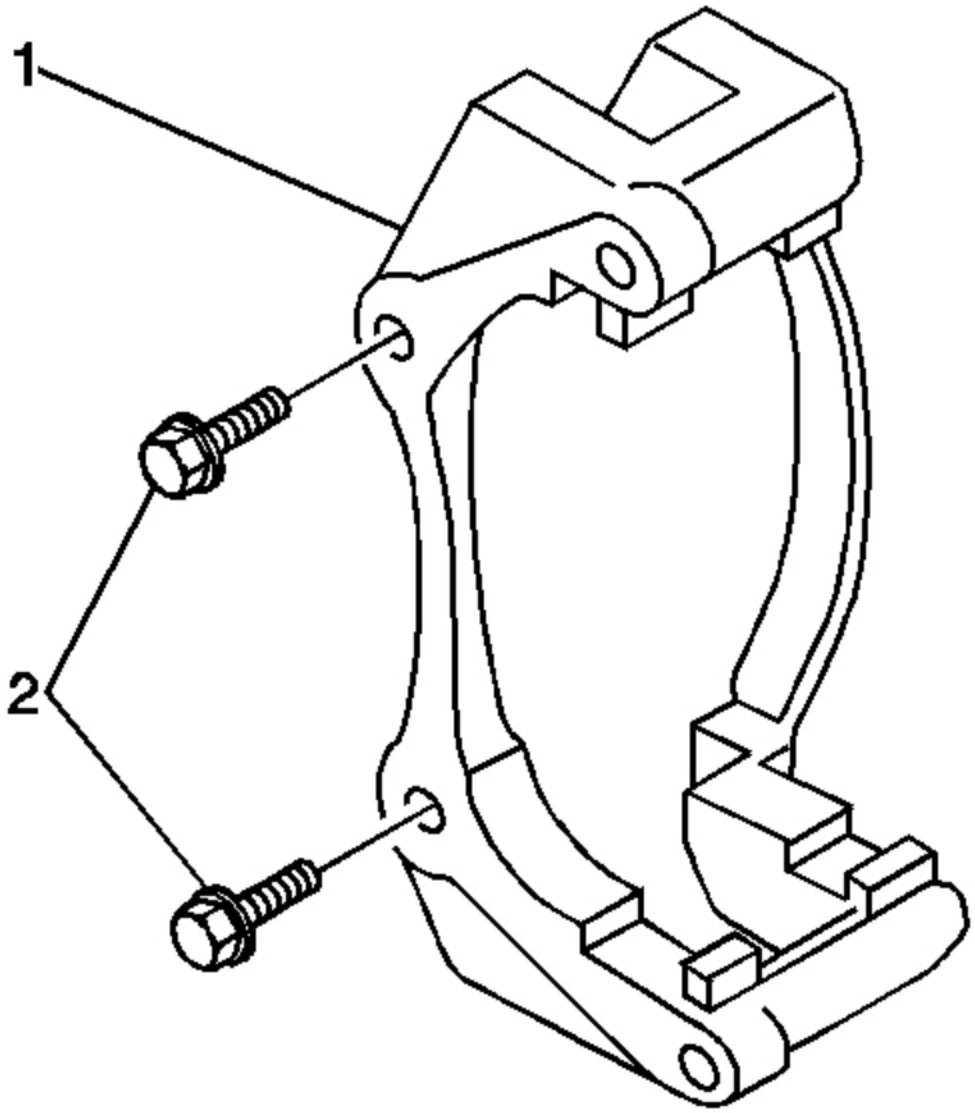

Fig. 58: Brake Caliper Bracket Mounting & Bolts
Courtesy of GENERAL MOTORS CORP.

4. Install the anti-rattle clips to the brake caliper bracket.
5. Install the brake pads to the brake caliper bracket.
6. Slide the brake pads in until they contact the rotor.

cardiagn.com

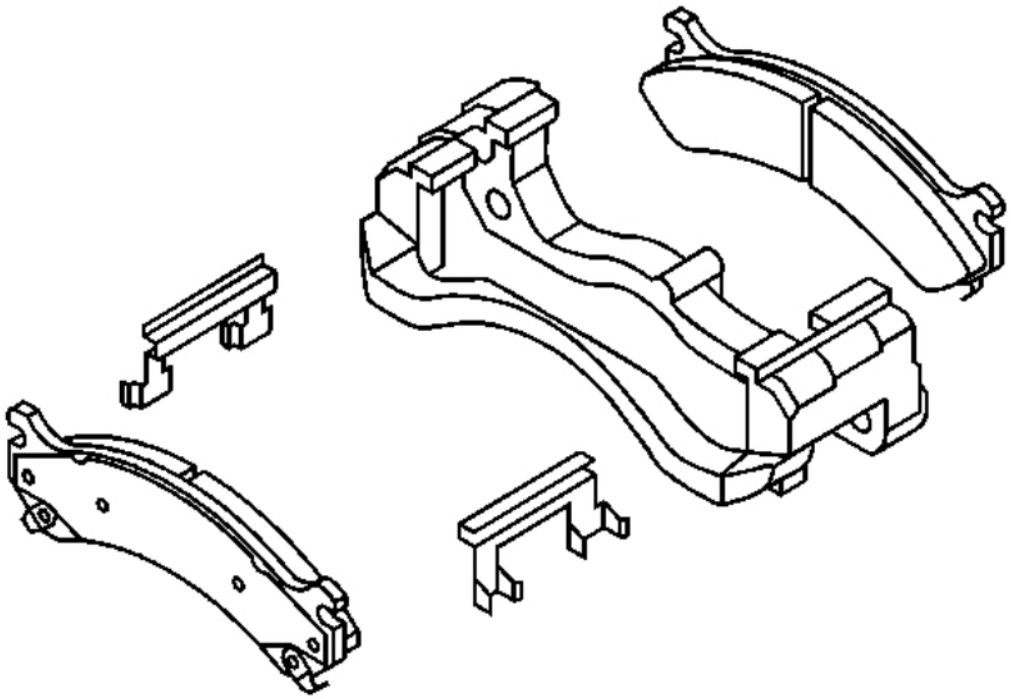

Fig. 59: View Of Disc Brake Pads & Brake Caliper Mounting Bracket
Courtesy of GENERAL MOTORS CORP.

7. Install the brake caliper. Refer to **Brake Caliper Replacement - Front**.
8. Install the tire and wheel assembly. Refer to **Tire and Wheel Removal and Installation** in Tires and Wheels.
9. Lower the vehicle.
10. With the engine OFF, gradually apply the brake pedal to approximately 2/3 of its travel distance.
11. Slowly release the brake pedal.
12. Wait 15 seconds, then repeat steps 10-11 until a firm pedal is obtained. This will properly seat the brake caliper pistons and brake pads.

BRAKE CALIPER BRACKET REPLACEMENT - REAR (W/O NYS)

Removal Procedure

CAUTION: Refer to Brake Dust Caution in Cautions and Notices.

cardiagn.com

NOTE: **Support the brake caliper with heavy mechanic's wire, or equivalent, whenever it is separated from its mount and the hydraulic flexible brake hose is still connected. Failure to support the caliper in this manner will cause the flexible brake hose to bear the weight of the caliper, which may cause damage to the brake hose and in turn may cause a brake fluid leak.**

1. Remove the caliper from the mounting bracket and support the caliper with heavy mechanic's wire or equivalent. DO NOT disconnect the hydraulic brake flexible hose from the caliper. Refer to **Brake Caliper Replacement - Front**.
2. Remove the brake pads.
3. Remove the anti-rattle clips from the brake caliper bracket.

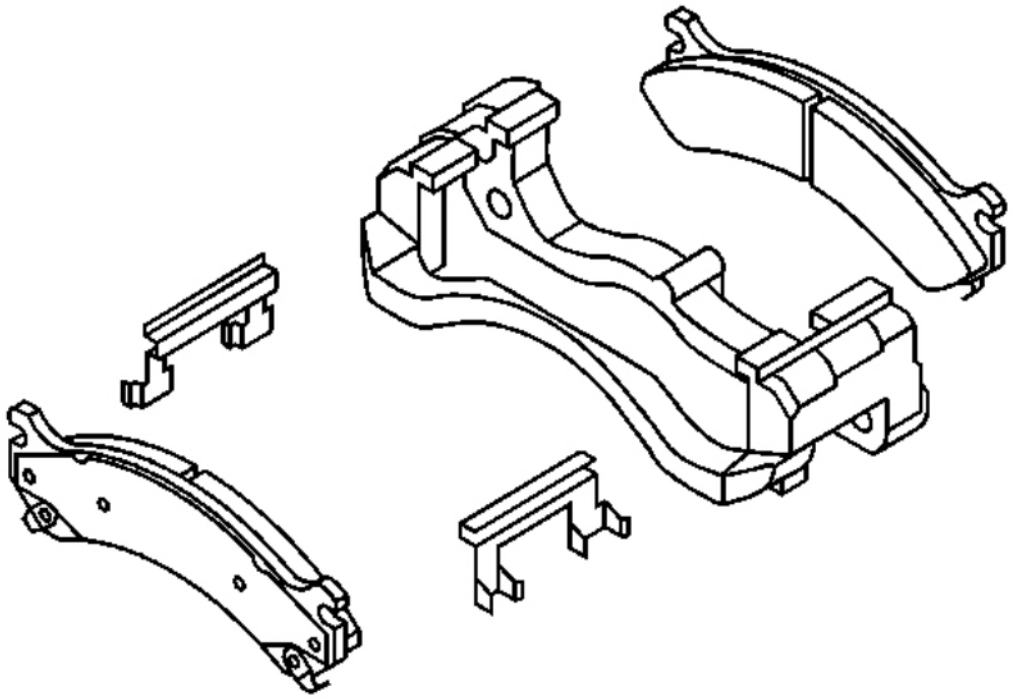

Fig. 60: View Of Disc Brake Pads & Brake Caliper Mounting Bracket
Courtesy of GENERAL MOTORS CORP.

4. Remove the brake caliper bracket mounting bolts (2).
5. Remove the brake caliper bracket (1).

cardiagn.com

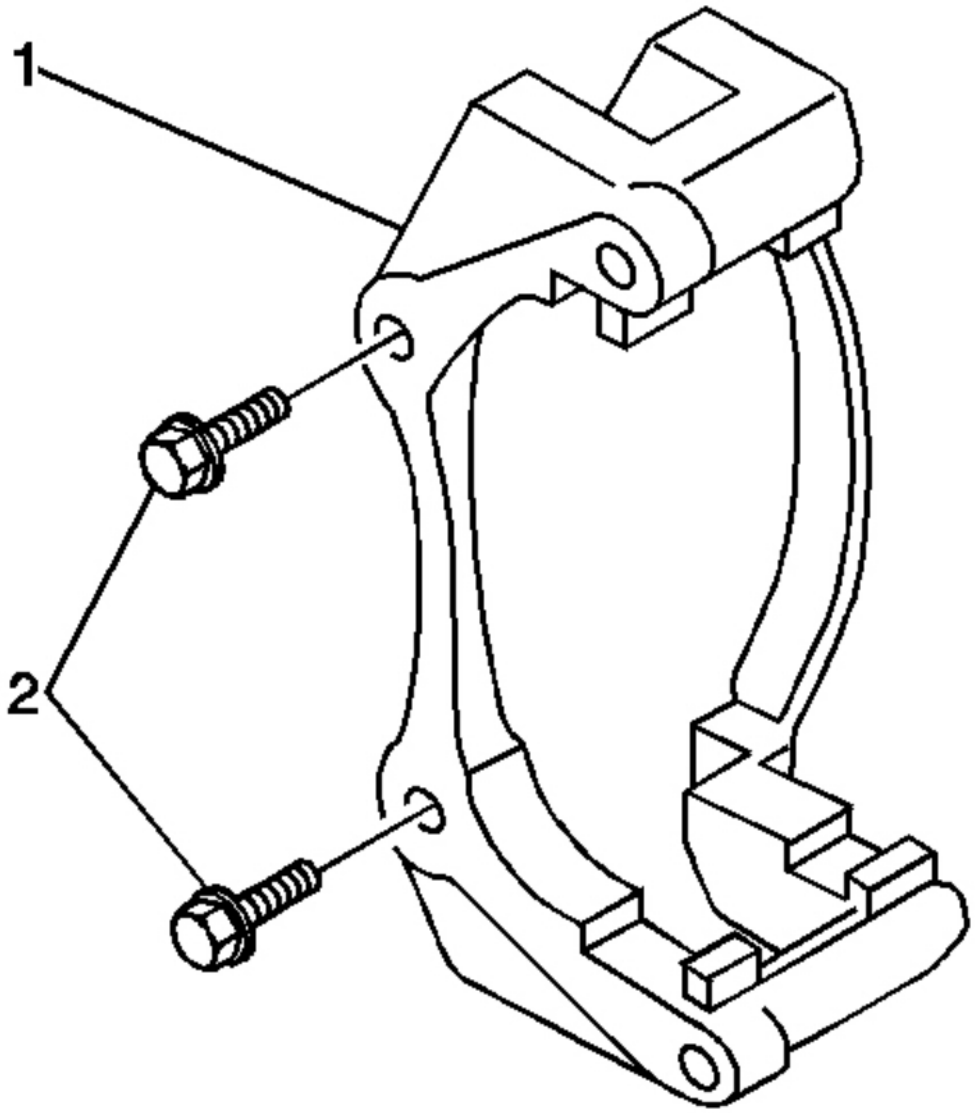

Fig. 61: Brake Caliper Bracket Mounting & Bolts
Courtesy of GENERAL MOTORS CORP.

6. Remove any contaminants or foreign material from the inside ends of the brake caliper bracket.
7. Clean the mounting surface and threads of the brake caliper bracket.

Installation Procedure

cardiagn.com

1. Install the brake caliper bracket (1).
2. Perform the following procedure before installing the brake caliper bracket mounting bolts.
   - Remove all traces of the original adhesive patch.
   - Clean the threads of the bolt with denatured alcohol or equivalent and allow to dry.
   - Apply Threadlocker GM P/N 12345493 (Canadian P/N 10953488) to the threads of the bolt.

NOTE: Refer to Fastener Notice in Cautions and Notices.

3. Install the caliper bracket mounting bolts (2).

Tighten:

- For vehicles equipped with JC5/JH5 brake systems, tighten the caliper bracket mounting bolts to 200 N.m (148 lb ft).
- For vehicles equipped with JH6 brake systems, tighten the caliper bracket mounting bolts to 165 N.m (122 lb ft).

cardiagn.com

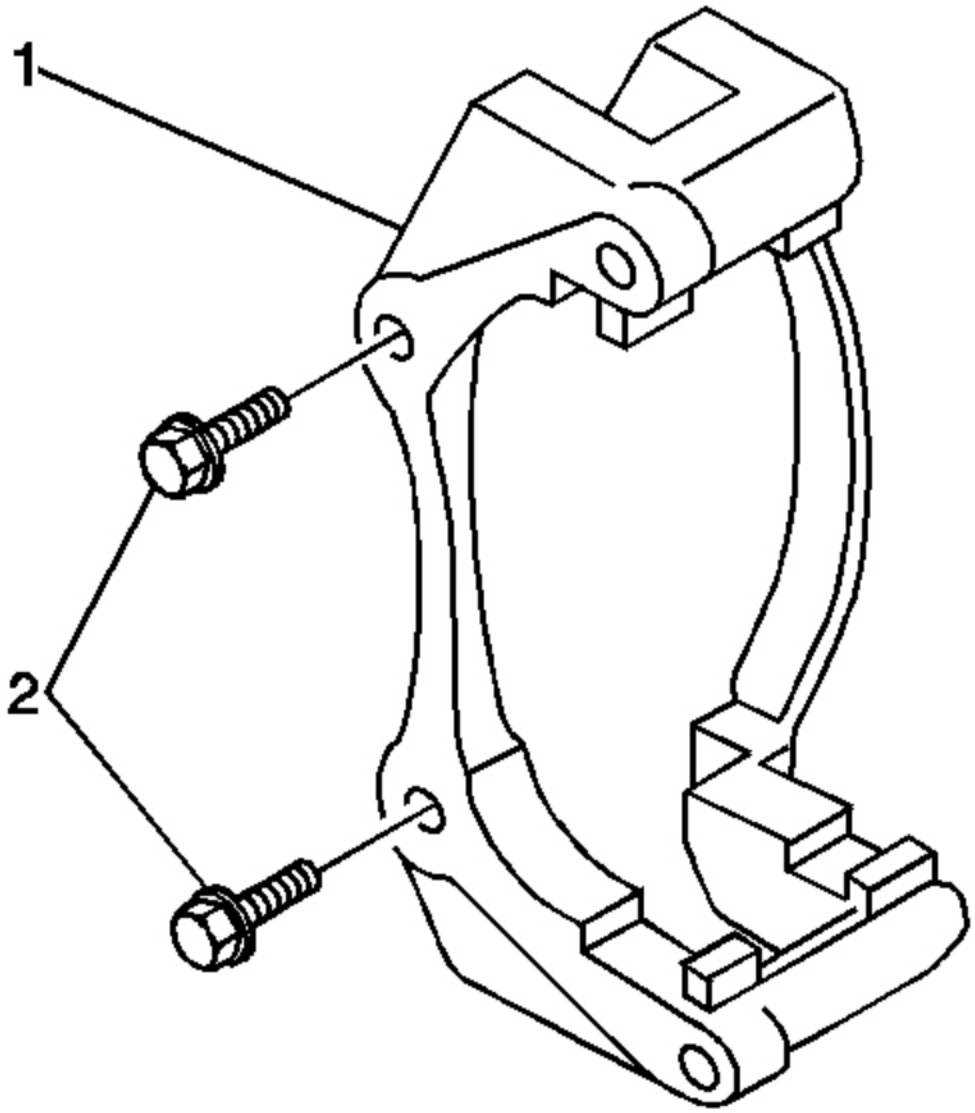

Fig. 62: Brake Caliper Bracket Mounting & Bolts
Courtesy of GENERAL MOTORS CORP.

4. Install the anti-rattle clips to the brake caliper bracket.
5. Install the brake pads to the brake caliper bracket.

cardiagn.com

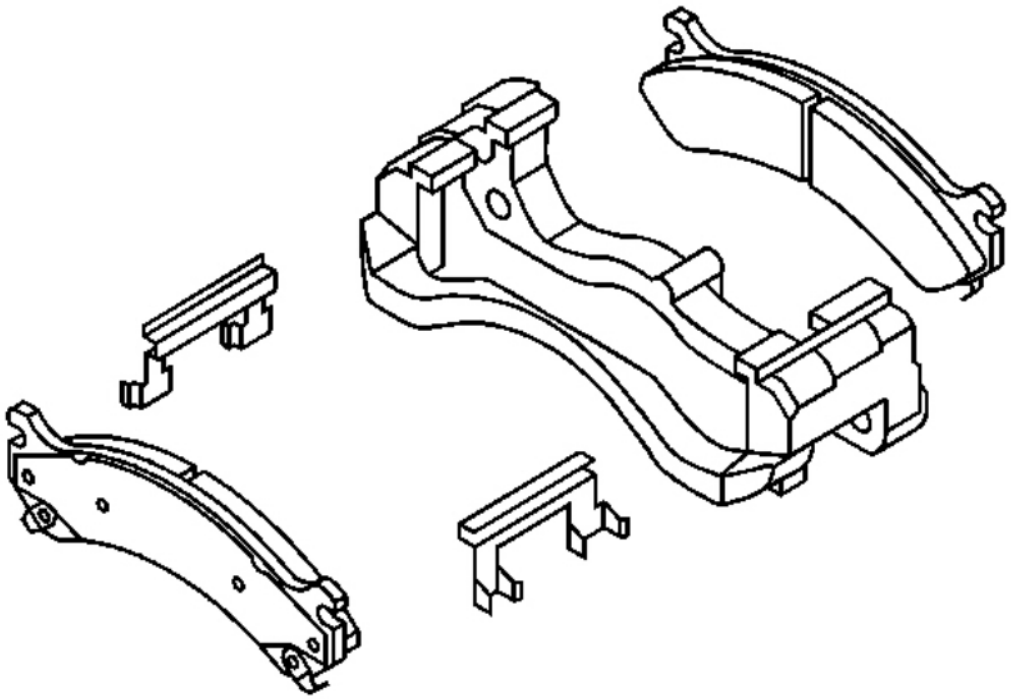

Fig. 63: View Of Disc Brake Pads & Brake Caliper Mounting Bracket
Courtesy of GENERAL MOTORS CORP.

6. Slide the brake pads in until they contact the rotor.
7. Install the brake caliper. Refer to **Brake Caliper Replacement - Front**.
8. Install the tire and wheel assembly. Refer to **Tire and Wheel Removal and Installation** in Tires and Wheels.
9. Lower the vehicle.
10. With the engine OFF, gradually apply the brake pedal to approximately 2/3 of its travel distance.
11. Slowly release the brake pedal.
12. Wait 15 seconds, then repeat steps 7-8 until a firm pedal is obtained. This will properly seat the brake caliper pistons and brake pads.

BRAKE CALIPER BRACKET REPLACEMENT - REAR (W/NYS)

CAUTION: Refer to Brake Dust Caution in Cautions and Notices.

cardiagn.com

Removal Procedure

1. Raise and suitably support the vehicle. Refer to **Lifting and Jacking the Vehicle** in General Information.
2. Remove the tire and wheel assembly. Refer to **Tire and Wheel Removal and Installation** in Tires and Wheels.
3. Remove the nut and the bolt from the quarter shaft shield.
4. Remove the shield.

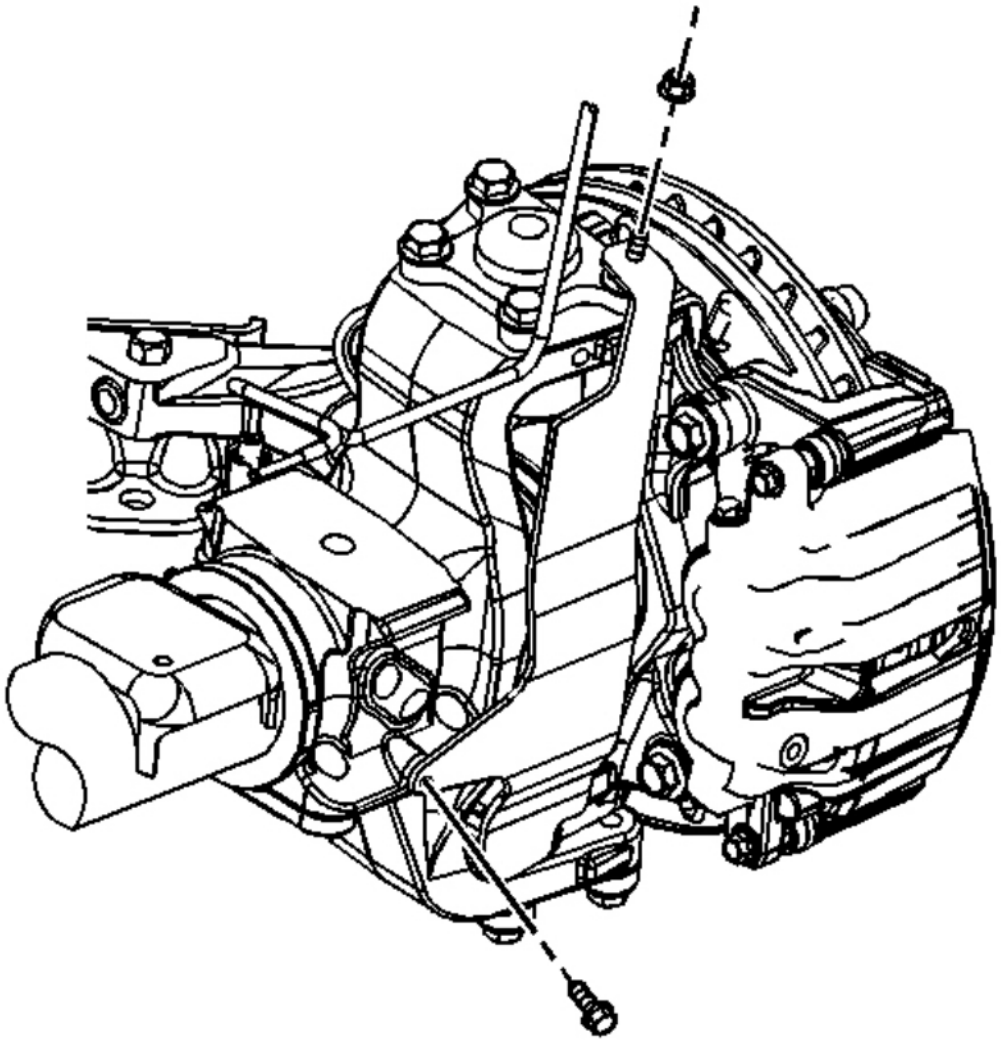

Fig. 64: View Of Quarter Shaft Shield, Nut & Bolt (W/NYS)
Courtesy of GENERAL MOTORS CORP.

cardiagn.com

5. Remove the 2 brake caliper mounting bolts.

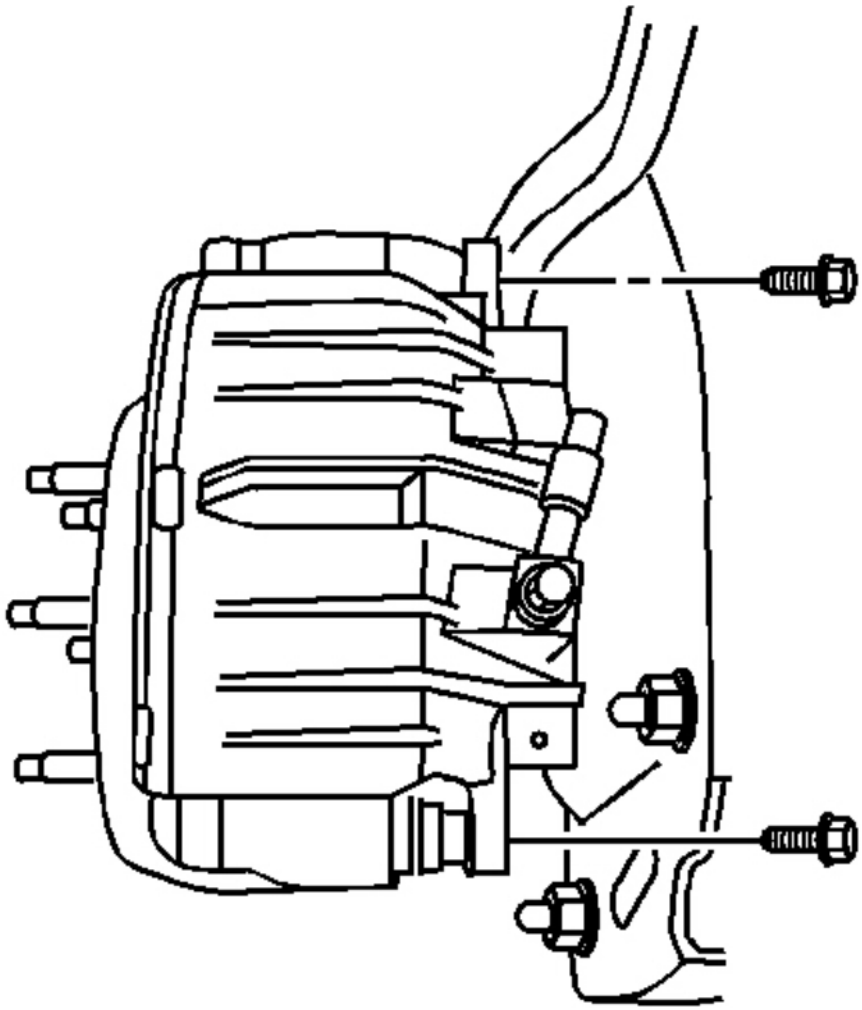

Fig. 65: View Of Caliper Guide Pin Bolts - Rear (W/NYS)
Courtesy of GENERAL MOTORS CORP.

NOTE: **Support the brake caliper with heavy mechanic's wire, or equivalent, whenever it is separated from its mount and the hydraulic flexible brake hose is still connected. Failure to support the caliper in this manner will cause the flexible brake hose to bear the weight of the caliper, which may cause damage to the brake hose and in turn may cause a brake fluid leak.**

cardiagn.com

6. Remove the brake caliper and support with heavy mechanic's wire or equivalent. DO NOT disconnect the hydraulic brake hose from the brake caliper.
7. Remove the 2 brake caliper mounting bracket bolts.

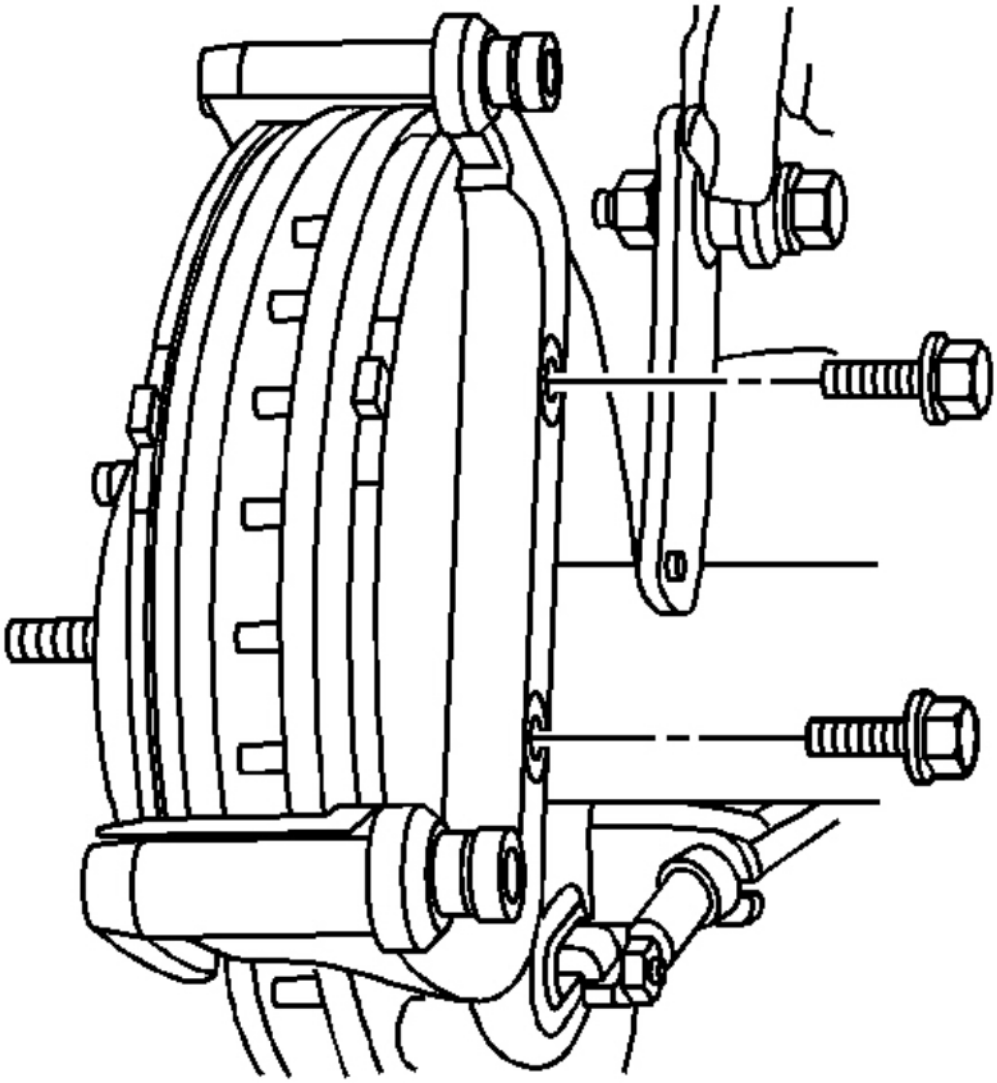

Fig. 66: View Of Brake Caliper Mounting Bracket Bolts - Rear (W/NYS)
Courtesy of GENERAL MOTORS CORP.

8. Remove the disc brake pads from the brake caliper mounting bracket.

cardiagn.com

9. Remove the anti-rattle clips from the brake caliper mounting bracket.

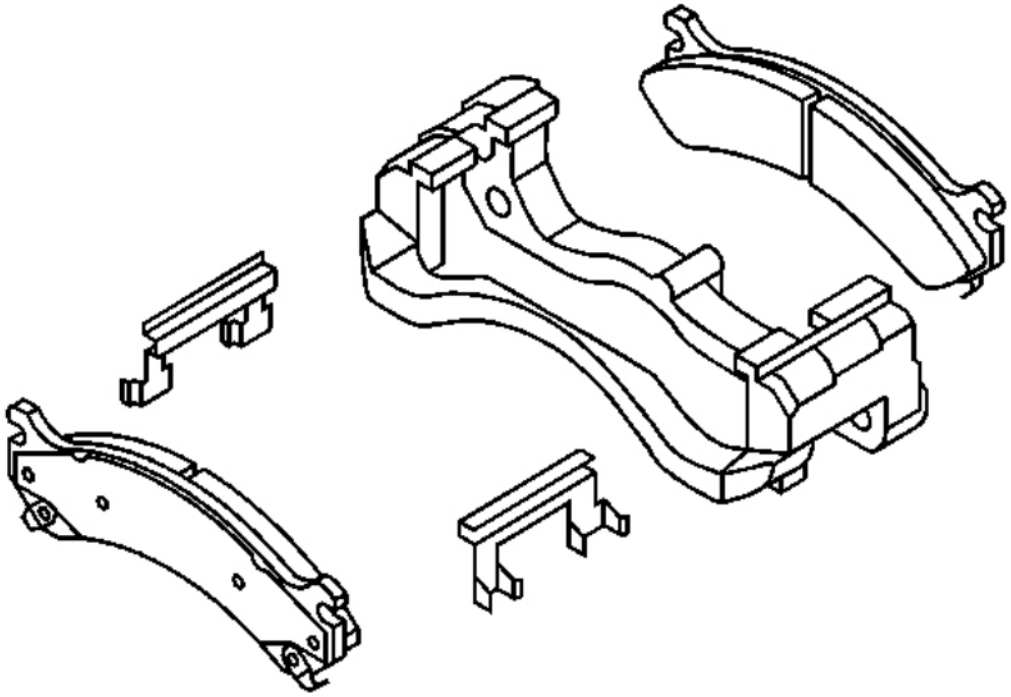

Fig. 67: View Of Disc Brake Pads & Brake Caliper Mounting Bracket
Courtesy of GENERAL MOTORS CORP.

Installation Procedure

1. Install the anti-rattle clips to the brake caliper mounting bracket.
2. Install the disc brake pads to the brake caliper mounting bracket.

cardiagn.com

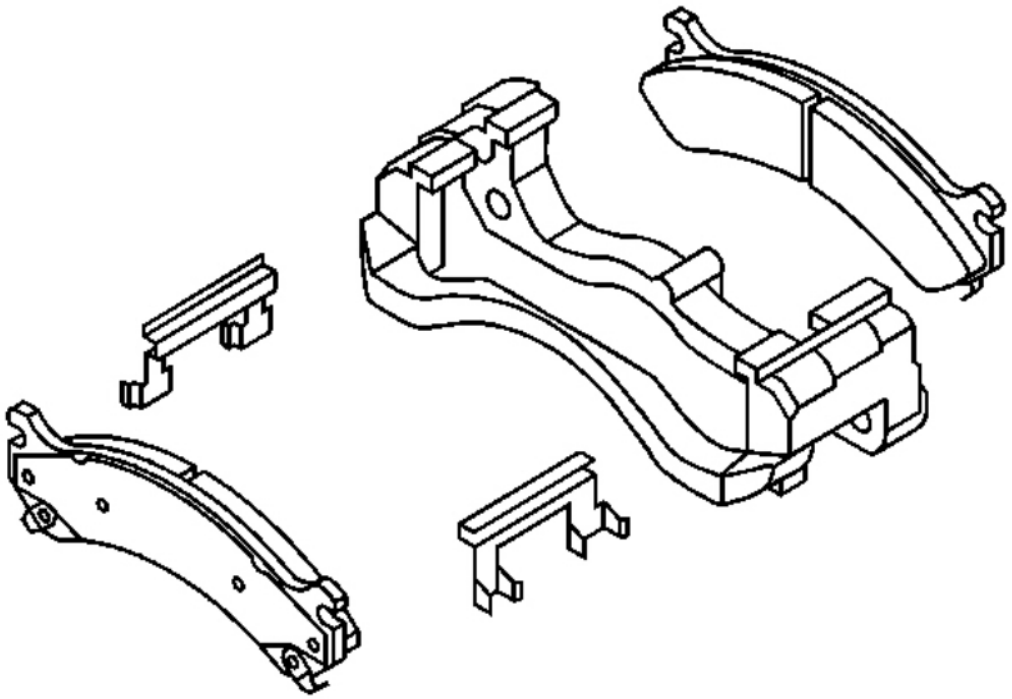

Fig. 68: View Of Disc Brake Pads & Brake Caliper Mounting Bracket
Courtesy of GENERAL MOTORS CORP.

3. Perform the following procedure before installing the 2 brake caliper mounting bracket bolts.
   - Remove all traces of the original adhesive patch.
   - Clean the threads of the bolts with brake parts cleaner or the equivalent and allow to dry.
   - Apply Threadlocker GM P/N 12345493 (Canadian P/N 10953488) to the threads of the bolts.

NOTE: **Refer to Fastener Notice in Cautions and Notices.**

4. Install the brake caliper mounting bracket and the 2 brake caliper mounting bracket bolts.

   Tighten: Tighten the 2 brake caliper mounting bracket bolts to 200 N.m (148 lb ft).

cardiagn.com

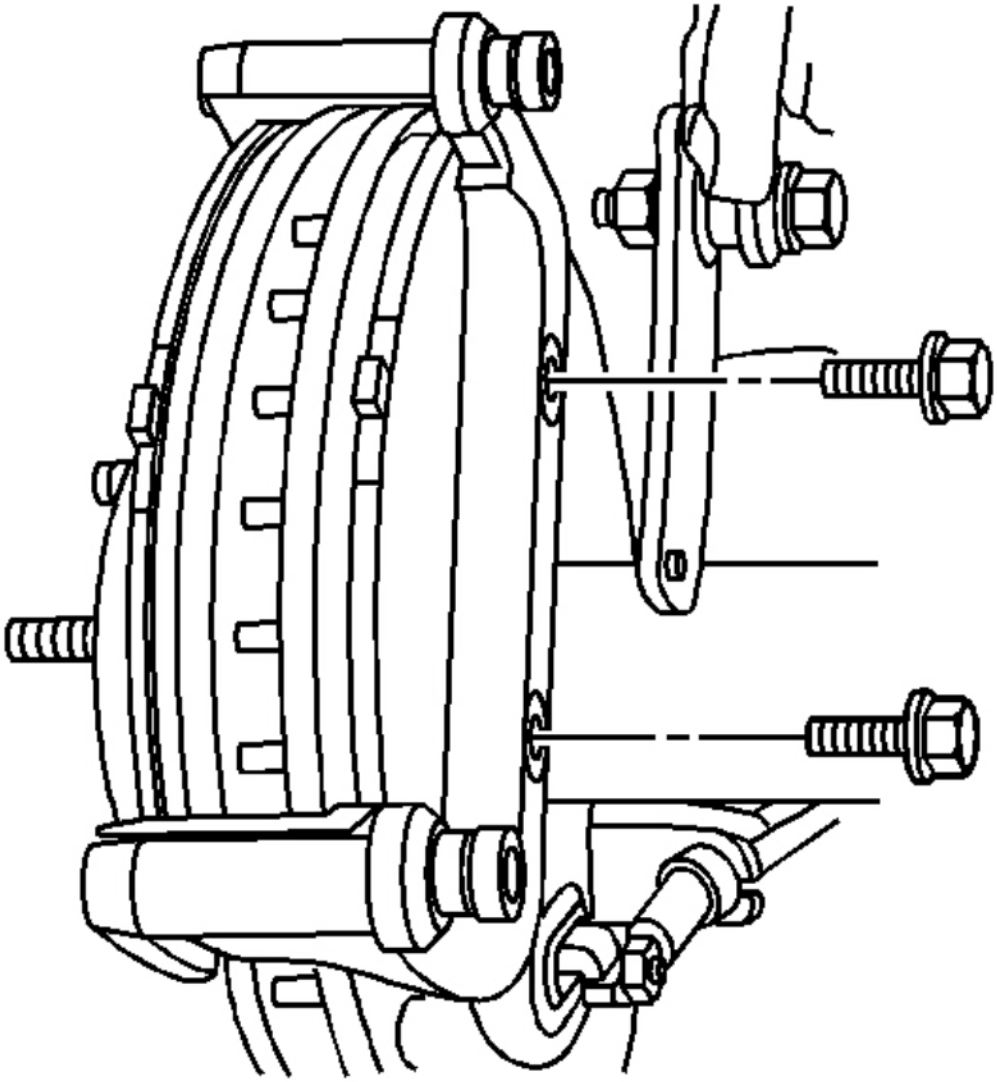

Fig. 69: View Of Brake Caliper Mounting Bracket Bolts - Rear (W/NYS)
Courtesy of GENERAL MOTORS CORP.

5. Perform the following procedure before installing the 2 brake caliper mounting bolts.
   - Remove all traces of the original adhesive patch.
   - Clean the threads of the bolts with brake parts cleaner or the equivalent and allow to dry.
   - Apply Threadlocker GM P/N 12345493 (Canadian P/N 10953488) to the threads of the bolts.
6. Install the brake caliper to the brake caliper mounting bracket.

cardiagn.com

NOTE: **Refer to Fastener Notice in Cautions and Notices.**

7. Install the 2 brake caliper mounting bolts.

   Tighten: Tighten the 2 brake caliper mounting bolts to 42 N.m (31 lb ft).

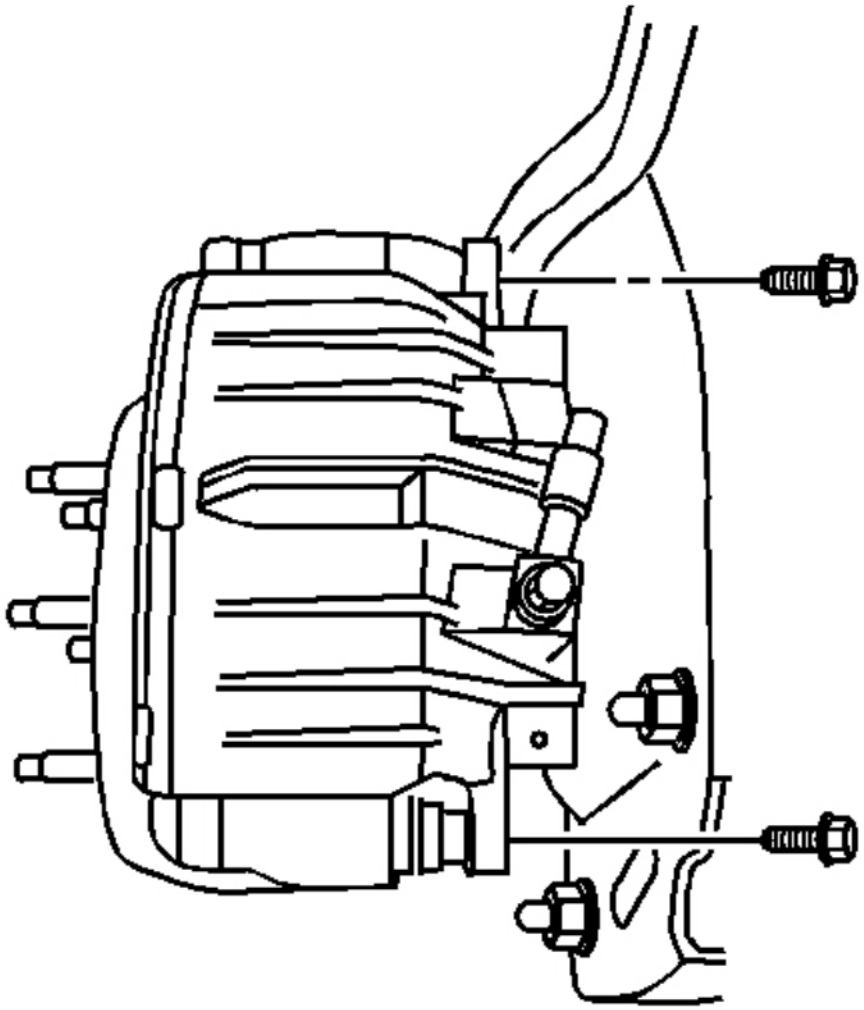

Fig. 70: View Of Caliper Guide Pin Bolts - Rear
Courtesy of GENERAL MOTORS CORP.

8. Install the quarter shaft shield.

cardiagn.com

9. Install the quarter shaft shield nut and the bolt.

   Tighten: Tighten the quarter shaft shield nut and the bolt to 25 N.m (18 lb ft).

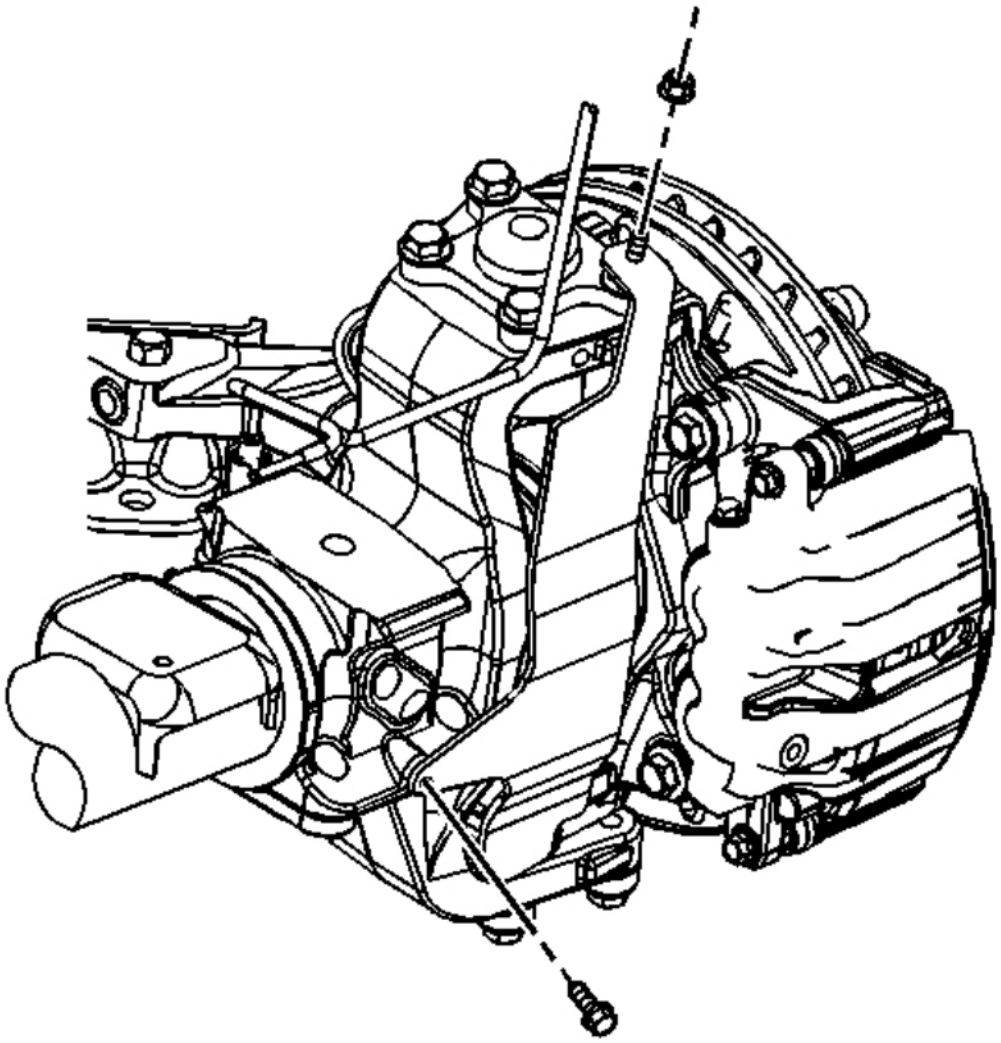

Fig. 71: View Of Quarter Shaft Shield, Nut & Bolt
Courtesy of GENERAL MOTORS CORP.

10. Install the tire and wheel assembly. Refer to **Tire and Wheel Removal and Installation** in Tires and Wheels.
11. Lower the vehicle.

cardiagn.com

12. With the engine OFF gradually apply the brake pedal to approximately 2/3 of it's travel distance.
13. Slowly release the brake pedal.
14. Wait 15 seconds then repeat steps 13, 14 and 15 until a firm pedal is obtained. This will properly seat the brake caliper pistons and brake pads.

BRAKE ROTOR REPLACEMENT - FRONT

CAUTION: Refer to Brake Dust Caution in Cautions and Notices.

Tools Required

- **J 41013** Rotor Resurfacing Kit. See **Special Tools and Equipment**.
- **J 42450-A** Wheel Hub Resurfacing Kit

Removal Procedure

NOTE: Any new rotor must have the protective coating removed from the friction surfaces before being placed in service. Remove the protective coating using denatured alcohol or an equivalent, and wipe the surface clean with clean cloths. Do not use gasoline, kerosene, or other oil base solvents which may leave an oily residue. This residue is damaging to the brake lining and is flammable.

1. Raise and suitably support the vehicle. Refer to **Lifting and Jacking the Vehicle** in General Information.
2. Remove the tire and wheel assembly. Refer to **Tire and Wheel Removal and Installation** in Tires and Wheels.
3. Mark the relationship of the rotor to the hub.
4. Install a C-clamp over the body of the brake caliper, with the C-clamp ends against the rear of the caliper body and the outboard disc brake pad.
5. Slowly tighten the C-clamp until the pistons are pushed into the caliper bores enough to remove the caliper from the pads.
6. Remove the C-clamp from the caliper.

cardiagn.com

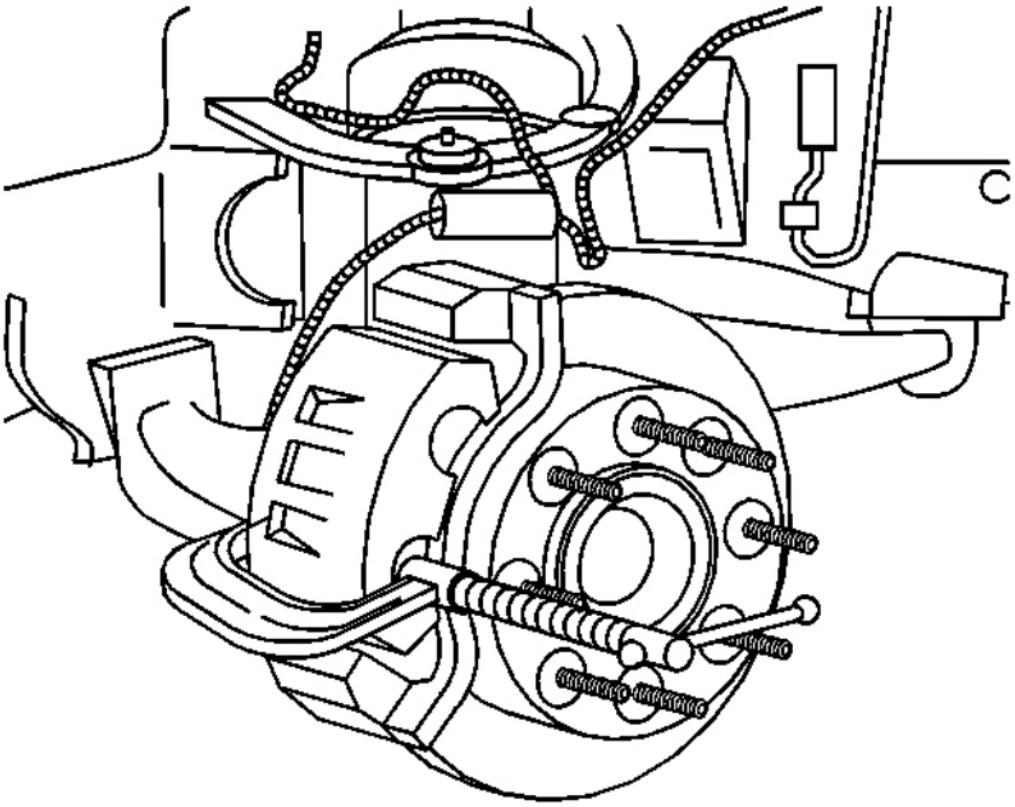

Fig. 72: Compressing Brake Caliper Pistons
Courtesy of GENERAL MOTORS CORP.

7. Remove the 2 brake caliper bracket mounting bolts.

NOTE: **Support the brake caliper with heavy mechanic's wire, or equivalent, whenever it is separated from its mount and the hydraulic flexible brake hose is still connected. Failure to support the caliper in this manner will cause the flexible brake hose to bear the weight of the caliper, which may cause damage to the brake hose and in turn may cause a brake fluid leak.**

8. Remove the brake caliper and brake caliper mounting bracket as an assembly and support with heavy mechanic's wire or equivalent. DO NOT disconnect the hydraulic brake flexible hose from the caliper.
9. Remove the rotor retaining push nuts from the wheel studs, if applicable.
10. It may be necessary to strike the end of the hub or the rotor with a deadblow hammer to separate the rotor from the hub.

cardiagn.com

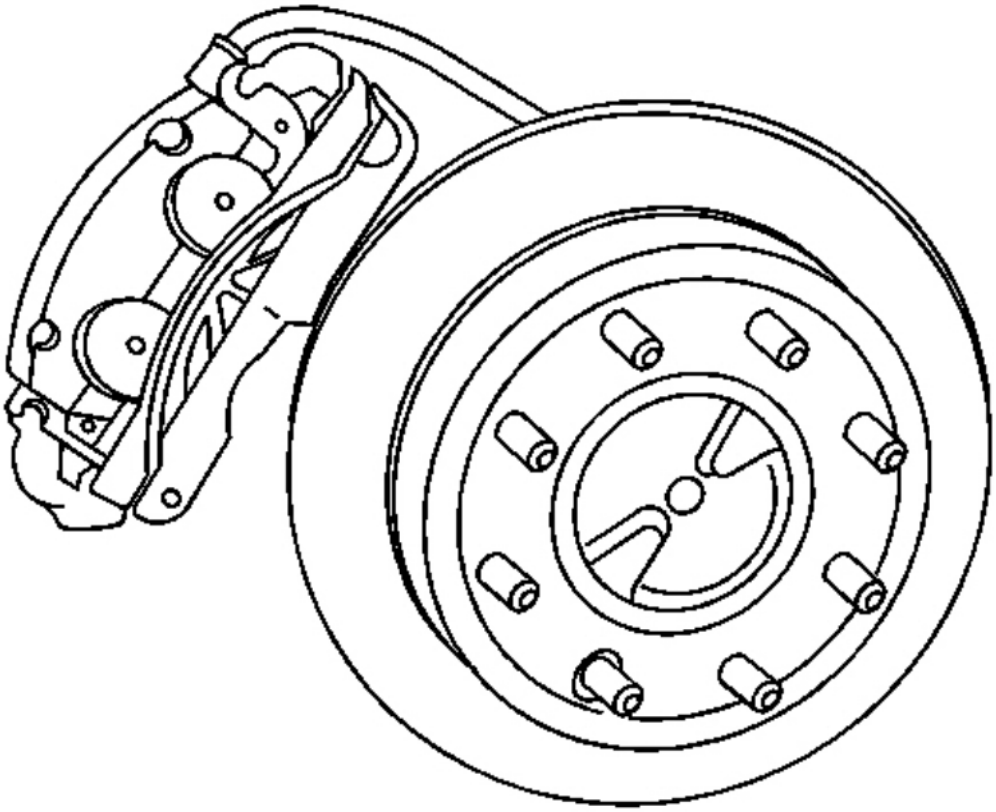

Fig. 73: View Of Brake Caliper & Brake Caliper Bracket
Courtesy of GENERAL MOTORS CORP.

11. Remove the rotor.
12. If the rotor is difficult to remove due to corrosion in the hub area use the following procedure to remove the rotor.
    - Clean all the surface areas and the threaded holes of contamination.
    - Generously apply penetrating oil or the equivalent to the hub/rotor area.
    - Insert (2) M10 x 1.5 bolts into the threaded holes of the rotor.
    - Tighten both bolts evenly to force the rotor from the hub.

cardiagn.com

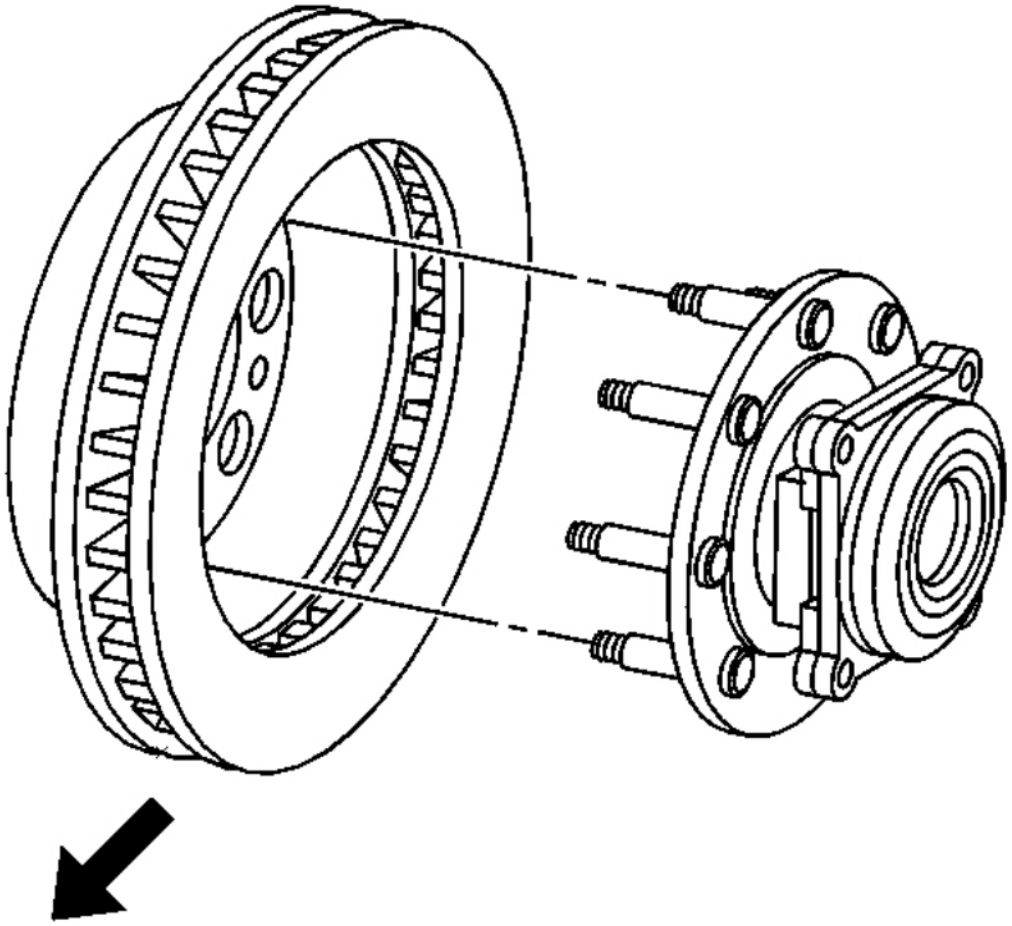

Fig. 74: View Of Front Brake Rotor And Hub
Courtesy of GENERAL MOTORS CORP.

Installation Procedure

IMPORTANT: Whenever the brake rotor has been separated from the hub/axle flange, any rust or contaminants should be cleaned from the hub/axle flange and the brake rotor mating surfaces. Failure to do this may result in excessive assembled lateral runout (LRO) of the brake rotor, which could lead to brake pulsation.

1. Use the **J 42450-A** to clean all rust and contaminants from the mating surface of the hub flange.
2. Use the **J 41013** to clean all rust and contaminants from the inside diameter of the hat section of the brake rotor to prevent any foreign material from getting between the brake rotor and the hub flange.

cardiagn.com

3. Inspect the mating surfaces of the hub/axle flange and the rotor to ensure that there are no foreign particles or debris remaining.

IMPORTANT: If the rotor was removed using the jack screw method you must ensure that the hub flange is free of nicks or marks caused by this procedure. Remove all raised nicks or marks before installing the rotor.

4. Align the rotor to its original position on the hub, if applicable, and install the rotor.

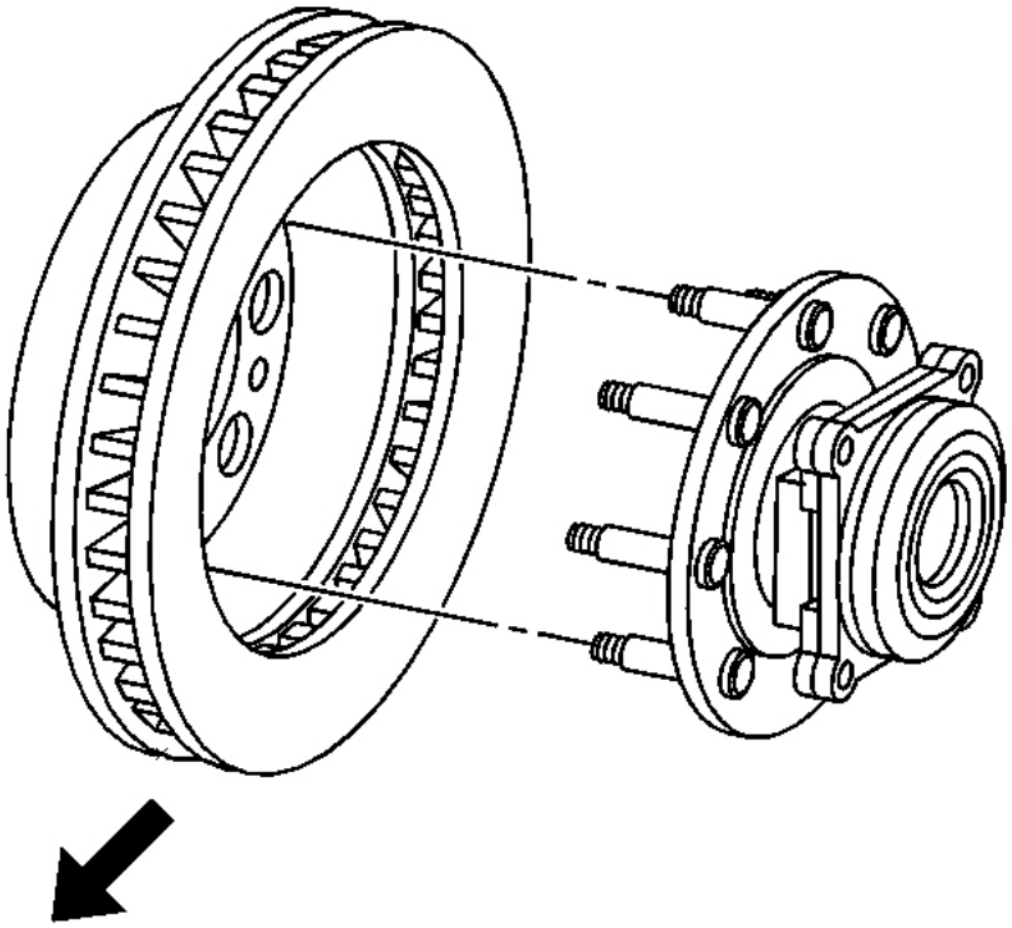

Fig. 75: View Of Front Brake Rotor And Hub
Courtesy of GENERAL MOTORS CORP.

5. If the brake rotor was removed and installed as part of a brake system repair, measure the assembled lateral runout (LRO) of the brake rotor to ensure optimum performance of the disc brakes. Refer to **Brake**

cardiagn.com

Rotor Assembled Lateral Runout (LRO) Measurement.

6. If the brake rotor assembled LRO measurement exceeds the specification, bring the LRO to within specifications. Refer to **Brake Rotor Assembled Lateral Runout (LRO) Correction**.
7. Install the caliper and caliper mounting bracket assembly.
8. Perform the following procedure before installing the brake caliper bracket mounting bolts.
   - Remove all traces of the original adhesive patch.
   - Clean the threads of the bolt with brake parts cleaner or the equivalent and allow to dry.
   - Apply Threadlocker GM P/N 12345493 (Canadian P/N 10953488) to the threads of the bolt.

NOTE: Refer to Fastener Notice in Cautions and Notices.

9. Install the 2 caliper bracket mounting bolts.

Tighten:

- Tighten the brake caliper bracket mounting bolts to 175 N.m (121 lb ft) (15 Series).
- Tighten the brake caliper bracket mounting bolts to 300 N.m (221 lb ft) (25 Series).

cardiagn.com

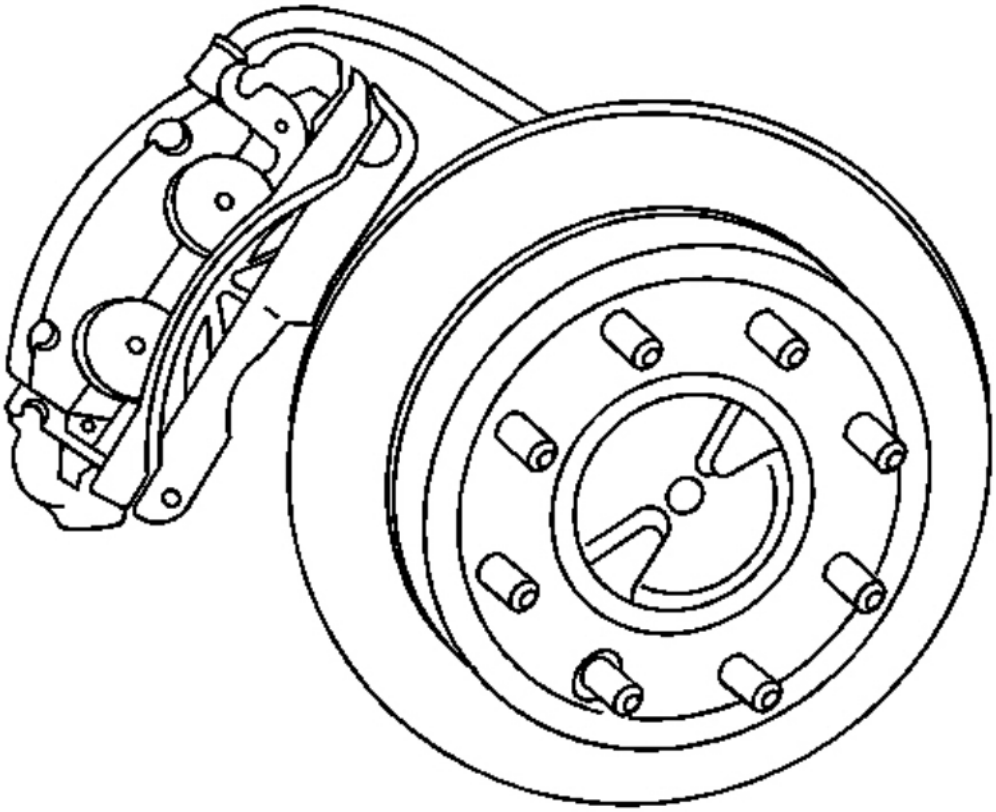

Fig. 76: View Of Brake Caliper & Brake Caliper Bracket
Courtesy of GENERAL MOTORS CORP.

10. Install the tire and wheel assembly. Refer to **Tire and Wheel Removal and Installation** in Tires and Wheels.
11. Lower the vehicle.
12. With the engine OFF, gradually apply the brake pedal to approximately 2/3 of its travel distance.
13. Slowly release the brake pedal.
14. Wait 15 seconds, then repeat steps 12-13 until a firm pedal is obtained. This will properly seat the brake caliper pistons and brake pads.
15. Fill the master cylinder reservoir to the proper level with clean brake fluid. Refer to **Master Cylinder Reservoir Filling** in Hydraulic Brakes.

BRAKE ROTOR REPLACEMENT - REAR (W/NYS)

cardiagn.com

Tools Required

- **J 41013** Rotor Resurfacing Kit. See **Special Tools and Equipment**.
- **J 42450-A** Wheel Hub Resurfacing Kit.

CAUTION: Refer to Brake Dust Caution in Cautions and Notices.

Removal Procedure

1. Release the park brake.
2. Raise and suitably support the vehicle. Refer to **Lifting and Jacking the Vehicle** in General Information.
3. Remove the tire and wheel assembly. Refer to **Tire and Wheel Removal and Installation** in Tires and Wheels.
4. Mark the relationship of the rotor to the hub.
5. Install a C-clamp over the body of the brake caliper, with the C-clamp ends against the rear of the caliper body and the outboard disc brake pad.
6. Slowly tighten the C-clamp until the pistons are pushed into the caliper bores enough to remove the caliper from the pads.
7. Remove the C-clamp from the caliper.

cardiagn.com

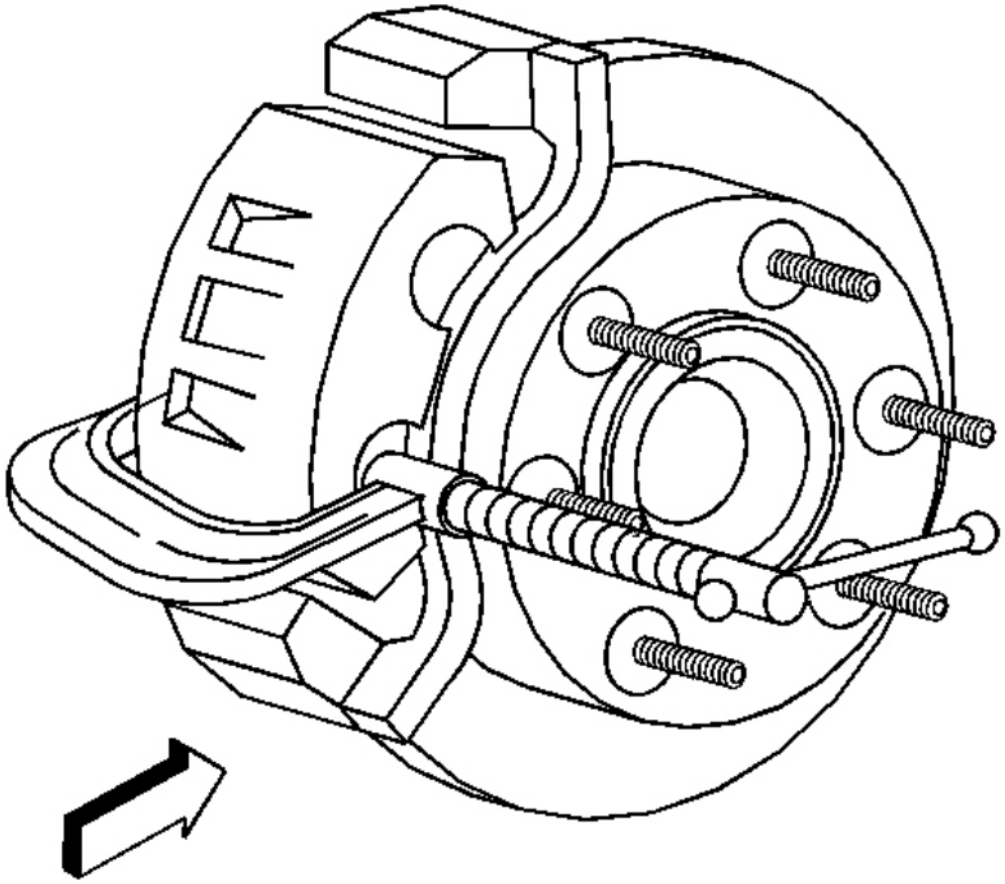

Fig. 77: Installing C-Clamp Over Brake Caliper - Rear (W/NYS)
Courtesy of GENERAL MOTORS CORP.

8. Remove the nut and the bolt from the quarter shaft shield.
9. Remove the shield.

cardiagn.com

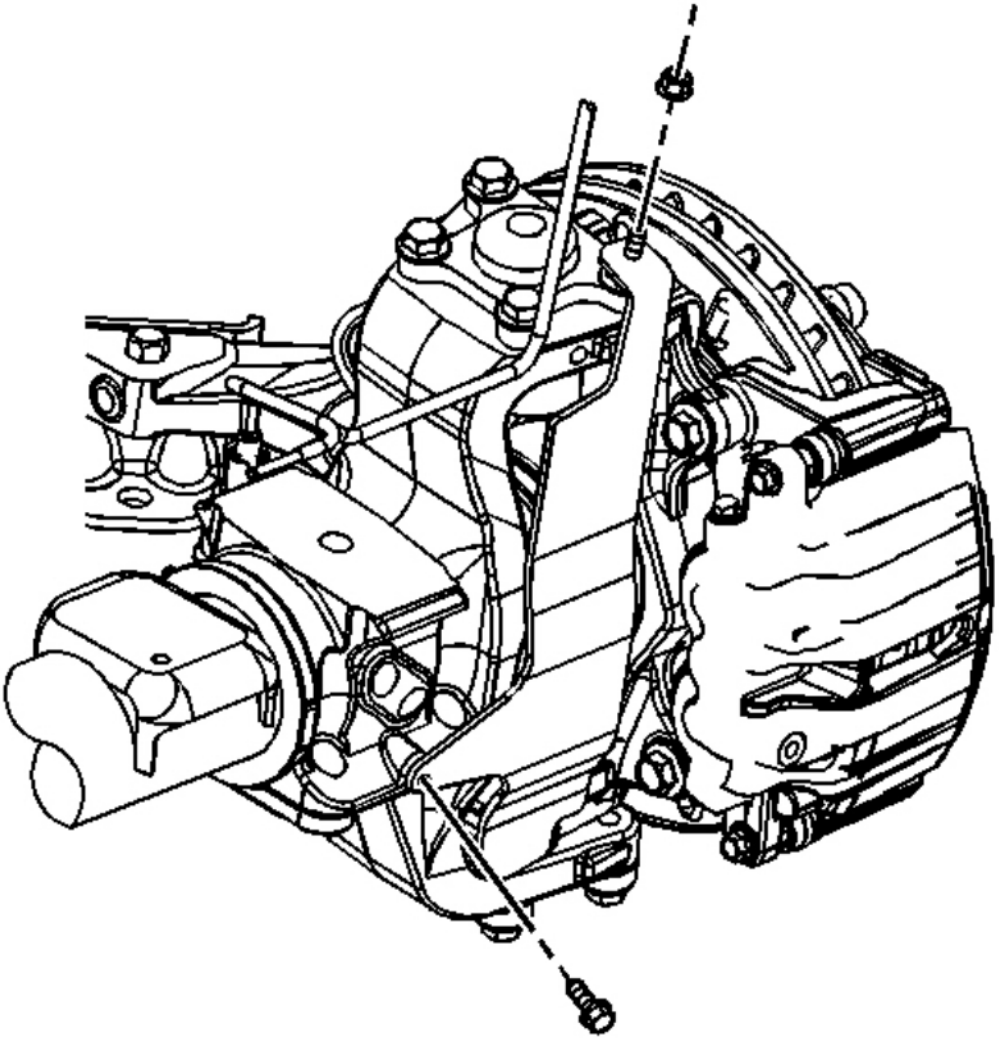

Fig. 78: View Of Quarter Shaft Shield, Nut & Bolt
Courtesy of GENERAL MOTORS CORP.

10. Remove the 2 brake caliper bracket mounting bolts.

cardiagn.com

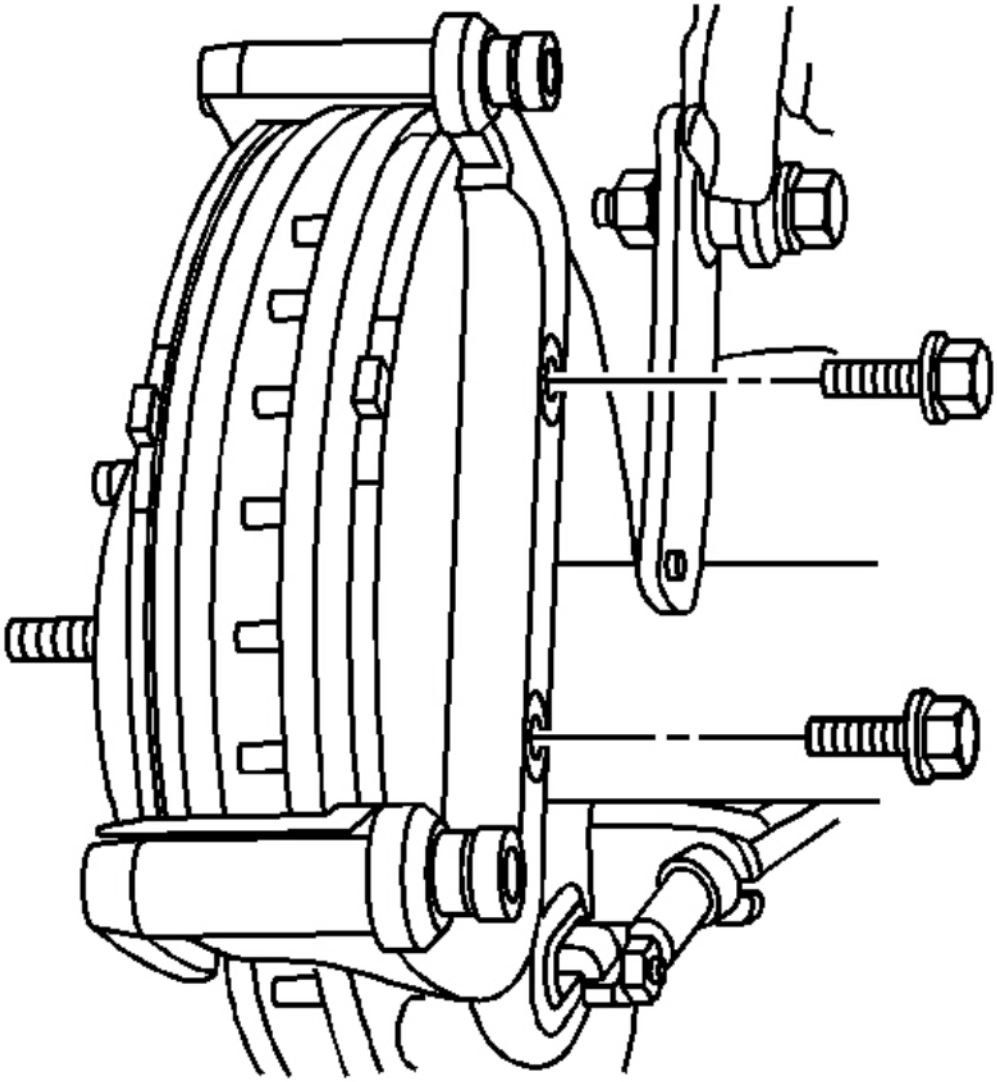

Fig. 79: View Of Brake Caliper Mounting Bracket Bolts - Rear (W/NYS)
Courtesy of GENERAL MOTORS CORP.

11. Mark the relationship of the rotor to the hub.

NOTE: **Support the brake caliper with heavy mechanic's wire, or equivalent, whenever it is separated from its mount and the hydraulic flexible brake hose is still connected. Failure to support the caliper in this manner will cause the flexible brake hose to bear the weight of the caliper, which may**

cardiagn.com

cause damage to the brake hose and in turn may cause a brake fluid leak.

12. Remove the brake caliper and brake caliper mounting bracket as an assembly and support with heavy mechanic's wire or equivalent. DO NOT disconnect the hydraulic brake flexible hose from the caliper.
13. Remove the rotor retaining push nuts from the wheel studs, if applicable.
14. It may be necessary to strike the end of the hub or the rotor with a deadblow hammer to separate the rotor from the hub.
15. Remove the rotor by slowly turning the rotor while pulling the rotor away from the axle.

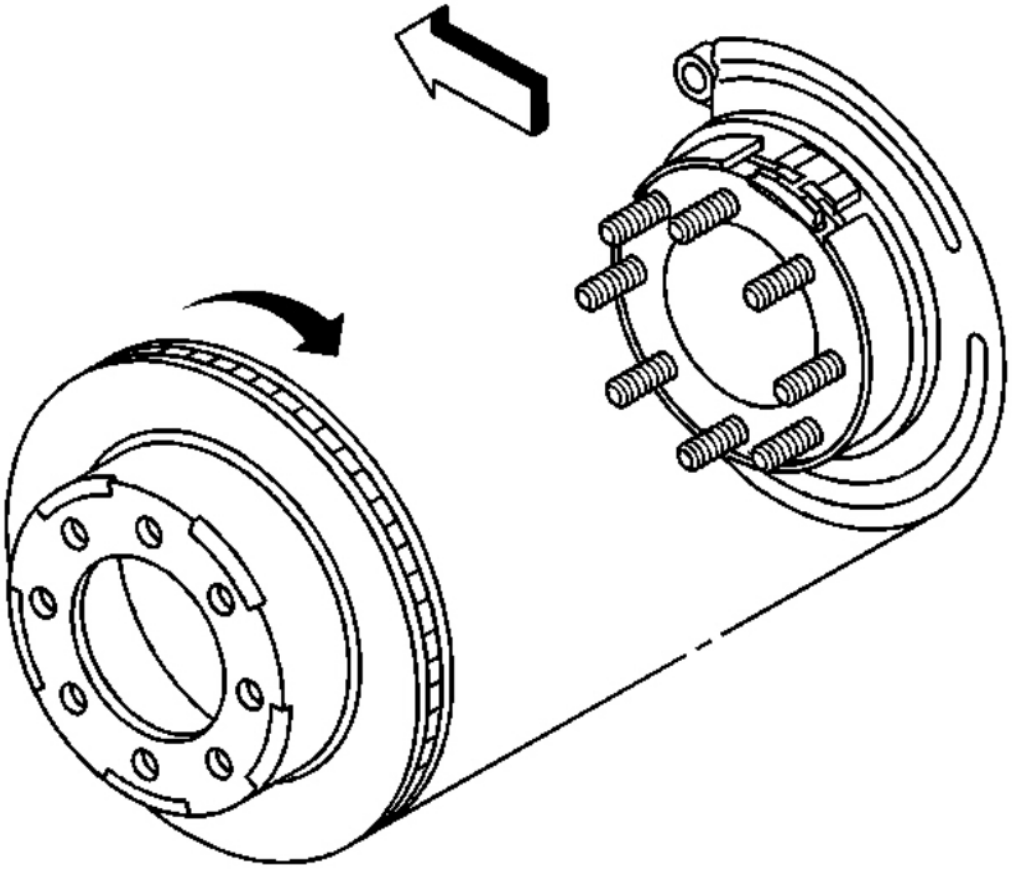

Fig. 80: View Of Rear Brake Rotor
Courtesy of GENERAL MOTORS CORP.

Installation Procedure

cardiagn.com

IMPORTANT: Whenever the brake rotor has been separated from the hub/axle flange, any rust or contaminants should be cleaned from the hub/axle flange and the brake rotor mating surfaces. Failure to do this may result in excessive assembled lateral runout (LRO) of the brake rotor, which could lead to brake pulsation.

1. Use the **J 42450-A** to clean all rust and contaminants from the mating surface of the hub flange.
2. Use the **J 41013** to clean all rust and contaminants from the inside diameter of the hat section of the brake rotor to prevent any foreign material from getting between the brake rotor and the hub flange.
3. Inspect the mating surfaces of the hub/axle flange and the rotor to ensure that there are no foreign particles or debris remaining.
4. Align the rotor to its original position on the hub, if applicable.
5. Install the rotor by slowly turning the rotor while pushing the rotor towards the axle.

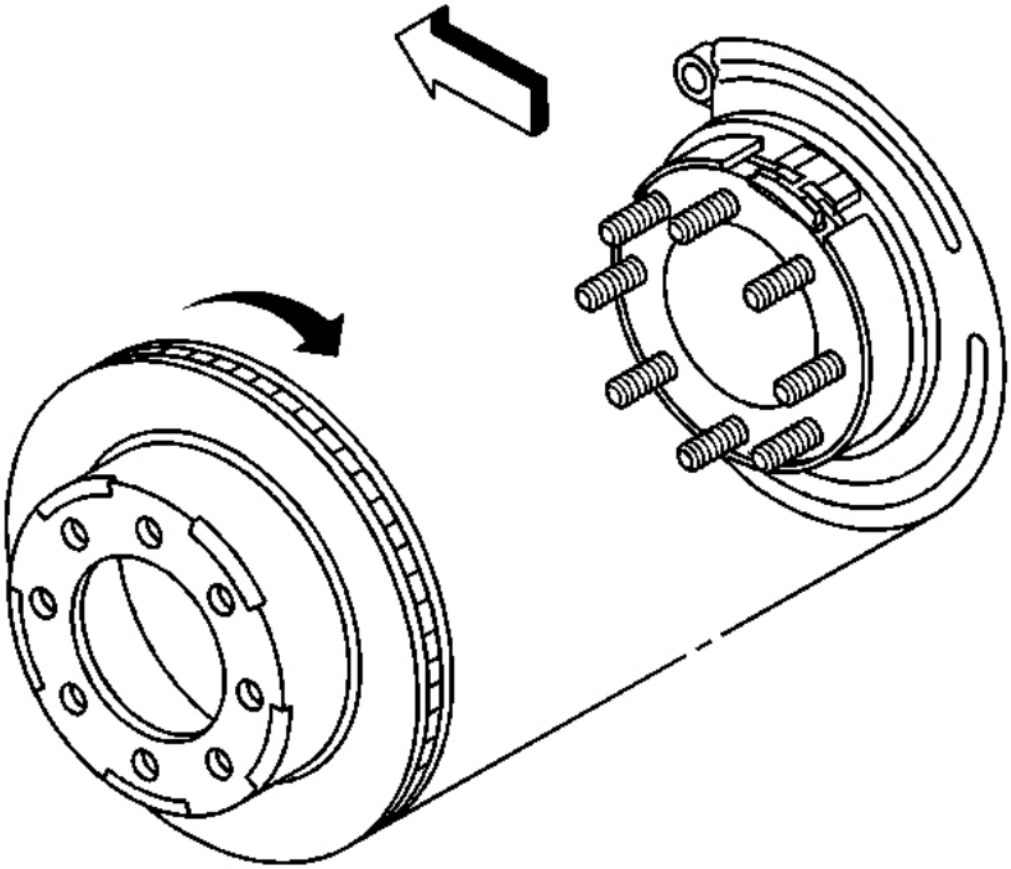

cardiagn.com

Fig. 81: View Of Rear Brake Rotor
Courtesy of GENERAL MOTORS CORP.

6. If the brake rotor was removed and installed as part of a brake system repair, measure the assembled lateral runout (LRO) of the brake rotor to ensure optimum performance of the disc brakes. Refer to **Brake Rotor Assembled Lateral Runout (LRO) Measurement**.
7. If the brake rotor assembled LRO measurement exceeds the specification, bring the LRO to within specifications. Refer to **Brake Rotor Assembled Lateral Runout (LRO) Correction**.
8. Install the brake caliper and the brake caliper mounting bracket as an assembly to the vehicle.
9. Perform the following procedure before installing the 2 brake caliper bracket mounting bolts.
    1. Remove all traces of the original adhesive patch.
    2. Clean the threads of the bolts with brake parts cleaner or the equivalent and allow to dry.
    3. Apply Threadlocker GM P/N 12345493 (Canadian P/N 10953488) to the threads of the bolts.

NOTE: Refer to Fastener Notice in Cautions and Notices.

10. Install the brake caliper bracket mounting bolts.

    Tighten: Tighten the brake caliper bracket mounting bolts to 200 N.m (148 lb ft).

cardiagn.com

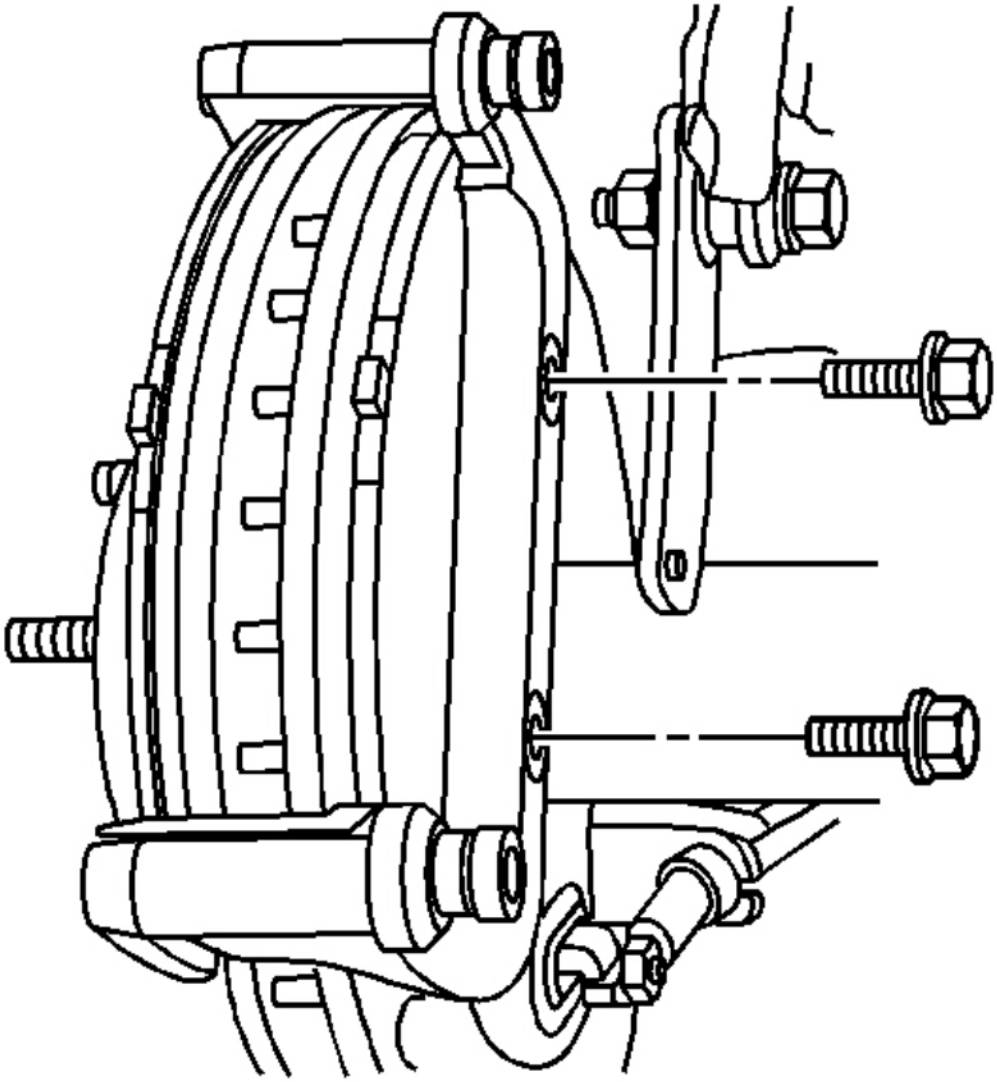

Fig. 82: View Of Brake Caliper Mounting Bracket Bolts - Rear (W/NYS)
Courtesy of GENERAL MOTORS CORP.

11. Install the quarter shaft shield.
12. Install the quarter shaft shield nut and the bolt.

Tighten: Tighten the quarter shaft shield nut and the bolt to 25 N.m (18 lb ft).

cardiagn.com

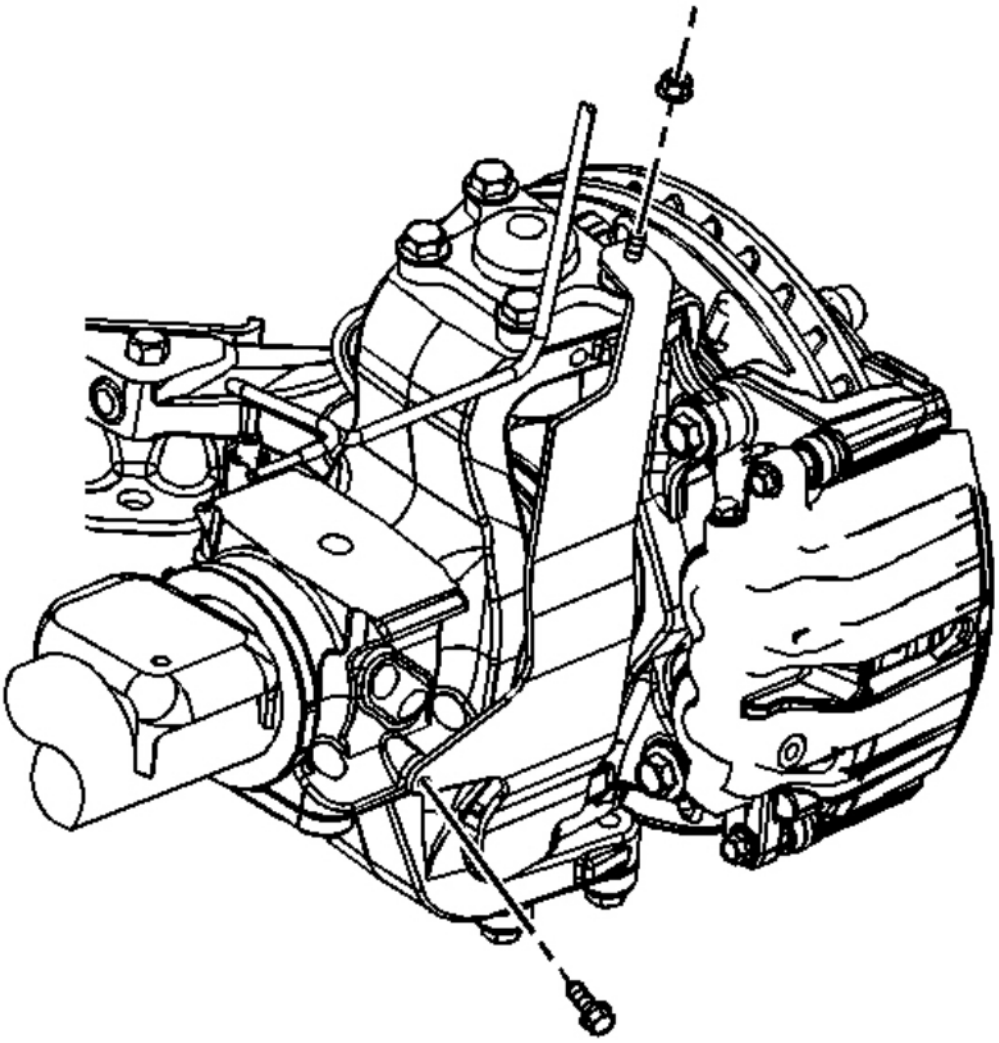

Fig. 83: View Of Quarter Shaft Shield, Nut & Bolt
Courtesy of GENERAL MOTORS CORP.

13. Install the tire and wheel assembly. Refer to **Tire and Wheel Removal and Installation** in Tires and Wheels.
14. Lower the vehicle.
15. With the engine OFF gradually apply the brake pedal to approximately 2/3 of it's travel distance.
16. Slowly release the brake pedal.
17. Wait 15 seconds then repeat steps 15-16 until a firm pedal is obtained. This will properly seat the brake

cardiagn.com

caliper pistons and brake pads.

BRAKE ROTOR REPLACEMENT - REAR (W/O NYS)

Tools Required

- **J 2619-01** Slide Hammer With Adapter. See **Special Tools and Equipment**.
- **J 41013** Rotor Resurfacing Kit
- **J 42450-A** Wheel Hub Resurfacing Kit
- **J-46277** Rotor Removal Tool

CAUTION: Refer to Brake Dust Caution in Cautions and Notices.

Removal Procedure

1. Release the park brake.
2. Raise and suitably support the vehicle. Refer to **Lifting and Jacking the Vehicle** in General Information.
3. Remove the tire and wheel assembly. Refer to **Tire and Wheel Removal and Installation** in Tires and Wheels.
4. Mark the relationship of the rotor to the axle flange.
5. Install a C-clamp over the body of the brake caliper, with the C-clamp ends against the rear of the caliper body and the outboard disc brake pad.
6. Slowly tighten the C-clamp until the pistons are pushed into the caliper bores enough to remove the caliper from the pads.
7. Remove the C-clamp from the caliper.

cardiagn.com

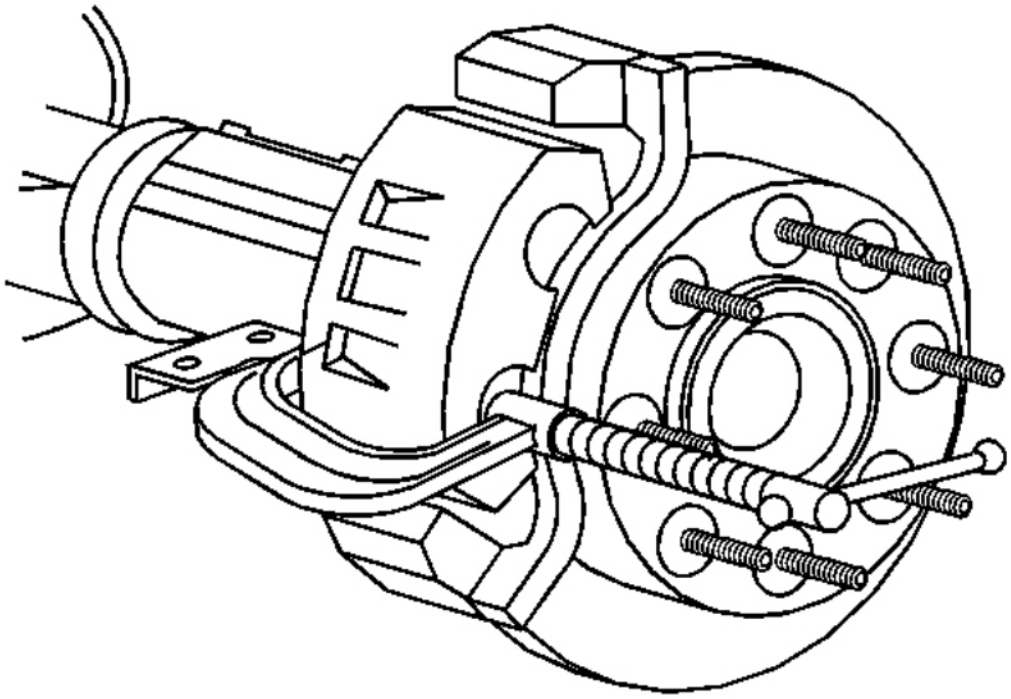

Fig. 84: Installing C-Clamp Over Brake Caliper - Rear
Courtesy of GENERAL MOTORS CORP.

8. Remove the brake caliper bracket mounting bolts.

NOTE: **Support the brake caliper with heavy mechanic's wire, or equivalent, whenever it is separated from its mount and the hydraulic flexible brake hose is still connected. Failure to support the caliper in this manner will cause the flexible brake hose to bear the weight of the caliper, which may cause damage to the brake hose and in turn may cause a brake fluid leak.**

9. Remove the brake caliper and brake caliper bracket as an assembly and support with heavy mechanic's wire or equivalent. DO NOT disconnect the hydraulic brake flexible hose from the caliper.

cardiagn.com

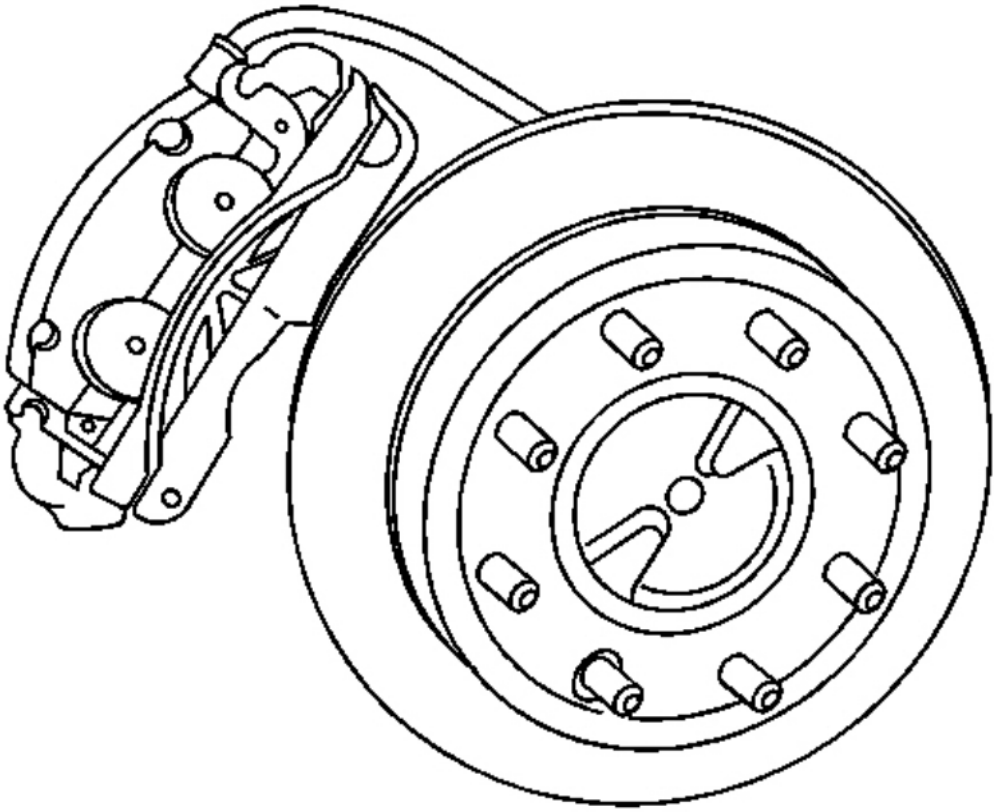

Fig. 85: View Of Brake Caliper & Brake Caliper Bracket
Courtesy of GENERAL MOTORS CORP.

10. Remove the rotor retaining push nuts from the wheel studs, if applicable.
11. It may be necessary to strike the end of the hub or the rotor with a deadblow hammer to separate the rotor from the hub.
12. Remove the brake rotor. Do not force the rotor off. If the rotor is difficult to remove, ease it off by gently rotating it as you pull outward.

cardiagn.com

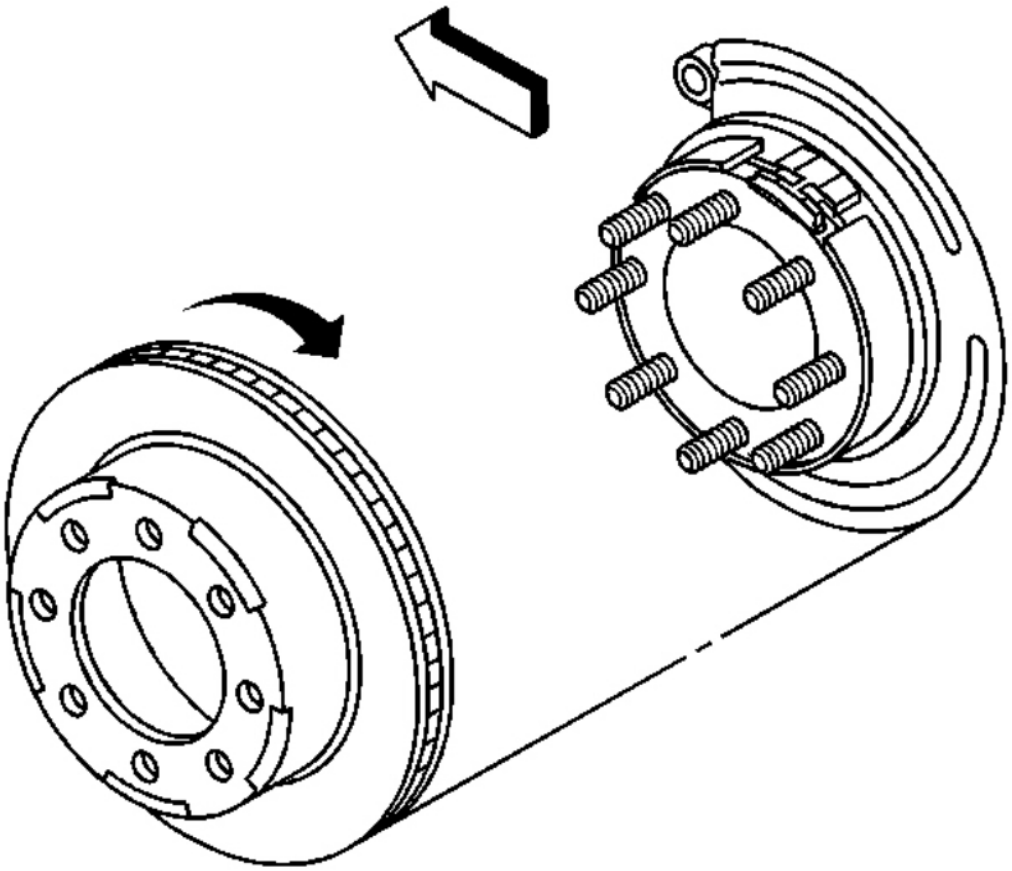

Fig. 86: View Of Rear Brake Rotor
Courtesy of GENERAL MOTORS CORP.

13. If the brake rotor cannot be removed perform the following:
    - Assemble **J-46277** to **J 2619-01** .
    - Insert **J-46277** between the rotor friction surfaces in the vent section of the rotor. DO NOT place the **J-46277** on the rotor friction surface.
    - Using **J-46277** and **J 2619-01** remove the rotor from the hub assembly.

cardiagn.com

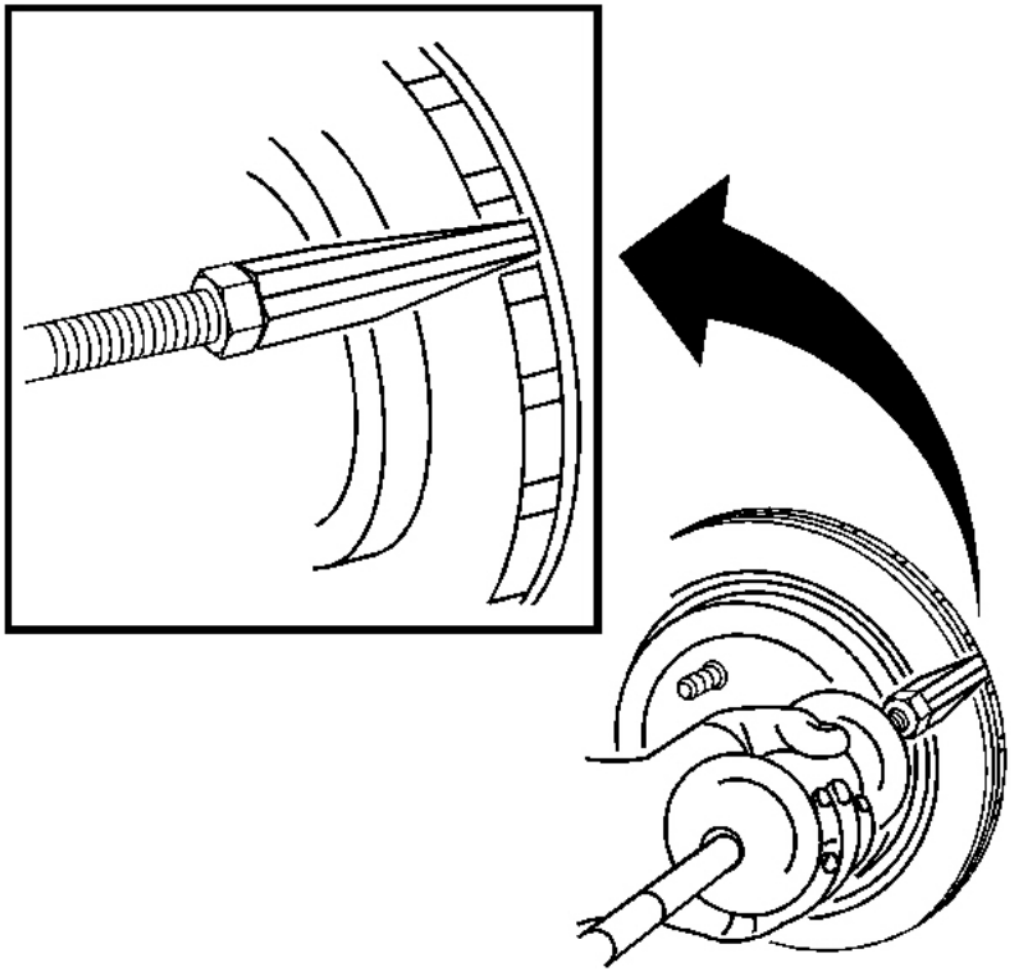

Fig. 87: View Of Rotor From Hub Assembly Removal Using J-46277 & J 2619-01
Courtesy of GENERAL MOTORS CORP.

- Inspect the park brake components for the following conditions:
  - Bent or broken hold down spring
  - Broken, cracked or worn brake shoe lining
  - Bent or damaged brake shoe
  - Worn, bent or damaged backing plate
- If any of these conditions are found replace the affected parts.

Installation Procedure

cardiagn.com

IMPORTANT: Whenever the brake rotor has been separated from the hub/axle flange, any rust or contaminants should be cleaned from the hub/axle flange and the brake rotor mating surfaces. Failure to do this may result in excessive assembled lateral runout (LRO) of the brake rotor, which could lead to brake pulsation.

1. Use the **J 42450-A** to clean all rust and contaminants from the mating surface of the hub flange.
2. Use the **J 41013** to clean all rust and contaminants from the inside diameter of the hat section of the brake rotor to prevent any foreign material from getting between the brake rotor and the hub flange.
3. Inspect the mating surfaces of the hub/axle flange and the rotor to ensure that there are no foreign particles or debris remaining.
4. Align the rotor to its original position on the hub, if applicable, and install the rotor by slowly turning the rotor while pushing the rotor towards the axle.

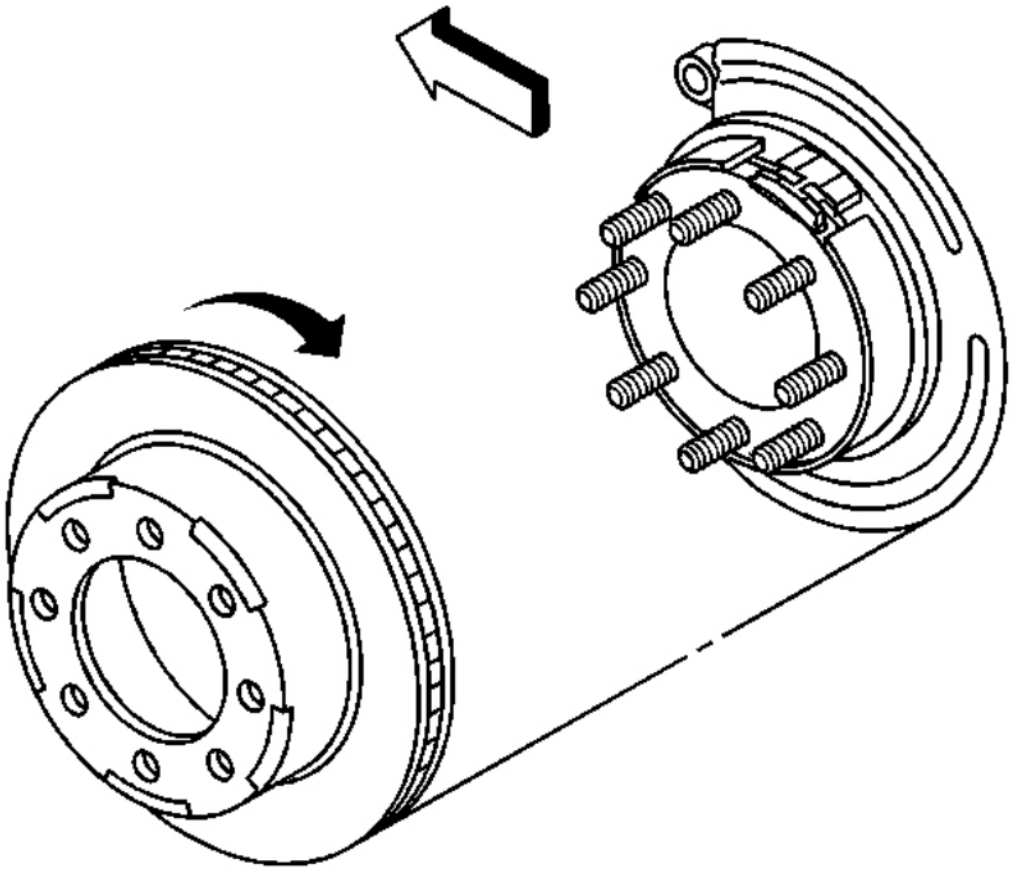

Fig. 88: View Of Rear Brake Rotor

cardiagn.com

Courtesy of GENERAL MOTORS CORP.

5. If the brake rotor was removed and installed as part of a brake system repair, measure the assembled LRO of the brake rotor to ensure optimum performance of the disc brakes. Refer to **Brake Rotor Assembled Lateral Runout (LRO) Measurement**.
6. If the brake rotor assembled LRO measurement exceeds the specification, bring the LRO to within specifications. Refer to **Brake Rotor Assembled Lateral Runout (LRO) Correction**.
7. Install the caliper and the bracket as an assembly to the vehicle.

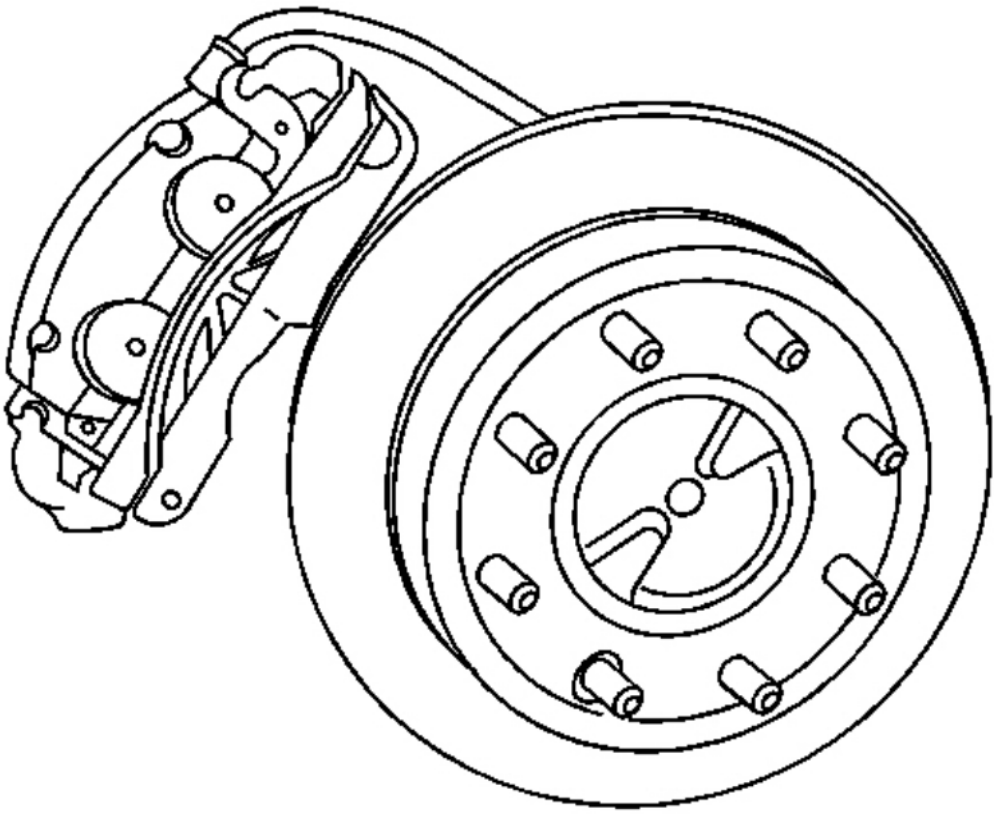

Fig. 89: View Of Brake Caliper & Brake Caliper Bracket
Courtesy of GENERAL MOTORS CORP.

8. Perform the following procedure before installing the caliper bracket mounting bolts.
   1. Remove all traces of the original adhesive patch.
   2. Clean the threads of the bolt with brake parts cleaner or the equivalent and allow to dry.

cardiagn.com

3. Apply threadlocker GM P/N 12345493 (Canadian P/N 10953488) to the threads of the bolt.

NOTE: Refer to Fastener Notice in Cautions and Notices.

9. Install the caliper bracket mounting bolts.

   Tighten:
   - Tighten the brake caliper bracket mounting bolts to 175 N.m (129 lb ft) (15 Series).
   - Tighten the brake caliper bracket mounting bolts to 300 N.m (221 lb ft) (25 Series).

10. Install the tire and wheel assembly. Refer to **Tire and Wheel Removal and Installation** in Tires and Wheels.
11. Lower the vehicle.
12. With the engine OFF, gradually apply the brake pedal to approximately 2/3 of its travel distance.
13. Slowly release the brake pedal.
14. Wait 15 seconds, then repeat steps 12-13 until a firm pedal is obtained. This will properly seat the brake caliper pistons and brake pads.
15. Fill the master cylinder reservoir to the proper level with clean brake fluid. Refer to **Master Cylinder Reservoir Filling** in Hydraulic Brakes.

DISC BRAKE SPLASH SHIELD REPLACEMENT - FRONT

Removal Procedure

CAUTION: Refer to Brake Dust Caution in Cautions and Notices.

1. Raise and support the vehicle. Refer to **Lifting and Jacking the Vehicle** in General Information.
2. Remove the tire and wheel assembly. Refer to **Tire and Wheel Removal and Installation** in Tires and Wheels.
3. Remove the hub and bearing assembly. Refer to **Wheel Hub, Bearing, and Seal Replacement (RWD)** or **Wheel Hub, Bearing, and Seal Replacement (4WD)** in Front Suspension.
4. Remove the splash shield (6) (15 Series).

cardiagn.com

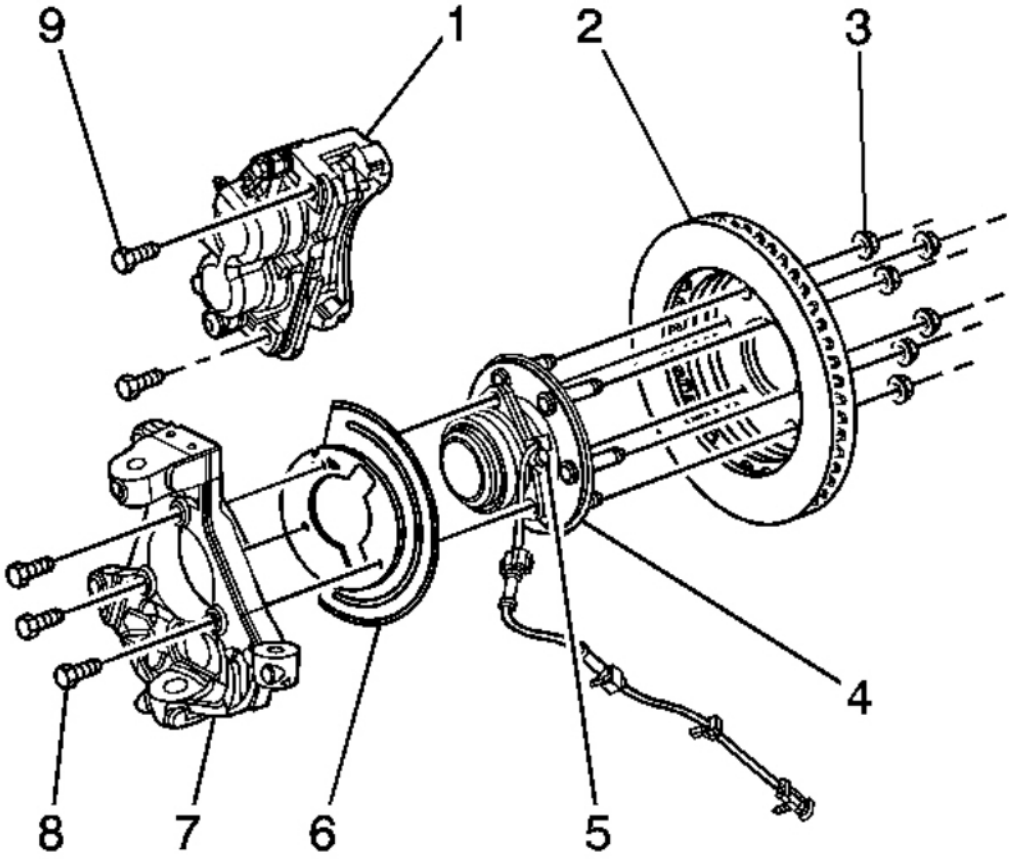

Fig. 90: Exploded View Of Disc Brake Components (15 Series)
Courtesy of GENERAL MOTORS CORP.

5. Remove the splash shield (6) (25 Series).

cardiagn.com

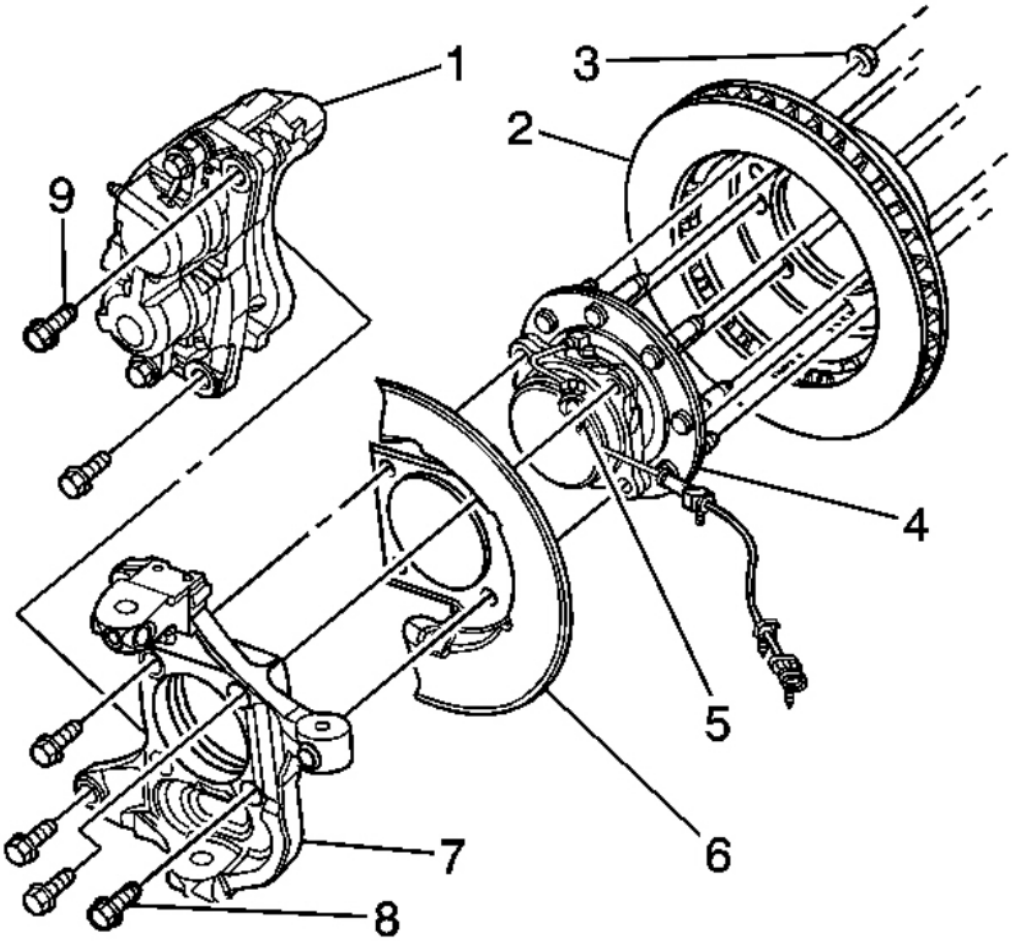

Fig. 91: Exploded View Of Disc Brake Components (25 Series)
Courtesy of GENERAL MOTORS CORP.

Installation Procedure

1. Install the splash shield (6) (25 Series).

cardiagn.com

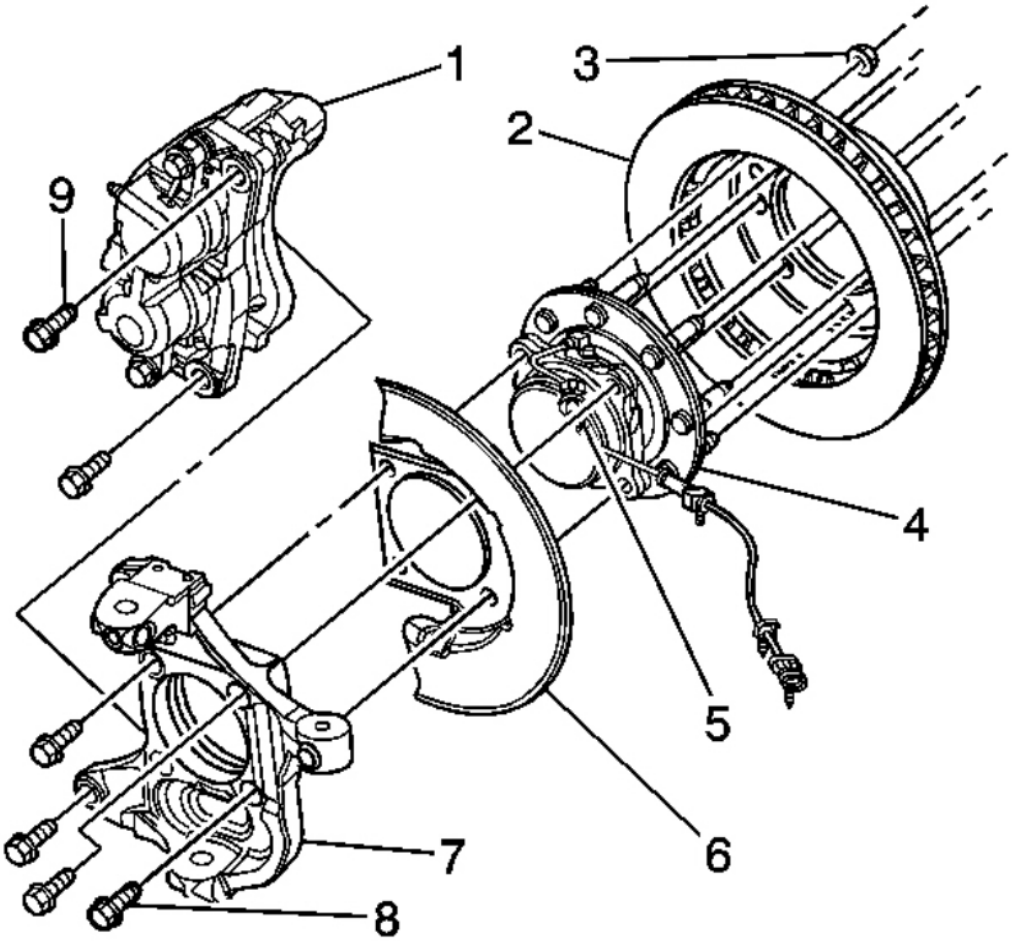

Fig. 92: Exploded View Of Disc Brake Components (25 Series)
Courtesy of GENERAL MOTORS CORP.

2. Install the splash shield (6) (15 Series).

cardiagn.com

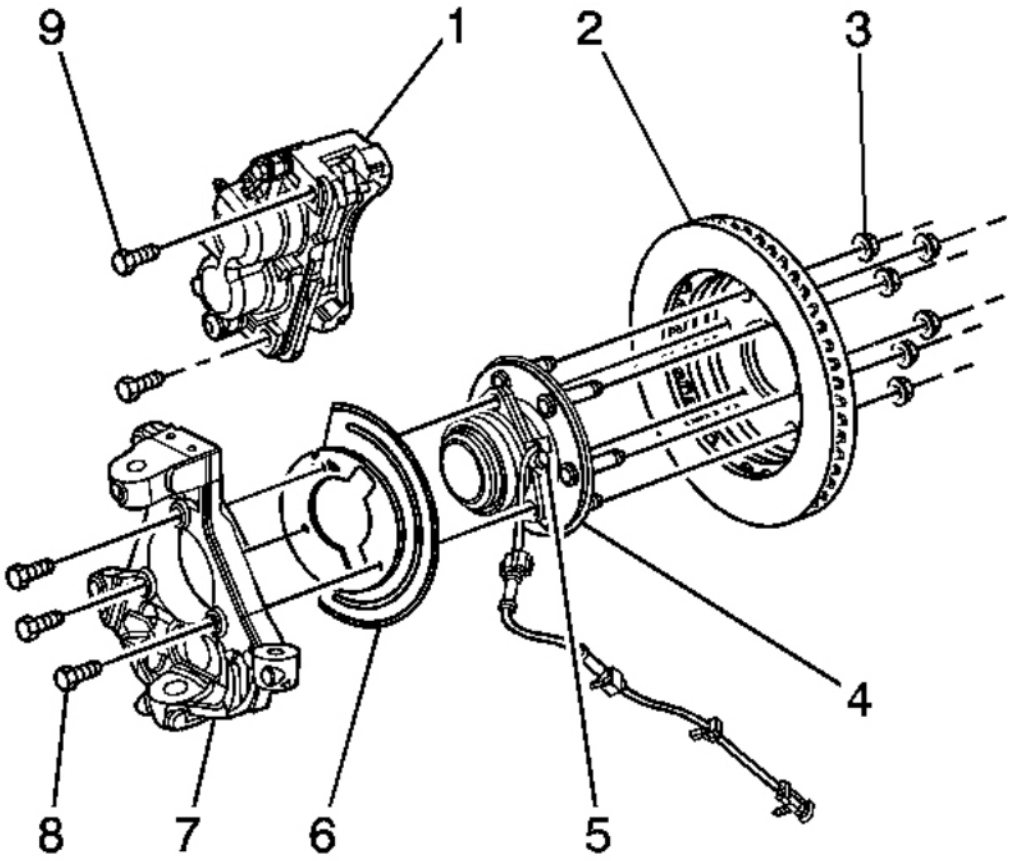

Fig. 93: Exploded View Of Disc Brake Components (15 Series)
Courtesy of GENERAL MOTORS CORP.

3. Install the hub and bearing assembly. Refer to **Wheel Hub, Bearing, and Seal Replacement (RWD)** or **Wheel Hub, Bearing, and Seal Replacement (4WD)** in Front Suspension.
4. Install the tire and wheel assembly. Refer to **Tire and Wheel Removal and Installation** in Tires and Wheels.
5. Remove the safety stands.
6. Lower the vehicle.

DISC BRAKE BACKING PLATE REPLACEMENT - REAR (W/O NYS)

Removal Procedure

CAUTION: Refer to Brake Dust Caution in Cautions and Notices.

cardiagn.com

1. Release the park brake.
2. Raise and support the vehicle. Refer to **Lifting and Jacking the Vehicle** in General Information.
3. Remove the tire and wheel assembly. Refer to **Tire and Wheel Removal and Installation** in Tires and Wheels.
4. Relieve the tension from the park brake cable by pulling down on the cable in front of the equalizer and removing the cable from the equalizer bar.

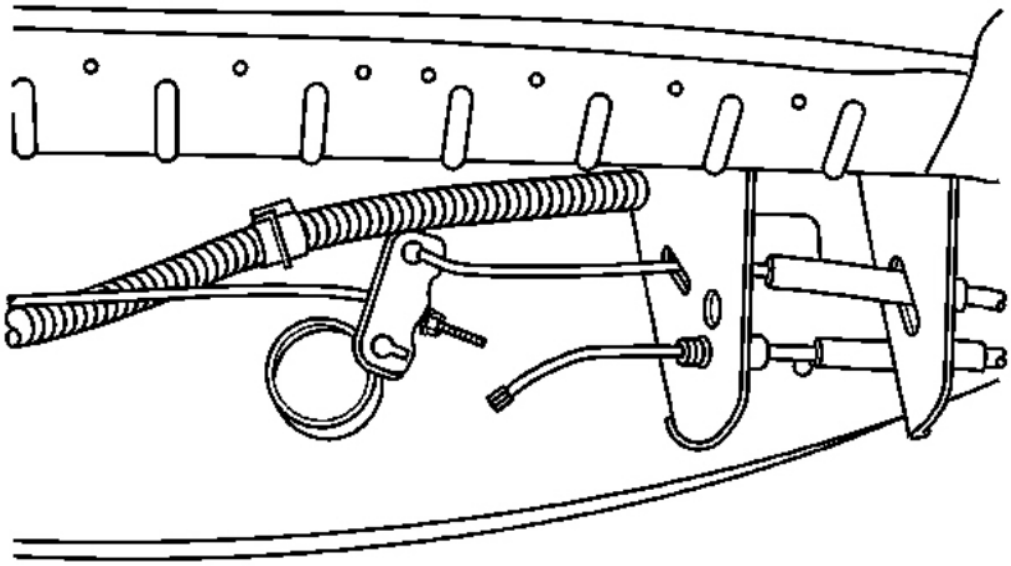

Fig. 94: Equalizer Bar & Park Brake Cable - Rear
Courtesy of GENERAL MOTORS CORP.

5. Remove the park brake cable from the mounting bracket (4) by depressing the locking tabs.
6. Remove the rear park brake cable end (2) from the park brake actuator lever (1).

cardiagn.com

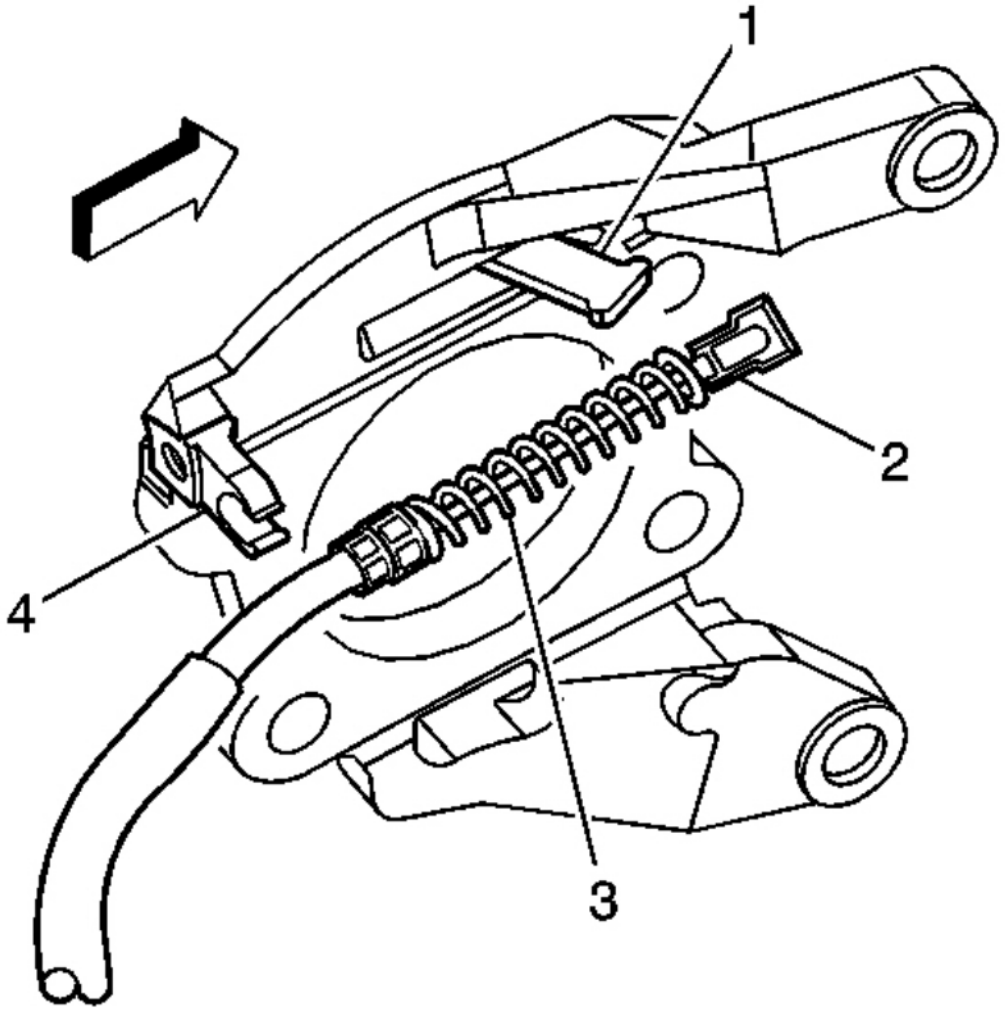

Fig. 95: View Of Lever, Park Brake Cable, Spring & Backing Plate
Courtesy of GENERAL MOTORS CORP.

7. Remove the rotor. Refer to **Brake Rotor Replacement - Rear (W/NYS)** or **Brake Rotor Replacement - Rear (W/O NYS)** in Disc Brakes.
8. Remove the axle shaft. Refer to **Rear Axle Shaft Replacement (8.6 Inch Axle W/O JL4, 9.5 Inch Axle)** or **Rear Axle Shaft Replacement (8.6 Inch Axle W/JL4)** or **Rear Axle Shaft Replacement (9.75 Inch Axle)** in Rear Drive Axle.
9. Remove the park brake shoe. Refer to **Park Brake Shoe Replacement (Except RPO NYS, 25 Series)** or **Park Brake Shoe Replacement (RPO NYS)** or **Park Brake Shoe Replacement (25 Series)** .
10. Remove the backing plate nuts.

cardiagn.com

11. Remove the backing plate from axle housing flange.

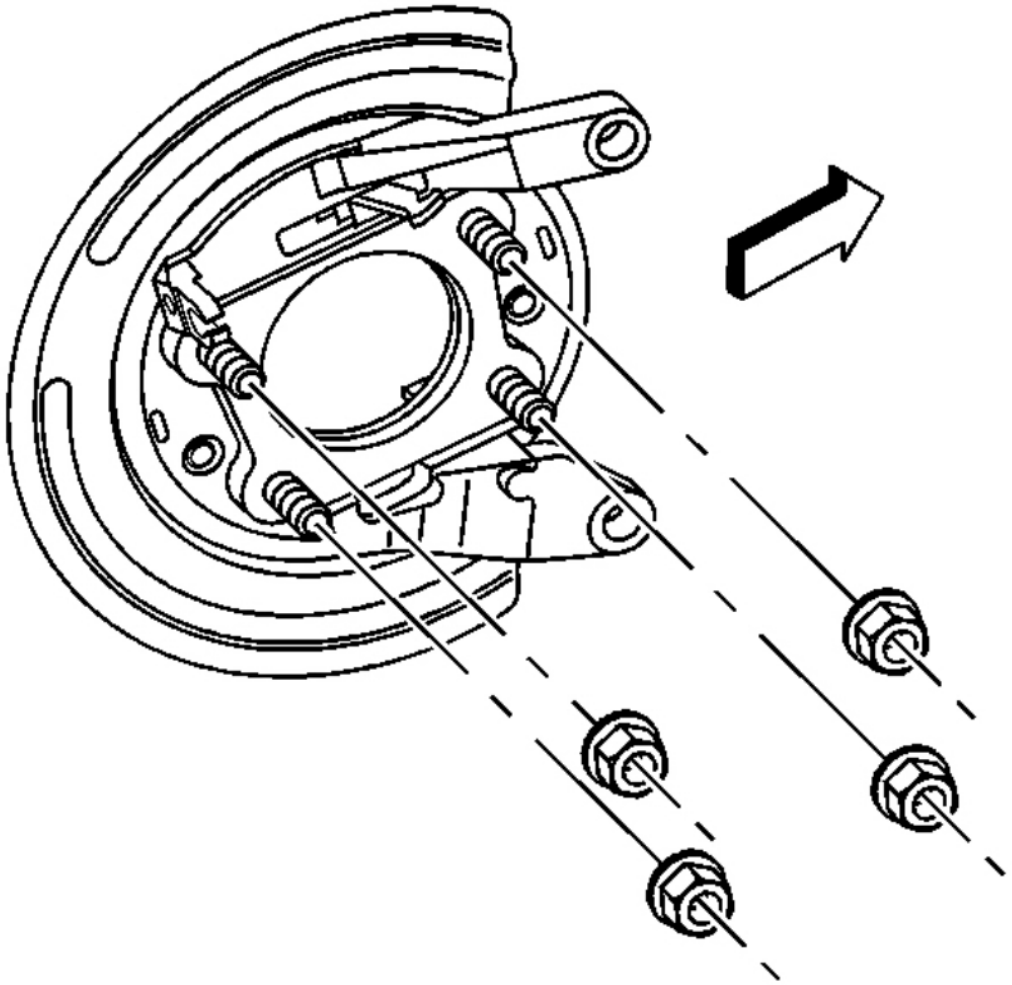

Fig. 96: View Of Backing Plate & Nuts - Rear
Courtesy of GENERAL MOTORS CORP.

Installation Procedure

1. Install the backing plate to the axle housing flange.

NOTE: **Refer to Fastener Notice in Cautions and Notices.**

2. Install the backing plate nuts.

cardiagn.com

Tighten: Tighten the backing plate nuts to 135 N.m (100 lb ft).

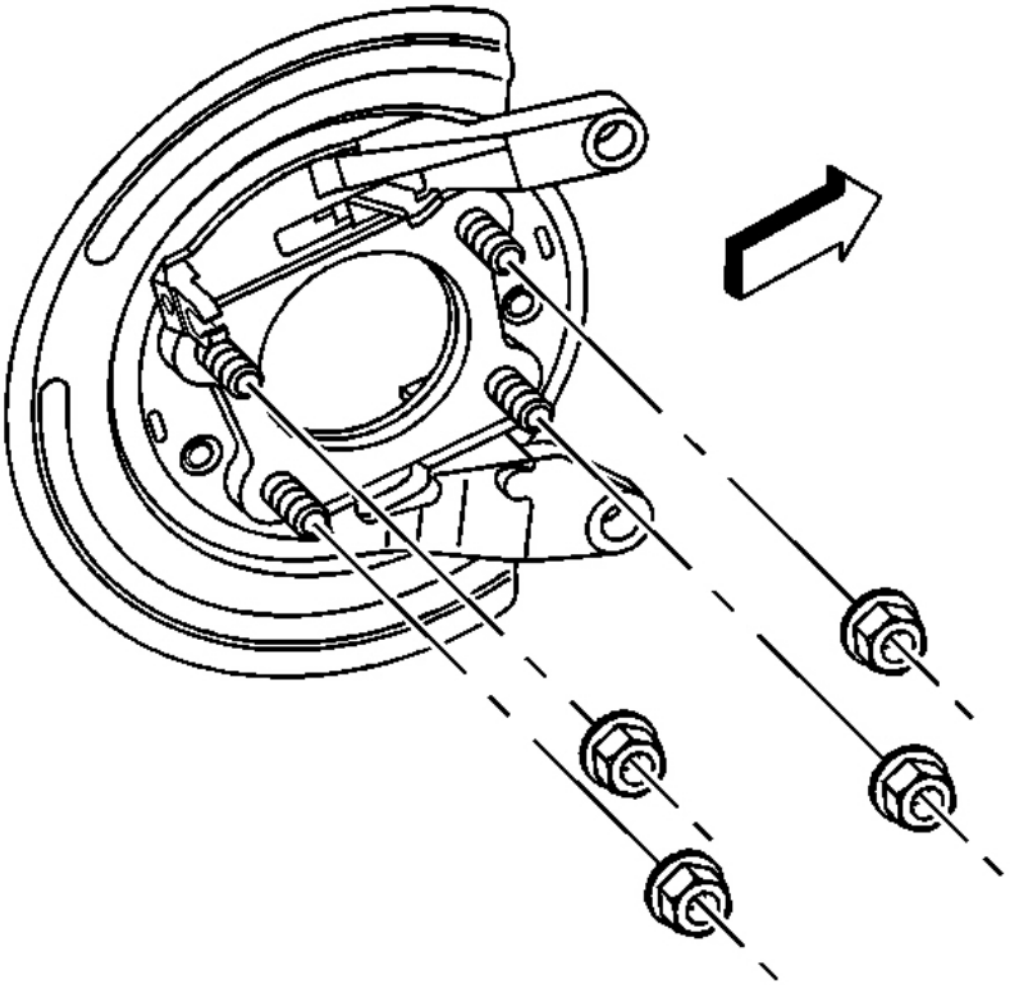

Fig. 97: View Of Backing Plate & Nuts - Rear
Courtesy of GENERAL MOTORS CORP.

3. Install the park brake shoe. Refer to **Park Brake Shoe Replacement (Except RPO NYS, 25 Series)** or **Park Brake Shoe Replacement (RPO NYS)** or **Park Brake Shoe Replacement (25 Series)** .
4. Install the axle shaft. Refer to **Rear Axle Shaft Replacement (8.6 Inch Axle W/O JL4, 9.5 Inch Axle)** or **Rear Axle Shaft Replacement (8.6 Inch Axle W/JL4)** or **Rear Axle Shaft Replacement (9.75 Inch Axle)** in Rear Drive Axle.
5. Adjust the park brake shoe. Refer to **Park Brake Adjustment** .
6. Install the rotor. Refer to **Brake Rotor Replacement - Rear (W/NYS)** or **Brake Rotor Replacement -**

cardiagn.com

Rear (W/O NYS) in Disc Brakes.

7. Install the rear park brake cable end (2) to the park brake actuator lever (1).
8. Install the park brake cable to the mounting bracket (4) until the locking tabs snap into place.

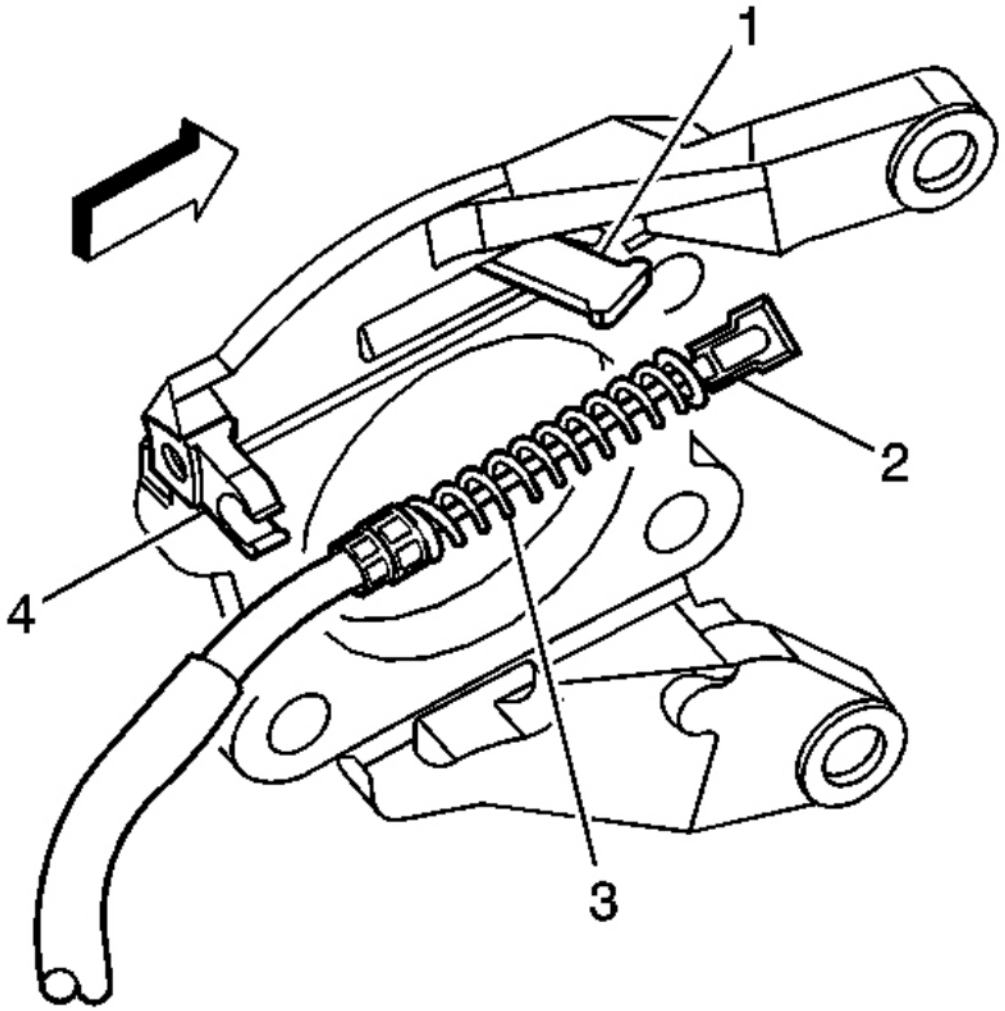

Fig. 98: View Of Lever, Park Brake Cable, Spring & Backing Plate
Courtesy of GENERAL MOTORS CORP.

9. Install the park brake cable to the equalizer bar by pulling down on the cable in front of the equalizer and installing the cable to the equalizer bar.

cardiagn.com

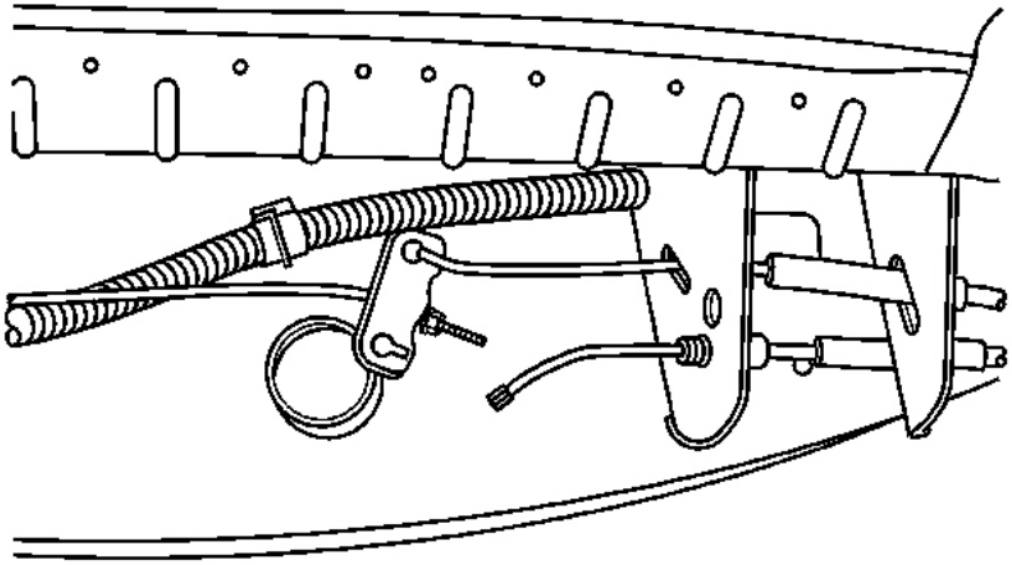

Fig. 99: Equalizer Bar & Park Brake Cable - Rear
Courtesy of GENERAL MOTORS CORP.

10. Install the tire and wheel assembly. Refer to **Tire and Wheel Removal and Installation** in Tires and Wheels.
11. Remove the safety stands.
12. Lower vehicle.
13. Adjust the park brake. Refer to **Park Brake Adjustment** in Park Brake.

DISC BRAKE BACKING PLATE REPLACEMENT - REAR (15 SERIES W/NYS)

CAUTION: Refer to Brake Dust Caution in Cautions and Notices.

Removal Procedure

1. Release the park brake.
2. Raise and support the vehicle. Refer to **Lifting and Jacking the Vehicle** in General Information.
3. Remove the tire and wheel assembly. Refer to **Tire and Wheel Removal and Installation** in Tires and Wheels.
4. Relieve the tension from the park brake cable by pulling down on the intermediate cable then release the cable from the equalizer bar.

cardiagn.com

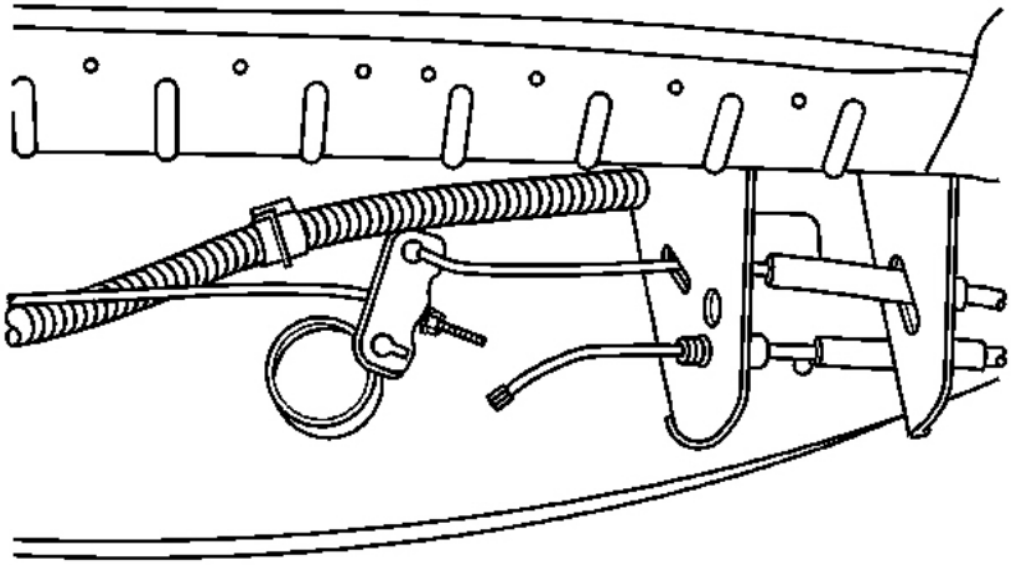

Fig. 100: Equalizer Bar & Park Brake Cable - Rear
Courtesy of GENERAL MOTORS CORP.

5. Remove the rear park brake bracket bolt.

cardiagn.com

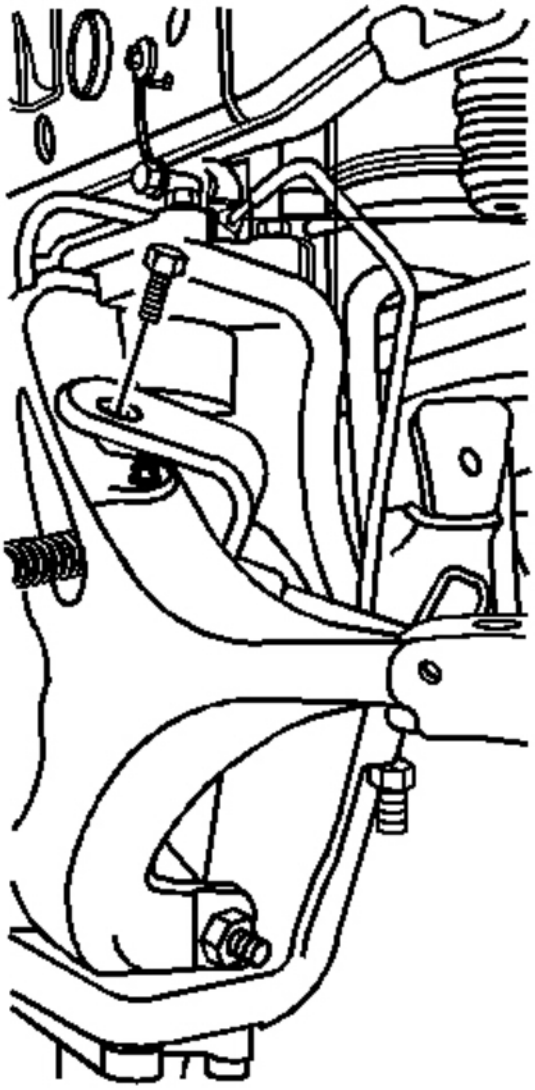

Fig. 101: Identifying Rear Park Brake Bracket Bolt
Courtesy of GENERAL MOTORS CORP.

6. Remove the park brake cable from the park brake actuator lever.

cardiagn.com

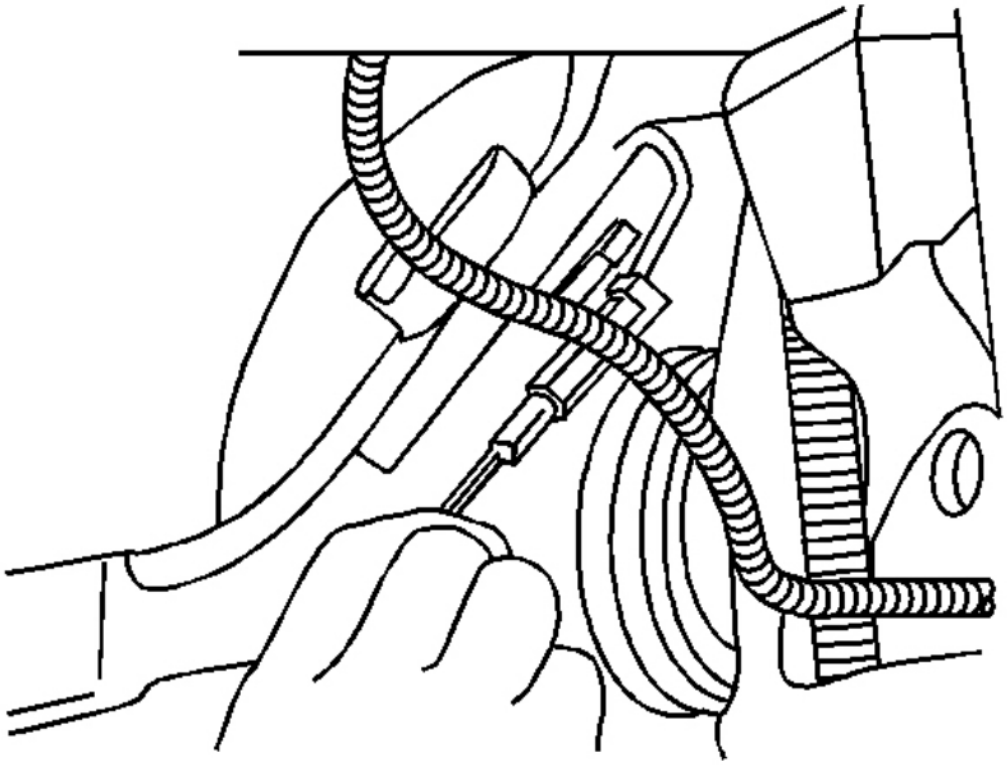

Fig. 102: View Of Park Brake Cable To Park Brake Actuator Lever
Courtesy of GENERAL MOTORS CORP.

7. Remove the wheel bearing. Refer to **Wheel Hub and Bearing Replacement** in Rear Wheel Steering.
8. Remove the park brake shoe.
9. Remove the park brake actuator lever housing from the backing plate.
10. Remove the backing plate.

Installation Procedure

1. Install the park brake actuator lever housing to the backing plate.
2. Install the park brake shoe.
3. Install the wheel bearing and adjust the park brake shoe. Refer to **Wheel Hub and Bearing Replacement** in Rear Wheel Steering and **Park Brake Adjustment** in Park Brake.
4. Install the park brake cable to the park brake actuator lever.

cardiagn.com

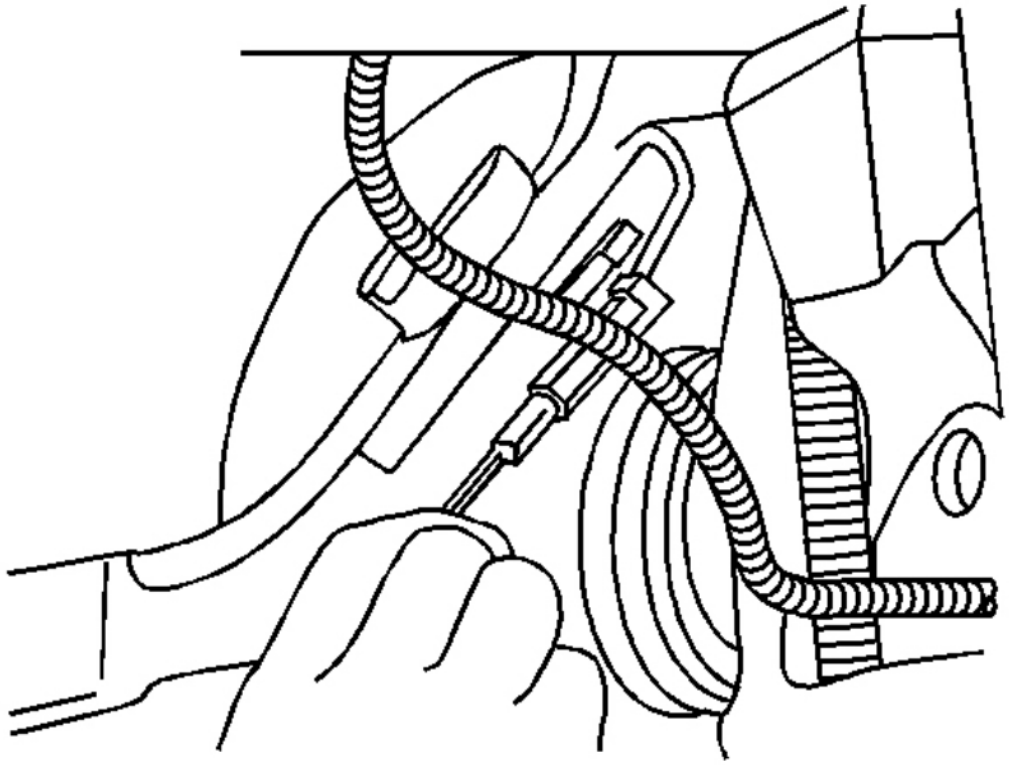

Fig. 103: View Of Park Brake Cable To Park Brake Actuator Lever
Courtesy of GENERAL MOTORS CORP.

NOTE: **Refer to Fastener Notice in Cautions and Notices.**

5. Install the rear park brake bracket bolt.

   Tighten: Tighten the bolt to 61 N.m (45 lb ft).

cardiagn.com

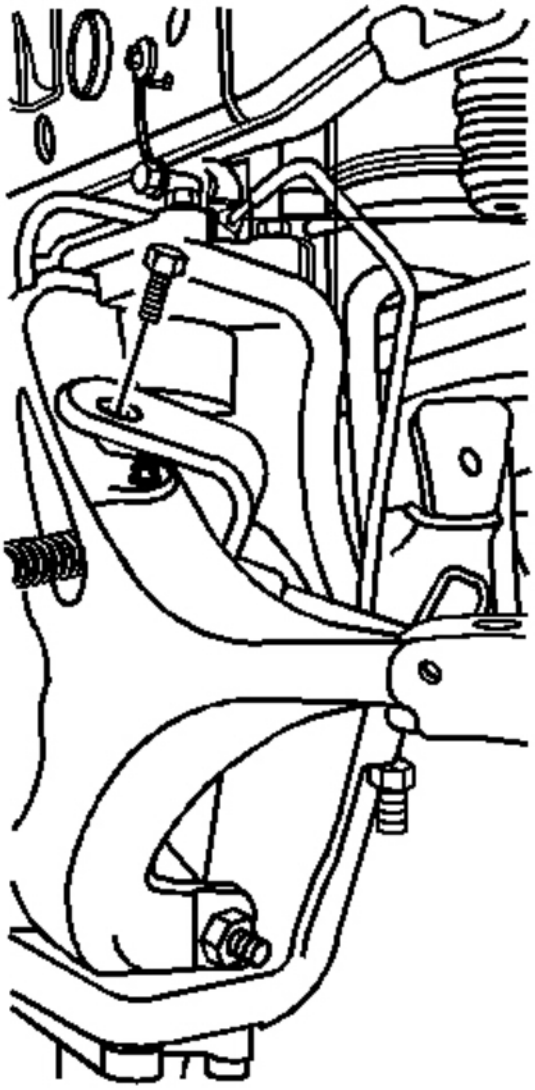

Fig. 104: Identifying Rear Park Brake Bracket Bolt
Courtesy of GENERAL MOTORS CORP.

6. Install the park brake cable to the equalizer bar.

cardiagn.com

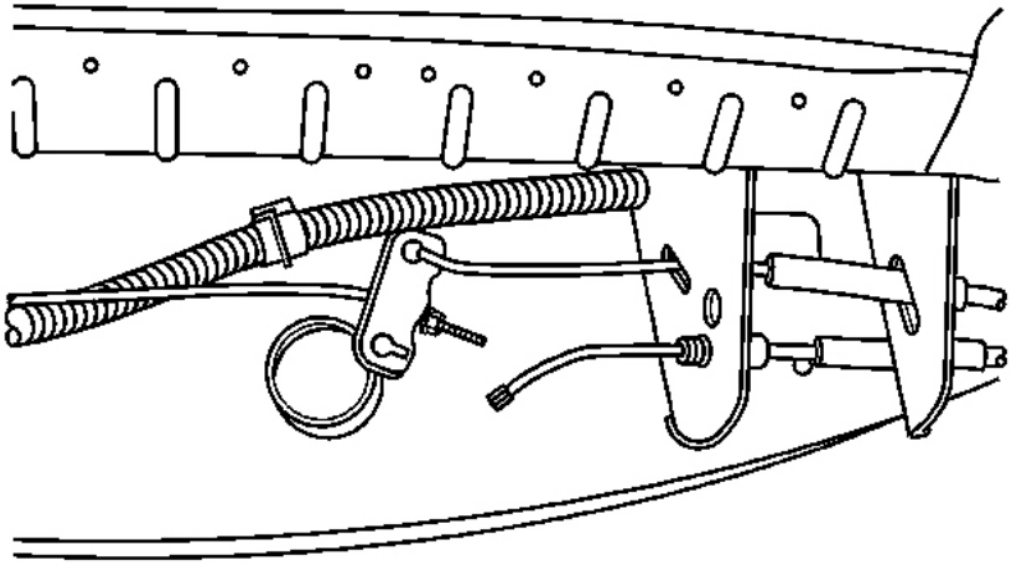

Fig. 105: Equalizer Bar & Park Brake Cable - Rear
Courtesy of GENERAL MOTORS CORP.

7. Install the tire and wheel assembly. Refer to **Tire and Wheel Removal and Installation** in Tires and Wheels.
8. Lower the vehicle.

BRAKE ROTOR ASSEMBLED LATERAL RUNOUT (LRO) CORRECTION

IMPORTANT:

- **Brake rotor thickness variation MUST be checked BEFORE checking for assembled lateral runout (LRO). Thickness variation exceeding the maximum acceptable level can cause brake pulsation. Refer to Brake Rotor Thickness Variation Measurement.**
- **Brake rotor assembled lateral runout (LRO) exceeding the maximum allowable specification can cause thickness variation to develop in the brake rotor over time, usually between 4 800-11 300 km (3,000-7,000 mi). Refer to Brake Rotor Assembled Lateral Runout (LRO) Measurement.**

Review the following acceptable methods for bringing the brake rotor assembled LRO to within specifications. Determine which method to use for the specific vehicle being repaired.

- **Brake Rotor Assembled Lateral Runout (LRO) Correction - Indexing**

cardiagn.com

The indexing method of correcting assembled LRO is most effective when the LRO specification is only exceeded by a relatively small amount: 0.025-0.127 mm (0.001-0.005 in). Indexing is used to achieve the best possible match of high spots to low spots between related components.

- **Brake Rotor Assembled Lateral Runout (LRO) Correction - On-Vehicle Lathe**

  The on-vehicle brake lathe method is used to bring the LRO to within specifications through compensating for LRO while refinishing the brake rotor.

If the assembled LRO cannot be corrected using these methods, then other components must be suspected as causing and/or contributing to the LRO concern.

BRAKE ROTOR ASSEMBLED LATERAL RUNOUT (LRO) CORRECTION - INDEXING

Tools Required

- **J 39544-KIT** Torque-Limiting Socket Set, or equivalent. See **Special Tools and Equipment**.
- **J 45101-100** Conical Brake Rotor Washers

CAUTION: Refer to Brake Dust Caution in Cautions and Notices.

IMPORTANT:

- **Brake rotor thickness variation MUST be checked BEFORE checking for assembled lateral runout (LRO). Thickness variation exceeding the maximum acceptable level can cause brake pulsation. Refer to Brake Rotor Thickness Variation Measurement.**
- **Brake rotor assembled lateral runout (LRO) exceeding the maximum allowable specification can cause thickness variation to develop in the brake rotor over time, usually between 4 800-11 300 km (3,000-7,000 mi). Refer to Brake Rotor Assembled Lateral Runout (LRO) Measurement.**

1. Remove the **J 45101-100** and the lug nuts that were installed during the assembled LRO measurement procedure.

cardiagn.com

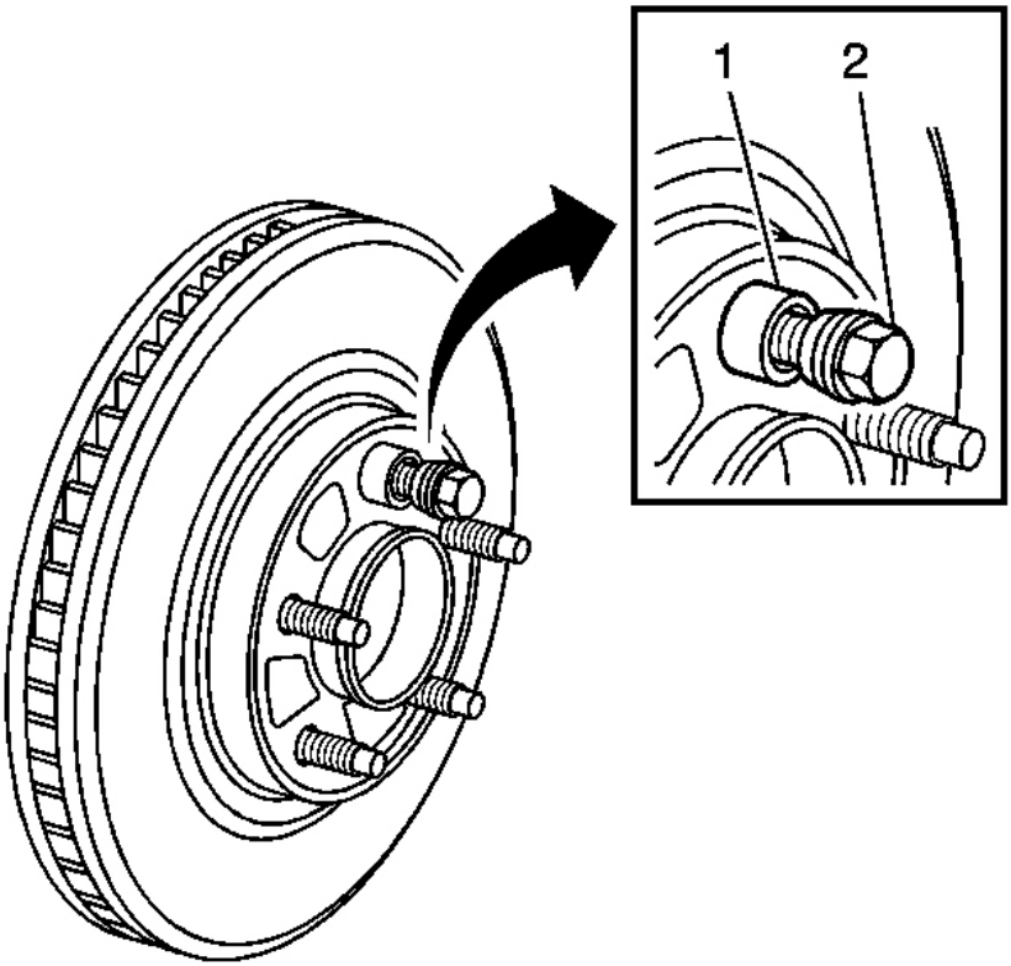

Fig. 106: Identifying J 45101-100 & Lug Nut
Courtesy of GENERAL MOTORS CORP.

2. Inspect the mating surface of the hub/axle flange and the brake rotor to ensure that there are no foreign particles or debris remaining.
3. Index the brake rotor in a different orientation to the hub/axle flange.
4. Hold the rotor firmly in place against the hub/axle flange and install one of the**J 45101-100** (1) and one lug nut (2) onto the upper-most wheel stud.
5. Continue to hold the rotor secure and tighten the lug nut firmly by hand.
6. Install the remaining**J 45101-100** and lug nuts onto the wheel studs and tighten the nuts firmly by hand in a star-pattern.
7. Using the **J 39544-KIT** , or equivalent, tighten the lug nuts in a star-pattern to specification, in order to

cardiagn.com

properly secure the rotor. Refer to **Tire and Wheel Removal and Installation** in Tires and Wheels.

8. Measure the assembled LRO of the brake rotor. Refer to **Brake Rotor Assembled Lateral Runout (LRO) Measurement**.
9. Compare the amount of change between this measurement and the original measurement.
10. If this measurement is within specifications, proceed to step 14.
11. If this measurement still exceeds specifications, repeat steps 1-9 until the best assembled LRO measurement is obtained.
12. Matchmark the final location of the rotor to the wheel studs if the orientation is different than it was originally.
13. If the brake rotor assembled LRO measurement still exceeds the maximum allowable specification, refer to **Brake Rotor Assembled Lateral Runout (LRO) Correction**.
14. If the brake rotor assembled LRO is within specification, install the brake caliper and depress the brake pedal several times to secure the rotor in place before removing the **J 45101-100** and the lug nuts.

cardiagn.com

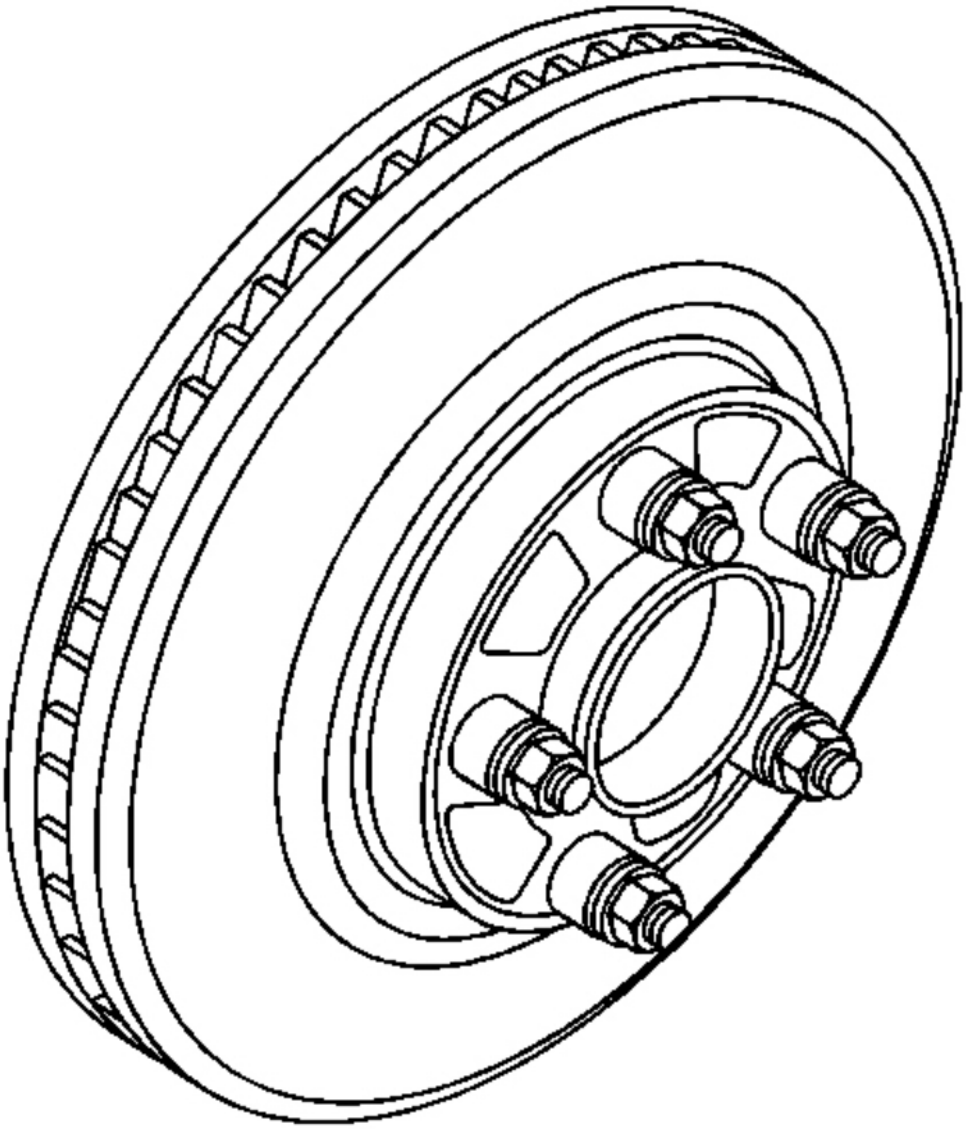

Fig. 107: Installing All J 45101-100s & Lug Nuts
Courtesy of GENERAL MOTORS CORP.

BRAKE ROTOR ASSEMBLED LATERAL RUNOUT (LRO) CORRECTION - ON-VEHICLE LATHE

Tools Required

cardiagn.com

J 45101-100 Conical Brake Rotor Washers. See **Special Tools and Equipment**.

CAUTION: Refer to Brake Dust Caution in Cautions and Notices.

IMPORTANT:

- **Brake rotor thickness variation MUST be checked BEFORE checking for assembled lateral runout (LRO). Thickness variation exceeding the maximum acceptable level can cause brake pulsation. Refer to Brake Rotor Thickness Variation Measurement.**
- **Brake rotor assembled lateral runout (LRO) exceeding the maximum allowable specification can cause thickness variation to develop in the brake rotor over time, usually between 4 800-11 300 km (3,000-7,000 mi). Refer to Brake Rotor Assembled Lateral Runout (LRO) Measurement.**

1. Ensure that the caliper and caliper bracket that are already being supported, are clear from contacting any rotating components, such as the brake rotor.
2. Remove the **J 45101-100** and the lug nuts that were installed during the assembled LRO measurement procedure and/or the indexing correction procedure.
3. Inspect the mounting surface of the hub/axle flange and the brake rotor to ensure that there are no foreign particles or debris remaining.
4. Set up the lathe, following the manufacturer's instructions.
5. Refinish the brake rotor, following the brake lathe manufacturer's instructions.
6. After each successive cut, inspect the brake rotor thickness. Refer to **Brake Rotor Thickness Measurement**.
7. If at any time the brake rotor exceeds the minimum allowable thickness after refinish specification, the brake rotor must be replaced. After replacing the rotor, proceed to step 10.
8. After refinishing the brake rotor, use the following procedure in order to obtain the desired non-directional finish:
    1. Follow the brake lathe manufacturer's recommended speed setting for applying a non-directional finish
    2. Using moderate pressure, apply the non-directional finish:
        - If the lathe is equipped with a non-directional finishing tool, apply the finish with 120 grit aluminum oxide sandpaper
        - If the lathe is not equipped with a non-directional finishing tool, apply the finish with a sanding block and 150 grit aluminum oxide sandpaper
    3. After applying a non-directional finish, clean each friction surface of the brake rotor with denatured alcohol, or an equivalent approved brake cleaner
9. Remove the lathe from the vehicle.
10. Measure the assembled LRO of the brake rotor. Refer to **Brake Rotor Assembled Lateral Runout (LRO) Measurement**.
11. If the brake rotor assembled LRO measurement still exceeds the maximum allowable specification, refer to **Brake Rotor Assembled Lateral Runout (LRO) Correction**.

cardiagn.com

12. If the brake rotor assembled LRO is within specification, install the brake caliper and depress the brake pedal several times to secure the rotor in place before removing the **J 45101-100** and the lug nuts.

BRAKE ROTOR REFINISHING

Tools Required

- **J 41013** Rotor Resurfacing Kit. See **Special Tools and Equipment**.
- **J 42450-A** Wheel Hub Resurfacing Kit

CAUTION: Refer to Brake Dust Caution in Cautions and Notices.

IMPORTANT:

- **The disc brake rotors do not require refinishing as part of routine brake system service. New disc brake rotors do not require refinishing.**

  Do not refinish disc brake rotors in an attempt to correct the following conditions:

  - **Brake system noise - squeal, growl, groan**
  - **Uneven and/or premature disc brake pad wear**
  - **Superficial or cosmetic corrosion/rust of the disc brake rotor friction surface**
  - **Scoring of the disc brake rotor friction surface less than the maximum allowable specification**
- **Before refinishing a brake rotor, the rotor MUST first be checked for adequate thickness to allow the rotor to be refinished and remain above the minimum allowable thickness after refinish specification. Refer to Brake Rotor Thickness Measurement.**

  Disc brake rotors should only be refinished if they have adequate thickness to be refinished and if one or more of the following conditions exist:

  - **Thickness variation in excess of the maximum allowable specification**
  - **Excessive corrosion/rust and/or pitting**
  - **Cracks and/or heat spots**
  - **Excessive blueing discoloration**
  - **Scoring of the disc brake rotor surface in excess of the maximum allowable specification**
- **Disc brake rotors may need to be refinished as part of the process for correcting brake rotor assembled lateral runout (LRO) that exceeds the**

cardiagn.com

maximum allowable specification.

IMPORTANT: Whenever the brake rotor has been separated from the hub/axle flange, clean any rust or contaminants from the hub/axle flange and the brake rotor mating surfaces. Failure to do this may result in increased assembled lateral runout (LRO) of the brake rotor, which could lead to brake pulsation.

1. Using the **J 42450-A** , thoroughly clean any rust or corrosion from the mating surface of the hub/axle flange.
2. Using the **J 41013** , thoroughly clean any rust or corrosion from the mating surface and mounting surface of the brake rotor.
3. Inspect the mating surfaces of the hub/axle flange and the rotor to ensure that there are no foreign particles or debris remaining.
4. Mount the brake rotor to the brake lathe according to the lathe manufacturer's instructions, ensuring that all mounting attachments and adapters are clean and free of debris.
5. Ensure that any vibration dampening attachments are securely in place.
6. With the brake lathe running, slowly bring in the cutting tools until they just contact the brake rotor friction surfaces.
7. Observe the witness mark on the brake rotor. If the witness mark extends approximately three-quarters or more of the way around the brake rotor friction surface on each side, the brake rotor is properly mounted to the lathe.
8. If the witness mark does not extend three-quarters or more of the way around the brake rotor, re-mount the rotor to the lathe.
9. Following the brake lathe manufacturer's instructions, refinish the brake rotor.
10. After each successive cut, inspect the brake rotor thickness. Refer to **Brake Rotor Thickness Measurement**.
11. If at any time the brake rotor exceeds the minimum allowable thickness after refinish specification, the brake rotor must be replaced.
12. After refinishing the brake rotor, use the following procedure in order to obtain the desired non-directional finish:
    1. Follow the brake lathe manufacturer's recommended speed setting for applying a non-directional finish
    2. Using moderate pressure, apply the non-directional finish:
        - If the lathe is equipped with a non-directional finishing tool, apply the finish with 120 grit aluminum oxide sandpaper
        - If the lathe is not equipped with a non-directional finishing tool, apply the finish with a sanding block and 150 grit aluminum oxide sandpaper
    3. After applying a non-directional finish, clean each friction surface of the brake rotor with denatured alcohol, or an equivalent approved brake cleaner
13. Remove the brake rotor from the brake lathe.
14. Measure the assembled lateral runout (LRO) of the brake rotor to ensure optimum performance of the

cardiagn.com

disc brakes. Refer to **Brake Rotor Assembled Lateral Runout (LRO) Measurement**.

15. If the brake rotor assembled LRO measurement exceeds the specification, bring the LRO to within specifications. Refer to **Brake Rotor Assembled Lateral Runout (LRO) Correction**.

DESCRIPTION AND OPERATION

DISC BRAKE SYSTEM DESCRIPTION AND OPERATION

System Component Description

The disc brake system consists of the following components:

Disc Brake Pads

Applies mechanical output force from the hydraulic brake calipers to friction surfaces of brake rotors.

Disc Brake Rotors

Uses mechanical output force applied to friction surfaces from the disc brake pads to slow speed of tire and wheel assembly rotation.

Disc Brake Pad Hardware

Secures disc brake pads firmly in proper relationship to the hydraulic brake calipers. Enables a sliding motion of brake pads when mechanical output force is applied.

Disc Brake Caliper Hardware

Provides mounting for hydraulic brake caliper and secures the caliper firmly in proper relationship to caliper bracket. Enables a sliding motion of the brake caliper to the brake pads when mechanical output force is applied.

System Operation

Mechanical output force is applied from the hydraulic brake caliper pistons to the inner brake pads. As the pistons press the inner brake pads outward, the caliper housings draw the outer brake pads inward. This allows the output force to be equally distributed. The brake pads apply the output force to the friction surfaces on both sides of the brake rotors, which slows the rotation of the tire and wheel assemblies. The correct function of both the brake pad and brake caliper hardware is essential for even distribution of braking force.

SPECIAL TOOLS AND EQUIPMENT

SPECIAL TOOLS

Special Tools

Illustration	Tool Number/Description

cardiagn.com

	J 2619-01 Slide Hammer w/Adapter
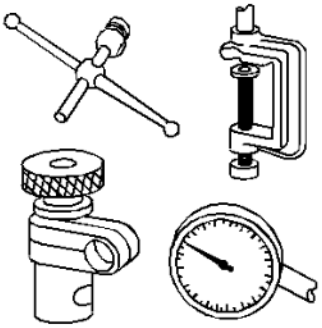	J 8001 Dial Indicator Set
	J 39544-KIT Torque-Limiting Socket Set
	J 41013 Rotor Resurfacing Kit

cardiagn.com

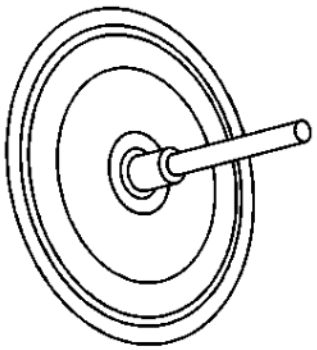	
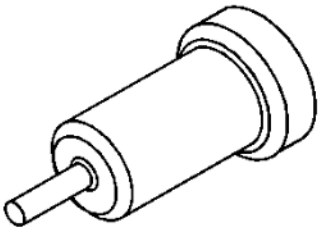	J 42450-A Wheel Hub Resurfacing Kit
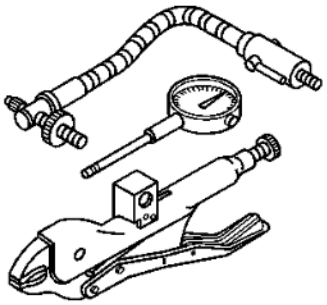	J 45101 Hub and Wheel Runout Gage
	J 45101-100 Conical Brake Rotor Washers

cardiagn.com

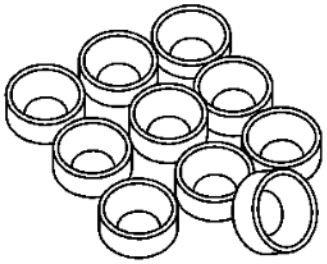	
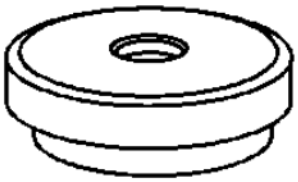	J 45515 Brake Caliper Piston Boot Seal Installer
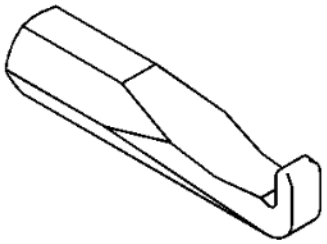	J 46277 Rotor Removal Tool

cardiagn.com