Fastener Tightening Specifications

Application	Specification	
	Metric	English
Brake Delay Valve Bolts	10 N·m	89 lb in
Brake Hose Bolt	12 N·m	106 lb in
Brake Hose Bracket Bolt	12 N·m	106 lb in
Brake Hose Fitting Bolt - Front	52 N·m	38 lb ft
Brake Hose Fitting Bolt - Rear	52 N·m	38 lb ft
Brake Master Cylinder Pressure Sensor	18 N·m	13 lb ft
Brake Pedal Bracket Bolt	25 N·m	18 lb ft
Brake Pipe Fittings	18 N·m	13 lb ft
Brake Pipe Fitting - Rear Brake Crossover Pipe	25 N·m	18 lb ft
Master Cylinder Nuts	25 N·m	18 lb ft
Vacuum Brake Booster Nuts	25 N·m	18 lb ft

cardiagn.com

Brake Component Specifications

Application	Specification	
	Metric	English
Brake Caliper Bleeder Valve - Front	13 N·m	115 lb in
Brake Caliper Bleeder Valve - Rear	13 N·m	115 lb in

cardiagn.com

Brake System Specifications

Application	Specification	
	Metric	English
Brake Pedal Travel - Maximum specification with 445 N (100 lbs) of force applied to the brake pedal with the ignition OFF and the booster power reserve depleted.	57 mm	2.25 in

cardiagn.com

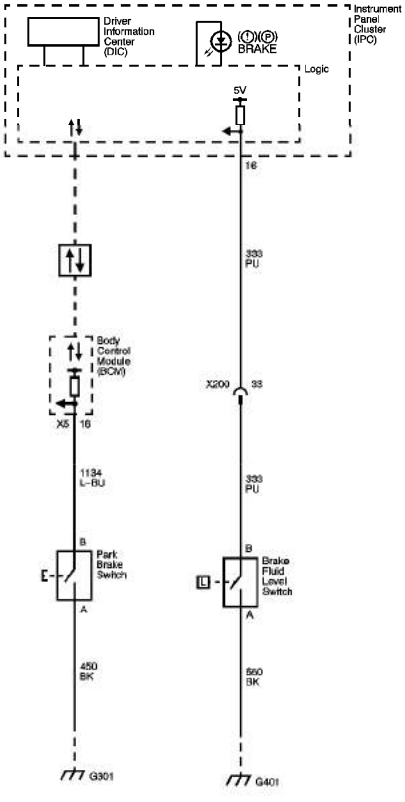

cardiagn.com

Hill Hold Valve (HP7) Brake Sensors

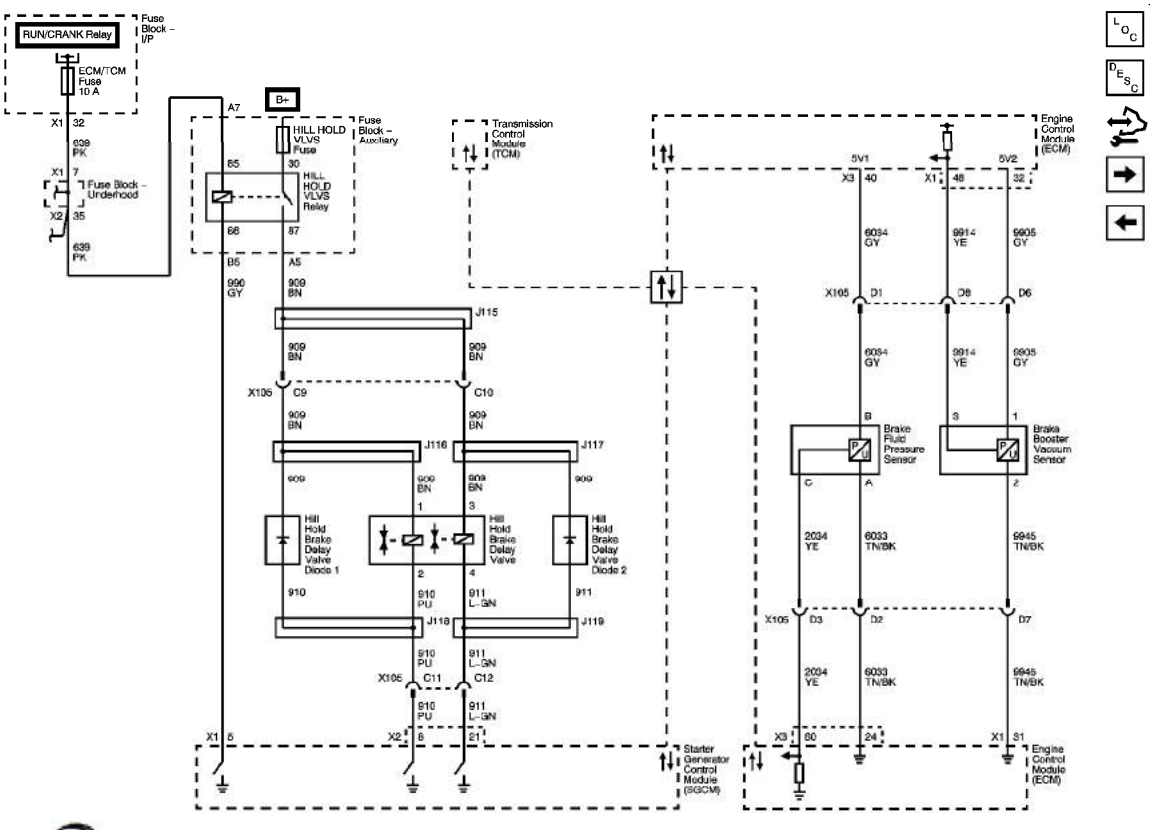

cardiagn.com

Master Cylinder Reservoir Filling

Warning: Refer to Brake Fluid Irritant Warning in the Preface section.

Caution: When adding fluid to the brake master cylinder reservoir, use only GM approved or equivalent DOT-3 brake fluid from a clean, sealed brake fluid container. The use of any type of fluid other than the recommended type of brake fluid may cause contamination which could result in damage to the internal rubber seals and/or rubber linings of hydraulic brake system components.

Caution: Refer to Brake Fluid Effects on Paint and Electrical Components Caution in the Preface section.

1. Visually inspect the brake fluid level through the brake master cylinder auxiliary reservoir.
2. If the brake fluid level is at or below the half-full point during routine fluid checks, the brake system should be inspected for wear and possible brake fluid leaks.
3. If the brake fluid level is at or below the half-full point during routine fluid checks, and an inspection of the brake system did not reveal wear or brake fluid leaks, the brake fluid may be topped-off up to the maximum-fill level.
4. If brake system service was just completed, the brake fluid may be topped-off up to the maximum-fill level.
5. If the brake fluid level is above the half-full point, adding brake fluid is not recommended under normal conditions.
6. If brake fluid is to be added to the master cylinder auxiliary reservoir, clean the outside of the reservoir on and around the reservoir cap prior to removing the cap and diaphragm.

cardiagn.com

Master Cylinder Reservoir Replacement

Removal Procedure

Warning: Refer to Brake Fluid Irritant Warning in the Preface section.

Caution: Refer to Brake Fluid Effects on Paint and Electrical Components Caution in the Preface section.

1. Using a suitable tool, remove the brake fluid from the brake master cylinder reservoir.
2. Discard the brake fluid into an approved container.
3. Remove the underhood electrical center. Refer to Underhood Electrical Center or Junction Block Replacement .
4. Without draining the coolant or removing the hoses, remove and position aside the radiator surge tank. Refer to Radiator Surge Tank Replacement .

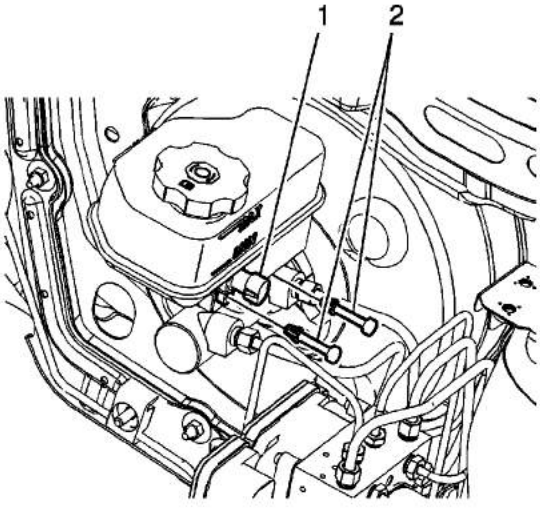

5. Disconnect the master cylinder fluid level sensor electrical connector (1).
6. Remove the master cylinder reservoir retaining pins (2) by compressing the locking tabs.

   Discard the retaining pins.

cardiagn.com

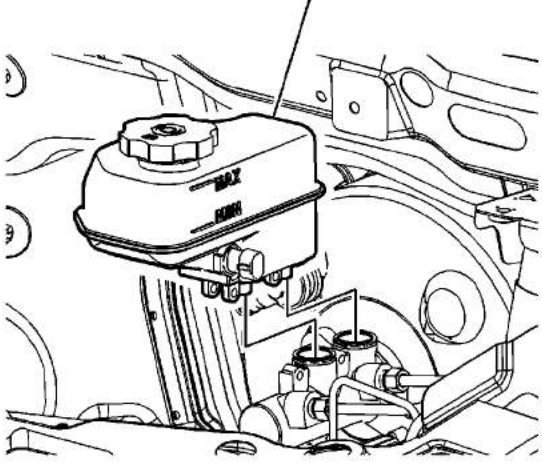

7. Carefully remove the master cylinder reservoir (1) by pulling the reservoir straight up.

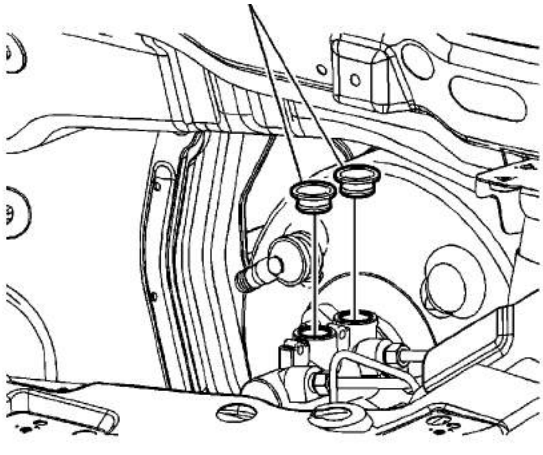

8. Remove the master cylinder reservoir seals (1).

Installation Procedure

cardiagn.com

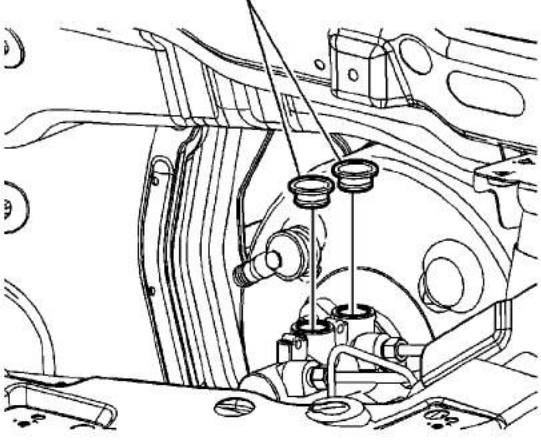

1. Install the master cylinder reservoir seals (1).

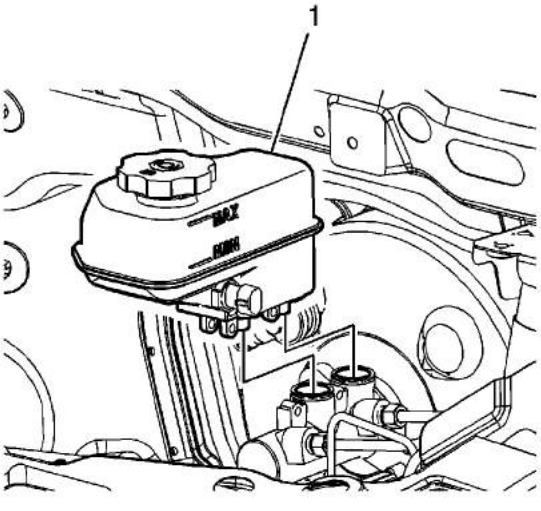

2. Install the master cylinder reservoir (1) to the master cylinder.

   Ensure the master cylinder reservoir bayonets are fully seated in the master cylinder.

cardiagn.com

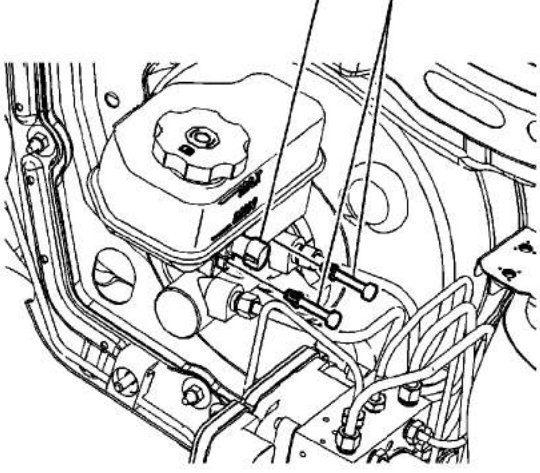

3. Connect the master cylinder fluid level sensor electrical connector (1).
4. Install new master cylinder reservoir retaining pins (2).

   Ensure the retaining pins are fully seated and the locking tabs are fully deployed.

5. Install the radiator surge tank. Refer to Radiator Surge Tank Replacement .
6. Install the underhood electrical center. Refer to Underhood Electrical Center or Junction Block Replacement .
7. Fill the master cylinder reservoir to the proper level. Refer to Master Cylinder Reservoir Filling .
8. Observe the brake pedal feel after filling the master cylinder reservoir. If the pedal feels spongy, bleed the hydraulic brake system. Refer to Hydraulic Brake System Bleeding .

cardiagn.com

Master Cylinder Replacement

Removal Procedure

Warning: Refer to Brake Fluid Irritant Warning in the Preface section.

Caution: Refer to Brake Fluid Effects on Paint and Electrical Components Caution in the Preface section.

1. Using a suitable tool, remove the brake fluid from the brake master cylinder reservoir.
2. Discard the brake fluid into an approved container.
3. Remove the underhood electrical center. Refer to Underhood Electrical Center or Junction Block Replacement .
4. Without draining the coolant or removing the hoses, remove and position aside the radiator surge tank. Refer to Radiator Surge Tank Replacement .

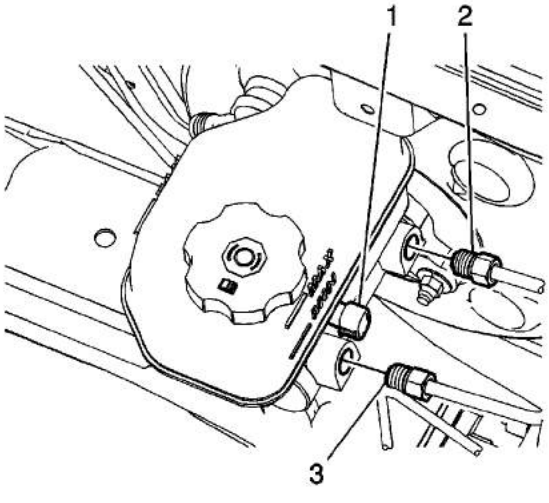

5. Disconnect the master cylinder fluid level sensor electrical connector (1).
6. Disconnect the master cylinder primary brake pipe fitting (2).

   Cap the brake pipe fitting and plug the master cylinder outlet port to prevent brake fluid loss and contamination.

7. Disconnect the master cylinder secondary brake pipe fitting (3).

   Cap the brake pipe fitting and plug the master cylinder outlet port to prevent brake fluid loss and contamination.

cardiagn.com

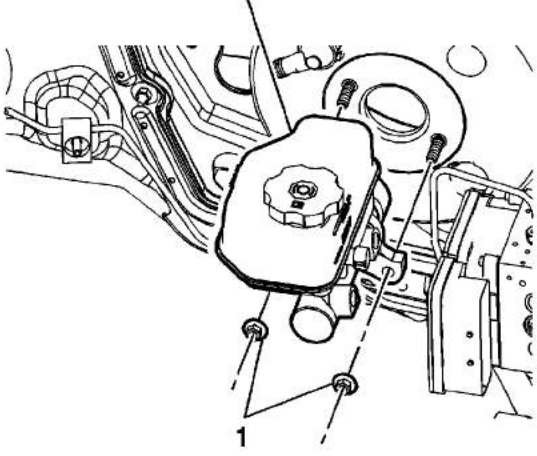

8. Remove the 2 master cylinder nuts (1).
9. Remove the master cylinder (2).

Installation Procedure

1. If installing a new master cylinder, bench bleed the master cylinder. Refer to Master Cylinder Bench Bleeding .

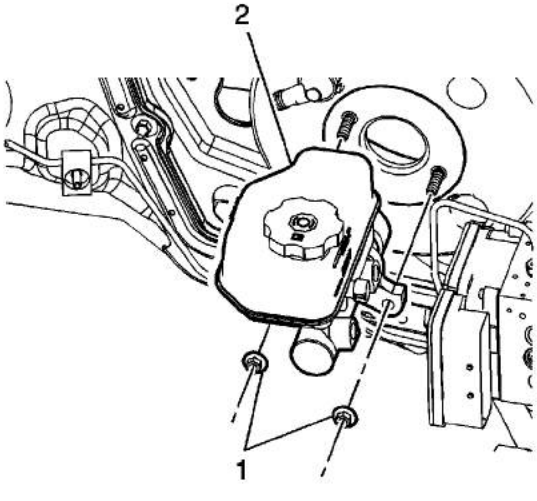

2. Install the master cylinder (2).

   Caution: Refer to Fastener Caution in the Preface section.

3. Install the 2 master cylinder nuts (1) and tighten to **25 N·m (18 lb ft)** .

cardiagn.com

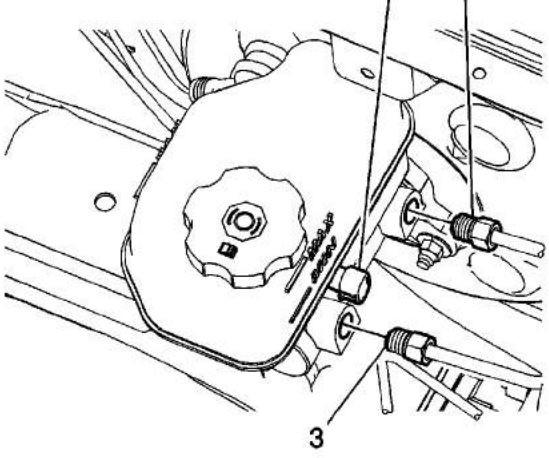

4. Connect the master cylinder fluid level sensor electrical connector (1).
5. Connect the master cylinder primary brake pipe fitting (2) and tighten to **18 N·m (13 lb ft)** .
6. Connect the master cylinder secondary brake pipe fitting (3) and tighten to **18 N·m (13 lb ft)** .
7. Install the radiator surge tank. Refer to Radiator Surge Tank Replacement .
8. Install the underhood electrical center. Refer to Underhood Electrical Center or Junction Block Replacement .
9. Bleed the hydraulic brake system. Refer to Hydraulic Brake System Bleeding .

cardiagn.com

Master Cylinder Bench Bleeding

Warning: Refer to Brake Fluid Irritant Warning in the Preface section.

Caution: When adding fluid to the brake master cylinder reservoir, use only GM approved or equivalent DOT-3 brake fluid from a clean, sealed brake fluid container. The use of any type of fluid other than the recommended type of brake fluid may cause contamination which could result in damage to the internal rubber seals and/or rubber linings of hydraulic brake system components.

Caution: Refer to Brake Fluid Effects on Paint and Electrical Components Caution in the Preface section.

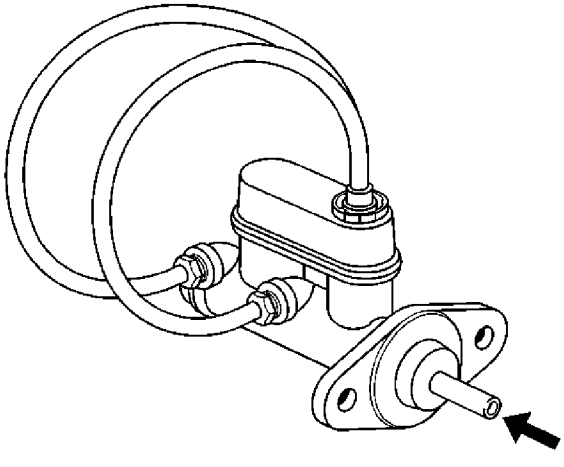

1. Secure the mounting flange of the brake master cylinder in a bench vise so that the rear of the primary piston is accessible.
2. Remove the cap from the hose nipple on the master cylinder reservoir.
3. Install suitable fittings to the master cylinder ports that match the type of flare seat required and also provide for hose attachment.
4. Install transparent hoses to the fittings, then route the hoses into the master cylinder reservoir.
5. Ensure that the ends of the transparent hoses running into the reservoir are fully submerged in the brake fluid.
6. Using a smooth, round-ended tool, depress and release the primary piston as far as it will travel, a depth of about 25 mm (1 in), several times. Observe the flow of fluid coming from the ports.

   As air is bled from the primary and secondary pistons, the effort required to depress the primary piston will increase and the amount of travel will decrease.

7. Continue to depress and release the primary piston until fluid flows freely from the ports with no evidence of air bubbles.

© 2010 General Motors Corporation. All rights reserved.

cardiagn.com

10. Remove the fittings with the transparent hoses from the master cylinder ports. Wrap the master cylinder with a clean shop cloth to prevent brake fluid spills.
11. Remove the master cylinder from the vise.

cardiagn.com

Brake Fluid Level Indicator Switch Replacement

Removal Procedure

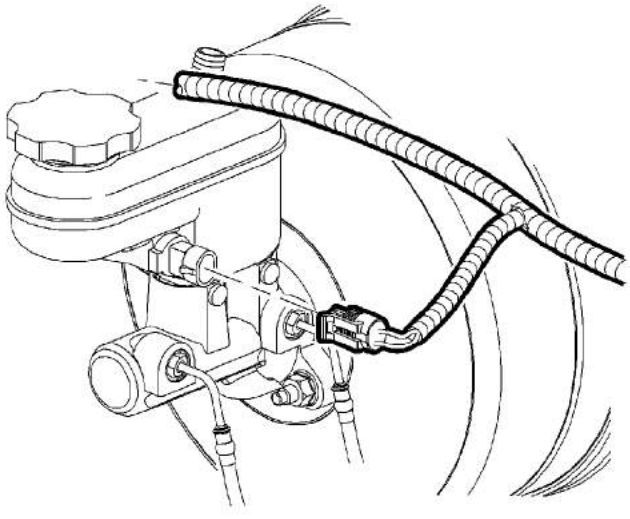

1. Without draining the coolant or removing the hoses, remove and position aside the radiator surge tank. Refer to Radiator Surge Tank Replacement .
2. Disconnect the brake fluid level sensor electrical connector.

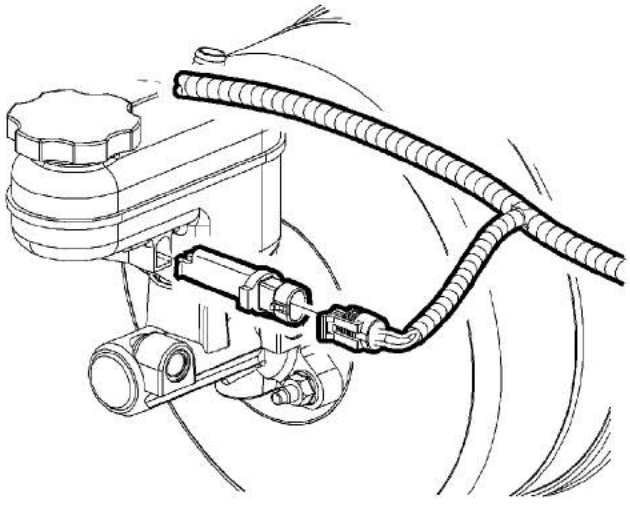

3. While simultaneously depressing the retaining tabs on the opposite side of the sensor electrical connection, carefully pull the sensor from the master cylinder reservoir.

© 2010 General Motors Corporation. All rights reserved.

cardiagn.com

Installation Procedure

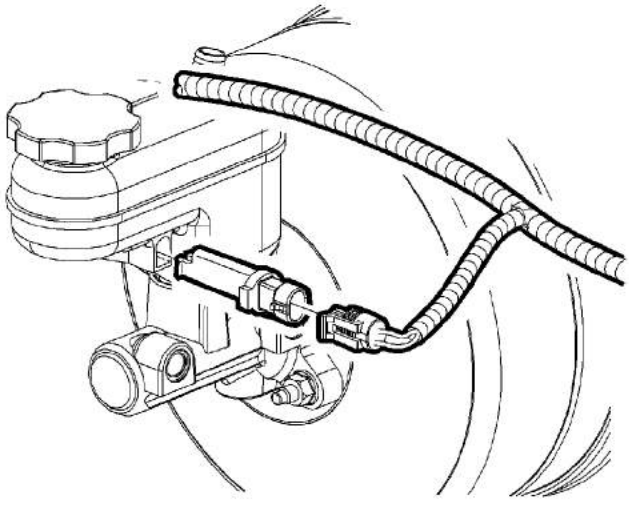

1. While noting the proper orientation, install the brake fluid level sensor to the master cylinder.
2. Press the brake fluid level sensor firmly into the master cylinder reservoir, ensuring that the retaining tabs are fully engaged.

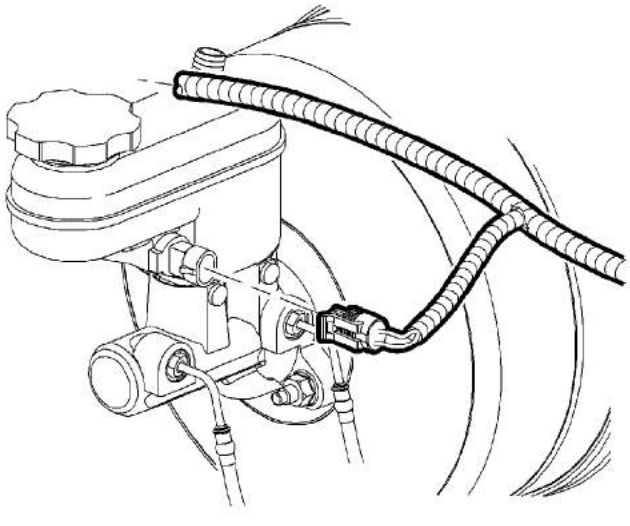

3. Connect the brake fluid level sensor electrical connector.
4. Without draining the coolant or removing the hoses, remove and position aside the radiator surge tank. Refer to Radiator Surge Tank Replacement .

cardiagn.com

Brake Pedal Assembly Replacement

Removal Procedure

1. Remove the driver knee bolster reinforcement. Refer to Driver Knee Bolster Reinforcement Replacement .
2. Remove the accelerator pedal position sensor. Refer to Accelerator Pedal with Position Sensor Assembly Replacement for the 2.4L engine, or Accelerator Pedal Position Sensor Replacement for the 3.5L engine, or Accelerator Pedal Position Sensor Replacement for the 3.6L engine.
3. Remove the stop lamp switch. Refer to Stop Lamp Switch Replacement .

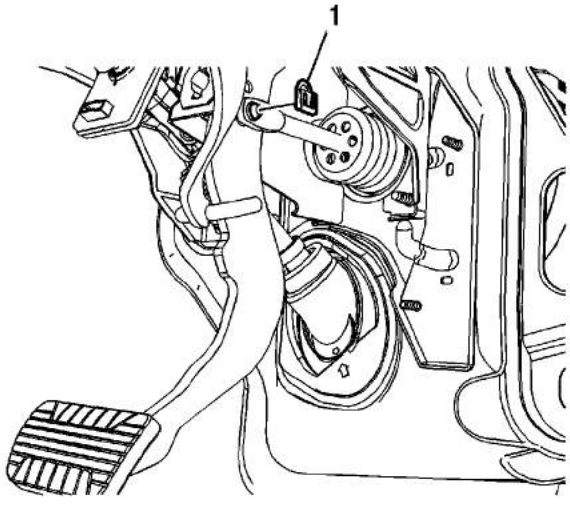

4. Remove the brake booster pushrod retainer (1).
5. Disconnect the brake booster pushrod from the brake pedal pivot pin.

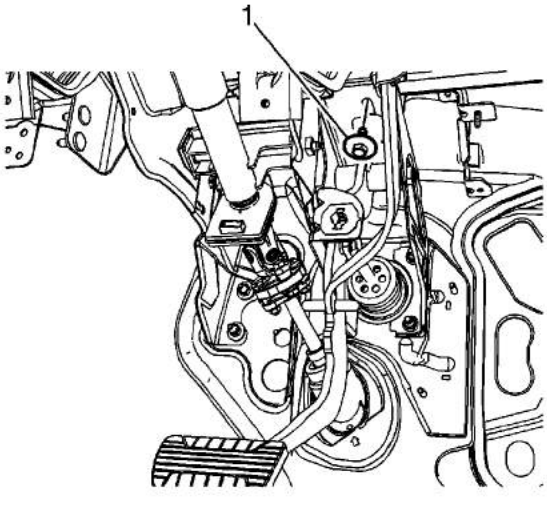

cardiagn.com

6. Remove the brake pedal bracket bolt (1).
7. Remove the instrument panel tie bar. Refer to Instrument Panel Tie Bar Replacement .

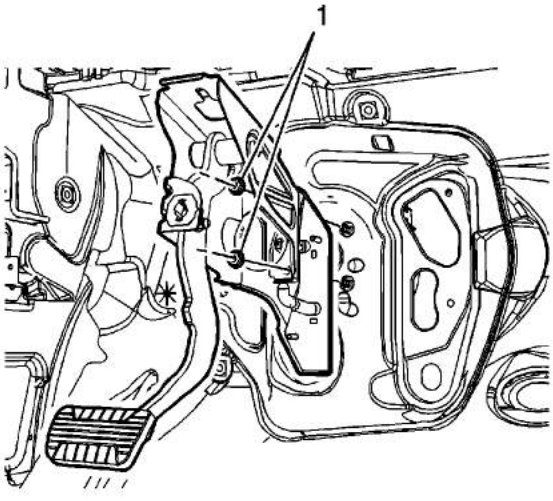

8. Remove the 2 nuts (1) and the brake pedal assembly.

Installation Procedure

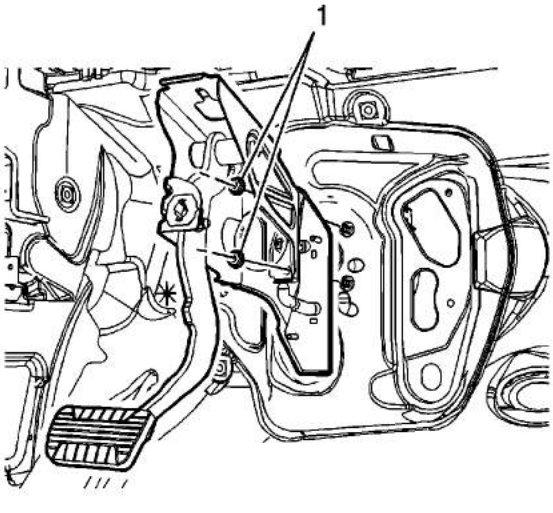

1. Install the brake pedal assembly to the dash panel reinforcement plate.

   Caution: Refer to Fastener Caution in the Preface section.

cardiagn.com

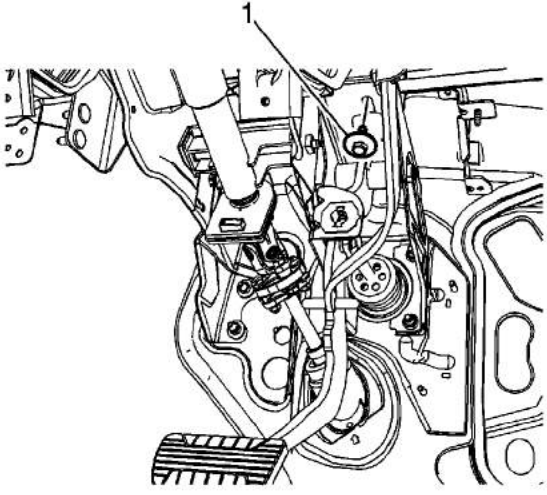

3. Install the instrument panel tie bar. Refer to Instrument Panel Tie Bar Replacement .
4. Install the brake pedal bracket bolt (1) and tighten to **25 N·m (18 lb ft)** .
5. Connect the brake booster pushrod to the brake pedal pivot pin.

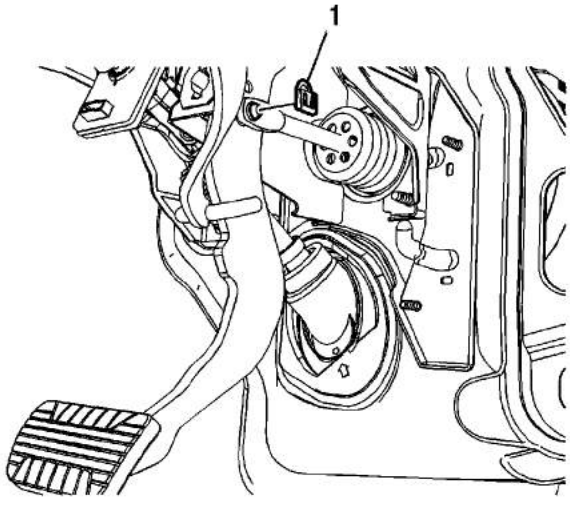

6. Install the brake booster pushrod retainer (1).

   Ensure the pushrod retainer is properly installed by rotating the retainer 360 degrees.

7. Install the accelerator pedal position sensor. Refer to Accelerator Pedal with Position Sensor Assembly Replacement for the 2.4L engine, or Accelerator Pedal Position Sensor Replacement for the 3.5L engine, or Accelerator Pedal Position Sensor Replacement for the 3.6L engine.
8. Install the stop lamp switch. Refer to Stop Lamp Switch Replacement .
9. Install the driver knee bolster reinforcement. Refer to Driver Knee Bolster Reinforcement

cardiagn.com

cardiagn.com

Brake Pipe Replacement

Special Tools

J 45405 Pipe Flaring Tool Kit

Warning: Refer to Brake Fluid Irritant Warning in the Preface section.

Caution: Refer to Brake Fluid Effects on Paint and Electrical Components Caution in the Preface section.

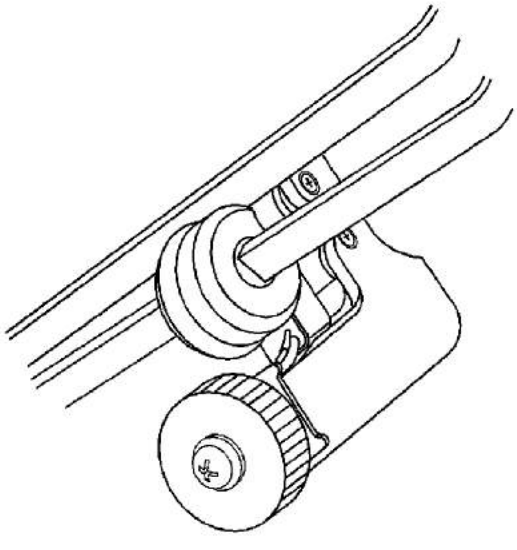

Warning: Always use double walled steel brake pipe when replacing brake pipes. The use of any other pipe is not recommended and may cause brake system failure. Carefully route and retain replacement brake pipes. Always use the correct fasteners and the original location for replacement brake pipes. Failure to properly route and retain brake pipes may cause damage to the brake pipes and cause brake system failure.

Note: When servicing the brake pipes, note the following:

- If sectioning the brake pipe, use replacement pipe of the same type and outside diameter.
- Use fittings of the appropriate size and type.
- Only create flares of the same type or design as originally equipped on the vehicle.

1. Inspect the area of brake pipe to be repaired or replaced.
2. Release the brake pipe to be replaced from the retainers, as required.
3. Select an appropriate location to section the brake pipe, if necessary.
   - Allow adequate clearance in order to maneuver the J 45405.

© 2010 General Motors Corporation. All rights reserved.

cardiagn.com

5. Add to the measurement taken the appropriate additional length required for each flare to be created.

Specification

- 6.35 mm (0.250 in) for 4.76 mm (3/16 in) diameter pipe
- 9.50 mm (0.374 in) for 6.35 mm (1/4 in) diameter pipe
- 12.67 mm (0.499 in) for 7.94 mm (5/16 in) diameter pipe

Note: Ensure that the brake pipe end to be flared is cut at a square, 90 degree angle to the pipe length.

6. Using the pipe cutter included in the J 45405 , carefully cut the brake pipe squarely to the measured length.
7. Remove the sectioned brake pipe from the vehicle.
8. Select the appropriate size of brake pipe and tube nuts, as necessary. The brake pipe outside diameter determines brake pipe size.

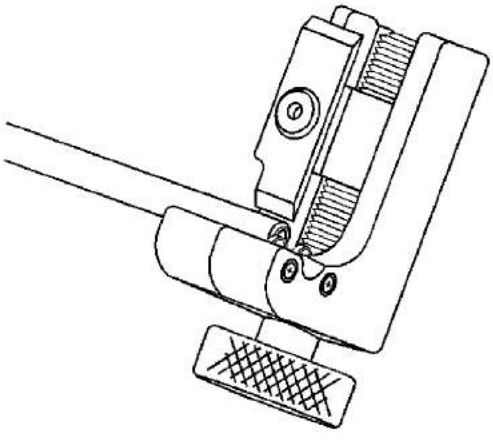

9. Strip the nylon coating from the brake pipe end to be flared, if necessary.
   - Select the appropriate blade on the coating stripping tool included in the J 45405 , by unthreading the blade block from the stripping tool and installing the block with the desired blade facing the tool rollers.

   Specification

   - 6.35 mm (0.250 in) blade for 4.76 mm (3/16 in) diameter pipe
   - 9.50 mm (0.374 in) blade for 6.35 mm (1/4 in) and 7.94 mm (5/16 in) diameter pipe
   - Insert the brake pipe end to be flared into the stripping tool to the depth of the ledge on the tool rollers.
   - While holding the brake pipe firmly against the stripping tool roller ledges, rotate the thumbwheel of the tool until the blade contacts the brake pipe coated surface.

cardiagn.com

- Rotate the stripping tool in a clockwise direction, ensuring that the brake pipe end remains against the tool roller ledges.
- After each successive revolution of the stripping tool, carefully rotate the thumbwheel of the tool clockwise, in order to continue stripping the coating from the brake pipe until the metal pipe surface is exposed.
- Loosen the thumbwheel of the tool and remove the brake pipe.

Note: Ensure that all loose remnants of the nylon coating have been removed from the brake pipe.

- Inspect the stripped end of the brake pipe to ensure that the proper amount of coating has been removed.

Specification

- 6.35 mm (0.250 in) for 4.76 mm (3/16 in) diameter pipe
- 9.50 mm (0.374 in) for 6.35 mm (1/4 in) and 7.94 mm (5/16 in) diameter pipe

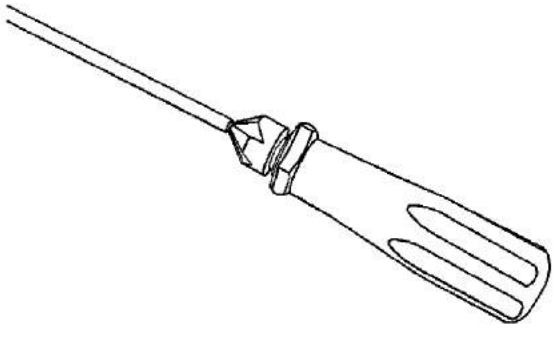

10. Chamfer the inside and outside diameter of the pipe with the de-burring tool included in the J 45405 .
11. Install the tube nuts on the brake pipe, noting their orientation.
12. Clean the brake pipe and the J 45405 of lubricant, contaminants, and debris.

cardiagn.com

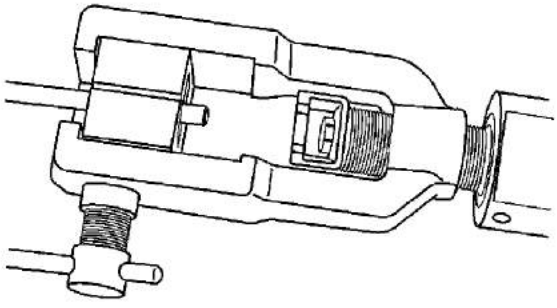

13. Loosen the die clamping screw of the J 45405 .
14. Select the corresponding die set and install the die halves into the die cage with the full, flat face of one die facing the clamping screw, and the counterbores of both dies facing the forming ram.

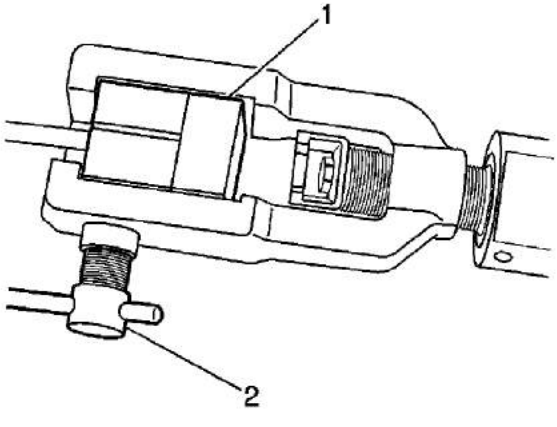

15. Place the flat face of an unused die (1) against the die halves in the clamping cage and hold firmly against the counterbored face of the dies.
16. Insert the prepared end of the pipe to be flared through the back of the dies until the pipe is seated against the flat surface of the unused die (1).
17. Remove the unused die (1).
18. Ensure that the rear of both dies are seated firmly against the enclosed end of the die cage.
19. Firmly hand tighten the clamping screw (2) against the dies.

cardiagn.com

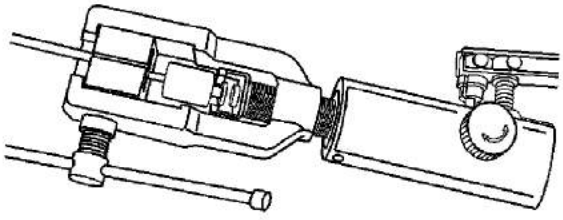

20. Select the appropriate forming mandrel and place into the forming ram.
21. Rotate the hydraulic fluid control valve clockwise to the closed position.
22. Rotate the body of the J 45405 until it bottoms against the die cage.

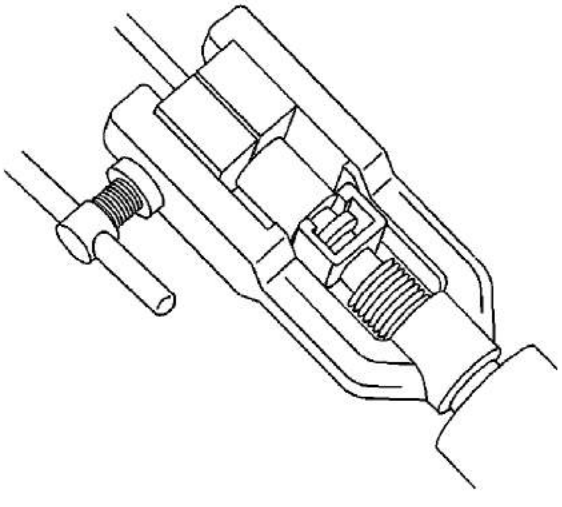

23. While guiding the forming mandrel into the exposed end of pipe to be flared, operate the lever of the J 45405 until the forming mandrel bottoms against the clamping dies.
24. Rotate the hydraulic fluid control valve counterclockwise to the open position to allow the hydraulic forming ram to retract.

cardiagn.com

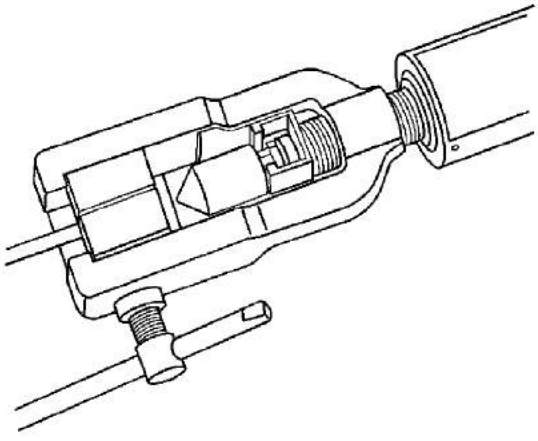

25. Insert the finishing cone into the forming ram.
26. Rotate the hydraulic fluid control valve clockwise to the closed position.
27. Rotate the body of the J 45405 until it bottoms against the die cage.
28. While guiding the finishing cone into the exposed end of pipe to be flared, operate the lever of the J 45405 until the finishing cone bottoms against the dies.
29. Rotate the hydraulic fluid control valve counterclockwise to the open position to allow the hydraulic forming ram to retract.
30. Loosen the die clamping screw and remove the dies and pipe.
31. If necessary, lightly tap the dies until the die halves separate.

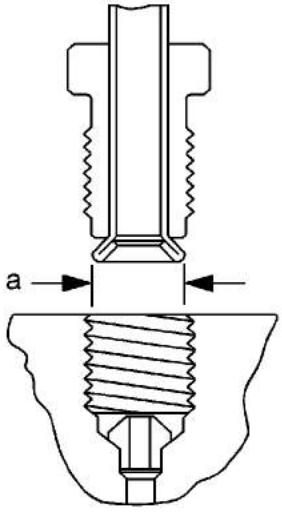

32. Inspect the brake pipe flare for correct shape and diameter (a).

Specification

- 6.74-7.10 mm (0.265-0.279 in) flare diameter for 4.76 mm (3/16 in) diameter pipe

cardiagn.com

10.42-10.79 mm (0.410-0.425 in) flare diameter for 7.94 mm (5/16 in) diameter pipe

33. If necessary, using the removed section of brake pipe as a template, shape the new pipe with a suitable brake pipe bending tool.

    Note: When installing the pipe, maintain a clearance of 19 mm (3/4 in) from all moving or vibrating components.

34. Install the pipe to the vehicle with the appropriate brake pipe unions, as required.
35. If previously released, secure the brake pipe to the retainers.
36. Bleed the hydraulic brake system. Refer to Hydraulic Brake System Bleeding.
37. With the aid of an assistant, inspect the brake pipe flares for leaks by starting the engine and applying the brakes.

cardiagn.com

Front Brake Hose Replacement

Removal Procedure

Warning: Refer to Brake Fluid Irritant Warning in the Preface section.

Caution: Refer to Brake Fluid Effects on Paint and Electrical Components Caution in the Preface section.

1. Raise and support the vehicle. Refer to Lifting and Jacking the Vehicle.
2. Remove the tire and wheel assembly. Refer to Tire and Wheel Removal and Installation.

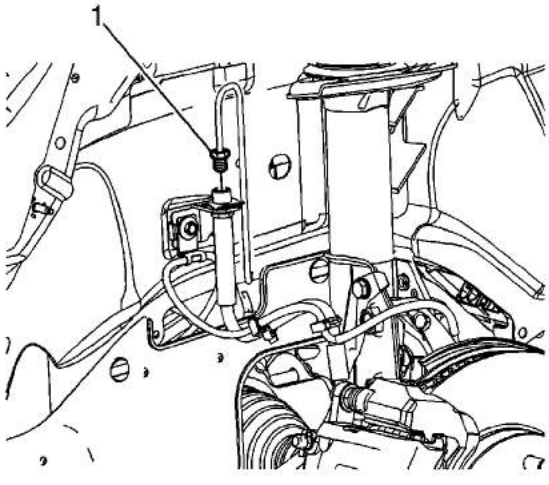

3. Disconnect the brake pipe fitting (1) from the brake hose.

   Cap the brake pipe fitting to prevent brake fluid loss and contamination.

cardiagn.com

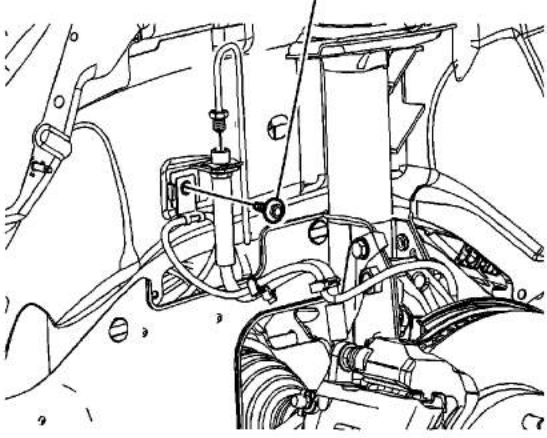

4. Remove the brake hose bolt (1) securing the brake hose bracket to the wheelhouse.

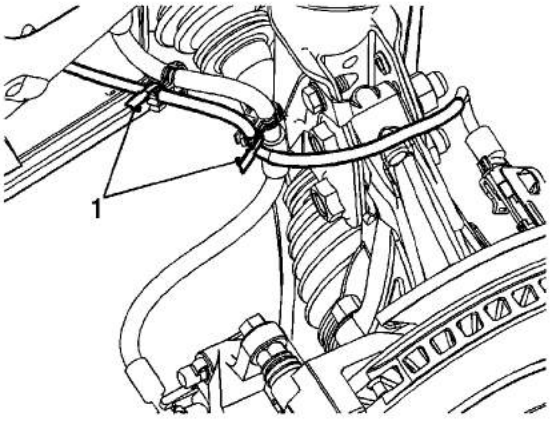

5. Release the wheel speed sensor harness retaining clips (1) and release the harness.

cardiagn.com

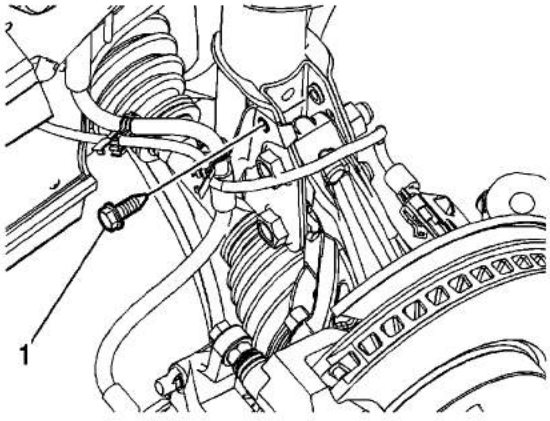

6. Remove the brake hose bracket bolt (1).

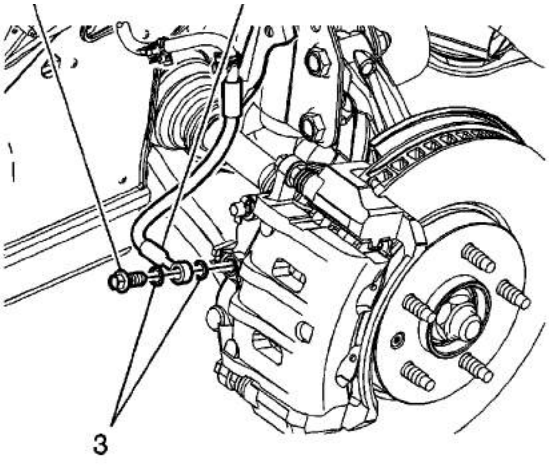

7. Remove the brake hose fitting bolt (1) from the brake hose and the caliper.
8. Remove the brake hose (2) from the caliper.

Note: Do not reuse the brake hose fitting gaskets.

9. Remove and discard the brake hose fitting gaskets (3).
10. Remove the brake hose.

Installation Procedure

cardiagn.com

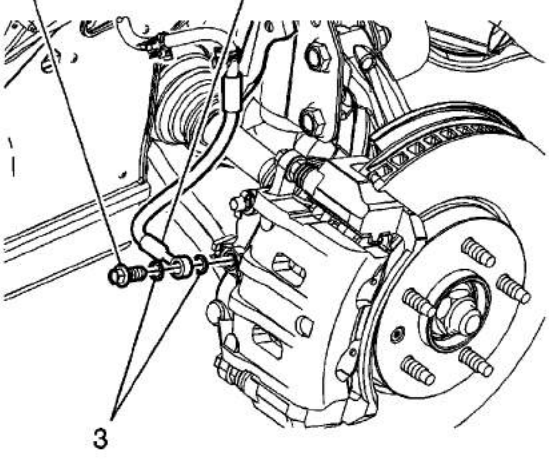

1. Install the brake hose.

   Note: Install new brake hose fitting gaskets.

2. Install new brake hose fitting gaskets (3).
3. Install the brake hose (2) to the caliper.

   Caution: Refer to Fastener Caution in the Preface section.

4. Install the brake hose fitting bolt (1) to the brake hose and the caliper.

   Tighten
   Tighten the bolt to 52 N·m (38 lb ft).

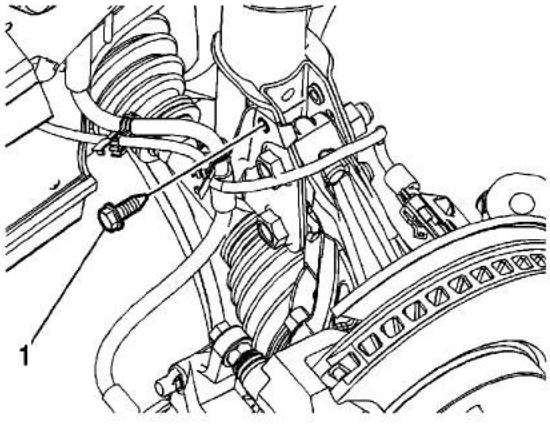

cardiagn.com

5. Install the brake hose bracket bolt (1).

   Tighten
   Tighten the bolt to 12 N·m (106 lb in).

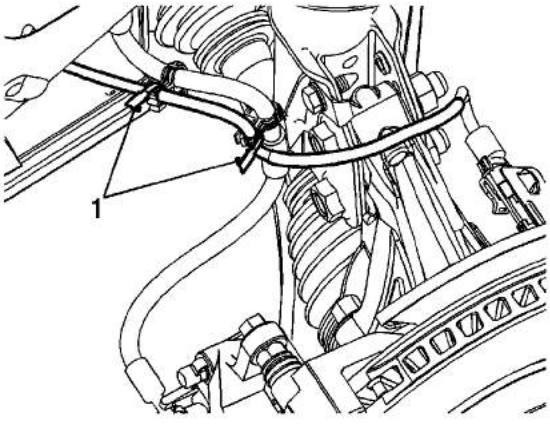

6. Install the wheel speed sensor harness and secure the retaining clips (1).

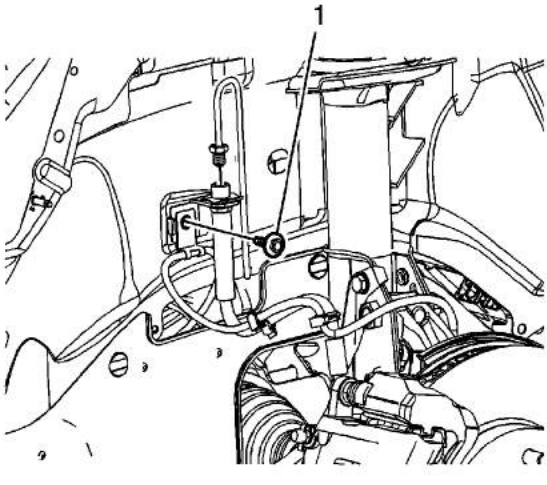

7. Install the brake hose bolt (1) securing the brake hose bracket to the wheelhouse.

   Tighten

cardiagn.com

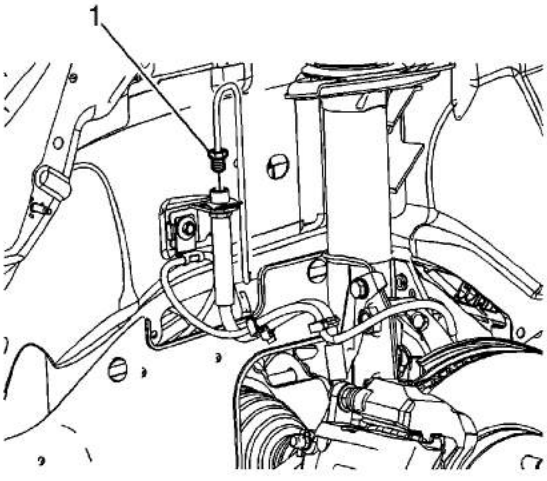

8. Connect the brake pipe fitting (1) to the brake hose.

   Tighten
   Tighten the fitting to 18 N·m (13 lb ft).

9. Bleed the hydraulic brake system. Refer to Hydraulic Brake System Bleeding.
10. Install the tire and wheel assembly. Refer to Tire and Wheel Removal and Installation.
11. Lower the vehicle.

cardiagn.com

Rear Brake Hose Replacement

Removal Procedure

Warning: Refer to Brake Fluid Irritant Warning in the Preface section.

Caution: Refer to Brake Fluid Effects on Paint and Electrical Components Caution in the Preface section.

1. Raise and support the vehicle. Refer to Lifting and Jacking the Vehicle.
2. Remove the tire and wheel assembly. Refer to Tire and Wheel Removal and Installation.

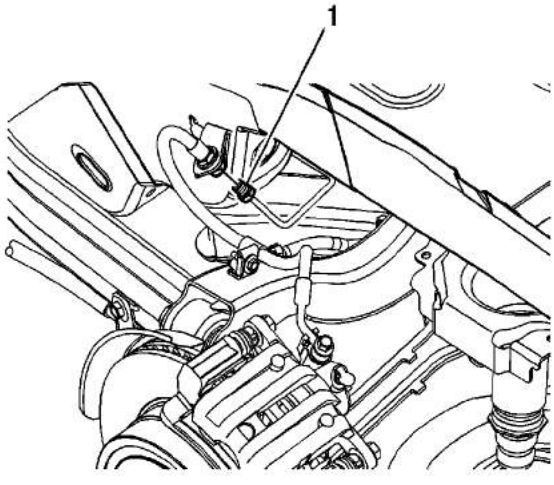

3. Disconnect the brake pipe fitting (1) from the brake hose.

   Cap the brake pipe fitting to prevent brake fluid loss and contamination.

cardiagn.com

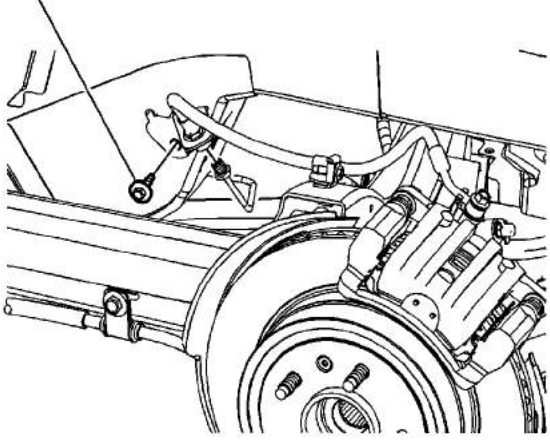

4. Remove the brake hose bolt (1) securing the brake hose bracket to the wheelhouse.

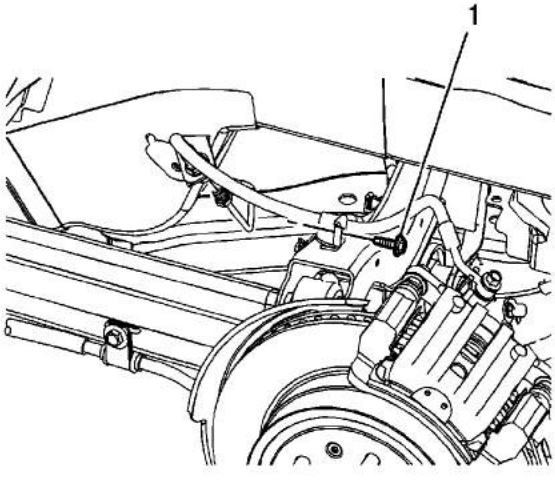

5. Remove the brake hose bracket bolt (1).

cardiagn.com

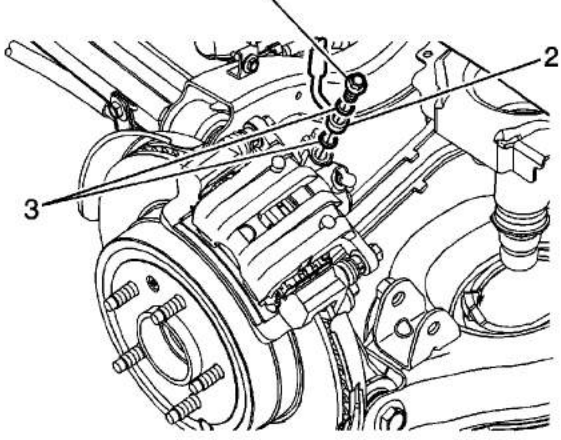

6. Remove the brake hose fitting bolt (1) from the brake hose and the caliper.
7. Remove the brake hose (2) from the caliper.

   Note: Do not reuse the brake hose fitting gaskets.

8. Remove and discard the brake hose fitting gaskets (3).
9. Remove the brake hose.

Installation Procedure

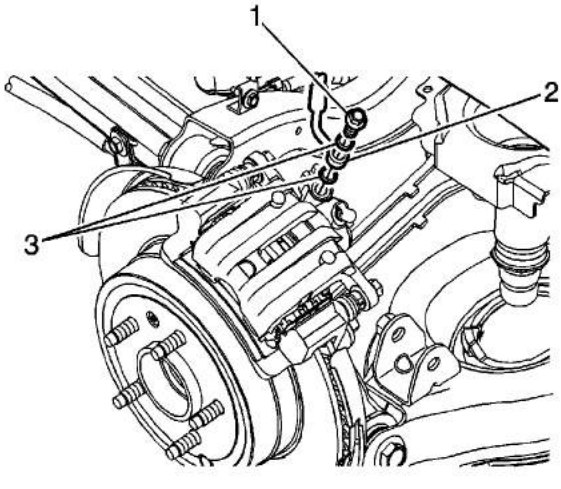

1. Install the brake hose.

cardiagn.com

2. Install new brake hose fitting gaskets (3).
3. Install the brake hose (2) to the caliper.

Caution: Refer to Fastener Caution in the Preface section.

4. Install the brake hose fitting bolt (1) to the brake hose and the caliper.

Tighten
Tighten the bolt to 52 N·m (38 lb ft).

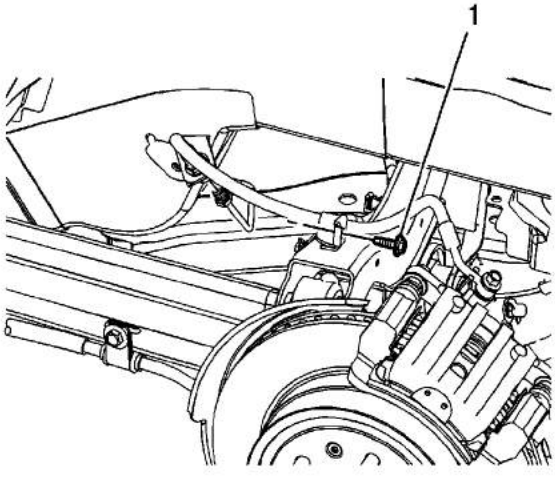

5. Install the brake hose bracket bolt (1).

Tighten
Tighten the bolt to 12 N·m (106 lb in).

cardiagn.com

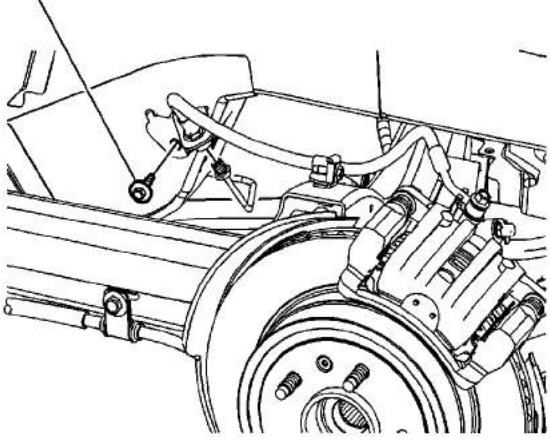

6. Install the brake hose bolt (1) securing the brake hose bracket to the wheelhouse.

   Tighten
   Tighten the bolt to 12 N·m (106 lb in).

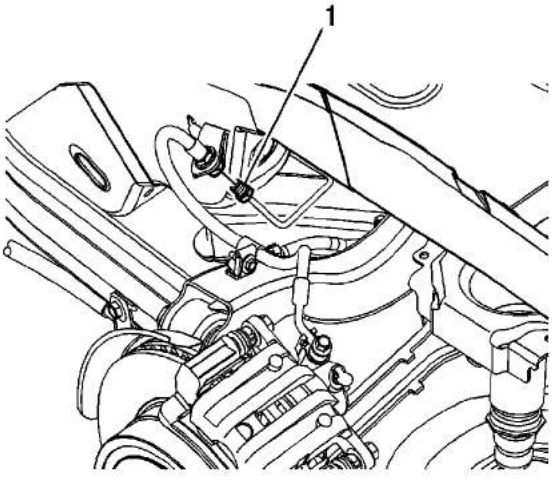

7. Connect the brake pipe fitting (1) to the brake hose.

   Tighten
   Tighten the fitting to 18 N·m (13 lb ft).

8. Bleed the hydraulic brake system. Refer to Hydraulic Brake System Bleeding.
9. Install the tire and wheel assembly. Refer to Tire and Wheel Removal and Installation.

cardiagn.com

cardiagn.com

Hydraulic Brake System Bleeding (Manual)

Warning: Refer to Brake Fluid Irritant Warning in the Preface section.

Caution: Refer to Brake Fluid Effects on Paint and Electrical Components Caution in the Preface section.

1. Place a clean shop cloth beneath the brake master cylinder to catch brake fluid spills.
2. With the ignition OFF and the brakes cool, apply the brakes 3-5 times, or until the brake pedal effort increases significantly, in order to deplete the brake booster power reserve.
3. If you have performed a brake master cylinder bench bleeding on this vehicle, or if you disconnected the brake pipes from the master cylinder, or if you have disconnected the brake pipes from the proportioning valve assembly or the brake modulator assembly, you must perform the following steps to bleed air at the ports of the hydraulic component:
   - 3.1. Fill the brake master cylinder reservoir combined with the hydraulic clutch on manual transmissions to the maximum-fill level with GM approved or equivalent DOT-3 brake fluid from a clean, sealed brake fluid container. If removal of the reservoir cap and diaphragm is necessary, clean the outside of the reservoir on and around the cap prior to removal.
   - 3.2. With the brake pipes installed securely to the master cylinder, proportioning valve assembly, or brake modulator assembly, loosen and separate one of the brake pipes from the port of the component.

   For the proportioning valve assembly or the brake modulator assembly, perform these steps in the sequence of system flow; begin with the fluid feed pipes from the master cylinder.

   - 3.3. Allow a small amount of brake fluid to gravity bleed from the open port of the component.
   - 3.4. Reconnect the brake pipe to the component and tighten securely.
   - 3.5. Have an assistant slowly depress the brake pedal fully and maintain steady pressure on the pedal.
   - 3.6. Loosen the same brake pipe to purge air from the open port of the component.
   - 3.7. Tighten the brake pipe, then have the assistant slowly release the brake pedal.
   - 3.8. Wait 15 seconds, then repeat steps 3.3-3.7 until all air is purged from the same port of the component.
   - 3.9. With the brake pipe installed securely to the master cylinder, proportioning valve assembly, or brake modulator assembly after all air has been purged from the first port of the component that was bled, loosen and separate the next brake pipe from the component, then repeat steps 3.3-3.8 until each of the ports on the component has been bled.
   - 3.10. After completing the final component port bleeding procedure, ensure that each of the brake pipe-to-component fittings is properly tightened.
4. Fill the brake master cylinder reservoir and combined hydraulic clutch, if equipped, to the maximum-fill level with GM approved or equivalent DOT-3 brake fluid from a clean, sealed brake fluid container. Ensure the brake master cylinder reservoir remains at least half-full during this bleeding procedure. Add fluid as needed to maintain the proper level.

   Clean the outside of t[redacted] prior to removing the cap

cardiagn.com

5. Install a proper box-end wrench onto the RIGHT REAR wheel hydraulic circuit bleeder valve.
6. Install a transparent hose over the end of the bleeder valve.
7. Submerge the open end of the transparent hose into a transparent container partially filled with GM approved or equivalent DOT-3 brake fluid from a clean, sealed brake fluid container.
8. Have an assistant slowly depress the brake pedal fully and maintain steady pressure on the pedal.
9. Loosen the bleeder valve to purge air from the wheel hydraulic circuit.
10. Tighten the bleeder valve, then have the assistant slowly release the brake pedal.
11. Wait 15 seconds, then repeat steps 8-10 until all air is purged from the same wheel hydraulic circuit.
12. With the right rear wheel hydraulic circuit bleeder valve tightened securely and after all air has been purged from the right rear hydraulic circuit, install a proper box-end wrench onto the LEFT FRONT wheel hydraulic circuit bleeder valve.
13. Install a transparent hose over the end of the bleeder valve, then repeat steps 7-11.
14. With the left front wheel hydraulic circuit bleeder valve tightened securely after all air has been purged from the left front hydraulic circuit, install a proper box-end wrench onto the LEFT REAR wheel hydraulic circuit bleeder valve.
15. Install a transparent hose over the end of the bleeder valve, then repeat steps 7-11.
16. With the left rear wheel hydraulic circuit bleeder valve tightened securely after all air has been purged from the left rear hydraulic circuit, install a proper box-end wrench onto the RIGHT FRONT wheel hydraulic circuit bleeder valve.
17. Install a transparent hose over the end of the bleeder valve, then repeat steps 7-11.
18. After completing the final wheel hydraulic circuit bleeding procedure, ensure that each of the 4 wheel hydraulic circuit bleeder valves is properly tightened.
19. Fill the brake master cylinder reservoir to the maximum-fill level with GM approved or equivalent DOT-3 brake fluid from a clean, sealed brake fluid container.
20. Slowly depress and release the brake pedal. Observe the feel of the brake pedal.
21. If the brake pedal feels spongy, repeat the bleeding procedure again. If the brake pedal still feels spongy after repeating the bleeding procedure, perform the following steps:
    21.1. Inspect the brake system for external leaks. Refer to Brake System External Leak Inspection.
    21.2. Pressure bleed the hydraulic brake system in order to purge any air that may still be trapped in the system.
22. Turn the ignition key ON, with the engine OFF. Check to see if the brake system warning lamp remains illuminated.

Note: DO NOT allow the vehicle to be driven until it is diagnosed and repaired.

23. If the brake system warning lamp remains illuminated. Refer to Symptoms - Hydraulic Brakes.

cardiagn.com

Hydraulic Brake System Bleeding (Pressure)

Special Tools

- J 29532 Diaphragm Type Brake Pressure Bleeder, or equivalent
- J 44894-A Brake Pressure Bleeder Adapter

Warning: Refer to Brake Fluid Irritant Warning in the Preface section.

Caution: Refer to Brake Fluid Effects on Paint and Electrical Components Caution in the Preface section.

1. Place a clean shop cloth beneath the brake master cylinder to catch brake fluid spills.
2. With the ignition OFF and the brakes cool, apply the brakes 3-5 times, or until the brake pedal becomes firm, in order to deplete the brake booster power reserve.
3. If you have performed a brake master cylinder bench bleeding on this vehicle, or if you disconnected the brake pipes from the master cylinder, or if you have disconnected the brake pipes from the proportioning valve assembly or the brake modulator assembly, you must perform the following steps to bleed air at the ports of the hydraulic component:
   3.1. Fill the brake master cylinder reservoir, combined with the hydraulic clutch on the manual transmission, equipped, to the maximum-fill level with GM approved or equivalent DOT-3 brake fluid from a clean sealed brake fluid container. If removal of the reservoir cap and diaphragm is necessary, clean the outside of the reservoir on and around the cap prior to removal.
   3.2. With the brake pipes installed securely to the master cylinder, proportioning valve assembly, or brake modulator assembly, loosen and separate one of the brake pipes from the port of the component.

   For the proportioning valve assembly or the brake modulator assembly, perform these steps in the sequence of system flow; begin with the fluid feed pipes from the master cylinder.

   3.3. Allow a small amount of brake fluid to gravity bleed from the open port of the component.
   3.4. Reconnect the brake pipe to the component and tighten securely.
   3.5. Have an assistant slowly depress the brake pedal fully and maintain steady pressure on the pedal.
   3.6. Loosen the same brake pipe to purge air from the open port of the component.
   3.7. Tighten the brake pipe, then have the assistant slowly release the brake pedal.
   3.8. Wait 15 seconds, then repeat steps 3.3-3.7 until all air is purged from the same port of the component.
   3.9. With the brake pipe installed securely to the master cylinder, proportioning valve assembly, or brake modulator assembly after all air has been purged from the first port of the component that was bled loosen and separate the next brake pipe from the component, then repeat steps 3.3-3.8 until each of the ports on the component has been bled.
   3.10. After completing the final component port bleeding procedure, ensure that each of the brake pipe-to-[redacted]

cardiagn.com

brake fluid container. Clean the outside of the reservoir on and around the reservoir cap prior to removing the cap and diaphragm.

5. Install the J 44894-A to the brake master cylinder reservoir.
6. Check the brake fluid level in the J 29532 . Add GM approved or equivalent DOT-3 brake fluid from a clean, sealed brake fluid container as necessary to bring the level to approximately the half-full point.
7. Connect the J 29532 , or equivalent, to the J 44894-A .
8. Charge the J 29532 , or equivalent, air tank to 175-205 kPa (25-30 psi).
9. Open the J 29532 , or equivalent, fluid tank valve to allow pressurized brake fluid to enter the brake system.
10. Wait approximately 30 seconds, then inspect the entire hydraulic brake system in order to ensure that there are no existing external brake fluid leaks.

    Any brake fluid leaks identified require repair prior to completing this procedure.

11. Install a proper box-end wrench onto the RIGHT REAR wheel hydraulic circuit bleeder valve.
12. Install a transparent hose over the end of the bleeder valve.
13. Submerge the open end of the transparent hose into the transparent container partially filled with GM approved or equivalent DOT-3 brake fluid from a clean, sealed brake fluid container.
14. Loosen the bleeder valve to purge air from the wheel hydraulic circuit. Allow fluid to flow until air bubbles stop flowing from the bleeder, then tighten the bleeder valve.
15. With the right rear wheel hydraulic circuit bleeder valve tightened securely after all air has been purged from the right rear hydraulic circuit, install a proper box-end wrench onto the LEFT FRONT wheel hydraulic circuit bleeder valve.
16. Install a transparent hose over the end of the bleeder valve, then repeat steps 13-14.
17. With the left front wheel hydraulic circuit bleeder valve tightened securely after all air has been purged from the left front hydraulic circuit, install a proper box-end wrench onto the LEFT REAR wheel hydraulic circuit bleeder valve.
18. Install a transparent hose over the end of the bleeder valve, then repeat steps 13-14.
19. With the left rear wheel hydraulic circuit bleeder valve tightened securely after all air has been purged from the left rear hydraulic circuit, install a proper box-end wrench onto the RIGHT FRONT wheel hydraulic circuit bleeder valve.
20. Install a transparent hose over the end of the bleeder valve, then repeat steps 13-14.
21. After completing the final wheel hydraulic circuit bleeding procedure, ensure that each of the 4 wheel hydraulic circuit bleeder valves is properly tightened.
22. Close the J 29532 , or equivalent, fluid tank valve, then disconnect the J 29532 , or equivalent, from the J 44894-A .
23. Remove the J 44894-A from the brake master cylinder reservoir.
24. Fill the brake master cylinder reservoir to the maximum-fill level with GM approved or equivalent DOT-3 brake fluid from a clean, sealed brake fluid container.
25. Slowly depress and release the brake pedal. Observe the feel of the brake pedal.
26. If the brake pedal feels spongy perform the following steps:
    - 26.1. Inspect the brake system for external leaks. Refer to Brake System External Leak Inspection.
    - 26.2. If equipped with antilock brakes, using a scan tool, perform the antilock brake system automated bleeding procedure to remove any air that may have been trapped in the brake pressure modulator valve (BPMV). Refer to Antilock Brake System Automated Bleed Procedure.
27. Turn the ignition key ON, with the engine OFF. Check to see if the brake system warning lamp remains illuminated.

    Note: DO NOT allow the vehicle to be driven until it is diagnosed and repaired.

cardiagn.com

cardiagn.com

Hydraulic Brake System Flushing

Warning: Refer to Brake Fluid Irritant Warning in the Preface section.

Caution: When adding fluid to the brake master cylinder reservoir, use only GM approved or equivalent DOT-3 brake fluid from a clean, sealed brake fluid container. The use of any type of fluid other than the recommended type of brake fluid may cause contamination which could result in damage to the internal rubber seals and/or rubber linings of hydraulic brake system components.

Caution: Refer to Brake Fluid Effects on Paint and Electrical Components Caution in the Preface section.

1. Inspect the brake fluid for the following conditions, indicating brake fluid contamination:
   - Fluid separation, indicating two types of fluid are present; a substance other than the recommended brake fluid has been introduced into the brake hydraulic system
     - Swirled appearance--Oil-based substance
     - Layered appearance--Silicone-based substance
   - Fluid discoloration, indicating the presence of moisture or particles that have been introduced into the brake hydraulic system
     - Cloudy appearance--Moisture
     - Dark appearance/suspended particles in fluid--Dirt, rust, corrosion, brake dust
2. Inspect the master cylinder reservoir cap diaphragm and the reservoir-to-master cylinder grommets for swelling, indicating brake fluid contamination.
3. If the brake fluid WAS contaminated with an oil-based or a silicone-based substance, indicated by fluid separation and/or a swollen master cylinder reservoir cap diaphragm and/or swollen reservoir-to-master cylinder grommets, perform the following:

   3.1. Remove ALL of the following components listed from the vehicle. Each component contains internal rubber seals/linings which have been contaminated by the contaminated brake fluid in the brake hydraulic system.

   Refer to the procedures indicated:

   - Master Cylinder Reservoir Replacement
   - Master Cylinder Replacement
   - Front Brake Hose Replacement
   - Rear Brake Hose Replacement
   - Front Brake Caliper Replacement
   - Rear Brake Caliper Replacement
   - Brake Pressure Modulator Valve Replacement

   3.2. Clean out all the hydraulic brake pipes using denatured alcohol, or equivalent.

   3.3. Dry the brake pipes using non-lubricated, filtered air.

   3.4. Repair or replace ALL of the following components listed and install them to the vehicle. Each component contains internal rubber seals/linings which have been contaminated by the contaminated brake fluid in the brake hydraulic system.

cardiagn.com

- Clean the brake master cylinder reservoir using denatured alcohol, or equivalent, then dry the reservoir using non-lubricated, filtered air. Inspect the reservoir for cracks and/or damage and replace if necessary. Refer to Master Cylinder Reservoir Replacement. Replace the brake master cylinder reservoir cap diaphragm.
- Master Cylinder Replacement
- Front Brake Hose Replacement
- Rear Brake Hose Replacement
- Front Brake Caliper Replacement
- Rear Brake Caliper Replacement
- Brake Pressure Modulator Valve Replacement

4. If the brake fluid was NOT contaminated with an oil-based or a silicone-based substance, but WAS contaminated with water or dirt, rust, corrosion, and/or brake dust, replace the brake master cylinder reservoir cap diaphragm which may have allowed the moisture or particles to enter the hydraulic system.
5. Pressure bleed the hydraulic brake system; begin the procedure with the pressure bleeder reservoir filled to the maximum-fill level with the correct brake fluid as indicated. Refer to Hydraulic Brake System Bleeding.

cardiagn.com

Power Vacuum Brake Booster Replacement

Removal Procedure

Warning: Refer to Brake Fluid Irritant Warning in the Preface section.

Caution: Refer to Brake Fluid Effects on Paint and Electrical Components Caution in the Preface section.

1. Remove the underhood electrical center. Refer to Underhood Electrical Center or Junction Block Replacement.
2. Remove and position aside the surge tank. Refer to Radiator Surge Tank Replacement.

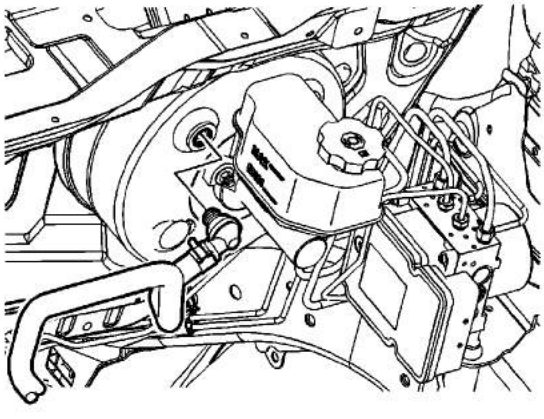

3. Disconnect the vacuum brake booster vacuum check valve and hose from the vacuum brake booster and position aside.
4. Remove the master cylinder. Refer to Master Cylinder Replacement.
5. Remove the brake pressure modulator valve (BPMV). Refer to Brake Pressure Modulator Valve Replacement.

cardiagn.com

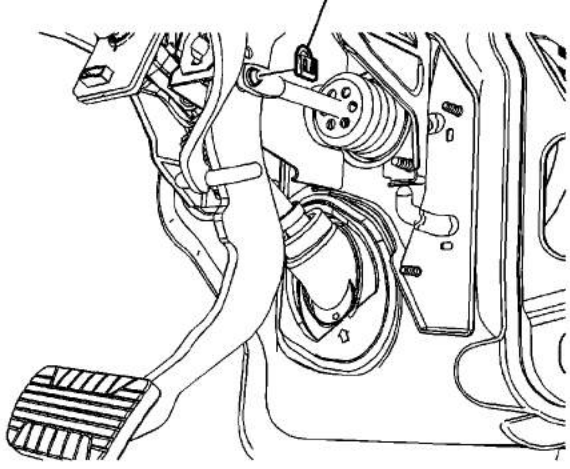

6. Remove the driver knee bolster. Refer to Driver Knee Bolster Replacement.
7. Remove the vacuum brake booster pushrod retainer (1).
8. Disconnect the vacuum brake booster pushrod from the brake pedal.

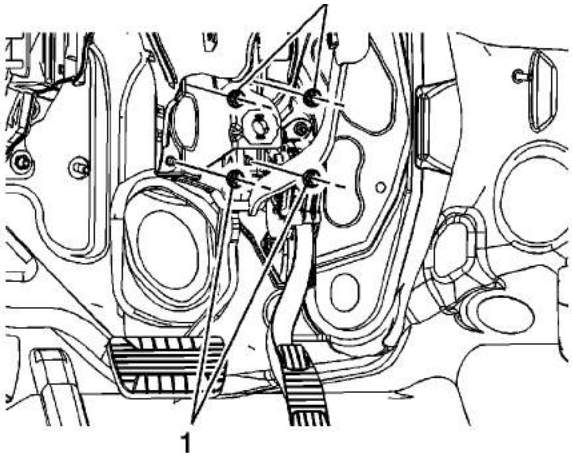

9. Remove the 4 vacuum brake booster nuts (1).

cardiagn.com

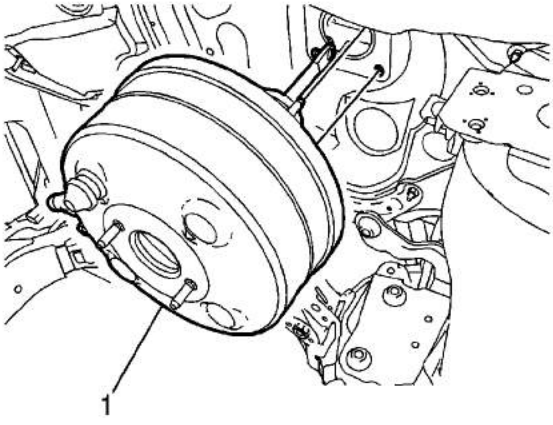

10. Carefully pull the vacuum brake booster forward until the mounting studs clear the dash panel.

    Note: Ensure the foam insulator on the mounting surface of the vacuum brake booster withdraws with the booster.

11. Remove the vacuum brake booster (1).

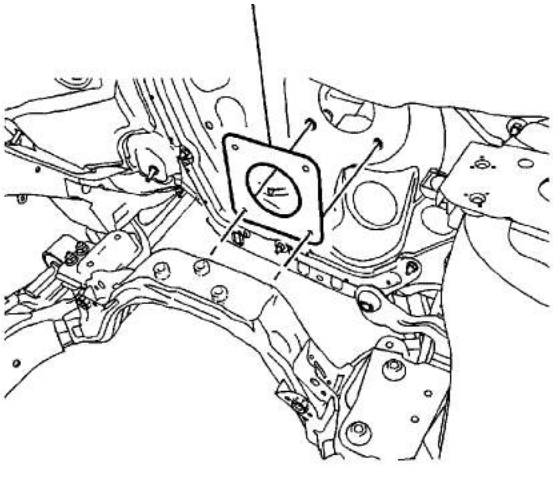

12. Inspect the vacuum brake booster gasket (1) for damage and replace if necessary.

Installation Procedure

cardiagn.com

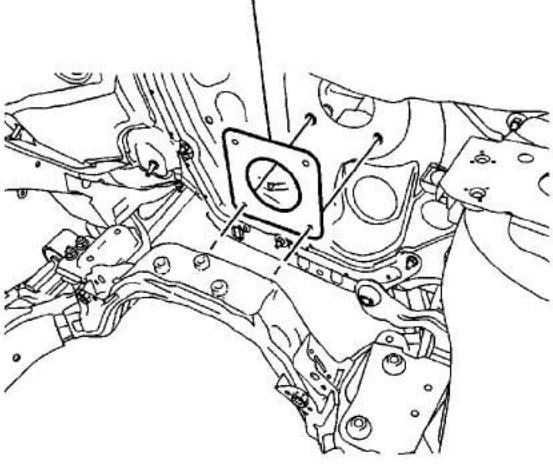

1. Install the vacuum brake booster gasket (1).

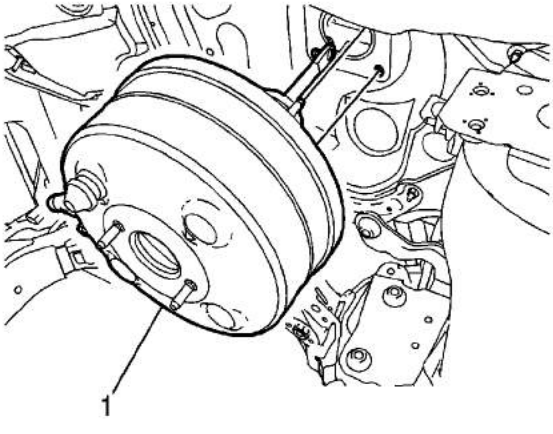

Note: Ensure the foam insulator on the mounting surface of the vacuum brake booster is properly installed on the booster.

2. While guiding the brake booster pushrod and mounting studs through the dash panel, install the vacuum brake booster (1).

Caution: Refer to Fastener Caution in the Preface section.

cardiagn.com

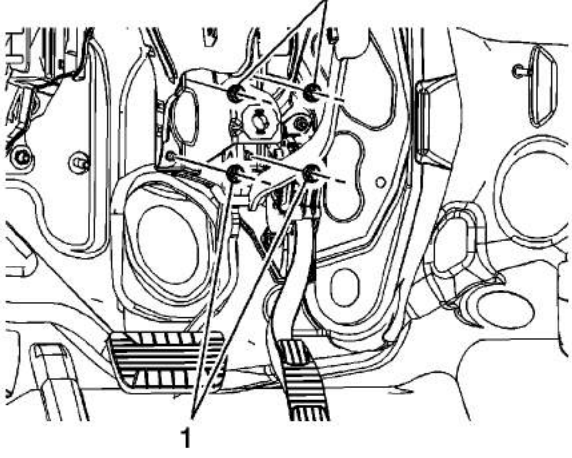

3. Install the 4 vacuum brake booster nuts (1).

   Tighten
   Tighten the nuts to 25 N·m (18 lb ft).

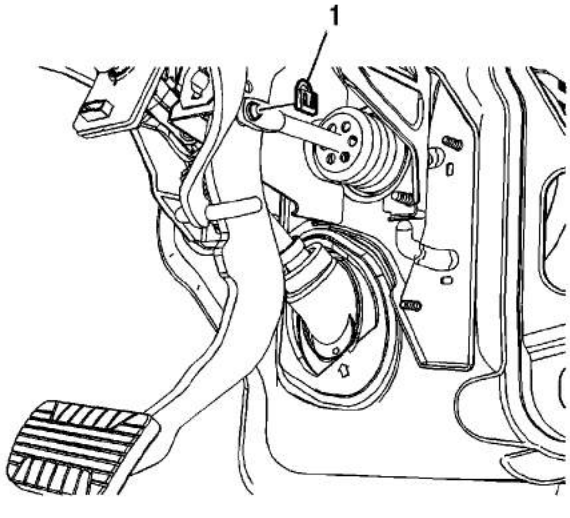

4. Connect the vacuum brake booster pushrod to the brake pedal.
5. Install the vacuum brake booster pushrod retainer (1).

   Rotate the vacuum brake booster pushrod retainer 360 degrees to ensure it is properly installed.

6. Install the driver knee bolster. Refer to Driver Knee Bolster Replacement.

cardiagn.com

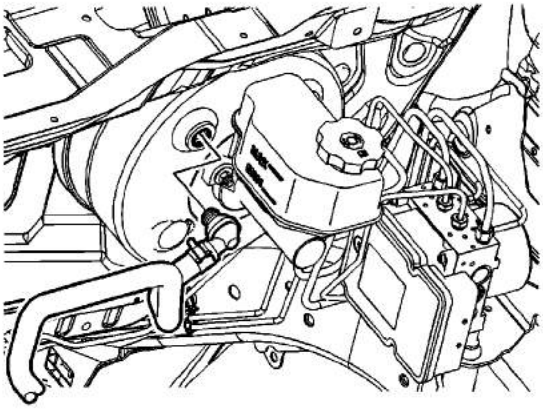

9. Connect the vacuum brake booster vacuum check valve and hose to the vacuum brake booster.
10. Install the surge tank. Refer to Radiator Surge Tank Replacement.
11. Install the underhood electrical center. Refer to Underhood Electrical Center or Junction Block Replacement.

cardiagn.com

Power Brake Booster Vacuum Check Valve and Hose Replacement

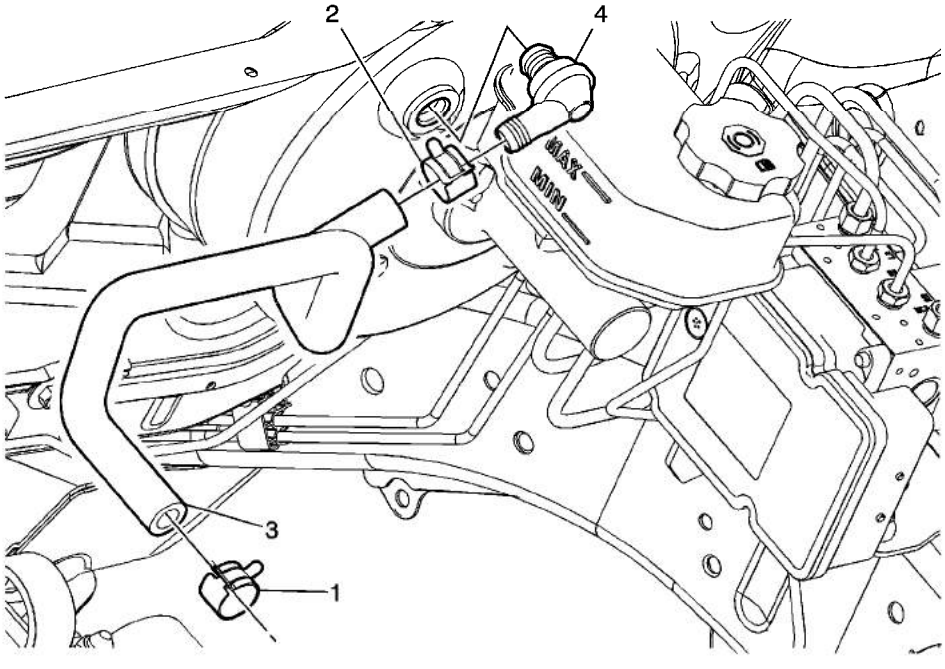

Callout	Component Name
Preliminary Procedures 1. If equipped with the 3.5L engine, remove the intake manifold cover. Refer to Intake Manifold Cover Replacement. 2. If equipped with the 3.6L engine, remove the fuel injector sight shield. Refer to Fuel Injector Sight Shield Replacement.	
1	Power Brake Booster Vacuum Hose Clamp
2	Power Brake Booster Vacuum Hose Clamp
3	Power Brake Booster Vacuum Hose
4	Power Brake Booster Vacuum Check Valve

cardiagn.com

Power Brake Booster Vacuum Sensor Replacement

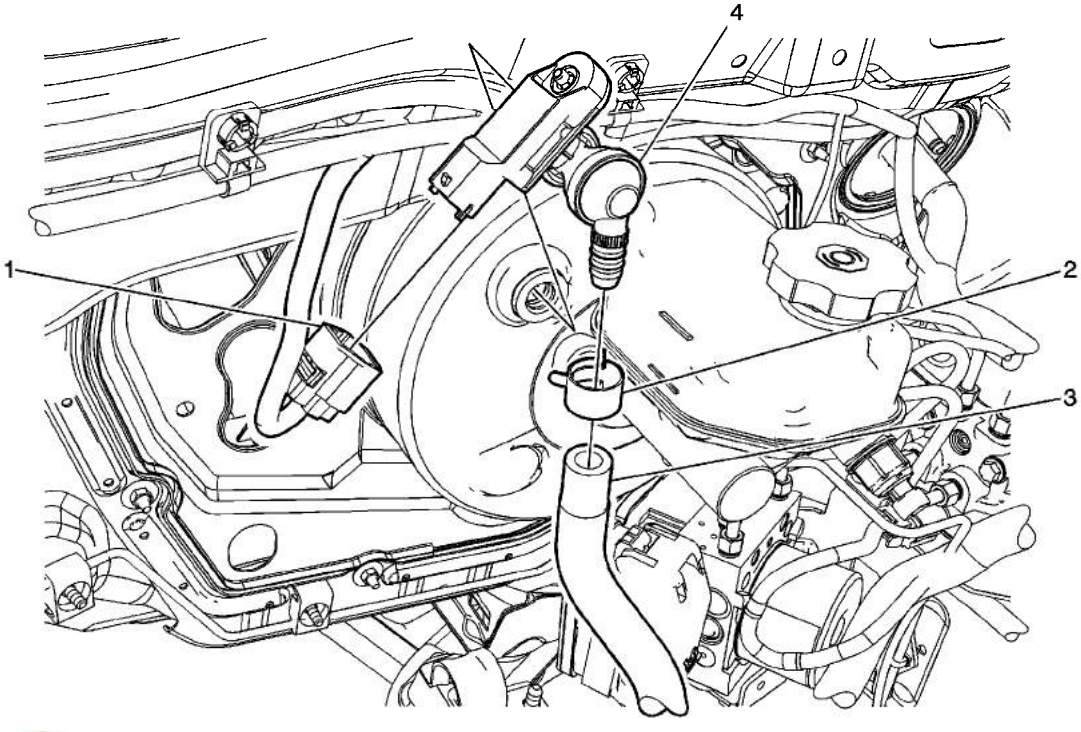

Callout	Component Name
Preliminary Procedures 1. Turn the ignition switch to the OFF position. 2. Apply the brake pedal several times until the brake pedal becomes firm to deplete the power brake booster vacuum reserve.	
1	Power Brake Booster Vacuum Vacuum Sensor Electrical Connector
2	Power Brake Booster Vacuum Hose Clamp
3	Power Brake Booster Vacuum Hose
3	Power Brake Booster Vacuum Sensor **Tip** If necessary, a small amount of denatured alcohol can be used as an assembly aid for installing the power brake booster vacuum sensor to the brake booster. Do not use soap.

cardiagn.com

Brake Master Cylinder Pressure Sensor Replacement

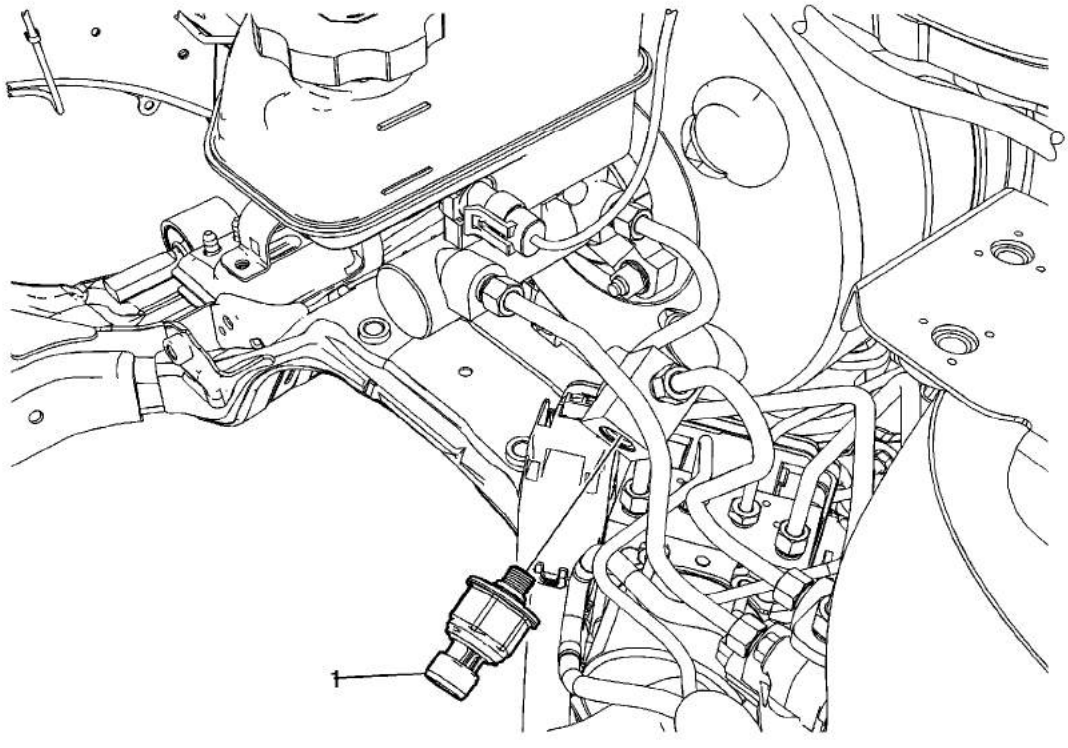

Callout	Component Name
Warning: Refer to Brake Fluid Irritant Warning in the Preface section. **Caution:** Refer to Brake Fluid Effects on Paint and Electrical Components Caution in the Preface section. **Preliminary Procedures** 1. Turn the ignition switch to the OFF position. 2. Remove the battery. Refer to Battery Replacement. 3. Without draining the coolant or removing the hoses, remove and position aside the radiator surge tank. Refer to Radiator Surge Tank Replacement. 4. Clean the area around the brake master cylinder pressure sensor of any foreign material or debris. 5. Disconnect the brake master cylinder pressure sensor electrical connector. 6. Place a clean shop cloth around the brake master cylinder pressure sensor mounting block outlet port brake pipe fitting to absorb any brake fluid.	
	Brake Master Cylinder Pressure Sensor **Caution:** Refer to Fastener Caution in the Preface section.

© 2010 General Motors Corporation. All rights reserved.

cardiagn.com

1	1. Bleed the hydraulic brake system. Refer to Hydraulic Brake System Bleeding. 2. Turn the ignition switch to the ON position. DO NOT start the engine. 3. Perform the Diagnostic System Check - Vehicle. 4. Observe the feel of the brake pedal after performing the diagnostic system check. If the brake pedal feels spongy, perform the Antilock Brake System Automated Bleed Procedure. 5. Install a scan tool. 6. Using the special functions menu on the scan tool, perform the brake master cylinder pressure sensor learn procedure. Refer to Service Programming System (SPS). **Tighten** 18 N·m (13 lb ft)

cardiagn.com

Brake Delay Valve Replacement

Warning: Refer to Brake Fluid Irritant Warning in the Preface section.

Caution: Refer to Brake Fluid Effects on Paint and Electrical Components Caution in the Preface section.

Removal Procedure

1. Turn the ignition switch to the OFF position.
2. Remove the 12V battery. Refer to Battery Replacement.
3. Without draining the coolant or removing the hoses, remove and position aside the radiator surge tank. Refer to Radiator Surge Tank Replacement.

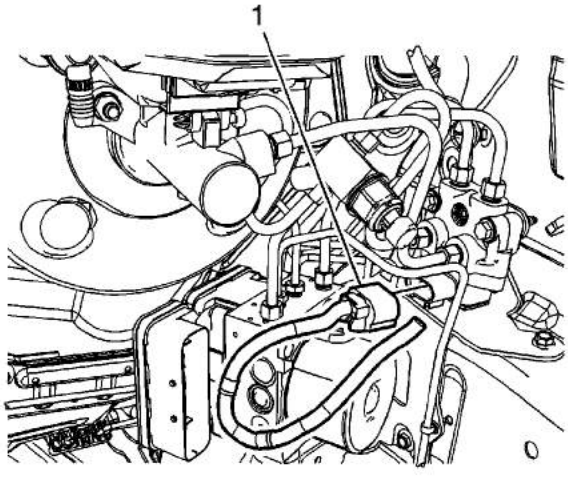

4. Disconnect the brake delay valve electrical connector (1).

cardiagn.com

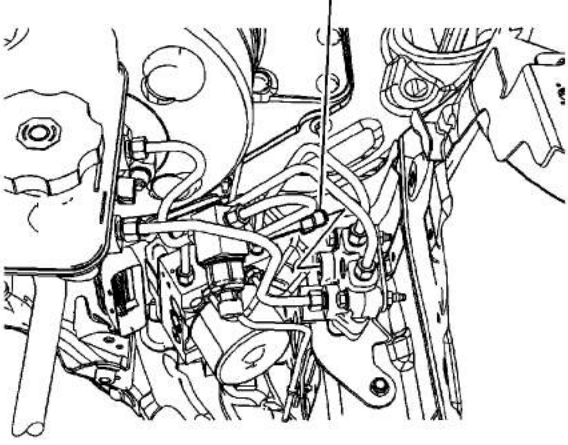

5. Loosen, but do not remove, the primary brake pipe fitting at the master cylinder pressure sensor mounting block.
6. Disconnect the primary brake pipe inlet fitting (1) at the brake delay valve.

   Rotate the brake pipe aside and cap the brake pipe fitting to prevent brake fluid loss and contamination.

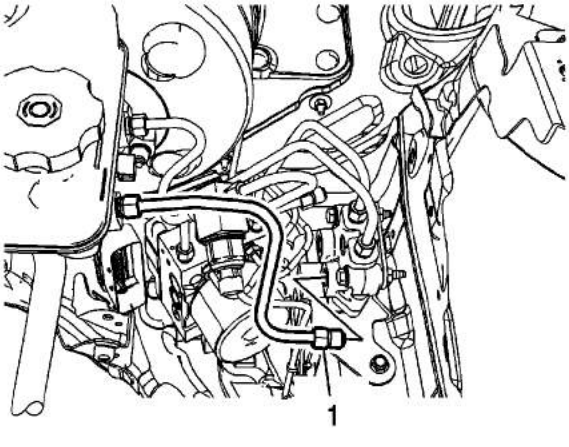

7. Loosen, but do not remove, the secondary brake pipe fitting at the master cylinder.
8. Disconnect the secondary brake pipe inlet fitting (1) at the brake delay valve.

   Rotate the brake pipe aside and cap the brake pipe fitting to prevent brake fluid loss and contamination.

cardiagn.com

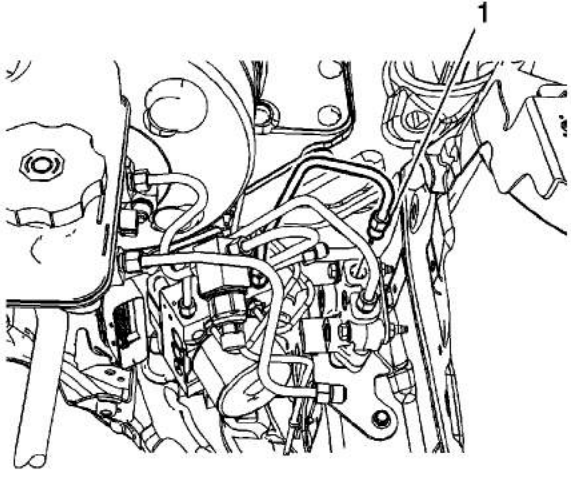

9. Loosen, but do not remove, the primary brake pipe fitting at the brake pressure modulator valve (BPMV).
10. Disconnect the primary brake pipe outlet fitting (1) at the brake delay valve.

    Rotate the brake pipe aside and cap the brake pipe fitting to prevent brake fluid loss and contamination.

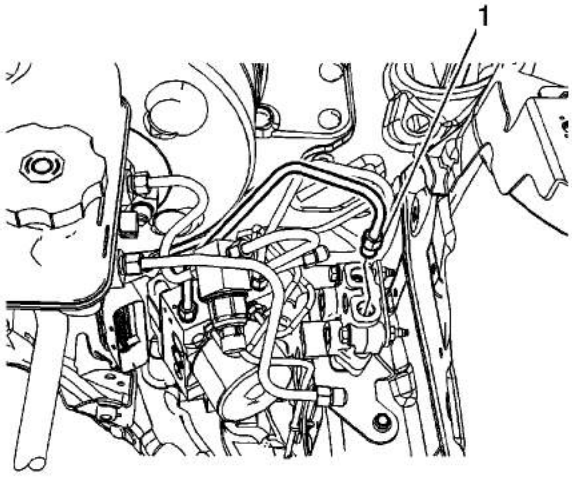

11. Loosen, but do not remove, the secondary brake pipe fitting at the BPMV.
12. Disconnect the secondary brake pipe outlet fitting (1) at the brake delay valve.

    Rotate the brake pipe aside and cap the brake pipe fitting to prevent brake fluid loss and

cardiagn.com

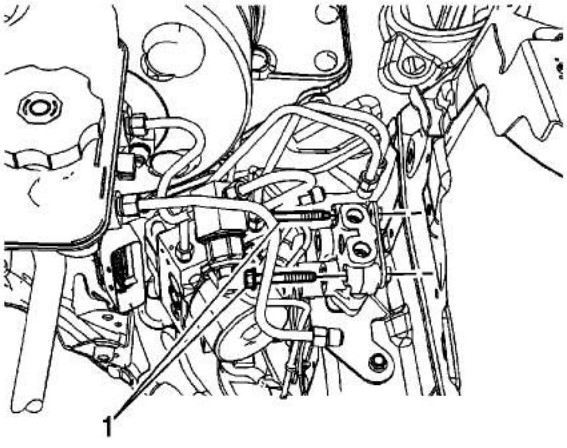

13. Remove the 2 brake delay valve bolts (1).
14. Remove the brake delay valve.

Installation Procedure

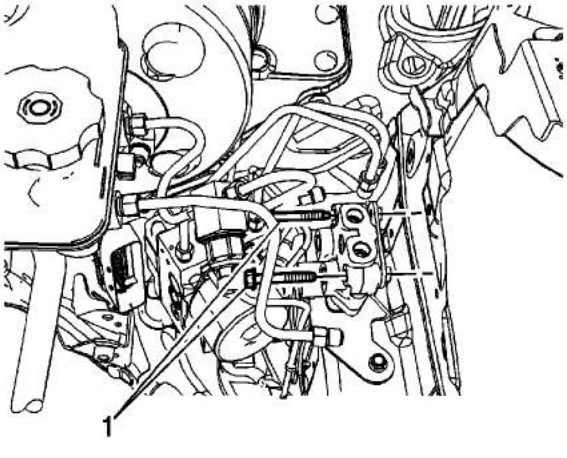

1. Install the brake delay valve.

Caution: Refer to Fastener Caution in the Preface section.

cardiagn.com

Tighten
Tighten the bolts to 10 N·m (89 lb in).

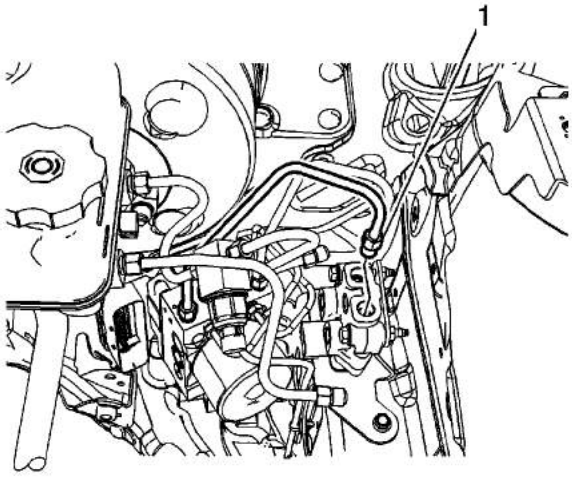

3. Connect the secondary brake pipe outlet fitting (1) at the brake delay valve.

   Tighten
   Tighten the fitting to 18 N·m (13 lb ft).

4. Tighten the secondary brake pipe fitting at the BPMV.

   Tighten
   Tighten the fitting to 18 N·m (13 lb ft).

cardiagn.com

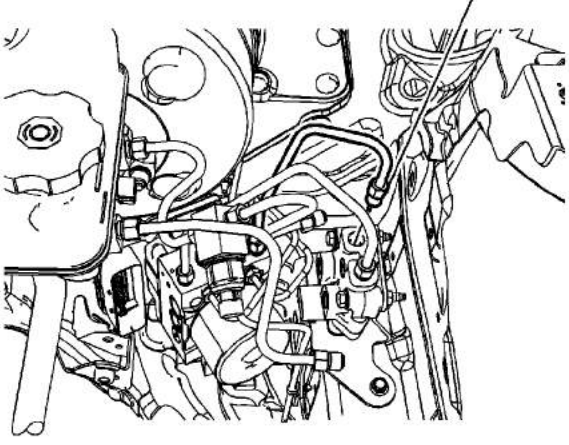

5. Connect the primary brake pipe outlet fitting (1) at the brake delay valve.

   Tighten
   Tighten the fitting to 18 N·m (13 lb ft).

6. Tighten the primary brake pipe fitting at the BPMV.

   Tighten
   Tighten the fitting to 18 N·m (13 lb ft).

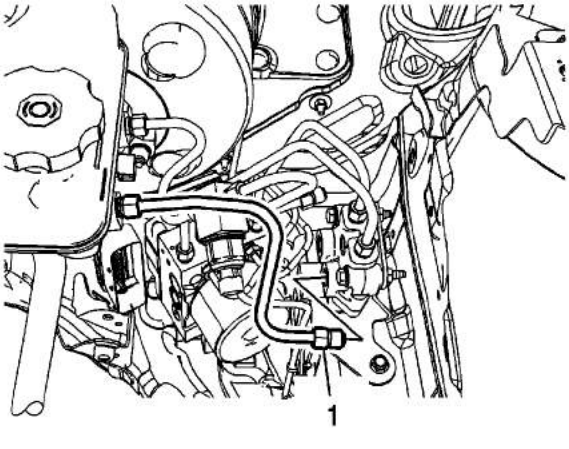

7. Connect the secondary brake pipe inlet fitting (1) at the brake delay valve.

cardiagn.com

8. Tighten the secondary brake pipe fitting at the master cylinder.

   Tighten
   Tighten the fitting to 18 N·m (13 lb ft).

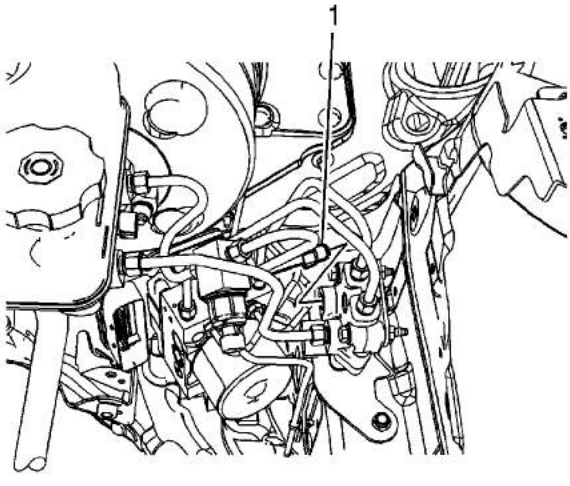

9. Connect the primary brake pipe outlet fitting (1) at the brake delay valve.

   Tighten
   Tighten the fitting to 18 N·m (13 lb ft).

10. Tighten the primary brake pipe fitting at the master cylinder pressure sensor mounting block.

    Tighten
    Tighten the fitting to 18 N·m (13 lb ft).

cardiagn.com

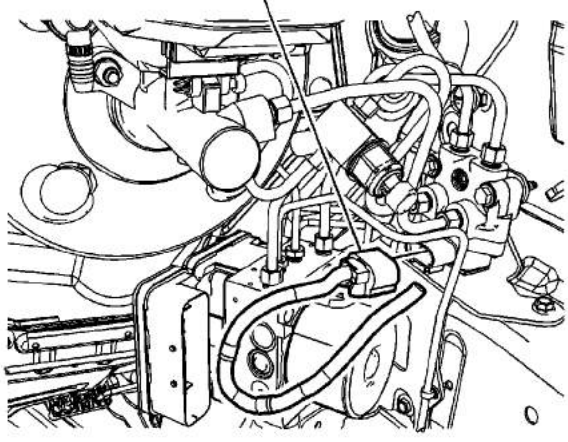

11. Connect the brake delay valve electrical connector (1).
12. Install the radiator surge tank. Refer to Radiator Surge Tank Replacement.
13. Install the 12V battery. Refer to Battery Replacement.
14. Bleed the hydraulic brake system. Refer to Hydraulic Brake System Bleeding.

cardiagn.com