2004 DRIVELINE/AXLE

Drive Axle - Locking/Limited Slip - C/K SUV

SPECIFICATIONS

FASTENER TIGHTENING SPECIFICATIONS

Fastener Tightening Specifications

Application	Specification	
	Metric	English
Differential Case Screws (10.5" axle)	17 N.m	13 lb ft
Pinion Shaft Lock Bolt (8.6" axle)	36 N.m	27 lb ft
Pinion Shaft Lock Bolt (9.5" axle)	50 N.m	37 lb ft

THRUST BLOCK SIZES (LOCKING)

Thrust Block Sizes (Locking)

Color Code	8.6" Axle	9.5" Axle	10.5" Axle
Blue	34.290 mm (1.350")	40.488 mm (1.594")	40.488 mm (1.594")
Purple	33.578 mm (1.322")	40.589 mm (1.598")	40.589 mm (1.598")
White	33.680 mm (1.326")	40.691 mm (1.602")	40.691 mm (1.602")
Brown	33.782 mm (1.330")	40.792 mm (1.606")	40.792 mm (1.606")
Yellow	33.883 mm (1.334")	40.894 mm (1.610")	40.894 mm (1.610")
Orange	33.985 mm (1.338")	40.996 mm (1.614")	40.996 mm (1.614")
Pink	34.087 mm (1.342")	41.097 mm (1.618")	41.097 mm (1.618")
Green	34.188 mm (1.346")	41.199 mm (1.622")	41.199 mm (1.622")

COMPONENT LOCATOR

LIMITED SLIP DIFFERENTIAL DISASSEMBLED VIEWS

cardiagn.com

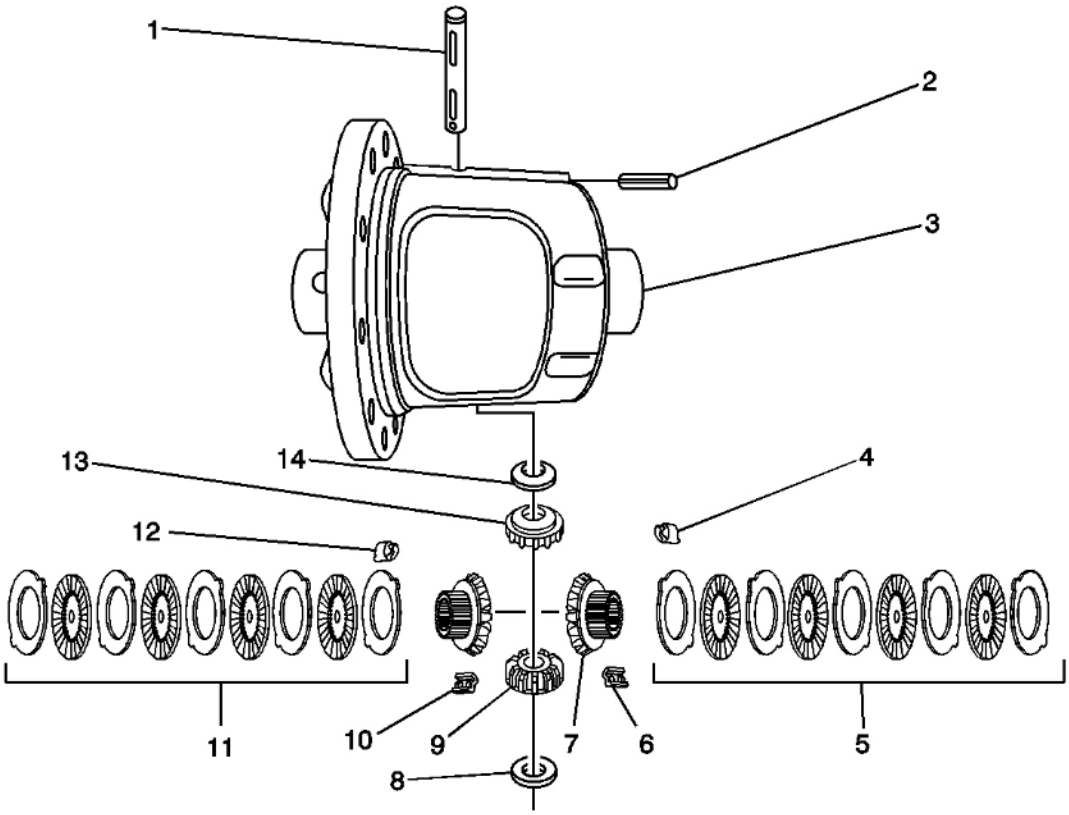

Fig. 1: 9.75 Limited Slip Differential Disassembled View
Courtesy of GENERAL MOTORS CORP.

Callouts For Fig. 1

Callout	Component Name
1	Pinion Mate Shaft
2	Roll Pin
3	Differential Housing
4	Retainer
5	Clutch Pack
6	Retainer
7	Differential Side Gear
8	Pinion Gear Thrust Washer
9	Differential Pinion Gear
10	Retainer
11	Clutch Pack
12	Retainer
13	Differential Pinion Gear

cardiagn.com

14	Pinion Gear Thrust Washer

LOCKING DIFFERENTIAL DISASSEMBLED VIEWS

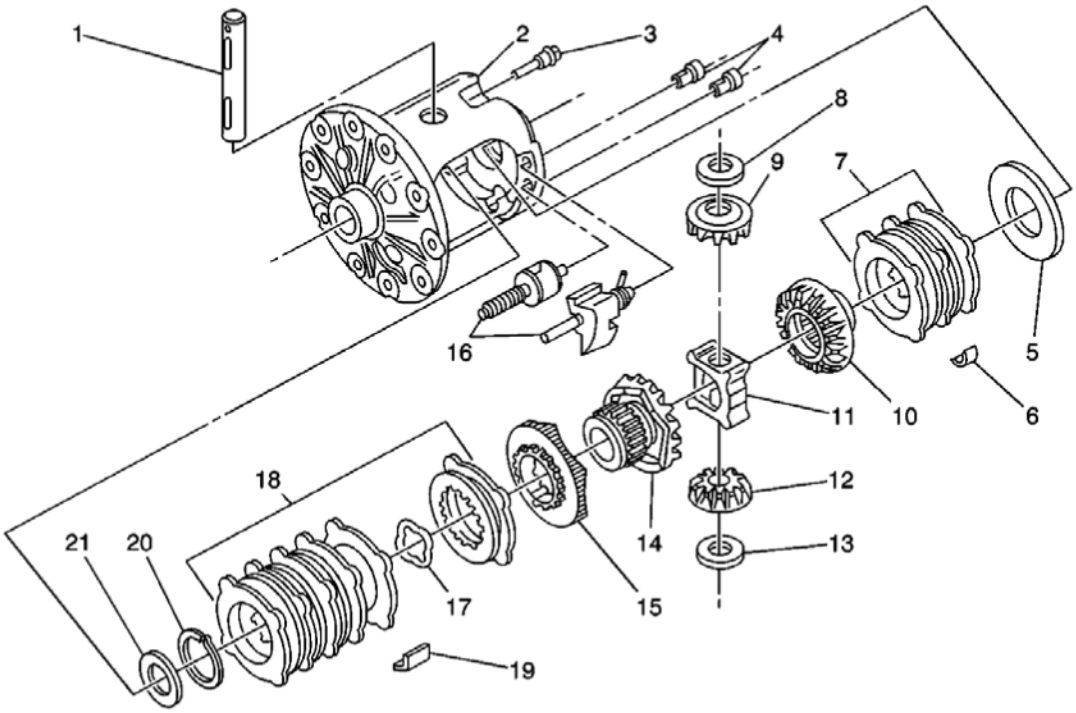

Fig. 2: 8.6 Locking Differential Disassembled View
Courtesy of GENERAL MOTORS CORP.

Callouts For Fig. 2

Callout	Component Name
1	Differential Pinion Gear Shaft
2	Differential Case
3	Differential Pinion Gear Shaft Lock Bolt
4	Locking Differential Lockout Bushings
5	Locking Differential Clutch Disc Thrust Washer
6	Locking Differential Clutch Disc Guide
7	Locking Differential Clutch Disc Set
8	Differential Pinion Gear Thrust Washer
9	Differential Pinion Gear
10	Locking Differential Side Gear
11	Locking Differential Thrust Block
12	Differential Pinion Gear

cardiagn.com

13	Differential Pinion Gear Thrust Washer
14	Locking Differential Side Gear, Cam-Faced
15	Locking Differential Cam
16	Locking Differential Governor
17	Wave Washer
18	Locking Differential Clutch Disc Set
19	Locking Differential Clutch Disc Guide
20	Locking Differential Snap Ring Retainer
21	Locking Differential Clutch Disc Thrust Washer

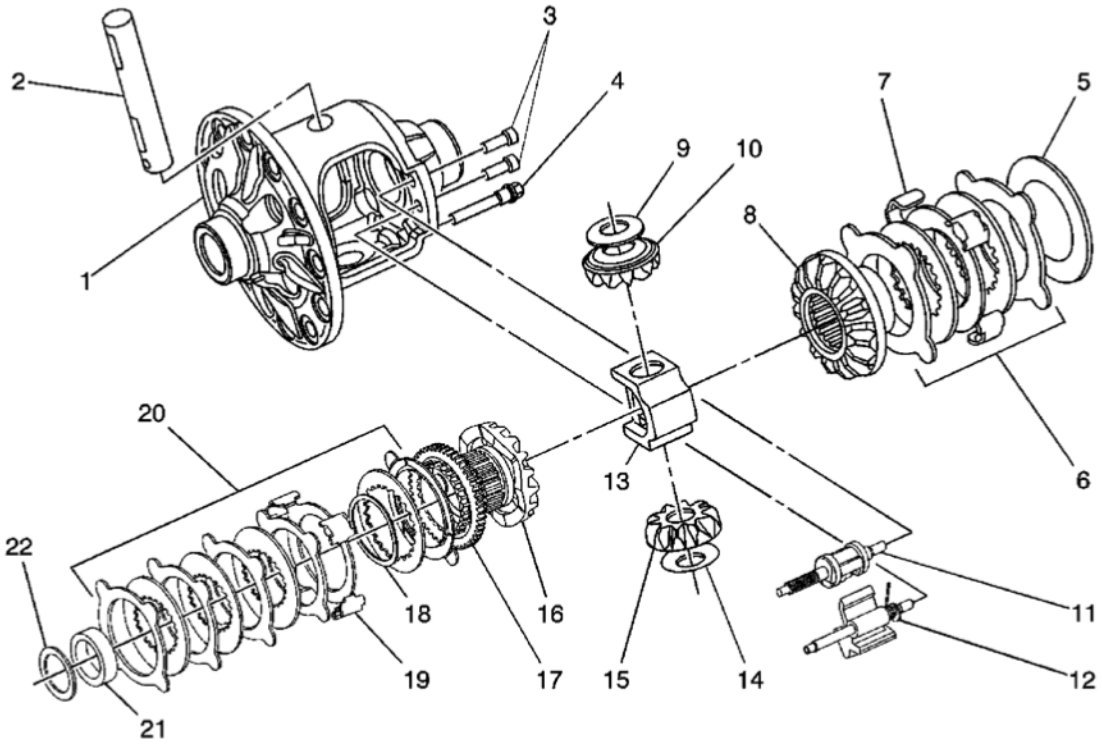

Fig. 3: 9.5 Locking Differential Disassembled View
Courtesy of GENERAL MOTORS CORP.

Callouts For Fig. 3

Callout	Component Name
1	Differential Case
2	Differential Pinion Gear Shaft
3	Locking Differential Lockout Bushing
4	Differential Pinion Gear Shaft Lock Bolt
5	Locking Differential Clutch Disc Thrust Washer
6	Locking Differential Clutch Disc Set

cardiagn.com

7	Locking Differential Clutch Disc Guide
8	Locking Differential Side Gear
9	Differential Pinion Gear Thrust Washer
10	Differential Pinion Gear
11	Locking Differential Governor
12	Locking Differential Latching Bracket
13	Locking Differential Thrust Block
14	Differential Pinion Gear Thrust Washer
15	Differential Pinion Gear
16	Locking Differential Side Gear, Cam-Faced
17	Locking Differential Cam
18	Wave Washer
19	Locking Differential Clutch Disc Guide
20	Locking Differential Clutch Disc Set
21	Locking Differential Side Gear Thrust Sleeve
22	Differential Side Gear Shim

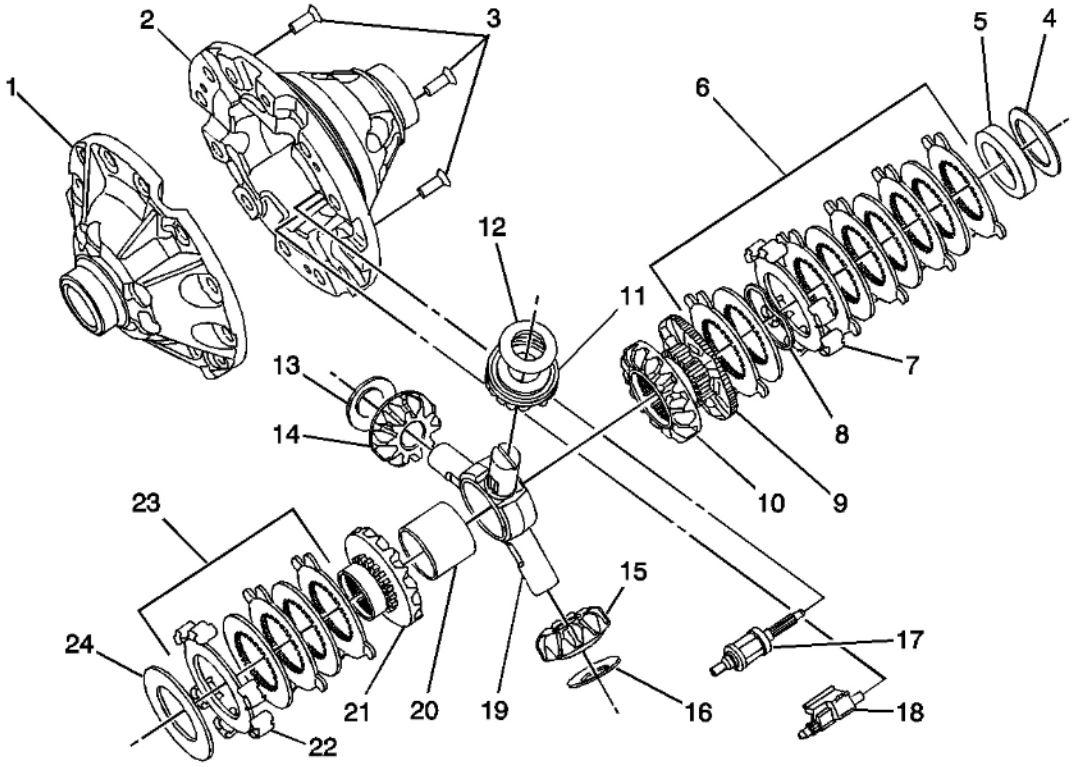

Fig. 4: 10.5 Locking Differential Disassembled View
Courtesy of GENERAL MOTORS CORP.

cardiagn.com

Callouts For Fig. 4

Callout	Component Name
1	Differential Case - Left Side
2	Differential Case - Right Side
3	Differential Case Screws
4	Locking Differential Clutch Disc Thrust Washer
5	Locking Differential Side Gear Thrust Sleeve
6	Locking Differential Clutch Disc Set
7	Locking Differential Clutch Disc Guide
8	Wave Washer
9	Locking Differential Cam
10	Locking Differential Side Gear - Cam Faced
11	Differential Pinion Gear
12	Differential Pinion Gear Thrust Washer
13	Differential Pinion Gear Thrust Washer
14	Differential Pinion Gear
15	Differential Pinion Gear
16	Differential Pinion Gear Thrust Washer
17	Locking Differential Governor
18	Locking Differential Latching Bracket and Spring
19	Locking Differential Spider
20	Locking Differential Thrust Block
21	Locking Differential Side Gear
22	Locking Differential Clutch Disc Guide
23	Locking Differential Clutch Disc Set
24	Differential Side Gear Shim

cardiagn.com

DIAGNOSTIC INFORMATION AND PROCEDURES

DIAGNOSTIC STARTING POINT - LOCKING/LIMITED SLIP REAR AXLE

Begin the system diagnosis by reviewing the system Description and Operation. Reviewing the Description and Operation information will help you determine the correct symptom diagnostic procedure when a malfunction exist. Reviewing the Description and Operation information will also help you determine if the condition described by the customer is normal operation. Refer to **Symptoms - Locking/Limited Slip Rear Axle** in order to identify the correct procedure for diagnosing the system and where the procedure is located.

SYMPTOMS - LOCKING/LIMITED SLIP REAR AXLE

Review the system and operation in order to familiarize yourself with the system functions. Refer to **Locking Differential Description and Operation** or **Limited Slip Differential Description and Operation**.

Visual/Physical Inspection

- Inspect the system for the following:
  - Loose or missing fasteners
  - Obvious damage or conditions which may cause the symptom.
- Check the system for proper operation. Refer to **Limited Slip Differential Diagnosis** or **Locking Differential Diagnosis**.

Symptom List

Refer to a system diagnostic procedure from the following list in order to diagnose the symptom:

- **Locking Rear Axle Does Not Lock**
- **Locking Rear Axle Locks in Turns**
- **Limited Slip Differential Chatters in Turns**
- **Locking Rear Drive Axle Chatters in Turns**
- **Noise in Addition to Normal Clutch Engagement**

LIMITED SLIP DIFFERENTIAL DIAGNOSIS

Limited Slip Differential Diagnosis

Step	Action	Values	Yes	No
1	Did you review the general description and perform the necessary inspections?	-	Go to **Step 2**	Go to **Diagnostic Starting Point - Locking/Limited Slip Rear Axle**
2	Measure the rotational force of the axle using the following procedure: 1. Block the front wheels. 2. Raise and support the vehicle. Refer to **Lifting and Jacking the Vehicle** in General Information. 3. Remove the tire and wheel. Refer to **Tire and Wheel Removal and Installation** in Tires and Wheels. 4. Using the **J 28733-B** Front/Rear Spindle Remover, measure the rotational force of the axle. See **Special Tools and Equipment**. 5. Repeat the procedure for the other axle. Does the force measure outside the specified range?	22 N.m (30 lb ft)-271 N.m (200 lb ft)	Go to **Step 3**	System OK

cardiagn.com

3	Repair the rear axle. Did you complete the repair?	-	Go to **Step 4**	-
4	Operate the system in order to verify the repair. Did you correct the condition?	-	Go to **Step 2**	System OK

LOCKING DIFFERENTIAL DIAGNOSIS

1. Place the vehicle on a frame-contact hoist, allowing free rotation of the rear wheels.
2. Hold 1 wheel stationary. Slowly rotate the other wheel approximately 1/2 revolution per second in both the forward and reversed directions. The wheel should rotate freely. The differential is locking and is broken if both wheels attempt to turn together.
3. Raise the hoist to maximum height with 1 person in the vehicle.
4. Start the engine. Ensure that the engine is operating at low idle speed (warm engine).
5. Apply the service brake. Place the automatic transmission in drive. Depress the clutch and place the transmission in first gear with a manual transmission.
6. Lock 1 rear wheel by pulling one parking brake cable from under the vehicle with the aid of an assistant.
7. Release the service brakes or disengage the clutch slowly enough to start the free wheel turning. The locked rear wheel remains stationary.
8. Increase the speed of the free wheel. The differential will lock, causing the rotating wheel to stop or both wheels to turn at the same speed. The engine, if equipped with manual transmission, may stall. In order to cause the differential to lock, you may need to accelerate the engine until approximately 16 km/h (10 mph) is indicated on the vehicle speedometer. If the indicated speed can be increased beyond 32 km/h (20 mph) without causing the differential to lock, the unit is not functioning properly. Rapid release of the brakes or clutch, or rapid acceleration of the engine, will invalidate the test.
9. Lock the opposite rear wheel and repeat the procedure.

LOCKING REAR AXLE DOES NOT LOCK

Locking Rear Axle Does Not Lock

Checks	Action
Little or no preload on the latching bracket	Replace the governor assembly and the latching bracket. Refer to **Locking Differential Disassemble (8.6, 9.5 Inch Axles)** or **Locking Differential Disassemble (10.5 Inch Axle)** and **Locking Differential Assemble (8.6, 9.5 Inch Axles)** or **Locking Differential Assemble (10.5 Inch Axle)**.
Flyweights in the governor assembly are stuck closed	Replace the governor assembly and the latching bracket. Refer to **Locking Differential Disassemble (8.6, 9.5 Inch Axles)** or **Locking Differential Disassemble (10.5 Inch Axle)** and **Locking Differential Assemble (8.6, 9.5 Inch Axles)** or **Locking Differential Assemble (10.5 Inch Axle)**.
The drive teeth on the governor or cam gear assembly are broken	Replace the cam plate, the governor assembly, and the latching bracket. Refer to the following: • **Locking Differential Disassemble (8.6, 9.5 Inch Axles)** or

cardiagn.com

	Locking Differential Disassemble (10.5 Inch Axle) • Locking Differential Cam Unit Disassemble (8.6 Inch Axle) or Locking Differential Cam Unit Disassemble (9.5 Inch Axle) or Locking Differential Cam Unit Disassemble (10.5 Inch Axle) • Locking Differential Cleaning and Inspection • Locking Differential Cam Unit Assemble (8.6 Inch Axle) or Locking Differential Cam Unit Assemble (9.5 Inch Axle) or Locking Differential Cam Unit Assemble (10.5 Inch Axle) • Locking Differential Adjustment (8.6 Inch Axle) or Locking Differential Adjustment (9.5 Inch Axle) or Locking Differential Adjustment (10.5 Inch Axle) • Locking Differential Assemble (8.6, 9.5 Inch Axles) or Locking Differential Assemble (10.5 Inch Axle)
Broken clutch plates	Replace the clutch plates and the wave spring. Refer to the following: • Locking Differential Disassemble (8.6, 9.5 Inch Axles) or Locking Differential Disassemble (10.5 Inch Axle) • Locking Differential Cam Unit Disassemble (8.6 Inch Axle) or Locking Differential Cam Unit Disassemble (9.5 Inch Axle) or Locking Differential Cam Unit Disassemble (10.5 Inch Axle) • Locking Differential Cleaning and Inspection • Locking Differential Cam Unit Assemble (8.6 Inch Axle) or Locking Differential Cam Unit Assemble (9.5 Inch Axle) or Locking Differential Cam Unit Assemble (10.5 Inch Axle) • Locking Differential Adjustment (8.6 Inch Axle) or Locking Differential Adjustment (9.5 Inch Axle) or Locking Differential Adjustment (10.5 Inch Axle) • Locking Differential Assemble (8.6, 9.5 Inch Axles) or Locking Differential Assemble (10.5 Inch Axle)

LOCKING REAR AXLE LOCKS IN TURNS

Locking Rear Axle Locks in Turns

Checks	Action
The governor assembly is tight in the case	Free up the governor assembly. Refer to Locking Differential Disassemble (8.6, 9.5 Inch Axles) or Locking Differential Disassemble (10.5 Inch Axle) and Locking Differential Assemble (8.6, 9.5 Inch Axles) or Locking Differential Assemble (10.5 Inch Axle).
Broken or weak governor flyweight spring	Replace the governor assembly and the latching bracket. Refer to Locking Differential Disassemble (8.6, 9.5 Inch Axles) or Locking Differential Disassemble (10.5 Inch Axle) and Locking Differential Assemble (8.6, 9.5 Inch Axles) or Locking Differential Assemble (10.5 Inch Axle).

cardiagn.com

The flyweight in the governor assembly is stuck open	Replace the governor assembly and the latching bracket. Refer to **Locking Differential Disassemble (8.6, 9.5 Inch Axles)** or **Locking Differential Disassemble (10.5 Inch Axle)** and **Locking Differential Assemble (8.6, 9.5 Inch Axles)** or **Locking Differential Assemble (10.5 Inch Axle)**.
The cam plate or the governor drive teeth are broken	Replace the cam plate, the governor assembly, and the latching bracket. Refer to the following: • **Locking Differential Disassemble (8.6, 9.5 Inch Axles)** or **Locking Differential Disassemble (10.5 Inch Axle)** • **Locking Differential Cam Unit Disassemble (8.6 Inch Axle)** or **Locking Differential Cam Unit Disassemble (9.5 Inch Axle)** or **Locking Differential Cam Unit Disassemble (10.5 Inch Axle)** • **Locking Differential Cleaning and Inspection** • **Locking Differential Cam Unit Assemble (8.6 Inch Axle)** or **Locking Differential Cam Unit Assemble (9.5 Inch Axle)** or **Locking Differential Cam Unit Assemble (10.5 Inch Axle)** • **Locking Differential Adjustment (8.6 Inch Axle)** or **Locking Differential Adjustment (9.5 Inch Axle)** or **Locking Differential Adjustment (10.5 Inch Axle)** • **Locking Differential Assemble (8.6, 9.5 Inch Axles)** or **Locking Differential Assemble (10.5 Inch Axle)**

LIMITED SLIP DIFFERENTIAL CHATTERS IN TURNS

Limited Slip Differential Chatters in Turns

Checks	Action
Lubricant is contaminated	Drain and flush the axle housing thoroughly. Refill with the correct lubricant. Refer to **Lubricant Replacement - Rear Drive Axle (8.6 Inch Axle)** or **Lubricant Replacement - Rear Drive Axle (9.5, 10.5 Inch Axle)** or **Lubricant Replacement - Rear Drive Axle (9.75 Inch Axle)** in Rear Drive Axle.
The clutch plates are deteriorated	Replace the clutch plates. Refer to **Limited Slip Differential Disassemble** and **Limited Slip Differential Assemble**.

LOCKING REAR DRIVE AXLE CHATTERS IN TURNS

Locking Rear Drive Axle Chatters in Turns

Checks	Action
Lubricant is contaminated	Drain and flush the axle housing thoroughly. Refill with the correct lubricant. Refer to **Lubricant Replacement - Rear Drive Axle (8.6 Inch Axle)** or **Lubricant Replacement - Rear Drive Axle (9.5, 10.5 Inch Axle)** or **Lubricant Replacement - Rear Drive Axle (9.75 Inch Axle)** in Rear Drive Axle.

cardiagn.com

The clutch plates are deteriorated	Replace the clutch plates. Refer to **Locking Differential Cam Unit Disassemble (8.6 Inch Axle)** or **Locking Differential Cam Unit Disassemble (9.5 Inch Axle)** or **Locking Differential Cam Unit Disassemble (10.5 Inch Axle)** and **Locking Differential Cam Unit Assemble (8.6 Inch Axle)** or **Locking Differential Cam Unit Assemble (9.5 Inch Axle)** or **Locking Differential Cam Unit Assemble (10.5 Inch Axle)**.

NOISE IN ADDITION TO NORMAL CLUTCH ENGAGEMENT

Noise in Addition to Normal Clutch Engagement

Checks	Action
The clutch plates are broken	Replace the clutch plates. Refer to the following: • **Locking Differential Disassemble (8.6, 9.5 Inch Axles)** or **Locking Differential Disassemble (10.5 Inch Axle)** • **Locking Differential Cam Unit Disassemble (8.6 Inch Axle)** or **Locking Differential Cam Unit Disassemble (9.5 Inch Axle)** or **Locking Differential Cam Unit Disassemble (10.5 Inch Axle)** • **Locking Differential Cleaning and Inspection** • **Locking Differential Cam Unit Assemble (8.6 Inch Axle)** or **Locking Differential Cam Unit Assemble (9.5 Inch Axle)** or **Locking Differential Cam Unit Assemble (10.5 Inch Axle)** • **Locking Differential Adjustment (8.6 Inch Axle)** or **Locking Differential Adjustment (9.5 Inch Axle)** or **Locking Differential Adjustment (10.5 Inch Axle)** • **Locking Differential Assemble (8.6, 9.5 Inch Axles)** or **Locking Differential Assemble (10.5 Inch Axle)**
The thrust block is broken	Replace the thrust block with a block of identical thickness. Check closely for other damage. Refer to **Locking Differential Disassemble (8.6, 9.5 Inch Axles)** or **Locking Differential Disassemble (10.5 Inch Axle)** and **Locking Differential Assemble (8.6, 9.5 Inch Axles)** or **Locking Differential Assemble (10.5 Inch Axle)**.
The case is damaged	Replace the unit. Refer to **Differential Replacement (8.6 Inch, 9.5 Inch Axles)** or **Differential Replacement (9.75 Inch Axle)** or **Differential Replacement (10.5 Inch Axle)** in Rear Drive Axle.
The differential gears are broken	Replace the gears. Refer to the following: • **Locking Differential Disassemble (8.6, 9.5 Inch Axles)** or **Locking Differential Disassemble (10.5 Inch Axle)** • **Locking Differential Cam Unit Disassemble (8.6 Inch Axle)** or **Locking Differential Cam Unit Disassemble (9.5 Inch Axle)** or **Locking Differential Cam Unit Disassemble (10.5 Inch Axle)** • **Locking Differential Cleaning and Inspection**

cardiagn.com

	• **Locking Differential Cam Unit Assemble (8.6 Inch Axle)** or **Locking Differential Cam Unit Assemble (9.5 Inch Axle)** or **Locking Differential Cam Unit Assemble (10.5 Inch Axle)** • **Locking Differential Adjustment (8.6 Inch Axle)** or **Locking Differential Adjustment (9.5 Inch Axle)** or **Locking Differential Adjustment (10.5 Inch Axle)** • **Locking Differential Assemble (8.6, 9.5 Inch Axles)** or **Locking Differential Assemble (10.5 Inch Axle)**

REPAIR INSTRUCTIONS

LIMITED SLIP DIFFERENTIAL DISASSEMBLE

Tools Required

J 45709 Limited Slip Differential Overhaul Kit - Dana 248. See **Special Tools and Equipment**.

1. Remove the ring gear, if necessary. Refer to **Drive Pinion and Ring Gear Replacement (8.6 Inch, 9.5 Inch Axle)** or **Drive Pinion and Ring Gear Replacement (9.75 Inch Axle)** or **Drive Pinion and Ring Gear Replacement (10.5 Inch Axle)** in Rear Drive Axle.
2. Remove the differential side bearings, if necessary. Refer to **Differential Side Bearings Replacement (All Except 9.75 Inch Axle)** or **Differential Side Bearings Replacement (9.75 Inch Axle)** in Rear Drive Axle.
3. Using a brass drift, remove the pinion shaft roll pin.

cardiagn.com

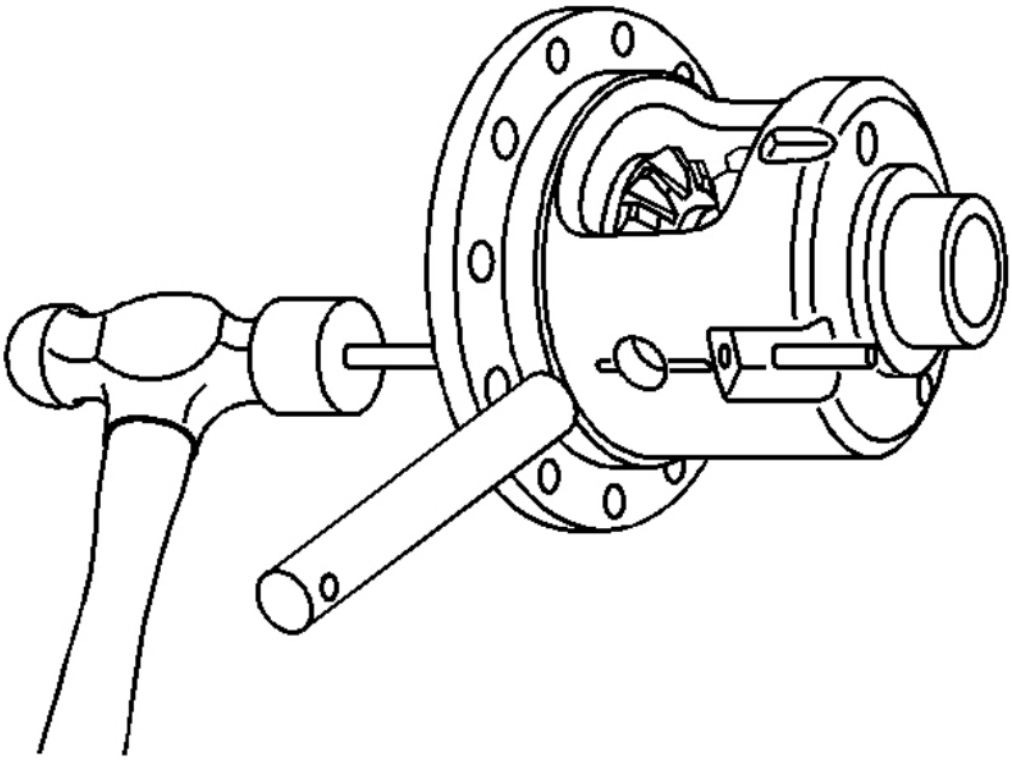

Fig. 5: Removing Pinion Shaft Roll Pin Using Brass Drift
Courtesy of GENERAL MOTORS CORP.

4. Remove the pinion shaft.
5. Install the J 45709-4 into a vise.

cardiagn.com

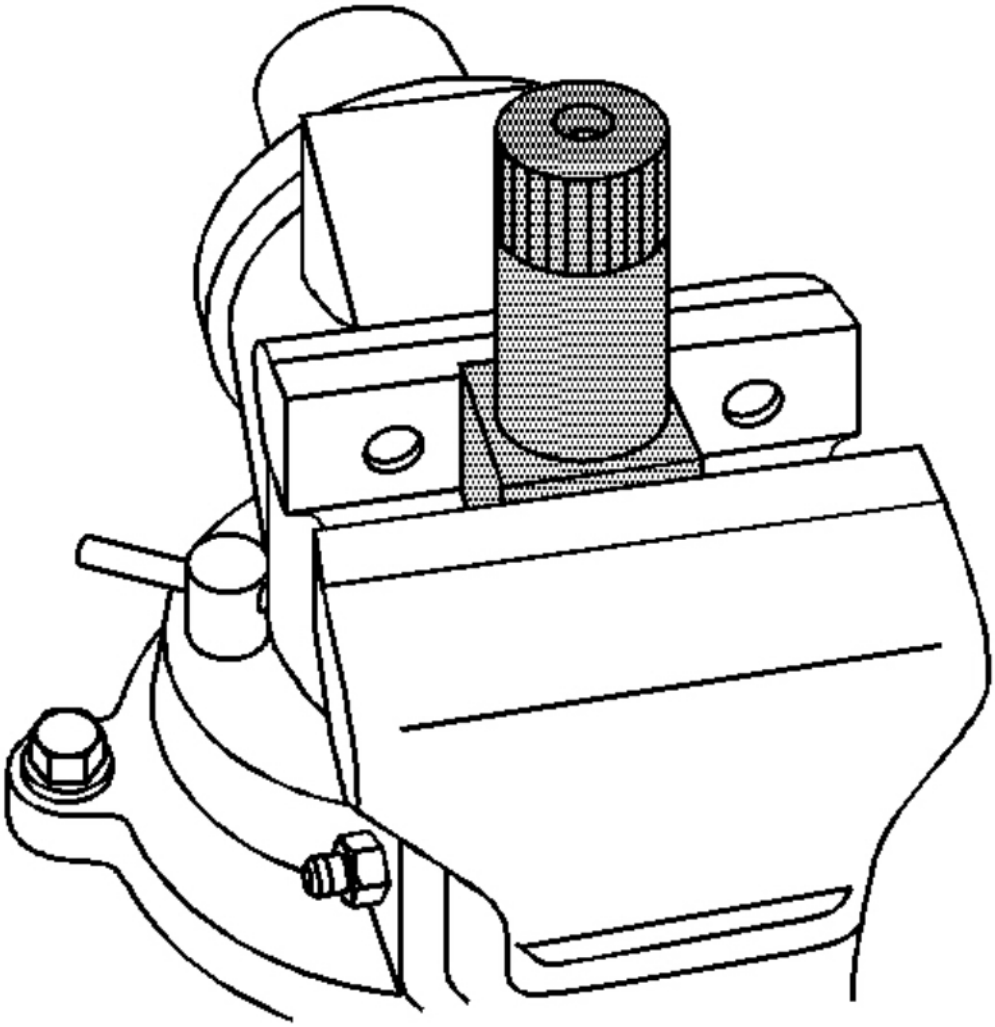

Fig. 6: Installing J 45709-4 Into Vise
Courtesy of GENERAL MOTORS CORP.

6. Install the differential assembly onto the J 45709-4.
7. Install the J 45709-3 (2) onto the lower differential side gear and the J 45709-2 (1) through the differential case as shown.

cardiagn.com

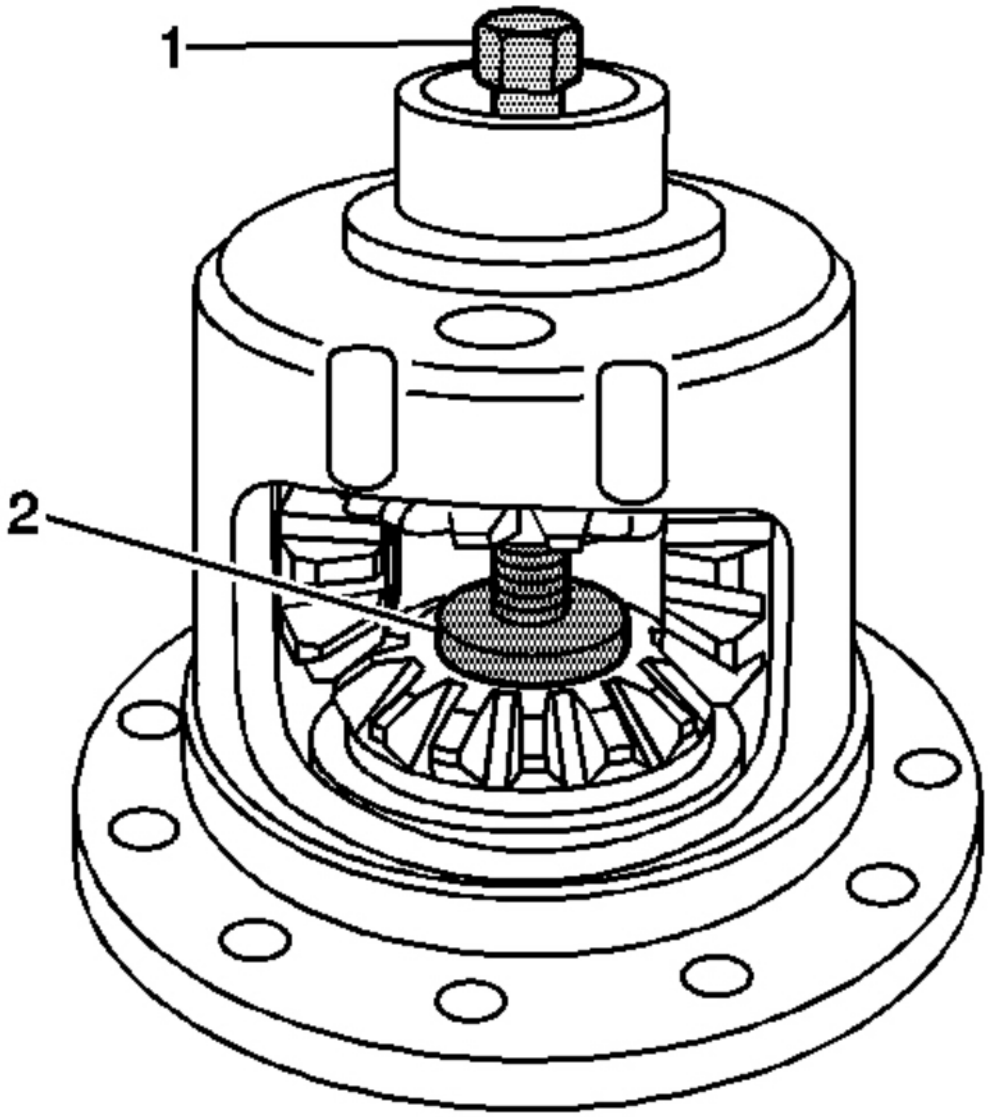

Fig. 7: Installing J 45709-2 & J 45709-3 Into Differential Case
Courtesy of GENERAL MOTORS CORP.

NOTE: Refer to Fastener Notice in Cautions and Notices.

8. Compress the side gear clutch disc packs by tightening the J 45709-2 (1) against the J 45709-3 (2).

cardiagn.com

Tighten: Tighten the J 45709-2 to 40 N.m (30 lb ft).

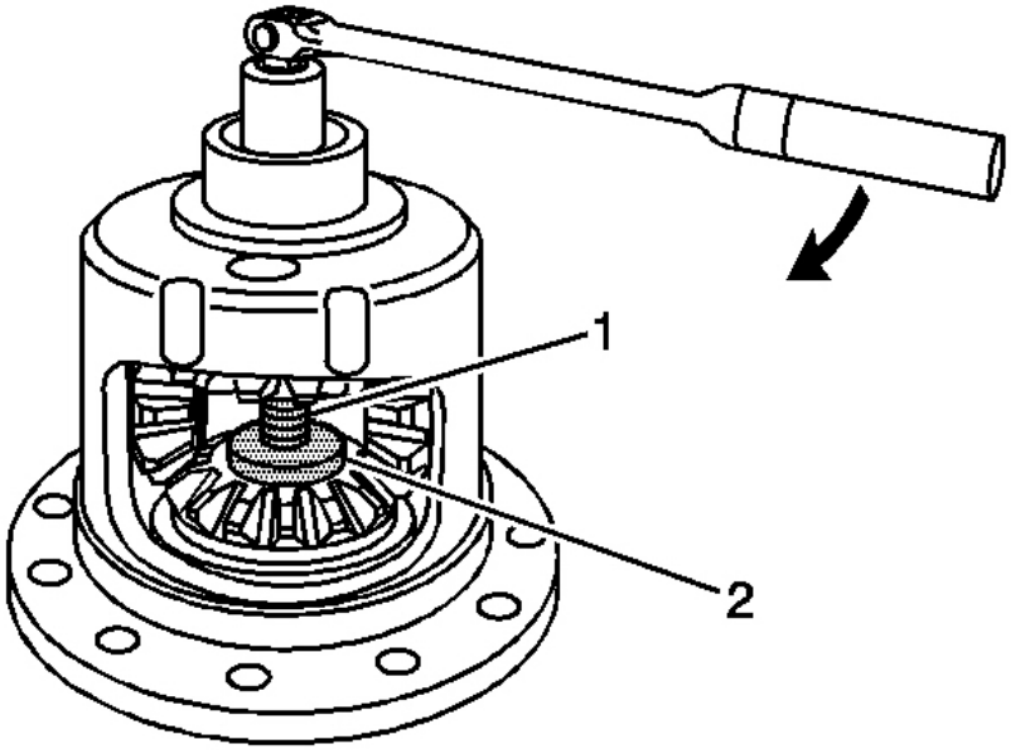

Fig. 8: Tightening J 45709-2 Against J 45709-3
Courtesy of GENERAL MOTORS CORP.

9. Remove the pinion gear thrust washers.

   If the pinion gear thrust washers cannot be removed, continue to tighten the J 45709-2 as necessary until the pinion gear thrust washers can be removed.

cardiagn.com

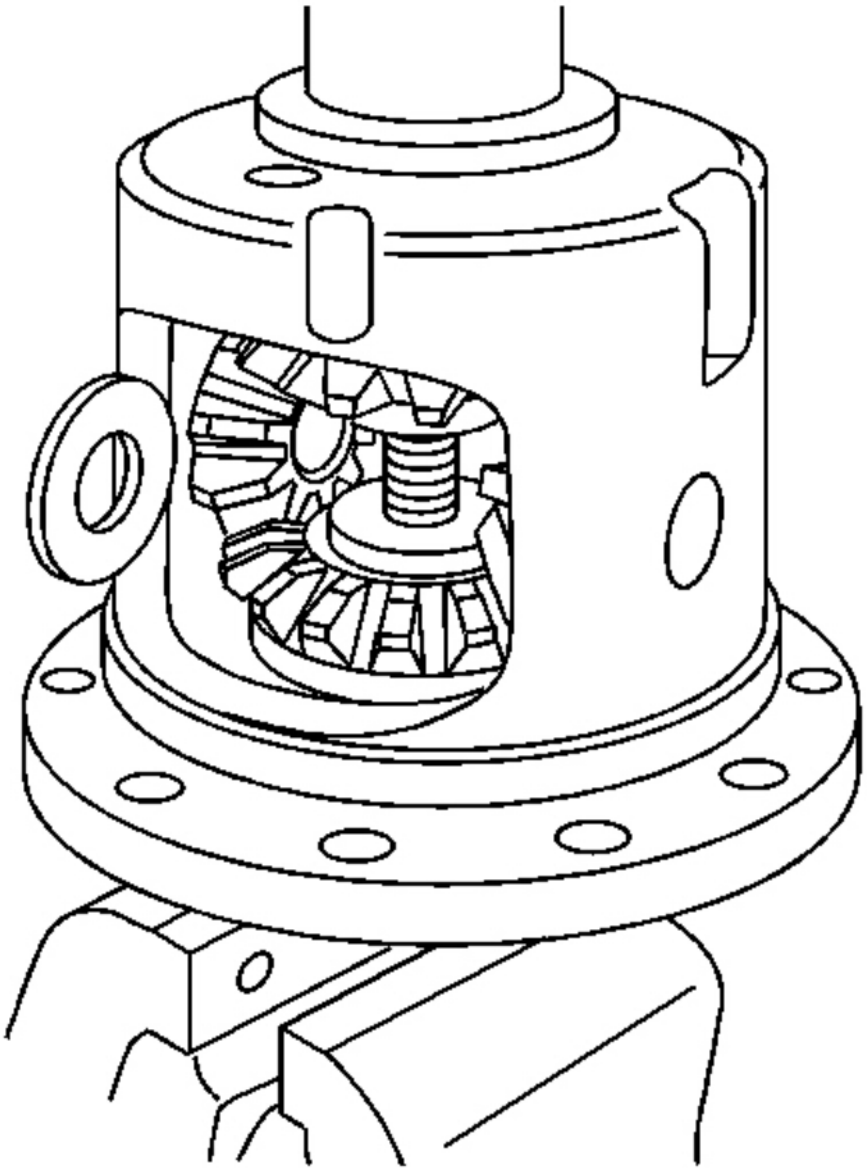

Fig. 9: View Of Pinion Gear Thrust Washers
Courtesy of GENERAL MOTORS CORP.

10. Install the J 45709-1 (1) into the differential case pinion gear shaft bore.

IMPORTANT: Only loosen the J 45709-2 until the differential case can be rotated.

cardiagn.com

11. While holding the J 45709-1 (1), turn the forcing screw of the J 45709-2 (3) counterclockwise to relieve the tension of the clutch disc packs against the differential case.

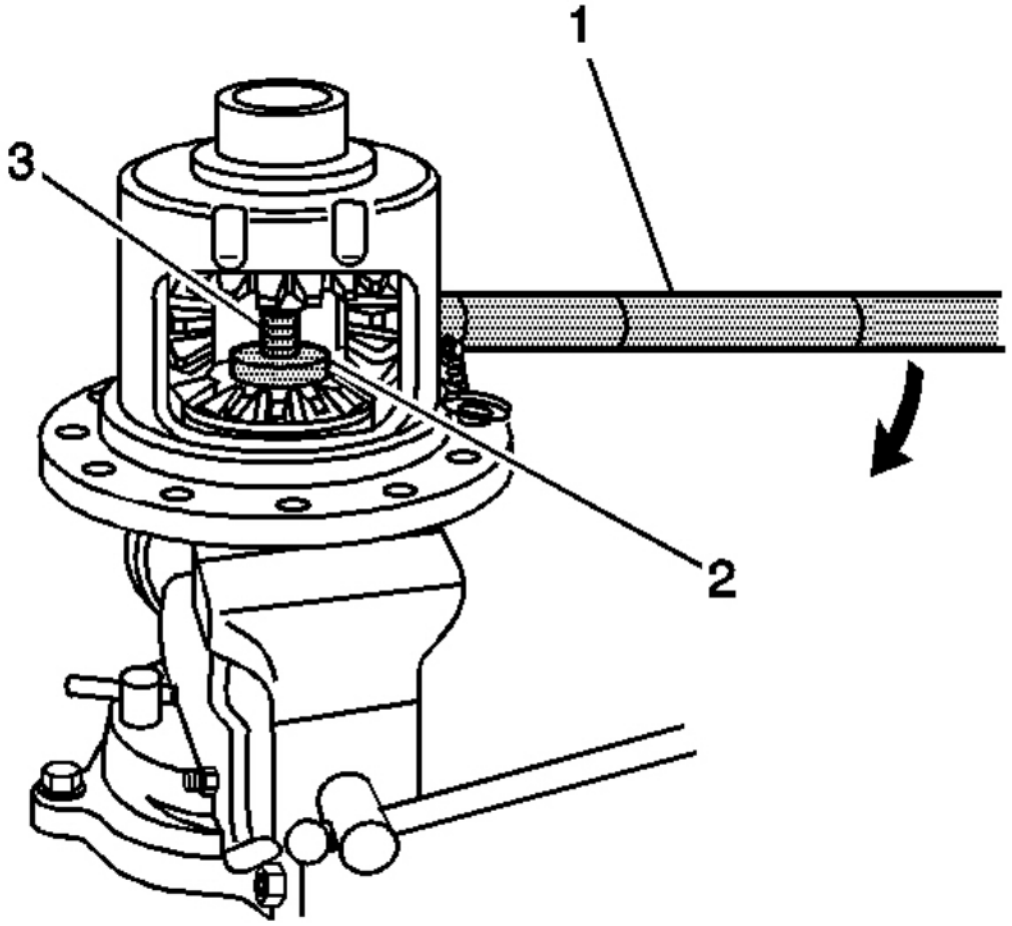

Fig. 10: View Of J 45709-1 In Differential Case Pinion Gear Shaft Bore
Courtesy of GENERAL MOTORS CORP.

12. Once the tension between the clutch disc packs and the differential case has been relieved, rotate the differential case using the J 45709-1.
13. Remove the differential pinion gears.
14. Remove the J 45709-2 (1).
15. Remove the J 45709-3 (3).

cardiagn.com

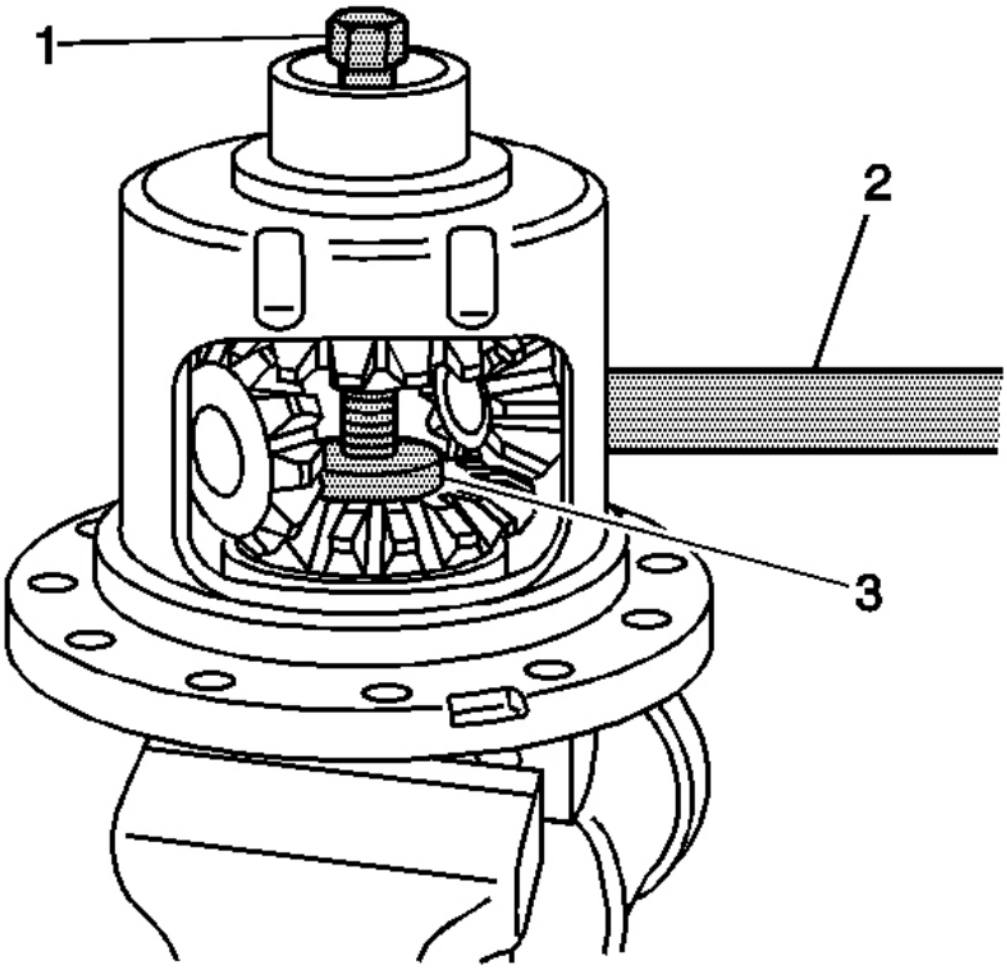

Fig. 11: View Of J 45709-2 & J 45709-3
Courtesy of GENERAL MOTORS CORP.

16. Remove the differential side gears and clutch disc pack assemblies.

IMPORTANT: Before removing the clutch disc packs, note their position and arrangement.

17. Remove the upper differential side gear and clutch disc pack.
18. Remove the lower differential side gear and clutch disc pack.

LOCKING DIFFERENTIAL DISASSEMBLE (8.6, 9.5 INCH AXLES)

cardiagn.com

Tools Required

J 26252 Locking Differential Governor Remover. See **Special Tools and Equipment**.

1. Remove the ring gear, if necessary. Refer to **Drive Pinion and Ring Gear Replacement (8.6 Inch, 9.5 Inch Axle)** or **Drive Pinion and Ring Gear Replacement (9.75 Inch Axle)** or **Drive Pinion and Ring Gear Replacement (10.5 Inch Axle)** in Rear Drive Axle.
2. Remove the governor bushing using the **J 26252** . See **Special Tools and Equipment**.
3. Remove the governor assembly.

   To aid in the removal of the governor assembly, turn the side gear as necessary to position the governor assembly between two of the side gear teeth.

cardiagn.com

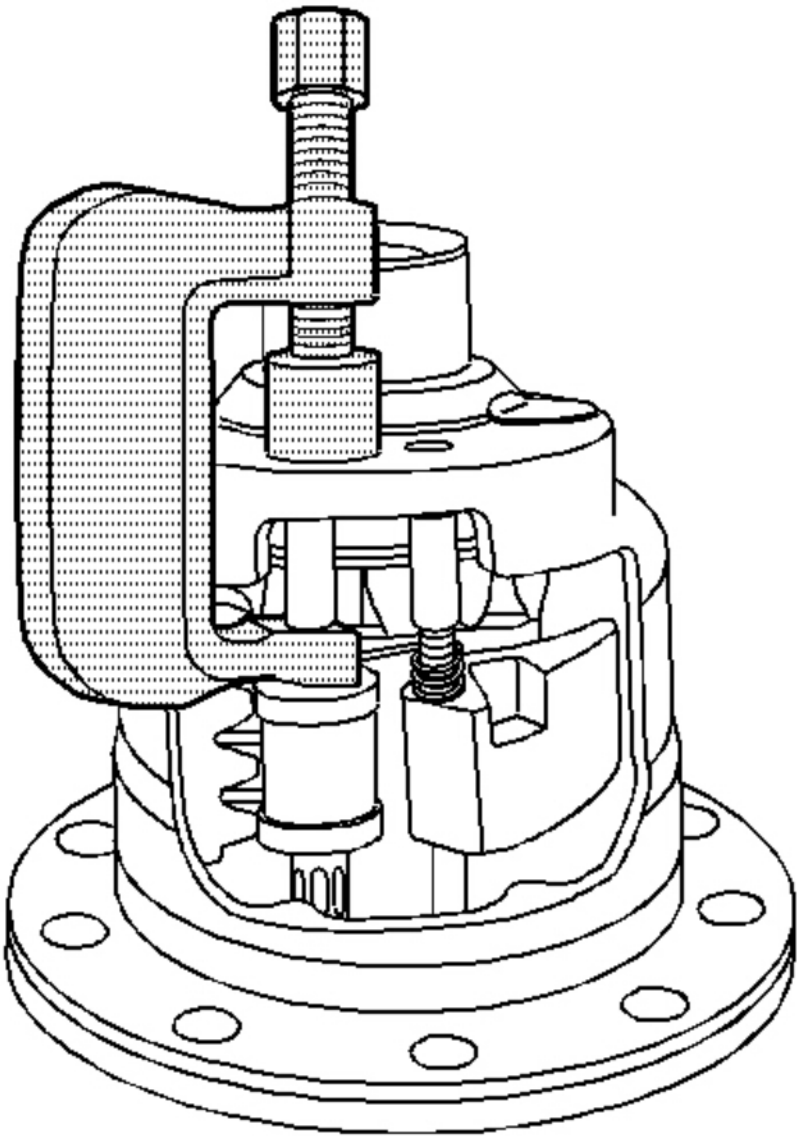

Fig. 12: Locating Governor Bushing
Courtesy of GENERAL MOTORS CORP.

4. Remove the latching bracket assembly bushing using the **J 26252** . See **Special Tools and Equipment**.

   To aid in the removal of the latching bracket assembly, turn the side gear as necessary to position the latching bracket assembly between two of the side gear teeth.

cardiagn.com

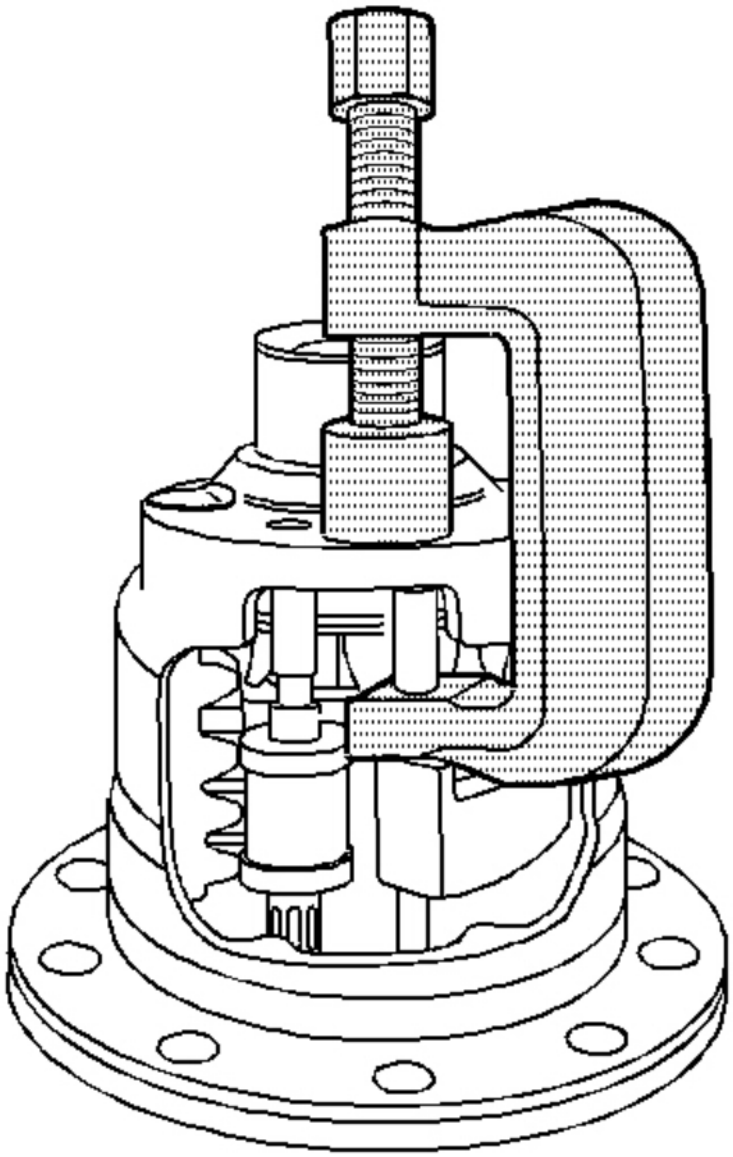

Fig. 13: Latching Bracket Assembly
Courtesy of GENERAL MOTORS CORP.

5. Remove the pinion shaft lock bolt.
6. Remove the pinion shaft.
7. Remove the differential pinion gears and the thrust washers.

cardiagn.com

Rotate the pinion gears and roll the pinion gears and the thrust washers out of the case through the differential window.

Mark the pinion gears and thrust washers accordingly for re-assembly.

8. Remove the thrust block.
9. Remove the right side gear and clutch discs assembly.
10. Remove the right side shim.
11. Remove the left side gear cam unit and clutch disc assembly.

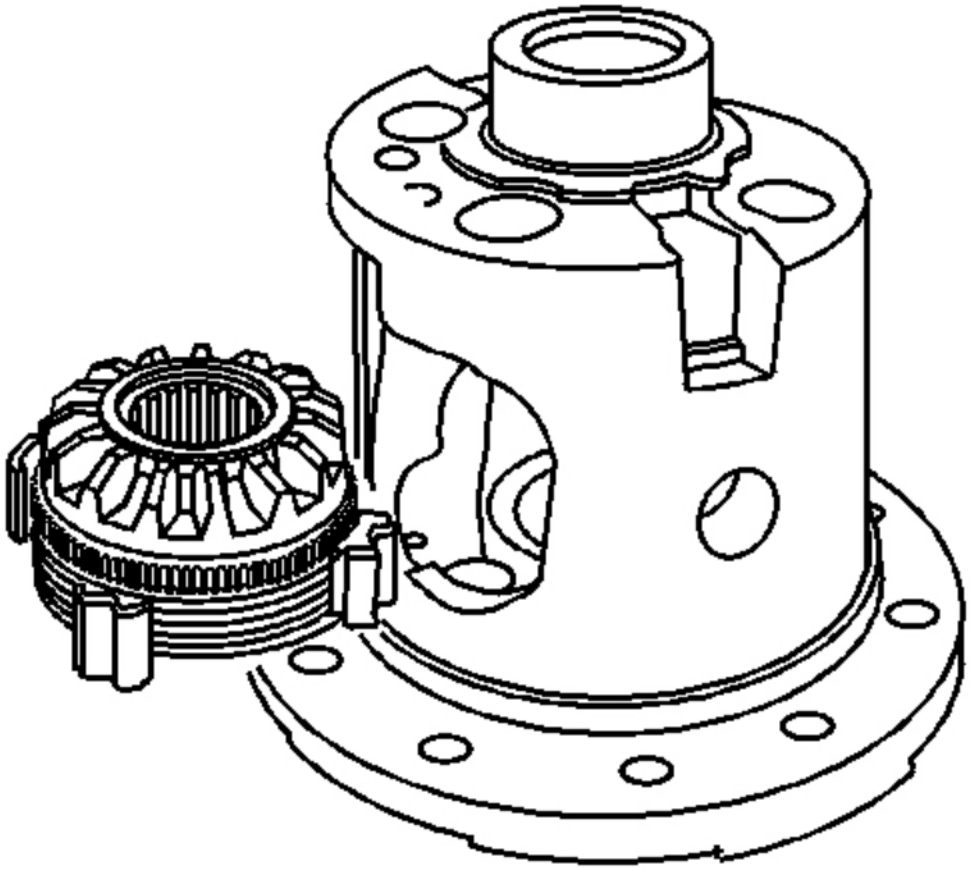

Fig. 14: View Of Left Side Gear Cam Unit & Clutch Disc Assembly
Courtesy of GENERAL MOTORS CORP.

12. Remove the left side gear thrust washer.

cardiagn.com

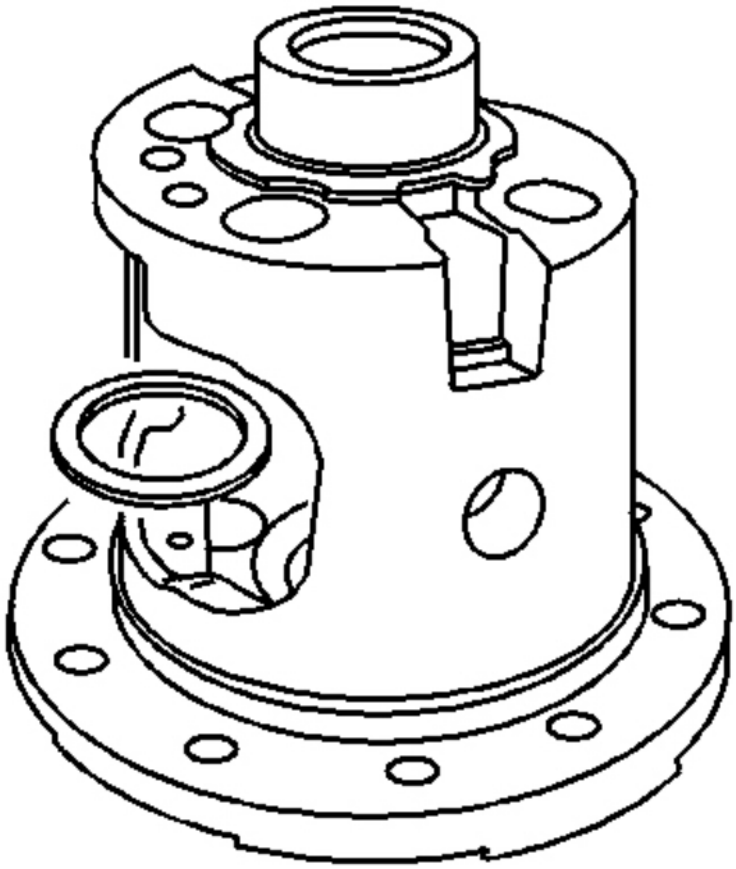

Fig. 15: View Of Left Side Gear Thrust Washer
Courtesy of GENERAL MOTORS CORP.

LOCKING DIFFERENTIAL DISASSEMBLE (10.5 INCH AXLE)

1. Remove the differential assembly. Refer to **Differential Replacement (8.6 Inch, 9.5 Inch Axles)** or **Differential Replacement (9.75 Inch Axle)** or **Differential Replacement (10.5 Inch Axle)** in Rear Drive Axle.
2. Remove the ring gear. Refer to **Drive Pinion and Ring Gear Replacement (8.6 Inch, 9.5 Inch Axle)** or **Drive Pinion and Ring Gear Replacement (9.75 Inch Axle)** or **Drive Pinion and Ring Gear Replacement (10.5 Inch Axle)** in Rear Drive Axle.
3. Remove the differential side bearings. Refer to **Differential Side Bearings Replacement (All Except 9.75 Inch Axle)** or **Differential Side Bearings Replacement (9.75 Inch Axle)** in Rear Drive Axle.
4. Remove the differential case screws.

cardiagn.com

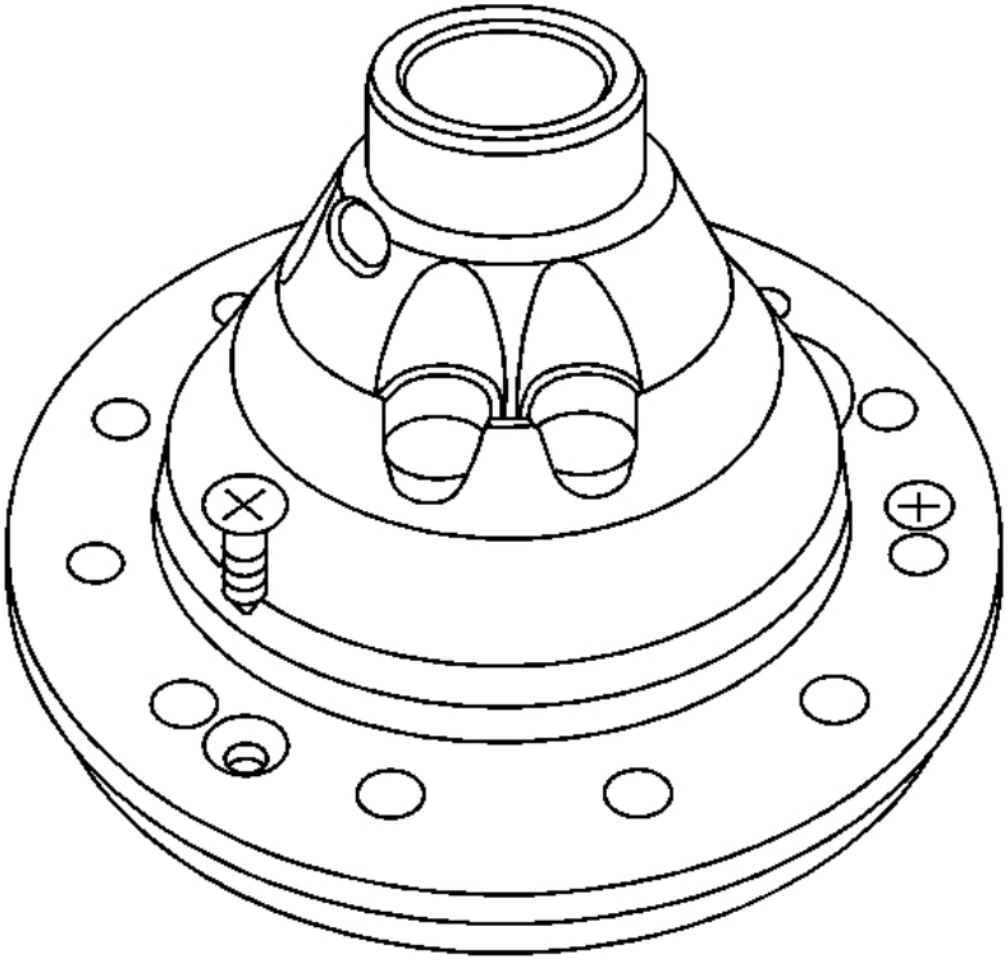

Fig. 16: View Of Differential Case Screws
Courtesy of GENERAL MOTORS CORP.

5. Separate the case halves by performing the following steps:
    1. Pry the case halves apart at the yoke hole location.
    2. Hold the locking differential cam, side gear and clutch plate assembly in the right side case half.

cardiagn.com

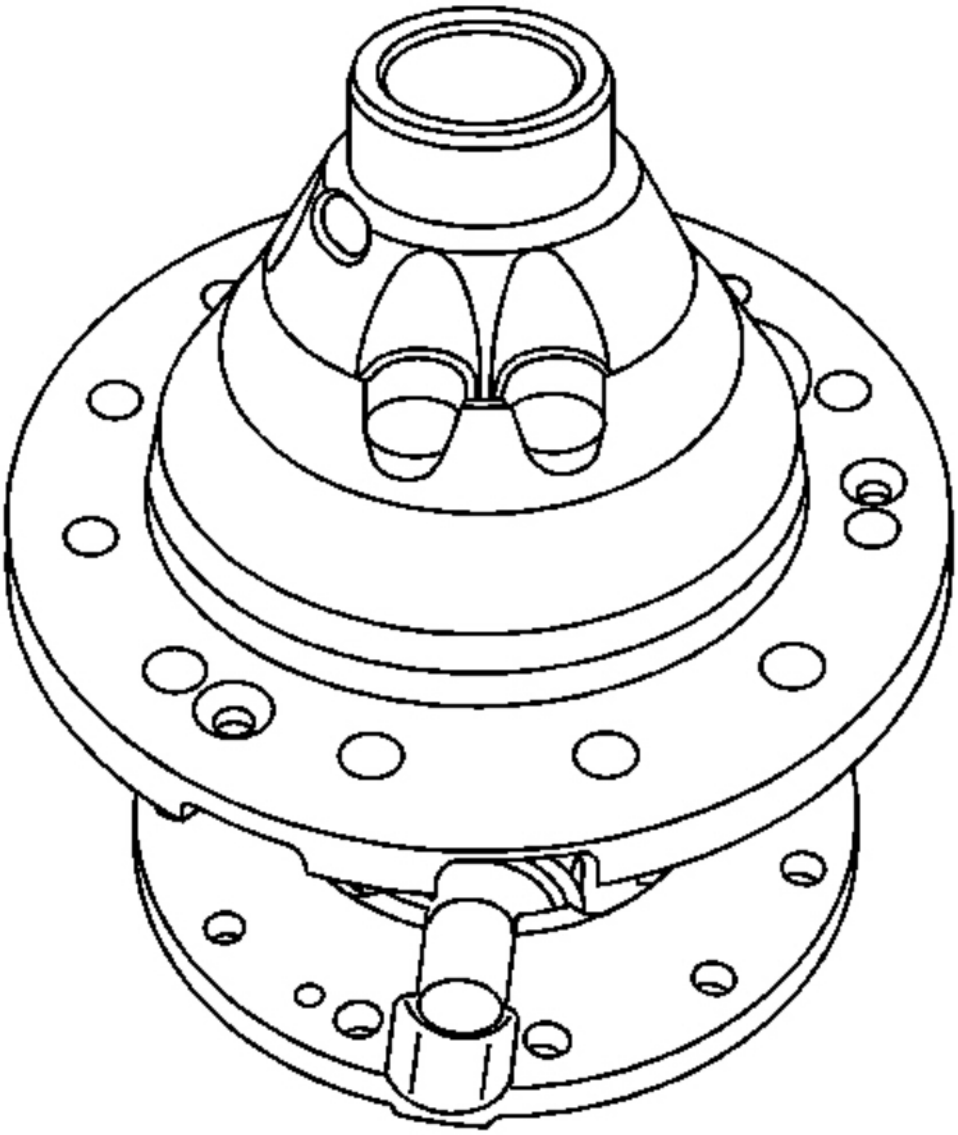

Fig. 17: View Of Differential Case Halves
Courtesy of GENERAL MOTORS CORP.

6. Remove the governor assembly.

cardiagn.com

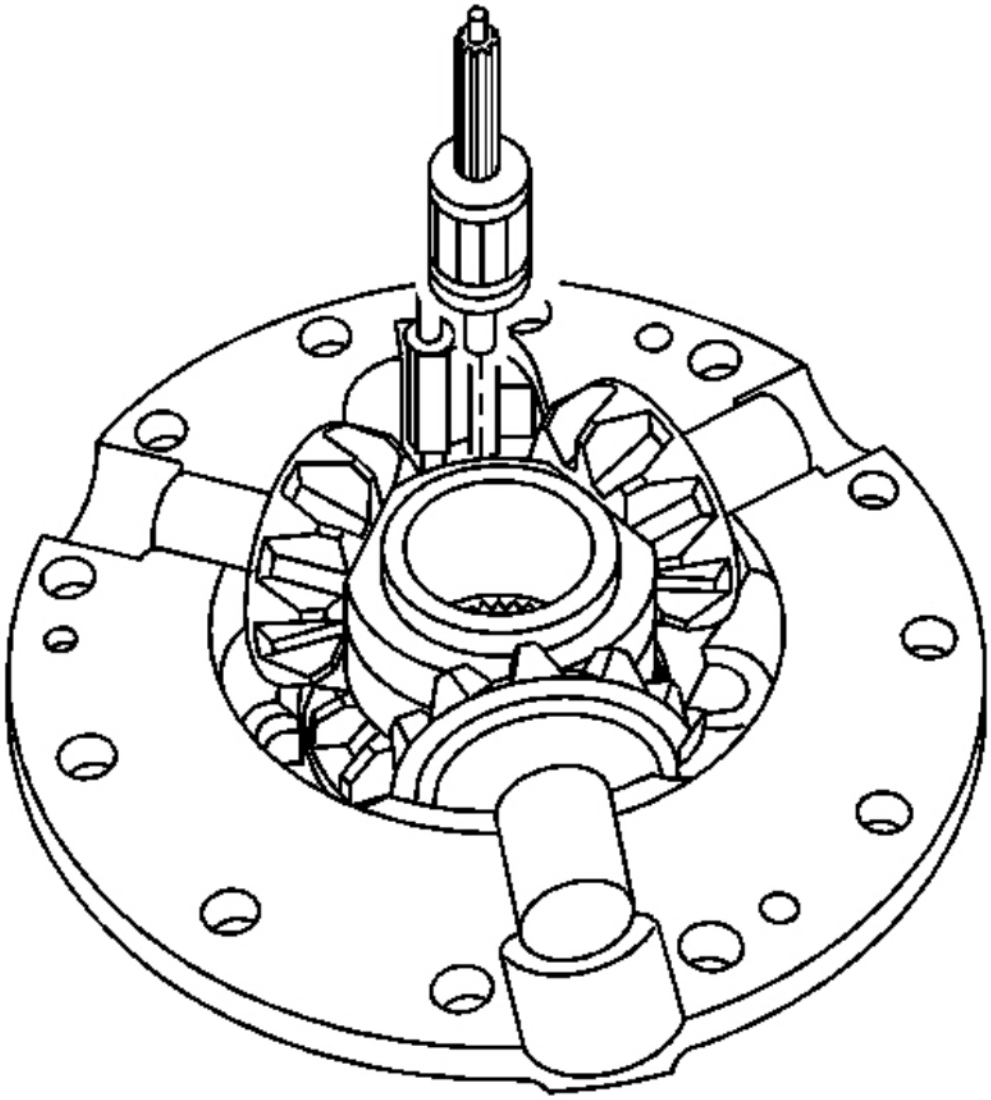

Fig. 18: View Of Governor Assembly (10.5 Inch Axle)
Courtesy of GENERAL MOTORS CORP.

7. Remove the latching bracket assembly.

cardiagn.com

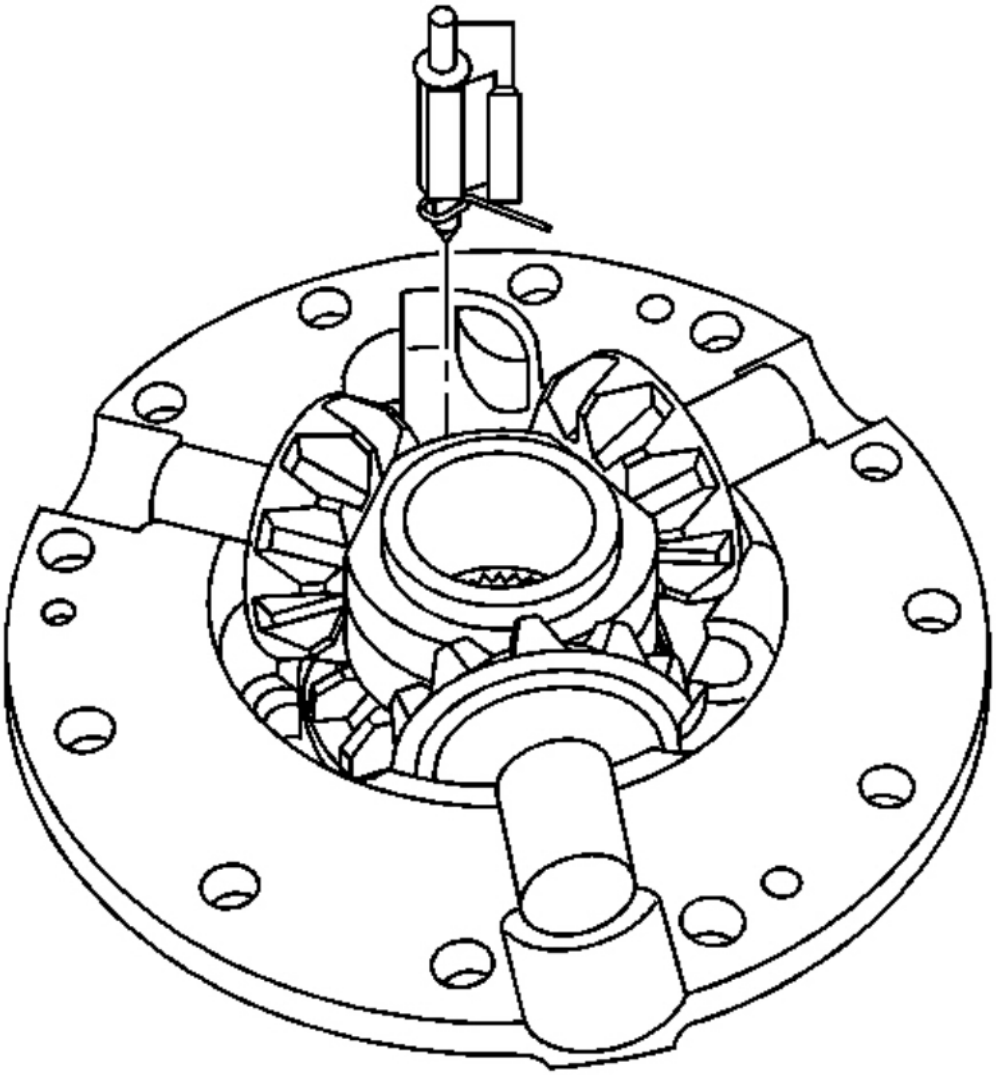

Fig. 19: View Of Latching Bracket Assembly (10.5 Inch Axle)
Courtesy of GENERAL MOTORS CORP.

8. Remove the thrust block.

cardiagn.com

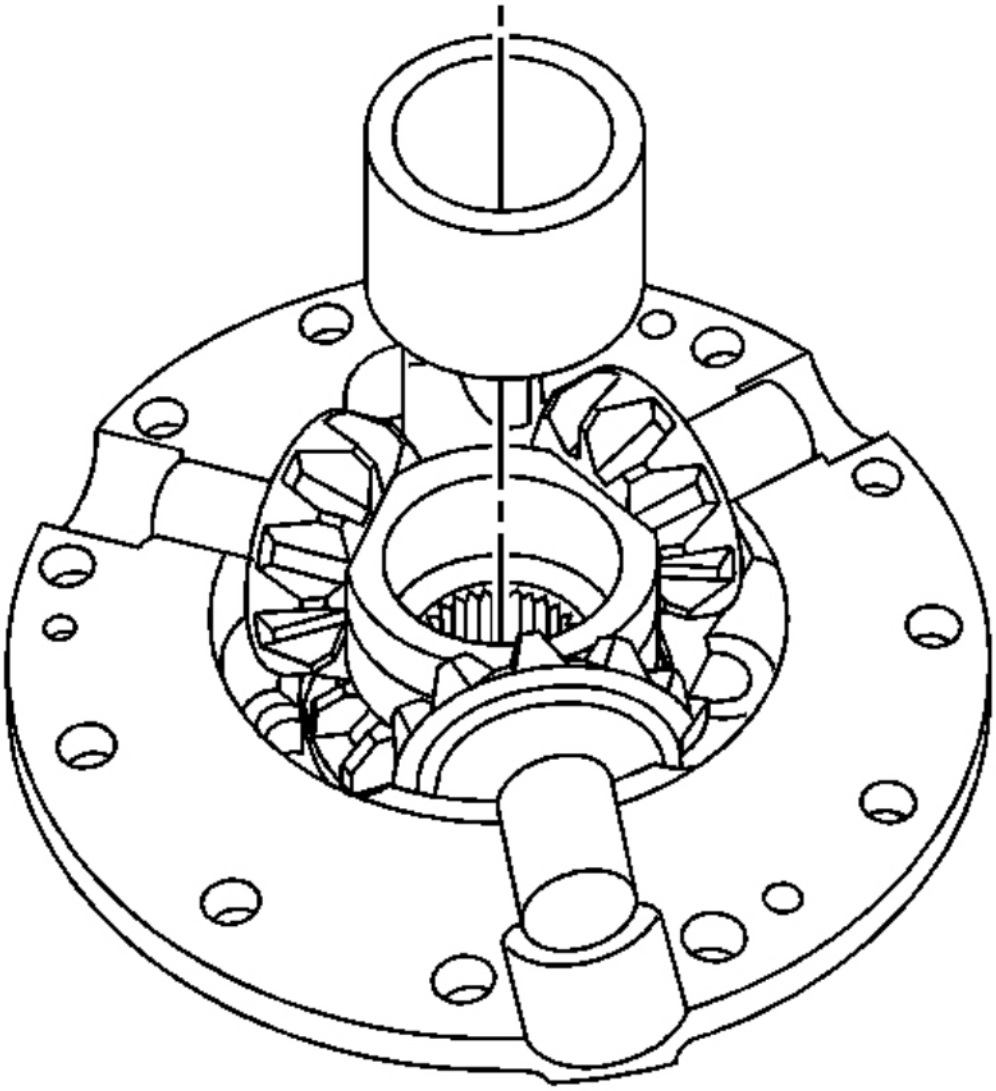

Fig. 20: View Of Thrust Block
Courtesy of GENERAL MOTORS CORP.

9. Remove the following components from the differential case:
   - The locking differential spider
   - The differential pinion gears
   - The differential pinion gear thrust washers
10. Mark the differential spider, the differential pinion gears and the differential pinion gears accordingly in

cardiagn.com

order to re-assemble the components correctly into the differential case.

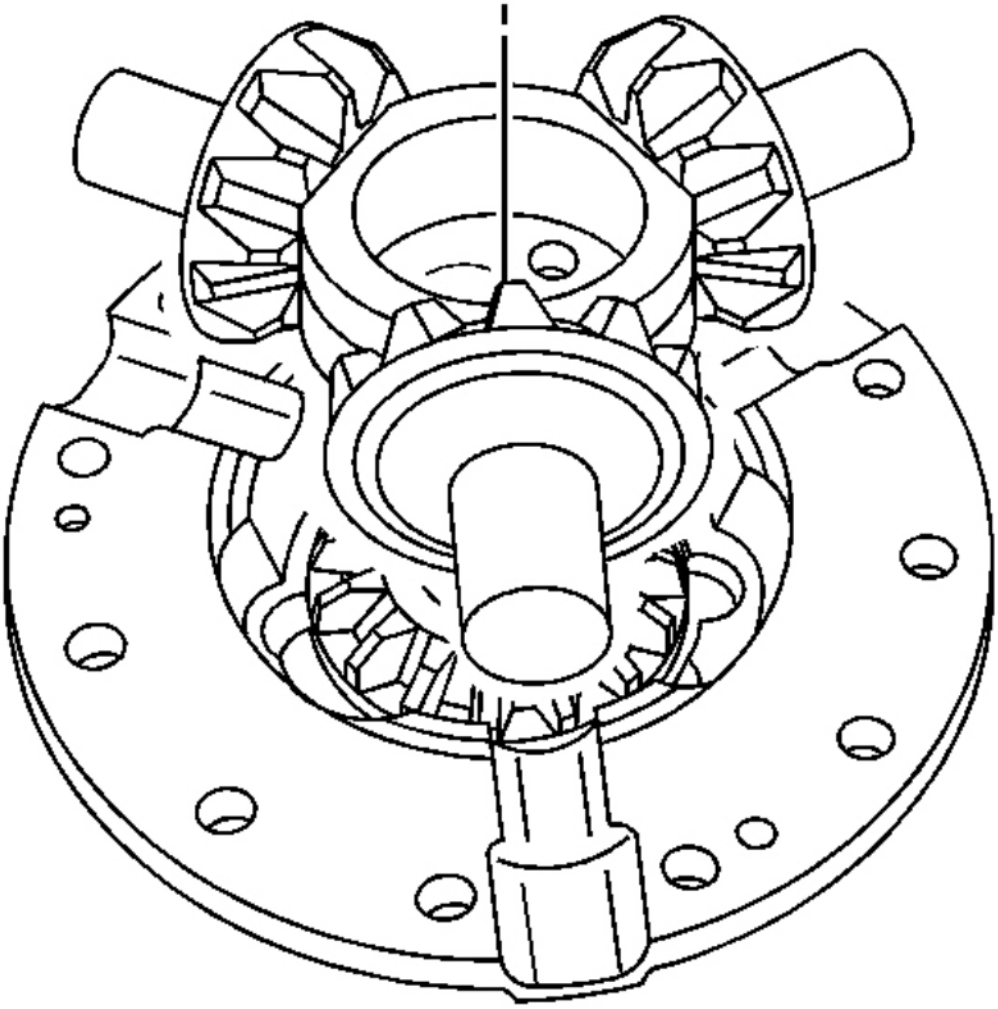

Fig. 21: View Of Locking Differential Spider, Differential Pinion Gears & Thrust Washers (Left Side)
Courtesy of GENERAL MOTORS CORP.

11. Remove the locking differential side gear.

cardiagn.com

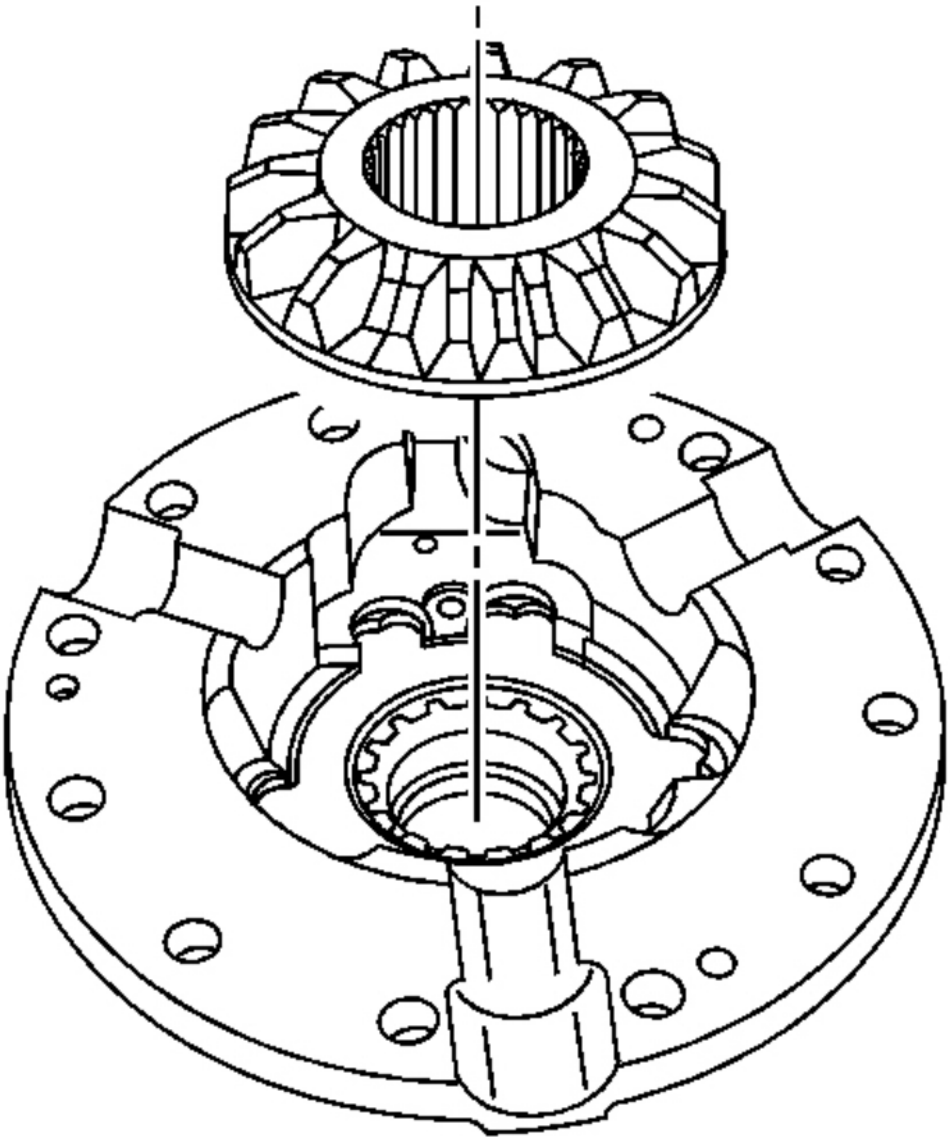

Fig. 22: View Of Locking Differential Side Gear
Courtesy of GENERAL MOTORS CORP.

12. Remove the left side clutch plates and the guide clips.

cardiagn.com

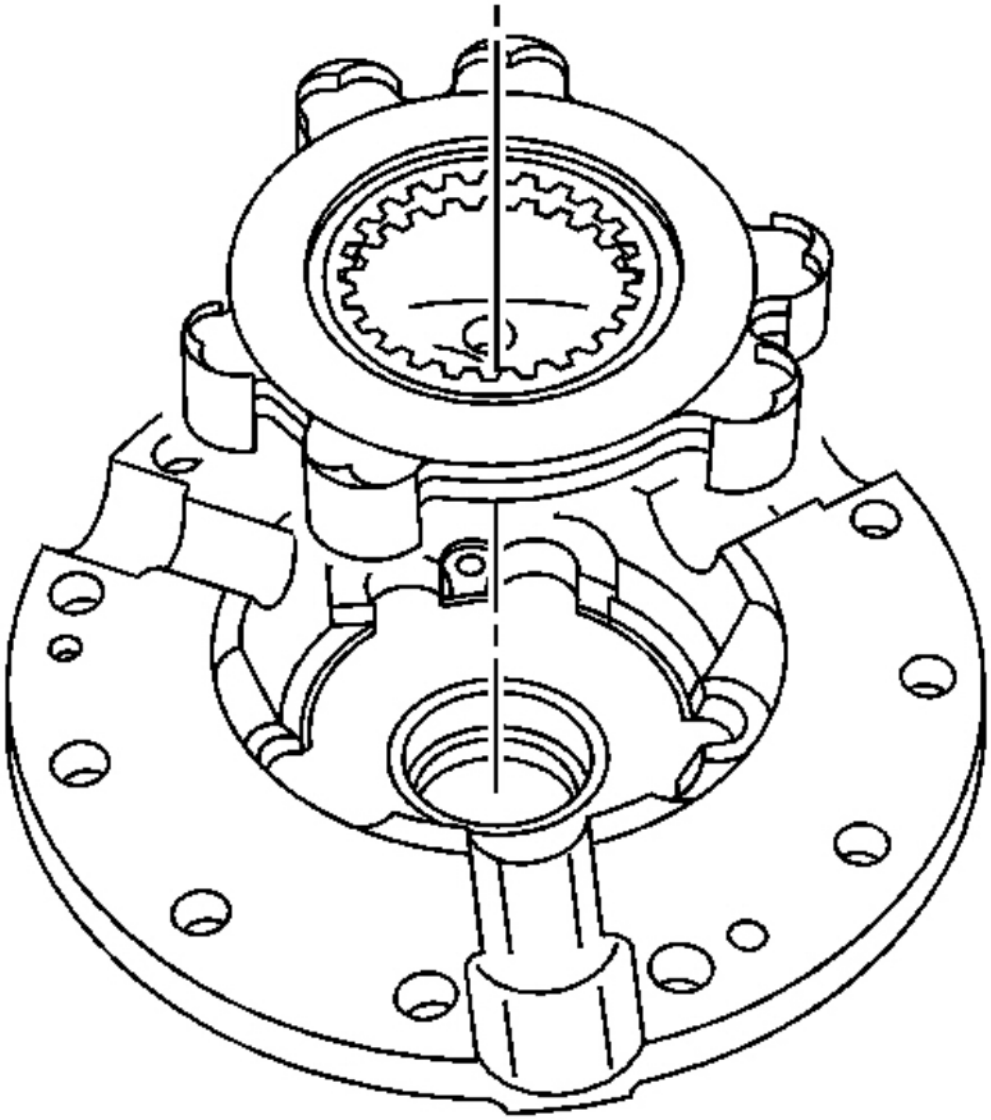

Fig. 23: View Of Left Side Clutch Disc Assembly
Courtesy of GENERAL MOTORS CORP.

13. Remove the left side gear thrust washer.

cardiagn.com

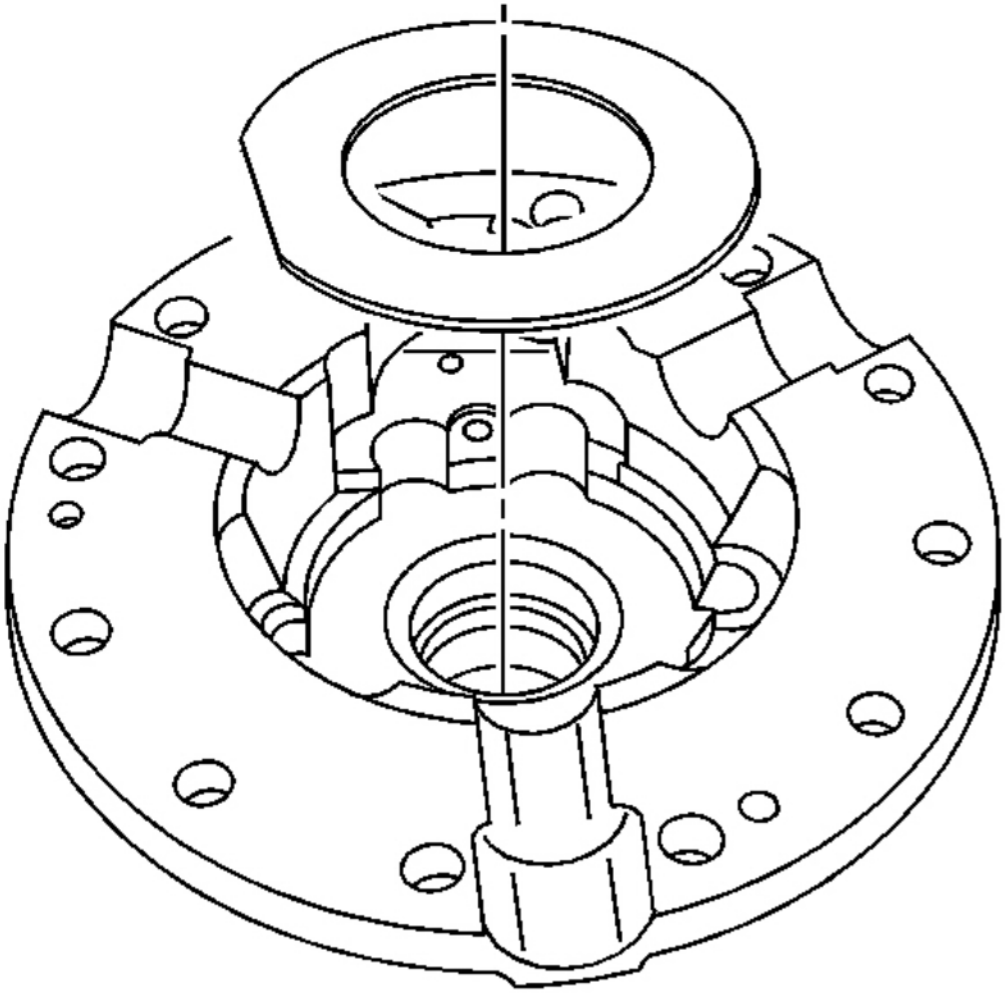

Fig. 24: View Of Left Side Gear Thrust Washer
Courtesy of GENERAL MOTORS CORP.

14. Remove the right side cam unit and clutch plate assembly.

cardiagn.com

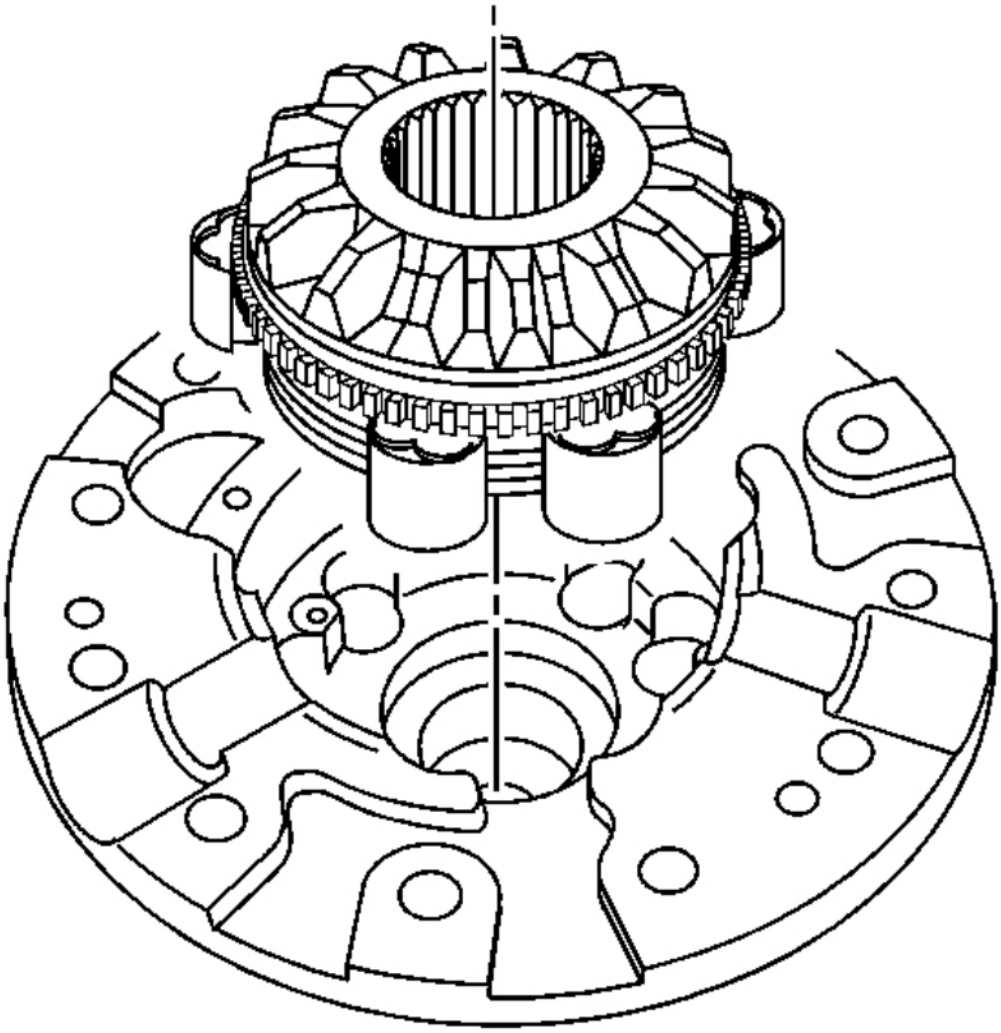

Fig. 25: View Of Right Side Cam Unit & Clutch Plate Assembly
Courtesy of GENERAL MOTORS CORP.

15. Remove the right side locking differential clutch disc thrust washer.

cardiagn.com

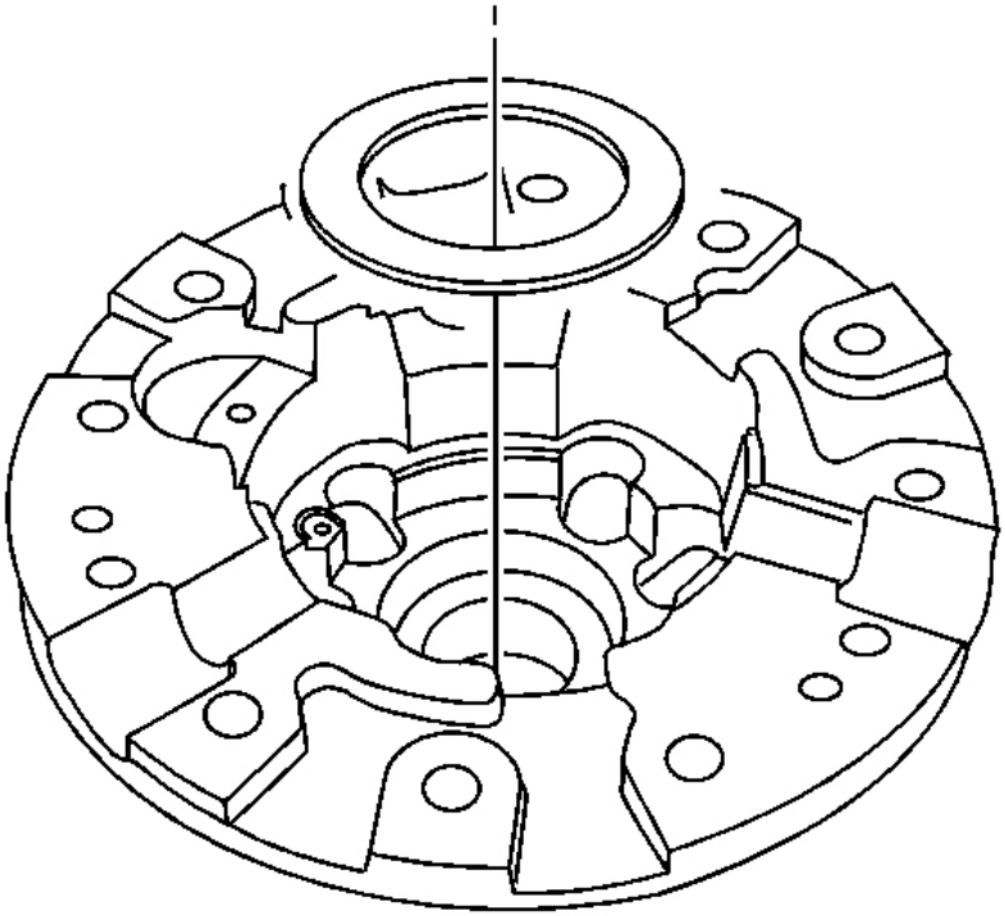

Fig. 26: View Of Right Side Locking Differential Clutch Disc Thrust Washer
Courtesy of GENERAL MOTORS CORP.

16. Disassemble the left side differential side gear and clutch disc assembly. Refer to **Locking Differential Clutch Disc Assembly - Disassemble (8.6 Inch Axle)** or **Locking Differential Clutch Disc Assembly - Disassemble (9.5 Inch Axle)** or **Locking Differential Clutch Disc Assembly - Disassemble (10.5 Inch Axle)**.
17. Disassemble the right side locking differential side gear cam unit and clutch disc assembly. Refer to **Locking Differential Cam Unit Disassemble (8.6 Inch Axle)** or **Locking Differential Cam Unit Disassemble (9.5 Inch Axle)** or **Locking Differential Cam Unit Disassemble (10.5 Inch Axle)**.

LOCKING DIFFERENTIAL CLUTCH DISC ASSEMBLY - DISASSEMBLE (8.6 INCH AXLE)

1. Remove the guide clips (3).

cardiagn.com

2. Remove the clutch discs and the splined discs (2, 4-6) from the locking differential side gear (1).

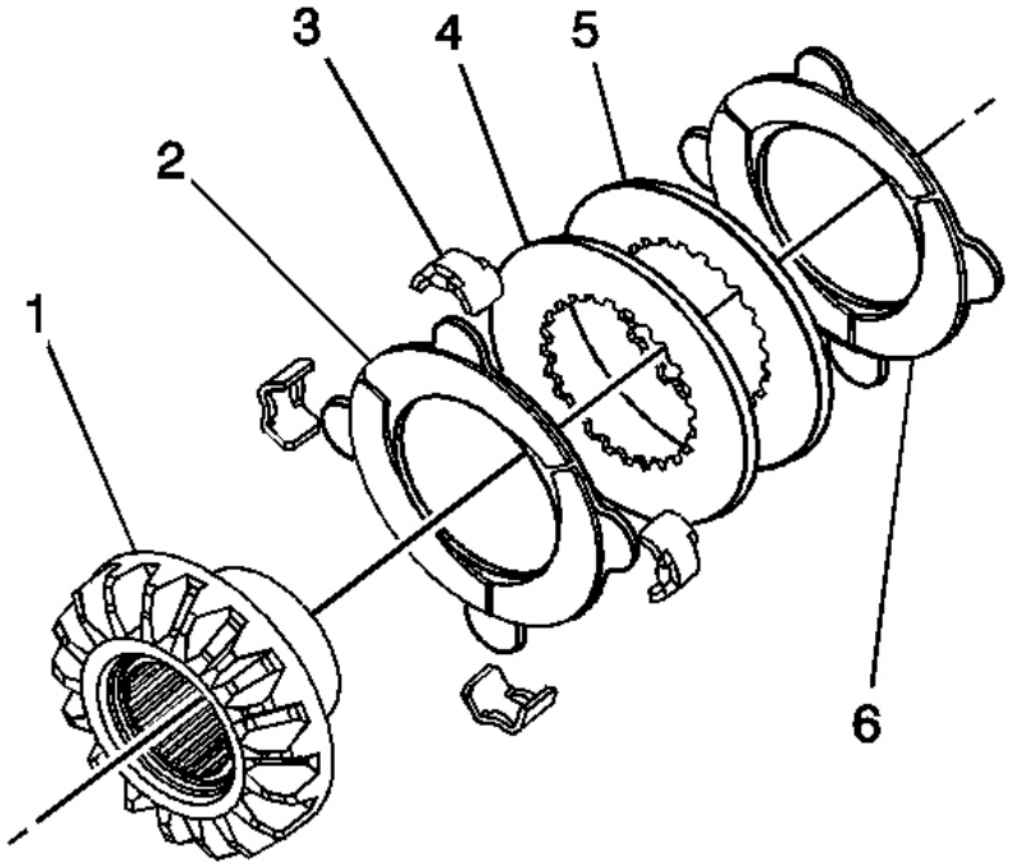

Fig. 27: View Of Locking Differential Clutch Disc Assembly (8.6 Inch Axle)
Courtesy of GENERAL MOTORS CORP.

LOCKING DIFFERENTIAL CLUTCH DISC ASSEMBLY - DISASSEMBLE (9.5 INCH AXLE)

1. Remove the guide clips (2).
2. Remove the clutch discs and the splined discs (3-7) from the locking differential side gear (1).

cardiagn.com

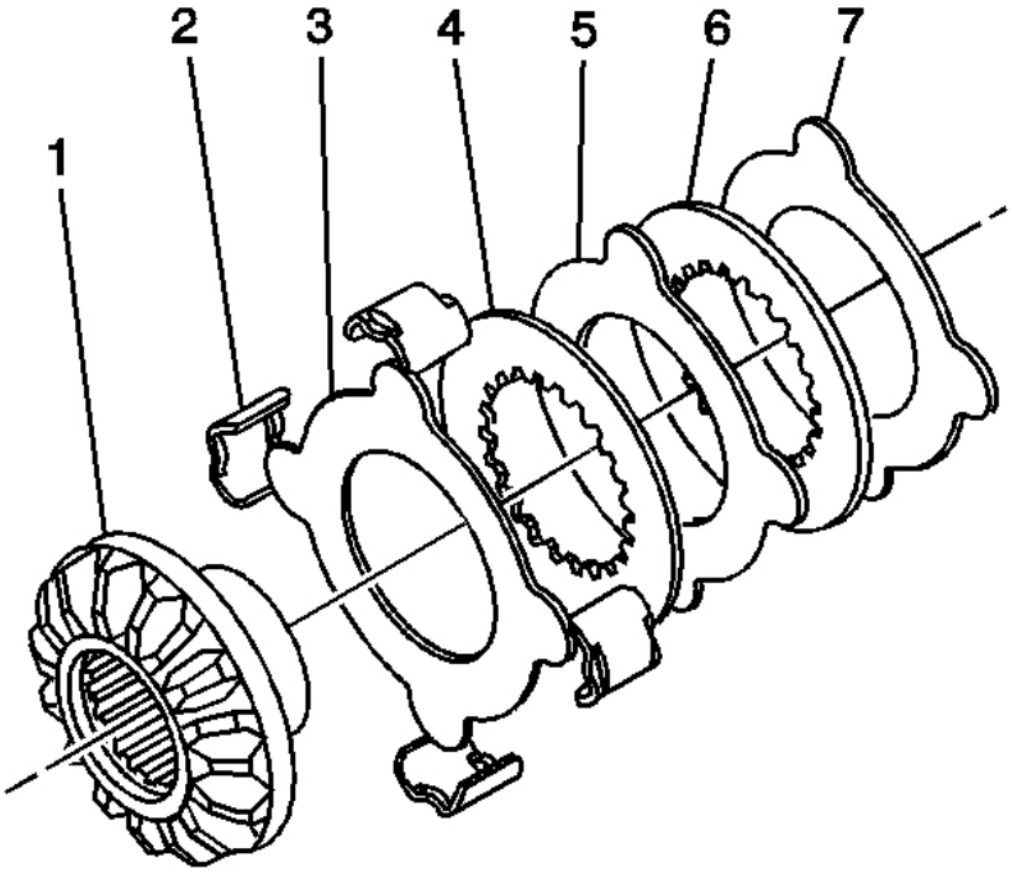

Fig. 28: View Of Locking Differential Clutch Disc Assembly (9.5 Inch Axle)
Courtesy of GENERAL MOTORS CORP.

LOCKING DIFFERENTIAL CLUTCH DISC ASSEMBLY - DISASSEMBLE (10.5 INCH AXLE)

1. Remove the guide clips (6).
2. Remove the clutch discs and the splined discs (2-5, 7) from the locking differential side gear (1).

cardiagn.com

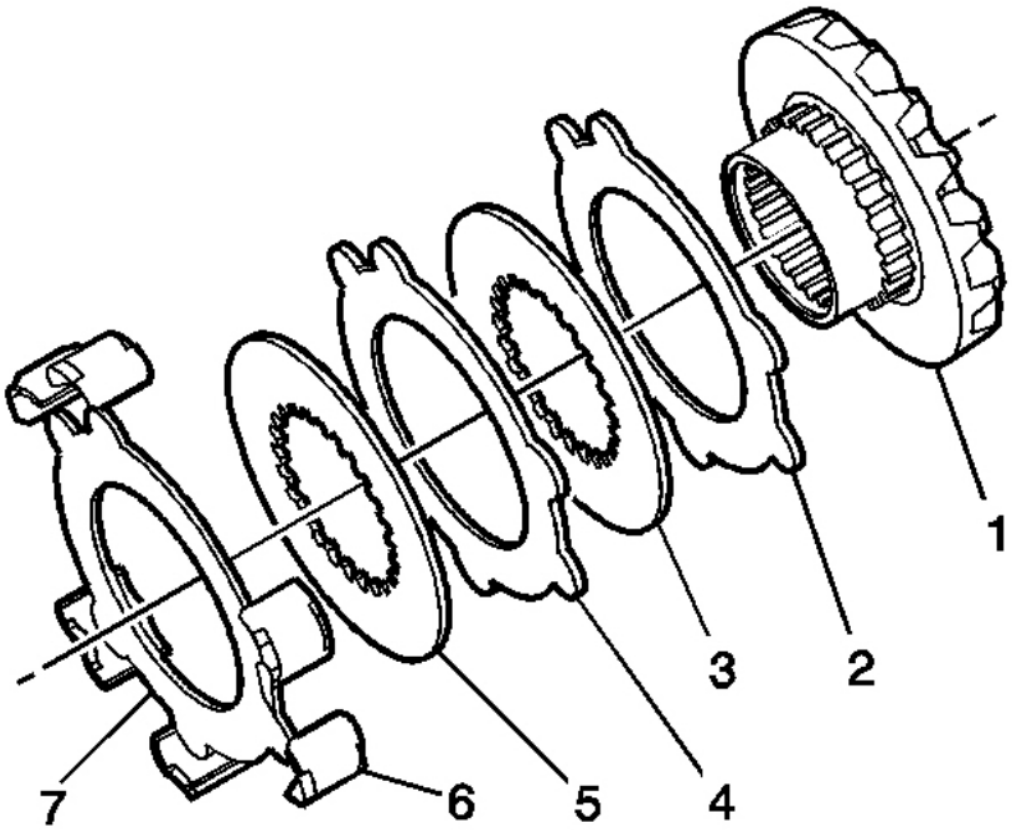

Fig. 29: View Of Locking Differential Clutch Disc Assembly (10.5 Inch Axle)
Courtesy of GENERAL MOTORS CORP.

LOCKING DIFFERENTIAL CAM UNIT DISASSEMBLE (8.6 INCH AXLE)

1. Remove the guide clips.
2. Remove the retaining ring.

cardiagn.com

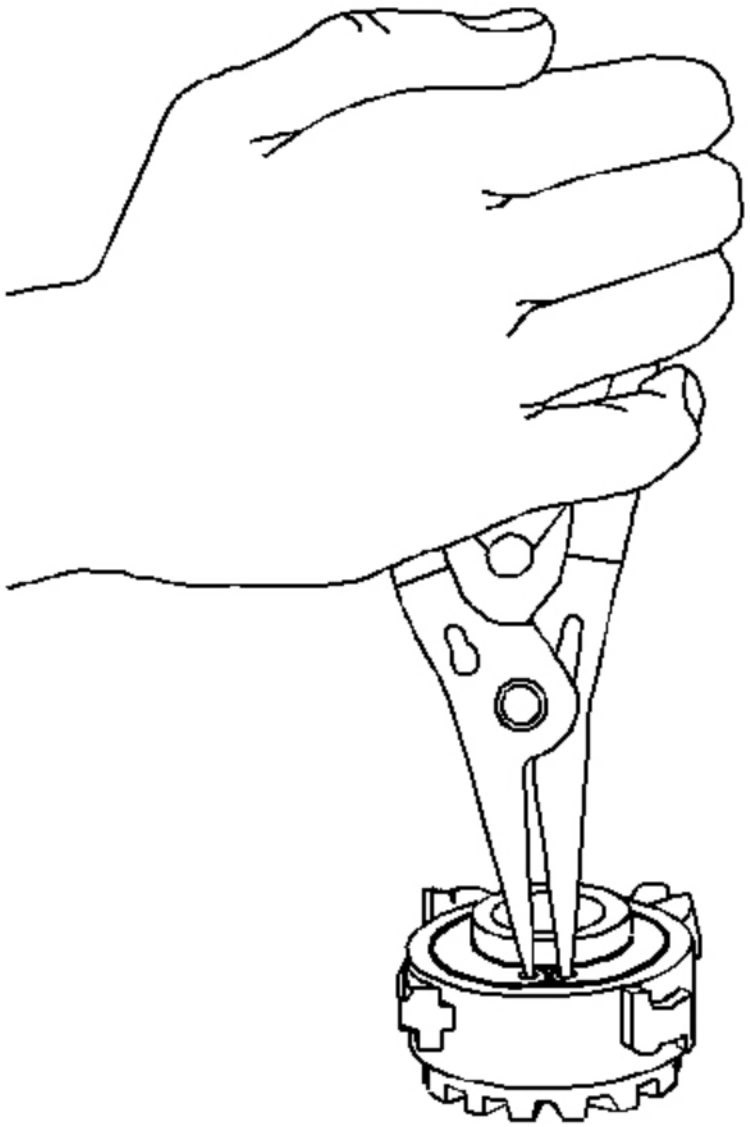

Fig. 30: Locking Differential Retaining Ring
Courtesy of GENERAL MOTORS CORP.

3. Disassemble the locking differential side gear cam unit and clutch disc assembly as follows:
    1. Remove the clutch discs and the splined discs (7-14).
    2. Remove the wave washer (5).
    3. Remove the fuse disc (4).

cardiagn.com

4. Remove the carbon eared disc (3).
5. Disassemble the cam plate (2) from the cam side gear (1).

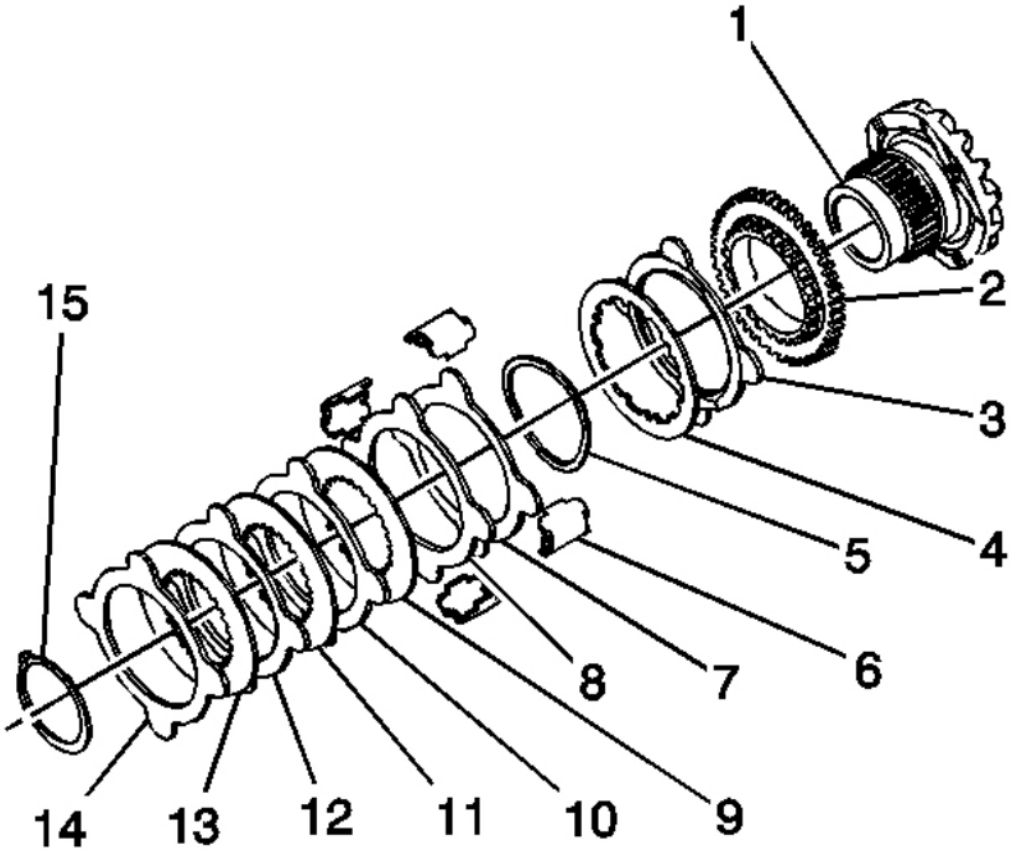

Fig. 31: Exploded View Of Locking Differential Side Gear Cam Unit & Clutch Disc Assembly
Courtesy of GENERAL MOTORS CORP.

LOCKING DIFFERENTIAL CAM UNIT DISASSEMBLE (9.5 INCH AXLE)

Tools Required

- J 22912-O1 Split Plate Bearing Puller
- **J 45232** Differential Bearing Adjuster Needle Bearing Installer - LH. See **Special Tools and Equipment**.

1. Measure and record the overall length of the gear assembly from the front of the gear to the thrust sleeve, including the side gear thrust washer.

cardiagn.com

2. Remove the guide clips.
3. Remove the thrust sleeve using the J 22912-O1 (2) and the **J 45232** (1), if necessary, and a hydraulic press. See **Special Tools and Equipment**.

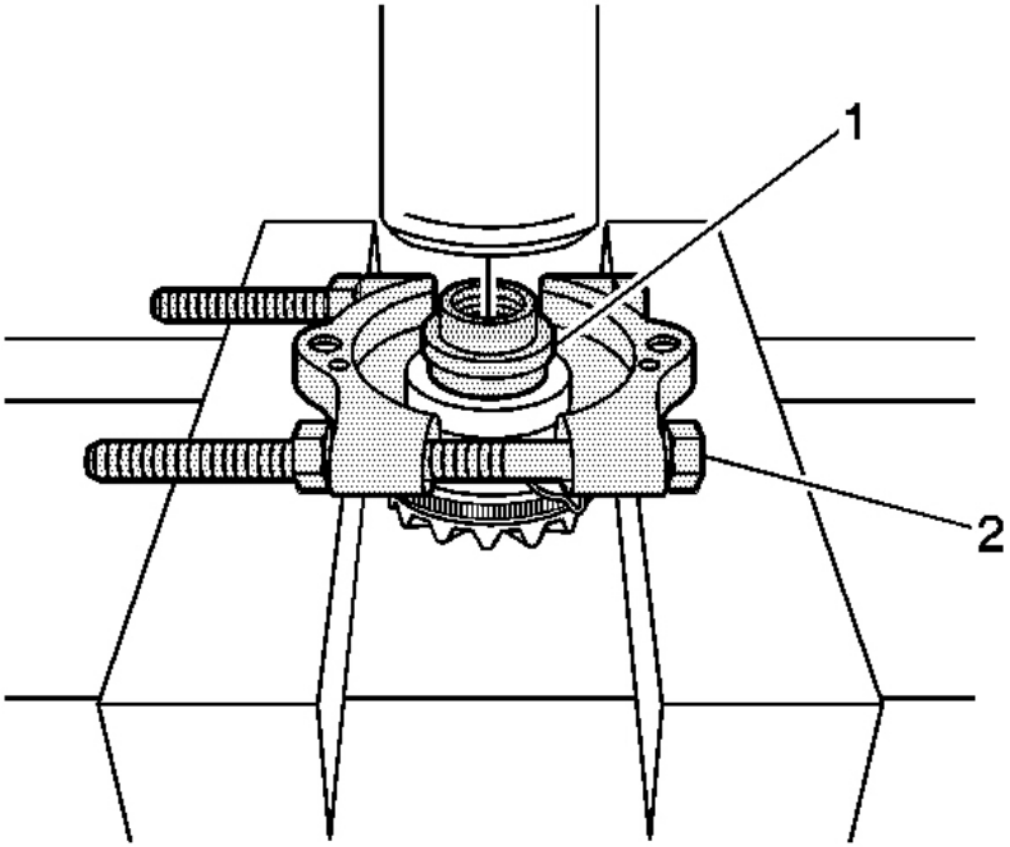

Fig. 32: Removing Thrust Sleeve Using J 22912-O1 & J 45232
Courtesy of GENERAL MOTORS CORP.

4. Disassemble the locking differential side gear cam unit and clutch disc assembly as follows:
    1. Remove the clutch discs and the splined discs (7-14).
    2. Remove the wave washer (5).
    3. Remove the fuse disc (4).
    4. Remove the carbon eared disc (3).
    5. Disassemble the cam plate (2) from the cam side gear (1).

cardiagn.com

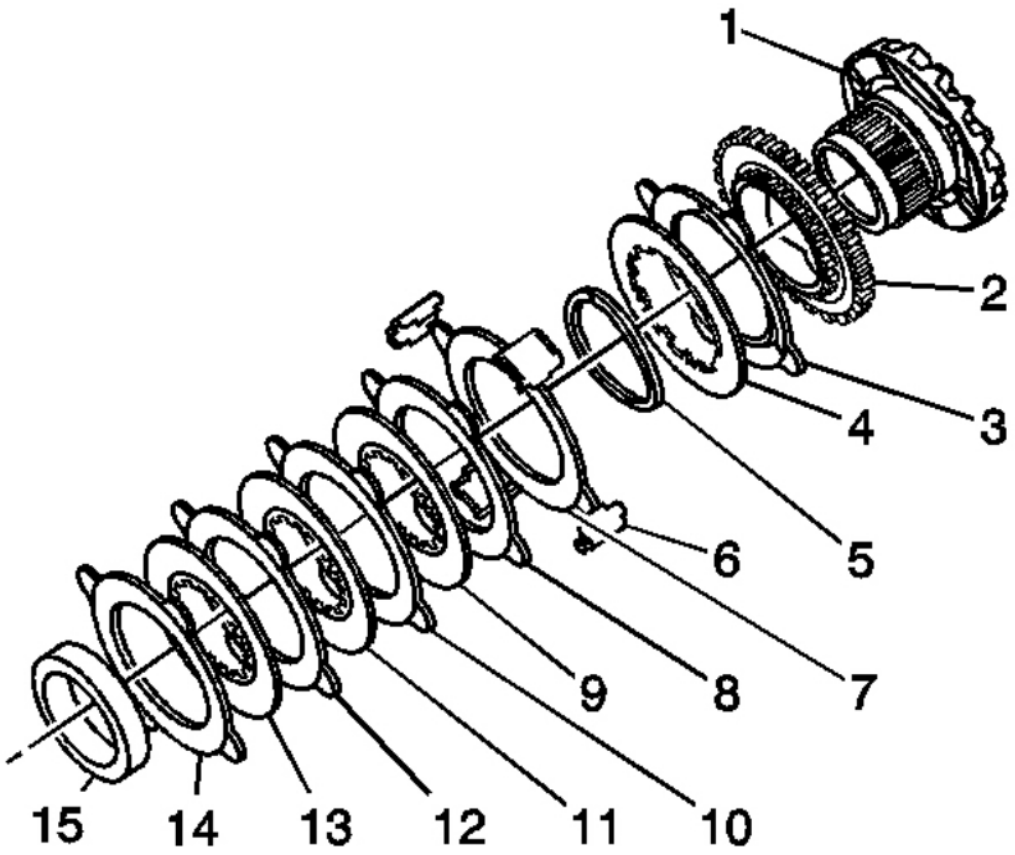

Fig. 33: Locking Differential Side Gear Cam Unit & Clutch Disc Assembly (9.5 Inch Axle)
Courtesy of GENERAL MOTORS CORP.

LOCKING DIFFERENTIAL CAM UNIT DISASSEMBLE (10.5 INCH AXLE)

Tools Required

- J 22912-O1 Split Plate Bearing Puller
- **J 45232** Differential Bearing Adjuster Needle Bearing Installer - LH. See **Special Tools and Equipment**.

1. Measure and record the overall length of the locking differential cam, side gear and clutch plate assembly from the front of the gear to the back of the thrust sleeve, including the locking differential clutch disc thrust washer.
2. Remove the guide clips.
3. Remove the thrust sleeve using the J 22912-O1 (2) and the **J 45232** (1), if necessary, and a hydraulic press. See **Special Tools and Equipment**.

cardiagn.com

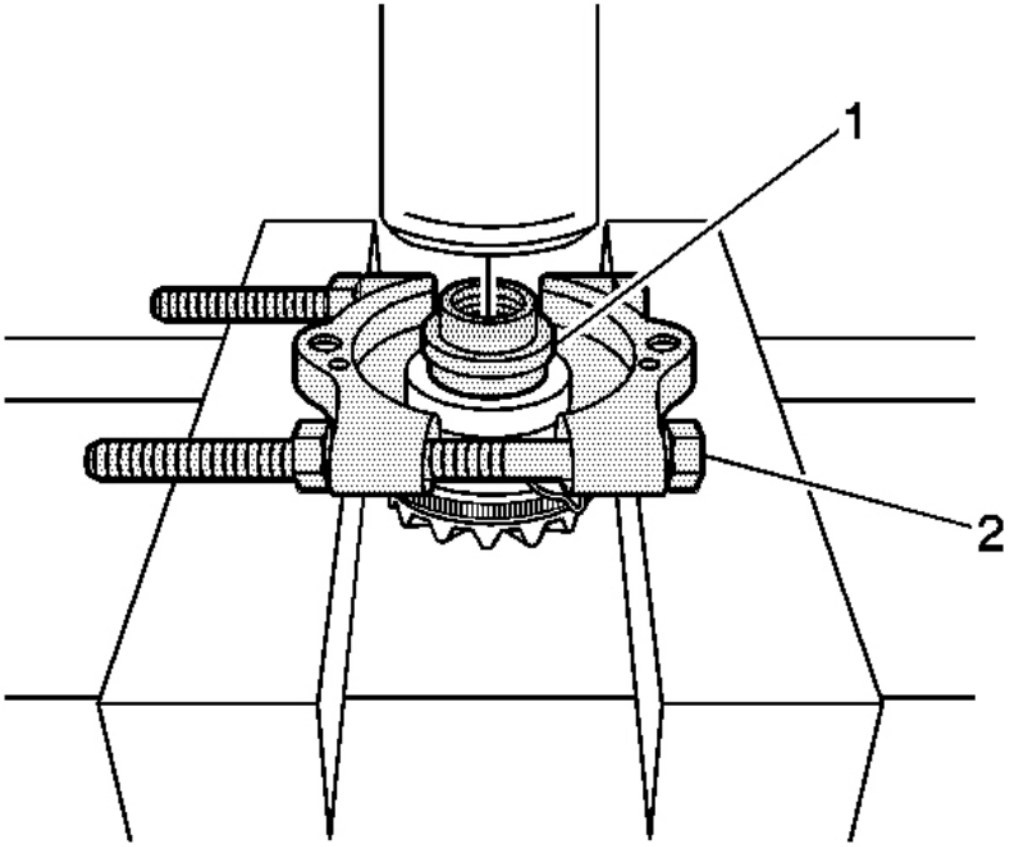

Fig. 34: Removing Thrust Sleeve Using J 22912-O1 & J 45232
Courtesy of GENERAL MOTORS CORP.

4. Disassemble the locking differential side gear cam unit and clutch disc assembly as follows:
    1. Remove the clutch discs and the splined discs (6, 8-14).
    2. Remove the wave washer (5).
    3. Remove the fuse disc (4).
    4. Remove the carbon eared disc (3).
    5. Disassemble the cam plate (2) from the cam side gear (1).

cardiagn.com

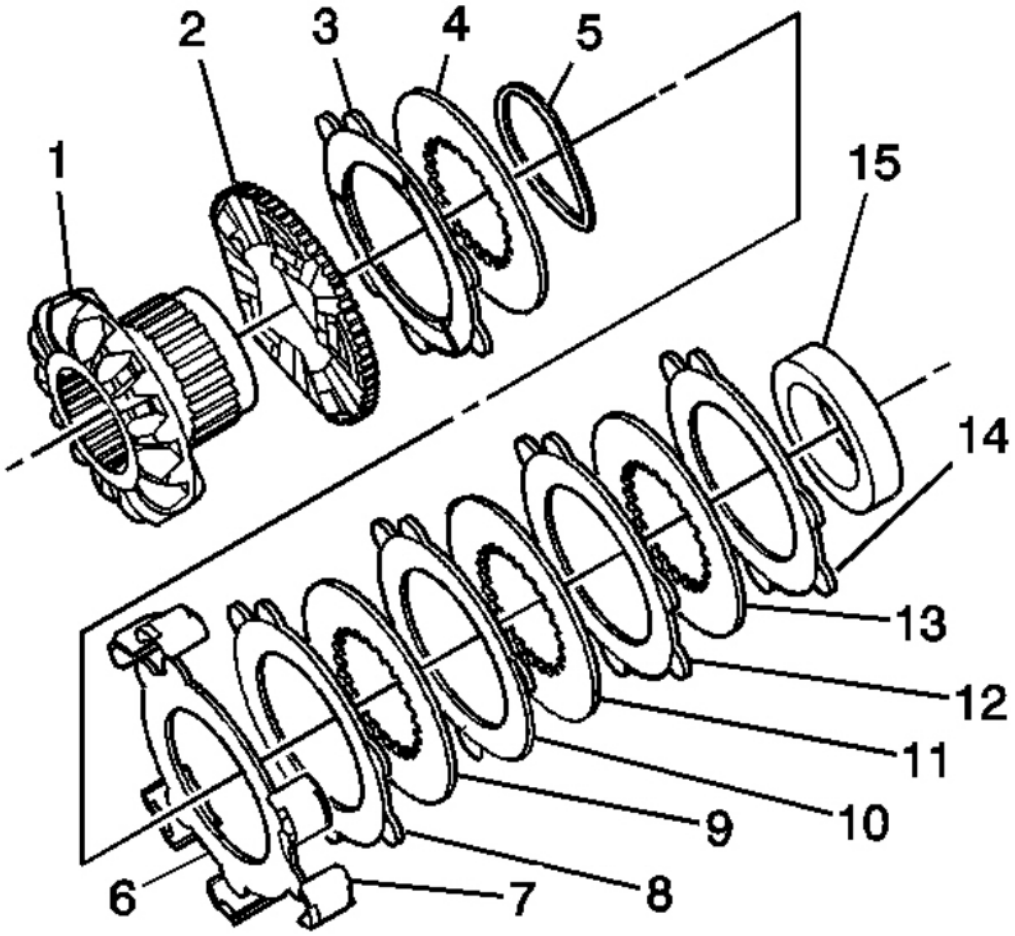

Fig. 35: Locking Differential Side Gear Cam Unit & Clutch Disc Assembly (10.5 Inch Axle)
Courtesy of GENERAL MOTORS CORP.

LIMITED SLIP DIFFERENTIAL CLEANING AND INSPECTION

1. Clean all the parts with an approved solvent.
2. Visually inspect all the parts for excessive wear or breakage. Replace the parts if necessary.
3. Inspect the pinion gear and the side gear teeth for any the following conditions:
   - Wear
   - Cracks
   - Scoring
   - Spalling

cardiagn.com

4. Inspect the thrust washers for wear.
5. Inspect the fit of the side gears on the axle shafts.
6. Inspect the differential case for cracks and scoring.
7. Inspect the side gear bore for scoring. If scoring is present, replace the entire differential.
8. Replace the differential if you find any damage to the case.

LOCKING DIFFERENTIAL CLEANING AND INSPECTION

1. Clean all the parts with an approved solvent.
2. Visually inspect all the parts for excessive wear or breakage. Replace the parts if necessary.
3. Inspect the pinion gear and the side gear teeth for any the following conditions:
   - Wear
   - Cracks
   - Scoring
   - Spalling
4. Inspect the thrust washers for wear.
5. Inspect the fit of the side gears on the axle shafts.
6. Inspect the differential case for cracks and scoring.

IMPORTANT: Do not replace the thrust sleeve unless it is necessary.

7. Inspect the thrust sleeve for excessive wear.
8. Inspect the side gear bore for scoring. If scoring is present, replace the entire differential.
9. Replace the differential if you find any damage to the case.

LOCKING DIFFERENTIAL CAM UNIT ASSEMBLE (8.6 INCH AXLE)

1. Apply axle lubricant, GM P/N 12378261 (Canadian P/N 10953455) or equivalent meeting GM Specification 9986115, to the surface of each disc.
2. Assemble the left side or the flange-end side locking differential side gear cam unit and clutch disc assembly as follows:
   1. Install the cam plate (2) to the cam side gear (1).
   2. Install the carbon-faced eared disc (3).
   3. Install the fuse disc (4).
   4. Install the 1st non-carbon eared disc (7).
   5. Install the 2nd non-carbon eared disc (8).
   6. Install the wave washer (5).
   7. Install the 1st splined disc (9).
   8. Install the 3rd non-carbon eared disc (10).
   9. Install the 2nd splined disc (11).

cardiagn.com

10. Install the 4th non-carbon eared disc (12).
11. Install the 3rd splined disc (13).
12. Install the 5th non-carbon eared disc (14).
13. Install the retaining ring (15).

    Compress the clutch disc assembly and align the teeth on the 3rd splined disc with the teeth on the cam plate in order to seat the retaining ring in the groove on the cam side gear.

14. Install the guide clips (2) to the clutch disc assembly.

    Apply chassis grease, GM P/N 12377985 (Canadian P/N 88901242) or equivalent, to the guide clips in order to hold the clips in place on the disc ears.

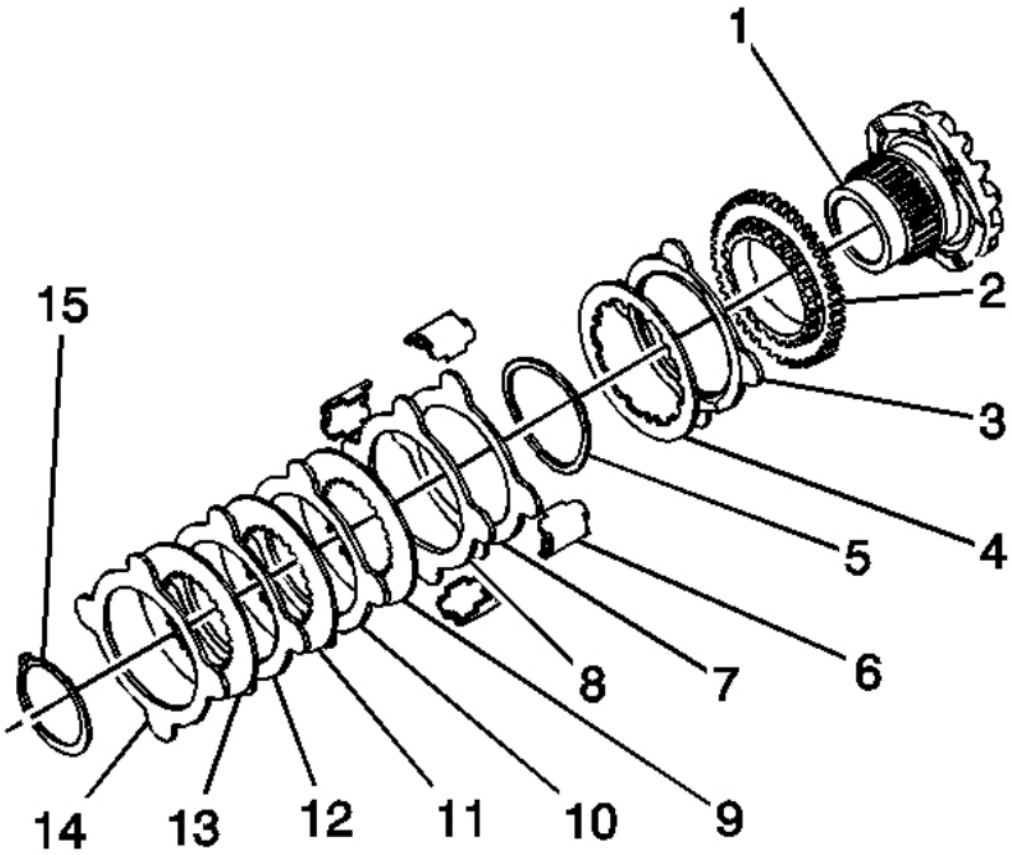

Fig. 36: Exploded View Of Locking Differential Side Gear Cam Unit & Clutch Disc Assembly
Courtesy of GENERAL MOTORS CORP.

cardiagn.com

LOCKING DIFFERENTIAL CAM UNIT ASSEMBLE (9.5 INCH AXLE)

Tools Required

J 29710 Differential Side Bearing Installer

1. Apply axle lubricant, GM P/N 12378261 (Canadian P/N 10953455) or equivalent meeting GM Specification 9986115, to the surface of each disc.
2. Assemble the left side or the flange-end side locking differential side gear cam unit and clutch disc assembly as follows:
    1. Install the cam plate (2) to the cam side gear (1).
    2. Install the carbon-faced eared disc (3).
    3. Install the fuse disc (4).
    4. Install the wave washer (5).
    5. Install the 1st non-carbon eared disc (7).
    6. Install the 2nd non-carbon eared disc (8).
    7. Install the 1st splined disc (9).
    8. Install the 3rd non-carbon eared disc (10).
    9. Install the 2nd splined disc (11).
    10. Install the 4th non-carbon eared disc (12).
    11. Install the 3rd splined disc (13).
    12. Install the 5th non-carbon eared disc (14).
    13. Align the splined discs with the teeth on the cam plate in order to compress the clutch disc assembly.
3. Install the thrust sleeve (15) onto the cam side gear.

cardiagn.com

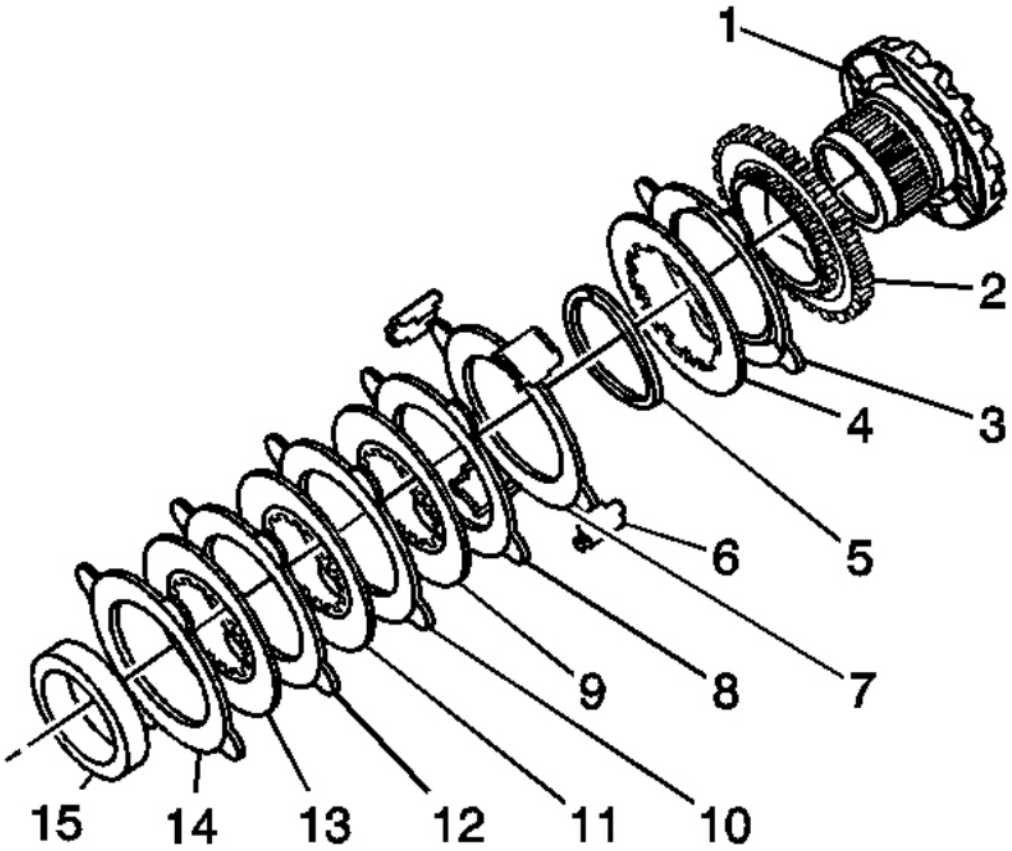

Fig. 37: Locking Differential Side Gear Cam Unit & Clutch Disc Assembly (9.5 Inch Axle)
Courtesy of GENERAL MOTORS CORP.

4. Install the thrust sleeve onto the cam side gear using a hydraulic press and the **J 29710** , if necessary, until the thrust sleeve is fully seated onto the locking differential cam gear.

cardiagn.com

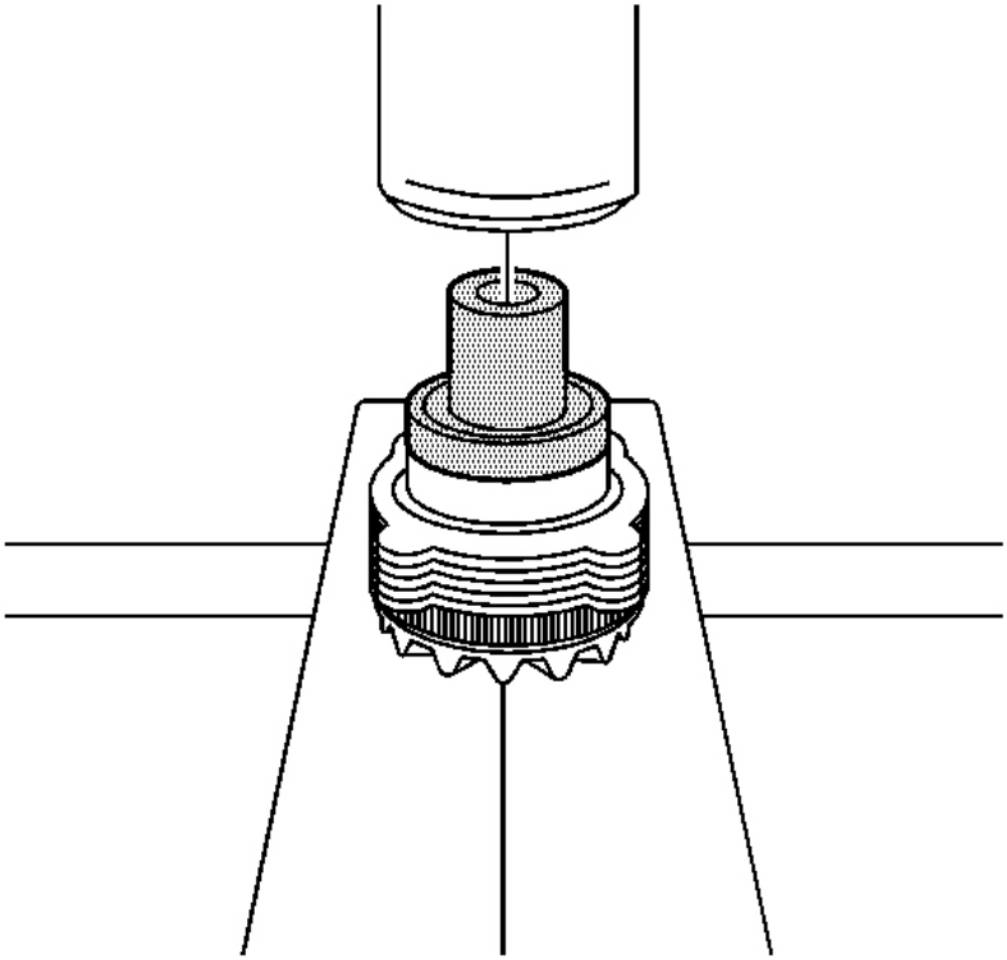

Fig. 38: Installing Thrust Sleeve Using Hydraulic Press & J 29710 (9.5 Inch Axle)
Courtesy of GENERAL MOTORS CORP.

5. If the cam side gear or the thrust sleeve has been replaced, measure the overall length of the gear assembly by doing the following:
    1. Place the locking differential clutch disc thrust washer on top of the thrust sleeve.
    2. Measure the overall length of the gear assembly from the front of the cam side gear to the back of the locking differential clutch disc thrust washer.
    3. Compare this measurement to the measurement obtained during disassembly.
    4. If the new reading is more than 0.762 mm (0.003 in) higher or lower than the original, select a locking differential clutch disc thrust washer that will return the reading closest to the original reading.

cardiagn.com

6. Align the ears of all the clutch discs.
7. Install the guide clips to the clutch disc assembly.

   Apply chassis grease, GM P/N 12377985 (Canadian P/N 88901242) or equivalent, to the guide clips in order to hold the clips in place on the disc ears.

LOCKING DIFFERENTIAL CAM UNIT ASSEMBLE (10.5 INCH AXLE)

Tools Required

J 29710 Differential Side Bearing Installer

1. Apply axle lubricant, GM P/N 12378261 (Canadian P/N 10953455) or equivalent meeting GM Specification 9986115, to the surface of each disc.
2. Assemble the right side locking differential side gear cam unit and clutch disc assembly as follows:
   1. Install the cam plate (2) to the cam side gear (1).
   2. Install the carbon-faced ear disc (3).
   3. Install the fuse disc (4).
   4. Install the wave washer (5).
   5. Install the 1st non-carbon eared disc (7).
   6. Install the 2nd non-carbon eared disc (8).
   7. Install the 1st splined disc (9).
   8. Install the 3rd non-carbon eared disc (10).
   9. Install the 2nd splined disc (11).
   10. Install the 4th non-carbon eared disc (12).
   11. Install the 3rd splined disc (13).
   12. Install the 5th non-carbon eared disc (14).
   13. Align the splined discs with the teeth on the cam side gear in order to compress the clutch disc disc.
3. Install the thrust sleeve (15) onto the cam side gear.

cardiagn.com

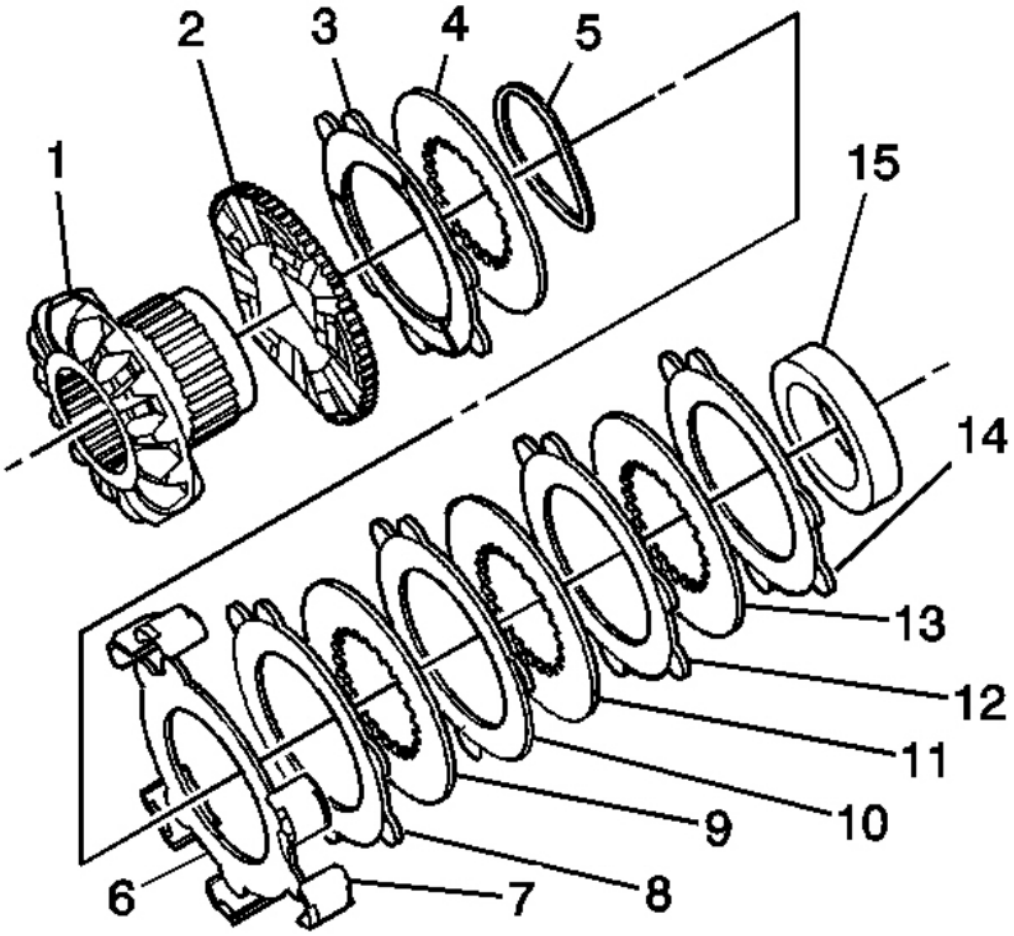

Fig. 39: Locking Differential Side Gear Cam Unit & Clutch Disc Assembly (10.5 Inch Axle)
Courtesy of GENERAL MOTORS CORP.

4. Install the thrust sleeve onto the cam side gear using a hydraulic press and the **J 29710** , if necessary, until the thrust sleeve is fully seated onto the cam side gear.

cardiagn.com

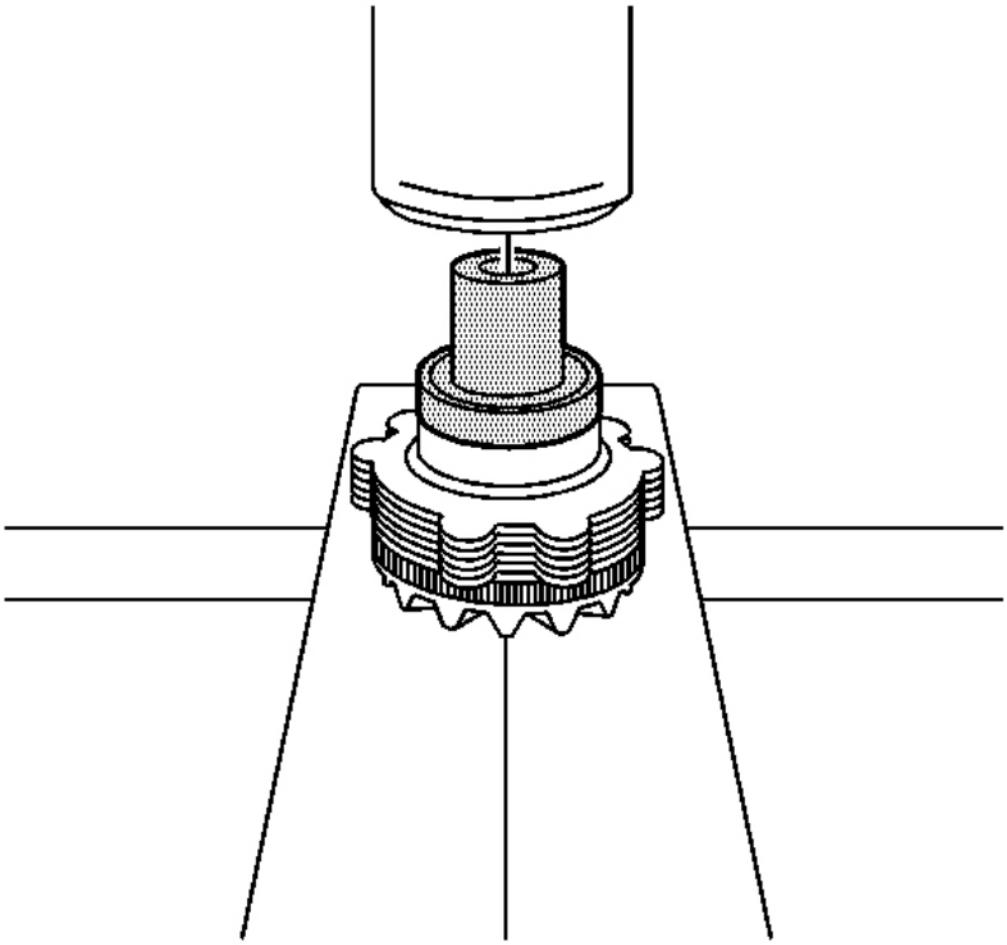

Fig. 40: Installing Thrust Sleeve Using Hydraulic Press & J 29710 (10.5 Inch Axle)
Courtesy of GENERAL MOTORS CORP.

5. If the cam side gear or the thrust sleeve has been replaced, measure the overall length of the gear assembly by doing the following:
    1. Place the locking differential clutch disc thrust washer on top of the thrust sleeve.
    2. Measure the overall length of the gear assembly from the front of the cam side gear to the back of the locking differential clutch disc thrust washer.
    3. Compare this measurement to the measurement obtained during disassembly.
    4. If the new reading is more than 0.762 mm (0.003 in) higher or lower than the original, select a locking differential clutch disc thrust washer that will return the reading closest to the original reading.

cardiagn.com

6. Align the ears of all the clutch discs.
7. Install the guide clips to the clutch disc assembly.

   Apply chassis grease, GM P/N 12377985 (Canadian P/N 88901242) or equivalent, to the guide clips in order to hold the clips in place on the disc ears.

LOCKING DIFFERENTIAL CLUTCH DISC ASSEMBLY - ASSEMBLE (8.6 INCH AXLE)

1. Apply axle lubricant, GM P/N 12378261 (Canadian P/N 10953455) or equivalent meeting GM Specification 9986115, to the surface of each disc.
2. Assemble the right side or bell-end side clutch disc assembly as follows:
   1. Install the two-sided carbon eared disc (2) to the side gear (1).
   2. Install the 1st splined disc (4).
   3. Install the 2nd splined disc (5).
   4. Install the one-sided carbon eared disc (6).
   5. Install the guide clips (3) to the clutch discs (2, 4-6).

      Apply chassis grease, GM P/N 12377985 (Canadian P/N 88901242) or equivalent, to the guide clips in order to hold the clips in place on the disc ears.

cardiagn.com

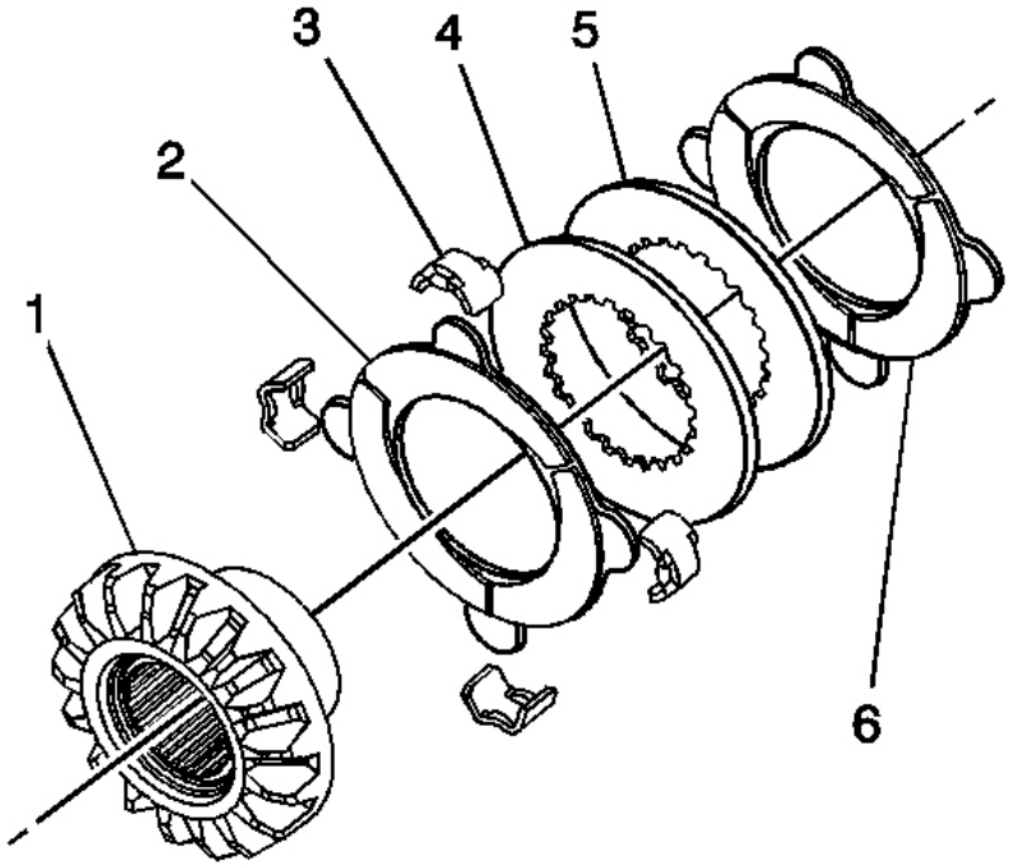

Fig. 41: View Of Locking Differential Clutch Disc Assembly (8.6 Inch Axle)
Courtesy of GENERAL MOTORS CORP.

LOCKING DIFFERENTIAL CLUTCH DISC ASSEMBLY - ASSEMBLE (9.5 INCH AXLE)

1. Apply axle lubricant, GM P/N 12378261 (Canadian P/N 10953455) or equivalent meeting GM Specification 9986115, to the surface of each disc.
2. Assemble the right side or bell-end side clutch disc assembly as follows:
    1. Install the 1st non-carbon eared disc (3) to the side gear (1).
    2. Install the 1st splined disc (4).
    3. Install the 2nd non-carbon eared disc (5).
    4. Install the 2nd splined disc (6).
    5. Install the 3rd non-carbon eared disc (7).
    6. Install the guide clips (2) to the clutch discs (2-7).

cardiagn.com

Apply chassis grease, GM P/N 12377985 (Canadian P/N 88901242) or equivalent, to the guide clips in order to hold the clips in place on the disc ears.

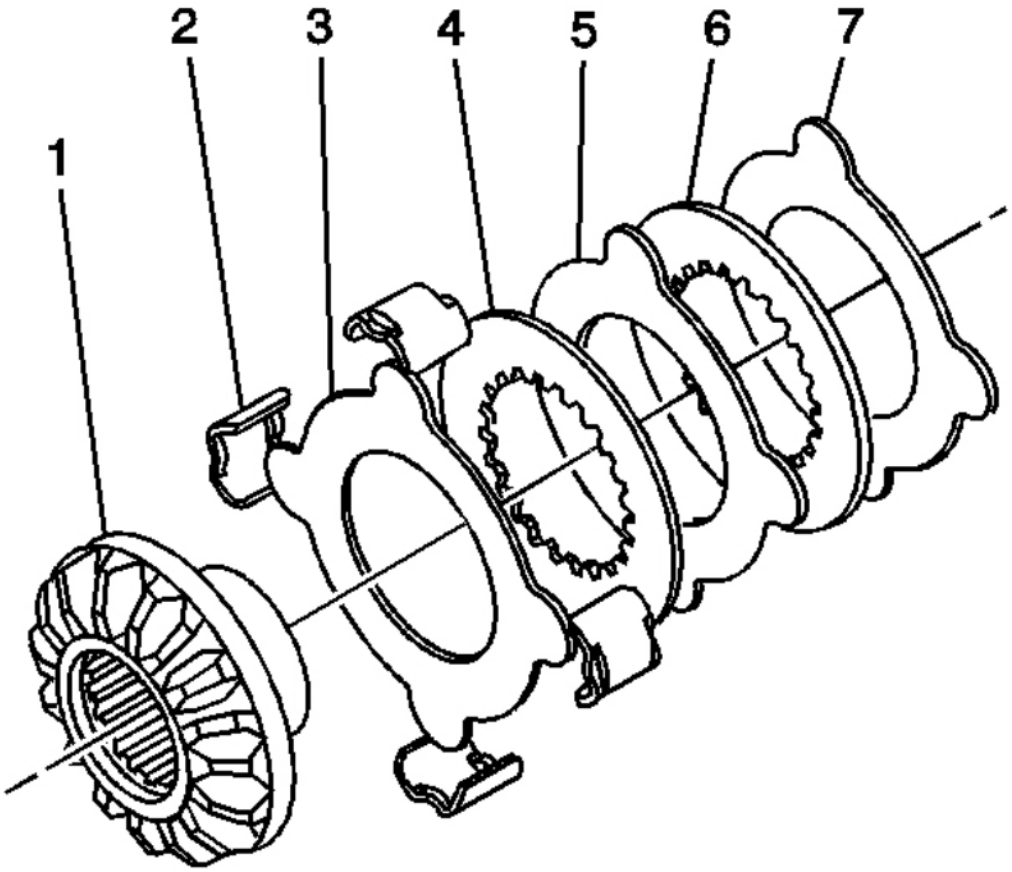

Fig. 42: View Of Locking Differential Clutch Disc Assembly (9.5 Inch Axle)
Courtesy of GENERAL MOTORS CORP.

LOCKING DIFFERENTIAL CLUTCH DISC ASSEMBLY - ASSEMBLE (10.5 INCH AXLE)

1. Apply axle lubricant, GM P/N 12378261 (Canadian P/N 10953455) or equivalent meeting GM Specification 9986115, to the surface of each disc.
2. Assemble the left side clutch disc assembly as follows:
    1. Install the 1st non-carbon eared disc (2) to the side gear (1).
    2. Install the 1st splined disc (3).
    3. Install the 2nd non-carbon eared disc (4).
    4. Install the 2nd splined disc (5).

cardiagn.com

5. Install the 3rd non-carbon eared disc (7).
6. Align the ears of all the clutch discs.
7. Install the guide clips (6) to the clutch discs (2-5, 7).

   Apply chassis grease, GM P/N 12377985 (Canadian P/N 88901242) or equivalent, to the guide clips in order to hold the clips in place on the disc ears.

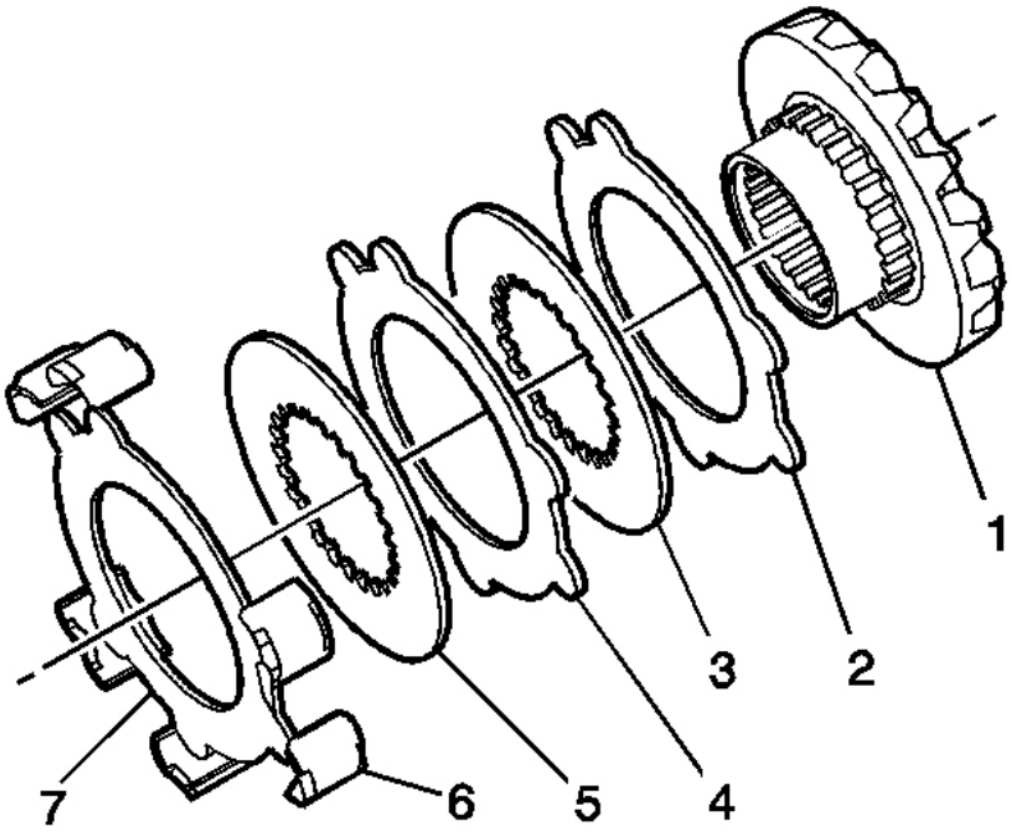

Fig. 43: View Of Locking Differential Clutch Disc Assembly (10.5 Inch Axle)
Courtesy of GENERAL MOTORS CORP.

LOCKING DIFFERENTIAL ADJUSTMENT (8.6 INCH AXLE)

Tools Required

- **J 7872** Magnetic Base Dial Indicator. See **Special Tools and Equipment**.
- **J 8001** Dial Indicator Set

cardiagn.com

Adjustment of the Differential

IMPORTANT: If it is necessary to replace the left side locking differential side gear cam unit and clutch disc assembly, the right side locking differential side gear and clutch disc assembly, or the thrust block, the entire differential must be adjusted. The differential is adjusted using selective thickness thrust washers between the clutch disc assemblies and the case and/or different selective thickness thrust blocks.

When adjusting the differential, note the following:

- Build up the clutch disc assemblies properly.

  Proper clearance between parts is critical to the operation of the unit.

- Adjust the backlash and thrust block clearance in the following order:
  1. The left side gear backlash
  2. The right side gear backlash
  3. The thrust block clearance

Left Side Gear Backlash Adjustment

1. Install the new locking differential clutch disc thrust washer into the left side or flange-end of the differential case.

cardiagn.com

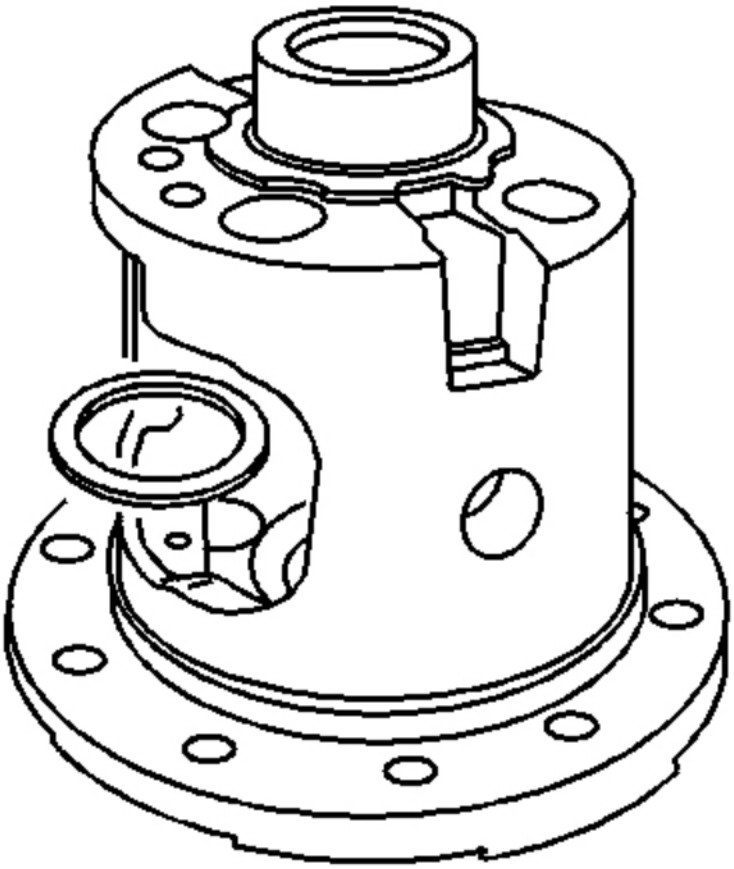

Fig. 44: View Of Left Side Gear Thrust Washer
Courtesy of GENERAL MOTORS CORP.

2. Install the locking differential side gear cam unit and clutch disc assembly into the left side or flange-end of the differential case.

cardiagn.com

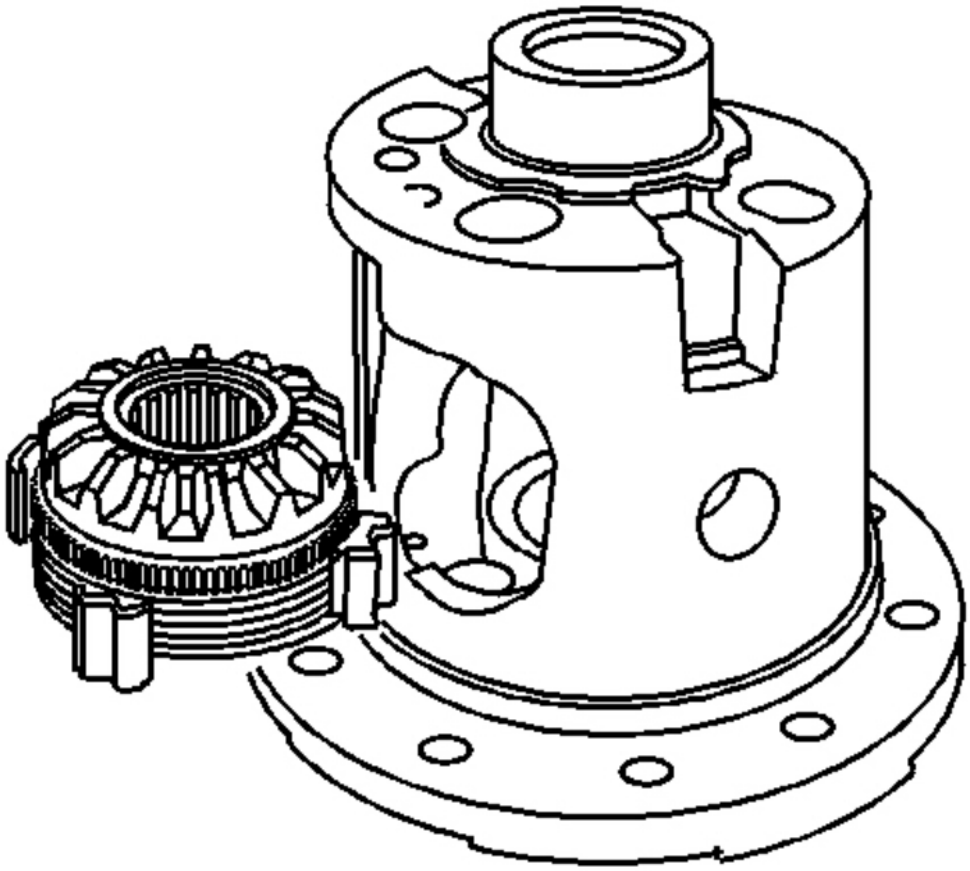

Fig. 45: View Of Left Side Gear Cam Unit & Clutch Disc Assembly
Courtesy of GENERAL MOTORS CORP.

3. Install the differential pinion gears with the differential pinion gear thrust washers into the differential case.

   Align the openings of the differential pinion gears and the differential pinion gear thrust washer to the pinion shaft opening in the differential case.

4. Install the pinion shaft. It may be necessary to press down on the locking differential side gear cam unit in order to align the pinion gear shaft opening with the pinion shaft opening in the differential case.

   If the pinion shaft cannot be installed after pressing on the locking differential side gear cam unit, replace the locking differential clutch disc gear thrust washer with a thinner washer.

cardiagn.com

NOTE: Refer to Fastener Notice in Cautions and Notices.

5. Install the pinion shaft lock bolt.

   Tighten: Tighten the pinion shaft lock bolt finger tight.

6. Rotate the pinion gear closest to the lock bolt so that one of the teeth is pointing downward, perpendicular to the ring gear flange.
7. Install a brass drift between the locking differential side gear cam unit and the pinion shaft.

   Press the brass drift in far enough in order to compress the clutch discs.

8. Measure the backlash of the differential pinion gear and the locking differential side gear cam unit by doing the following:
   1. Install the **J 7872** (1) to the ring gear flange. See **Special Tools and Equipment**.
   2. Loosely clamp the J 8001-3 (2) onto the stem on the **J 7872** (1). See **Special Tools and Equipment**.

cardiagn.com

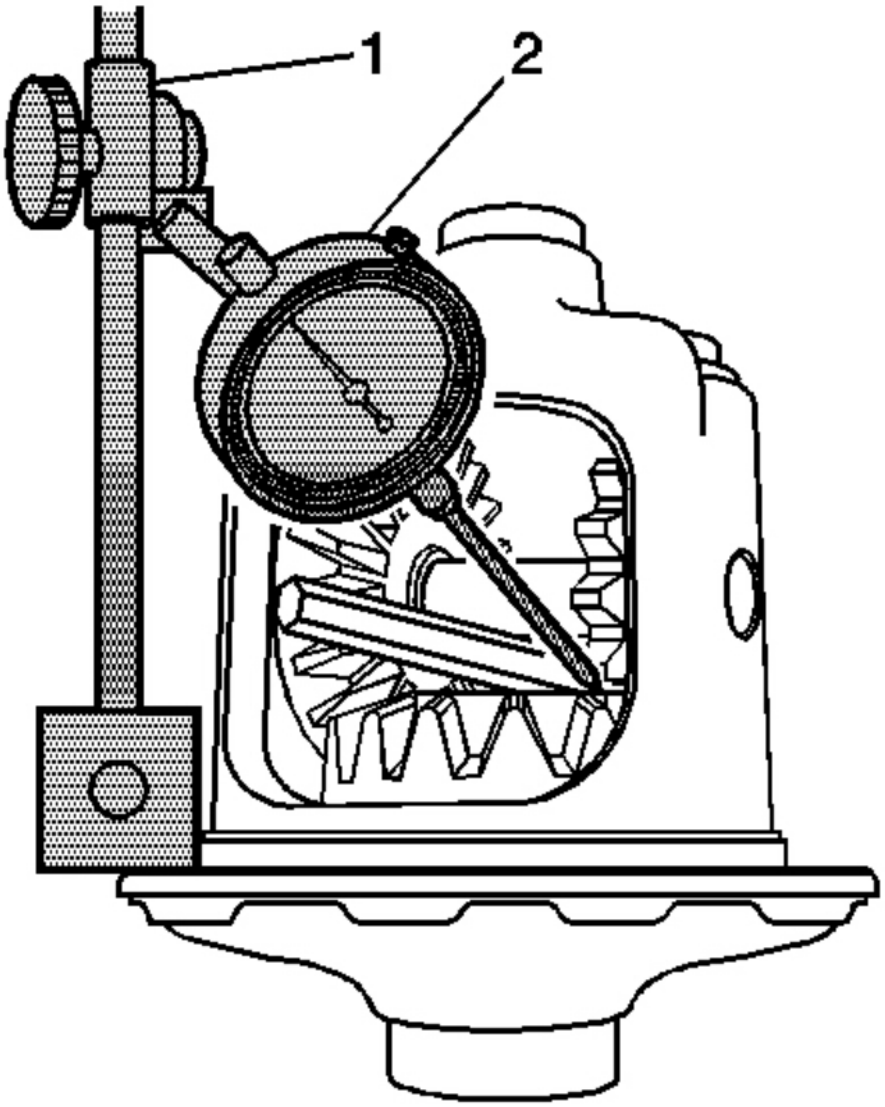

Fig. 46: Measuring Backlash Of Differential Pinion Gear & Side Gear
Courtesy of GENERAL MOTORS CORP.

3. Place the contact pad of the J 8001-3 on one of the teeth of the pinion gear closest to the pinion shaft lock bolt.

   Turn the dial of the J 8001-3 until the needle and the dial face indicate ZERO.

cardiagn.com

4. Tighten the lock nut of the J 8001-3 finger tight.
5. Pull the pinion gear firmly into the differential case seat.
6. Rotate the pinion gear back and forth.
7. Measure the backlash.

   Specification: The backlash between the differential pinion gear and the locking differential side gear cam unit should be 0.254-0.406 mm (0.010-0.016 in).

9. If the backlash is too large, install a thicker locking differential clutch disc thrust washer and recheck the backlash.
10. If the backlash is too small, install a thinner locking differential clutch disc thrust washer and recheck the backlash.

Locking differential clutch disc thrust washers are available in the following sizes:

Washer Sizes:

- 0.559 mm (0.022 in)
- 0.686 mm (0.027 in)
- 0.813 mm (0.032 in)
- 0.914 mm (0.036 in)
- 1.016 mm (0.040 in)
- 1.118 mm (0.044 in)
- 1.219 mm (0.048 in)
- 1.321 mm (0.052 in)

Right Side Gear Backlash Adjustment

1. If necessary, remove the following from the differential case:
   1. The pinion lock shaft bolt
   2. The pinion shaft
   3. The differential pinion gears
   4. The differential pinion gear thrust washers
   5. The left side locking differential side gear cam unit and clutch disc assembly
2. Install the differential side gear shim into the right side or bell-end of the differential case.
3. Install the locking differential side gear and clutch disc assembly into the right side or bell-end of the differential case.
4. Install the differential pinion gears with the differential pinion thrust washers into the differential case.

   Align the openings of the differential pinion gears and the differential pinion gear thrust washers to the pinion shaft opening in the differential case.

cardiagn.com

5. Press down on the locking differential side gear and install the pinion shaft.

   If the side gear cannot be pressed down far enough to install the pinion shaft, replace the side gear shim with a thinner shim.

6. Install the pinion shaft lock bolt.

   Tighten: Tighten the pinion shaft lock bolt finger tight.

7. Rotate the differential pinion gear so that one of the teeth is pointing downward, perpendicular to the ring gear flange.
8. Install a brass drift between the locking differential side gear and the pinion shaft.

   Press the brass drift in enough in order to compress the clutch discs.

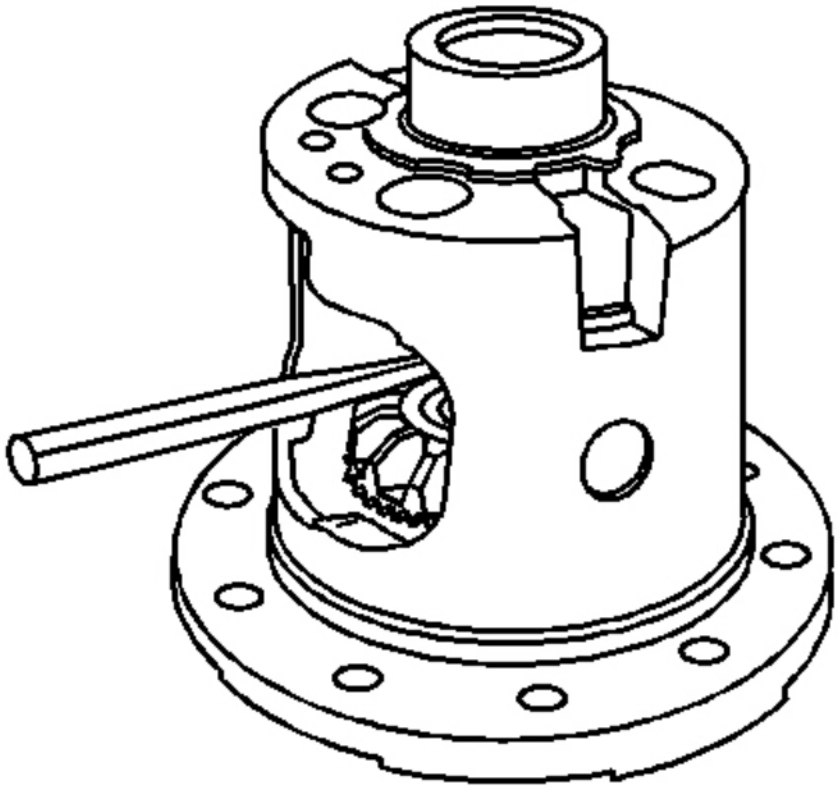

Fig. 47: Installing Brass Drift Between Locking Differential Side Gear & Pinion Shaft

cardiagn.com

Courtesy of GENERAL MOTORS CORP.

9. Measure the backlash of the pinion gear and the right side gear by doing the following:
    1. Install the **J 7872** (1) to the ring gear flange. See **Special Tools and Equipment**.
    2. Loosely clamp the J 8001-3 (2) onto the stem on the **J 7872** (1). See **Special Tools and Equipment**.

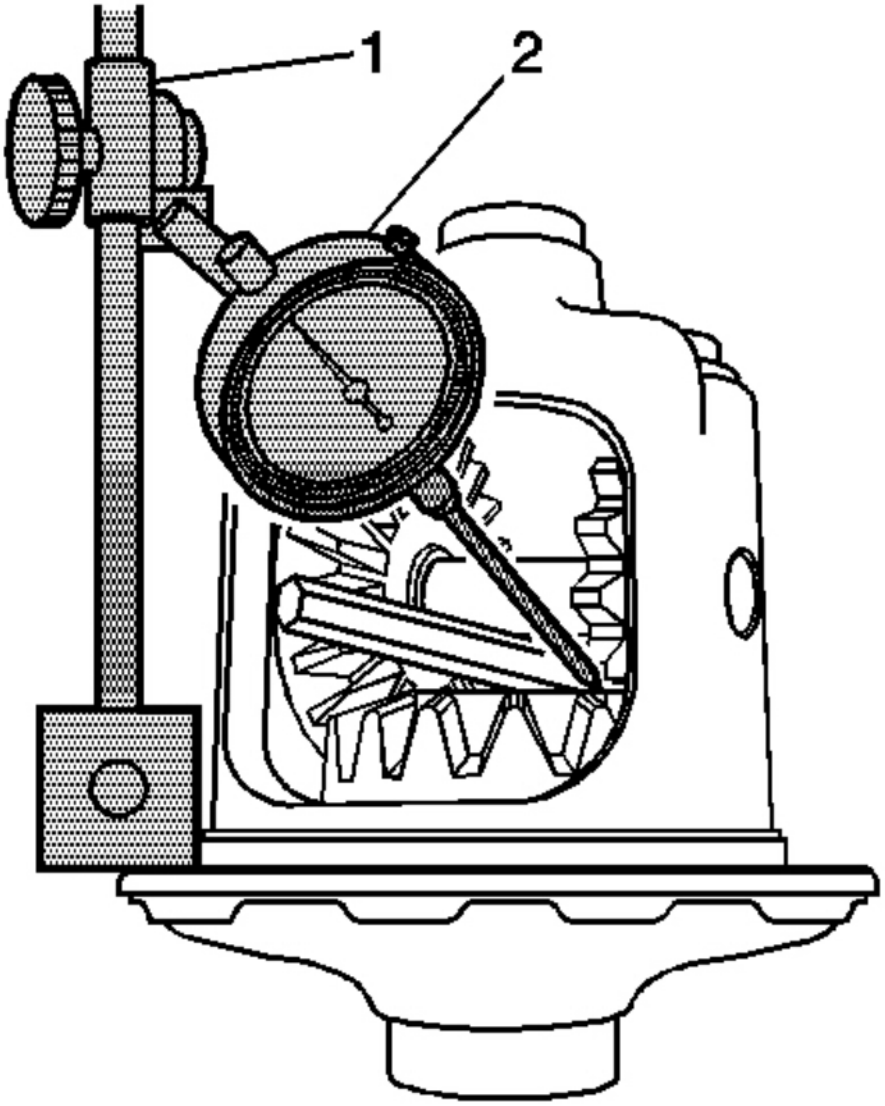

cardiagn.com

Fig. 48: Measuring Backlash Of Differential Pinion Gear & Side Gear
Courtesy of GENERAL MOTORS CORP.

3. Place the contact pad of the J 8001-3 on one of the teeth of the pinion gear closest to the pinion shaft lock bolt.

   Turn the dial of the J 8001-3 until the needle and the dial face indicate ZERO.

4. Tighten the lock nut of the J 8001-3 finger tight.
5. Pull the pinion gear firmly into the differential case seat.
6. Rotate the pinion gear back and forth.
7. Measure the backlash.

   Specification: The backlash for the pinion gears should be 0.076-0.229 mm (0.003-0.009 in).

10. If the backlash is too large, install a thicker differential side gear shim and check the backlash.
11. If the backlash is too small, install a thinner differential side gear shim and check the backlash again.

Differential side gear shims are available in the following sizes:

Shim Sizes:

- 0.254 mm (0.010 in)
- 0.381 mm (0.015 in)
- 0.508 mm (0.020 in)
- 0.635 mm (0.025 in)
- 0.762 mm (0.030 in)
- 0.889 mm (0.035 in)
- 1.016 mm (0.040 in)
- 1.143 mm (0.045 in)

Thrust Block Clearance Adjustment

IMPORTANT: The left and right side gear backlash measurements must be done before the thrust block measurement can be completed.

1. Install the locking differential clutch disc thrust washer into the left side or flange-end of the differential case.

cardiagn.com

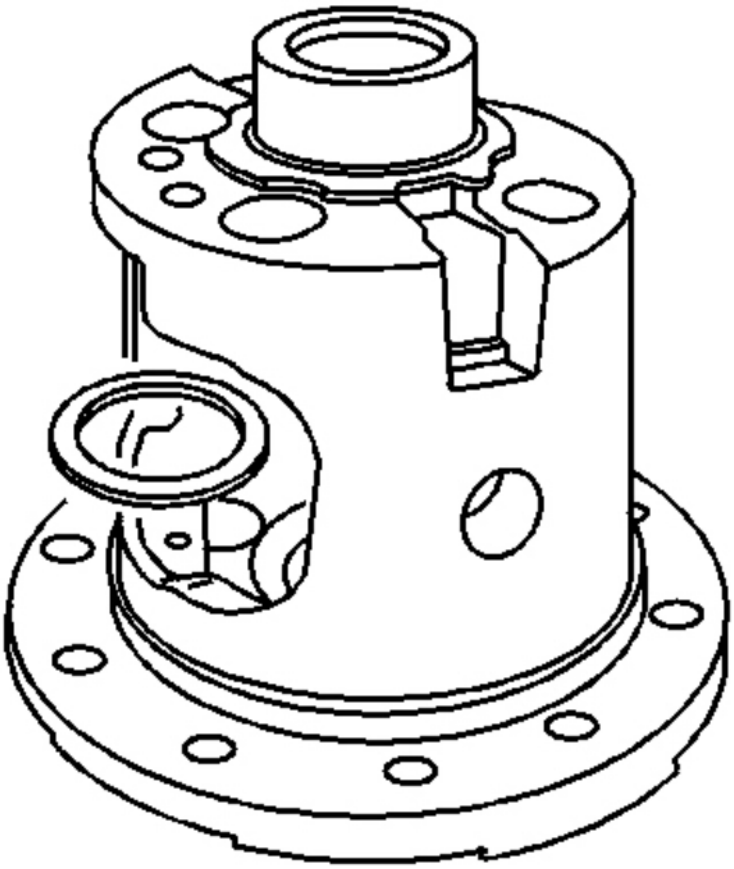

Fig. 49: View Of Left Side Gear Thrust Washer
Courtesy of GENERAL MOTORS CORP.

2. Install the locking differential side gear cam unit and clutch disc assembly into the left side or flange-end of the differential case.

cardiagn.com

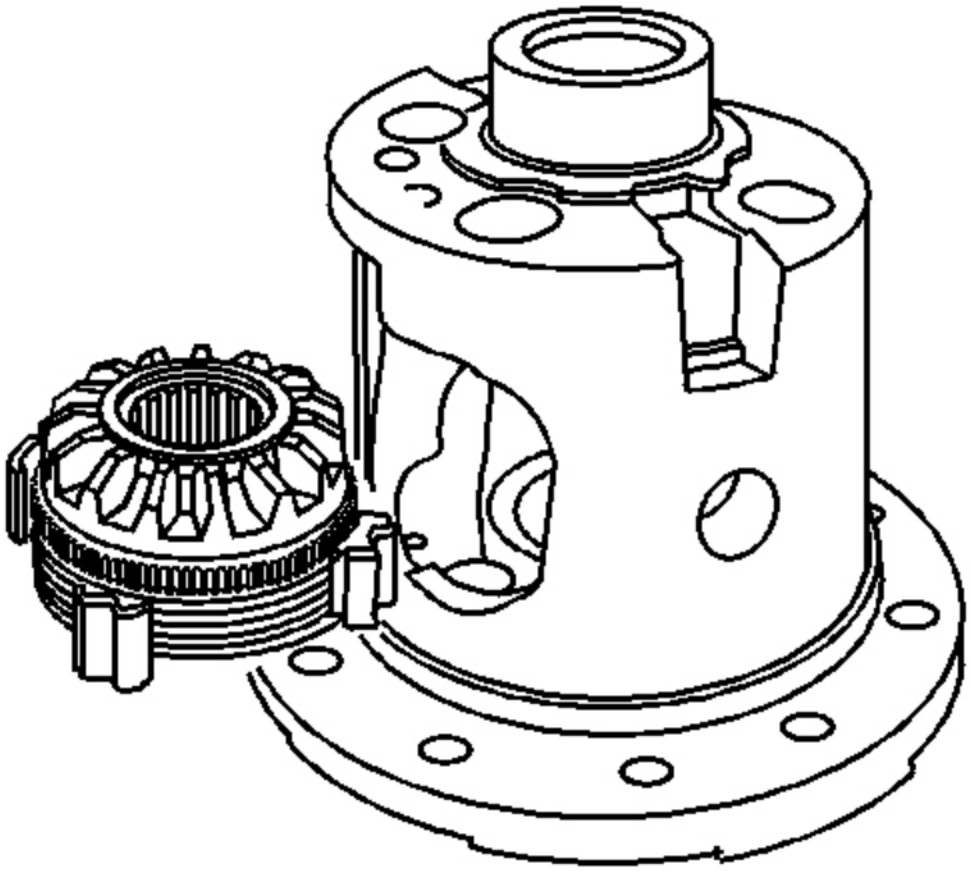

Fig. 50: View Of Left Side Gear Cam Unit & Clutch Disc Assembly
Courtesy of GENERAL MOTORS CORP.

3. Install the differential side gear shim into the right side or bell-end of the differential case.
4. Install the locking differential side gear and clutch disc assembly into the right side or bell-end of the differential case.
5. Install the pinion shaft.
6. Install the pinion shaft bolt.

   Tighten: Tighten the pinion shaft bolt finger tight.

7. Install a brass drift between the left locking differential side gear cam unit and the pinion shaft.

   Press the brass drift in far enough in order to compress the clutch disc assembly and hold the left side gear

cardiagn.com

assembly in place.

8. Install a brass drift between the right side locking differential side gear and the pinion shaft.

   Press the brass drift in far enough in order to hold the right side gear assembly in place.

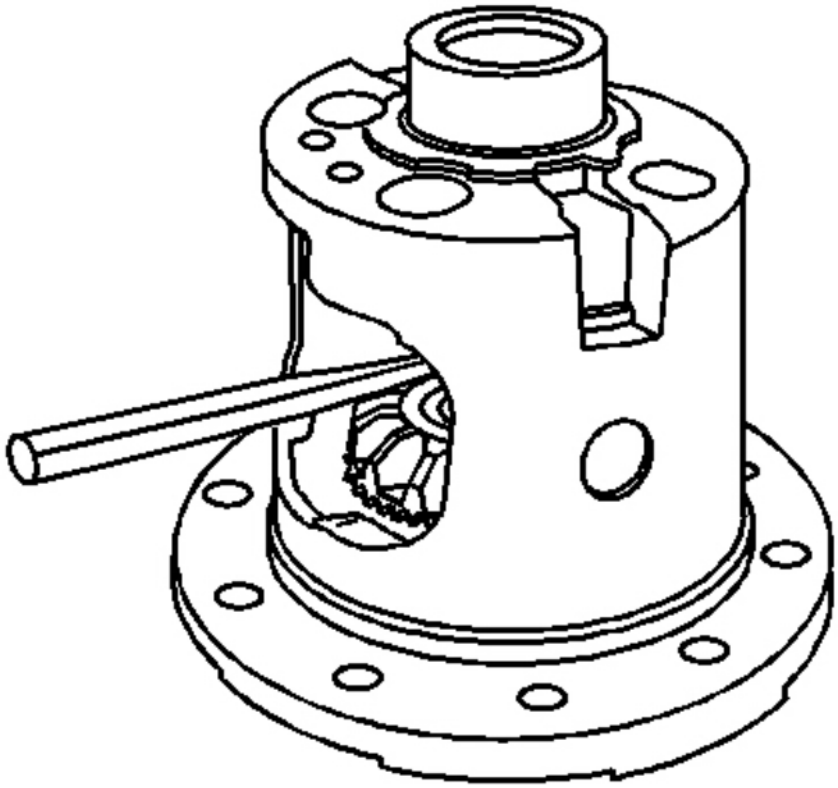

Fig. 51: Installing Brass Drift Between Locking Differential Side Gear & Pinion Shaft
Courtesy of GENERAL MOTORS CORP.

IMPORTANT: Do not measure the distance between the side gear teeth.

9. Measure the distance between the side gear faces using a 25.4-50.8 mm (1-2 in) telescoping gage.

cardiagn.com

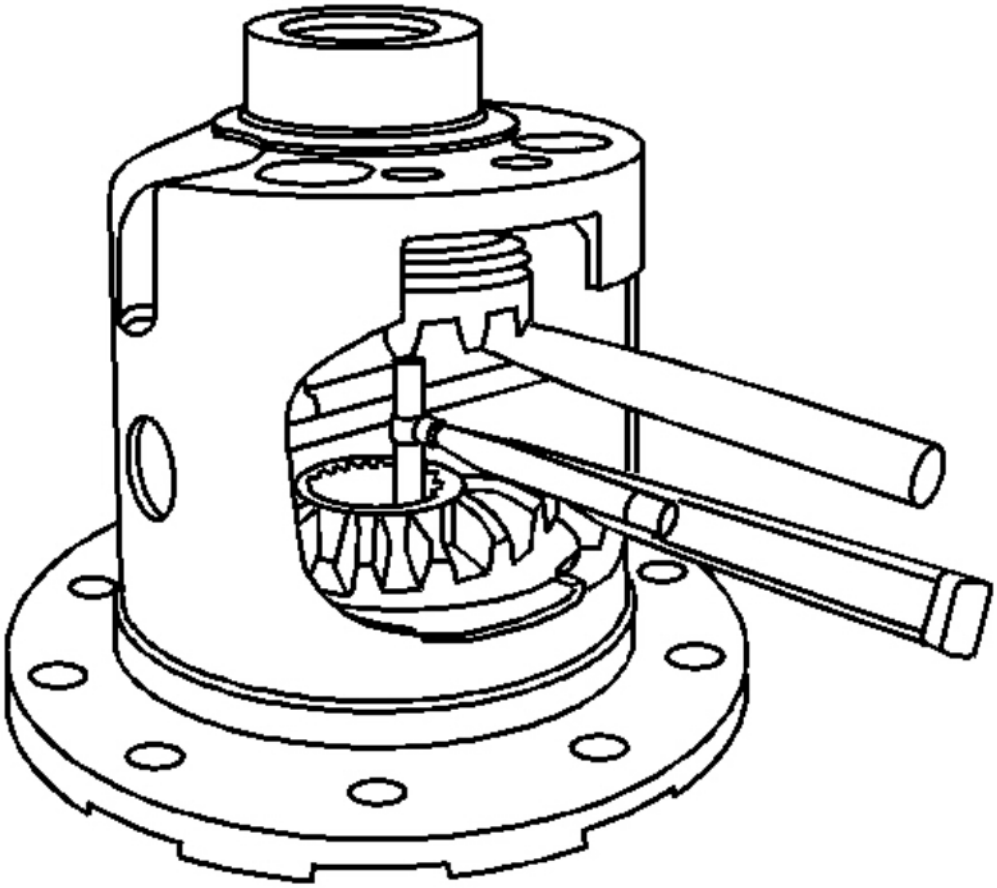

Fig. 52: Measuring Distance Between Side Gear Faces
Courtesy of GENERAL MOTORS CORP.

10. Remove the telescoping gage.
11. Measure the telescoping gage with a micrometer.

    Record the measurement.

12. Compare the measurement obtained in step 11 to the thrust block sizes available. If the measurement is equal to one of the thrust blocks sizes available, then select that thrust block.
13. If the measurement obtained in step 11 is not equal to one of the thrust blocks sizes available, then select the thrust block that is smaller than the measurement.

    For example, if the measurement is 33.833 mm (1.332 in), select the 33.782 mm (1.330 in) thrust block.

cardiagn.com

IMPORTANT: The backlash must be rechecked and adjusted to specification anytime the left and/or the right thrust washers are replaced.

14. If the measurement obtained in step 11 is less than 33.578 mm (1.322 in), then reduce the left side gear thrust washer or the right side gear shim thickness in order to increase the thrust block opening.
15. If the measurement obtained in step 11 is greater than 34.290 mm (1.350 in), then increase the left side gear thrust washer or the right side gear shim thickness in order to decrease the thrust block opening.
16. Recheck the left and/or right side gear backlash and adjust as necessary.
17. Recheck the thrust block clearance and adjust as necessary.
18. Assemble the differential. Refer to **Locking Differential Assemble (8.6, 9.5 Inch Axles)** or **Locking Differential Assemble (10.5 Inch Axle)**.

LOCKING DIFFERENTIAL ADJUSTMENT (9.5 INCH AXLE)

Tools Required

- **J 7872** Magnetic Base Dial Indicator. See **Special Tools and Equipment**.
- **J 8001** Dial Indicator Set

Adjustment of the Differential

IMPORTANT: If it is necessary to replace the left side gear cam unit and disc assembly, the right side gear and disc assembly, or the thrust block, the entire differential must be adjusted. The differential is adjusted using selective thickness thrust washers between the clutch disc assemblies and the case and/or different selective thickness thrust blocks.

When adjusting the differential, note the following:

- Build up the clutch disc assemblies properly.

  Proper clearance between parts is critical to the operation of the unit.

- Adjust the backlash and thrust block clearance in the following order:
  1. The left side gear backlash
  2. The right side gear backlash
  3. The thrust block clearance

Left Side Gear Backlash Adjustment

1. Install the new left side thrust washer into the flange-end of the differential case.

cardiagn.com

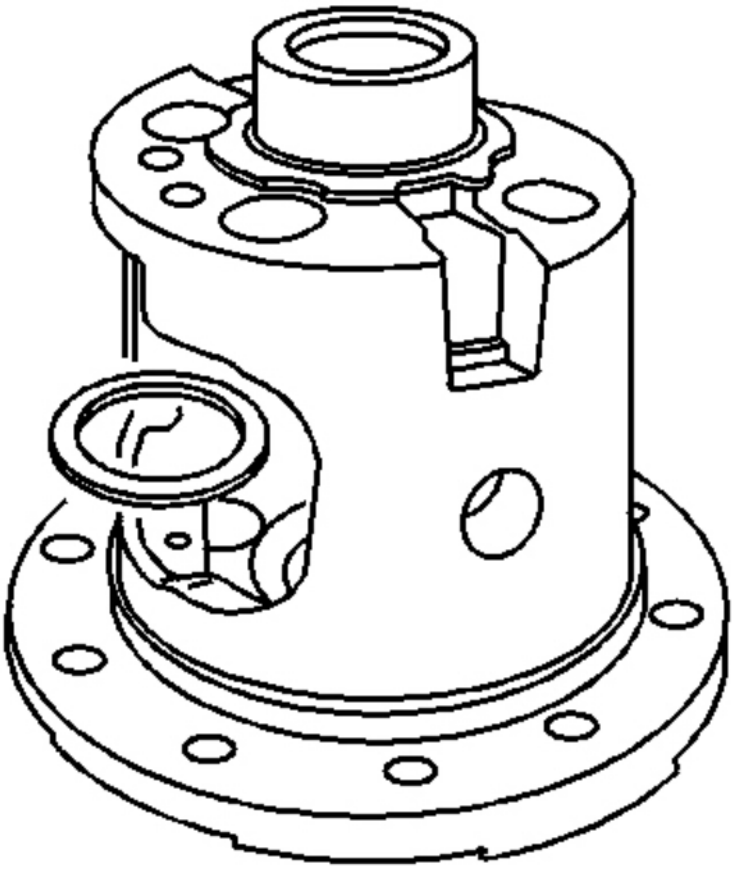

Fig. 53: View Of Left Side Gear Thrust Washer
Courtesy of GENERAL MOTORS CORP.

2. Install the left side locking differential side gear cam unit and clutch disc assembly into the differential case.

cardiagn.com

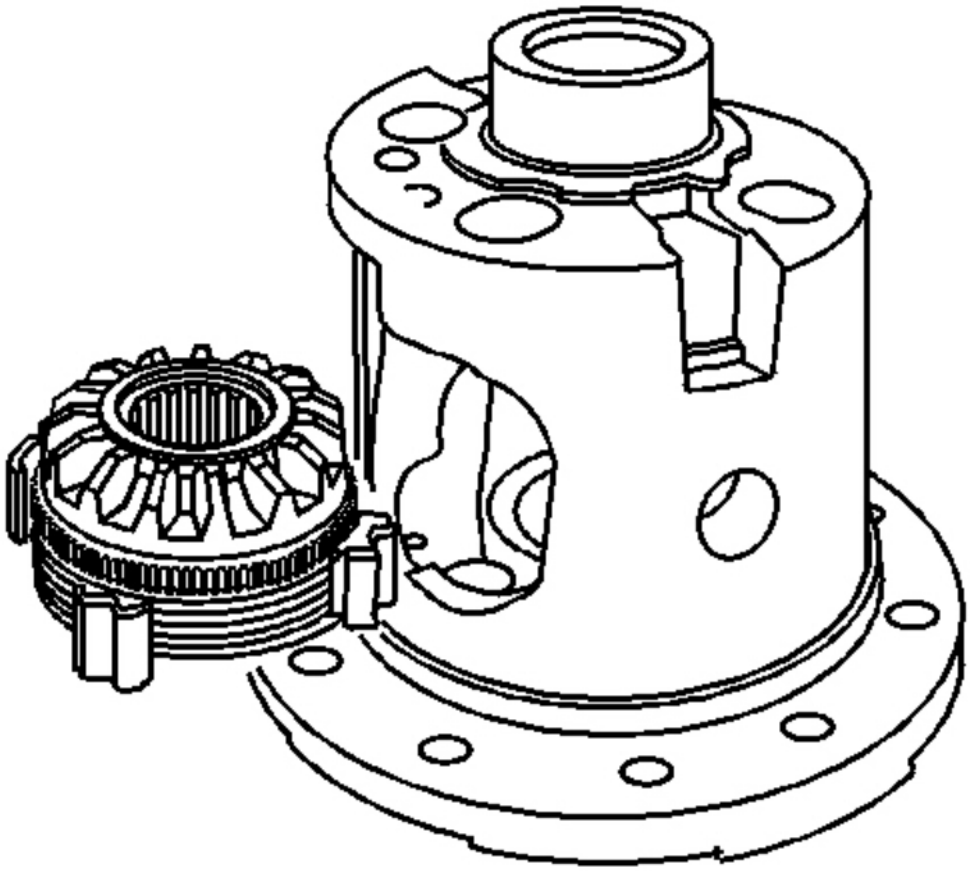

Fig. 54: View Of Left Side Gear Cam Unit & Clutch Disc Assembly
Courtesy of GENERAL MOTORS CORP.

3. Install the differential pinion gears with the deferential pinion gear thrust washers into the differential case.

   Align the openings of the differential pinion gears and the differential pinion gear thrust washers to the pinion shaft opening in the differential case.

4. Install the pinion shaft. It may be necessary to press down on the side gear in order to align the pinion gear shaft opening with the pinion shaft opening in the differential case.

   If the pinion shaft cannot be installed after pressing on the side gear, replace the locking differential clutch disc thrust washer with a thinner washer.

cardiagn.com

NOTE: Refer to Fastener Notice in Cautions and Notices.

5. Install the pinion shaft lock bolt.

   Tighten: Tighten the pinion shaft lock bolt finger tight.

6. Rotate the pinion gear closest to the lock bolt so that one of the teeth is pointing downward, perpendicular to the ring gear flange.
7. Install a brass drift between the side gear and the pinion shaft.

   Press the brass drift in far enough in order to compress the clutch discs.

8. Measure the backlash of the pinion gear and the side gear by doing the following:
   1. Install the **J 7872** (1) to the ring gear flange. See **Special Tools and Equipment**.
   2. Loosely clamp the J 8001-3 (2) onto the stem on the **J 7872** (1). See **Special Tools and Equipment**.

cardiagn.com

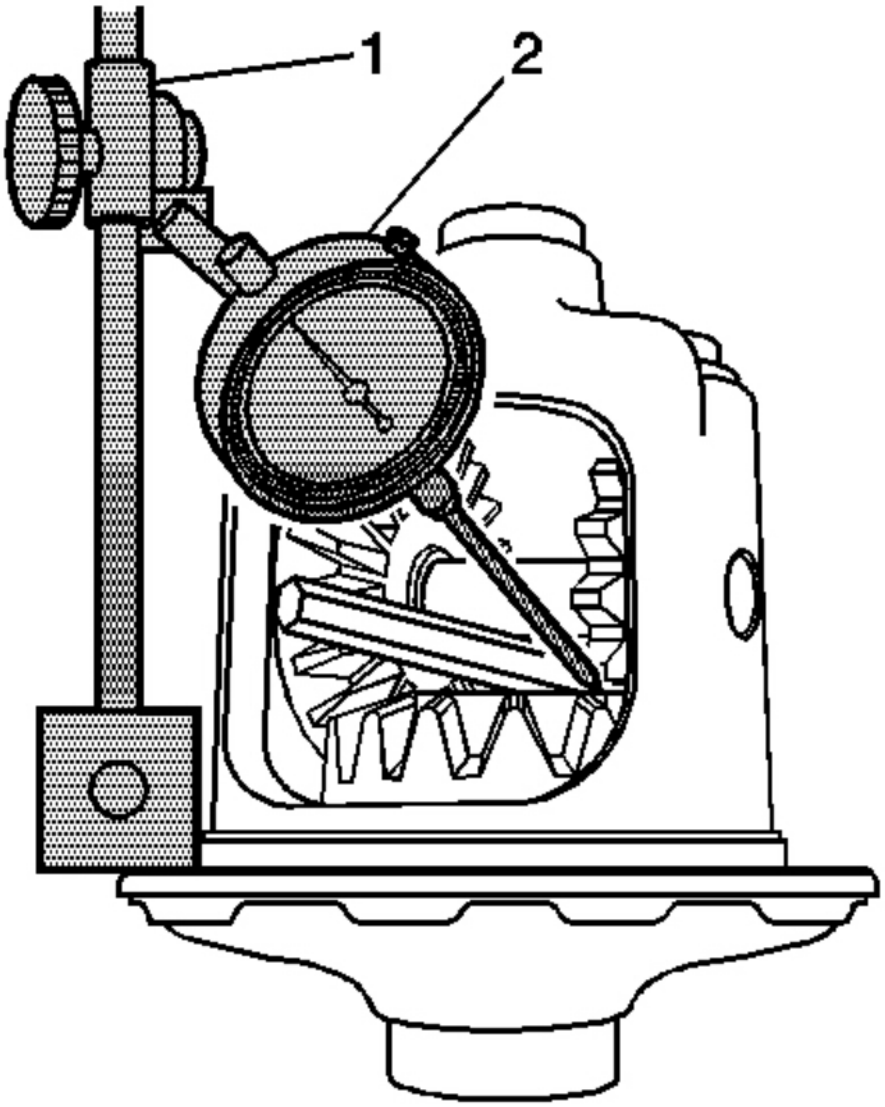

Fig. 55: Measuring Backlash Of Differential Pinion Gear & Side Gear
Courtesy of GENERAL MOTORS CORP.

3. Place the contact pad of the J 8001-3 on one of the teeth of the pinion gear closest to the pinion shaft lock bolt.

   Turn the dial of the J 8001-3 until the needle and the dial face indicate ZERO.

cardiagn.com

4. Tighten the lock nut of the J 8001-3 finger tight.
5. Pull the pinion gear firmly into the differential case seat.
6. Rotate the pinion gear back and forth.
7. Measure the backlash.

   Specification: The backlash between the differential pinion gears and the locking differential side gear cam unit should be 0.279-0.432 mm (0.011-0.017 in).

9. If the backlash is too large, install a thicker locking differential clutch disc thrust washer and recheck the backlash.
10. If the backlash is too small, install a thinner locking deferential clutch disc thrust washer and recheck the backlash.

Locking differential clutch disc thrust washers are available in the following sizes:

Washer Sizes:

- 0.559 mm (0.022 in)
- 0.686 mm (0.027 in)
- 0.813 mm (0.032 in)
- 0.914 mm (0.036 in)
- 1.016 mm (0.040 in)
- 1.118 mm (0.044 in)
- 1.219 mm (0.048 in)
- 1.321 mm (0.052 in)

Right Side Gear Backlash Adjustment

1. If necessary, remove the following from the differential case:
   1. The pinion lock shaft bolt
   2. The pinion shaft
   3. The differential pinion gears
   4. The differential pinion gear thrust washers
   5. The locking differential side gear cam unit and clutch disc assembly
2. Install the right side differential side gear shim into the bell-end of the differential case.
3. Install the clutch disc assembly into the differential case.
4. Install the locking differential side gear.
5. Install the differential pinion gears with the differential pinion thrust washers into the differential case.

   Align the openings of the differential pinion gears and the differential pinion thrust washer to the pinion shaft opening in the differential case.

cardiagn.com

6. Press down on the locking differential side gear and install the pinion shaft.

   If the side gear cannot be pressed down far enough to install the pinion shaft, replace the differential side gear shim with a thinner shim.

7. Install the pinion shaft lock bolt.

   Tighten: Tighten the pinion shaft lock bolt finger tight.

8. Rotate the differential pinion gear so that one of the teeth is pointing downward, perpendicular to the ring gear flange.
9. Install a brass drift between the differential side gear and the pinion shaft.

   Press the brass drift in enough in order to compress the clutch discs.

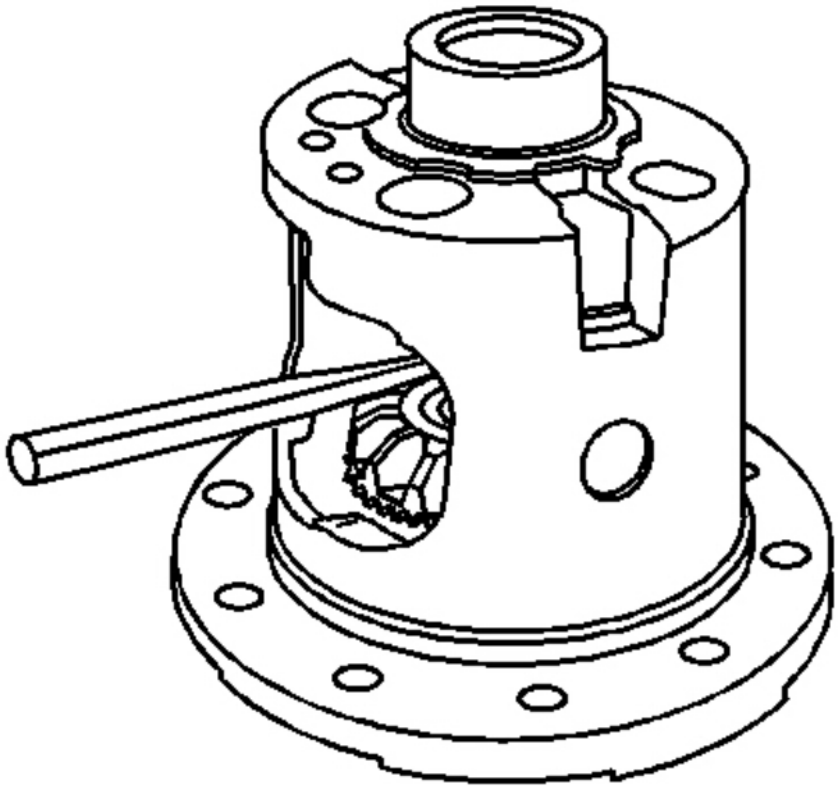

Fig. 56: Installing Brass Drift Between Locking Differential Side Gear & Pinion Shaft

cardiagn.com

Courtesy of GENERAL MOTORS CORP.

10. Measure the backlash of the differential pinion gear and the locking differential side gear by doing the following:
    1. Install the **J 7872** (1) to the ring gear flange. See **Special Tools and Equipment**.
    2. Loosely clamp the J 8001-3 (2) onto the stem on the **J 7872** (1). See **Special Tools and Equipment**.

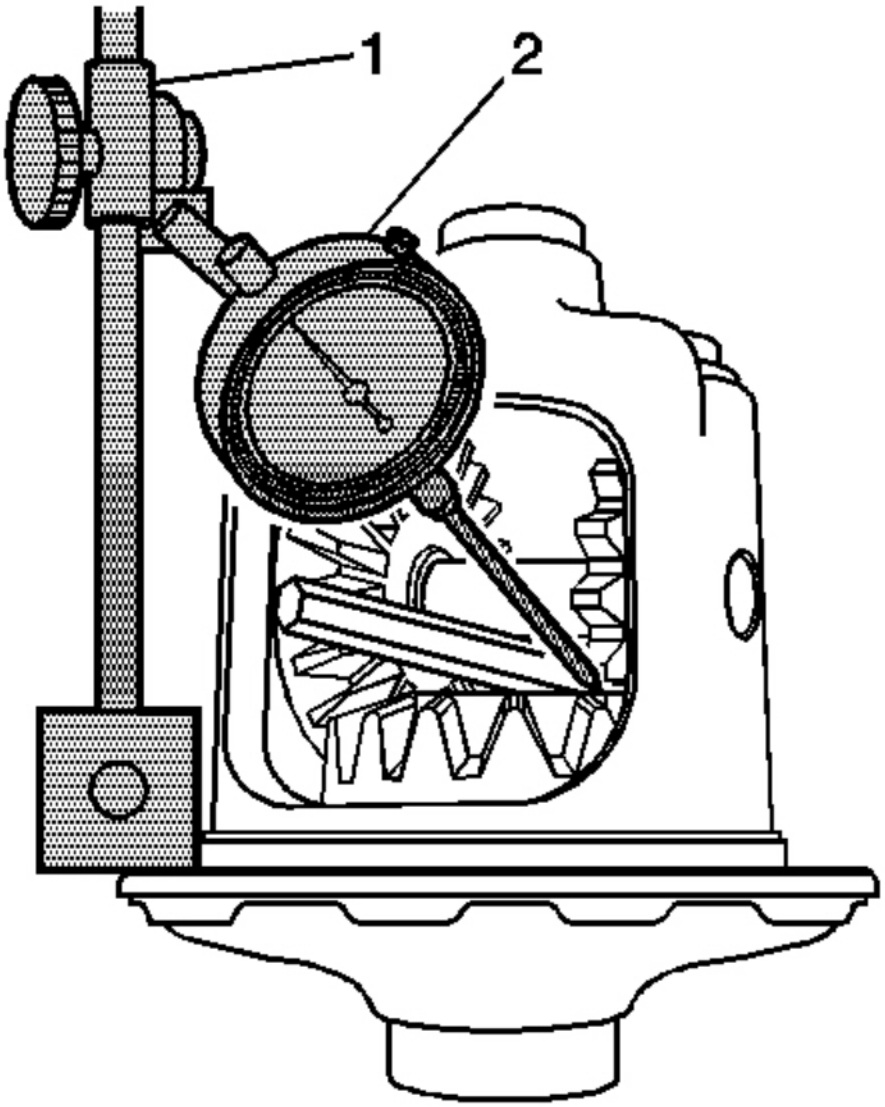

cardiagn.com

Fig. 57: Measuring Backlash Of Differential Pinion Gear & Side Gear
Courtesy of GENERAL MOTORS CORP.

3. Place the contact pad of the J 8001-3 on one of the teeth of the pinion gear closest to the pinion shaft lock bolt.

   Turn the dial of the J 8001-3 until the needle and the dial face indicate ZERO.

4. Tighten the lock nut of the J 8001-3 finger tight.
5. Pull the pinion gear firmly into the differential case seat.
6. Rotate the pinion gear back and forth.
7. Measure the backlash.

   Specification: The backlash between the differential pinion gear and the locking differential side gear should be 0.051-0.203 mm (0.002-0.008 in).

11. If the backlash is too large, install a thicker locking differential clutch disc thrust washer and recheck the backlash.
12. If the backlash is too small, install a thinner locking differential clutch disc thrust washer and recheck the backlash.

Differential side gear shims are available in the following sizes:

Shim Sizes:

- 0.254 mm (0.010 in)
- 0.381 mm (0.015 in)
- 0.508 mm (0.020 in)
- 0.635 mm (0.025 in)
- 0.762 mm (0.030 in)
- 0.899 mm (0.035 in)
- 1.016 mm (0.040 in)
- 1.143 mm (0.045 in)
- 1.270 mm (0.050 in)
- 1.397 mm (0.055 in)
- 1.524 mm (0.060 in)

Thrust Block Clearance Adjustment

IMPORTANT: The left and right side gear backlash measurements must be done before the thrust block measurement can be completed.

1. Install the locking differential side gear thrust washer into the differential case.

cardiagn.com

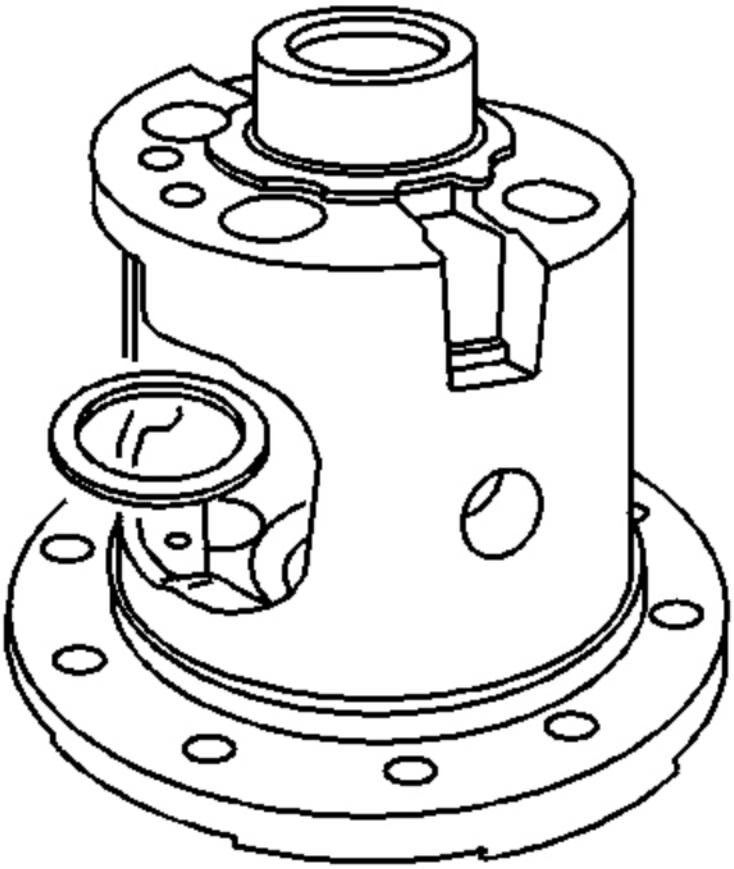

Fig. 58: View Of Left Side Gear Thrust Washer
Courtesy of GENERAL MOTORS CORP.

2. Install the left side locking differential side gear cam unit and clutch disc assembly into the differential case.

cardiagn.com

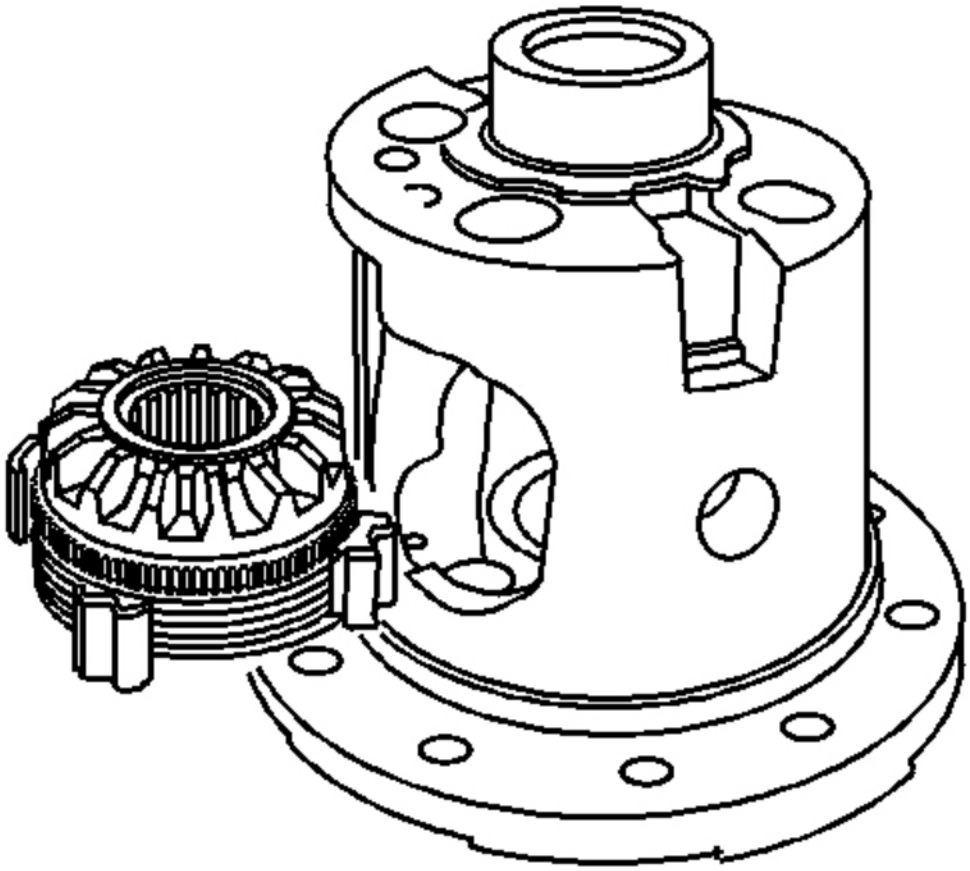

Fig. 59: View Of Left Side Gear Cam Unit & Clutch Disc Assembly
Courtesy of GENERAL MOTORS CORP.

3. Install the right side differential side gear shim into the differential case.
4. Install the right side locking differential side gear and clutch disc assembly into the differential case.
5. Install the pinion shaft.
6. Install the pinion shaft bolt.

   Tighten: Tighten the pinion shaft bolt finger tight.

7. Install a brass drift between the left side gear and the pinion shaft.

   Press the brass drift in far enough in order to compress the clutch disc assembly and hold the left side gear assembly in place.

cardiagn.com

8. Install a brass drift between the right side gear and the pinion shaft.

   Press the brass drift in far enough in order to hold the right side gear assembly in place.

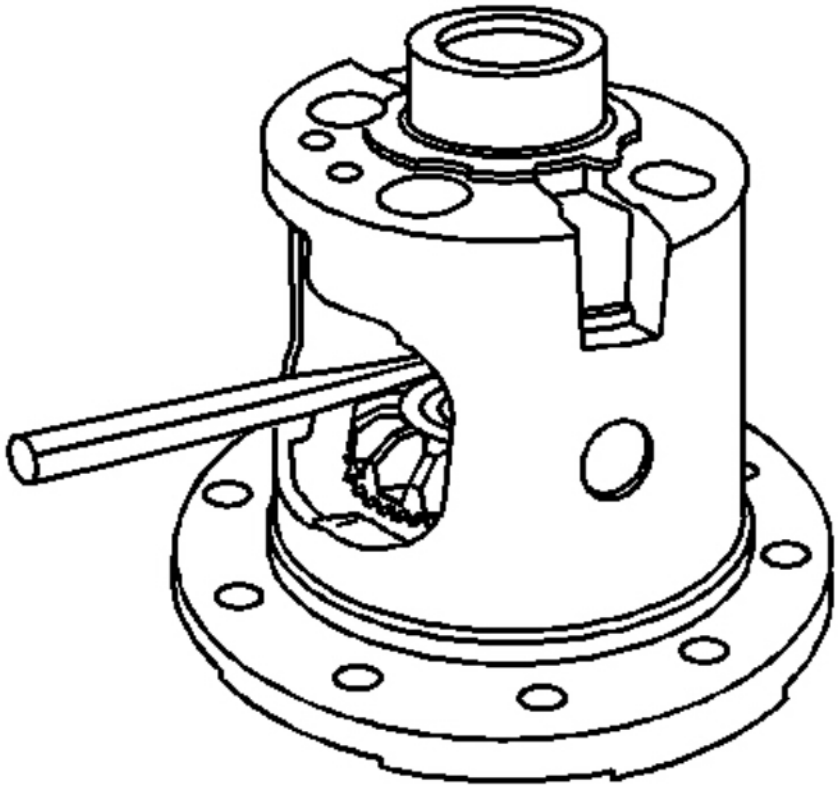

Fig. 60: Installing Brass Drift Between Locking Differential Side Gear & Pinion Shaft
Courtesy of GENERAL MOTORS CORP.

IMPORTANT: Do not measure the distance between the side gear teeth.

9. Measure the distance between the side gear faces using a 25.4-50.8 mm (1-2 in) telescoping gage.

cardiagn.com

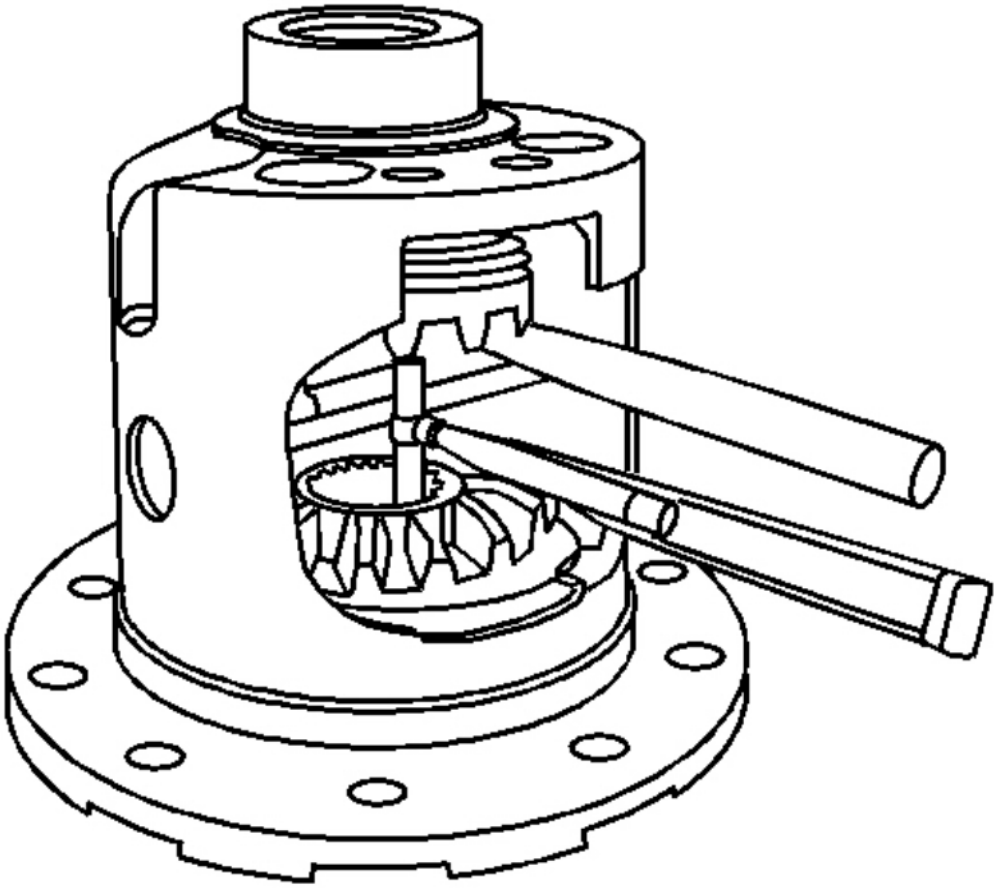

Fig. 61: Measuring Distance Between Side Gear Faces
Courtesy of GENERAL MOTORS CORP.

10. Remove the telescoping gage.
11. Measure the telescoping gage with a micrometer.

    Record the measurement.

12. Compare the measurement obtained in step 11 to the thrust block sizes available. If the measurement is equal to one of the thrust blocks sizes available, then select that thrust block.
13. If the measurement obtained in step 11 is not equal to one of the thrust blocks sizes available, then select the thrust block that is smaller than the measurement.

    For example, if the measurement is 40.869 mm (1.609 in), select the 40.792 mm (1.606 in) thrust block.

cardiagn.com

IMPORTANT: The backlash must be rechecked and adjusted to specification anytime the left and/or the right thrust washers are replaced.

14. If the measurement obtained in step 11 is less than 40.488 mm (1.594 in), then reduce the left side gear thrust washer or the right side gear shim thickness in order to increase the thrust block opening.
15. If the measurement obtained in step 11 is greater than 41.120 mm (1.622 in), then increase the left side gear thrust washer or the right side gear shim thickness in order to decrease the thrust block opening.
16. Recheck the left and/or right side gear backlash and adjust as necessary.
17. Recheck the thrust block clearance and adjust as necessary.

LOCKING DIFFERENTIAL ADJUSTMENT (10.5 INCH AXLE)

Tools Required

- **J 34672** Depth Micrometer
- **J 34673** Flat Gage Bar (2 required). See **Special Tools and Equipment**.
- **J 7872** Magnetic Base Dial Indicator. See **Special Tools and Equipment**.
- **J 8001** Dial Indicator Set

Adjustment of the Differential

IMPORTANT: If it is necessary to replace the right side cam gear and clutch disc assembly, the left hand side gear and clutch disc assembly, or the thrust block, the entire differential must be adjusted. The differential is adjusted using selective thickness thrust washers between the clutch pack assemblies and case and/or different selective thickness thrust blocks.

When adjusting the differential, note the following:

- Build up the clutch disc packs properly.

  Proper clearance between the parts is critical to the operation of the unit.

- Adjust the backlash and thrust block clearance in the following order:
  1. The left side gear backlash
  2. The right side gear backlash
  3. The thrust block clearance

Left Side Gear Backlash Adjustment

1. Install the differential side gear shim.

cardiagn.com

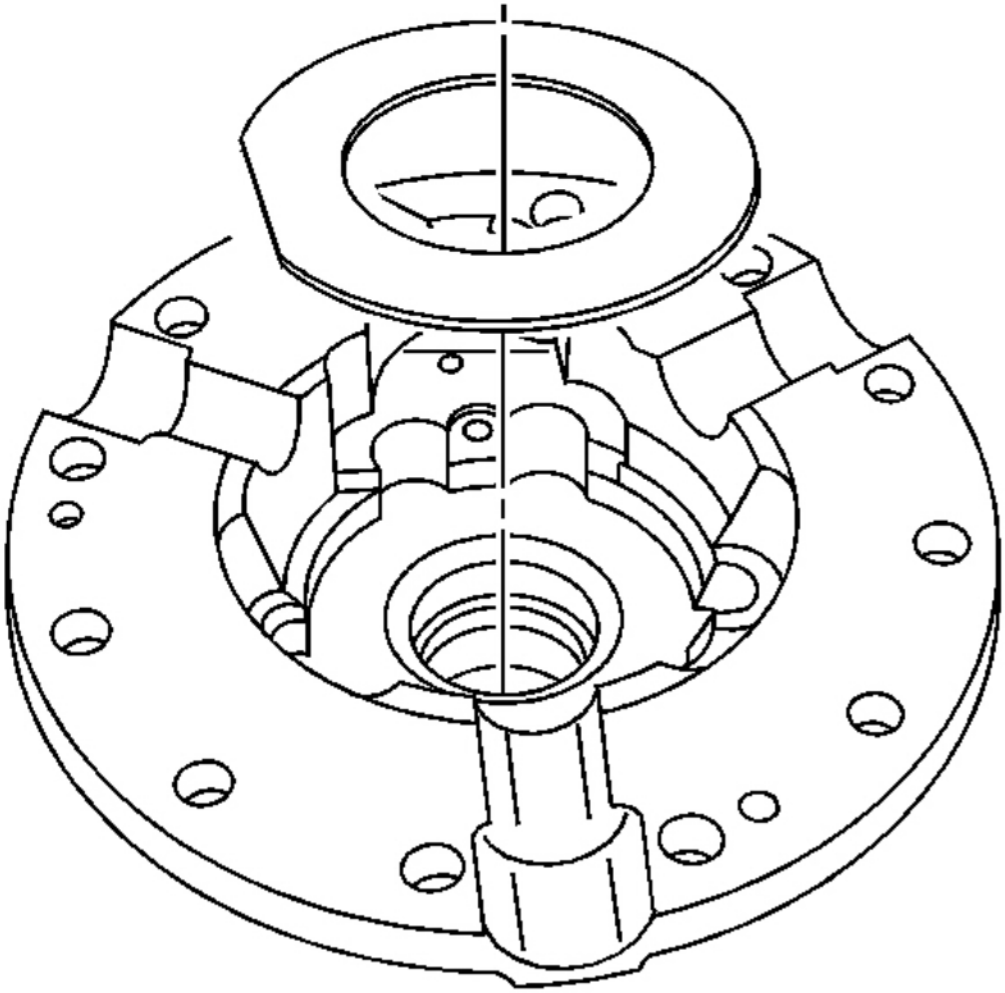

Fig. 62: View Of Left Side Gear Thrust Washer
Courtesy of GENERAL MOTORS CORP.

2. Install the clutch pack assembly.

cardiagn.com

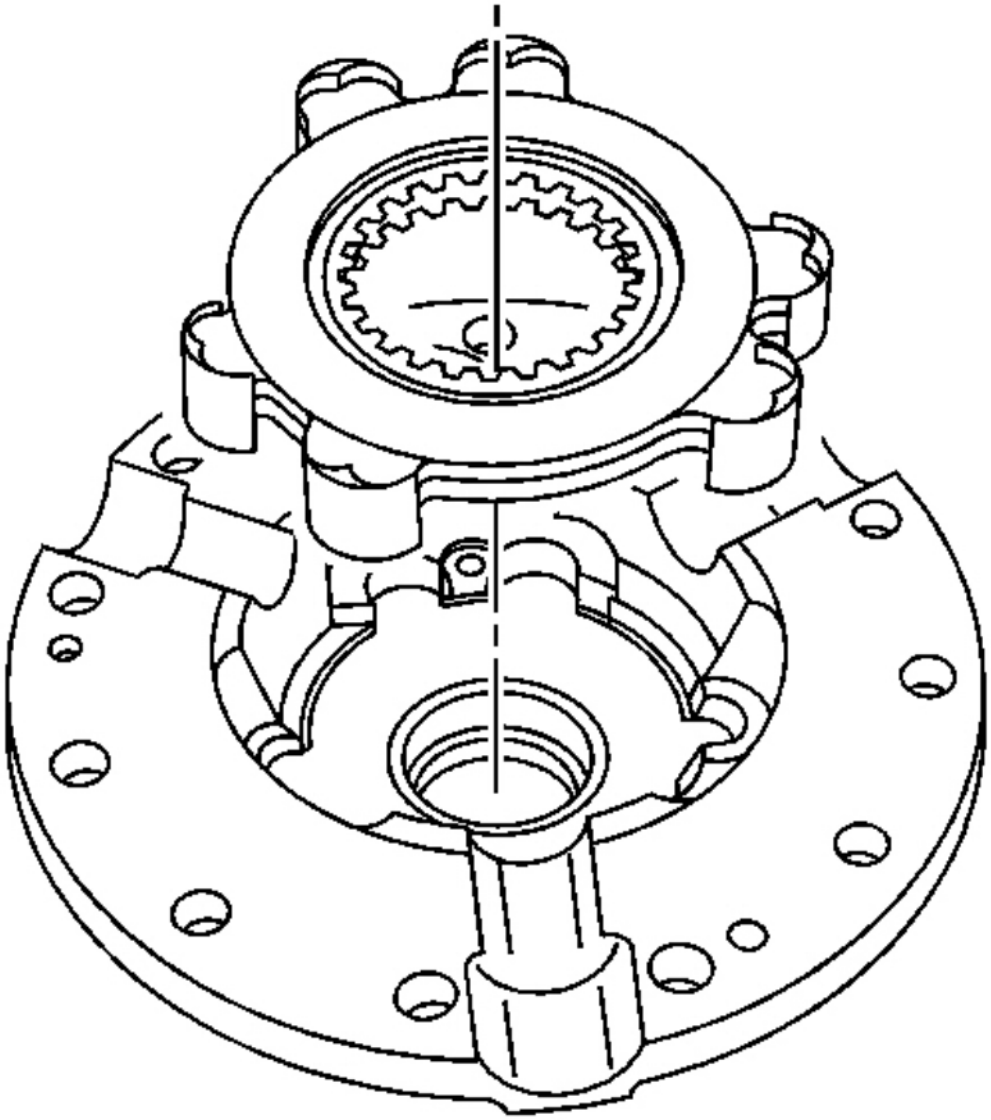

Fig. 63: View Of Left Side Clutch Disc Assembly
Courtesy of GENERAL MOTORS CORP.

3. Install the differential side gear.

cardiagn.com

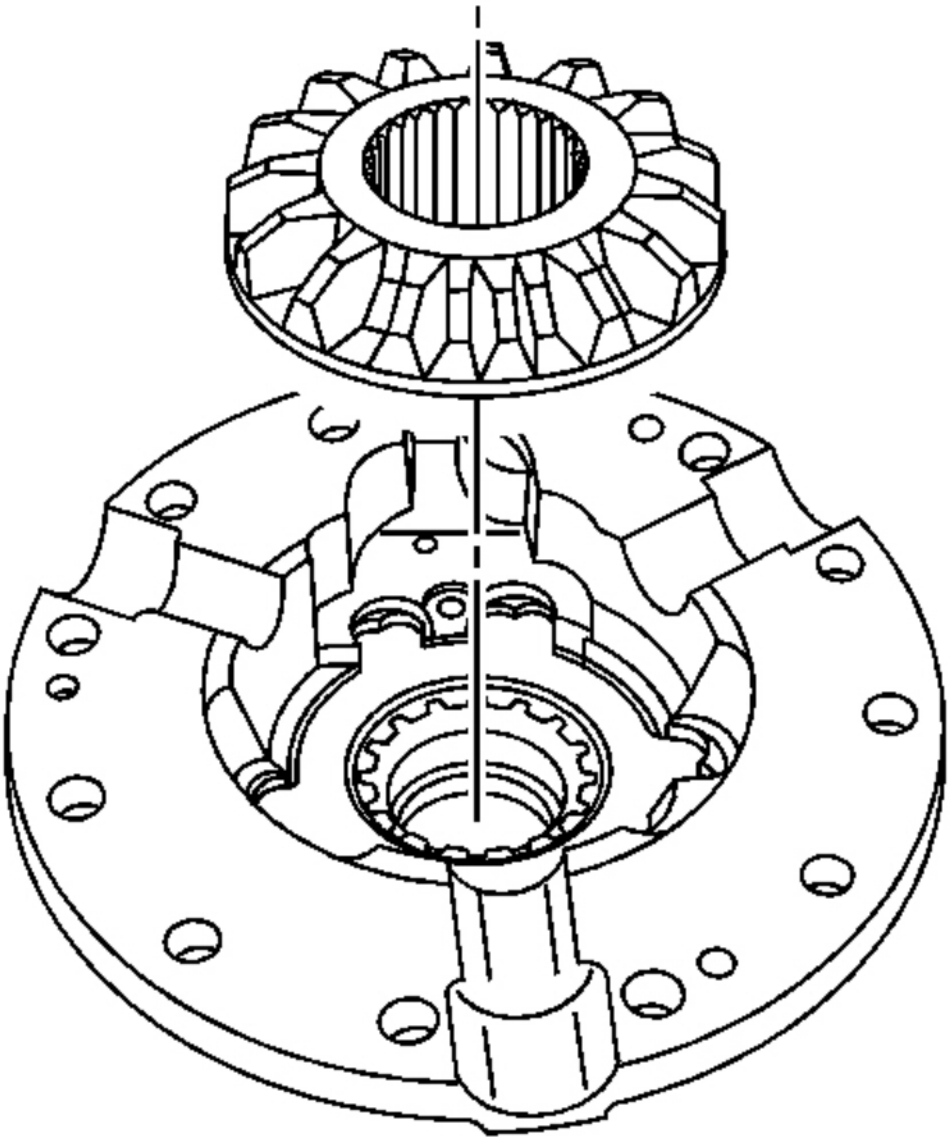

Fig. 64: View Of Locking Differential Side Gear
Courtesy of GENERAL MOTORS CORP.

IMPORTANT: The washers must be large enough in order to fit over the differential side gear, but not too large to where they will cause an interference with the pinion gear and spider assembly.

cardiagn.com

4. Assemble a set of washers, a nut, and a bolt long enough in order to hold the side gear in place.
5. Install the bolt and washer assembly through the differential case half.

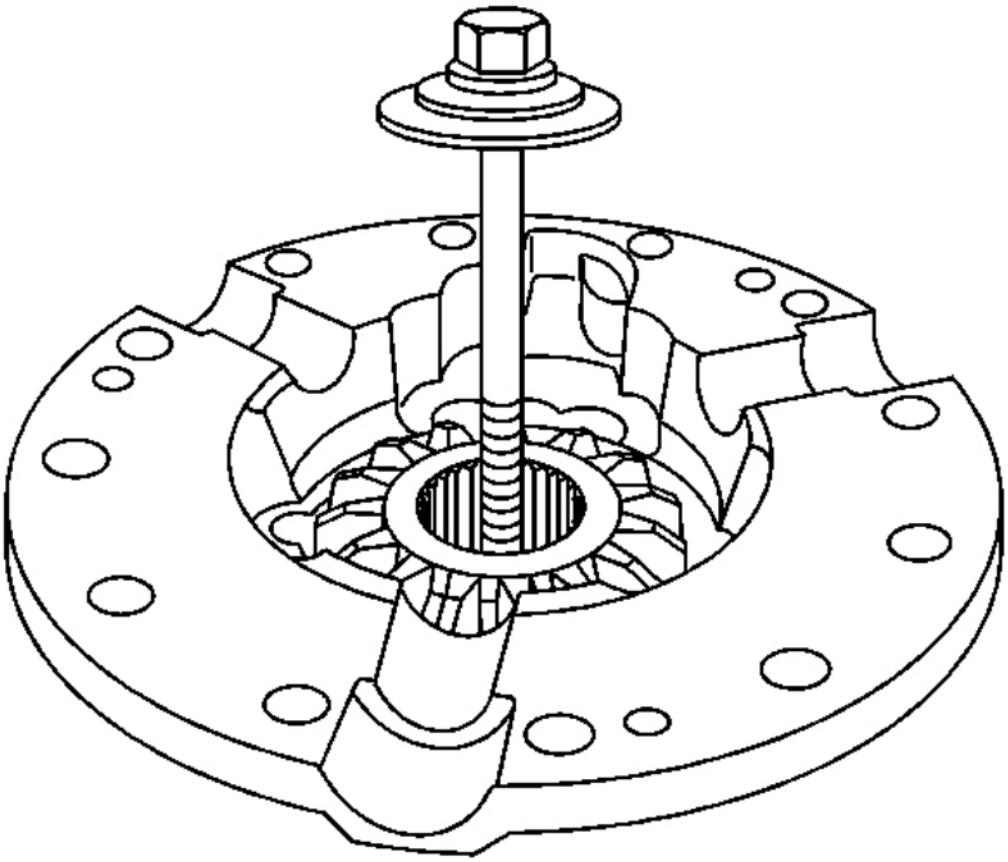

Fig. 65: Installing Bolt & Washer Assembly Through Differential Case Half (Left Side)
Courtesy of GENERAL MOTORS CORP.

6. Install a second set of washers and the nut onto the bolt extending through the differential case half.
7. Install the differential case half into a vise.

   Clamp on the nut on the bottom of the differential case.

8. Install the differential pinion gears, the differential pinion gear thrust washers and the locking differential spider into the case half.

cardiagn.com

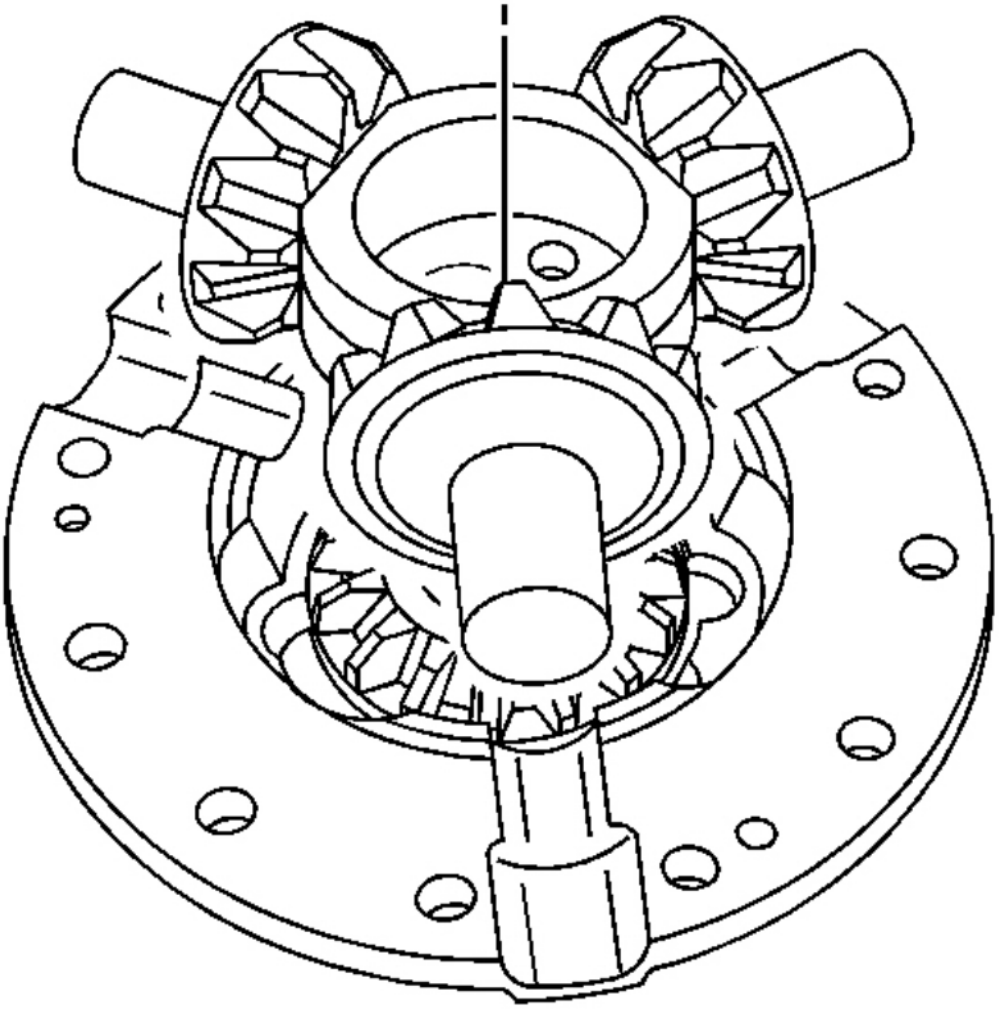

Fig. 66: View Of Locking Differential Spider, Differential Pinion Gears & Thrust Washers (Left Side)
Courtesy of GENERAL MOTORS CORP.

9. Loosen the bolt in order to turn the differential side gear.
10. Index the pinion gear so that one tooth is pointing downward, perpendicular to the case half face.
11. Tighten the bolt until the clutch discs are compressed.
12. Install the **J 7872** onto the differential case. See **Special Tools and Equipment**.
13. Loosely clamp the J 8001-3 onto the stem of the **J 7872** . See **Special Tools and Equipment**.
14. Place the contact pad of the J 8001-3 on the tooth that is perpendicular to the differential side gear.

cardiagn.com

15. Preload the dial of the J 8001-3 approximately one turn clockwise.
16. Tighten the lock nut on the **J 7872** finger tight. See **Special Tools and Equipment**.
17. Turn the dial of the J 8001-3 until the needle and the dial face indicate ZERO.

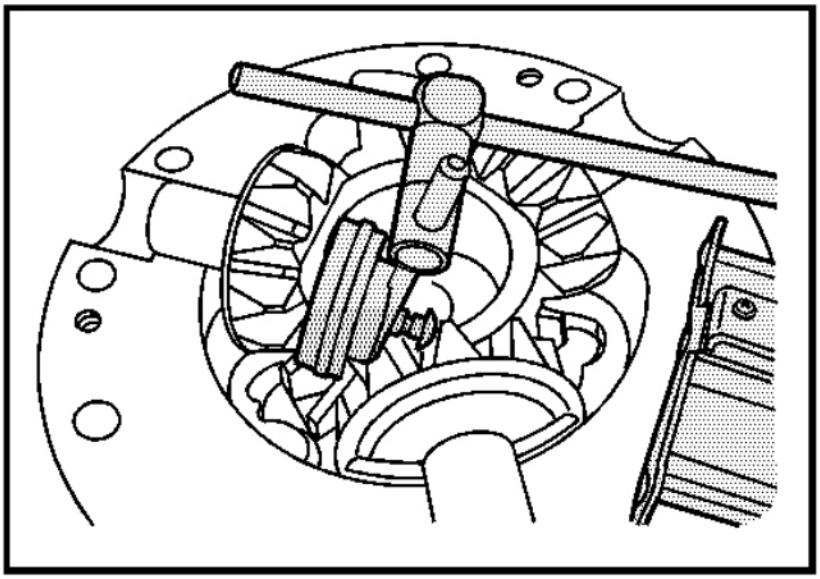

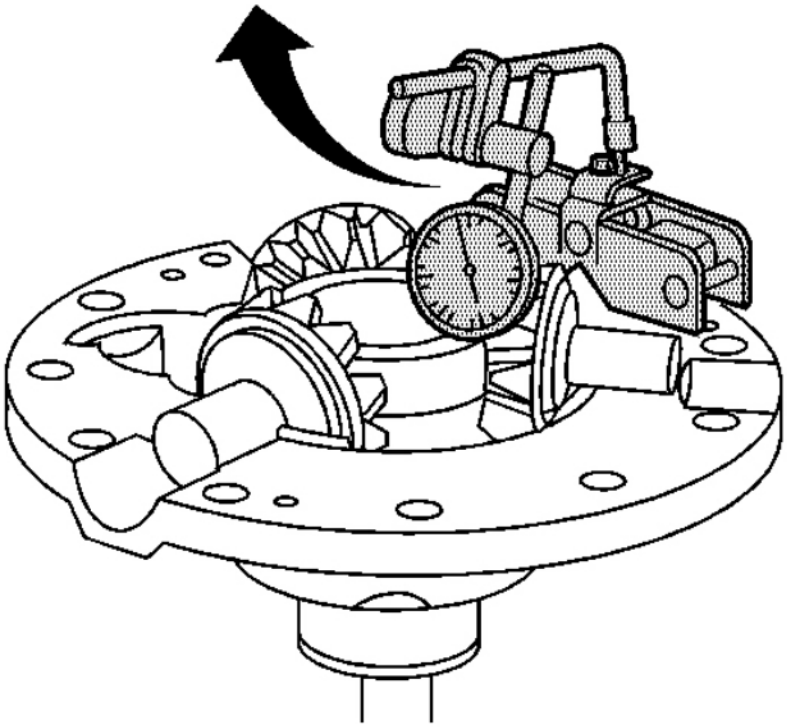

cardiagn.com

Fig. 67: View Of J 7872 & J 8001-3 On Differential Case (Left Side)
Courtesy of GENERAL MOTORS CORP.

18. Measure the differential pinion gear to locking differential side gear backlash by performing the following steps:
    - Pull the pinion gear firmly into the seat.
    - Rotate the pinion gear back and forth while reading the dial indicator.

      Do not unseat the locking differential spider. This will make the backlash reading inaccurate.

    - Record the measurement.
19. Measure the differential pinion gear to locking differential side gear backlash on the other 2 pinion gears following the steps above.

    Specification: The backlash between the differential pinon gear and locking differential side gear should be between 0.051-0.203 mm (0.002-0.008 in).

20. If the backlash is too large, install a thicker differential side gear shim and recheck the backlash.
21. If the backlash is too small, use a thinner differential side gear shim and recheck the backlash.

Differential side gear shims are available in the following sizes:

Shim Sizes

- 0.254 mm (0.010 in)
- 0.381 mm (0.015 in)
- 0.508 mm (0.020 in)
- 0.635 mm (0.025 in)
- 0.762 mm (0.030 in)
- 0.899 mm (0.035 in)
- 1.016 mm (0.040 in)
- 1.143 mm (0.045 in)
- 1.270 mm (0.050 in)
- 1.397 mm (0.055 in)
- 1.524 mm (0.060 in)

Right Side Gear Backlash Adjustment

1. Install the locking differential clutch disc thrust washer.

cardiagn.com

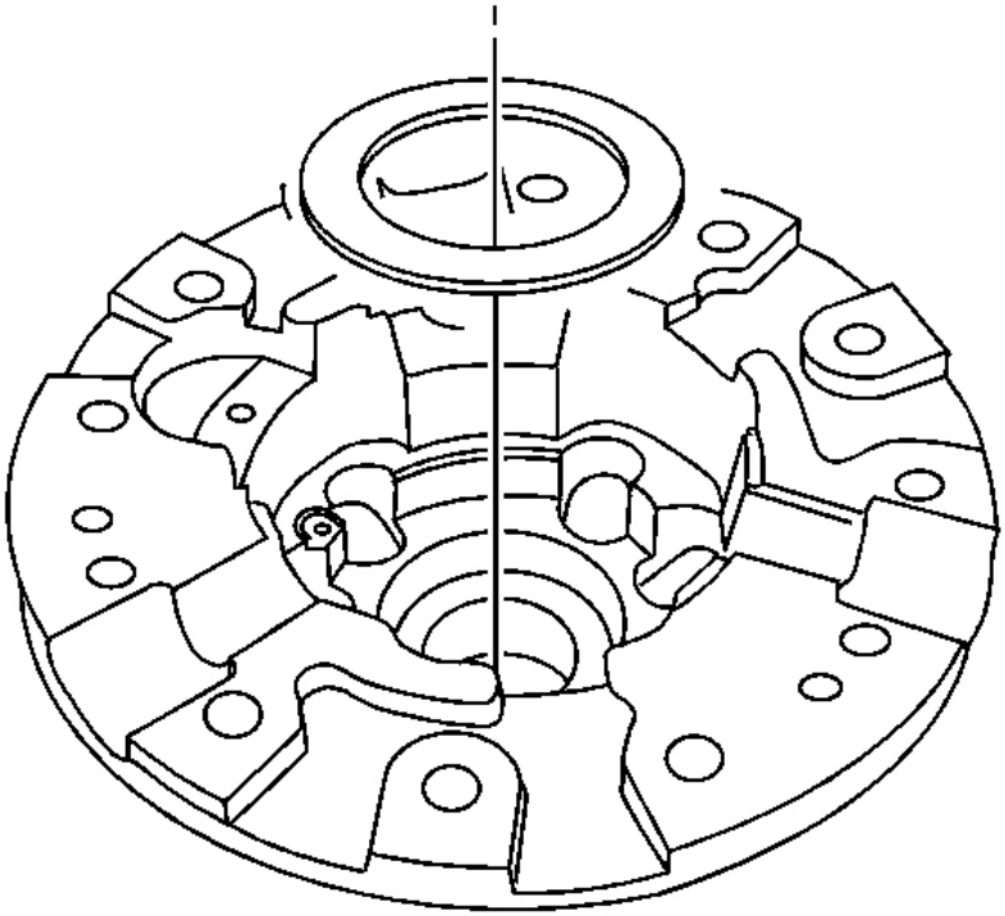

Fig. 68: View Of Right Side Locking Differential Clutch Disc Thrust Washer
Courtesy of GENERAL MOTORS CORP.

2. Install the differential side gear cam unit and clutch pack assembly.

cardiagn.com

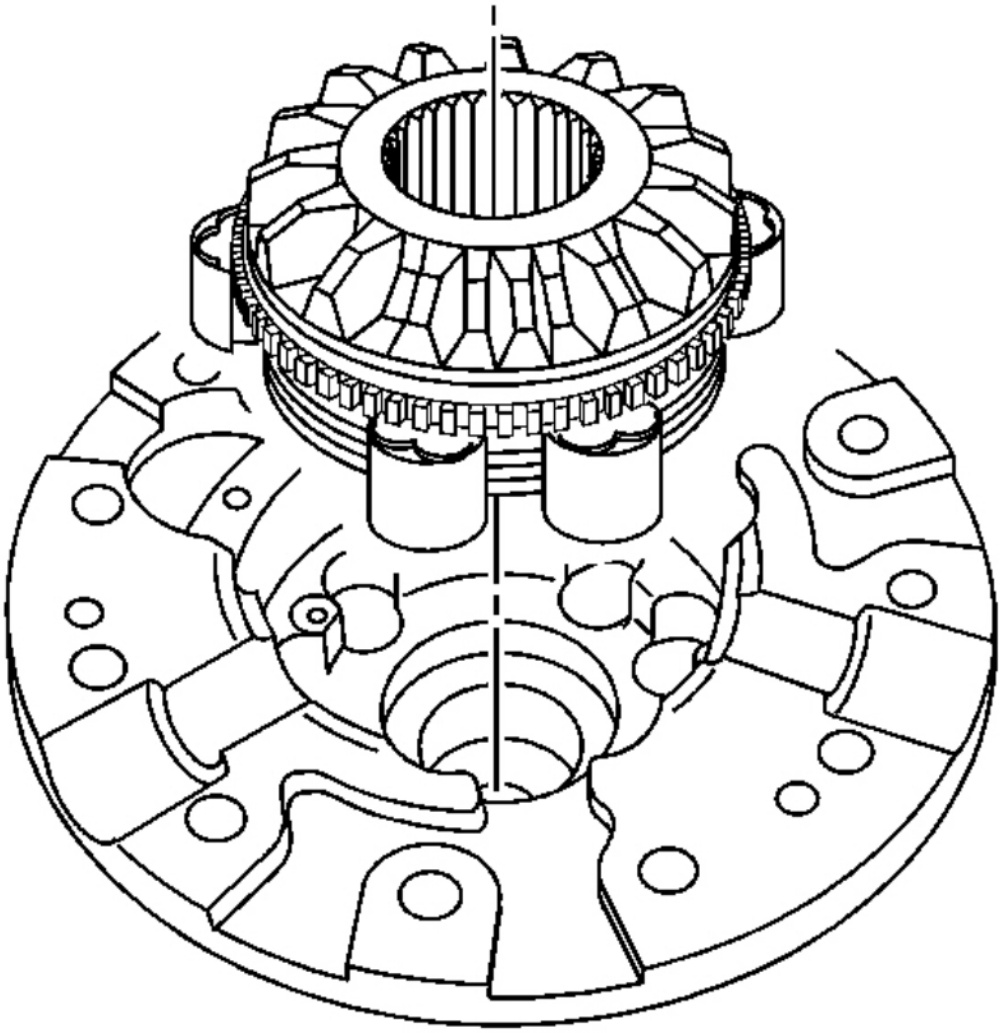

Fig. 69: View Of Right Side Cam Unit & Clutch Plate Assembly
Courtesy of GENERAL MOTORS CORP.

IMPORTANT: The washers must be large enough in order to fit over the differential side gear but not too large to where they will cause an interference with the pinion gear and spider assembly.

3. Assemble a set of washers, a nut, and a bolt long enough in order to hold the side gear in place.
4. Install the bolt and washer assembly through the differential case half.

cardiagn.com

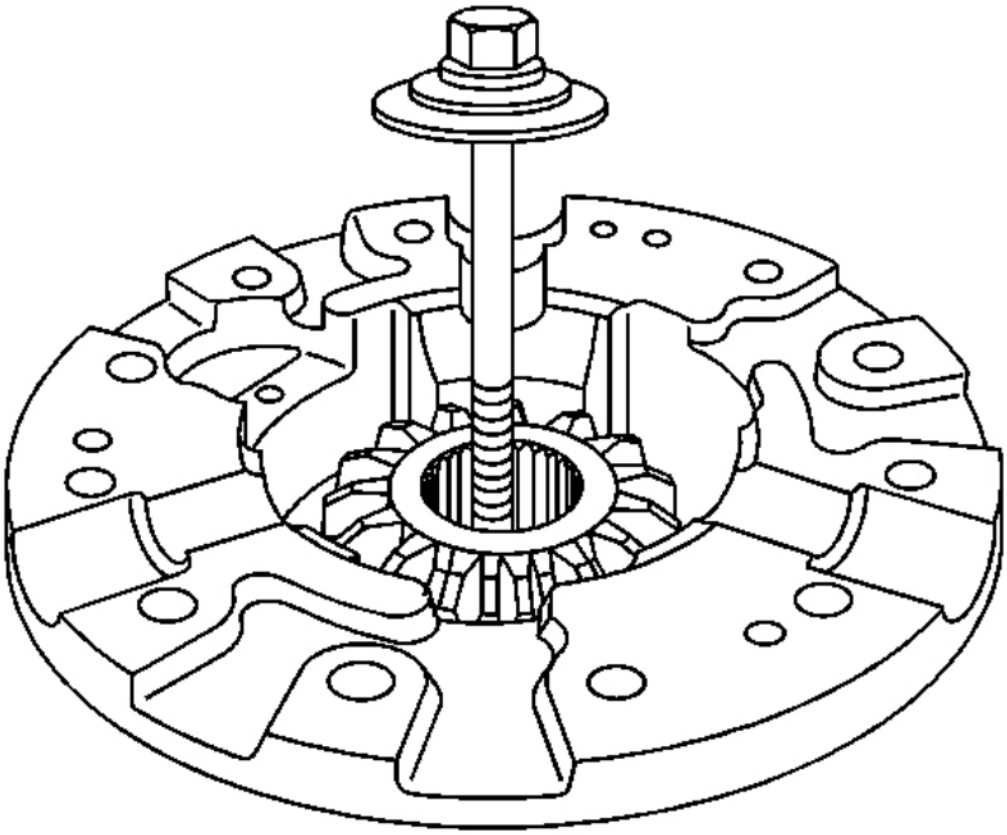

Fig. 70: Installing Bolt & Washer Assembly Through Differential Case Half (Right Side)
Courtesy of GENERAL MOTORS CORP.

5. Install a second set of washers and the nut onto the bolt extending through the differential case half.
6. Install the differential case half into a vise.

   Clamp on the nut on the bottom of the differential case.

7. Install the differential pinion gears, the differential pinion gear thrust washers and the locking differential spider into the case half.

cardiagn.com

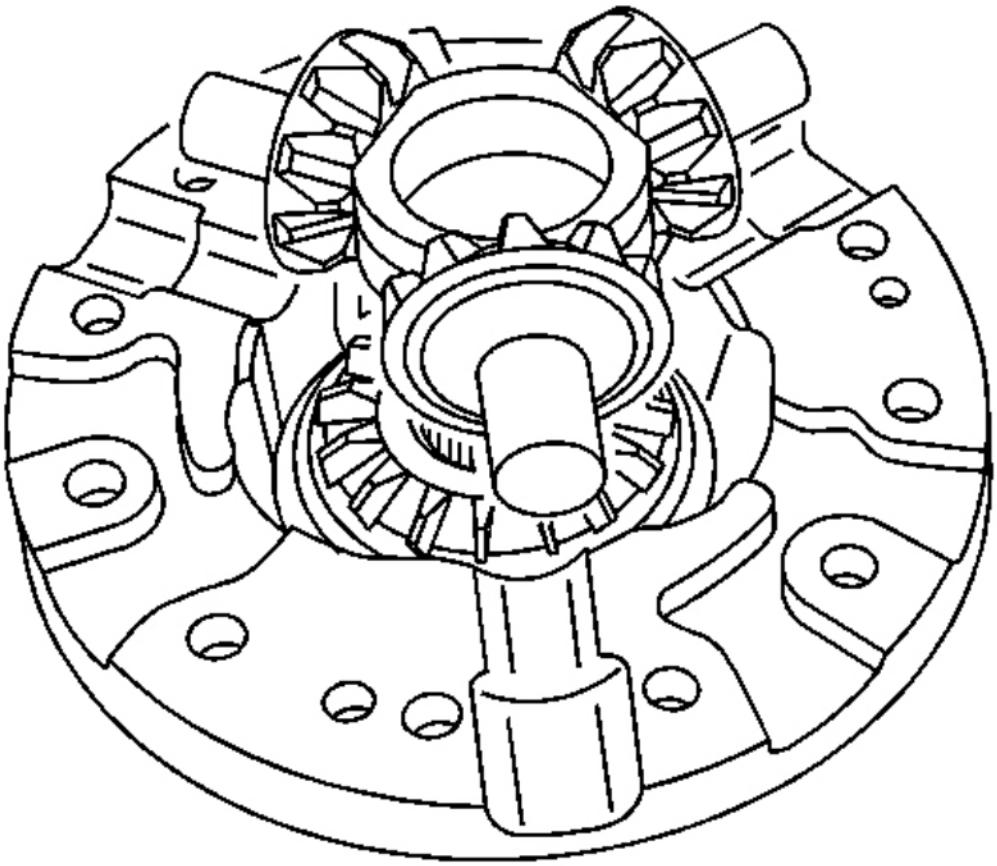

Fig. 71: View Of Locking Differential Spider, Differential Pinion Gears & Thrust Washers (Right Side)
Courtesy of GENERAL MOTORS CORP.

8. Loosen the bolt in order to turn the differential side gear.
9. Index the pinion gear so that one tooth is pointing downward, perpendicular to the case half face.
10. Tighten the bolt until the clutch plates are compressed.
11. Install the **J 7872** onto the differential case. See **Special Tools and Equipment**.
12. Loosely clamp the J 8001-3 onto the stem of the **J 7872** . See **Special Tools and Equipment**.
13. Place the contact pad of the J 8001-3 on the tooth that is perpendicular to the differential side gear.
14. Preload the dial of the J 8001-3 approximately one turn clockwise.
15. Tighten the lock nut on the **J 7872** finger tight. See **Special Tools and Equipment**.

cardiagn.com

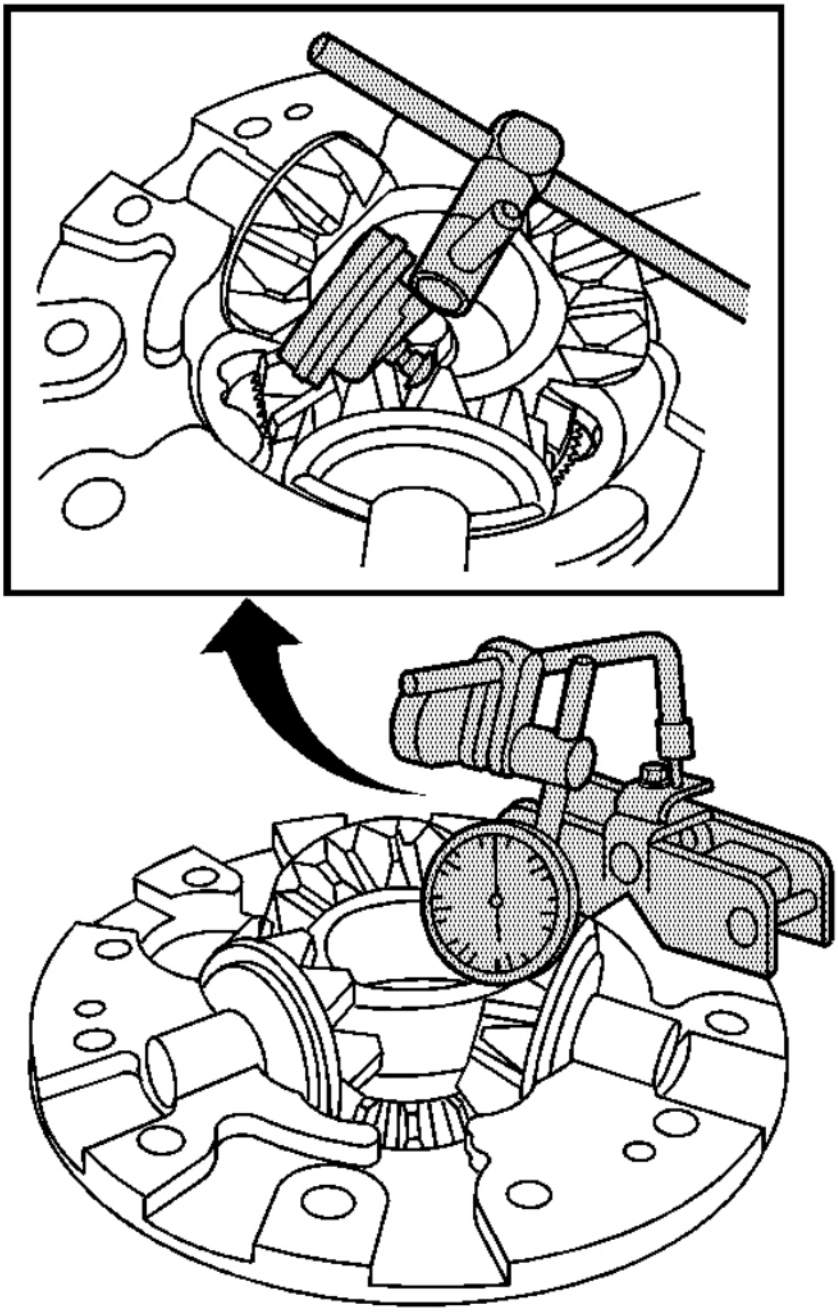

Fig. 72: View Of J 7892 & J 8001-3 On Differential Case (Right Side)
Courtesy of GENERAL MOTORS CORP.

16. Turn the dial of the J 8001-3 until the needle and the dial face indicate ZERO.

cardiagn.com

17. Measure the differential pinion gear to locking differential side gear backlash by performing the following steps:
    - Pull the pinion gear firmly into the seat.
    - Rotate the pinion gear back and forth while reading the dial indicator.

      Do not unseat the locking differential spider. This will make the backlash reading inaccurate.

    - Record the measurement.
18. Measure the differential pinion gear to locking differential side gear backlash on the other 2 pinion gears following the steps above.

    Specification: The backlash between the differential pinon gear and locking differential side gear should be between 0.279-0.432 mm (0.011-0.017 in).

19. If the backlash is too large, install a thicker locking differential side gear thrust washer and recheck the backlash.
20. If the backlash is too small, use a thinner locking differential side gear thrust washer and recheck the backlash.
21. Locking differential side gear thrust washers are available in the following sizes:

    Washer Sizes

    - 0.559 mm (0.022 in)
    - 0.686 mm (0.027 in)
    - 0.813 mm (0.032 in)
    - 0.914 mm (0.036 in)
    - 1.016 mm (0.040 in)
    - 1.067 mm (0.042 in)
    - 1.118 mm (0.044 in)
    - 1.219 mm (0.048 in)
    - 1.321 mm (0.052 in)

Thrust Block Clearance Adjustment

IMPORTANT: The left and right side gear backlash measurements must be done before the thrust block measurement can be completed.

cardiagn.com

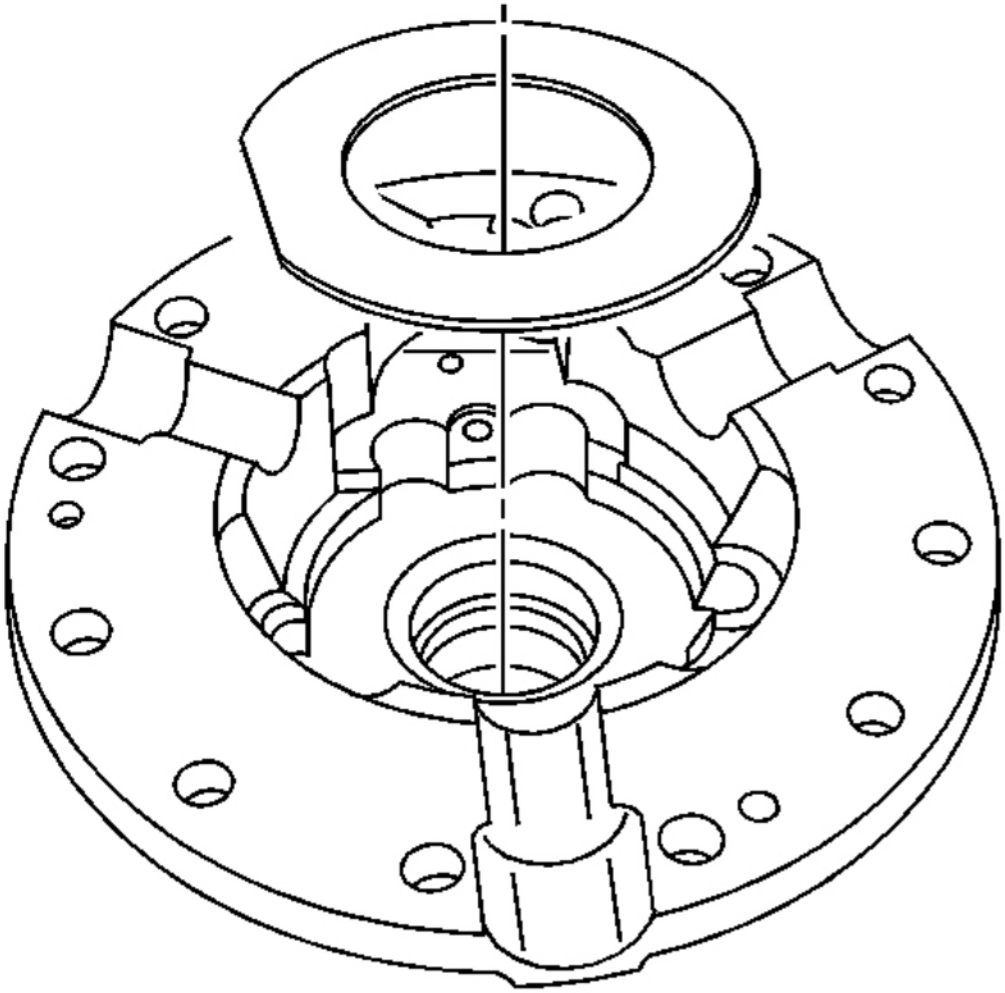

Fig. 73: View Of Left Side Gear Thrust Washer
Courtesy of GENERAL MOTORS CORP.

1. Install the differential side gear shim.

cardiagn.com

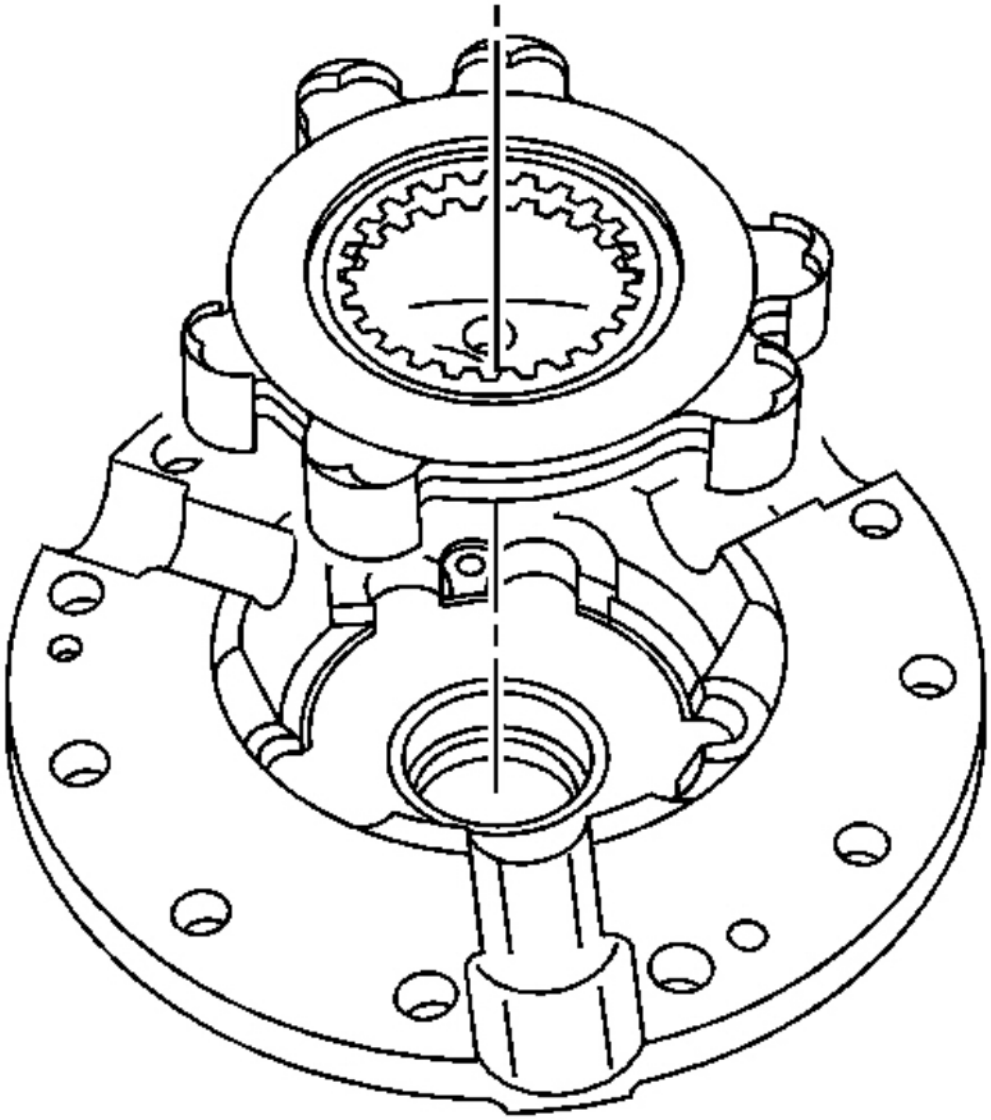

Fig. 74: View Of Left Side Clutch Disc Assembly
Courtesy of GENERAL MOTORS CORP.

2. Install the clutch pack assembly.

cardiagn.com

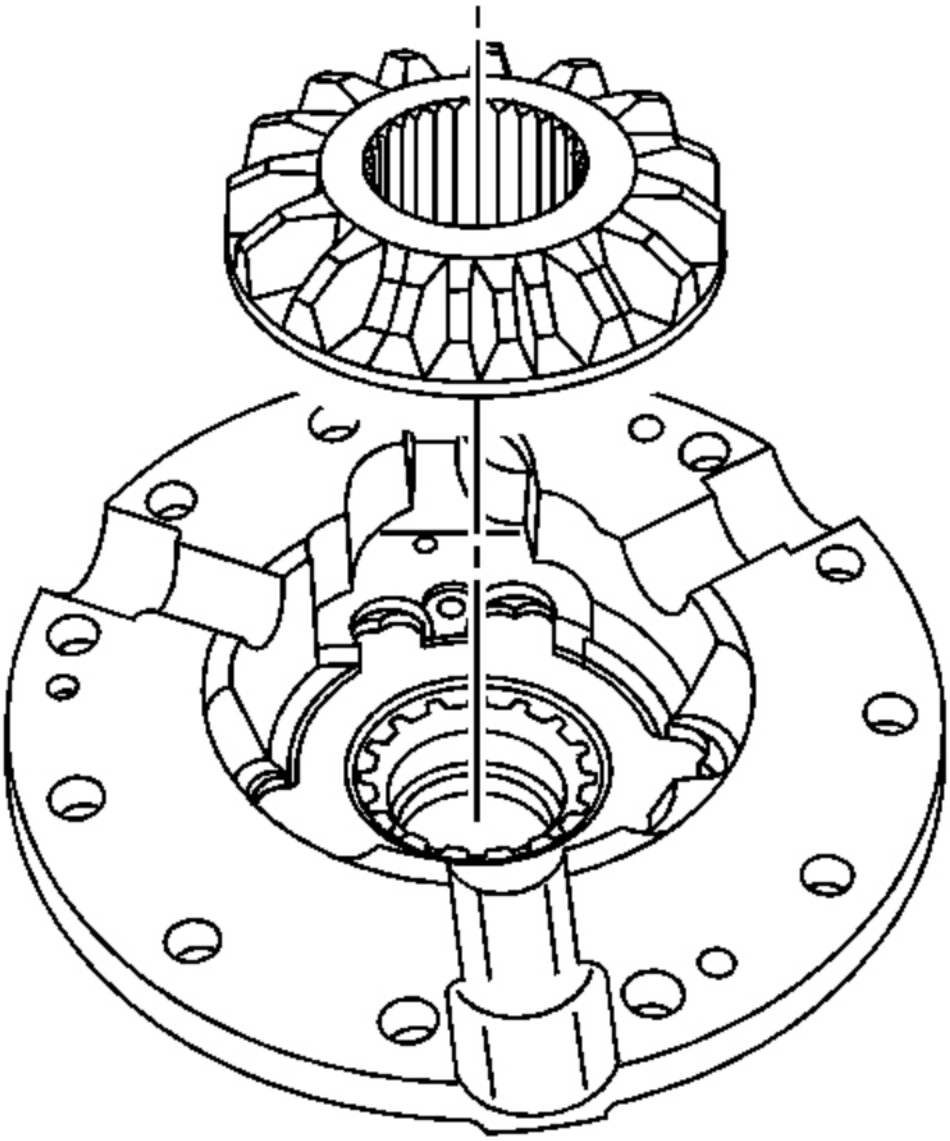

Fig. 75: View Of Locking Differential Side Gear
Courtesy of GENERAL MOTORS CORP.

3. Install the differential side gear.
4. Assemble a set of washers, a nut, and a bolt long enough in order to hold the side gear in place.

cardiagn.com

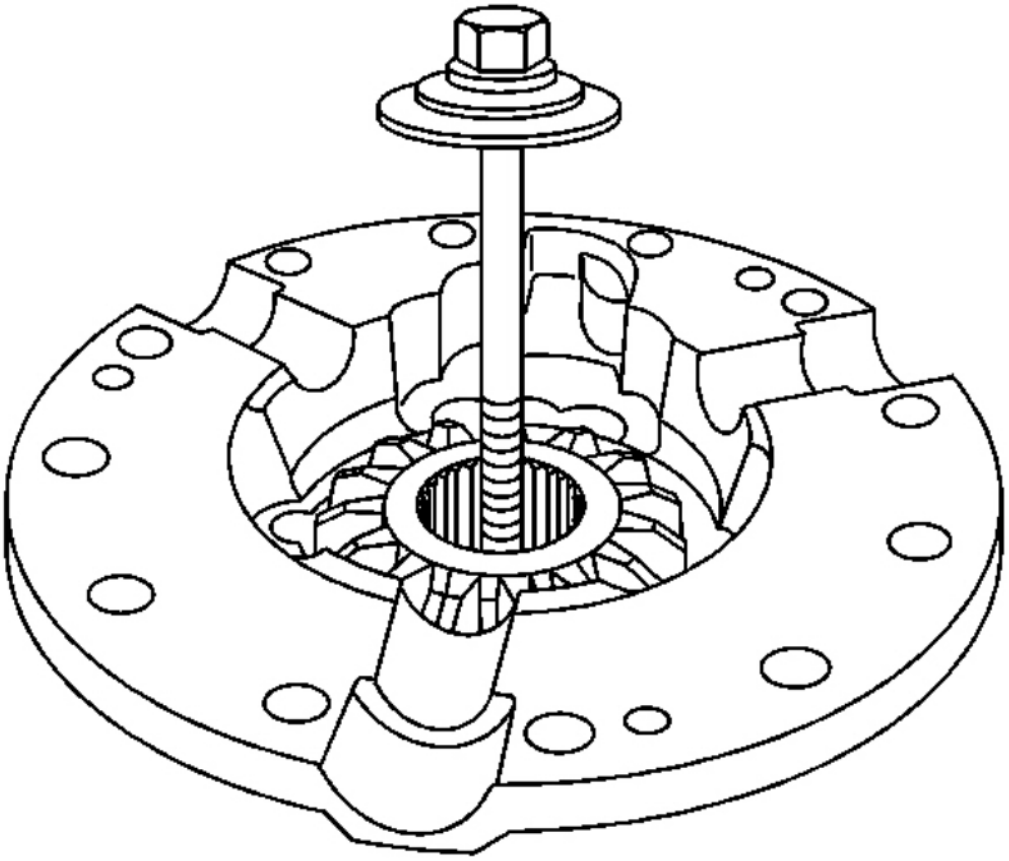

Fig. 76: Installing Bolt & Washer Assembly Through Differential Case Half (Left Side)
Courtesy of GENERAL MOTORS CORP.

5. Install the bolt and washer assembly through the differential case half.
6. Install a second set of washers and the nut onto the bolt extending through the differential case half.
7. Install the differential case half into a vise.

   Clamp on the nut on the bottom of the differential case.

8. Tighten the bolt until the clutch plates are compressed.
9. Install the **J 34673** (2) and the **J 34672** (1) onto the differential case as shown.

   Install the **J 34673** onto the face of the differential case, not the ridge of the differential case, or an inaccurate measurement will result. See **Special Tools and Equipment**.

cardiagn.com

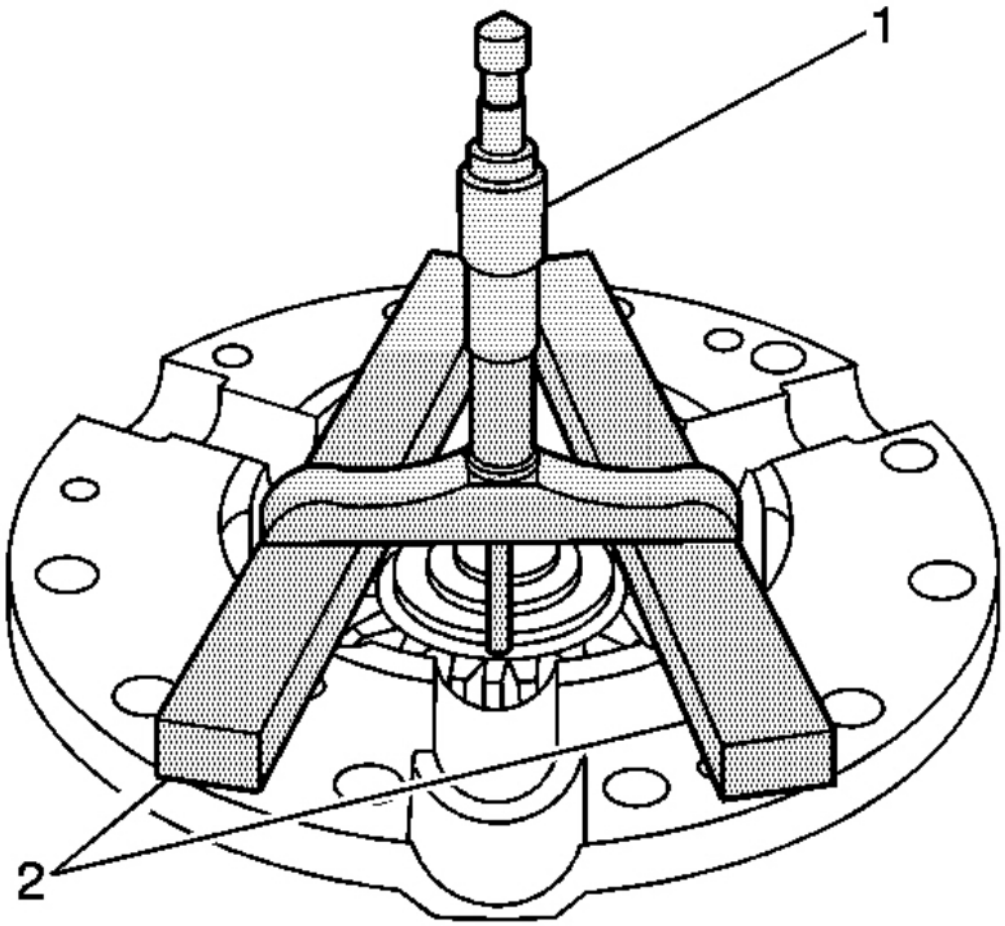

Fig. 77: Installing J 34673 & J 34672 Onto Differential Case (Left Side)
Courtesy of GENERAL MOTORS CORP.

10. Measure the depth from the face of the **J 34673** to the face of the differential side gear using the **J 34672** . See **Special Tools and Equipment**.

    Record the measurement.

11. Measure the thickness of the **J 34673** . See **Special Tools and Equipment**.
12. Subtract the thickness of the **J 34673** from the measurement obtained in step 10. See **Special Tools and Equipment**.

    Record the measurement. This measurement is equal to one-half of the thrust block thickness.

cardiagn.com

13. Remove the **J 34673** and the **J 34673** from the differential case. See **Special Tools and Equipment**.
14. Remove the differential case half from the vise.
15. Install the locking differential clutch disc thrust washer.

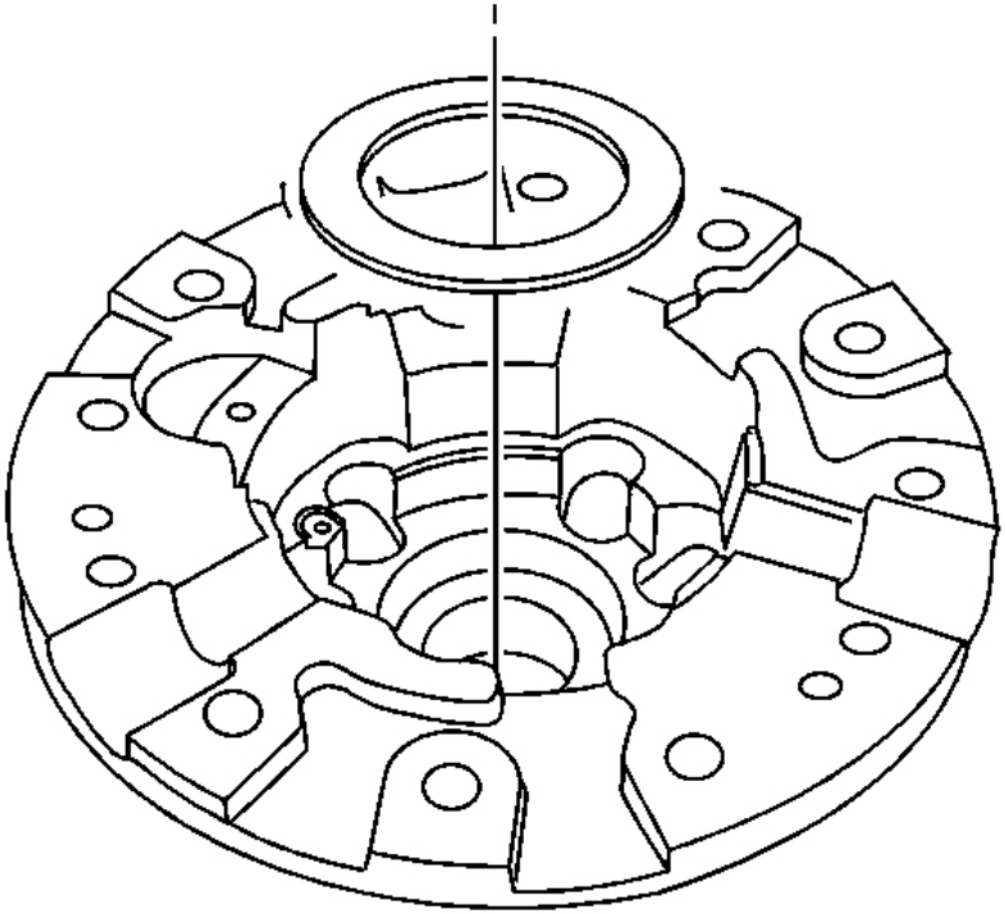

Fig. 78: View Of Right Side Locking Differential Clutch Disc Thrust Washer
Courtesy of GENERAL MOTORS CORP.

16. Install the differential side gear cam unit and clutch pack assembly.

cardiagn.com

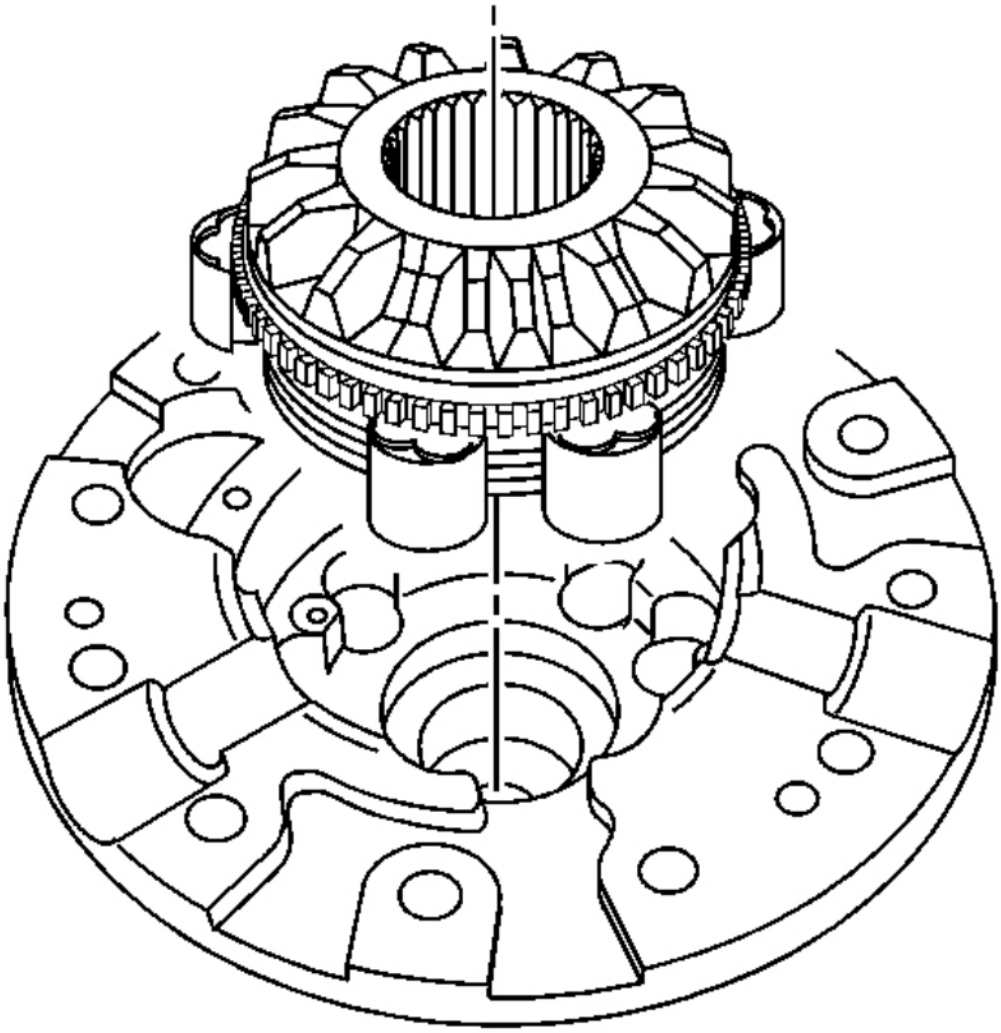

Fig. 79: View Of Right Side Cam Unit & Clutch Plate Assembly
Courtesy of GENERAL MOTORS CORP.

17. Assemble a set of washers, a nut, and a bolt long enough in order to hold the side gear in place.
18. Install the bolt and washer assembly through the differential case half.

cardiagn.com

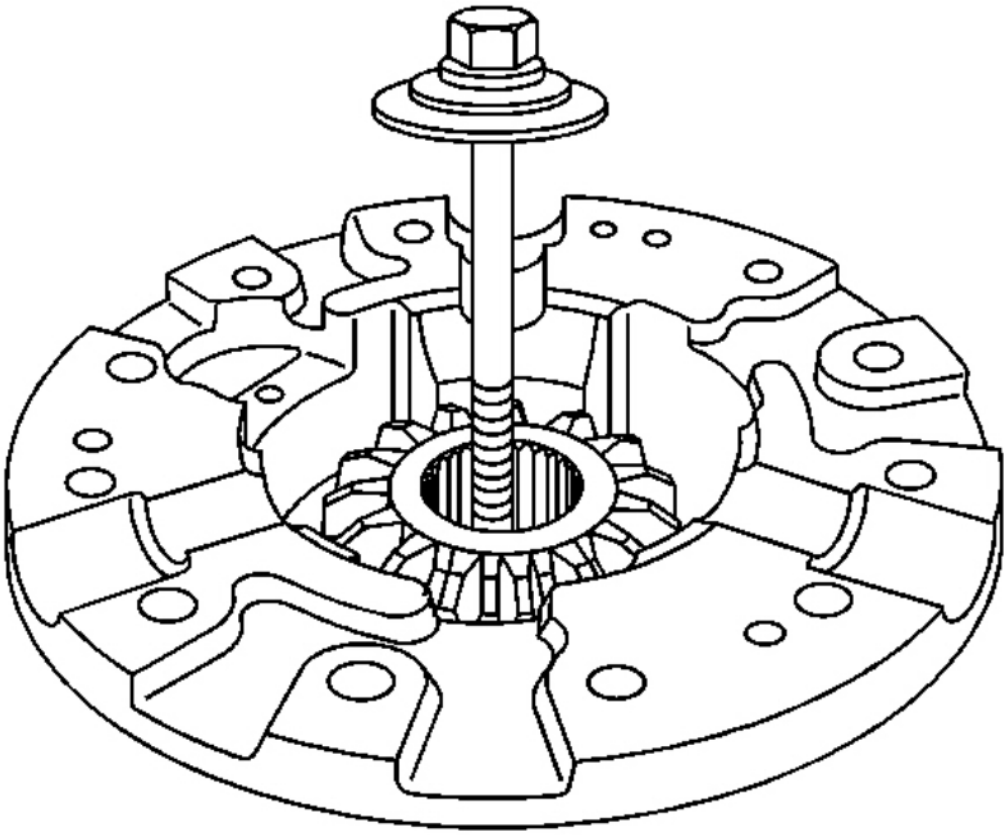

Fig. 80: Installing Bolt & Washer Assembly Through Differential Case Half (Right Side)
Courtesy of GENERAL MOTORS CORP.

19. Install a second set of washers and the nut onto the bolt extending through the differential case half.
20. Install the differential case half into a vise.

    Clamp on the nut on the bottom of the differential case.

21. Tighten the bolt until the clutch plates are compressed.
22. Install the **J 34673** (2) and the **J 34672** (1) onto the differential case as shown. See **Special Tools and Equipment**.

cardiagn.com

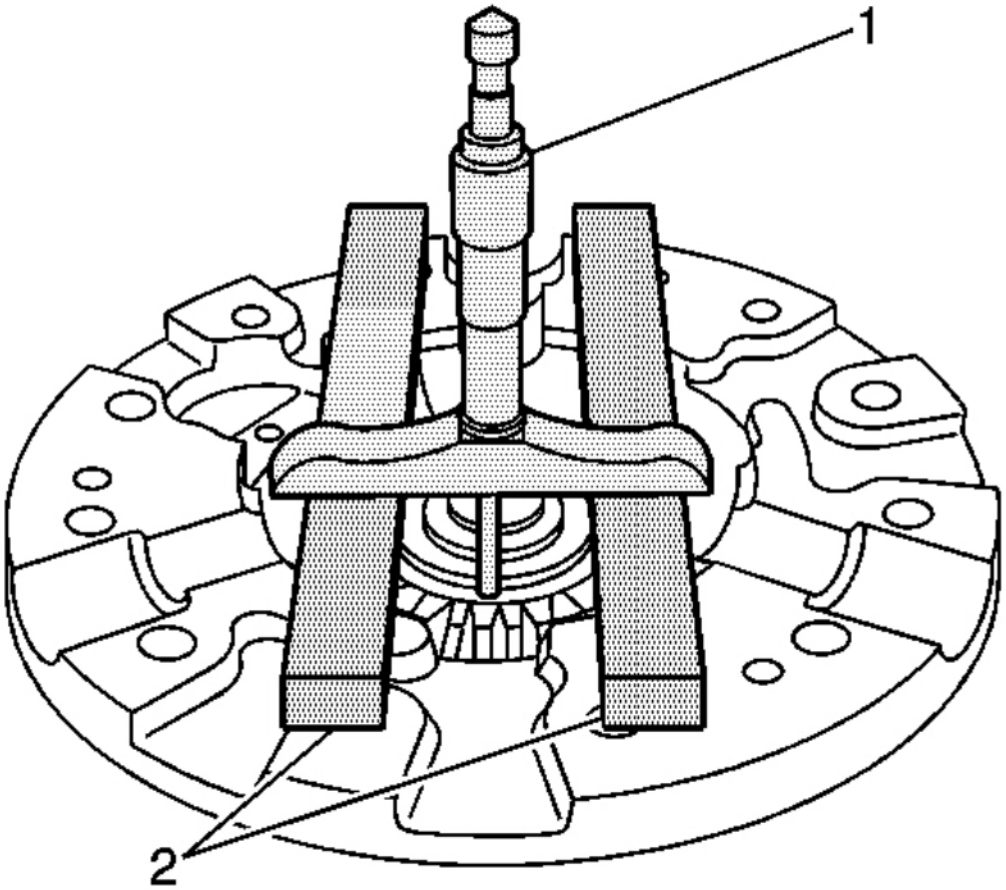

Fig. 81: Installing J 34673 & J 34672 Onto Differential Case (Right Side)
Courtesy of GENERAL MOTORS CORP.

23. Measure the depth from the face of the **J 34673** to the face of the differential side gear using the **J 34672** . See **Special Tools and Equipment**.

    Record the measurement.

24. Measure the thickness of the **J 34673** . See **Special Tools and Equipment**.
25. Subtract the thickness of the **J 34673** from the measurement obtained in step 23. See **Special Tools and Equipment**.

    Record the measurement. This measurement is equal to one-half of the thrust block thickness.

26. Add the measurements in step 12 and step 25 together. This is the thickness for the thrust block.

cardiagn.com

27. Compare the measurement obtain in step 25 to the thrust block sizes available. If the measurement is equal to one of the thrust block sizes available, the select that thrust block.
28. If the measurement obtained in step 25 is not equal to one of the thrust block sizes available, then select the thrust block that is smaller the measurement.

    For example, if the measurement is 40.919 mm (1.611 in), select the 40.894 mm (1.610 in) thrust block.

IMPORTANT: The backlash must be rechecked and adjusted to specification anytime the left and/or the right thrust washers are replaced.

29. If the measurement obtained in step 25 is less then 40.488 mm (1.594 in), then reduce the left differential side gear shim or the right locking differential clutch disc thrust washer thickness in order to increase the thrust block opening.
30. If the measurement obtained in step 25 is greater then 41.120 mm (1.622 in), then increase the left differential side gear shim or the right locking differential clutch disc thrust washer thickness in order to decrease the thrust block opening.
31. Recheck the left and/or right side gear backlash and adjust as necessary.
32. Recheck the thrust block clearance and adjust as necessary.

LIMITED SLIP DIFFERENTIAL ASSEMBLE

Tools Required

J 45709 Limited Slip Differential Overhaul Kit - Dana 248. See **Special Tools and Equipment**.

IMPORTANT:

- **The clutch discs are replaceable as complete sets only. If one clutch disc pack requires replacement, both packs must be replaced.**
- **New clutch discs and clutch plates need to be soaked in the lubricant that is provided in the kit for 20 minutes before the clutch packs can be assembled.**

1. Soak the clutch discs and the clutch plates in the lubricant provided with the kit for 20 minutes.
2. Assemble the components of each clutch pack onto the left and right side differential side gear (1) in the following order:
    1. The limited slip clutch disc spacer (2)
    2. The 1st non-eared clutch disc (3)
    3. The 1st eared clutch plate (4)
    4. The 2nd non-eared clutch disc (5)
    5. The 2nd eared clutch plate (6)
    6. The 3rd non-eared clutch disc (7)
    7. The 3rd eared clutch plate (8)
    8. The 4th non-eared clutch disc (9)

cardiagn.com

9. The 4th eared clutch plate (10)

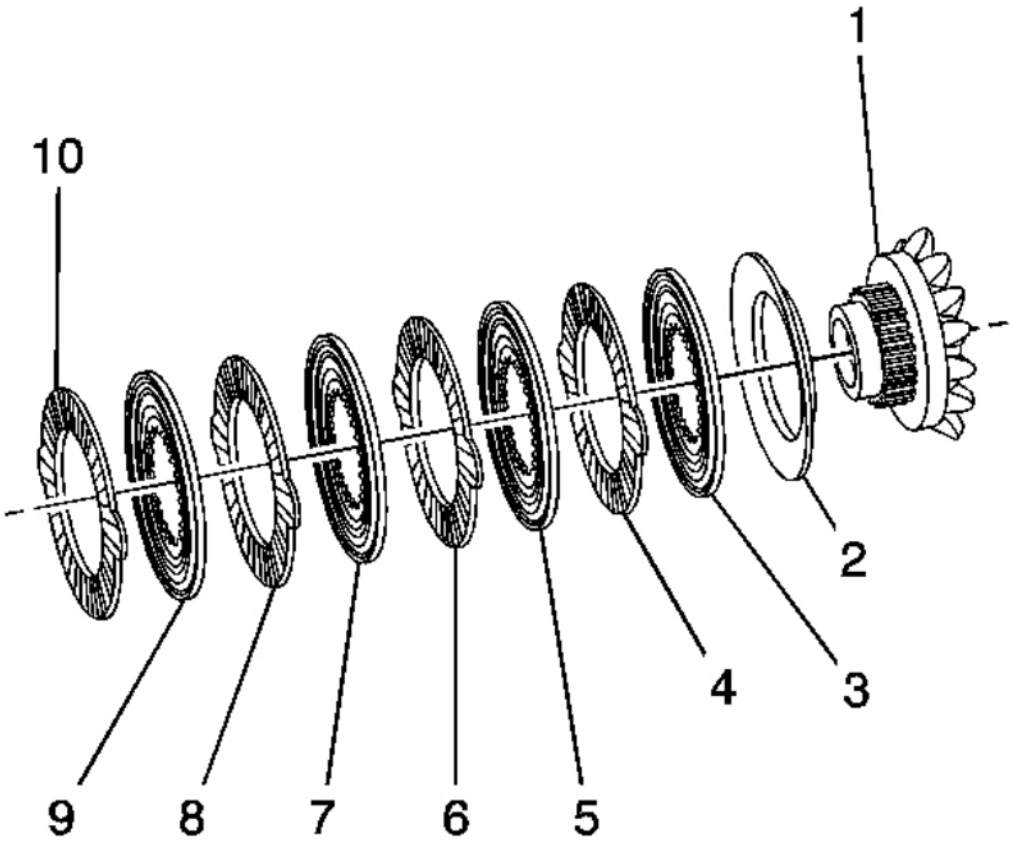

Fig. 82: Installing Clutch Pack Onto Left & Right Side Differential Side Gear
Courtesy of GENERAL MOTORS CORP.

3. Install the two differential clutch retainers to the each of the clutch packs.

   Ensure that the differential clutch retainers are fully seated onto the ears of the clutch plates.

4. Install the left side differential side gear and clutch pack into the flange end of the differential case.
5. Install the right side differential side gear and clutch pack into the bell end of the differential case.
6. While holding the bell end differential side gear in position, install the J 45709-2 (1) and the J 45709-3 (2) into the differential case.
7. Tighten the J 45709-2 (1) until there is enough clearance to install the pinion gears.

cardiagn.com

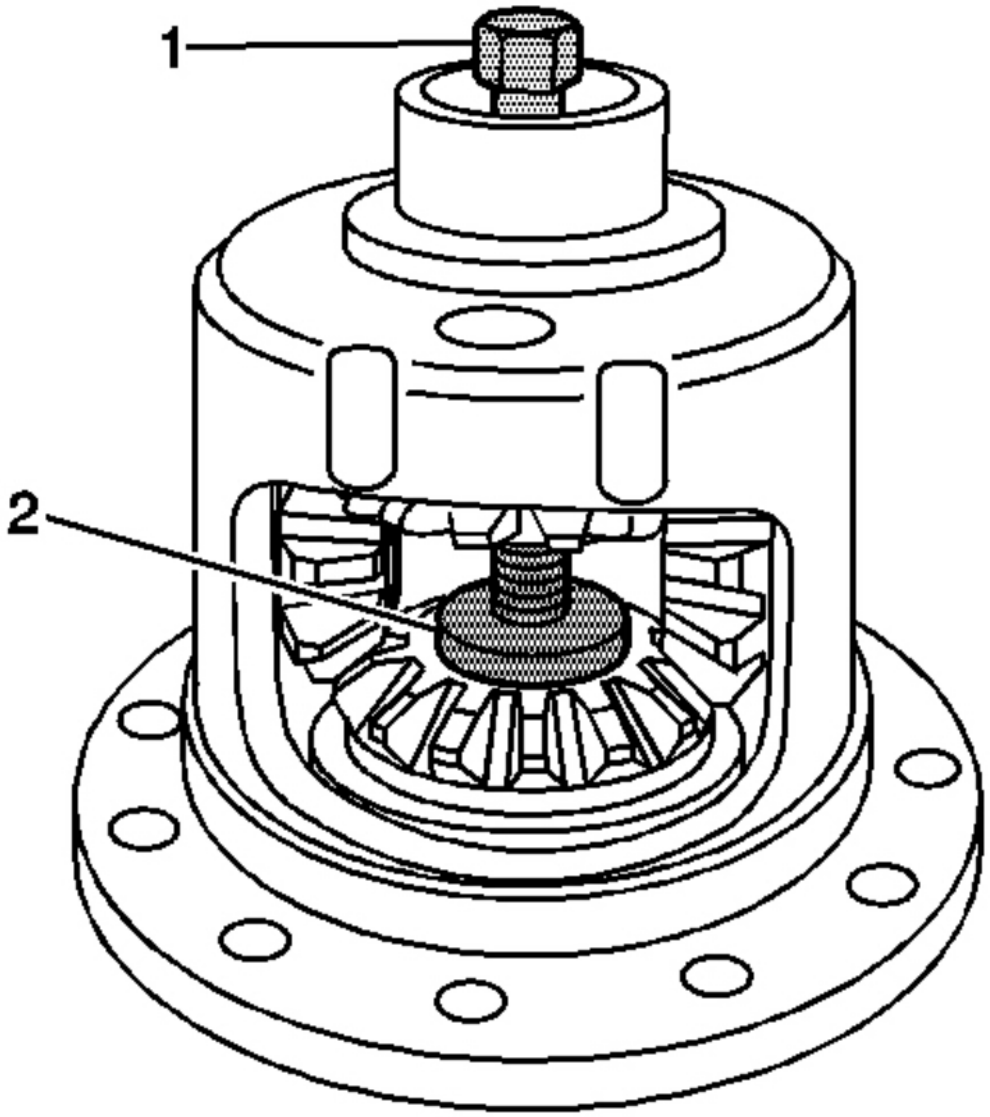

Fig. 83: Installing J 45709-2 & J 45709-3 Into Differential Case
Courtesy of GENERAL MOTORS CORP.

8. Install the J 45709-1 (2).

   While holding the pinion gears against the side gears, rotate the differential using the J 45709-1 until the pinion gears align with the pinion shaft bore.

cardiagn.com

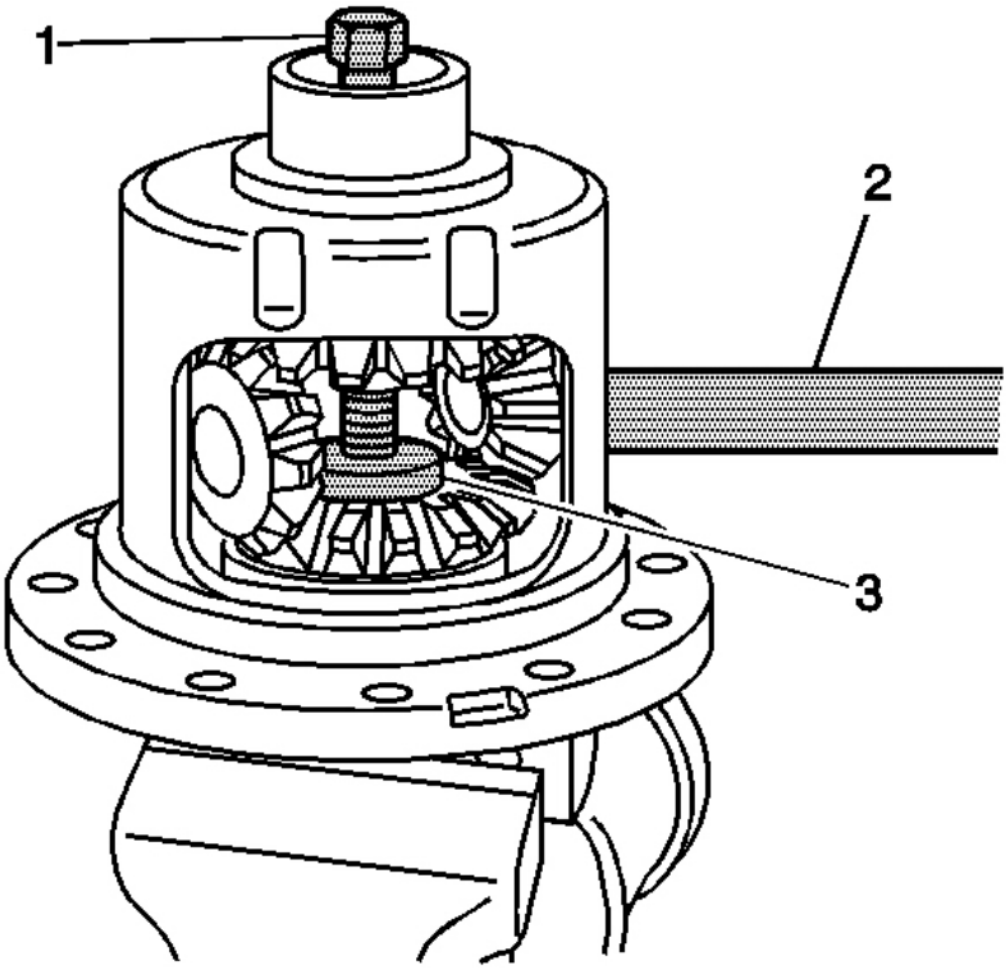

Fig. 84: View Of J 45709-2 & J 45709-3
Courtesy of GENERAL MOTORS CORP.

NOTE: **Refer to Fastener Notice in Cautions and Notices.**

9. Tighten the J 45709-2 (1).

   Tighten: Tighten the J 45709-2 to 40 N.m (30 lb ft).

cardiagn.com

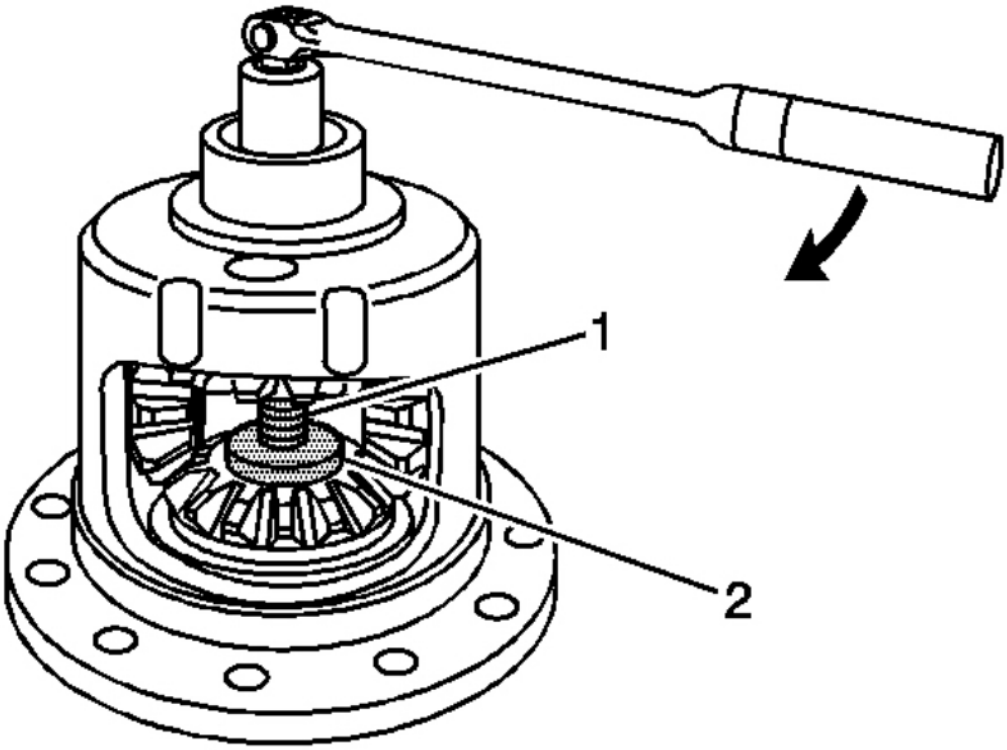

Fig. 85: Tightening J 45709-2 Against J 45709-3
Courtesy of GENERAL MOTORS CORP.

10. Lubricate the differential pinion gear thrust washers with the lubricant provided in the kit.
11. Install the differential pinion gear thrust washers.

    If the thrust washers cannot be installed, continue to tighten the J 45709-2 as necessary until the thrust washers can be installed.

cardiagn.com

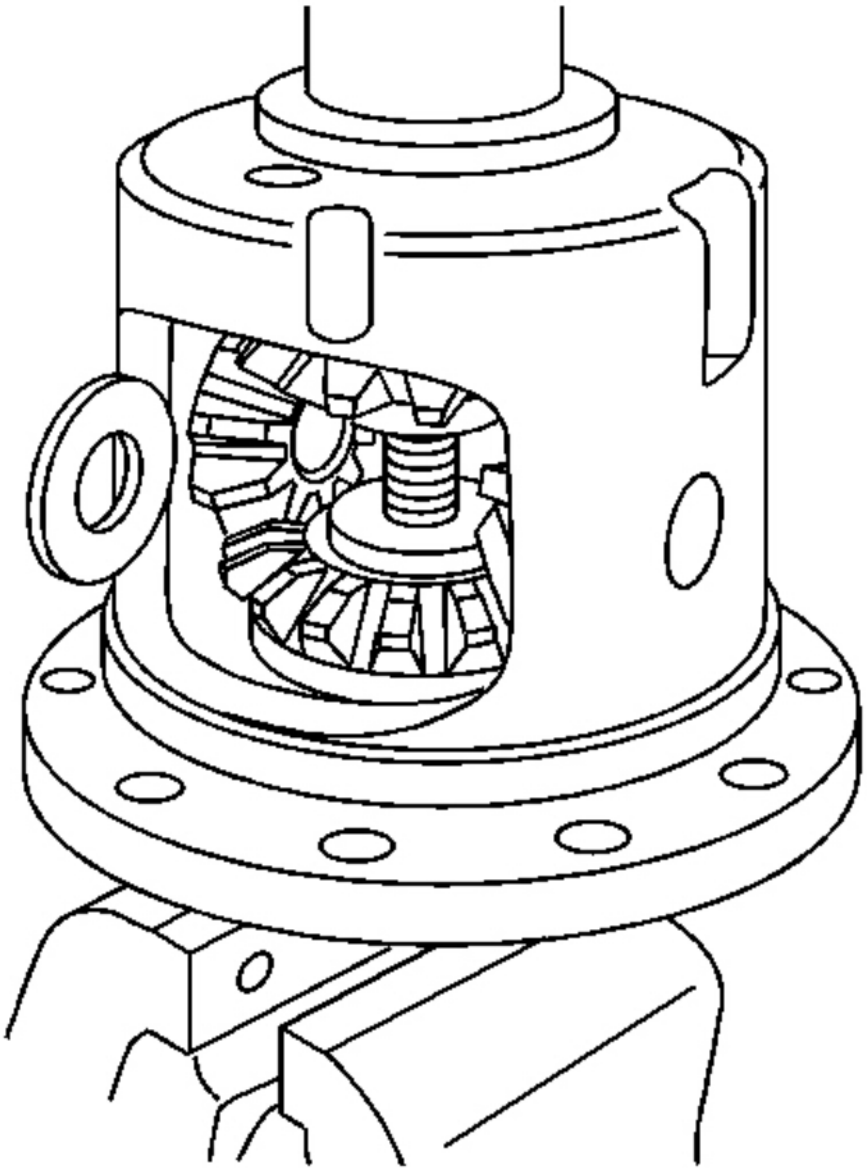

Fig. 86: View Of Pinion Gear Thrust Washers
Courtesy of GENERAL MOTORS CORP.

12. Remove the J 45709-2.
13. Remove the J 45709-3.
14. Install the pinion shaft.

cardiagn.com

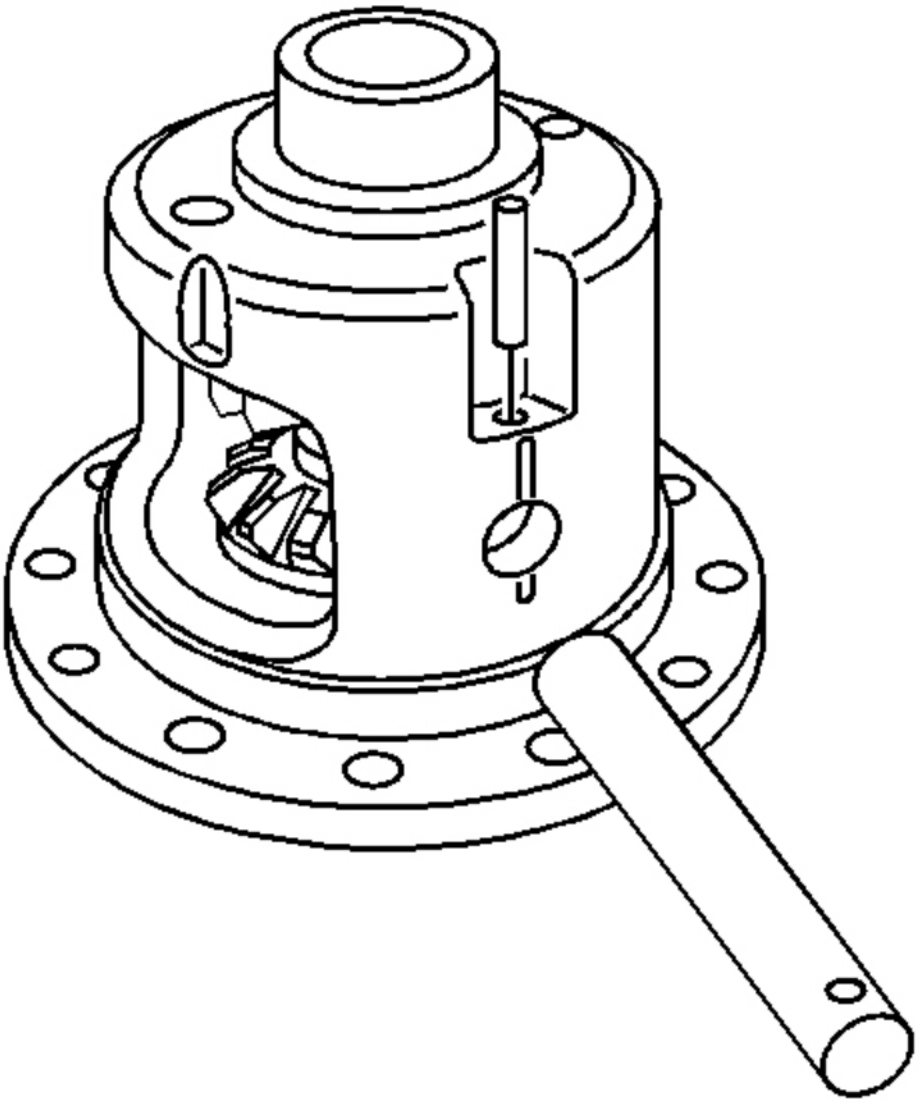

Fig. 87: View Of Pinion Shaft
Courtesy of GENERAL MOTORS CORP.

15. Using a brass drift, install a new roll pin.

    Specification: Drive the roll pin into the differential case until it is approximately 44.5 mm (1.75 in) below the surface of the differential case.

cardiagn.com

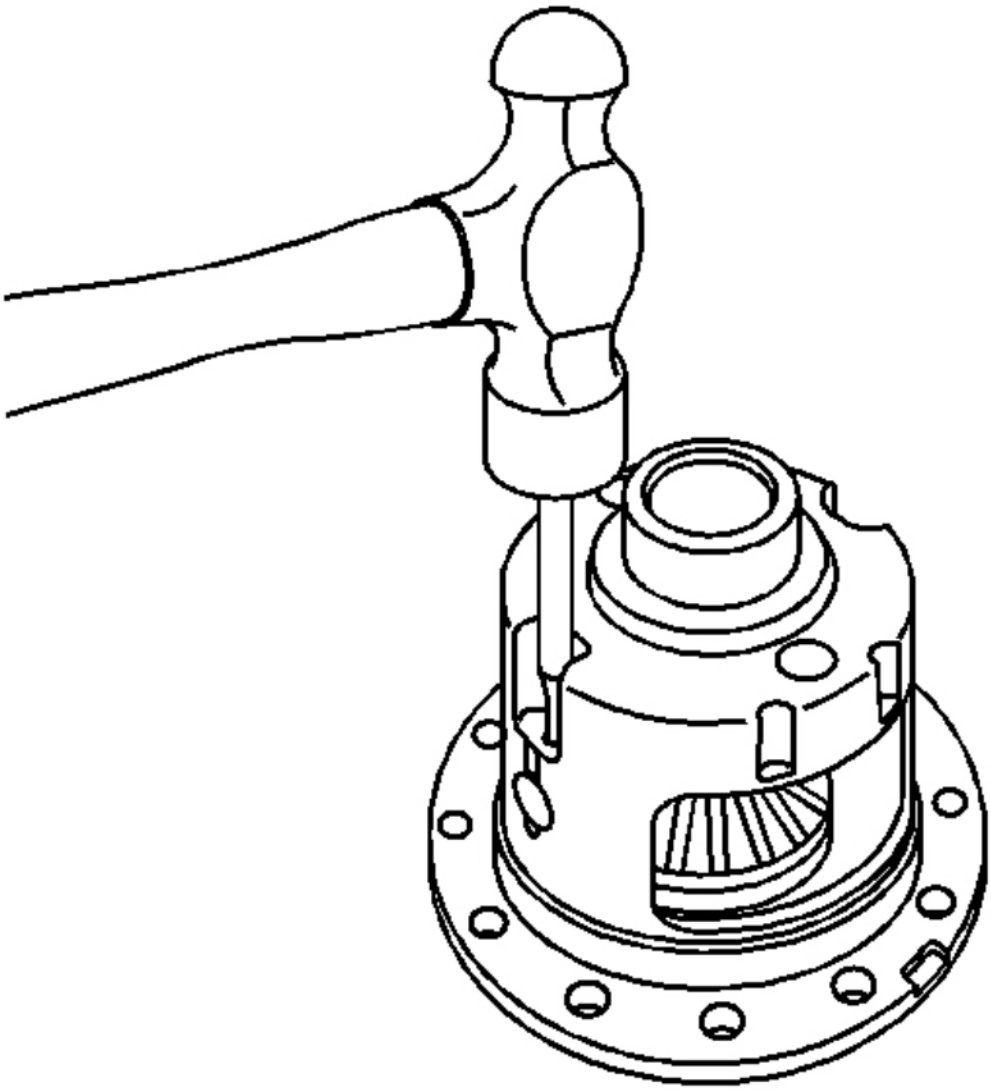

Fig. 88: Installing Roll Pin Using Brass Drift
Courtesy of GENERAL MOTORS CORP.

16. Install the differential side bearings, if necessary. Refer to **Differential Side Bearings Replacement (All Except 9.75 Inch Axle)** or **Differential Side Bearings Replacement (9.75 Inch Axle)** in Rear Drive Axle.
17. Install the ring gear, if necessary. Refer to **Drive Pinion and Ring Gear Replacement (8.6 Inch, 9.5 Inch Axle)** or **Drive Pinion and Ring Gear Replacement (9.75 Inch Axle)** or **Drive Pinion and Ring**

cardiagn.com

Gear Replacement (10.5 Inch Axle) in Rear Drive Axle.

LOCKING DIFFERENTIAL ASSEMBLE (8.6, 9.5 INCH AXLES)

IMPORTANT: The left and right side gear backlash and thrust block thickness measurement must be completed before the components of the locking differential can be assembled.

1. Install the left side gear thrust washer.

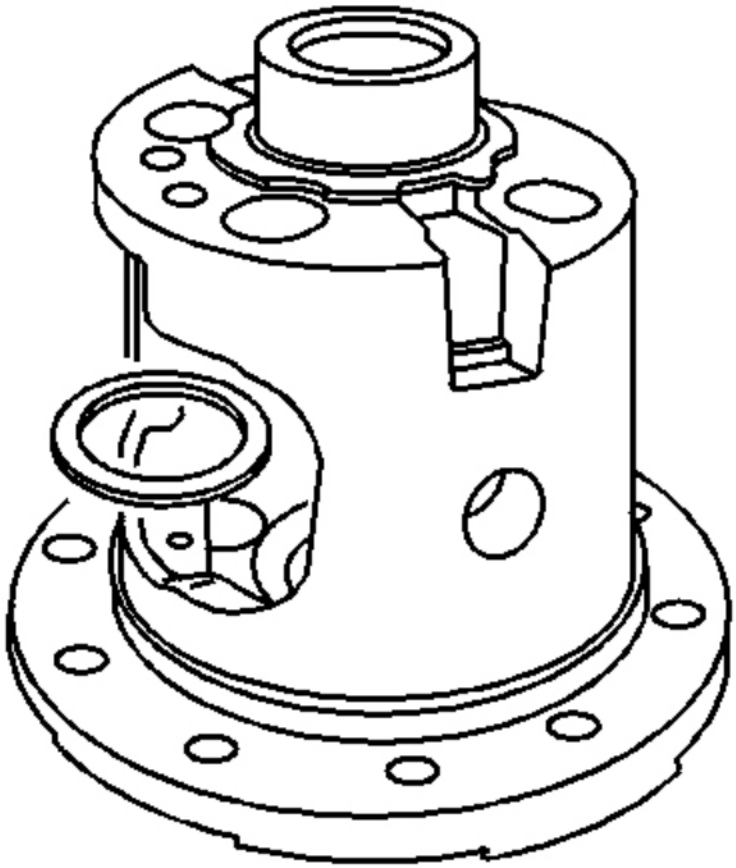

Fig. 89: View Of Left Side Gear Thrust Washer
Courtesy of GENERAL MOTORS CORP.

2. Install the left side gear cam unit and clutch disc assembly.

cardiagn.com

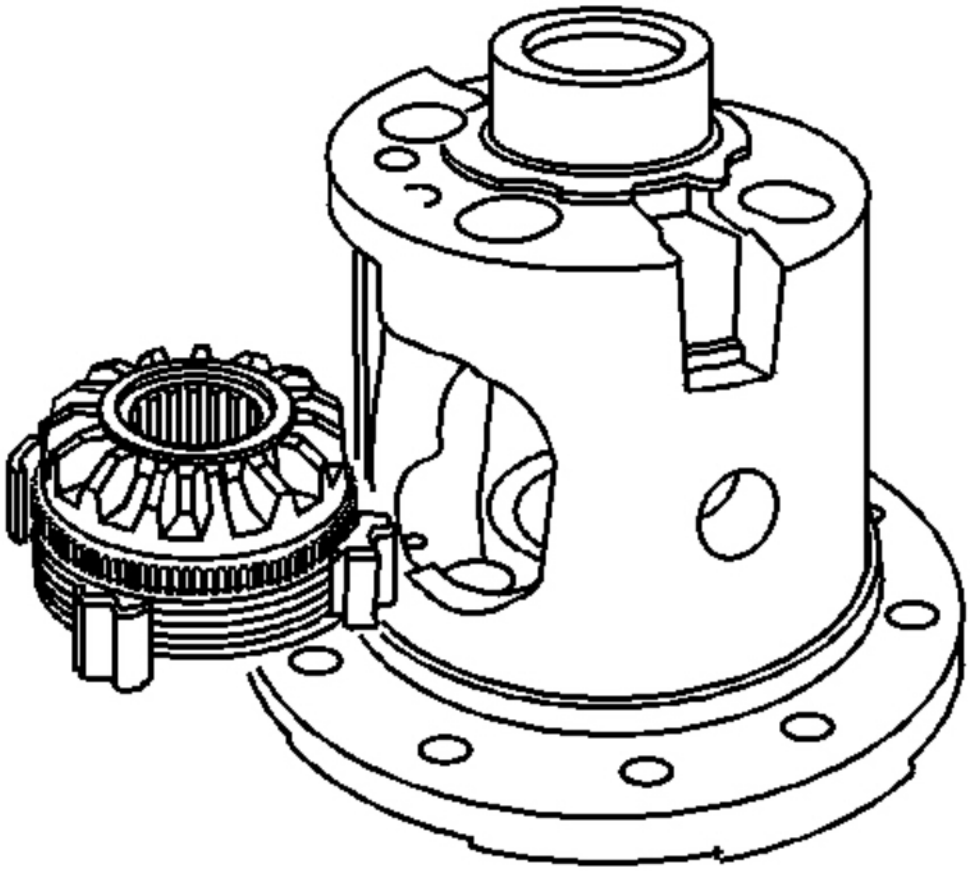

Fig. 90: View Of Left Side Gear Cam Unit & Clutch Disc Assembly
Courtesy of GENERAL MOTORS CORP.

3. Install the right side gear thrust washer.
4. Install the right side clutch disc assembly.
5. Install the right side gear.

IMPORTANT: If the original pinion gears and thrust washers are being re-used, install the pinion gears and thrust washers on the same side as when removed.

6. Install the pinion gear and the pinion thrust washers.

   Place the pinion gears and the pinion thrust washers 180 degrees apart.

cardiagn.com

7. Rotate the pinion gears and the pinion thrust washers 90 degrees and align the pinion gears with the pinion shaft opening in the differential case.
8. Install the thrust block.

   The open side of the thrust block must face the window opening.

9. Install the pinion shaft.
10. Install the new pinion shaft lock bolt.

    Tighten the pinion shaft lock bolt finger tight.

11. Install the governor assembly.
12. Install the governor bushing using a hammer and a brass drift.

    Specification: Press the bushing into place until there is 0.025-0.076 mm (0.010-0.030 in) of shaft end play.

cardiagn.com

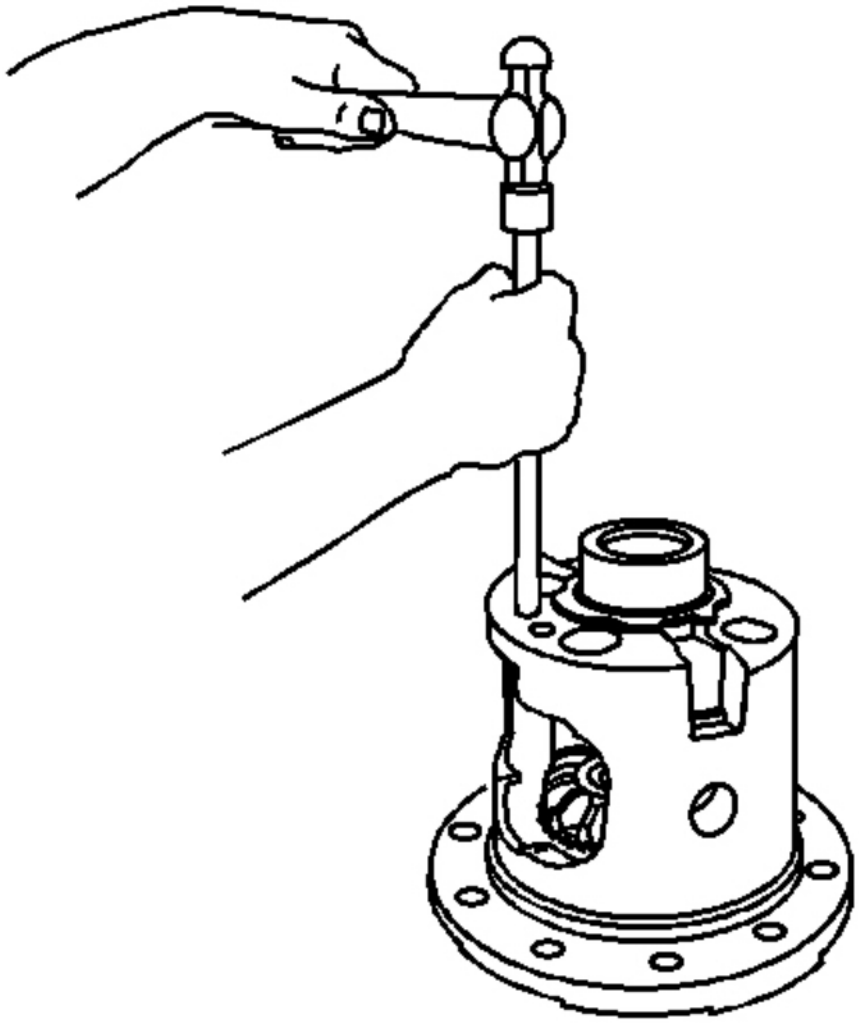

Fig. 91: Installing Governor Bushing Using Hammer & Brass Drift
Courtesy of GENERAL MOTORS CORP.

13. Install the latching bracket assembly.

    The straight end of the latching bracket spring must be over and outside the governor assembly shaft.

cardiagn.com

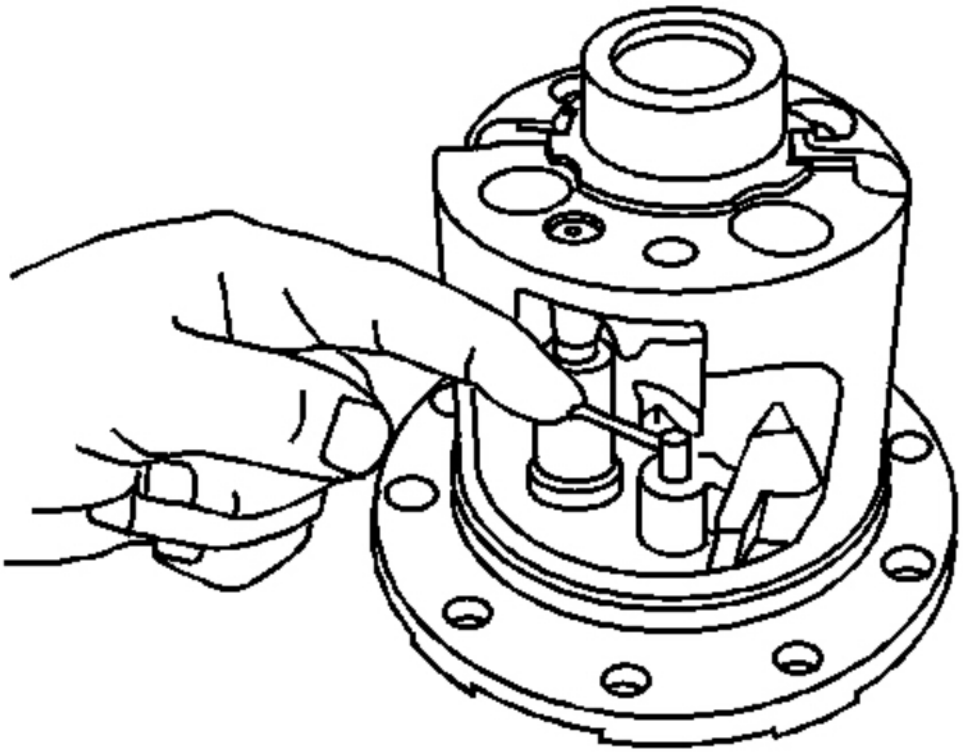

Fig. 92: Installing Latching Bracket Assembly
Courtesy of GENERAL MOTORS CORP.

14. Install the latching bracket bushing using a hammer and a brass drift.

    Specification: Press the bushing into place until there is 0.000-0.051 mm (0.000-0.002 in) of shaft end play.

15. Tighten the pinion shaft lock bolt.

    Tighten:
    - For the 8.6 inch axle, tighten the pinion shaft lock bolt to 36 N.m (27 lb ft).
    - For the 9.5 inch axle, tighten the pinion shaft lock bolt to 50 N.m (37 lb ft).

16. Install the ring gear, if necessary. Refer to **Drive Pinion and Ring Gear Replacement (8.6 Inch, 9.5 Inch Axle)** or **Drive Pinion and Ring Gear Replacement (9.75 Inch Axle)** or **Drive Pinion and Ring Gear Replacement (10.5 Inch Axle)** in Rear Drive Axle.

cardiagn.com

LOCKING DIFFERENTIAL ASSEMBLE (10.5 INCH AXLE)

IMPORTANT: The left and right side gear backlash and thrust block thickness measurement must be completed before the components of the differential can be assembled.

1. Install the right side differential side gear shim into the right differential case half.

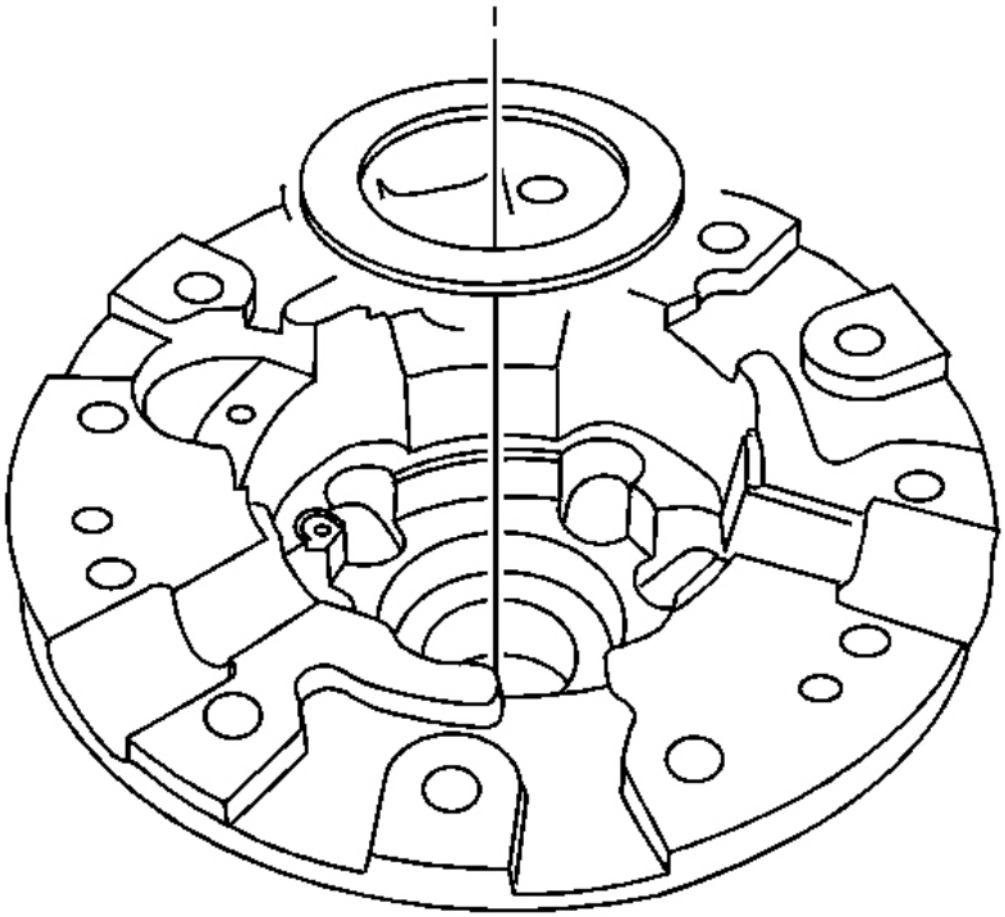

Fig. 93: View Of Right Side Locking Differential Clutch Disc Thrust Washer
Courtesy of GENERAL MOTORS CORP.

2. Install the locking differential side gear cam unit and clutch disc assembly.

cardiagn.com

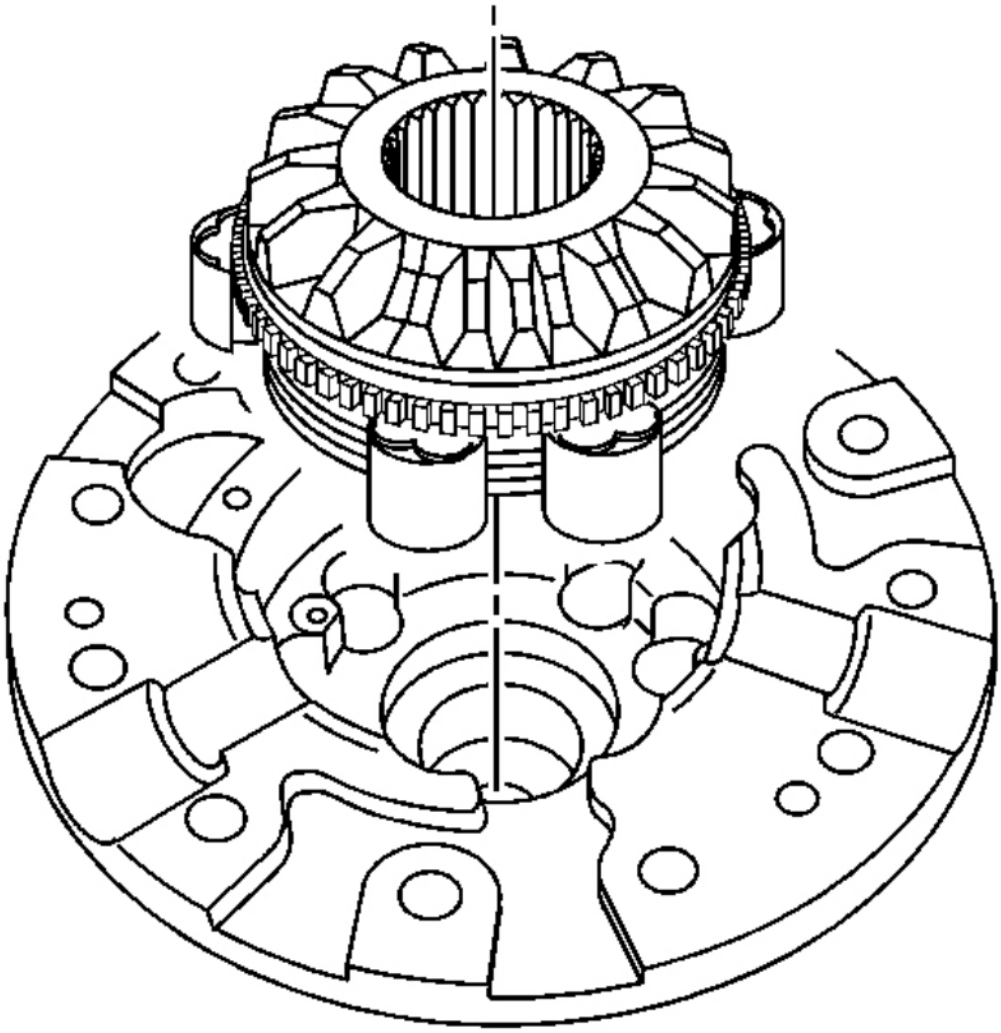

Fig. 94: View Of Right Side Cam Unit & Clutch Plate Assembly
Courtesy of GENERAL MOTORS CORP.

3. Install the latching bracket and spring assembly.

cardiagn.com

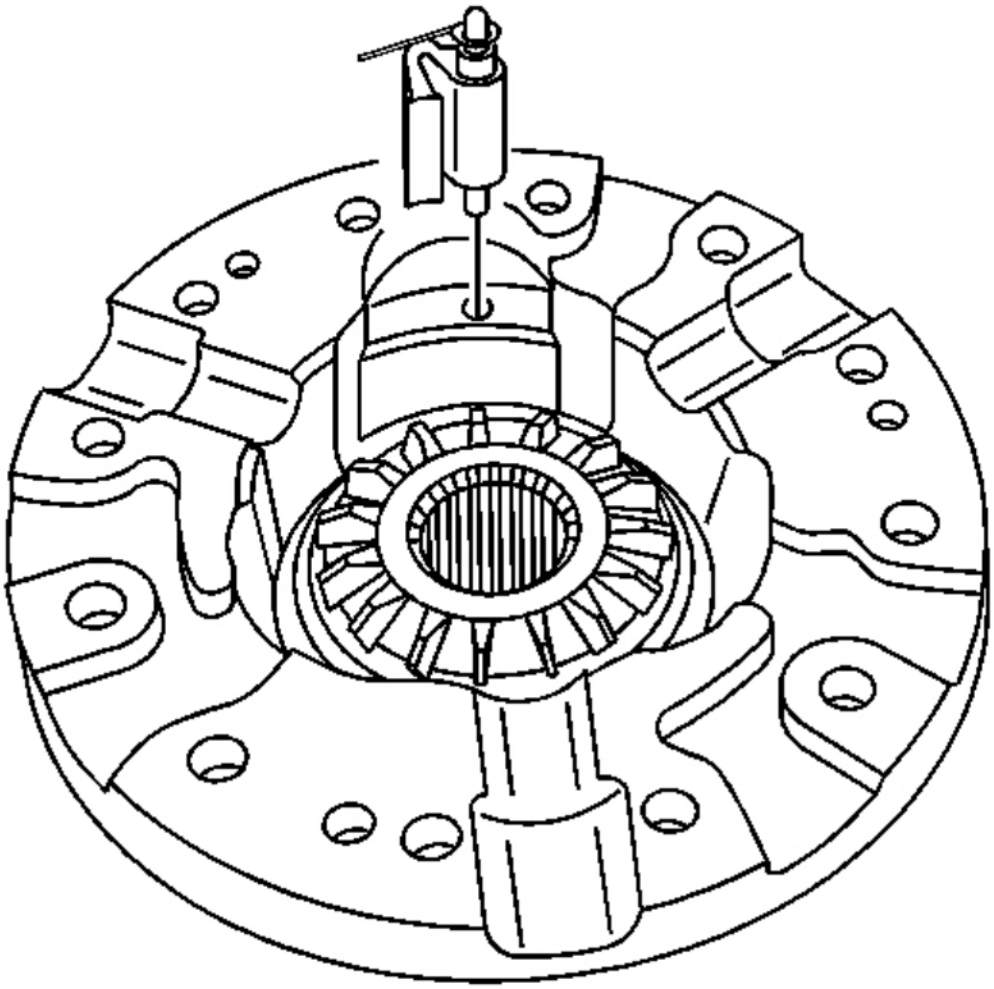

Fig. 95: Installing Latching Bracket & Spring Assembly
Courtesy of GENERAL MOTORS CORP.

4. Install the governor assembly.

cardiagn.com

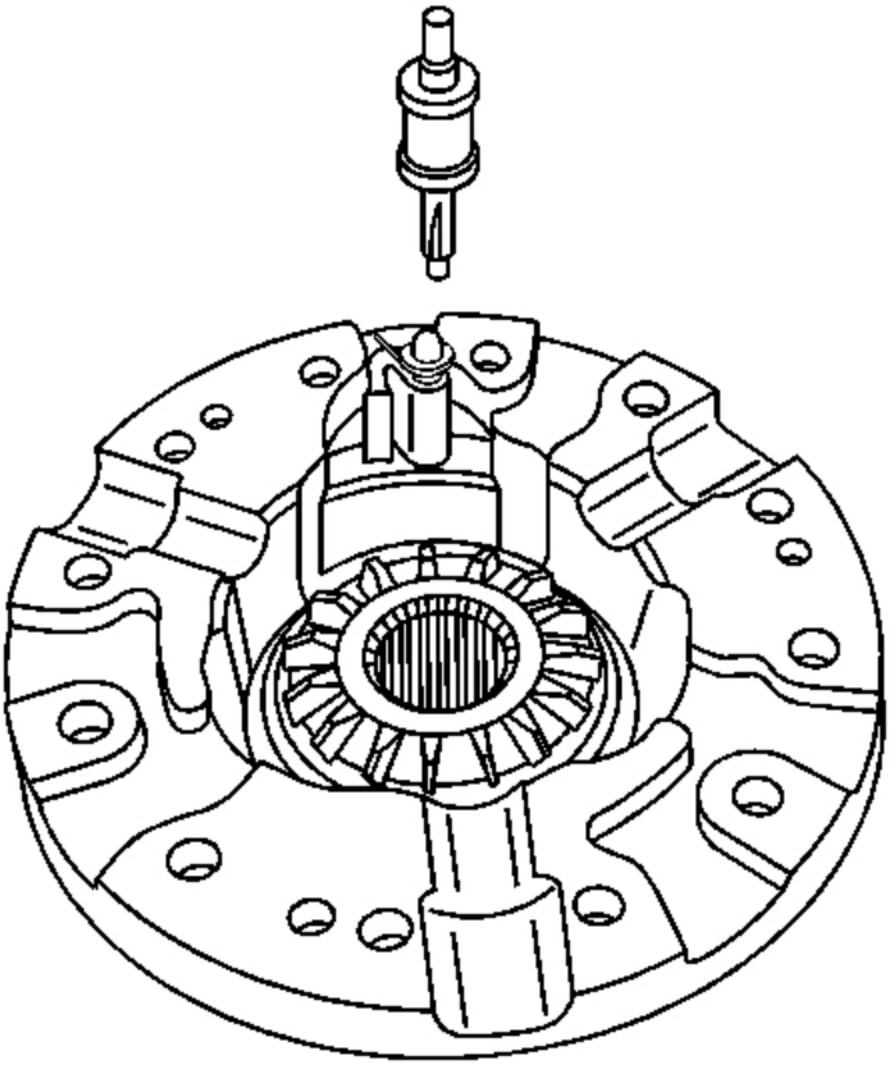

Fig. 96: Installing Governor Assembly
Courtesy of GENERAL MOTORS CORP.

5. Position the straight end of the latching bracket spring over the governor assembly shaft.

cardiagn.com

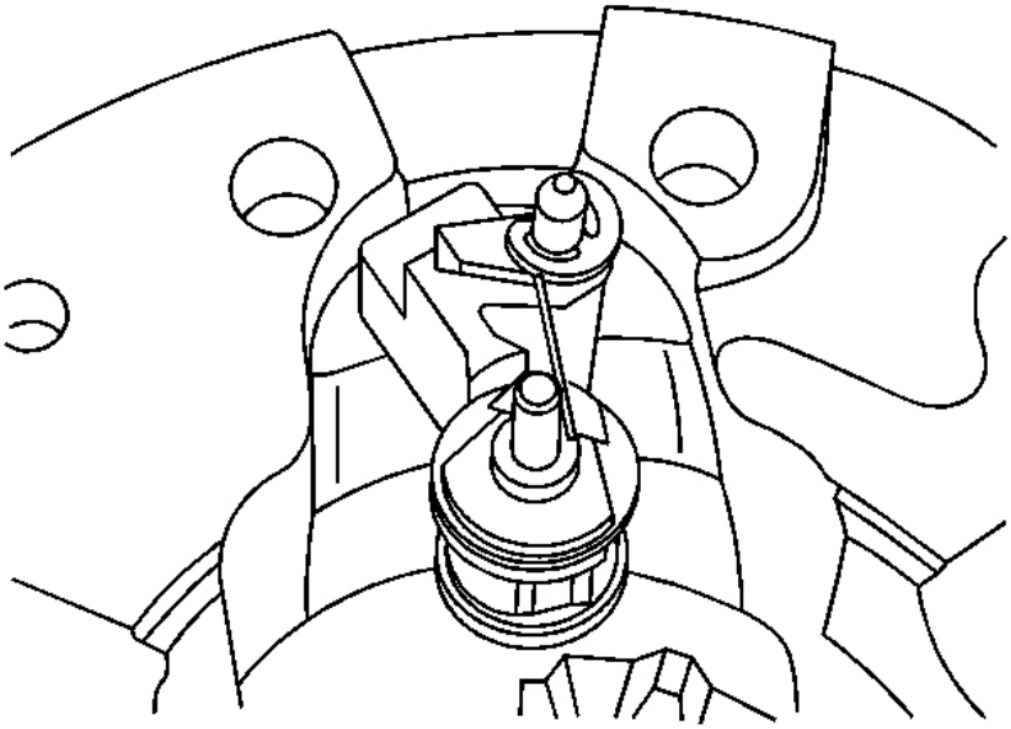

Fig. 97: Positioning Straight End Of Latching Bracket Spring Over Governor Assembly Shaft
Courtesy of GENERAL MOTORS CORP.

6. Install the locking differential spider, the differential pinion gears, and the differential pinion gear thrust washers into the differential case.

cardiagn.com

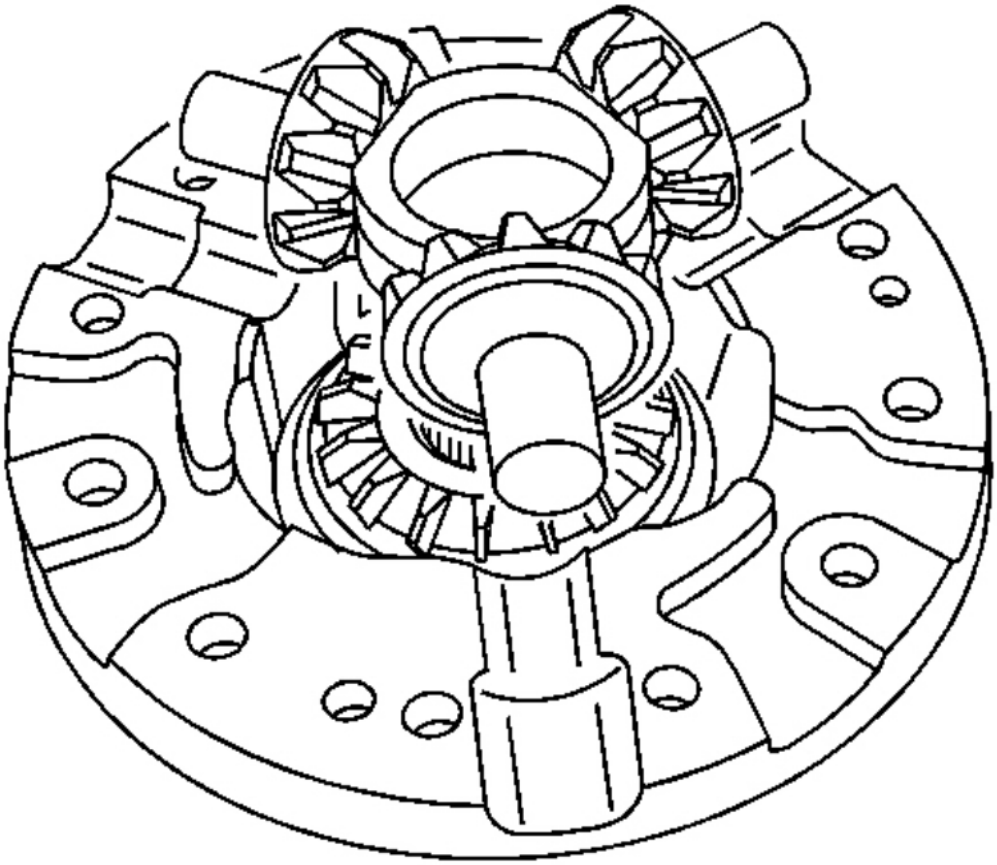

Fig. 98: View Of Locking Differential Spider, Differential Pinion Gears & Thrust Washers (Right Side)
Courtesy of GENERAL MOTORS CORP.

7. Install the thrust block.

cardiagn.com

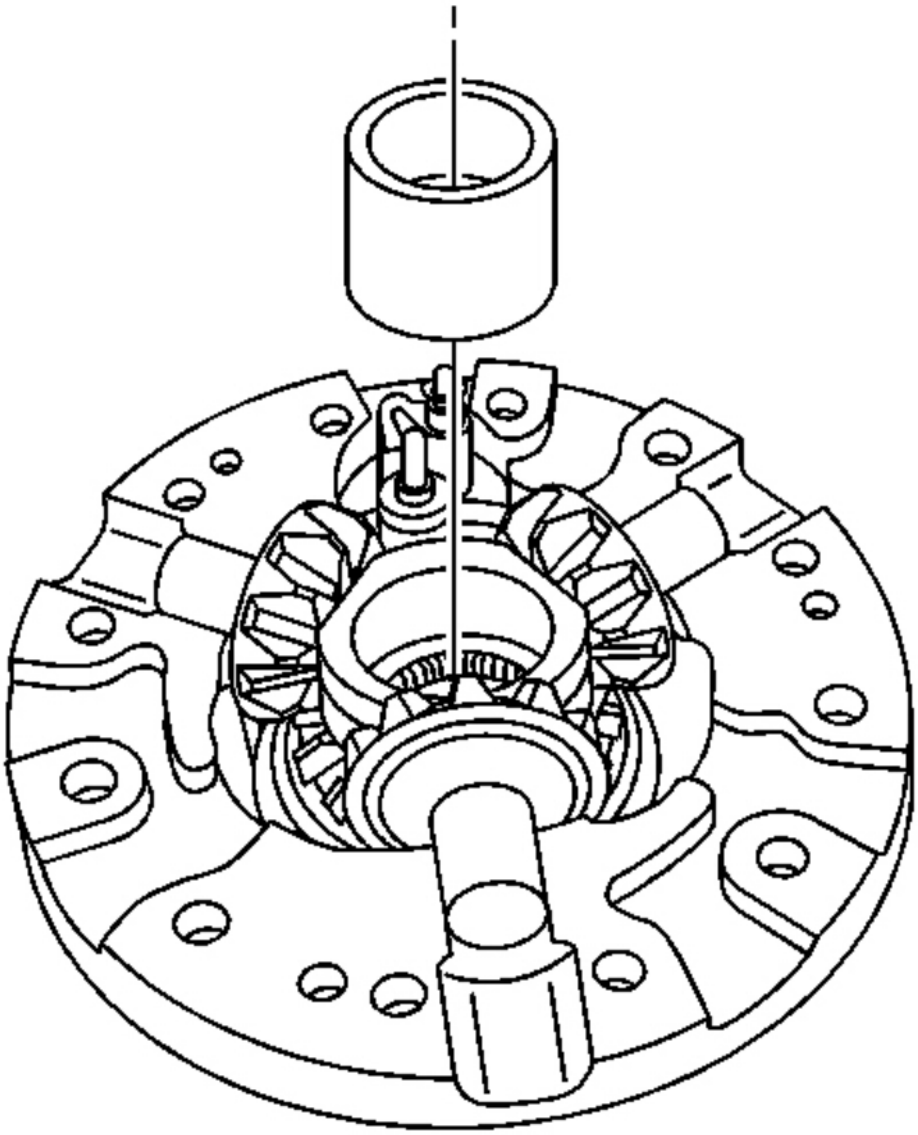

Fig. 99: View Of Thrust Block
Courtesy of GENERAL MOTORS CORP.

8. Install the left side differential side gear shim into the left differential case half.

cardiagn.com

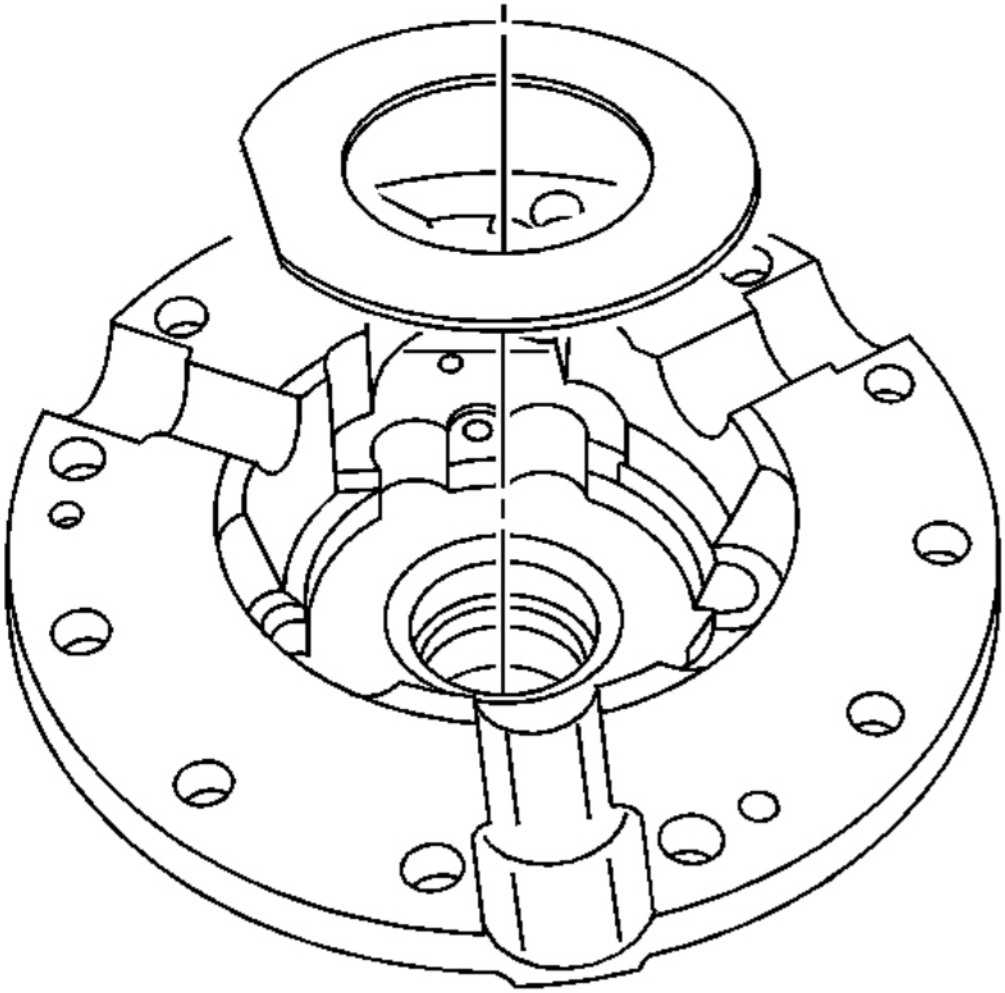

Fig. 100: View Of Left Side Gear Thrust Washer
Courtesy of GENERAL MOTORS CORP.

9. Install the left side clutch disc assembly.

cardiagn.com

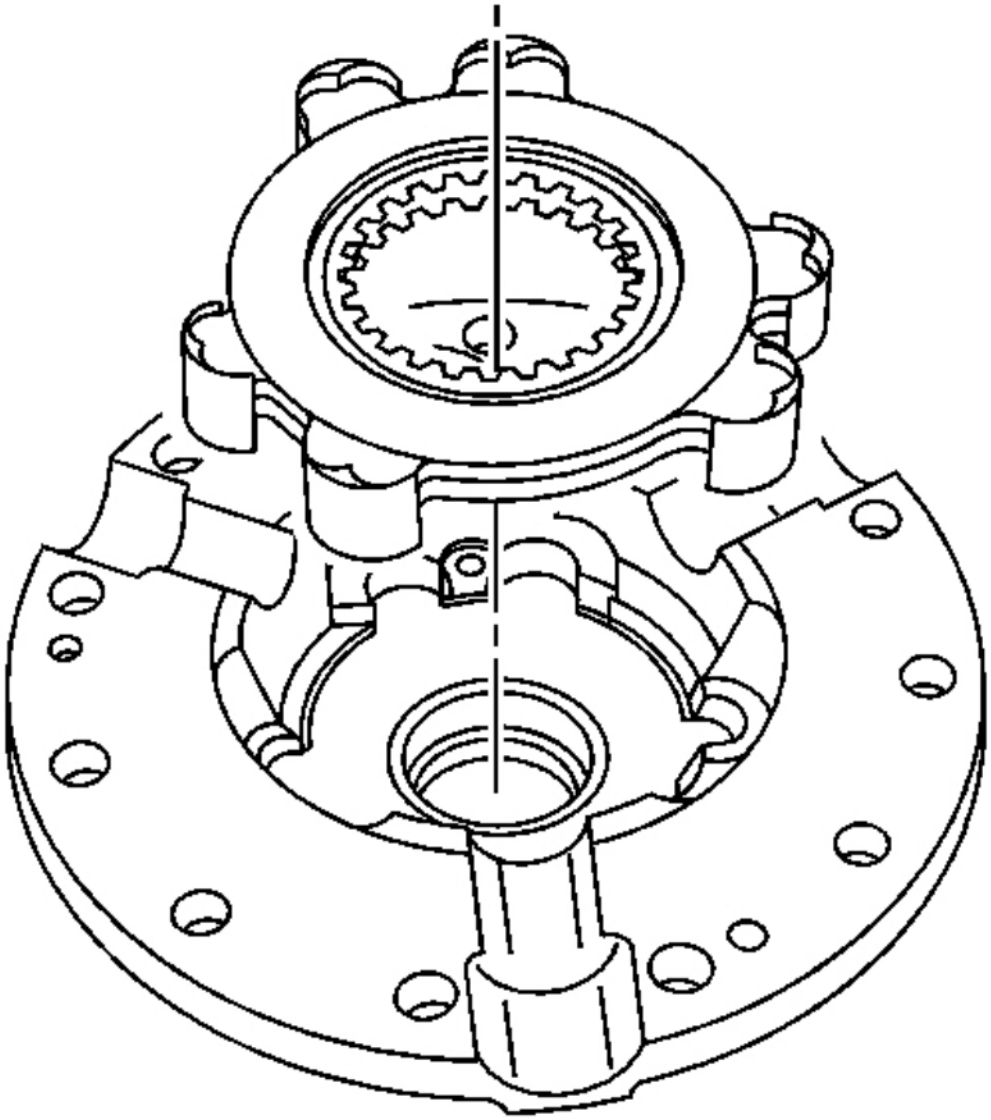

Fig. 101: View Of Left Side Clutch Disc Assembly
Courtesy of GENERAL MOTORS CORP.

10. Install the locking differential side gear.

cardiagn.com

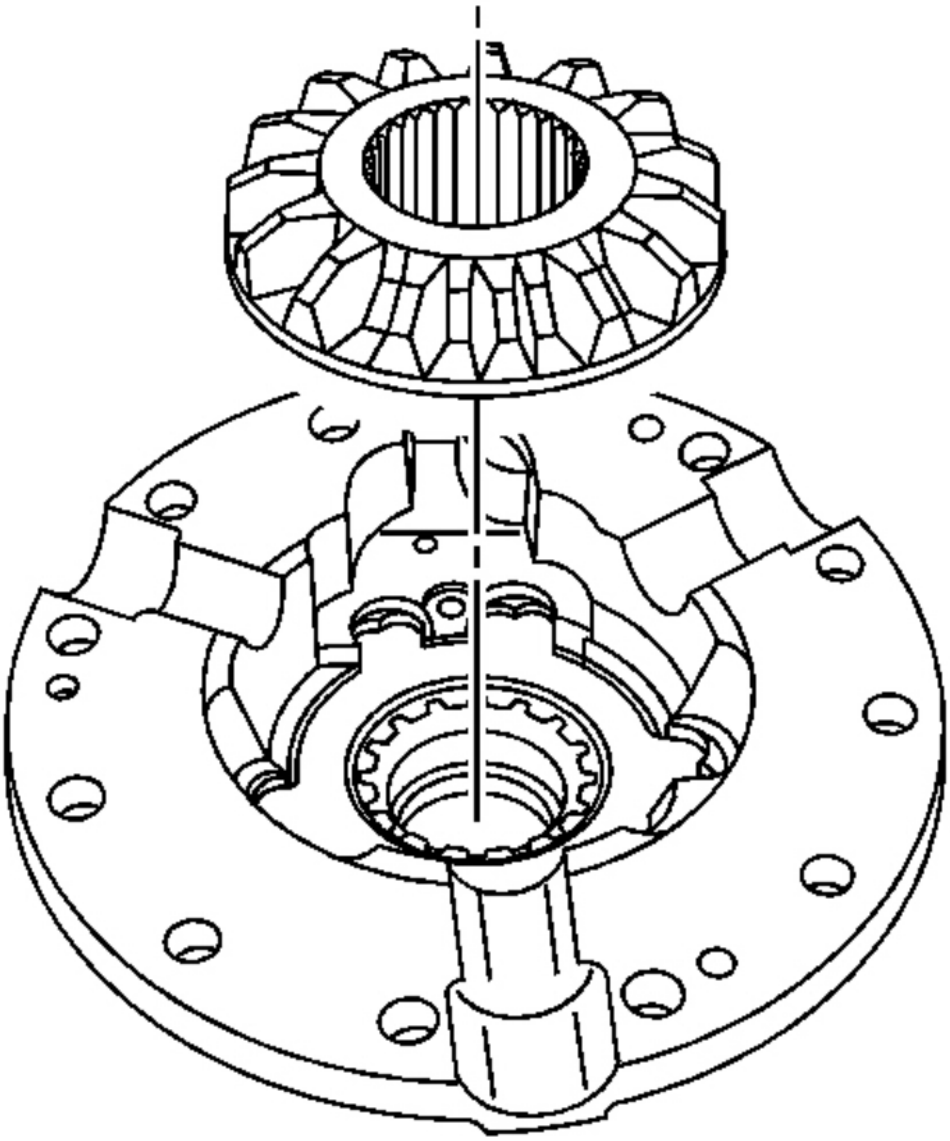

Fig. 102: View Of Locking Differential Side Gear
Courtesy of GENERAL MOTORS CORP.

11. Install the left case half to the right case half.

    Hold the left side locking differential side gear and clutch disc assembly in the left side case half.

cardiagn.com

Align the governor and latching bracket assembly shaft with the holes in the left case half.

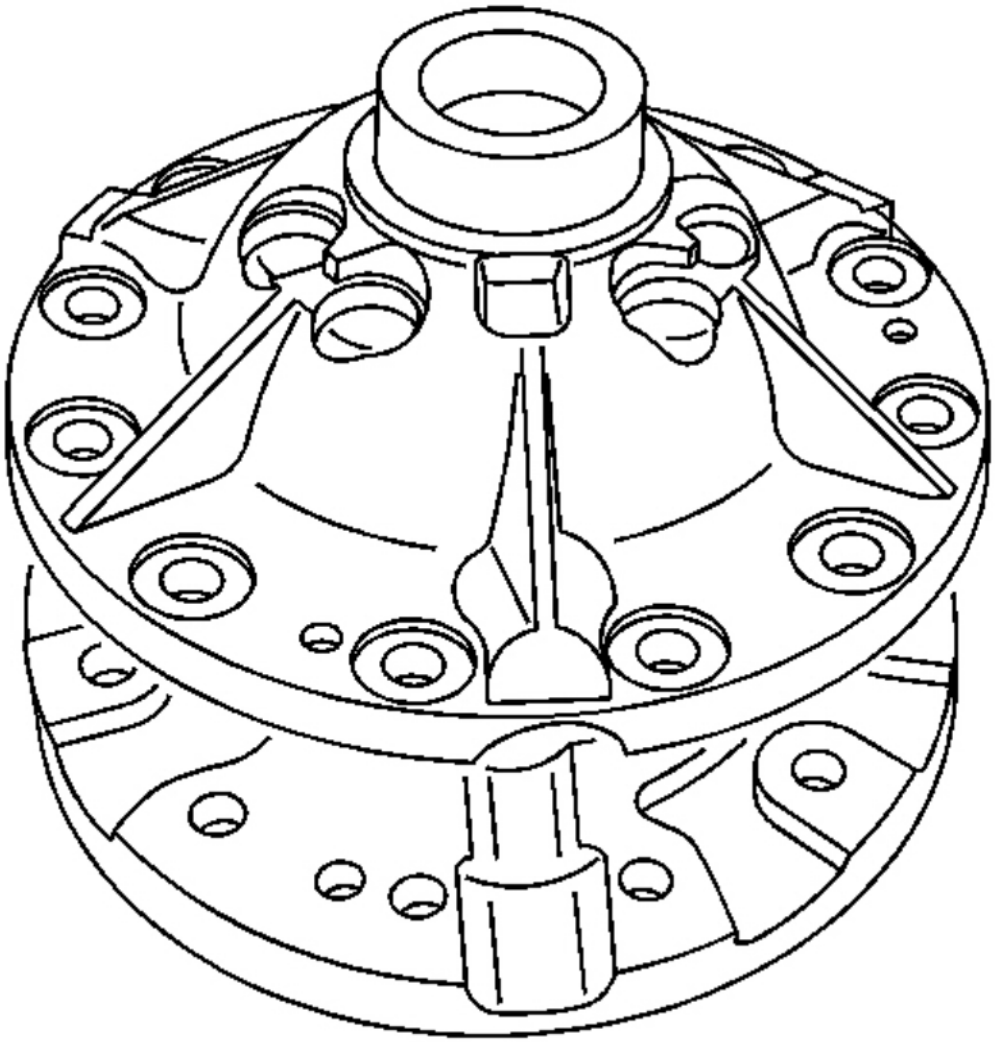

Fig. 103: Installing Left Case Half To Right Case Half
Courtesy of GENERAL MOTORS CORP.

12. Turn the differential case over onto the left case half.

NOTE: **Refer to Fastener Notice in Cautions and Notices.**

13. Install the differential case screws.

cardiagn.com

Tighten: Tighten the differential case screws to 17 N.m (13 lb ft).

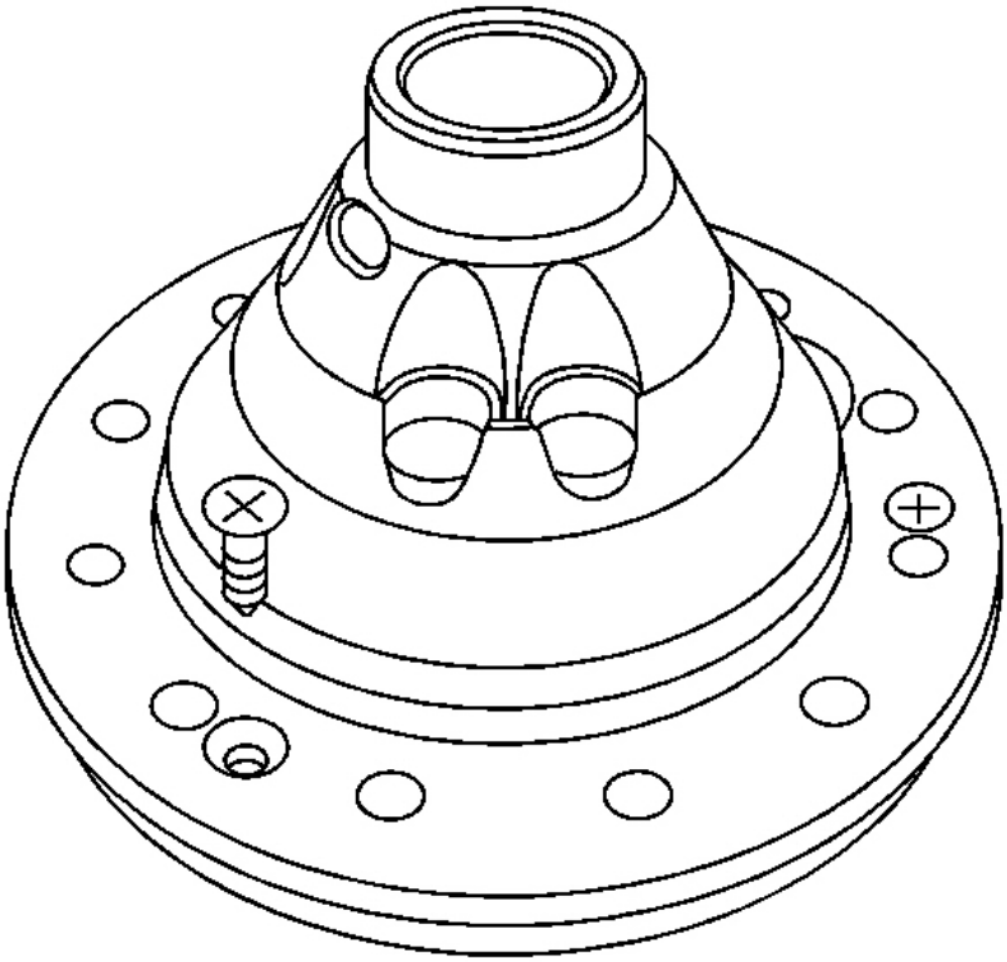

Fig. 104: View Of Differential Case Screws
Courtesy of GENERAL MOTORS CORP.

14. Install the ring gear. Refer to **Drive Pinion and Ring Gear Replacement (8.6 Inch, 9.5 Inch Axle)** or **Drive Pinion and Ring Gear Replacement (9.75 Inch Axle)** or **Drive Pinion and Ring Gear Replacement (10.5 Inch Axle)** .
15. Install the differential side bearings. Refer to **Differential Side Bearings Replacement (All Except 9.75 Inch Axle)** or **Differential Side Bearings Replacement (9.75 Inch Axle)** .

DESCRIPTION AND OPERATION

cardiagn.com

LOCKING DIFFERENTIAL DESCRIPTION AND OPERATION

The locking differential consists of the following components:

- Differential case - 1 or 2 piece
- Locking differential spider - 2 piece case only
- Pinion gear shaft - 1 piece case only
- Differential pinion gear shaft lock bolt - 1 piece case only
- 2 clutch discs sets
- Locking differential side gear
- Thrust block
- Locking differential clutch disc guides
- Differential side gear shim
- Locking differential clutch disc thrust washer
- Locking differential governor
- Latching bracket
- Cam plate assembly
- Differential pinion gears
- Differential pinion gear thrust washers

The optional locking differential (RPO G80) enhances the traction capability of the rear axle by combining the characteristics of a limited-slip differential and the ability of the axle shafts to "lock" together when uneven traction surfaces exist. The differential accomplishes this in 2 ways. First by having a series of clutch plates at each side of the differential case to limit the amount of slippage between each wheel. Second, by using a mechanical locking mechanism to stop the rotation of the right differential side gear, or the left differential side gear on the 10.5 inch axle, in order to transfer the rotating torque of the wheel without traction to the wheel with traction. Each of these functions occur under different conditions.

Limited-Slip Function

Under normal conditions, when the differential is not locked, a small amount of limited-slip action occurs. The gear separating force developed in the right-hand (left-hand side on 10.5 inch axle) clutch pack is primarily responsible for this.

The operation of how the limited-slip function of the unit works can be explained when the vehicle makes a right-hand turn. Since the left wheel travels farther than the right wheel, it must rotate faster than the ring gear and differential case assembly. This results in the left axle and left side gear rotating faster than the differential case. The faster rotation of the left-side gear causes the pinion gears to rotate on the pinion shaft. This causes the right-side gear to rotate slower than the differential case.

Although the side gear spreading force produced by the pinion gears compresses the clutch packs, primarily the right side, the friction between the tires and the road surface is sufficient to overcome the friction of the clutch packs. This prevents the side gears from being held to the differential case.

cardiagn.com

Locking Function

Locking action occurs through the use of some special parts:

- A governor mechanism with 2 flyweights
- A latching bracket
- The left side cam plate and cam side gear

When the wheel-to-wheel speed difference is 100 RPM or more, the flyweights of the governor will fling out and one of them will contact an edge of the latching bracket. This happens because the left cam side gear and cam plate are rotating at a speed different, either slower or faster, than that of the ring gear and differential case assembly. The cam plate has teeth on its outer diameter surface in mesh with teeth on the shaft of the governor.

As the side gear rotates at a speed different than that of the differential case, the shaft of the governor rotates with enough speed to force the flyweights outward against spring tension. One of the flyweights catches its edge on the closest edge of the latching bracket, which is stationary in the differential case. This latching process triggers a chain of events.

When the governor latches, it stops rotating. A small friction clutch inside the governor allows rotation, with resistance, of the governor shaft while one flyweight is held to the differential case through the latching bracket. The purpose of the governor's latching action is to slow the rotation of the cam plate as compared to the cam side gear. This will cause the cam plate to move out of its detent position.

The cam plate normally is held in its detent position by a small wave spring and detent humps resting in matching notches of the cam side gear. At this point, the ramps of the cam plate ride up on the ramps of the cam side gear, and the cam plate compresses the left clutch pack with a self-energizing action.

As the left clutch pack is compressed, it pushes the cam plate and cam side gear slightly toward the right side of the differential case. This movement of the cam side gear pushes the thrust block which compresses the right-hand side gear clutch pack.

At this point, the force of the self-energizing clutches and the side gear separating force combine to hold the side gears to the differential case in the locking stage.

The entire locking process occurs in less than 1 second. The process works with either the left or right wheel spinning, due to the design of the governor and cam mechanism. A torque reversal of any kind will unlatch the governor, causing the cam plate to ride back down to its detent position. Cornering or deceleration during a transmission shift will cause a torque reversal of this type. The differential unit returns to its limited-slip function.

The self-energizing process would not occur if it were not for the action of one of the left clutch discs. This energizing disc provides the holding force of the ramping action to occur. It is the only disc which is splined to the cam plate itself. The other splined discs fit on the cam side gear.

If the rotating speed of the ring gear and differential case assembly is high enough, the latching bracket will pivot due to centrifugal force. This will move the flyweights so that no locking is permitted. During vehicle driving, this happens at approximately 32 km/h (20 mph) and continues at faster speeds.

cardiagn.com

When comparing the effectiveness of the locking differential, in terms of percent-of-grade capability to open and limited-slip units, the locking differential has nearly 3 times the potential of the limited-slip unit under the same conditions.

Locking Differential Torque-Limiting Disc

The locking differential design was modified in mid-1986 to include a load-limiting feature to reduce the chance of breaking an axle shaft under abusive driving conditions. The number of tangs on the energizing disc in the left-hand clutch pack was reduced allowing these tangs to shear in the event of a high-torque engagement of the differential locking mechanism.

At the time of failure of the load-limiting disc, there will be a loud bang in the rear axle and the differential will operate as a standard differential with some limited-slip action of the clutch packs at low torques.

The service procedure, when the disc tangs shear, involves replacing the left-hand clutch plates and the wave spring. It is also necessary to examine the axle shafts for twisting because at high torques it is possible to not only shear the load-limiting disc, but to also twist the axle shafts.

LIMITED SLIP DIFFERENTIAL DESCRIPTION AND OPERATION

The locking differential consists of the following components:

- Differential case
- Pinion gear shaft
- Differential pinion gear shaft lock pin
- 2 clutch discs sets
- Differential side gears
- Differential clutch disc guides
- Differential side gear shim
- Differential clutch disc thrust washer
- Differential pinion gears
- Differential pinion gear thrust washers

In a conventional differential, if one wheel spins, the opposite wheel will generate only as much torque as the wheel with the least amount of traction. In a limited slip differential, part of the ring gear torque is transmitted through clutch packs which contain multiple discs. In operation, two forces engage the limited slip differential's clutches. The first is the pre-load force within the clutch packs. The second is the separating forces generated by the side gears as torque is applied through the ring gear. The limited slip design provides the action needed for turning corners and for driving in a straight line when traction is uneven. When one wheel loses traction, the clutch packs transfer additional torque to wheel having the most traction. Limited slip differential resist wheel spin on bumpy roads and provides greater pulling power when one wheel loses traction. If both wheels slip due to unequal traction, limited slip operation is normal. Also in extreme cases of unequal traction, the wheel with the least amount of traction may spin.

SPECIAL TOOLS AND EQUIPMENT

cardiagn.com

SPECIAL TOOLS

Special Tools

Illustration	Tool Number/Description
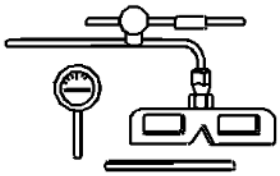	J 7872 Magnetic Base Dial Indicator
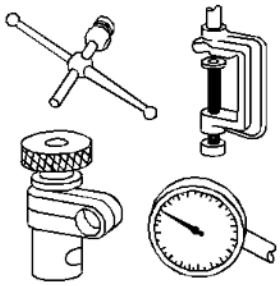	J 8001 Dial Indicator Set
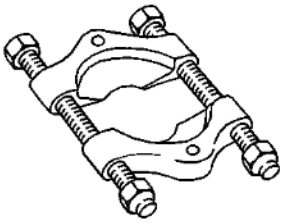	J 22912-O1 Split Plate Bearing Puller
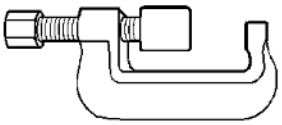	J 26252 Locking Differential Governor Remover

cardiagn.com

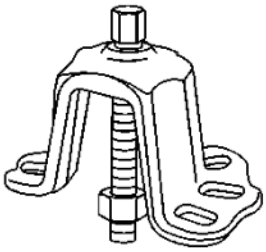	J 28733-B Front/Rear Spindle Remover
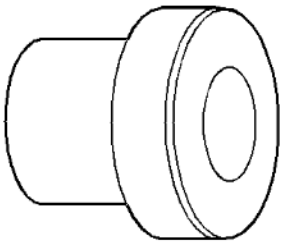	J 29710 Differential Side Bearing Installer
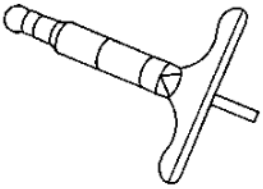	J 34672 Depth Micrometer
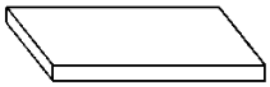	J 34673 Flat Gage Bar
	J 45232 Differential Side Bearing Adjuster Needle Bearing Installer - LH

cardiagn.com

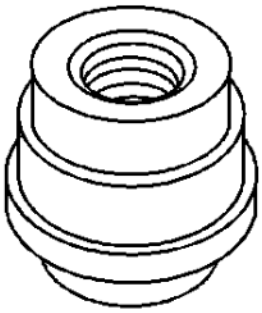	
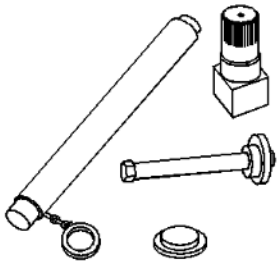	J 45709 Limited Slip Differential Overhaul Kit - Dana 248

cardiagn.com