Service.

Self-Study Programme 300

6-speed automatic transmission 09D

Design and function

Compared to the 5-speed automatic transmission, the 09D 6-speed automatic transmission provides:

- a reduction in fuel consumption,
- a reduction in exhaust emissions,
- improved acceleration values and
- a reduction in noise.

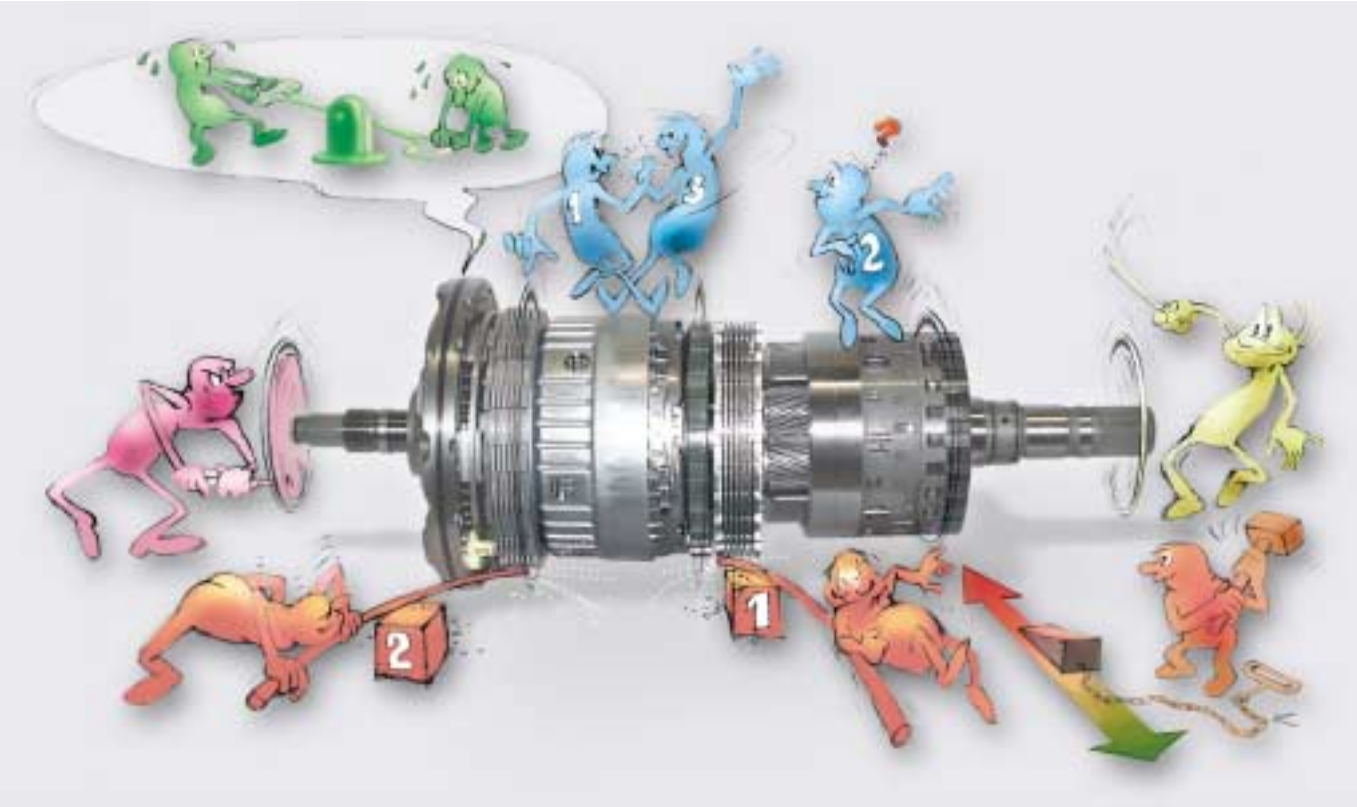

300_U2

This self-study programme provides you with the design and function of the new 6-speed automatic transmission which is installed in the Touareg.

NEW

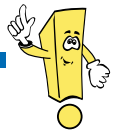

Caution Note

The Self-Study Programme describes the design and function of new developments! The contents are not updated.

Please always refer to the relevant service literature for up-to-date inspection, adjustment and repair instructions.

At a glance

Introduction 4

Selector lever 6

Design of gearbox 12

System overview 28

Sensors 30

Actuators 42

Check your knowledge 51

Operational diagram 52

Self-diagnosis. 54

Service 55

Introduction

The 09D 6-speed automatic transmission

was developed at the famous Japanese manufacturer of automatic transmissions, AISIN Co., LTD, where it is manufactured.
In the development of the control unit software, the years of experience that Volkswagen engineers have had with fuzzy logic-controlled driving programmes that depend on driving situations and hindrances has been a determining factor.
This 6-speed automatic transmission, which has a very compact construction, is being used for the first time in the Volkswagen Touareg.

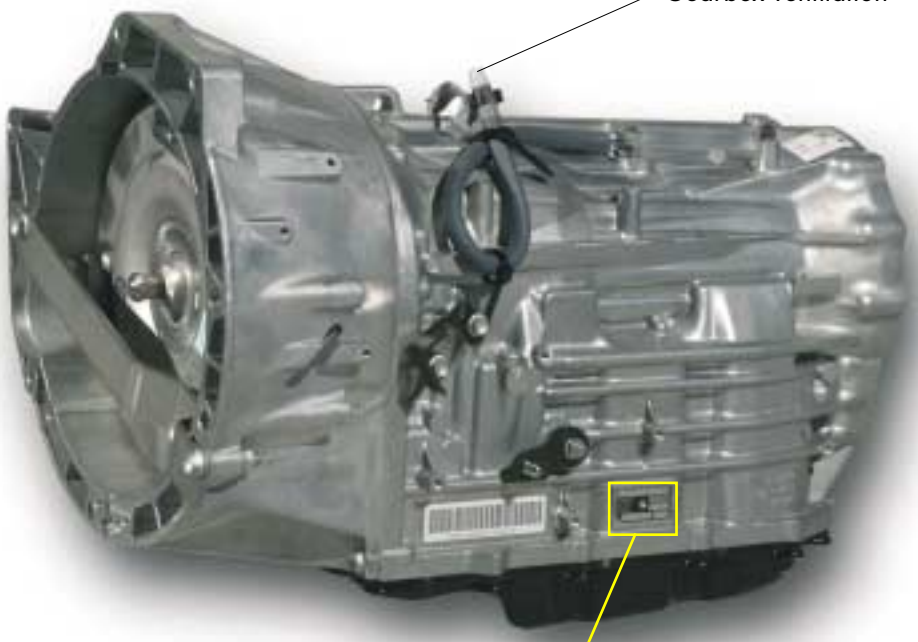

300_002

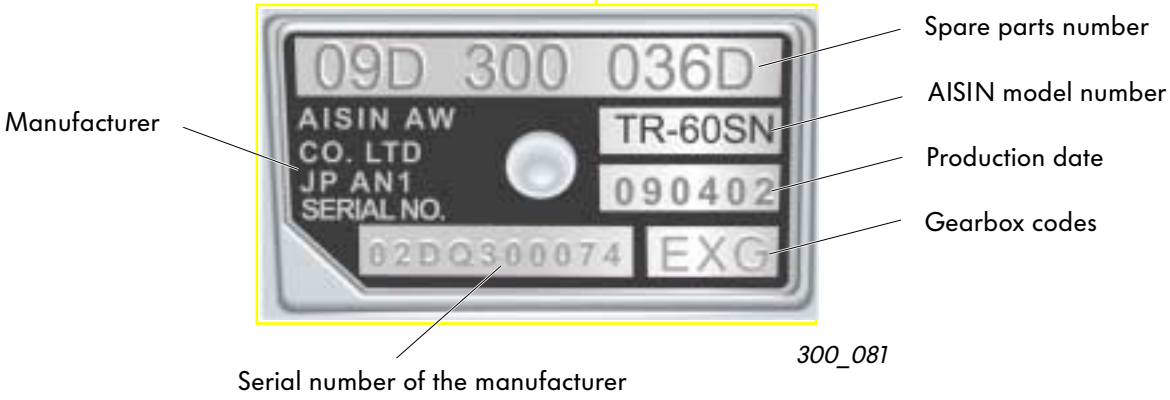

300_081

Special gearbox features include:

- fuzzy logic-controlled switching programmes that depend on driver and driving situations as well as switching programmes that depend on driving impedance
- a controlled converter bypass coupling
- lifetime ATF filling
- The hill-holder function secures the vehicle from rolling back and permits hills to be approached comfortably.
- selector lever and steering wheel Tiptronic switches

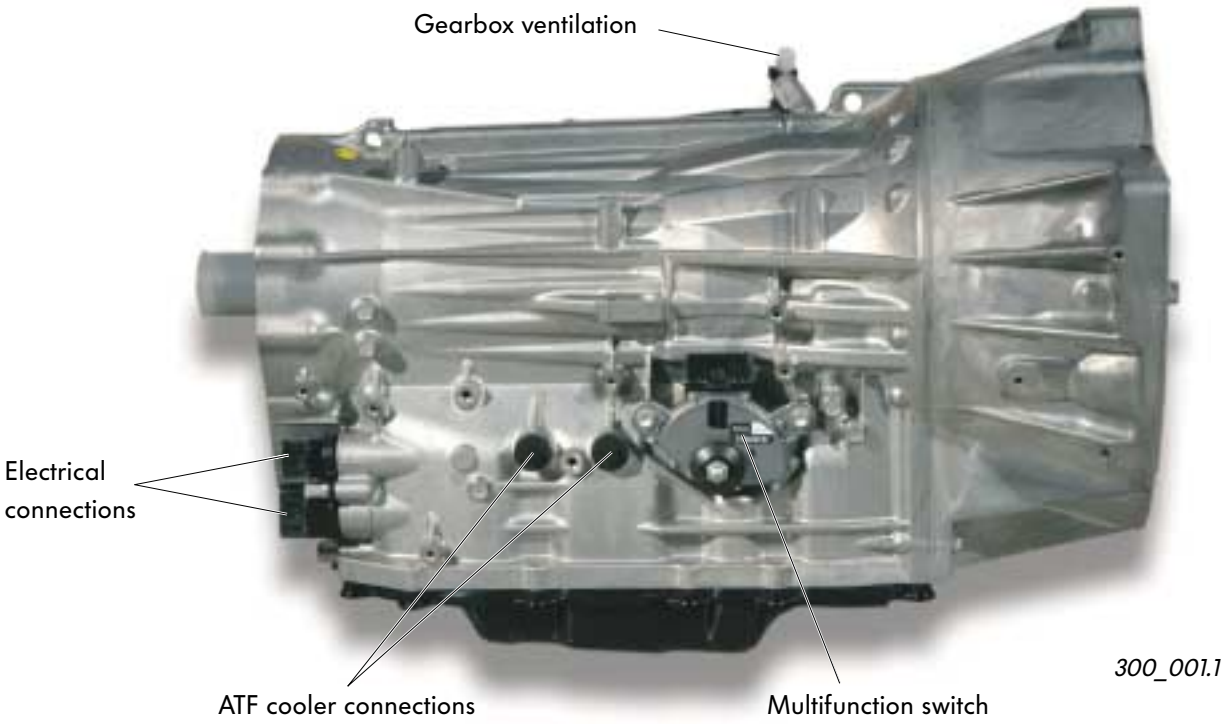

Technical data

Volkswagen designation		AG6 - 09D
Gearbox codes	with V10-TDI-engine with V6 engine	EXG EXL
ATF		Lifetime filling
ATF filling amount	with V10-TDI-engine with V6 engine	12 litres 9.6 litres
Maximum torque transmission		750 Nm
Weight	depending on engine including ATF	97 to 110 kg
Emergency run	in case of defective control unit	3rd gear and R gear

Selector lever

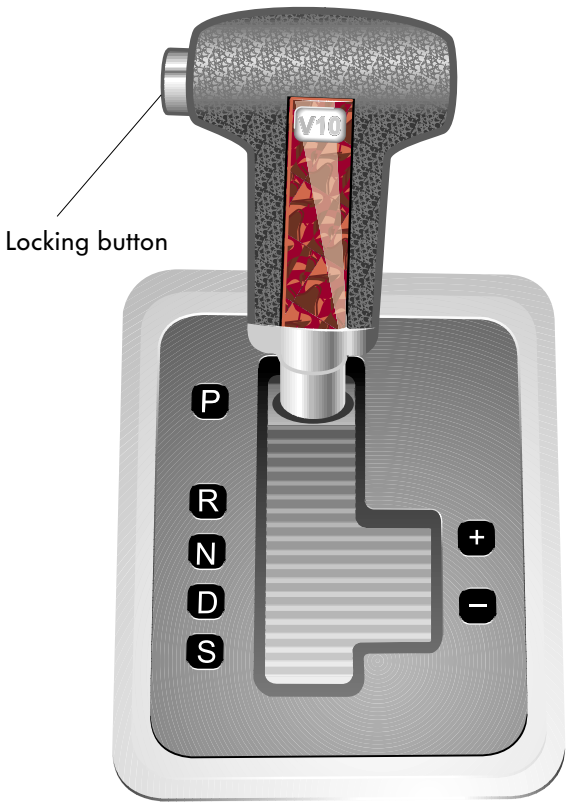

300_003

The selector lever positions

P - Park
Before the selector lever can be moved out of the Park position, the ignition must be switched on. In addition, the foot brake and the locking button on the selector lever must be pressed.

R - Reverse
The locking button on the selector lever must be pressed to switch into reverse.

N - Neutral
The gearbox is idling in this position.
No power is being transmitted to the wheels.
If the selector lever is in this position for a long time, the foot brake must be pressed again to activate the lever.

D - Drive
In the Drive position, the forwards gears are switched automatically.

S - Sport
The control unit selects gears automatically according to a "sporty" switching characteristic curve.
The individual gears are extended further.

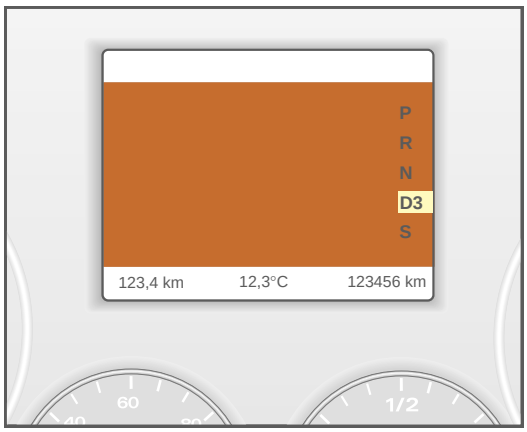

300_004

Selector lever position and gear display in dash panel insert

After the ignition is switched on, the current selector lever position is displayed in the dash panel insert.
In positions "D" and "S", the gear selected in the gearbox is also displayed.

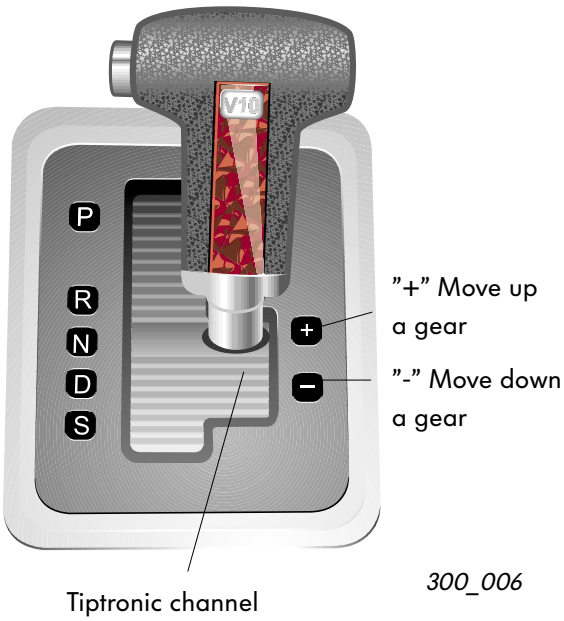

300_006

The Tiptronic

in the Touareg is available as a selector lever as well as a steering wheel switch.

Selector lever Tiptronic

The Tiptronic channel is reached by moving the selector lever to the right out of the "D" position. The control unit for the automatic gearbox thus enters the Tiptronic mode.

The driver can now actively select gears.

Steering wheel switches

300_036

Steering wheel - Tiptronic switches

The steering wheel switches offer an optimal ergonomic actuation for gear selection.
Here you use:

- the switch on the right to move up a gear. and
- the switch on the left to move down a gear.

If the selector lever is in the "D" or "S" position when the steering wheel switches are pressed, the automatic transmission control moves into Tiptronic mode.
Control automatically reverts to the previously selected "D" or "S" programme if the steering wheel switches are not pressed again.

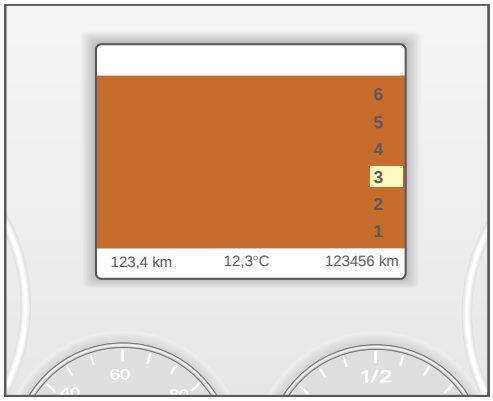

300_005

Gear display in the dash panel insert

The current gear is displayed in Tiptronic mode.

Selector lever

Selector lever lock and ignition key removal lock

Magnet for selector lever lock N110

This is located in the front on the selector lever frame.
It prevents the actuation of the selector lever from the positions "P" and "N" when the brake is not being applied.

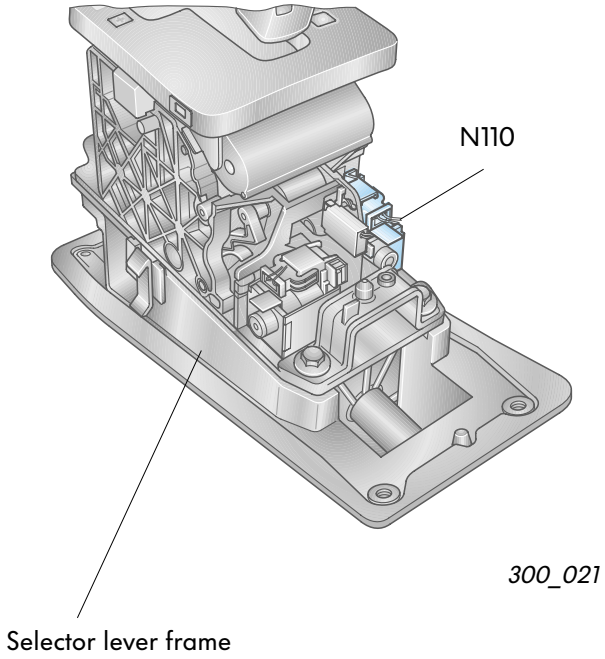

How it works

Once the ignition has been turned on, the magnet for the selector lever lock is put under current by the control unit for automatic transmission, thus blocking the selector lever.
If the control unit receives the signal "brake applied" via the CAN data bus, it cuts off current to the magnet and the selector lever can be moved.

Effects of a signal drop-out

If one of these two signals fails or if the magnet is faulty, the selector lever can be moved out of "P" and "N" without applying the brake – assuming the ignition is turned on.

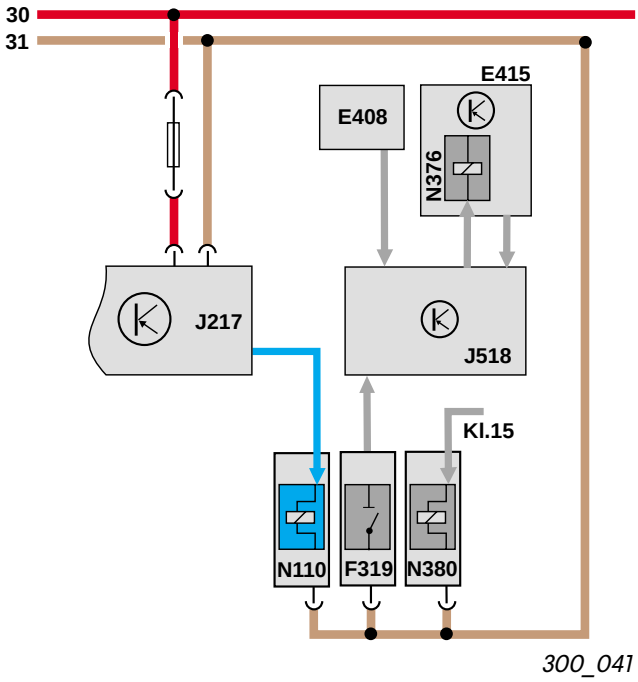

E408 - button for starting/stopping the engine
E415 - switch for access and start authorisation
F319 - switch for selector lever locked in P
J217 - control unit for automatic gearbox
J518 - switch for access and start authorisation
N110 - magnet for selector lever lock
N376 - magnet for ignition key removal lock
N380 - magnet for selector lever lock P

The magnet for selector lever lock ”P” N380

is at the selector lever frame, as is the magnet for the selector lever lock.
It prevents the selector lever from moving out of the ”P” position when the ignition is switched off. The ignition must be switched on to activate the lock button.

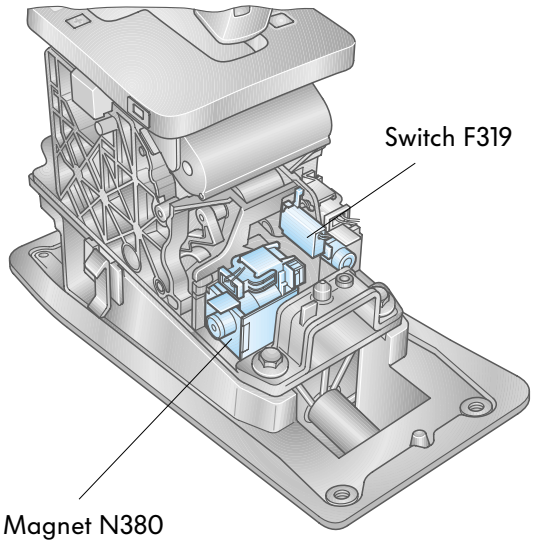

300_021

How it works

The magnet N380 is without power when the ignition is switched off, thus disabling the selector lever in the ”P” position.
After the ignition is switched on, the magnet N380 receives power from terminal 15 and the lock is lifted.
The switch F319 signals to the access and start authorisation control device that the selector lever is in the ”P” position.

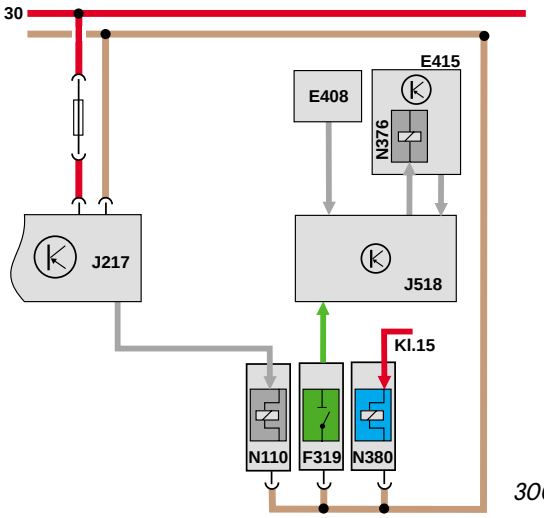

300_042

Effects of a signal drop-out

If one of the signals fails or the magnet for selector lever lock ”P” is defective, then the selector lever cannot be moved out of the ”P” position.

The disablement has to be manually unlocked for towing the vehicle.
For this purpose the centre console covering is to be removed and the magnet actuated by hand.

The selector lever has to be simultaneously moved out of the ”P” position.

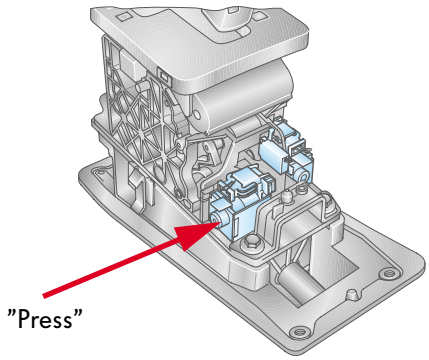

300_021

Selector lever

The magnet for ignition key removal lock N376

is located within the switch for access and start authorisation E415 and prevents the ignition key from being removed when the selector lever is in a driving position. The ignition key removal lock works electromechanically.

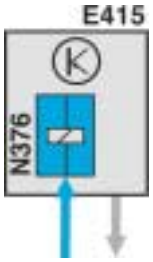

300_080

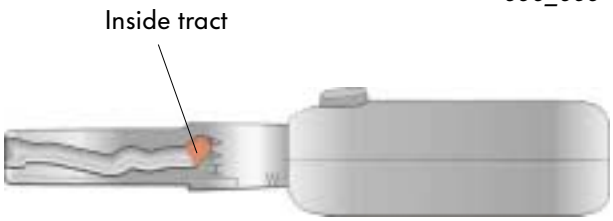

300_038

How it works

The magnet for the ignition key removal lock N376 contains two spring-loaded locking pins which engage into the inside tract of the inserted ignition key if the selector lever is not in the ”P” position (N376 without power).

The ignition key cannot be withdrawn.

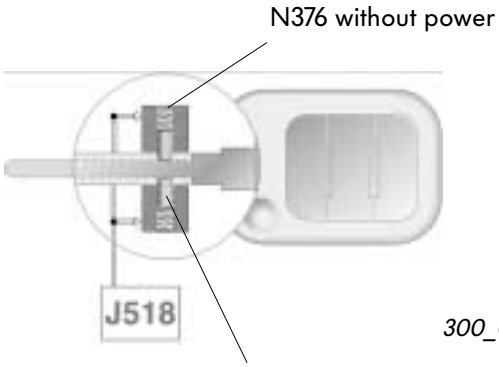

300_039

When the selector lever is in the 'P' position, a signal travels from the switch for the selector lever in ”P” F319 to the access and start authorisation control unit J518.
The control unit then sends current to the magnet for the ignition key removal lock N376.
The locking pins are pulled out by the magnets and thus removed from the extended inside tract of the ignition key.

The ignition key can be withdrawn.

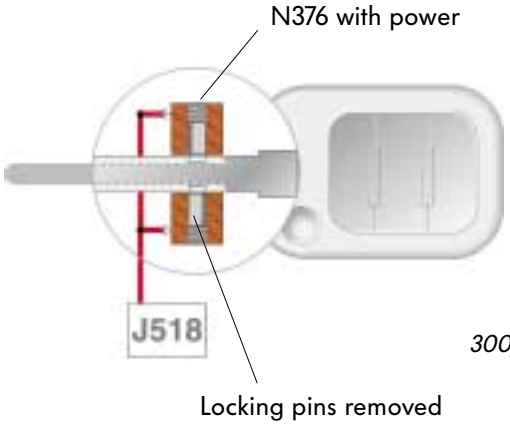

300_040

Electric circuitry

If the ignition is switched off and the selector lever is in the ”P” position, a signal travels from the switch F319 to the access and start authorisation control unit J518.
The control unit then sends current to the magnet for the ignition key removal lock N376.
The locking pins are removed.
The ignition key can be withdrawn.

If the selector lever is not in the ”P” position when the engine of a vehicle with start/stop buttons is switched off, the dash panel insert emits an optical and acoustical warning.
The driver is thus informed that the selector lever is not in the ”P” position.

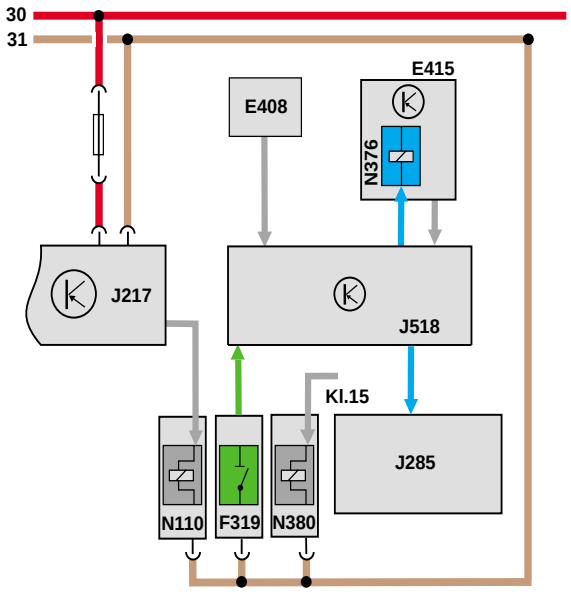

300_043

Effects of signal drop-out

The electromechanical lock cannot be released if either the signal from the selector lever to the control unit J518 or the signal from the control unit to the switch for access and start authorisation E415 fails.
The key cannot be withdrawn.

In these circumstances, the ignition lock has an

... emergency release for the ignition key.

Press the emergency release button with a pen or similar object to activate the emergency release for the ignition key.
While keeping the button pressed, turn the ignition key to the left and remove it.

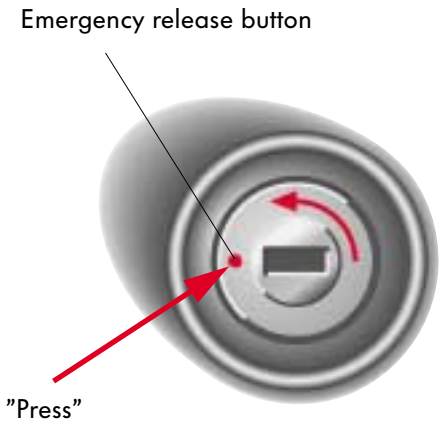

300_037

Design of gearbox

Fitting position of parts

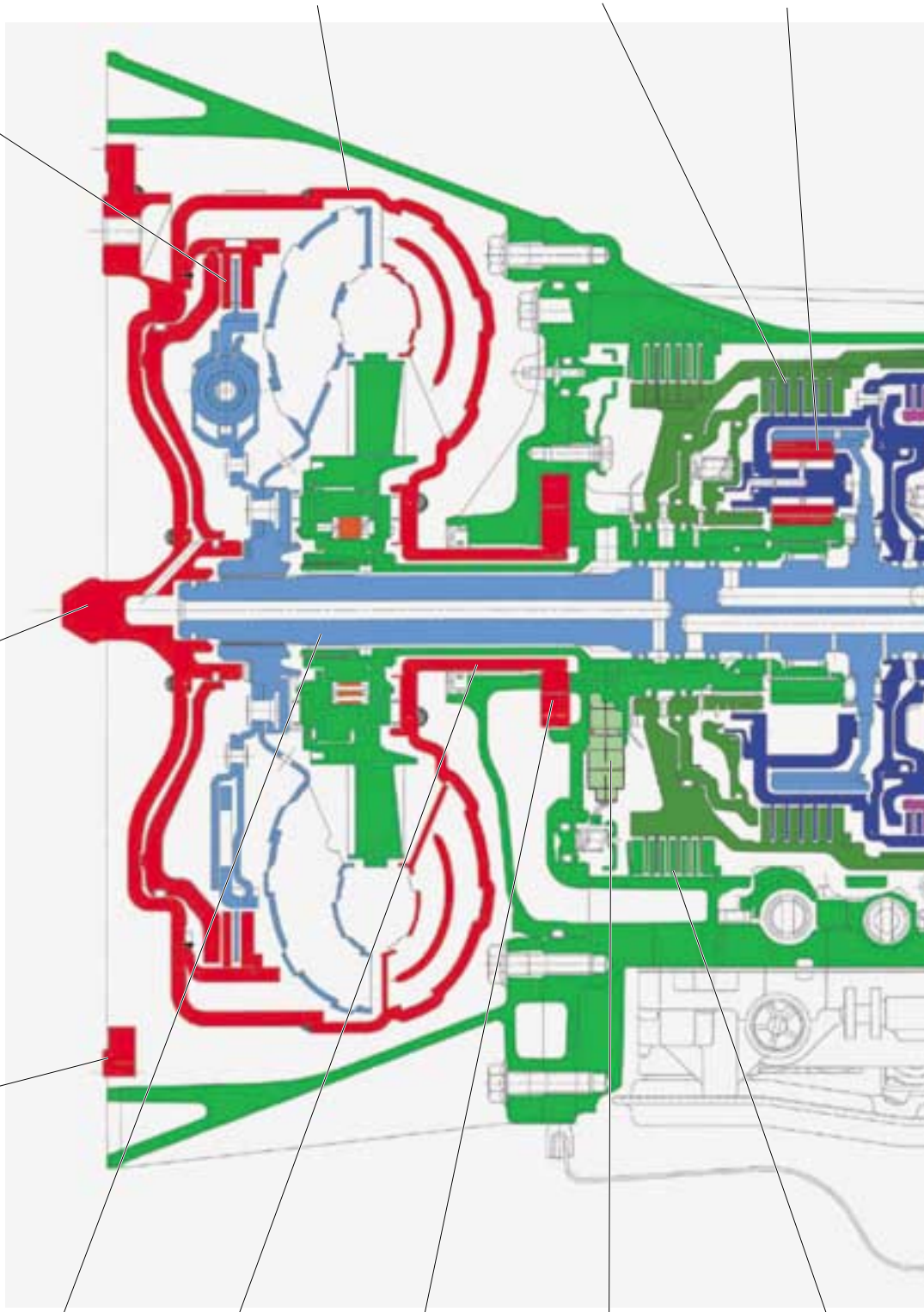

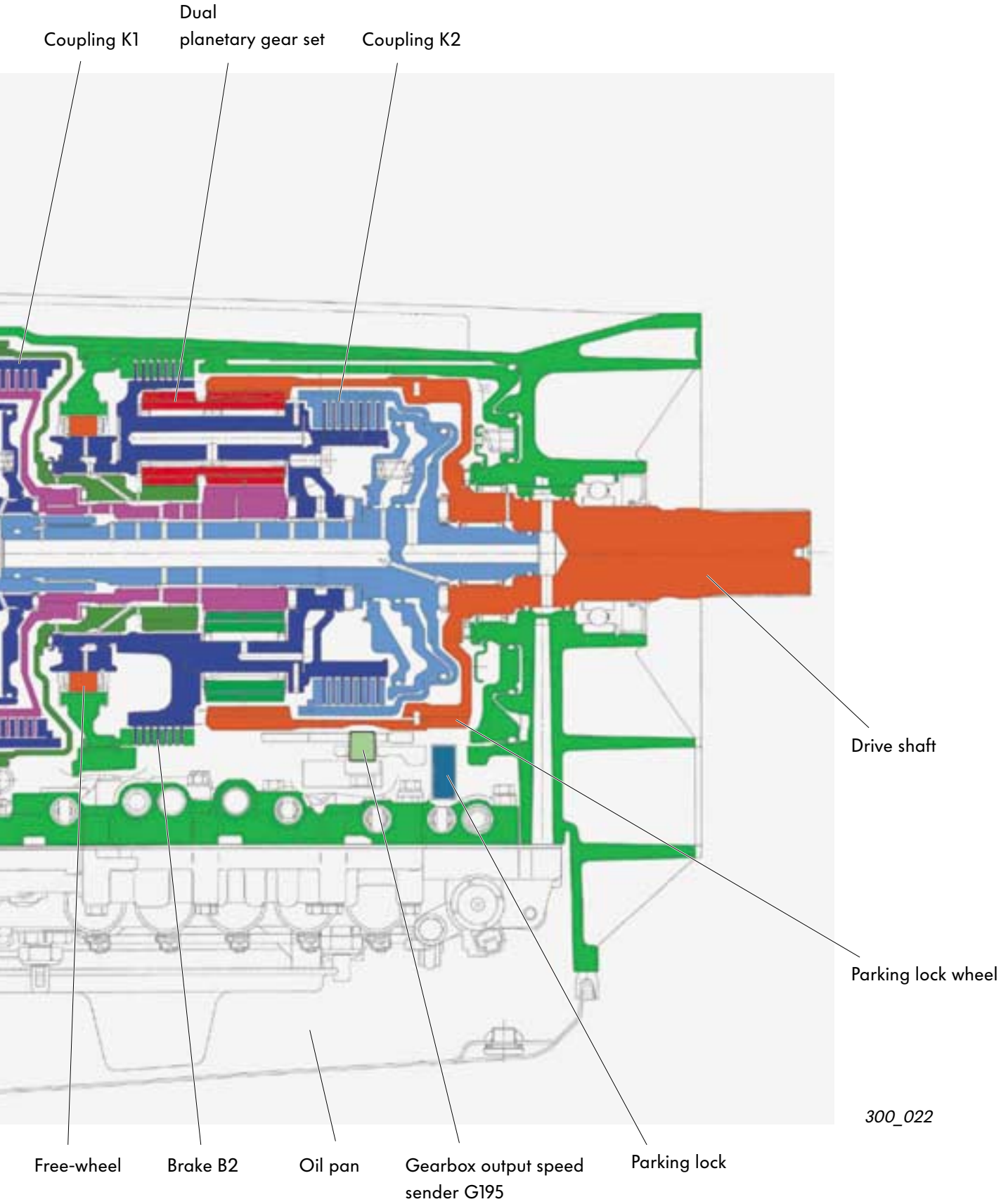
Coupling K1
Dual
planetary gear set
Coupling K2
Drive shaft
Parking lock wheel
300_022
Free-wheel
Brake B2
Oil pan
Gearbox output speed
sender G195
Parking lock

Design of gearbox

Introductory description of functions

The gearbox housing consists of an aluminium alloy.

The six forwards gears and the reverse gear are switched using a Lepelletier arrangement of the planetary gear sets.

To switch the gears,
- three multi-disc couplings,
- two multiple disc brakes and
- a free-wheel

are switched on or off using the electro-mechanic-hydraulic control unit in the control valve assembly.

The control unit for the automatic gearbox starts the switching of the gears and monitors the process for problems.
After the signals of the information senders (sensors), the actuators are activated.
Activation takes place depending on driver, driving situation and driving impedance switching programmes.

The gearbox is adapted to use with different engines (V10 or V6) in the Touareg using
- the number of installed disc pairs for the brakes and the couplings,
- the size of the torque converter and
- the geometric adaptation of the torque converter housing.

The transmissions of the individual gears remain the same for both engines.

A transfer gearbox flanged onto the gearbox distributes the torque to the axle drives.

Torque converter with converter bypass coupling and ATF pump

The hydromechanical torque converter serves as a starting element and increases the torque in the transforming area.

It is equipped with a converter bypass coupling. Starting at an engine speed of 1000 rpm, the control unit for the automatic gearbox can close this coupling.
This transfers the engine torque directly to the drive input shaft.

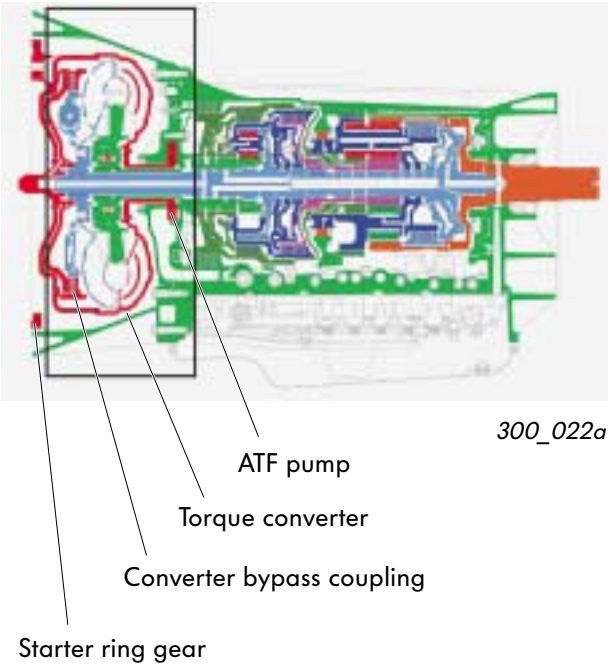

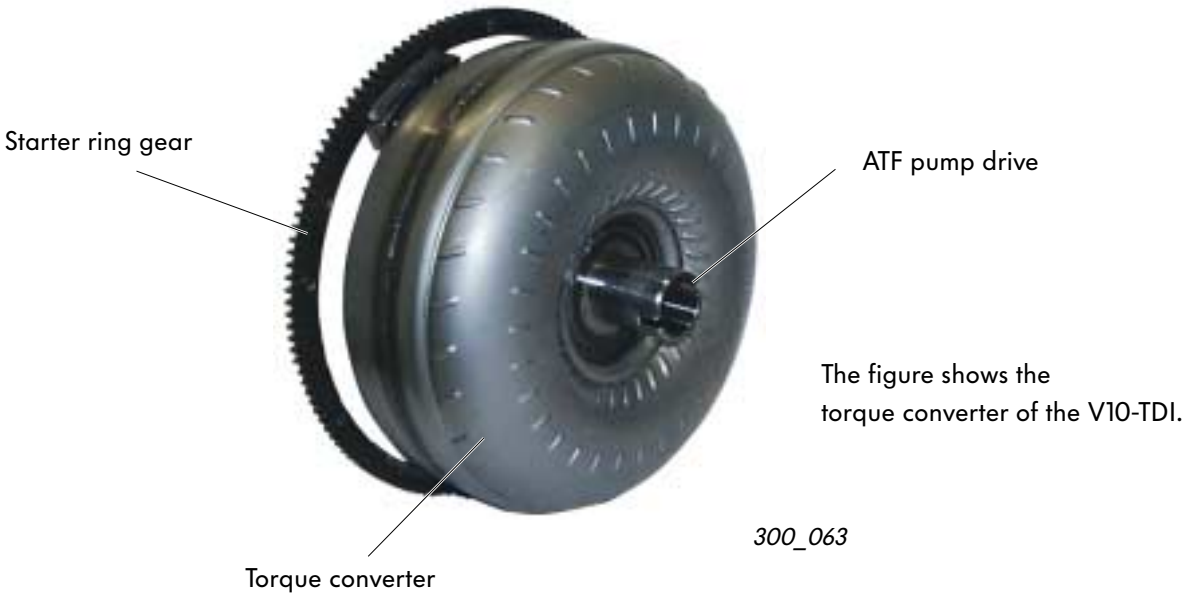

The figure shows the torque converter of the V10-TDI.

Converter bypass coupling

Function

The control unit for the automatic gearbox controls the solenoid valve N91. The solenoid valve opens or closes the converter bypass coupling depending on the engine's speed and torque.

If the converter bypass coupling is to be closed, the solenoid valve opens the oil reservoir upstream of the converter bypass coupling. As a result, the oil pressure in this reservoir decreases; the oil pressure downstream of the converter bypass coupling closes the converter bypass coupling.

When the solenoid valve N91 closes the oil flow again, the pressure upstream of the converter bypass coupling builds up again and the converter bypass coupling opens.

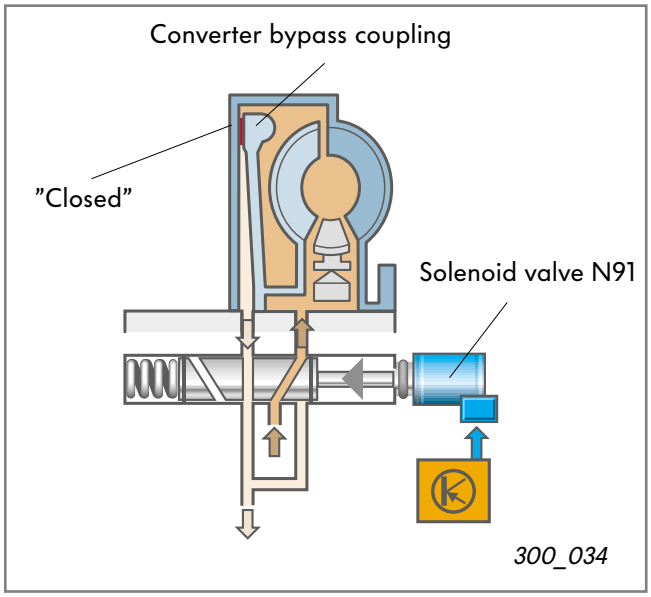

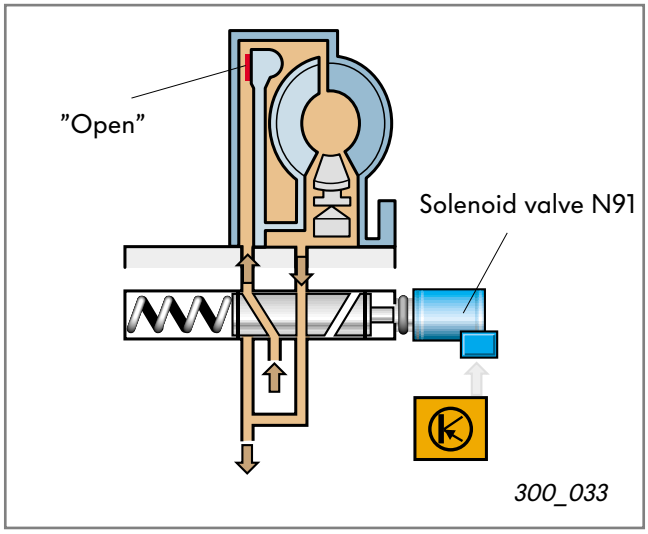

Design of gearbox

The ATF pump

is a gear pump and is driven by the ATF pump drive (pump gear shaft) of the torque converter.

It suctions the ATF from the oil pan of the gearbox through the oil sieve.

The ATF pump generates the working pressure for:

- the multi-disc couplings and multiple disc brakes,
- the lubrication circulation system and
- the coolant circulation system.

The ATF is cooled in a cooler.
This cooler is located in front of the engine cooler (as seen in the driving direction).

300_064

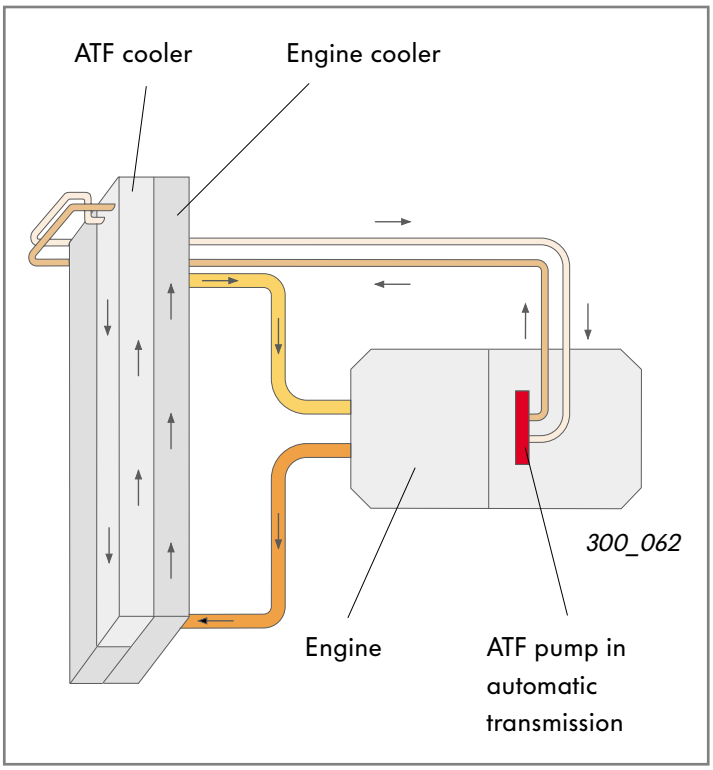

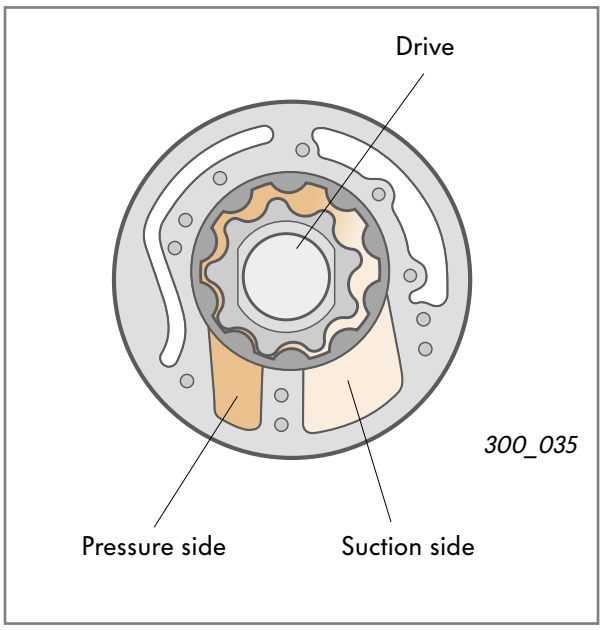

The Lepelletier arrangement

is based on a simple planetary gear set and a subsequent dual planetary gear set according to Ravigneaux.

Lepelletier's brilliant idea was to drive

the sun wheels and the planetary carriers of the dual planetary gear set at different speeds.
Due to these different input speeds in the dual planetary gear set, the potential transmission doubles compared to a five-gear automatic gearbox to ten gears minus one gear.

The sun wheels of the dual planetary gear set are driven with the transmitted output speed of the simple planetary gear set.
The planetary carriers of the dual planetary gear set are driven with the gearbox input speed.
As a result, the sun wheels and the planetary carriers have different speeds.

In this automatic gearbox, six forwards and one reverse gear bring Lepelletier's brilliant idea to life.

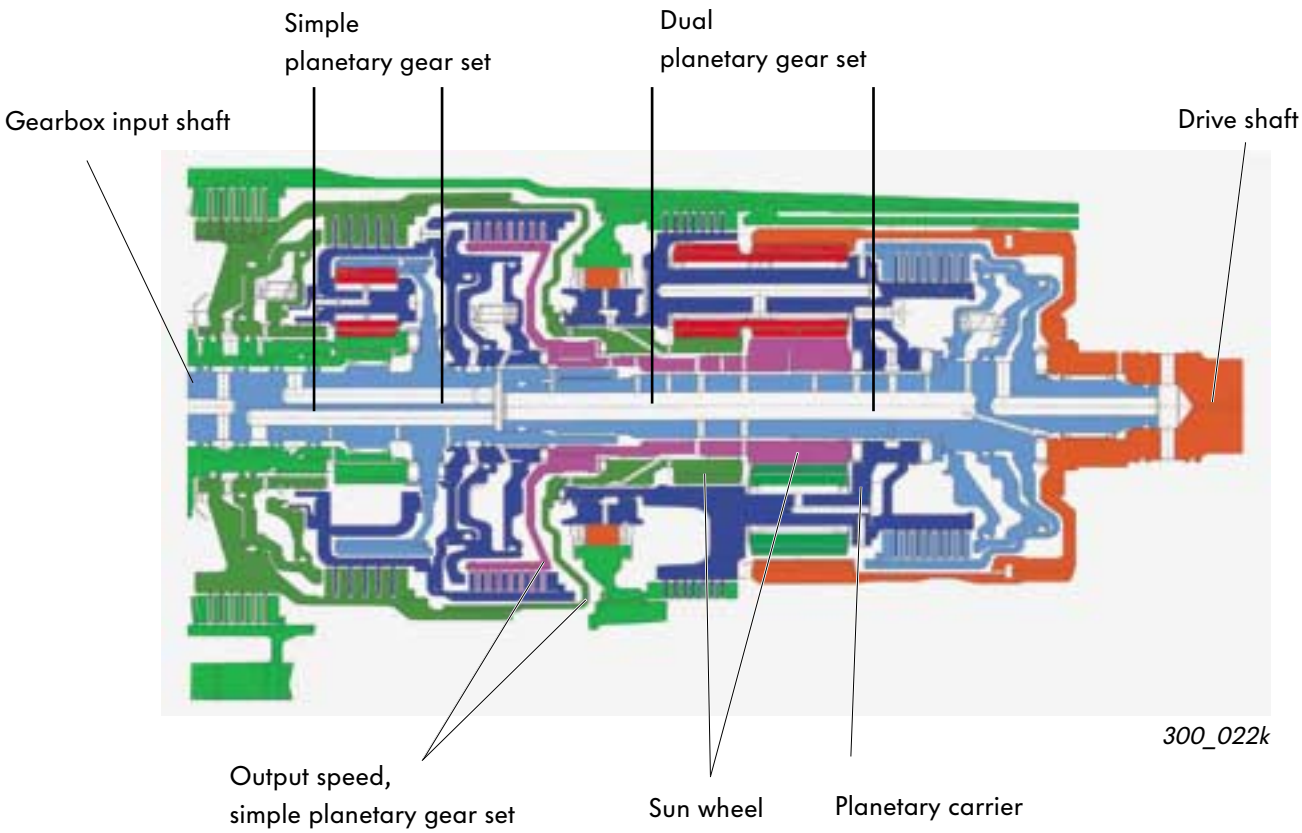

Design of gearbox

The simple planetary gear set

consists of:
- a sun wheel,
- an internal gear and
- 5 planetary wheels with V10-TDI engine and 3 planetary wheels with V6 engine, which are
- guided by the planetary carriers.

The input torque is guided through the simple planetary gear set on two paths:
- from the gearbox input shaft without transmission via the coupling K2 on the planetary carrier of the dual planetary gear set and
- through the simple planetary gear set with transmission to couplings K1 and K3.

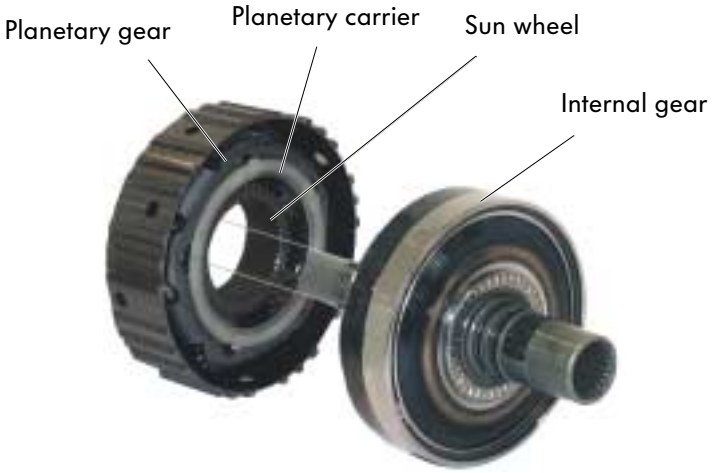

300_072

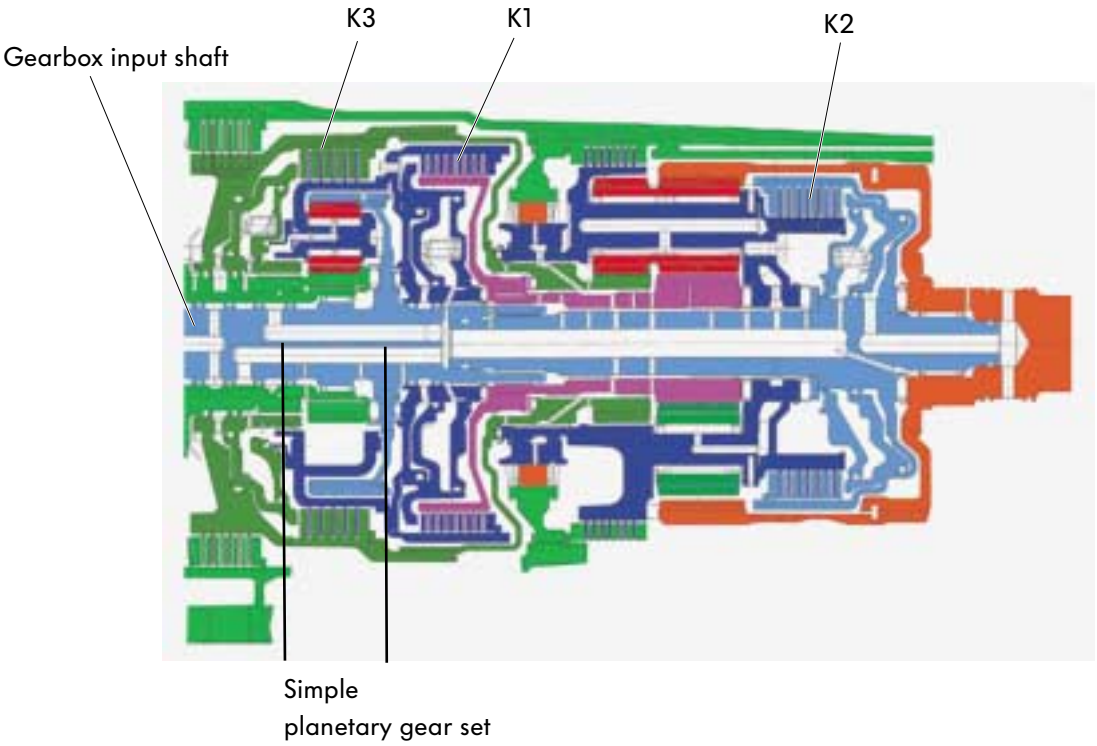

300_022k

The dual planetary gear set,

also known as the Ravigneaux planetary gear set, consists of:
- an internal gear
- a planetary carrier
- two sun wheels with different diameters and
- short and long planetary wheels.

The multi-disc coupling K1 provides the connection between the internal gear of the simple planetary gear set and the large sun wheel of the dual planetary gear set.

The multi-disc coupling K3 provides the connection between the planetary carrier of the simple planetary gear set and the small sun wheel of the dual planetary gear set.
The multi-disc coupling K2 provides the connection between the transmission input shaft and the planetary carriers of the dual planetary gear set.

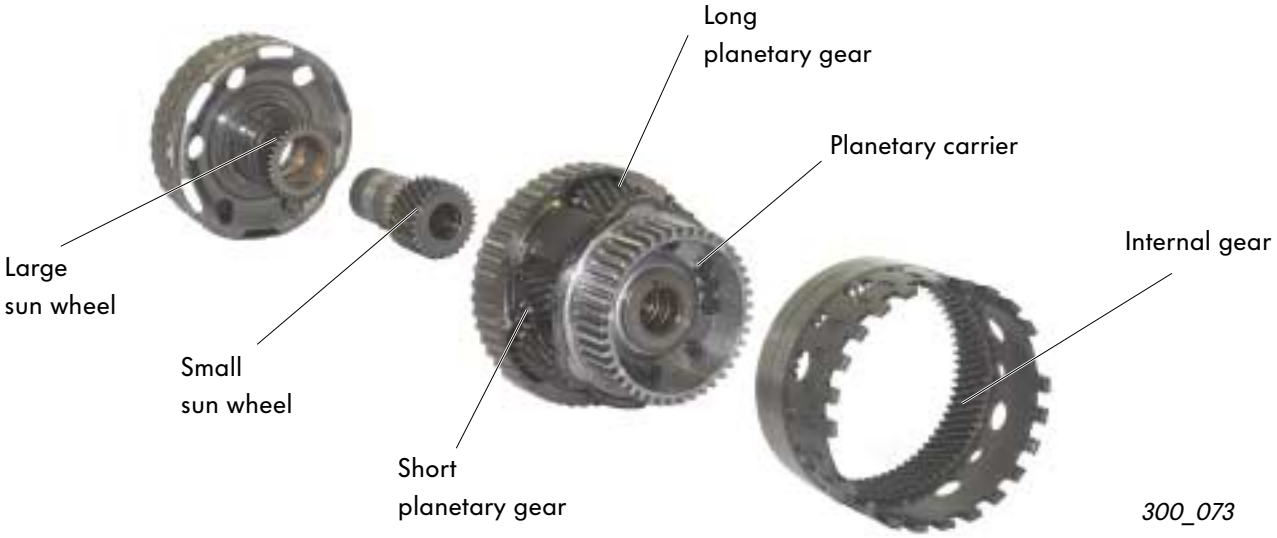

300_073

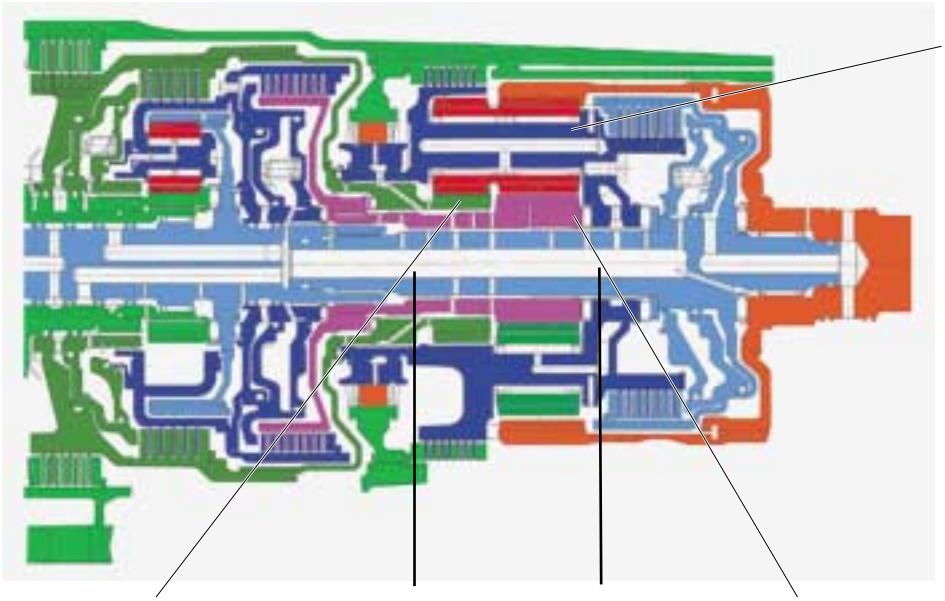

300_022k

Design of gearbox

The multi-disc couplings

drive the two sun wheels and the planetary carriers of the dual planetary gear set when they are closed.
Depending on the gear to be switched, they are placed under ATF pressure by the control unit for the automatic gearbox via a solenoid valve in the control valve assembly; this closes them.
Each multi-disc coupling is supplied with ATF pressure by another solenoid valve.
The number of installed disc pairs per coupling varies with the maximum torque that can be transmitted.

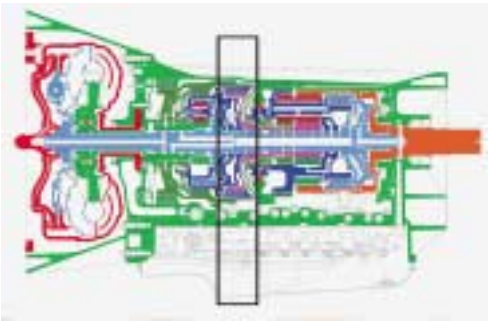

300_022e

The multi-disc coupling K1

is closed in gears 1 to 4 and is controlled by the solenoid valve N90.

It is compensated for centrifugal pressure.

In the V10-TDI, for example, seven multi-disc pairs are installed.

300_065

The multi-disc coupling K2

is closed in gears 4 to 6.

It is controlled by the solenoid valve N282.

It is compensated for centrifugal pressure.

In the V10-TDI, for example, seven multi-disc pairs are installed.

300_022d

300_066

The multi-disc coupling K3

is controlled by the solenoid valve N92 and is closed in gears 3, 5 and R.

It is compensated for centrifugal pressure.

In the V10-TDI, for example, five multi-disc pairs are installed.

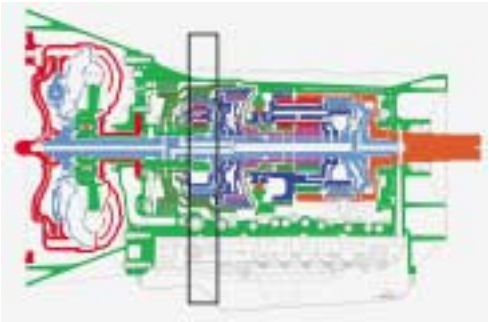

300_022c

300_067

Information regarding the design and function of couplings that are compensated for centrifugal pressure can be found in SSP 172.

Design of gearbox

The multiple disc brakes

secure parts of the planetary gear sets when they are closed.
To do this, they are submitted to ATF pressure by the control unit for the automatic gearbox via a solenoid valve or via the manual slider.

The multiple disc brakes are supported on the gearbox housing by their exterior discs.

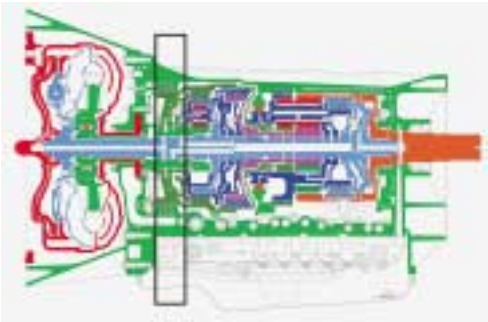

300_022b

The multiple disc brake B1

brakes the small sun wheel of the dual planetary gear set.
It is closed in gears 2 to 6 and is controlled by the solenoid valve N283.

In the V10-TDI, for example, six multi-disc pairs are installed.

300_069

The multiple disc brake B2

brakes the planetary carriers of the dual planetary gear set.
It is controlled without a solenoid valve using the selector lever via the manual slider.
It is closed in Reverse and, in the Tiptronic mode, in 1st gear.

In the V10-TDI, for example, seven multi-disc pairs are installed.

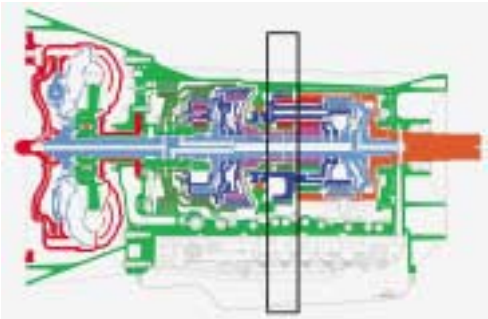

300_022f

300_069

The free-wheel

connects the planetary carriers of the dual planetary gear set with the gearbox housing.

If the exterior ring turns clockwise when the interior ring is braked, the bodies stand up and form a torsion-free connection between the interior and exterior rings.
Free-wheeling is "locked".
If the turning direction switches to anticlockwise, this connection breaks down.

Free-wheeling works in "D"- 1st gear and "S" – 1st gear, "tension" in the locking direction. In Tiptronic mode, 1st gear "thrust" secures free-wheeling of the multiple disc brake B2.
This permits "engine braking".

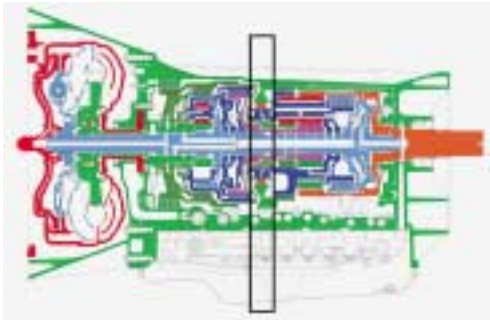

300_022h

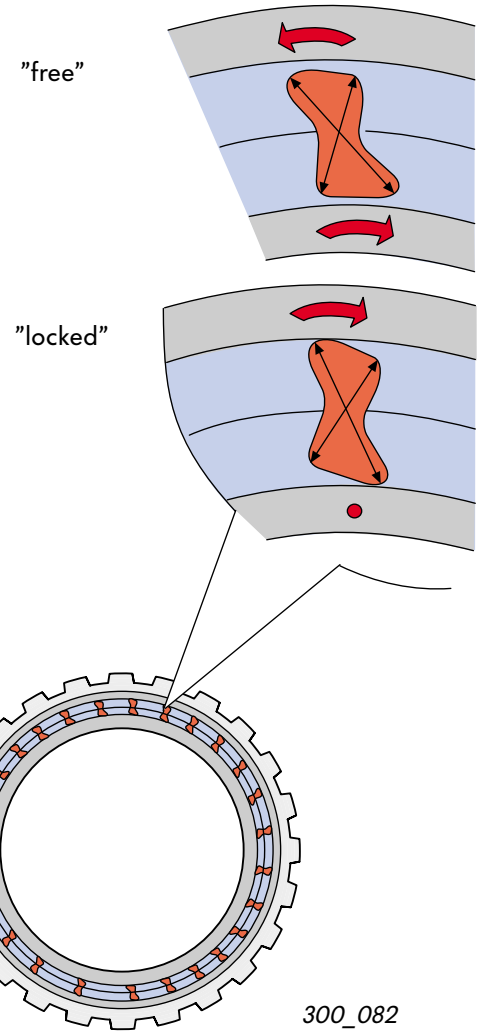

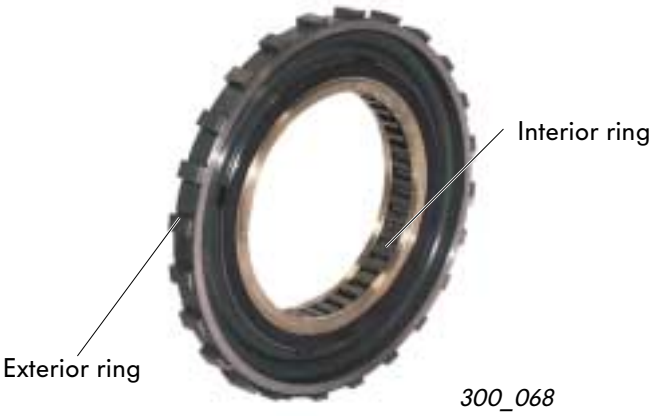

300_068

300_082

Design of gearbox

The parking lock

mechanically secures the vehicle from rolling away.
The parking lock is activated purely mechanically using the selector lever cable when the vehicle is at a standstill.
It engages in the parking lock wheel on the driveshaft and prevents turning of the driveshaft and thus of the vehicle wheels.

The clamp pushes the parking lock in the gear teeth of the parking lock wheel and secures it.

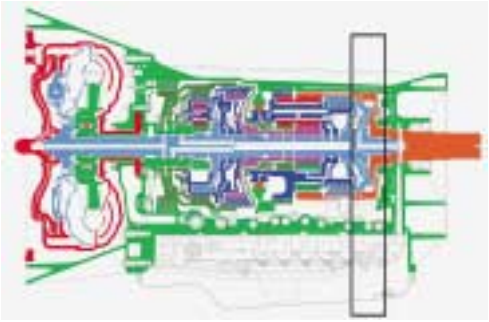

300_022g

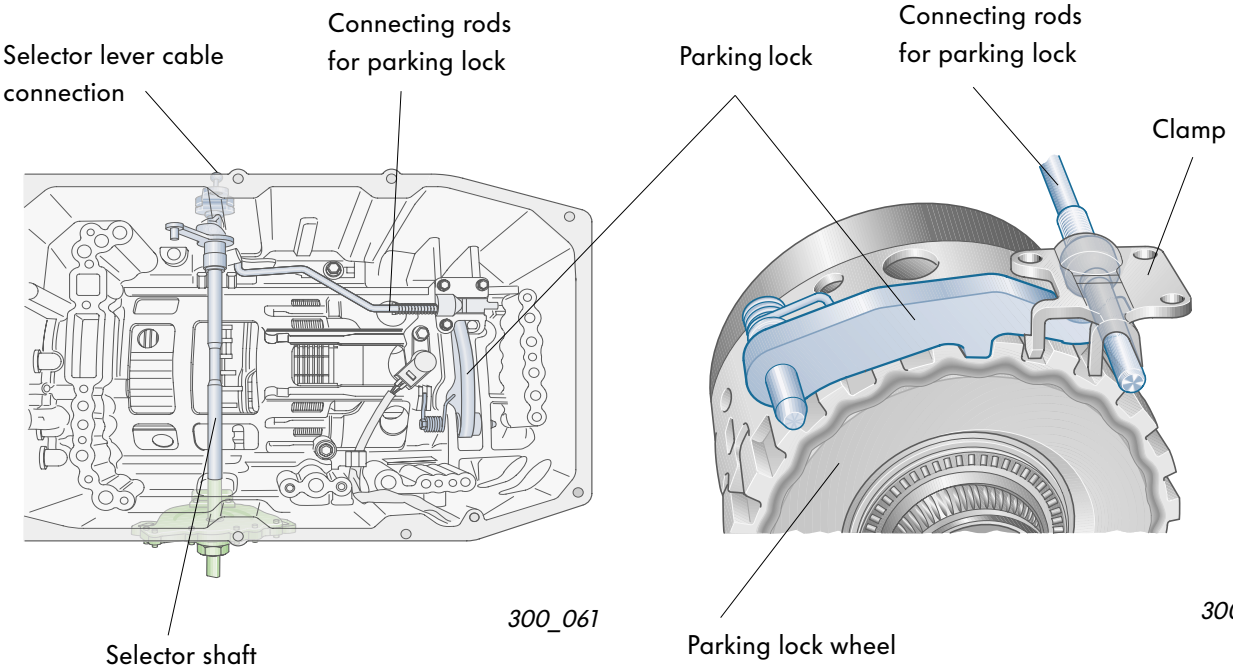

300_061

300_018

Hillholder function

The hill-holder function secures the vehicle from rolling back and permits hills to be approached comfortably.

How it works

If the control unit for the automatic gearbox detects an incline due to the driving impedance while simultaneously detecting a driving speed of ”zero”, it switches into 2nd gear.
In 2nd gear, the vehicle cannot roll back because the internal gear of the dual planetary gear set would have to turn in reverse against the locking free-wheel.

Free-wheeling is released and the vehicle starts comfortably only after the starting torque is greater than the slope descending force.

Assignment table

The following table shows in which gear the individual multi-disc couplings and multiple disc brakes are closed.

	Component					
Gear	K1	K2	K3	B1	B2	F
1st gear	X				*	X
2nd gear	X			X		
3rd gear	X		X			
4th gear	X	X				
5th gear		X	X			
6th gear		X		X		
R gear			X		X	

* ”Engine braking”

The braking force of the ”pushed” engine in particular driving situations – such as steep downhills – can be taken advantage of by applying the 1st gear in Tiptronic mode.

The multiple disc brake B2 is closed in 1st gear only in Tiptronic mode.

Emergency run

After certain components fail, normal operation of the automatic gearbox is no longer possible. In this case, the automatic gearbox can be operated only in emergency run.
In emergency run, the converter bypass coupling is no longer closed and the gearbox is in 3rd gear in all forwards driving stages.
When the selector lever is switched to the "R" position, the manual slider is shifted, thus applying the Reverse gear.

The emergency run mode is indicated by a different display in the dash panel insert.

The "Effects of signal drop-out" section in the Sensors and Actuators chapter describes which components must fail to lead to emergency run.

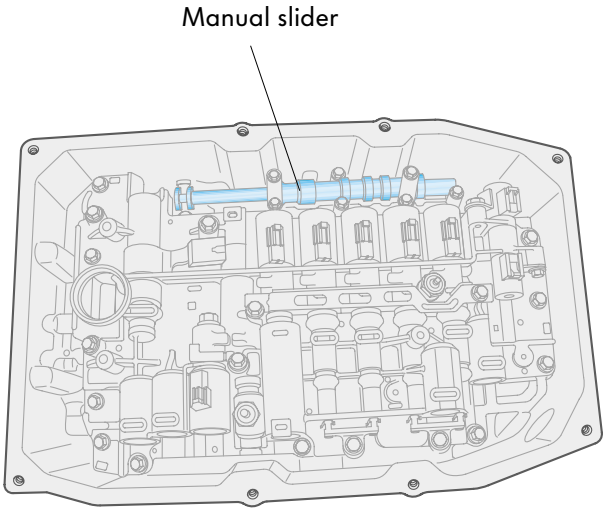

300_075

Torque transmission in the Touareg

The torque of the engine is transferred to the automatic gearbox using the torque converter. As there is no axle drive within the automatic gearbox, a transfer gearbox is flanged onto the automatic gearbox.
The engine torque is transferred from the driveshaft of the gearbox to the transfer gearbox.
In the transfer gearbox, the torque is distributed between the front and rear axles, depending on the load.
The transfer gearbox can be locked. This fixes the torque distribution between the front and rear axles.
Each axle receives 50 % of the torque.

In addition, there is a switchable reduction in the transfer gearbox.
If this is switched on, the drive speed of the wheels is reduced by a factor of 2.7, thus increasing the drive torque.

In the transfer gearbox, the torque is transferred further between the front and rear axles using cardan shafts.
The differential of the rear axle to the transfer gearbox can also be locked using an electromechanical multi-disc coupling.

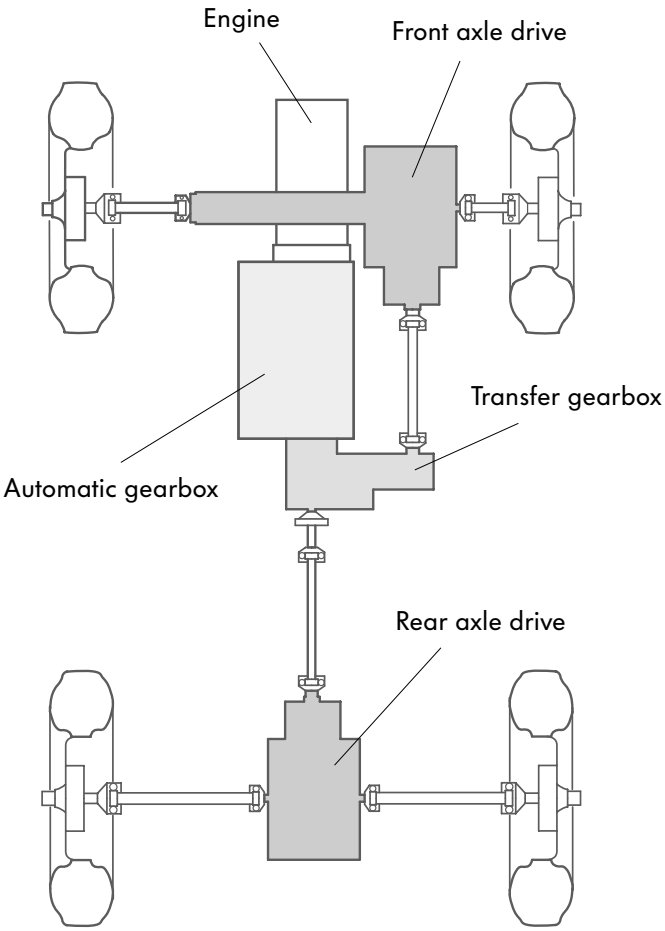

300_008

System overview

Sensors

Gearbox input speed sender G182

Gearbox output speed sender G195

Multifunctional switch F125

Gearbox oil temperature sender G93

Sender 1 G193 and sender 2 G194
for hydraulic pressure

Switch for Tiptronic F189

Switch for Tiptronic in steering wheel E438 and E439

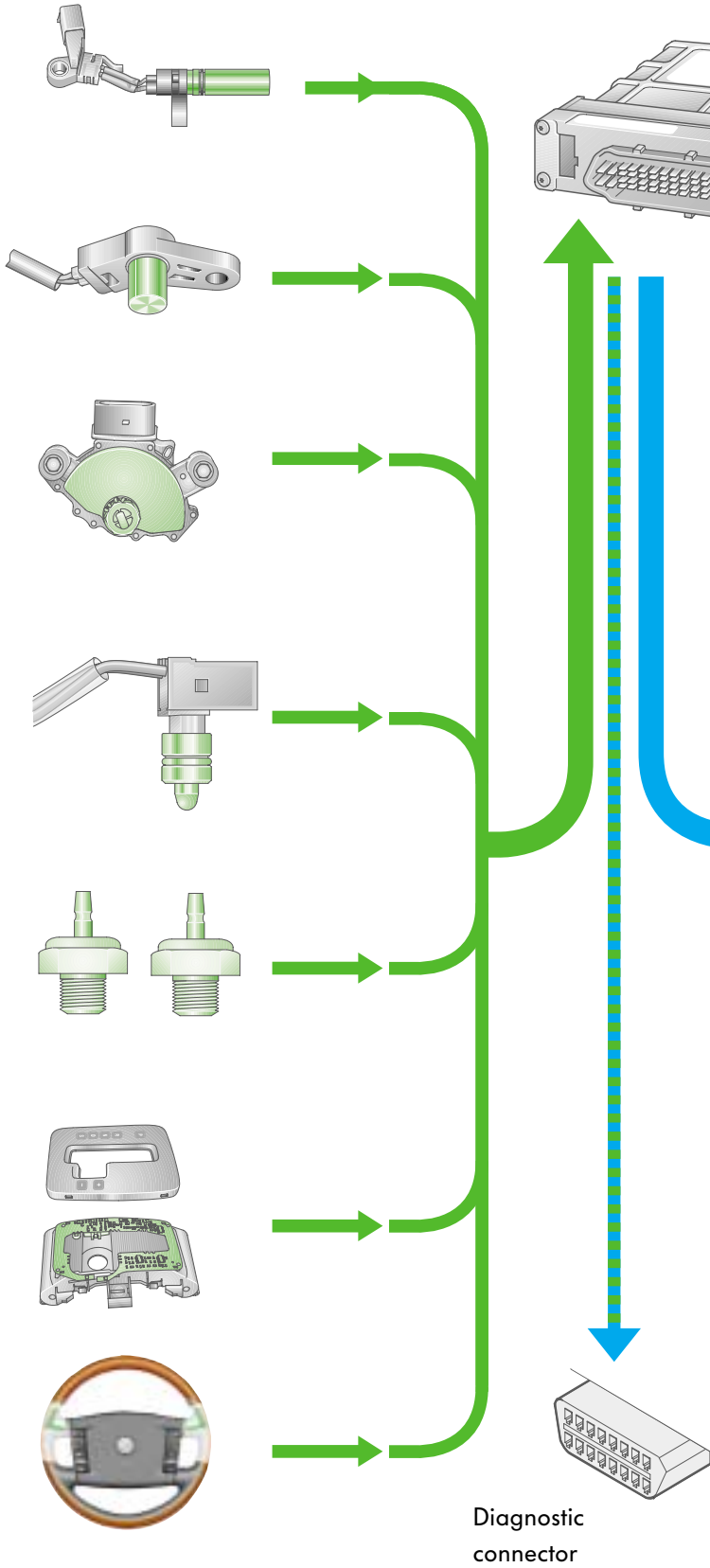

Volkswagen Technical Site: http://volkswagen.msk.ru http://vwts.info http://vwts.ru
огромный архив документации по автомобилям Volkswagen, Skoda, Seat, Audi

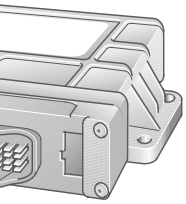

CAN data bus

Actuators

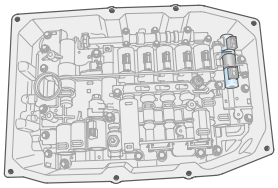

Solenoid valves in control valve assembly N88, N89

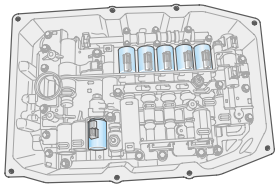

Solenoid valves in control valve assembly N90, N91, N92, N93, N282, N283

Magnet for selector lever lock N110

Control units

Engine control unit

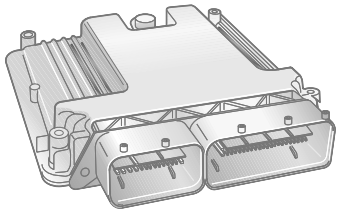

Control unit for transfer gearbox

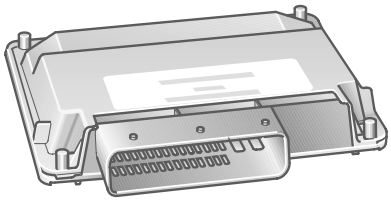

ABS control unit

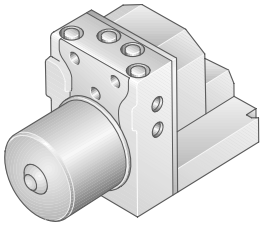

Control unit with display unit in dash panel insert

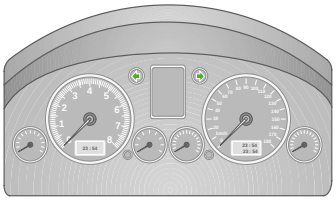

300_031

Sensors

The gearbox input speed sender G182

is located within the gearbox.
It is inserted in the housing of the ATF pump and uses a ring gear on the turbine shaft to determine the gearbox input speed.

It works according to the Hall principle.
Within the sender, there is an IC switch which activates the Hall sender.

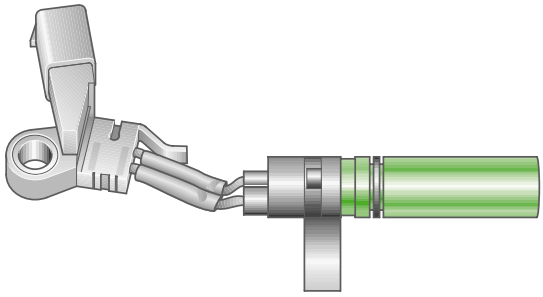

300_009

Signal utilisation

The control unit for the automatic gearbox uses the signal to detect the difference between the engine speed and the gearbox input speed.
Using this speed difference, the slip of the converter bypass coupling is controlled up to a speed of 2000 rpm using the solenoid valve N91.

Effects of signal drop-out

The converter bypass coupling is closed without slip.
The engine speed is used as the replacement speed.

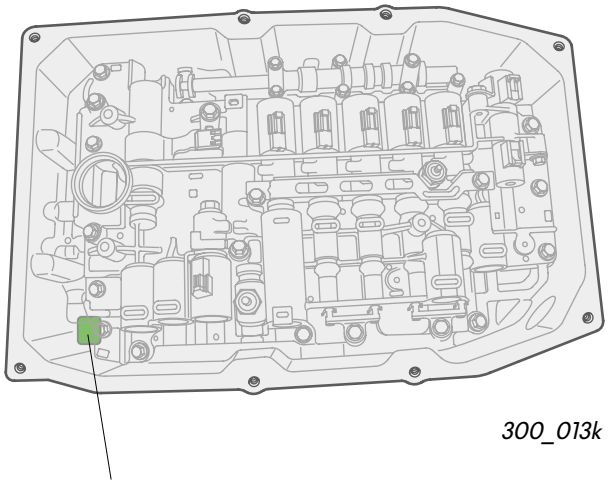

300_013k

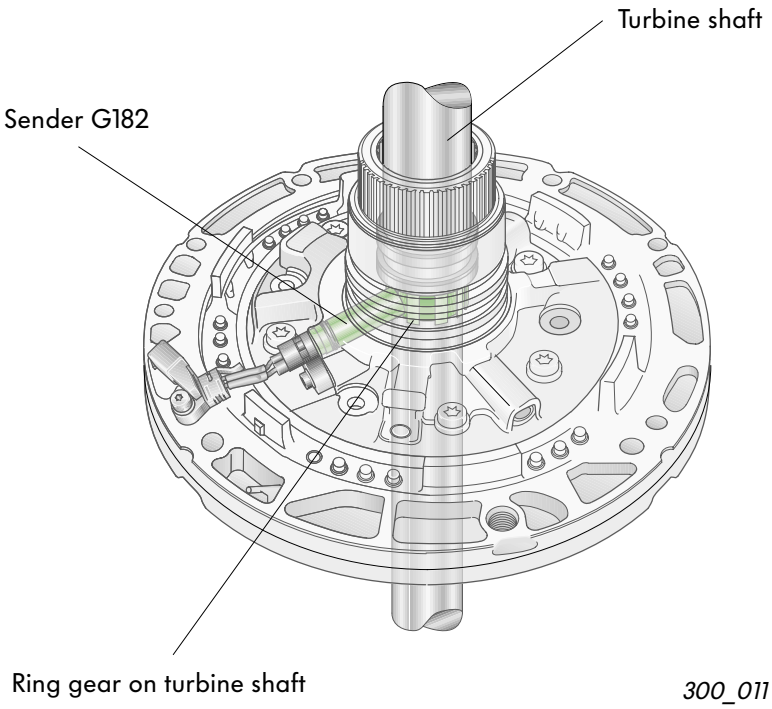

Electric circuitry

G182 - gearbox input speed sender
J217 - control unit for automatic gearbox

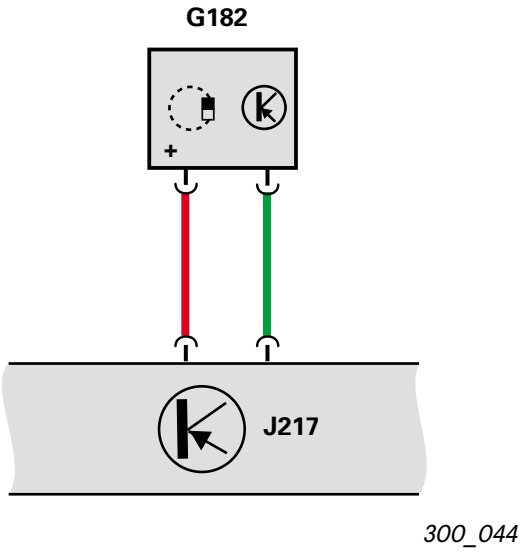

Sensors

The gearbox output speed sender G195

is located above the control valve assembly and is screwed onto the gearbox housing.
It determines the working speed of the automatic gearbox.
It scans the outer teeth of the internal gear on the rear planetary gear set.

It works according to the Hall principle.
Within the sender, there is an IC switch which activates the Hall sender.

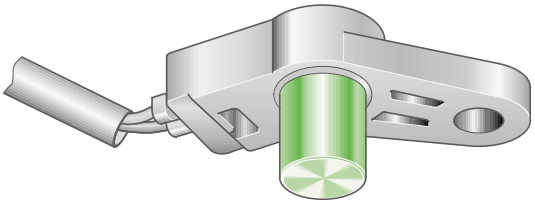

300_010

Signal utilisation

The control unit uses the gearbox output speed to start switching the gears according to the switching plan.

Effects of signal drop-out

The speed signal of the ABS control unit is used as the replacement speed.

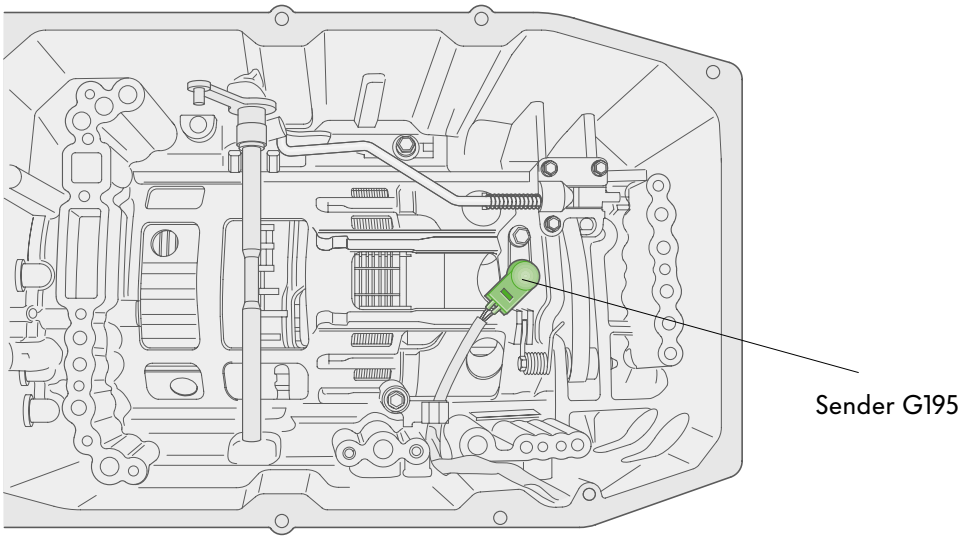

300_012

Electric circuitry

G195 - gearbox output speed sender
J217 - control unit for automatic gearbox

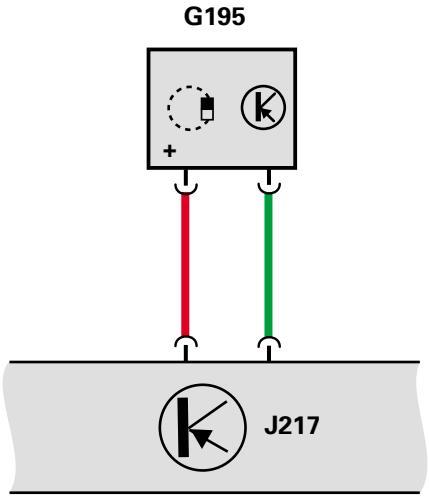

300_045

Sensors

The multifunction switch F125

is screwed onto the exterior of the gearbox.
Its duty is to further transfer the selector lever settings in automatic operation to the control unit for the automatic gearbox.
The multifunction switch is connected with the selector shaft and the selector lever cable.

If the multifunction switch is replaced, a position to the selector shaft must be set.
If the switch is incorrectly set, the engine cannot be started.

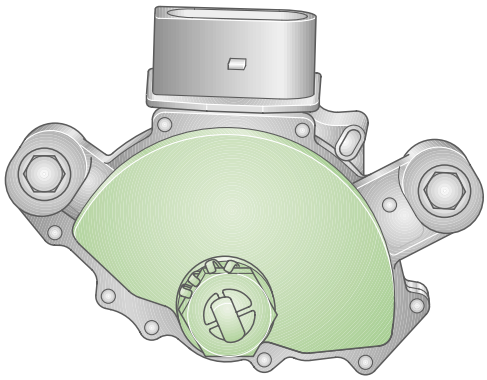

300_020

Signal utilisation

The control unit for the automatic gearbox starts the switch programmes according to the setting of the multifunction switch.

Effects of signal drop-out

As long as the difference between forwards and reverse gears can be determined, there are no effects on the switch programmes.

If the Reverse gear signal is defective, the gearbox enters the emergency run.

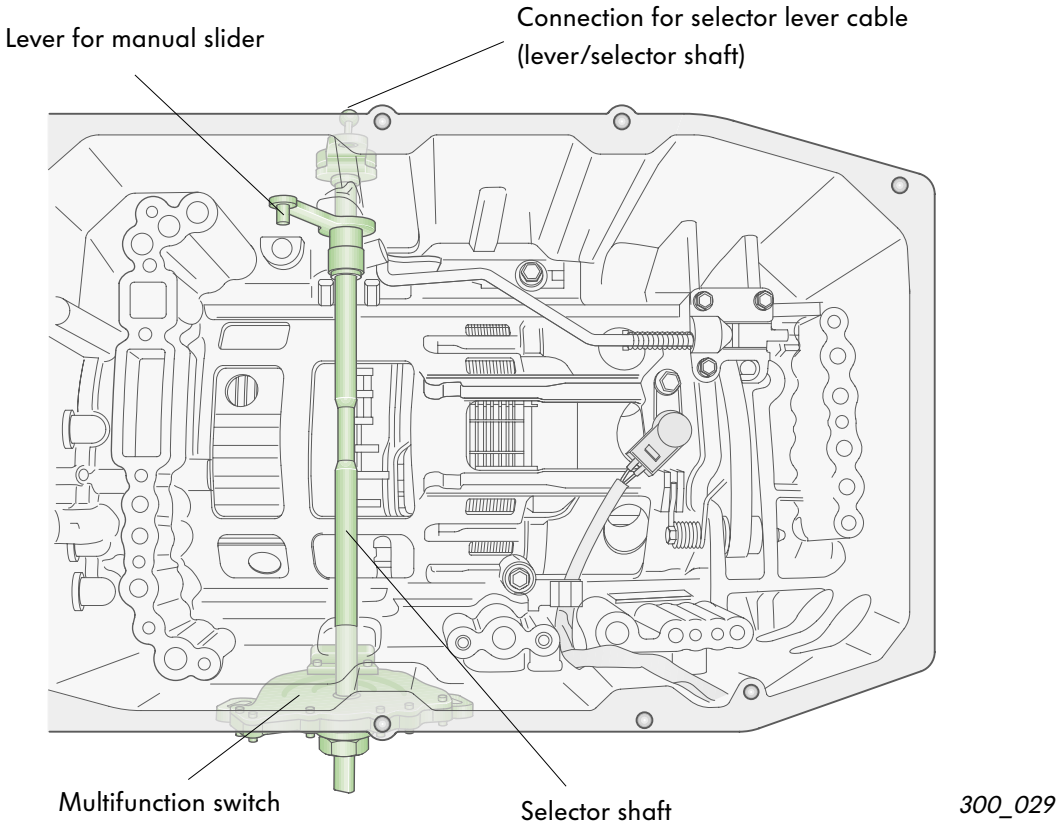

Electric circuitry

F41 - reverse gear switch
F125 - multifunction switch
J217 - control unit for automatic gearbox
J518 - control unit for access and start authorisation

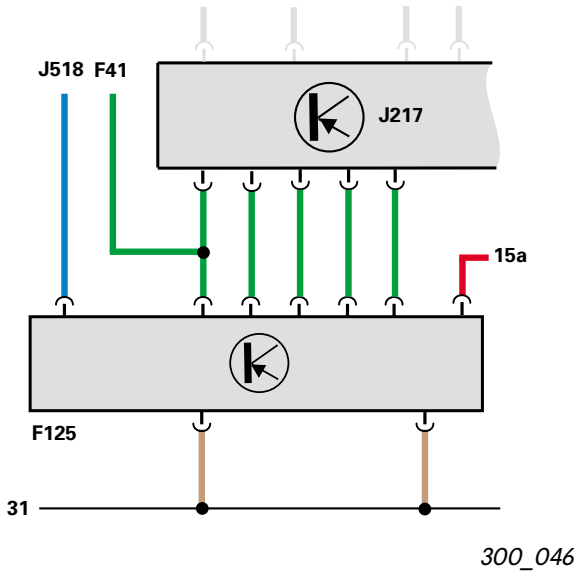

Sensors

The gearbox oil temperature sender G93

is located in the control valve assembly within the ATF.
It checks the ATF temperature and reports this to the control unit for the automatic gearbox.

It is an NTC resistor (NTC - negative temperature coefficient), i.e. the electrical resistance of the sender drops with increasing temperature.

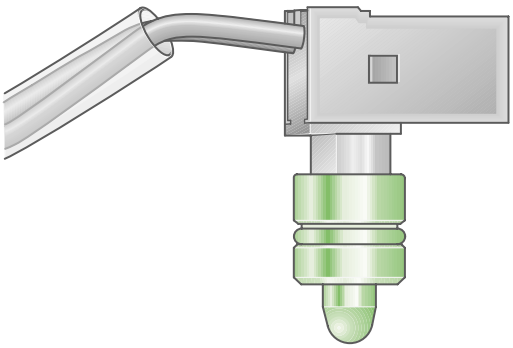

300_016

Signal utilisation

Starting at an ATF temperature of 150 °C, the torque converter bypass coupling is closed more frequently.
If this does not result in cooling of the ATF, reduction of the engine torque is initiated starting at 170 °C.

Effects of signal drop-out

Harder gear shifts may occur.

Example of an NTC resistor characteristic curve

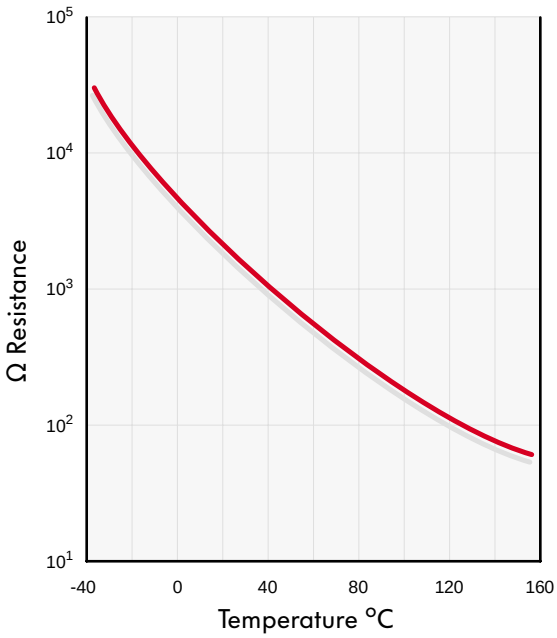

300_074

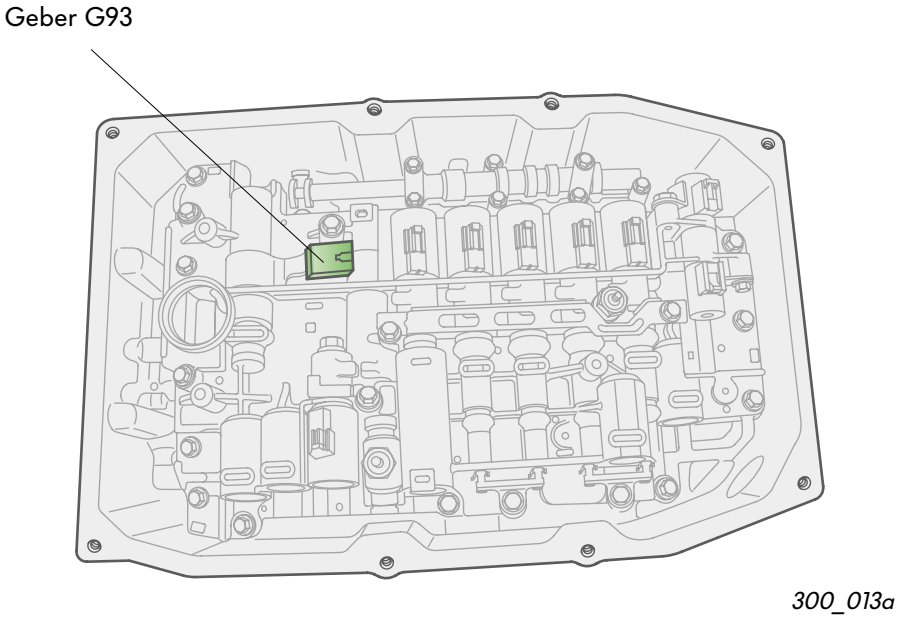

Electric circuitry

G93 - gearbox oil temperature sender
J217 - control unit for automatic gearbox

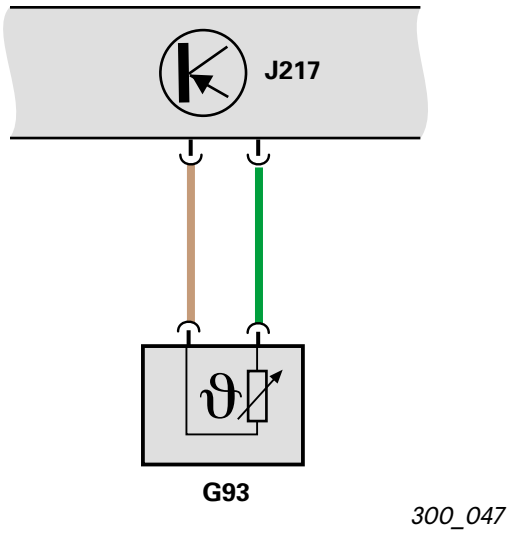

Sensors

The sender 1 G193 and sender 2 G194 for hydraulic pressure

have the same design and are located in the control valve assembly.
They monitor the ATF pressure behind the safety slides in the control valve assembly.
This prevents couplings that do not correspond to the switch programme from closing.
As a result, blocking of the gearbox is hindered.

They function as diaphragm pressure senders.
If the ATF pressure reaches a critical value, the pressure membranes are bent, closing the electrical circuit.

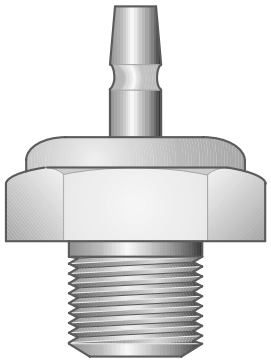

300_015

Signal utilisation

The signal is used to monitor the clutch control unit.

If the ATF pressure is incorrect, the clutches are not activated.

Effects of signal drop-out

Incorrect pressure signals can have effects in the control unit of the shifting unit.

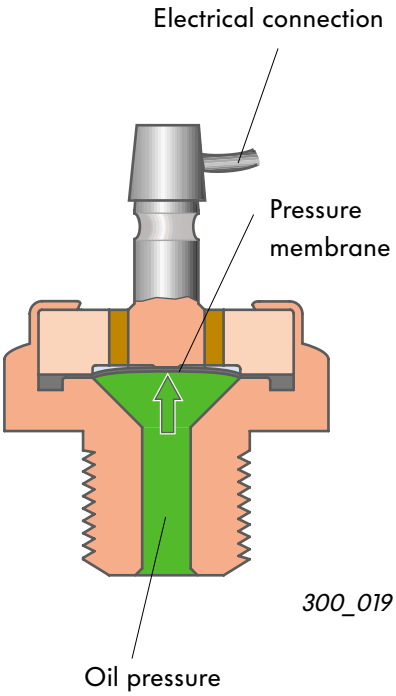

300_019

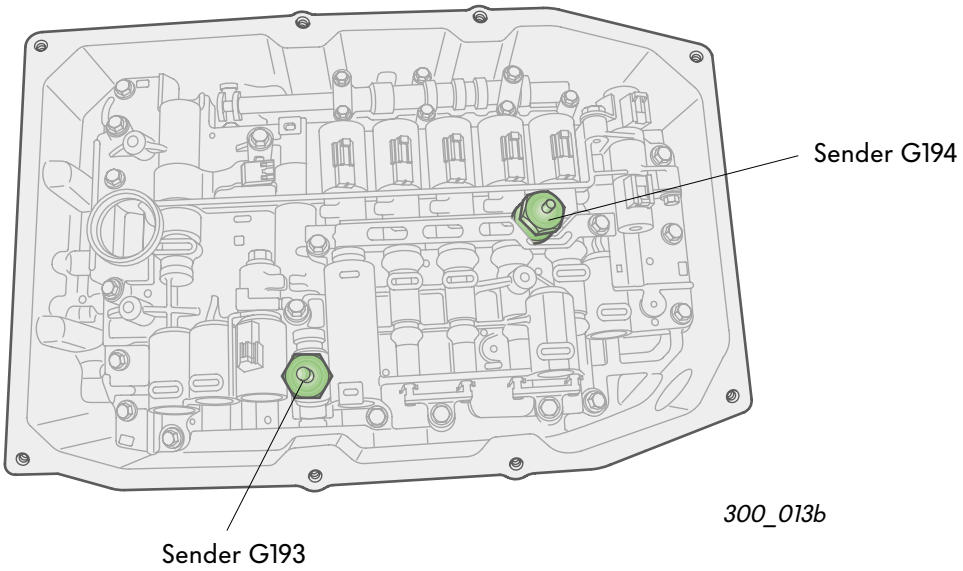

Electric circuitry

G193 - sender 1 for hydraulic pressure, automatic gearbox
G194 - sender 2 for hydraulic pressure, automatic gearbox
J217 - control unit for automatic gearbox

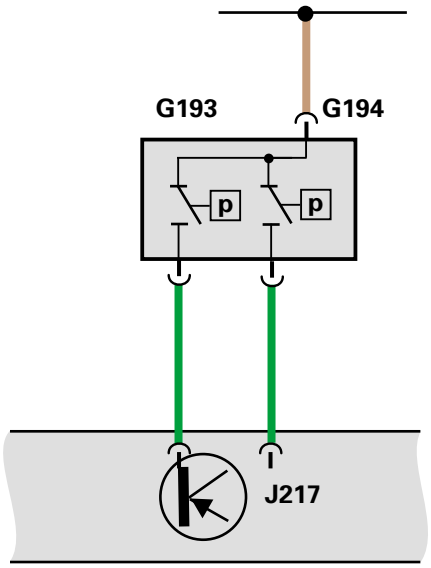

300_048

Sensors

The switch for Tiptronic F189

is located under the selector lever covering on the plate.

A ferromagnetic "contact maker" is attached to each blind of the selector lever.
The combination of the contact maker on blind 2 and the three Hall sensors on the plate form the switch for Tiptronic F189.
When the blinds are moved, the contact makers change their position under the plate. In this way, a different Hall sensor is always activated – "switched" – and sends a signal to the control unit for the automatic gearbox.

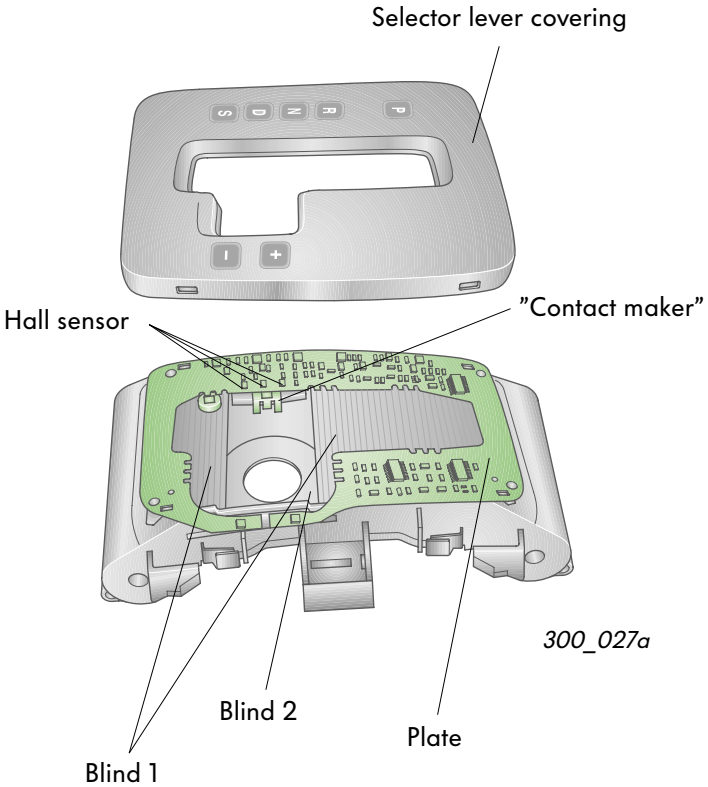

Signal utilisation

In the Tiptronic channel, tipping "to the front" results in moving up a gear and tipping "to the back" results in moving down a gear by the control unit for the automatic gearbox.

Effect of signal drop-out

When the signal drops out, the Tiptronic function using the selector lever can no longer be used.

Electric circuitry

F189 - switch for Tiptronic
J217 - control unit for automatic gearbox
J519 - control unit for on-board network
(The link to the selector lever lighting is required.)

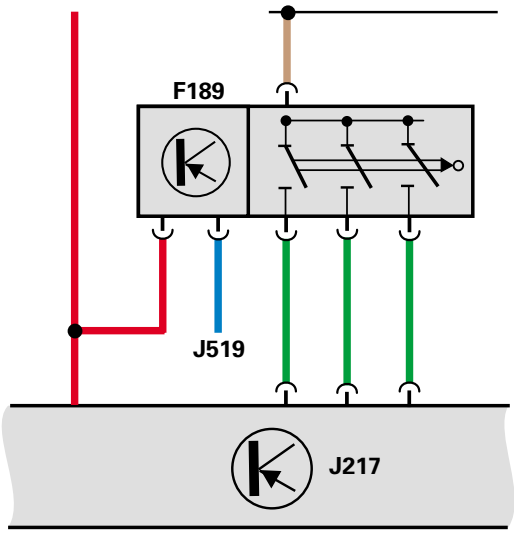

300_049

The switches for Tiptronic in the steering wheel F438 and F439

are located to the left and right behind the steering wheel.

The gears are switched by tipping the switches towards the steering wheel.

The
right switch (E438) is used to move up a gear "+"
and the
left switch (E439) is used to move down a gear "-".

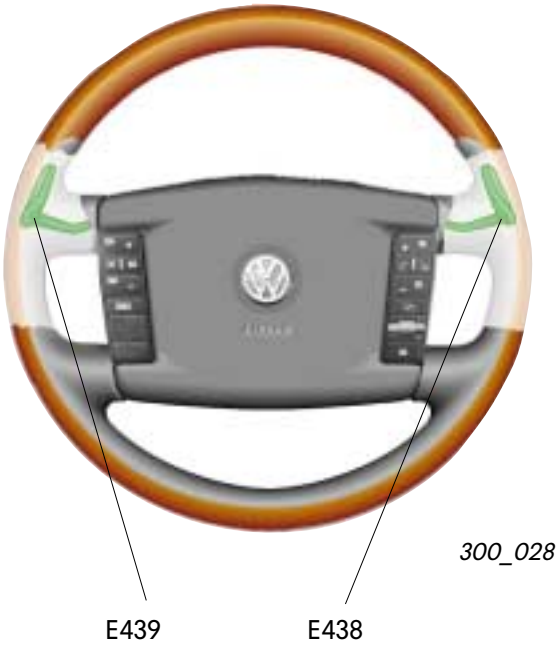

300_028

Signal utilisation

In Tiptronic mode, these switches can also be used to change gears. The switching signal is sent to the control unit for the automatic gearbox.

If the Tiptronic switches on the steering wheel are pressed in the automatic mode, the gearbox control unit enters the Tiptronic mode.
If the Tiptronic switches on the steering wheel are no longer pressed, the gearbox control unit automatically enters the Automatic mode.

Effect of signal drop-out

If the signal drops out, the Tiptronic functions using the steering wheel switch can no longer be used.

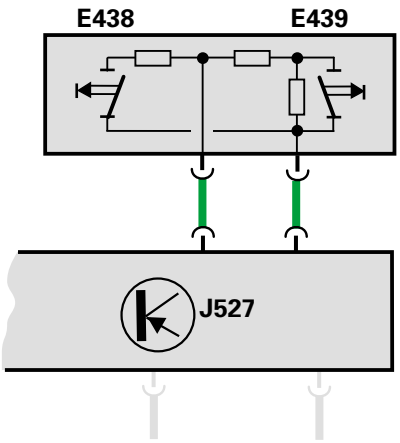

300_050

Electric circuitry

E438 - switch for Tiptronic in the steering wheel
E439 - switch for Tiptronic in the steering wheel
J527 - control unit for steering wheel electronics

Actuators

Solenoid valves

Solenoid valves are used as electrohydraulic switching elements in the electronically controlled automatic gearbox.
There are switching solenoid valves (yes/no valves) and control solenoid valves (modulation valves).

The solenoid valve N88

works as a yes/no solenoid valve, opening or closing an ATF channel.

If the solenoid valve is open, the gears 4 to 6 can be activated.
The solenoid valve also improves the switching transition from 5th to 6th gear.

If it is not under power, the solenoid valve is closed.

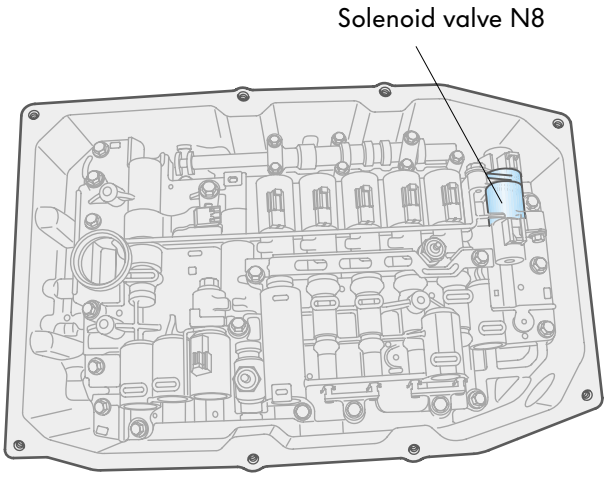

300_013c

Effect of signal or actuator drop-out

The gears 4 to 6 can no longer be activated.

Electric circuitry

J217 - control unit for automatic gearbox
N88 - solenoid valve

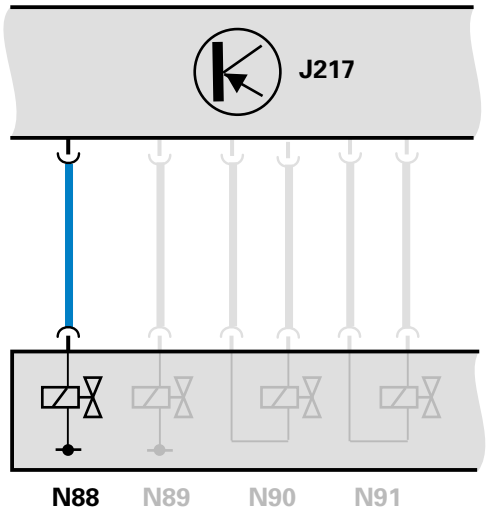

300_051

The solenoid valve N89

is located in the control valve assembly.

It works as a yes/no solenoid valve, opening or closing an ATF channel.

When the solenoid valve is opened, the ATF pressure on the converter bypass coupling is increased.

If the solenoid valves N88 and N89 are opened simultaneously, the brake B2 closes so that the "engine brake" is effective in Tiptronic mode, 1st gear.

If it is not under power, the valve is closed.

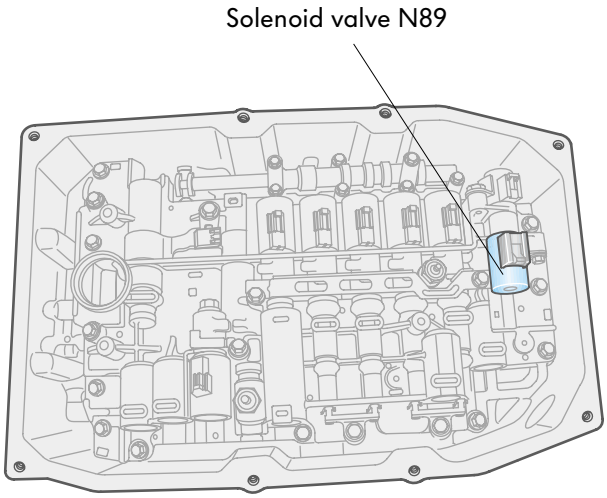

300_013d

Effect of signal drop-out

If the signal to the solenoid valve N89 drops out, the converter bypass coupling can no longer be subjected to the maximum ATF pressure.
Driving with the "engine brake" is impossible.

Electric circuitry

J217 - control unit for automatic gearbox
N89 - solenoid valve

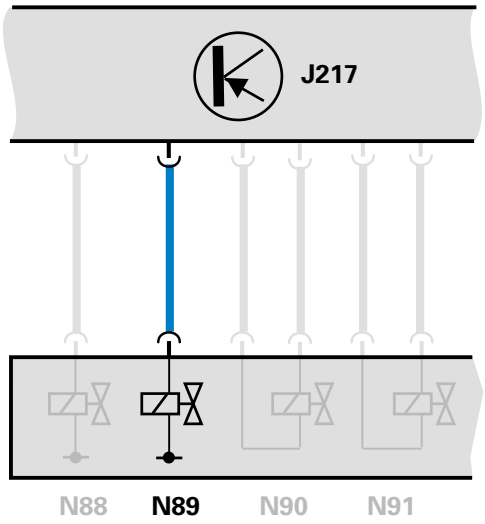

300_052

Actuators

The solenoid valve N90

is located in the control valve assembly.

It is a modulation valve that controls the ATF pressure to the multi-disc coupling K1.

If it is not under power, the solenoid valve is closed.
In this switching state, the maximum ATF pressure works on the coupling.

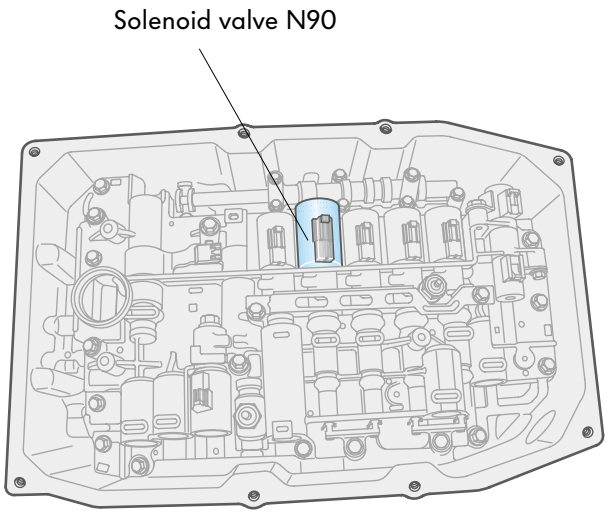

300_013e

Effect of signal drop-out

If the solenoid valve is defective or if it cannot be activated, switching of gears 1 to 4 may be harder.

Electric circuitry

J217 - control unit for automatic gearbox
N90 - solenoid valve

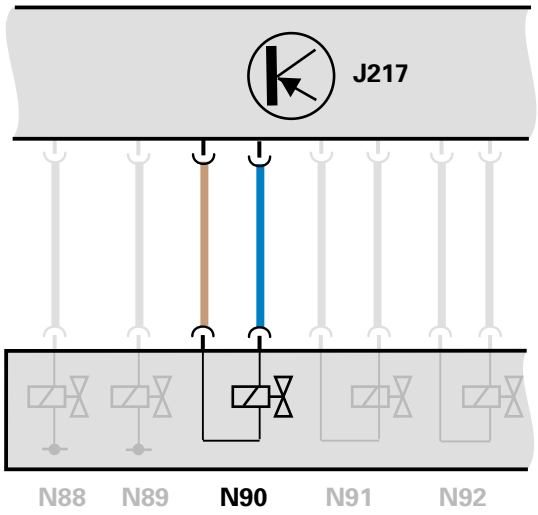

300_055

The solenoid valve N91

is located in the control valve assembly.

It is a modulation valve that controls the ATF pressure on the converter bypass coupling.

If the solenoid valve N91 is not under power, the converter bypass coupling is open.

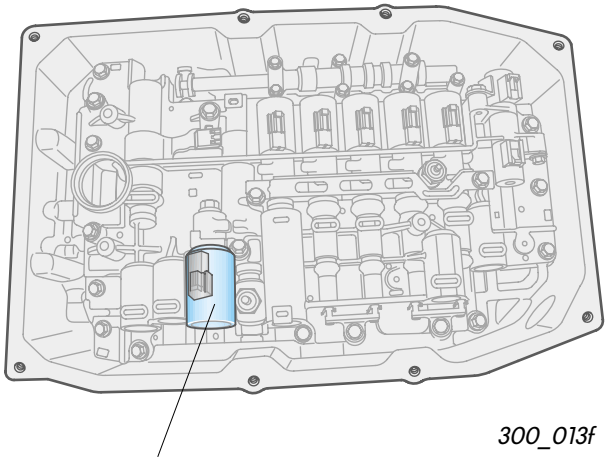

300_013f

Effect of signal drop-out

The converter bypass coupling is not closed.

Electric circuitry

J217 - control unit for automatic gearbox
N91 - solenoid valve

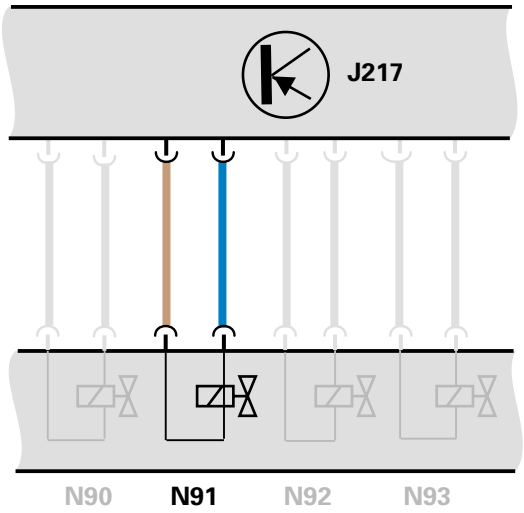

300_057

Actuators

The solenoid valve N92

is integrated in the control valve assembly.

It is a modulation valve that controls the ATF pressure to the multi-disc coupling K3.

If it is not under power, the solenoid valve is closed.
In this switching state, the maximum ATF pressure works on the coupling.

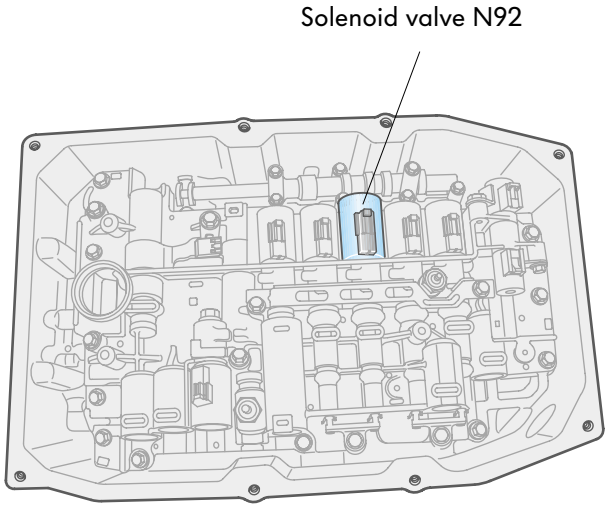

300_013g

Effect of signal drop-out

If the solenoid valve is defective or if there is a fault in the circuit, switching of gears 3, 5 and R may be harder.

Electric circuitry

J217 - control unit for automatic gearbox
N92 - solenoid valve

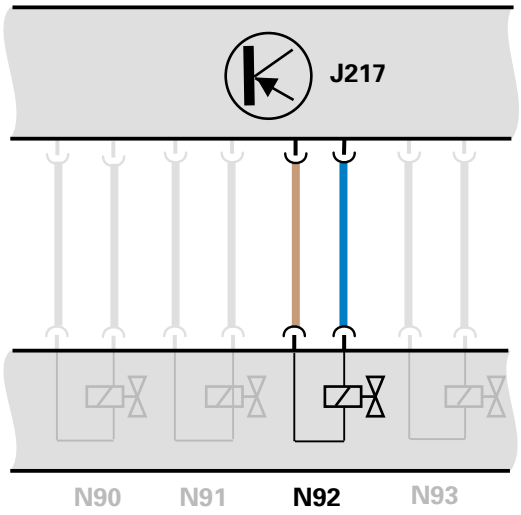

300_053

The solenoid valve N93

is located in the control valve assembly.

It is a modulation valve that controls the main ATF pressure in the gearbox, depending on the engine torque.

If it is not under power, the solenoid valve is closed, so that the gearbox works with the maximum ATF pressure.

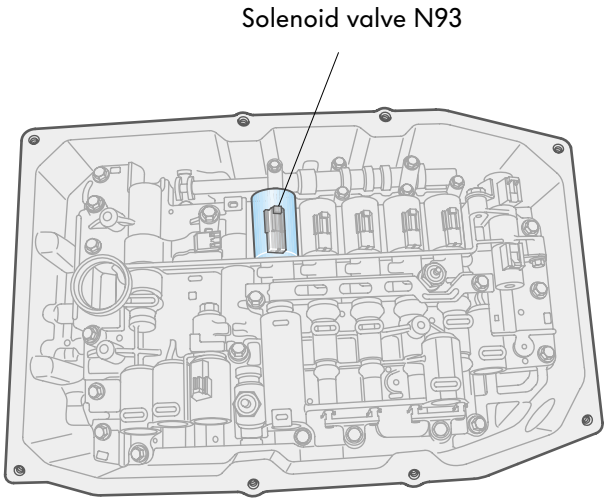

300_013h

Effect of signal drop-out

If the solenoid valve is defective or if there is a fault in the circuit, switching of all gears may be harder.

Electric circuitry

J217 - control unit for automatic gearbox
N93 - solenoid valve

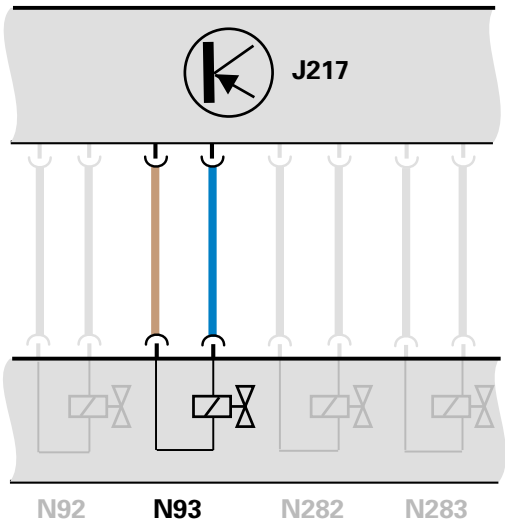

300_058

Actuators

The solenoid valve N282

is located in the control valve assembly.

It is a modulation valve that controls the ATF pressure to the multi-disc coupling K2.

If it is not under power, the solenoid valve is closed.
In this switching state, the coupling is closed with the maximum pressure.

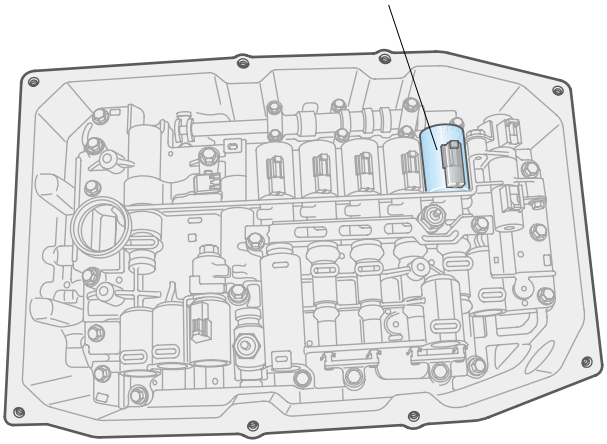

300_013i

Effect of signal drop-out

If the solenoid valve is defective or if there is a fault in the circuit, switching of gears 4 to 6 may be harder.

Electric circuitry

J217 - control unit for automatic gearbox
N282 - solenoid valve

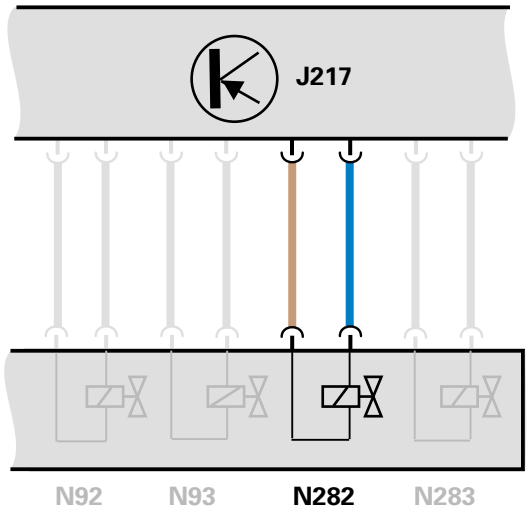

300_054

The solenoid valve N283

is located in the control valve assembly.

It is a modulation valve that controls the ATF pressure to the multiple-disc brake B1.

The solenoid valve closes depending on the current strength.
If it is not under power, the brake is closed with the maximum ATF pressure.

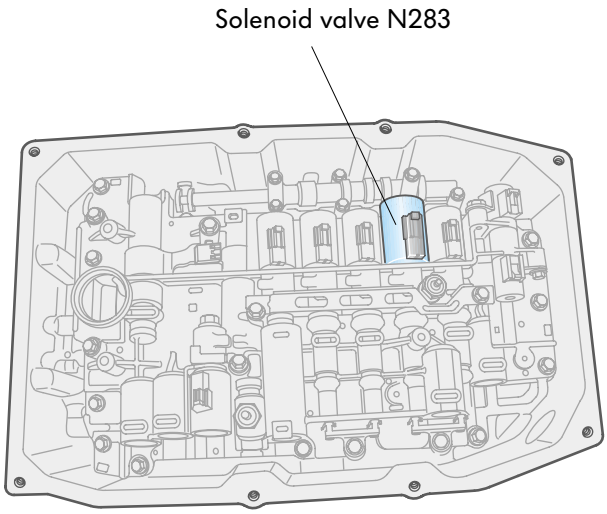

300_013j

Effect of signal drop-out

If the solenoid valve is defective or if there is a fault in the circuit, switching of gears 2 and 6 may be harder.

Electric circuitry

J217 - control unit for automatic gearbox
N283 - solenoid valve

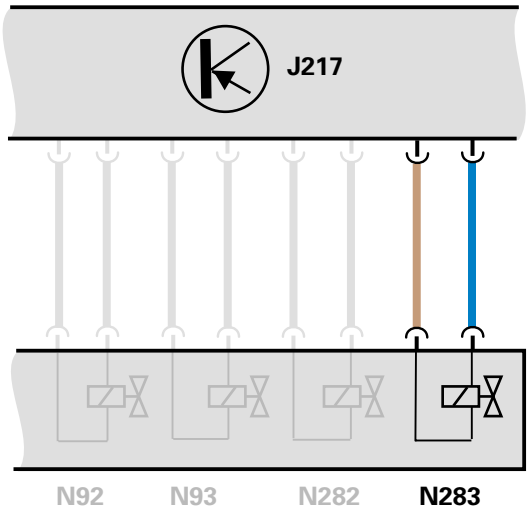

300_056

Actuators

The magnet for selector lever lock N110

is located in the selector lever frame.

It is an electromagnet that prevents the selector lever from moving out of the "P" position when the ignition is switched on.
If the selector lever is to be moved from this position, the foot brake must be pressed.

If the ignition is switched on, the control unit for the automatic gearbox supplies the magnet with power.
The magnet blocks the selector lever.
If the foot brake is pressed, the control unit switches off the power to the magnet so that the selector lever can be pressed.

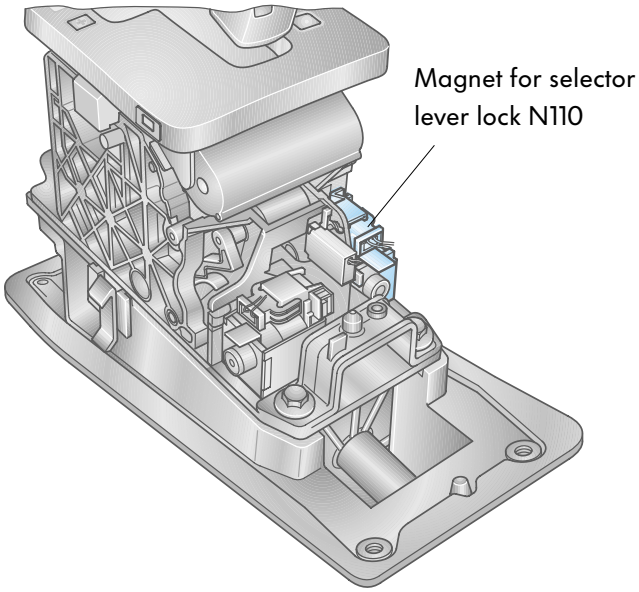

300_021a

Effect of signal drop-out

If the solenoid valve is defective or if there is a fault in the circuit, the selector lever can be pressed without having to press the foot brake.

Electric circuitry

J217 - control unit for automatic gearbox
N110 - magnet for selector lever lock

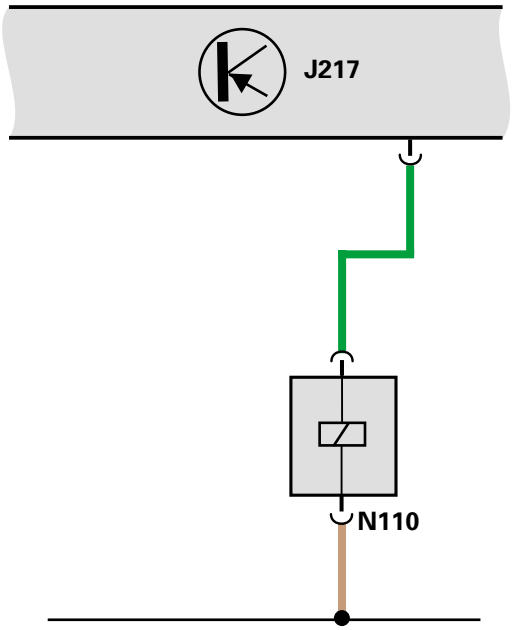

300_059

Check your knowledge

Which answers are correct?

One, several or all answers can be correct.

1. Name two types of solenoid valves that are used for the gearbox control unit.

.....

2. On which part(s) of the automatic gearbox are brakes B1 and B2 supported?

.....

3. Name the components of a simple planetary gear set.

.....

4. What is the replacement interval for the ATF filling of the automatic gearbox?

☐ a) 20,000 km

☐ b) 2 years

☐ c) none (lifetime filling)

.....

5. On which principle is the Lepelletier arrangement based?

☐ a) two series-connected simple planetary gear sets

☐ b) one simple and one subsequent dual planetary gear set

☐ c) two series-connected dual planetary gear sets

Solutions

1. Yes/no valves and modulation valves; 2. On the gearbox housing; 3. Internal gear, planetary wheels, sun wheel and planetary carrier; 4. c; 5. b

Operational diagram

Component

E438 - switch for Tiptronic in the steering wheel
E439 - switch for Tiptronic in the steering wheel

F125 - multifunction switch
F189 - switch for Tiptronic
F319 - switch for selector lever in P

G93 - gearbox oil temperature sender
G182 - gearbox input speed sender
G193 - sender 1 for hydraulic pressure, automatic gearbox
G194 - sender 2 for hydraulic pressure, automatic gearbox
G195 - gearbox output speed sender

J217 - control unit for automatic gearbox
J527 - control unit for steering wheel electronics

N88 - solenoid valve 1
N89 - solenoid valve 2
N90 - solenoid valve 3
N91 - solenoid valve 4
N92 - solenoid valve 5
N93 - solenoid valve 6
N110 - magnet for selector lever lock
N282 - solenoid valve 9
N283 - solenoid valve 10
N380 - magnet for selector lever lock P

Additional signals

F41 - reverse gear switch

J518 - control unit for access and start authorisation
J519 - control unit for on-board network

1 Self-diagnosis
2 CAN data bus high
3 CAN data bus low

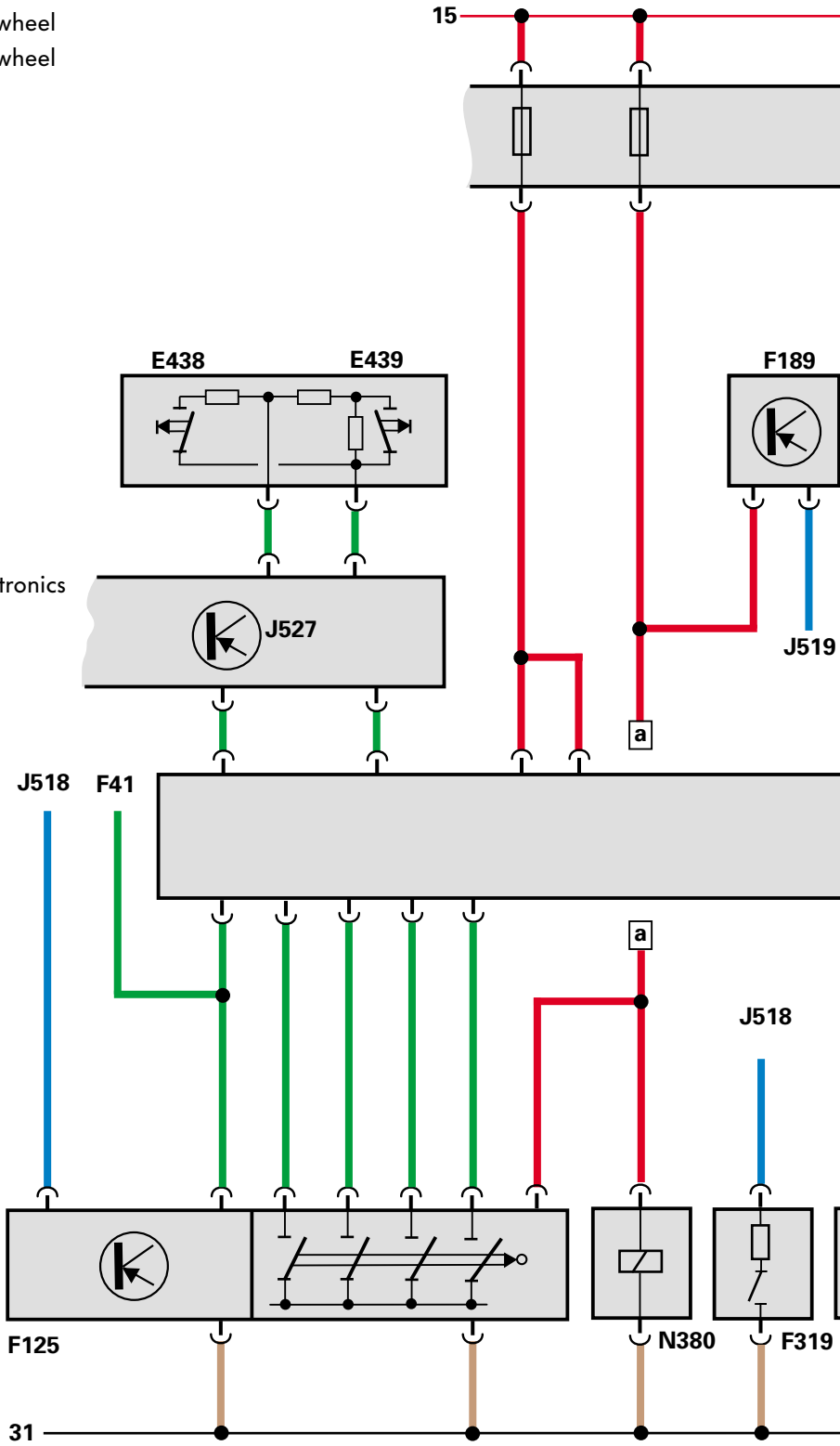

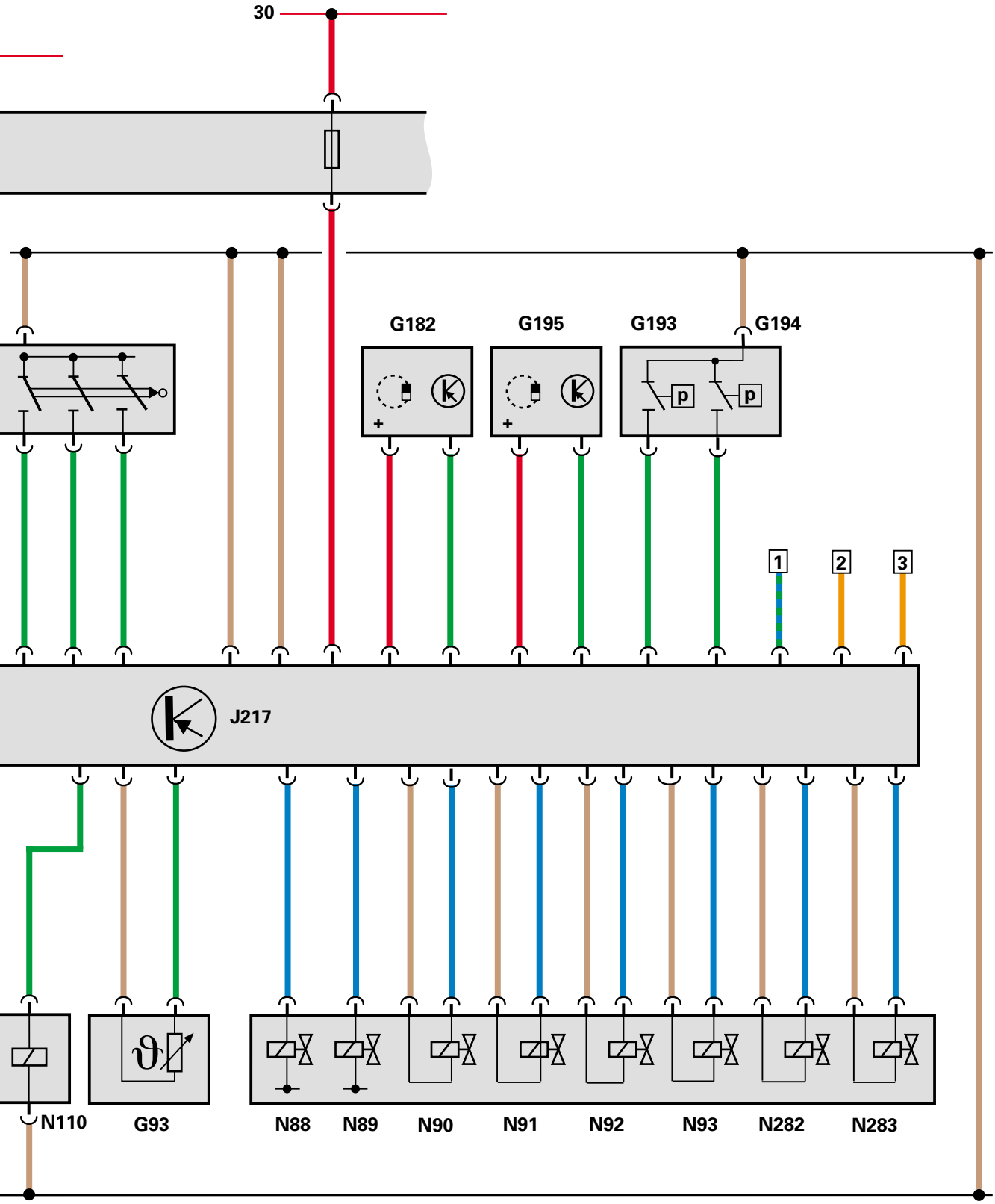
30
G182
G195
G193
G194
p
p
1
2
3
J217
N110
G93
N88
N89
N90
N91
N92
N93
N282
N283

300_032

Self-diagnosis

Diagnostics

For vehicle diagnostics, measurement and information systems VAS 5051 and VAS 5052, the operating modes

- Guided error search and
- Mobile vehicle self-diagnosis are available

The operating mode "Guided error search"

carries out a vehicle-specific check of all installed control units for incorrect entries and automatically compiles an individual checking plan from the results.
Together with the ELSA information, such as circuit diagrams or repair guidelines, this provides a specific target for trouble-shooting.

Independent of this, you can compile your own checking plan.
The function and component selection incorporates the checks that you select into the checking plan; these can be processed in the continued diagnostics procedure in any order.

Although the "Vehicle self-diagnosis"

operating mode can still be used, ELSA no longer provides any additional information.

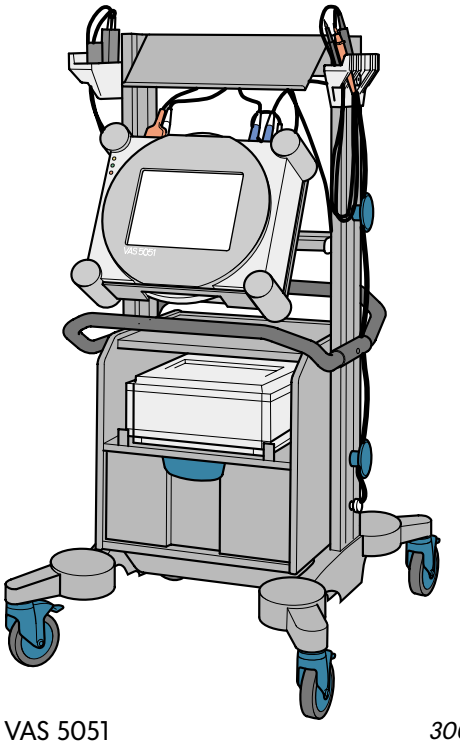

VAS 5051 *300_060*

300_084

VAS 5052

New tools

Setting gauge for multifunction switch T10173

This is required to set the multifunction switch when repairs are completed.

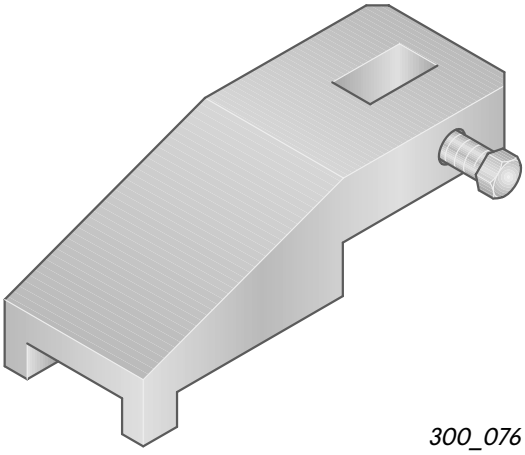

300_076

Pressure piece T10174

This is required to knock in the gaskets on the shaft for the multifunction switch.

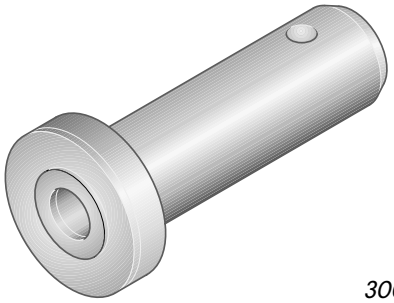

300_077

Pressure piece T10180

This is required to knock in the gaskets of the drive shaft.

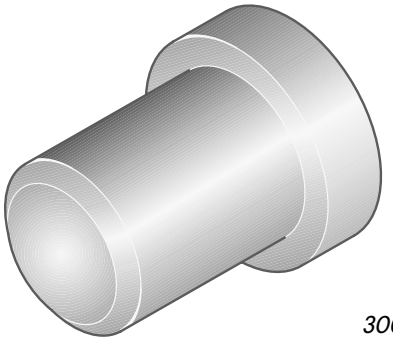

300_078

Sleeve T10186

This must be placed on the serration of the drive shaft before the gasket is attached to prevent damage during attachment of the gasket.

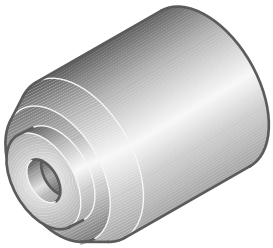

300_079