MODEL IDENTIFICATION

MODEL IDENTIFICATION - CARS

Body Code (1)	Model
"C"	Park Avenue
"E"	Eldorado
"F"	Camaro & Firebird
"G"	Aurora & Riviera
"H"	Bonneville, Eighty Eight, LeSabre & LSS
"J"	Cavalier & Sunfire
"K"	(2) DeVille & Seville
"M"	Metro
"N"	Alero, Cutlass, Grand Am & Malibu
"S"	Prizm
"V"	Catera
"W"	Century, Grand Prix, Intrigue, Lumina, Monte Carlo & Regal
"Y"	Corvette
"Z"	Saturn

(1) Vehicle body code is fourth character of VIN.

(2) Includes Concours and D'Elegance.

MODEL IDENTIFICATION - TRUCKS

Series (1)	Model
"C"	2WD Pickup, Sierra, Silverado, Suburban, Tahoe & Yukon
"E"	2WD Tracker
"G"	Cutaway, Express, G-Van & Savana
"J"	4WD Tracker
"K"	4WD Pickup, Sierra, Silverado, Suburban, Tahoe, Yukon & AWD Escalade
"L"	AWD Astro & Safari
"M"	2WD Astro & Safari
"P"	Forward Control (P42) & Motorhome (P32)
"S"	2WD Blazer, Envoy, Jimmy, Pickup & Sonoma
"T"	4WD Blazer, Bravada, Envoy, Jimmy, Pickup & Sonoma
"U"	Montana, Silhouette, Trans Sport & Venture

(1) Vehicle series is fifth character of VIN.

cardiagn.com

DRIVE BELT ROUTING

SERPENTINE BELT ROUTING & ALIGNMENT - CARS

NOTE: **For serpentine belt routing, see underhood label or See Fig. 1 -Fig. 15 .**

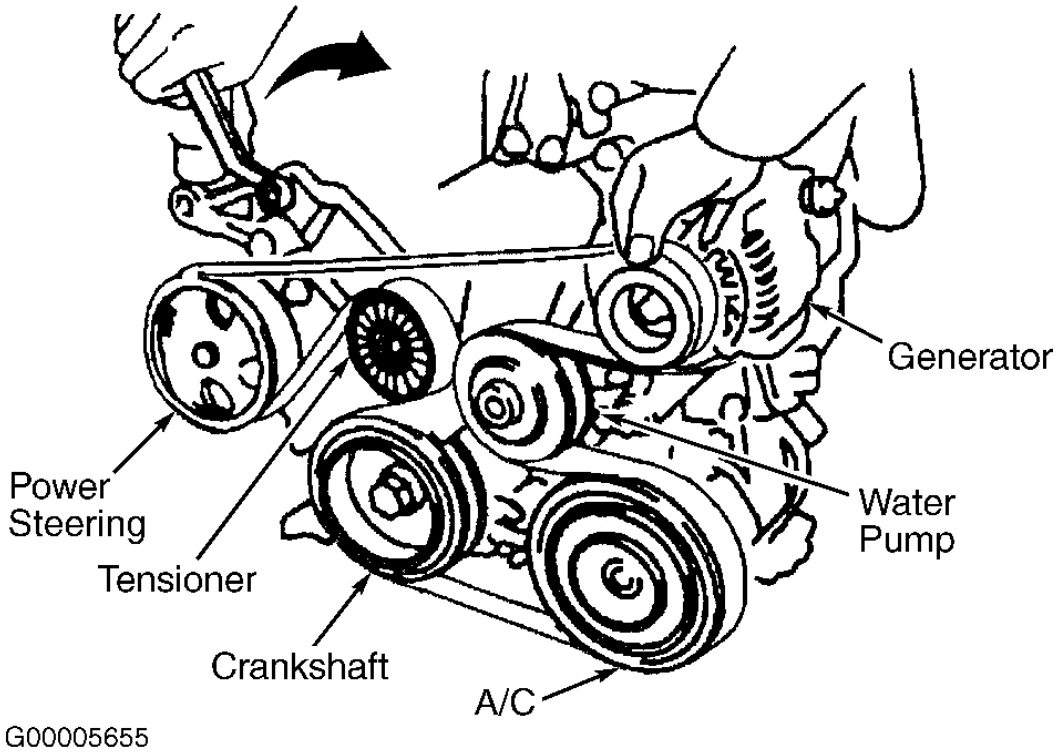

Fig. 1: Serpentine Belt Routing (1.8L Prizm)
Courtesy of GENERAL MOTORS CORP.

cardiagn.com

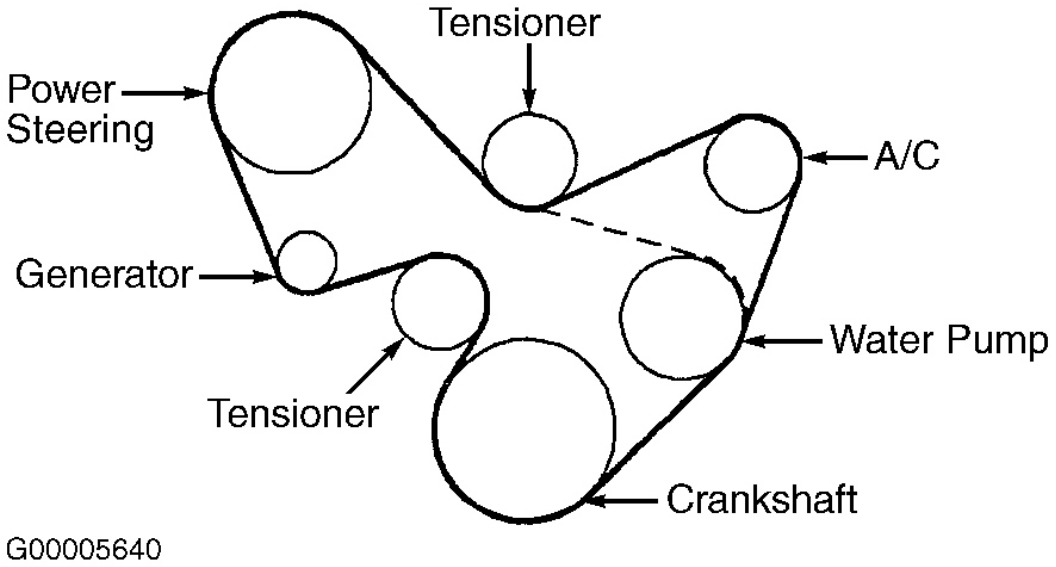

Fig. 2: Serpentine Belt Routing (1.9L Saturn DOHC)
Courtesy of GENERAL MOTORS CORP.

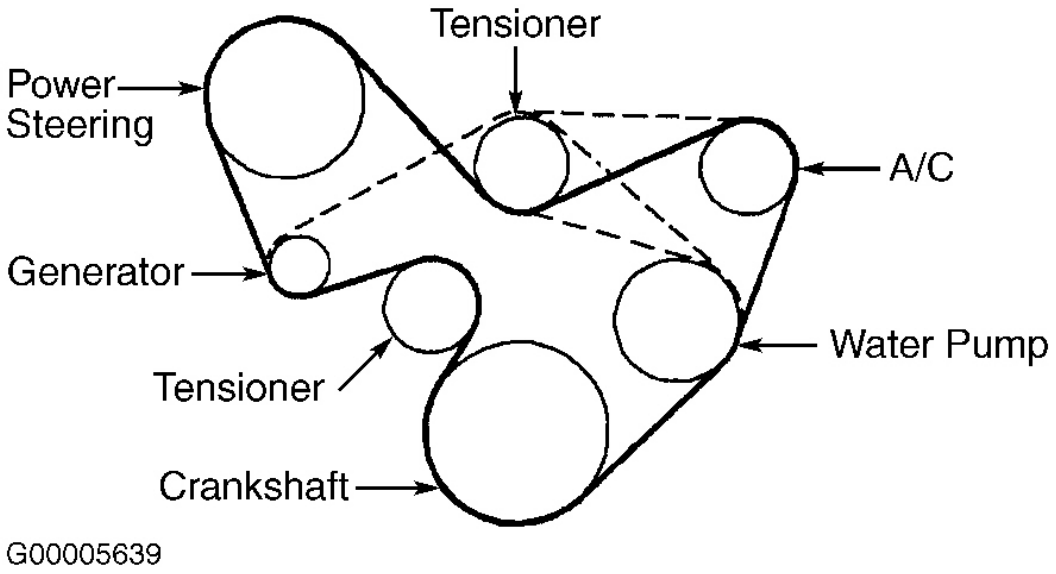

Fig. 3: Serpentine Belt Routing (1.9L Saturn SOHC)
Courtesy of GENERAL MOTORS CORP.

cardiagn.com

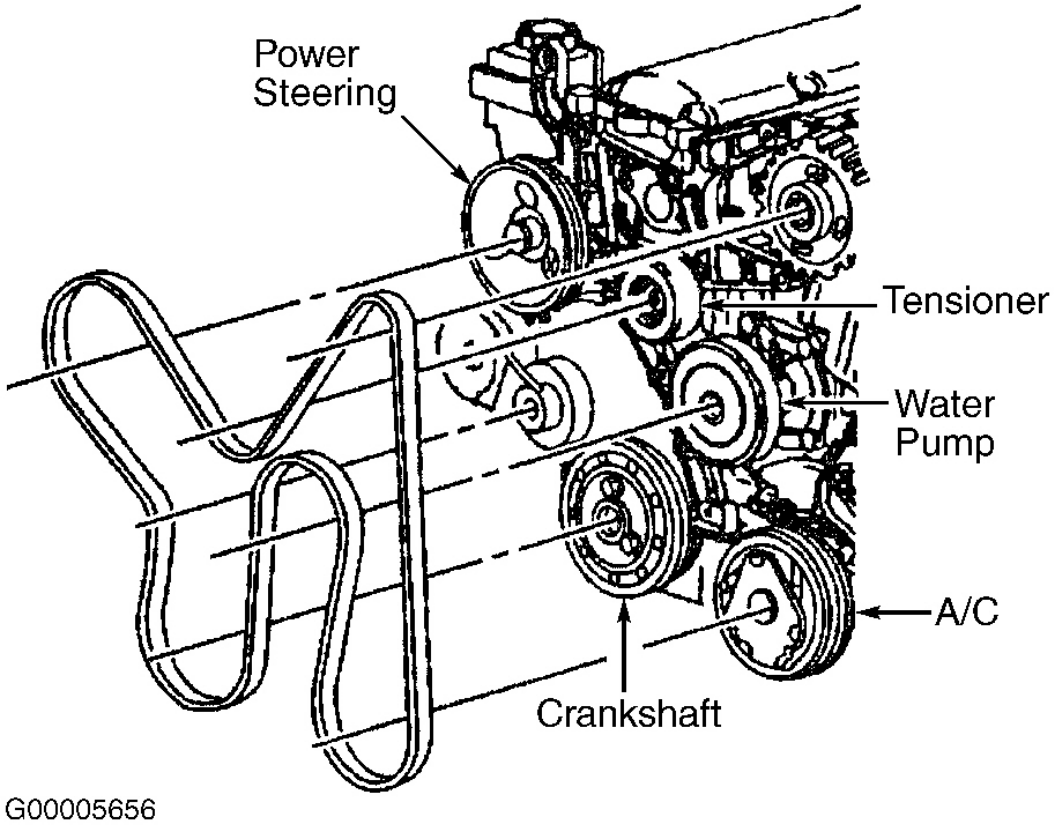

Fig. 4: Serpentine Belt Routing (2.2L "J" Body - With A/C)
Courtesy of GENERAL MOTORS CORP.

cardiagn.com

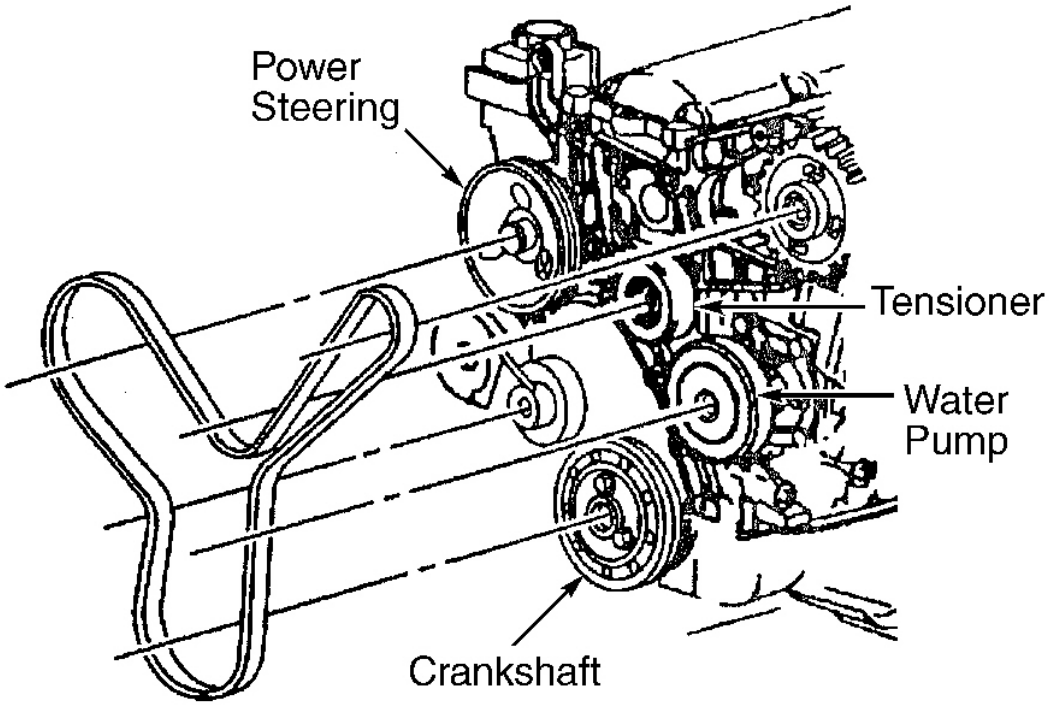

G00005657

Fig. 5: Serpentine Belt Routing (2.2L "J" Body - Without A/C)
Courtesy of GENERAL MOTORS CORP.

cardiagn.com

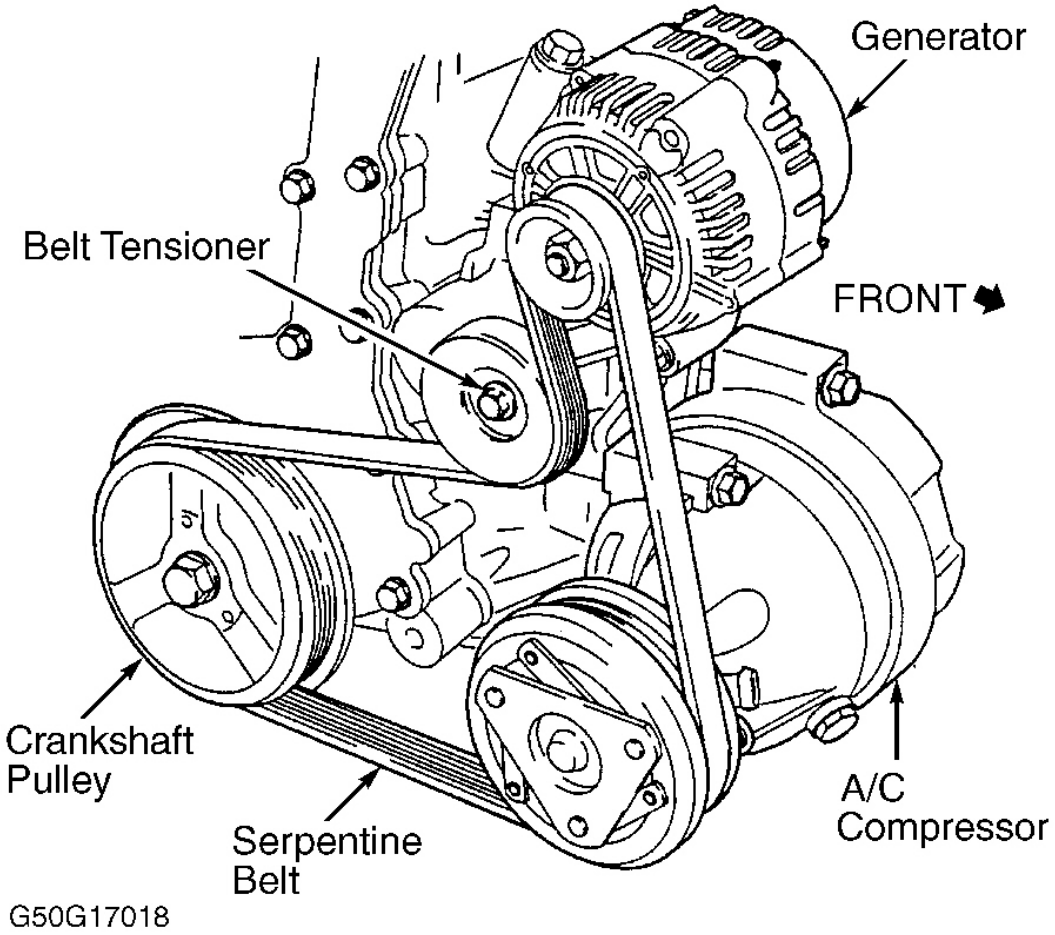

Fig. 6: Serpentine Belt Routing (2.4L "J" & "N" Bodies)
Courtesy of GENERAL MOTORS CORP.

cardiagn.com

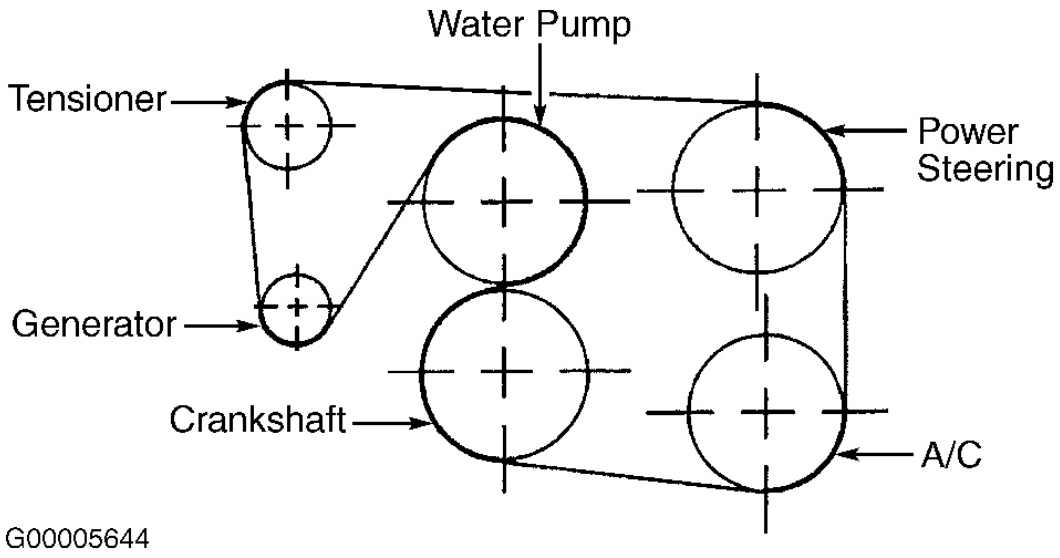

Fig. 7: Serpentine Belt Routing (3.0L "V" Body)
Courtesy of GENERAL MOTORS CORP.

cardiagn.com

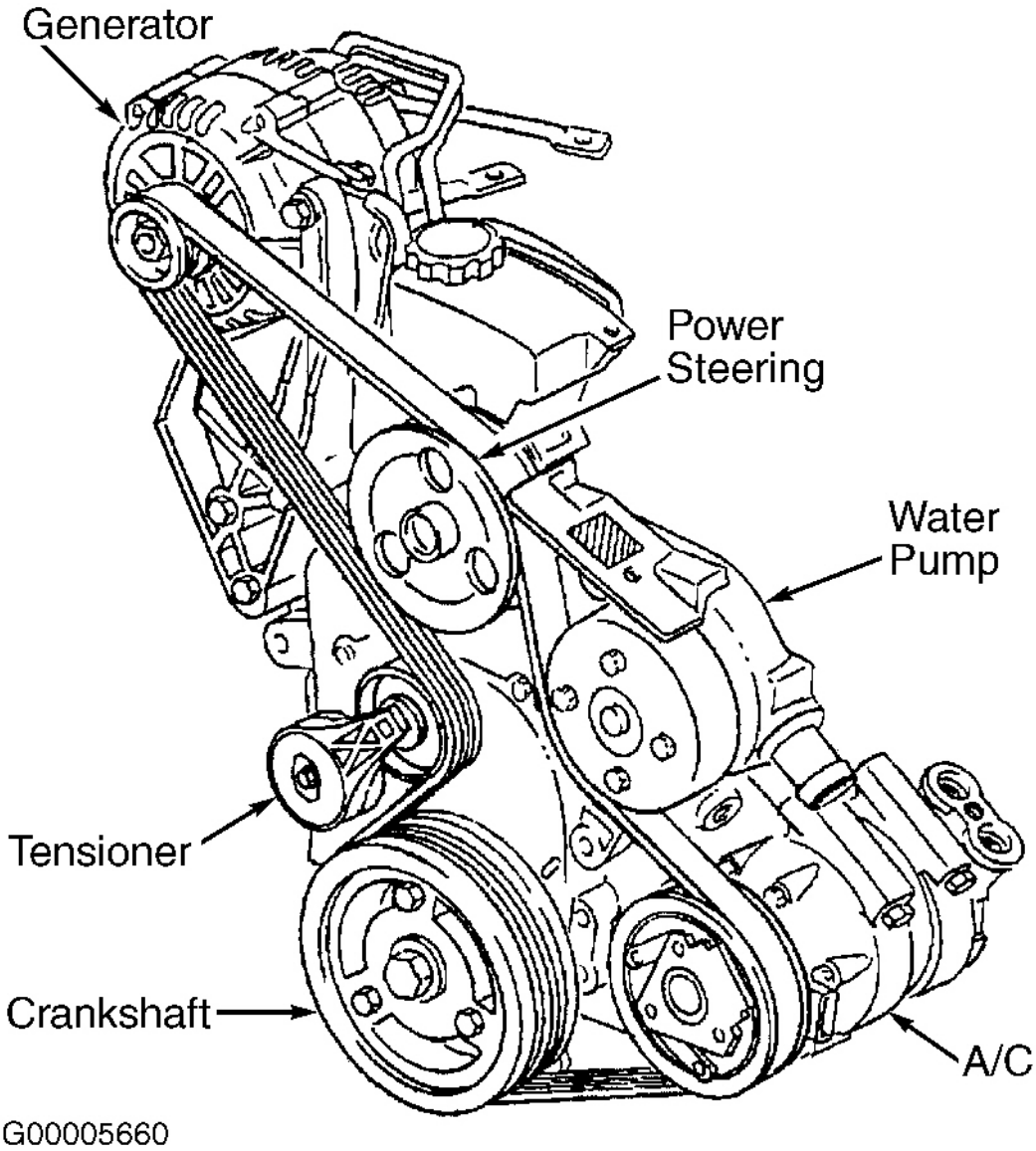

Fig. 8: Serpentine Belt Routing (3.1L & 3.4L "N" & "W" Body - Except Cutlass & Malibu)
Courtesy of GENERAL MOTORS CORP.

cardiagn.com

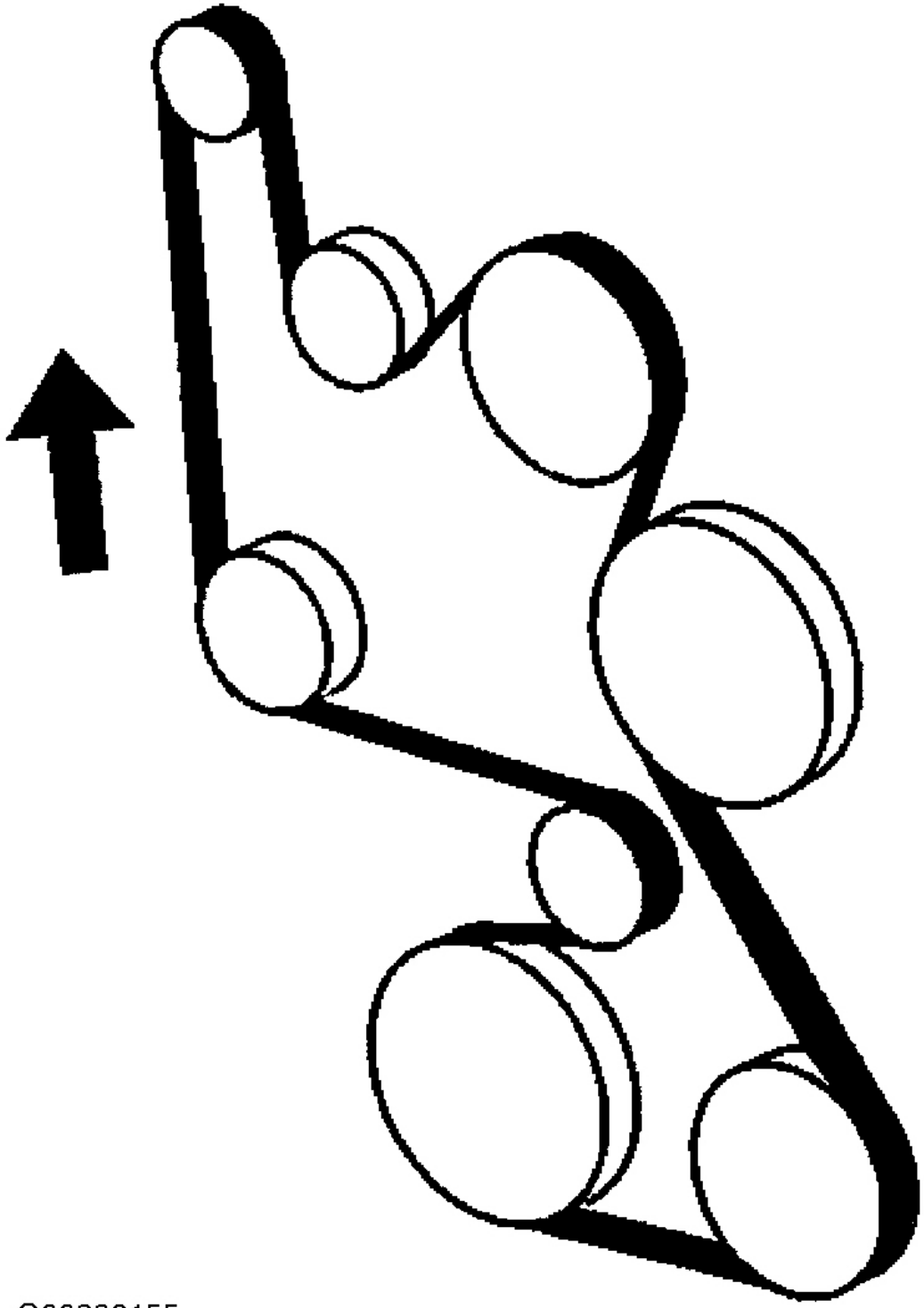

G00236155

cardiagn.com

Fig. 9: Serpentine Belt Routing (3.1L & 3.4L "N" & "W" Body - Cutlass & Malibu)
Courtesy of GENERAL MOTORS CORP.

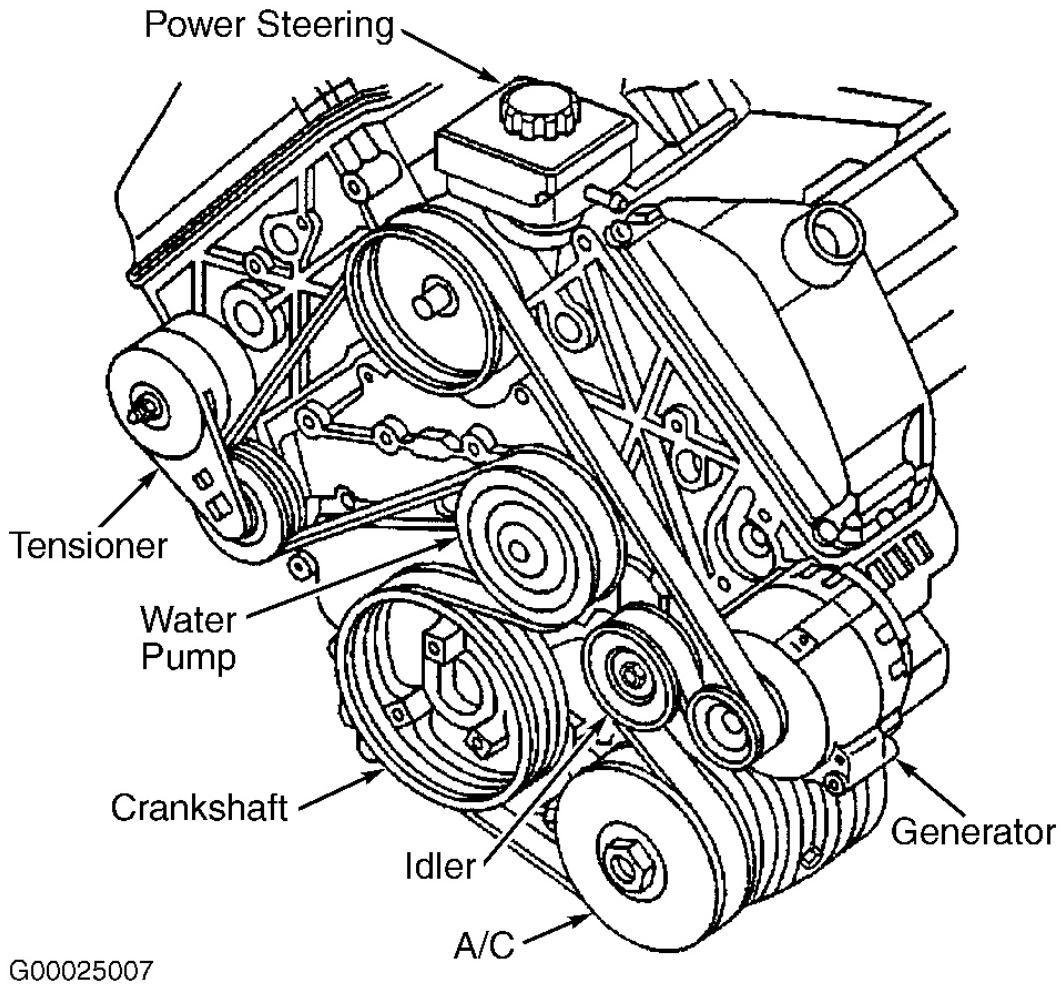

Fig. 10: Serpentine Belt Routing (3.5L "W" Body)
Courtesy of GENERAL MOTORS CORP.

cardiagn.com

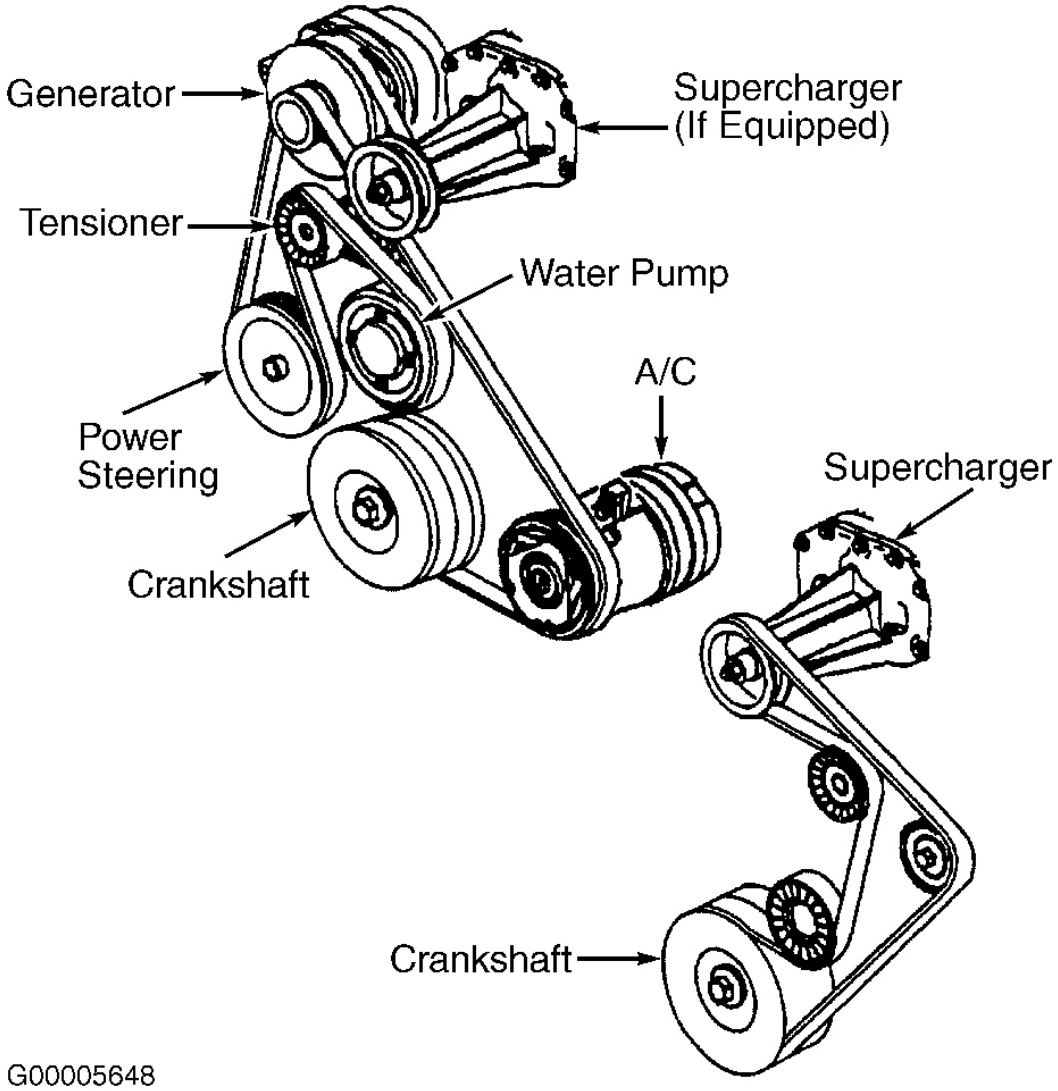

Fig. 11: Serpentine Belt Routing (3.8L "C", "G", "H" & "W" Bodies)
Courtesy of GENERAL MOTORS CORP.

cardiagn.com

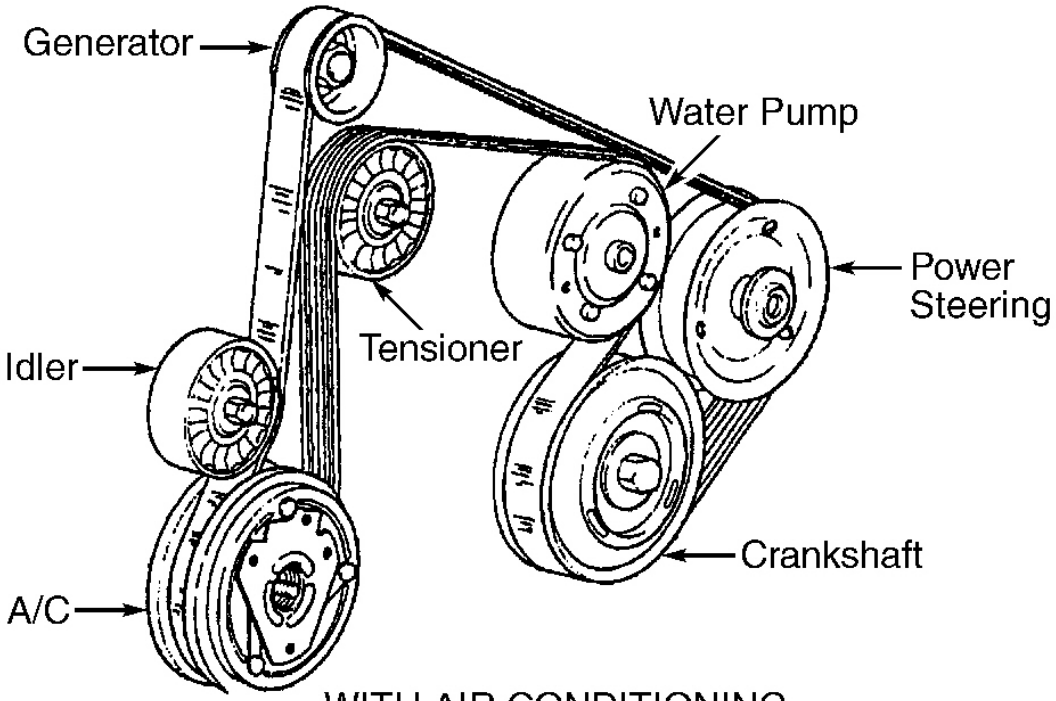

WITH AIR CONDITIONING

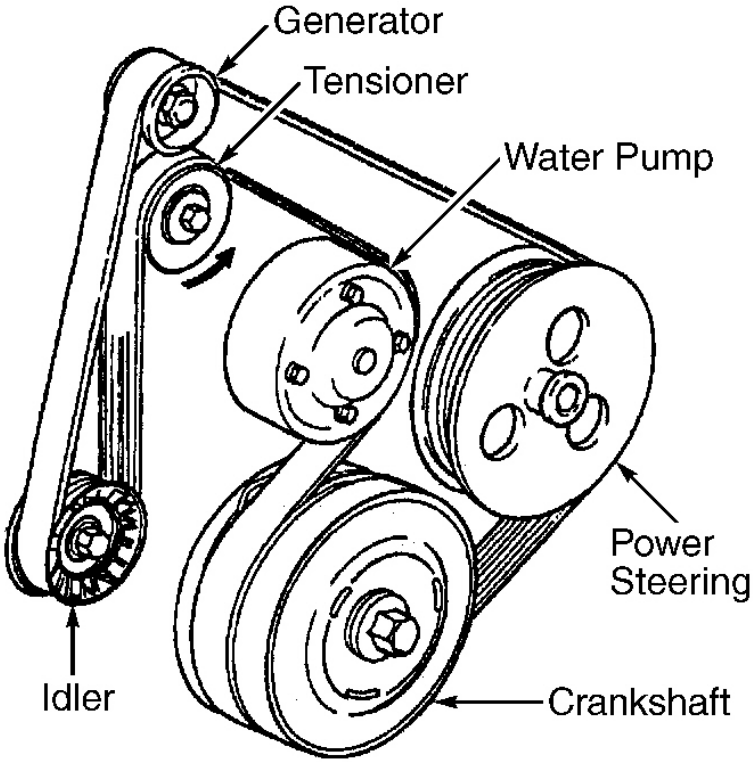

WITHOUT AIR CONDITIONING

G00005649

cardiagn.com

Fig. 12: Serpentine Belt Routing (3.8L "F" Body)
Courtesy of GENERAL MOTORS CORP.

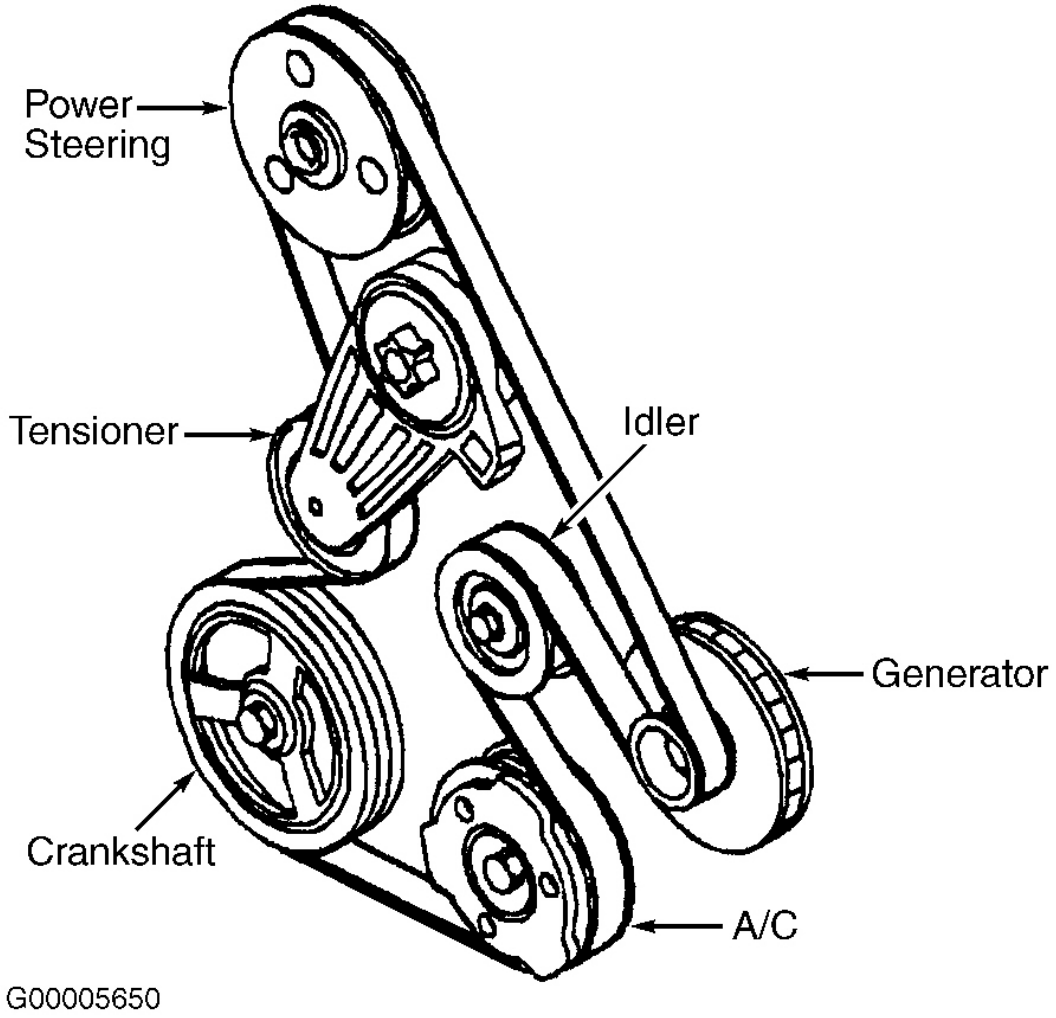

Fig. 13: Serpentine Belt Routing (4.0L "G" Body & 4.6L "E" & "K" Bodies)
Courtesy of GENERAL MOTORS CORP.

cardiagn.com

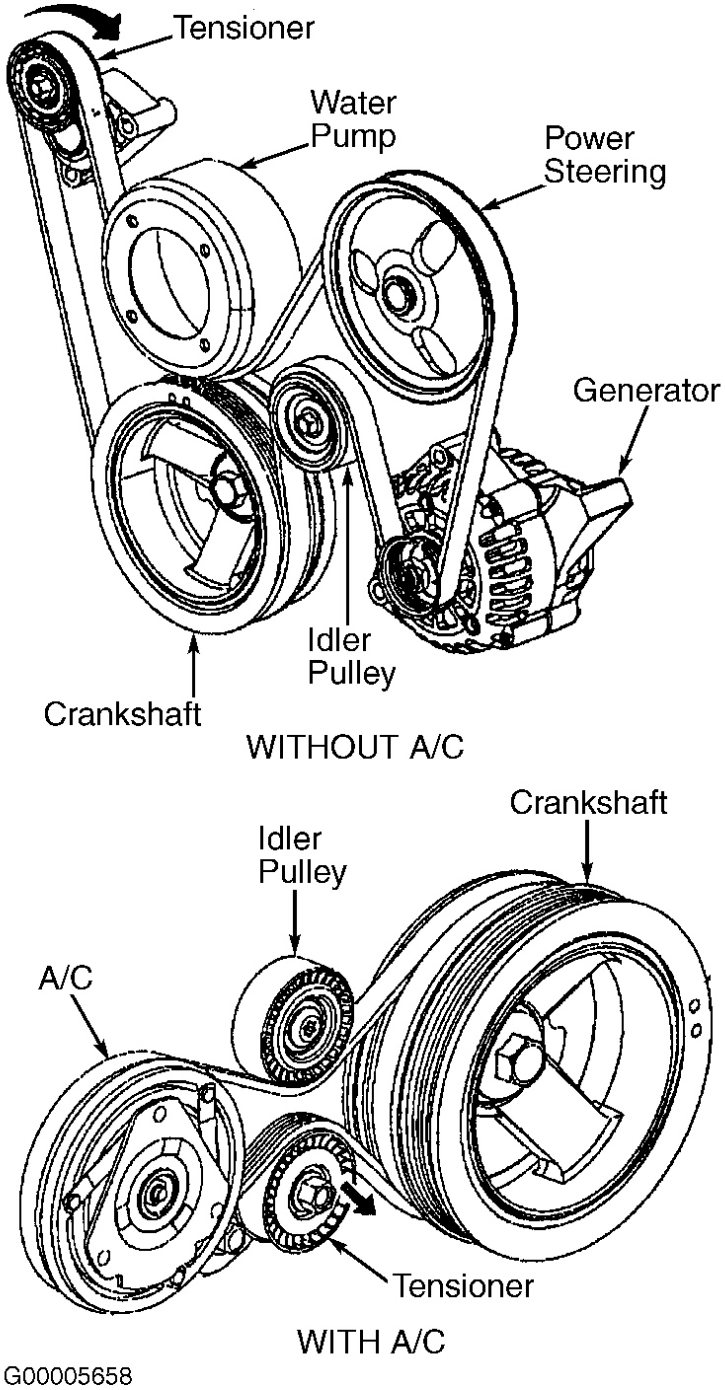

Fig. 14: Serpentine Belt Routing (5.7L "F" Body)
Courtesy of GENERAL MOTORS CORP.

cardiagn.com

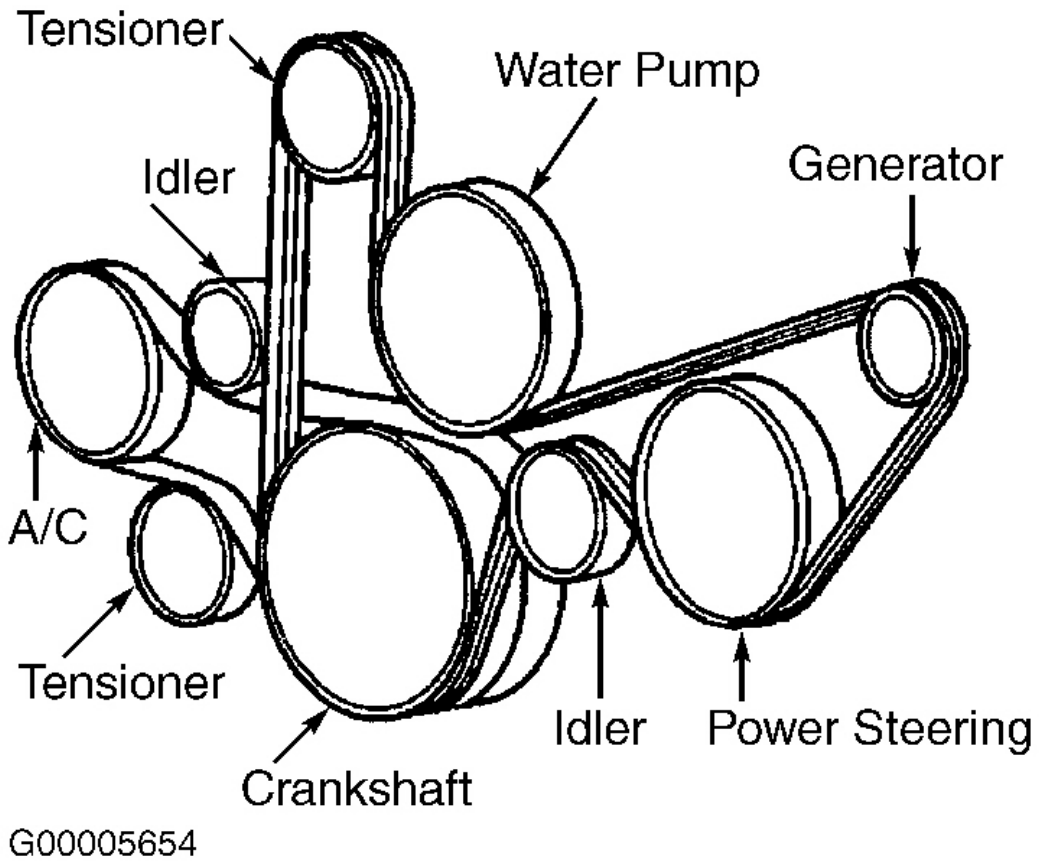

Fig. 15: Serpentine Belt Routing (5.7L "Y" Body)
Courtesy of GENERAL MOTORS CORP.

SERPENTINE BELT ROUTING & ALIGNMENT - TRUCKS

NOTE: **For serpentine belt routing, see underhood label or See Fig. 16 -Fig. 22 .**

cardiagn.com

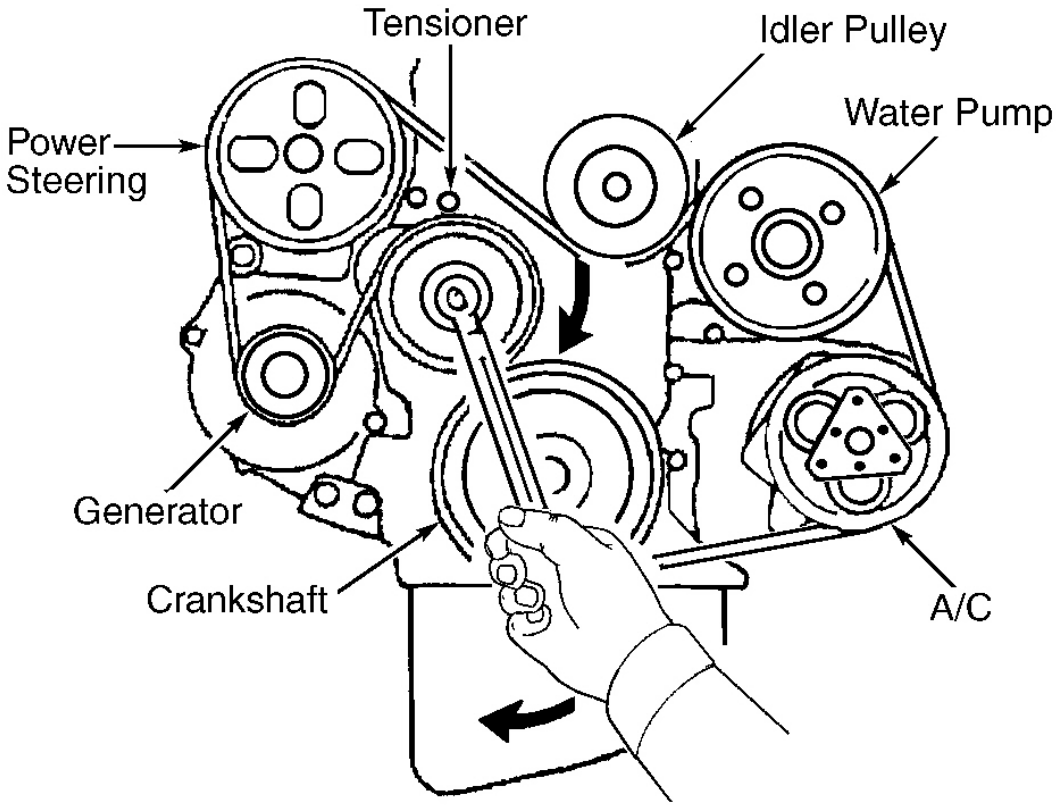

Fig. 16: Serpentine Belt Routing (2.0L Tracker)
Courtesy of GENERAL MOTORS CORP.

cardiagn.com

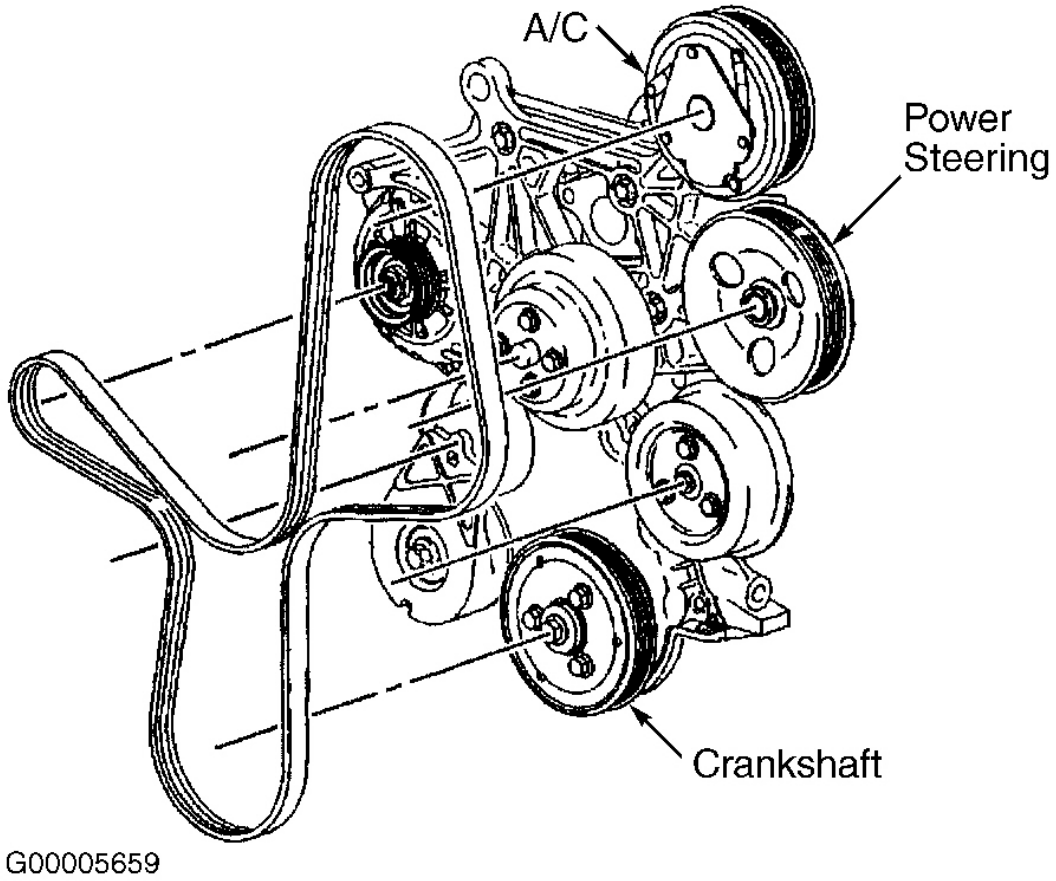

Fig. 17: Serpentine Belt Routing (2.2L "S" Series)
Courtesy of GENERAL MOTORS CORP.

cardiagn.com

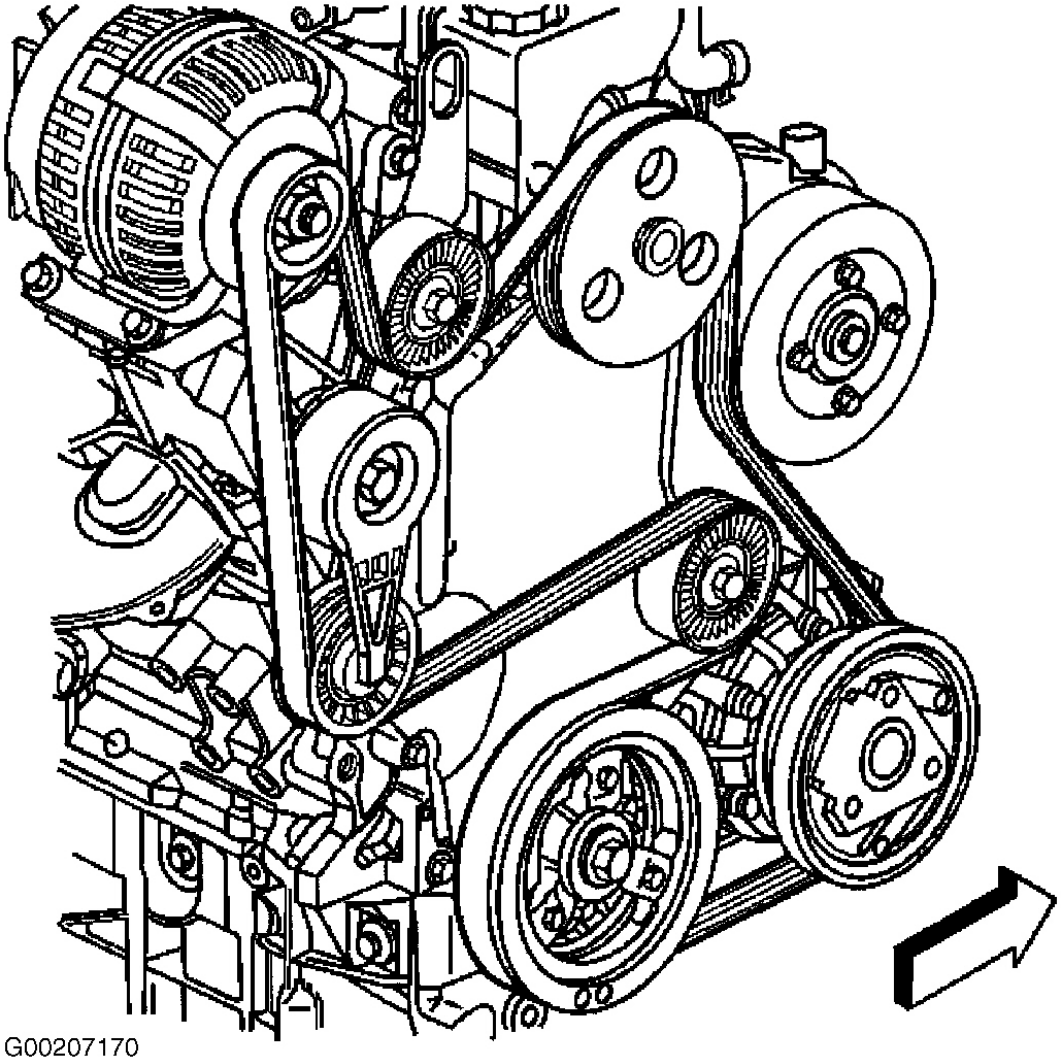

Fig. 18: Serpentine Belt Routing (3.4L "U" Series)
Courtesy of GENERAL MOTORS CORP.

cardiagn.com

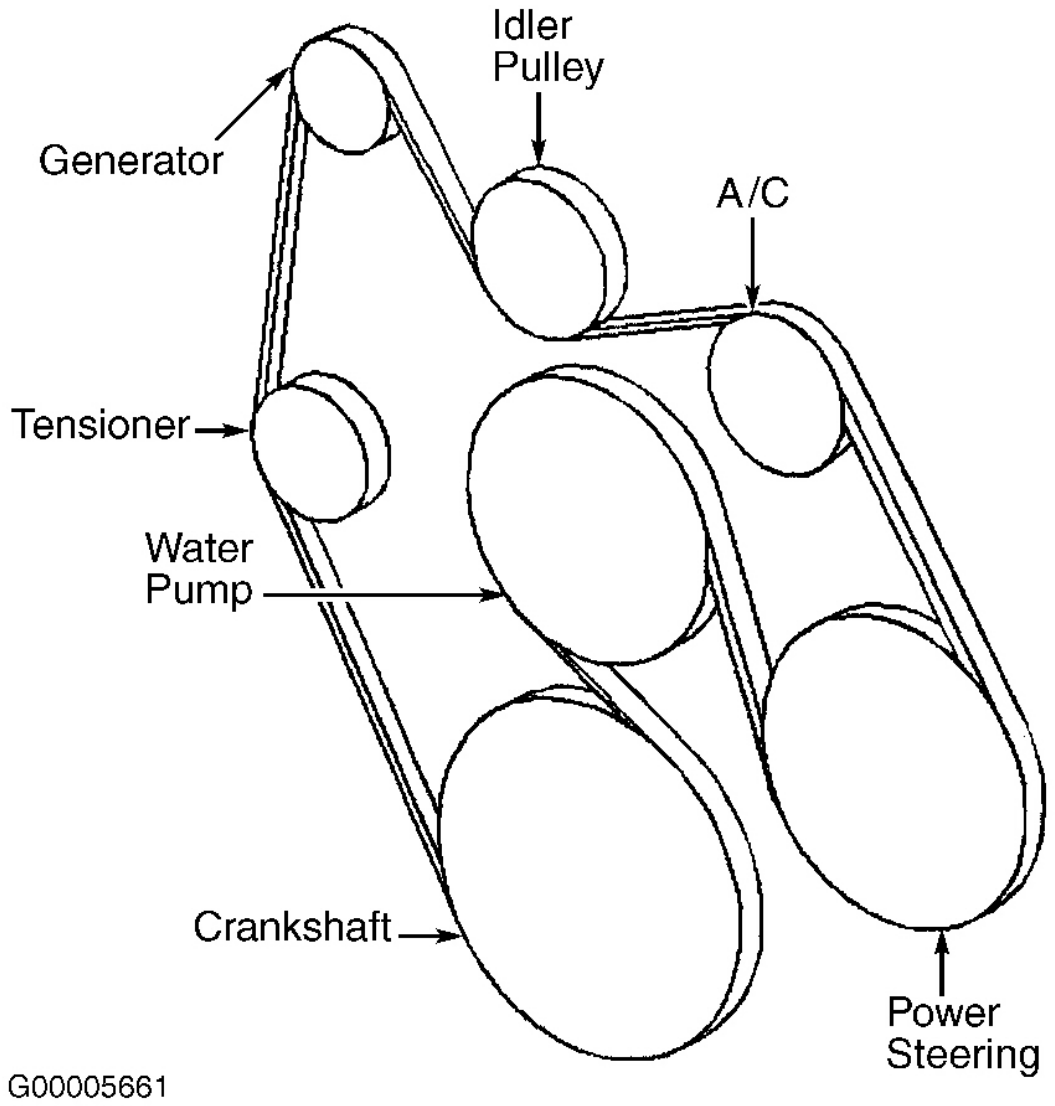

Fig. 19: Serpentine Belt Routing (4.3L, 5.0L, 5.7L & 7.4L "C", "G", "K", "L", "M", "P", "S" & "T" Series)
Courtesy of GENERAL MOTORS CORP.

cardiagn.com

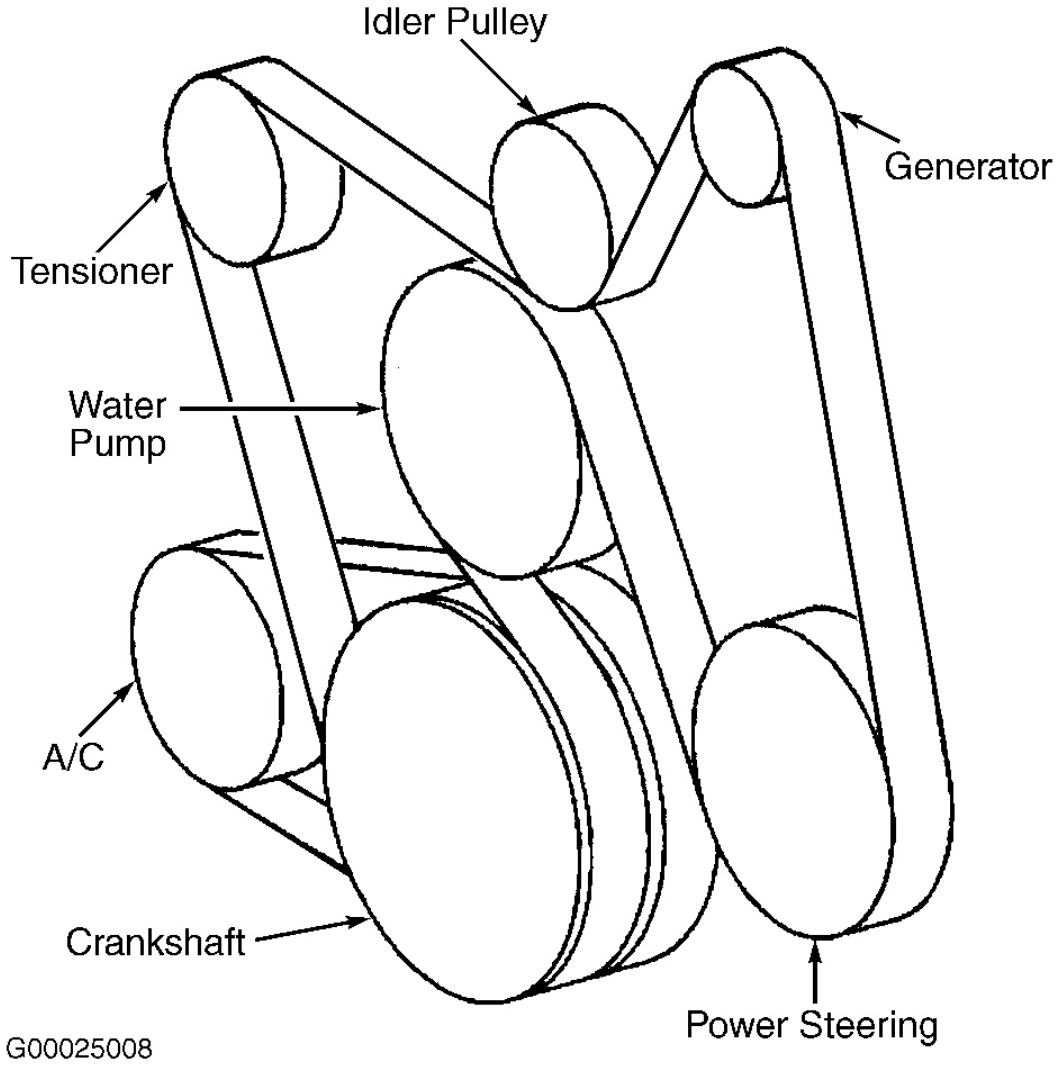

Fig. 20: Serpentine Belt Routing (4.8L, 5.3L & 6.0L "C" & "K" Series)
Courtesy of GENERAL MOTORS CORP.

cardiagn.com

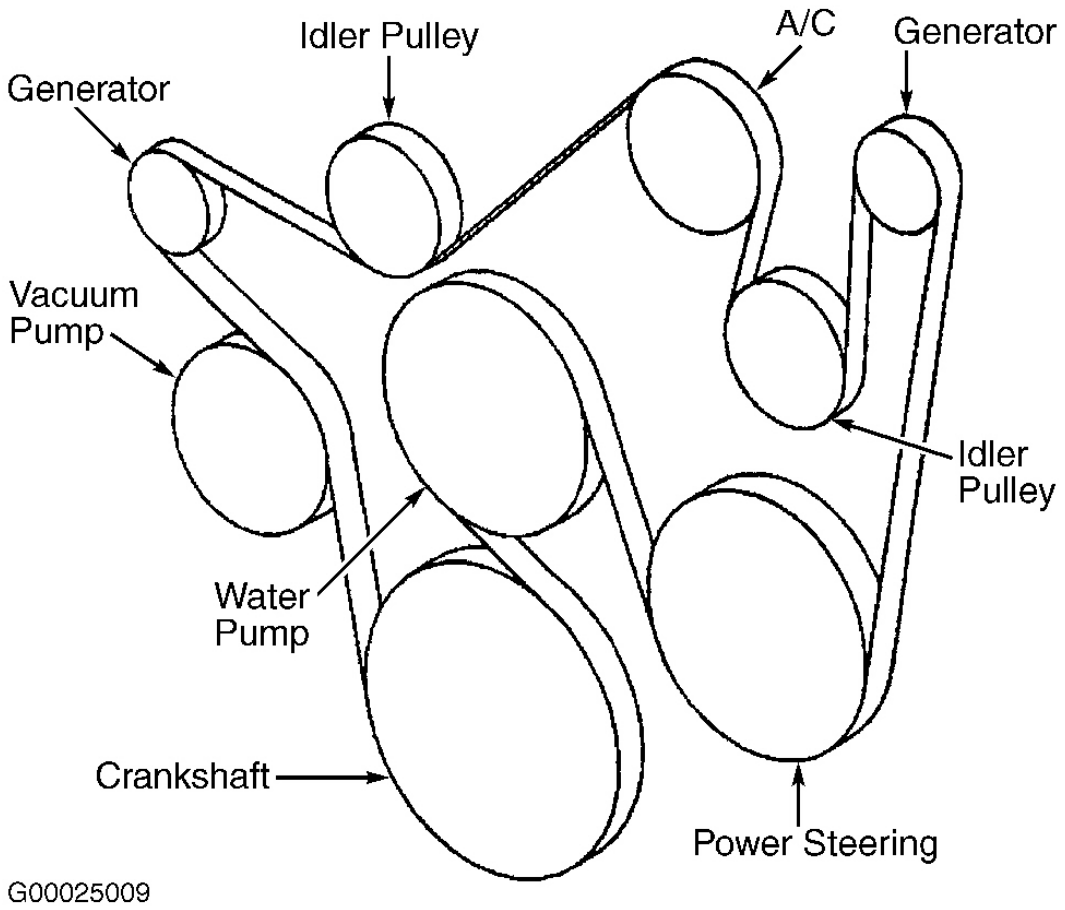

Fig. 21: Serpentine Belt Routing (6.5L Turbo-Diesel "C", "G" & "K" Series With Dual Generators)
Courtesy of GENERAL MOTORS CORP.

cardiagn.com

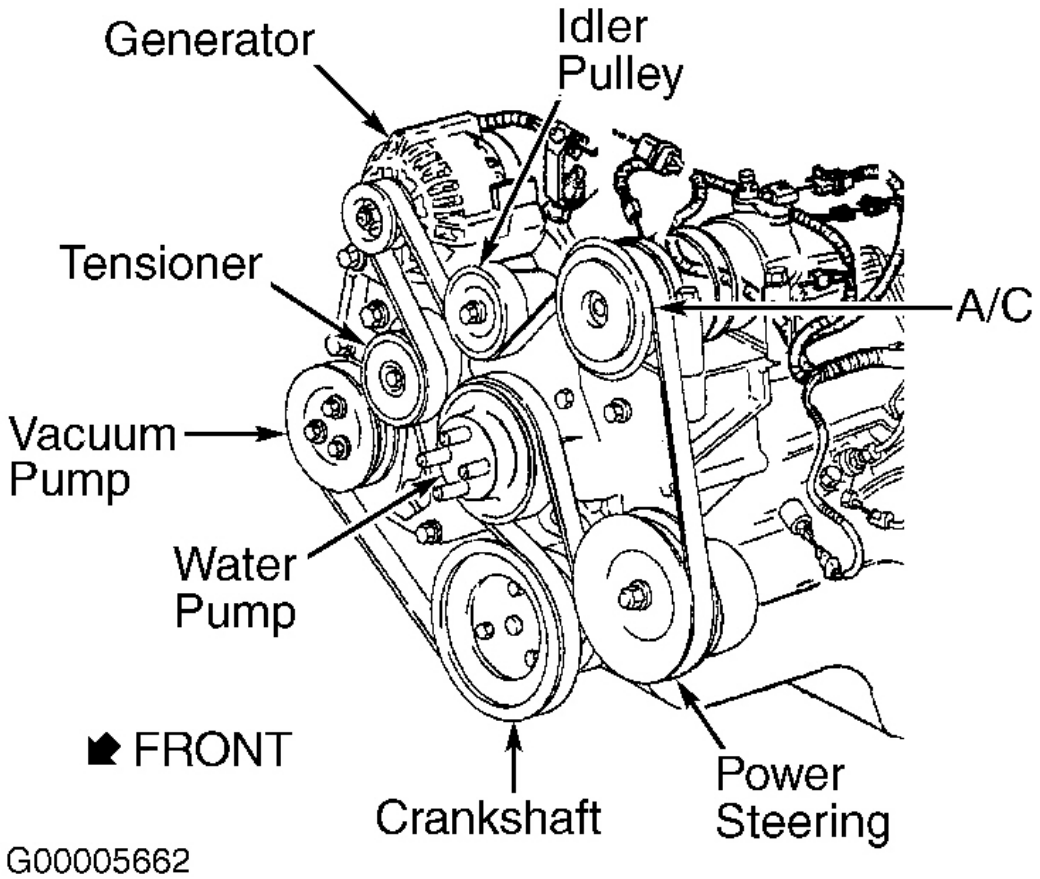

Fig. 22: Serpentine Belt Routing (6.5L Turbo-Diesel "C", "G" & "K" Series Without Dual Generators)
Courtesy of GENERAL MOTORS CORP.

REMOVAL & INSTALLATION

CUTLASS & MALIBU ONLY (3.1L & 3.4L)

NOTE: **Removal and installation procedure given on these vehicles only due to the complicated procedure involved.**

Removal

NOTE: **Tools Required: J-39914 Drive Belt Tension Wrench.**

1. Disconnect the negative battery cable. Using the J-39914, rotate the belt tensioner. See **Fig. 23** .
2. Remove the drive belt from the generator pulley. Support the engine by the oil pan.

cardiagn.com

3. Remove the engine mount assembly from the engine mount bracket support. See **Fig. 24** . Remove the auxiliary bracket.
4. Lower the engine in order to remove the drive belt. See **Fig. 25** . Remove the drive belt.

Installation

1. Using the J-39914, rotate the belt tensioner and install the drive belt.
2. Install the auxiliary bracket. Install the auxiliary bracket fasteners. Tighten the fasteners to 37 ft. lbs. (50 N.m).
3. Install the engine mount assembly to the engine mount bracket support bolts.
4. Remove the floor jack. Connect the negative battery cable.

cardiagn.com

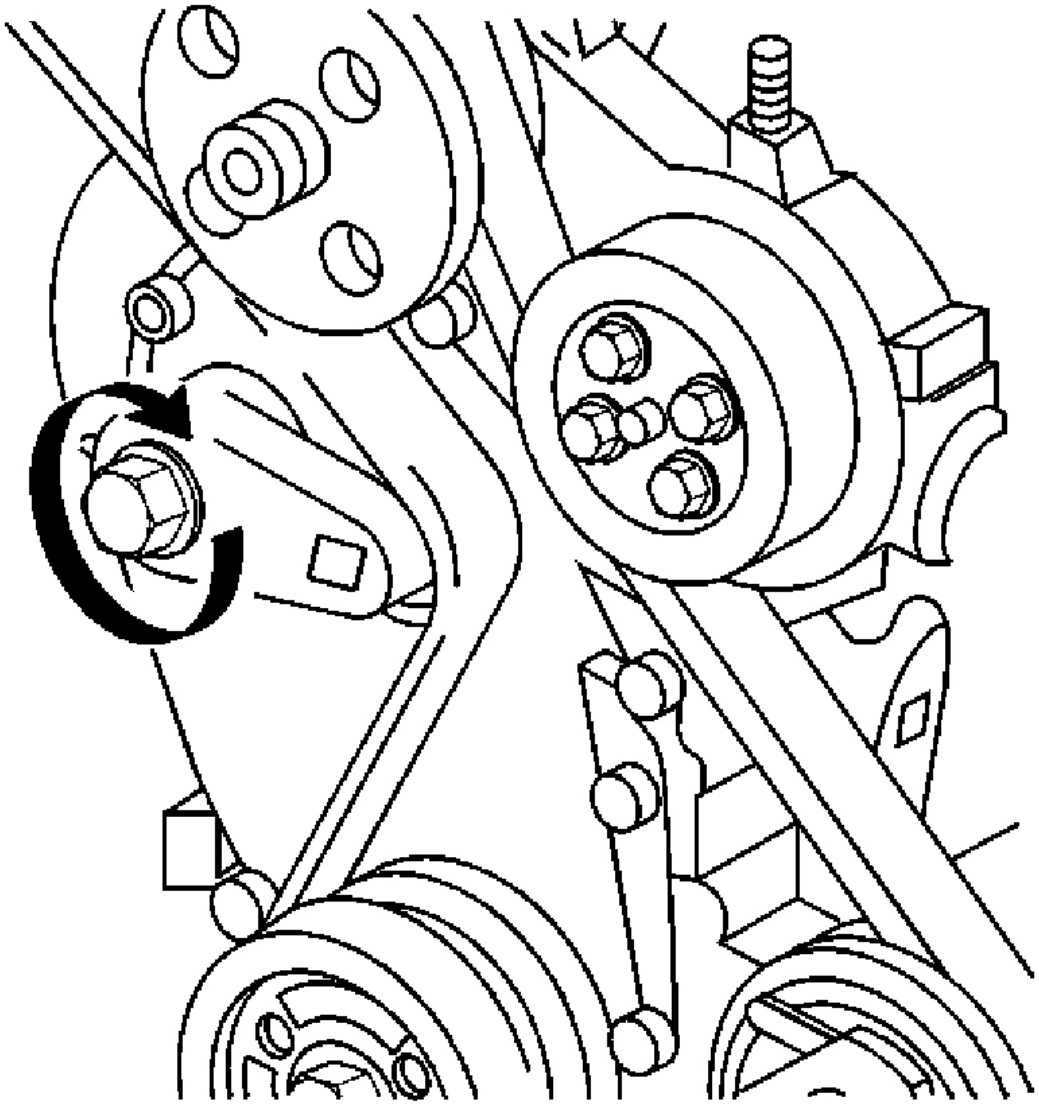

Fig. 23: Rotating The Belt Tensioner
Courtesy of GENERAL MOTORS CORP.

cardiagn.com

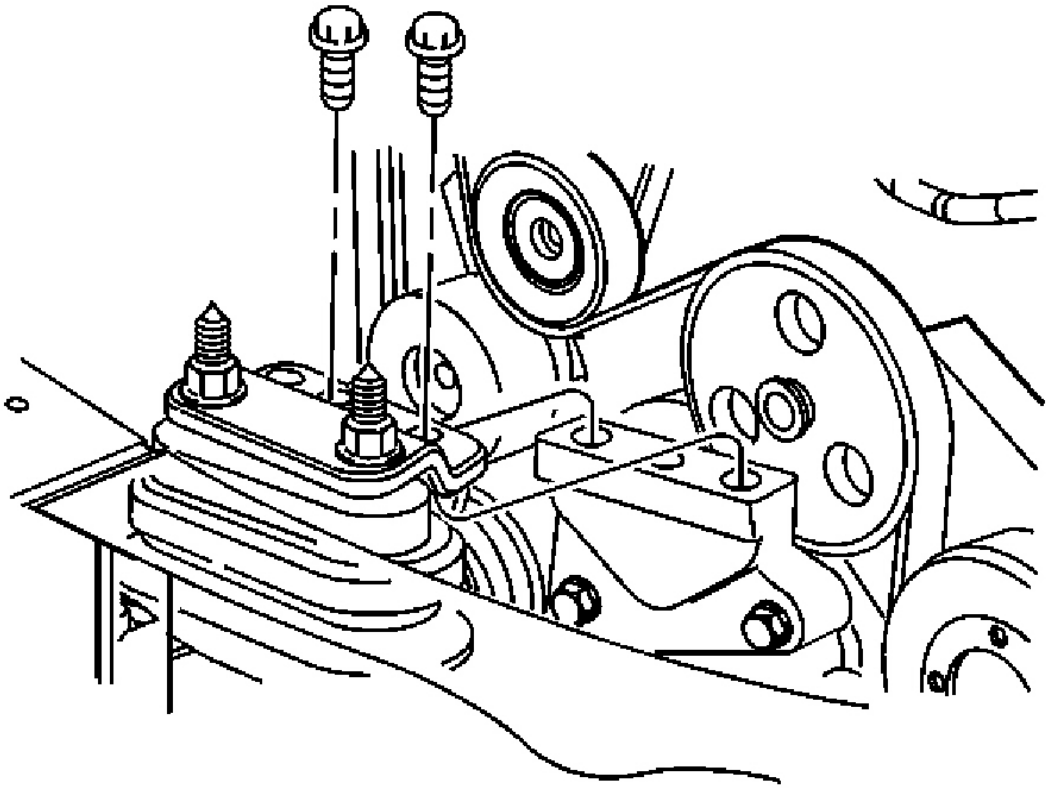

Fig. 24: Seperating Engine Mount Bracket
Courtesy of GENERAL MOTORS CORP.

cardiagn.com

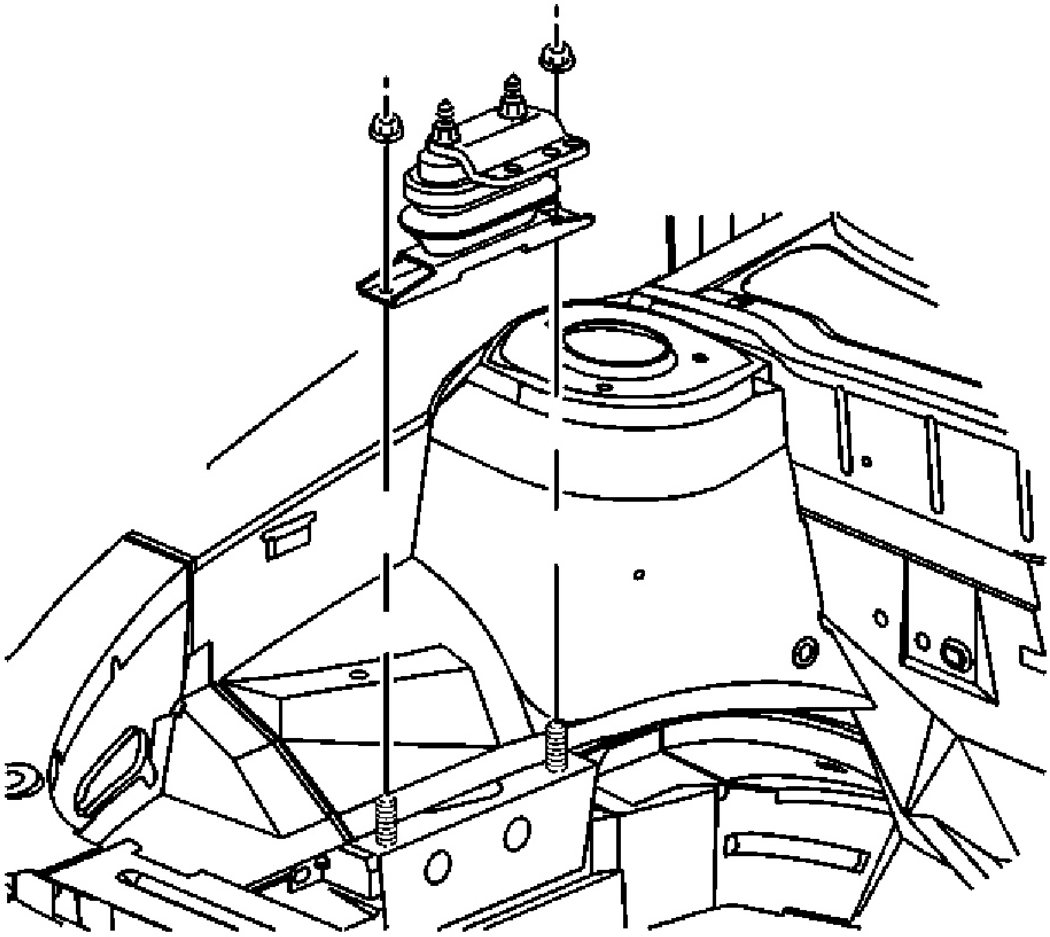

Fig. 25: Removing & Installing Engine Mount
Courtesy of GENERAL MOTORS CORP.

SPECIFICATIONS

CAUTION: When battery is disconnected, vehicle computer and memory systems may lose memory data. Driveability problems may exist until computer systems have completed a relearn cycle. See COMPUTER RELEARN PROCEDURES article in GENERAL INFORMATION before disconnecting battery.

BELT ADJUSTMENT

BELT ADJUSTMENT - CARS

cardiagn.com

Application	Specification
Serpentine Belt	(1) 30-50 Lbs. (13.6-22.7 kg.)
Except Serpentine Belt - Deflection @ 22 Lbs. (10.0 kg.)	
Metro	
A/C Compressor & Power Steering Pump	.28-.35 (7.0-9.0)
Generator	.24-.31 (6-8)
(1) Serpentine belt is automatically adjusted by tensioner. Tension is checked with belt tension gauge. If tension is not as specified, check belt length and tensioner operating range. Replace belt or tensioner as necessary.	

BELT ADJUSTMENT - TRUCKS

Application	(1) Lbs. (kg)
All Models	(1)
(1) Serpentine belt tension is maintained automatically by a spring-tensioned idler pulley. No adjustment is necessary.	

COOLING SYSTEM SPECIFICATIONS

COOLING SYSTEM SPECIFICATIONS - CARS

Application	Specification
Coolant Replacement Interval	
Except Metro & Prizm	60 Months Or 150,000 Miles
Metro	30 Months Or 30,000 Miles
Prizm	24 Months Or 30,000 Miles
Coolant Capacity (1)	
1.0L	4.1 Qts. (3.9L)
1.3L	
M/T	4.9 Qts. (4.6L)
A/T	5.0 Qts. (4.7L)
1.8L	
Prizm	
A/T	6.0 Qts. (5.7L)
M/T	6.1 Qts. (5.8L)
1.9L	7.0 Qts. (6.6L)
2.2	
"J" Body	9.6 Qts. (9.1L)
2.4L	
"J" Body	9.9 Qts. (9.4L)
"N" Body	11.3 Qts. (10.7L)
3.0L	10.0 Qts. (9.5L)

cardiagn.com

3.1L	
"L" & "N" Bodies	13.6 Qts. (12.9L)
"W" Body	11.7 Qts. (11.0L)
3.4L	13.6 Qts. (12.9L)
3.5L	9.8 Qts. (9.3L)
3.8L	
Except "F" & "W" Bodies	13.0 Qts. (12.3L)
"F" Body	
A/T	12.3 Qts. (11.6L)
M/T	12.5 Qts. (11.8L)
"W" Body	10.7 Qts. (10.1L)
4.0L	13.0 Qts. (12.3L)
4.6L Except Seville	10.7 Qts. (10.1L)
4.6L Seville	12.5 Qts. (11.8L)
5.7L	
"F" Body	
A/T	15.1 Qts. (14.3L)
M/T	15.3 Qts. (14.5L)
"Y" Body	
A/T	12.3 Qts. (11.6L)
M/T	12.6 Qts. (11.9L)
Pressure Cap	
"F" Body	18 psi
Metro	13 psi
Prizm	13 psi
Saturn	15 psi
All Others	(2) 15 psi
Thermostat	
Prizm	
Starts To Open	176-183°F (80-84°C)
Fully Opens	203°F (95°C)
Metro	
Starts To Open	190-197°F (88-92°C)
Fully Opens	212-221°F (100-105°C)
Saturn	
Starts To Open	182-190°F (83-88°C)
Fully Open	212-222°F (100-106°C)
All Others	
Starts To Open	189°F (87°C)
Fully Opens	207°F (97°C)

cardiagn.com

(1) Specification is approximate and includes heater capacity.

(2) Or specification stamped on cap.

COOLING SYSTEM SPECIFICATIONS - TRUCKS

Application	Specification
Coolant Replacement Interval	
Except Tracker	60 Months Or 150,000 Miles
Tracker	30 Months Or 30,000 Miles
Pressure Cap	
Except Tracker	15 psi
Tracker	13 psi
Thermostat Opens	
Except Tracker	
Starts	188°F (87°C)
Fully Open	206°F (97°C)
Tracker	
Starts	179°F (82°C)
Fully Open	203°F (95°C)
Coolant Capacity (1)	
1.6L	
Tracker	6.9 Qts. (6.5L)
Tracker	5.8 Qts. (5.5L)
2.2L	11.6 Qts. (11.0L)
3.4L	
With Rear Heater	12.4 Qts. (11.75L)
Without Rear Heater	11.8 Qts. (11.25L)
4.3L	
"C" & "K" Series	
A/T	12.7 Qts. (12.0L)
M/T	13.0 Qts. (12.3L)
"G" & "P" Series	
With Rear Heater	14.0 Qts. (13.2L)
Without Rear Heater	11.0 Qts. (10.5L)
"L" & "M" Series	
With Rear Heater	16.5 Qts. (15.5L)
Without Rear Heater	13.5 Qts. (12.8L)
"P" Series	13.0 Qts. (12.3L)
"S" & "T" Series	

cardiagn.com

A/T	11.7 Qts. (11.1L)
M/T	11.9 Qts. (11.3L)
4.8L	
A/T	13.4 Qts. (12.7L)
M/T	13.7 Qts. (13.0L)
5.0L	
With A/C	18.0 Qts. (17.0L)
Without A/C	17.5 Qts. (16.6L)
5.3L	
With A/C	14.9 Qts. (14.1L)
Without A/C	13.4 Qts. (12.7L)
5.7L	
Standard	
With A/C	20.0 Qts. (19.0L)
Without A/C	17.5 Qts. (16.6L)
Heavy Duty	
With A/C	27.0 Qts. (25.5L)
Without A/C	26.4 Qts. (25.0L)
6.0L	
A/T	
With Oil Cooler	14.4 Qts. (13.6L)
Without Oil Cooler	14.8 Qts. (14.0L)
M/T	
With Oil Cooler	14.8 Qts. (14.0L)
Without Oil Cooler	15.2 Qts. (14.4L)
6.5L	25.0 Qts. (23.7L)
7.4L	
Standard	
With A/C	27.5 Qts. (26.0L)
Without A/C	25.0 Qts. (23.7L)
Heavy Duty	
With A/C	28.5 Qts. (27.0L)
Without A/C	26.4 Qts. (25.0L)
(1) Specification is approximate and includes heater capacity.	

cardiagn.com