Torque Converter Assembly Removal

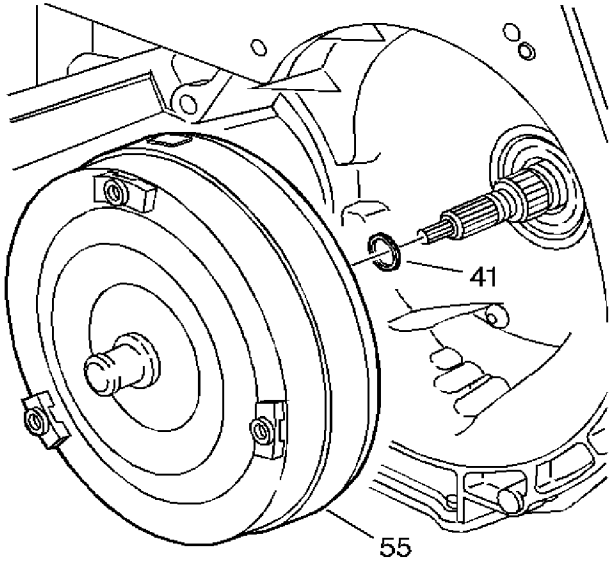

Warning: The torque converter weighs approximately 65 lbs. Personal injury may result if you lift the torque converter improperly.

1. Remove the torque converter assembly (55).
2. Remove the turbine shaft 0-ring (41) from the end of the turbine shaft.

cardiagn.com

Auxiliary Fluid Pump Removal (L4 Hybrid Only)

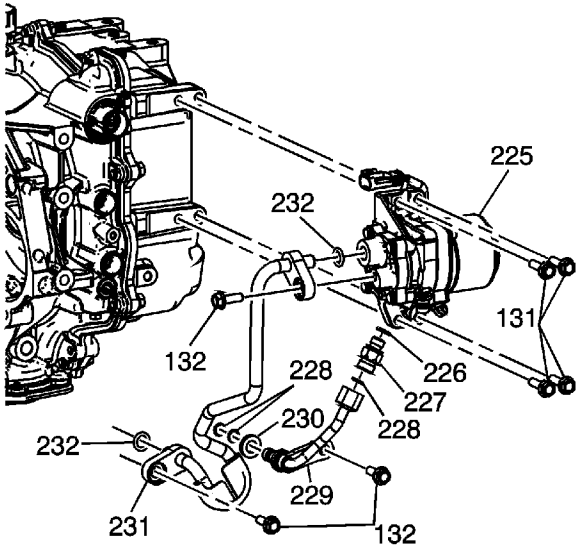

Caution: Use care to restrain the check valve when removing the outlet pipe. Restrain while the nut is loosened or damage may occur.

Caution: Do not remove the auxiliary pump assembly with inlet and outlet pipes attached. This may cause damage to the pipes which will result in Hybrid mal-function.

1. Hold the check valve (227) in its assembled position with a wrench and loosen the outlet pipe (229) nut from the check valve (227).
2. Remove the upper suction pipe, M8 x 1.25 x 25 mm bolt (132) from the auxiliary pump (225).
3. Remove the 4 auxiliary pump, M8 x 1.25 x 30 mm bolts (131).

Caution: Do not bend the electrical connector or clip or damage may occur. The electrical connector and clip are one piece.

4. Disconnect the electrical connector.
5. Remove the complete auxiliary pump (225) and check valve (227) assembly.
6. Remove the outlet pipe, M8 x 1.25 x 25 mm, Bolt (132) and outlet pipe (229) from the case assembly.
7. Remove the lower suction pipe, M8 x 1.25 x 25 mm bolt (132) and suction pipe (231) from the case assembly.

cardiagn.com

Transmission Holding Fixture Assemble

Special Tools

- *J 41230* Transmission Support Fixture
- *J 41230-TEM* Drill Template
- *J 3289-20* Transmission Holding Fixture Base

For equivalent regional tools, refer to Special Tools.

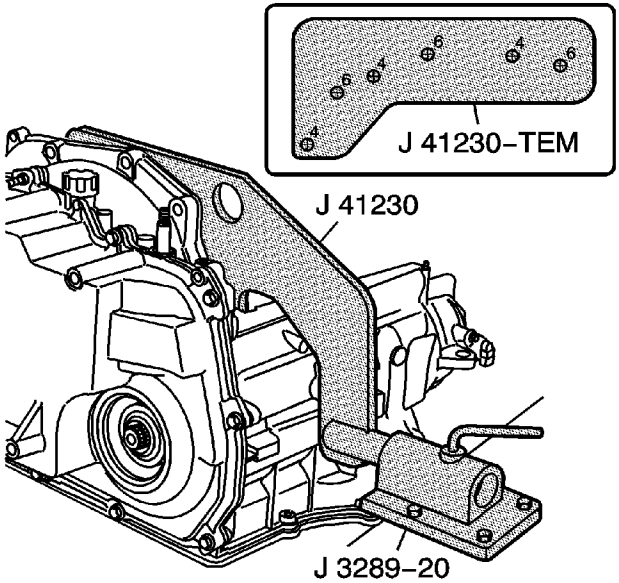

Warning: To reduce the possibility of personal injury or transmission damage, make sure, when doing the next step, that all of the bolts for the support fixture are installed as shown, and that the bolts are tightened to 11 N·m (98 lb in).

Note: *J 41230* support fixture should be updated using *J 41230-TEM* drill template due to transmission mounting changes.

1. Install the *J 41230* support fixture transmission support fixture onto the transmission.

   Caution: Refer to Fastener Caution in the Preface section.

2. Install the support fixture bolts. Tighten the support fixture bolts to **11 N·m (8 lb ft)**.
3. Install the transmission and the support fixture onto the *J 3289-20* holding fixture base .
4. Position the transmission with the side cover facing down.
5. Insert the pin into the *J 3289-20* holding fixture base in order to lock the unit into place.

cardiagn.com

Stub Shaft Removal

Special Tools

- *J 6125-1B* Slide Hammer
- *J 38868* Shaft Remover

For equivalent regional tools, refer to Special Tools.

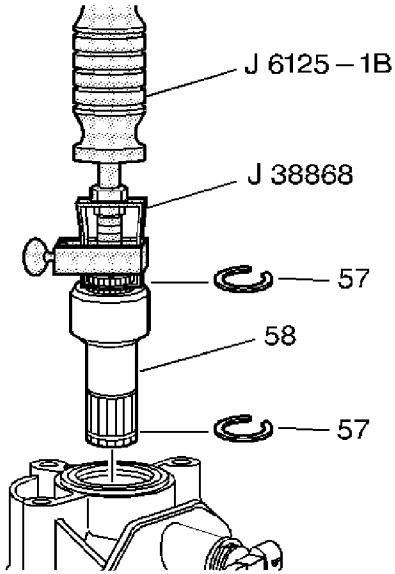

Note: Handle the stub shaft carefully. The stub shaft sleeve is reusable if the sleeve is not damaged or removed from the stub shaft. Damage to the stub shaft sleeve will result in a transmission fluid leak.

1. Remove and discard the snap ring (57) from the end of the stub shaft (58). The stub shaft snap ring is not reusable.
2. Attach the *J 6125-1B* slide hammer to the *J 38868* shaft remover . Install the *J 38868* shaft remover into the snap ring groove on the stub shaft (58). Tighten the *J 38868* shaft remover securely to the stub shaft.
3. Pull lightly on the shaft and rotate it until the stub shaft snap ring at the differential seats in the taper on the differential side gear.

   Caution: Confirm that the stub shaft snap ring (57) is properly seated in the differential side gear. If not damage may occur to the transmission when you attempt to remove the stub shaft.

4. Pull the stub shaft (58) out with the slide hammer impact.

cardiagn.com

Output Speed Sensor Removal

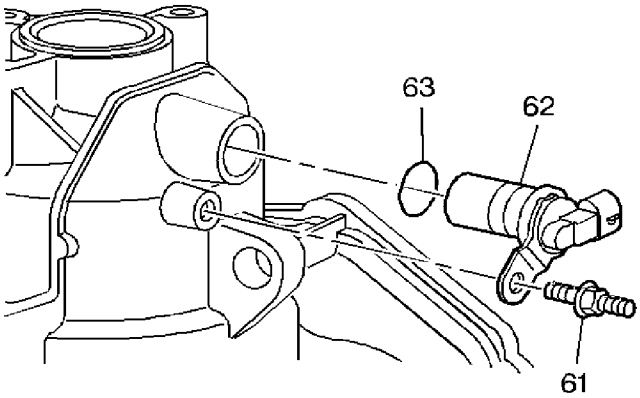

1. Rotate the transmission so that the case side cover is facing upward in order to drain the transmission fluid through the stub shaft end of the transmission.
2. Remove the speed sensor stud (61).
3. Remove the speed sensor assembly (62). Pull the speed sensor assembly straight out from the transmission case in order to prevent damage to the case bore.
4. Remove the O-ring (63).
5. Rotate the transmission with the oil pan facing upward.

cardiagn.com

Automatic Transmission Fluid Pan and Gasket Removal

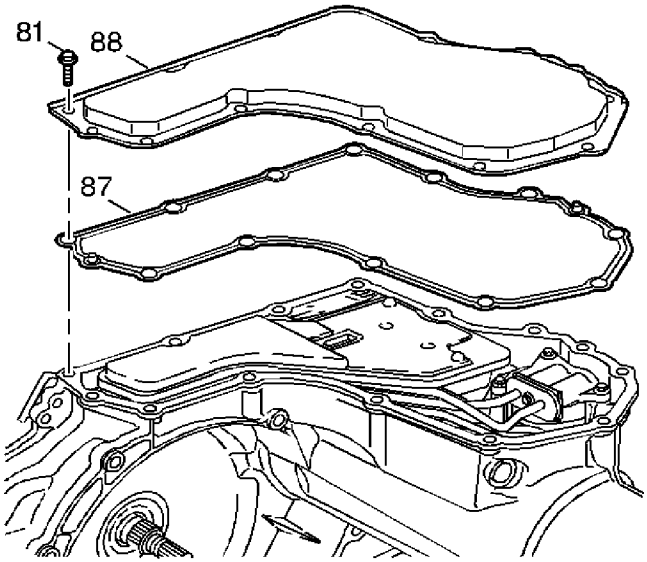

1. Remove the twelve oil pan bolts (81).
2. Remove the oil pan (88). The magnet can remain in the oil pan.
3. Remove the oil pan gasket (87). The oil pan gasket is reusable.

cardiagn.com

Automatic Transmission Fluid Filter, Seal, and Level Control Valve Removal

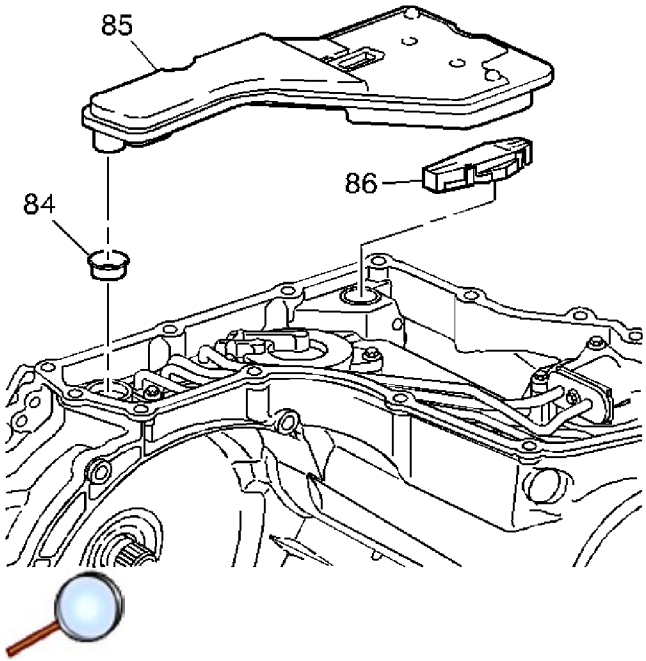

1. Remove the transmission filter assembly (85).
2. Remove the oil level control valve (86).

Caution: Do not damage the case sealing surface when removing the filter seal assembly.

3. Using a chisel, indent top of seal to relax press fit of seal.
4. Using a small screwdriver remove the filter neck seal (84) from the transmission case. The filter neck seal (84) is not reusable and should be discarded.

cardiagn.com

Oil Feed Pipes Removal

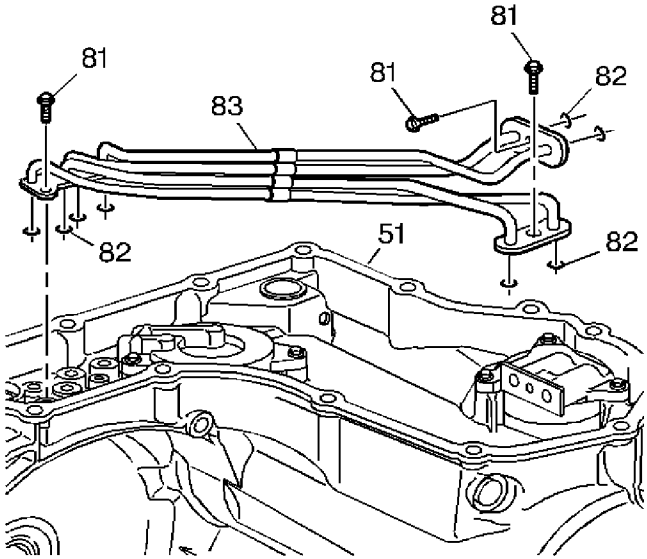

Note: The feed pipe seal rings (82) are glued into place and should remain with the feed pipe assembly (83). The feed pipe seal rings are reusable.

Remove the four oil feed pipe bolts (81) and remove the oil feed pipe assembly (83).

cardiagn.com

Intermediate/Fourth Servo Removal

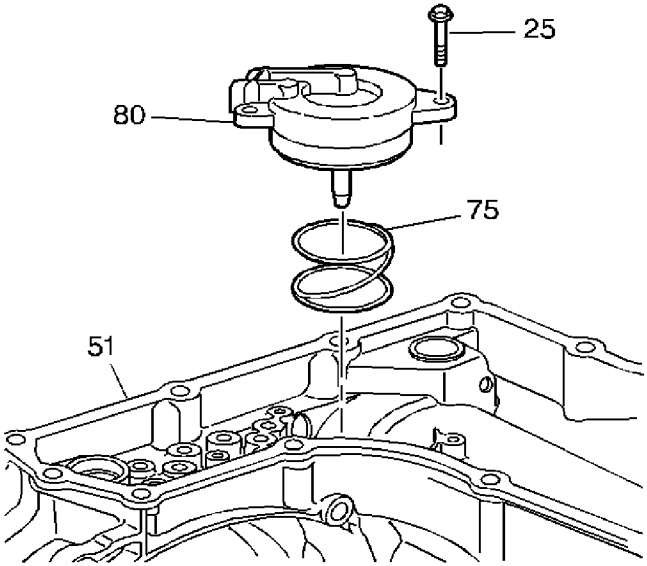

Caution: Remove bolts evenly, to prevent bore damage.

1. Remove the three servo cover bolts (25).
2. Remove the servo cover (Intermediate/Fourth) (80) assembly.
3. Remove the servo return spring (75).

cardiagn.com

Wiring Harness Assembly Connect

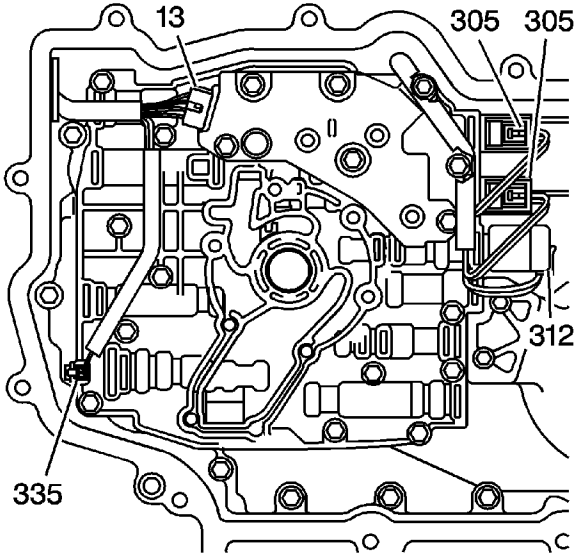

Connect the wiring harness assembly to the following components:

- The TFP switch assembly (13)
- The pressure control solenoid (312) - red connector

Note: The 1-2 shift solenoids wires are red and light green. The 2-3 shift solenoid wires are red and yellow.

- The 1-2 shift solenoid (305) - white connector
- The 2-3 shift solenoids (305) - white connectors
- The TCC solenoid (335)

cardiagn.com

Control Valve Body Cover Removal

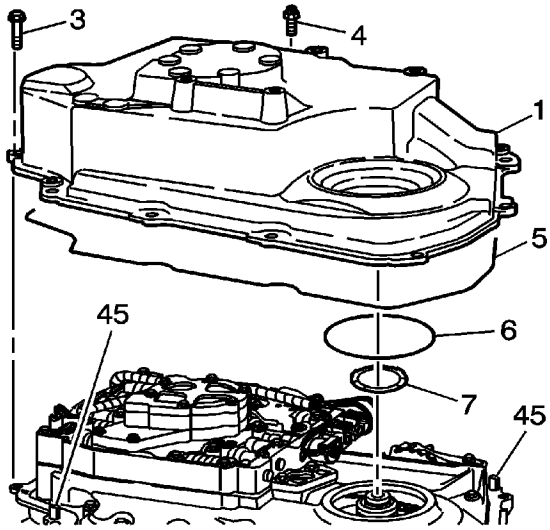

1. Rotate the transmission so that the side cover faces upward.
2. Remove the 11 side cover bolts (3) or studs (4) (model dependant).

   Caution: Pry on the corner of the case side cover near the locating dowel pins (45), to prevent damage to the sealing surfaces.

3. Remove the transmission side cover (1).
4. Remove the two side cover gaskets (5 and 6) and the side cover to driven support thrust washer (7). They may remain with the side cover. Only replace if damaged.

cardiagn.com

Output Shaft Removal

Special Tools

- *J 6125-1B* Slide Hammer with Adapter
- *J 38868* Output Shaft Assembly Remover and Installer

For equivalent regional tools, refer to Special Tools.

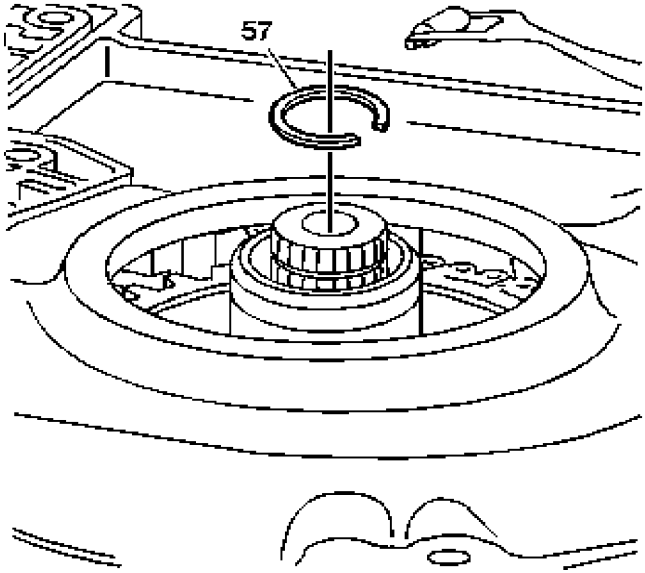

1. Remove the snap ring (57).

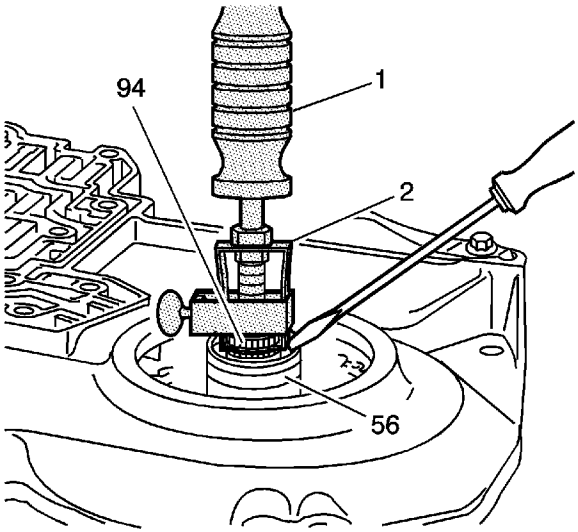

cardiagn.com

2. Install the *J 6125-1B* slide hammer with adapter and *J 38868* remover and installer on the output shaft (94).

cardiagn.com

Oil Pump and Oil Pump Shaft Removal

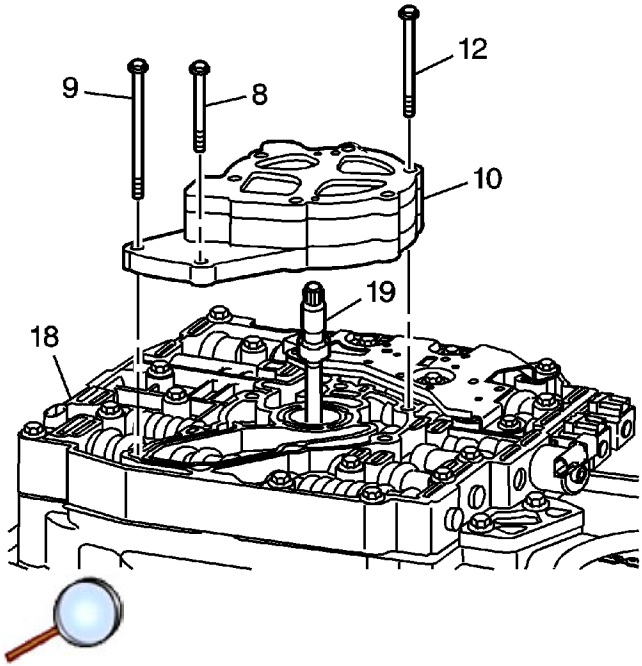

1. Remove the eight bolts from the oil pump (8, 9 and 12).
2. Remove the oil pump assembly (10).
3. Remove the oil pump shaft (19).

cardiagn.com

Wire Harness Disconnect

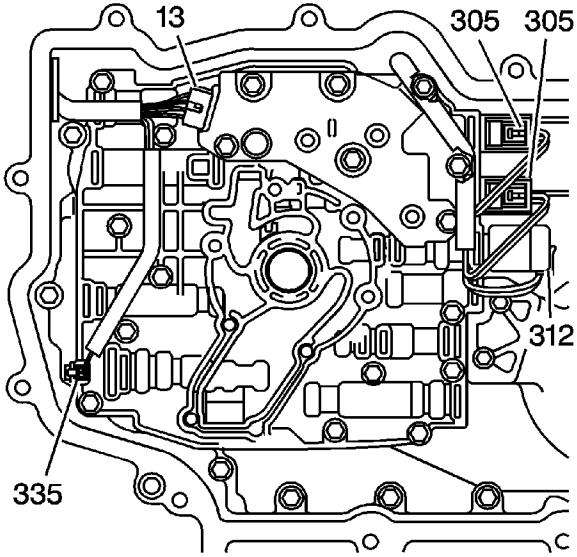

1. Disconnect the wiring harness connectors from the pressure control solenoid (312).
2. Disconnect the wiring harness connectors from the 1-2 and 2-3 shift solenoids (305).
3. Disconnect the wiring harness connectors from the pressure switch assembly (13)
4. Disconnect the wiring harness connectors from the TCC solenoid (335).

cardiagn.com

Transmission Fluid Pressure Switch Removal

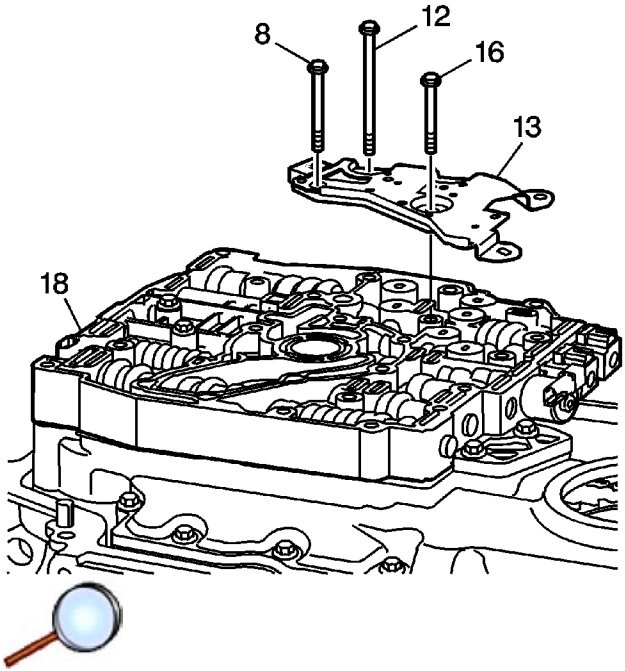

1. Remove the six bolts from the TFP switch assembly (8, 12, and 16).
2. Remove the TFP switch assembly (13) from the control valve body assembly (18). The 4 pressure switch O-rings are reusable and should remain with the TFP switch assembly.

cardiagn.com

Transmission Fluid Pressure Switch Removal

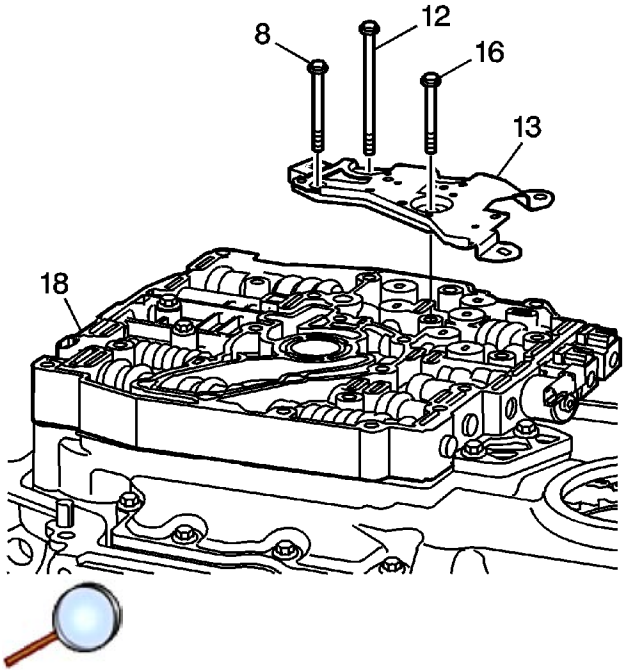

1. Remove the six bolts from the TFP switch assembly (8, 12, and 16).
2. Remove the TFP switch assembly (13) from the control valve body assembly (18). The 4 pressure switch O-rings are reusable and should remain with the TFP switch assembly.

cardiagn.com

Control Valve Body Assembly Removal

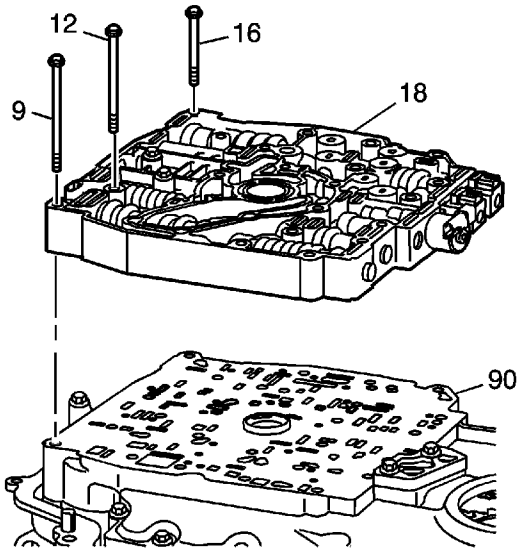

1. Remove the remaining twelve bolts (9, 12 and 16) from the control valve body assembly (18).
2. Remove the control valve body assembly (18).

cardiagn.com

Control Valve Body Spacer Plate Removal

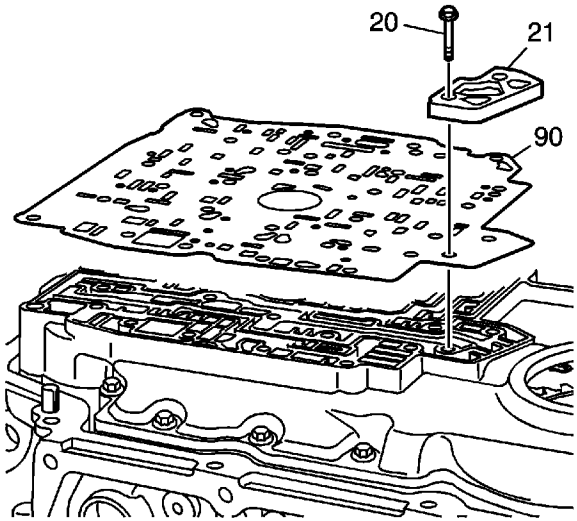

1. Remove the 2 spacer plate support bolts (20).
2. Remove the spacer plate support (21).

   Note: The Non-Electronic Range Select Mode 4T40-E/4T45-E has a different spacer plate than the 4T45-E Electronic Range Select Mode transmission.

3. Remove and discard the spacer plate assembly (90).

cardiagn.com

Control Valve Body Spacer Plate and 4-3 Downshift On/Off Solenoid Removal

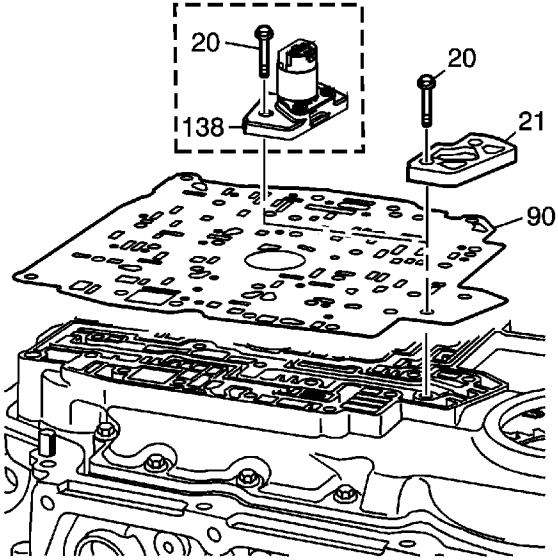

1. Remove the two spacer plate support bolts (20).
2. Remove the spacer plate support (21), or 4-3 solenoid on L4 Hybrid models.
3. Remove and discard the spacer plate with bonded gaskets assembly (90).

cardiagn.com

Checkball Removal

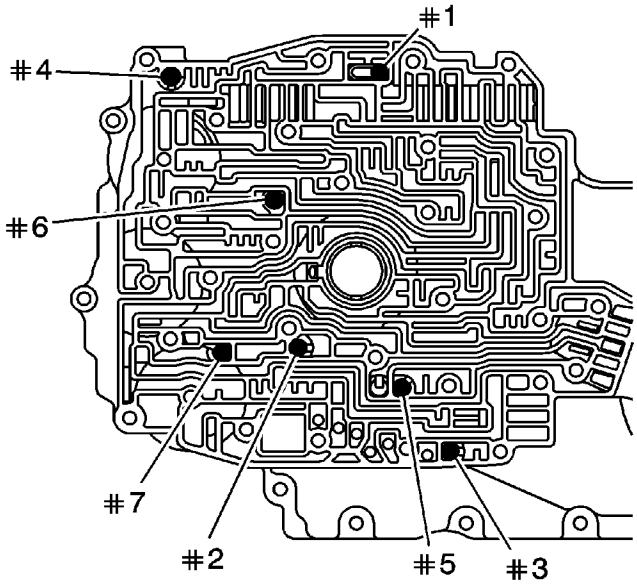

Note: Do not use a magnet in order to remove the checkballs. The magnet may magnetize the checkballs, and the checkballs may attract metallic particles.

Remove the seven checkballs (1-7) in the channel plate.

cardiagn.com

Manual Valve Clip Removal

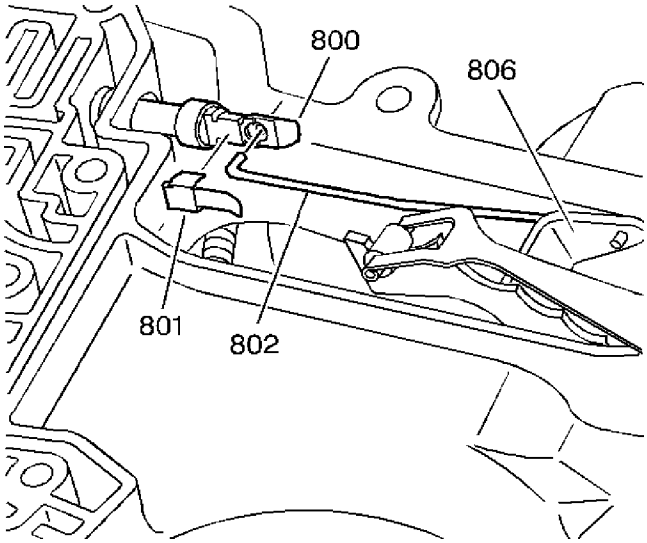

1. Disconnect the manual valve clip (801) from the manual valve.

   Caution: Do not attempt to remove the manual valve, damage may occur.

2. Disconnect the manual valve link (802) from the manual valve.

cardiagn.com

Channel Plate and Gasket Removal

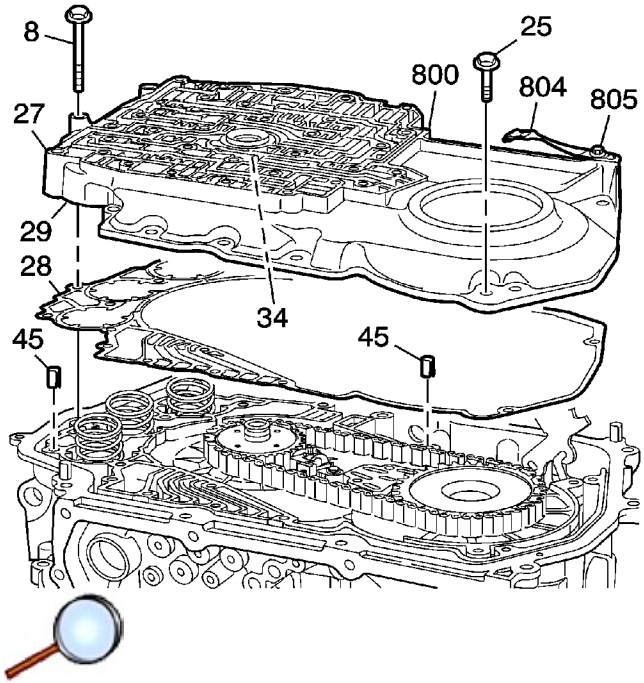

1. Remove the ten channel plate bolts (8 and 25).

   Caution: Pry on the channel plate near locating dowel pins (45) to prevent damage to sealing surfaces.

2. Remove the channel plate assembly (27). Keep the following components with the channel plate:
   - The drive sprocket to channel plate thrust washer (34)
   - The three accumulator pistons (29)
   - The manual valve (800)
   - The detent lever spring (804) and bolt (805)
3. Remove and discard the channel plate to case gasket (28).

cardiagn.com

Accumulator Spring Removal

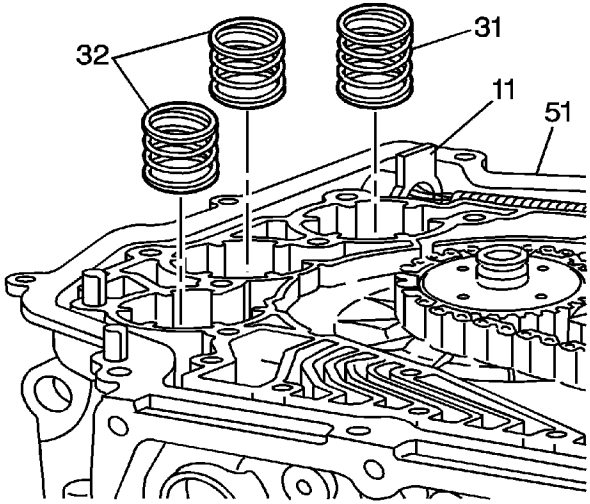

Remove the three accumulator springs (31 and 32) from the case (51).

cardiagn.com

Drive Sprocket, Driven Sprocket, and Drive Link Removal

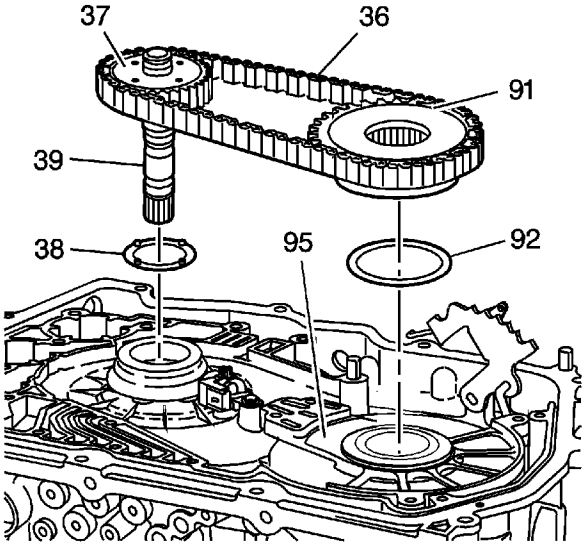

Note: When removing the drive link assembly (36) note which direction the chain faces. You must later install the chain in the same direction in order to prevent excessive noise.

1. Remove, as an entire unit, the drive sprocket (37), the turbine shaft (39), the driven sprocket (91) and the drive link assembly (36).
2. If the drive sprocket to drive sprocket support thrust washer (38) has not remained with the drive sprocket assembly (37 and 39), remove the drive sprocket to drive sprocket support thrust washer (38). The driven sprocket to driven sprocket support thrust washer (92) should remain with the driven sprocket support assembly (95).

cardiagn.com

Input Speed Sensor Removal

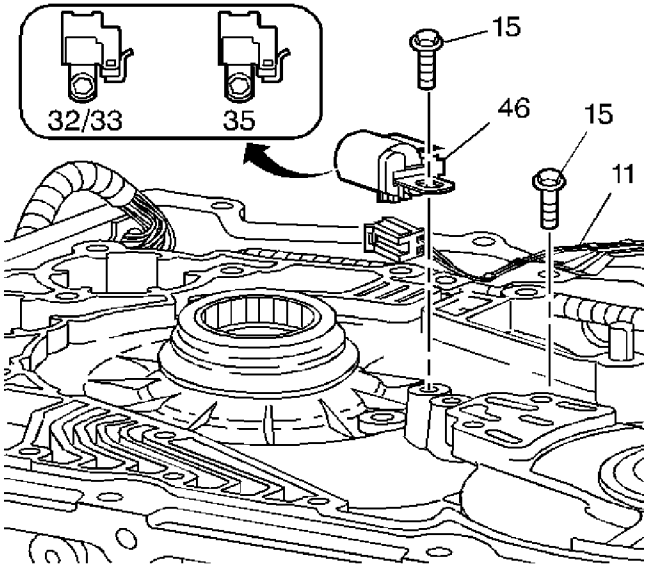

1. Remove the wiring harness connector at the input speed sensor (46).
2. Remove the input speed sensor bolt (15) and the input speed sensor (46).
3. Remove the wire retainer clip bolt (15) and retainer clip.

cardiagn.com

Wiring Harness Removal

Special Tools

J 41101 Pass-Through Connector Remover

For equivalent regional tools, refer to Special Tools.

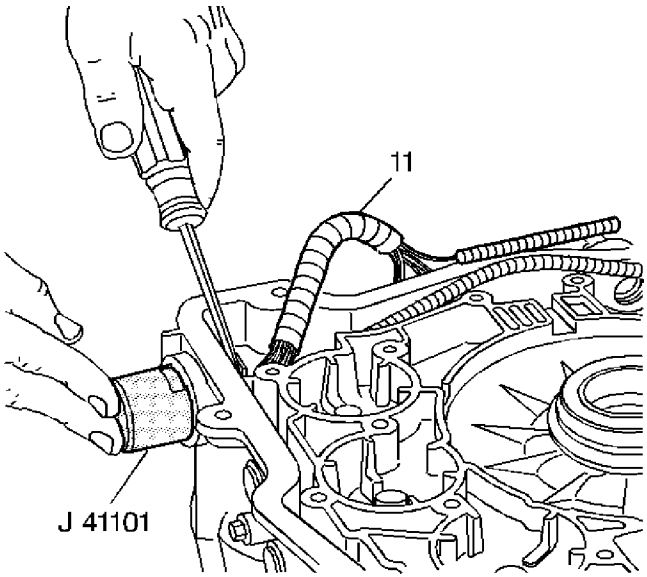

1. Push the *J 41101* remover or equivalent onto the pass-through connector from the outside of the transmission case in order to compress the pass-through connector's retaining tabs.
2. With the retaining tabs compressed, use a screwdriver in order to remove the pass-through connector through the inside of the transmission case.
3. Remove the wiring harness (11).

cardiagn.com

Wiring Harness Removal

Special Tools

J 41101 Pass-Through Connector Remover

For equivalent regional tools, refer to Special Tools.

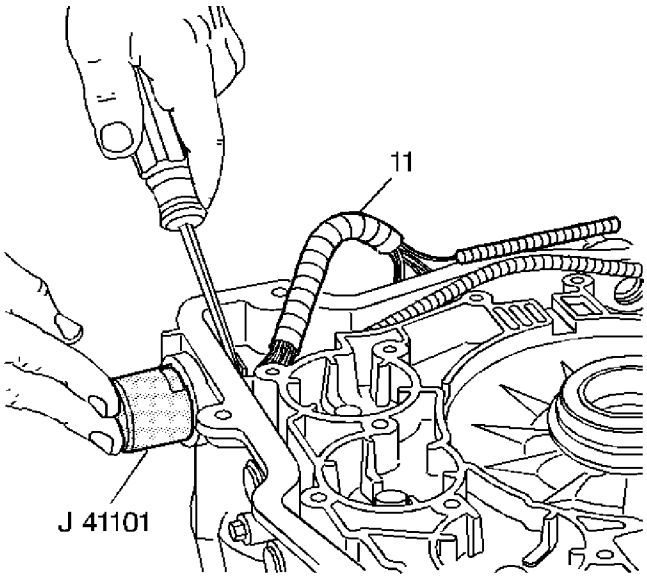

1. Push the *J 41101* remover or equivalent onto the pass-through connector from the outside of the transmission case in order to compress the pass-through connector's retaining tabs.
2. With the retaining tabs compressed, use a screwdriver in order to remove the pass-through connector through the inside of the transmission case.
3. Remove the wiring harness (11).

cardiagn.com

Driven Sprocket Support Assembly Removal

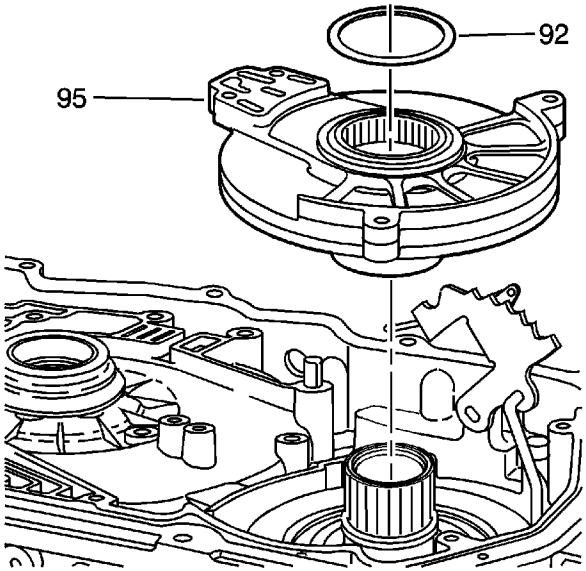

1. Remove the driven sprocket to driven sprocket support thrust washer (92).
2. Remove the driven sprocket support assembly (95).

cardiagn.com

Second Clutch Plates Removal

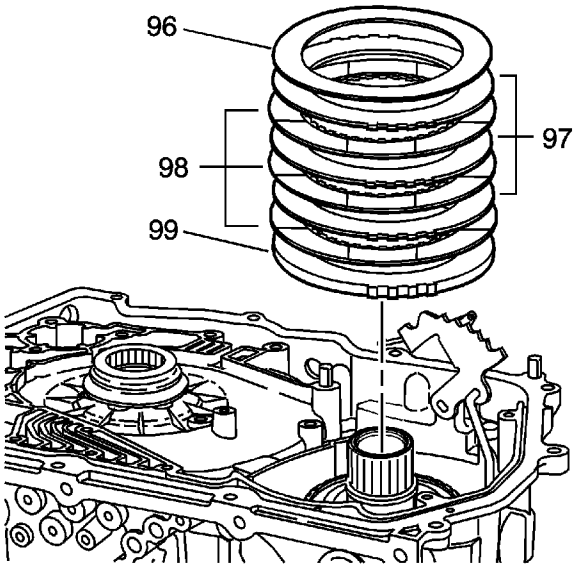

Remove the following plates:

- 2nd clutch wave plate (96)
- 2nd clutch steel plates (97)
- 2nd clutch fiber plates (98)
- 2nd clutch backing plate (99)

cardiagn.com

Reverse Input Clutch Housing Removal

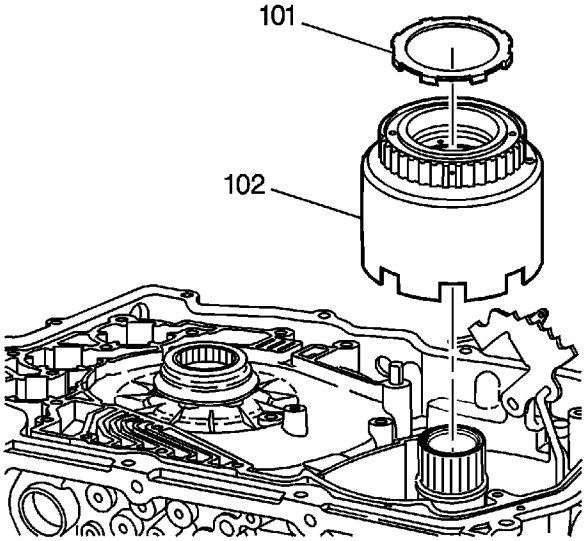

1. Remove the driven sprocket support to reverse clutch housing thrust washer (101).
2. Remove the reverse input clutch housing and the 2nd roller clutch assembly (102).

cardiagn.com

Intermediate Fourth Band Removal

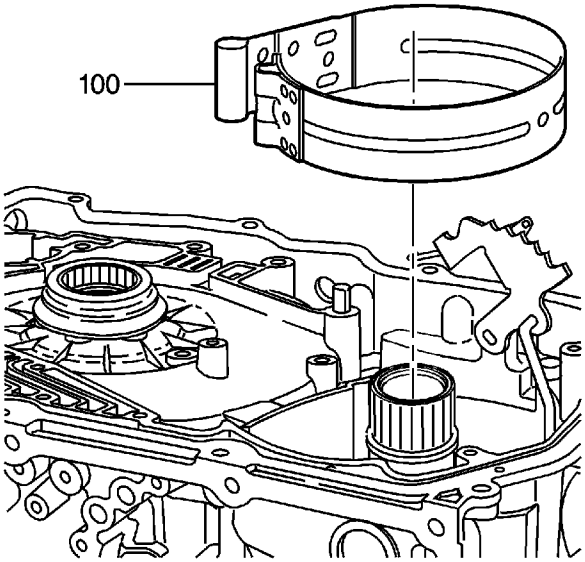

Remove the intermediate 4th band (100).

cardiagn.com

Direct/Coast Clutch and Reaction Gear Set Removal

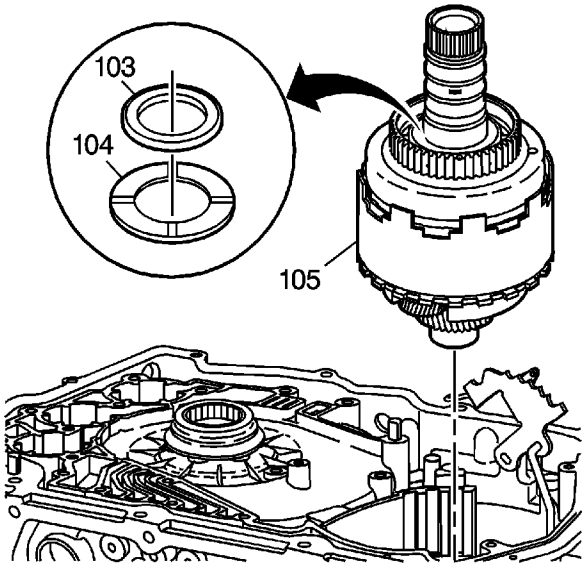

Note: Keep the bearing assembly (103) and the selective thrust washer (104) on top of the direct/coast clutch and reaction carrier assembly (105).

Remove the direct/coast clutch and reaction carrier assembly (105).

cardiagn.com

Input Carrier and Reaction Gear Assembly Removal

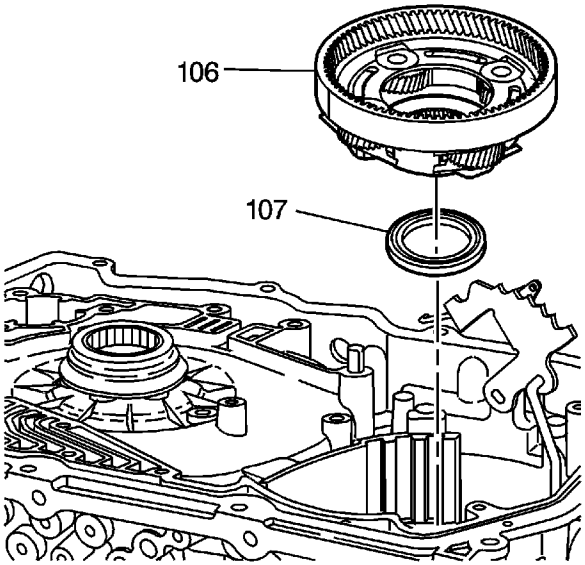

1. Remove the input carrier and reaction internal gear assembly (106). A bearing assembly is permanently inside the input carrier.
2. Remove the input carrier to forward clutch hub thrust bearing (107). The input carrier to forward clutch hub thrust bearing may have remained with the input carrier.

cardiagn.com

Input Internal Gear, Forward Clutch Hub Removal

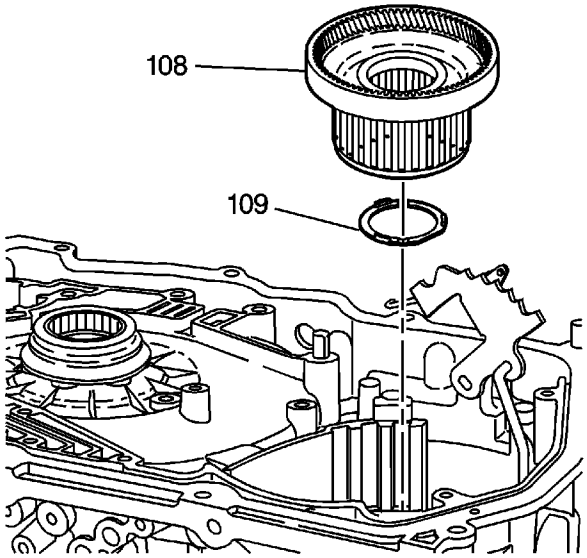

1. Remove the input internal gear and forward clutch hub assembly (108).
2. If the forward clutch hub to race thrust washer (109) did not remain with the forward clutch hub, remove the forward clutch hub to race thrust washer (109).

cardiagn.com

Forward Clutch and Low / Reverse Band Removal

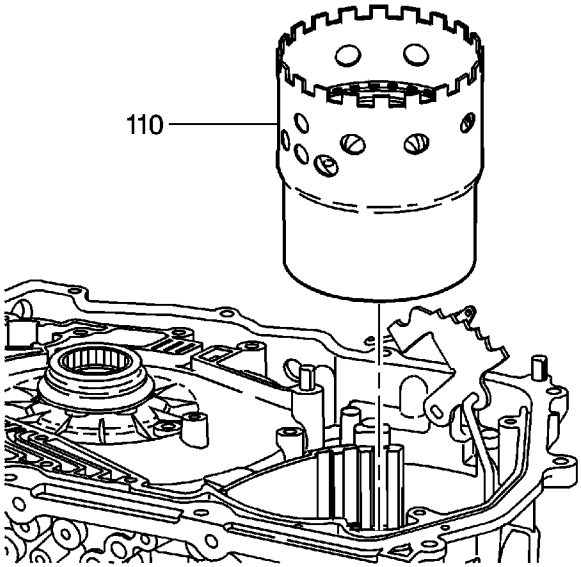

1. Remove the forward clutch assembly (110).

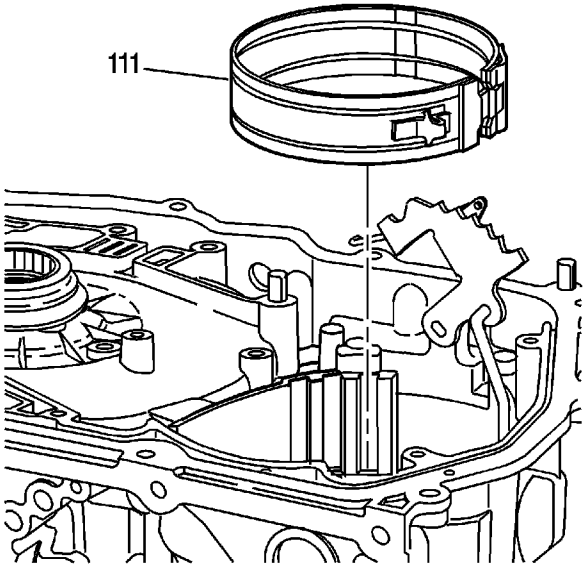

2. Remove the low/reverse band (111).

cardiagn.com

Forward Clutch Support, Low Roller Clutch Removal

Special Tools

J 28585 Snap Ring Screwdriver

For equivalent regional tools, refer to Special Tools.

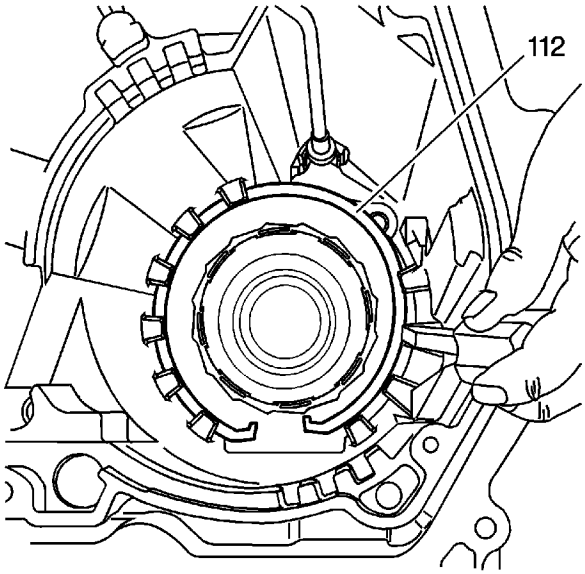

Note: The snap ring opening must be at the bottom of the transmission case. If the snap ring opening is out of position, inspect the transmission case for damage.

1. Remove the forward clutch support snap ring (112) from the transmission case. Use the *J 28585* snap ring screwdriver or equivalent.

cardiagn.com

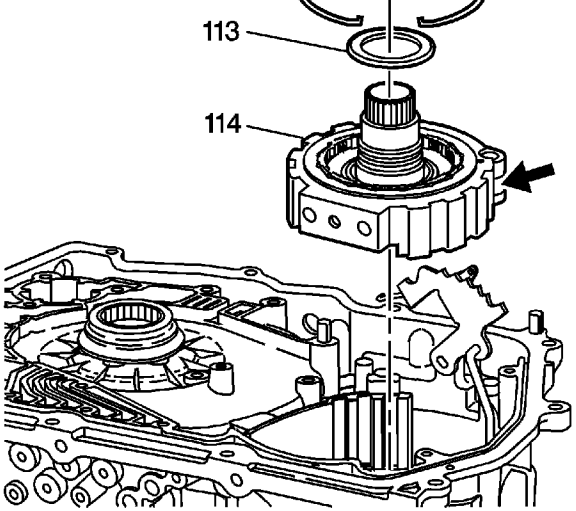

Note: You may need to depress the parking pawl in order to remove the forward clutch support.

2. Remove the forward clutch support and the low roller clutch assembly (114). Keep the forward clutch housing to the forward clutch support thrust bearing (113) with the forward clutch support assembly (114).

cardiagn.com

Final Drive Assembly Removal

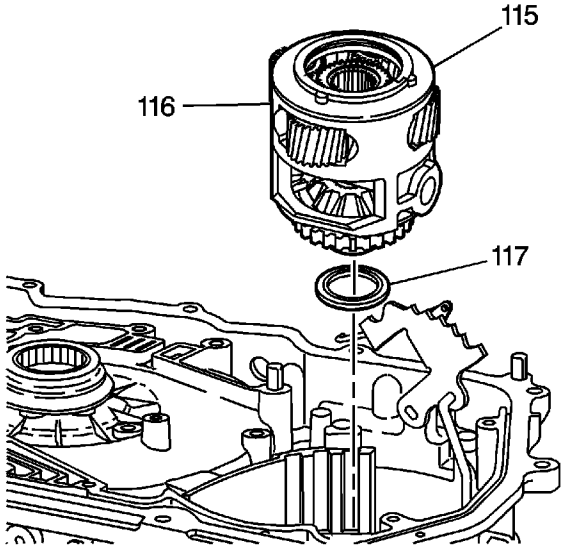

1. Remove the final drive assembly (116) and the final drive sun gear (115).
2. If the differential carrier to case thrust bearing (117) did not remain with the final drive assembly (116), remove the differential carrier to case thrust bearing (117).

cardiagn.com

Final Drive Internal Gear Removal

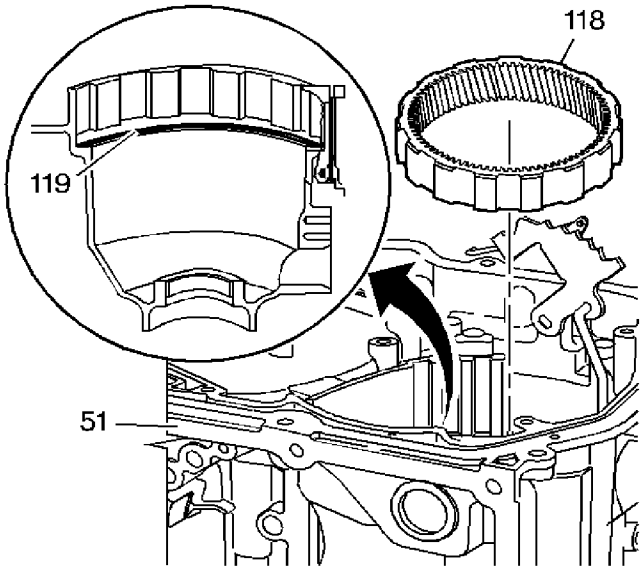

Note: Note orientation of the internal gear before removal. It must be installed in the same orientation as it was assembled to prevent possible final drive noise.

Note: The fretting ring (119) is in the case ring groove. Do not remove the fretting ring unless it appears damaged.

Remove the final drive internal gear (118).

cardiagn.com

Manual Shift Shaft Pin, Detent Lever, and Park Pawl Actuator Assembly Removal

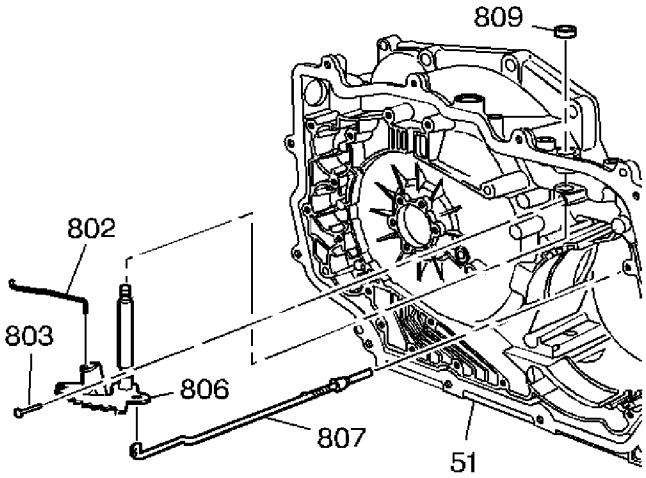

1. Remove the manual shaft to transmission case pin (803).

   Note: The parking lock actuator assembly (807) remains attached to the manual shaft and detent lever until the assembly is removed.

2. Remove the manual shaft and detent lever assembly (806) by pushing the manual shaft into the transmission case (51). The parking lock actuator assembly (807) remains attached to the detent lever until you remove the manual shaft and detent lever assembly.

   Caution: Do not damage the case bore during removal of the manual shift shaft seal.

3. Remove the manual shaft seal (809) from the case (51).

cardiagn.com

Transmission Fluid Cooler Pipe Fitting Seal Removal

Special Tools

J 45201 Cooler Line Seal Removal

For equivalent regional tools, refer to Special Tools.

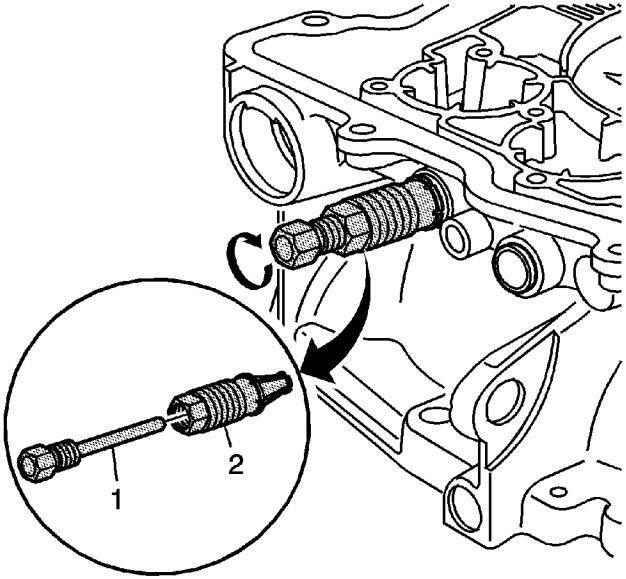

1. Insert *J 45201* seal removal collet (2) fully into the cooler line seal bore.
2. Insert the forcing screw piece of the *J 45201* seal removal (1) into *J 45201* seal removal (2) and tighten.

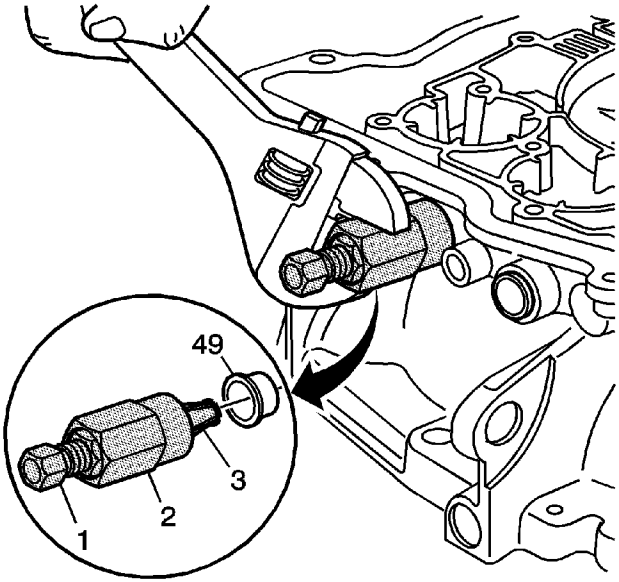

cardiagn.com

3. Thread the *J 45201* seal removal collar (2) onto *J 45201* seal removal (3) and tighten until the tool has removed the seal.
4. Use a pair of pliers to remove the cooler line seal from *J 45201* seal removal .

cardiagn.com

Torque Converter Seal Removal

Special Tools

- *J 41103-1* Torque Converter Seal Puller Legs
- *J 41103-2* Torque Converter Seal Puller Bridge
- *J 41103-3* Torque Converter Seal Support Body

For equivalent regional tools, refer to Special Tools.

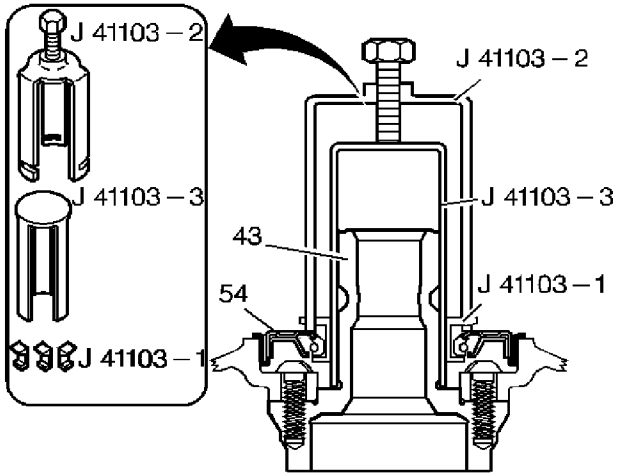

1. Insert the three *J 41103-1* puller legs under the Torque Converter Seal (54).
2. Insert the *J 41103-3* support body over the stator shaft (43).
3. Insert the *J 41103-2* puller bridge over the *J 41103-3* support body . Connect the *J 41103-1* puller legs into the slots on the *J 41103-2* puller bridge .

   Note: The puller legs will damage the torque converter seal (54). Discard the torque converter seal (54) after removal.

4. Tighten the forcing screw on the *J 41103-2* puller bridge until the *J 41103-1* puller legs remove the torque converter seal (54).

cardiagn.com

Drive Sprocket Support Removal

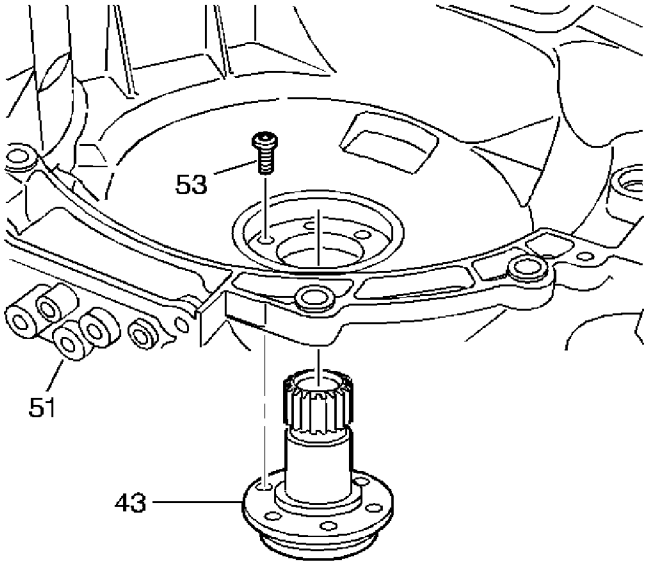

1. Remove the six bolts (53) form the drive sprocket support (43).
2. Remove the drive sprocket support (43) from the case (51).

cardiagn.com

Right Hand Axle Seal Removal

Special Tools

- *J 6125-1B* Slide Hammer
- *J 23129* Universal Seal Remover

For equivalent regional tools, refer to Special Tools.

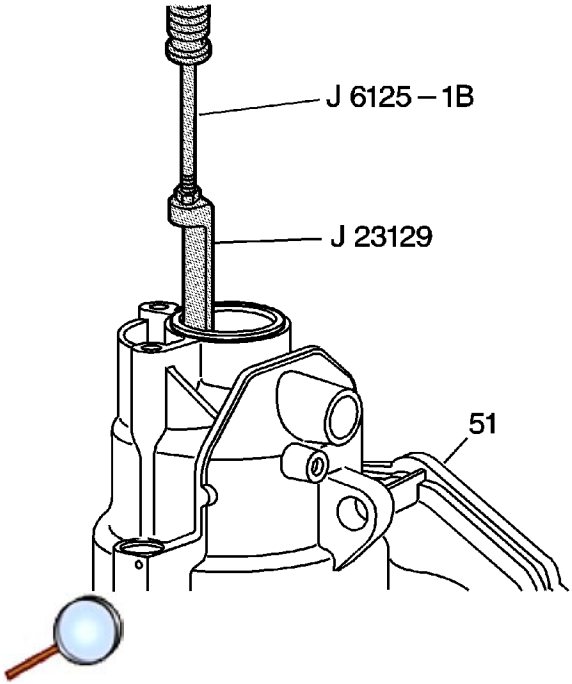

Caution: Do not damage the case bore when removing the axle seal.

Assemble *J 23129* seal remover onto *J 6125-1B* slide hammer . Use *J 6125-1B* slide hammer and *J 23129* seal remover to remove the axle seal.

cardiagn.com

Case Inspection

Special Tools

J 36850 Assembly Lubricant

For equivalent regional tools, refer to Special Tools.

Caution: Use J 36850 or equivalent during assembly in order to retain checkballs or to lubricate components. Lubricants other than the recommended assembly lube changes the transmission fluid characteristics and causes undesirable shift conditions or filter clogging.

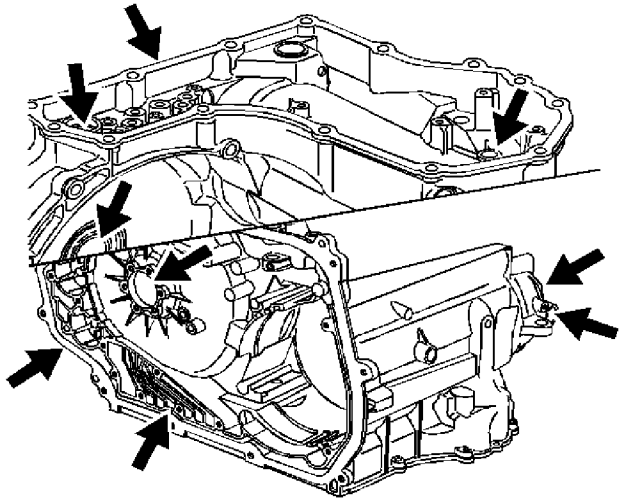

Note: After cleaning the transmission case, allow the case to air dry. Do not use cloth or paper towels in order to dry the transmission case or any other transmission components. Lint from the towels can cause component failure.

1. Thoroughly clean the transmission case and all the case threads with solvent.
2. Inspect the case exterior and the external bores for cracks, sharp edges, porosity and excessive bushing wear.
3. Inspect the case interior for damage at the snap ring grooves, case lugs and band anchor pin.
4. Inspect all the gasket surfaces for surface damage and in order to ensure surface flatness.
5. Inspect the corresponding gasket for proper impressions in order to ensure surface flatness.
6. Inspect the bolt holes and fasteners for thread damage. If necessary, repair or replace any bolt holes or fasteners.
7. Air check the oil passages. For identification of the oil passages, refer to the transmission diagnosis section.

cardiagn.com

Actuator Guide Replacement

Note: Do not remove the actuator guide unless the actuator guide appears damaged.

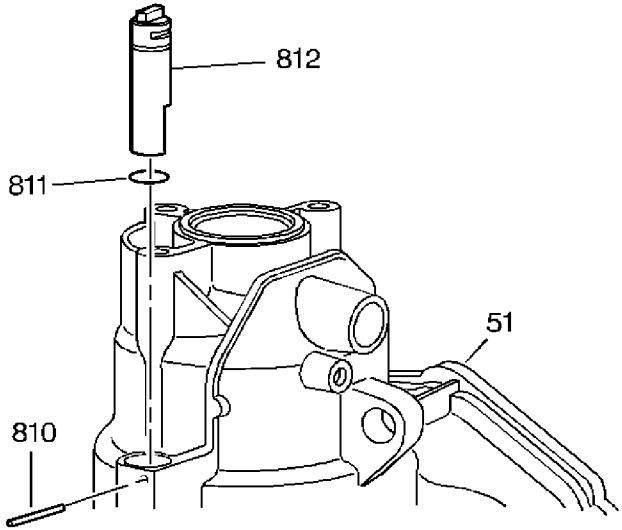

1. Remove the actuator guide roll pin (810) from the case.
2. Remove the actuator guide (812) and O-ring seal (811) assembly from the case (51). For easiest removal, tap the actuator guide (812) into the case (51).
3. Install a new O-ring seal (811) on the actuator guide (812).
4. Install the actuator guide (812) and O-ring assembly (811) into the transmission case (51).
5. Install the actuator guide roll pin (810) into the case (51) in order to secure the actuator guide (812).

cardiagn.com

Drive Sprocket Support Installation

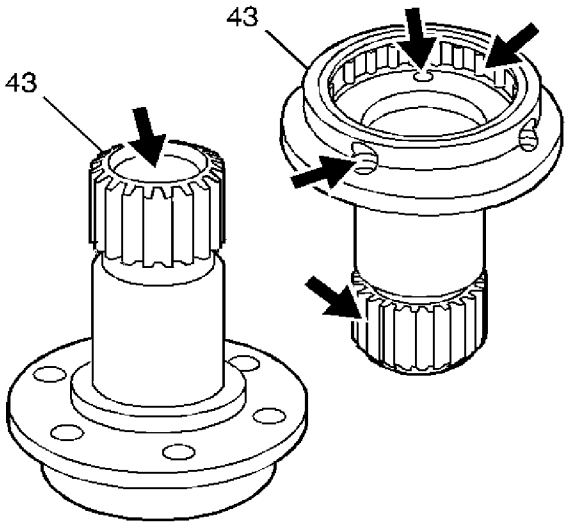

1. Inspect the drive sprocket support (43) for damage to the stator shaft splines, the journals, the bushings, and the roller bearing.
2. Inspect the converter seal drain holes for blockage.

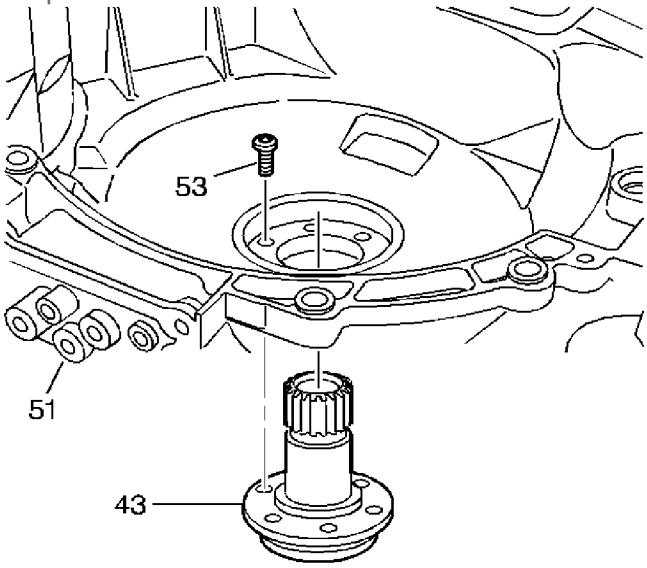

3. Install the drive sprocket support (43) into the bell housing of the transmission case.
4. Install the six drive sprocket support bolts (53) into the drive sprocket support (43).

Caution: Refer to Fastener Caution in the Preface section.

cardiagn.com

cardiagn.com

Torque Converter Seal Installation

Special Tools

J 28540-A Torque Converter Seal Installer

For equivalent regional tools, refer to Special Tools.

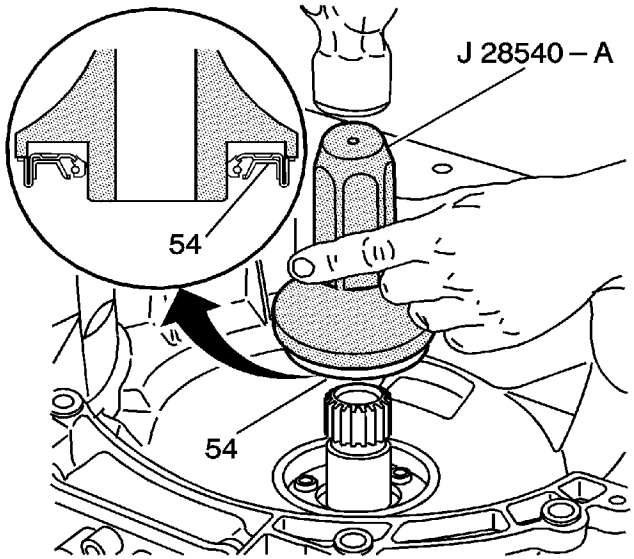

Caution: Install the seal onto the tool before installing into the case to prevent damage to the seal.

Install a new torque converter seal (54). Use the *J 28540-A* seal installer .

cardiagn.com

Transmission Fluid Cooler Pipe Fitting Seal Installation

Special Tools

J 41239-1A Cooler Line Seal Installer

For equivalent regional tools, refer to Special Tools.

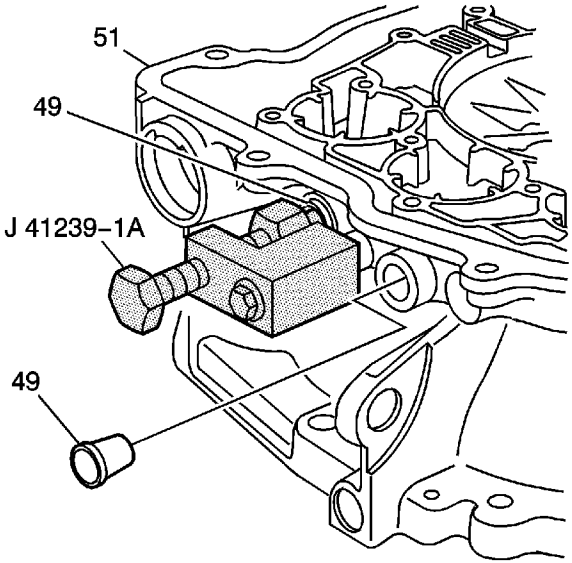

Caution: Failure to lubricate the cooler line seals with automatic transmission fluid DEXRON ® VI before installing into the case or before installing the cooler line pipes into the seals may cause damage to the seal.

1. Lubricate the inside surface of both cooler line seals (49) with automatic transmission fluid DEXRON ® V1.
2. Place a new cooler line seal (49) in the case bore.
3. Install the *J 41239-1A* seal installer on the transmission case (51) at the cooler line bracket bolt hole.
4. Press the new cooler line seal (49) in by tightening the seal pressing bolt on the *J 41239-1A* seal installer until the seal bottoms out in the case bore.
5. Repeat steps 2-4 for the second cooler line seal (49).

cardiagn.com

Manual Shift Shaft Pin, Detent Lever, and Park Pawl Actuator Assembly Installation

Special Tools

J 41229 Manual Shaft to Case Pin Installer or equivalent

For equivalent regional tools, refer to Special Tools.

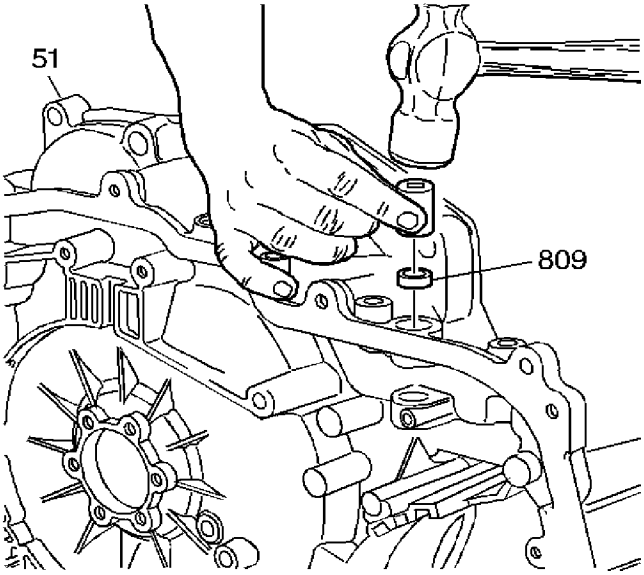

1. Install a new manual shaft seal (809) into the case (51). Use a 13 mm socket.

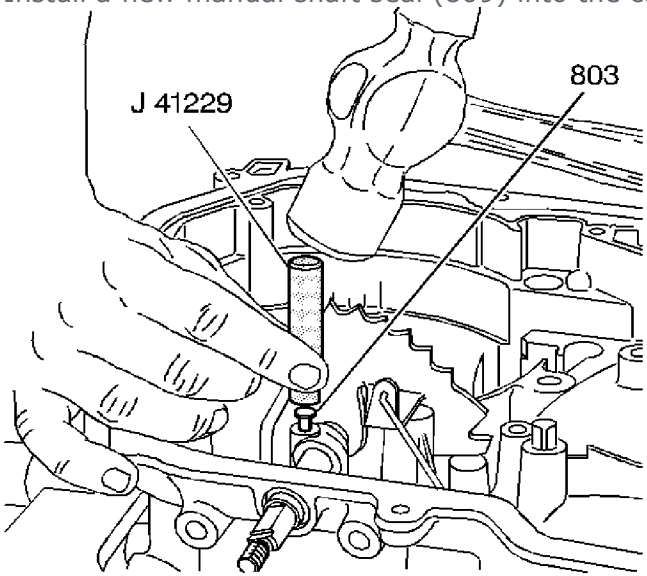

cardiagn.com

Caution: Use J 41229 to install the manual shaft pin at the correct height in order to properly secure the manual shaft. If you install the pin too deep, the case bore may crack.

2. Install the manual shaft pin (803) into the case. Use the *J 41229* pin installer or equivalent.

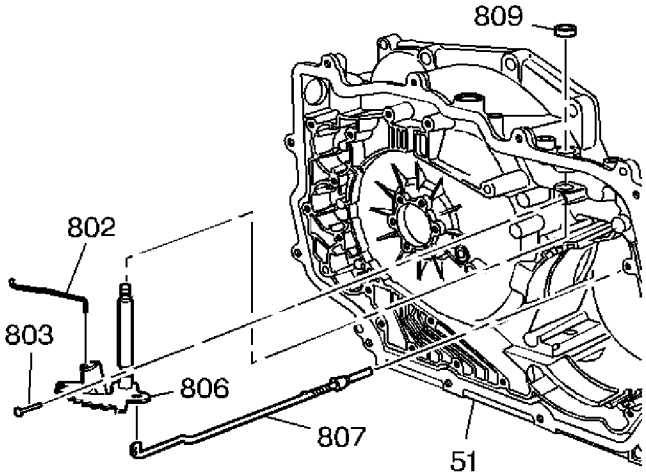

3. With the manual valve to detent lever link (802) and the parking lock actuator assembly (807) attached, install the manual shaft and detent lever assembly (806) into the case.
4. Ensure that the parking lock actuator rod is correctly positioned into the actuator guide.

cardiagn.com

Final Drive Assembly Disassemble

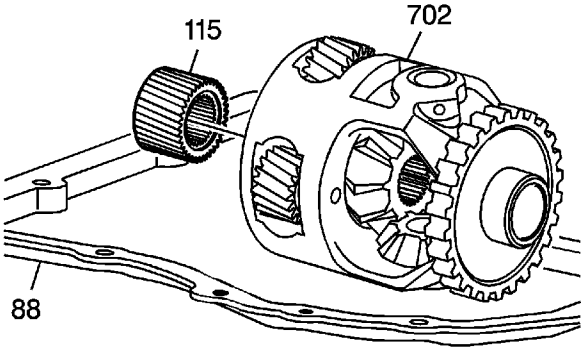

1. Remove the final drive sun gear (115).

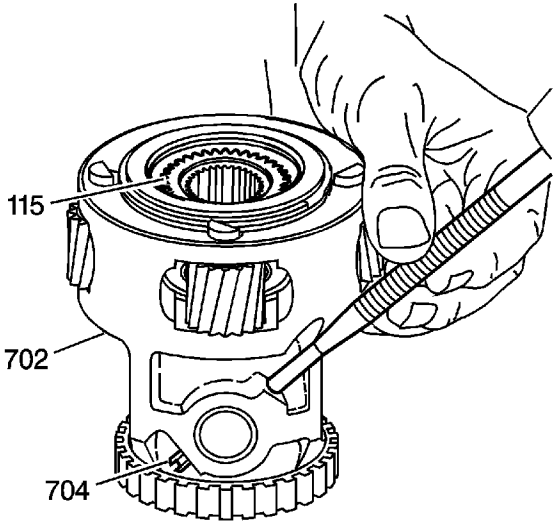

2. Remove the differential pinion shaft retaining pin (704). Use a pin punch.

cardiagn.com

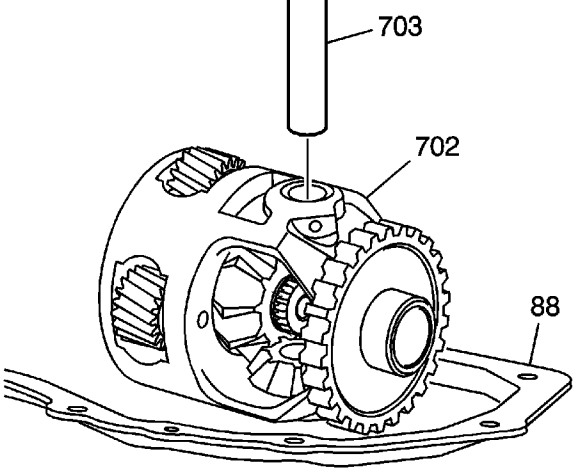

Note: If the pinion gears are removed, place the final drive carrier into a clean transmission oil pan in order to prevent losing the needle bearings.

3. Remove the differential pinion shaft (703).

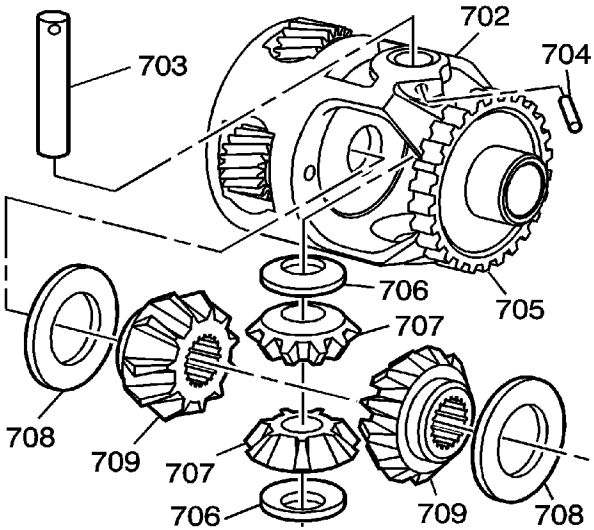

4. Remove the differential pinion gears (707), thrust washers (706), the differential side gears (709), and the thrust washers (708).

cardiagn.com

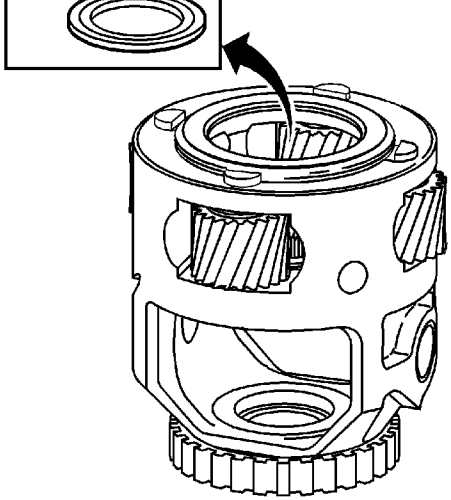

5. Inspect the final drive sun gear to carrier thrust bearing (700).
6. Inspect all pinions for excessive wear or bearing noise.

cardiagn.com

Final Drive Assembly Assemble

Special Tools

J 36850 Assembly Lubricant

For equivalent regional tools, refer to Special Tools.

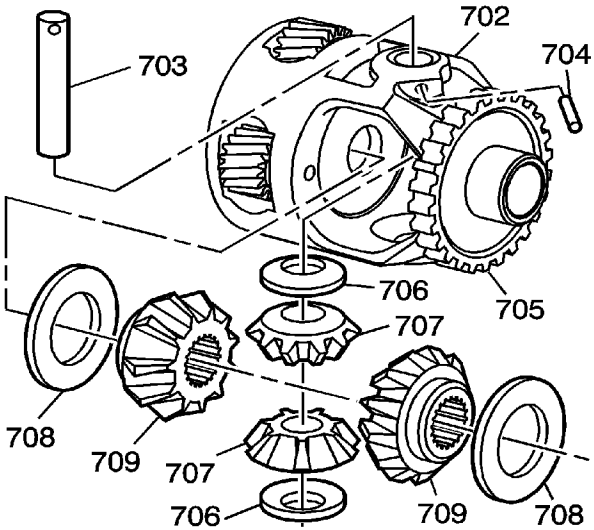

1. Assemble the thrust washers (708) onto the differential side gears (709).
2. Install the differential side gears into the final drive carrier (702).
3. Assemble the thrust washers (706) onto the pinion gears (707). Retain the thrust washers with *J 36850* lubricant or equivalent.
4. With the thrust washers (706) attached, install the pinion gears (707) into the final drive carrier (702).
5. Rotate the pinion gears (707) into position, and install the pinion shaf (703) through the final drive carrier (702) and through the pinion gears (707).
6. Position the pinion shaft (703) in order to allow installation of the retaining pin.

   Note: Using a chisel stake the retaining pin (704) in place.

7. Install the retaining pin (704) through the final drive carrier (702) and through the pinion shaft (703) in order to retain the pinion shaft (703).

cardiagn.com

Final Drive Assembly Assemble

Special Tools

J 36850 Assembly Lubricant

For equivalent regional tools, refer to Special Tools.

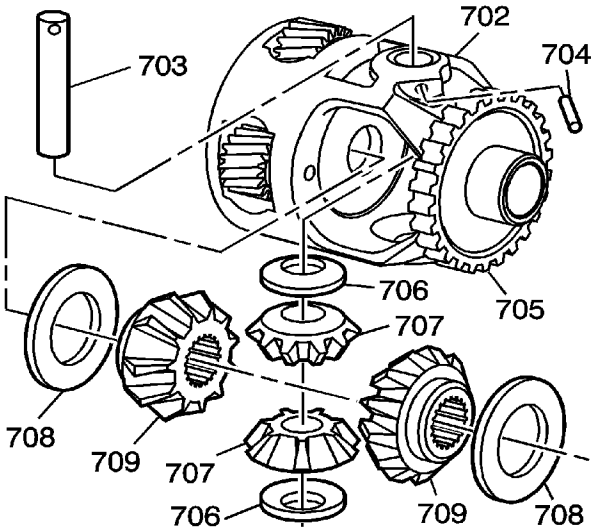

1. Assemble the thrust washers (708) onto the differential side gears (709).
2. Install the differential side gears into the final drive carrier (702).
3. Assemble the thrust washers (706) onto the pinion gears (707). Retain the thrust washers with *J 36850* lubricant or equivalent.
4. With the thrust washers (706) attached, install the pinion gears (707) into the final drive carrier (702).
5. Rotate the pinion gears (707) into position, and install the pinion shaf (703) through the final drive carrier (702) and through the pinion gears (707).
6. Position the pinion shaft (703) in order to allow installation of the retaining pin.

   Note: Using a chisel stake the retaining pin (704) in place.

7. Install the retaining pin (704) through the final drive carrier (702) and through the pinion shaft (703) in order to retain the pinion shaft (703).

cardiagn.com

Final Drive Pinion End Play Check

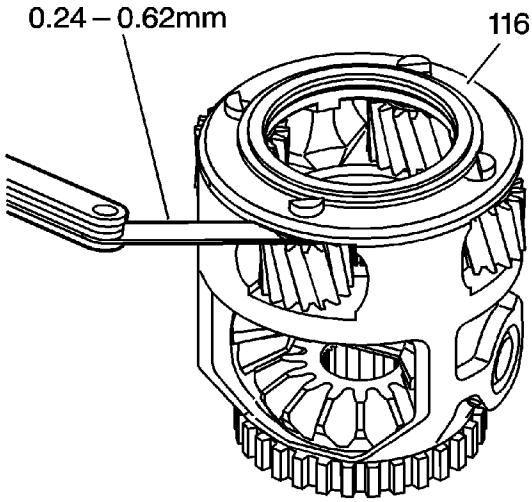

1. Inspect the end play with a feeler gage for proper clearance. Proper clearance is 0.24-0.62 mm (0.009-0.024 in).
2. If the clearance is out of specification, replace the differential assembly (116).

cardiagn.com

Fretting Ring, Final Drive Internal Gear Install

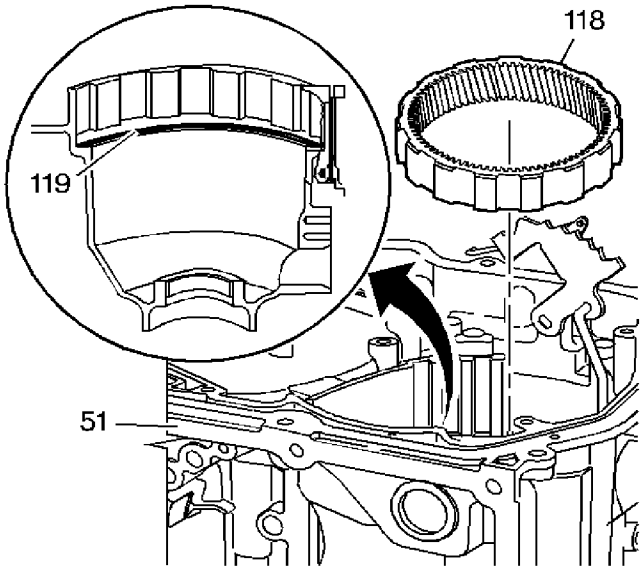

1. If the fretting ring (119) has been removed, install the fretting ring (119) into the small groove in the transmission case (51).

   Note: Install the final drive internal gear in same orientation as observed during removal, inside lip faces up.

2. Install the final drive internal gear (118) into the transmission case (51).

cardiagn.com

Final Drive and Differential Assembly Install

Special Tools

J 36850 Assembly Lubricant

For equivalent regional tools, refer to Special Tools.

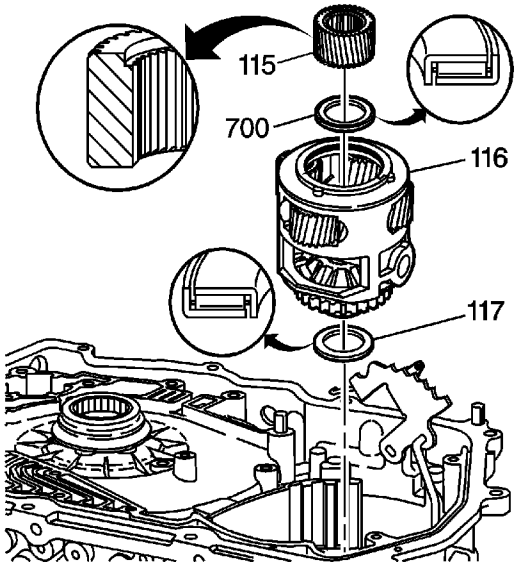

1. Install the final drive carrier to case thrust bearing (117) onto the final drive carrier. Retain the bearing with *J 36850* lubricant .
2. Install the complete final drive carrier assembly (116) into the transmission case (51).
3. Install the thrust bearing (700) into the final drive carrier assembly (116). Retain the bearing with *J 36850* lubricant .

   Note: Install the sun gear with the grooved side up (flat side down).

4. Install the final drive sun gear (115) into the final drive carrier (116).

cardiagn.com

Forward Clutch Support, Roller Clutch Disassemble

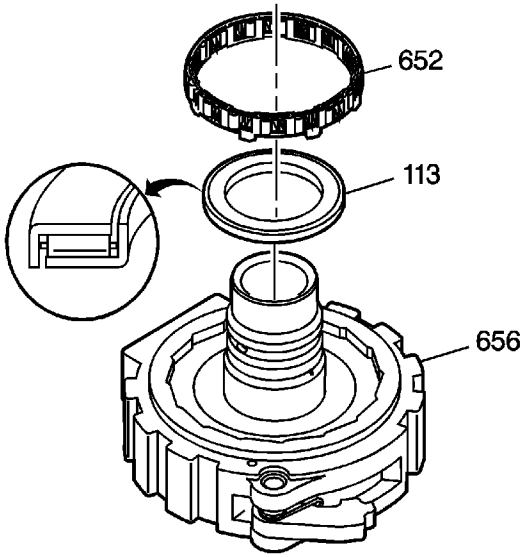

1. Remove the roller clutch assembly (652) from the forward clutch support (656) by turning the roller clutch assembly (652) clockwise and gently lifting upward.
2. Remove the thrust bearing (113) from the forward clutch support (656).

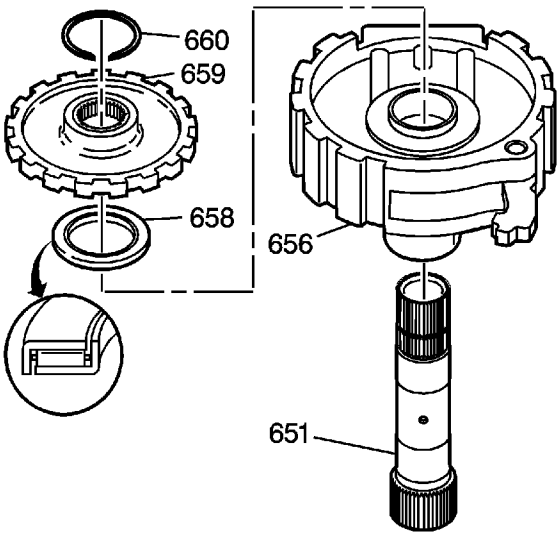

3. Remove the final drive sun gear shaft snap ring (660).
4. Remove the parking pawl gear (659).
5. Remove the forward clutch support to parking pawl gear thrust bearing (658).
6. Remove the forward clutch support (656) from the final drive sun gear shaft (651).

cardiagn.com

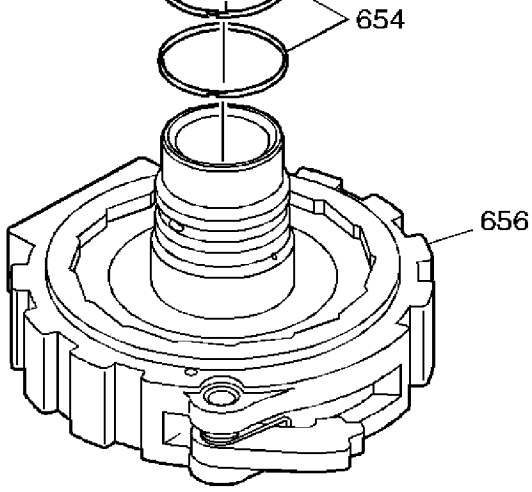

Note: The parking pawl pin has a pressed fit into the forward clutch support. The parking pawl pin is not serviceable. Do not remove the parking pawl pin.

7. Remove and discard the two seals (654) from the forward clutch support (656).

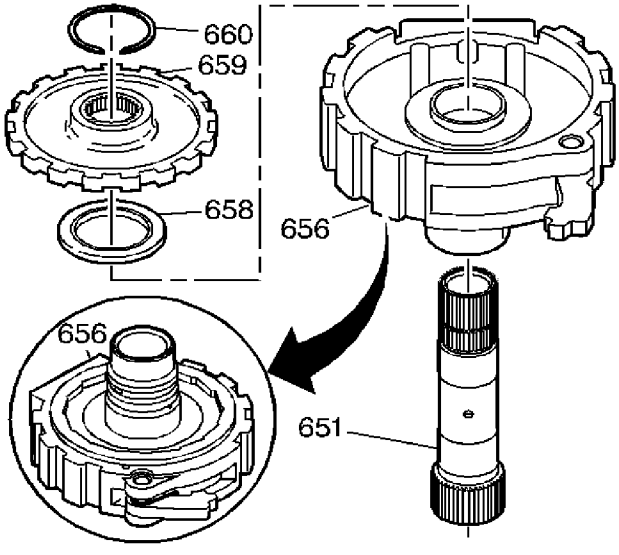

8. Inspect the snap ring for overextension (660).
9. Inspect the seal grooves for damage (656).
10. Inspect for signs of excessive bearing and bushing wear.
11. Inspect the splines and the parking gear teeth for cracks or excessive wear.
12. Inspect the fluid feed holes for the proper opening.
13. Inspect all other components for excessive wear or damage.
14. Clean and dry all of the components.

cardiagn.com

Forward Clutch Support, Low Roller Clutch Assemble

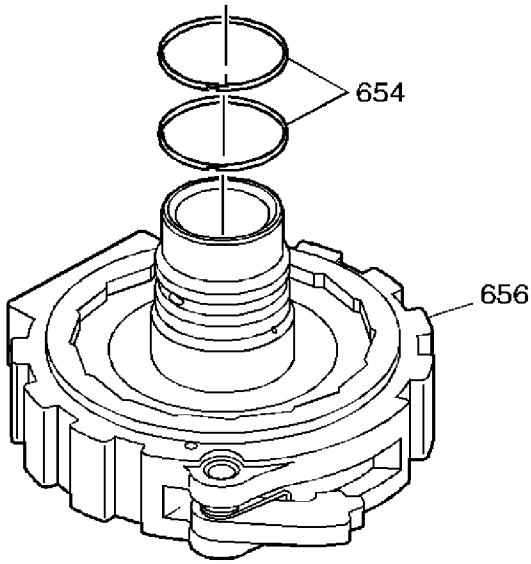

1. Assemble two new seals (654) on the forward clutch support (656).

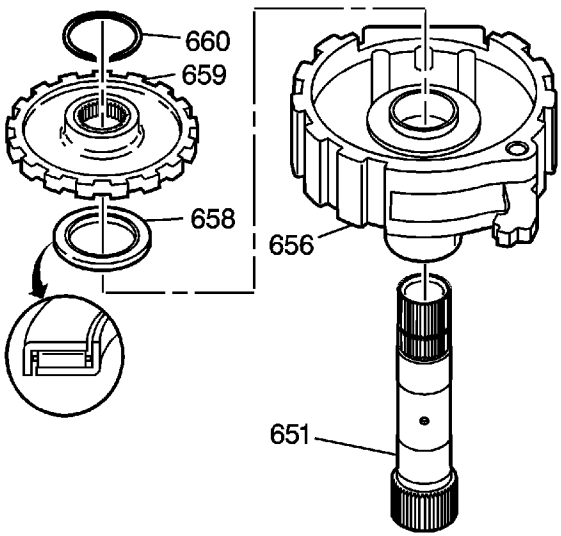

2. Assemble the forward clutch support (656) onto the final drive sun gear shaft (651).
3. Assemble the roller bearing (658) onto the forward clutch support (656).
4. Assemble the parking pawl gear (659) onto the final drive sun gear shaft (651) with the raised inner boss facing up, so that the parking pawl properly engages the teeth on the parking pawl gear.

cardiagn.com

5. Assemble the snap ring (660) to the final drive sun gear shaft (651) in order to retain the parking pawl gear (659).

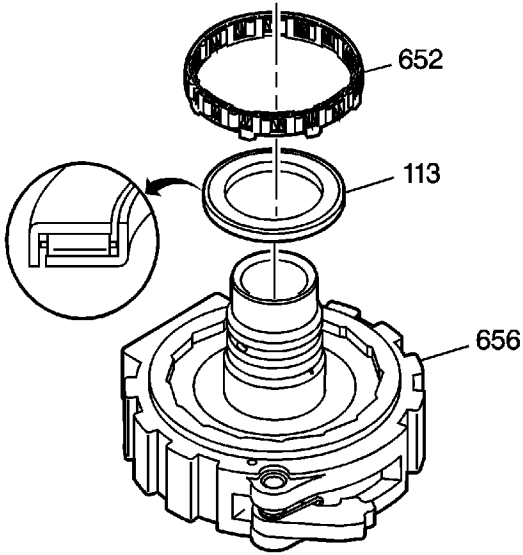

6. Assemble the lo roller clutch assembly (652) onto the forward clutch support (656). The larger tabs on the cage must face down into the forward clutch support (656). Rotate the cage slightly counterclockwise in order to lock the tabs into the grooves in the forward clutch support (656).
7. Assemble the thrust bearing (113) onto the forward clutch support (656).

cardiagn.com

Forward Clutch Support, Low Roller Clutch Install

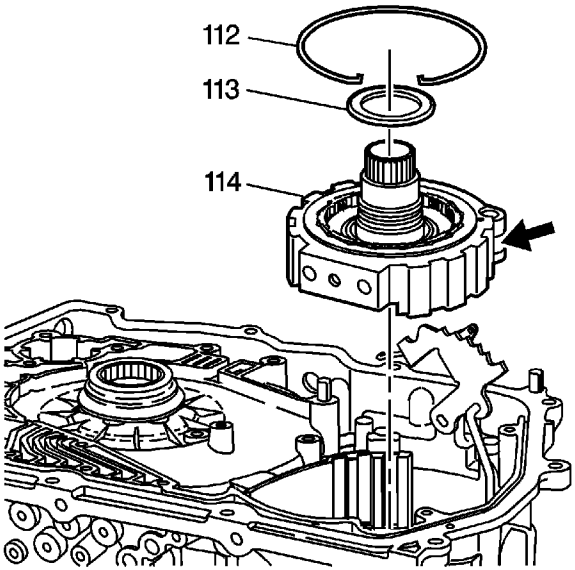

1. Install the forward clutch support and lo roller clutch assembly (114) into the transmission case. Compress the parking pawl spring, and line up the parking pawl with the parking pawl gear.

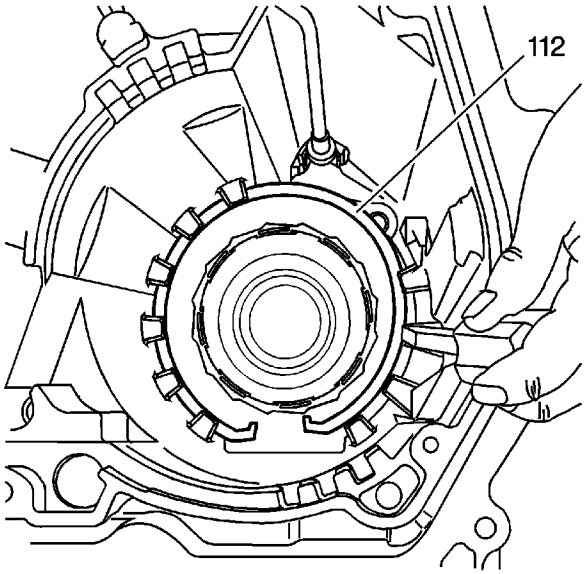

Note: When installing the forward clutch support snap ring (112), the snap ring opening must be toward the bottom of the transmission case and facing the bottom pan.

cardiagn.com

cardiagn.com

Forward Clutch Assembly Disassemble

Special Tools

- *J 23327* Return Spring Compressor
- *J 45398* Forward Clutch Inner Seal Puller
- *J 258031-A* Puller/Inner Seal Remover

For equivalent regional tools, refer to Special Tools.

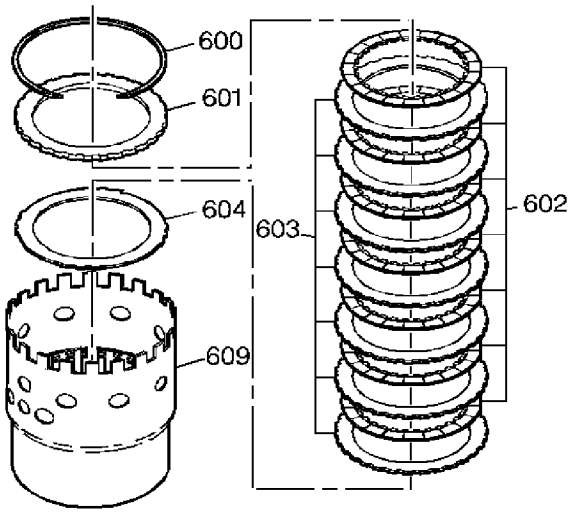

1. Remove the snap ring (600) from the housing assembly (609).
2. Remove the backing plate (601).
3. Remove the seven fiber plates (602).
4. Remove the seven steel plates (603).
5. Remove the wave plate (604).

cardiagn.com

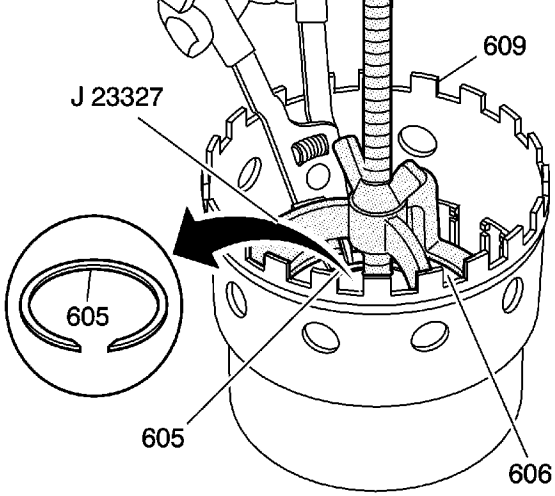

Caution: Compress the return spring assembly (606) only enough to remove the snap ring (605), or damage may occur to the spring assembly (606).

6. Compress the forward clutch return spring assembly. Use the *J 23327* spring compressor .
7. Remove the return spring snap ring (605).
8. Remove the *J 23327* spring compressor .

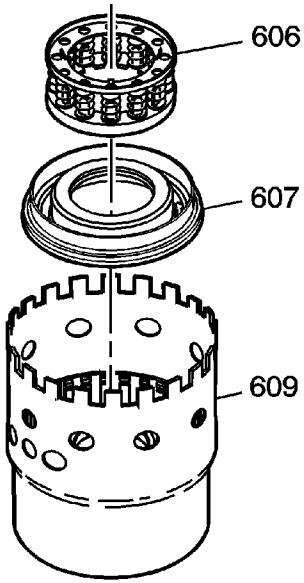

9. Remove the forward clutch return spring assembly (606).
10. Remove the forward clutch piston and seal assembly (607).

cardiagn.com

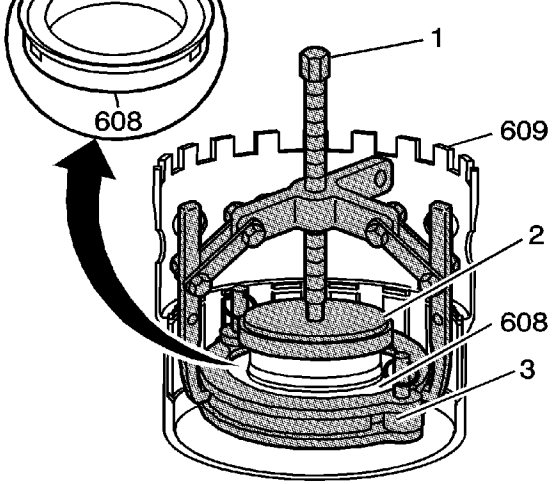

Note: If the seal assembly is not damaged do not remove the seal assembly.

11. Inspect the forward clutch inner seal assembly (608) for damage.
12. If the seal is damaged, assemble J 45398-1 (3), which is part of *J 45398* seal puller , onto the seal. Place the J 45398-2 (2), which is part of *J 45398* seal puller , on the inner hub of the clutch housing.

    Note: Align puller *J 258031-A* seal remover (1) with the groove located on the outside of J 45398-1 to aid in removal.

13. Use *J 258031-A* seal remover (1) to remove the seal.

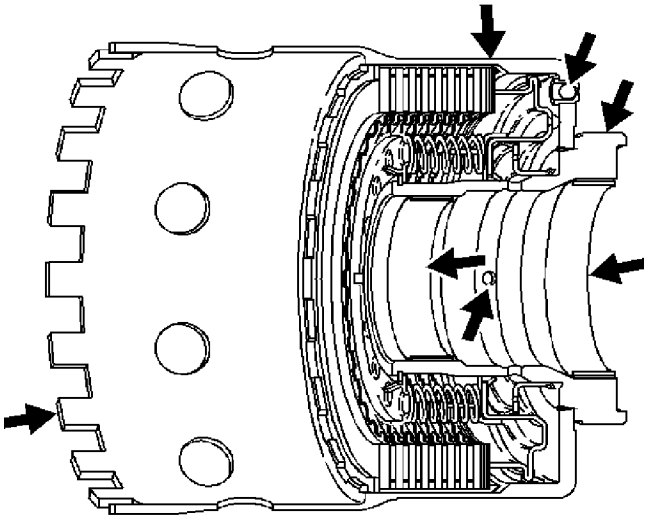

14. Inspect the housing, the plates, the bushings, the splines, the band apply surface, the roller

cardiagn.com

16. Inspect the retainer and ball assembly for proper openings.
17. Inspect the piston and seal assembly for cut seals or other damage. The piston and seal assemblies are reusable, if not damaged.
18. Clean and dry all of the components.

cardiagn.com

Forward Clutch Assembly Assemble

Special Tools

- *J 41231* Inner Seal Installer
- *J 23327* Return Spring Compressor

For equivalent regional tools, refer to Special Tools.

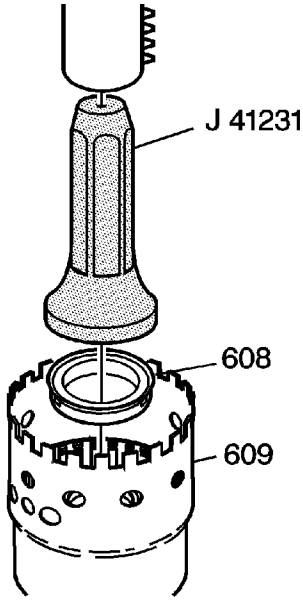

1. Assemble a new inner seal assembly (608) if the old seal was damaged and removed. Use an arbor press and the *J 41231* seal installer in order to press the inner seal assembly onto the forward clutch housing (609).

cardiagn.com

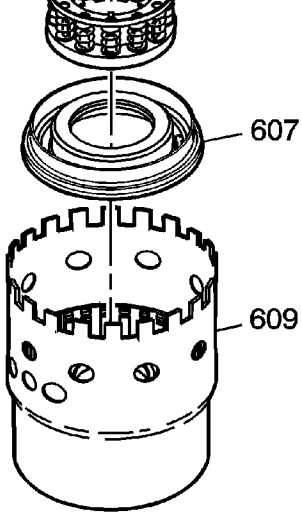

2. Assemble the forward clutch piston assembly (607) into the forward clutch housing (609). In order to ease assembly, lubricate the seals with transmission fluid.
3. With the snap ring tabs facing up, assemble the forward clutch return spring assembly (606) into the forward clutch housing (609).

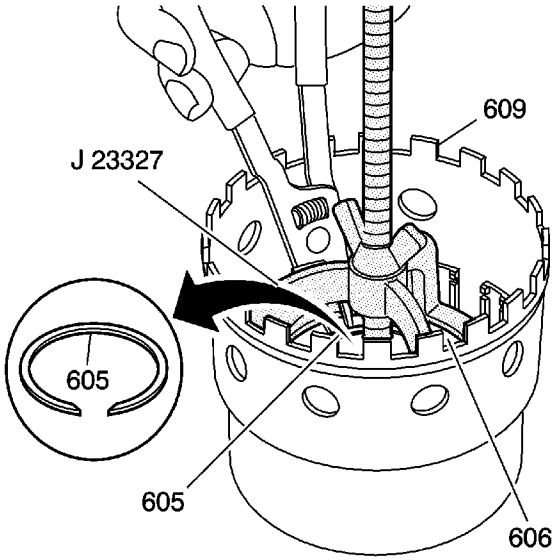

Caution: Compress the return spring (606) only enough to install the snap ring (605), or damage may occur to the spring assembly (606).

4. Compress the return spring assembly. Use the *J 23327* spring compressor .
5. Assemble the snap ring (605) in order to retain the forward clutch return spring.
6. Remove the *J 23327* spring compressor .

cardiagn.com

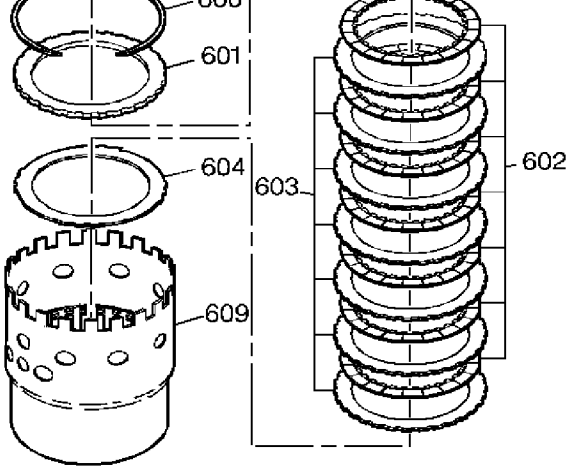

7. Install the forward clutch waved plate (604).
8. Install the seven steel plates (603) and the seven new fiber plates (602) in alternating order beginning with a steel plate (603).
9. Install the forward clutch backing plate (601).
10. Install the forward clutch backing plate snap ring (600) in order to retain the clutch pack.

cardiagn.com

Low / Reverse Band Installation

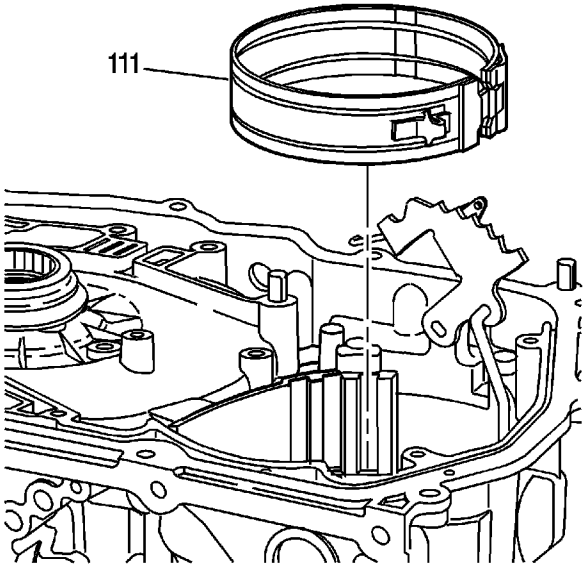

Install the low/reverse band (111) into the transmission case. Align the servo pin apply surface toward the bottom pan and hook the band into the band anchor pin inside the transmission case.

cardiagn.com

Forward Clutch Assembly Installation

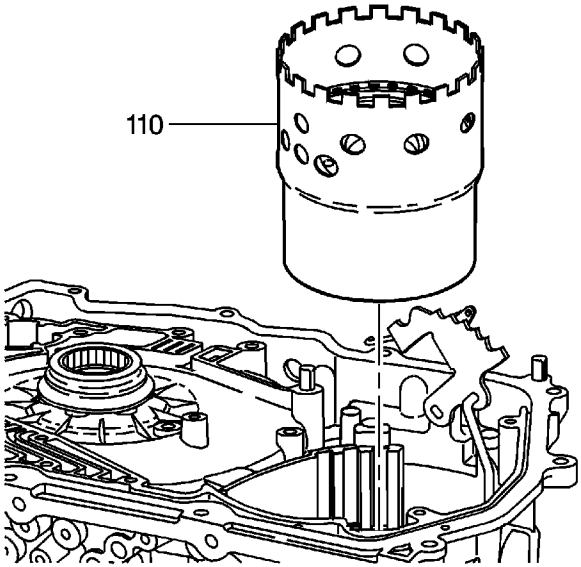

Note: Rotate the forward clutch assembly (110) counterclockwise during assembly in order to seat the assembly into the lo roller clutch. When assembled correctly, the forward clutch assembly (110) should not turn clockwise.

1. Install the forward clutch assembly (110) into the transmission case.

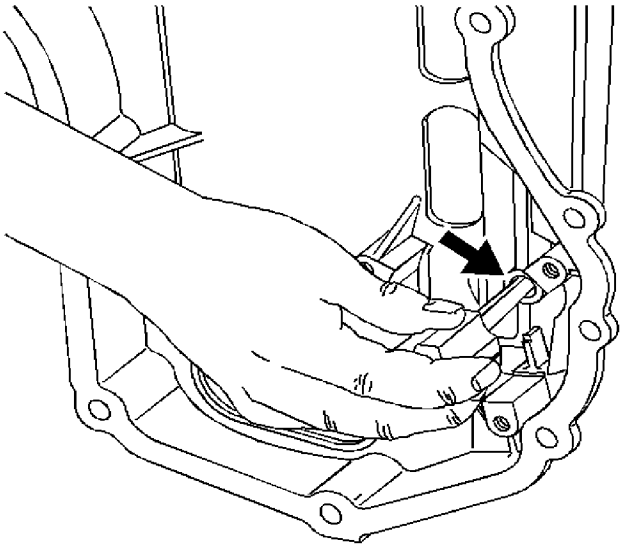

2. Insert a screwdriver through the reverse servo pin hole in order to verify the correct

cardiagn.com

cardiagn.com

Forward Clutch Functional Air Check

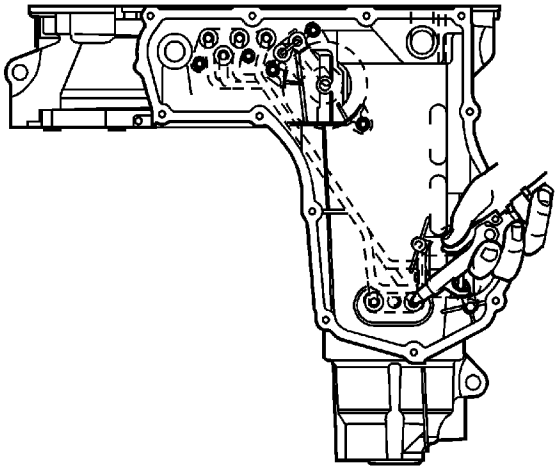

With air pressure set at 20 psi, check the forward clutch to verify proper operation of the seals and clutch assembly.

cardiagn.com

Input Internal Gear, Forward Clutch Hub Disassemble

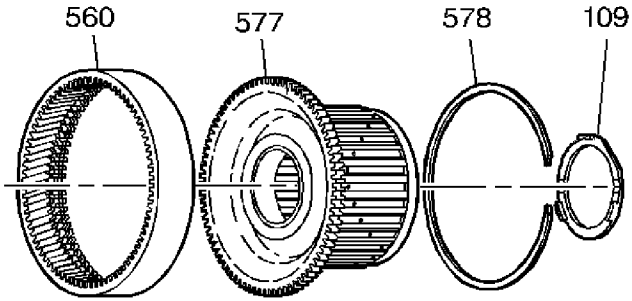

1. If the thrust washer (109) has not been removed, remove the thrust washer (109) from the forward clutch hub (577).
2. Remove the input internal gear to forward clutch hub assembly snap ring (578).
3. Remove the forward clutch hub (577) from the input internal gear (560).

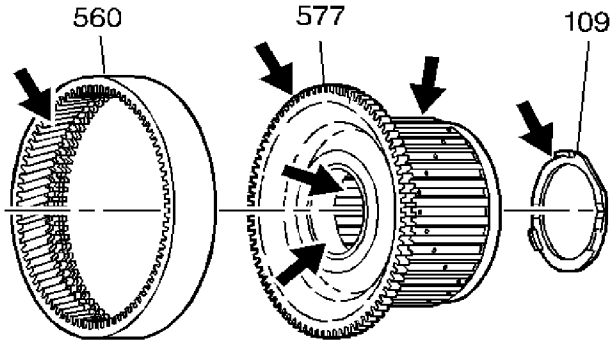

4. Inspect the input internal gear (560) for damage or excessive wear.
5. Inspect the forward clutch hub (577) splines for damage or excessive wear.
6. Inspect the bushing and the thrust washer (109) for damage or excessive wear.
7. Clean and dry all of the components.

cardiagn.com

Input Internal Gear, Forward Clutch Hub Assemble

Special Tools

J 36850 Assembly Lubricant

For equivalent regional tools, refer to Special Tools.

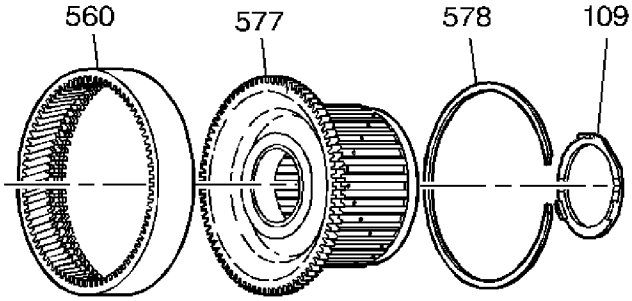

1. Assemble the forward clutch hub (577) onto the input internal gear (560) and retain it with the snap ring (578).
2. Assemble the thrust washer (109) onto the forward clutch hub (577) with the thrust washer tabs toward the forward clutch hub (577). Retain the thrust washer with *J 36850* lubricant or equivalent.

cardiagn.com

Input Internal Gear, Forward Clutch Hub Install

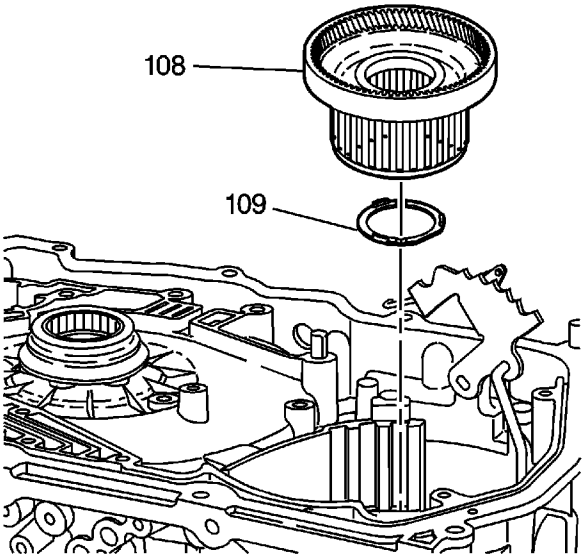

Note: Install the forward clutch hub and input internal gear assembly into the transmission case. Rotate the assembly while installing in order to spline the forward clutch hub (108) to the forward clutch plates.

Install the forward clutch hub and input internal gear assembly into the transmission case.

cardiagn.com

Reaction Internal Gear, Input Carrier Disassemble

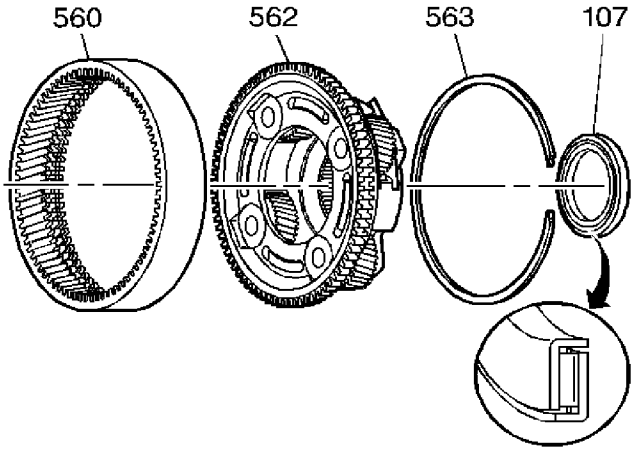

1. Remove the thrust bearing (107) from the reaction carrier (562) if the thrust bearing has not been removed.
2. Remove the reaction internal gear (560) to input carrier assembly snap ring (563).

   Note: The reaction internal gear and the input internal gear are identical parts. However, these parts are not interchangeable after the transmission has operated in a vehicle.

3. Remove the input carrier assembly (562) from the reaction internal gear (560).

cardiagn.com

Input Carrier Pinion Gear Clearance Check

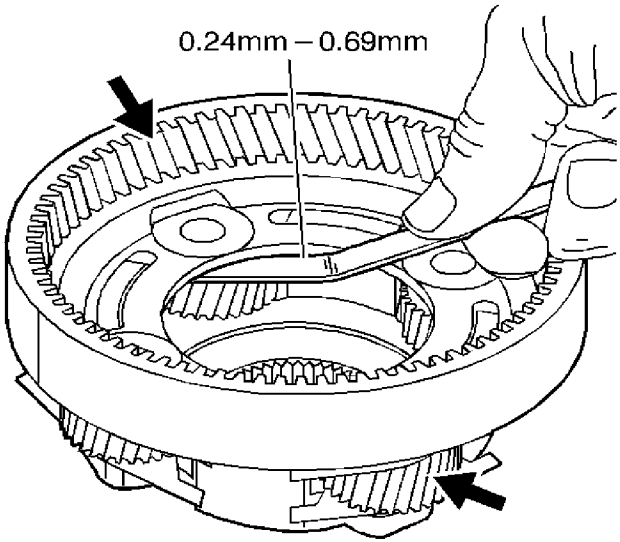

Note: Replace the carrier if pinion gear clearance is out of specification. The pinion gears are permanently assembled to the carrier and are not serviced individually.

1. Measure the pinion gear end play for proper clearance. Use a feeler gage. The clearance should be 0.24-0.69 mm (0.01-0.027 in).
2. Inspect the reaction internal gear and the input carrier assembly for damage or excessive wear. Specifically inspect the condition of the pinion gears, the washers, and the thrust bearings.
3. Clean and dry each of the components.

cardiagn.com

Reaction Internal Gear, Input Carrier Assemble

Special Tools

J 36850 Assembly Lubricant

For equivalent regional tools, refer to Special Tools.

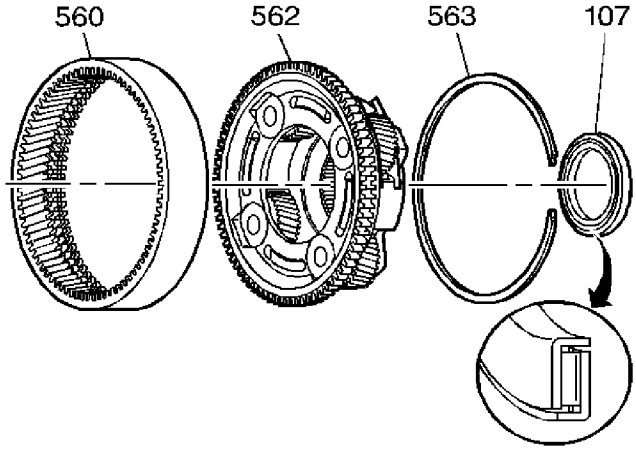

1. Assemble the input carrier assembly (562) to the reaction internal gear (560.
2. Retain the input carrier assembly with the snap ring (563).
3. Assemble the thrust bearing (107) onto the input carrier assembly.
4. Retain the thrust bearing with *J 36850* lubricant or equivalent. You will find another thrust bearing permanently retained in the input carrier assembly (562).

cardiagn.com

Reaction Internal Gear, Input Carrier Installation

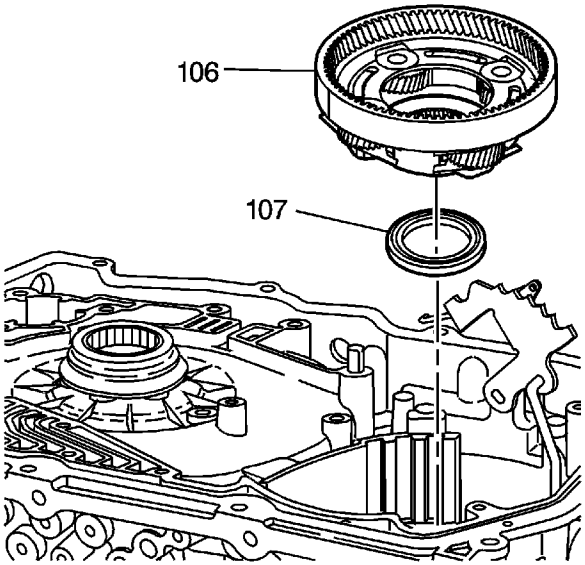

Note: While installing the reaction internal gear and input carrier assembly, rotate the assembly in order to mesh the input carrier pinion gears to the input internal gear.

Install the reaction internal gear and input carrier assembly (106) into the transmission case.

cardiagn.com

Direct / Coast Clutch, Reaction Carrier Disassemble

Special Tools

- *J 23327* Clutch Spring Compressor
- *J 41232* Direct Clutch Return Spring Compressor Adapter
- *J 41236* Coast Cutch Return Spring Compressor

For equivalent regional tools, refer to Special Tools.

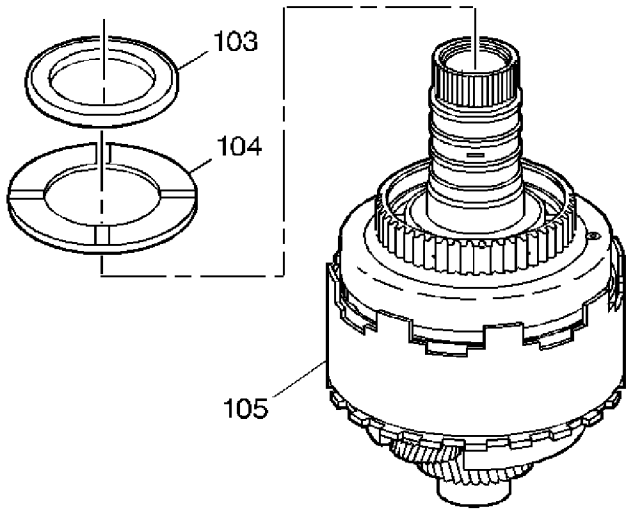

1. Remove the selective thrust bearing (103) and the thrust washer (104) from the input shaft of the direct and coast clutch assembly (105).

cardiagn.com

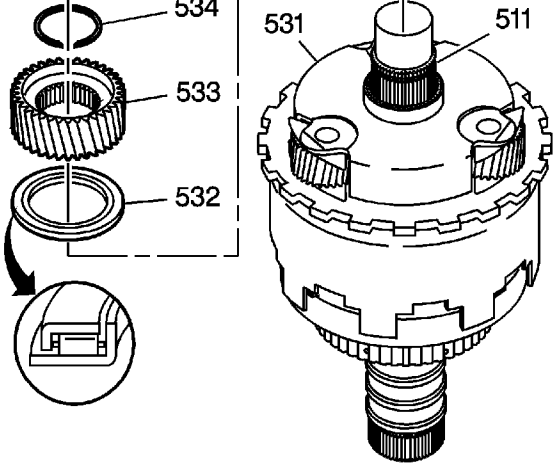

2. Remove the input sun gear to input sun gear shaft snap ring (534).
3. Remove the input sun gear (533) from the input sun gear shaft (511).
4. Remove the thrust bearing (532) from the reaction carrier assembly (531).

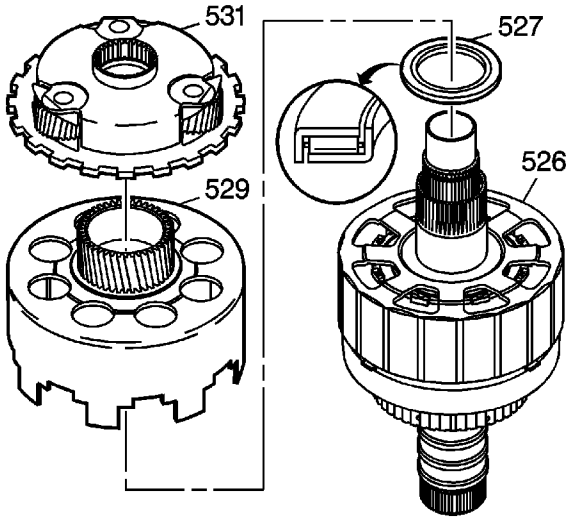

5. Remove the reaction carrier assembly (531). You will find a thrust bearing permanently installed in the reaction carrier assembly under the pinion gears.
6. Remove the reaction sun gear and shell assembly (529).
7. Remove the thrust bearing (527) from the reaction carrier shaft and shell assembly (526).

cardiagn.com

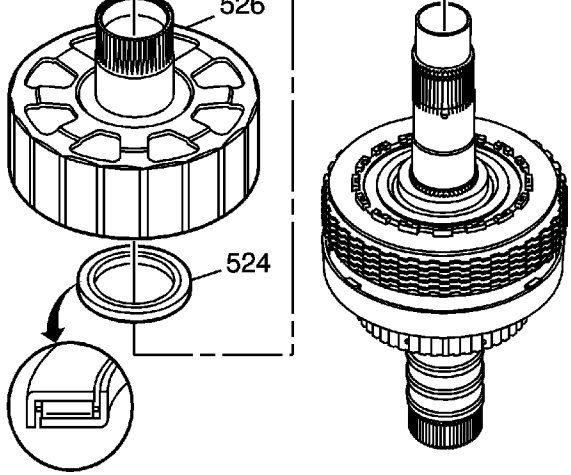

8. Remove the reaction carrier shaft and shell assembly (526).
9. Remove the thrust bearing (524) from the top of the sprag race assembly.

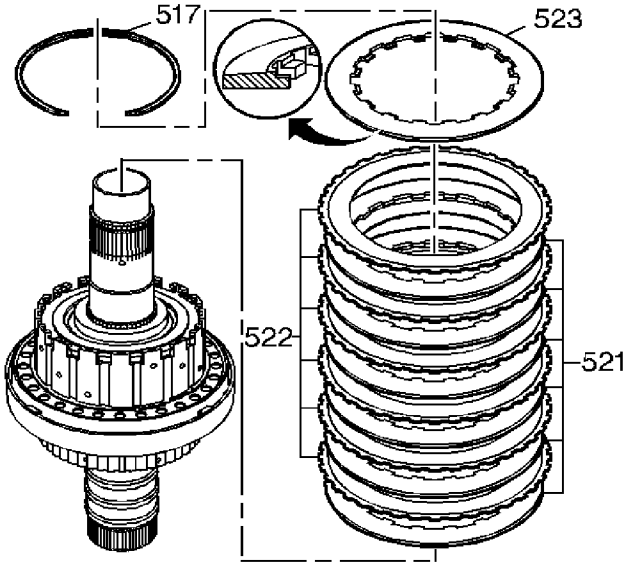

10. Remove the clutch retaining snap ring (517).
11. Remove the direct clutch plates from the direct coast clutch input housing. The direct clutch consists of a backing plate (523), steel plates (521) and fiber plates (522).

cardiagn.com

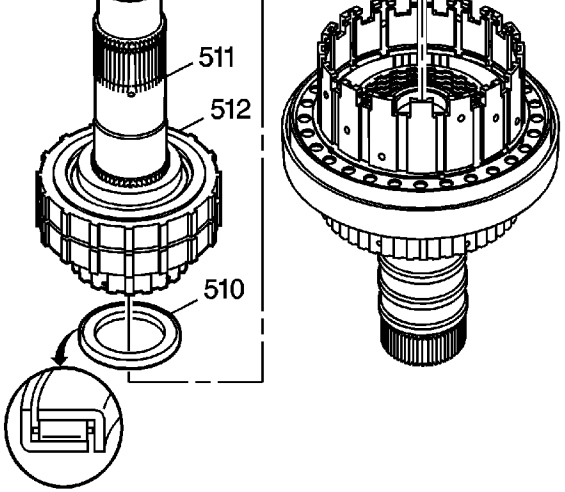

12. Lift up on the input sun shaft (511) in order to remove the input sun shaft (511) and the sprag (512) as an assembly.
13. Remove the inner race to input housing thrust bearing (510) if the inner race to input housing thrust bearing did not remain with the input sun shaft and sprag assembly.

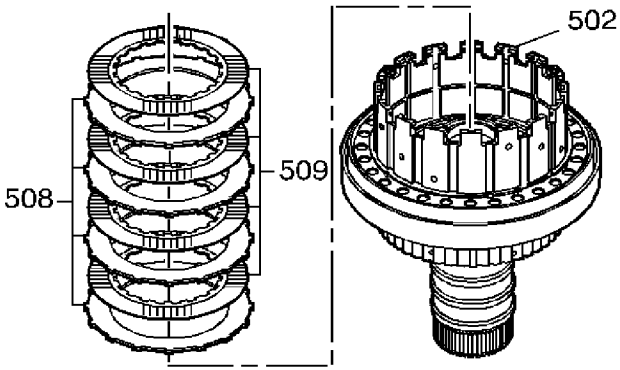

14. Remove the coast clutch plates from the input housing (502). The coast clutch consists of four steel plates (508) and four fiber plates (509).

cardiagn.com

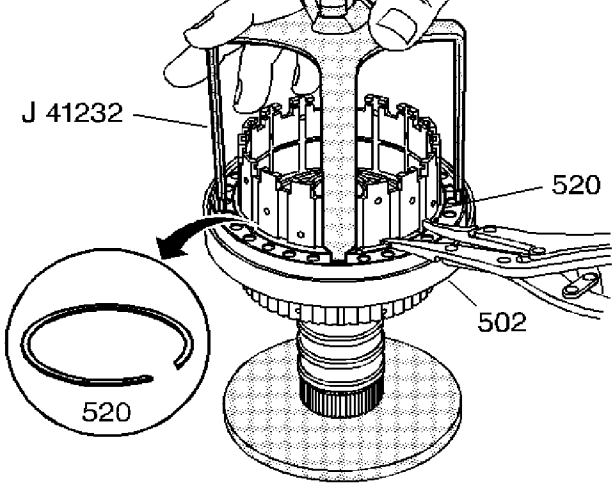

15. Compress the direct clutch return spring assembly. Use the *J 41232* compressor adapter and *J 23327* spring compressor or equivalent.
16. Remove the spring retaining snap ring (520).
17. Remove the *J 41232* compressor adapter and *J 23327* spring compressor .

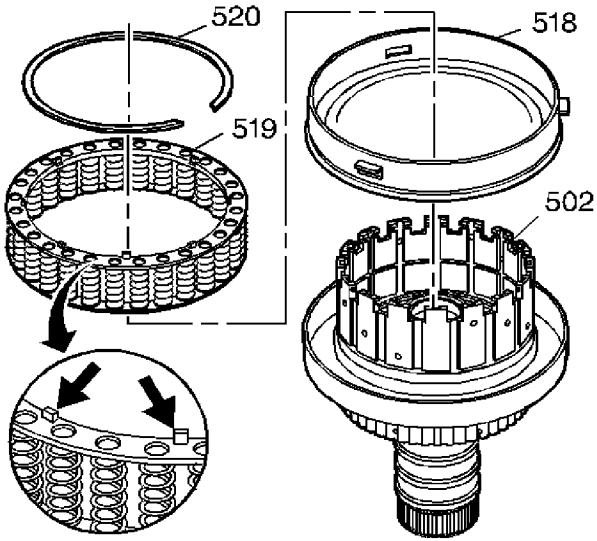

18. Remove the direct clutch return spring (519).
19. Remove the direct clutch piston and seal assembly (518).

cardiagn.com

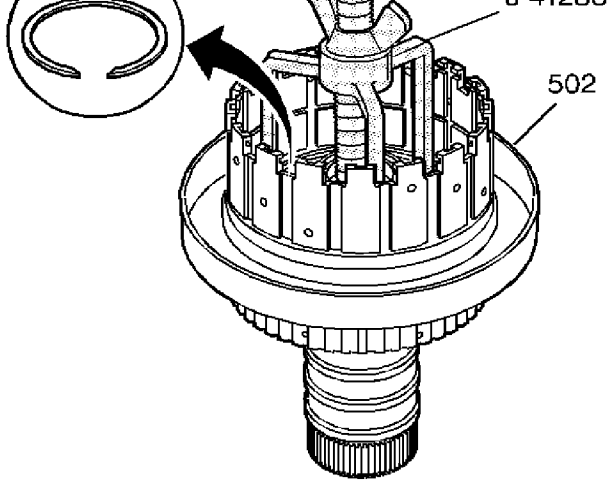

20. Compress the coast clutch return spring. Use the *J 41236* spring compressor and *J 23327* spring compressor or equivalent.
21. Remove the spring retaining snap ring (507).
22. Remove the *J 41236* spring compressor and *J 23327* spring compressor .

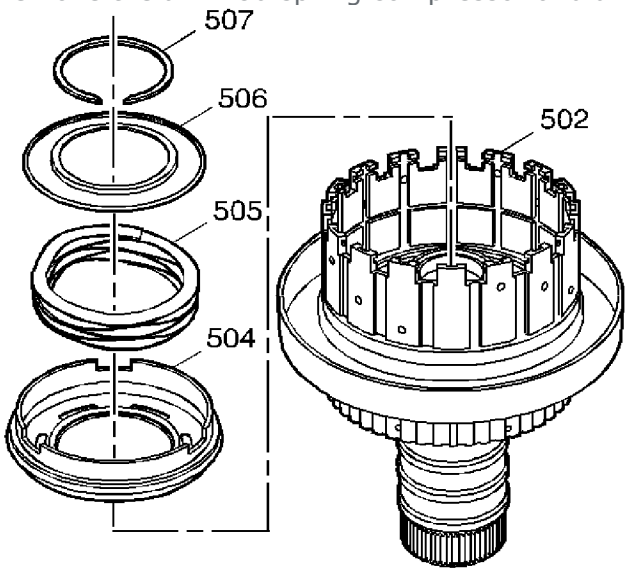

23. Remove the coast clutch return spring retainer (506) and the release spring (505).
24. Remove the coast clutch piston and seal assembly (504).

cardiagn.com

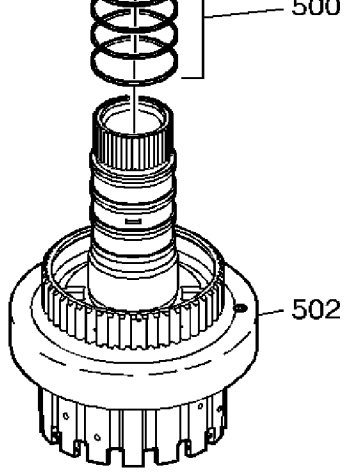

25. Remove and discard the 4 Teflon™ oil seals (500) from the input shaft assembly (502).

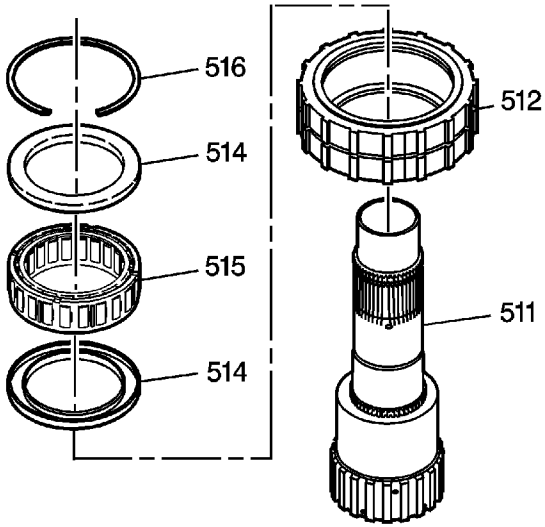

26. Remove the input sprag assembly (512 and 514-516) from the input sun gear shaft (511).
27. Remove the snap ring (516) from the sprag assembly (515).
28. Remove the sprag clutch assembly (515) from the sprag outer race (512).
29. Remove the 2 end bearings (514) from the sprag clutch assembly (515).

cardiagn.com

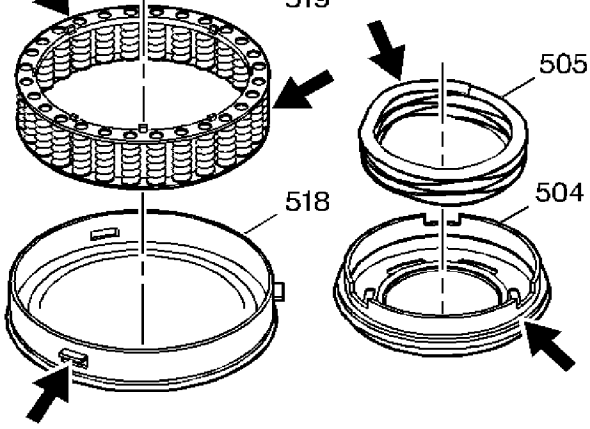

Note: The pistons are reusable if not damaged. If the pistons or seals are damaged, replace the assembly.

30. Inspect the piston (518 and 504) and seal assemblies for damage or cut seals.
31. Inspect the clutch spring assemblies (519 and 505) for distortion or missing springs.

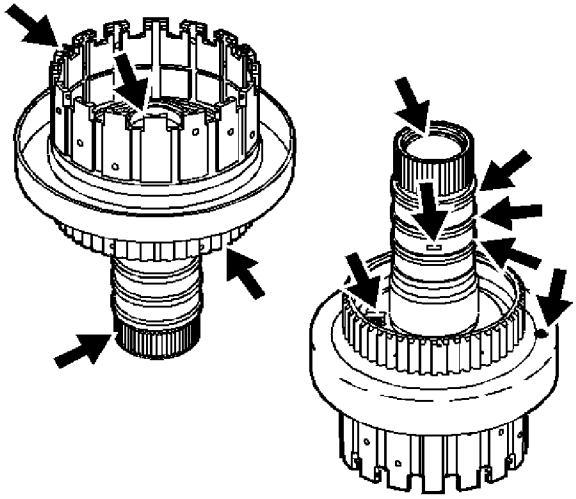

32. Inspect the direct clutch and coast clutch retainer and ball assemblies for leaks or damage.
33. Inspect the oil passages for blockage.
34. Inspect the bushings and bearings for excessive wear.
35. Inspect the seal grooves on the input shaft for nicks or damage.
36. Inspect the splines, housings and clutch plates for cracks, excessive wear or damage.
37. Inspect all other components for damage or excessive wear.

cardiagn.com

Reaction Carrier Pinion Clearance Check

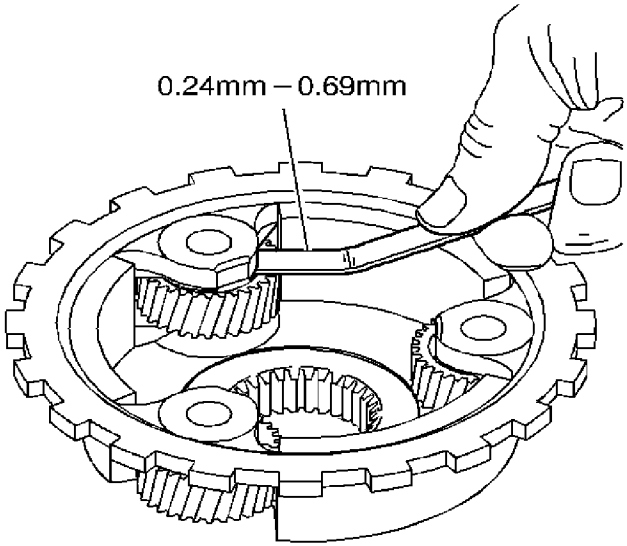

Note: Replace the carrier assembly if the pinion gear clearance is out of specification. The pinion gears are permanently assembled to the carrier and are not serviced individually.

1. Measure the reaction carrier pinion gear end play for proper clearance. Use a feeler gauge. The clearance is 0.24-0.69 mm (0.01-0.027 in).
2. Clean and dry each of the components.

cardiagn.com

Direct / Coast Clutch, Reaction Carrier Assemble

Special Tools

- *J 23327* Clutch Spring Compressor
- *J 36850* Assembly Lubricant
- *J 41232* Direct Clutch Return Spring Compressor Adapter
- *J 41234-1* Input Shaft Seal Installer Pusher
- *J 41234-2* Input Shaft Seal Installer Protector
- *J 41234-3* Input Shaft Seal Installer Sizer
- *J 41236* Coast Clutch Return Spring Compressor Adapter

For equivalent regional tools, refer to Special Tools.

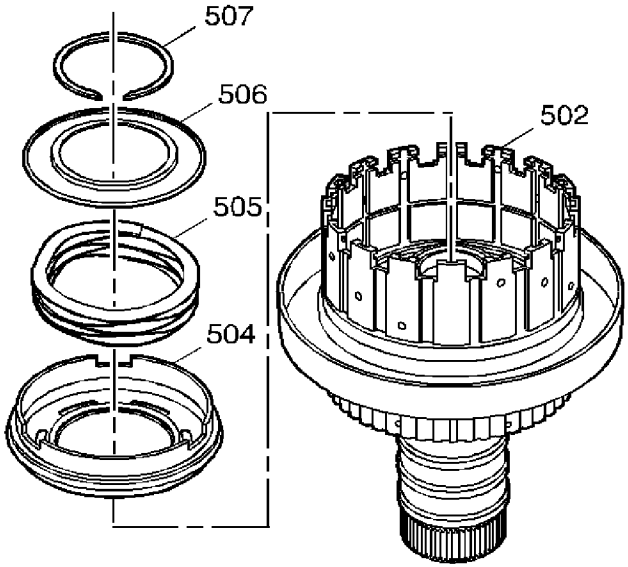

1. In order to aid in the assembly, lubricate the seal with transmission fluid.
2. Assemble the coast clutch piston and seal assembly (504) into the input housing (502).

   Note: You must assemble the spring retainer with the inner lip facing up.

3. Assemble the coast clutch release spring (505) and spring retainer (506) into the input housing (502).

cardiagn.com

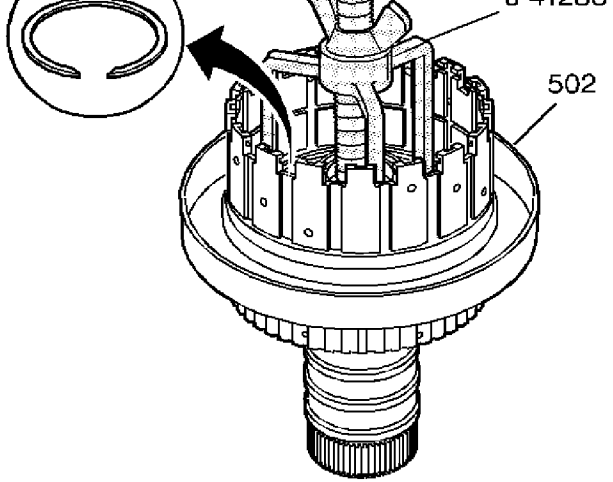

4. Compress the coast clutch return spring retainer. Use the *J 41236* compressor adapter and *J 23327* spring compressor or equivalent.
5. Assemble the coast clutch spring retainer snap ring (507) onto the input housing (502).
6. Remove the *J 41236* compressor adapter and *J 23327* spring compressor .

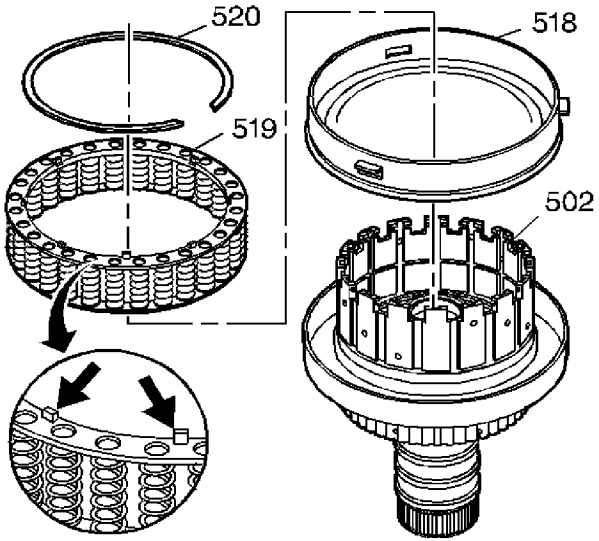

7. In order to aid in the assembly, lubricate the seal with transmission fluid.
8. Assemble the direct clutch piston and seal assembly (518) into the input housing (502).
9. Assemble the direct clutch return spring assembly (519) into the input housing with the snap ring retaining tabs facing up.

cardiagn.com

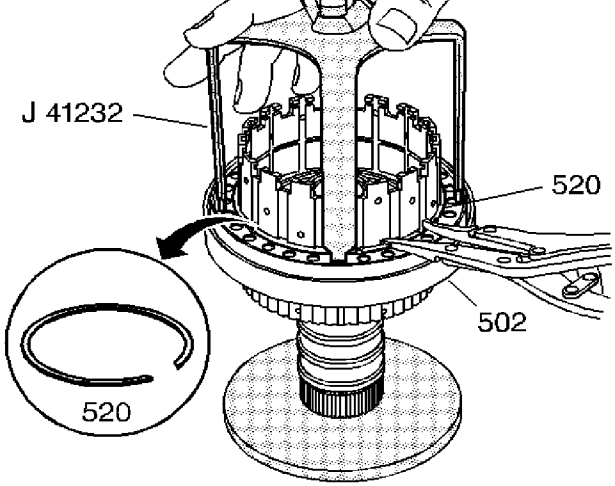

10. Compress the direct clutch spring assembly. Use the *J 41232* compressor adapter and *J 23327* spring compressor or equivalent.
11. Assemble the direct clutch snap ring (520) into the input housing (502).
12. Remove the *J 41232* compressor adapter and *J 23327* spring compressor .

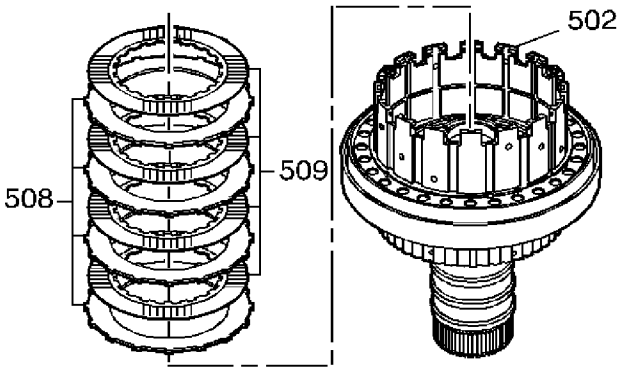

Note: Assemble the steel plates (508) with the splines in the input housing grooves that are machined to the pistons.

13. Assemble the 4 steel coast clutch plates (508) and the 4 new fiber coast clutch plates (509) into the input housing in alternating order, beginning with a steel plate (508).

cardiagn.com

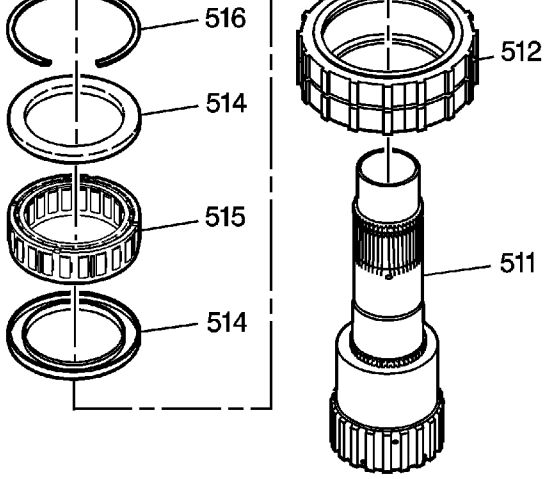

14. Place the sprag outer race (512) on the bench with the flat side down and the side with the snap ring groove up.
15. Place one end bearing (514) into the outer race.
16. While rotating the sprag slowly, assemble the sprag clutch (515) into the sprag outer race. Keep the four notches up and the flat side down.
17. Assemble the other end bearing (514) on top of the sprag clutch.
18. Assemble the snap ring (516) into the sprag outer race (512) in order to retain the sprag clutch and end bearings.

Note: The snap ring side of the assembly faces up when installing the sprag clutch onto the input sun gear shaft. The flat side of the sprag outer race functions as the backing plate for the coast clutch.

19. While rotating the input sun gear shaft clockwise in order to help seat the sprags, assemble the sprag clutch and outer race assembly onto the input sun gear shaft (511).

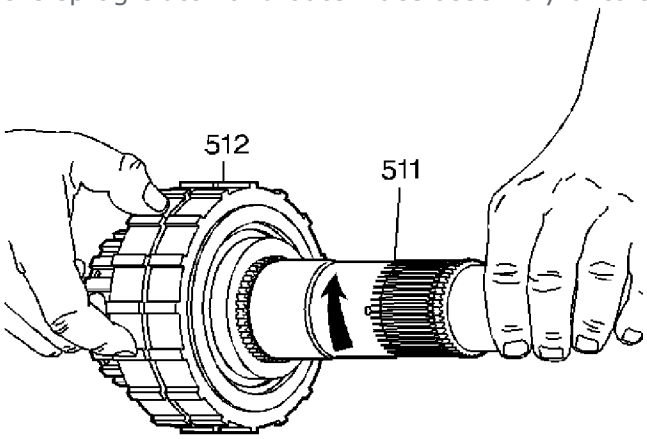

cardiagn.com

Note: The input sun gear shaft (511) must only rotate clockwise.

20. Verify the correct operation of the sprag clutch by holding the sprag clutch outer race (512) and rotating the input sun gear shaft (511).

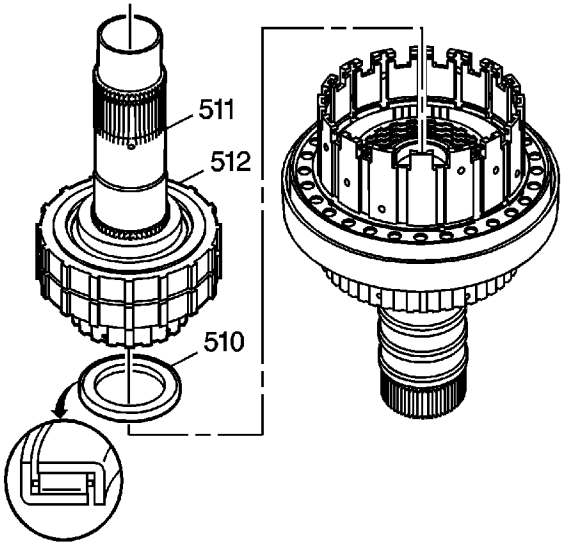

21. Assemble the thrust bearing (510) on the underside of the input sun gear shaft.
22. Retain the thrust bearing with *J 36850* lubricant or equivalent.
23. Assemble the input sun gear shaft and sprag clutch assembly (511 and 512) into the input housing. The splines on the input sun gear shaft engage with the coast clutch fiber plates.

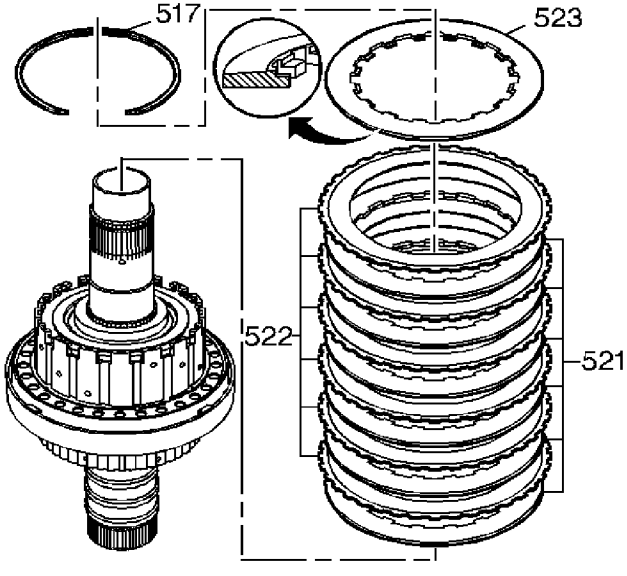

cardiagn.com

the following illustration for 5 plate installation sequence.

24. Assemble the 6 steel (521) and 6 new fiber (522) direct clutch plates into the input housing in alternating order beginning with a steel plate (521).
25. Assemble the direct clutch backing plate (523) onto the input housing with the flat side down.
26. Assemble the snap ring (517) in order to retain the input sun shaft and sprag clutch assembly and the direct clutch plates.

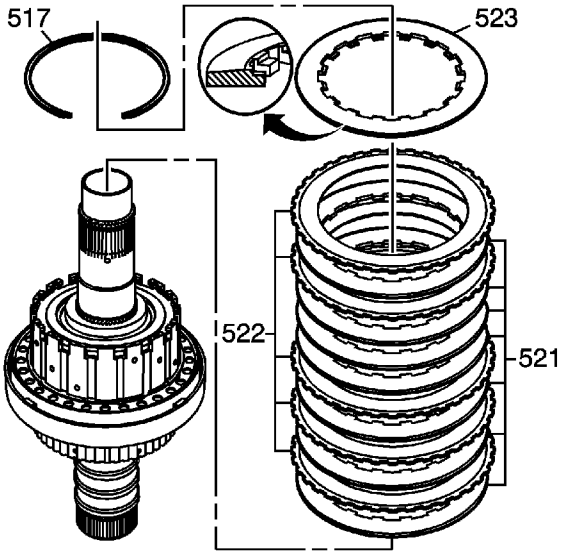

Note: Direct clutch plates are model dependent. Refer to Clutch Plate Selection Specifications to determine correct plate quantity. Then refer to either of the above illustration for 6 plate or 5 plate installation sequence.

27. Assemble the 7 steel (521) and 5 new fiber (522) direct clutch plates into the input housing in alternating order beginning with a steel plate (521). Note the location of the 4th and 5th fiber plates. 3 steel plates will be installed together.
28. Assemble the direct clutch backing plate (523) onto the input housing with the flat side down.
29. Assemble the snap ring (517) in order to retain the input sun shaft and sprag clutch assembly and the direct clutch plates.

cardiagn.com

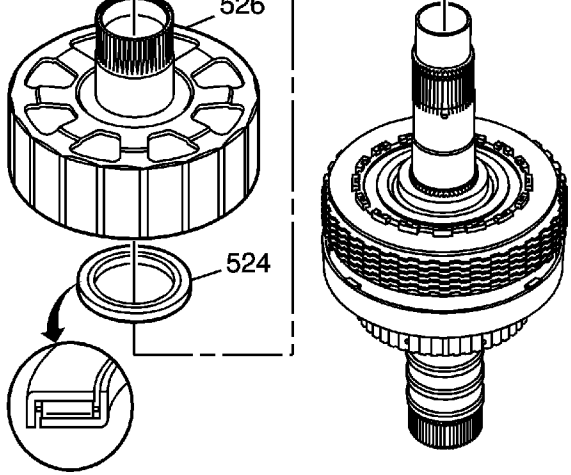

30. Assemble the thrust bearing (524) on the top of the sprag clutch assembly. Retain with *J 36850* lubricant or equivalent.
31. Assemble the reaction carrier shaft and shell assembly (526) onto the input housing. The splines on the inside of the shell engage the direct clutch fiber plates.

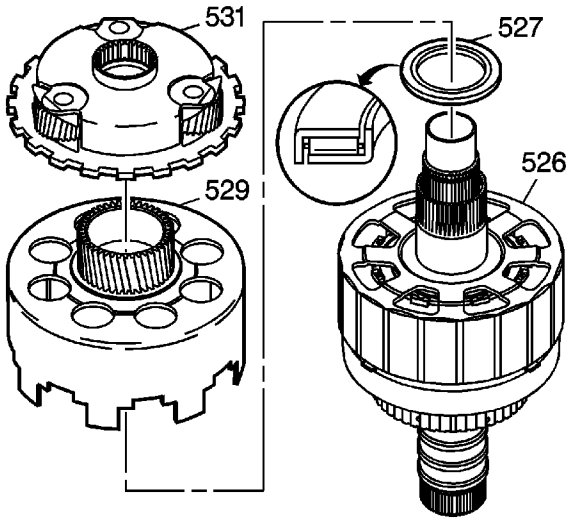

32. Assemble the thrust bearing (527) onto the top of the reaction carrier shaft and shell assembly.
33. Assemble the reaction carrier sun gear and shell assembly (529) onto the reaction shaft shell.

Note: Rotate the reaction carrier during assembly in order to mesh the sun gear with the pinion gears.

34. Assemble the reaction carrier assembly (531) onto the reaction sun gear.

cardiagn.com

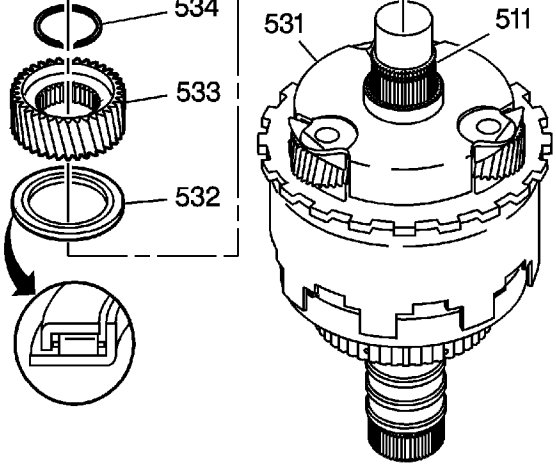

35. Assemble the reaction carrier assembly to input sun gear thrust bearing (532) onto the reaction carrier assembly.
36. Assemble the input sun gear (533) onto the input sun gear shaft.
37. Assemble the input sun gear snap ring (534) onto the input sun gear shaft.

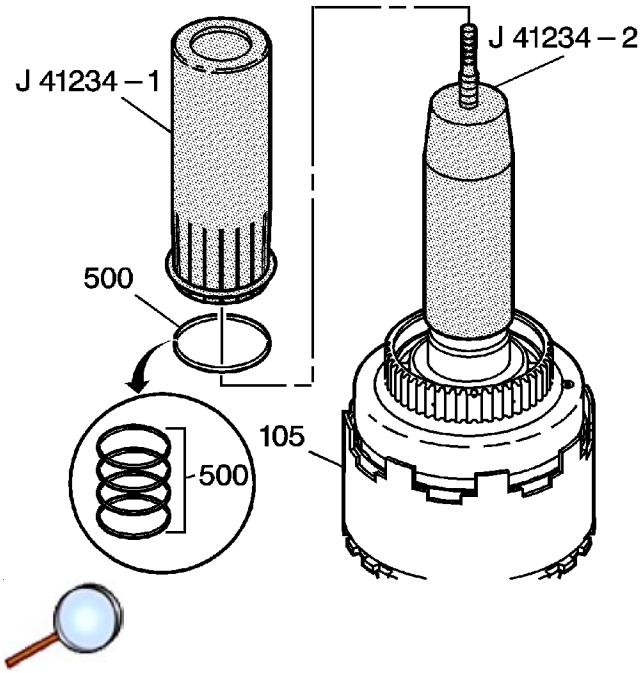

Note: When assembling the four new Teflon seals (500) onto the input shaft, begin with the seal closest to the housing.

38. Slide the *J 41234-2* protector over the input shaft, and position the *J 41234-2* protector at the seal groove closest to the housing. Coat the *J 41234-2* protector with transmission fluid.
39. Guide a new seal onto the *J 41234-2* protector and slide the seal into the seal groove with the *J 41234-1* pusher .
40. Repeat the above procedure for each seal. Adjust the *J 41234-2* protector as necessary for

cardiagn.com

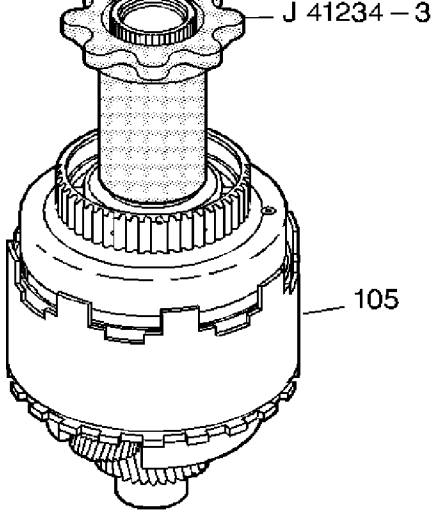

41. Size the seals with the *J 41234-3* sizer .
42. Leave the *J 41234-3* sizer in place for at least five minutes. If possible, leave the *J 41234-3* sizer in place until you install the assembly (105) into the transmission case.

cardiagn.com

Direct and Coast Clutch Functional Air Checks

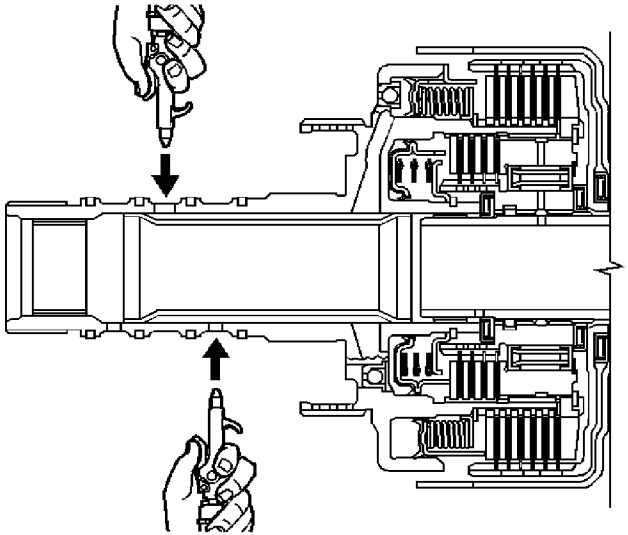

1. Air check the direct clutch in order to verify the proper operation of the seals and clutch assembly.
2. Air check the coast clutch in order to verify the proper operation of the seals and clutch assembly.

cardiagn.com

Direct/Coast Clutch, Reaction Carrier Installation

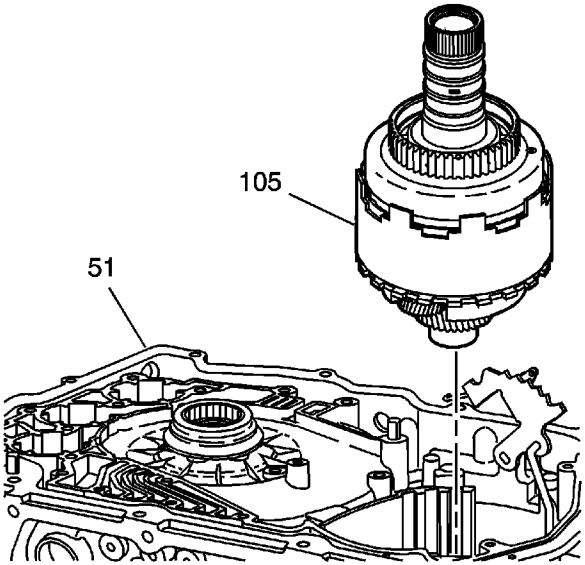

Install the direct/coast clutch and reaction carrier assembly (105) into the transmission case (51).

cardiagn.com

Selective Washer Measurement and Installation

Special Tools

J 34673 Gage Block

For equivalent regional tools, refer to Special Tools.

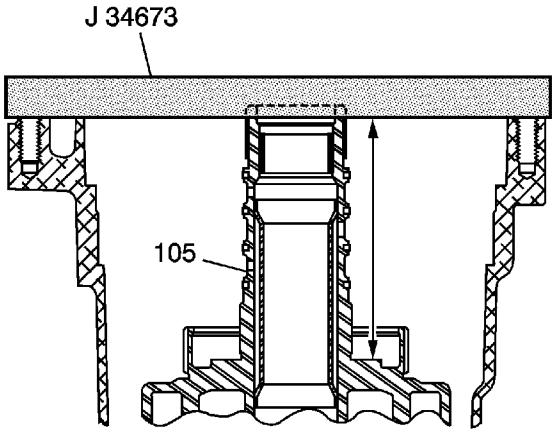

1. Place the *J 34673* gage block across the machined surface of the case infront or behind the direct/coast clutch shaft.
2. Measure the distance between the top of the direct/coast clutch housing (105) and the machined surface of the case (record measurement).
3. Note the recorded measurement and choose the correct selective washer. Refer to End Play Specifications.

cardiagn.com

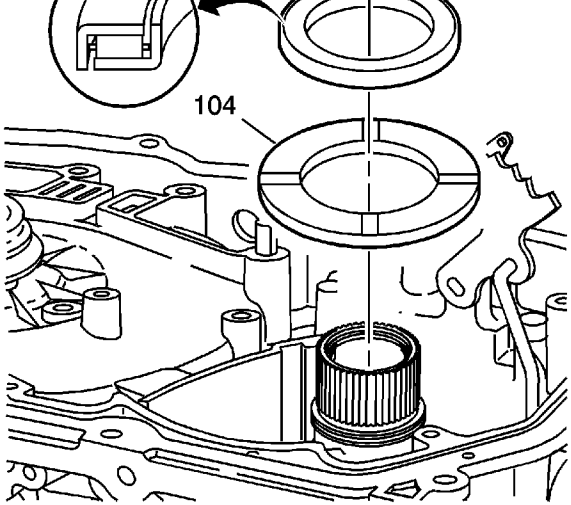

Note: Position the tab, on the selective thrust washer (104), in the recessed area for the retainer and ball assembly.

4. Assemble the selective thrust washer (104) onto the top of the input housing.
5. Assemble the thrust bearing (103) over the input shaft and onto the top of the selective thrust washer (104).

cardiagn.com

Reverse Input and Second Roller Clutch Disassemble

Special Tools

- *J 23327* Clutch Spring Compressor
- *J 41232* Return Spring Compressor
- *J 41097-1* Inner Seal Remover Adapter
- *J 41097-2* Inner Seal Remover Adapter Ring
- *J 25031-A* Inner Seal Remover
- *J 4646* Pliers

For equivalent regional tools, refer to Special Tools.

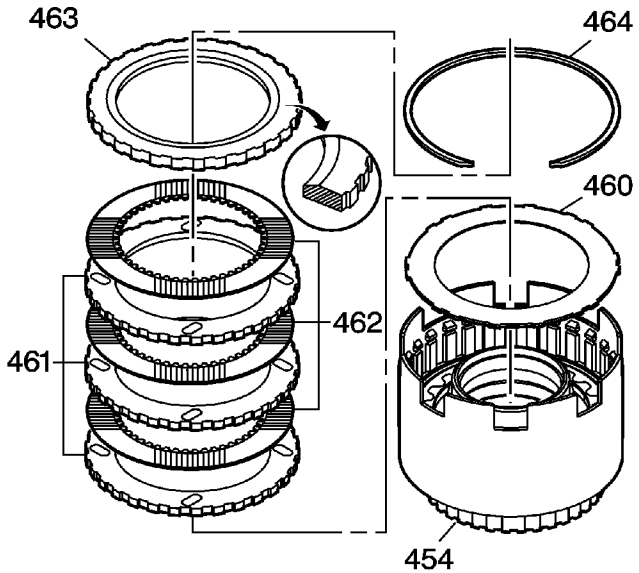

1. Remove the reverse clutch snap ring (464).
2. Remove the reverse clutch plates (one backing plate (463), three steel plates (461), three fiber plates (462), and a waved plate (460).

cardiagn.com

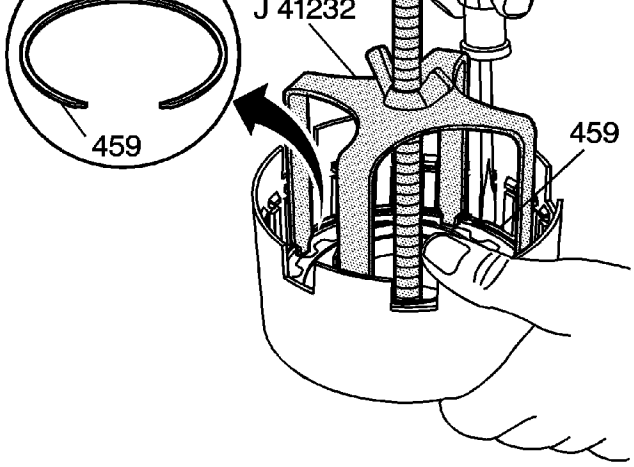

3. Compress the reverse clutch return spring. Use the *J 41232* spring compressor and *J 23327* spring compressor or equivalent.
4. Remove the reverse clutch return spring and the retainer snap ring (459).
5. Remove the *J 41232* spring compressor and *J 23327* spring compressor .

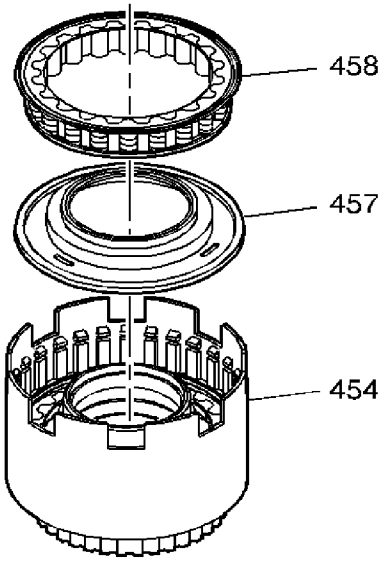

6. Remove the reverse clutch return spring and retainer assembly (458).
7. Remove the reverse clutch piston and seal assembly (457).

cardiagn.com

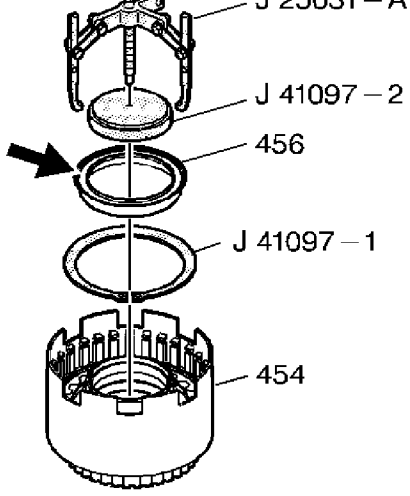

Note: If the seal assembly is not damaged do not remove the seal assembly.

8. Inspect the reverse clutch inner seal (456).
9. If the seal assembly is damaged, perform the following procedure in order to remove the seal assembly:
   9.1. Use the *J 4646* pliers or equivalent in order to install the *J 41097-1* seal remover adapter under the outer lip of the reverse clutch inner seal (456).
   9.2. Place the *J 41097-2* adapter ring on the inner hub of the reverse clutch housing (454).
   9.3. Use the puller *J 25031-A* seal remover in order to remove the seal.

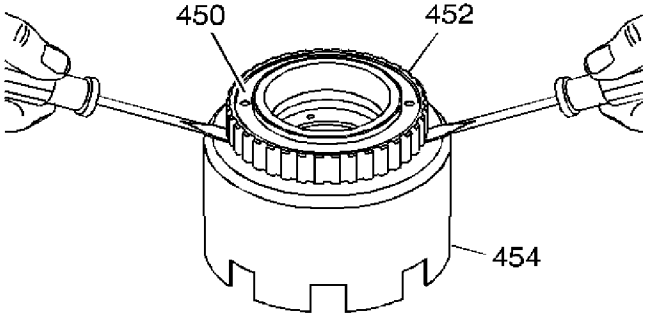

cardiagn.com

10. Remove the 2nd roller clutch (452) and roller clutch retainer (450) by prying up on the roller clutch assembly with two screwdrivers. The second roller clutch retainer is pressed onto the reverse clutch housing (454) and is not reusable after removal.

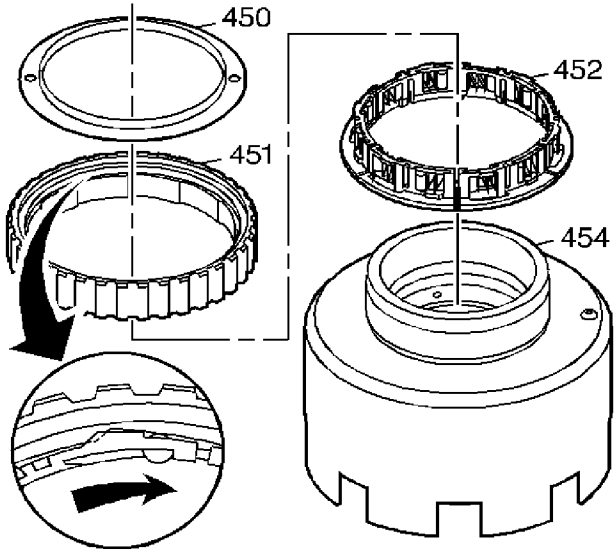

Note: In order to remove the 2nd roller clutch (452), rotate the roller clutch clockwise until indexed with the roller clutch cam (451) ramps.

11. Remove the 2nd roller clutch (452) from the inside of the roller clutch cam (451).

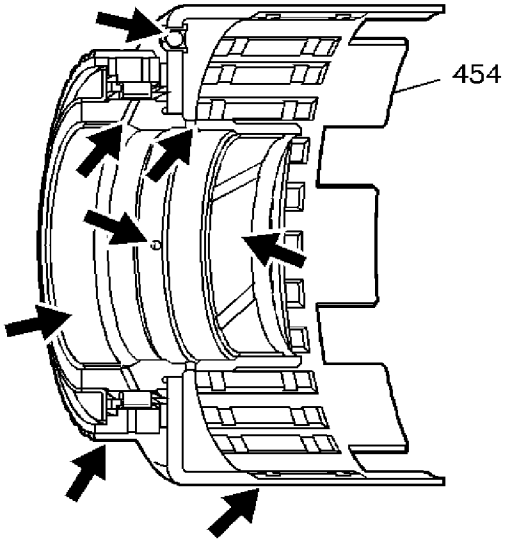

12. Inspect the reverse housing (454) for excessive band wear and damaged splines.
13. Inspect the retainer and ball capsule for damage or clogging.

cardiagn.com

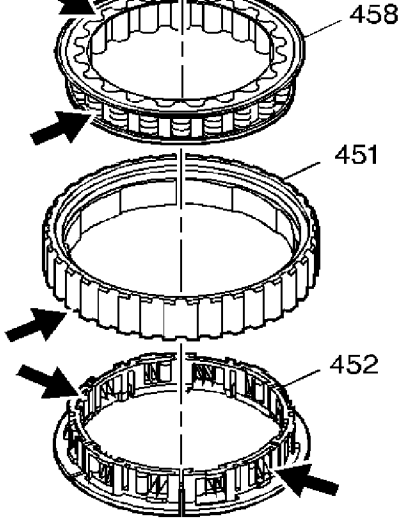

15. Inspect the roller clutch for excessive wear (451 and 452).
16. Inspect the spring assembly for dislocated or damaged springs (458).
17. Inspect all components for damage and excessive wear.
18. Clean and dry each of the components.

cardiagn.com

Reverse Input and Second Roller Clutch Assemble

Special Tools

- *J 23327* Clutch Spring Compressor
- *J 41232* Return Spring Compressor
- *J 41233* Inner Seal Installer

For equivalent regional tools, refer to Special Tools.

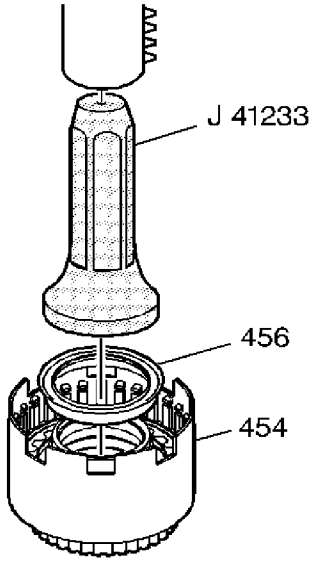

1. If the reverse clutch inner seal assembly (456) was damaged and removed, install a new reverse clutch inner seal assembly (456). Use the *J 41233* seal installer .
2. Assemble the reverse clutch piston and seal assembly (456). In order to aid in the assembly, lubricate the seal with transmission fluid.
3. Assemble the reverse clutch return spring and retainer assembly with the smaller outside diameter down.

cardiagn.com

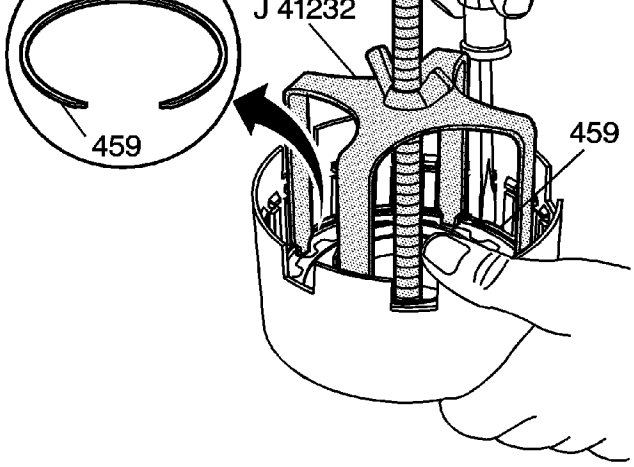

4. Compress the reverse clutch return spring. Use the *J 41232* spring compressor and *J 23327* spring compressor or equivalent.
5. Assemble the return spring snap ring (459).
6. Remove the *J 41232* spring compressor and *J 23327* spring compressor .

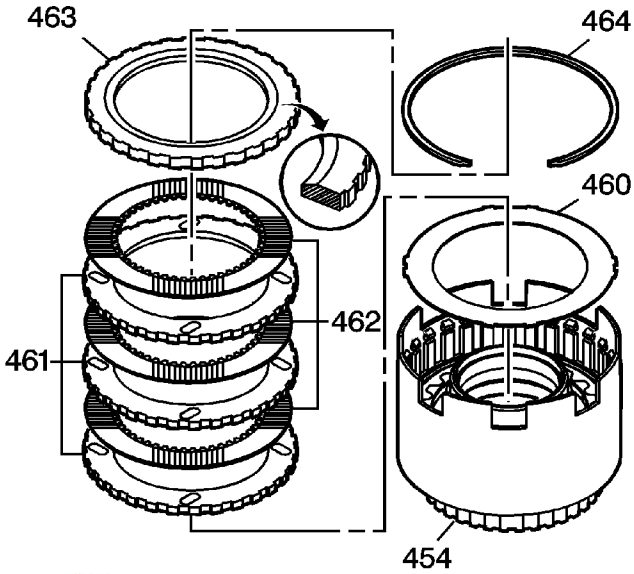

7. Assemble the wave plate (460).
8. Assemble the 3 steel plates (461) and the 3 new fiber plates (462) in alternating order beginning with a steel plate (461).
9. Assemble the reverse clutch backing plate with the beveled edge up.
10. Assemble the snap ring in the reverse clutch housing in order to retain the reverse clutch plates.

cardiagn.com

Reverse Clutch Functional Air Check

Special Tools

J 41235 Second Roller Clutch Installer

For equivalent regional tools, refer to Special Tools.

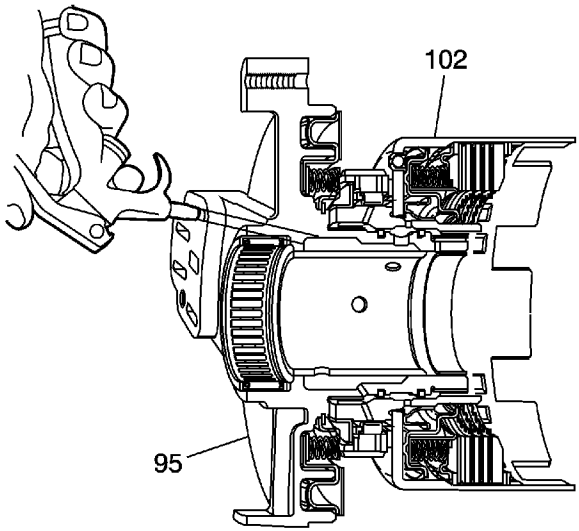

1. Install the driven sprocket support (95) into the reverse input clutch assembly (102).

   Note: Temporary installation of the driven sprocket support is necessary in order to perform the air check.

2. Air check the reverse clutch at the passage indicated, in order to verify the proper operation of the seals and clutch assembly.
3. Remove the driven sprocket support after air check has been performed.

cardiagn.com

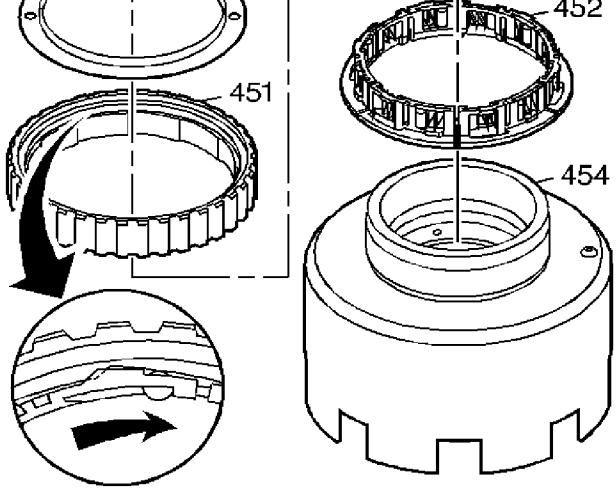

4. Assemble the 2nd roller clutch assembly (452) into the roller clutch cam (451).

   Note: When installing the 2nd roller clutch assembly onto the reverse clutch housing, the flat side of the roller clutch cam faces down toward the housing (454).

5. While rotating the roller clutch in order to properly engage the rollers, assemble the 2nd roller clutch onto the reverse clutch housing (454).

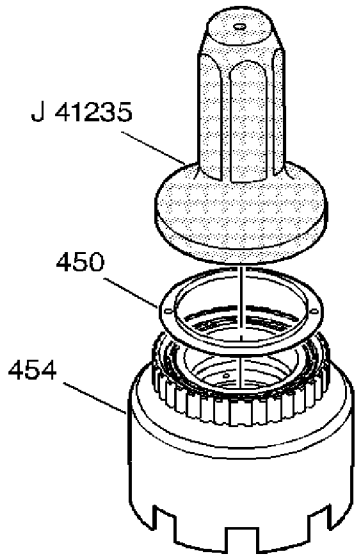

   Note: The *J 41235* installer will press the roller clutch assembly to a specified depth. If you install the 2nd roller too far down onto the inner race, the roller clutch may not operate properly.

6. Assemble a new 2nd roller clutch retainer (450) onto the 2nd roller clutch assembly. Use the

cardiagn.com

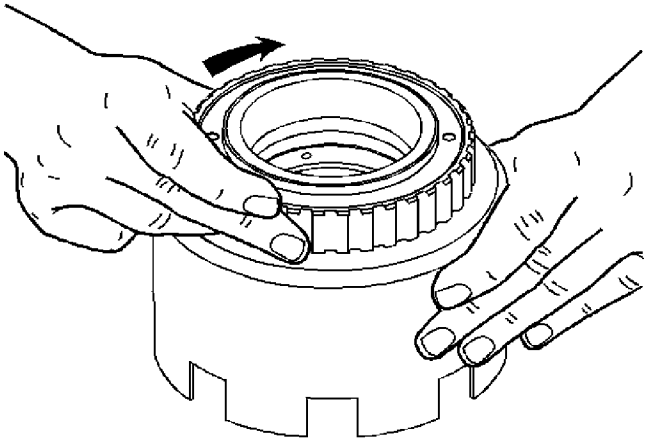

7. Hold the reverse clutch housing, and ensure that the roller clutch cam rotates clockwise only.

cardiagn.com

Reverse Input and Second Roller Clutch Installation

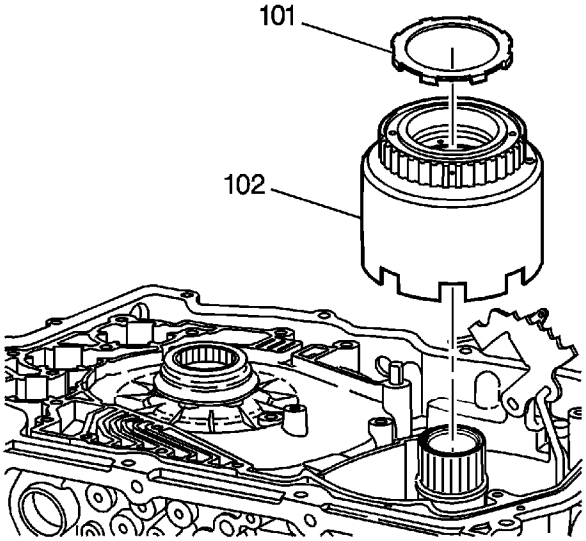

Note: The tangs on the reverse clutch housing spline to the tangs on the reaction carrier sun gear and shell assembly.

1. While rotating the reverse clutch housing (102) in order to align the clutch plates, install the reverse clutch and 2nd roller clutch assembly into the transmission case.
2. Assemble the reverse clutch thrust washer (101) onto the top of the 2nd roller clutch. The tabs must face down onto the housing.

cardiagn.com

Intermediate Fourth Band Assembly Installation

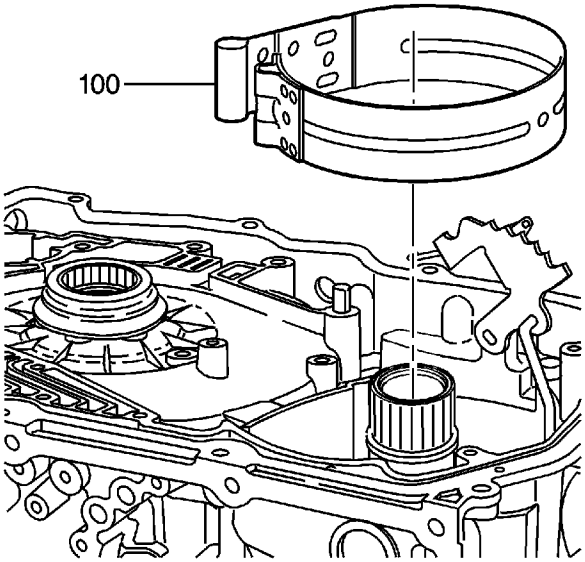

1. Assemble a new Intermediate/Fourth band (100) into the transmission case.

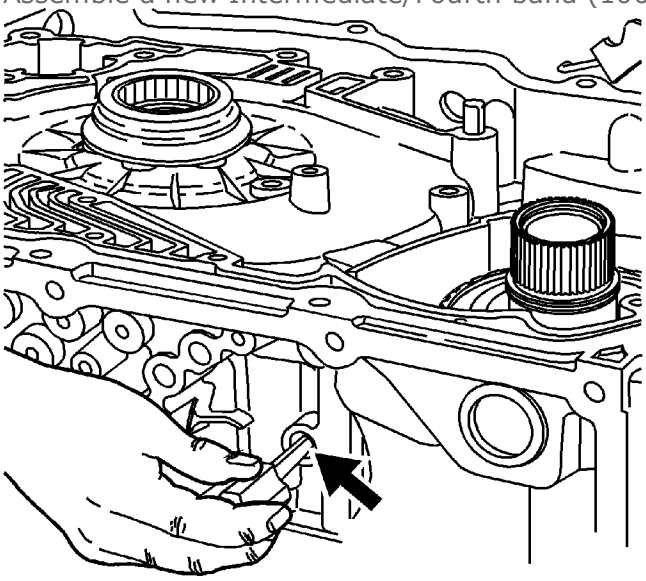

2. In order to verify the proper positioning of the band, insert a screwdriver through the Intermediate/Fourth servo bore. The screwdriver should press on the servo pin rest and compress the band around the reverse clutch housing.

cardiagn.com

Second Clutch Plate Installation

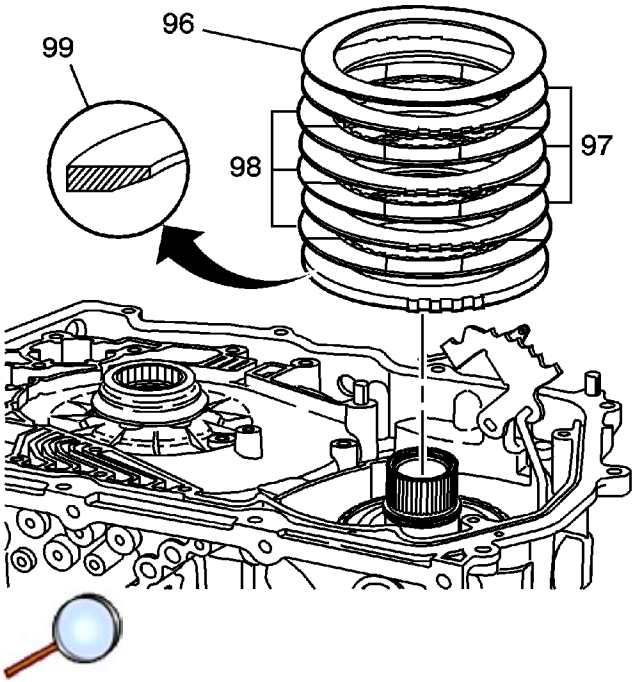

1. Inspect the 2nd clutch plates for excessive wear.
2. Clean and dry each of the components.
3. Assemble the 2nd clutch backing plate (99) with the flat side facing up.
4. Assemble the three steel (97) and the three new fiber plates (98) in alternating order beginning with a fiber plate (98).
5. Assemble the 2nd clutch wave plate (96).

cardiagn.com

Driven Sprocket Support Assembly Disassemble

Special Tools

- *J 23327* Clutch Spring Compressor
- *J 41232* Return Spring Compressor

For equivalent regional tools, refer to Special Tools.

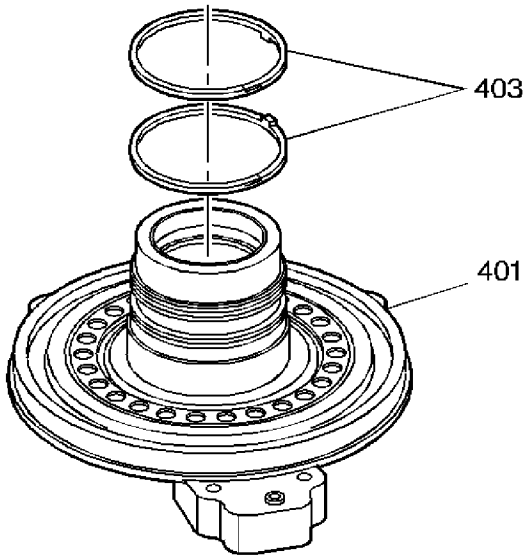

1. Remove the two seal rings (403) from the driven sprocket support (401).
2. Discard the two seal rings (403).

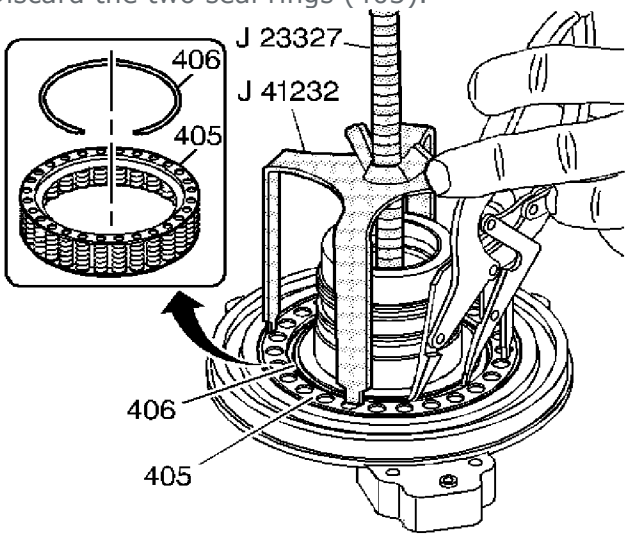

cardiagn.com

3. Compress the 2nd clutch spring and retainer assembly (405). Use the *J 41232* spring compressor and *J 23327* spring compressor or equivalent.
4. Remove the 2nd clutch spring retainer snap ring (406).
5. Remove the *J 41232* spring compressor and *J 23327* spring compressor .

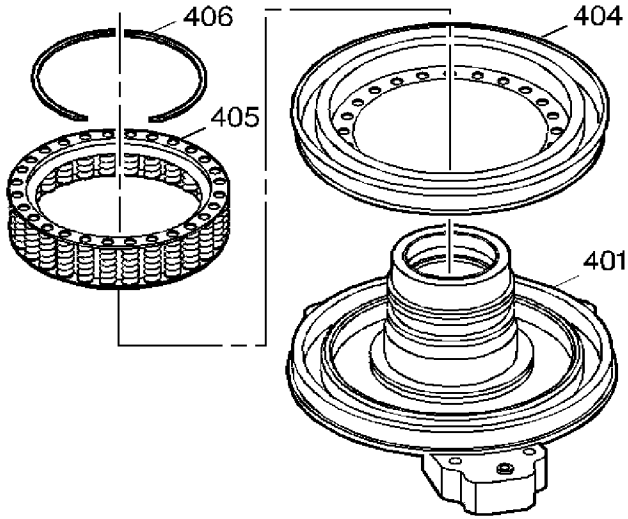

6. Remove the 2nd clutch spring and retainer assembly (405).
7. Remove the 2nd clutch piston and seal assembly (404). If not damaged, the piston and seal assembly is reusable.

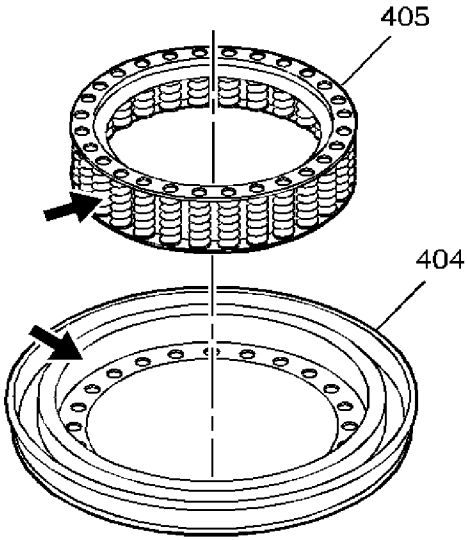

8. Inspect the piston and seal assembly (404) for damaged seals.
9. If the seal is cut or damaged replace the seal with a new piston and seal assembly.

cardiagn.com

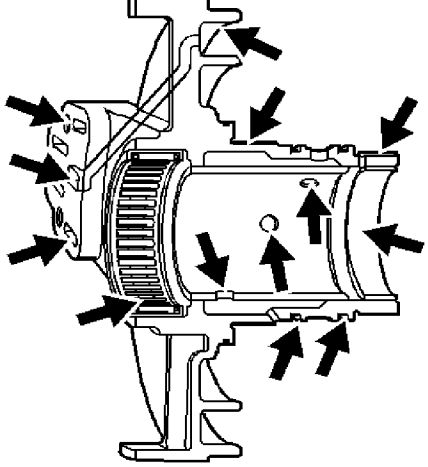

10. Inspect the bushing and bearing for damage or excessive wear.
11. Inspect the driven sprocket support (401) for plugged feed holes, damaged seal grooves, stripped bolt holes, and a damaged machined surface.

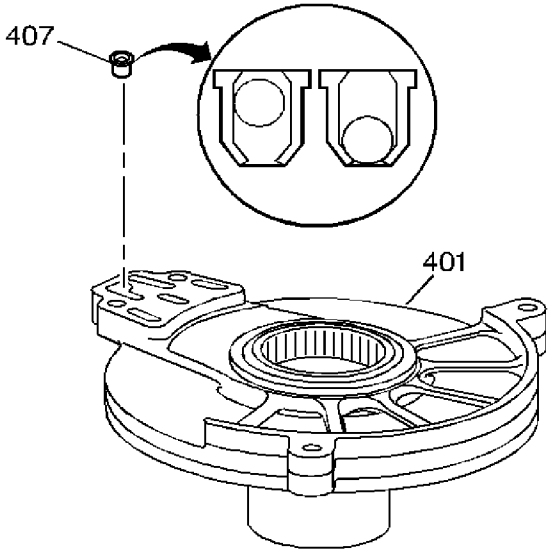

12. Inspect the reverse intermediate clutch housing valve assembly (407) for free operation.

Note: The valve assembly must be in its seated position before you perform the leak test.

13. Using Automatic Transmission fluid, inspect the reverse intermediate clutch housing valve assembly (407) for leaks.

cardiagn.com

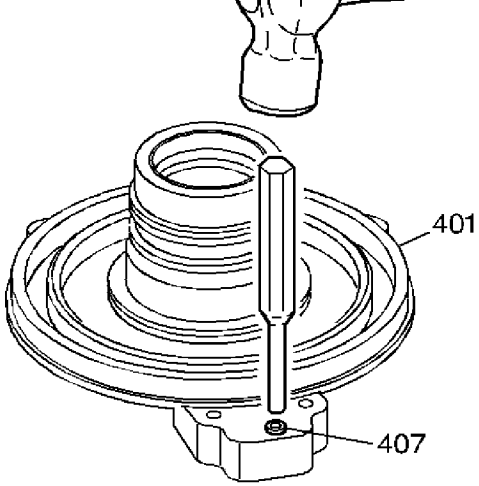

Note: Remove the reverse clutch housing valve assembly (407) only if inspection or the leak test has indicated a problem.

14. Using a 6.25 mm (¼ in) drift and a mallet, remove the valve assembly (407) from the driven sprocket support (401).

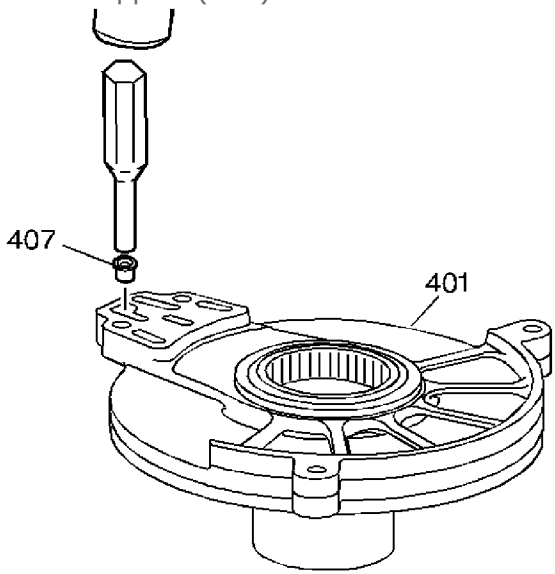

15. Using a 6.25 mm (¼ in) drift and a mallet, install the valve assembly (407) in the driven sprocket support (401).

cardiagn.com

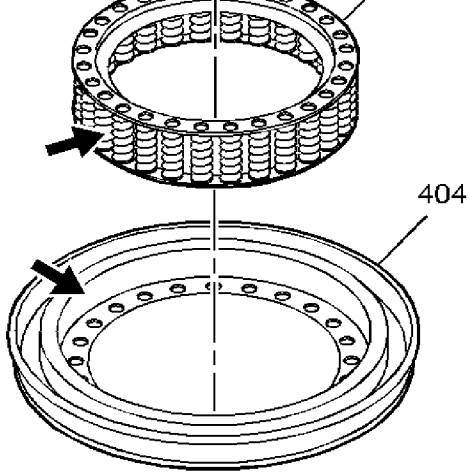

16. Inspect the spring assembly (405) for dislocated or damaged springs.
17. Clean and dry each of the components.

cardiagn.com

Drive Sprocket Support Assemble

Special Tools

- *J 23327* Clutch Spring Compressor
- *J 41232* Return Spring Compressor

For equivalent regional tools, refer to Special Tools.

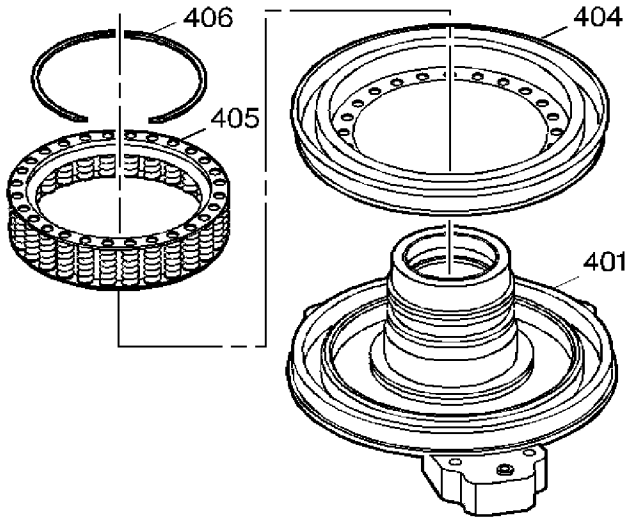

1. In order to aid in the assembly, lubricate the seal with transmission fluid.
2. Assemble the 2nd clutch piston and seal assembly (404) into the driven sprocket support (401).
3. Assemble the 2nd clutch spring and retainer assembly (405) into the driven sprocket support.

cardiagn.com

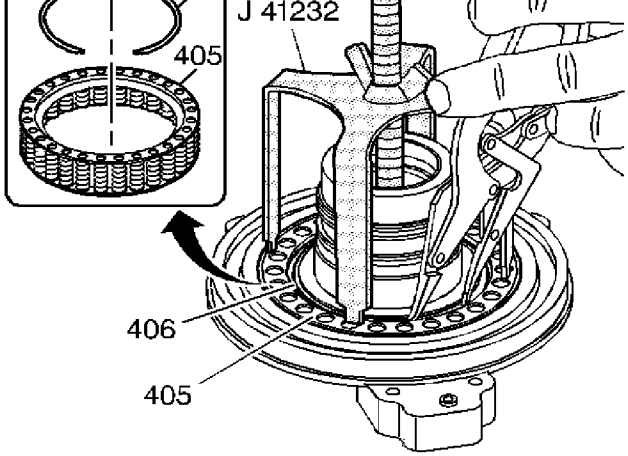

4. Compress the 2nd clutch spring assembly. Use the *J 41232* spring compressor and *J 23327* spring compressor or equivalent.
5. Assemble the 2nd clutch spring retainer snap ring (406).
6. Remove the *J 41232* spring compressor and *J 23327* spring compressor .

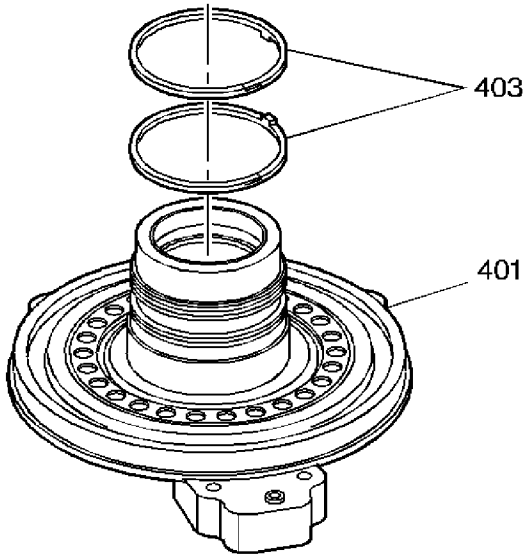

7. Assemble two new seal rings (403) onto the driven sprocket support.

cardiagn.com

Second Clutch Functional Air Check

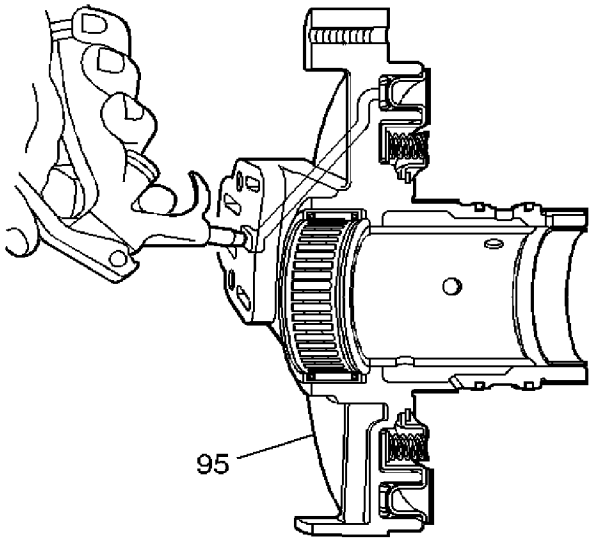

Air check the 2nd clutch (95) in order to verify proper operation of the seals and piston assembly.

cardiagn.com

Driven Sprocket Support Assembly Installation

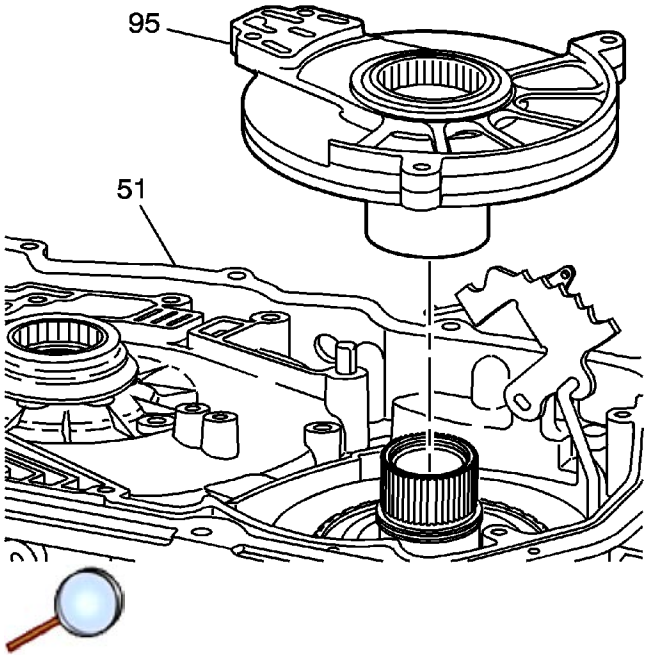

Install the driven sprocket support and 2nd clutch assembly (95) into the transaxle case (51). When installed properly, the driven sprocket support sits slightly below the machined surface of the transaxle case (51).

cardiagn.com

Wiring Harness Connection

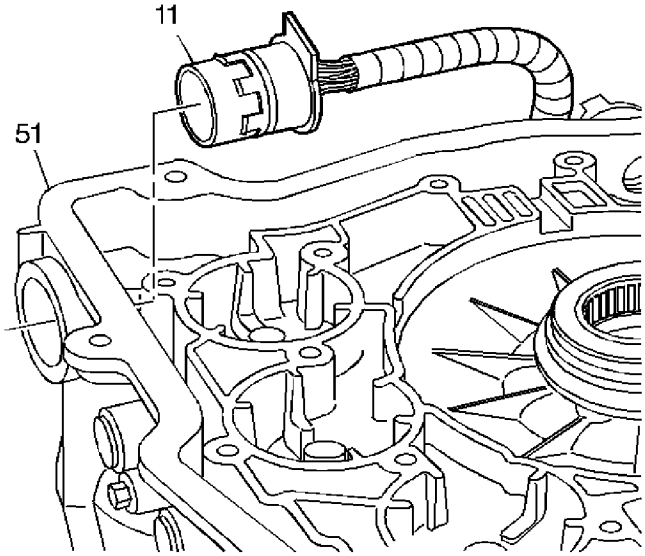

1. Inspect the wiring harness (11) for damage.
2. Inspect the pass thru connector pins and o-ring seal for damage.
3. Assemble the wiring harness pass thru connector into the transaxle case bore from the inside of the transaxle case.

cardiagn.com

Input Speed Sensor Installation

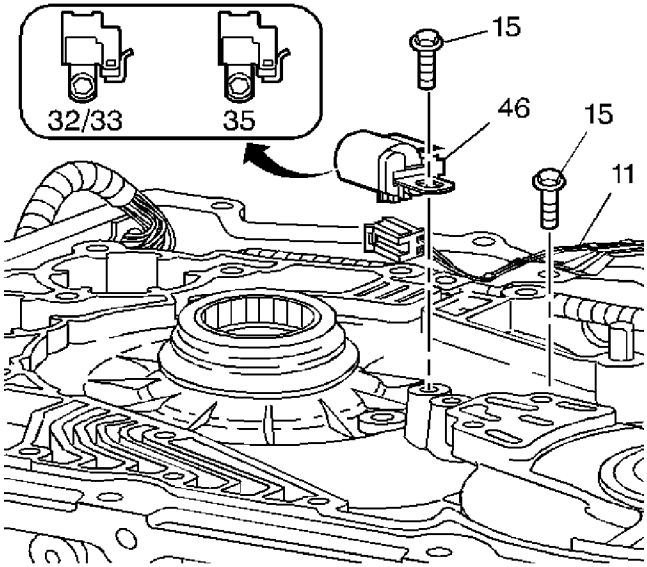

Note: The tab on the sensor housing (46) fits into the recess on the case boss.

Note: For drive sprockets with 35 teeth, use a black sensor housing. For drive sprockets with 32 or 33 teeth, use a natural colored sensor housing.

1. Assemble the input speed sensor (46) to the transmission case.

   Caution: Refer to Fastener Caution in the Preface section.

2. Install the input speed sensor bolt (15). Hand start the bolts. Tighten the input speed sensor bolt to **12 N·m (9 lb ft)**.
3. Route the input speed sensor wiring harness in the case channel.
4. Connect the input speed sensor connector to the input speed sensor.
5. Install the wire harness retainer and wire harness retainer bolt. Tighten the wire harness retainer bolt to **12 N·m (9 lb ft)**.

cardiagn.com

Drive Sprocket, Driven Sprocket, and Drive Link Disassemble

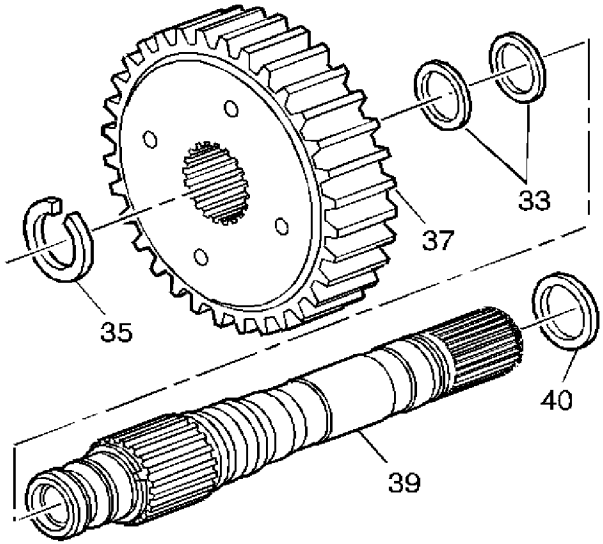

1. Remove the turbine shaft to drive sprocket snap ring (35).
2. Remove the drive sprocket (37) from the turbine shaft (39).
3. Remove the three Teflon seals (33 and 40) from the turbine shaft.
4. Discard the Teflon seals (33 and 40).

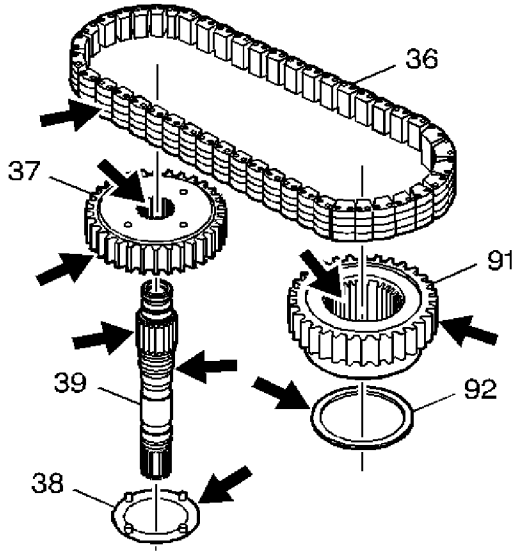

5. Inspect the drive sprocket (37) , the driven sprocket (91) , the drive link assembly (36), and the turbine shaft (39) for damage or excessive wear.

cardiagn.com

8. Clean and dry each of the components.

cardiagn.com

Drive Sprocket, Driven Sprocket, and Drive Link Assemble

Special Tools

- *J 29569-1* Turbine Shaft Seal Installer
- *J 29569-2* Turbine Shaft Seal Sizer
- *J 29829-1* Turbine Shaft Seal Installer
- *J 29829-2* Turbine Shaft Seal Sizer

For equivalent regional tools, refer to Special Tools.

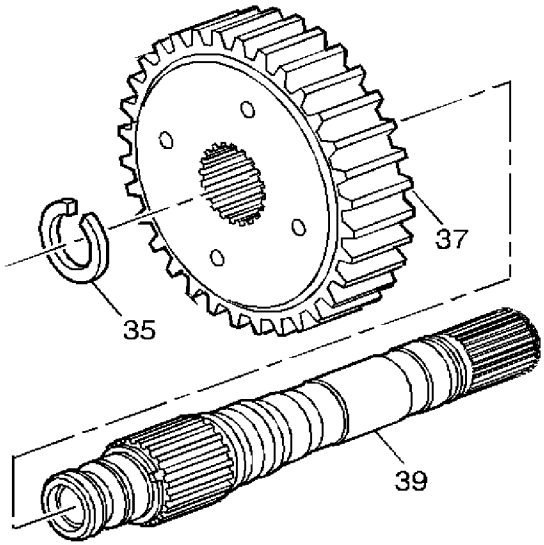

1. Assemble the drive sprocket (37) onto the turbine shaft (39).
2. Retain the drive sprocket with the turbine shaft to drive sprocket snap ring (35).

cardiagn.com

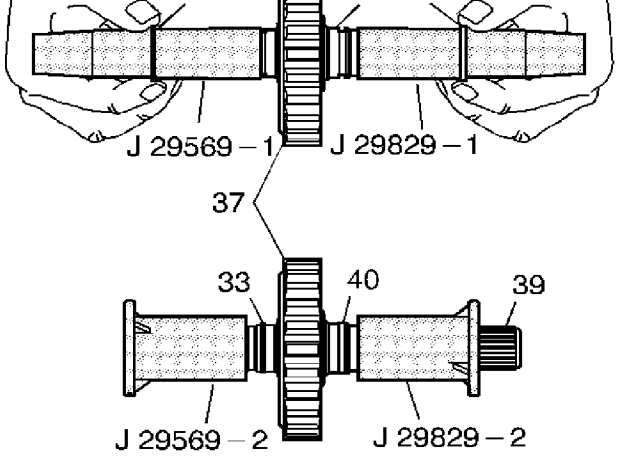

3. In order to assemble three new Teflon seals (33, 40) onto the turbine shaft (39), perform the following procedure:
   3.1. Slide the *J 29569-1* seal installer over the large spline of the turbine shaft.
   3.2. Coat the *J 29569-1* seal installer with transmission fluid.
   3.3. Use your fingers in order to guide the new Teflon™ seals over the *J 29569-1* seal installer and into the seal ring grooves on the turbine shaft.
   3.4. Remove the *J 29569-1* seal installer when the seals are in place.

Note: In order to properly size the seals, keep the *J 29569-2* sizer in place for 5 minutes.

   3.5. Size the new Teflon™ seals. Use both halves of the *J 29569-2* sizer .
   3.6. Repeat steps 3.1 through 3.6 with *J 29829-1* seal installer and *J 29829-2* seal sizer on the small splined side of the turbine shaft.

cardiagn.com

Drive Sprocket, Driven Sprocket, and Drive Link Installation

Special Tools

J 36850 Assembly Lubricant

For equivalent regional tools, refer to Special Tools.

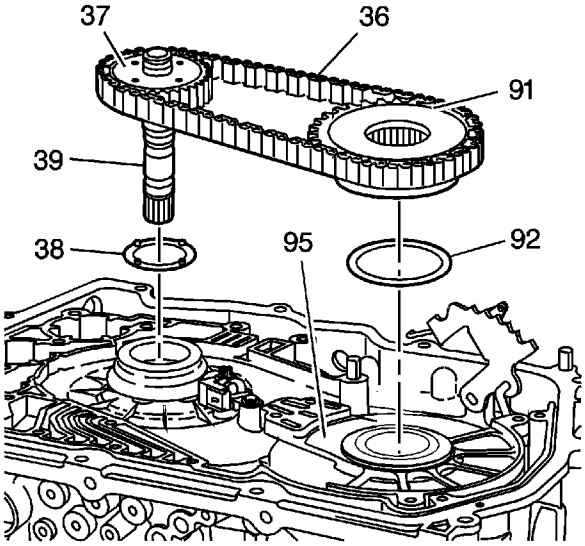

1. Install the drive sprocket to drive sprocket support thrust washer (38) to the drive sprocket (37). Place the tabs on the thrust washer into the holes on the drive sprocket.
2. Retain the thrust washer with *J 36850* lubricant or equivalent.
3. Install the driven sprocket to driven sprocket support thrust washer (92) onto the driven sprocket support (95).

   Note: Orient the drive link assembly (36) in the same direction in which the drive link assembly (36) was removed. If the drive link assembly (36) is new, you can install it in either direction.

4. Install the drive link assembly (36) to the drive and driven sprockets (37 and 91).
5. Install as a complete assembly, the drive sprocket (37) the driven sprocket (91), and the drive link assembly (36) onto the transmission.

cardiagn.com

Channel Plate Assembly Disassemble

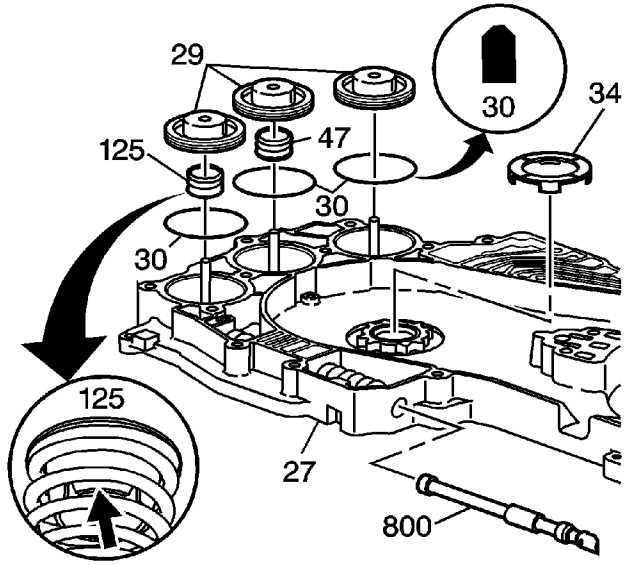

Note: The accumulator pins are pressed into the channel plate (27). Do not remove the accumulator pins.

1. Remove the three accumulator pistons (29) from the channel plate (27).

Note: The 1-2 accumulator assist spring (125) has a retainer that presses into the spring. Keep the retainer and the spring together as an assembly.

2. Remove the 1-2 accumulator assist spring (125).
3. Remove the 2-3 accumulator assist spring (47).
4. Remove the seals (30) from the accumulator pistons (29).
5. Discard the accumulator piston seals (30).
6. Remove the manual valve (800) from the channel plate (27).

cardiagn.com

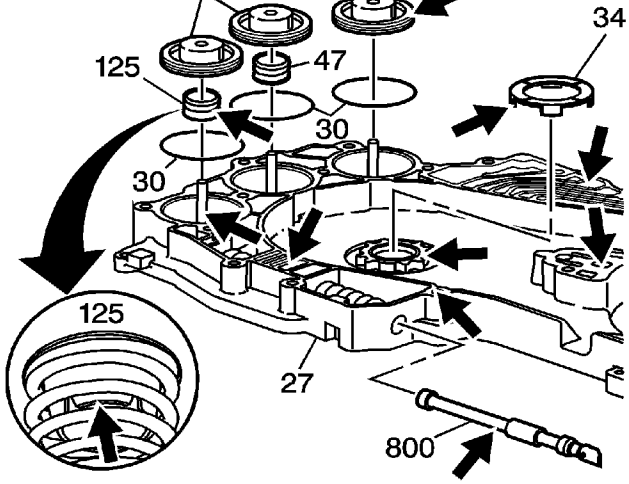

7. Inspect the channel plate (27) for damage.
8. inspect the channel plate (27) passages for debris.
9. Inspect the accumulator pistons (29), the assist springs (47, 125), and the pins for damage.
10. Inspect the channel plate sleeve for wear from the turbine shaft.
11. Inspect the channel plate (27) bolt holes for stripped threads and debris.
12. Inspect the channel plate machined surface for nicks or scratches that could cause a fluid leak.
13. Inspect the manual valve (800) for freedom of movement.
14. Inspect the drive sprocket to channel plate thrust washer (34).
15. Clean and dry each component.

cardiagn.com

Channel Plate Assembly Assemble

Special Tools

J 36850 Assembly Lubricant

For equivalent regional tools, refer to Special Tools.

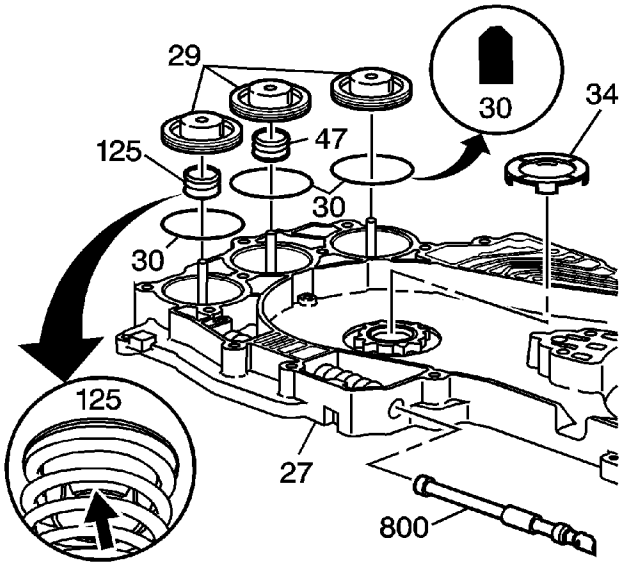

1. Assemble the new accumulator piston seals (30) on the three accumulator pistons (29).
2. Install the 1-2 and 2-3 accumulator assist springs (47, 125).
3. Install the accumulator pistons (29) into the channel plate over the guide pins. The pistons are identical. You can assemble the pistons in any of the three accumulator bores.
4. In order to retain the pistons, apply *J 36850* lubricant onto the piston seals.
5. Install the manual valve (800) into channel plate.

cardiagn.com

Accumulator Springs Installation

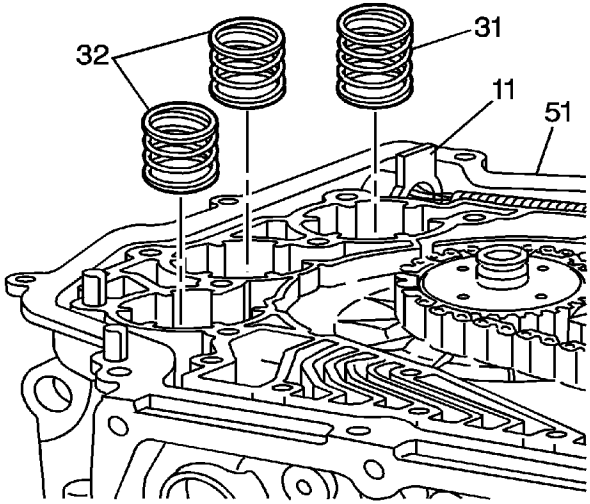

Note: The 1-2 accumulator spring (31) is slightly taller than the other two springs (32). Install a 1-2 accumulator spring in the bore closest to the electrical pass-through connector (11).

Install the two remaining accumulator springs into the transmission case accumulator bores.

cardiagn.com

Channel Plate Assembly Installation

Special Tools

J 36850 Assembly Lubricant

For equivalent regional tools, refer to Special Tools.

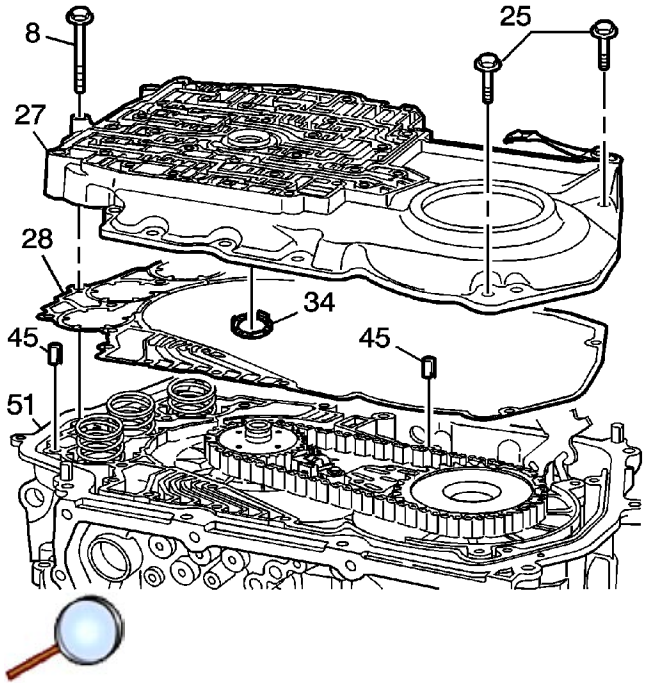

1. Install the channel plate to drive sprocket thrust washer (34) onto the channel plate (27).
2. Retain the thrust washer (34) with *J 36850* lubricant or equivalent.
3. Install a new channel plate to case gasket (28) onto the transmission case (51).
4. Install the channel plate assembly onto the transmission case (51). The channel plate should fit tightly over the guide pins (45) located on the transmission case (51).

   Caution: Refer to Fastener Caution in the Preface section.

5. Install the two channel plate to driven sprocket support bolts (25). Tighten the two channel plate to driven sprocket bolts (25) to **14 N·m (10.5 lb ft)**.

cardiagn.com

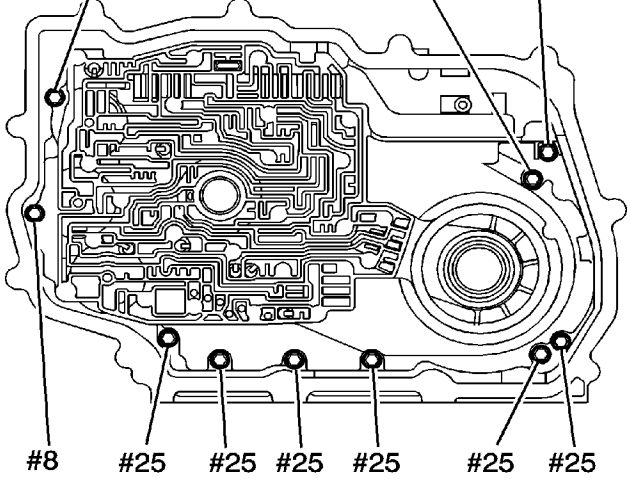

6. Install the six channel plate to case bolts (25). Hand tighten the bolts. Tighten the six channel plate to case bolts and the two channel plate to driven sprocket support bolts to **12 N·m (9 lb ft)**.

cardiagn.com

Manual Valve Link Installation

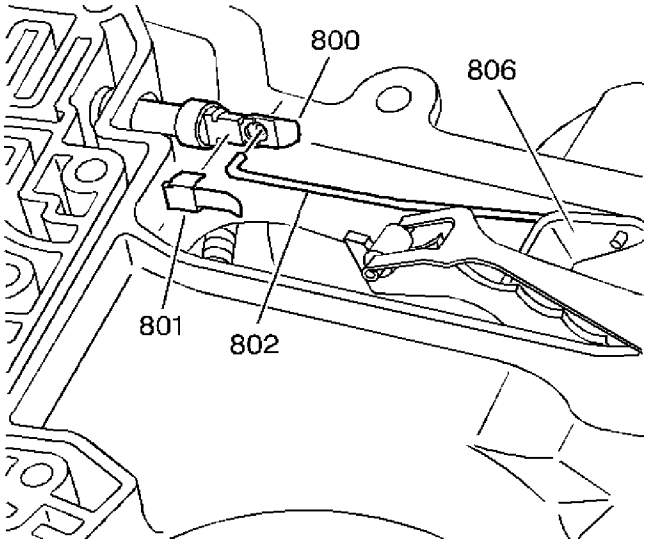

1. Connect the manual valve link (802) to both the manual valve and detent lever.
2. Install the manual valve clip (801) onto the manual valve.

cardiagn.com

Checkballs Installation

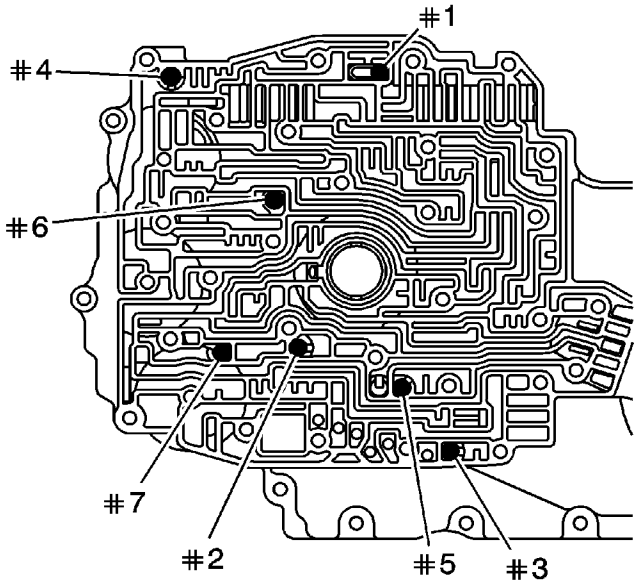

Install the seven checkballs into the proper locations on the channel plate.

cardiagn.com

Control Valve Body Spacer Plate Installation

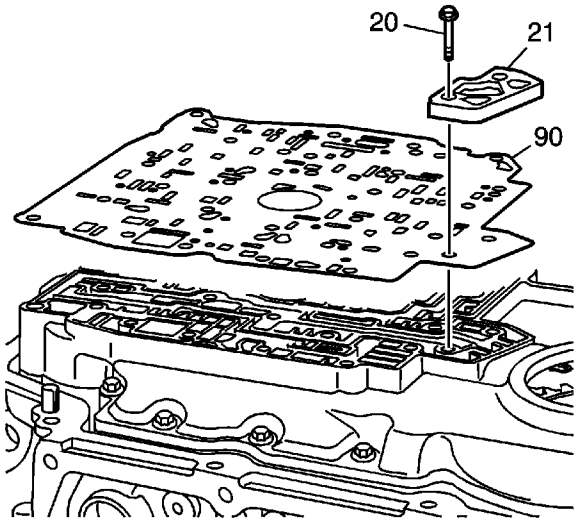

Caution: A new spacer plate assembly must be installed to prevent possible transmission damage.

Note: The non-Driver Shift Control (DSC) 4T40-E/4T45-E has a different spacer plate than the 4T45-E Driver Shift Control (DSC). The DSC spacer plate has one notch on it. The NON-DSC spacer plate has two notches on it.

1. Install a new spacer plate assembly (90) onto the channel plate.

   Caution: Refer to Fastener Caution in the Preface section.

2. Install the spacer plate support (21) and the two bolts (20) onto the spacer plate. Hand start the bolts. Tighten the bolts to **14 N·m (10.5 lb ft)**.

cardiagn.com

Control Valve Body Spacer Plate and 4-3 Downshift On/Off Solenoid Installation

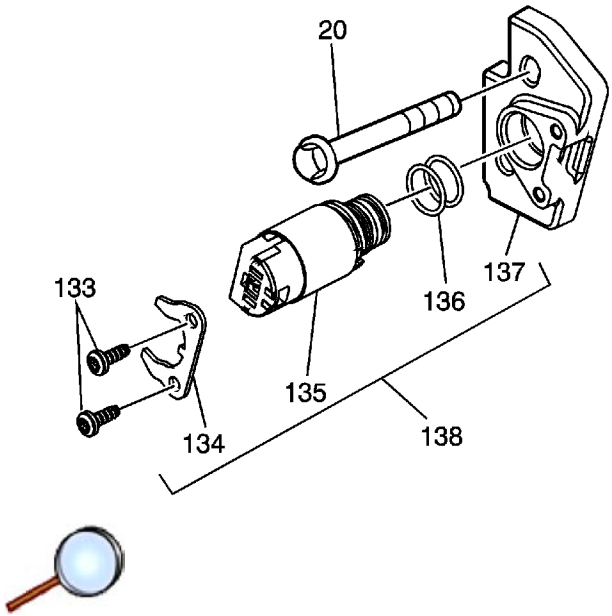

Note: If necessary clean and inspect the 4-3 solenoid.

1. Remove the retaining clip bolts (133) and the retaining clip (134).
2. Remove the 4-3 solenoid (135) and O-Rings (136) from the solenoid block (137). Discard the O-Rings and install NEW.
3. Inspect all components and replace as necessary.
4. Install the solenoid (135).

Caution: Refer to Fastener Caution in the Preface section.

5. Install the retainer clip (134) with bolts (133). Tighten the bolts to **4.5 N·m (40 lb in)**.

cardiagn.com

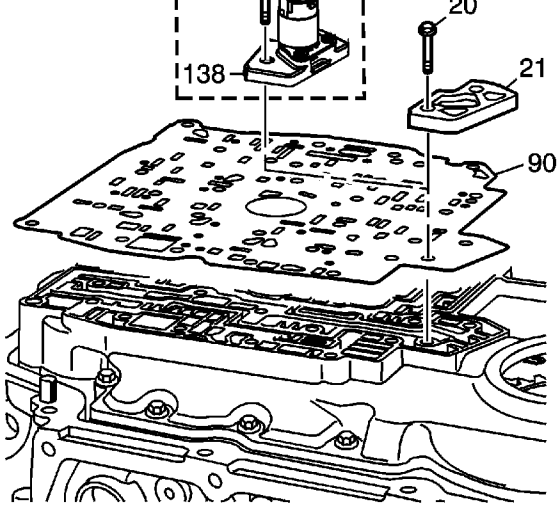

Caution: A new spacer plate assembly must be installed to prevent possible transmission damage.

6. Install the spacer plate with bonded gaskets assembly (90) on top of the channel plate.
7. Install the spacer plate support (21) or 4-3 solenoid on hybrid models, and the two bolts (20) onto the spacer plate. Hand start the bolts. Tighten the bolts to **14 N·m (10.5 lb ft)**.

cardiagn.com

Control Valve Body Disassemble

Note: Retainer clips hold in each of the valve line-ups. Use a small screwdriver in order to remove the retainer clips. Be careful not to score the valve body when removing the retainer clips and valves. Before removing the valve line-ups, inspect each valve line-up for freedom of movement.

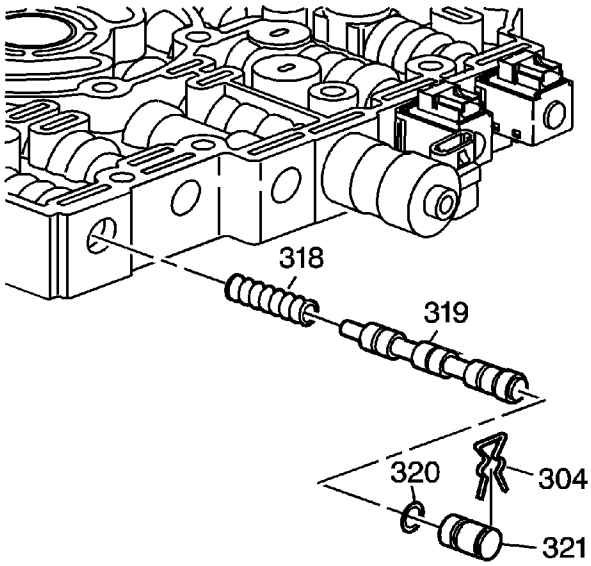

1. Remove the 3-4 shift valve retainer clip (304), the bore plug (321), with O-ring (320), the 3-4 shift valve (319) and the 3-4 shift valve spring (318).

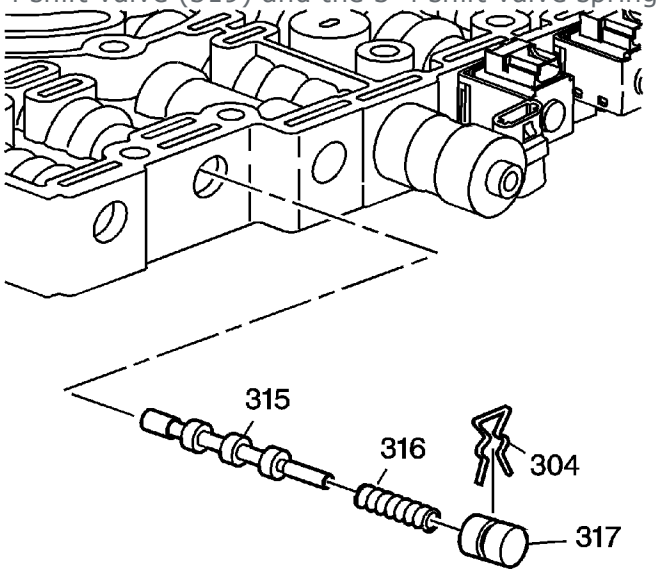

cardiagn.com

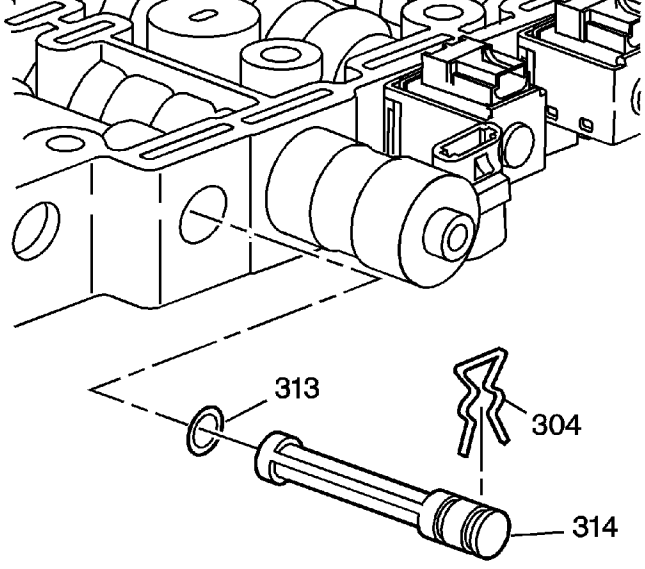

3. Remove the actuator oil filter retainer clip (304), and the actuator oil filter (314) with O-ring (313).

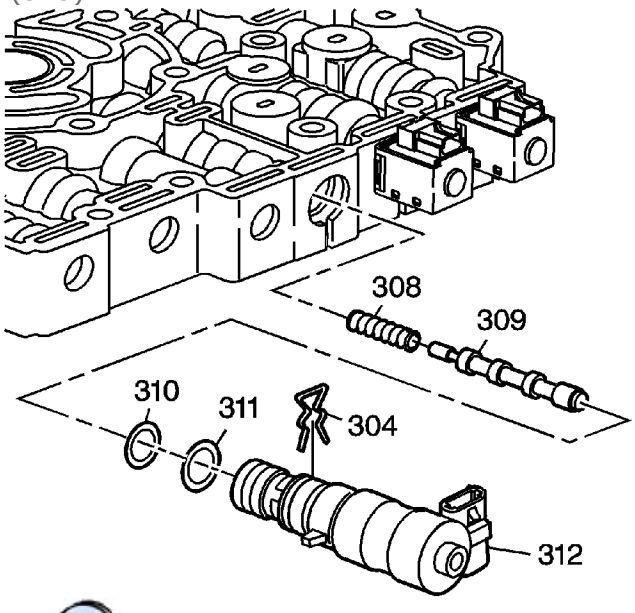

4. Remove the Pressure Control Solenoid (PCS) retainer clip (304), the PCS with two O-rings and screen (312, 309, 310), the torque signal regulator valve (309), and the torque signal regulator spring (308).

cardiagn.com

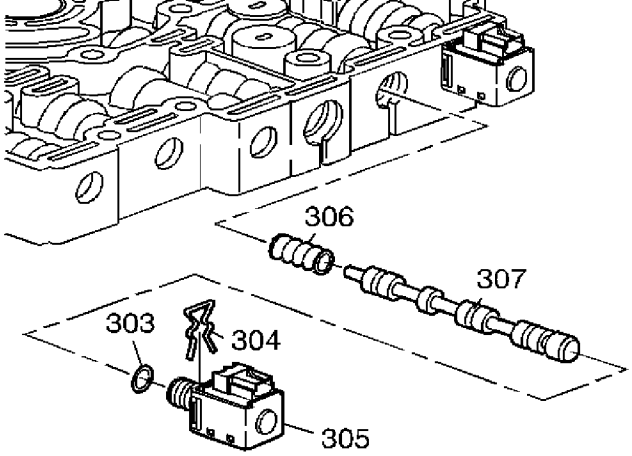

5. Remove the 2-3 shift solenoid retainer clip (304), the 2-3 shift solenoid (305) with O-ring (303), the 2-3 shift valve (307), and the 2-3 shift valve spring (306).

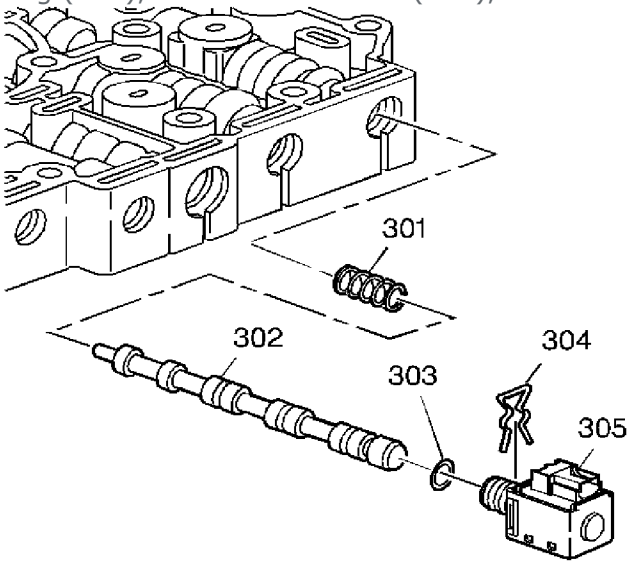

6. Remove the 1-2 shift solenoid retainer clip (304), the 1-2 shift solenoid (305) with O-ring (303), the 1-2 shift valve (302), and the 1-2 shift valve spring (301).

cardiagn.com

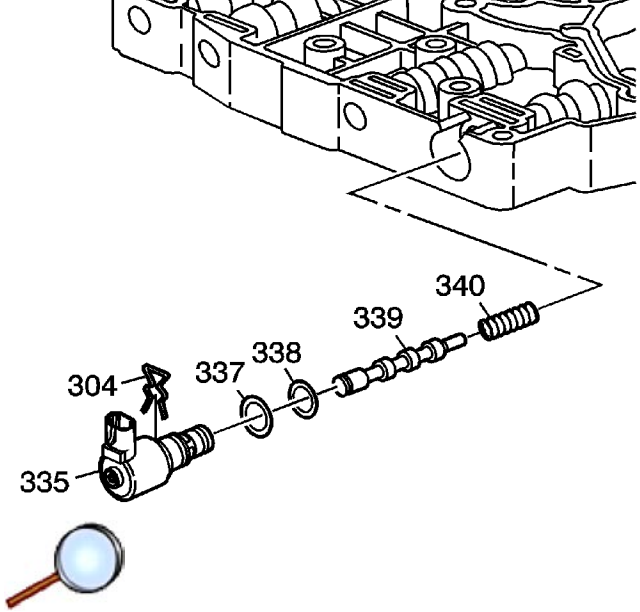

7. Remove the TCC solenoid retainer clip (304), the TCC solenoid (335), with two O-rings (337, 338), and screen, the TCC regulated apply valve (339) and the spring (340).

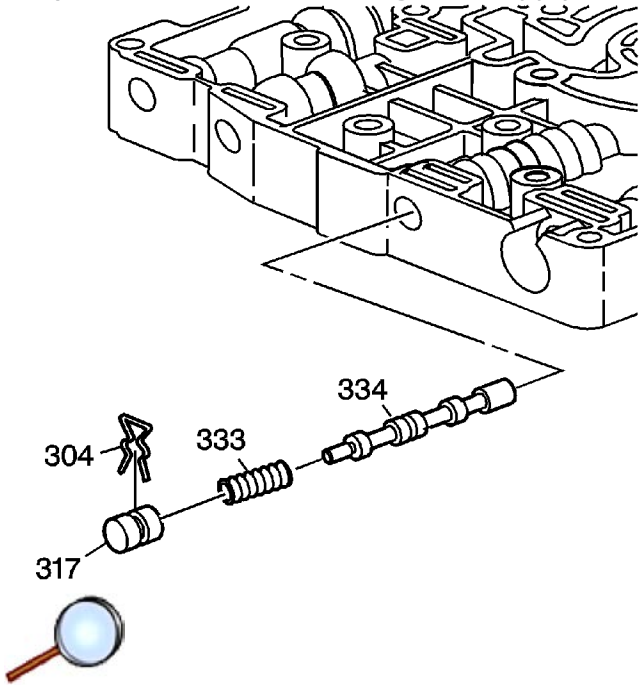

8. Remove the TCC control valve retainer clip (304), the bore plug (317), the spring (333), and the TCC control valve (334).

cardiagn.com

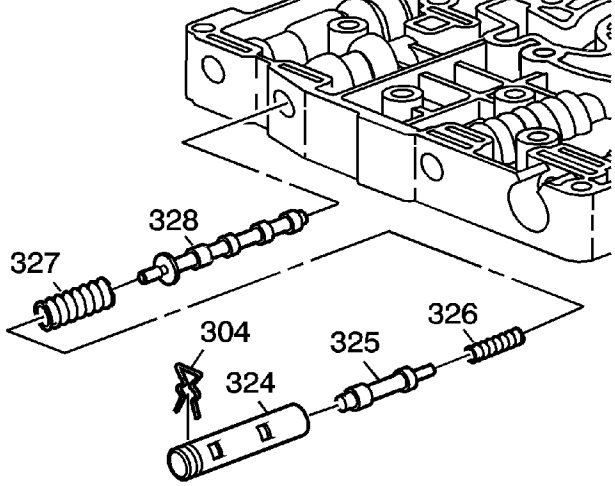

9. Remove the pressure regulator valve retainer clip (304), the bushing (324), the pressure regulator boost valve (325), the isolator spring (326), the pressure regulator valve spring (327), and the pressure regulator valve (328).

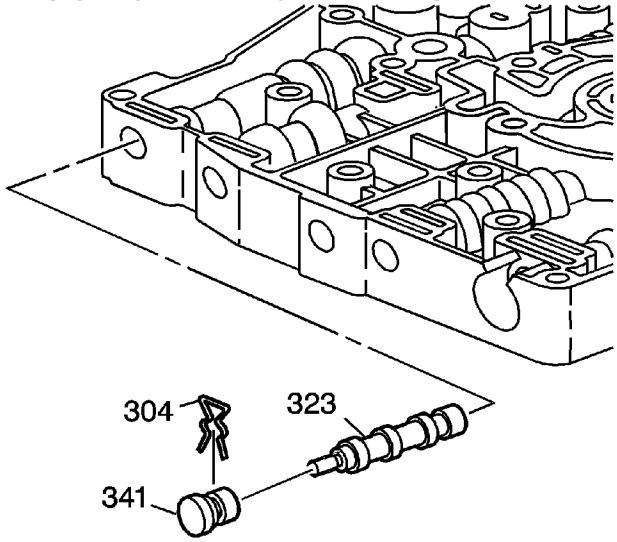

10. Remove the 1-2/3-4 accumulator valve retainer clip (304), the plug (341), and the accumulator valve (323).
11. Inspect the valve body passages for debris.
12. Inspect the machined surfaces for nicks or scratches. Some polish is normal for the machined surfaces.
13. Inspect the valves for nicks or scratches that could cause sticking valves or fluid leaks.
14. Inspect the springs, bushings, O-rings, screens and solenoids for damage.
15. Clean and dry the valve body and valve body components.

cardiagn.com

Control Valve Body Assemble

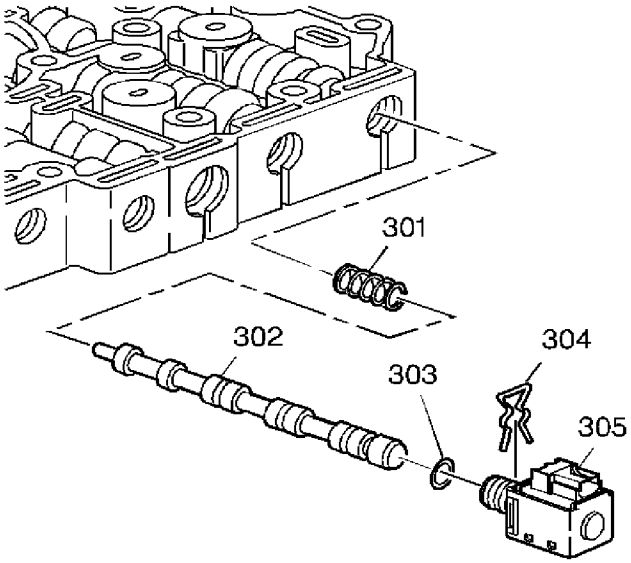

1. Install the 1-2 shift valve spring (301), the 1-2 shift valve (302), the 1-2 shift solenoid (305) with O-ring (303) and the 1-2 shift solenoid retainer clip (304).

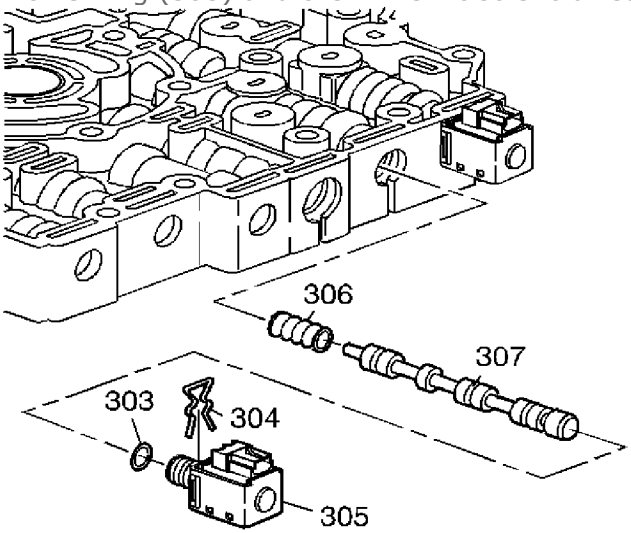

2. Install the 2-3 shift valve spring (306), the 2-3 shift valve (307), the 2-3 shift solenoid (305) with O-ring (303) and the 2-3 shift solenoid retainer clip (304).

cardiagn.com

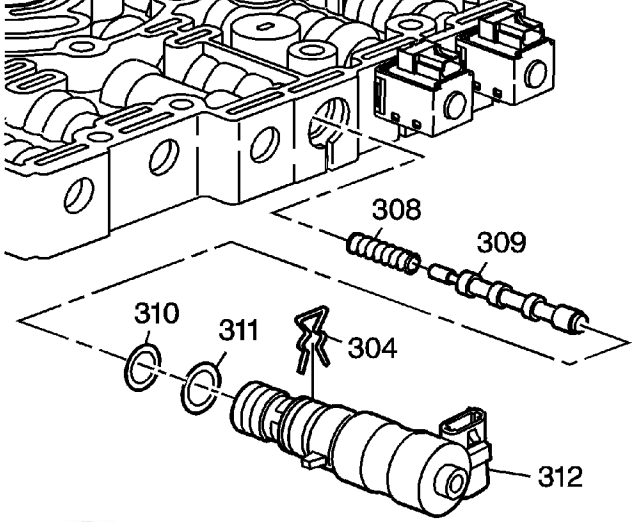

3. Install the torque signal regulator spring (308), the torque signal regulator valve (309), the Pressure Control Solenoid (PCS) with two O-rings and screen (312, 309, 310) and the PCS retainer clip (304).

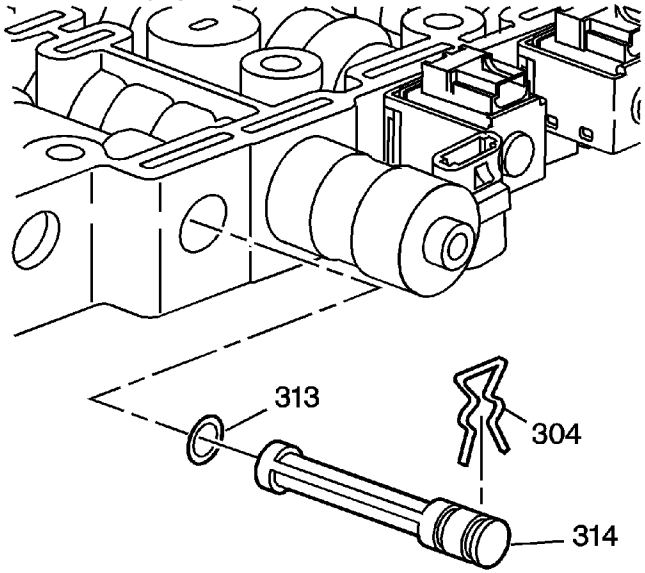

4. Install the actuator oil filter (314), with the O-ring (313) and the actuator oil filter retainer clip (304).

cardiagn.com

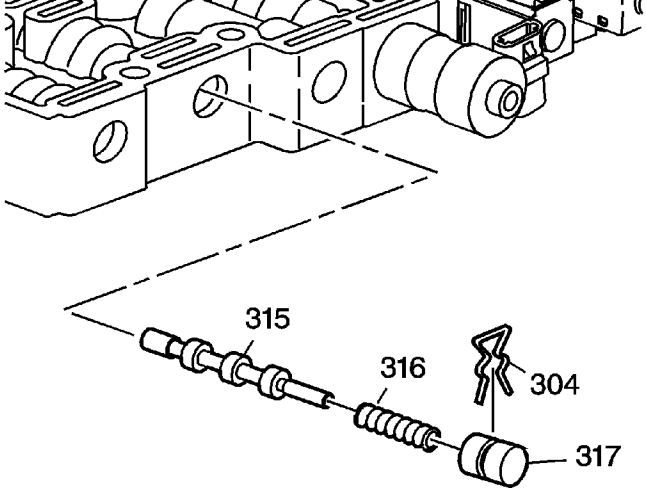

5. Install the actuator feed limit valve (315), the actuator feed limit spring (316), the bore plug (317) and the actuator feed limit valve retainer clip (304).

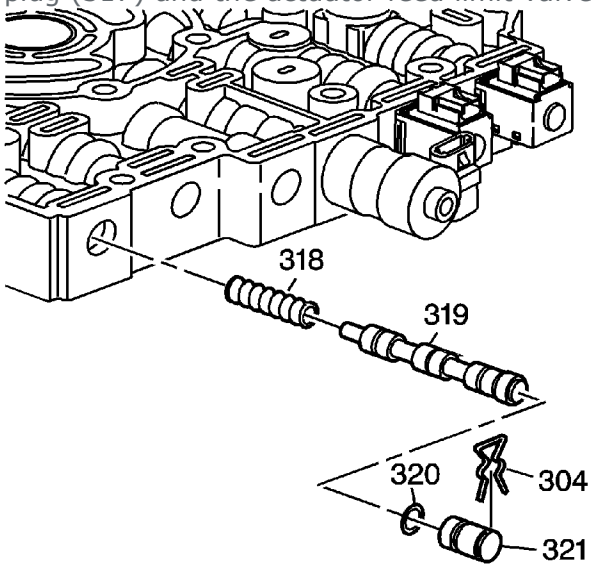

6. Install the 3-4 shift valve spring (318), the 3-4 shift valve (319), the bore plug (321), with O-ring (320) and the 3-4 shift valve retainer clip (304).

cardiagn.com

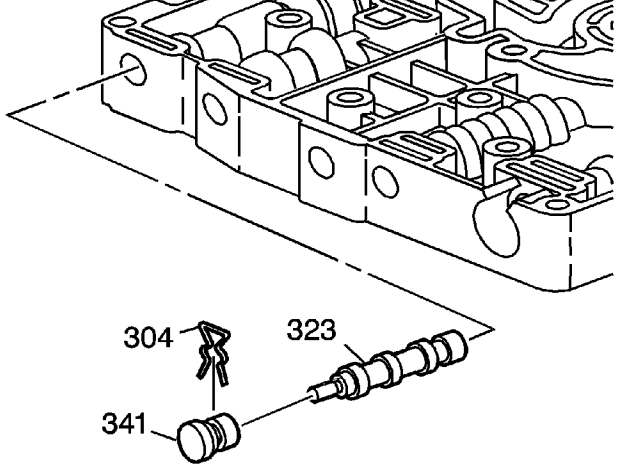

7. Install the accumulator valve (323), the plug (341) and the 1-2/3-4 accumulator valve retainer clip (304).

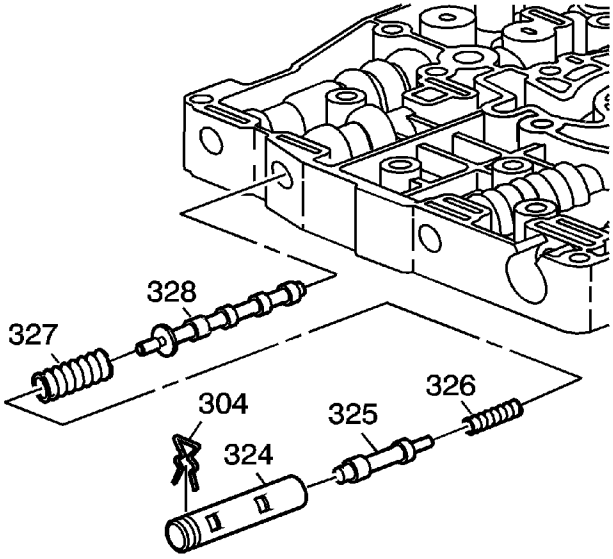

8. Install the pressure regulator valve (328), the pressure regulator valve spring (327), the isolator spring (326), the pressure regulator boost valve (325), the bushing (324) and the pressure regulator valve retainer clip (304).

cardiagn.com

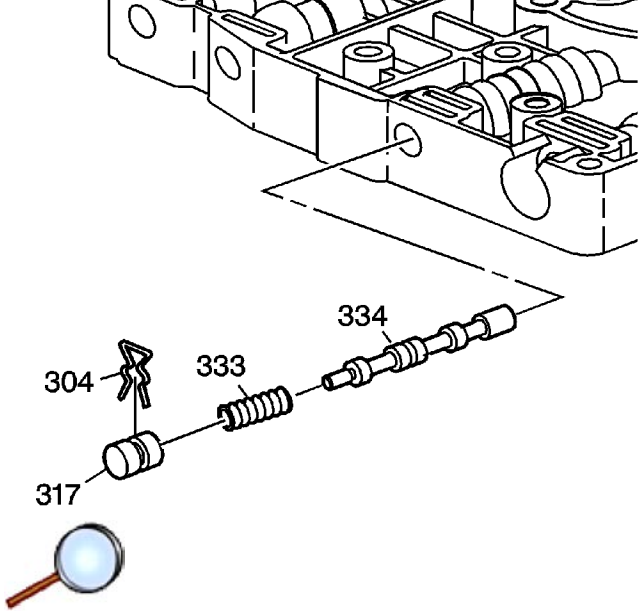

9. Install the TCC control valve (334), the spring (333), the bore plug (317) and the TCC control valve retainer clip (304).

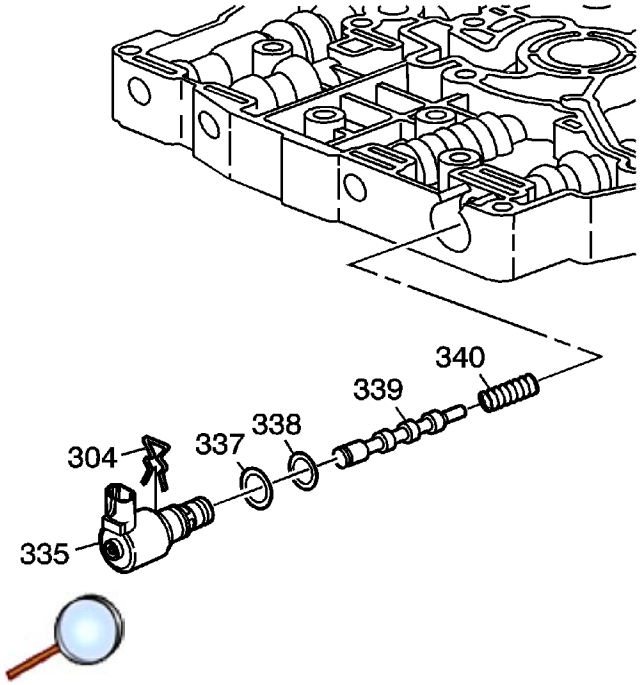

10. Install the spring (340), the TCC regulated apply valve (339), the TCC solenoid (335) with two O-rings (337 and 338) and screen, and the TCC solenoid retainer clip (304).

cardiagn.com

Control Valve Assembly and Transmission Fluid Pressure Switch Installation

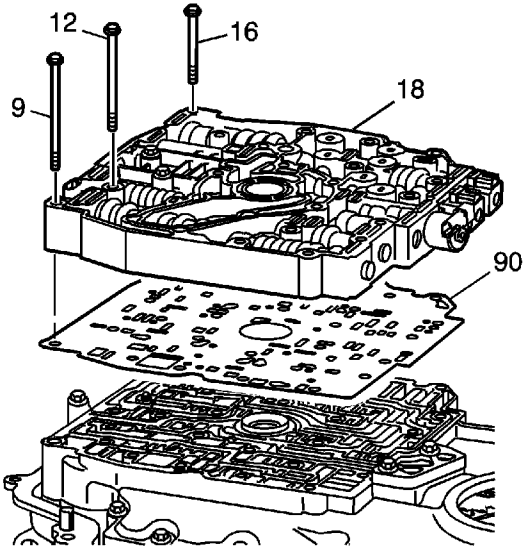

Note: The 4T40-E/4T45-E non-Electronic Range Select Mode models use a spacer plate with 2 identification notches. The 4T45-E models with Electronic Range Select Mode use a spacer plate with 1 identification notch.

1. Install a NEW control valve body to spacer plate assembly onto the case cover.
2. Install the control valve body assembly (18) onto the spacer plate assembly (90).

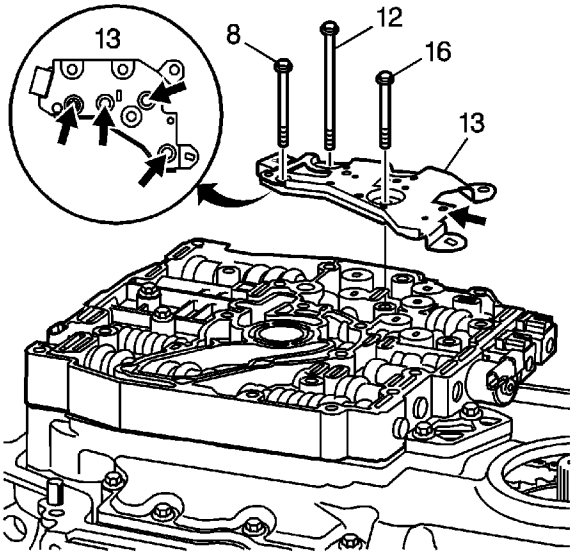

cardiagn.com

3. Inspect the TFP switch assembly (13) in order to verify the condition and correct location of the 4 pressure switch O-rings.
4. If necessary replace the pressure switch O-rings.

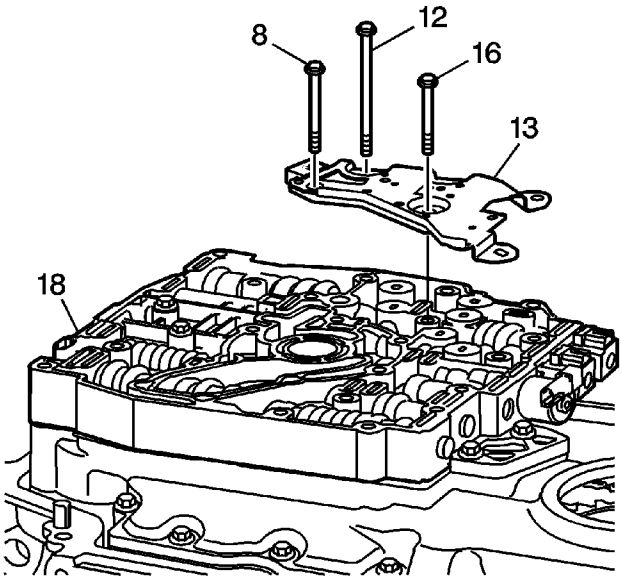

5. Install the TFP switch assembly (13) onto the control valve body assembly.

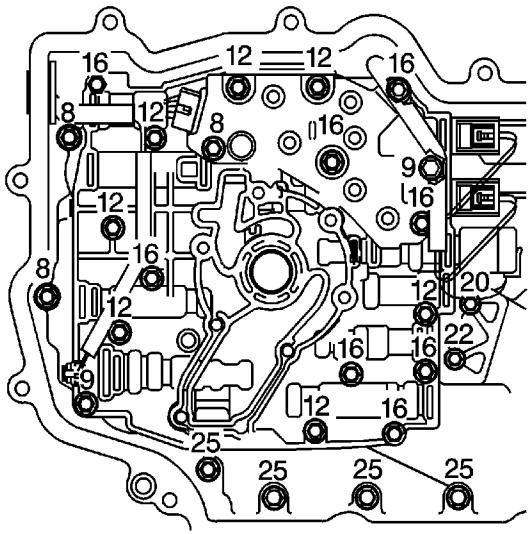

6. Install the 18 control valve body assembly bolts.

Caution: Refer to Fastener Caution in the Preface section.

cardiagn.com

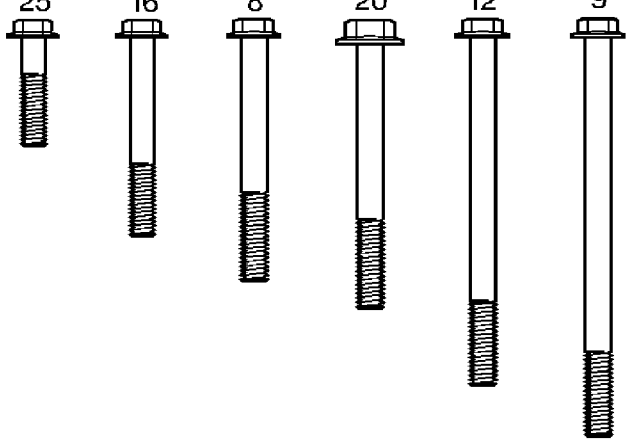

7. Hand start the bolts. Tighten the bolts to **14 N·m (124 lb in)**.

cardiagn.com

Wiring Harness Assembly Connect

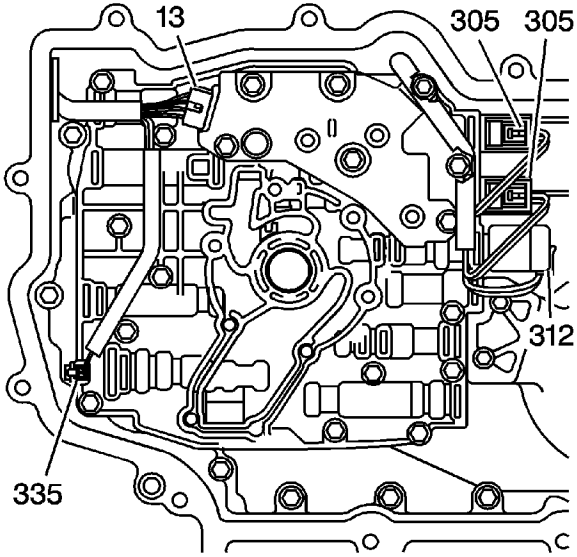

Connect the wiring harness assembly to the following components:

- The TFP switch assembly (13)
- The pressure control solenoid (312) - red connector

Note: The 1-2 shift solenoids wires are red and light green. The 2-3 shift solenoid wires are red and yellow.

- The 1-2 shift solenoid (305) - white connector
- The 2-3 shift solenoids (305) - white connectors
- The TCC solenoid (335)

cardiagn.com

Oil Pump Cleaning and Inspection

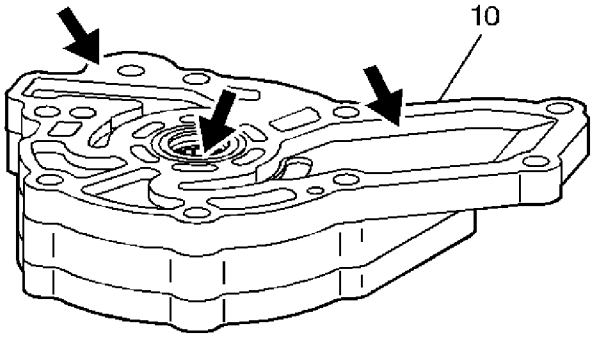

1. Inspect the bearing on the flange for excessive wear or damage.
2. Inspect the machined surfaces for scratches or nicks that may cause a fluid leak.

   Note: While flushing, rotate the oil pump rotor with the oil pump drive shaft. Rotating the oil pump rotor flushes clean fluid through the oil pump.

3. Thoroughly flush the oil pump assembly (10) with clean transmission fluid through the pump inlet and outlet passages.
4. Drain excess fluid from the oil pump assembly.

cardiagn.com

Oil Pump Assembly Installation

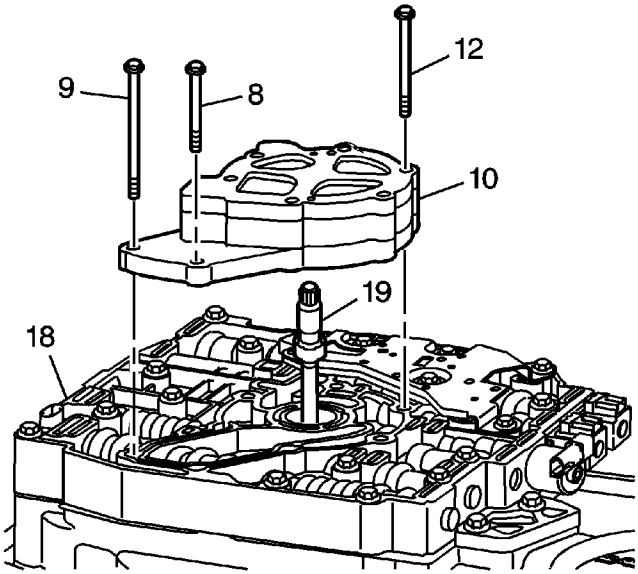

1. Install the oil pump shaft (19) into the oil pump assembly (10).
2. Install the oil pump assembly (10) and the oil pump shaft (19) onto the control valve body.

Caution: Refer to Fastener Caution in the Preface section.

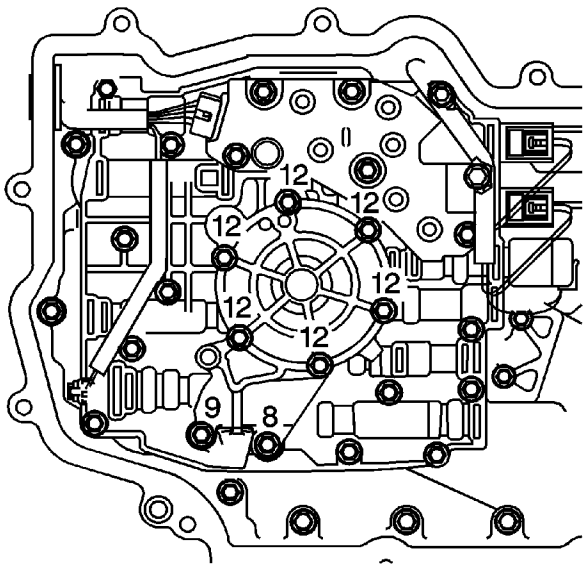

3. Install the eight oil pump bolts (8, 9, 12). Hand start the bolts. Tighten the bolts to **12 N·m**

cardiagn.com

cardiagn.com

Side Cover / Gaskets, Disassemble, Assemble, Install

Special Tools

J 36850 Assembly Lubricant

For equivalent regional tools, refer to Special Tools.

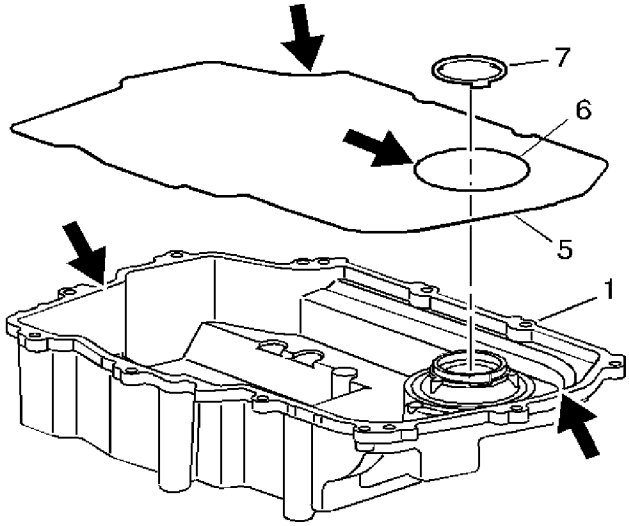

1. Remove the side cover gaskets (5 and 6) and the thrust washer (7) from the side cover (1).

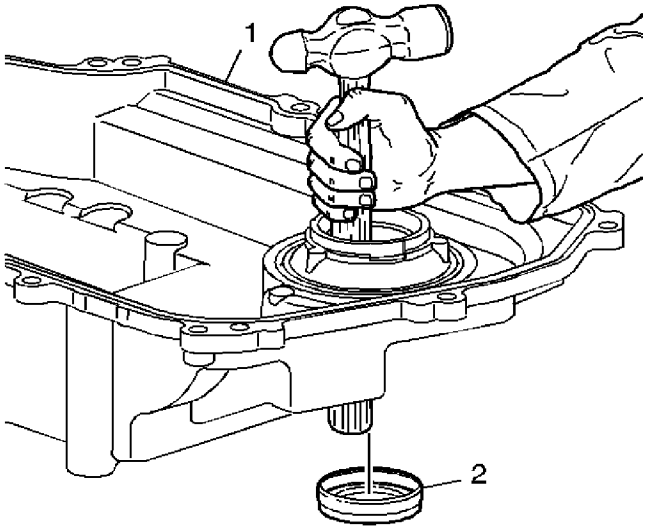

cardiagn.com

2. Remove the side cover axle seal (2). Use the handle end of a hammer.

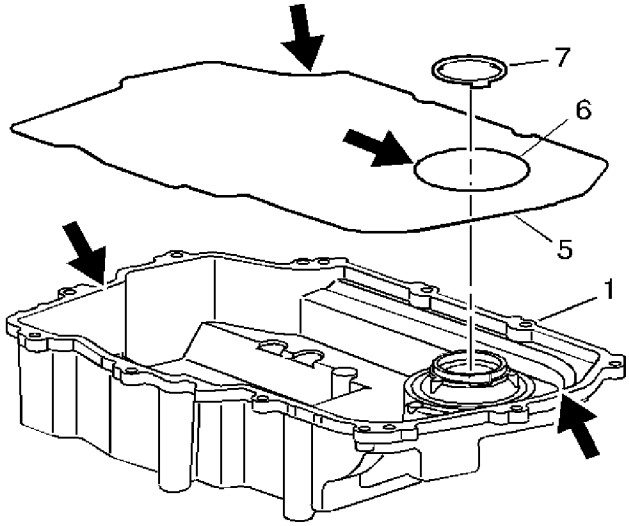

3. Inspect the side cover for cracks or damage to the seal grooves and mounting bosses.
4. Inspect the side cover seals for damage. The side cover seals are reusable if not damaged.
5. Thoroughly clean the side cover and the side cover seals.
6. Clean and dry the seal grooves and the axle seal bore.
7. Install the side cover gaskets (5 and 6) into the grooves on the side cover (1).
8. Retain the seals with *J 36850* lubricant or equivalent.
9. Install the side cover to drive sprocket thrust washer (7) onto the side cover.
10. Retain the thrust washer with *J 36850* lubricant or equivalent.

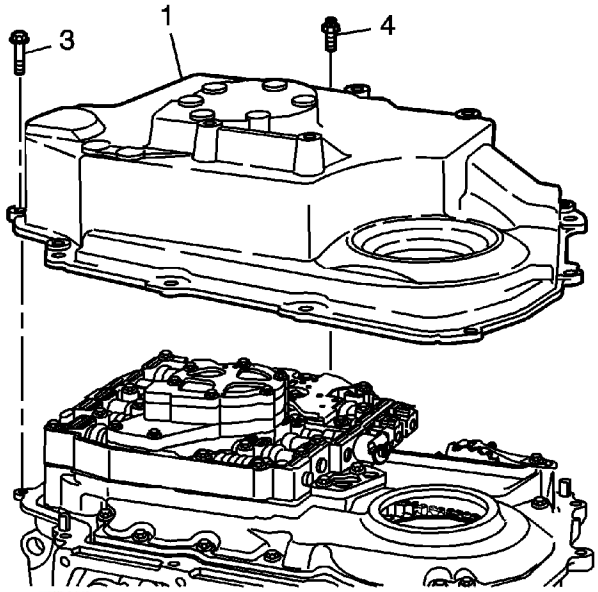

11. Install the side cover assembly onto the transmission case.
12. Install the 11 side cover bolts (3) or studs (4) (model dependent).

cardiagn.com

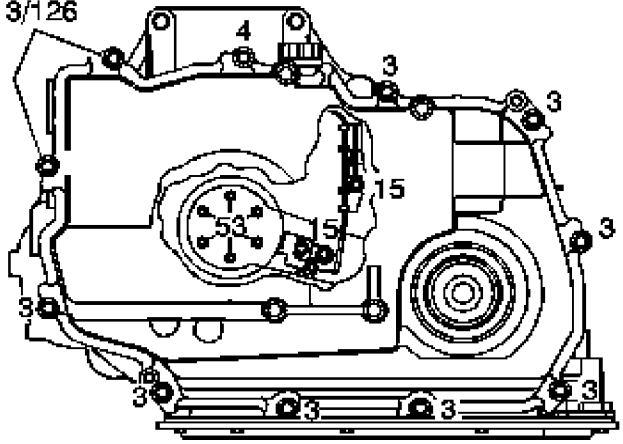

13. Refer to the graphic in order to find the correct installation points of the bolts and the stud.

Caution: Refer to Fastener Caution in the Preface section.

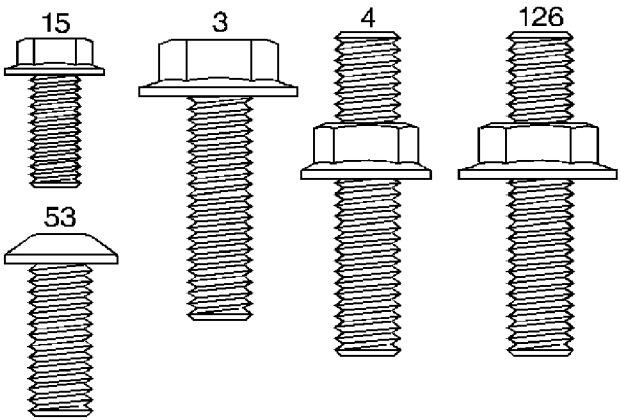

14. Hand start the bolts. Tighten the side cover bolts and stud to **28 N·m (22 lb ft)**.

cardiagn.com

Output Shaft Inspect

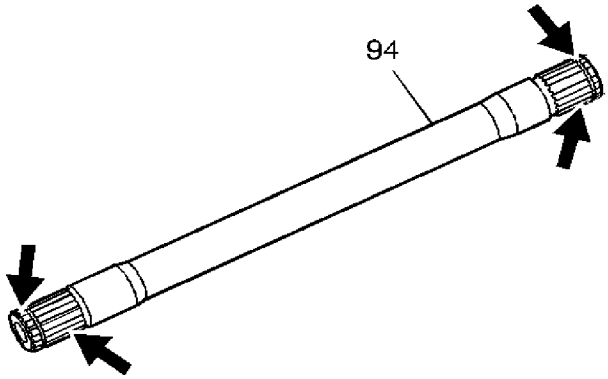

1. Inspect the output shaft (94) for damage to the splines, snap ring grooves and the journals.
2. Clean and dry the output shaft.

cardiagn.com

Output Shaft Sleeve Replacement

Special Tools

- *J 41227* Output Shaft Sleeve Remover
- *J 41228* Output Shaft Sleeve Installer

For equivalent regional tools, refer to Special Tools.

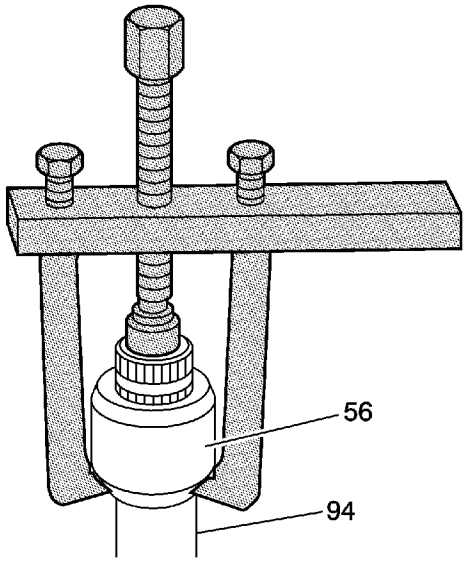

1. Inspect the sleeve (56) for excessive wear, scratches or nicks that could cause a leak or damage the seal. If the sleeve is damaged replace with a NEW seal.
2. Using *J 41227* remover the sleeve (56) from the shaft (94).

cardiagn.com

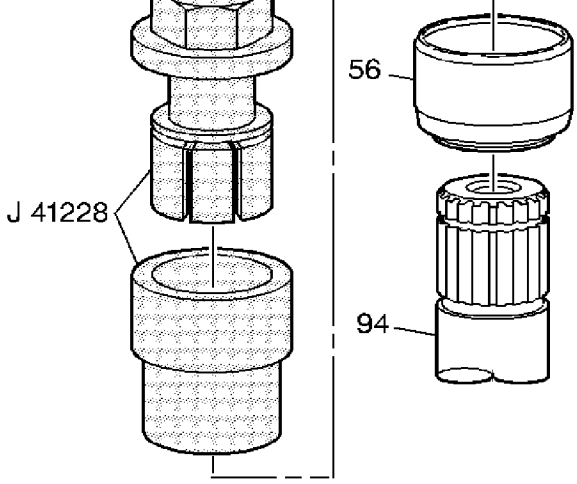

Note: You must use the *J 41228* sleeve installer in order to install the NEW sleeve onto the output and stub shafts. If you do not use the *J 41228* sleeve installer , you will cause a fluid leak.

3. Place a NEW sleeve (56) over the end of the output shaft (94).
4. Install the collet into the output shaft snap ring groove with the collet attached to the threaded collet shaft.
5. Place the NEW sleeve installing tube over the collet. Be sure the small outside diameter of the tube fits securely into the sleeve.
6. Install the bearing and nut onto the threaded collet shaft.
7. In order to move the installing tube and press the sleeve onto the output shaft, hold the end of the threaded collet shaft while tightening the nut down.
8. Remove the *J 41228* sleeve installer .

cardiagn.com

Output Shaft Installation

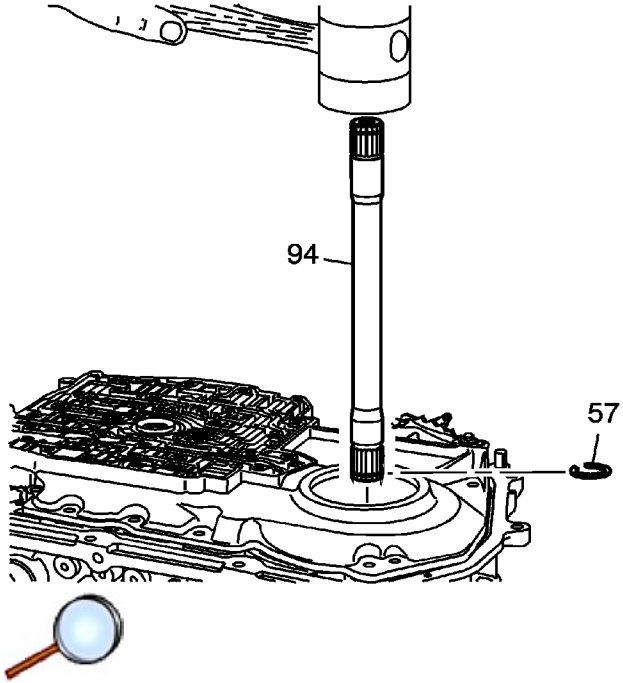

1. Install a new snap ring (57) into the snap ring groove on the final drive end (small machined diameter) of the output shaft (94).
2. Install the output shaft (94) into the final drive assembly. Use a mallet in order to install the shaft (94) through the final drive differential gear.

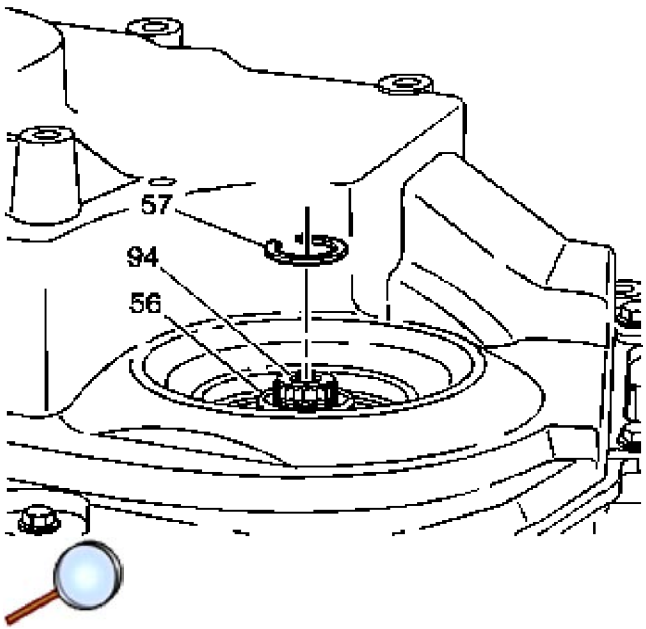

3. Install a new snap ring (57) into the output shaft snap ring groove.

cardiagn.com

Stub Shaft Sleeve Assembly Installation

Special Tools

J 41228 Output Shaft Sleeve Installer

For equivalent regional tools, refer to Special Tools.

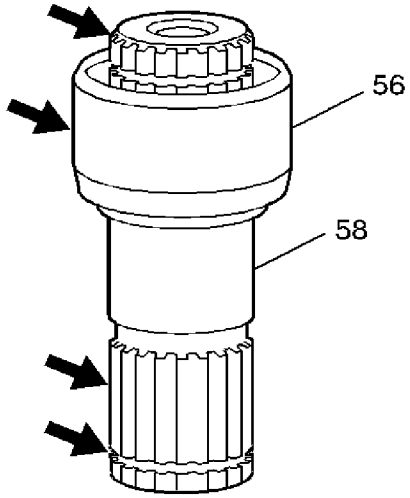

1. Inspect the stub shaft (58) for damage to the splines, the snap ring grooves, and the journals.

   Note: If the sleeve (56) appears damaged, replace the sleeve (56) using the same procedure for removal and installation as with the output shaft sleeve. This procedure is listed below.

2. Inspect the sleeve (56) for excessive wear, scratches or nicks that could cause a leak or damage the seal portion.
3. Clean and dry the stub shaft and sleeve assembly.

cardiagn.com

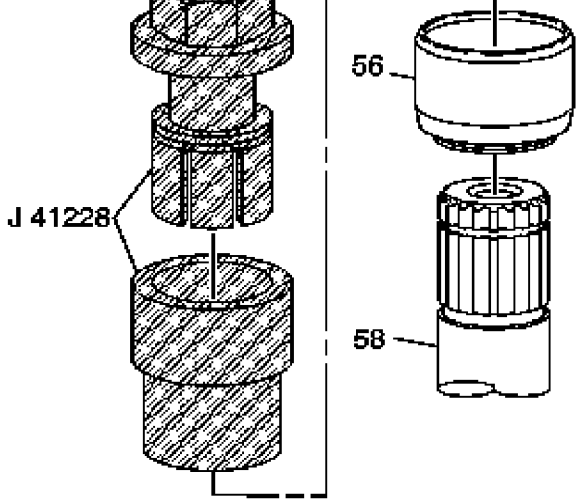

Caution: Use the J 41228 to install the sleeve onto the output and stub shaft, to prevent a fluid leak.

4. Place a NEW sleeve (56) over the end of the stub shaft (58).
5. Install the collet into the stub shaft snap ring groove with the collet attached to the threaded collet shaft.
6. Place the sleeve installing tube over the collet. Be sure the small outside diameter of the tube fits securely into the sleeve.
7. Install the bearing and nut onto the threaded collet shaft.
8. In order to move the installing tube and press the sleeve onto the stub shaft, hold the end of the threaded collet shaft while tightening the nut down.
9. Remove the *J 41228* sleeve installer .

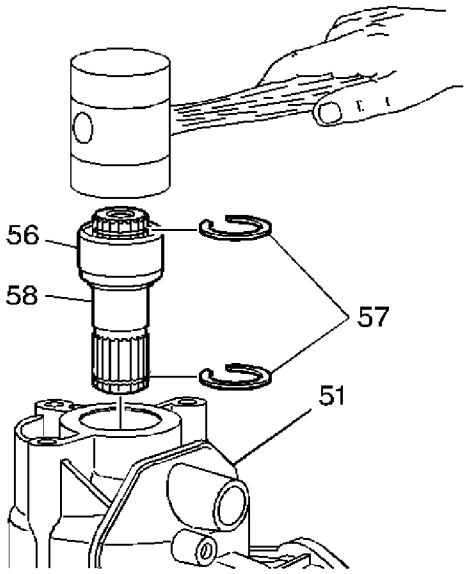

cardiagn.com

11. Install the stub shaft into the transmission. Use a mallet in order to install the shaft through the final drive differential gear.

cardiagn.com

Right Hand Axle Seal Assemble

Special Tools

- *J 8092* Driver Handle
- *J 41102-1A* Axle Seal Installer

For equivalent regional tools, refer to Special Tools.

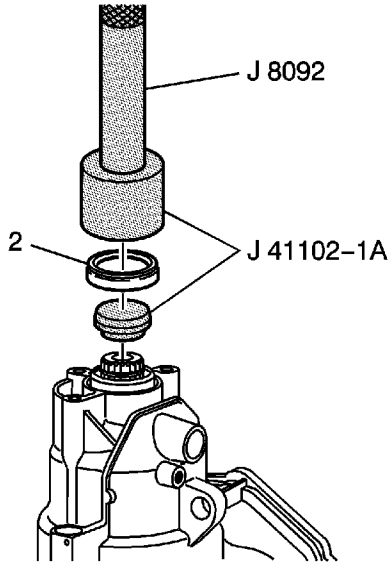

Note: You must use the *J 41102-1A* seal installer in order to install the seal correctly. The *J 41102-1A* seal installer installs the axle seal to a given depth.

1. Install a new right hand axle seal (2) into the transmission case. Use the *J 41102-1A* seal installer with the *J 8092* driver handle .
2. In order to prevent damage to the shaft splines during vehicle operation, add Polyurea grease (part number 7843867) to the splines on the output shaft.

cardiagn.com

Output Speed Sensor Installation

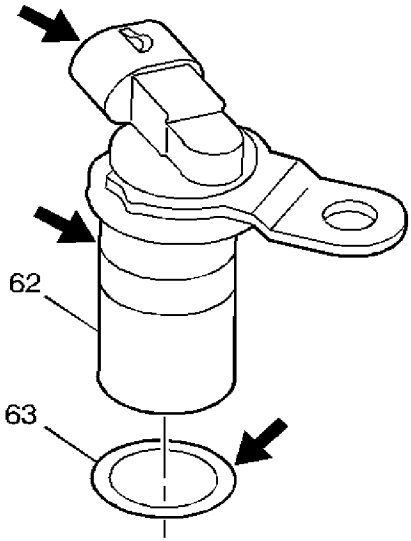

1. Inspect the vehicle speed sensor (62) for damage to the sensor, the electrical connector, or the O-ring (63).
2. Clean and dry the vehicle speed sensor (62).

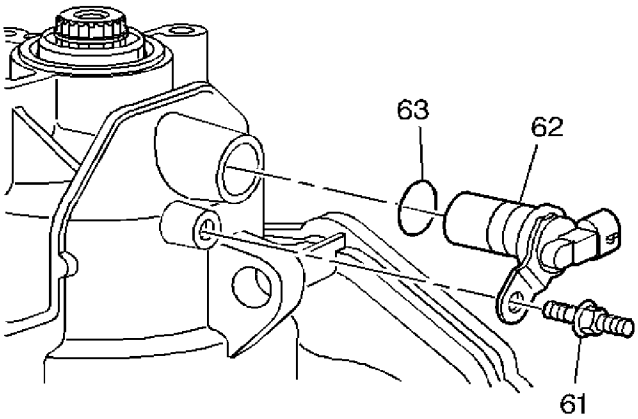

3. Install the O-ring (63) onto the speed sensor (62).
4. Install the speed sensor (62) into the transmission case.

Caution: Refer to Fastener Caution in the Preface section.

cardiagn.com

cardiagn.com

Intermediate / Fourth Servo Disassemble

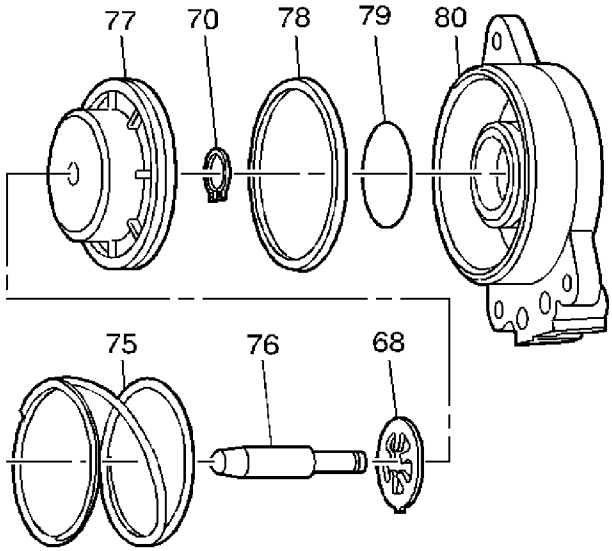

1. Remove the piston and pin assembly (76 and 77) from the servo cover (80).
2. Remove the snap ring (70) from the servo pin (76).
3. Remove the piston (77) and the servo cushion springs (68) from the servo pin (76).
4. Remove the servo piston seals (78, 79) from the servo cover (80).
5. Discard the servo piston seals (78 and 79). Do not reuse the servo piston seals.

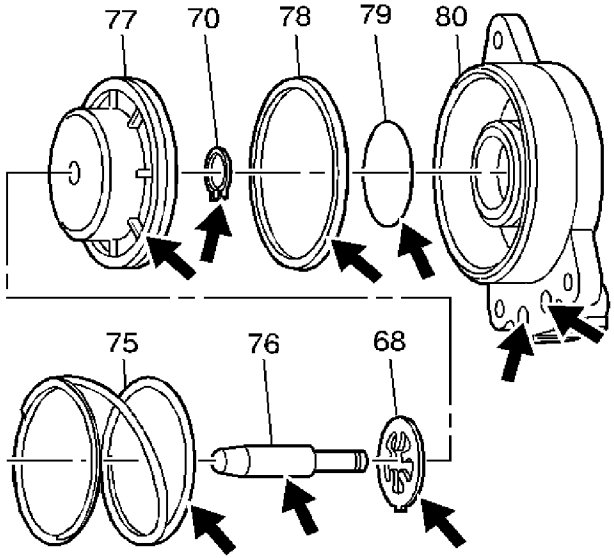

6. Inspect all components for damage.
7. Inspect the fluid feed holes for proper opening.
8. Inspect the bolt holes threads for debris and stripping.

cardiagn.com

cardiagn.com

Intermediate/Fourth Servo Assemble and Installation

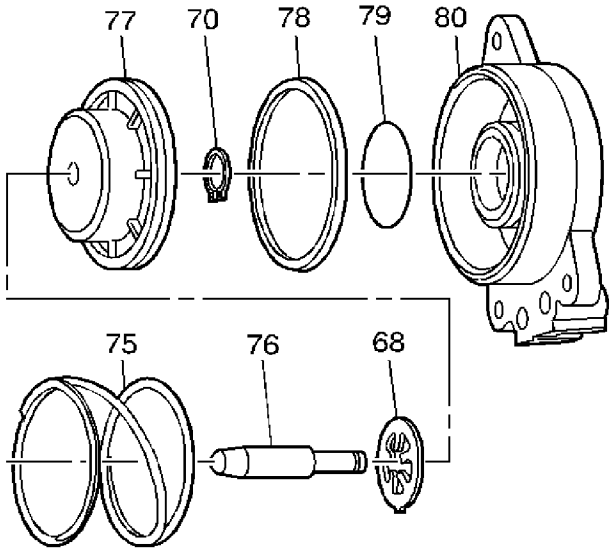

1. Install the servo cushion springs (68) and the servo piston (77) onto the servo pin (76).
2. Install the snap ring (70) onto the servo pin (76) in order to retain the springs (68) and piston (77).
3. Install the new seals (78 and 79) onto the servo piston (77) and the servo cover (80).
4. Install the servo piston assembly into the servo cover (80). Lubricate the piston seals with transmission fluid in order to aid in assembly.

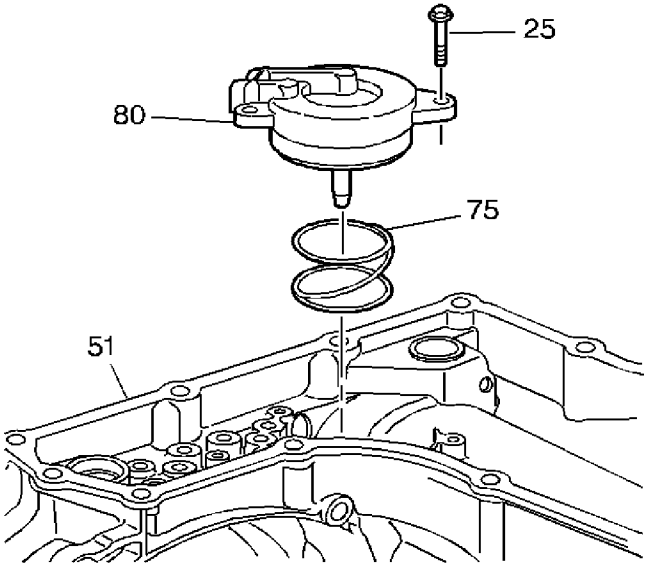

5. Install the servo return spring (75) into the transmission case (51).
6. Install the servo cover (80) and the piston assembly over the servo return spring (75).

cardiagn.com

Caution: Hand tighten servo bolts to prevent bore damage.

7. Install the three servo cover bolts (25). Hand start the bolts. Tighten the bolts to **12 N·m (9 lb ft)**.

cardiagn.com

Low and Reverse Servo Disassemble

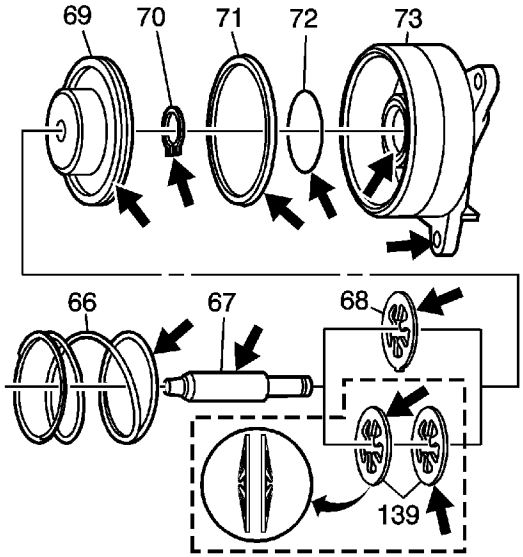

1. Remove the piston pin assembly (67-70) from the servo cover (73).
2. Remove the snap ring (70) from the servo pin (67).
3. Remove the piston (69) and the servo cushion springs (68) from the servo pin (67).
4. Remove the servo piston seals (71, 72) from the cover (73).
5. Discard the servo piston seals (71 and 72).
6. Inspect all the components for damage.
7. Inspect the fluid feed holes for the proper opening.
8. Inspect the bolt hole threads for debris or stripping.
9. Inspect the seal grooves for damage.
10. Clean and dry each component.

cardiagn.com

Low and Reverse Servo Assemble and Installation

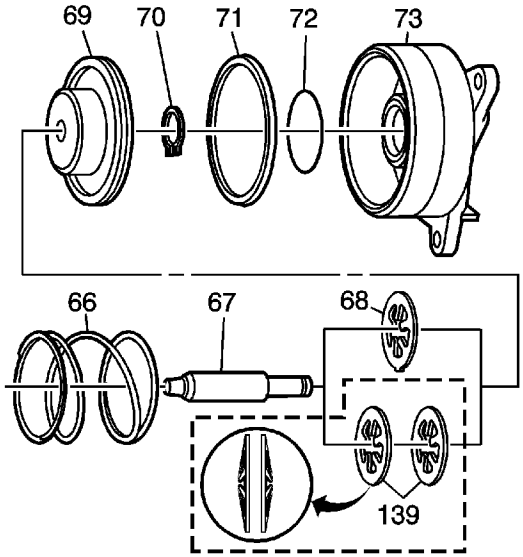

1. Assemble the servo cushion springs (68) and the servo piston (69) onto the servo pin (67).
2. Install the snap ring onto the servo pin (67) in order to retain the servo cushion springs (68) and the servo piston (69).
3. Assemble the new seals (71, 72) onto the servo piston (69) and the servo cover (73).
4. Assemble the servo piston assembly (67-70) into the servo cover (73). Lubricate the piston seals with transmission fluid in order to aid in assembly.

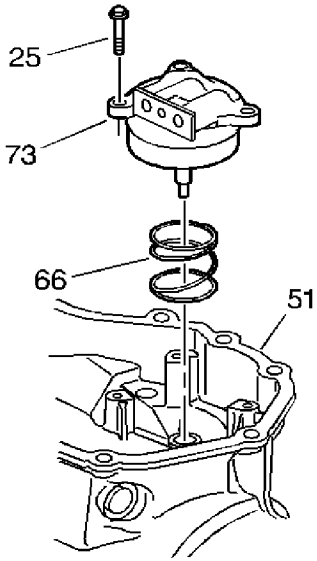

5. Install the servo return spring (66) into the transmission case (51).
6. Install the servo cover and piston assembly over the servo return spring (66).

cardiagn.com

Caution: Hand tighten servo bolts to prevent bore damage.

7. Install the three servo cover bolts (25). Hand start the bolts. Tighten the bolts to **12 N·m (9 lb ft)**.

cardiagn.com

Oil Feed Pipes Assemble

Special Tools

J 36850 Assembly Lubricant or equivalent

For equivalent regional tools, refer to Special Tools.

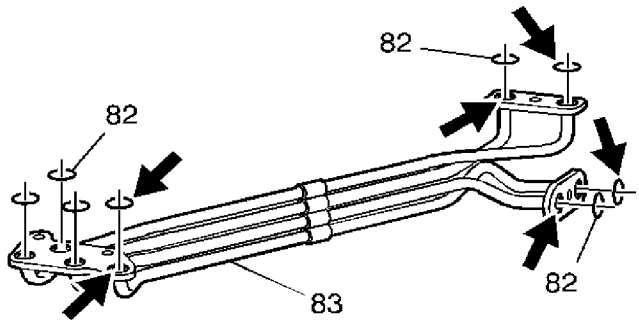

1. Inspect the oil feed pipes (83) for plugged passages, bent pipes, or cracks.
2. Inspect the oil feed pipe seal rings (82) in order to verify the proper location of the seal rings (82).

   Note: The oil feed pipe seals are glued into place during initial assembly. If you must replace a seal ring, be sure to thoroughly clean any residual glue from the oil feed pipes.

3. Replace the seal rings (82) only if they are cut, swelled or damaged.
4. Clean and dry the oil feed pipes.

cardiagn.com

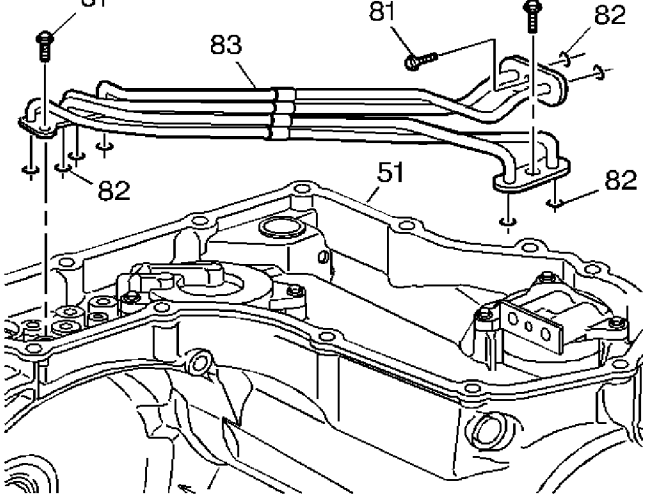

5. Install new oil feed pipe seal rings (82) if necessary.
6. Retain any newly installed oil feed pipe seal rings (82) with *J 36850* lubricant or equivalent.
7. Install the oil feed pipe assembly (83) onto the transmission case (51).

   Caution: Refer to Fastener Caution in the Preface section.

8. Install the four oil feed pipe bolts (81). Hand start the bolts. Tighten the bolts to **12 N·m (9 lb ft)**.

cardiagn.com

Filter Assembly and Seal Installation

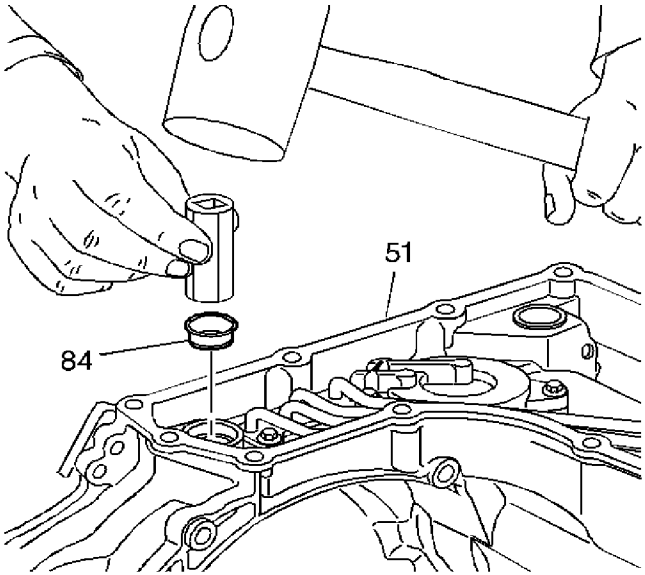

1. Lubricate the oil filter seal (84) with transmission fluid.

   Caution: Gently tap the filter seal (84) evenly into the bore, to prevent damage to the case bore and seal.

2. Install a new oil filter seal (84) into the transmission case (51). You may use a large socket as an installer in order to tap on the seal.

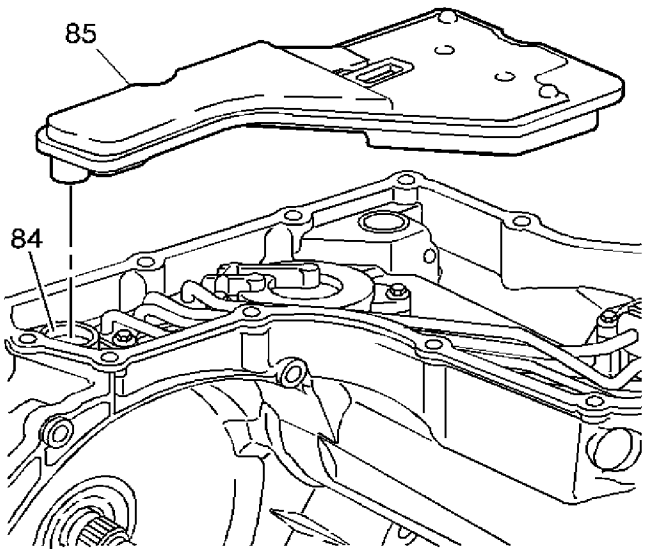

cardiagn.com

cardiagn.com

Oil Level Control Valve Installation

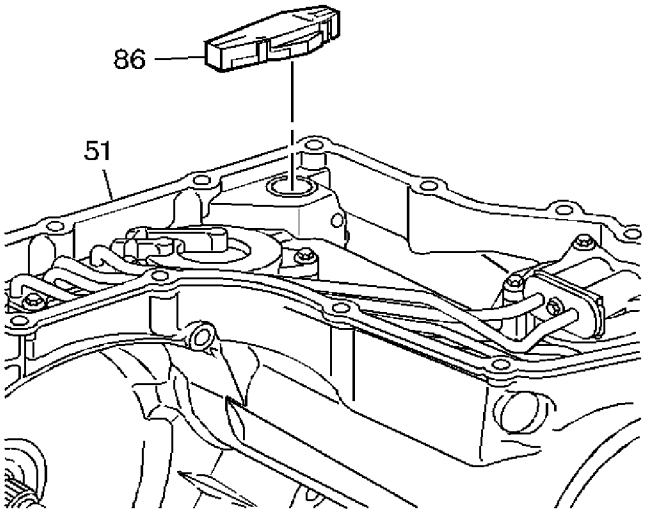

Install the oil level control valve into the transmission case (51). Push straight down on the center of the oil level control valve in order to prevent damage to the case bore.

cardiagn.com

Automatic Transmission Fluid Pan and Gasket Installation

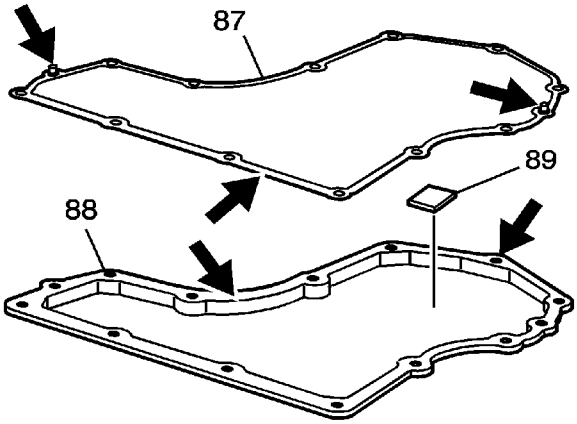

1. Inspect the oil pan (88) for cracks, dents or damage to the gasket sealing surface.
2. Inspect the gasket (87) for cuts or other damage. The bottom pan gasket is reusable if not damaged.
3. Clean and dry the bottom pan, gasket and magnet (89).

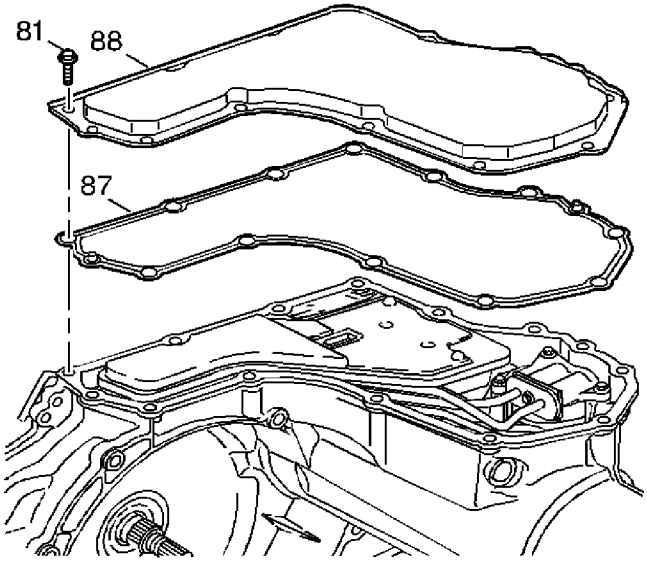

4. Install the gasket (87) and bottom pan (88) onto the transmission case.

cardiagn.com

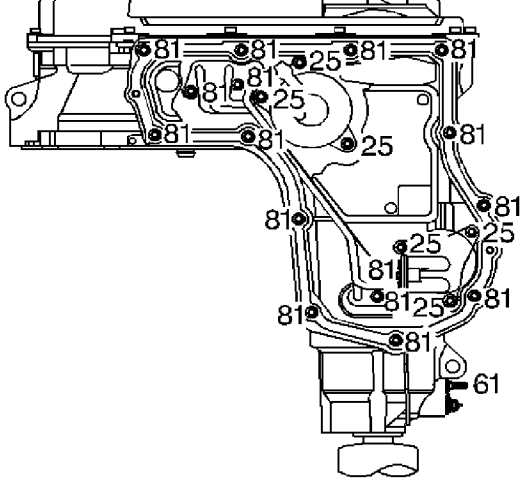

5. Install the twelve bottom pan bolts (81).

   Caution: Refer to Fastener Caution in the Preface section.

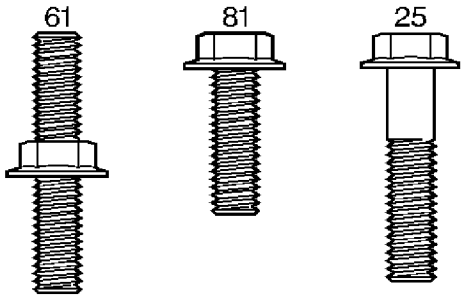

6. Hand start the bolts. Tighten the bottom pan bolts to **12 N·m (106 lb in)**.

cardiagn.com

Automatic Transmission Fluid Pan and Gasket Installation

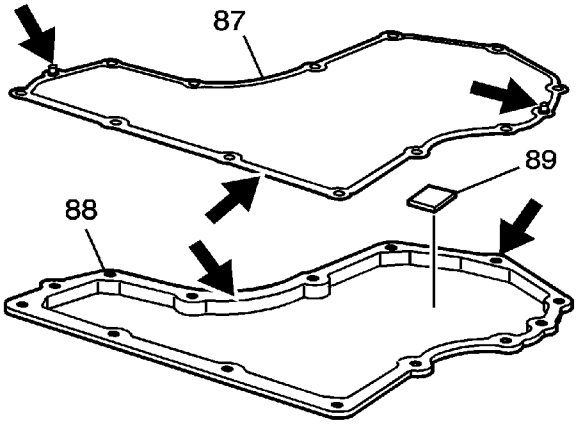

1. Inspect the oil pan (88) for cracks, dents or damage to the gasket sealing surface.
2. Inspect the gasket (87) for cuts or other damage. The bottom pan gasket is reusable if not damaged.
3. Clean and dry the bottom pan, gasket and magnet (89).

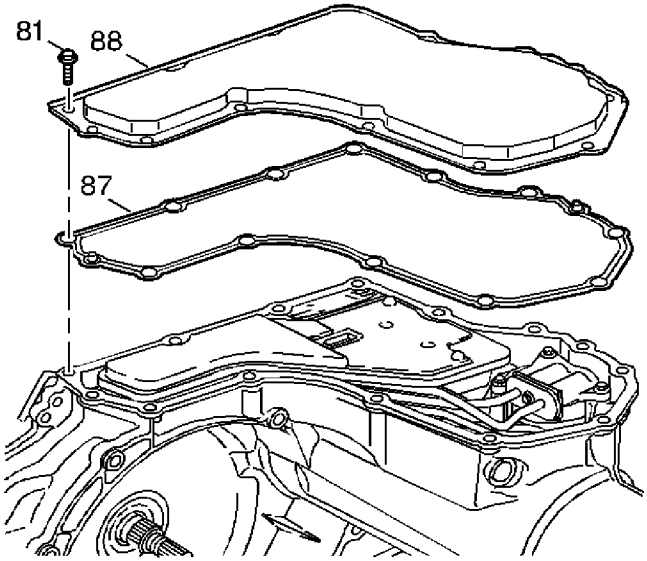

4. Install the gasket (87) and bottom pan (88) onto the transmission case.

cardiagn.com

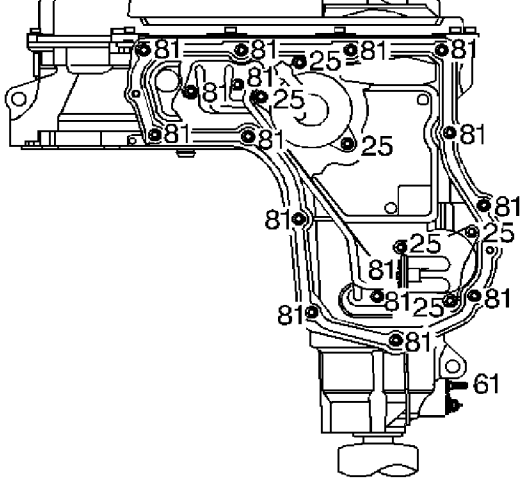

5. Install the twelve bottom pan bolts (81).

   Caution: Refer to Fastener Caution in the Preface section.

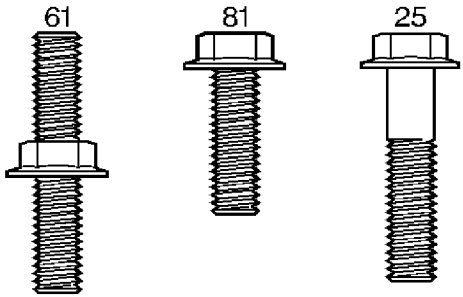

6. Hand start the bolts. Tighten the bottom pan bolts to **12 N·m (106 lb in)**.

cardiagn.com

Auxiliary Fluid Pump Installation

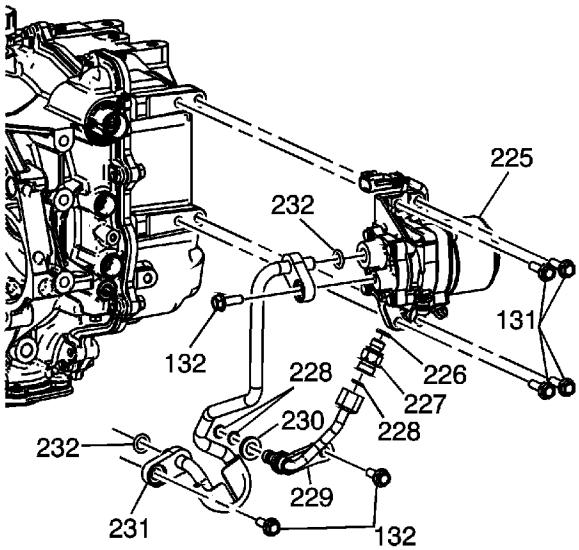

Caution: Use care when installing the O-rings (226 and 228). The 2 O-rings are different sizes. The larger O-ring (226) installs onto the fluid pump check valve (227), on the pump side. Be careful not to split or damage the O-rings when installing.

Note:

- Discard all seals. Seals are not reusable.
- Inspect pipes for damage. Clean pipes inside and out, using compressed air to ensure no debris is on the inside of the pipes.
- Clean and inspect all O-ring sealing surfaces, on the pipes, check valve and the pump assembly.
- Remove the fluid pump check valve (227) from the auxilliary pump asssembly and inspect for debris or blockage.

1. Install NEW O-ring seals (226 to the pump side and 228 to the outlet pipe side) onto the check valve (227).

   Caution: Refer to Fastener Caution in the Preface section.

2. Install the check valve (227) onto the auxiliary pump (225). Tighten to **25 N·m (18 lb ft)**.
3. Install NEW foam spacer (230) and 2 NEW O-ring seals (228) onto the outlet pipe (229).

   Note: It's important to notice the size of bolts (131) verses bolts (132). Bolts (132) are shorter - M8 x 1.25 x 25 mm.

4. Install the outlet pipe (229) and M8 x 1.25 x 25 mm bolt (132) into the case assembly.

cardiagn.com

Note: It's important to notice the size of bolts (131) verses bolts (132). Bolts (132) are shorter - M8 x 1.25 x 25 mm.

6. Install the suction pipe (231) and lower M8 x 1.25 x 25 mm bolt (132) to the case assembly. Tighten the bolt to **25 N·m (18 lb ft)**.
7. Install the auxiliary pump (225) and check valve (227) assembly onto the suction pipe (231) end and align with the outlet pipe (229) end.
8. Align the outlet pipe (229) nut to the check valve (227) and tighten by hand. Do not torque.

Note: It's important to notice the size of bolts (131) verses bolts (132). Bolts (131) are longer - M8 x 1.25 x 30 mm.

9. Install 3 auxiliary pump M8 x 1.25 x 30 mm bolts (131) - 2 at bottom, and 1 at the top-right, to the case cover. Tighten the bolt to **25 N·m (18 lb ft)**.

Note: It's important to notice the size of bolts (131) verses bolts (132). Bolts (132) are shorter - M8 x 1.25 x 25 mm.

10. Install the suction pipe (231) and top M8 x 1.25 x 25 mm bolt (132) to the pump (225). Tighten the bolt to **25 N·m (18 lb ft)**.

Caution: Do not bend the electrical connector or clip or damage may occur. The electrical connector and clip are one piece.

11. Route the auxiliary pump (225) wire behind the auxiliary pump motor housing.

Caution: Be sure to restrain the fluid pump check valve (227) when tightening the fluid pump outlet pipe (229). Failure to keep the check valve (227) from tightening further may result in damage to the O-ring seal (228) on the fluid pump check valve (227).

12. Position the auxiliary pump (225) connector and clip with the top-left mount hole and install auxiliary pump M8 x 1.25 x 30 mm bolt (131), to the case cover. Tighten the bolt to **25.5 N·m (18.8 lb ft)**.
13. Tighten the outlet pipe (229) nut. Tighten the nut to **22.5 N·m (16.6 lb ft)**.

Note: Refer to the Tech II for auxiliary pump priming procedure under special functions after transaxle installation.

14. After the auxiliary pump assembly has been installed onto the transaxle, it must be primed. Refer to Auxiliary Fluid Pump Priming.

cardiagn.com

Torque Converter Installation

Special Tools

J 21366 Torque Converter Holding Strap

For equivalent regional tools, refer to Special Tools.

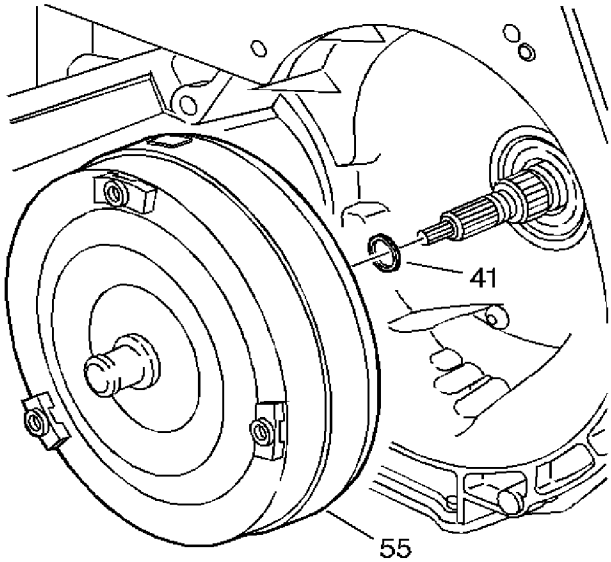

1. Install a new turbine shaft O-ring (41) on the end of the turbine shaft.

   Warning: The torque converter weighs approximately 65 lbs. Personal injury may result if you lift the torque converter improperly.

2. Install the torque converter onto the transmission.
3. Install the *J 21366* holding strap .
4. Remove the transmission from the holding fixture.

cardiagn.com