SPECIFICATIONS

FASTENER TIGHTENING SPECIFICATIONS

Fastener Tightening Specifications

Application	Specification	
	Metric	English
Backup Lamp Switch	20 N.m	15 lb ft
Differential to Transmission Bolts and Nuts	50 N.m	37 lb ft
Differential to Transmission Lower Nut	50 N.m	37 lb ft
Driveline Support Assembly to Engine Flywheel Housing Bolts	50 N.m	37 lb ft
EBTCM LH Mounting Bracket Mounting Bolts	50 N.m	37 lb ft
Gear Select/Skip Shift Solenoid	40 N.m	30 lb ft
Intermediate Exhaust Pipe to Muffler Bolts	50 N.m	37 lb ft
Negative Battery Cable Bolt	15 N.m	11 lb ft
Rear Shock Absorber Lower Mounting Bolt	220 N.m	162 lb ft
Rear Suspension Crossmember Mounting Nuts	110 N.m	81 lb ft
Reverse Lockout Solenoid	40 N.m	30 lb ft
Shift Control Closeout Boot Retaining Nuts	12 N.m	106 lb in
Shift Control Mounting Bolts	30 N.m	22 lb ft
Transaxle Mount Bracket to Differental Bolts	50 N.m	37 lb ft
Transaxle Mount to Rear Suspension Crossmember Nuts	50 N.m	37 lb ft
Transmission to Driveline Support Assembly Bolts/Studs	50 N.m	37 lb ft
Transmission Fluid Drain Plug	27 N.m	20 lb ft
Transmission Fluid Fill Plug	27 N.m	20 lb ft
Transmission Fluid Temperature Sensor	27 N.m	20 lb ft
Transmission Shift Rod Clamp Bolt	30 N.m	22 lb ft
Transmission Vent Tube Retaining Bolt	20 N.m	15 lb ft

LUBRICATION SPECIFICATIONS

Lubrication Specifications

Application	Metric	English
DEXRON(R) - lll	3.9 liters	4.1 quarts

SCHEMATIC AND ROUTING DIAGRAMS

MANUAL TRANSMISSION SCHEMATICS

cardiagn.com

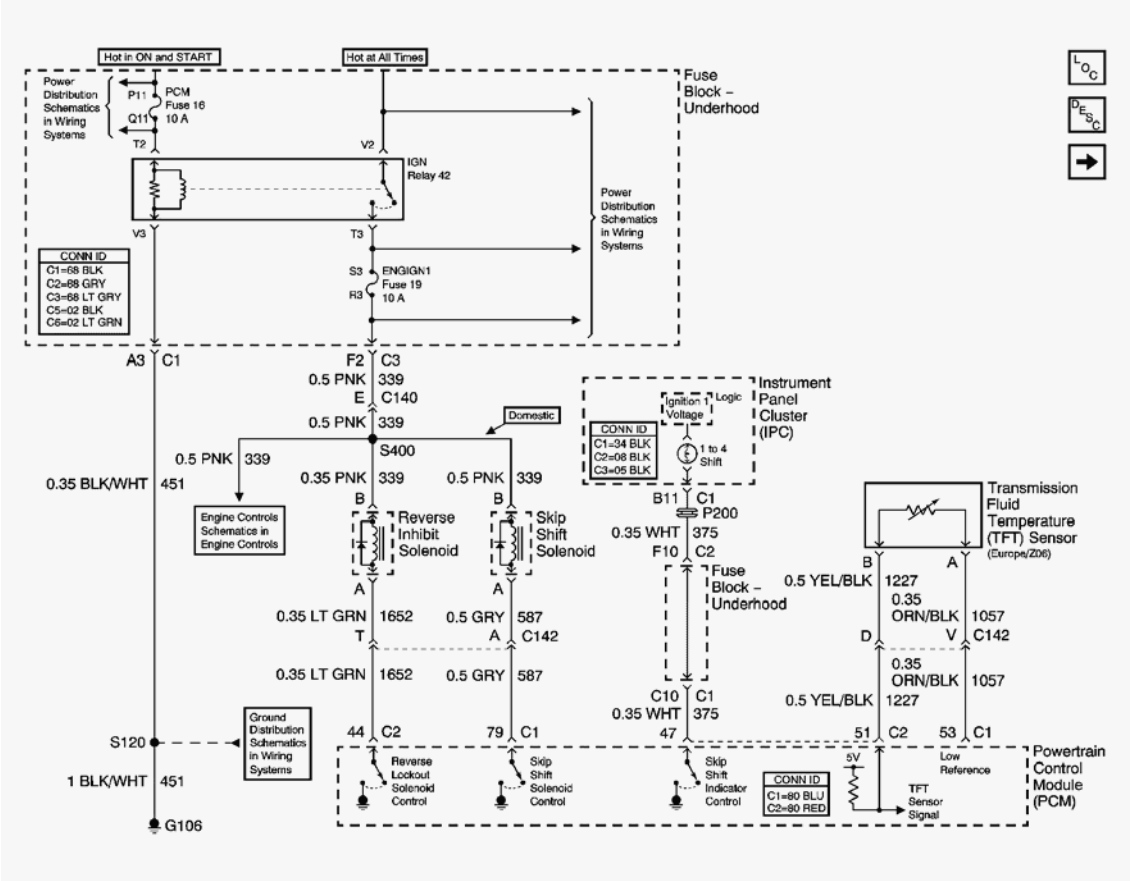

Fig. 1: Solenoid Controls And TFT Sensor Schematics
Courtesy of GENERAL MOTORS CORP.

cardiagn.com

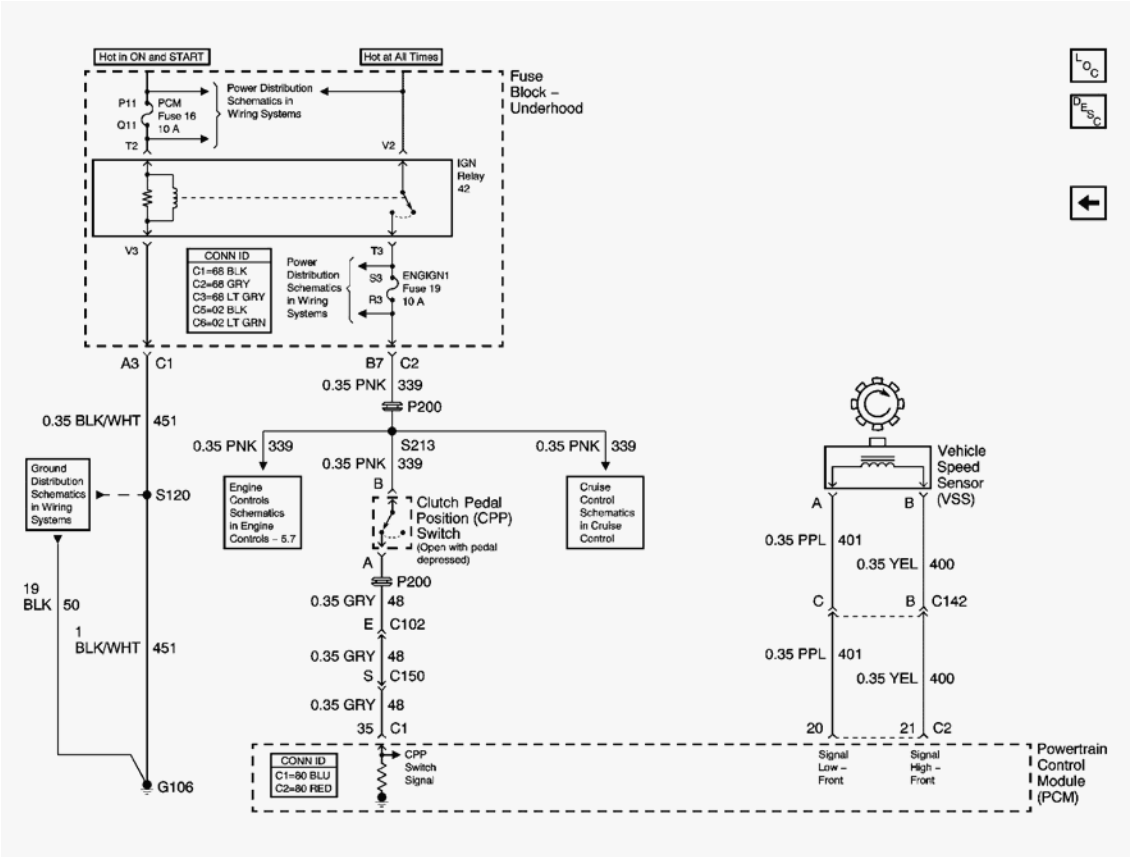

Fig. 2: Clutch Pedal Position Schematics (CPP) Switch And Vehicle Speed Sensor (VSS)
Courtesy of GENERAL MOTORS CORP.

COMPONENT LOCATOR

MANUAL TRANSMISSION COMPONENT VIEWS

cardiagn.com

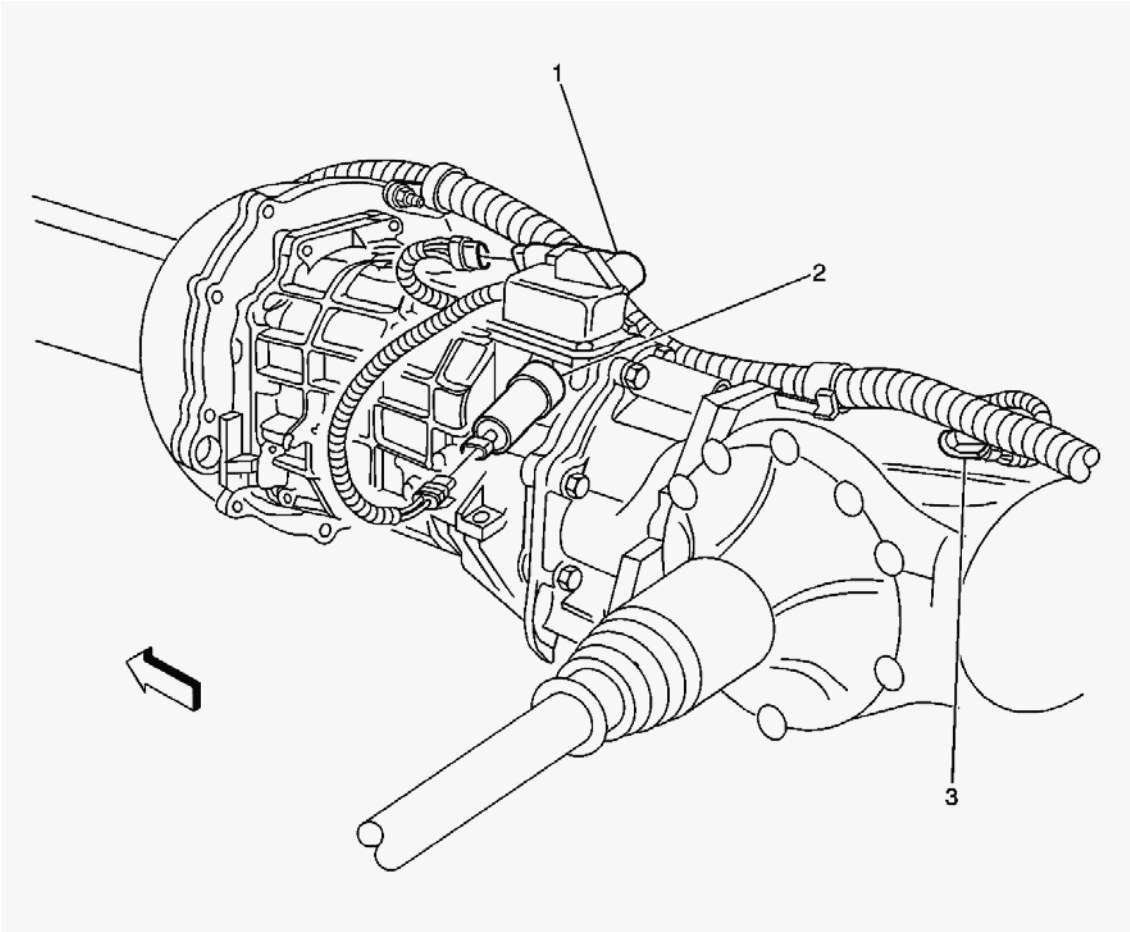

Fig. 3: Manual Transmission Component View
Courtesy of GENERAL MOTORS CORP.

Callouts For Fig. 3

Callout	Component Name
1	Reverse Inhibit Solenoid
2	Skip Shift Solenoid
3	Vehicle Speed Sensor (VSS)

cardiagn.com

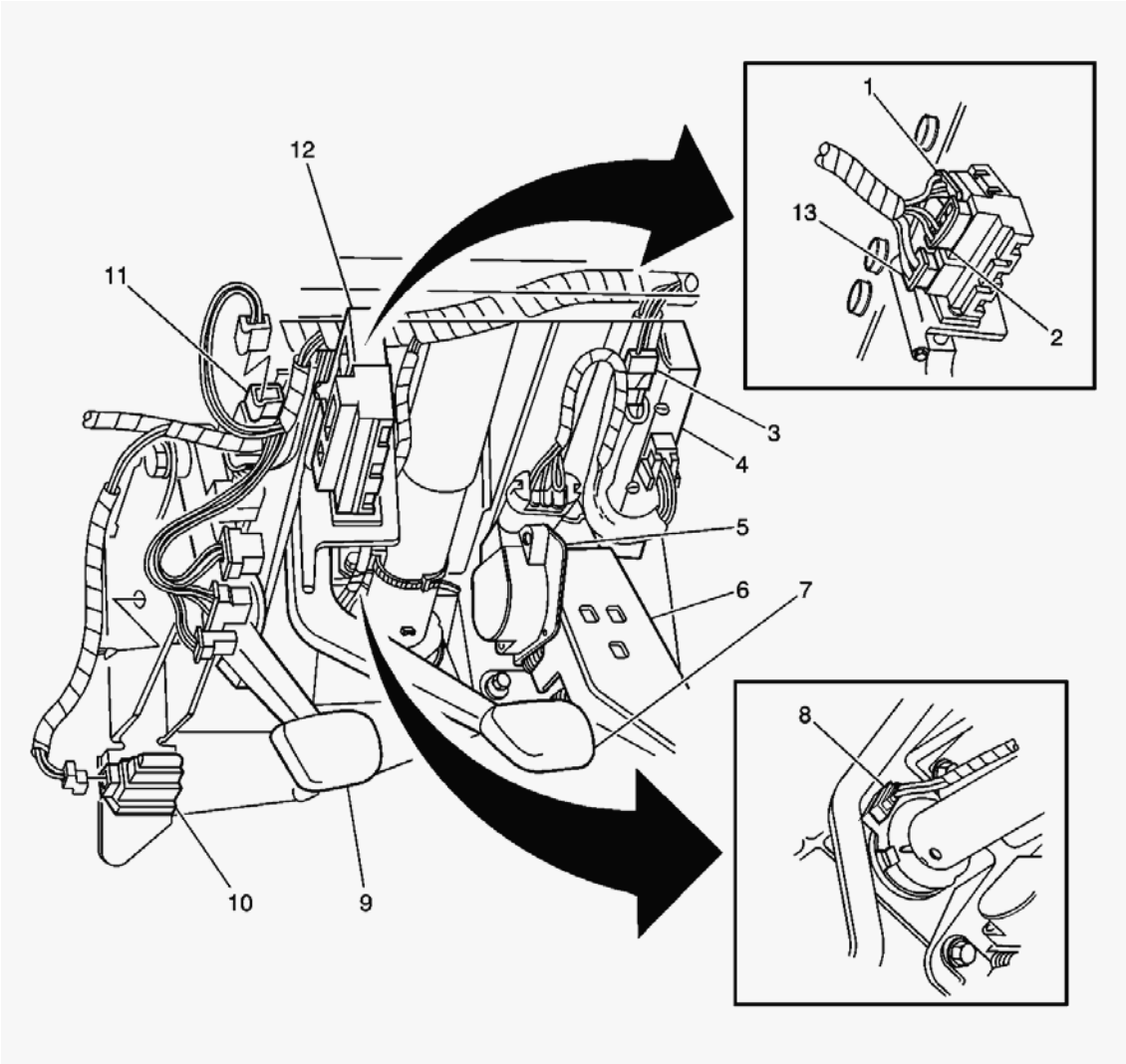

Fig. 4: Under Side Of The Dash Component View - Left
Courtesy of GENERAL MOTORS CORP.

Callouts For Fig. 4

Callout	Component Name
1	Stop Lamp Switch C1
2	Stop Lamp Switch C3
3	C213
4	Bose Signal Processor
5	Accelerator Pedal Position (APP) Sensor
6	Accelerator Pedal
7	Brake Pedal
8	Steering Wheel Position Sensor
9	Clutch Pedal
10	Clutch Pedal Start Switch

cardiagn.com

11	Clutch Pedal Position Switch
12	Stop Lamp Switch
13	Stop Lamp Switch Connector C2

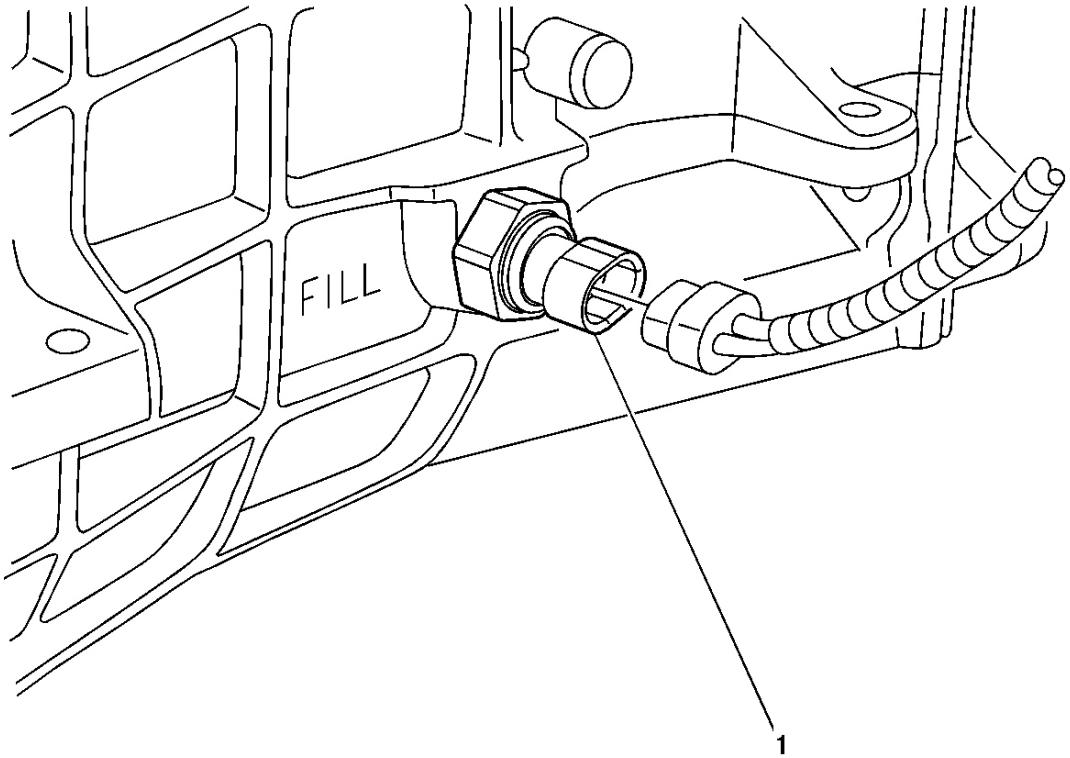

Fig. 5: Left Side Of The Transmission Component View
Courtesy of GENERAL MOTORS CORP.

Callouts For Fig. 5

Callout	Component Name
1	Transmission Fluid Temperature (TFT) Sensor

VISUAL IDENTIFICATION

MANUAL TRANSMISSION CONNECTOR END VIEWS

Clutch Pedal Position Terminal Identification (CPP) Switch

cardiagn.com

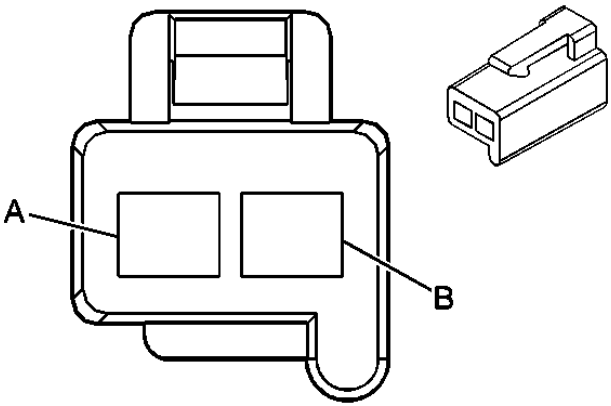

Connector Part Information		• 12041433 • 2 Way F Metri-Pack 280 Series (BLK)	
Pin	**Wire Color**	**Circuit No.**	**Function**
A	GRY	48	CPP Switch Signal
B	PNK	339	Ignition 1 Voltage

Reverse Inhibit Solenoid Terminal Identification

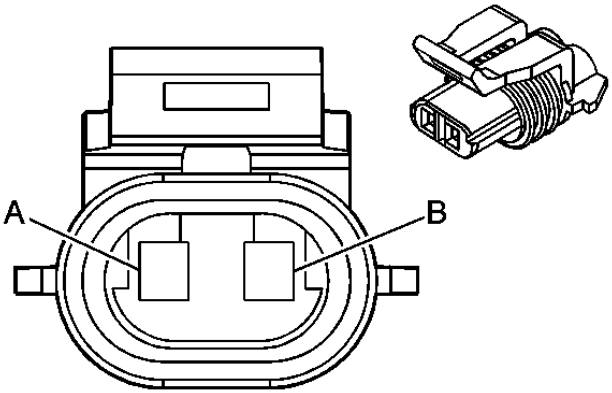

Connector Part Information		• 12052640 • 2 Way F Metri-Pack 150 Series (WHT)	
Pin	**Wire Color**	**Circuit No.**	**Function**
A	LT GRN	1652	Reverse Lockout Solenoid Control
B	PNK	339	Ignition 1 Voltage

cardiagn.com

Skip Shift Solenoid Terminal Identification

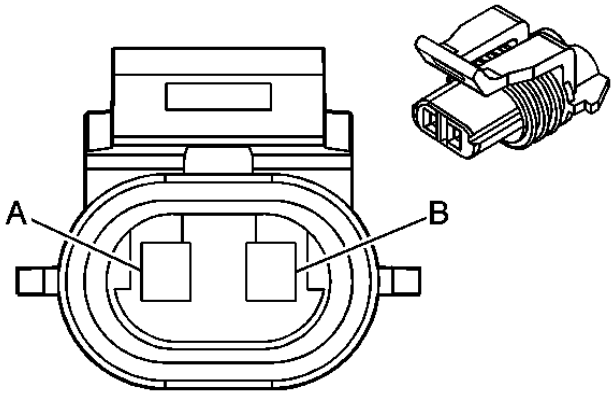

Connector Part Information		• 12052640 • 2 Way F Metri-Pack 150 Series (WHT)	
Pin	**Wire Color**	**Circuit No.**	**Function**
A	GRY	587	Skip Shift Solenoid Control
B	PNK	339	Ignition 1 Voltage

Transmission Fluid Temperature Terminal Identification (TFT) Sensor

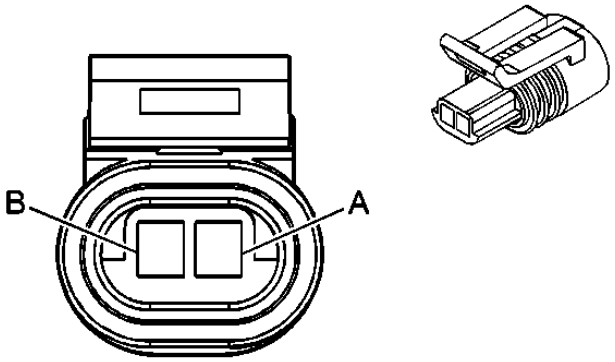

Connector Part Information		• 12162195 • 2 Way F Metri-Pack 150.2 Series (BLK)	
Pin	**Wire Color**	**Circuit No.**	**Function**
A	ORN/BLK	1057	Low Reference
B	YEL/BLK	1227	TFT Sensor Signal

cardiagn.com

Vehicle Speed Sensor Terminal Identification (VSS)

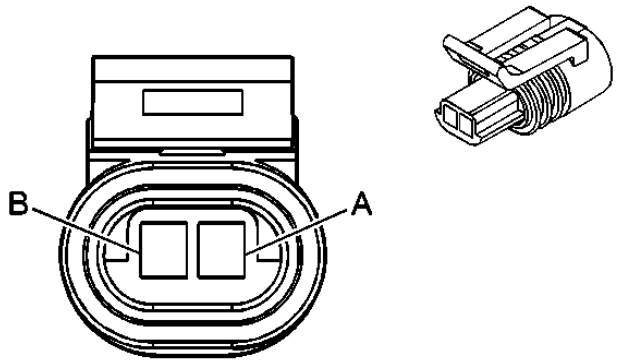

Connector Part Information		• 12162195 • 2 Way F Metri-Pack 150 Series (BLK)	
Pin	**Wire Color**	**Circuit No.**	**Function**
A	PPL	401	VSS Low Signal
B	YEL	400	VSS High Signal

DIAGNOSTIC INFORMATION AND PROCEDURES

DIAGNOSTIC STARTING POINT - MANUAL TRANSMISSION

Begin the system diagnosis with the **Diagnostic System Check - Manual Transmission** . The Diagnostic System Check - Manual Transmission will provide the following information:

- The identification of the control module or modules which command the system
- The ability of the control module or modules to communicate through the serial data circuit
- The identification of any stored diagnostic trouble codes (DTCs) and the codes' statuses.

Use the Diagnostic System Check - Manual Transmission in order to identify the correct procedure for diagnosing the system and where the procedure is located.

DIAGNOSTIC SYSTEM CHECK - MANUAL TRANSMISSION

Circuit Description

The Diagnostic System Check - Manual Transmission is an organized approach to identify a condition created by a manual transmission. The Diagnostic System Check is the diagnostic starting point for a manual transmission concern. The Diagnostic System Check directs you to the next logical step for diagnosing a transmission concern. Perform this check only if there is a driveability concern or if you have been directed here from another service information section.

cardiagn.com

Follow the table to help reduce diagnostic time and help prevent unnecessary replacement of good parts.

Diagnostic Aids

IMPORTANT: Do not clear the diagnostic trouble code (DTC) unless directed by a diagnostic procedure. Clearing the DTC will erase all Freeze Frame and Failure Records stored in the powertrain control module (PCM) memory.

- Use a scan tool that is known to function correctly. If necessary, test the scan tool on another vehicle.
- Ensure the scan tool contains the most current file available.
- The scan tool will display a loss of communication error message under the following conditions:
  - PCM power is interrupted
  - The ignition switch is turned OFF
  - The battery voltage level is very low
  - A poor connection at the diagnostic link connector (DLC)

Test Description

The numbers below refer to the step numbers on the diagnostic table.

1: This step determines if the scan tool is receiving power through the DLC connector.

2: The malfunction indicator lamp (MIL) should illuminate whenever the ignition is ON and the engine is not running.

3: This step determines if the PCM is transmitting class 2 serial data to the DLC and that the class 2 data circuit is not open or shorted.

4: This step determines if a DTC is current or stored in history.

Diagnostic System Check - Manual Transmission

Step	Action	Value (s)	Yes	No
1	1. Install a scan tool. **IMPORTANT:** • **Check for applicable service bulletins before proceeding with this test. Perform this test only if there is a driveability complaint or if you have been directed to this table from another section in the service information.** • **Do not turn the ignition OFF when performing this diagnostic procedure. Do not clear the DTCs unless instructed by this**	-		

cardiagn.com

	diagnostic procedure. 2. Turn ON the ignition, with the engine OFF. Does the scan tool turn ON?		Go to **Step 2**	Go to **Diagnostic Starting Point - Data Link Communications** in Data Link Communications
2	Is the MIL ON?	-	Go to **Step 3**	Go to **DTC P0650** in Engine Controls - 5.7L
3	Attempt to establish communication with the PCM. Does the scan tool communicate with the PCM?	-	Go to **Step 4**	Go to **Diagnostic Starting Point - Data Link Communications** in Data Link Communications
4	Use the scan tool Capture Info function in order to save or capture, Store Info, any DTC Information. Are there any DTCs present?	-	Go to **Diagnostic Trouble Code (DTC) List/Type**	Go to **Symptoms - Manual Transmission**

SCAN TOOL DATA LIST

Use the scan tool data values under the following conditions:

- The Diagnostic System Check - Engine Controls is complete.
- The On-Board Diagnostics are functioning properly.
- No DTCs are present.

The values below represent a typical display recorded from a properly functioning system.

IMPORTANT: Do not use a scan tool that displays faulty data. Report the condition to the scan tool manufacturer. The use of a faulty scan tool can result in misdiagnosis and the unnecessary replacement of parts.

Only the parameters listed below are used in this manual for diagnosing. If a scan tool displays other parameters, the values are not recommended by General Motors for use in diagnosis.

Scan tool values below were recorded under the following conditions:

- Engine at idle
- Upper radiator hose hot
- Closed throttle
- Transmission in Neutral
- Closed Loop operation
- Accessories OFF

cardiagn.com

- Brake pedal not applied

Scan Tool Data List

Scan Tool Parameter	Data List	Units Displayed	Typical Data Value
Clutch Pedal Switch	F0, F3	APPLIED/RELEASED	RELEASED
Reverse Inhibit Solenoid Command	F0	ON/OFF	OFF
Skip Shift Lamp Command	F0	ON/OFF	OFF
Skip Shift Solenoid Command	F0	SKIP/NO SKIP	NO SKIP
TFT Sensor, if equipped	F2	°C/°F	85-115°C (185-239°F)
Vehicle Speed Sensor	ALL	km/h (mph)	0

*Data List Legend

- F0: Engine Data 1
- F1: Engine Data 2
- F2: Engine Data 3
- F3: Cruise Control Data
- F4: Enhanced EVAP Data
- F5: Fuel Trim Data
- F6: Misfire Data
- F7: TAC Data
- F8: H02S Data

SCAN TOOL DATA DEFINITIONS

Clutch Pedal Switch

This parameter displays the state of the clutch pedal switch circuit input. The scan tool will display APPLIED when the clutch pedal is depressed, and RELEASED when the clutch pedal is released.

Reverse Inhibit Solenoid Command

This parameter displays the commanded state of the reverse inhibit solenoid. When the vehicle speed is greater than 5 km/h (3 mph), the solenoid is commanded ON, inhibiting shifts to Reverse. When the vehicle speed is less than 5 km/h (3 mph), the solenoid is commanded OFF, allowing shifts to Reverse. The scan tool will display ON/OFF.

Skip Shift Lamp Command

This parameter displays the commanded state of the skip shift lamp. The scan tool will display ON/OFF.

Skip Shift Solenoid Command

This parameter displays the commanded state of the skip shift solenoid. The scan tool will display

cardiagn.com

SKIP/NO SKIP.

Transmission Fluid Temperature (TFT) Sensor

This parameter displays the input signal of the transmission fluid temperature (TFT) sensor. The TFT is high 151°C (304°F) when signal voltage is low, 0 V, and the TFT is low -40°C (-40°F) when signal voltage is high, 5 V.

Vehicle Speed

This parameter displays the speed at which the vehicle is traveling. The scan tool displays vehicle speed as kilometers per hour (km/h), miles per hour (MPH). The vehicle speed is calculated based on the input signal from the vehicle speed sensor.

SCAN TOOL OUTPUT CONTROLS

Scan Tool Output Controls

Scan Tool Output Control	Additional Menu Selection(s)	Description
Skip Shift Solenoid	Special Functions - Engine Output Controls	Command grounds the skip shift solenoid control circuit. Turns skip shift solenoid ON and OFF.
Reverse Inhibit	Special Functions - Engine Output Controls	Command grounds the reverse lockout solenoid control circuit. Turns the reverse inhibit solenoid ON and OFF.

DIAGNOSTIC TROUBLE CODE (DTC) TYPE DEFINITIONS

Diagnostic trouble codes (DTCs) are categorized into emissions and non-emissions related types. If a DTC is set, the malfunction indicator lamp (MIL) and failure data are utilized by the control module diagnostic executive according to the DTC type. Each DTC is set based upon the individual DTCs running and setting criteria. Read the Action Taken When the DTC Sets and Conditions for Clearing the MIL/DTC in the supporting text for taking appropriate action to each DTC.

Emissions Related DTCs

Type A

The following actions occur at the time of the first failure:

- The MIL is turned ON.
- A DTC is stored in memory.
- The Freeze Frame/Failure Records are stored.
- The Failure Records are updated after the first failure of each ignition cycle.

Some Type A DTCs will not perform the above actions when the DTC first detects a failure. Two consecutive failures are required. This allows systems, such as evaporative emission (EVAP), to accurately identify what failure exists before setting a DTC and requesting MIL illumination.

cardiagn.com

Type B

The following actions occur at one of the following times:

- First failure:
  - The MIL is not turned ON.
  - A DTC is stored in memory as a Failed Last Test.
  - The Failure Records are stored.
- Second consecutive drive cycle with a failure:
  - The MIL is turned ON.
  - A DTC is stored in memory as a history DTC.
  - The Freeze Frame data is stored.
  - The Failure Records are stored.
- Second non-consecutive drive cycle with a failure:
  - The MIL is not turned ON.
  - A DTC is stored in memory as a Failed Last Test.
  - The Failure Records are stored.

Non-Emissions Related DTCs

Type C

The following actions occur at the time of a failure:

- The MIL does not turn ON.
- A DTC is stored in memory as a history DTC.
- The Failure Records are stored.
- The Failure Records are updated after the first failure of each ignition cycle.
- Some Type C DTCs may also cause an auxiliary service lamp to be illuminated, and/or display a message to the vehicle operator.

Type X

Actions did not occur. These DTCs are coded into the control module software, but will not run for one of the following reasons:

- The associated hardware is not installed with the vehicle emission package.
- The diagnostic is not required for the vehicle emission package.

DIAGNOSTIC TROUBLE CODE (DTC) LIST/TYPE

Diagnostic Trouble Code (DTC) List/Type

cardiagn.com

DTC	Diagnostic Procedure	DTC Type	Module(s)
P0500	**DTC P0500**	B	Powertrain Control Module (PCM)
P0712	**DTC P0712**	C	Powertrain Control Module (PCM)
P0713	**DTC P0713**	C	Powertrain Control Module (PCM)
P0801	**DTC P0801**	C	Powertrain Control Module (PCM)
P0803	**DTC P0803**	B	Powertrain Control Module (PCM)
P0804	**DTC P0804**	C	Powertrain Control Module (PCM)
P0833	**DTC P0833**	B	Powertrain Control Module (PCM)

DTC P0500

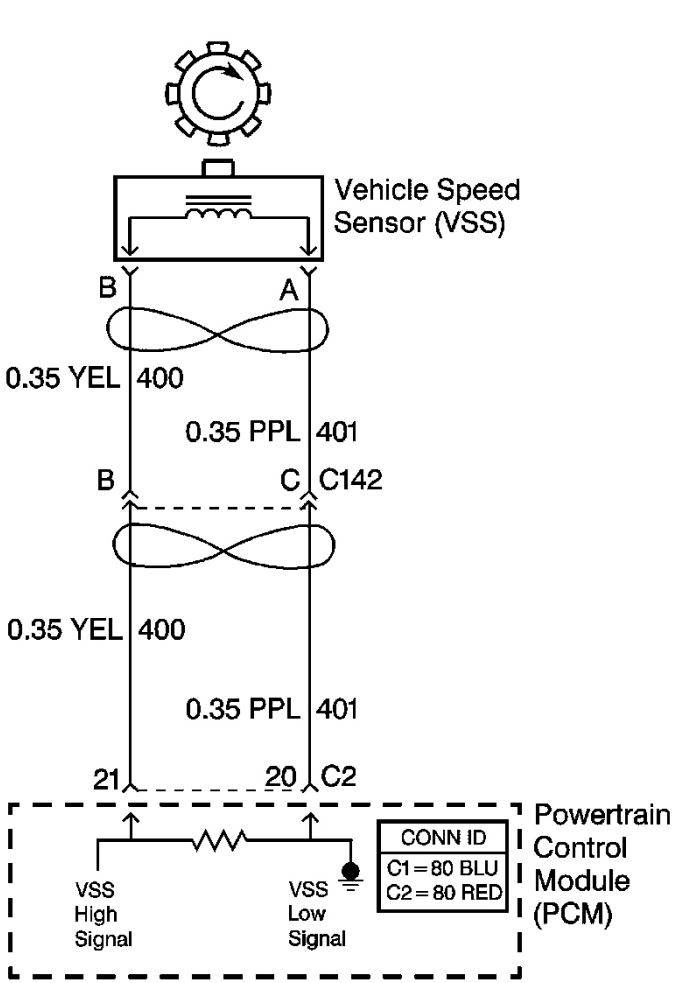

Fig. 6: DTC P0500 Schematics
Courtesy of GENERAL MOTORS CORP.

Circuit Description

cardiagn.com

Vehicle speed information is provided to the powertrain control module (PCM) by the vehicle speed sensor (VSS). The VSS is a permanent magnet generator that is mounted on the transmission and produces a pulsing voltage. The AC voltage amplitude and frequency increases with vehicle speed. The PCM converts the pulsing voltage into km/h (mph). The PCM supplies the necessary signal to the instrument panel for speedometer, odometer operation and to the cruise control module. The PCM also supplies the signal to the body control module (BCM), and the electronic suspension control module, if equipped.

If the PCM detects no vehicle speed for 50 seconds, DTC P0500 sets. DTC P0500 is a type B DTC.

Conditions for Running the DTC

- No MAP sensor DTC P0106.
- No ECT sensor DTCs P0117 or P0118.
- No idle control system DTCs P0506 or P0507.
- No TP sensor DTCs P0120 or P0220.
- The ECT is 35°C (95°F) or greater.
- The engine speed is greater than 1,000 RPM.
- The TP angle is 5-100 percent.
- The MAP is 40-100 kPa when the A/C is OFF.
- The MAP is 45-100 kPa when the A/C is ON.
- All conditions are met for more than 2 seconds.

Conditions for Setting the DTC

The PCM detects no vehicle speed (0 km/h (0 mph)) for 50 seconds.

Action Taken When the DTC Sets

- The PCM illuminates the malfunction indicator lamp (MIL) during the second consecutive trip in which the Conditions for Setting the DTC are met.
- The PCM disables Cruise Control.
- The PCM commands the coolant fan ON.
- The PCM records the operating conditions when the Conditions for Setting the DTC are met. The PCM stores this information as Freeze Frame and Failure Records.
- The PCM stores DTC P0500 in PCM history during the second consecutive trip in which the Conditions for Setting the DTC are met.

Conditions for Clearing the MIL/DTC

- The PCM turns OFF the MIL during the third consecutive trip in which the diagnostic test runs and passes.
- A scan tool can clear the MIL/DTC.
- The PCM clears the DTC from PCM history if the vehicle completes 40 warm-up cycles without an

cardiagn.com

emission-related diagnostic fault occurring.

- The PCM cancels the DTC default actions when the fault no longer exists and the DTC passes.

Diagnostic Aids

Ensure the VSS is correctly torqued to the transmission housing.

Test Description

The numbers below refer to the step numbers on the diagnostic table.

4: The vehicle speed detector in the PCM and the VSS are matched in such a way that an open or a short to ground in the VSS low signal circuit will not usually cause a loss of speed signal or a DTC P0500 to set.

7: This step isolates the short between the VSS and the wiring.

9: The DMM will detect AC voltage if the VSS high signal circuit is shorted to ground.

DTC P0500

Step	Action	Value (s)	Yes	No
1	Did you perform the Diagnostic System Check - Engine Controls?	-	Go to **Step 2**	Go to **Diagnostic System Check - Engine Controls** in Engine Controls - 5.7L
2	**NOTE:** **In order to avoid damage to the drive axles, support the lower control arms in the normal horizontal position. Do not run the vehicle in gear with the wheels hanging down at full travel.** 1. Install a scan tool. 2. Turn ON the ignition with the engine OFF. **IMPORTANT:** **Record the Failure Records before clearing the DTCs. Using the Clear Info function erases the Failure Records from the PCM.** 3. Record the DTC Freeze Frame and Failure Records. 4. Clear the DTC.	0 km/h (0 mph)		

cardiagn.com

	5. Raise the drive wheels. 6. Start the engine. 7. Allow the engine to idle in gear. Does the scan tool display vehicle speed above the specified value?		Go to **Step 3**	Go to **Step 4**
3	1. Turn OFF the ignition. 2. Turn ON the ignition, with the engine OFF. 3. Review the Freeze Frame data and note the parameters. 4. Start the engine. 5. Operate the vehicle within the Freeze Frame Conditions and the Conditions for Running the DTC. Does the scan tool display vehicle speed above the specified value?	0 km/h (0 mph)	Go to **Intermittent Conditions** in Engine Controls - 5.7L	Go to **Step 4**
4	1. Turn OFF the ignition. 2. Disconnect the PCM. 3. Measure the resistance between the VSS low signal and the VSS high signal circuits. Is the resistance within the specified range?	966-2,200 ohm	Go to **Step 6**	Go to **Step 5**
5	Test the VSS high signal circuit and the VSS low signal circuit for the following conditions: • An open circuit or high resistance condition • VSS high signal circuit and VSS low signal circuit shorted together Refer to **Circuit Testing** in Wiring Systems. Did you find and correct a condition?	-	Go to **Step 13**	Go to **Step 10**
6	Measure the resistance between the VSS high signal circuit and ground. Is the resistance greater than the specified value?	50 K ohm	Go to **Step 9**	Go to **Step 7**
	1. Leave the DMM connected between the VSS high signal circuit and ground.			

cardiagn.com

7	2. Disconnect the VSS. 3. Measure the resistance between the VSS high signal circuit and ground. Is the resistance greater than the specified value?	50 K ohm	Go to **Step 10**	Go to **Step 8**
8	Repair the short to ground in the VSS high signal circuit. Refer to **Testing for Short to Ground** and **Wiring Repairs** in Wiring Systems. Did you complete the repair?	-	Go to **Step 13**	-
9	1. Connect the DMM between the VSS low signal and the VSS high signal circuits. 2. Measure the AC voltage with the DMM while rotating the drive wheels by hand. Is the AC voltage equal to or greater than the specified value?	0.5 V	Go to **Step 12**	Go to **Step 10**
10	1. Remove the VSS. 2. Inspect the VSS and the VSS rotor for the following conditions: • VSS damage • VSS rotor damage • Excessive air gap between the VSS rotor and the VSS • Incorrect alignment between the VSS and the VSS rotor 3. Repair or replace any of the above items as necessary. Did you find and correct a condition?	-	Go to **Step 13**	Go to **Step 11**
11	Replace the VSS. Did you complete the repair?	-	Go to **Step 13**	-
12	Replace the PCM. Refer to **Powertrain Control Module (PCM) Replacement** in Engine Controls - 5.7L. Is the action complete?	-	Go to **Step 13**	-
	Perform the following procedure in order to verify the repair: 1. Select DTC. 2. Select Clear Info.			

cardiagn.com

13	3. Operate the vehicle in order to achieve a vehicle speed of greater than 3 km/h (2 mph) for 2 seconds. 4. Select Specific DTC. 5. Enter DTC P0500. Has the test run and passed?	-	Go to **Step 14**	Go to **Step 2**
14	With the scan tool, observe the stored information, capture info and DTC info. Does the scan tool display any DTCs that you have not diagnosed?	-	Go to **Diagnostic Trouble Code (DTC) List** in Engine Controls - 5.7L	System OK

DTC P0712

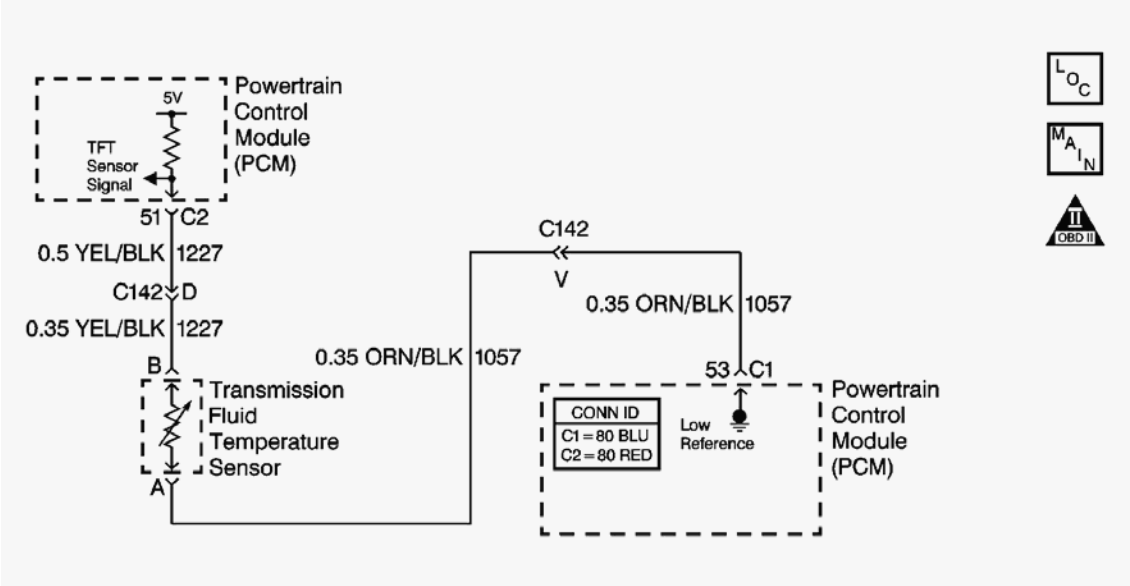

Fig. 7: DTC P0712 Schematics
Courtesy of GENERAL MOTORS CORP.

Circuit Description

IMPORTANT: This diagnostic procedure is for manual transmission vehicles with RPO VD1 and/or RPO Z06.

The transmission fluid temperature (TFT) sensor contains a semiconductor device which changes the resistance based on the temperature, a thermistor. The TFT sensor has a signal circuit and a ground circuit. The powertrain control module (PCM) applies a voltage, approximately 5 volts, on the signal circuit to the sensor. The PCM monitors the changes in this voltage caused by changes in the resistance of the sensor in order to determine he fluid temperature.

cardiagn.com

When the PCM senses a signal voltage lower than the normal operating range of the sensor, DTC P0712 sets. DTC P0712 is a type C DTC.

Conditions for Running the DTC

The engine is running.

Conditions for Setting the DTC

- The transmission fluid temperature is greater than 145°C (299°F).
- All conditions are met for 10 seconds.

Action Taken When the DTC Sets

- The PCM stores the DTC information into memory when the diagnostic runs and fails.
- The PCM does not illuminate the malfunction indicator lamp (MIL).
- The PCM records the operating conditions when the Conditions for Setting the DTC are met. The PCM stores this information as Failure Records.
- A message is displayed on the Drivers Information Center.
- The PCM stores DTC P0712 in PCM history.

Conditions for Clearing the DTC

- A scan tool can clear the DTC.
- The PCM clears the DTC from PCM history if the vehicle completes 40 warm-up cycles without a non-emission-related diagnostic fault occurring.
- The PCM cancels the DTC default actions when the fault no longer exists and the DTC passes.

Diagnostic Aids

IMPORTANT:

- **Remove any debris from the PCM connector surfaces before servicing the PCM. Inspect the PCM connector gaskets when diagnosing/replacing the module. Ensure that the gaskets are installed correctly. The gaskets prevent contaminate intrusion into the PCM.**
- **For any test that requires probing the PCM or a component harness connector, use the J 35616 GM terminal test kit. Using this kit prevents damage to the harness/component terminals. Refer to Using Connector Test Adapters in Wiring Systems.**

- If the engine has sat overnight, the transmission fluid temperature and the intake air temperature values should display within a few degrees of each other. If the temperatures are not within 3°C (5°F), refer to **Temperature vs Resistance** in Engine Controls - 5.7L.
- For an intermittent, refer to **Symptoms - Engine Controls** in Engine Controls - 5.7L.

cardiagn.com

Test Description

The numbers below refer to the step numbers on the diagnostic table.

2: This step determines if the malfunction is present.

3: Using the Freeze Frame/Failure Records data may aid in locating an intermittent condition. If you cannot duplicate the DTC, the information included in the Freeze Frame/Failure Records data can help determine how many miles since the DTC set. The Fail Counter and Pass Counter can also help determine how many ignition cycles the diagnostic reported a pass and/or a fail. Operate the vehicle within the same freeze frame conditions, such as RPM, load, vehicle speed, temperature, that you observed. This will isolate when the DTC failed.

4: A TFT below -30°C (-22°F) indicates the PCM and the TFT sensor wiring are functioning correctly.

5: Disconnecting the PCM enables the DMM to test continuity of the circuits. This aids in locating an open or a shorted circuit.

7: Inspect for proper terminal tension/connections at the PCM harness before replacing the PCM.

DTC P0712

Step	Action	Values	Yes	No
1	Did you perform the Diagnostic System Check - Engine Controls?	-	Go to **Step 2**	Go to **Diagnostic System Check - Engine Controls** in Engine Controls - 5.7L
2	1. Install a scan tool. 2. Turn ON the ignition, with the engine OFF. 3. Monitor the TFT sensor display on the Engine 3 Data List of the scan tool. Is the TFT sensor above the specified value?	150°C (302°F)	Go to **Step 4**	Go to **Step 3**
3	1. Turn ON the ignition, with the engine OFF. 2. Review the Freeze Frame/Failure Records data for this DTC and observe the parameters. 3. Turn OFF the ignition for 15 seconds. 4. Start the engine. 5. Operate the vehicle within the conditions required for this diagnostic to run, and as close to the conditions recorded in the Freeze Frame/Failure Records as possible. Special operating conditions that you need to meet before the PCM will run this diagnostic, where applicable, are listed in Conditions for Running the DTC. 6. Select the Diagnostic Trouble Code (DTC)	-		

cardiagn.com

	option, the Specific DTC option, then enter the DTC number using the scan tool. Does the scan tool indicate that the diagnostic failed this ignition?		Go to **Step 4**	Go to Diagnostic Aids
4	1. Disconnect the TFT sensor electrical connector. 2. Observe the TFT sensor display on the scan tool. Is the TFT sensor below the specified value?	-30°C (-22°F)	Go to **Step 6**	Go to **Step 5**
5	1. Turn OFF the ignition. 2. Disconnect the PCM connector C2. 3. Test the TFT sensor signal circuit for a short to a ground. Refer to **Testing for Short to Ground** in Wiring Systems. 4. If you find the TFT sensor signal circuit is grounded, repair the circuit as necessary. Refer to **Wiring Repairs** in Wiring Systems. Did you find the TFT sensor signal circuit grounded?	-	Go to **Step 8**	Go to **Step 7**
6	Replace the TFT sensor. Refer to **Transmission Fluid Temperature (TFT) Sensor Replacement** . Is the action complete?	-	Go to **Step 8**	-
7	Replace the PCM. Refer to **Powertrain Control Module (PCM) Replacement** in Engine Controls - 5.7L. Is the action complete?	-	Go to **Step 8**	-
8	Perform the following procedure in order to verify the repair: 1. Select DTC. 2. Select Clear Info. 3. Operate the vehicle under the following conditions: • Turn ON the ignition, with the engine OFF. • The Trans. Fluid Temp. must be 144°C (291°F) or less for 2 seconds. 4. Select Specific DTC. 5. Enter DTC P0712	-		

cardiagn.com

	Has the test run and passed?		Go to **Step 9**	Go to **Step 2**
9	With the scan tool, observe the stored information, capture info and DTC info. Does the scan tool display any DTCs that you have not diagnosed?	-	Go to **Diagnostic Trouble Code (DTC) List** in Engine Controls - 5.7L	System OK

DTC P0713

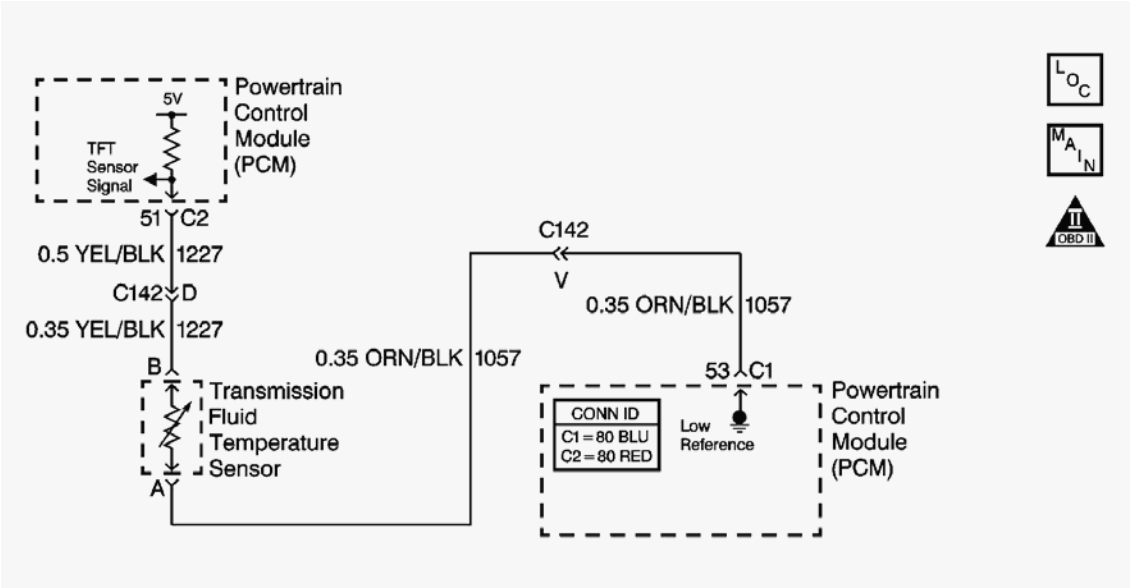

Fig. 8: DTC P0713 Schematics
Courtesy of GENERAL MOTORS CORP.

Circuit Description

IMPORTANT: This diagnostic procedure is for manual transmission vehicles with RPO VD1 and/or RPO Z06.

The transmission fluid temperature (TFT) sensor contains a semiconductor device which changes the resistance based on the temperature, a thermistor. The TFT sensor has a signal circuit and a ground circuit. The powertrain control module (PCM) applies a voltage, approximately 5.0 volts, on the signal circuit to the sensor. The PCM monitors the changes in this voltage caused by changes in the resistance of the sensor in order to determine the fluid temperature.

When the PCM senses a signal voltage higher than the normal operating range of the sensor, DTC P0713 sets. DTC P0713 is a type C DTC.

Conditions for Running the DTC

The engine is running.

cardiagn.com

Conditions for Setting the DTC

- The TFT is less than -35°C (-31°F).
- The conditions are met for 10 seconds.

Action Taken When the DTC Sets

- The PCM stores the DTC information into memory when the diagnostic runs and fails.
- The PCM does not illuminate the malfunction indicator lamp (MIL).
- The PCM records the operating conditions when the Conditions for Setting the DTC are met. The PCM stores this information as Failure Records.
- A message is displayed on the Drivers Information Center.
- The PCM stores DTC P0713 in PCM history.

Conditions for Clearing the DTC

- A scan tool can clear the DTC.
- The PCM clears the DTC from PCM history if the vehicle completes 40 warm-up cycles without a non-emission-related diagnostic fault occurring.
- The PCM cancels the DTC default actions when the fault no longer exists and the DTC passes.

Diagnostic Aids

IMPORTANT:

- **Remove any debris from the PCM connector surfaces before servicing the PCM. Inspect the PCM connector gaskets when diagnosing/replacing the module. Ensure that the gaskets are installed correctly. The gaskets prevent contaminate intrusion into the PCM.**
- **For any test that requires probing the PCM or a component harness connector, use the J 35616 GM terminal test kit. Using this kit prevents damage to the harness/component terminals. Refer to Using Connector Test Adapters in Wiring Systems.**

- If the engine has sat overnight, the transmission fluid temperature and intake air temperature values should display within a few degrees of each other. If the temperatures are not within 3°C (5°F), refer to **Temperature vs Resistance** in Engine Controls - 5.7L.
- For an intermittent, refer to **Symptoms - Engine Controls** in Engine Controls - 5.7L.

Test Description

The numbers below refer to the step numbers on the diagnostic table.

2: This step determines if the malfunction is present.

3: Using the Freeze Frame/Failure Records data may aid in locating an intermittent condition. If you cannot duplicate the DTC, the information included in the Freeze Frame/Failure Records data can help

cardiagn.com

determine how many miles since the DTC set. The Fail Counter and Pass Counter can also help determine how many ignition cycles the diagnostic reported a pass and/or a fail. Operate the vehicle within the same freeze frame conditions, such as RPM, load, vehicle speed, temperature, that you observed. This will isolate when the DTC failed.

4: A TFT above 139°C (282°F) indicates that the PCM and TFT sensor wiring is functioning correctly.

5: A TFT above 139°C (282°F) indicates that the PCM and TFT sensor signal circuit is functioning correctly.

6: Disconnecting the PCM allows using the DMM in order to test continuity of the circuits. This aids in locating an open or a shorted circuit.

8: Disconnecting the PCM allows using the DMM in order to test continuity of the circuits. This aids in locating an open or a shorted circuit.

11: Inspect for proper terminal tension/connections at the PCM harness before replacing the PCM.

DTC P0713

Step	Action	Values	Yes	No
1	Did you perform the Diagnostic System Check - Engine Controls?	-	Go to **Step 2**	Go to **Diagnostic System Check - Engine Controls** in Engine Controls - 5.7L
2	1. Install a scan tool. 2. Turn ON the ignition, with the engine OFF. 3. Monitor the TFT sensor display on the Engine 3 Data List of the scan tool. Is the TFT sensor below the specified value?	-39°C (-38°F)	Go to **Step 4**	Go to **Step 3**
3	1. Turn ON the ignition, with the engine OFF. 2. Review the Freeze Frame/Failure Records data for this DTC and observe the parameters. 3. Turn OFF the ignition for 15 seconds. 4. Start the engine. 5. Operate the vehicle within the conditions required for this diagnostic to run, and as close to the conditions recorded in the Freeze Frame/Failure Records as possible. Special operating conditions that you need to meet before the PCM will run this diagnostic, where applicable, are listed in Conditions for Running the DTC. 6. Select the Diagnostic Trouble Code (DTC) option, the Specific DTC option, then enter the DTC number using the scan tool.	-		

cardiagn.com

	Does the scan tool indicate that the diagnostic failed this ignition?		Go to **Step 4**	Go to Diagnostic Aids
4	1. Disconnect the TFT sensor electrical connector. 2. Connect a 3 amp fused jumper wire between the signal circuit of the TFT sensor and the low reference circuit of the TFT sensor. 3. Observe the Transmission Fluid Temperature parameter on the scan tool. Is the TFT sensor above the specified value?	150°C (284°F)	Go to **Step 9**	Go to **Step 5**
5	Connect a fused jumper wire from the TFT sensor signal circuit to a ground. Is the TFT sensor at the specified value?	150°C (284°F)	Go to **Step 8**	Go to **Step 6**
6	1. Turn OFF the ignition. 2. Disconnect the PCM connector C2. 3. Test the TFT sensor signal circuit for an open. Refer to **Testing for Continuity** in Wiring Systems. Is the TFT sensor signal circuit open?	-	Go to **Step 7**	Go to **Step 11**
7	Repair the TFT sensor signal circuit. Refer to **Wiring Repairs** in Wiring Systems. Is the action complete?	-	Go to **Step 14**	-
8	1. Turn OFF the ignition. 2. Disconnect the PCM connector C1. 3. Test the TFT sensor ground circuit for an open. Refer to **Circuit Testing** in Wiring Systems. Is the TFT sensor ground circuit open?	-	Go to **Step 10**	Go to **Step 11**
9	Replace the TFT sensor. Refer to **Transmission Fluid Temperature (TFT) Sensor Replacement** . Is the action complete?	-	Go to **Step 14**	-
10	Repair the TFT sensor ground circuit. Refer to **Wiring Repairs** in Wiring Systems. Is the action complete?	-	Go to **Step 14**	-
11	Test for a short to voltage on the signal circuit. Refer to **Testing for a Short to Voltage** and **Wiring Repairs** in Wiring Systems. Did you find and correct the condition?	-	Go to **Step 14**	Go to **Step 12**
	Inspect for poor connections at the PCM. Refer to **Testing for Intermittent Conditions and Poor**			

cardiagn.com

12	**Connections** and **Repairing Connector Terminals** in Wiring Systems. Did find and correct the condition?	-	Go to **Step 14**	Go to **Step 13**
13	Replace the PCM. Refer to **Powertrain Control Module (PCM) Replacement** in Engine Controls - 5.7L. Is the action complete?	-	Go to **Step 14**	-
14	Perform the following procedure in order to verify the repair: 1. Select DTC. 2. Select Clear Info. 3. Operate the vehicle under the following conditions: • Turn ON the ignition, with the engine OFF. • The Trans. Fluid Temp. must be greater than -40°C (-40°F) for 6 seconds. 4. Select Specific DTC. 5. Enter DTC P0713. Has the test run and passed?	-	Go to **Step 15**	Go to **Step 2**
15	With the scan tool, observe the stored information, capture info and DTC info. Does the scan tool display any DTCs that you have not diagnosed?	-	Go to **Diagnostic Trouble Code (DTC) List** in Engine Controls - 5.7L	System OK

DTC P0801

cardiagn.com

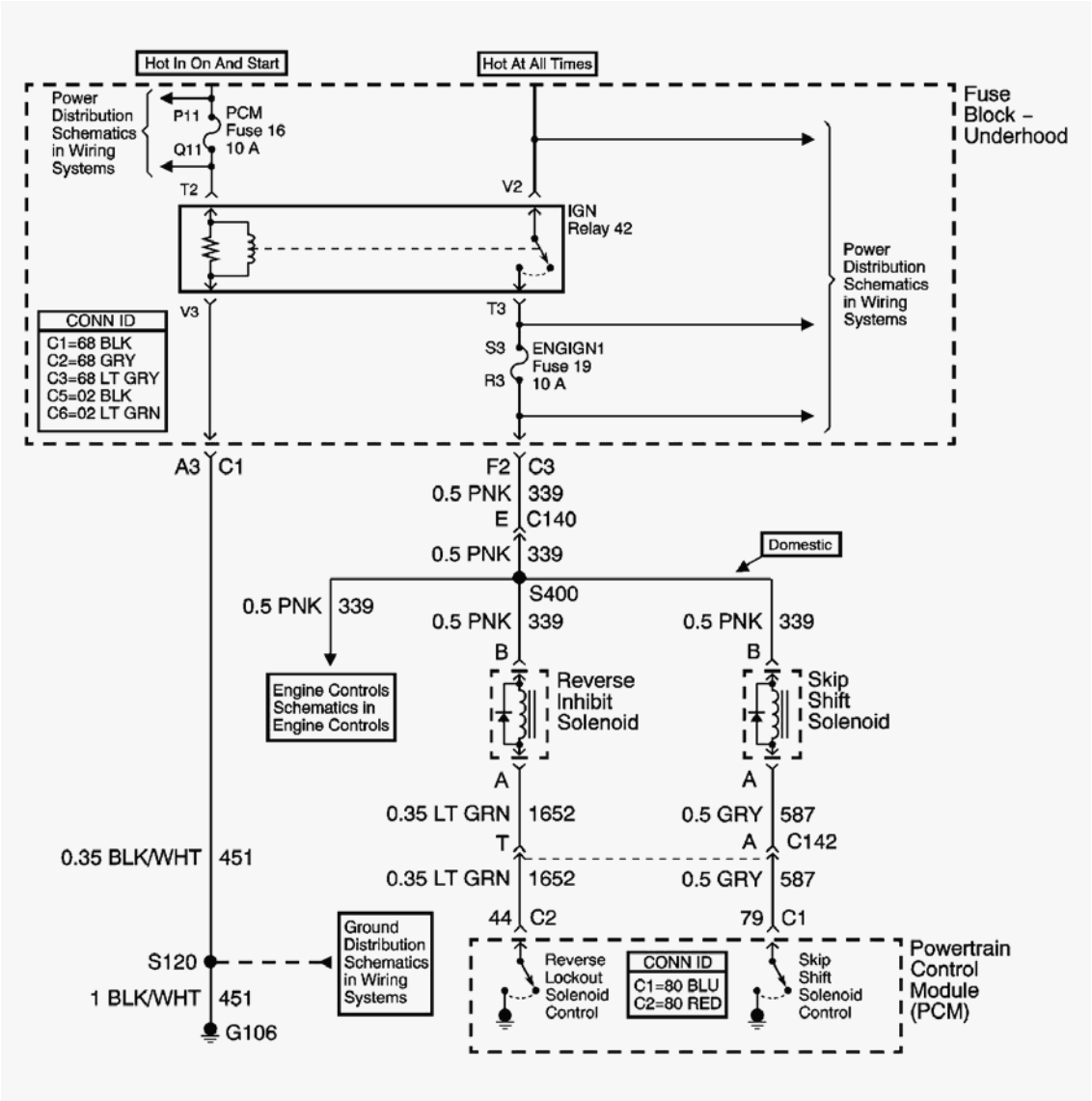

Fig. 9: DTC P0801 Schematics
Courtesy of GENERAL MOTORS CORP.

Circuit Description

The reverse inhibit solenoid is a safety feature which prevents an inadvertent shift into reverse at speeds above 5 km/h (3 mph). With the ignition ON battery voltage is supplied directly to the reverse inhibit solenoid, which is also known as the reverse lockout solenoid. The powertrain control module (PCM) controls the solenoid by grounding the control circuit via an internal switch called a driver. The driver supplies the ground for the component being controlled. Each driver has a fault line which the PCM monitors. When the PCM commands a component ON, the voltage of the control circuit should be low, near 0 volts. When the PCM commands the control circuit to a component OFF, the voltage potential of the circuit should be high, near battery voltage. If the internal fault detection circuit senses a voltage other than what is expected, the fault line status changes, causing DTC P0801 to set. DTC P0801 is a type C DTC.

cardiagn.com

Conditions for Running the DTC

- The engine is running.
- The vehicle speed is less than 3 km/h (2 mph).

Conditions for Setting the DTC

- The PCM detects that the commanded state of the driver and the actual state of the control circuit do not match.
- Condition must exist for a minimum of 5 seconds.

Action Taken When the DTC Sets

- The PCM stores the DTC information into memory when the diagnostic runs and fails.
- The PCM does not illuminate the malfunction indicator lamp (MIL).
- The PCM records the operating conditions when the Conditions for Setting the DTC are met. The PCM stores this information as Failure Records.
- The PCM stores DTC P0801 in PCM history.

Conditions for Clearing the DTC

- A scan tool can clear the DTC.
- The PCM clears the DTC from PCM history if the vehicle completes 40 warm-up cycles without a non-emission-related diagnostic fault occurring.
- The PCM cancels the DTC default actions when the fault no longer exists and the DTC passes.

Diagnostic Aids

- Remove any debris from the PCM connector surfaces before servicing the PCM. Inspect the PCM connector gaskets when diagnosing/replacing the PCM. Ensure that the gaskets are installed correctly. The gaskets prevent contaminate intrusion into the PCM.
- For any test that requires probing the PCM or a component harness connector, use the **J 35616** connector test adapter kit. Using this kit prevents damage to the harness/component terminals. Refer to **Using Connector Test Adapters** in Wiring Systems.
- Low system voltage can cause this DTC to set. When reviewing captured data, verify if a low system voltage condition was present at the time the DTC was stored in memory.
- For an intermittent condition, refer to **Testing for Intermittent Conditions and Poor Connections** in Wiring Systems

Test Description

The numbers below refer to the step numbers on the diagnostic table.

2: Listen for an audible click when the reverse inhibit solenoid operates. Command both the ON and OFF states. Repeat the commands as necessary.

cardiagn.com

3: Tests for voltage at the coil side of the reverse inhibit solenoid. The ENG IGN 1 fuse supplies power to the coil side of the reverse inhibit solenoid.

5: Verifies that the PCM is providing ground to the reverse inhibit solenoid.

6: Tests if ground is constantly being applied to the reverse inhibit solenoid.

DTC P0801

Step	Action	Yes	No
1	Did you perform the Diagnostic System Check - Engine Controls?	Go to **Step 2**	Go to **Diagnostic System Check - Engine Controls** in Engine Controls - 5.7L
2	1. Install a scan tool. 2. Turn ON the ignition, with the engine OFF. 3. With a scan tool, command the reverse inhibit solenoid ON and OFF. Does the reverse inhibit solenoid turn ON and OFF?	Go to **Step 3**	Go to **Step 4**
3	1. Observe the Freeze Frame and/or Failure records data for this DTC. 2. Turn OFF the ignition for 30 seconds. 3. Start the engine. 4. Operate the vehicle within the Conditions for Running the DTC as specified in the supporting text. Does the DTC reset?	Go to **Step 4**	Go to **Testing for Intermittent Conditions and Poor Connections** in Wiring Systems
4	1. Turn OFF the ignition. 2. Disconnect the reverse inhibit solenoid. 3. Turn ON the ignition, with the engine OFF. 4. Probe the ignition 1 voltage circuit of the reverse inhibit solenoid with a test lamp that is connected to ground. Does the test lamp illuminate?	Go to **Step 5**	Go to **Step 11**
5	1. Connect a test lamp between the control circuit of the reverse inhibit solenoid and the ignition 1 voltage circuit of the reverse inhibit solenoid. 2. With a scan tool, command the reverse inhibit solenoid ON and OFF.		

cardiagn.com

	Does the test lamp turn ON and OFF?	Go to **Step 9**	Go to **Step 6**
6	Does the test lamp remain illuminated with each command?	Go to **Step 8**	Go to **Step 7**
7	Test the control circuit of the reverse inhibit solenoid for a short to voltage or an open. Refer to **Circuit Testing** and **Wiring Repairs** in Wiring Systems. Did you find and correct the condition?	Go to **Step 14**	Go to **Step 10**
8	Test the control circuit of the reverse inhibit solenoid for a short to ground. Refer to **Testing for Short to Ground** and **Wiring Repairs** in Wiring Systems. Did you find and correct the condition?	Go to **Step 14**	Go to **Step 10**
9	Inspect for poor connections at the reverse inhibit solenoid. Refer to **Testing for Intermittent Conditions and Poor Connections** and **Connector Repairs** in Wiring Systems. Did you find and correct the condition?	Go to **Step 14**	Go to **Step 12**
10	Inspect for poor connections at the harness connector of the PCM. Refer to **Testing for Intermittent Conditions and Poor Connections** and **Connector Repairs** in Wiring Systems. Did you find and correct the condition?	Go to **Step 14**	Go to **Step 13**
11	Test the ignition 1 voltage circuit of the reverse inhibit solenoid for an open or short to ground. Refer to **Wiring Repairs** in Wiring Systems. Did you complete the repair?	Go to **Step 14**	-
12	Replace the reverse inhibit solenoid. Refer to **Reverse Lockout Solenoid Replacement** . Did you find and correct the condition?	Go to **Step 14**	-
13	Replace the PCM. Refer to **Powertrain Control Module (PCM) Replacement** in Engine Controls - 5.7L. Did you complete the replacement?	Go to **Step 14**	-
14	Perform the following procedure in order to verify the repair: 1. Select DTC. 2. Select Clear Info. 3. Operate the vehicle. 4. Select Specific DTC. 5. Enter DTC P0801.		

cardiagn.com

	Has the test run and passed?	Go to **Step 15**	Go to **Step 2**
15	With the scan tool, observe the stored information, capture info and DTC info. Does the scan tool display any DTCs that you have not diagnosed?	Go to **Diagnostic Trouble Code (DTC) List** in Engine Controls - 5.7L	System OK

DTC P0803

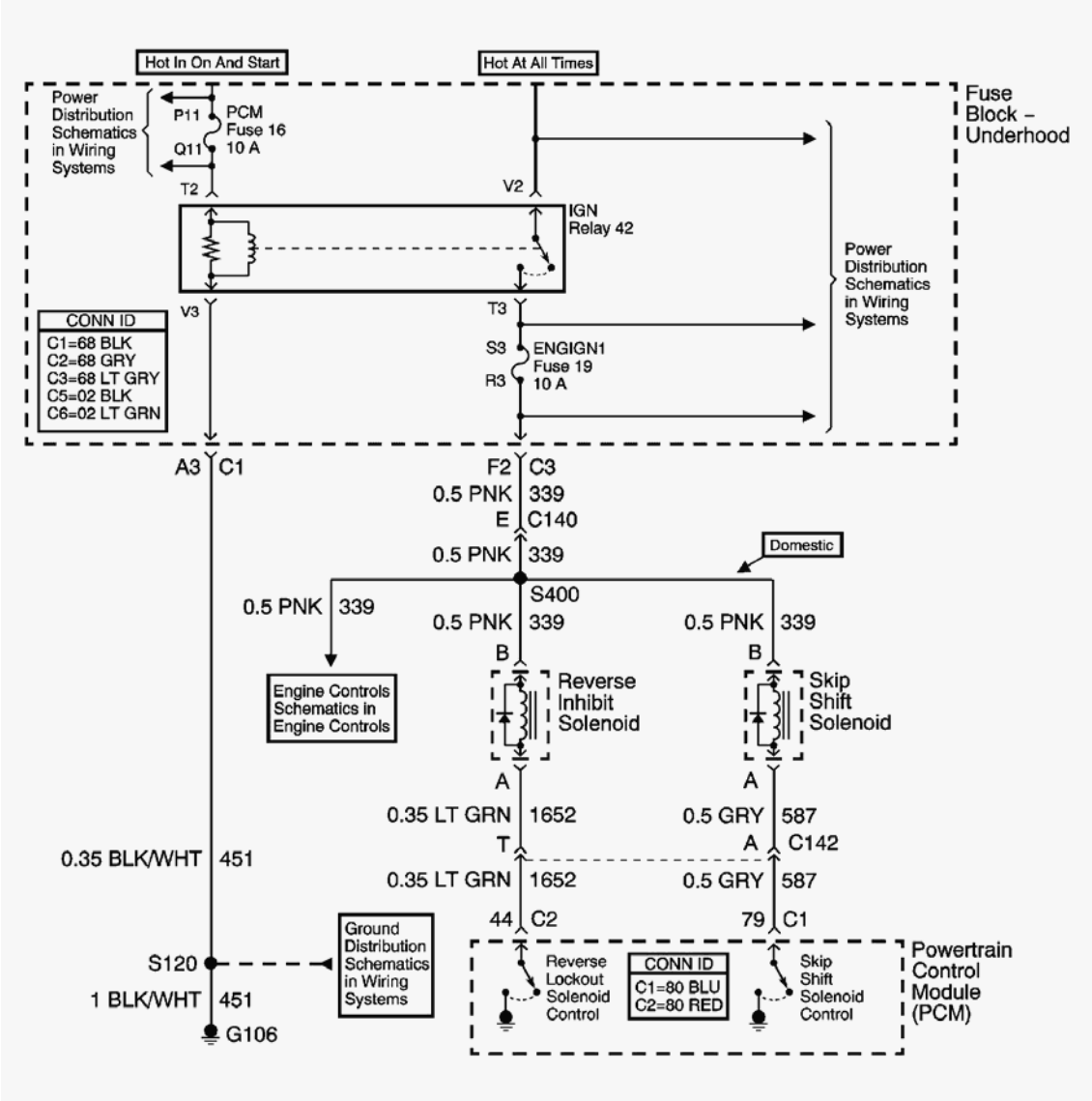

Fig. 10: DTC P0803 Schematics
Courtesy of GENERAL MOTORS CORP.

Circuit Description

cardiagn.com

The skip shift solenoid is a performance feature which forces the driver to shift from 1st gear to 4th gear during light acceleration and low engine load conditions. With the ignition ON battery voltage is supplied directly to the skip shift solenoid. The powertrain control module (PCM) controls the solenoid by grounding the control circuit via an internal switch called a driver. The driver supplies the ground for the component being controlled. Each driver has a fault line which the PCM monitors. When the PCM commands a component ON, the voltage of the control circuit should be low, near 0 volts. When the PCM commands the control circuit to a component OFF, the voltage potential of the circuit should be high, near battery voltage. If the internal fault detection circuit senses a voltage other than what is expected, the fault line status changes, causing DTC P0803 to set. DTC P0803 is a type B DTC.

Conditions for Enabling the 1-4 Upshift Solenoid

- The VSS is between 24-31 km/h (15-19 mph).
- The ECT is 77°C (171°F) or greater.
- The BARO is greater than 76 kPa.
- The accelerator pedal position (APP) is less than 21 percent.
- Once the 1-4 Upshift solenoid is enabled the solenoid will not be re-enabled until the vehicle speed returns to 1 km/h (1 mph) and the conditions for enabling the 1-4 Upshift solenoid are met.

Conditions for Running the DTC

The engine is running.

Conditions for Setting the DTC

- The PCM detects that the commanded state of the driver and the actual state of the control circuit do not match.
- Condition must exist for a minimum of 5 seconds.

Action Taken When the DTC Sets

- The PCM illuminates the malfunction indicator lamp (MIL) during the second consecutive trip in which the Conditions for Setting the DTC are met.
- The PCM disables cruise control.
- The PCM records the operating conditions when the Conditions for Setting the DTC are met. The PCM stores this information as Freeze Frame and Failure Records.
- The PCM stores DTC P0803 in PCM history.

Conditions for Clearing the MIL/DTC

- The PCM turns OFF the MIL during the third consecutive trip in which the diagnostic test runs and passes.
- A scan tool can clear the MIL/DTC.
- The PCM clears the DTC from PCM history if the vehicle completes 40 warm-up cycles without an emission-related diagnostic fault occurring.

cardiagn.com

- The PCM cancels the DTC default actions when the fault no longer exists and the DTC passes.

Diagnostic Aids

- Remove any debris from the PCM connector surfaces before servicing the PCM. Inspect the PCM connector gaskets when diagnosing/replacing the PCM. Ensure that the gaskets are installed correctly. The gaskets prevent contaminate intrusion into the PCM.
- For any test that requires probing the PCM or a component harness connector, use the **J 35616** connector test adapter kit. Using this kit prevents damage to the harness/component terminals. Refer to **Using Connector Test Adapters** in Wiring Systems.
- Low system voltage can cause this DTC to set. When reviewing captured data, verify if a low system voltage condition was present at the time the DTC was stored in memory.
- For an intermittent condition, refer to **Testing for Intermittent Conditions and Poor Connections** in Wiring Systems.

Test Description

The numbers below refer to the step numbers on the diagnostic table.

2: Listen for an audible click when the skip shift solenoid operates. Command both the ON and OFF states. Repeat the commands as necessary.

4: Tests for voltage at the coil side of the skip shift solenoid. The ENG IGN1 fuse supplies power to the coil side of the skip shift solenoid.

5: Verifies that the PCM is providing ground to the skip shift solenoid.

6: Tests if ground is constantly being applied to the skip shift solenoid.

DTC P0803

Step	Action	Yes	No
1	Did you perform the Diagnostic System Check - Engine Controls?	Go to **Step 2**	Go to **Diagnostic System Check - Engine Controls** in Engine Controls - 5.7L
2	1. Install a scan tool. 2. Turn ON the ignition, with the engine OFF. 3. With a scan tool, command the skip shift solenoid ON and OFF. Does the skip shift solenoid turn ON and OFF?	Go to **Step 3**	Go to **Step 4**
	1. Observe the Freeze Frame and/or Failure records data for this DTC. 2. Turn OFF the ignition for 30 seconds. 3. Start the engine. 4. Operate the vehicle within the Conditions		

cardiagn.com

3	for Running the DTC as specified in the supporting text or as close to the Freeze Frame and/or Failure records data that you observed. Does the DTC fail this ignition?	Go to **Step 4**	Go to **Testing for Intermittent Conditions and Poor Connections** in Wiring Systems
4	1. Turn OFF the ignition. 2. Disconnect the skip shift solenoid. 3. Turn ON the ignition, with the engine OFF. 4. Probe the ignition 1 voltage circuit of the skip shift solenoid with a test lamp that is connected to a good ground. Does the test lamp illuminate?	Go to **Step 5**	Go to **Step 11**
5	1. Connect a test lamp between the control circuit of the skip shift solenoid and the ignition 1 voltage circuit of the skip shift solenoid. 2. With a scan tool, command the skip shift solenoid ON and OFF. Does the test lamp turn ON and OFF?	Go to **Step 9**	Go to **Step 6**
6	Does the test lamp remain illuminated with each command?	Go to **Step 8**	Go to **Step 7**
7	Test the control circuit of the skip shift solenoid for a short to voltage or an open. Refer to **Circuit Testing** and **Wiring Repairs** in Wiring Systems. Did you find and correct the condition?	Go to **Step 14**	Go to **Step 10**
8	Test the control circuit of the skip shift solenoid for a short to ground. Refer to **Testing for Short to Ground** and **Wiring Repairs** in Wiring Systems. Did you find and correct the condition?	Go to **Step 14**	Go to **Step 10**
9	Inspect for poor connections at the skip shift solenoid. Refer to **Testing for Intermittent Conditions and Poor Connections** and **Connector Repairs** in Wiring Systems. Did you find and correct the condition?	Go to **Step 14**	Go to **Step 12**
10	Inspect for poor connections at the harness connector of the PCM. Refer to **Testing for Intermittent Conditions and Poor Connections** and **Connector Repairs** in Wiring		

cardiagn.com

	Systems. Did you find and correct the condition?	Go to **Step 14**	Go to **Step 13**
11	Repair the ignition 1 voltage circuit of the skip shift solenoid. Refer to **Wiring Repairs** in Wiring Systems. Did you complete the repair?	Go to **Step 14**	-
12	Replace the skip shift solenoid. Refer to **Gear Select/Skip Shift Solenoid Replacement** . Did you complete the replacement?	Go to **Step 14**	-
13	Replace the PCM. Refer to **Powertrain Control Module (PCM) Replacement** in Engine Controls - 5.7L. Did you complete the replacement?	Go to **Step 14**	-
14	Perform the following procedure in order to verify the repair: 1. Select DTC. 2. Select Clear Info. 3. Operate the vehicle with the APP angle below 21%. 4. Select Specific DTC. 5. Enter DTC P0803. Has the test run and passed?	Go to **Step 15**	Go to **Step 2**
15	With the scan tool, observe the stored information, capture info and DTC info. Does the scan tool display any DTCs that you have not diagnosed?	Go to **Diagnostic Trouble Code (DTC) List** in Engine Controls - 5.7L	System OK

DTC P0804

cardiagn.com

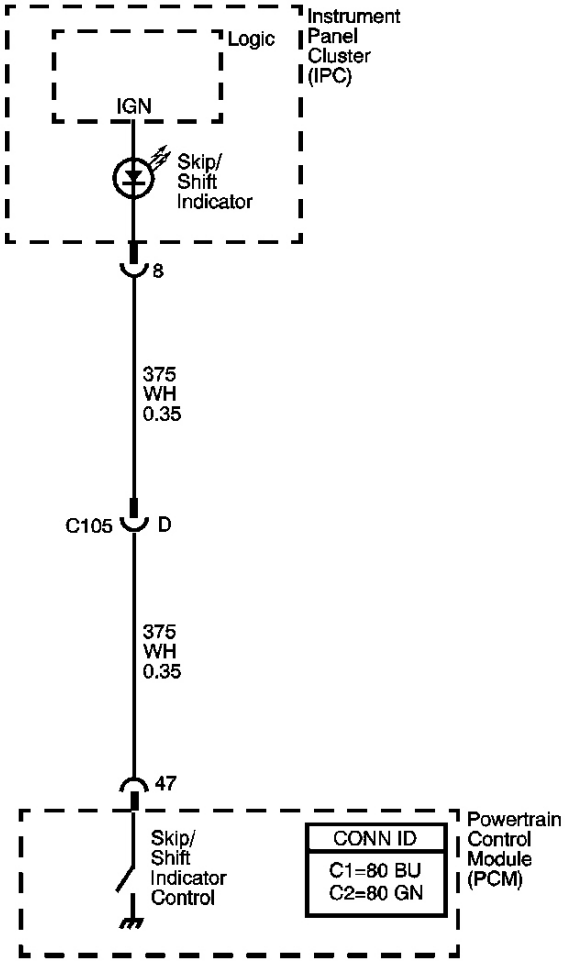

Fig. 11: DTC P0804 Schematics
Courtesy of GENERAL MOTORS CORP.

Circuit Description

With the ignition ON, battery voltage is supplied to the skip shift lamp through the instrument panel cluster (IPC). The powertrain control module turns on the skip shift lamp at the same time the skip shift solenoid is enabled. The powertrain control module (PCM) controls the skip shift lamp by grounding the control circuit via an internal switch called a driver. The driver supplies the ground for the component being controlled. Each driver has a fault line which the PCM monitors. When the PCM commands a component ON, the voltage of the control circuit should be low, near 0 volts. When the PCM commands the control circuit to a component OFF, the voltage potential of the circuit should be high, near battery voltage. If the internal fault detection circuit senses a voltage other than what is expected, the fault line status changes, causing DTC P0804 to set. DTC P0804 is a type C DTC.

cardiagn.com

Conditions for Enabling the Skip Shift Solenoid and Lamp

- The VSS is between 24-31 km/h (15-19 mph).
- The ECT is 77°C (171°F) or greater.
- The BARO is greater than 76 kPa.
- The accelerator pedal position (APP) is less than 21 percent.
- Once the 1-4 Upshift solenoid is enabled the solenoid will not be re-enabled until the vehicle speed returns to 1 km/h (1 mph) and the conditions for enabling the 1-4 Upshift solenoid are met.

Conditions for Running the DTC

The engine is running.

Conditions for Setting the DTC

- The PCM detects that the commanded state of the driver and the actual state of the control circuit do not match.
- Condition must exist for a minimum of 5 seconds.

Action Taken When the DTC Sets

- The PCM stores the DTC information into memory when the diagnostic runs and fails.
- The PCM does not illuminate malfunction indicator lamp (MIL).
- The PCM records the operating conditions when the Conditions for Setting the DTC are met. The PCM stores this information as Failure Records.
- The PCM stores DTC P0804 in PCM history.

Conditions for Clearing the DTC

- A scan tool can clear the DTC.
- The PCM clears the DTC from PCM history if the vehicle completes 40 warm-up cycles without a non-emission-related diagnostic fault occurring.
- The PCM cancels the DTC default actions when the fault no longer exists and the DTC passes.

Diagnostic Aids

- Remove any debris from the PCM connector surfaces before servicing the PCM. Inspect the PCM connector gaskets when diagnosing/replacing the PCM. Ensure that the gaskets are installed correctly. The gaskets prevent contaminate intrusion into the PCM.
- For any test that requires probing the PCM or a component harness connector, use the **J 35616** connector test adapter kit. Using this kit prevents damage to the harness/component terminals. Refer to **Using Connector Test Adapters** in Wiring Systems.
- Low system voltage can cause this DTC to set. When reviewing captured data, verify if a low system voltage condition was present at the time the DTC was stored in memory.

cardiagn.com

- For an intermittent condition, refer to **Testing for Intermittent Conditions and Poor Connections** .

Test Description

The numbers below refer to the step numbers on the diagnostic table.

2: Watch for the skip shift lamp to illuminate. Command both the ON and OFF states. Repeat the commands as necessary.

5: Verifies that the powertrain control module (PCM) is providing ground to the skip shift lamp.

6: Tests if ground is constantly being applied to the skip shift lamp.

DTC P0804

Step	Action	Yes	No
1	Did you perform the Diagnostic System Check - Engine Controls?	Go to **Step 2**	Go to **Diagnostic System Check - Engine Controls** in Engine Controls - 5.7L
2	1. Install a scan tool. 2. Turn ON the ignition, with the engine OFF. 3. With a scan tool, command the skip shift lamp ON and OFF. Does the skip shift lamp turn ON and OFF?	Go to **Step 3**	Go to **Step 4**
3	1. Observe the Freeze Frame and/or Failure records data for this DTC. 2. Turn OFF the ignition for 30 seconds. 3. Start the engine. 4. Operate the vehicle within the Conditions for Running the DTC as specified in the supporting text or as close to the Freeze Frame and/or Failure records data that you observed. Does the DTC fail this ignition?	Go to **Step 4**	Go to **Testing for Intermittent Conditions and Poor Connections** Wiring Systems
4	1. Turn OFF the ignition. 2. Disconnect the skip shift lamp. 3. Turn ON the ignition, with the engine OFF. 4. Probe the ignition 1 voltage circuit of the skip shift lamp with a test lamp that is connected to a ground.		

cardiagn.com

	Does the test lamp illuminate?	Go to **Step 5**	Go to **Step 11**
5	1. Connect a test lamp between the control circuit of the skip shift lamp and the ignition 1 voltage circuit of the skip shift lamp. 2. With a scan tool, command the skip shift lamp ON and OFF. Does the test lamp turn ON and OFF?	Go to **Step 9**	Go to **Step 6**
6	Does the test lamp remain illuminated with each command?	Go to **Step 8**	Go to **Step 7**
7	Test the control circuit of the skip shift lamp for a short to voltage or an open. Refer to **Circuit Testing** and **Wiring Repairs** in Wiring Systems. Did you find and correct the condition?	Go to **Step 14**	Go to **Step 10**
8	Test the control circuit of the skip shift lamp for a short to ground. Refer to **Testing for Short to Ground** and **Wiring Repairs** in Wiring Systems. Did you find and correct the condition?	Go to **Step 14**	Go to **Step 10**
9	Inspect for poor connections at the skip shift lamp. Refer to **Testing for Intermittent Conditions and Poor Connections** and **Connector Repairs** in Wiring Systems. Did you find and correct the condition?	Go to **Step 14**	Go to **Step 12**
10	Inspect for poor connections at the harness connector of the PCM. Refer to **Testing for Intermittent Conditions and Poor Connections** and **Connector Repairs** in Wiring Systems. Did you find and correct the condition?	Go to **Step 14**	Go to **Step 13**
11	Repair the ignition 1 voltage circuit of the skip shift lamp. Refer to **Wiring Repairs** in Wiring Systems. Did you complete the repair?	Go to **Step 14**	-
12	Replace the skip shift lamp. Refer to **Instrument Panel Cluster (IPC) Indicator Lamp Replacement** in Instrument Panel, Gages and Console. Did you complete the replacement?	Go to **Step 14**	-
13	Replace the PCM. Refer to **Powertrain Control Module (PCM) Replacement** in Engine Controls. Did you complete the replacement?	Go to **Step 14**	-

cardiagn.com

14	Perform the following procedure in order to verify the repair: 1. Select DTC. 2. Select Clear Info. 3. Operate the vehicle. 4. Select Specific DTC. 5. Enter DTC P0804. Has the test run and passed?	Go to **Step 15**	Go to **Step 2**
15	With the scan tool, observe the stored information, capture info and DTC info. Does the scan tool display any DTCs that you have not diagnosed?	Go to **Diagnostic Trouble Code (DTC) List** in Engine Controls - 5.7L	System OK

DTC P0833

cardiagn.com

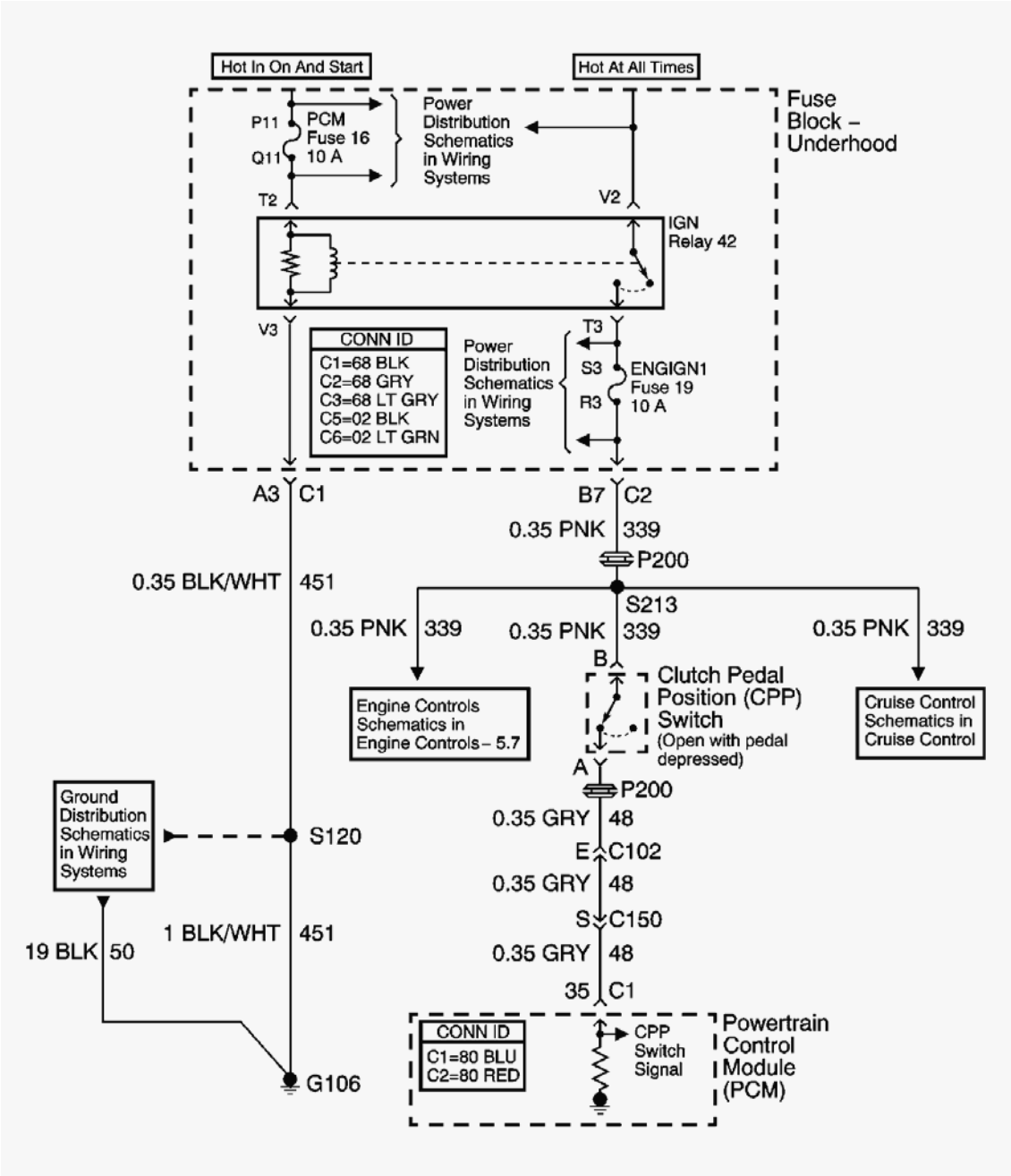

Fig. 12: DTC P0833 Schematics
Courtesy of GENERAL MOTORS CORP.

Circuit Description

Battery voltage is supplied from the Engine Ignition 1 fuse to the clutch switch. The clutch switch is a normally closed switch. When the clutch pedal is released, the clutch pedal position switch signal circuit is pulled up to B+. When the clutch pedal is applied, the switch opens, and the voltage drops to 0 volts.

If the powertrain control module (PCM) detects a specified number of vehicle speed transitions without

cardiagn.com

detecting a clutch switch transition, DTC P0833 sets. DTC P0833 is a type B DTC.

Conditions for Running the DTC

No VSS DTC P0500.

Conditions for Setting the DTC

- The vehicle speed goes from 0 km/h (0 mph) to greater than 39 km/h (24 mph) and back to 0 km/h (0 mph) for 2 seconds without the PCM detecting a clutch transition.
- This must occur 7 times before the diagnostic reports a fault.

Action Taken When the DTC Sets

- The PCM illuminates the malfunction indicator lamp (MIL) during the second consecutive trip in which the Conditions for Setting the DTC are met.
- The PCM disables cruise control.
- The PCM records the operating conditions at the time when the Conditions for Setting the DTC are met. The PCM stores this information as Freeze Frame and Failure Records.
- The PCM stores DTC P0833 in PCM history.

Conditions for Clearing the MIL/DTC

- The PCM turns OFF the MIL during the third consecutive trip in which the diagnostic test runs and passes.
- A scan tool can clear the MIL/DTC.
- The PCM clears the DTC from PCM history if the vehicle completes 40 warm-up cycles without an emission-related diagnostic fault occurring.
- The PCM cancels the DTC default actions when the fault no longer exists and the DTC passes.

Diagnostic Aids

IMPORTANT:

- **Remove any debris from the PCM connector surfaces before servicing the PCM. Inspect the PCM connector gaskets when diagnosing/replacing the module. Ensure that the gaskets are installed correctly. The gaskets prevent contaminate intrusion into the PCM.**
- **For any test that requires probing the PCM or a component harness connector, use the J 35616 GM terminal test kit. Using this kit prevents damage to the harness/component terminals. Refer to Using Connector Test Adapters in Wiring Systems.**

For clutch switch adjustment refer to **Clutch Pedal Position Switch Replacement** in Clutch.

Test Description

cardiagn.com

The numbers below refer to the step numbers on the diagnostic table.

1: This step ensures that the technician has performed a Diagnostic System Check on the Manual Transmission System.

2: This test confirms if the scan tool is receiving a clutch switch position signal.

3: This step inspects the clutch pedal connector and adjustment.

4: This step tests for a short to ground.

5: This step tests for voltage to the fuse.

6: This step tests for voltage to the clutch pedal position switch.

7: This step tests the clutch pedal position switch.

8: This step tests the Clutch Pedal Position switch signal circuit.

9: This step tests the Ignition 1 Voltage circuit for a short to ground.

10: This step tests the Clutch Pedal Position switch signal circuit for a ground.

17: This step ensures that the technician has verified the system is operating normally.

DTC P0833

Step	Action	Values	Yes	No
1	Did you perform the Diagnostic System Check - Engine Controls?	-	Go to **Step 2**	Go to **Diagnostic System Check - Engine Controls** in Engine Controls - 5.7L
2	1. Install a scan tool. 2. Turn ON the ignition, with the engine OFF. 3. Use the scan tool to monitor the clutch pedal position switch parameter. 4. Apply and release the clutch pedal several times. Does the scan tool indicate a change in state when the clutch pedal is either applied or released?	-	Go to **Intermittent Conditions** in Engine Controls - 5.7L	Go to **Step 3**
3	Inspect the adjustment of the clutch pedal position switch and the connector. Refer to **Clutch Pedal Cruise Control Release Switch Replacement** in Cruise Control. Does the clutch switch require adjustment or the connector require service?	-	Go to **Step 11**	Go to **Step 4**
4	Is the Engine Ignition 1 fuse open?	-	Go to **Step 9**	Go to **Step 5**
	1. Start the vehicle.			

cardiagn.com

5	2. Using a DMM, measure voltage at the Engine Ignition 1 fuse in the underhood fuse block. Does the DMM indicate the specified value?	B+	Go to **Step 6**	Go to **Step 12**
6	1. Turn OFF the ignition. 2. Disconnect the clutch pedal position switch connector. 3. Start the vehicle. 4. Using a DMM, measure the voltage at the Ignition 1 Voltage circuit. Does the DMM indicate the specified value?	B+	Go to **Step 7**	Go to **Step 13**
7	1. Use the scan tool to monitor the clutch pedal position switch parameter. 2. Put the transmission in Neutral. 3. Apply the parking brake. 4. Start the vehicle. 5. Use a fused jumper wire to repeatedly connect and disconnect pin A and pin B of the clutch pedal position switch electrical connector. Does the scan tool parameter display applied and released?	-	Go to **Step 15**	Go to **Step 8**
8	1. Turn the ignition switch OFF. 2. Disconnect C1 at the PCM. 3. Using the DMM, test for continuity and a short to voltage on the Clutch Pedal Position switch signal circuit. Did you find a short to voltage, high resistance or an open on the Clutch Pedal Position switch signal circuit?	-	Go to **Step 14**	Go to **Step 16**
9	1. Turn the ignition switch OFF. 2. Remove the Engine Ignition 1 fuse. 3. Disconnect the clutch pedal position switch connector and C1 at the PCM. 4. Using a DMM, test for a short to	-		

cardiagn.com

	ground on the Ignition 1 Voltage circuit at the switch connector. Is the Ignition 1 Voltage circuit grounded?		Go to **Step 13**	Go to **Step 10**
10	Using a DMM, test for a short to ground on the Clutch Pedal Position switch signal circuit at the switch connector. Is the Clutch Pedal Position switch signal circuit grounded?	-	Go to **Step 14**	Go to **Step 15**
11	Adjust the clutch pedal position switch or repair the connector as necessary. Refer to **Clutch Pedal Cruise Control Release Switch Replacement** in Cruise Control. Did you complete the repair?	-	Go to **Step 17**	-
12	**IMPORTANT:** **Voltage to this fuse is run through the Ignition relay. Refer to Power Distribution Schematics in Wiring Systems.** Repair the Power Distribution circuit to the Engine Ignition 1 fuse.Did you complete the repair?	-	Go to **Step 17**	-
13	Repair the open, high resistance or short to ground in the Ignition 1 Voltage circuit or a parallel circuit that uses the fuse. Did you complete the repair?	-	Go to **Step 17**	-
14	Repair the open, high resistance or short in the Clutch Pedal Position switch signal circuit. Did you complete the repair?	-	Go to **Step 17**	-
15	Replace the clutch pedal position switch. Refer to **Clutch Pedal Position Switch Replacement** in Clutch. Is the action complete?	-	Go to **Step 17**	-
16	Replace the PCM. Refer to **Powertrain Control Module (PCM) Replacement** in Engine Controls - 5.7L. Is the action complete?	-	Go to **Step 17**	-
17	Perform the following procedure in order to verify the repair: 1. Select DTC. 2. Select Clear Info. 3. Operate the vehicle from 0 km/h (0 mph) to above 38 km/h (24 mph)	-		

cardiagn.com

	then back to 0 km/h (0 mph) 7 times. 4. Select Specific DTC. 5. Enter DTC P0833. Has the test run and passed?		Go to **Step 18**	Go to **Step 2**
18	With the scan tool, observe the stored information, capture info and DTC info. Does the scan tool display any DTCs that you have not diagnosed?	-	Go to **Diagnostic Trouble Code (DTC) List** in Engine Controls - 5.7L	System OK

SYMPTOMS - MANUAL TRANSMISSION

Strategy Based Diagnostics

Review the system operations in order to familiarize yourself with the system functions. Refer to **Manual Transmission Description and Operation** .

Visual/Physical Inspection

- Inspect the easily accessible or visible system components for obvious damage or conditions which could cause the symptom.
- Inspect the manual transmission for the correct fluid level.
- Inspect the manual transmission for fluid leaks.
- Inspect the manual transmission for broken or loose transmission mounts.

Intermittent

Test the vehicle under the same conditions that the customer reported in order to verify the system is operating properly.

Symptom List

Refer to a symptom diagnostic procedure from the following list in order to diagnose the symptom:

- **Transmission Shifts Hard**
- **Transmission Gear Clash When Shifting Gears**
- **Transmission Noisy**
- **Transmission Jumps Out of Gear**
- **Transmission Does Not Shift into One Gear**
- **Transmission Locked in One Gear**
- **Transmission Clunk on Acceleration or Deceleration**
- **Transmission Fluid Leak Diagnosis**

cardiagn.com

TRANSMISSION SHIFTS HARD

Diagnostic Aids

An intermittent hard shift may be caused by an intermittent clutch condition. With a self adjusting clutch, the clutch may be in between adjustments and not give full clutch release. This might be felt by a low clutch pedal. After several applications, the clutch may adjust properly to give the proper pedal feel.

Test Description

The numbers below refer to the step numbers on the diagnostic table.

3: A static shift test is performed by shifting into all of the gear positions with the engine not operating. While performing the test one should note how the shift lever movement is felt. Also while shifting from one gear to the other feel for binding in the shift rails. You should be able to feel the detent plungers operating when coming out of a gear and going into a gear.

6: A dynamic shift test is performed by shifting into of the gear positions with the engine operating. Test for the correct mesh of the synchronizers and for the clutch releasing correctly. When shifting into a gear and out of the gear feel the shift detent plungers and for the synchronizers sleeve for moving freely.

8: The transmission uses DEXRON(R) III transmission fluid that allows proper synchronizer operation. The incorrect fluid may cause hard shifting, from varnish build up or not enough lubrication for proper synchronizer operation.

Transmission Shifts Hard

Step	Action	Yes	No
DEFINITION: The transmission does not shift smoothly or without difficulty from one gear to the other.			
1	Did you review the **Symptoms - Manual Transmission** operations and perform the necessary inspections?	Go to **Step 2**	Go to **Symptoms - Manual Transmission**
2	Inspect the clutch system for proper operation. Refer to **Clutch System Description and Operation** in Clutch. Did you find or repair the condition?	Go to **Step 12**	Go to **Step 3**
3	1. Perform a static shift test on the transmission. 2. Test for the following conditions: • Blockage preventing full shift lever movement • Excessive movement in the shift lever • Binding in the shift lever • Detent plungers or shift rails binding • Shift linkage binding • Shift linkage proper adjustment Are you able to shift into all gears?	Go to **Step 8**	Go to **Step 4**
	Remove the shift control shift closeout boot. Refer to **Shift**		

cardiagn.com

4	**Control Shift Closeout Boot Replacement** . Inspect for the following: • Loose mounting • Foreign debris Did you find and repair the condition?	Go to **Step 12**	Go to **Step 5**
5	Inspect for proper shift linkage adjustment. Refer to **Shift Linkage Adjustment** . Did you find and repair the condition?	Go to **Step 12**	Go to **Step 6**
6	1. Perform a dynamic shift test on the transmission. 2. Test for the following conditions: • Detent plungers or shift rails binding • Synchronizer sleeve binding • Gear clash into only one gear • Gear clash into all gears Did the transmission shift hard into all gears?	Go to **Step 7**	Go to **Step 11**
7	Inspect the transmission for the correct fluid level and the correct type of transmission fluid. Refer to **Transmission Fluid Replacement** . Is the transmission at the correct level and proper fluid being used?	Go to **Step 9**	Go to **Step 8**
8	Drain and fill the transmission with the correct type fluid. Refer to **Transmission Fluid Replacement** . Did you find and repair the condition?	Go to **Step 12**	Go to **Step 9**
9	Remove the transmission. Refer to **Transmission Replacement** . Inspect the clutch pressure plate and/or clutch driven plate. Is the clutch pressure plate and/or clutch driven plate worn or faulty?	Go to **Step 10**	Go to **Step 11**
10	Replace the clutch assembly. Refer to **Clutch Assembly Replacement** in Clutch. Did you find and repair the condition?	Go to **Step 12**	Go to **Step 11**
11	1. Disassemble the transmission. Refer to Transmission Disassemble (Y Car) Transmission Disassemble (CTSV) Transmission Disassemble (GTO) in the Transmission Unit Repair Manual. 2. Inspect the transmission for the following faulty components in the gear that is hard to shift or clashing: • Excessive synchronizers blocking ring to gear clearance • Synchronizer hub external splines worn or damaged • Excessive axial clearance in the speed gear		

cardiagn.com

	• Mainshaft to speed gear bearing or journal worn • Shift rail and the internal shift control lever components for wear or damage 3. Replace worn or damaged components as necessary. Did you find and repair the condition?	Go to **Step 11**	Go to Diagnostic Aids
12	Operate the system in order to verify the repair. Did you correct the condition?	System OK	Go to **Step 1**

TRANSMISSION GEAR CLASH WHEN SHIFTING GEARS

Diagnostic Aids

Gear clashing may be caused by shifting at too high of an engine RPM or by rushing the shift. If gear clashing is occurring in more than one gear, the clutch may not be releasing properly for proper synchronizer operation.

Test Description

The numbers below refer to the step numbers on the diagnostic table.

2: This step tests for the proper release of the clutch. If the clutch reserve is not correct, the mainshaft gears may be turning, causing the gear to clash.

5: This step inspects for the proper transmission fluid. The proper fluid is required for the correct lubrication of the synchronizers.

7: A static shift test is performed by shifting into all of the gear positions with the engine not operating. While performing the test, you should note how the shift lever movement feels. Also, while shifting from one gear to another, feel for binding in the shift rails. You should be able to feel the detent plungers operating when coming out of a gear and going into a gear. Excessive play in the gear shift lever may prevent the shift forks from fully engaging the synchronizer.

10: A dynamic shift test is performed by shifting into all of the gear positions with the engine operating. Test for the correct mesh of the synchronizers and for the clutch releasing correctly. Move the shift lever and feel for the synchronizer sleeve to just release from the gear then let up on the clutch pedal. Depress the clutch pedal and move the shift lever to engage that gear again. If the transmission shifts back into the gear without clashing, the clutch is releasing correctly and the synchronizer is operating. If clashing occurs, test another gear. If all gears clash, the clutch is not releasing correctly.

Transmission Gear Clash When Shifting Gears

Step	Action	Yes	No
DEFINITION: Noise from the transmission when shifting gears. A grinding or grating sound when the synchronizer sleeve is engaging with the selector teeth on the speed gear. A suspected internal transmission condition if the noise is only happens in one gear.			
1	Did you review the **Symptoms - Manual Transmission** and perform the necessary inspections?	Go to **Step 2**	Go to **Symptoms - Manual Transmission**

cardiagn.com

2	With the engine operating, does the transmission shift from neutral to any gear without the vehicle lurching or gear clashing?	Go to **Step 5**	Go to **Step 3**
3	Inspect for proper clutch operation. Refer to **Clutch System Description and Operation** in Clutch. Does the clutch operate properly?	Go to **Step 5**	Go to **Step 4**
4	Repair the clutch system. Refer to **Symptoms - Clutch** in Clutch. Did you find and repair the condition?	Go to **Step 12**	Go to **Step 5**
5	Inspect for the correct transmission fluid level and for the correct fluid. Refer to **Transmission Fluid Replacement** . Is the transmission fluid level correct and at the correct level?	Go to **Step 7**	Go to **Step 6**
6	Fill the transmission to the correct level or change the fluid if it is the incorrect type. Does the transmission still have gear clash?	Go to **Step 7**	Go to **Step 12**
7	1. Perform a static shift test on the transmission. 2. Test for the following conditions: • Blockage preventing full shift lever movement • Excessive movement in the shift lever • Binding in the shift lever • Detent plungers or shift rails binding • Shift linkage binding • Shift linkage proper adjustment Did the transmission shift smoothly into the gear that is clashing?	Go to **Step 10**	Go to **Step 8**
8	1. Remove the shift lever. 2. Inspect for damaged or worn components. Refer to **Shift Control Assembly Replacement** . Did you find and repair the condition?	Go to **Step 12**	Go to **Step 9**
9	Inspect for proper shift linkage adjustment. Refer to **Shift Linkage Adjustment** . Did you find and repair the condition?	Go to **Step 12**	Go to **Step 10**
10	1. Perform a dynamic shift test on the transmission. 2. Test for the following conditions: • Detent plungers or shift rails binding • Synchronizer sleeve binding • Gear clashing in more than the suspected gear Is the transmission hard to shift into all gears?	Go to **Transmission Shifts Hard**	Go to **Step 11**

cardiagn.com

11	1. Disassemble the transmission. Refer to Transmission Disassemble (Y Car) Transmission Disassemble (CTSV) Transmission Disassemble (GTO) in the Transmission Unit Repair Manual. 2. Inspect the following transmission components for the suspect gear that is clashing: • Excessive synchronizer blocking ring to gear clearance • Synchronizer sleeve to hub lash or rock excessive • Excessive axial clearance in the speed gear • Mainshaft to speed gear bearing or journal worn • Shift fork worn or damaged • Internal shift control worn or damaged • Mainshaft bearing worn or damaged • Input gear bearing or pilot bearing worn Did you find and repair the condition?	Go to **Step 12**	Go to Diagnostic Aids
12	Operate the system and verify the repair. Did you correct the condition?	System OK	Go to **Step 1**

TRANSMISSION NOISY

Diagnostic Aids

If the transmission is in neutral with the engine operating, and a whirling noise - neutral gear rattle - is heard outside the vehicle, this is a normal condition.

Test Description

The numbers below refer to the step numbers on the diagnostic table.

5: This step inspects for the correct transmission fluid level. If the transmission fluid level is excessively low, damage may have occurred to the transmission components.

7: This step inspects for the correct type of transmission fluid. The transmission uses DEXRON(R) III fluid. If the incorrect fluid was used, there may have been an overheating condition. Overheating may cause damage to the transmission components.

9: This step inspects for noise coming into the driver compartment. Improper sealing of the shift tower may be allowing normal transmission noise to be heard by the driver.

13: This step tests to determine if clutch components are making the noise. Depress the clutch pedal slowly and listen for the change in noise. If the noise changes while pressing the pedal, it may be a faulty clutch component. If the noise does not change until the clutch is completely disengaged, the transmission

cardiagn.com

component is faulty.

Transmission Noisy

Step	Action	Yes	No
DEFINITION: The transmission is making a noise. The noise may be a whine or a growl caused by faulty bearings or gears. The noise may also be caused from a faulty component causing a vibration noise.			
1	Did you review the **Symptoms - Manual Transmission** operations and perform the necessary inspections?	Go to **Step 2**	Go to **Symptoms - Manual Transmission**
2	Is the noise present while in neutral, with the engine operating?	Go to Diagnostic Aids	Go to **Step 3**
3	Is the noise present in all gears?	Go to **Step 5**	Go to **Step 4**
4	Is the noise present in just one gear?	Go to **Step 15**	Go to **Step 5**
5	Inspect the transmission fluid level. Is the fluid level correct?	Go to **Step 7**	Go to **Step 6**
6	Add transmission fluid. Refer to **Transmission Fluid Replacement** . Did you find and repair the condition?	Go to **Step 16**	Go to **Step 7**
7	Inspect the transmission for the correct fluid type. Refer to **Lubrication Specifications** . Is the transmission fluid the correct type?	Go to **Step 9**	Go to **Step 8**
8	Drain and fill the transmission with the correct type of fluid. Refer to **Transmission Fluid Replacement** . Did you find and repair the condition?	Go to **Step 16**	Go to **Step 9**
9	Inspect the shift tower boot. Is the closeout boot loose or damaged?	Go to **Step 10**	Go to **Step 11**
10	Position and tighten the shift tower boot to specifications. Refer to **Shift Control Boot Replacement** . Did you find and repair the condition?	Go to **Step 16**	Go to **Step 11**
11	Inspect for torque tube to transmission alignment and loose transmission mounting bolts. Are there any loose transmission mounting bolts?	Go to **Step 12**	Go to **Step 15**
12	Replace and tighten the transmission mounting bolts. Refer to **Fastener Tightening Specifications** . Is the noise still present?	Go to **Step 13**	Go to **Step 16**
13	With the engine operating, depress the clutch pedal. Is the noise still present?	Go to **Step 14**	Go to **Step 15**
	1. Remove the clutch. Refer to **Clutch Assembly Replacement** in Clutch. 2. Inspect the following components for being the cause of the		

cardiagn.com

14	noise: • The release bearing • The pilot bearing • The dual mass flywheel, if equipped • The pressure plate • The clutch disc • The input shaft bearing • The engine crankshaft end play Did you find and repair the condition?	Go to **Step 16**	Go to **Step 15**
15	1. Remove the transmission. Refer to **Transmission Replacement** . 2. Disassemble the transmission. Refer to Transmission Disassemble (Y Car) Transmission Disassemble (CTSV) Transmission Disassemble (GTO) in the Transmission Unit Repair Manual. Use the information in the Cleaning and Inspection section to determine if any of the transmission components are faulty. Did you find and repair the condition?	Go to **Step 16**	-
16	Operate the system in order to verify the repair. Did you correct the condition?	System OK	Go to **Step 1**

TRANSMISSION JUMPS OUT OF GEAR

Diagnostic Aids

If the transmission jumps out of gear during deceleration, inspect the components that may allow for the gears or shafts to tip. If the gears or shafts tip, the synchronizer sleeve can disengage from the selector teeth on the speed gear. If the transmission jumps out of gear during acceleration, inspect the components that may not allow full engagement of the synchronizer sleeve to the selector teeth on the speed gear. Insufficient engagement of the selector teeth under torque may cause the transmission to jump out of gear.

Test Description

The numbers below refer to the step numbers on the diagnostic table.

2: A static shift test is performed by shifting into all gear positions with the engine not operating. While performing the test, slowly move the shift lever. Feel for proper movement of the shift lever and transmission internal shift components.

5: A dynamic shift test is performed by shifting into all gear positions with the engine operating. Test for the correct mesh of the synchronizers sleeve and the speed gear selector teeth. Move the shift lever, and feel for the synchronizer sleeve to release from the gear, then let up on the clutch pedal. Depress the clutch pedal and move the shift lever to engage the gear again, to ensure full travel of the shift

cardiagn.com

components.

6: This step inspects for worn or damaged transmission or engine mounts. Loose mounts may cause a shock on the transmission allowing for gear disengagement.

7: This step inspects for the misalignment of the torque tube to transmission. Misalignment may put a bind on the input shaft, allowing for the input shaft or the mainshaft to tip.

9: This step inspects the pilot bearing and the pilot bearing journal on the input shaft. A worn pilot bearing or input shaft may allow the input shaft to tip, causing gear disengagement.

Transmission Jumps Out of Gear

Step	Action	Yes	No
DEFINITION: Gear disengagement occurs during acceleration or deceleration.			
1	Did you review the **Symptoms - Manual Transmission** operations and perform the necessary inspections?	Go to **Step 2**	Go to **Symptoms - Manual Transmission**
2	1. Perform a static shift test. 2. Test for the following conditions: • Blockage preventing full shift lever movement • Excessive movement in the shift lever • Detent plungers engaging in the shift rails • Synchronizer pressure pieces on the synchronizer sleeves • Shift linkage binding • Shift linkage proper adjustment Did the transmission shift completely into all gears?	Go to **Step 5**	Go to **Step 3**
3	Remove the shift control shift closeout boot. Refer to **Shift Control Shift Closeout Boot Replacement** . Inspect for the following: • Loose mounting • Foreign debris Did you find and repair the condition?	Go to **Step 11**	Go to **Step 4**
4	Inspect for proper shift linkage adjustment. Refer to **Shift Linkage Adjustment** . Did you find and repair the condition?	Go to **Step 11**	Go to **Step 5**
5	1. Perform a dynamic shift test on the transmission. 2. Test for the following conditions: • Synchronizer sleeve engagement to the speed gear selector teeth • Detent plungers engaging in the shift rails		

cardiagn.com

	Did the transmission shift completely into all gears?	Go to **Step 6**	Go to **Step 9**
6	Inspect the engine and/or transmission mounts. Refer to **Transmission Mount Replacement** in Rear Drive Axle and **Engine Mount Inspection** in Engine Mechanical - 5.7L. Did you find and repair the condition?	Go to **Step 11**	Go to **Step 7**
7	Inspect the clutch housing for loose bolts or misalignment. Are there any loose bolts or misalignment?	Go to **Step 10**	Go to **Step 9**
8	Tighten any loose housing bolts and/or align the housing. Refer to **Clutch Assembly Replacement** in Clutch. Did you find and repair the condition?	Go to **Step 11**	Go to **Step 9**
9	1. Remove the transmission. Refer to **Transmission Replacement** . 2. Remove the clutch assembly. Refer to **Clutch Assembly Replacement** in Clutch. 3. Inspect the pilot bearing for being faulty. 4. Inspect the input shaft for excessive wear at the pilot bearing. Did you find and repair the condition?	Go to **Step 11**	Go to **Step 10**
10	1. Disassemble the transmission. Refer to Transmission Disassemble (Y Car) Transmission Disassemble (CTSV) Transmission Disassemble (GTO) in the Transmission Unit Repair Manual. 2. Inspect the following components for wear or damage: • The shift rails • The detent plungers and springs • The shift forks • The synchronizer sleeve and speed gear selector teeth • The mainshaft to input shaft bearing and journals • The speed gear bearings and journals • The speed gear axial clearance • The mainshaft center and rear bearings Did you find and repair the condition?	Go to **Step 11**	Go to Diagnostic Aids
11	Operate the system in order to verify the repair. Did you correct the condition?	System OK	Go to **Step 1**

TRANSMISSION DOES NOT SHIFT INTO ONE GEAR

Diagnostic Aids

If the transmission shifts into gear and then jumps out of gear, refer to **Transmission Jumps Out of Gear** . If it

cardiagn.com

is an intermittent condition, other driveline components may be faulty.

Test Description

The numbers below refer to the step numbers on the diagnostic table.

2: This test is to confirm that the clutch is not slipping. During certain conditions, the clutch may slip and feel as though the transmission is not in gear.

3: A static shift test is performed by shifting into all gears with the engine not operating. While performing the test, you should note how the shift lever movement feels. Also feel for the shift rails moving freely, the detent plungers operating when coming out of a gear and going in the next gear, and the synchronizer sleeve movement.

6: A dynamic shift test is performed by shifting into all gears with the engine operating. Test for the correct mesh of the synchronizers sleeve and the speed gear selector teeth. Move the shift lever and feel for the synchronizer sleeve to just release from the gear, then let up on the clutch pedal. Depress the clutch pedal and move the shift lever to engage that gear again, to ensure full travel of the shift components.

Transmission Does Not Shift into One Gear

Step	Action	Yes	No
DEFINITION: The shift lever will not move into a particular gear position, or when in a gear position, power is not delivered through the transmission.			
1	Did you review the **Symptoms - Manual Transmission** and perform the necessary inspections?	Go to **Step 2**	Go to **Symptoms - Manual Transmission**
2	Inspect the clutch system for slipping. Refer to **Clutch Slipping** in Clutch. Is the clutch operating properly?	Go to **Step 2**	Go to **Clutch Assembly Replacement** in Clutch
3	1. Perform a static shift test on the transmission. 2. Test for the following conditions: • Blockage preventing full shift lever movement • Excessive movement in the shift lever • Binding in the shift lever • Detent plungers or shift rails binding • Synchronizer sleeve moving on the hub and pressure pieces • Shift linkage binding • Shift linkage proper adjustment Were you able to shift into the gear position with the concern?	Go to **Step 6**	Go to **Step 4**
	Remove the shift control shift closeout boot. Refer to **Shift Control Shift Closeout Boot Replacement** .		

cardiagn.com

4	Inspect for the following: • Loose mounting • Foreign debris Did you find and repair the condition?	Go to **Step 9**	Go to **Step 5**
5	Inspect for proper shift linkage adjustment. Refer to **Shift Linkage Adjustment** . Did you find and repair the condition?	Go to **Step 9**	Go to **Step 6**
6	1. Perform a dynamic shift test on the transmission. 2. Test for the following conditions: • Detent plungers or shift rails binding • Synchronizer sleeve binding • Synchronizer sleeve engaging on the speed gear selector teeth Were you able to shift into the gear position with the concern?	Go to **Step 8**	Go to **Step 7**
7	1. Remove the transmission. Refer to **Transmission Replacement** . 2. Disassemble the transmission. Refer to Transmission Disassemble (Y Car) Transmission Disassemble (CTSV) Transmission Disassemble (GTO) in the Transmission Unit Repair Manual. 3. Inspect the following transmission internal components for wear or damage: • The shift forks • The internal shift control lever Did you find and repair the condition?	Go to **Step 9**	Go to **Step 8**
8	1. Remove the transmission. Refer to **Transmission Replacement** . 2. Disassemble the transmission. Refer to Transmission Disassemble (Y Car) Transmission Disassemble (CTSV) Transmission Disassemble (GTO) in the Transmission Unit Repair Manual. 3. Inspect the following transmission internal components for wear or damage: • The synchronizer sleeve selector teeth • The speed gear selector teeth • The speed gear axial clearance for being excessive		

cardiagn.com

	• The speed gear to mainshaft bearings and journals • The countershaft for being broken • The mainshaft for being broken • The countershaft gear for being stripped • The mainshaft gear for being stripped Did you find and repair the condition?	Go to **Step 9**	Go to Diagnostic Aids
9	Operate the system in order to verify the repair. Did you correct the condition?	System OK	Go to **Step 1**

TRANSMISSION LOCKED IN ONE GEAR

Test Description

The numbers below refer to the step numbers on the diagnostic table.

2: This step is to ensure the use of the proper transmission fluid. DEXRON(R) III fluid is used to ensure proper synchronizer operation, and for sufficient lubrication. Improper fluid may cause the synchronizers to stick or cause overheating of the transmission components.

4: A static shift test is performed by shifting into all gears with the engine not operating. By confirming that the transmission can be shifted into all positions, ensures that the shift lever is not excessively worn or damaged.

6: A dynamic shift test is performed by shifting into all of the gear positions with the engine operating. Test to ensure that the internal shift components are properly functioning.

Transmission Locked in One Gear

Step	Action	Yes	No
DEFINITION: The transmission cannot be shifted out of a gear or the vehicle will not move because the transmission is locked.			
1	Did you review the **Symptoms - Manual Transmission** and perform the necessary inspections?	Go to **Step 2**	Go to **Symptoms - Manual Transmission**
2	Inspect for the correct type of transmission fluid. Is the correct type of transmission fluid being used?	Go to **Step 6**	Go to **Step 5**
3	Drain and fill the transmission with the correct type of fluid. Refer to **Transmission Fluid Replacement** . Did you find and repair the condition?	Go to **Step 9**	Go to **Step 6**
4	1. Perform a static shift test on the transmission. 2. Test for the shift lever moving to all positions. Were you able to shift into all positions?	Go to **Step 6**	Go to **Step 5**
	1. Remove the shift lever. Refer to **Shift Control Assembly Replacement** .		

cardiagn.com

5	2. Inspect for worn or faulty components. Did you find and repair the conditions?	Go to **Step 9**	Go to **Step 6**
6	1. Perform a dynamic shift test on the transmission. 2. Test for being able to shift in and out of the gear with the concern. Were you able to shift the transmission correctly?	Go to **Step 7**	Go to **Step 8**
7	1. Remove the transmission. Refer to **Transmission Replacement** . 2. Inspect the clutch system for the clutch not releasing properly. Refer to **Clutch System Description and Operation** in Clutch. Did you find and repair the condition?	Go to **Step 9**	Go to **Step 8**
8	1. Disassemble the transmission. Refer to Transmission Disassemble (Y Car) Transmission Disassemble (CTSV) Transmission Disassemble (GTO) in the Transmission Unit Repair Manual. 2. Inspect the following transmission internal components for wear or damage: • The shift rail • The internal shift control lever • The synchronizer components for being broken or faulty • The speed gears for being seized to the mainshaft Did you find and repair the conditions?	Go to **Step 9**	Go to Diagnostic Aids
9	Operate the system in order to verify the repair. Did you correct the condition?	System OK	Go to **Step 1**

TRANSMISSION CLUNK ON ACCELERATION OR DECELERATION

Diagnostic Aids

All manual transmissions have gear play that might cause a clunk. If the transmission is suspected of causing the clunk, compare it with a similar vehicle. An internal clunk in the transmission is usually caused by wear between two components, or from improper assembly, which would also cause other symptoms.

Test Description

The number below refers to the step number on the diagnostic table.

cardiagn.com

5: This step inspects the driveline components that may be the cause of the clunk noise. The noise may resonate to the transmission.

Transmission Clunk on Acceleration or Deceleration

Step	Action	Yes	No
DEFINITION: A clunk is heard and/or felt on acceleration or deceleration.			
1	Did you review the **Symptoms - Manual Transmission** and perform the necessary inspections?	Go to **Step 2**	Go to **Symptoms - Manual Transmission**
2	Inspect the engine mounts for being loose or damaged. Refer to **Engine Mount Inspection** in Engine Mechanical - 5.7L. Did you find and repair the condition?	Go to **Step 7**	Go to **Step 3**
3	Inspect the transmission mounts for being loose or damaged. Refer to **Transmission Mount Replacement** in Rear Drive Axle. Did you find and repair the condition?	Go to **Step 7**	Go to **Step 4**
4	Inspect the transmission to engine fasteners for being loose or missing. Refer to **Fastener Tightening Specifications** . Did you find and repair the condition?	Go to **Step 7**	Go to **Step 5**
5	Inspect the driveline for causing the clunk. Refer to **Diagnostic Starting Point - Propeller Shaft** in Propeller Shaft. Did you find and repair the condition?	Go to **Step 7**	Go to **Step 6**
6	1. Remove the transmission. Refer to **Transmission Replacement** . 2. Disassemble the transmission. Refer to Transmission Disassemble (Y Car) Transmission Disassemble (CTSV) Transmission Disassemble (GTO) in the Transmission Unit Repair Manual. 3. Inspect the following transmission components that maybe causing the clunk: • Faulty mainshaft bearings • Faulty countershaft bearings • Worn speed gear teeth • Worn countershaft gear teeth • Worn synchronizer sleeve to hub • Worn thrust washers and thrust surfaces on the speed gears or mainshaft Did you find and repair the condition?	Go to **Step 7**	Go to Diagnostic Aids
7	Operate the system in order to verify the repair. Did you correct the condition?	System OK	Go to **Step 1**

TRANSMISSION FLUID LEAK DIAGNOSIS

cardiagn.com

Diagnostic Aids

Using the incorrect type of transmission fluid may affect the sealing ability of the seals. Ensure the use of the correct type of transmission fluid. The incorrect type of sealer may not be compatible with the transmission fluid or may not have the correct characteristics for sealing the affected components. Ensure the use of the correct type of sealers. Refer to Sealers, Adhesives, and Lubricants in the Transmission Unit Repair Manual.

Test Description

The number below refers to the step number on the diagnostic table.

5: Use an approved method to clean the transmission to ensure the leak location is correctly identified. If using a powder method or dye method, ensure the products are compatible with the transmission fluid.

Transmission Fluid Leak Diagnosis

Step	Action	Yes	No
DEFINITION: Visible sign of the transmission fluid leaking from the transmission.			
1	Did you review the **Symptoms - Manual Transmission** and perform the necessary inspections?	Go to **Step 2**	Go to **Symptoms - Manual Transmission**
2	1. Inspect for the transmission fluid level higher than the recommended level. Refer to **Transmission Fluid Replacement** . 2. Adjust the transmission level if incorrect. Was the transmission fluid level too high?	Go to **Step 19**	Go to **Step 3**
3	Inspect the transmission vent for a blockage. Is the transmission vent blocked?	Go to **Step 4**	Go to **Step 5**
4	Repair or replace the transmission vent. Refer to **Transmission Vent Tube Replacement** . Did you find and repair the condition?	Go to **Step 19**	Go to **Step 5**
5	Verify the location of the leak. 1. Clean the transmission assembly. 2. Operate the vehicle for 24 km (15 mi), or until normal operating temperatures are reached. 3. Visual inspect or use the powder method or dye and black light method to locate the leak. Is the leak occurring at the drain or fill plug?	Go to **Step 6**	Go to **Step 7**
6	Replace the drain or fill plug. Refer to **Transmission Fluid Replacement** . Did you find and repair the condition?	Go to **Step 19**	Go to Diagnostic Aids
	Is the leak at the transmission output shaft seal?	Go to	

cardiagn.com

7		**Step 8**	Go to **Step 9**
8	Remove the output shaft seal and inspect for the following. Refer to Extension Housing Disassemble (Y Car) Extension Housing Disassemble (CTSV) and Extension Housing Assemble (Y Car) Extension Housing Assemble (CTSV) in Unit Repair. • Damaged or worn seal • Damaged seal bore • Improper installation • Cracks in the component • Propeller shaft yoke sealing surface is scratched, nicked, damaged, or worn • Loose or worn bearing causing excessive seal wear • Yoke flange nut loose Did you find and repair the condition?	Go to **Step 19**	Go to Diagnostic Aids
9	Is the leak at the front of the transmission?	Go to **Step 10**	Go to **Step 12**
10	1. Inspect for the leak at the input shaft seal. 2. Inspect for the following if the input shaft seal is leaking: • Damaged or worn seal • Damaged seal bore • Improper installation • Cracks in the component • Input shaft sealing surface is scratched, nicked, damaged or worn • Loose or worn bearing causing excessive seal wear 3. Replace the input shaft seal if leaking. Refer to the Adapter Plate section of Trans Case and Adapter Plate Disassemble (Y Car) Trans Case and Adapter Plate Disassemble (CTSV) Trans Case and Adapter Plate Disassemble (GTO) and Trans Case and Adapter Plate Assemble (Y Car) Trans Case and Adapter Plate Assemble (CTSV) Trans Case and Adapter Plate Assemble (GTO) in Unit Repair. Did you find and repair the condition?	Go to **Step 19**	Go to **Step 11**
11	1. Inspect the case for cracks or porosity. 2. Replace the transmission front case half if it is faulty. Refer to Transmission Disassemble (Y Car) Transmission Disassemble (CTSV) Transmission Disassemble (GTO) in the Transmission Unit Repair Manual.		

cardiagn.com

	Did you find and repair the condition?	Go to **Step 19**	Go to Diagnostic Aids
12	Is the leak at the backup light switch?	Go to **Step 13**	Go to **Step 15**
13	1. Remove the backup light switch. Refer to **Backup Lamp Switch Replacement** . 2. Inspect for the following: • Cross threaded or damaged threads • Insufficient sealant • Leaking switch • Improper installation Did you find and repair the condition?	Go to **Step 19**	Go to **Step 1**
14	1. Remove the shift shaft detent sleeve. Refer to Transmission Disassemble (Y Car) Transmission Disassemble (CTSV) Transmission Disassemble (GTO) and Transmission Assemble (Y Car) Transmission Assemble (CTSV) Transmission Assemble (GTO) in the Transmission Unit Repair Manual. 2. Inspect for the following: • Cross threaded or damaged threads • Insufficient sealant • Cracked sleeve or case • Improper installation Did you find and repair the condition?	Go to **Step 19**	Go to **Step 1**
15	Is the leak at the sealing flanges of the transmission case?	Go to **Step 16**	Go to **Step 17**
16	1. Remove the transmission. Refer to **Transmission Replacement** . 2. Disassemble the transmission. Refer to Transmission Disassemble (Y Car) Transmission Disassemble (CTSV) Transmission Disassemble (GTO) in the Transmission Unit Repair Manual. 3. Inspect the sealing surfaces. Refer to Trans Case and Adapter Plate Cleaning and Inspection (Y Car) Trans Case and Adapter Plate Cleaning and Inspection (CTSV) Trans Case and Adapter Plate Cleaning and Inspection (GTO) and Extension Housing Cleaning and Inspection in the Transmission Unit Repair Manual. Did you find and repair the condition?	Go to **Step 19**	Go to **Step 17**
17	Is the leak coming from a crack or porosity in the transmission case ?	Go to **Step 18**	Go to Diagnostic Aids

cardiagn.com

18	1. Remove the transmission. Refer to **Transmission Replacement** . 2. Disassemble the transmission. Refer to Transmission Disassemble (Y Car) Transmission Disassemble (CTSV) Transmission Disassemble (GTO) in the Transmission Unit Repair Manual. 3. Replace the faulty case. Refer to Transmission Assemble (Y Car) Transmission Assemble (CTSV) Transmission Assemble (GTO) in the Transmission Unit Repair Manual. Did you find and repair the condition?	Go to **Step 19**	Go to Diagnostic Aids
19	Operate the system in order to verify the repair. Did you correct the condition?	System OK	Go to **Step 1**

REPAIR INSTRUCTIONS

TRANSMISSION FLUID LEVEL INSPECTION

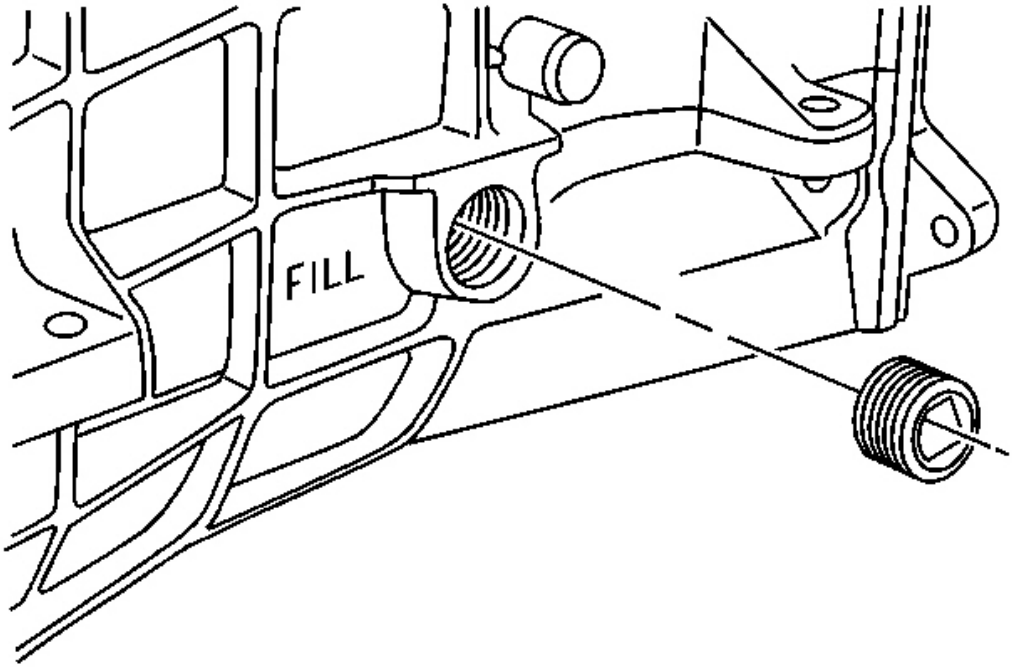

Fig. 13: Transmission Fluid Fill Plug Hole
Courtesy of GENERAL MOTORS CORP.

cardiagn.com

1. Raise and suitably support the vehicle; ensure that the vehicle is level. Refer to **Lifting and Jacking the Vehicle** in General Information.
2. Clean any dirt from around the fill plug hole.
3. Remove the transmission fluid fill plug hole.

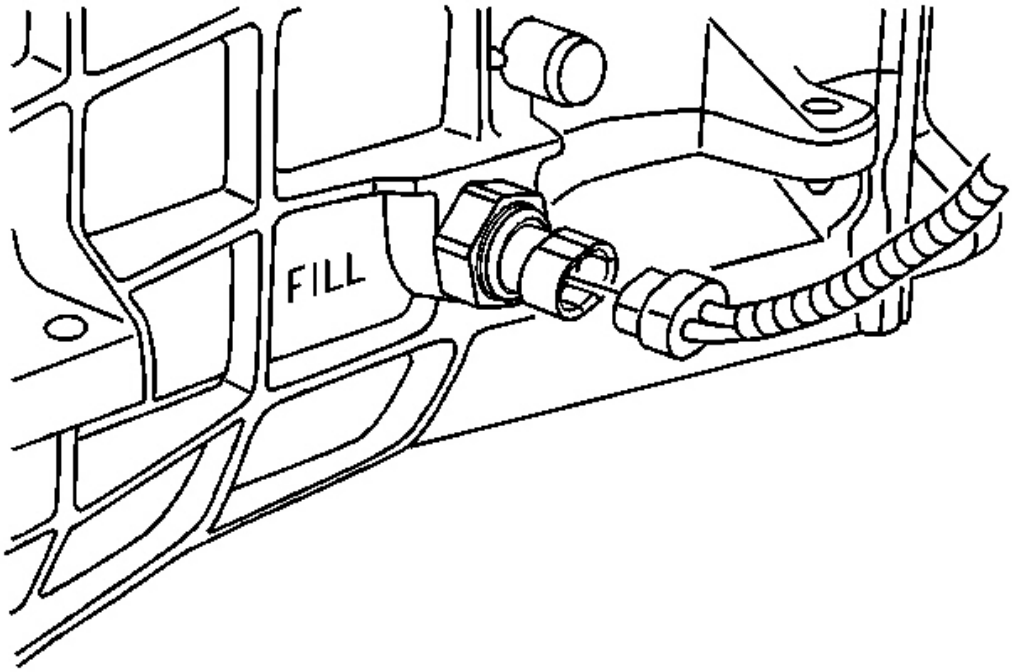

Fig. 14: TFT Sensor Electrical Connector
Courtesy of GENERAL MOTORS CORP.

4. If equipped, disconnect the transmission fluid temperature (TFT) sensor electrical connector.
5. Clean any dirt from around the TFT sensor.

cardiagn.com

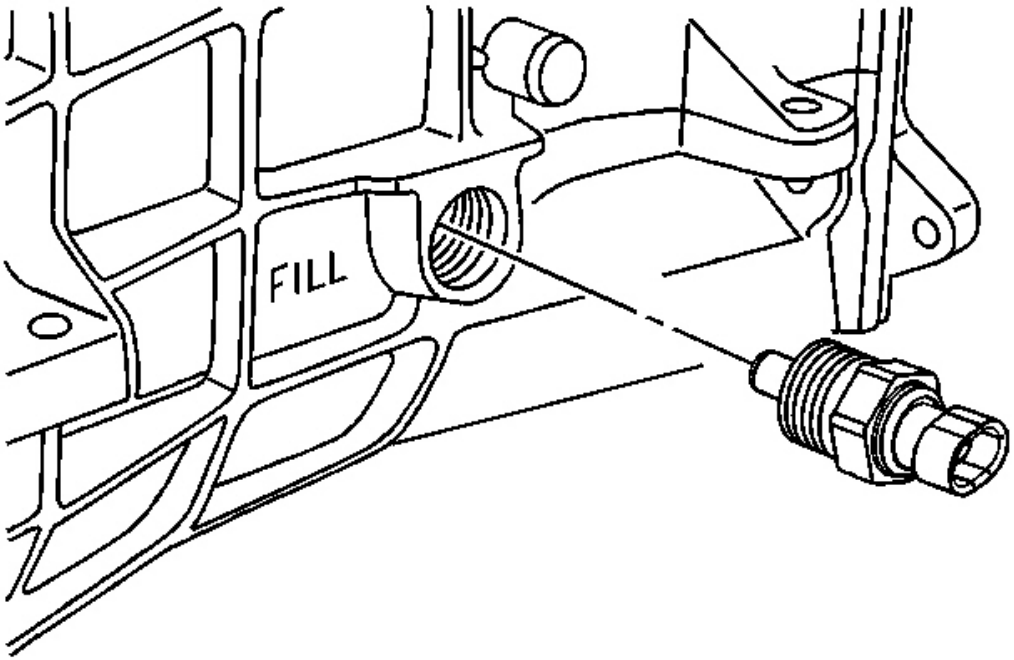

Fig. 15: Inspecting Transmission Fluid Level Is Even Bottom Of Fill Plug Hole
Courtesy of GENERAL MOTORS CORP.

6. If equipped, remove the TFT sensor from the transmission.
7. Inspect the transmission fluid level, ensure that the fluid level is even with the bottom of the fill plug hole.
8. Add Dexron(R) - III transmission fluid, if necessary.

cardiagn.com

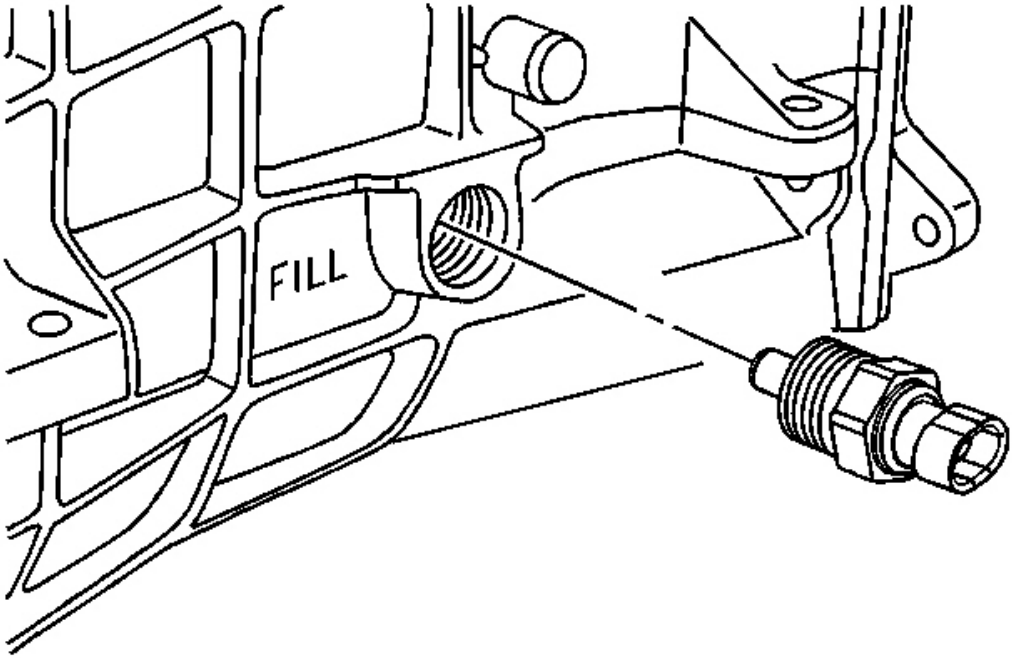

Fig. 16: Inspecting Transmission Fluid Level Is Even Bottom Of Fill Plug Hole
Courtesy of GENERAL MOTORS CORP.

NOTE: **Refer to Fastener Notice in Cautions and Notices.**

9. If equipped, install the TFT sensor to the transmission.

   Tighten: Tighten the TFT sensor to 27 N.m (20 lb ft).

cardiagn.com

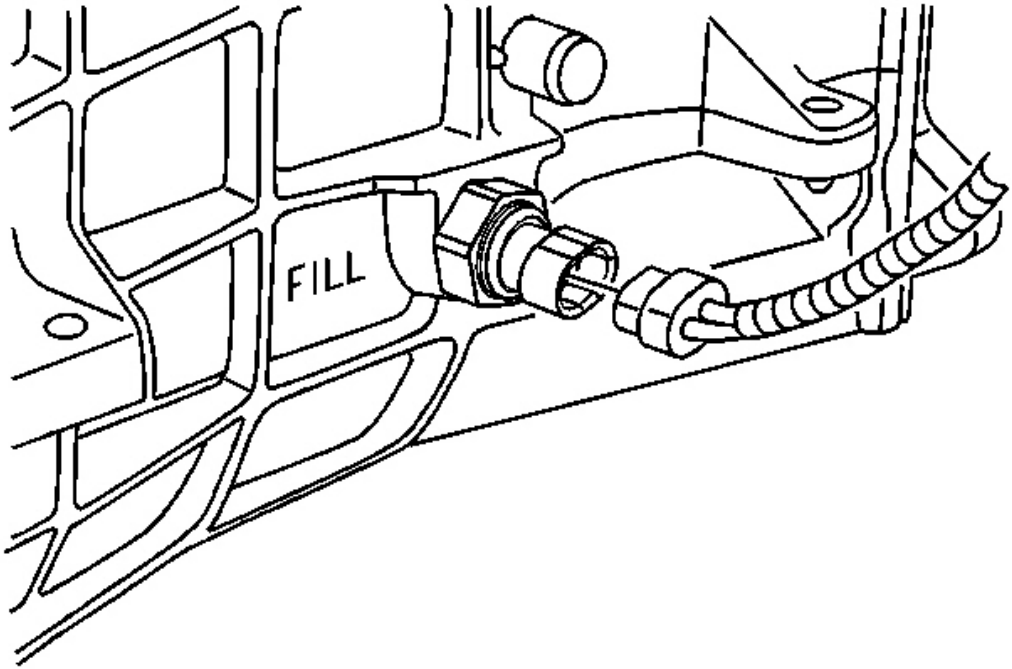

Fig. 17: TFT Sensor Electrical Connector
Courtesy of GENERAL MOTORS CORP.

10. If equipped, connect the TFT sensor electrical connector.

cardiagn.com

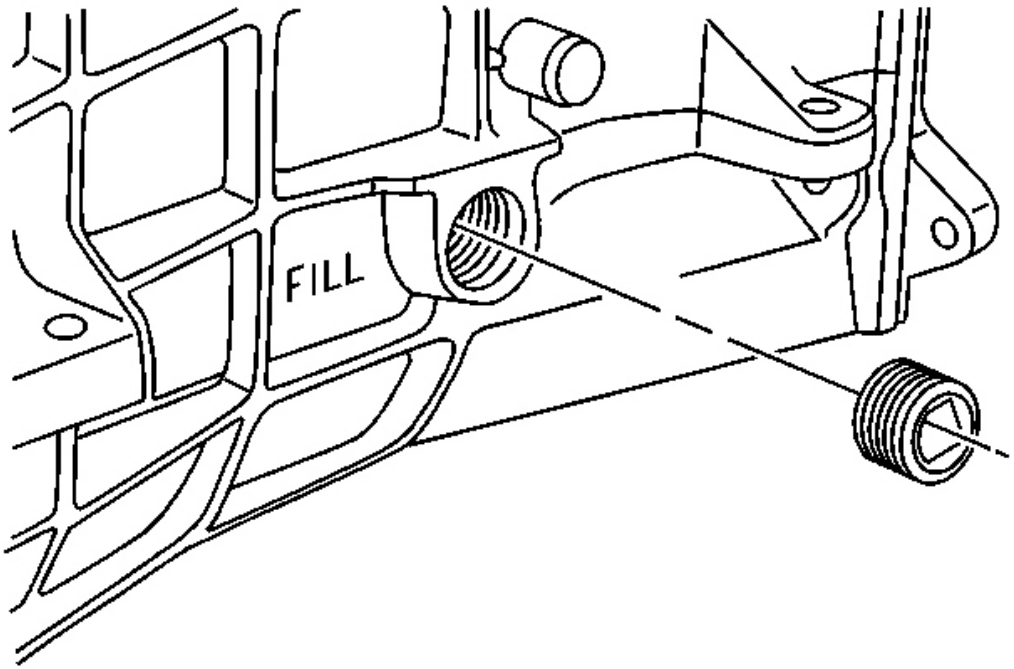

Fig. 18: Transmission Fluid Fill Plug Hole
Courtesy of GENERAL MOTORS CORP.

11. Install the transmission fluid fill plug hole.

    Tighten: Tighten the transmission fluid fill plug hole to 27 N.m (20 lb ft).

12. Lower the vehicle.

SHIFT CONTROL ASSEMBLY REPLACEMENT

Removal Procedure

cardiagn.com

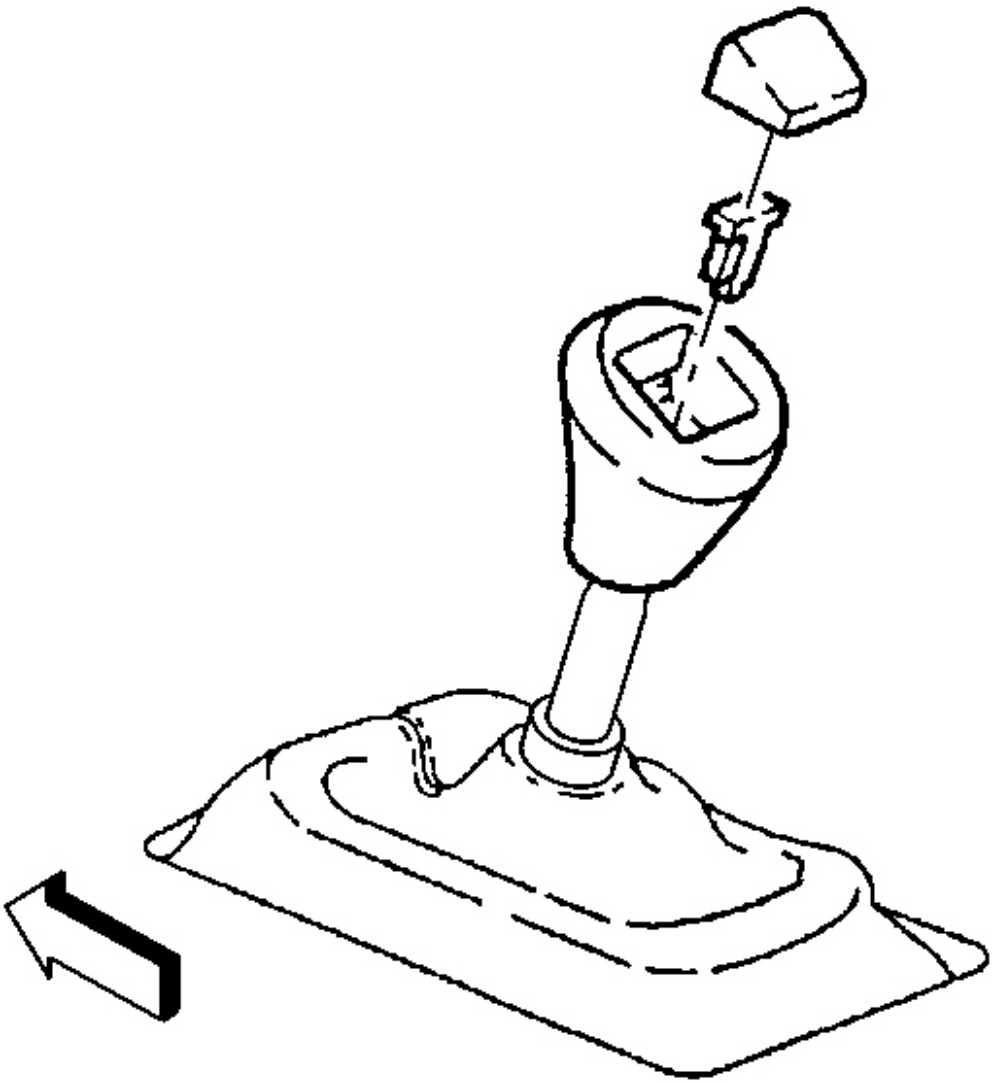

Fig. 19: Shift Control Knob Retainer & Button
Courtesy of GENERAL MOTORS CORP.

1. Remove the console. Refer to **Console Replacement** in Instrument Panel, Gages and Console.
2. Carefully pry off the shift control knob button.
3. Pry the shift control knob retainer out of the slots and remove the retainer.

cardiagn.com

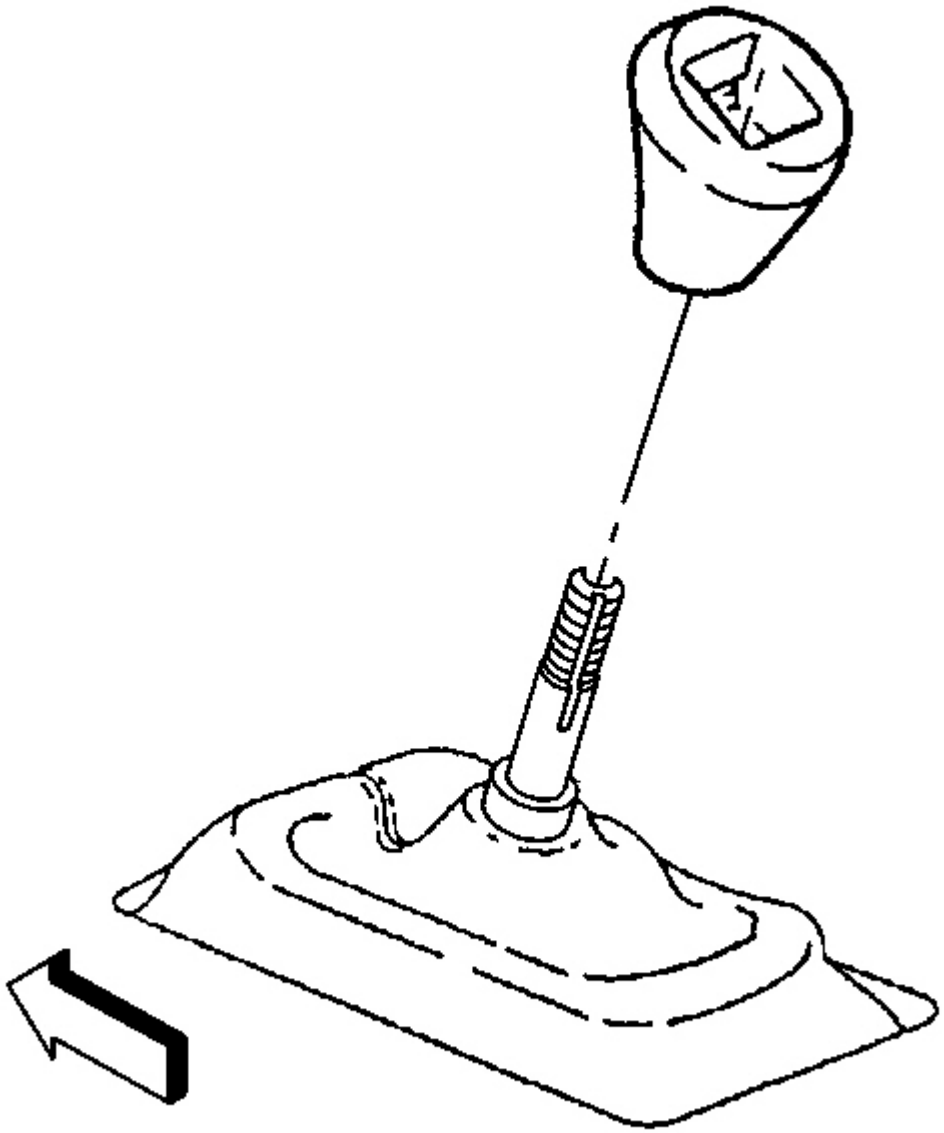

Fig. 20: Removing Gear Shift Knob
Courtesy of GENERAL MOTORS CORP.

4. Unscrew the shift control knob.

cardiagn.com

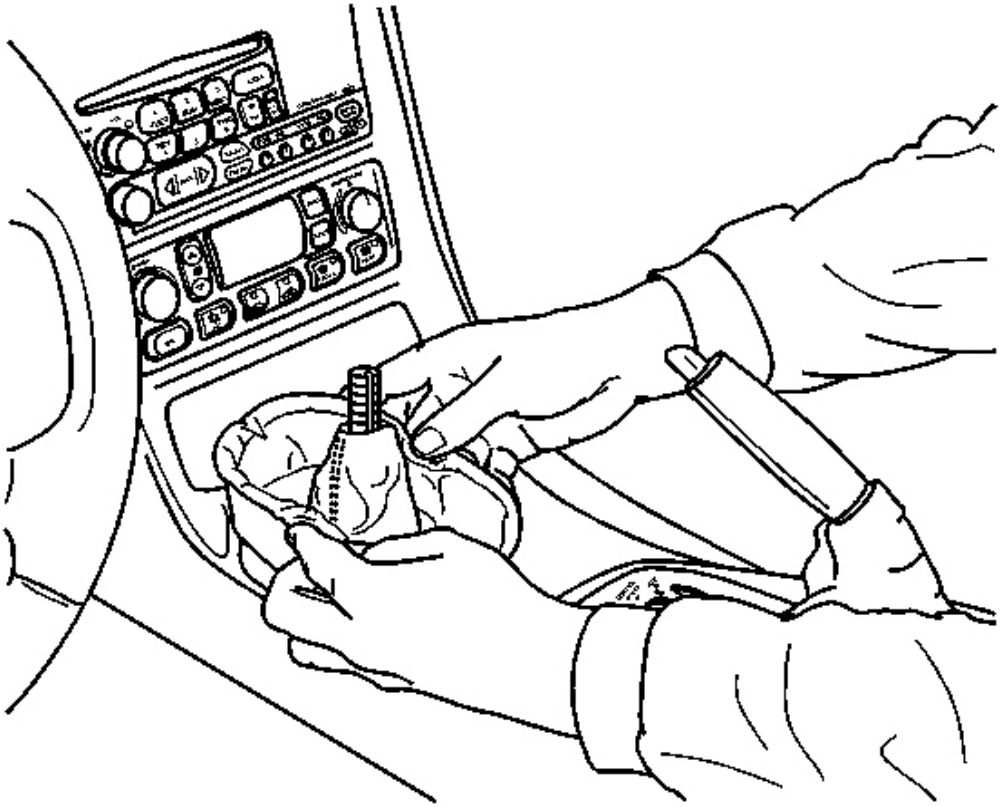

Fig. 21: Releasing The Remaining Boot Retaining Tabs
Courtesy of GENERAL MOTORS CORP.

5. Grasp the sides of the shift control boot and apply light pressure in toward the shift control lever to begin to release the shift boot retaining tabs from the IP accessory trim plate.
6. Using light pressure, continue to release the remaining boot retaining tabs.

cardiagn.com

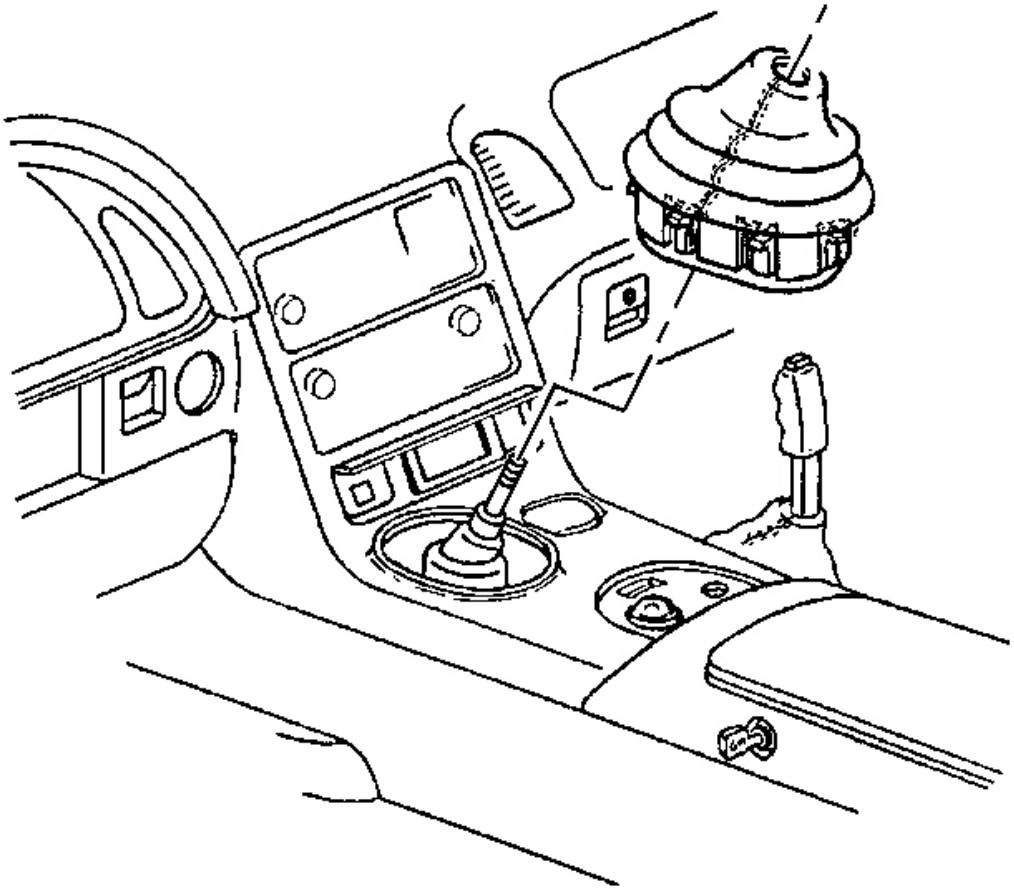

Fig. 22: Shift Control Boot, Shift Control Lever & IP Accessory Trim Plate
Courtesy of GENERAL MOTORS CORP.

7. Lift the boot away from the trim plate and remove the boot.
8. Remove the IP accessory trim plate. Refer to **Trim Plate Replacement - Instrument Panel (I/P) Accessory** in Instrument Panel, Gages and Console.

cardiagn.com

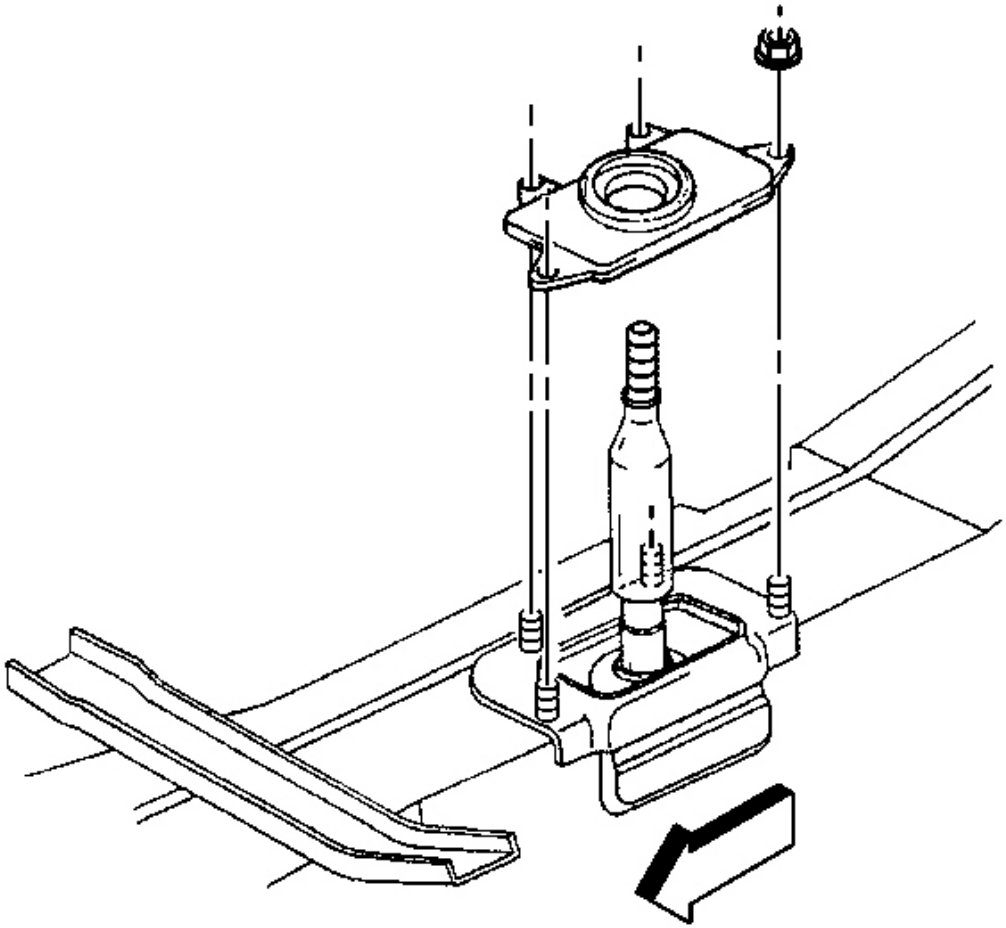

Fig. 23: Shift Control Closeout Boot & Retaining Nuts
Courtesy of GENERAL MOTORS CORP.

9. Remove the shift control closeout boot retaining nuts.
10. Remove the shift control closeout boot.

cardiagn.com

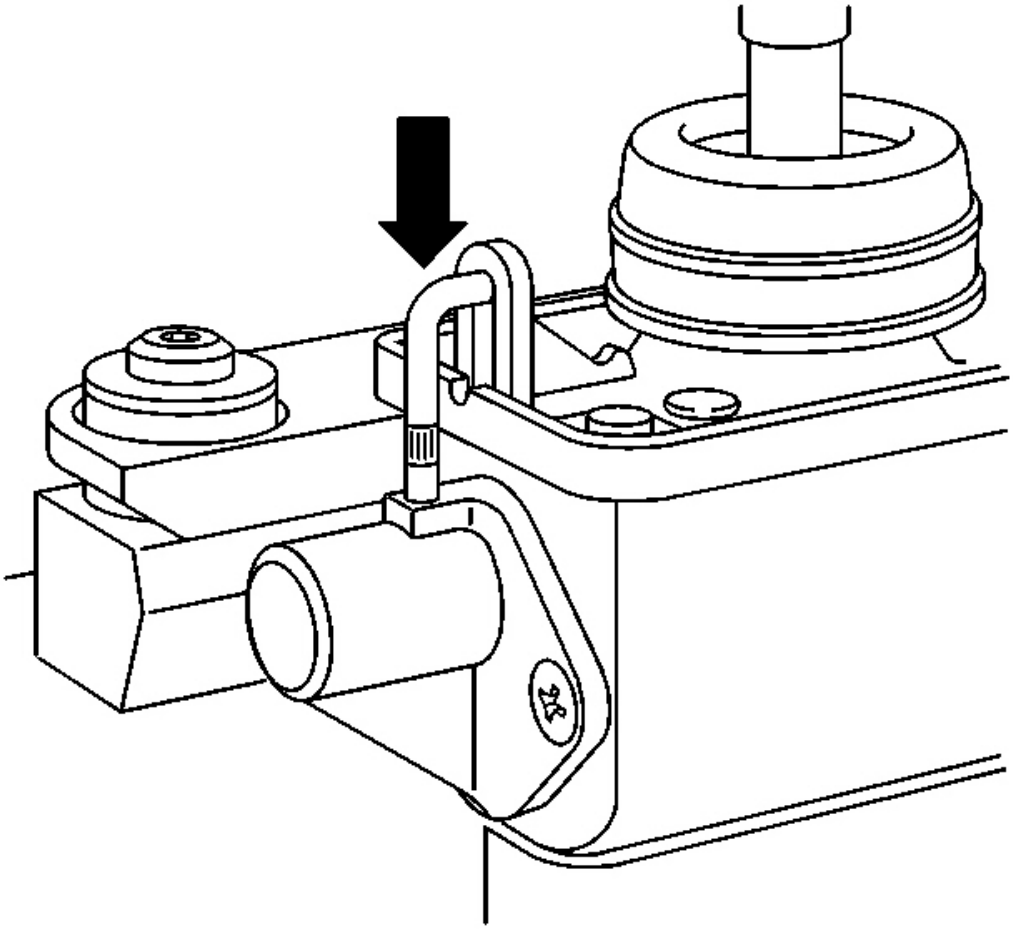

Fig. 24: Shift Control Neutral Lock Pin
Courtesy of GENERAL MOTORS CORP.

11. Place the shifter into NEUTRAL.
12. Press down to engage the shift control neutral lock pin.

cardiagn.com

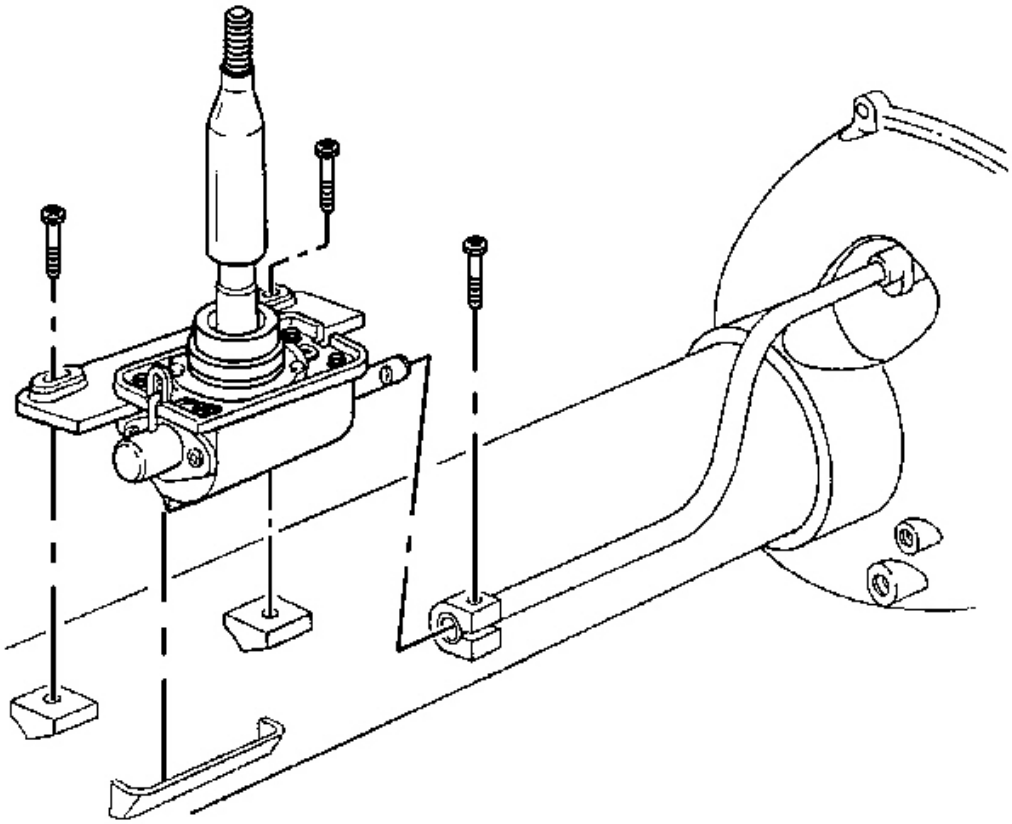

Fig. 25: Transmission Shift Rod, Clamp & Bolt
Courtesy of GENERAL MOTORS CORP.

13. Remove the transmission shift rod clamp bolt.
14. Remove the shift control mounting bolts.
15. Raise the shift control to release the locator from the shifter bracket on the side of the driveline support assembly.
16. Release the shift control from the transmission shift rod clamp and remove the shift control assembly.

Installation Procedure

cardiagn.com

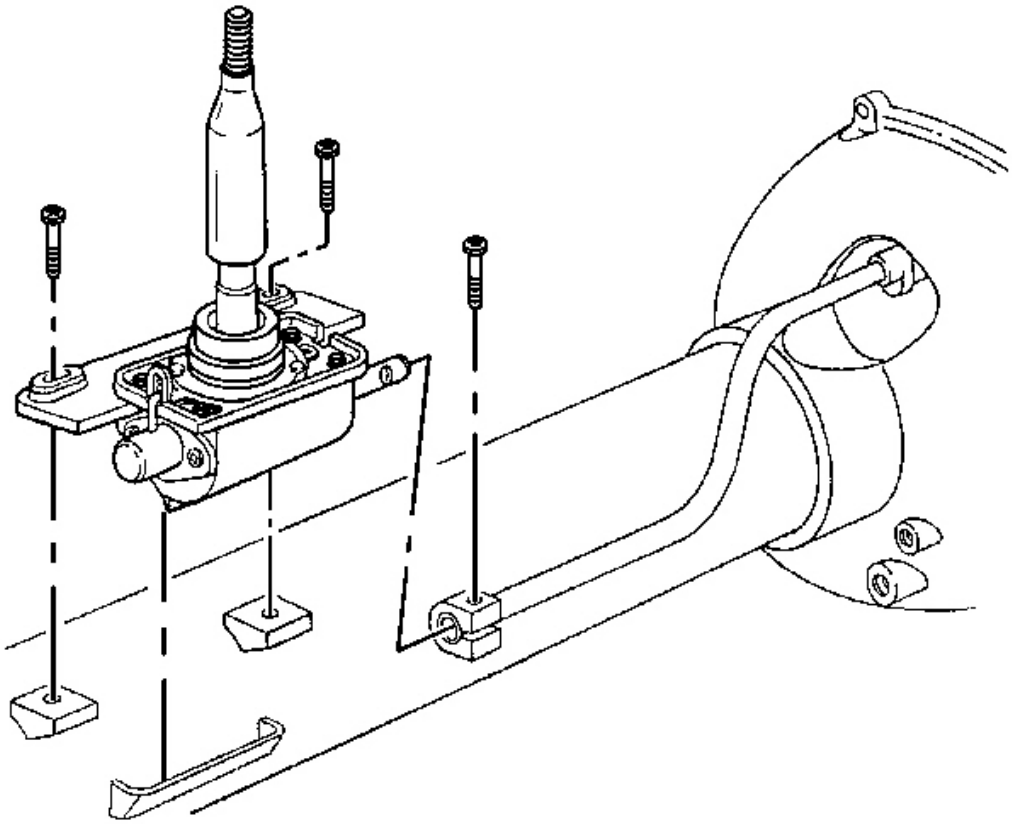

Fig. 26: Transmission Shift Rod, Clamp & Bolt
Courtesy of GENERAL MOTORS CORP.

1. Install the shift control assembly to the transmission shift rod clamp.
2. Lower the shifter into position and insert the locator into the shifter bracket on the side of the driveline support assembly.

NOTE: Refer to Fastener Notice in Cautions and Notices.

3. Install the shift control mounting bolts.

   Tighten: Tighten the shift control mounting bolts to 30 N.m (22 lb ft).

4. Install the transmission shift rod clamp bolt.

   Tighten: Tighten the transmission shift rod clamp bolt to 30 N.m (22 lb ft).

cardiagn.com

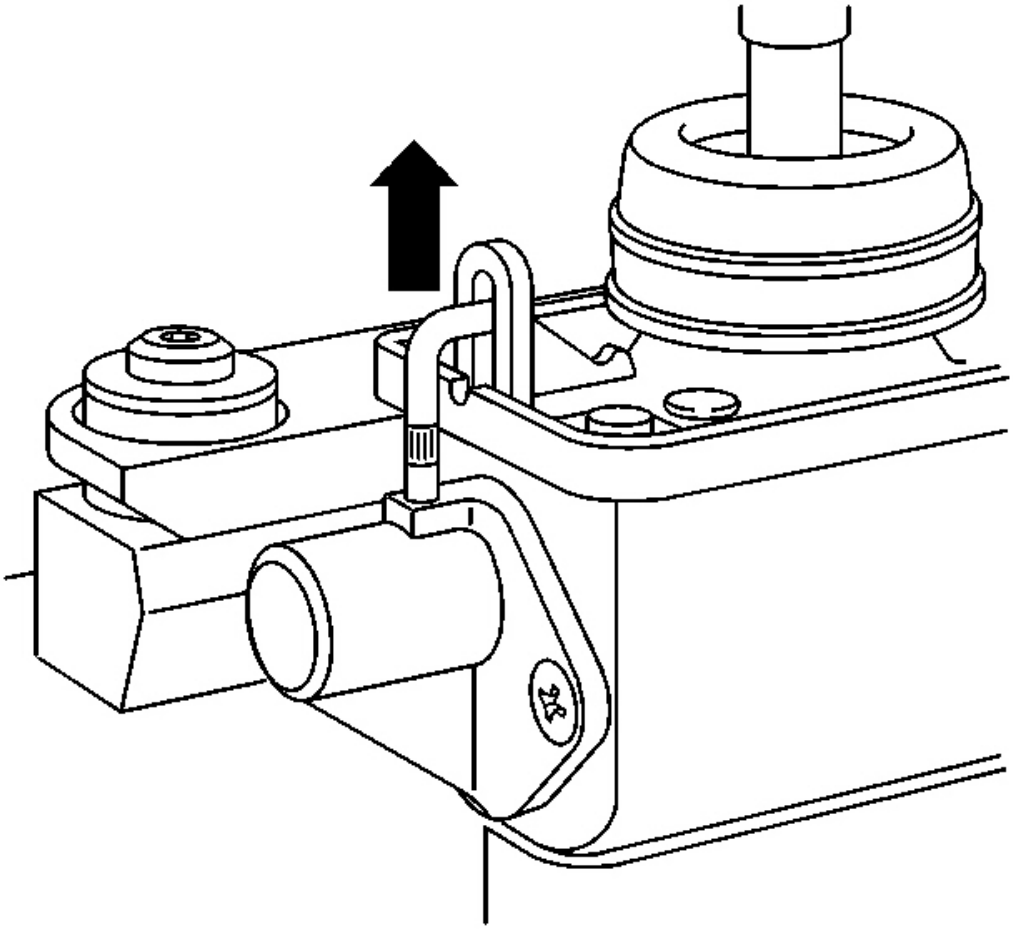

Fig. 27: Releasing The Shift Control Neutral Lock Pin
Courtesy of GENERAL MOTORS CORP.

5. Lift to release the shift control neutral lock pin.

cardiagn.com

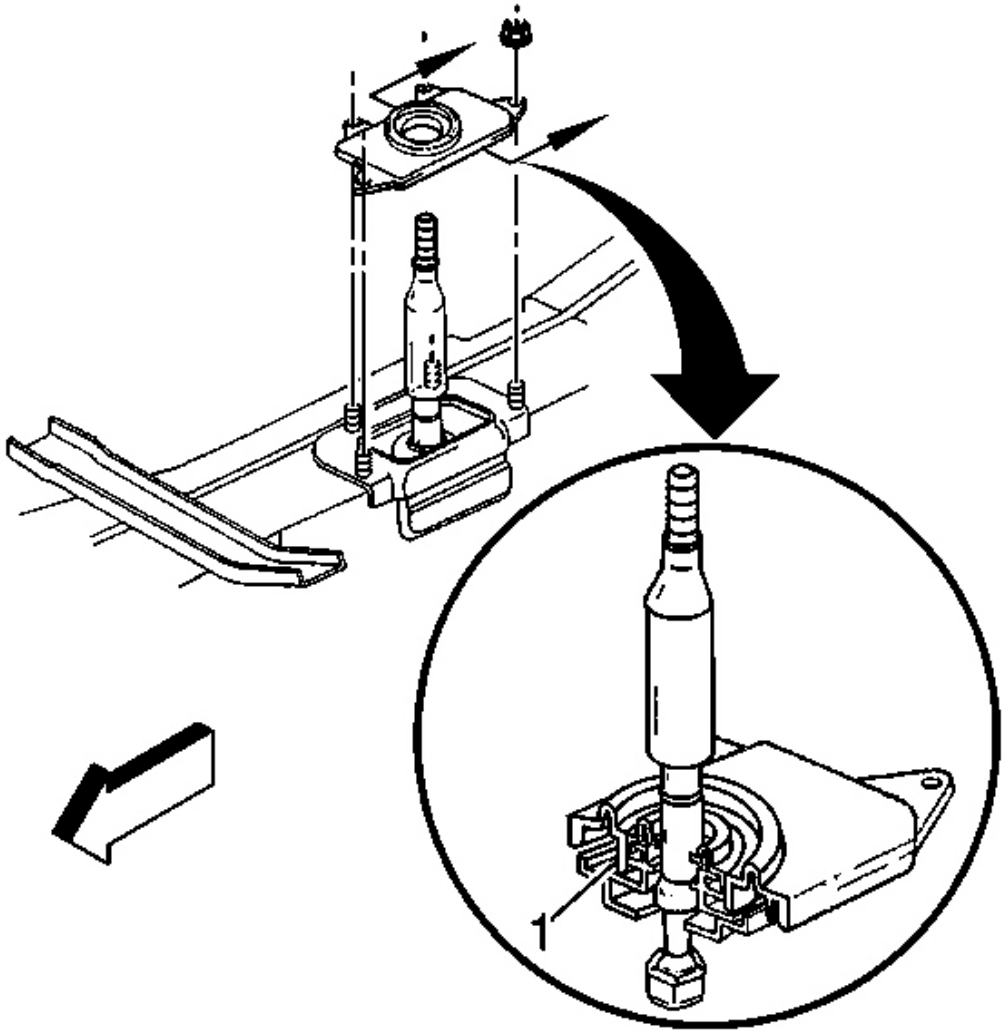

Fig. 28: Shift Control Closeout Boot, Retaining Nuts & Shift Control Assembly
Courtesy of GENERAL MOTORS CORP.

6. Install the shift control closeout boot.

   Check that the closeout boot fully seats to the shift control lever seal and the base of the shift control assembly (1).

7. Install the shift control closeout boot retaining nuts.

   Tighten: Tighten the shift control closeout boot retaining nuts to 12 N.m (106 lb in).

cardiagn.com

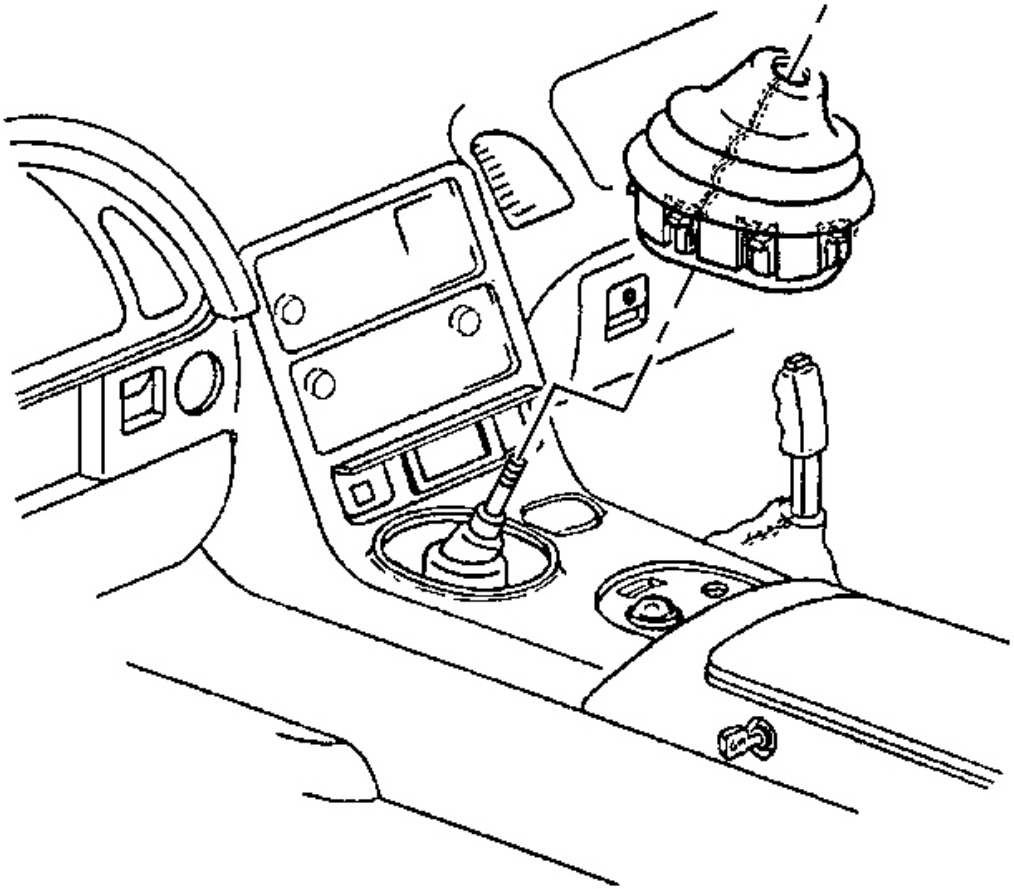

Fig. 29: Shift Control Boot, Shift Control Lever & IP Accessory Trim Plate
Courtesy of GENERAL MOTORS CORP.

8. Install the IP accessory trim plate. Refer to **Trim Plate Replacement - Instrument Panel (I/P) Accessory** in Instrument Panel, Gages and Console.
9. Install the shift control boot over the shift control lever.

cardiagn.com

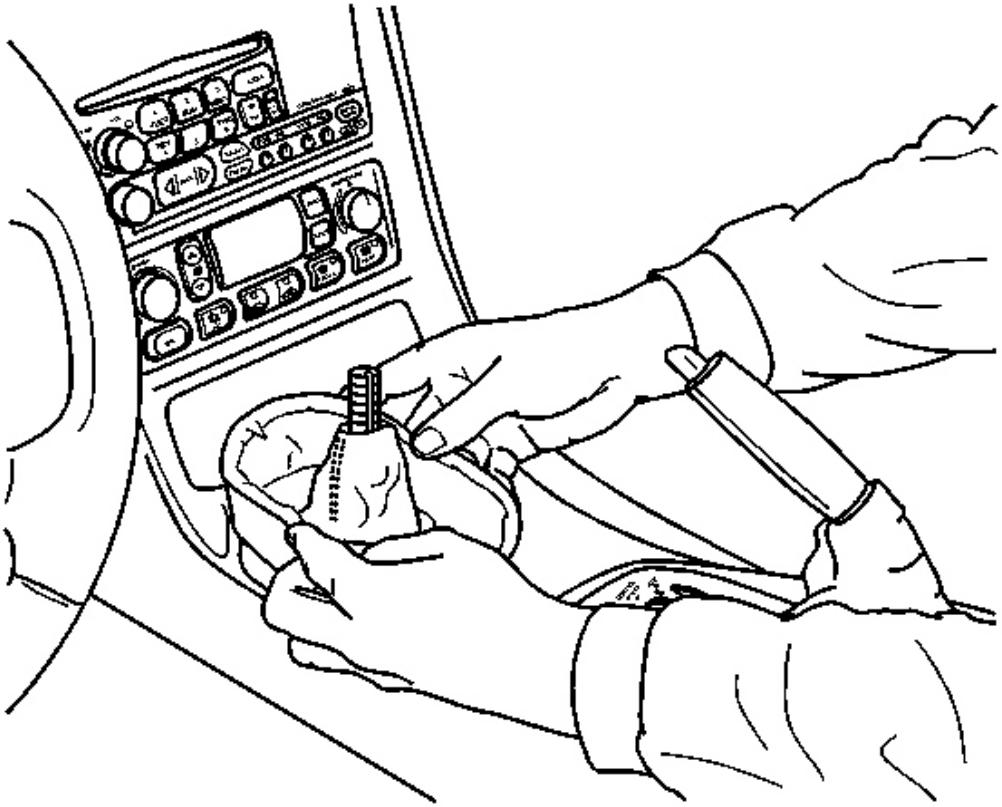

Fig. 30: Locking The Boot Retaining Tabs
Courtesy of GENERAL MOTORS CORP.

10. Align the shift control boot to the IP accessory trim plate opening, then press to lock the boot retaining tabs.
11. Adjust the shape of the boot for appearance, if necessary.

cardiagn.com

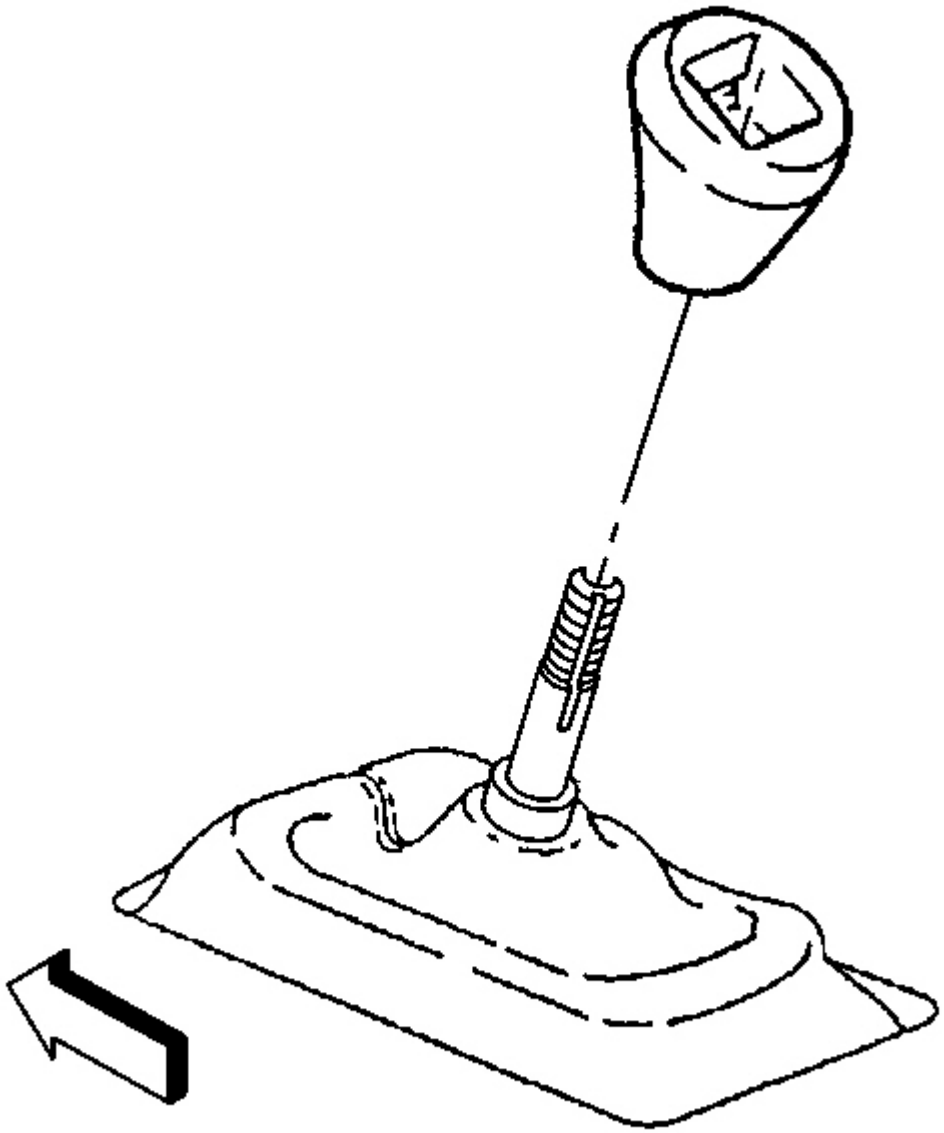

Fig. 31: Removing Gear Shift Knob
Courtesy of GENERAL MOTORS CORP.

12. Screw the shift control knob onto the shift control lever until the knob bottoms out.

cardiagn.com

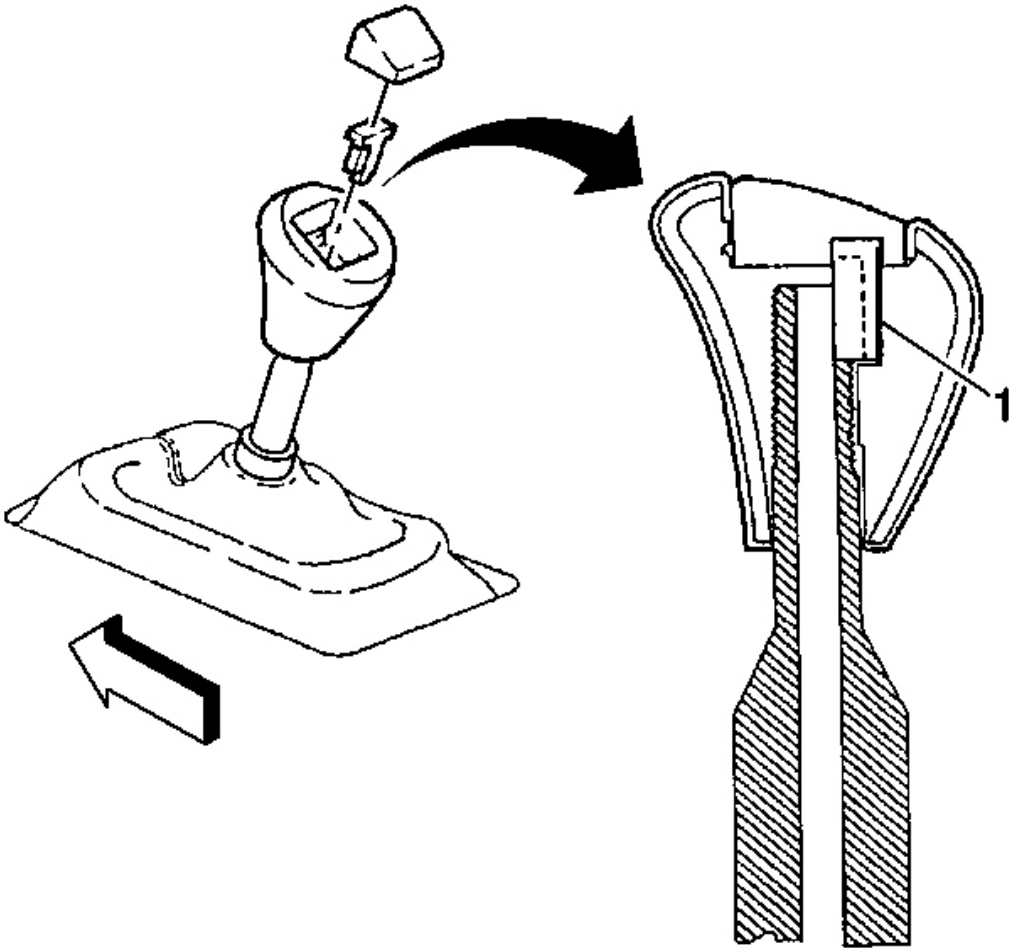

Fig. 32: Shift Control Knob Retainer, Shift Control Knob Button
Courtesy of GENERAL MOTORS CORP.

13. Unscrew the shift control knob just enough to align the retainer slot with the slot on the shift control lever.
14. Install the shift control knob retainer (1) into the slots and seat fully.
15. Install the shift control knob button.
16. Install the console. Refer to **Console Replacement** in Instrument Panel, Gages and Console.

SHIFT CONTROL BOOT REPLACEMENT

Removal Procedure

cardiagn.com

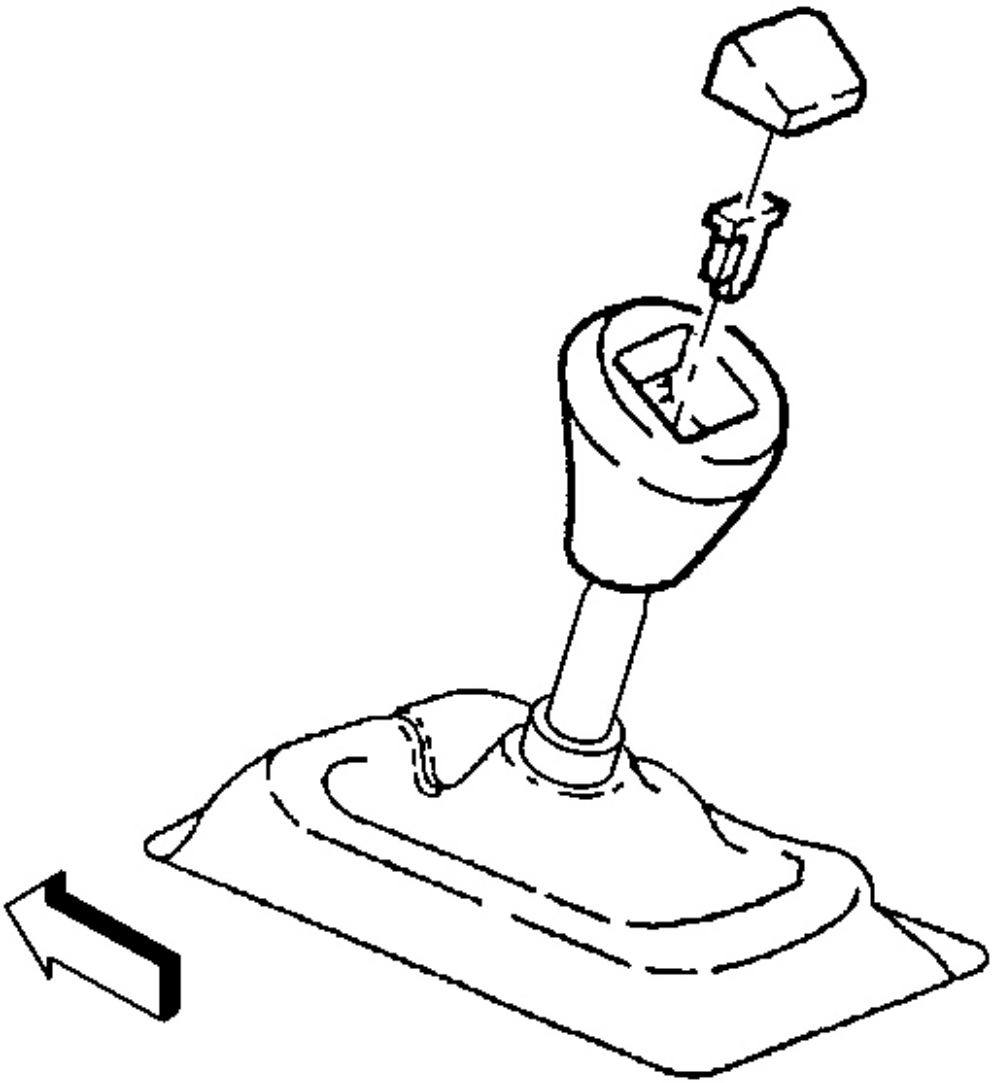

Fig. 33: Shift Control Knob Retainer & Button
Courtesy of GENERAL MOTORS CORP.

1. Carefully pry off the shift control knob button.
2. Pry the shift control knob retainer out of the slots and remove the retainer.

cardiagn.com

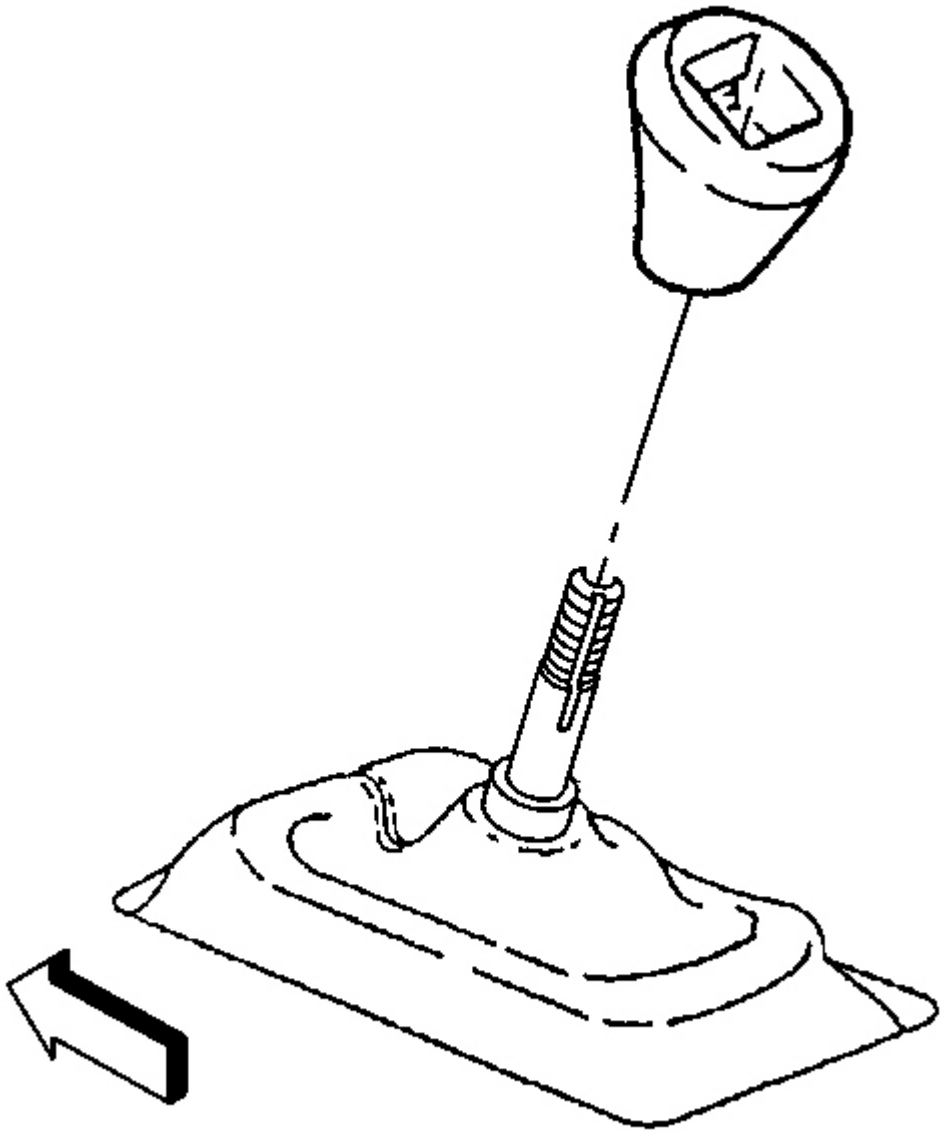

Fig. 34: Removing Gear Shift Knob
Courtesy of GENERAL MOTORS CORP.

3. Unscrew the shift control knob.

cardiagn.com

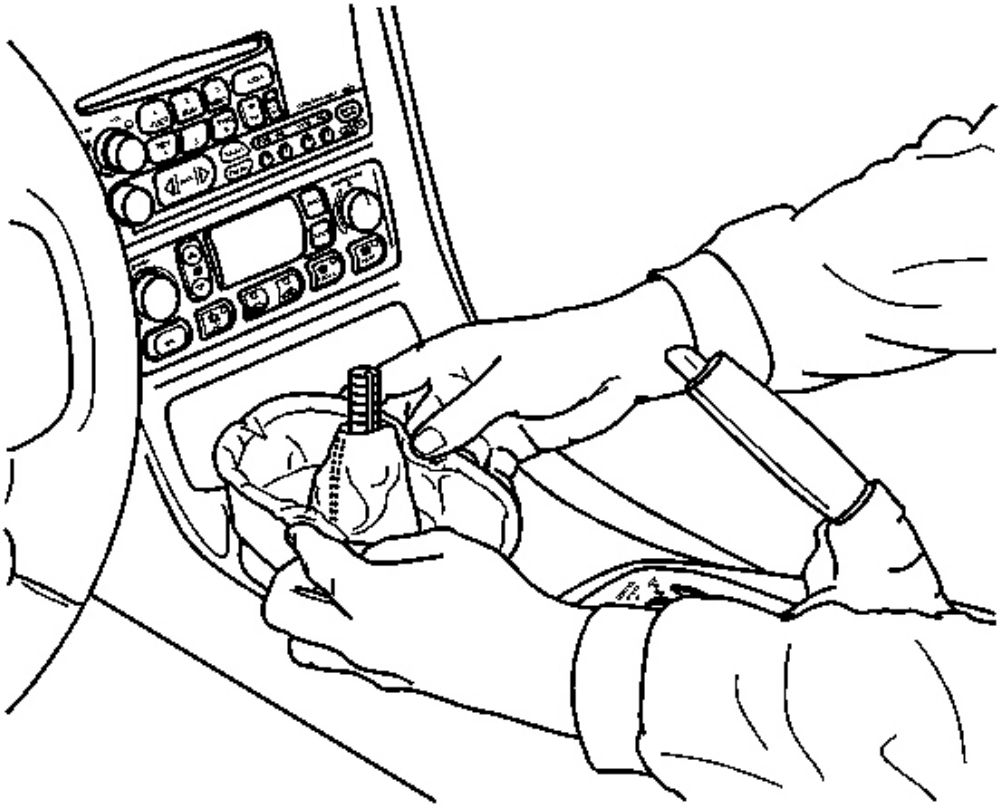

Fig. 35: Releasing The Remaining Boot Retaining Tabs
Courtesy of GENERAL MOTORS CORP.

4. Grasp the sides of the shift control boot and apply light pressure in toward the shift control lever to begin to release the shift boot retaining tabs from the I/P accessory trim plate.
5. Using light pressure, continue to release the remaining boot retaining tabs.

cardiagn.com

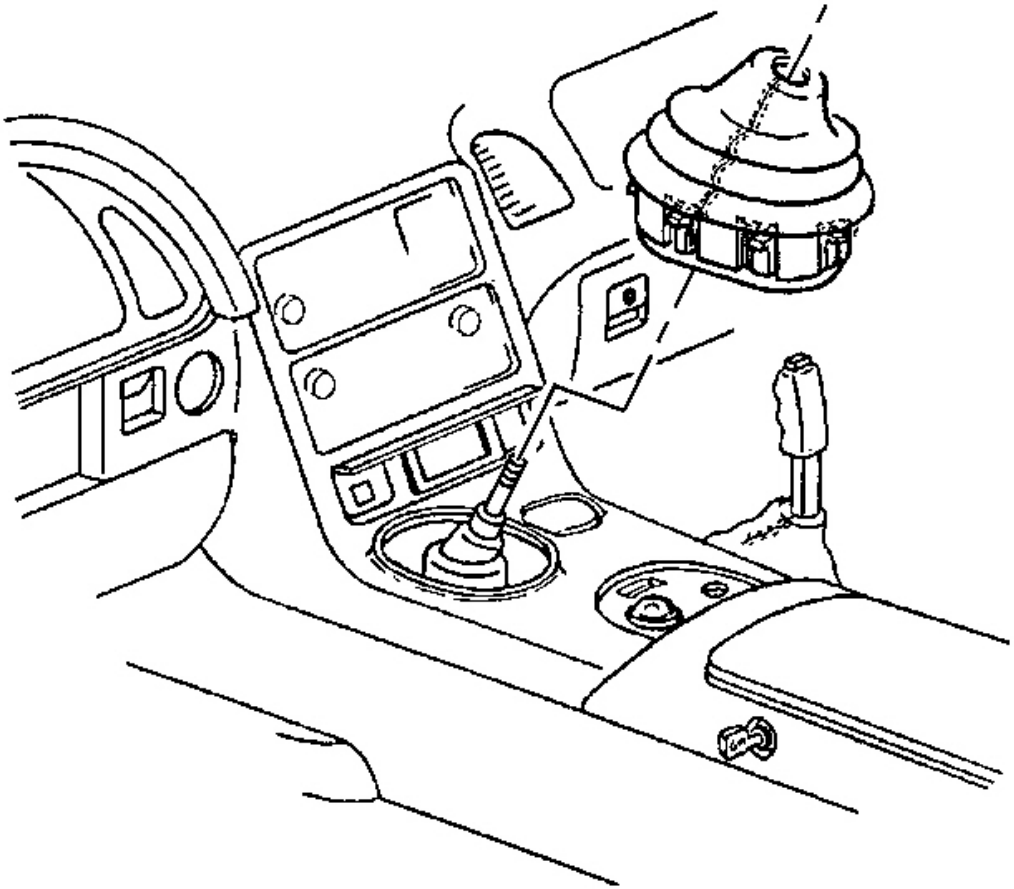

Fig. 36: Shift Control Boot, Shift Control Lever & IP Accessory Trim Plate
Courtesy of GENERAL MOTORS CORP.

6. Lift the boot away from the trim plate and remove the boot.

Installation Procedure

cardiagn.com

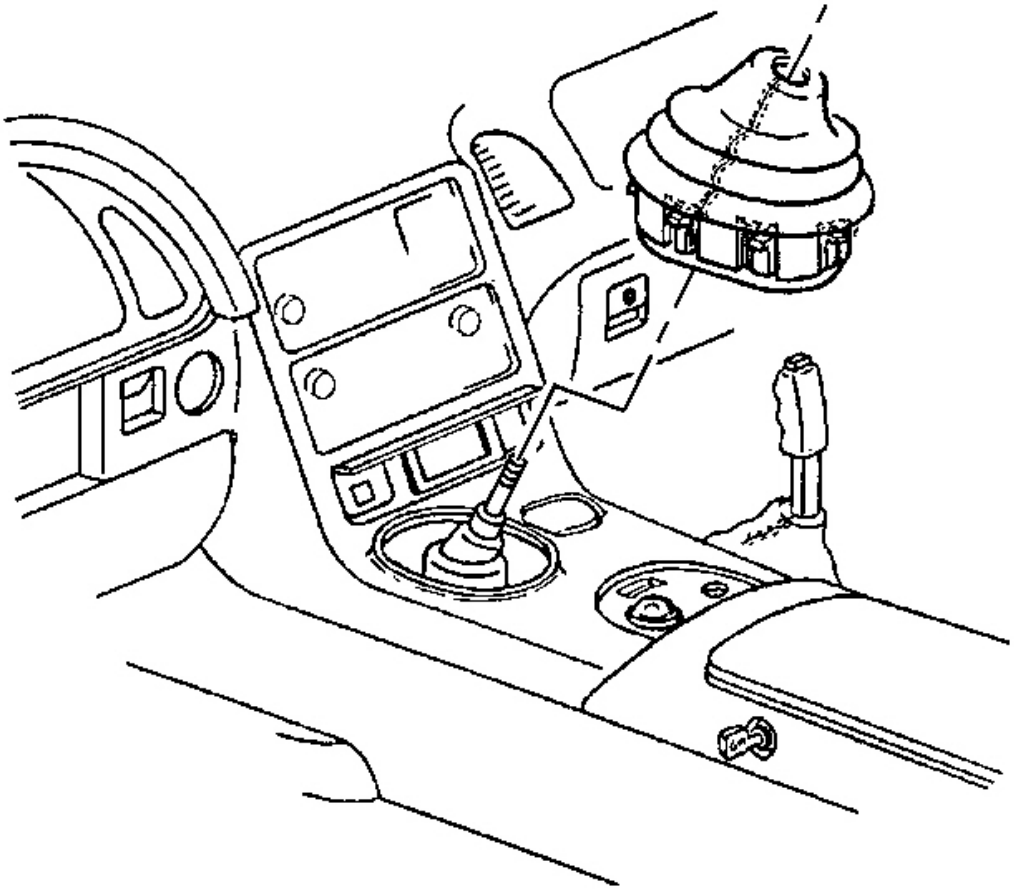

Fig. 37: Shift Control Boot, Shift Control Lever & IP Accessory Trim Plate
Courtesy of GENERAL MOTORS CORP.

1. Install the shift control boot over the shift control lever.

cardiagn.com

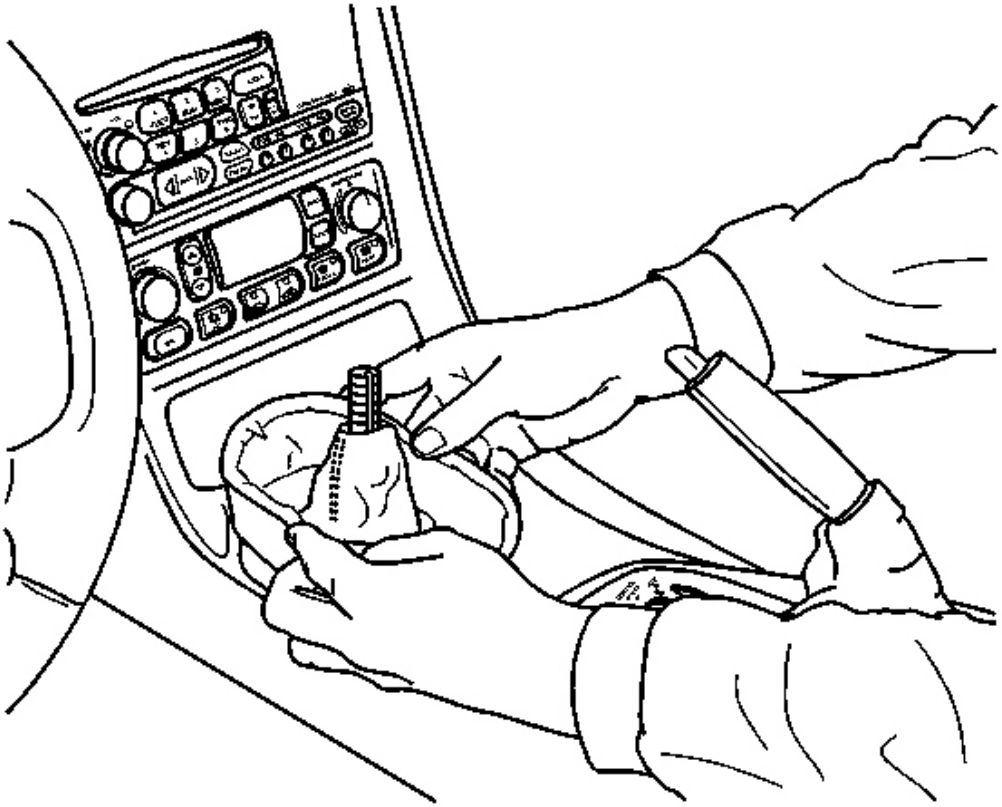

Fig. 38: Locking The Boot Retaining Tabs
Courtesy of GENERAL MOTORS CORP.

2. Align the shift control boot to the I/P accessory trim plate opening, then press to lock the boot retaining tabs.
3. Adjust the shape of the boot for appearance, if necessary.

cardiagn.com

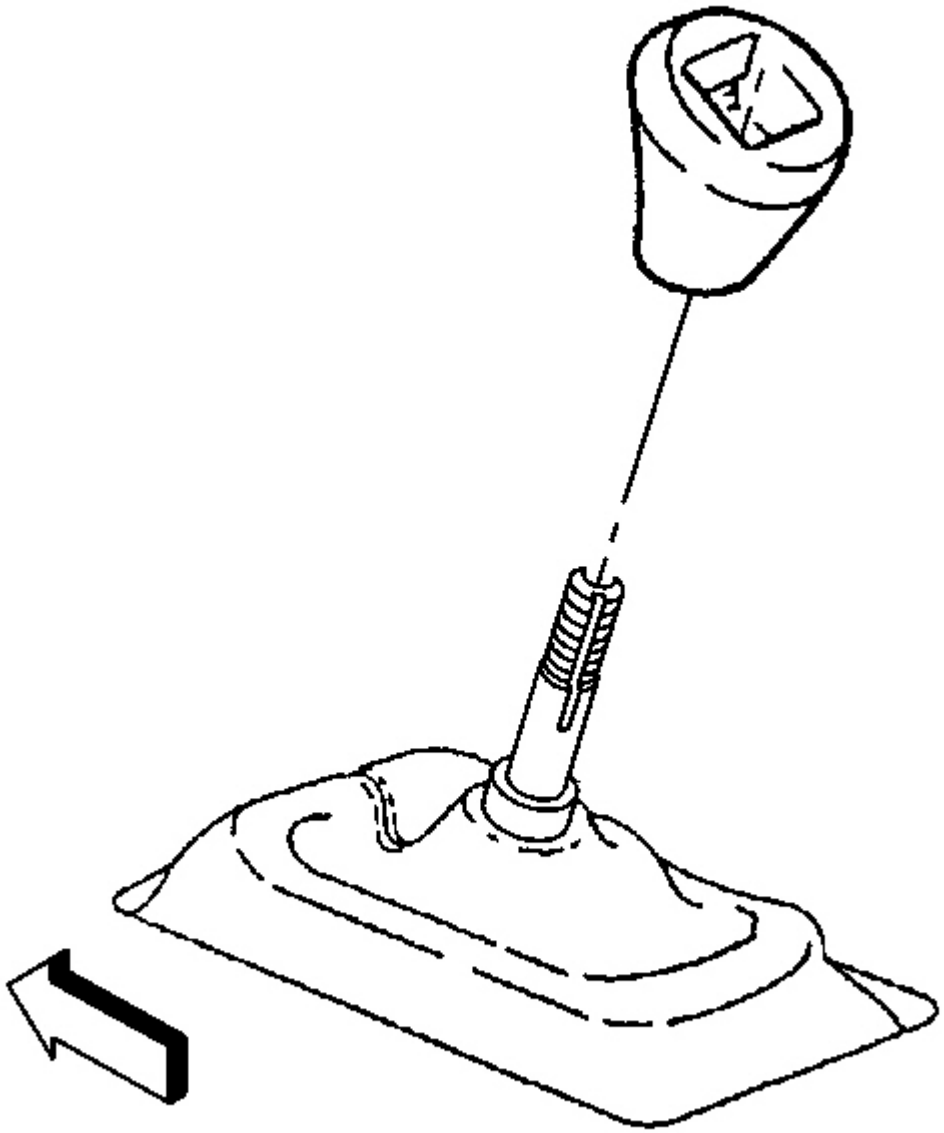

Fig. 39: Removing Gear Shift Knob
Courtesy of GENERAL MOTORS CORP.

4. Screw the shift control knob onto the shift control lever until the knob bottoms out.

cardiagn.com

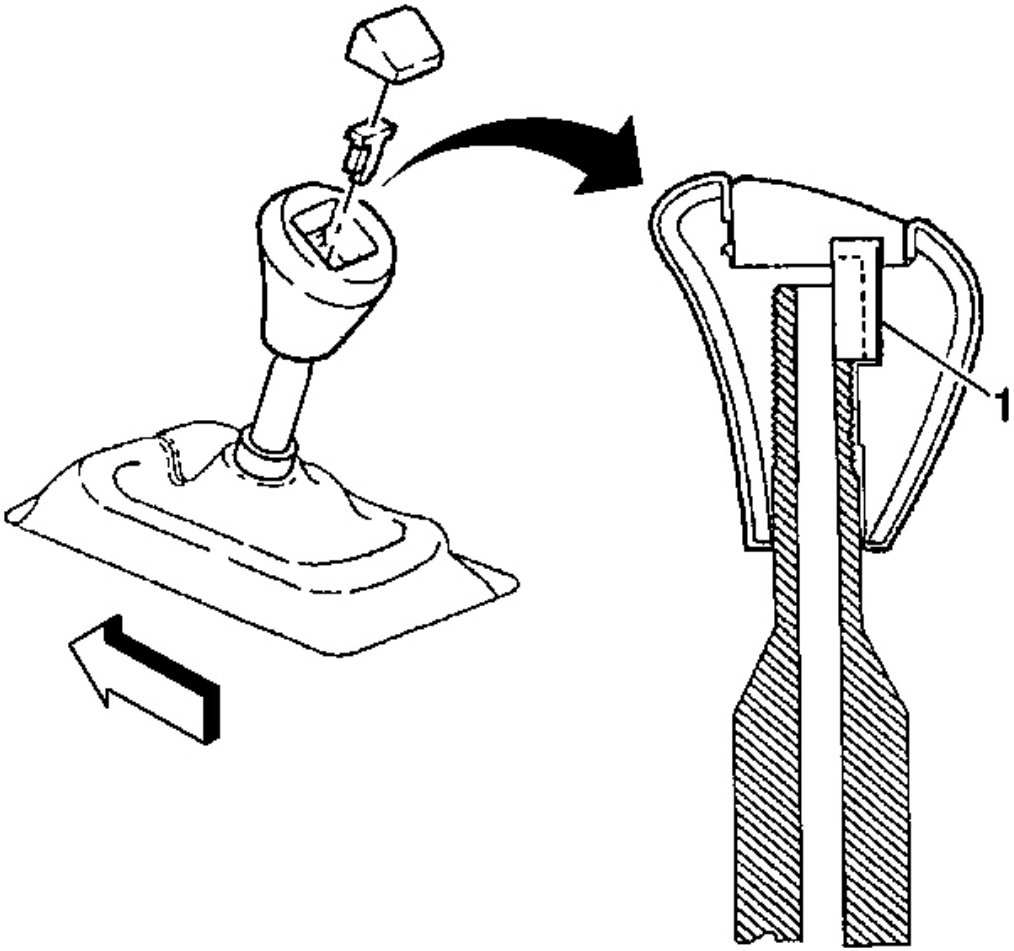

Fig. 40: Shift Control Knob Retainer, Shift Control Knob Button
Courtesy of GENERAL MOTORS CORP.

5. Unscrew the shift control knob just enough to align the retainer slot with the slot on the shift control lever.
6. Install the shift control knob retainer (1) into the slots and seat fully.
7. Install the shift control knob button.

SHIFT CONTROL SHIFT CLOSEOUT BOOT REPLACEMENT

Removal Procedure

cardiagn.com

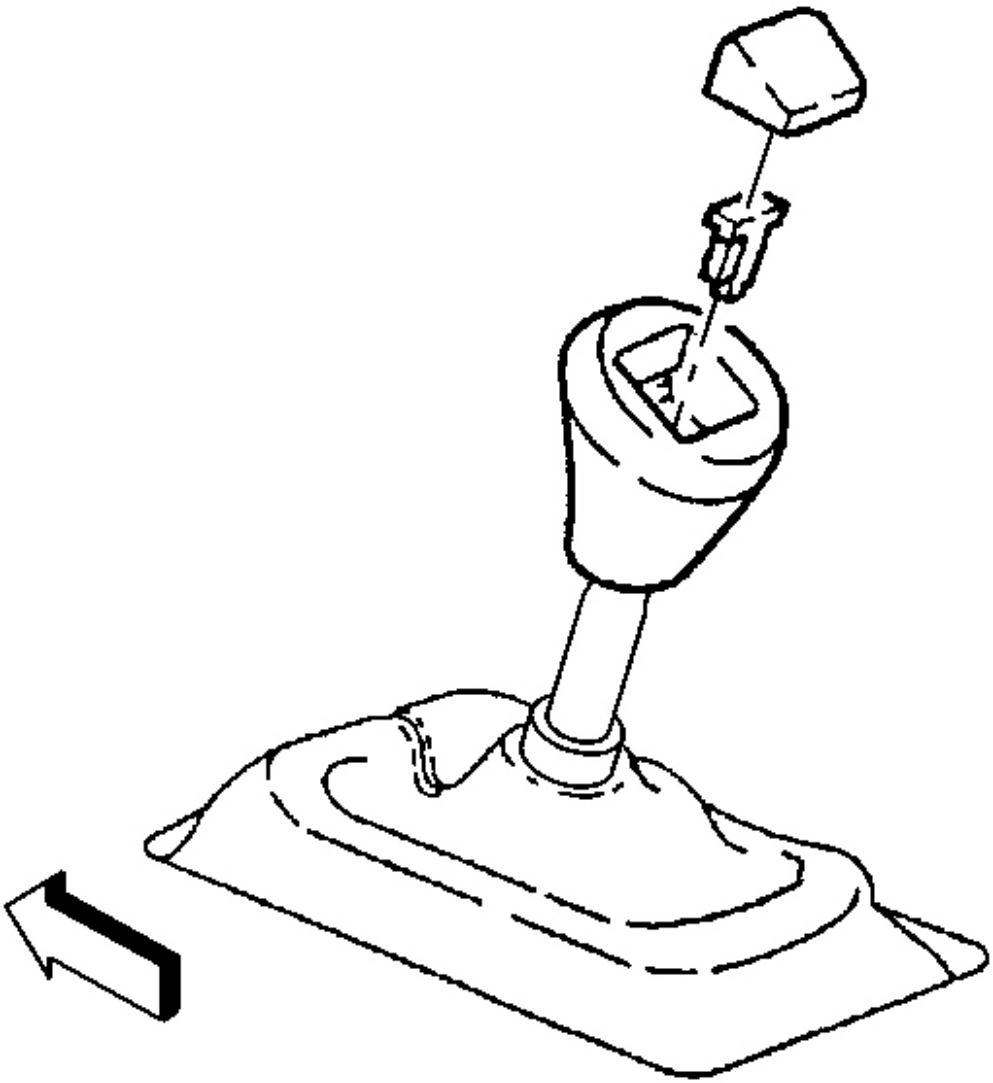

Fig. 41: Shift Control Knob Retainer & Button
Courtesy of GENERAL MOTORS CORP.

1. Remove the console. Refer to **Console Replacement** in Instrument Panel, Gages and Console.
2. Carefully pry off the shift control knob button.
3. Pry the shift control knob retainer out of the slots and remove the retainer.

cardiagn.com

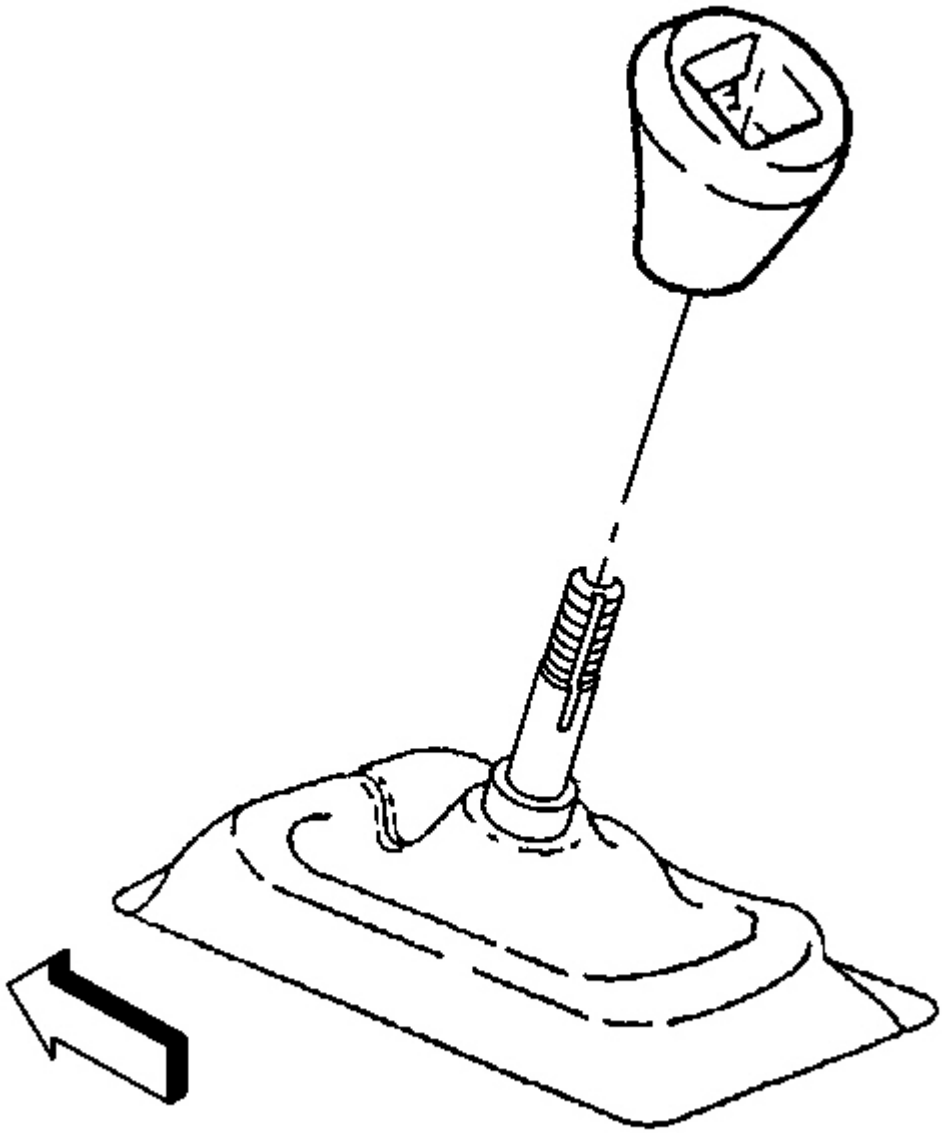

Fig. 42: Removing Gear Shift Knob
Courtesy of GENERAL MOTORS CORP.

4. Unscrew the shift control knob.

cardiagn.com

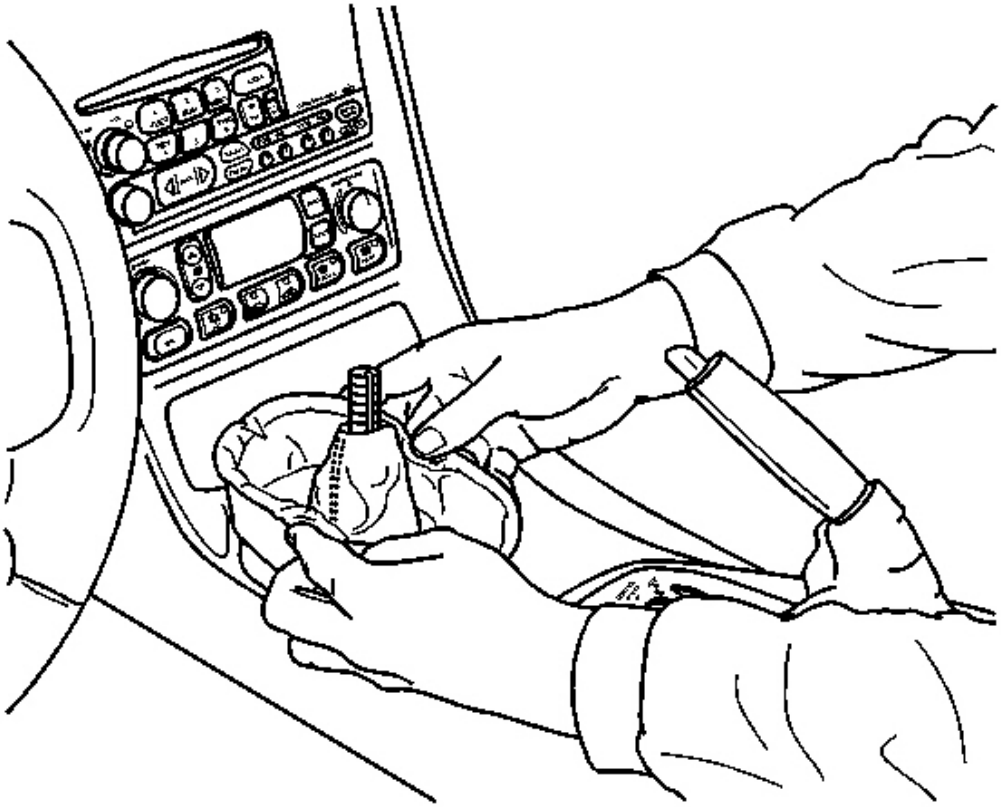

Fig. 43: Releasing The Remaining Boot Retaining Tabs
Courtesy of GENERAL MOTORS CORP.

5. Grasp the sides of the shift control boot and apply light pressure in toward the shift control lever to begin to release the shift boot retaining tabs from the IP accessory trim plate.
6. Using light pressure, continue to release the remaining boot retaining tabs.

cardiagn.com

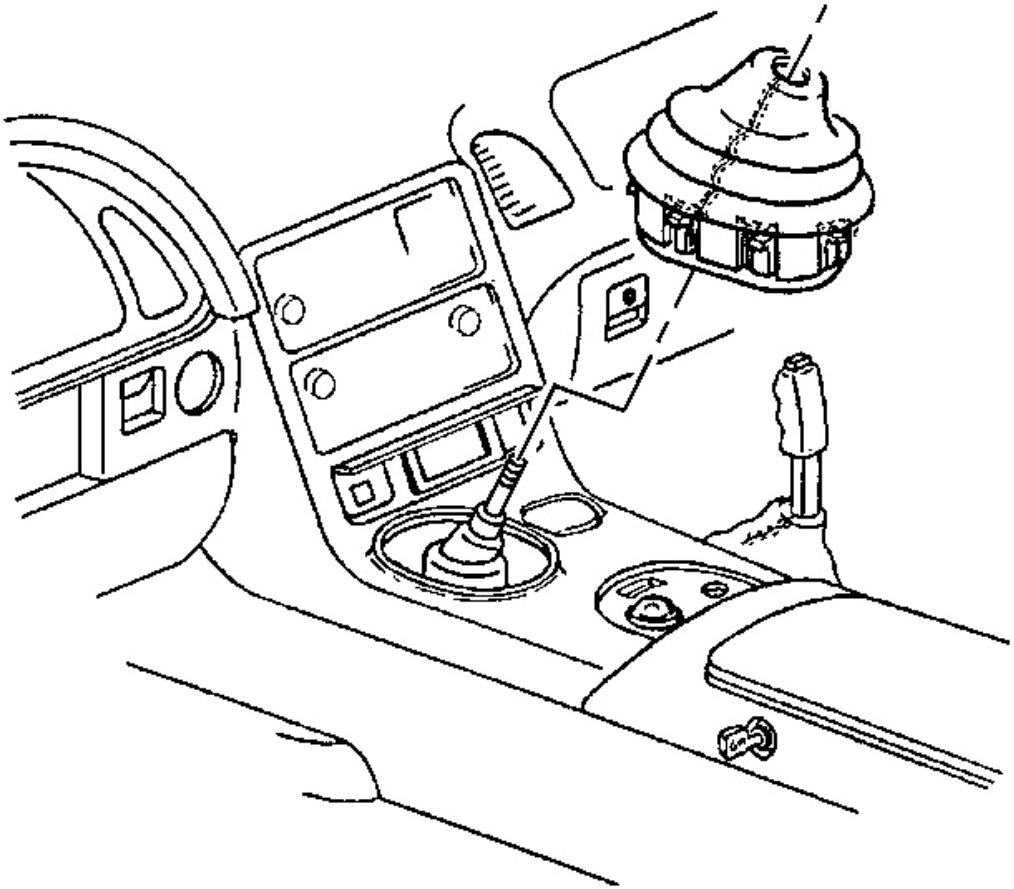

Fig. 44: Shift Control Boot, Shift Control Lever & IP Accessory Trim Plate
Courtesy of GENERAL MOTORS CORP.

7. Lift the boot away from the trim plate and remove the boot.
8. Remove the IP accessory trim plate. Refer to **Trim Plate Replacement - Instrument Panel (I/P) Accessory** in Instrument Panel, Gages and Console.

cardiagn.com

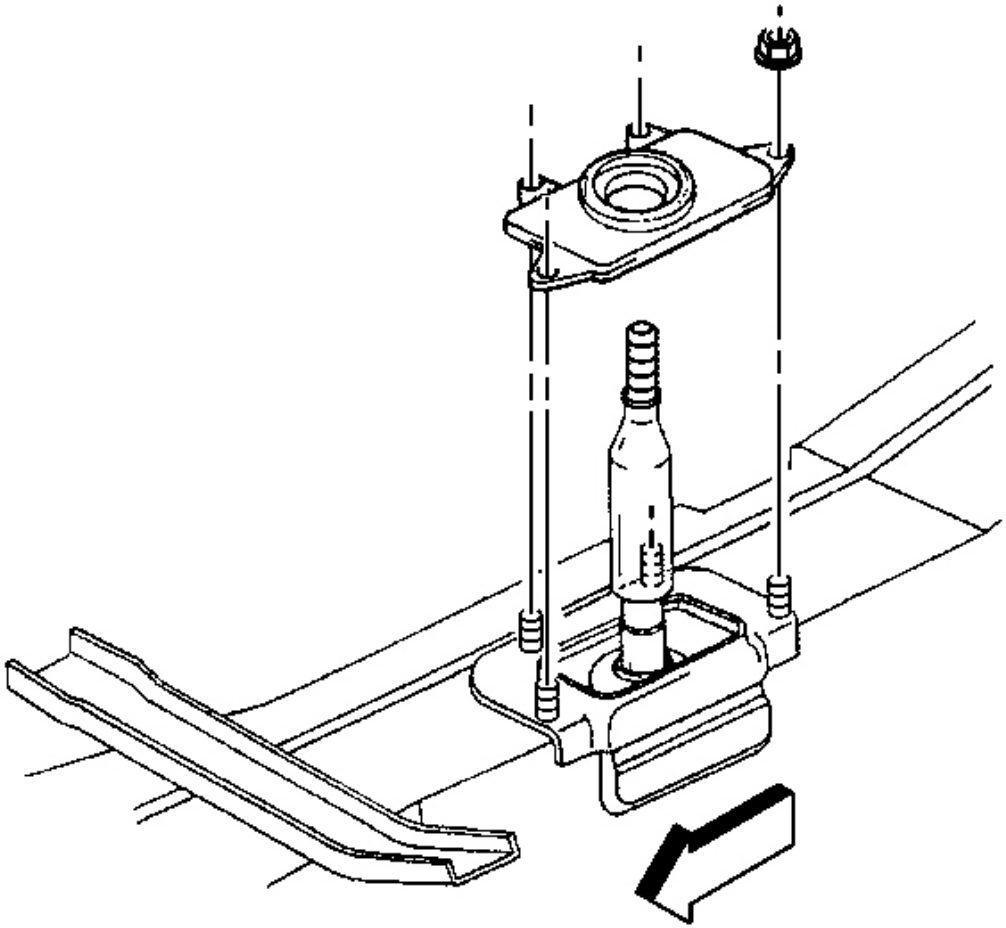

Fig. 45: Shift Control Closeout Boot & Retaining Nuts
Courtesy of GENERAL MOTORS CORP.

9. Remove the shift control closeout boot retaining nuts.
10. Remove the shift control closeout boot.

Installation Procedure

cardiagn.com

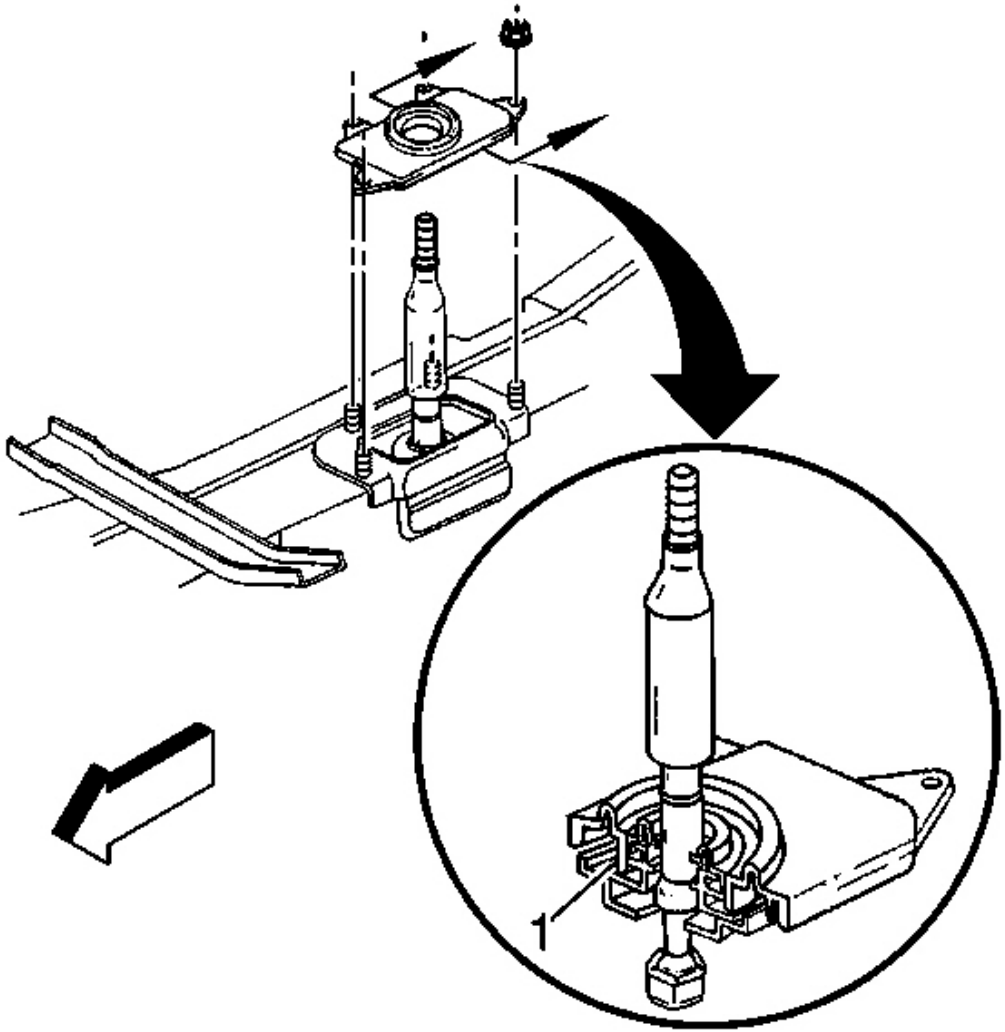

Fig. 46: Shift Control Closeout Boot, Retaining Nuts & Shift Control Assembly
Courtesy of GENERAL MOTORS CORP.

1. Install the shift control closeout boot.

   Check that the closeout boot fully seats to the shift control lever seal and the base of the shift control assembly (1).

   NOTE: Refer to Fastener Notice in Cautions and Notices.

cardiagn.com

2. Install the shift control closeout boot retaining nuts.

   Tighten: Tighten the shift control closeout boot retaining nuts to 12 N.m (106 lb in).

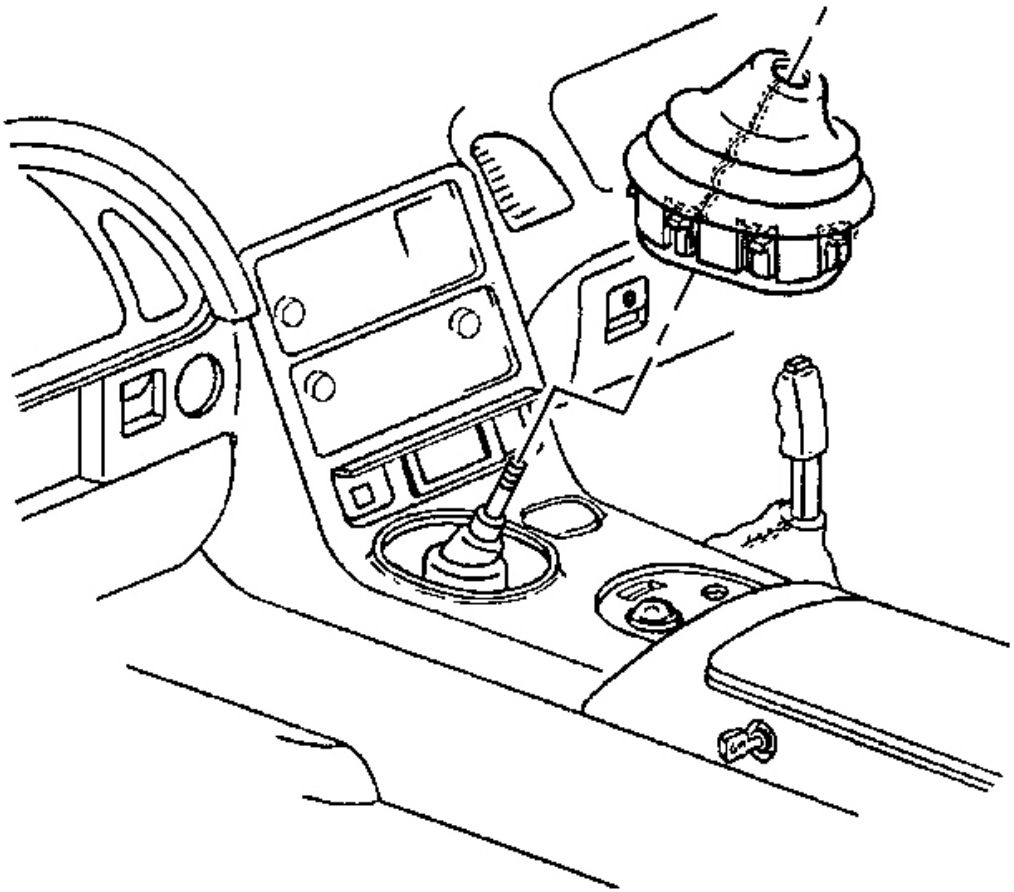

Fig. 47: Shift Control Boot, Shift Control Lever & IP Accessory Trim Plate
Courtesy of GENERAL MOTORS CORP.

3. Install the IP accessory trim plate. Refer to **Trim Plate Replacement - Instrument Panel (I/P) Accessory** in Instrument Panel, Gages and Console.
4. Install the shift control boot over the shift control lever.

cardiagn.com

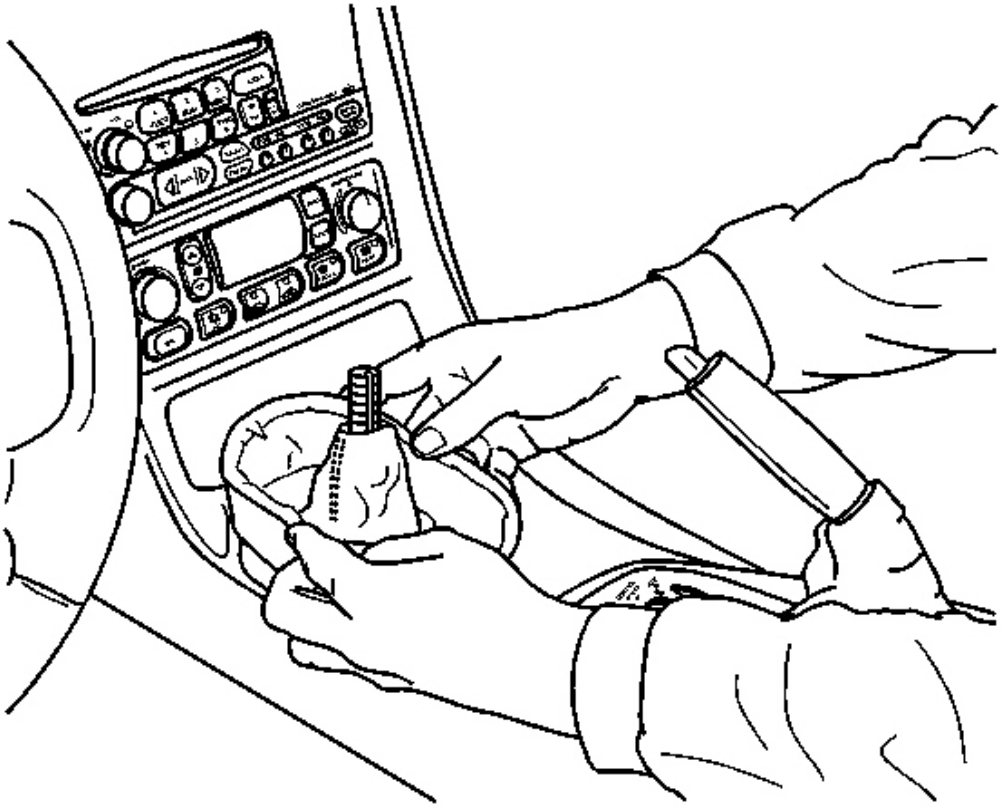

Fig. 48: Locking The Boot Retaining Tabs
Courtesy of GENERAL MOTORS CORP.

5. Align the shift control boot to the IP accessory trim plate opening, then press to lock the boot retaining tabs.
6. Adjust the shape of the boot for appearance, if necessary.

cardiagn.com

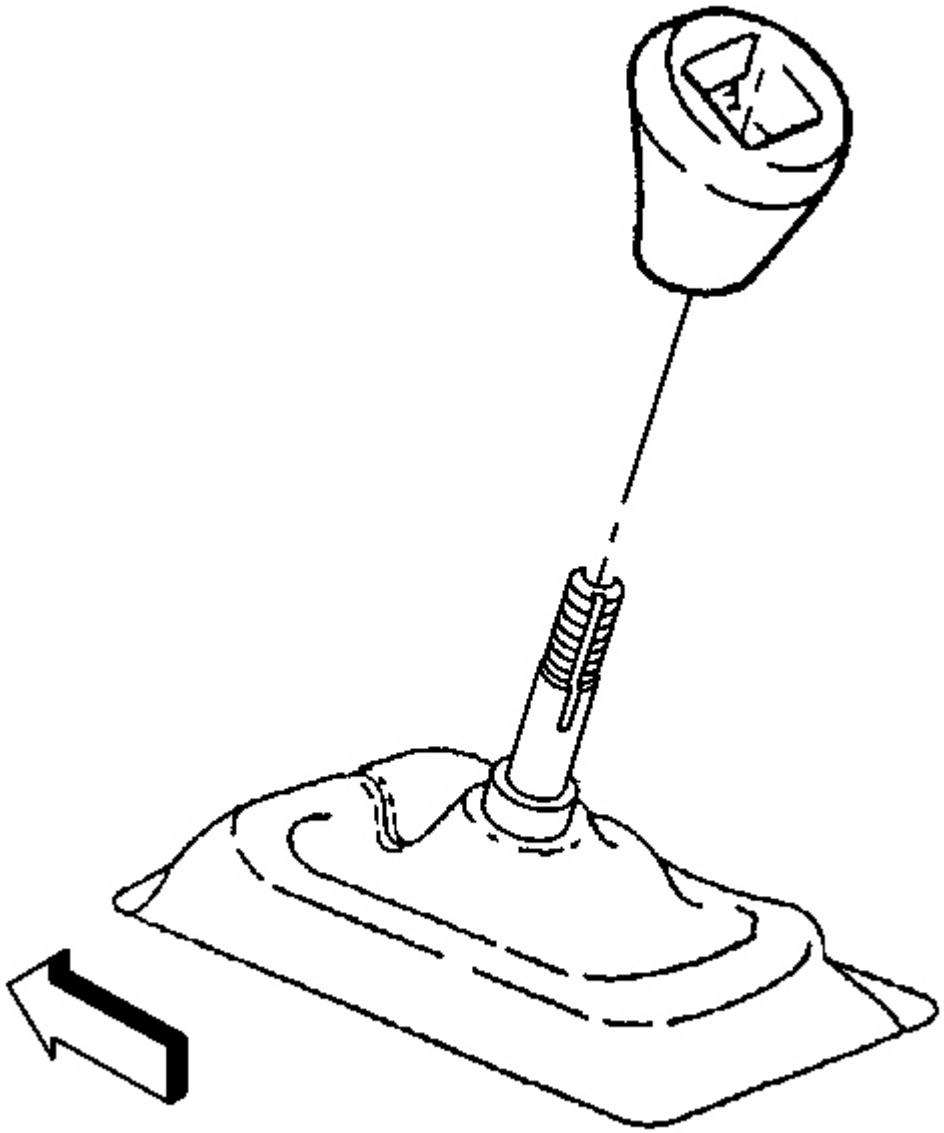

Fig. 49: Removing Gear Shift Knob
Courtesy of GENERAL MOTORS CORP.

7. Screw the shift control knob onto the shift control lever until the knob bottoms out.

cardiagn.com

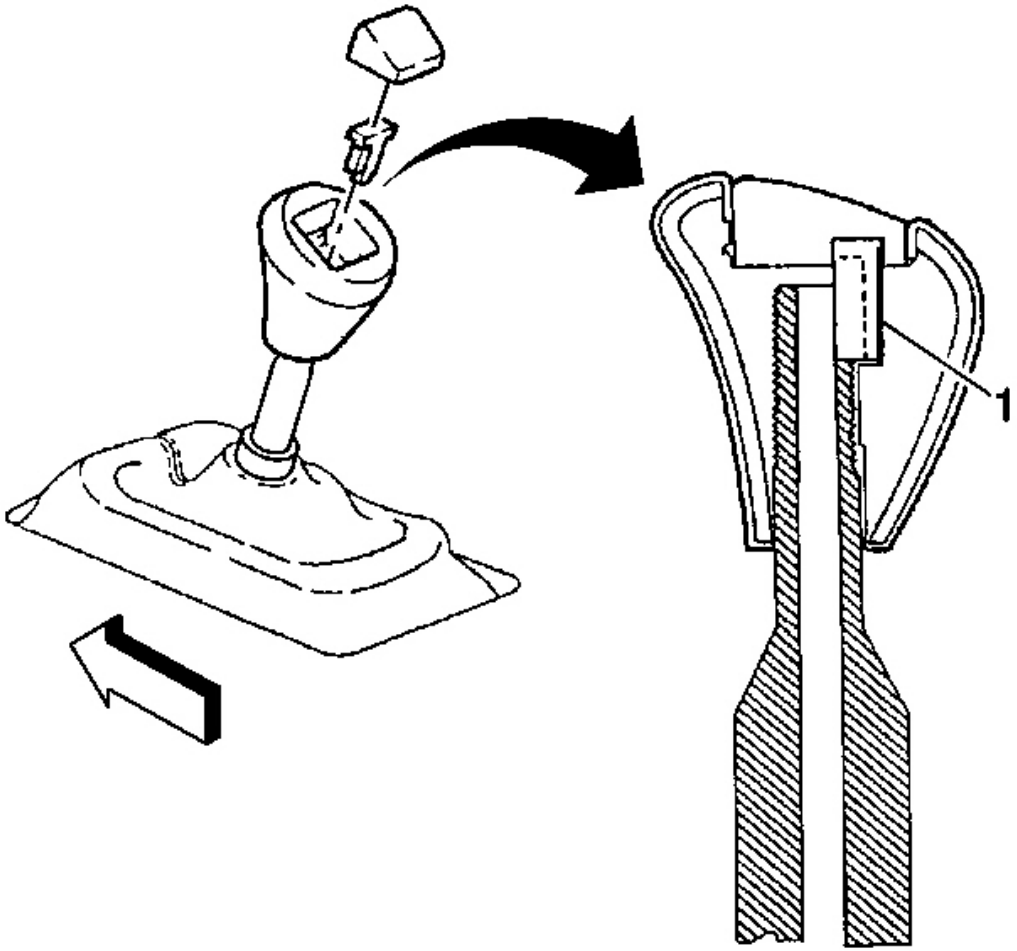

Fig. 50: Shift Control Knob Retainer, Shift Control Knob Button
Courtesy of GENERAL MOTORS CORP.

8. Unscrew the shift control knob just enough to align the retainer slot with the slot on the shift control lever.
9. Install the shift control knob retainer (1) into the slots and seat fully.
10. Install the shift control knob button.
11. Install the console. Refer to **Console Replacement** in Instrument Panel, Gages and Console.

SHIFT CONTROL KNOB REPLACEMENT

Removal Procedure

cardiagn.com

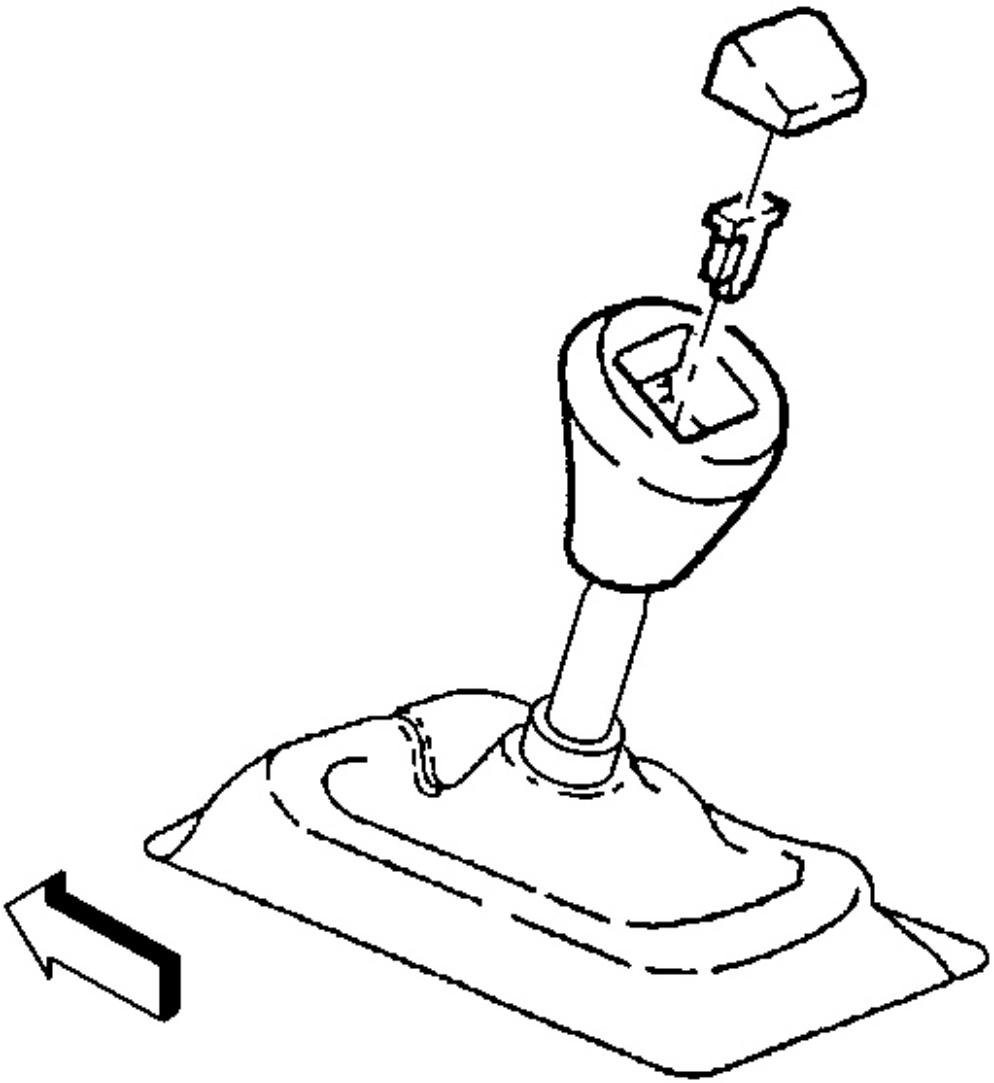

Fig. 51: Shift Control Knob Retainer & Button
Courtesy of GENERAL MOTORS CORP.

1. Carefully pry off the shift control knob button.
2. Pry the shift control knob retainer out of the slots and remove the retainer.

cardiagn.com

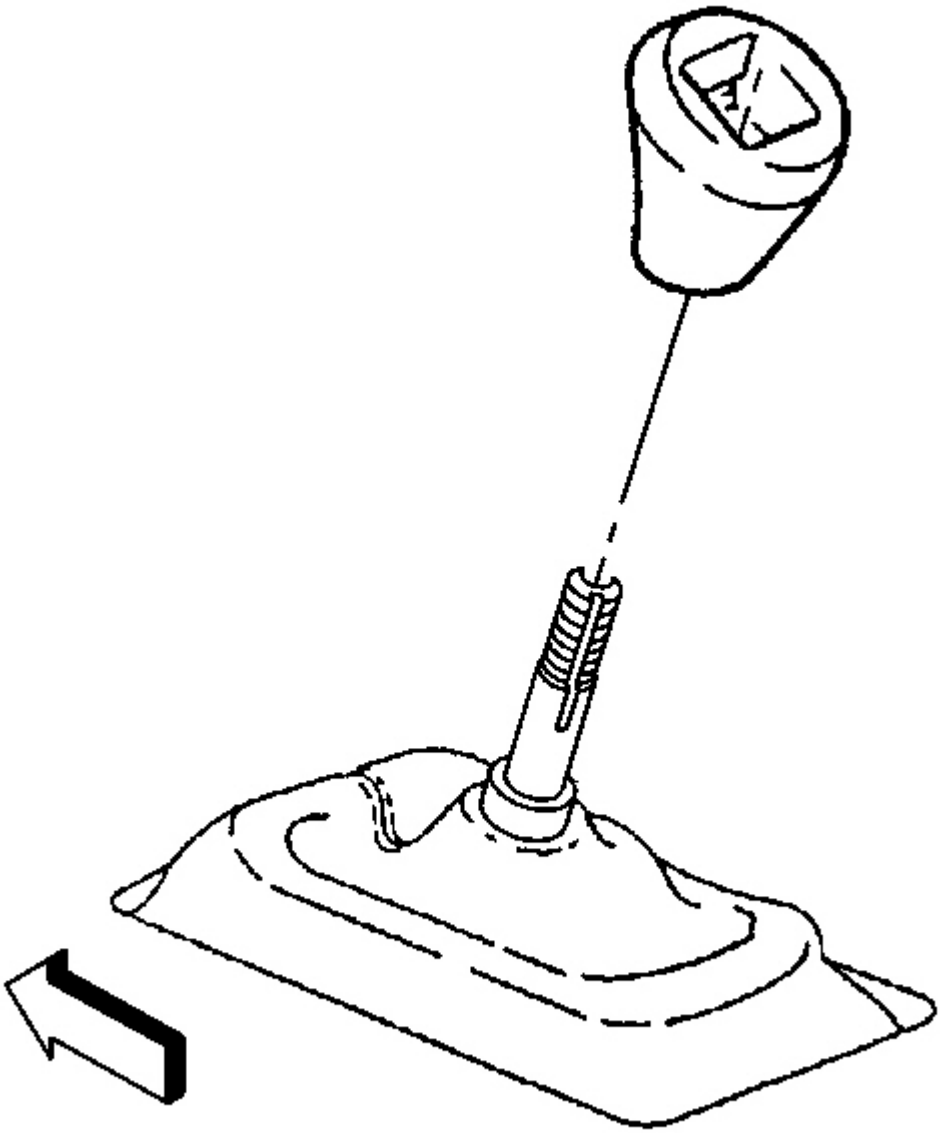

Fig. 52: Removing Gear Shift Knob
Courtesy of GENERAL MOTORS CORP.

3. Unscrew the shift control knob.

Installation Procedure

cardiagn.com

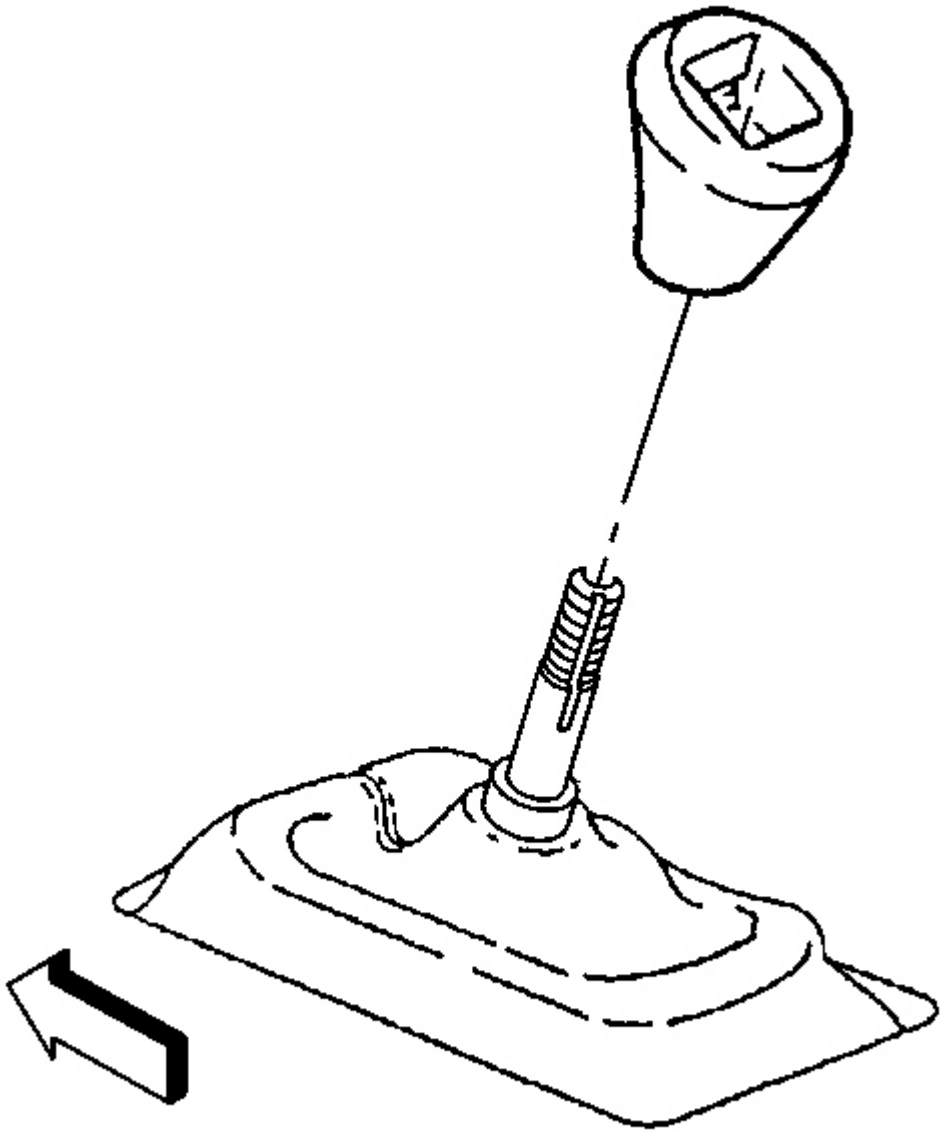

Fig. 53: Removing Gear Shift Knob
Courtesy of GENERAL MOTORS CORP.

1. Screw the shift control knob onto the shift control lever until the knob bottoms out.

cardiagn.com

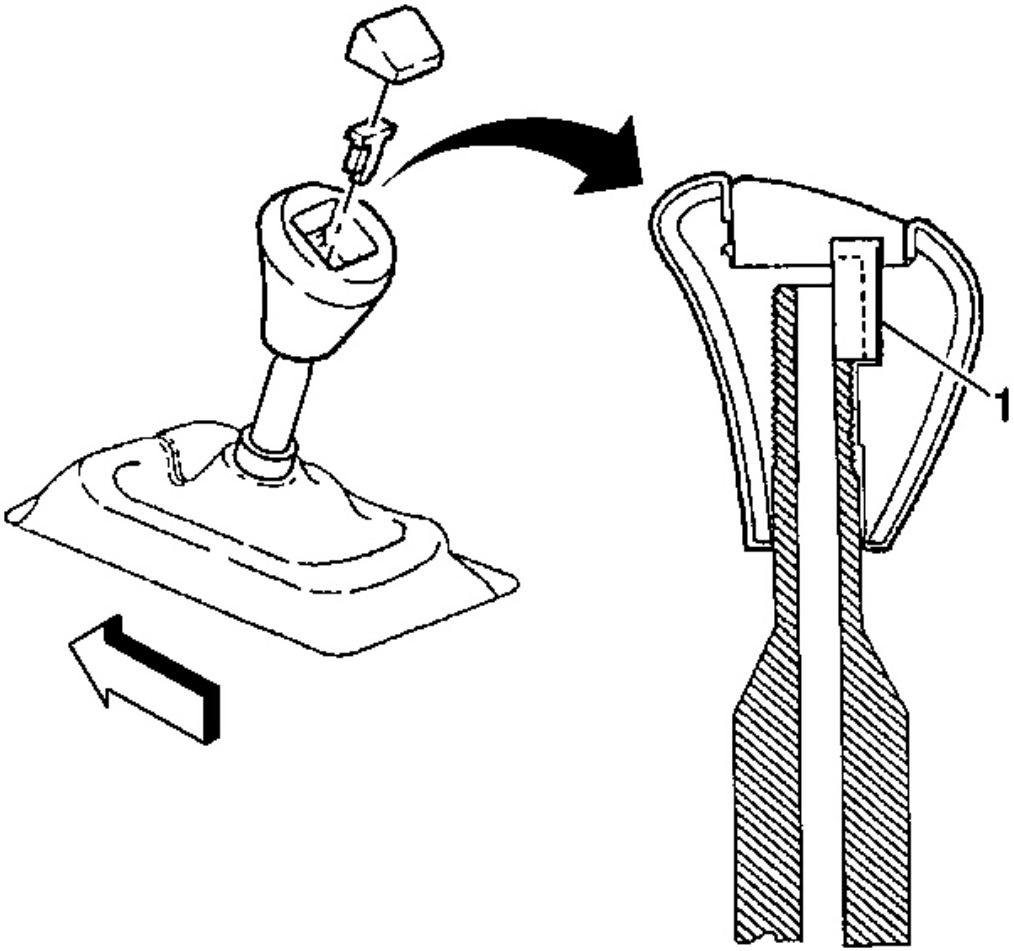

Fig. 54: Shift Control Knob Retainer, Shift Control Knob Button
Courtesy of GENERAL MOTORS CORP.

2. Unscrew the shift control knob just enough to align the retainer slot with the slot on the shift control lever.
3. Install the shift control knob retainer (1) into the slots and seat fully.
4. Install the shift control knob button.

SHIFT ROD REPLACEMENT

Removal Procedure

cardiagn.com

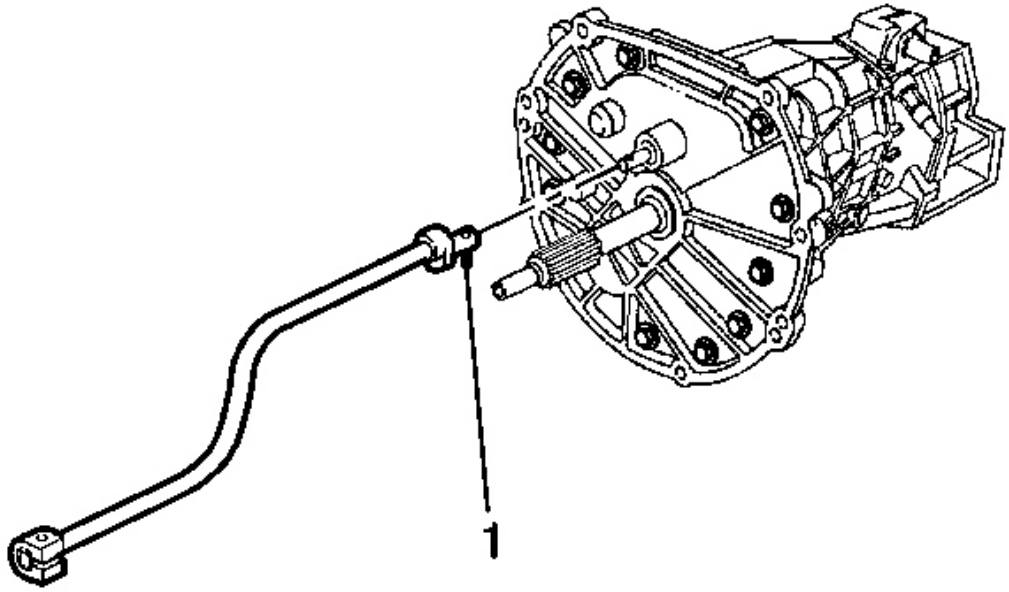

Fig. 55: Roll Pin, Transmission Shift Rod & Transmission Shift Shaft
Courtesy of GENERAL MOTORS CORP.

1. Remove the shift control assembly. Refer to **Shift Control Assembly Replacement** .
2. Remove the driveline support assembly, the transmission and the differential from the vehicle, then separate the transmission from the driveline support assembly. Refer to **Driveline Support Assembly Replacement (Automatic Transmission)** or **Driveline Support Assembly Replacement (Manual Transmission)** in Driveline/Axle.
3. Slide the transmission shift rod toward the transmission until the transmission shift shaft seats in the rear-most detent position.

   (Placing the shift rod close to the transmission housing provides additional support for the transmission shift shaft.)

4. Using a drift or punch, remove the roll pin (1) retaining the transmission shift rod to the transmission shift shaft.
5. Remove the transmission shift rod from the transmission shift shaft.

Installation Procedure

cardiagn.com

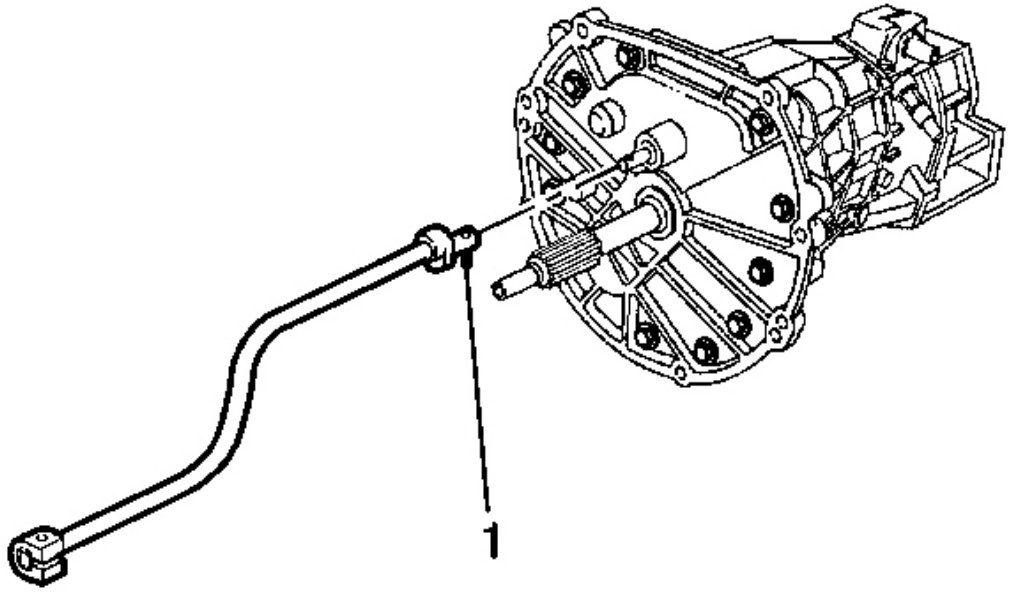

Fig. 56: Roll Pin, Transmission Shift Rod & Transmission Shift Shaft
Courtesy of GENERAL MOTORS CORP.

1. Install the transmission shift rod to the transmission shift shaft.
2. Using a drift or punch, install the roll pin (1) to retain the transmission shift rod to the shift shaft.
3. Pull the transmission shift rod away from the transmission to the middle detent position (NEUTRAL).
4. Install the transmission to the driveline support assembly, then install the driveline support assembly, transmission and differential to the vehicle. Refer to **Driveline Support Assembly Replacement (Automatic Transmission)** or **Driveline Support Assembly Replacement (Manual Transmission)** in Driveline/Axle.
5. Install the shift control assembly. Refer to **Shift Control Assembly Replacement** .

SHIFT LINKAGE ADJUSTMENT

cardiagn.com

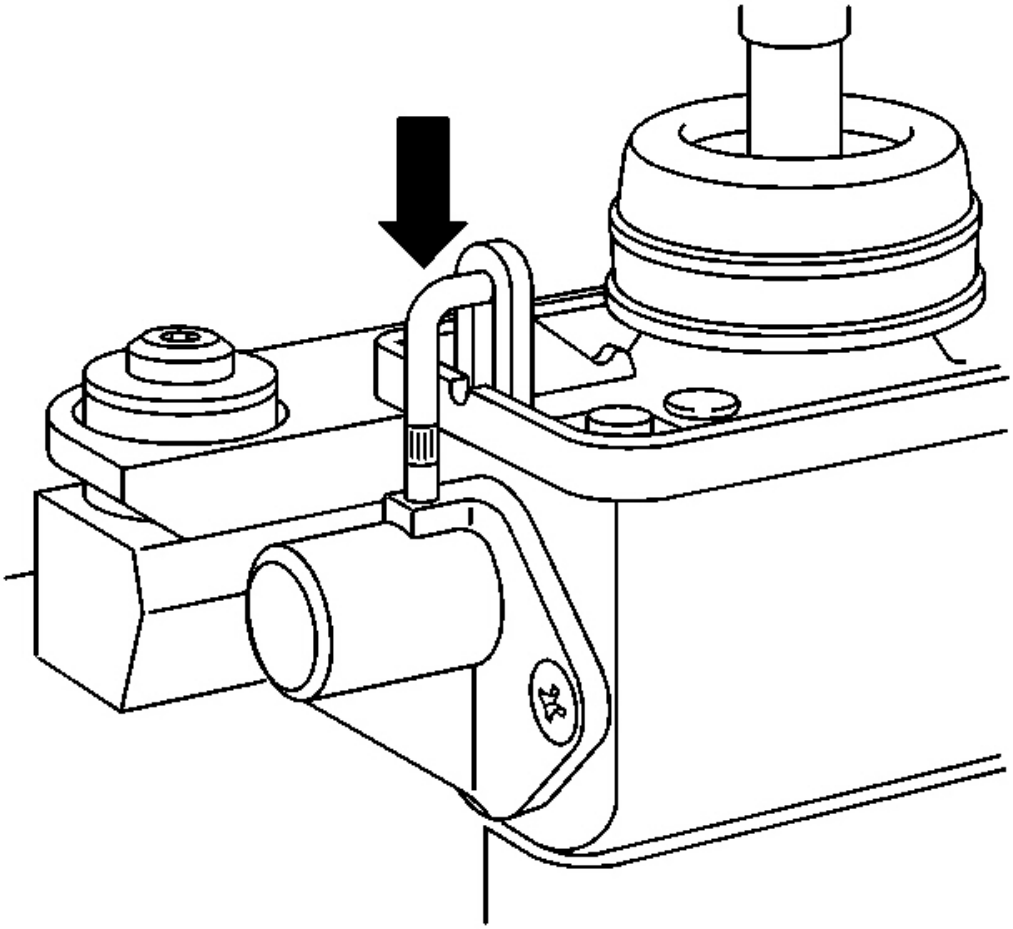

Fig. 57: Shift Control Neutral Lock Pin
Courtesy of GENERAL MOTORS CORP.

1. Apply the parking brake.
2. Remove the shift control closeout boot. Refer to **Shift Control Shift Closeout Boot Replacement** .
3. Place the shifter into NEUTRAL.
4. Press down to engage the shift control neutral lock pin.

cardiagn.com

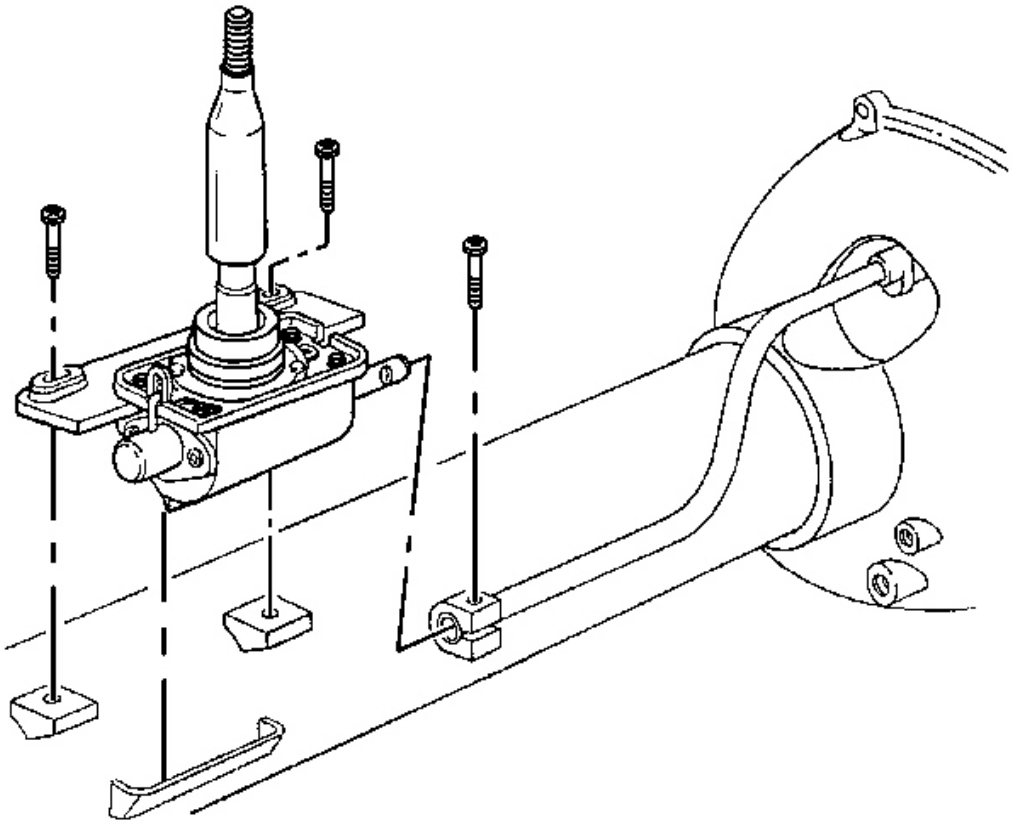

Fig. 58: Transmission Shift Rod, Clamp & Bolt
Courtesy of GENERAL MOTORS CORP.

5. Loosen the transmission shift rod clamp bolt.
6. Loosen the shift control mounting bolts.
7. Check that the shift control locator (on the underside of the shift control) is installed into the shifter bracket on the side of the driveline support assembly.

NOTE: Refer to Fastener Notice in Cautions and Notices.

8. Tighten the shift control mounting bolts.

   Tighten: Tighten the shift control mounting bolts to 30 N.m (22 lb ft).

9. Tighten the transmission shift rod clamp bolt.

cardiagn.com

Tighten: Tighten the transmission shift rod clamp bolt to 30 N.m (22 lb ft).

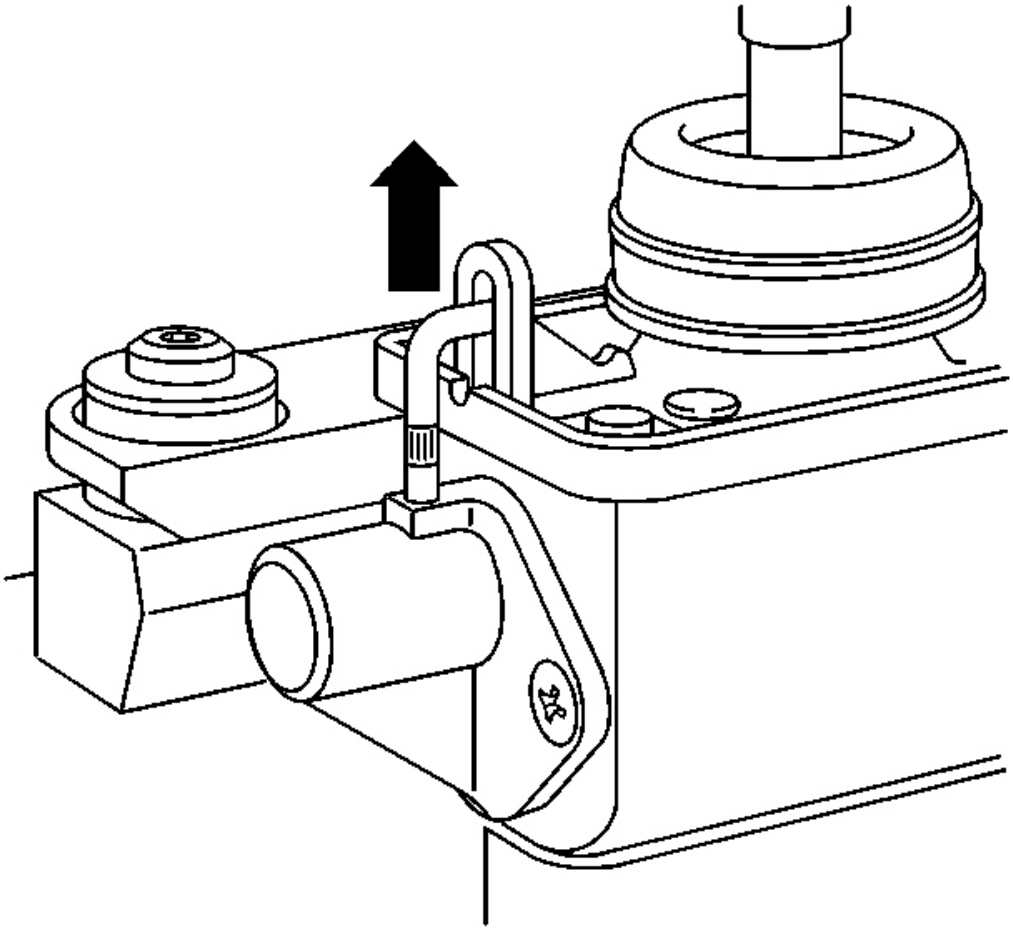

Fig. 59: Releasing The Shift Control Neutral Lock Pin
Courtesy of GENERAL MOTORS CORP.

10. Lift to release the shift control neutral lock pin.
11. Install the shift control closeout boot. Refer to **Shift Control Shift Closeout Boot Replacement** .
12. Release the parking brake.

BACKUP LAMP SWITCH REPLACEMENT

Removal Procedure

cardiagn.com

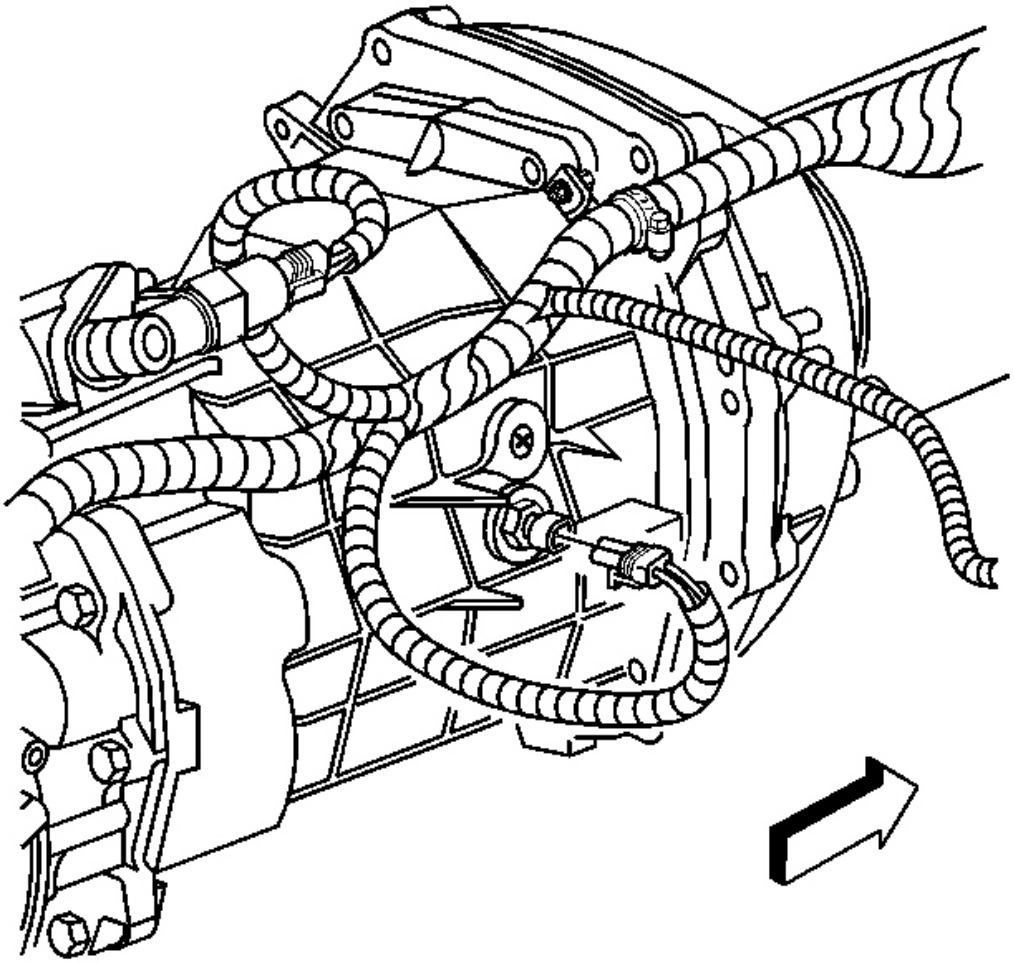

Fig. 60: Backup Lamp Switch Electrical Connector
Courtesy of GENERAL MOTORS CORP.

1. Raise and suitably support the vehicle. Refer to **Lifting and Jacking the Vehicle** in General Information.
2. Remove the catalytic converter. Refer to **Catalytic Converter Replacement** in Engine Exhaust.
3. Disconnect the backup lamp switch electrical connector.

cardiagn.com

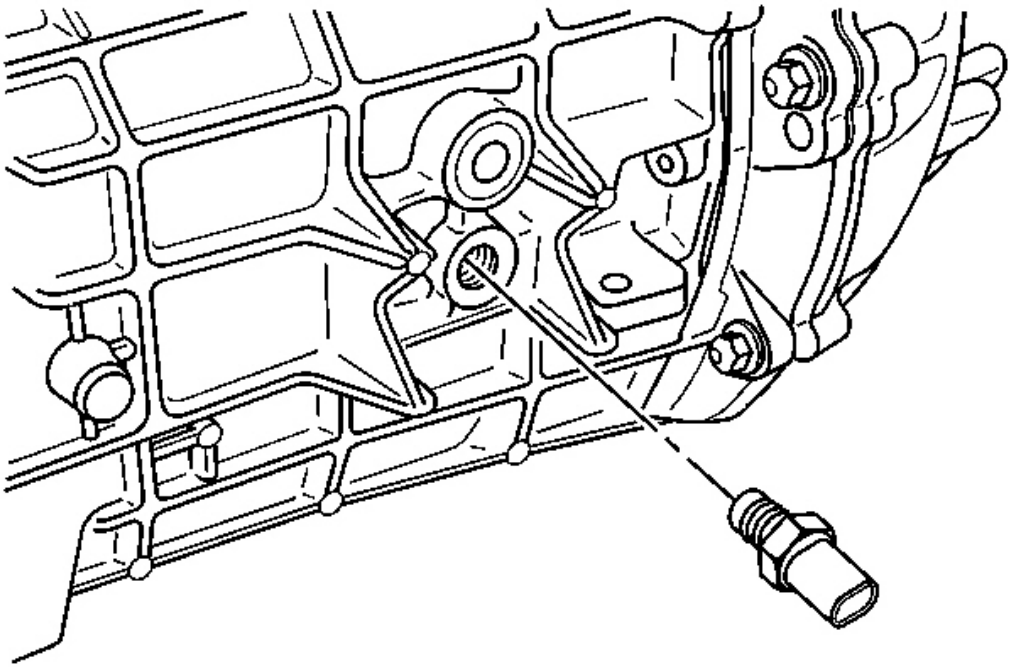

Fig. 61: Backup Lamp Switch
Courtesy of GENERAL MOTORS CORP.

4. Remove the backup lamp switch.

Installation Procedure

cardiagn.com

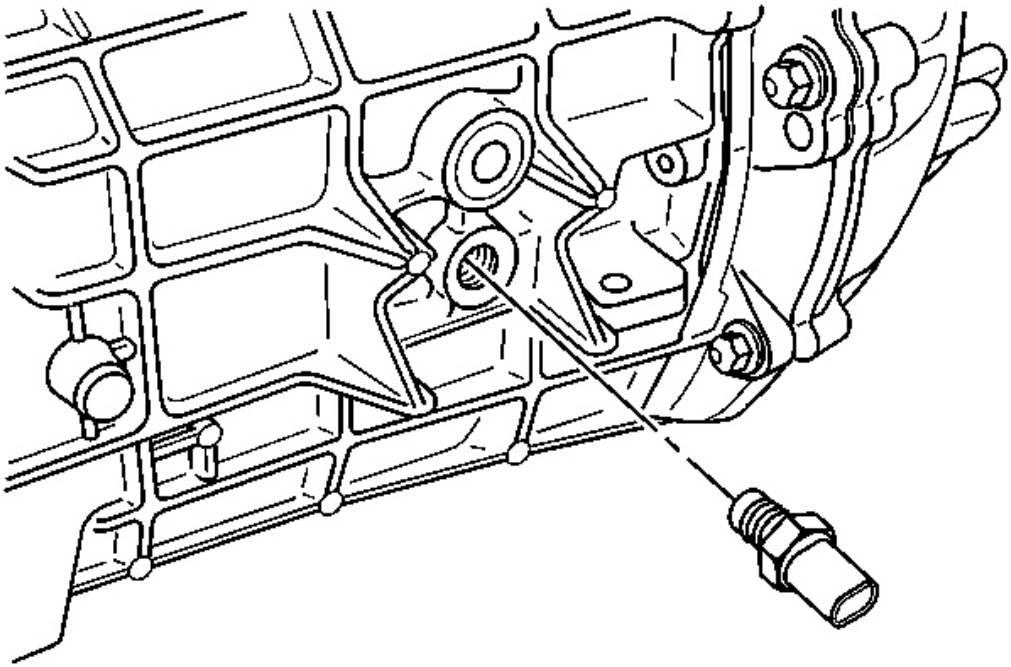

Fig. 62: Backup Lamp Switch
Courtesy of GENERAL MOTORS CORP.

NOTE: Refer to Fastener Notice in Cautions and Notices.

1. Install the backup lamp switch.

   Tighten: Tighten the backup lamp switch to 20 N.m (15 lb ft).

cardiagn.com

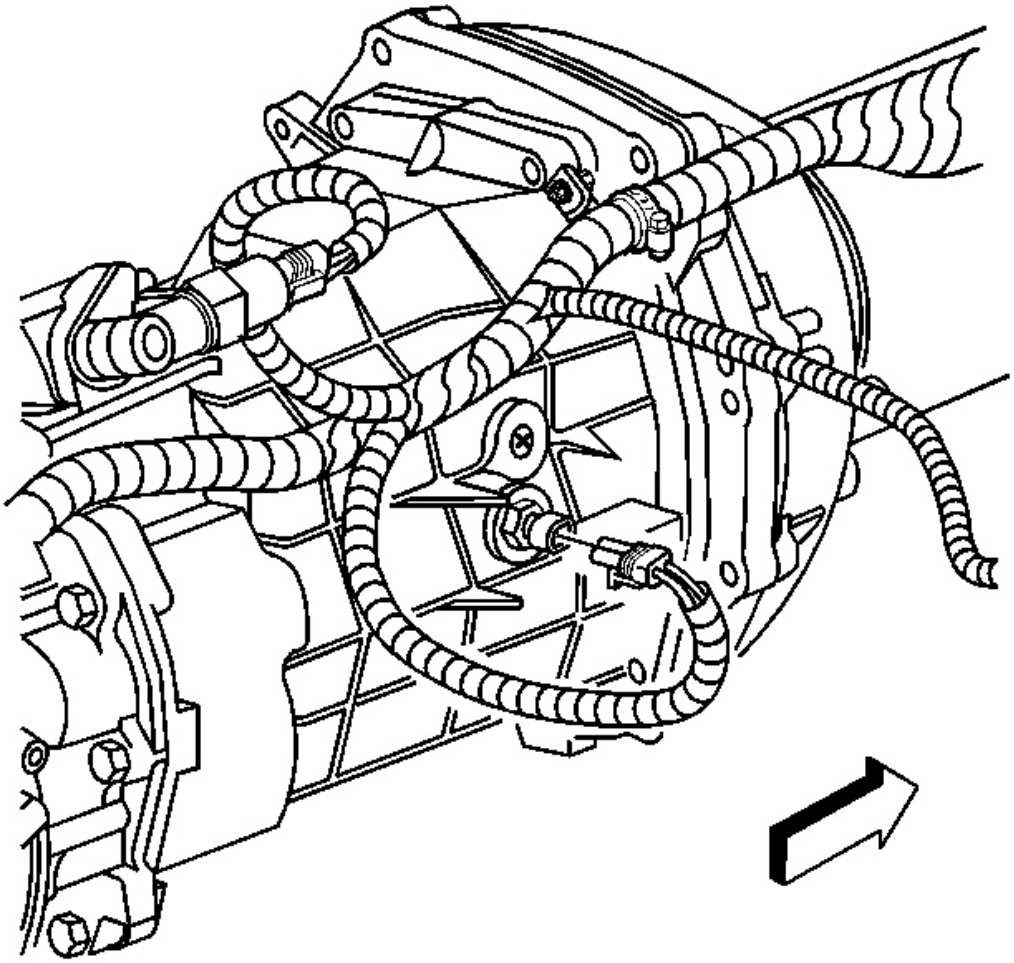

Fig. 63: Backup Lamp Switch Electrical Connector
Courtesy of GENERAL MOTORS CORP.

2. Connect the backup lamp switch electrical connector.
3. Install the catalytic converter. Refer to **Catalytic Converter Replacement** in Engine Exhaust.
4. Lower the vehicle.

TRANSMISSION FLUID TEMPERATURE (TFT) SENSOR REPLACEMENT

Removal Procedure

cardiagn.com

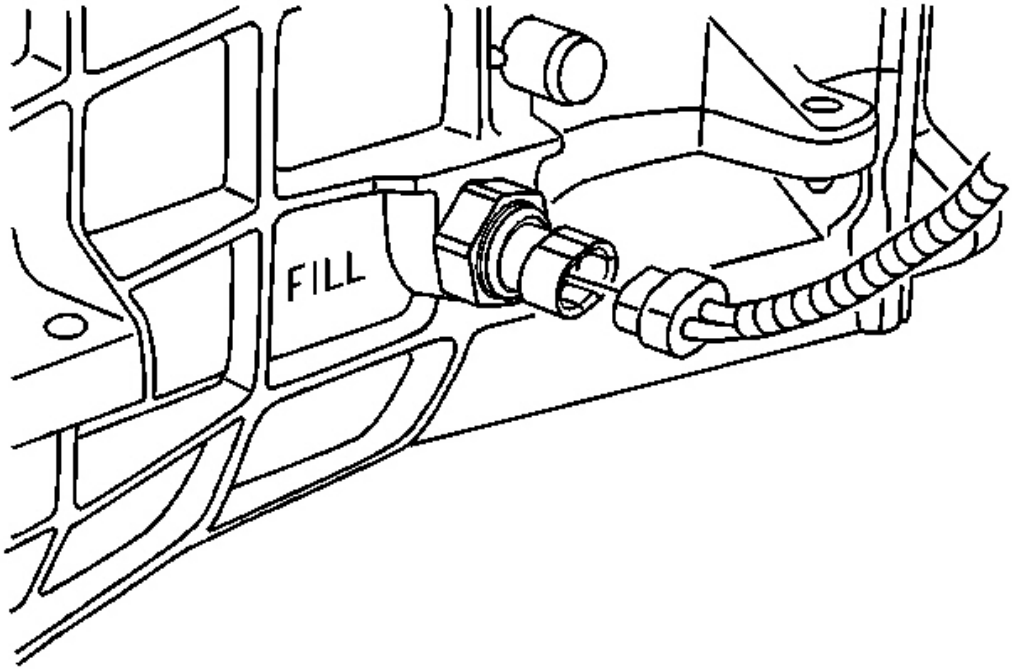

Fig. 64: TFT Sensor Electrical Connector
Courtesy of GENERAL MOTORS CORP.

1. Raise and suitably support the vehicle. Refer to **Lifting and Jacking the Vehicle** in General Information.
2. Disconnect the transmission fluid temperature sensor electrical connector.

cardiagn.com

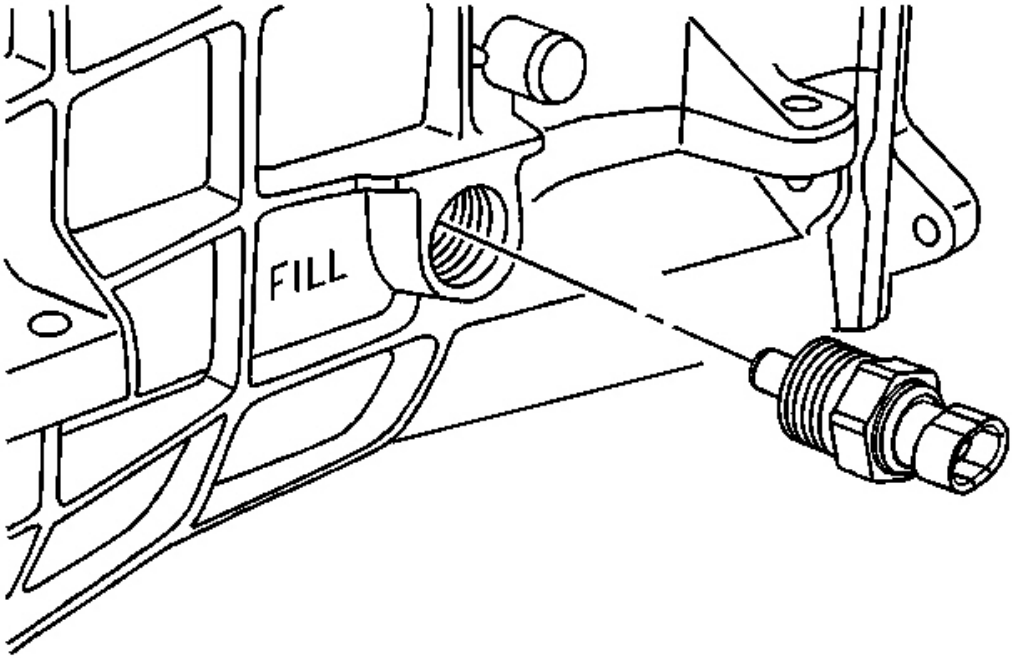

Fig. 65: Inspecting Transmission Fluid Level Is Even Bottom Of Fill Plug Hole
Courtesy of GENERAL MOTORS CORP.

3. Remove the transmission fluid temperature sensor.

Installation Procedure

cardiagn.com

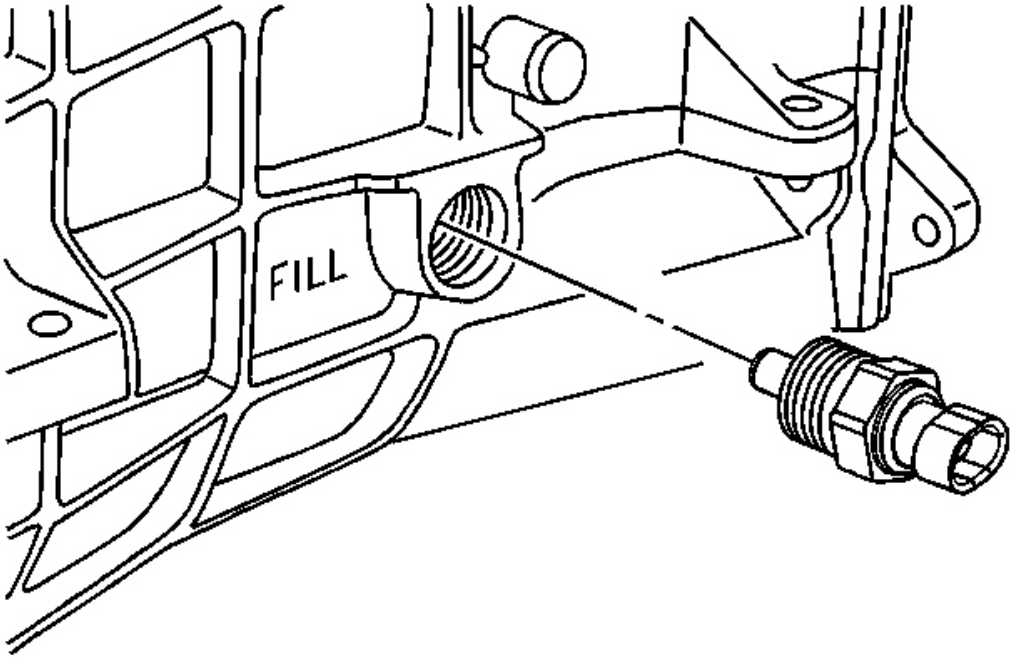

Fig. 66: Inspecting Transmission Fluid Level Is Even Bottom Of Fill Plug Hole
Courtesy of GENERAL MOTORS CORP.

NOTE: **Refer to Fastener Notice in Cautions and Notices.**

1. Install the transmission fluid temperature sensor.

   Tighten: Tighten the transmission fluid temperature sensor to 27 N.m (20 lb ft).

cardiagn.com

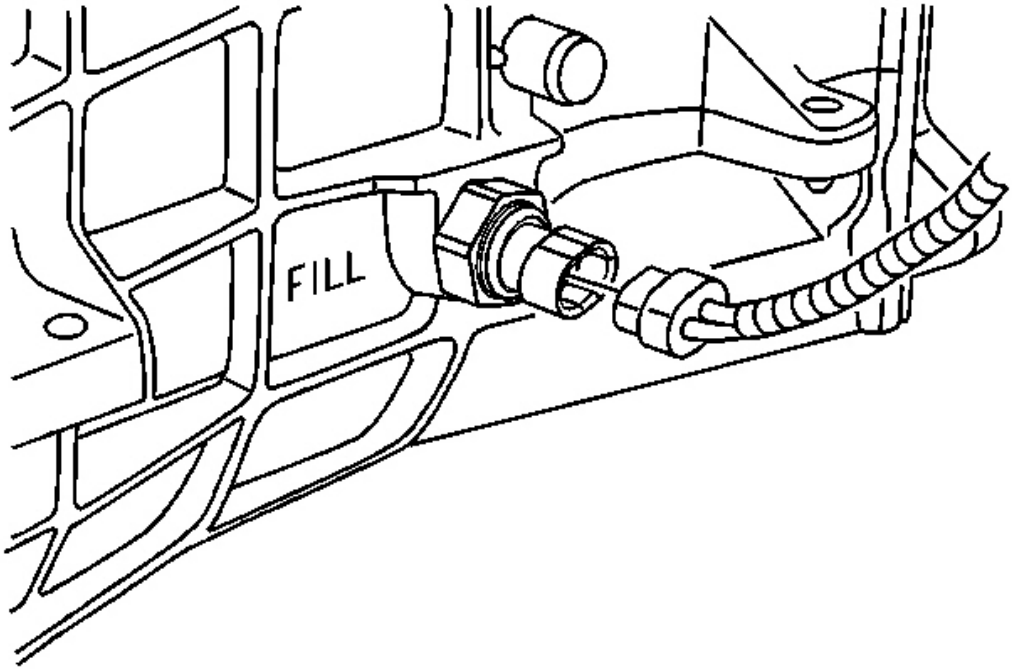

Fig. 67: TFT Sensor Electrical Connector
Courtesy of GENERAL MOTORS CORP.

2. Connect the transmission fluid temperature sensor electrical connector.
3. Lower the vehicle.

REVERSE LOCKOUT SOLENOID REPLACEMENT

Tools Required

J 41099 Gear Select/Reverse Lockout Solenoid Socket. See **Special Tools and Equipment** .

Removal Procedure

cardiagn.com

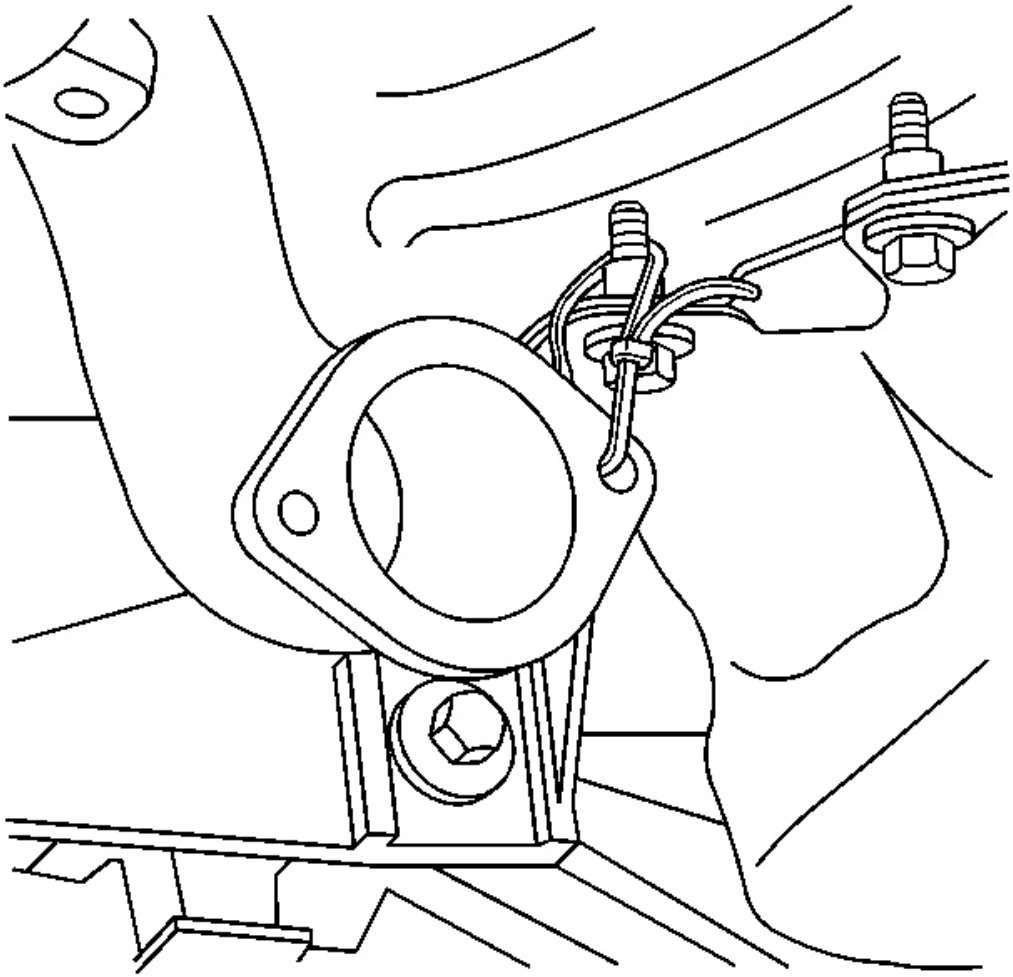

Fig. 68: Wiring Harness, Brake Pipe Clip Retainers & Rear Suspension Crossmember
Courtesy of GENERAL MOTORS CORP.

CAUTION: Refer to Battery Disconnect Caution in Cautions and Notices.

1. Disconnect the negative battery cable.
2. Raise and suitably support the vehicle. Refer to **Lifting and Jacking the Vehicle** in General Information.
3. Remove the rear tire and wheel assemblies. Refer to **Tire and Wheel Removal and Installation** in Tires and Wheels.
4. Remove the intermediate exhaust pipe to muffler bolts.

cardiagn.com

5. Tie off the mufflers to the underbody to support out of the way.
6. Remove the rear transverse spring. Refer to **Rear Transverse Spring Replacement** in Rear Suspension.
7. Disconnect the wiring harness and brake pipe clip retainers from the rear suspension crossmember.
8. Position a transmission jack under the rear suspension crossmember and firmly secure the crossmember to the jack.
9. Using ONLY HAND TOOLS, remove the rear suspension crossmember mounting nuts.

IMPORTANT: Observe the clearance between the driveline and the driveline tunnel closeout panel.

10. Slowly lower the rear suspension crossmember, along with the attached driveline, approximately 4 cm (11/2 in).

    (Lower the rear suspension crossmember and driveline for access to the reverse lockout solenoid.)

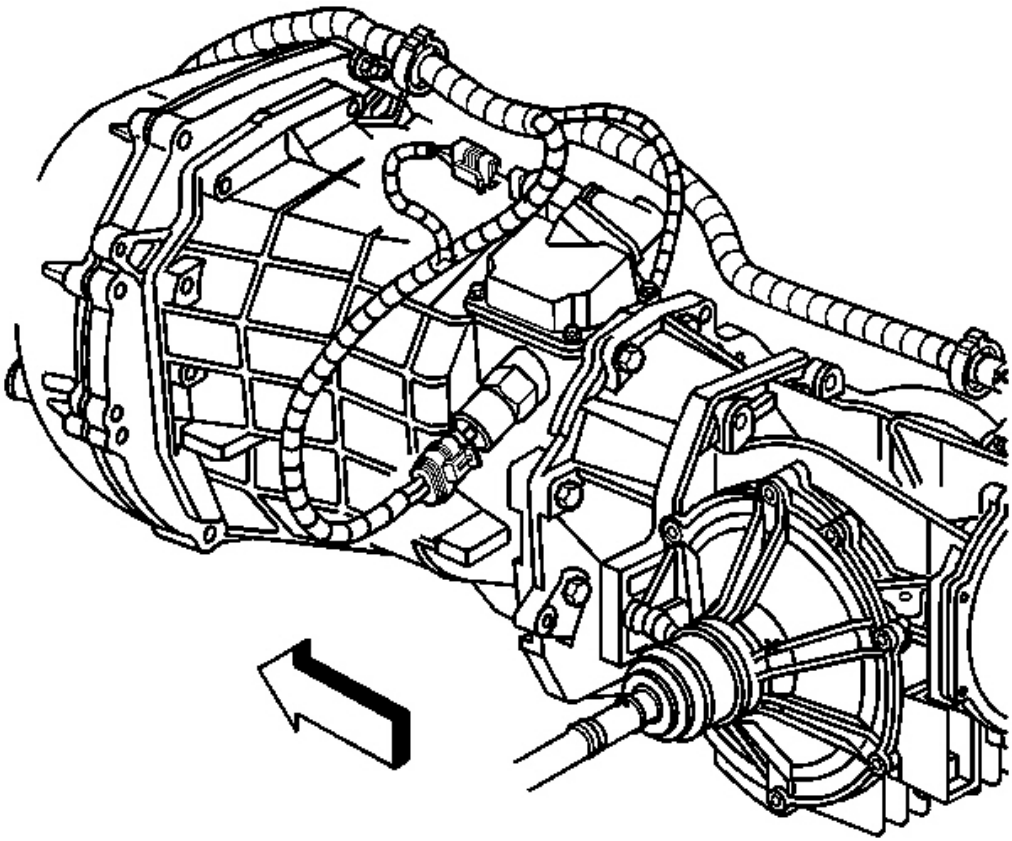

cardiagn.com

Fig. 69: Reverse Lockout Solenoid Electrical Connector
Courtesy of GENERAL MOTORS CORP.

11. Disconnect the reverse lockout solenoid electrical connector.

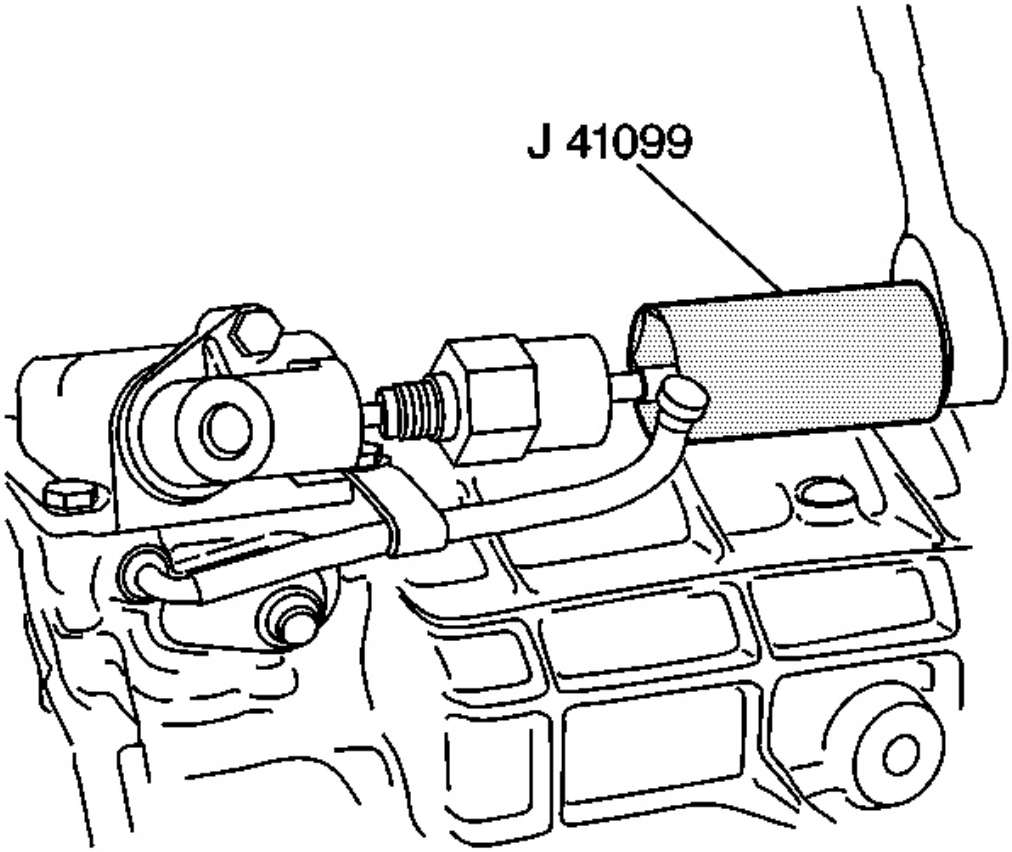

Fig. 70: J 41099 & Reverse Lockout Solenoid
Courtesy of GENERAL MOTORS CORP.

12. Using the **J 41099** , remove the reverse lockout solenoid. See **Special Tools and Equipment** .

Installation Procedure

cardiagn.com

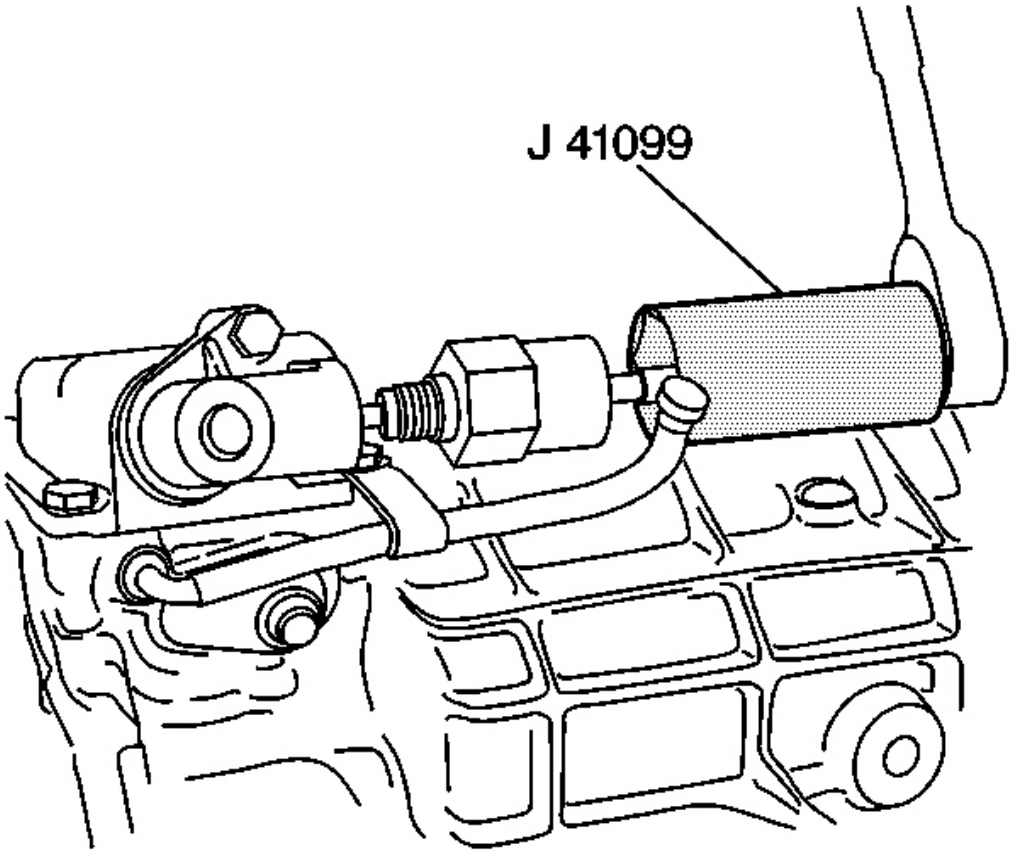

Fig. 71: J 41099 & Reverse Lockout Solenoid
Courtesy of GENERAL MOTORS CORP.

NOTE: Refer to Fastener Notice in Cautions and Notices.

1. Using the **J 41099** , install the reverse lockout solenoid. See **Special Tools and Equipment** .

   Tighten: Tighten the reverse lockout solenoid to 40 N.m (30 lb ft).

cardiagn.com

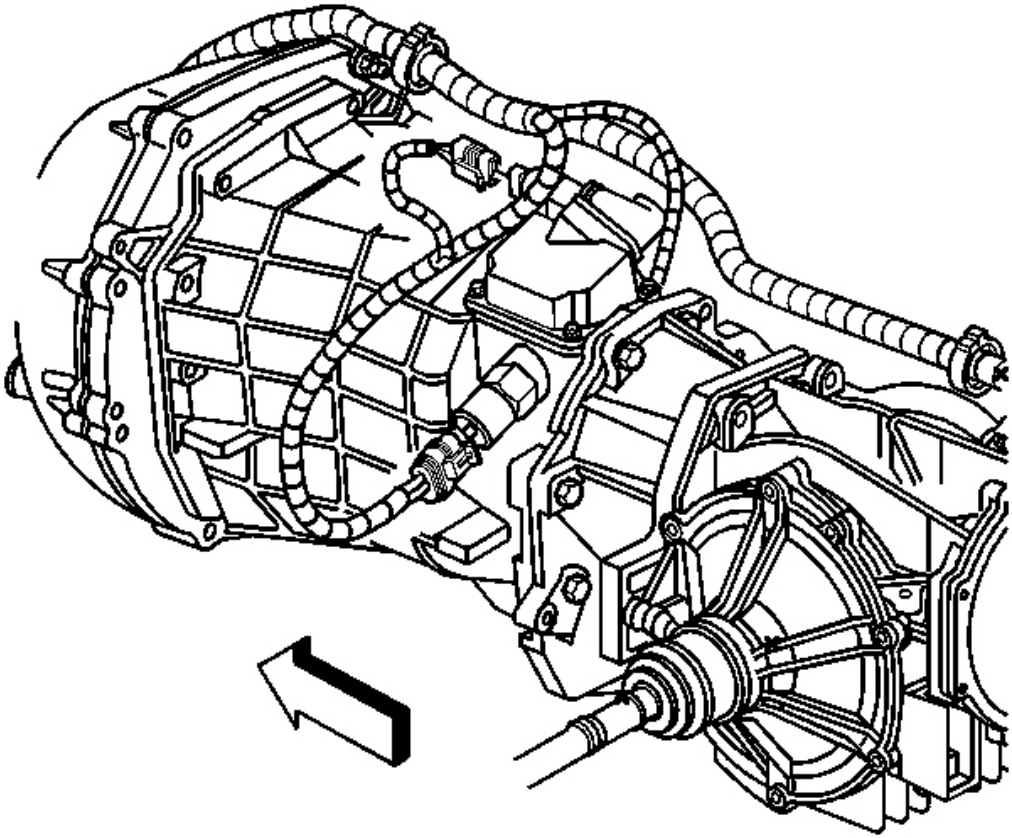

Fig. 72: Reverse Lockout Solenoid Electrical Connector
Courtesy of GENERAL MOTORS CORP.

2. Connect the reverse lockout solenoid electrical connector.

cardiagn.com

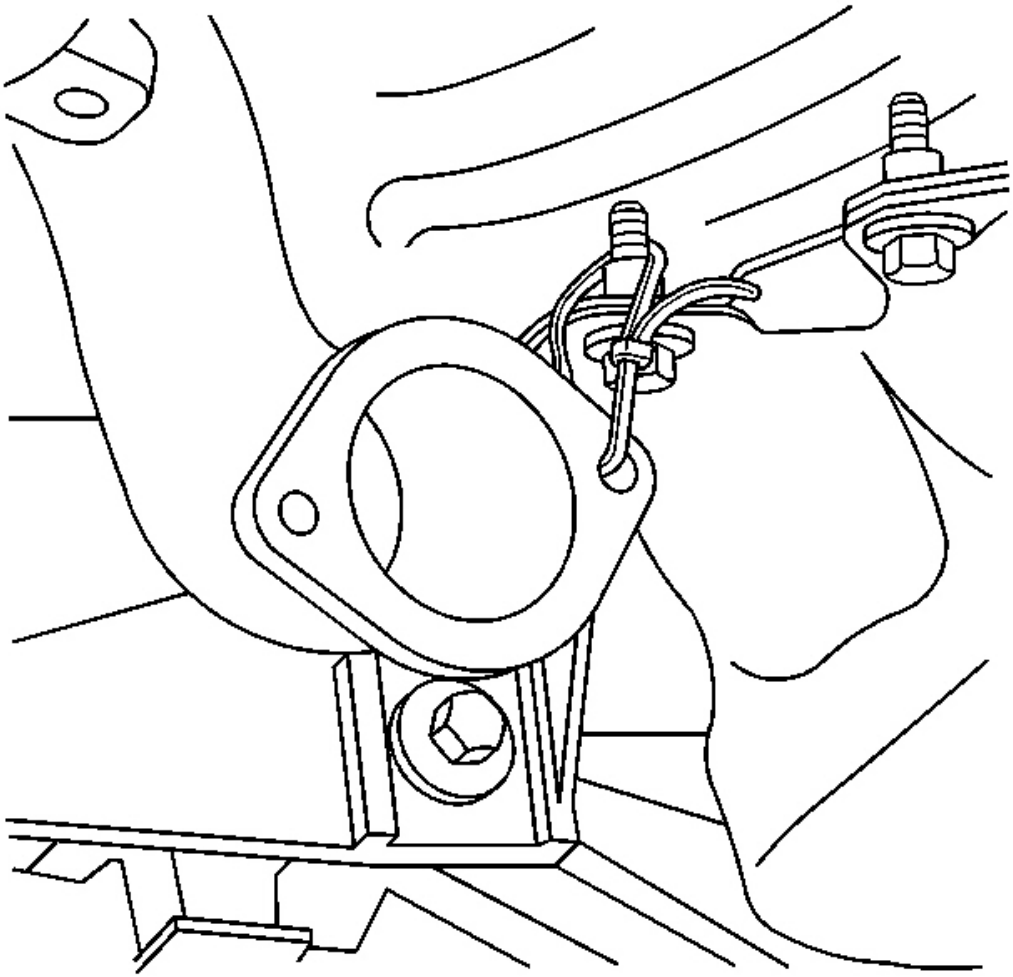

Fig. 73: Wiring Harness, Brake Pipe Clip Retainers & Rear Suspension Crossmember
Courtesy of GENERAL MOTORS CORP.

3. Slowly raise the rear suspension crossmember to seat to the vehicle frame rails.
4. Using ONLY HAND TOOLS, install NEW rear suspension crossmember mounting nuts.

   Tighten: Tighten the rear suspension crossmember mounting nuts to 110 N.m (81 lb ft).

5. Remove the transmission jack from the rear suspension crossmember.
6. Connect the wiring harness and brake pipe clip retainers to the rear suspension crossmember.
7. Install the rear transverse spring. Refer to **Rear Transverse Spring Replacement** in Rear Suspension.
8. Remove the tie-off retainers from the muffler assemblies.

cardiagn.com

9. Install the intermediate exhaust pipe to muffler bolts.

   Tighten: Tighten the intermediate exhaust pipe to muffler bolts to 50 N.m (37 lb ft).

10. Install the rear tire and wheel assemblies. Refer to **Tire and Wheel Removal and Installation** in Tires and Wheels.
11. Lower the vehicle.
12. Connect the negative battery cable.

    Tighten: Tighten the negative battery cable bolt to 15 N.m (11 lb ft).

13. Program the transmitters. Refer to **Transmitter Programming** in Keyless Entry.

GEAR SELECT/SKIP SHIFT SOLENOID REPLACEMENT

Tools Required

J 41099 Gear Select/Reverse Lockout Solenoid Socket. See **Special Tools and Equipment** .

Removal Procedure

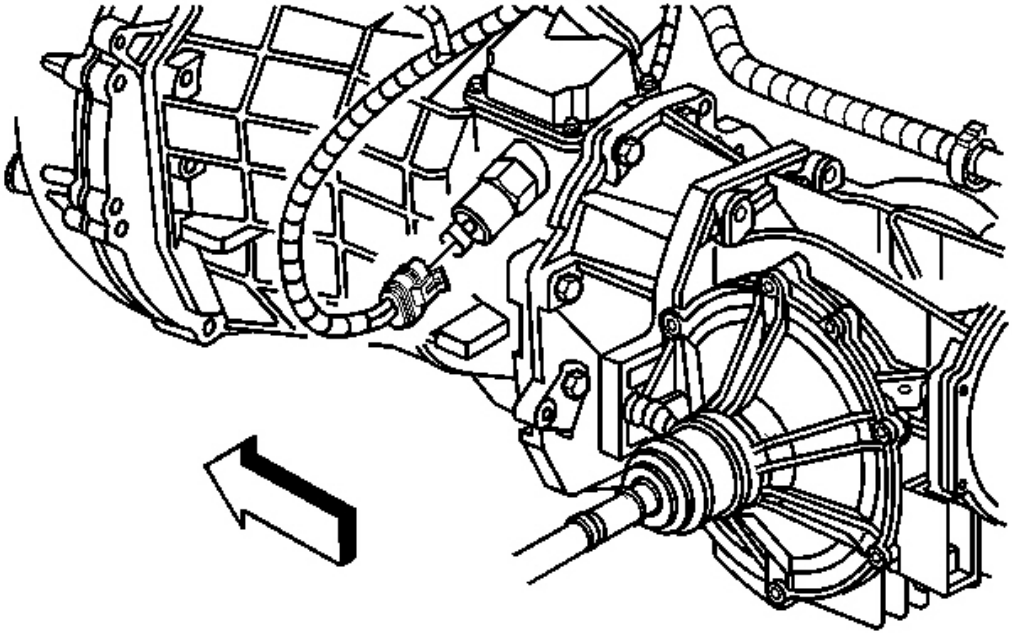

cardiagn.com

Fig. 74: Gear Select Solenoid Electrical Connector
Courtesy of GENERAL MOTORS CORP.

1. Raise and suitably support the vehicle. Refer to **Lifting and Jacking the Vehicle** in General Information.
2. Disconnect the gear select solenoid electrical connector.

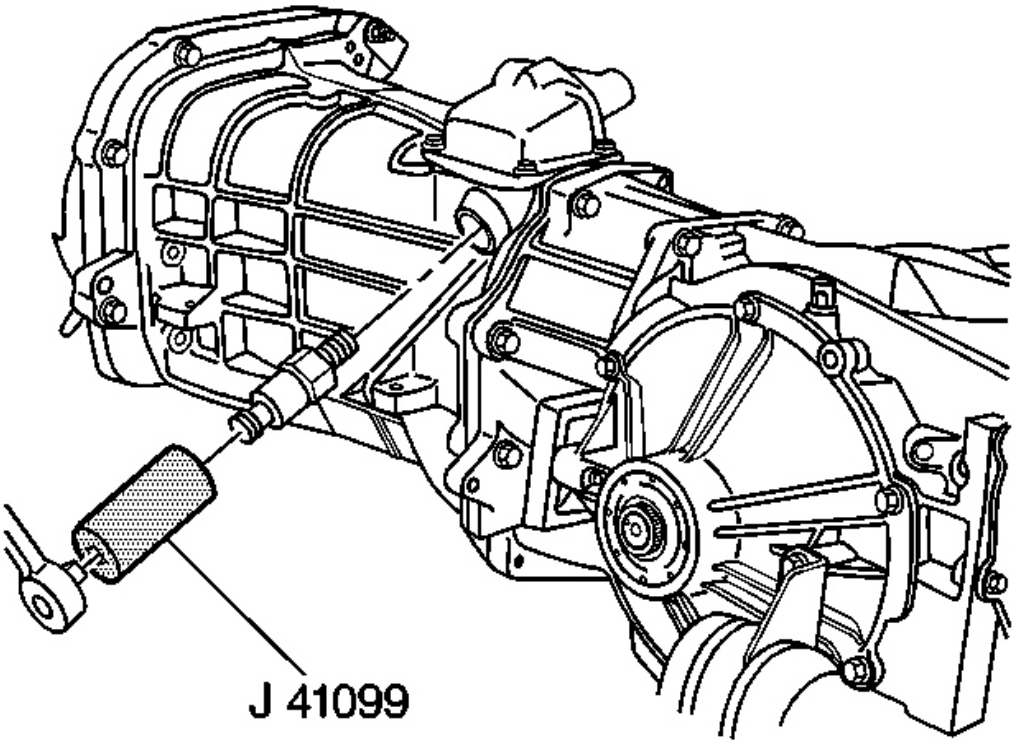

Fig. 75: J 41099 & Gear Select Solenoid
Courtesy of GENERAL MOTORS CORP.

3. Using the **J 41099** , remove the gear select solenoid. See **Special Tools and Equipment** .

Installation Procedure

cardiagn.com

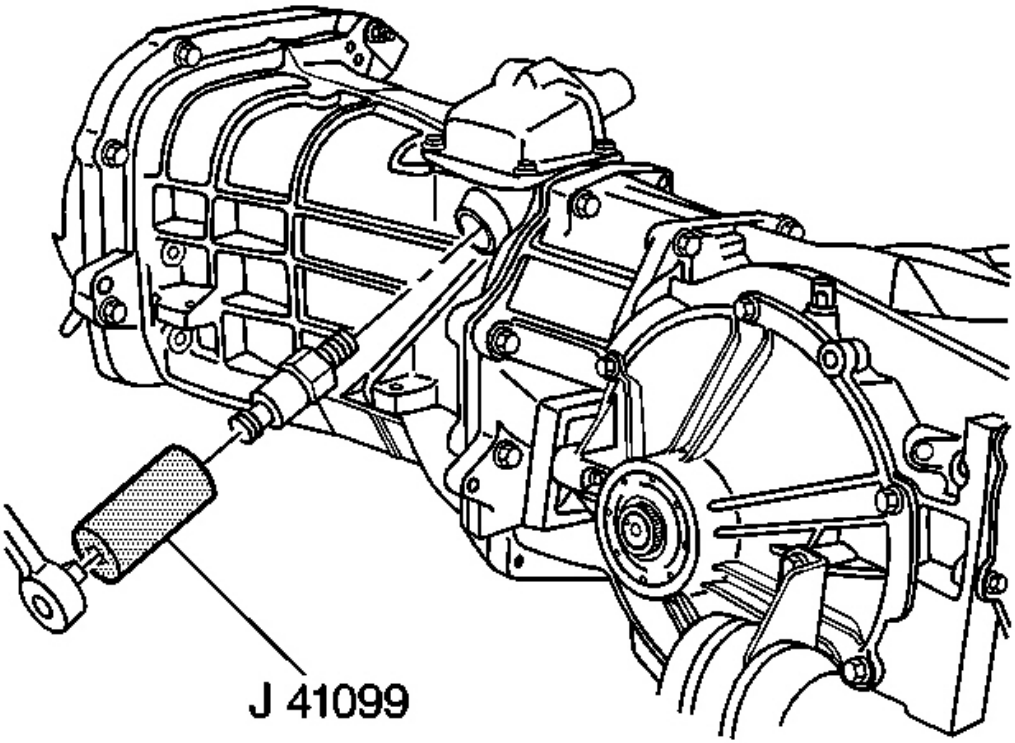

Fig. 76: J 41099 & Gear Select Solenoid
Courtesy of GENERAL MOTORS CORP.

NOTE: Refer to Fastener Notice in Cautions and Notices.

1. Using the **J 41099** , install the gear select (skip shift) solenoid. See **Special Tools and Equipment** .

   Tighten: Tighten the gear select solenoid to 40 N.m (30 lb ft).

cardiagn.com

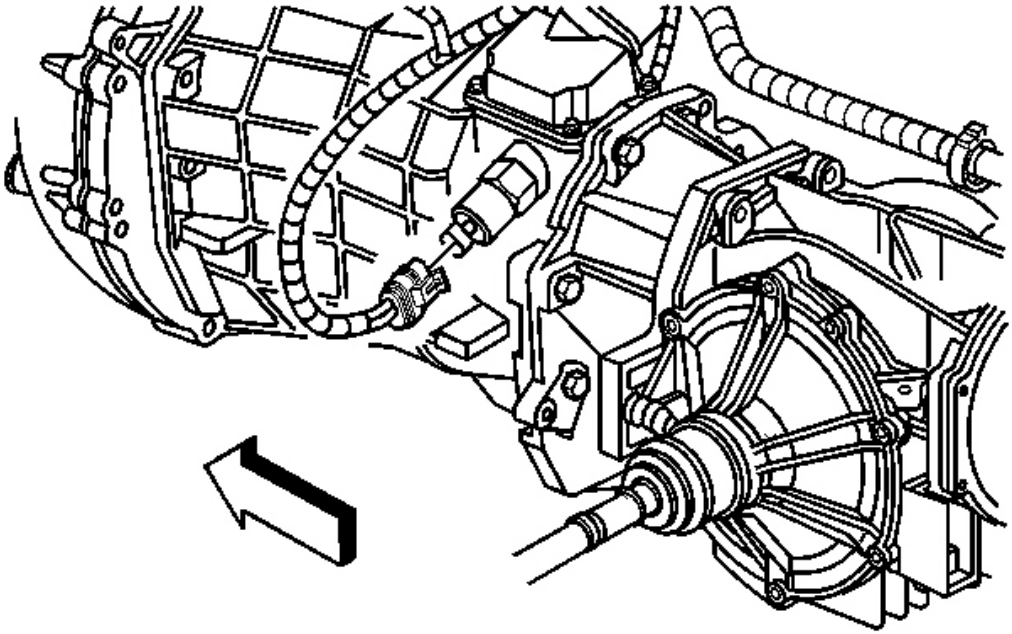

Fig. 77: Gear Select Solenoid Electrical Connector
Courtesy of GENERAL MOTORS CORP.

2. Connect the gear select solenoid electrical connector.
3. Lower the vehicle.

TRANSMISSION FLUID REPLACEMENT

Draining Procedure

cardiagn.com

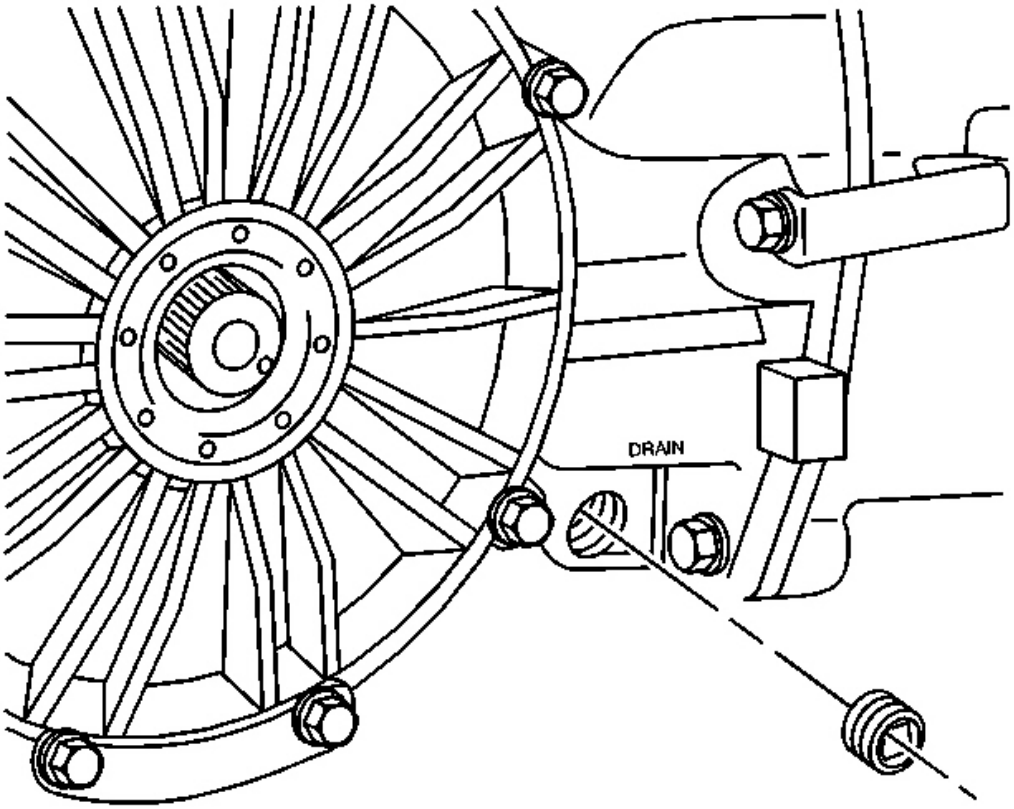

Fig. 78: Transmission Fluid Drain Plug
Courtesy of GENERAL MOTORS CORP.

1. Raise and suitably support the vehicle; ensure that the vehicle is level. Refer to **Lifting and Jacking the Vehicle** in General Information.
2. Clean away all dirt and debris from the transmission fluid drain plug area.
3. Remove the drain plug.
4. Allow the system to drain.

Filling Procedure

cardiagn.com

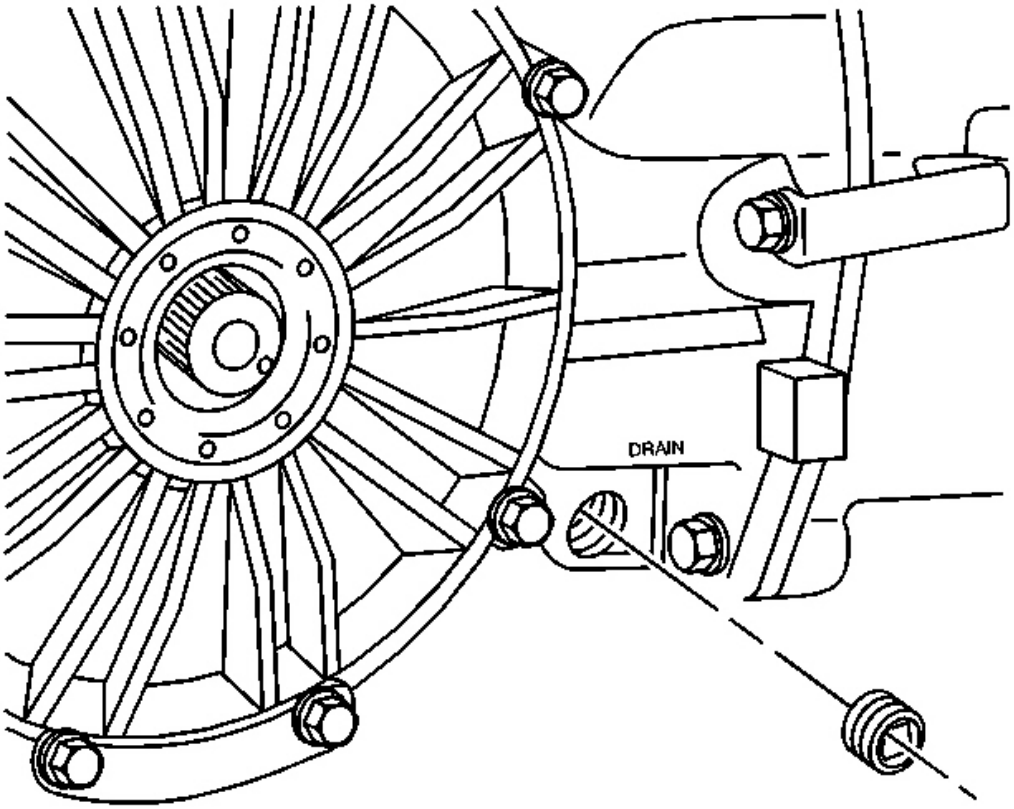

Fig. 79: Transmission Fluid Drain Plug
Courtesy of GENERAL MOTORS CORP.

NOTE: Refer to Fastener Notice in Cautions and Notices.

1. Install the transmission fluid drain plug.

   Tighten: Tighten the transmission fluid drain plug to 27 N.m (20 lb ft).

cardiagn.com

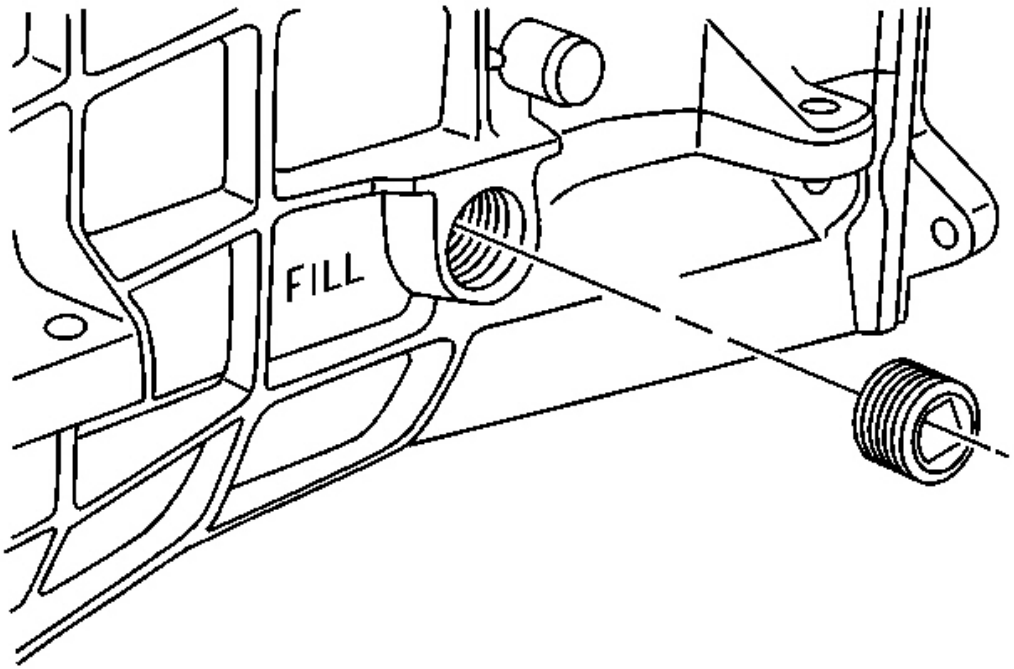

Fig. 80: Transmission Fluid Fill Plug Hole
Courtesy of GENERAL MOTORS CORP.

2. Clean away all dirt and debris from the transmission fluid fill plug area.
3. Remove the fill plug.
4. Fill the transmission with DEXRON(R)-III transmission fluid, until even with the bottom of the fill plug hole.
5. Install the transmission fluid fill plug.

   Tighten: Tighten the transmission fluid fill plug to 27 N.m (20 lb ft).

6. Lower the vehicle.

TRANSMISSION VENT TUBE REPLACEMENT

Removal Procedure

cardiagn.com

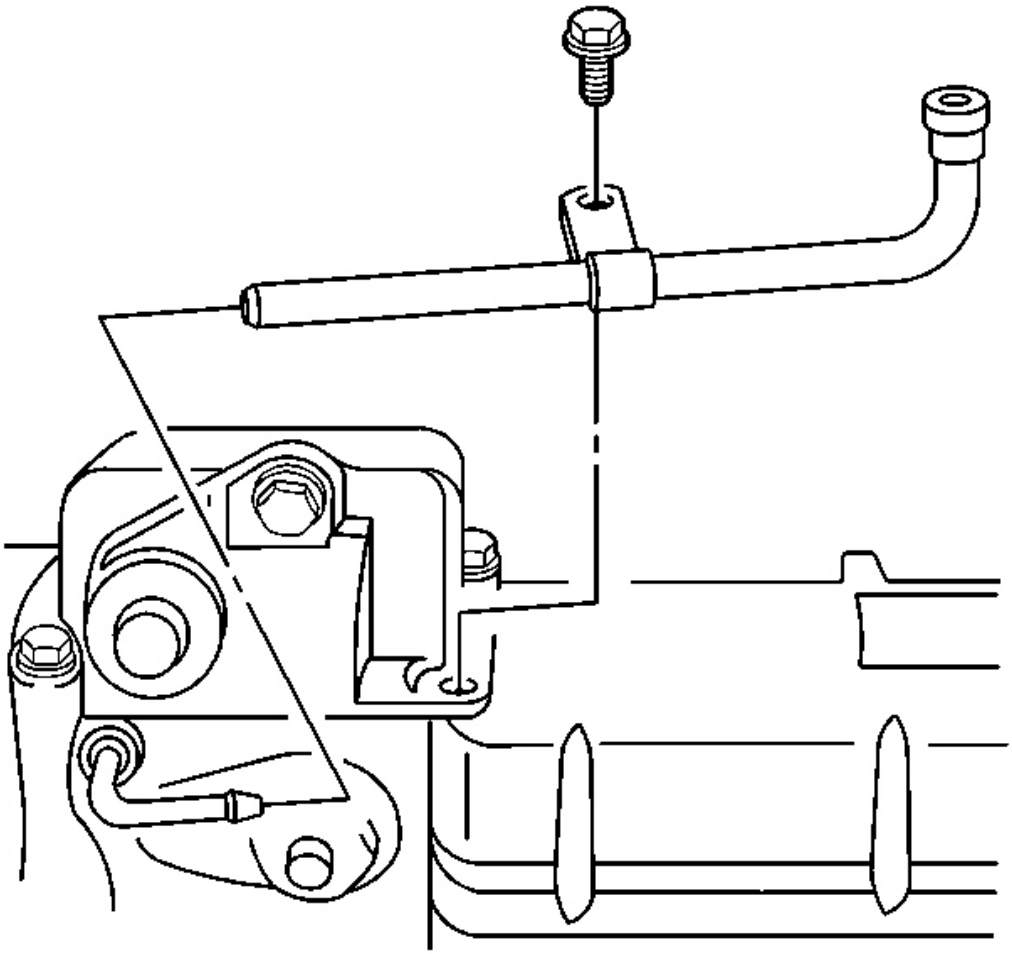

Fig. 81: Transmission Vent Tube & Retaining Bolt
Courtesy of GENERAL MOTORS CORP.

1. Raise and suitably support the vehicle. Refer to **Lifting and Jacking the Vehicle** in General Information.
2. Remove the reverse lockout solenoid. Refer to **Reverse Lockout Solenoid Replacement** .
3. Remove the transmission vent tube retaining bolt.
4. Remove the transmission vent tube.

Installation Procedure

cardiagn.com

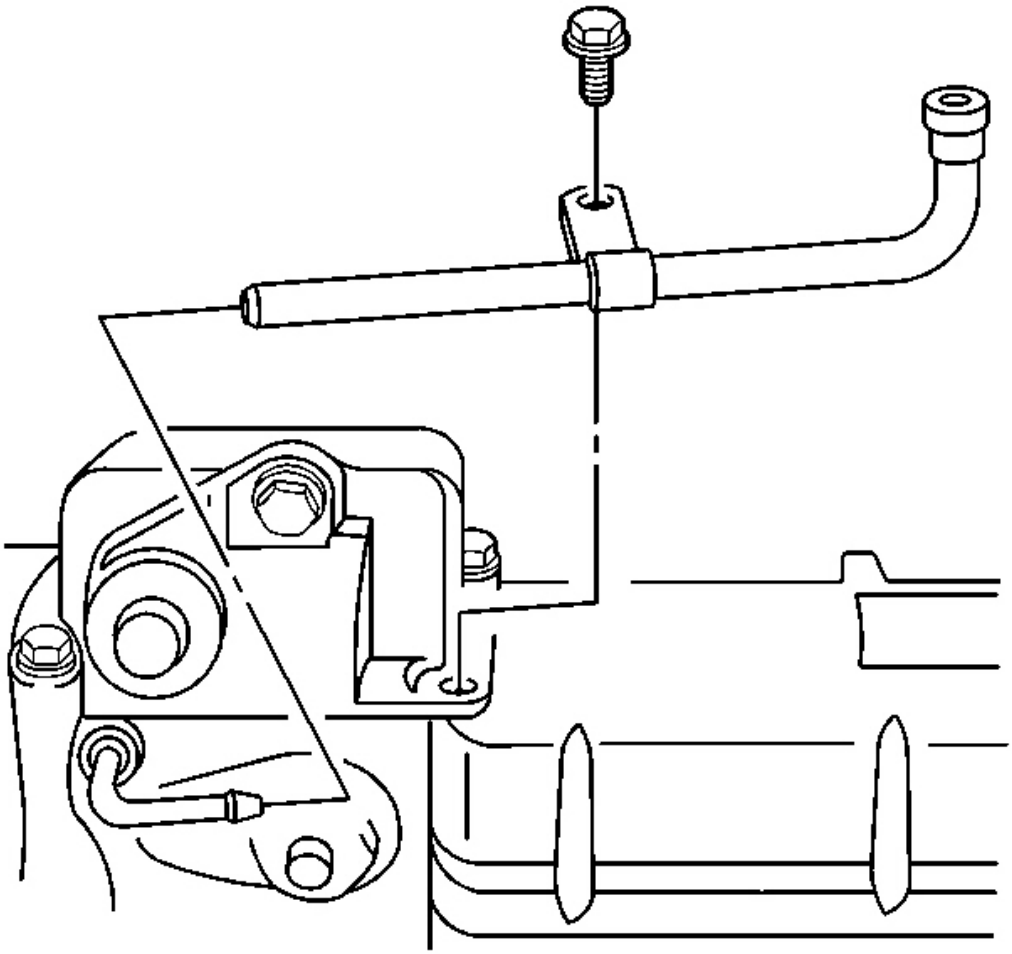

Fig. 82: Transmission Vent Tube & Retaining Bolt
Courtesy of GENERAL MOTORS CORP.

1. Install the transmission vent tube.

NOTE: **Refer to Fastener Notice in Cautions and Notices.**

2. Install the transmission vent tube retaining bolt.

   Tighten: Tighten the transmission vent tube retaining bolt to 20 N.m (15 lb ft).

3. Install the reverse lockout solenoid. Refer to **Reverse Lockout Solenoid Replacement** .
4. Lower the vehicle.

cardiagn.com

TRANSMISSION REPLACEMENT

Tools Required

- **J 42055** Transmission Support Fixture
- **J 42371** Hydraulic Clutch Line Separator. See **Special Tools and Equipment** .

Removal Procedure

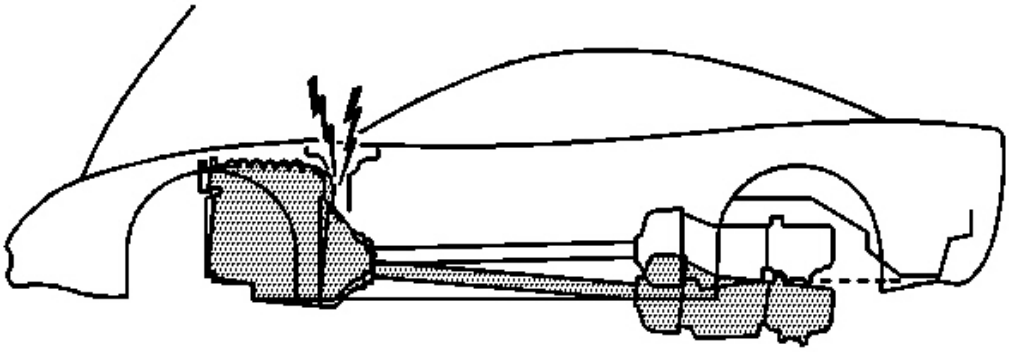

Fig. 83: Rear Of Driveline
Courtesy of GENERAL MOTORS CORP.

CAUTION: Refer to Battery Disconnect Caution in Cautions and Notices.

NOTE: **When tilting down the rear of the driveline, observe the clearance between the rear of the engine and the composite dash panel. Do not allow the engine to rest unsupported against the composite dash panel, or vehicle damage may result.**

NOTE: **When lowering and removing the rear of the driveline, observe the clearance between the rear of the transaxle assembly and the underbody to prevent damage.**

NOTE: **When tilting down the rear of the driveline, insert a putty knife or similar tool between the shift control bracket on the driveline support assembly and the brake pipe retainer on the driveline tunnel wall to prevent damage.**

cardiagn.com

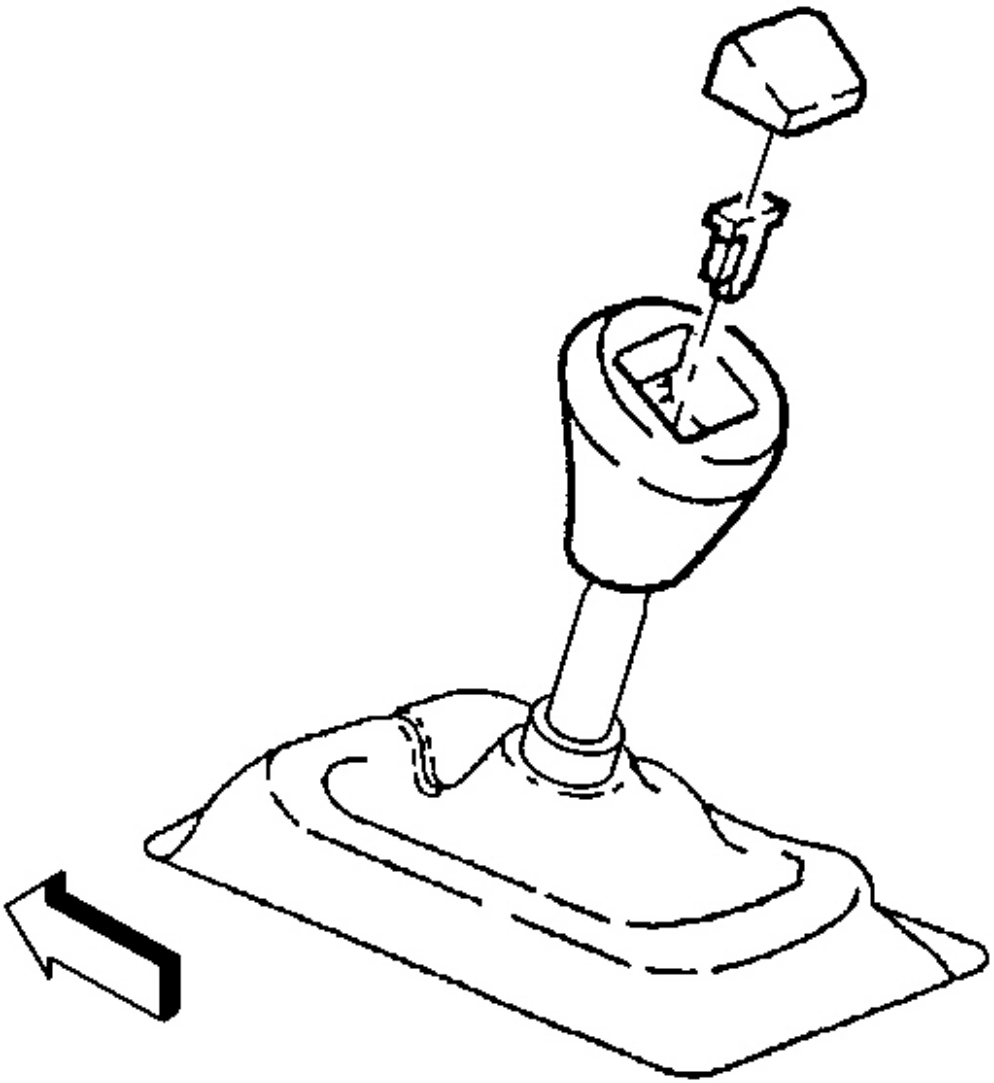

Fig. 84: Shift Control Knob Retainer & Button
Courtesy of GENERAL MOTORS CORP.

1. Disconnect the negative battery cable.
2. Remove the console. Refer to **Console Replacement** in Instrument Panel, Gages and Console.
3. Carefully pry off the shift control knob button.
4. Pry the shift control knob retainer out of the slots and remove the retainer.

cardiagn.com

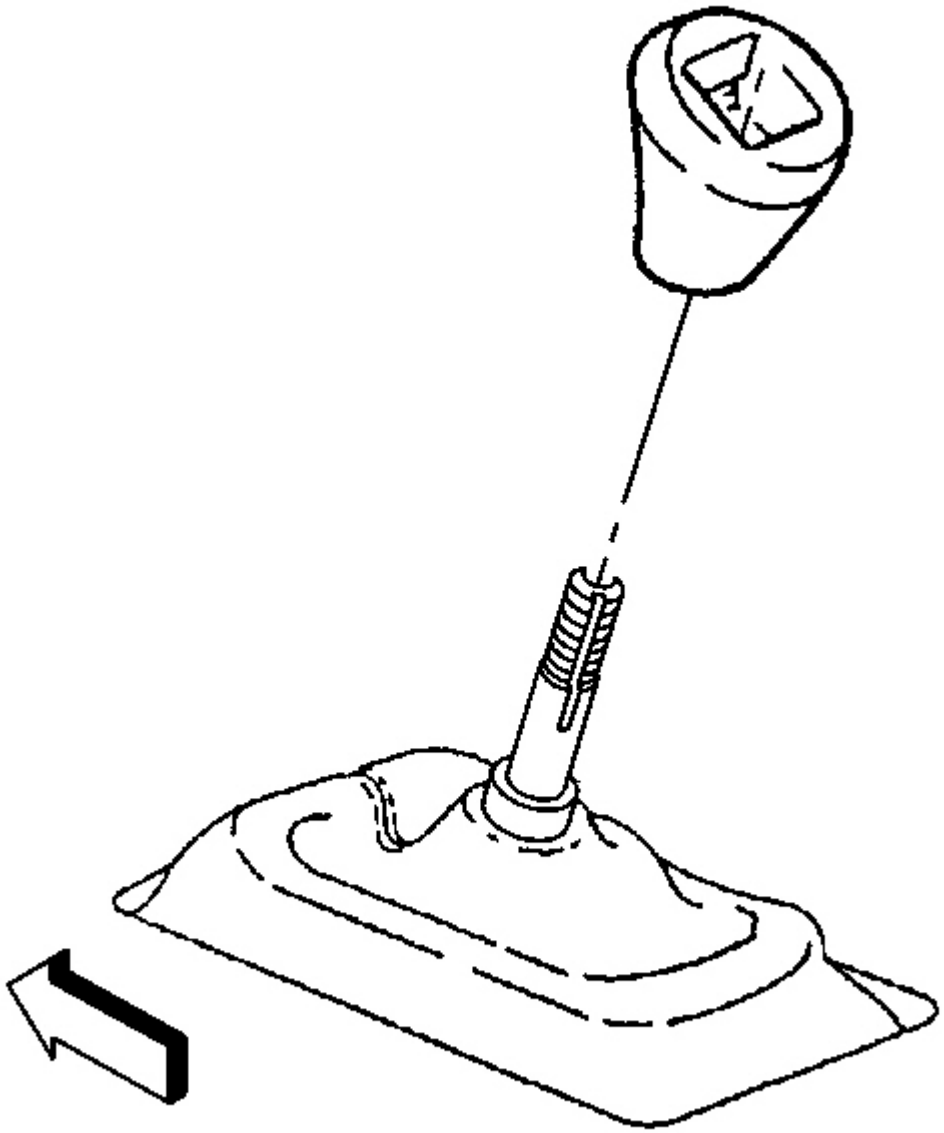

Fig. 85: Removing Gear Shift Knob
Courtesy of GENERAL MOTORS CORP.

5. Unscrew the shift control knob.

cardiagn.com

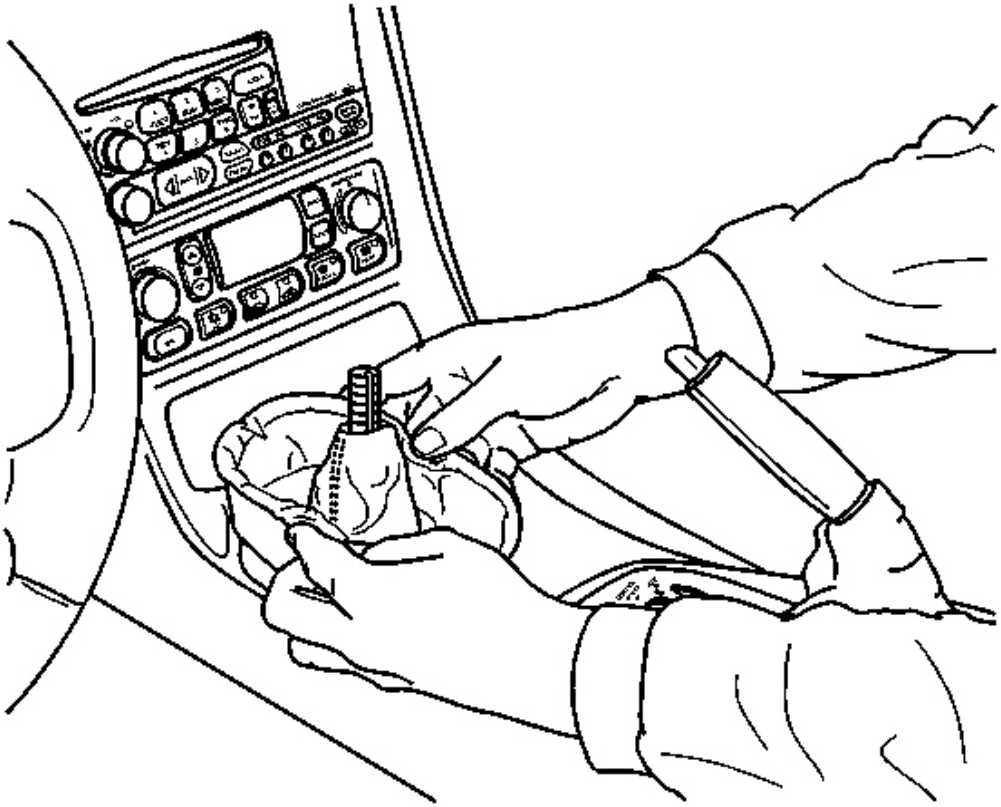

Fig. 86: Releasing The Remaining Boot Retaining Tabs
Courtesy of GENERAL MOTORS CORP.

6. Grasp the sides of the shift control boot and apply light pressure in toward the shift control lever to begin to release the shift boot retaining tabs from the IP accessory trim plate.
7. Using light pressure, continue to release the remaining boot retaining tabs.

cardiagn.com

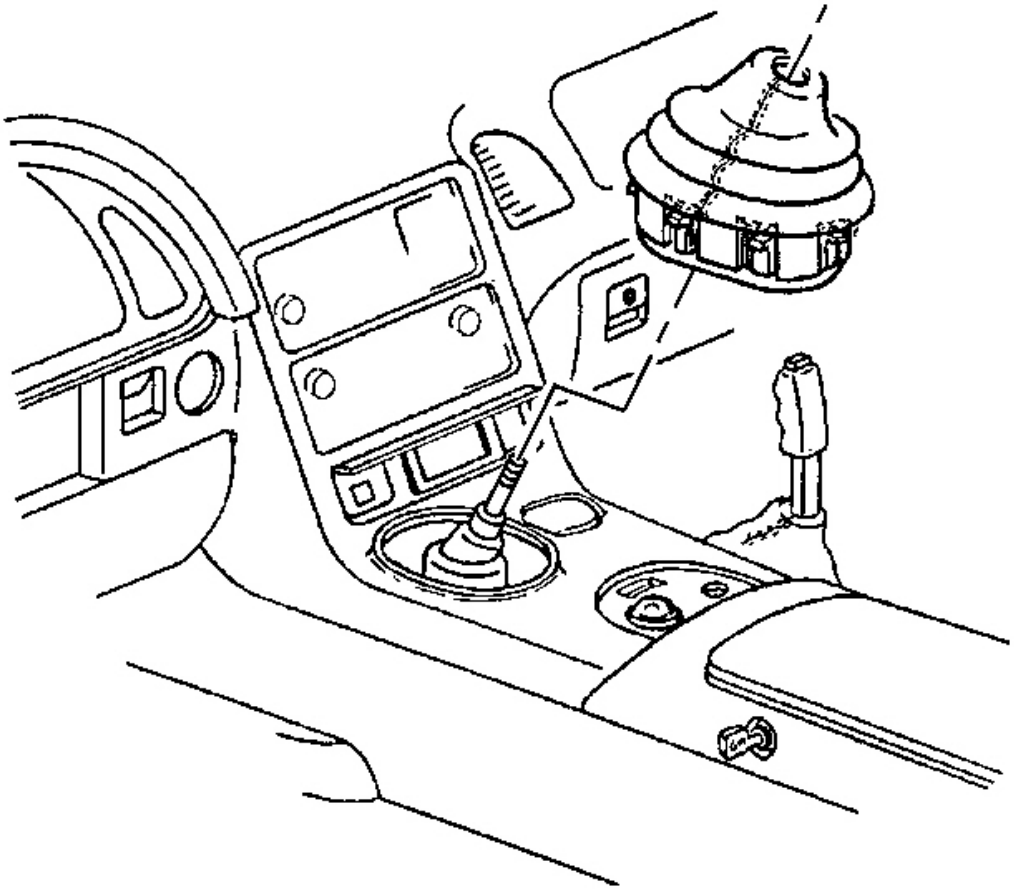

Fig. 87: Shift Control Boot, Shift Control Lever & IP Accessory Trim Plate
Courtesy of GENERAL MOTORS CORP.

8. Lift the boot away from the trim plate and remove the boot.
9. Remove the IP accessory trim plate. Refer to **Trim Plate Replacement - Instrument Panel (I/P) Accessory** in Instrument Panel, Gauges and Console.

cardiagn.com

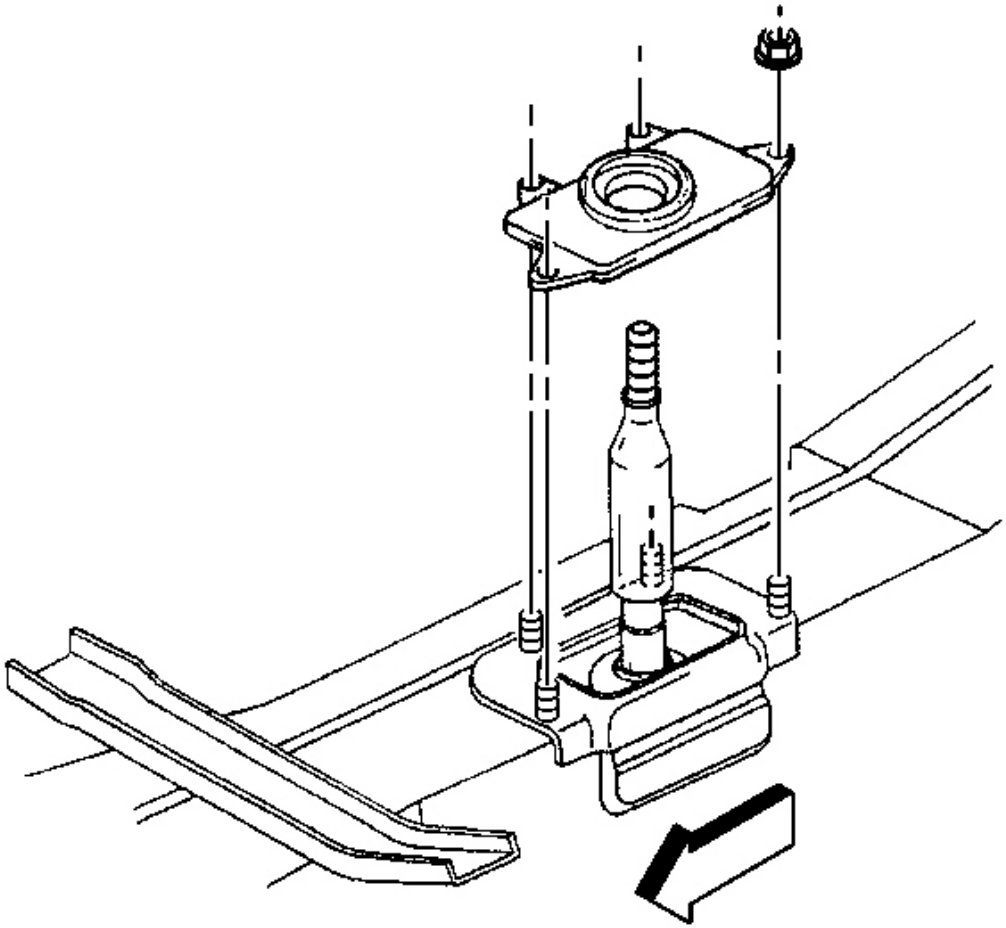

Fig. 88: Shift Control Closeout Boot & Retaining Nuts
Courtesy of GENERAL MOTORS CORP.

10. Remove the shift control closeout boot retaining nuts.
11. Remove the shift control closeout boot.
12. Remove the shift control assembly. Refer to **Shift Control Assembly Replacement** .
13. Remove the left IP lower insulator panel. Refer to **Closeout/Insulator Panel Replacement - Left** in Instrument Panel, Gauges and Console.

cardiagn.com

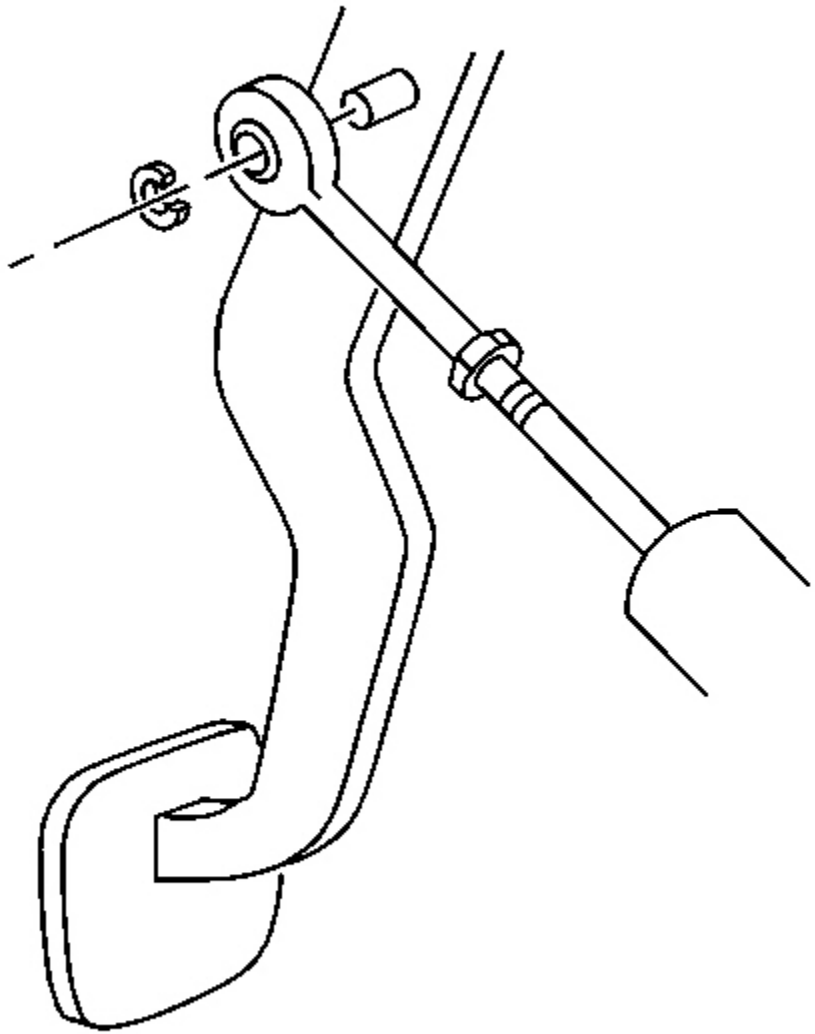

Fig. 89: Master Cylinder Push Rod From The Clutch Pedal
Courtesy of GENERAL MOTORS CORP.

14. Remove the clutch master cylinder pushrod retainer.
15. Disconnect the clutch master cylinder pushrod from the clutch pedal.

cardiagn.com

Fig. 90: Clutch Actuator Cylinder Hose
Courtesy of GENERAL MOTORS CORP.

16. Raise and suitably support the vehicle. Refer to **Lifting and Jacking the Vehicle** in General Information.
17. Remove the clutch actuator cylinder hose from the hose retaining clip (at the rear of the engine).

cardiagn.com

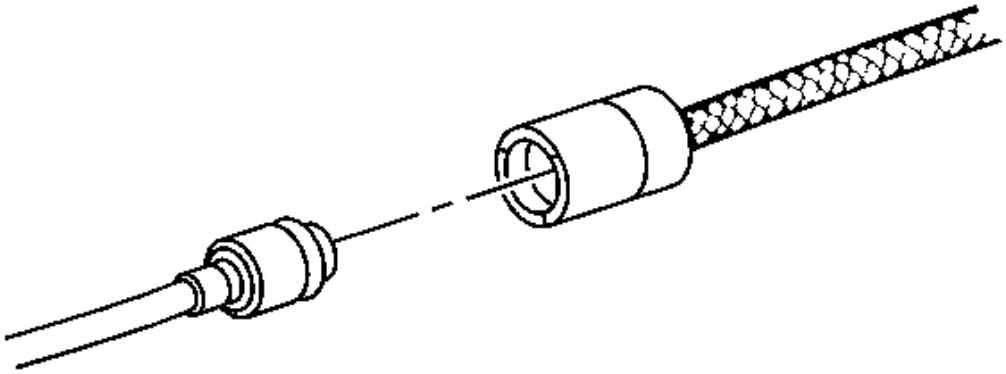

Fig. 91: Identifying White Circular Release Ring On The Actuator Hose
Courtesy of GENERAL MOTORS CORP.

18. Using the **J 42371** , depress the white circular release ring on the actuator cylinder hose and simultaneously pull lightly on the master cylinder hose to disconnect. See **Special Tools and Equipment** .
19. Protect both hose coupling ends from dirt and damage.

cardiagn.com

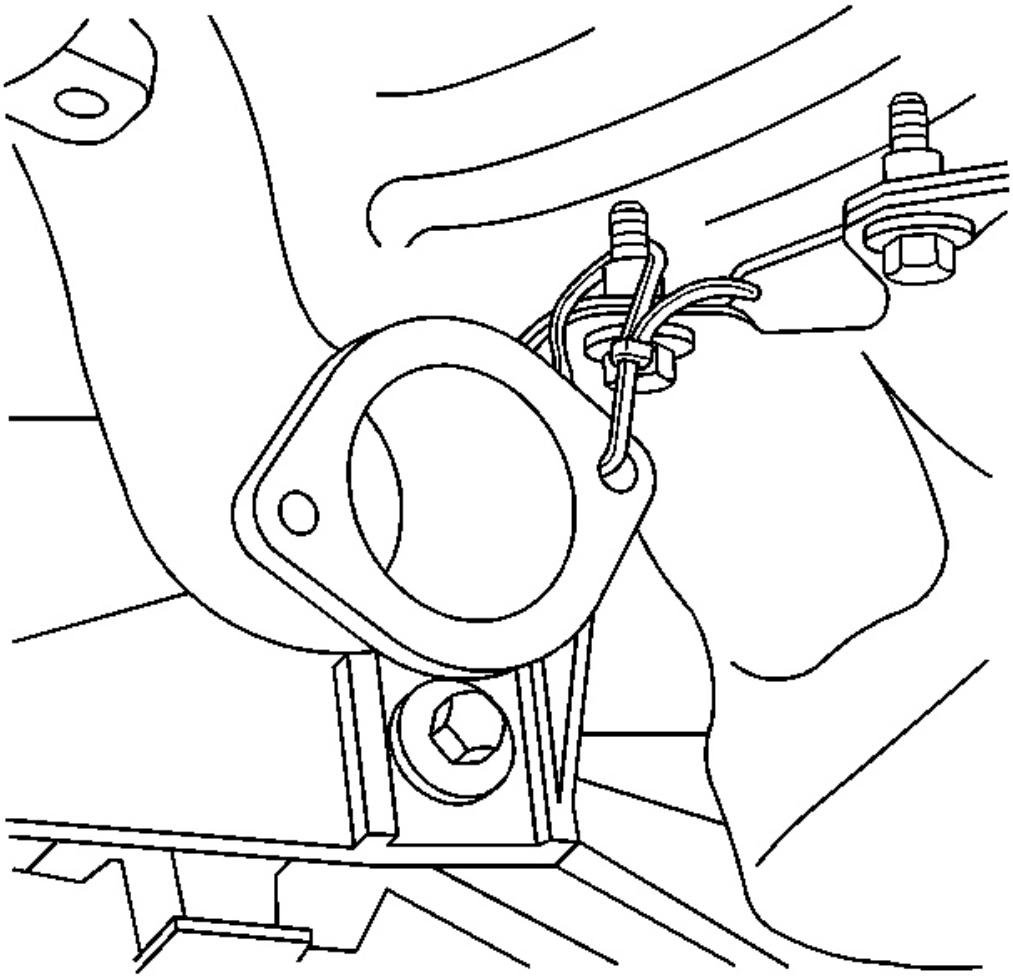

Fig. 92: Wiring Harness, Brake Pipe Clip Retainers & Rear Suspension Crossmember
Courtesy of GENERAL MOTORS CORP.

20. Remove the rear tire and wheel assemblies. Refer to **Tire and Wheel Removal and Installation** in Tires and Wheels.
21. Remove the catalytic converter. Refer to **Catalytic Converter Replacement** in Engine Exhaust.
22. Tie off the muffler assemblies to the underbody to support out of the way.
23. Remove the driveline tunnel closeout panel. Refer to **Driveline Tunnel Closeout Panel Replacement** in Propeller Shaft.

cardiagn.com

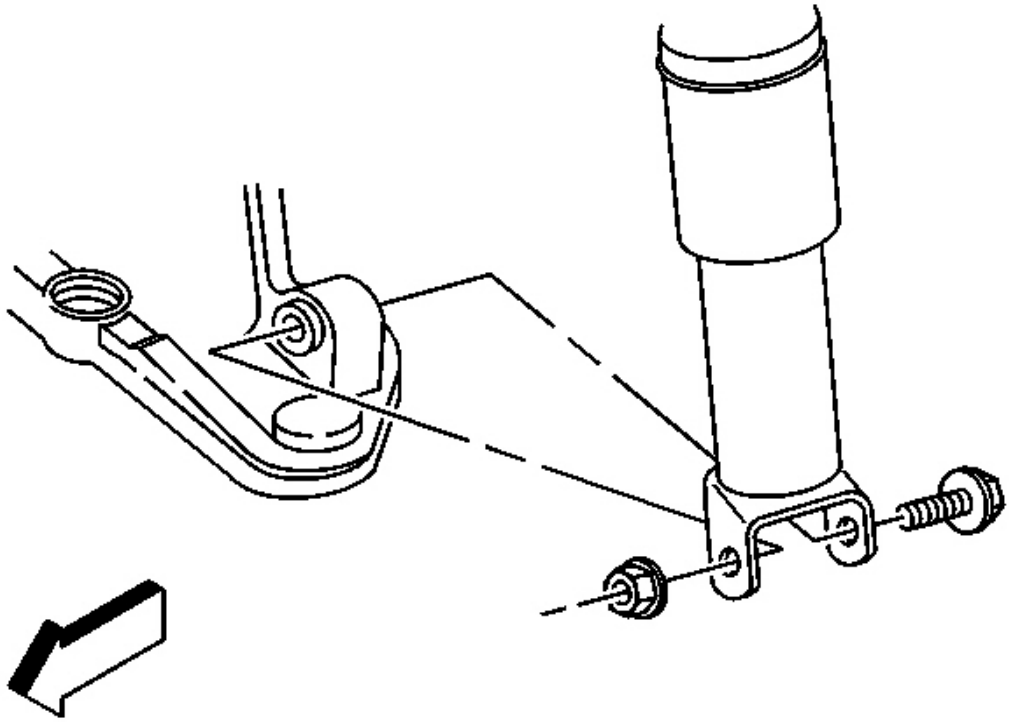

Fig. 93: Mounting Shock Absorber To Control Arm
Courtesy of GENERAL MOTORS CORP.

24. Remove the rear transverse spring. Refer to **Rear Transverse Spring Replacement** in Rear Suspension.
25. Support the lower control arm with a straight jack.
26. Disconnect the outer tie rod end from the suspension knuckle. Refer to **Tie Rod Replacement (Outer End)** or **Tie Rod Replacement (Suspension Link)** in Rear Suspension.
27. Remove the shock absorber lower mounting bolt.
28. Disconnect the lower ball joint from the suspension knuckle. Refer to **Knuckle Replacement** in Rear Suspension.
29. Remove the straight jack from the control arm.
30. Repeat steps 25 through 29 for the other side of the vehicle.

cardiagn.com

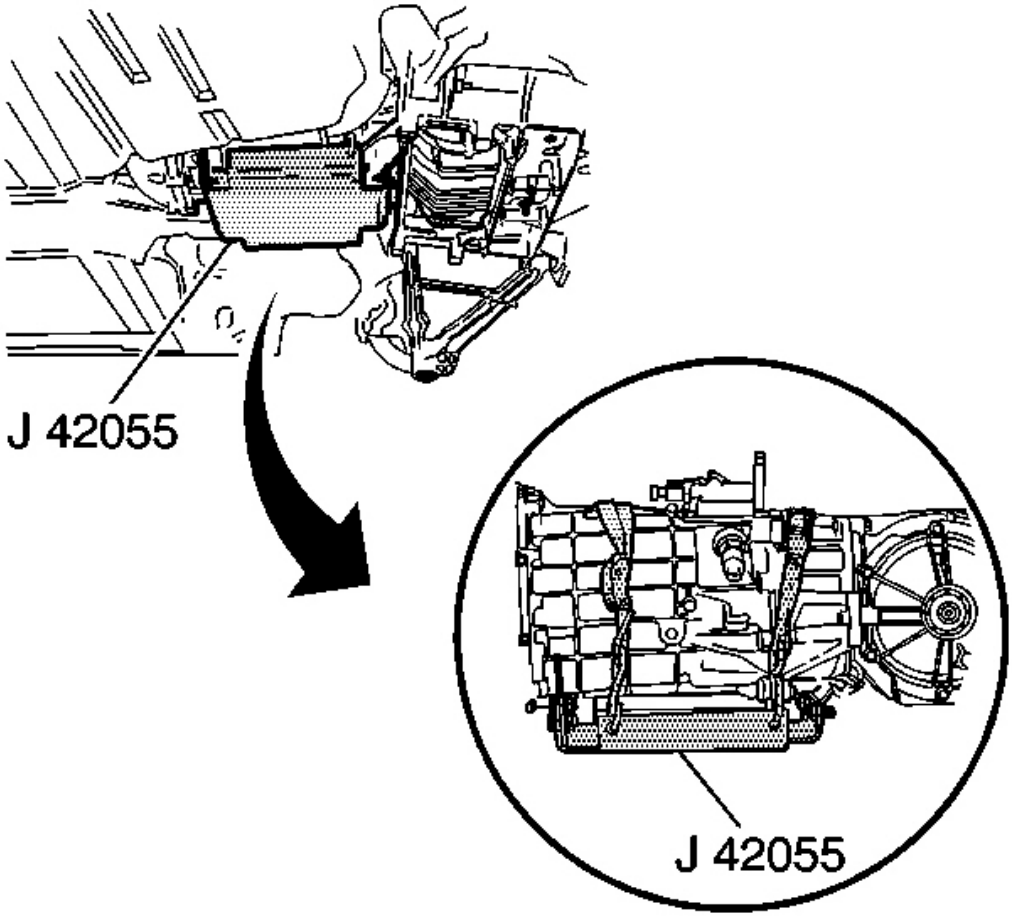

Fig. 94: J 42055 & Transmission Jack
Courtesy of GENERAL MOTORS CORP.

31. Assemble the **J 42055** .
32. Install the **J 42055** to a transmission jack.
33. Position and firmly secure the **J 42055** with the transmission jack to the transmission.

cardiagn.com

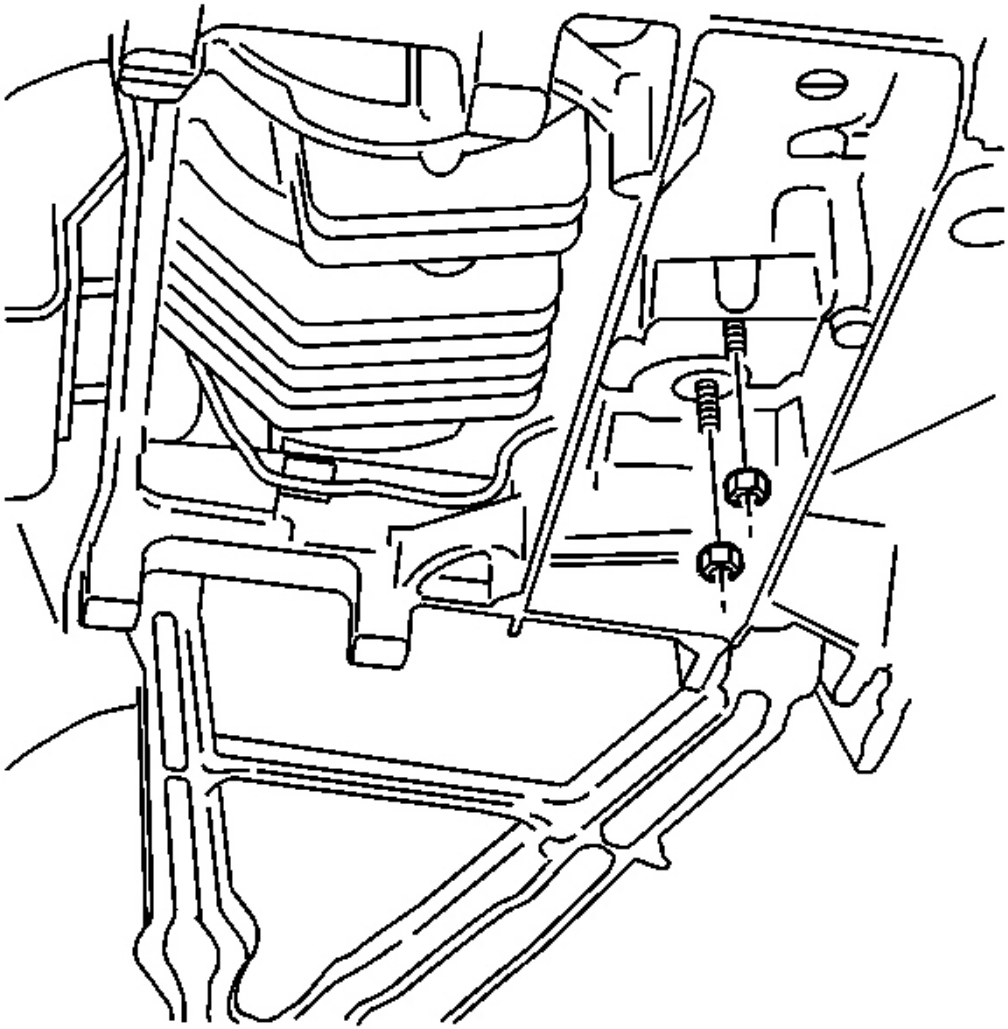

Fig. 95: Transaxle Mount To Rear Crossmember Nuts
Courtesy of GENERAL MOTORS CORP.

34. Disconnect the wiring harness and brake pipe clip retainers from the rear suspension crossmember.
35. Remove the differential to transmission lower nut.

    (Removing the nut at this time will aid in separating the differential from the transmission after the driveline has been removed from the vehicle.)

36. Remove the transaxle mount to rear crossmember nuts.

cardiagn.com

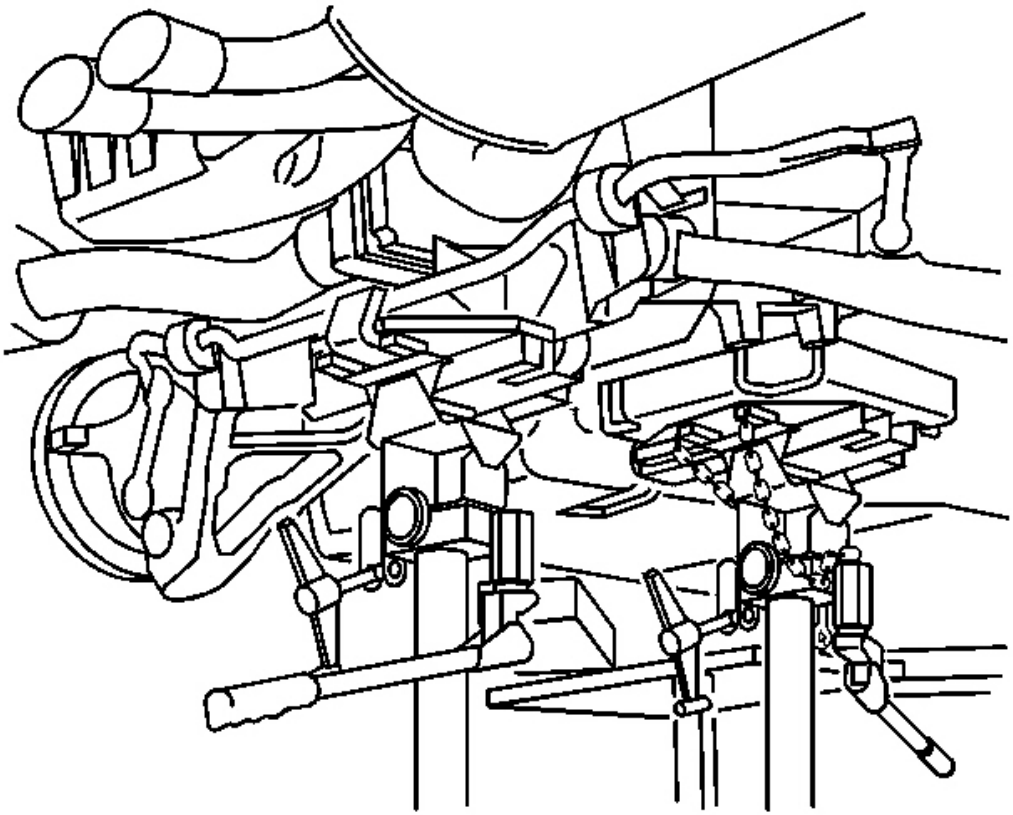

Fig. 96: View Of Jack Under Front End
Courtesy of GENERAL MOTORS CORP.

37. Position a transmission jack under the rear suspension crossmember and firmly secure the crossmember to the jack.
38. Using ONLY HAND TOOLS, remove the rear suspension crossmember retaining nuts.

cardiagn.com

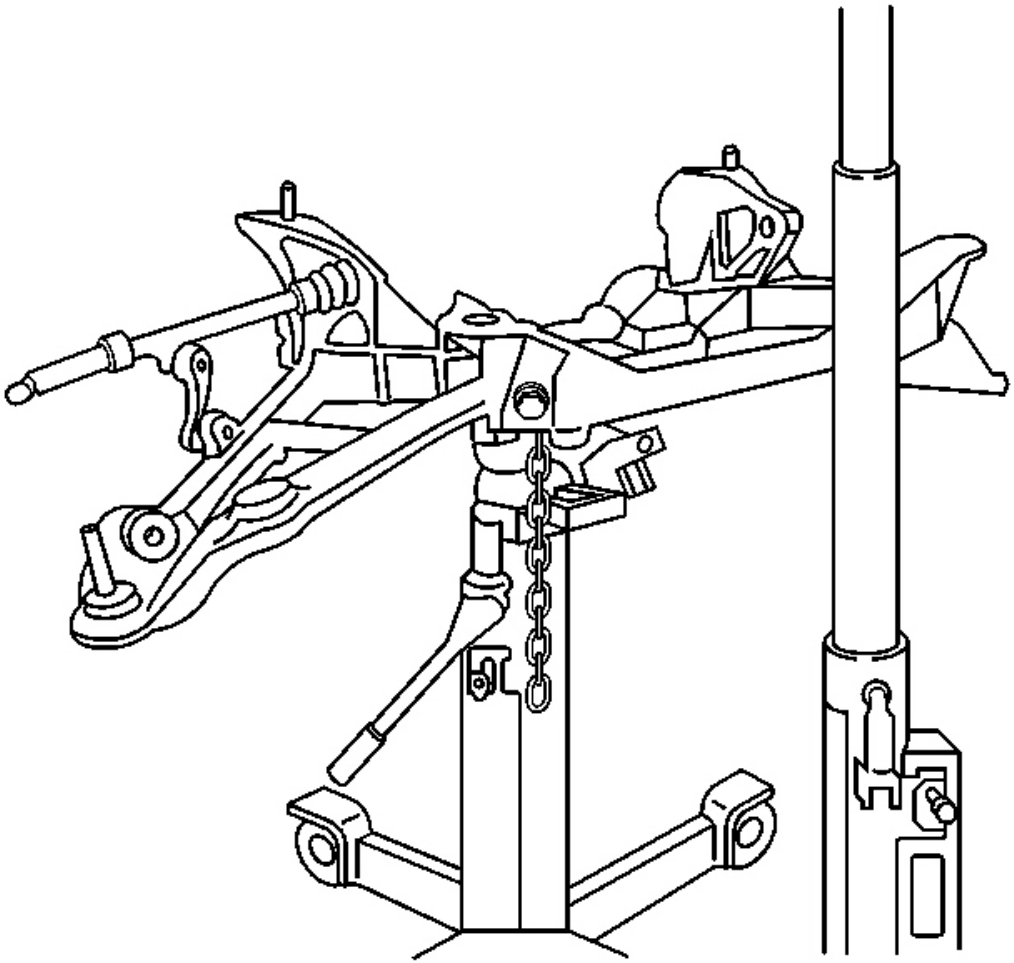

Fig. 97: Supporting Crossmember On Jack
Courtesy of GENERAL MOTORS CORP.

39. With the aid of an assistant, slowly lower the rear suspension crossmember away from the vehicle frame rails and remove the crossmember.

cardiagn.com

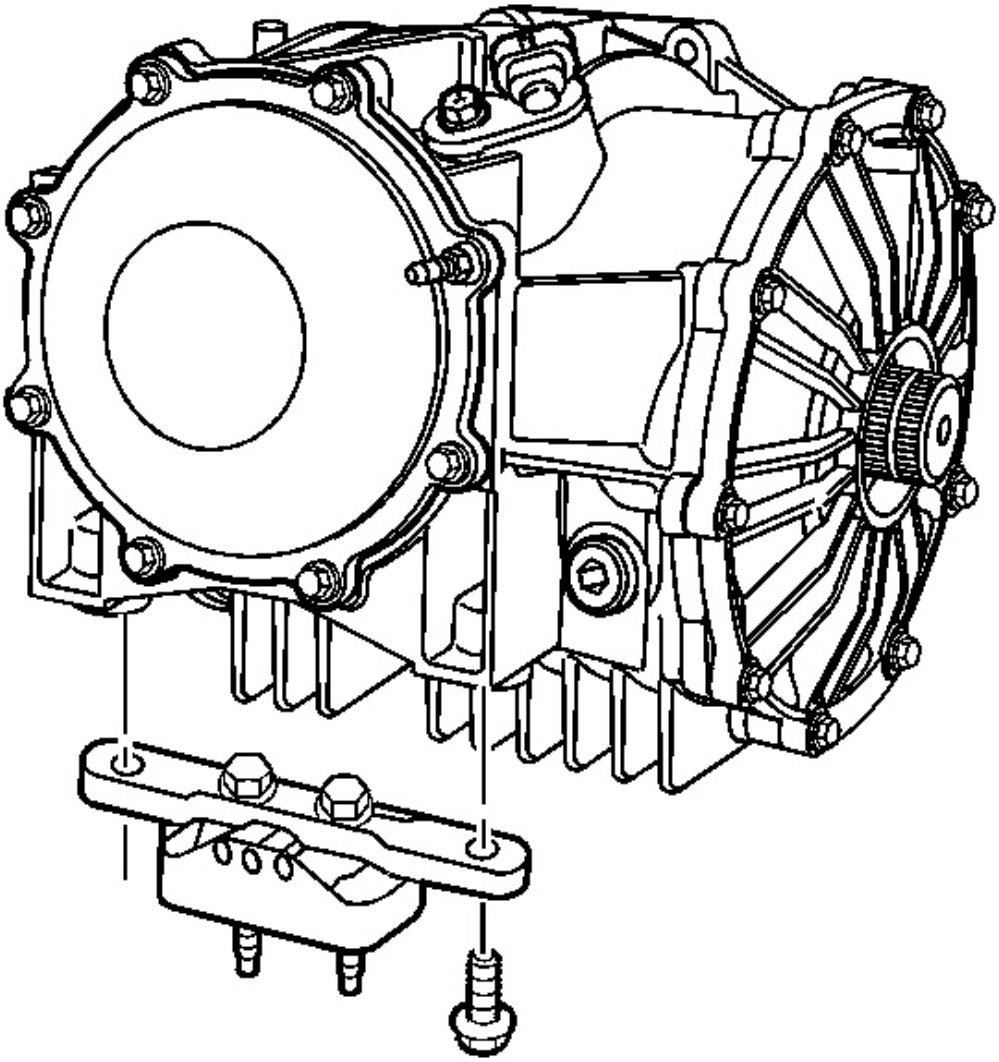

Fig. 98: Mount Location
Courtesy of GENERAL MOTORS CORP.

40. Remove the transaxle mount bracket to differential bolts.
41. Remove the transaxle mount with bracket.

(Removing the transaxle mount will allow for greater stability on a workbench after the driveline is removed.)

cardiagn.com

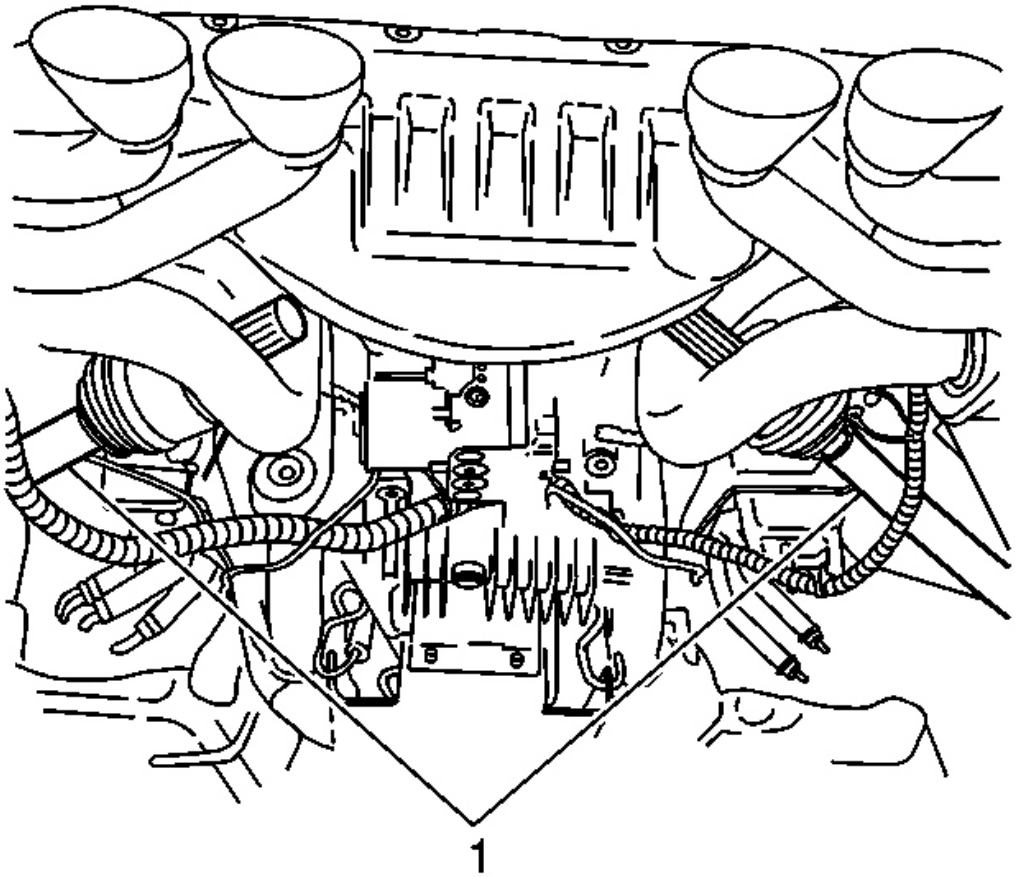

Fig. 99: Axle Shafts
Courtesy of GENERAL MOTORS CORP.

42. Using a pry bar, CAREFULLY release the axle shafts from the differential.
43. Tie off the axle shafts (1) to the underbody to support out of the way.

The muffler assembly pipes toward the rear offer a good location to help support the axle shafts (1).

cardiagn.com

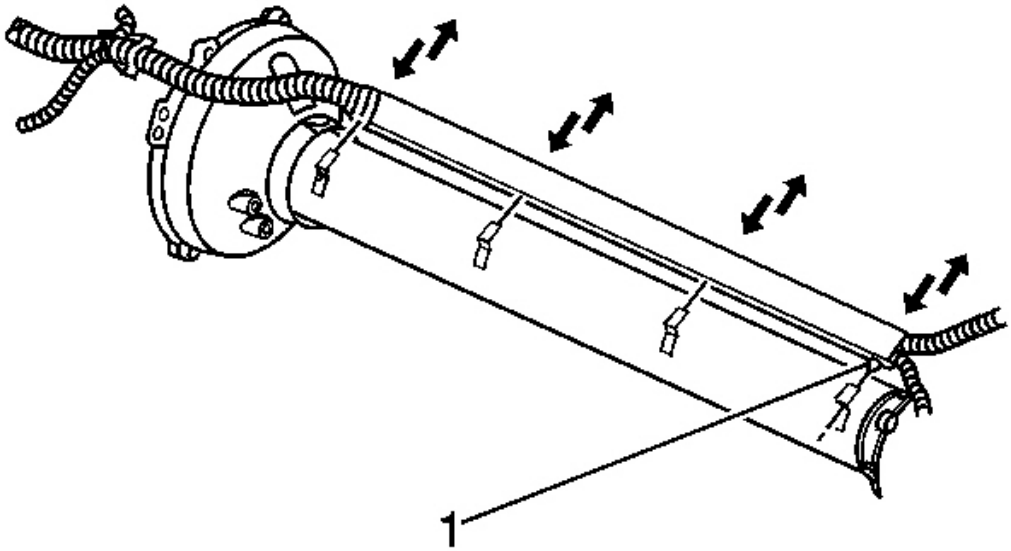

Fig. 100: Retainer Securing The Wiring Harness
Courtesy of GENERAL MOTORS CORP.

44. Release the retainer (1) securing (and positioning) the wiring harness to the L-shaped brackets along the driveline support assembly, then slide the harness up out of the brackets and position out of the way.

cardiagn.com

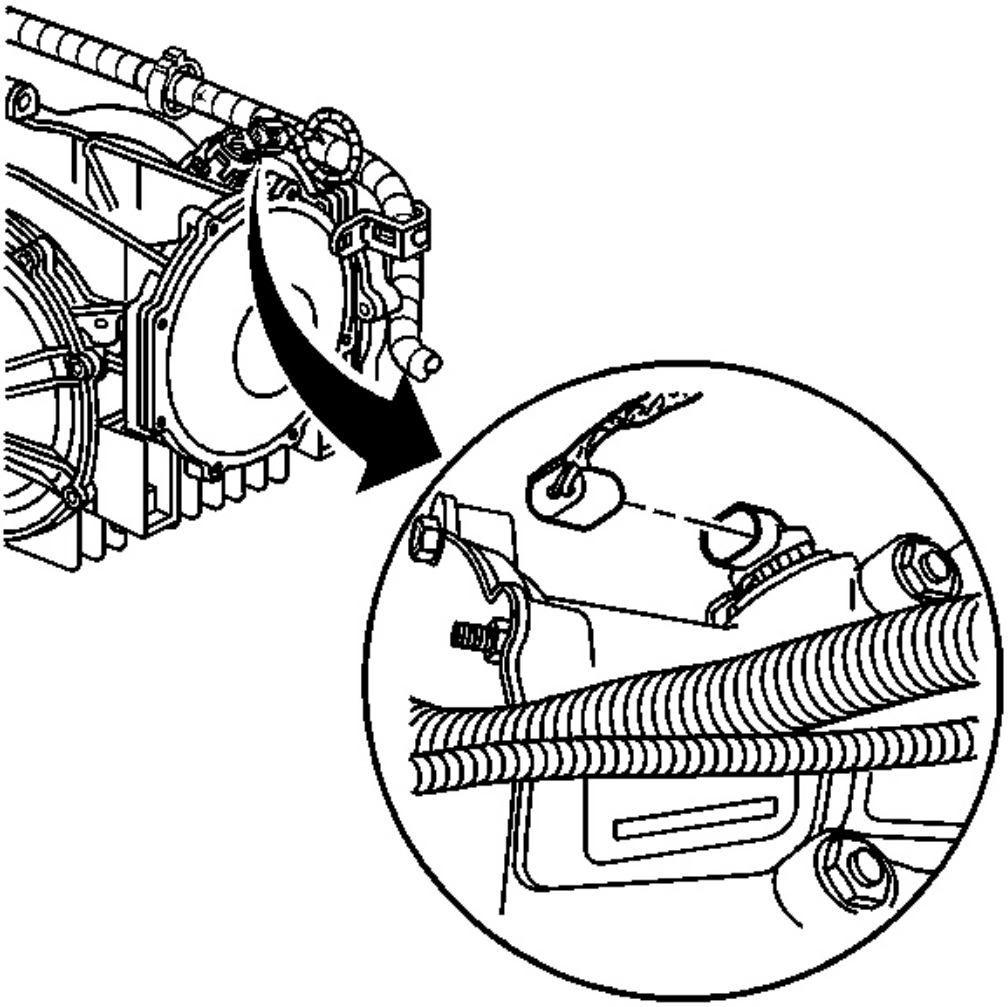

Fig. 101: VSS Electrical Connector
Courtesy of GENERAL MOTORS CORP.

45. SLOWLY lower the driveline approximately 5 cm (2 in), while simultaneously adjusting the angle of tilt, in order to access the electrical connectors.
46. Disconnect the vehicle speed sensor (VSS) electrical connector.

cardiagn.com

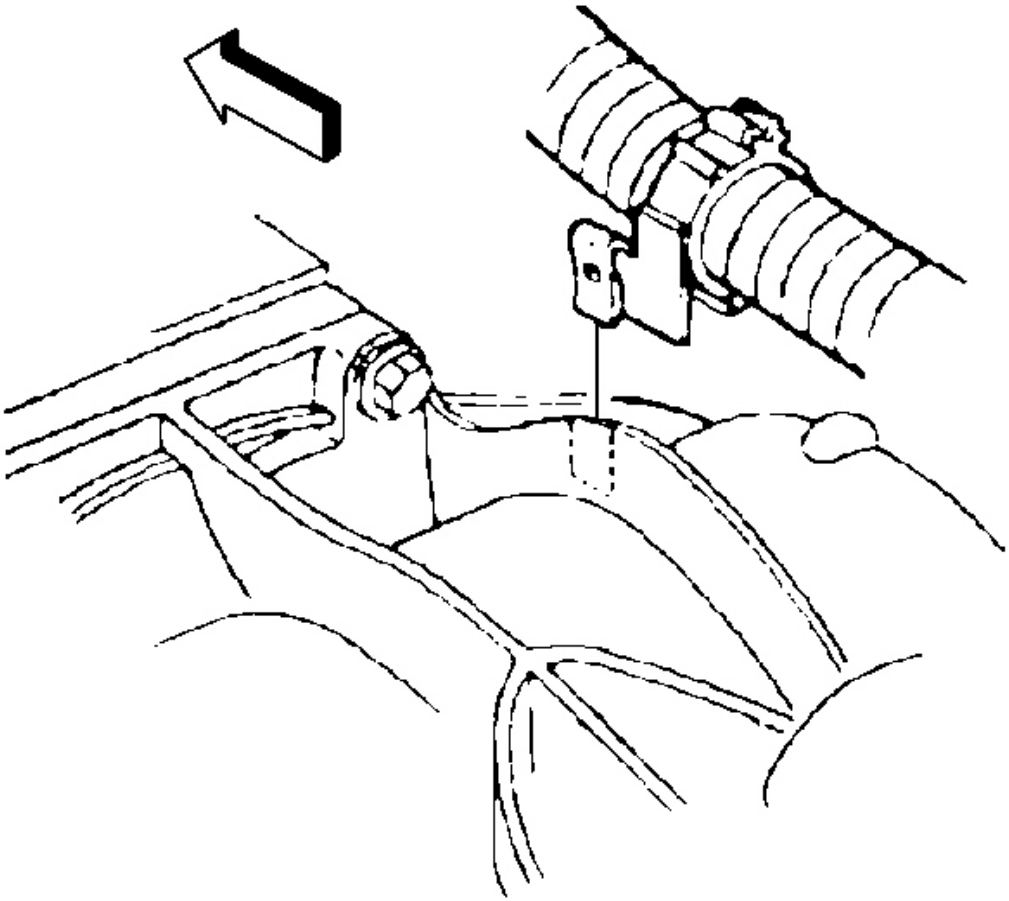

Fig. 102: Wiring Harness Retainer Clip
Courtesy of GENERAL MOTORS CORP.

47. Disconnect the wiring harness retainer from the stud at the differential rear cover.
48. Disconnect the wiring harness retainer clip from the top of the differential.

cardiagn.com

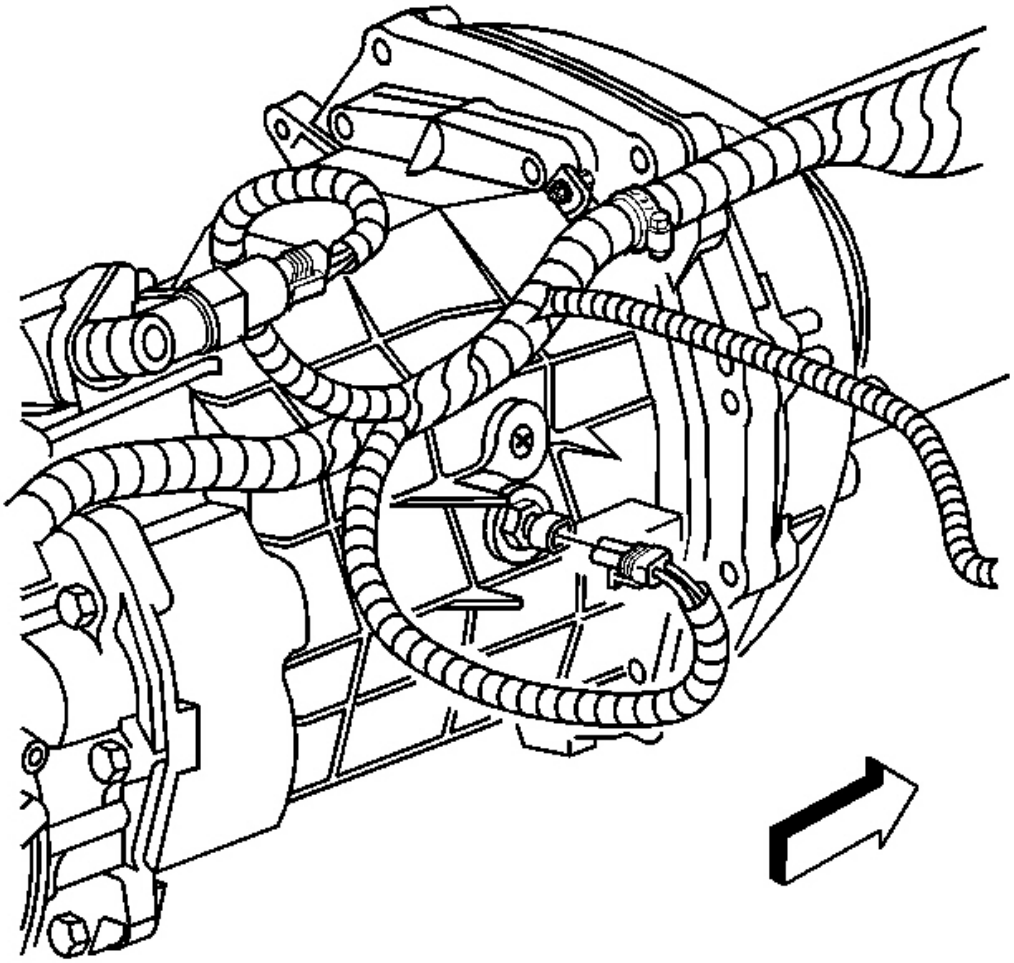

Fig. 103: Backup Lamp Switch Electrical Connector
Courtesy of GENERAL MOTORS CORP.

49. Disconnect the backup lamp switch electrical connector.

cardiagn.com

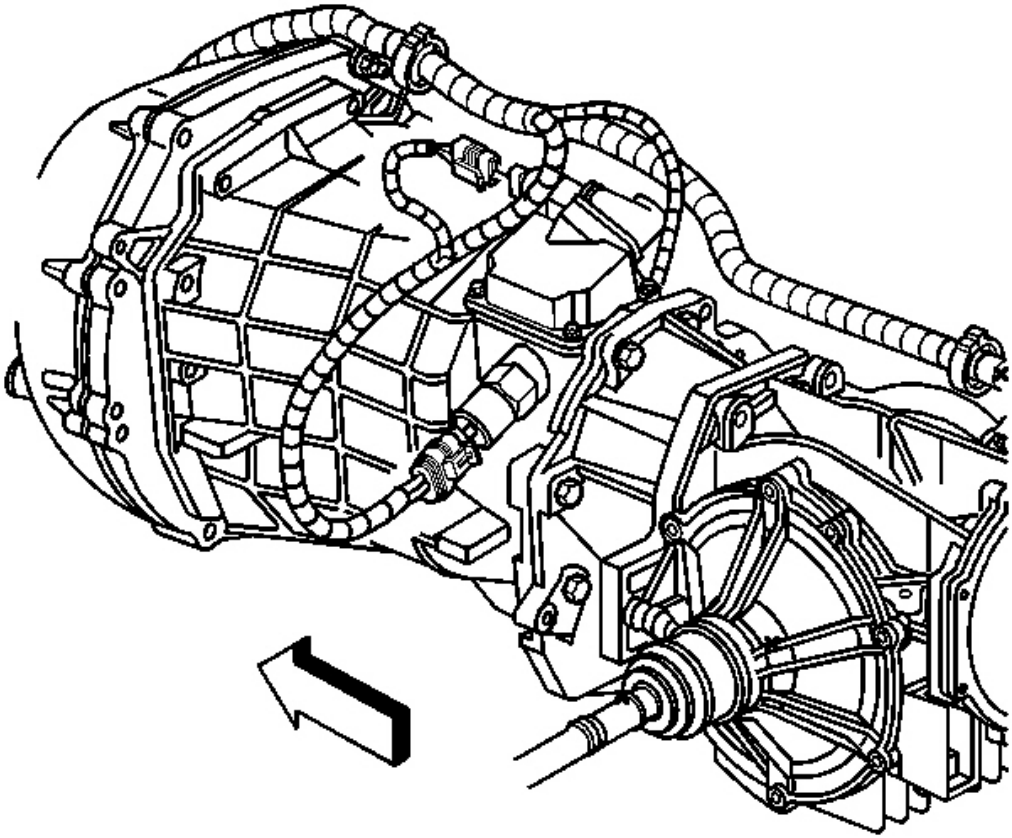

Fig. 104: Reverse Lockout Solenoid Electrical Connector
Courtesy of GENERAL MOTORS CORP.

50. Disconnect the reverse lockout solenoid electrical connector.

cardiagn.com

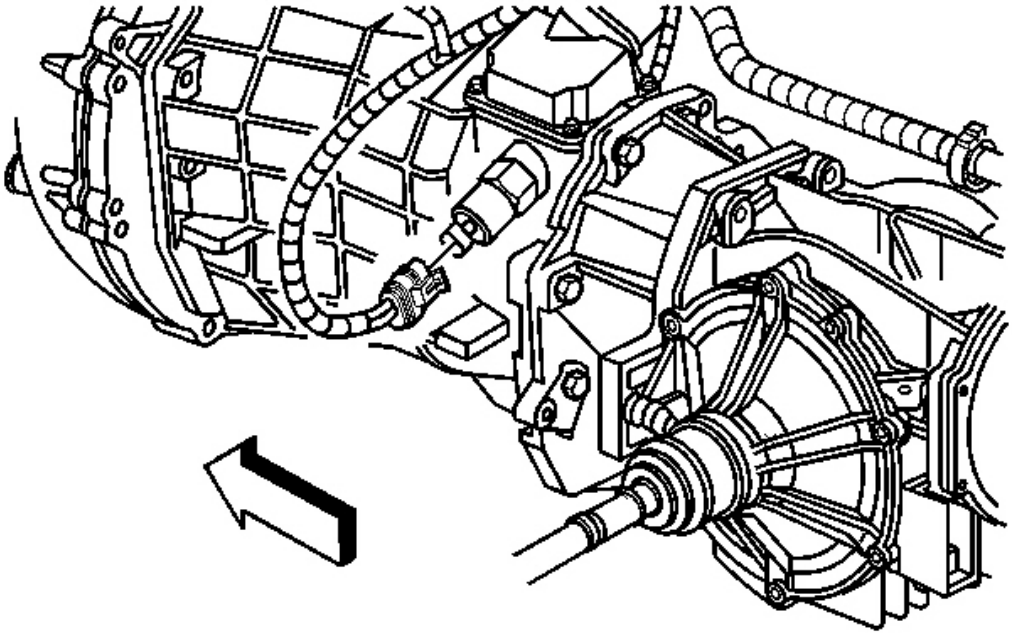

Fig. 105: Gear Select Solenoid Electrical Connector
Courtesy of GENERAL MOTORS CORP.

51. Disconnect the gear select (skip shift) solenoid electrical connector.

cardiagn.com

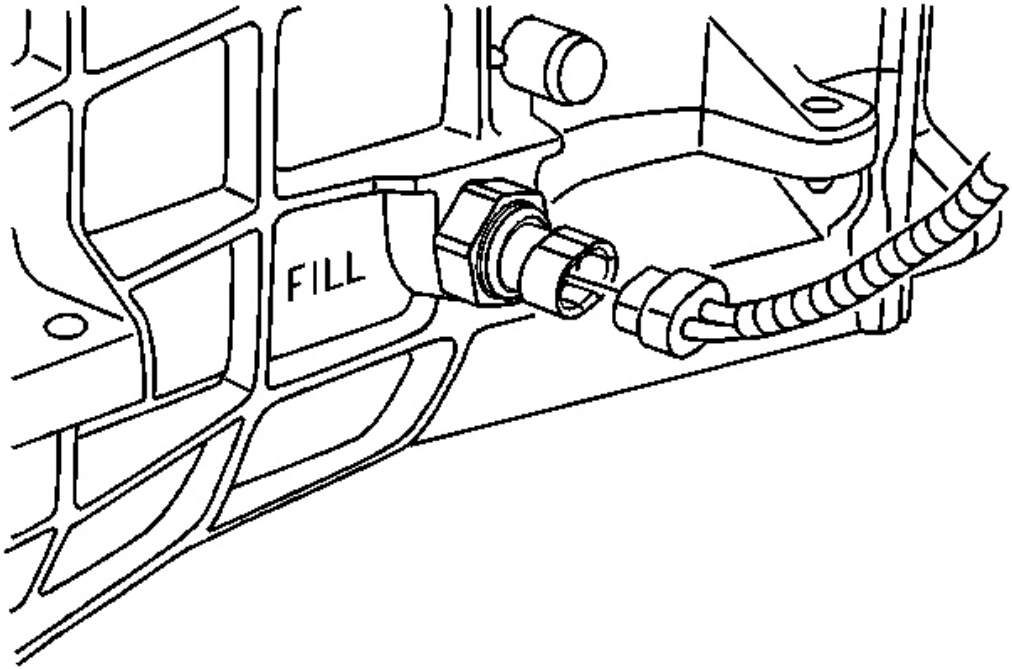

Fig. 106: TFT Sensor Electrical Connector
Courtesy of GENERAL MOTORS CORP.

52. Disconnect the transmission fluid temperature sensor electrical connector, if equipped.

cardiagn.com

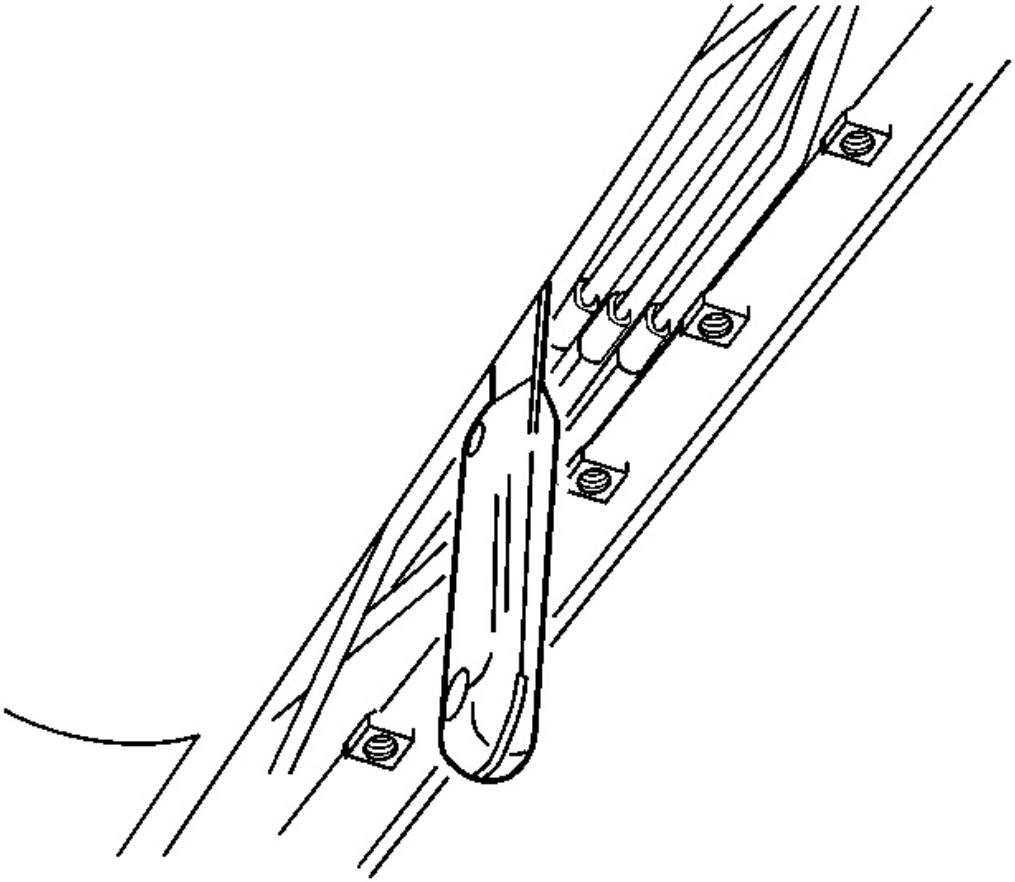

Fig. 107: Inserting Putty Knife Between Edge Of Shifter Bracket & Brake Pipe Retainer
Courtesy of GENERAL MOTORS CORP.

53. Insert a putty knife, or similar tool, between the edge of the shifter bracket on the side of the driveline support assembly and the brake pipe retainer on the wall of the driveline tunnel.

cardiagn.com

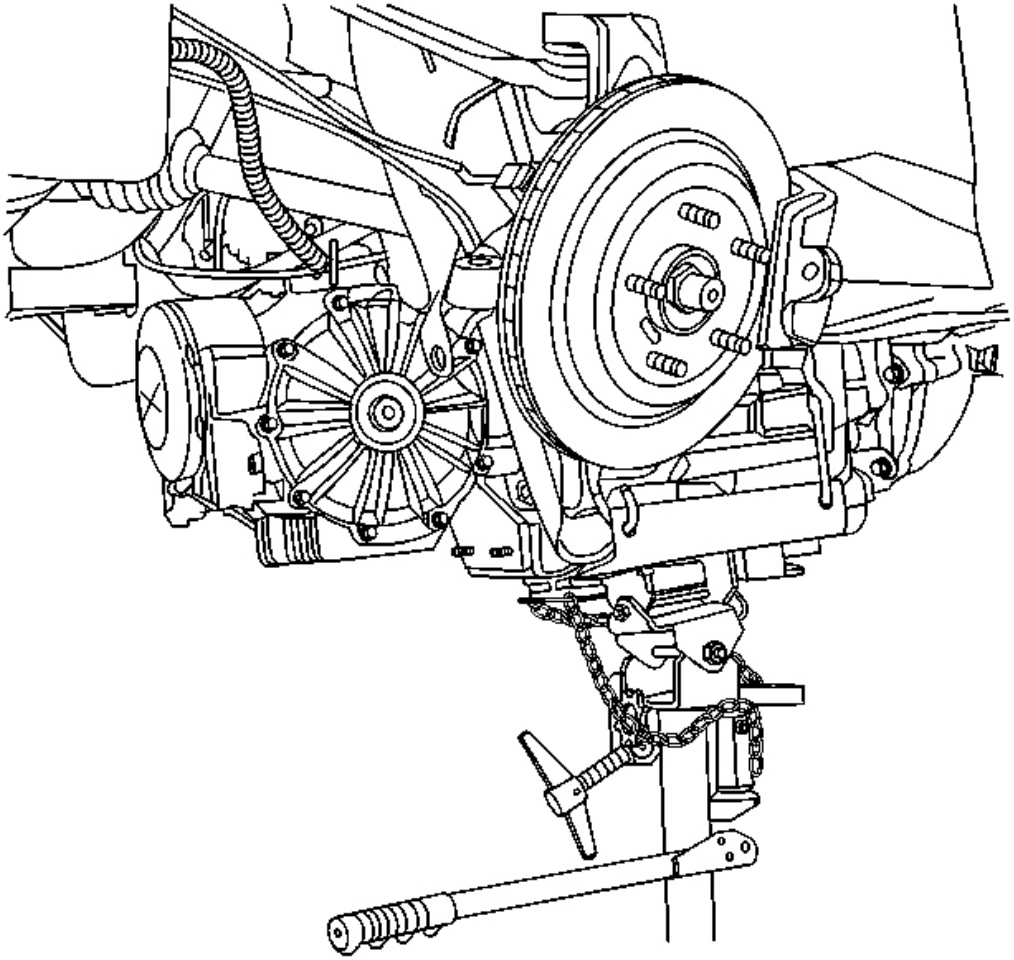

Fig. 108: Transmission Jack Supporting Differential
Courtesy of GENERAL MOTORS CORP.

54. SLOWLY lower the driveline, while simultaneously adjusting the angle of tilt, and observe the relationship between the top rear of the differential and the lowest part of the rear compartment panel floor (the center storage compartment between the frame rails); the differential should not be lowered more than approximately EVEN with the specified body point of reference.

    (The engine positive crankcase ventilation (PCV) pipes which route along the rear of the engine intake manifold will likely contact the dash panel.)

55. Release the wiring harness from the harness retainer along the top of the transmission.
56. Check to be sure that the wiring harness is free from the driveline being removed.

cardiagn.com

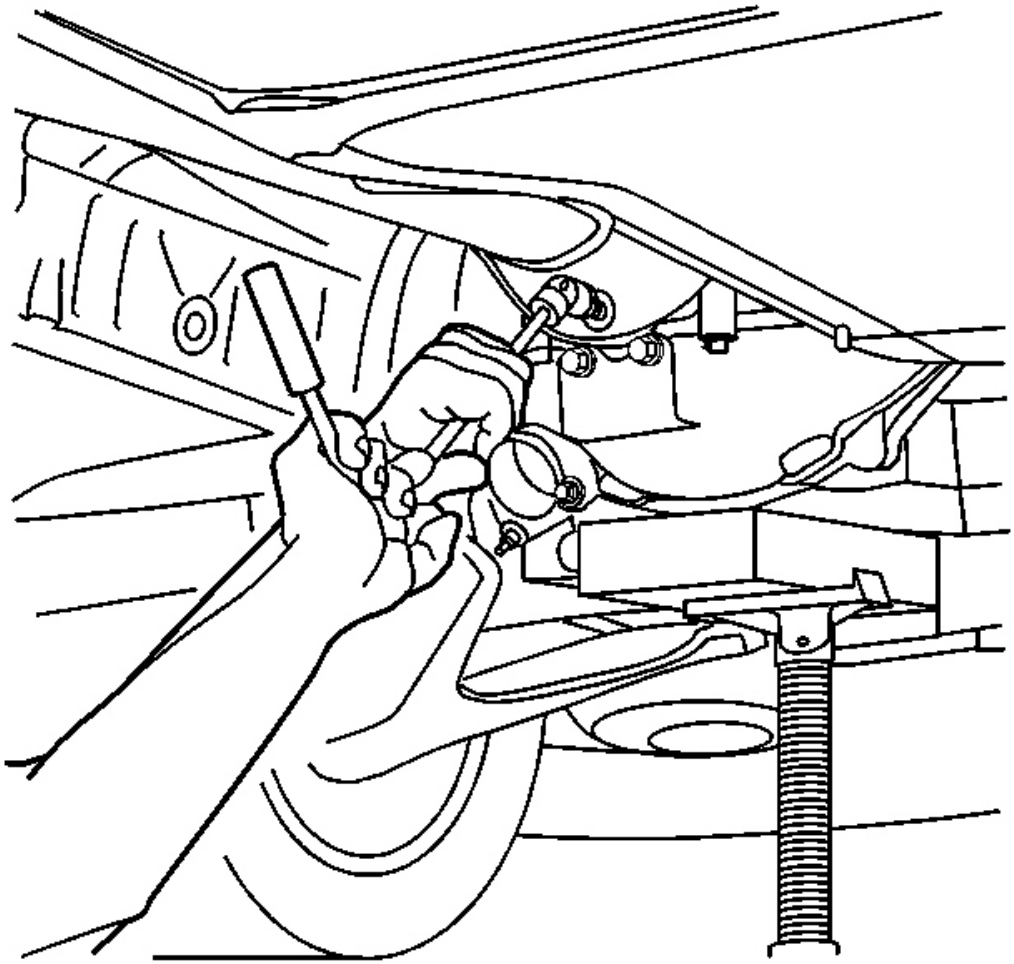

Fig. 109: Removing/Installing Five Driveline Support Assembly To Engine Flywheel Housing Bolts
Courtesy of GENERAL MOTORS CORP.

57. Using a block of wood to protect the engine oil pan, place a straight jack under the rear of the engine oil pan to support the engine from stressing the composite dash panel.
58. Remove the five driveline support assembly to engine flywheel housing bolts.
59. Carefully bend the wiring harness bracket away from the driveline toward the driveline tunnel wall in order to make a clear removal path for the driveline.

cardiagn.com

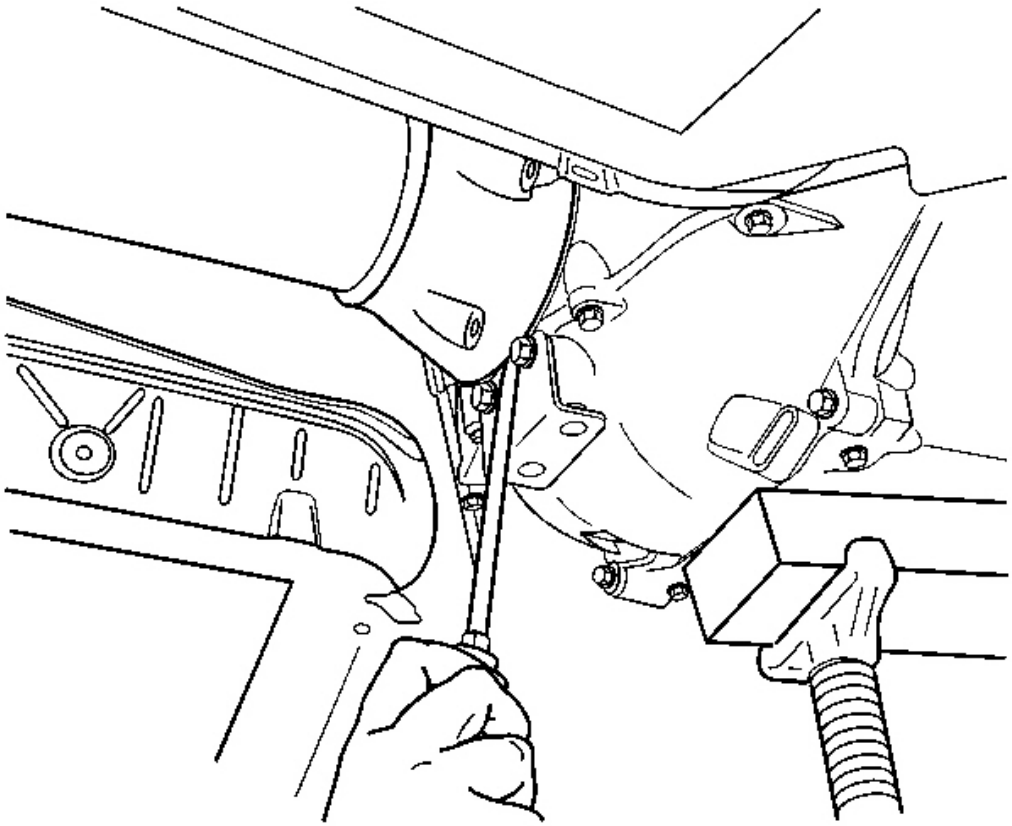

Fig. 110: Inserting A Flat Bladed Tool Between Edge Of Driveline Support Assembly & Engine Flywheel Housing
Courtesy of GENERAL MOTORS CORP.

IMPORTANT: The aid of an assistant will be necessary for the remaining steps.

60. Have an assistant insert a flat bladed screwdriver, or similar tool, between the edge of the driveline support assembly and the engine flywheel housing, then begin to pry the driveline loose from the engine.

cardiagn.com

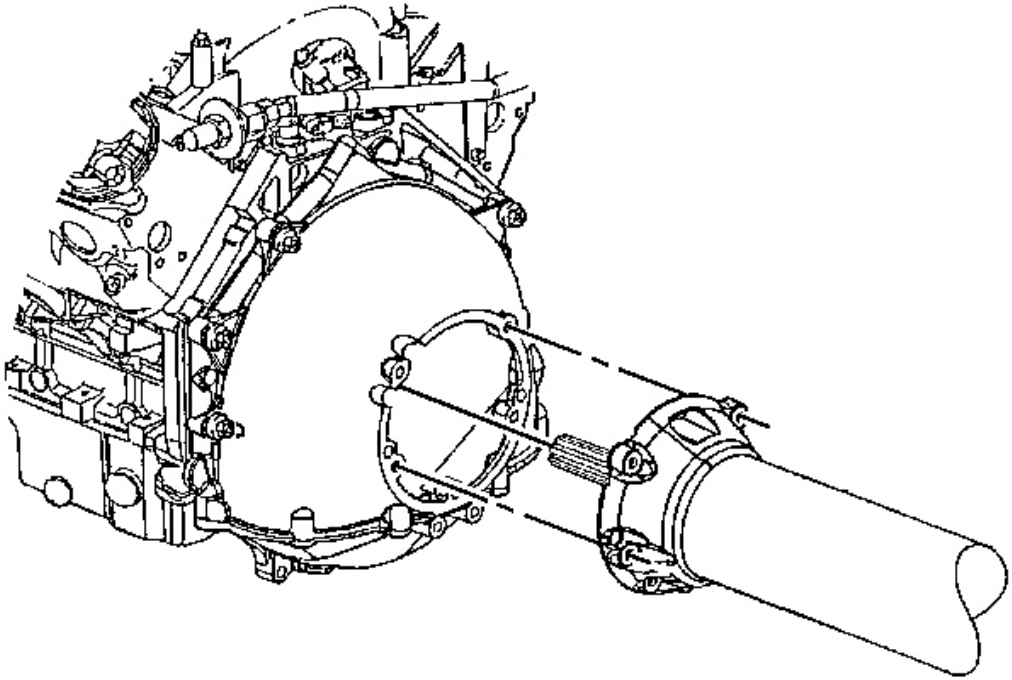

Fig. 111: Propeller Input Shaft & Clutch Driven Plate Hub
Courtesy of GENERAL MOTORS CORP.

61. Have an assistant guide the front of the driveline during the removal of the driveline from the vehicle.
62. SLOWLY lower the driveline, while simultaneously adjusting the angle of tilt and pulling the driveline away from the engine UNTIL the propeller input shaft at the front of the driveline support assembly just clears the engine flywheel housing.
63. SLOWLY lower the driveline completely out of the vehicle.

cardiagn.com

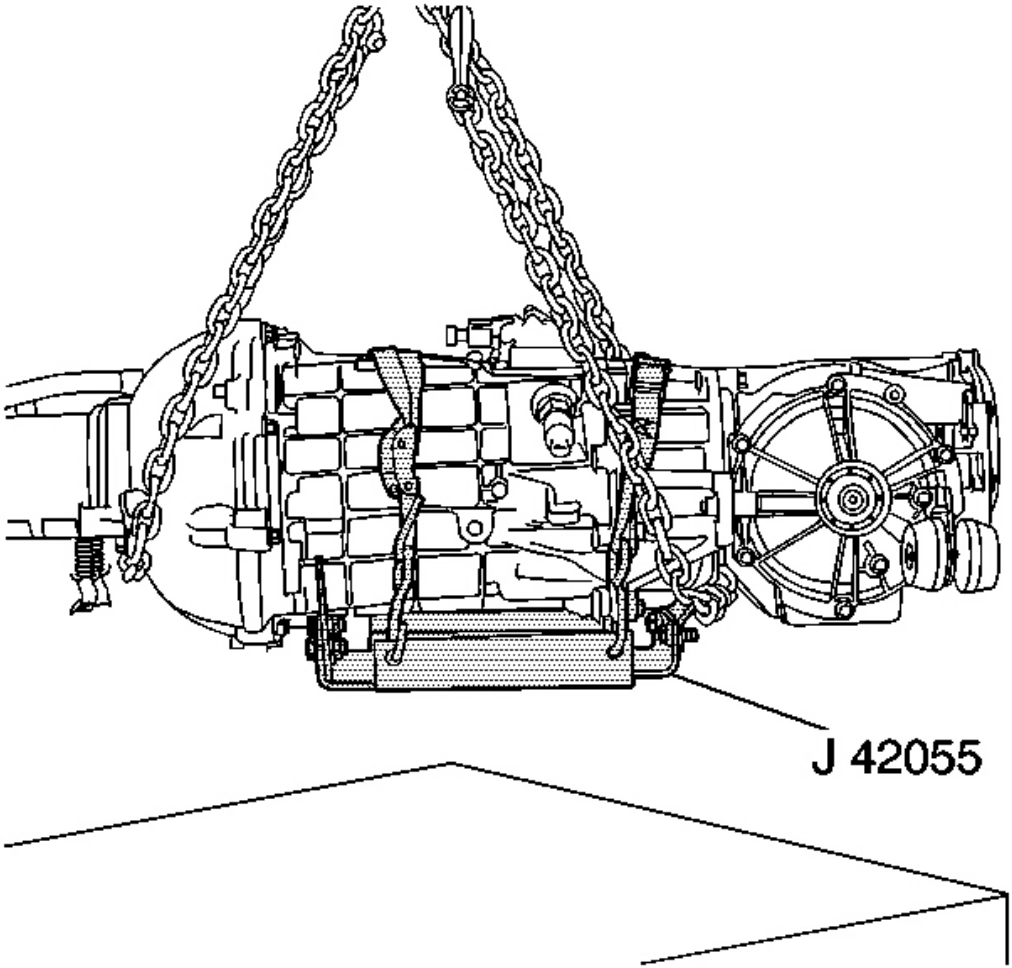

Fig. 112: J 42055 & Transmission Jack
Courtesy of GENERAL MOTORS CORP.

64. Position the chainfall, or equivalent, of a lift device in a way which will protect the rear exhaust hangers located on the driveline support assembly.
65. Using the lift device, raise the driveline to relieve the weight from the transmission jack.
66. Disconnect the **J 42055** from the transmission jack ONLY; the **J 42055** will provide stability to the driveline components while working on a bench.
67. Position the driveline on a workbench with the lift device still attached.
68. Support the driveline support assembly and the differential for additional balance.
69. Remove the lift device from the driveline.

cardiagn.com

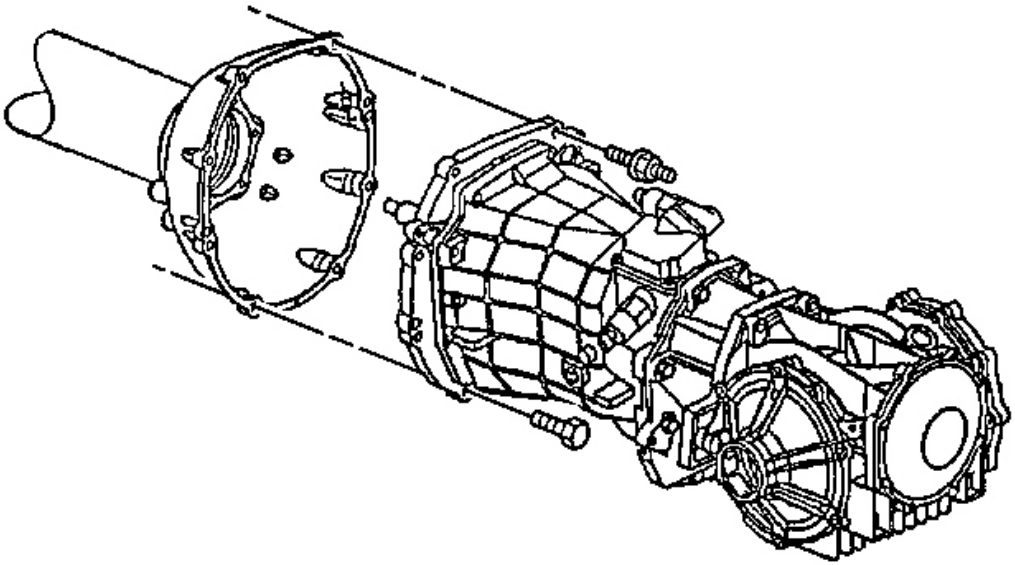

Fig. 113: Driveline Support Assembly, Bolts & Studs
Courtesy of GENERAL MOTORS CORP.

70. Remove the transmission to driveline support assembly bolts/studs.
71. Insert a flat bladed screwdriver, or similar tool, between the edge of the driveline support assembly and the transmission, then begin to pry the driveline support assembly loose from the transmission.

cardiagn.com

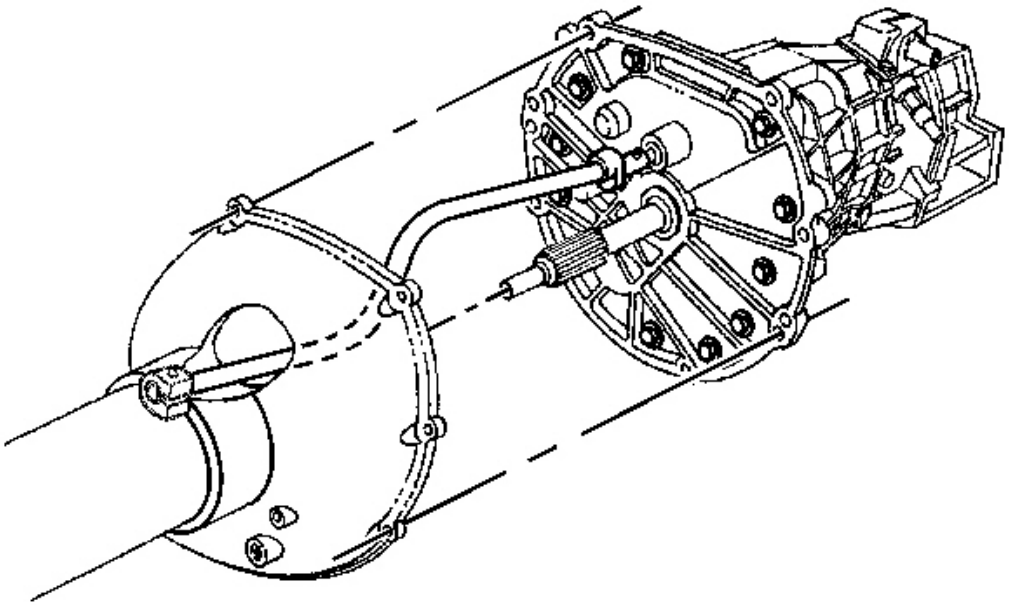

Fig. 114: Driveline Support Assembly & Transmission Shift Rod
Courtesy of GENERAL MOTORS CORP.

72. Slowly slide the driveline support assembly away from the transmission while guiding the transmission shift rod through the opening in the driveline support assembly.

cardiagn.com

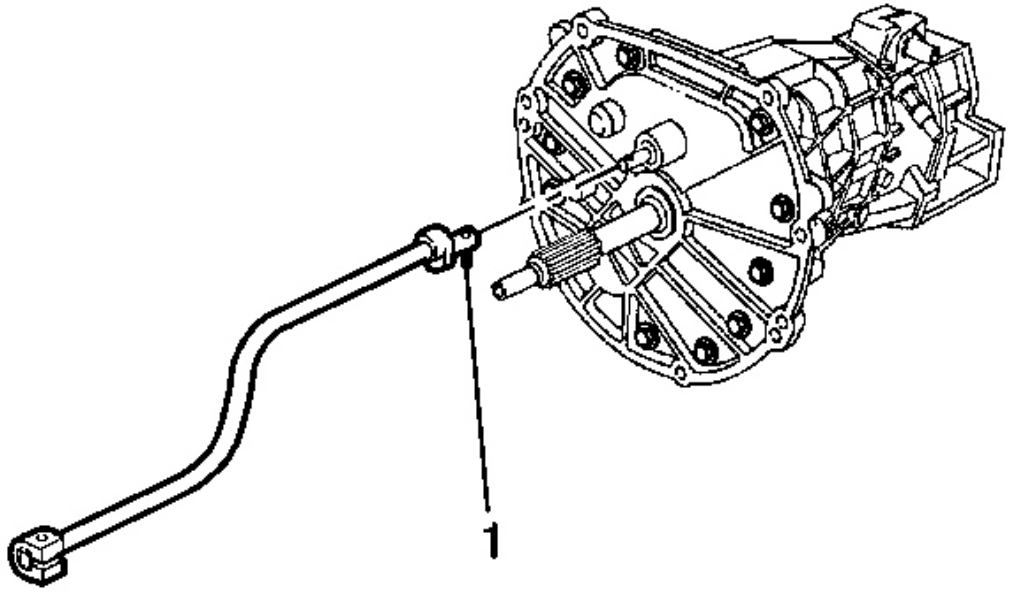

Fig. 115: Roll Pin, Transmission Shift Rod & Transmission Shift Shaft
Courtesy of GENERAL MOTORS CORP.

73. Using a drift or punch, remove the roll pin (1) retaining the transmission shift rod to the transmission shift shaft.
74. Remove the transmission shift rod.

cardiagn.com

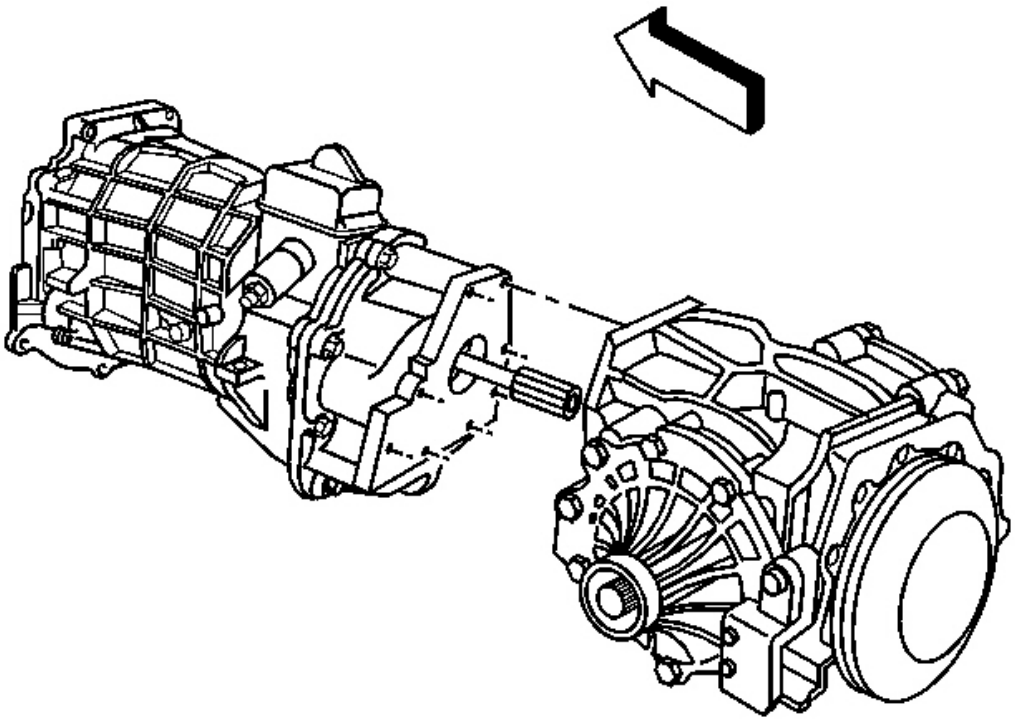

Fig. 116: Differential & Transmission
Courtesy of GENERAL MOTORS CORP.

75. Remove the differential to transmission bolts and nuts.
76. SLOWLY slide the differential from the transmission.
77. Remove the transmission from the **J 42055** , if necessary.

Installation Procedure

NOTE: **When tilting down the rear of the driveline, insert a putty knife or similar tool between the shift control bracket on the driveline support assembly and the brake pipe retainer on the driveline tunnel wall to prevent damage.**

NOTE: **Ensure that the clutch hydraulic hoses are positioned away from nearby vehicle components or vehicle damage may result.**

cardiagn.com

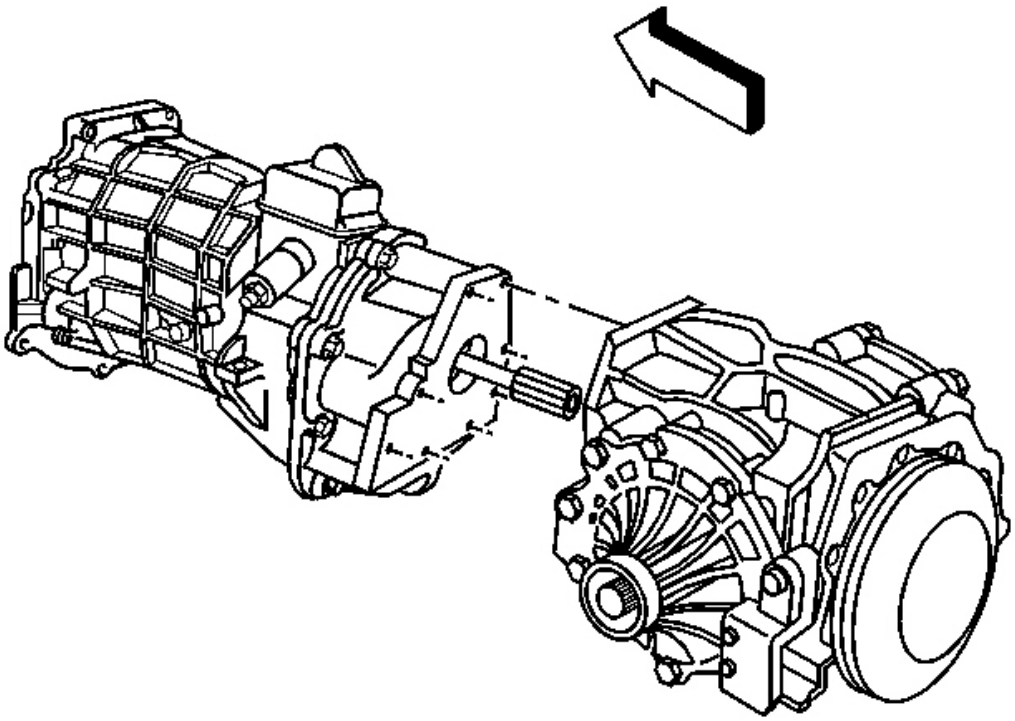

Fig. 117: Differential & Transmission
Courtesy of GENERAL MOTORS CORP.

1. Install the transmission to the **J 42055** , if removed.
2. SLOWLY slide the differential to the transmission.

NOTE: **Refer to Fastener Notice in Cautions and Notices.**

3. Install the differential to transmission bolts and nuts.

Tighten: Tighten the differential to transmission bolts and nuts to 50 N.m (37 lb ft).

cardiagn.com

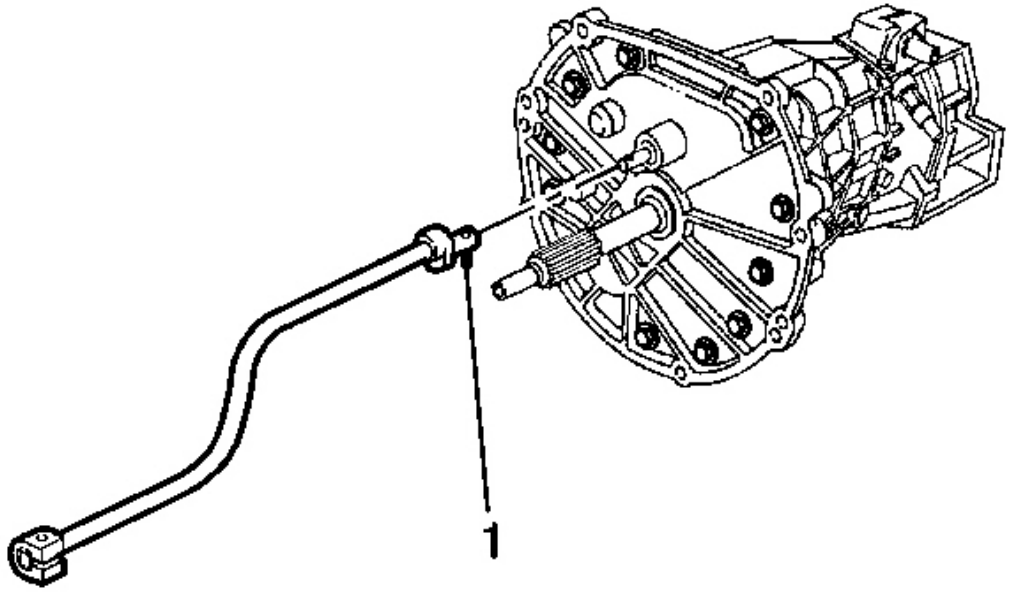

Fig. 118: Roll Pin, Transmission Shift Rod & Transmission Shift Shaft
Courtesy of GENERAL MOTORS CORP.

4. Install the transmission shift rod to the transmission shift shaft.
5. Using a drift or punch, install the roll pin (1) to retain the transmission shift rod to the shift shaft.

cardiagn.com

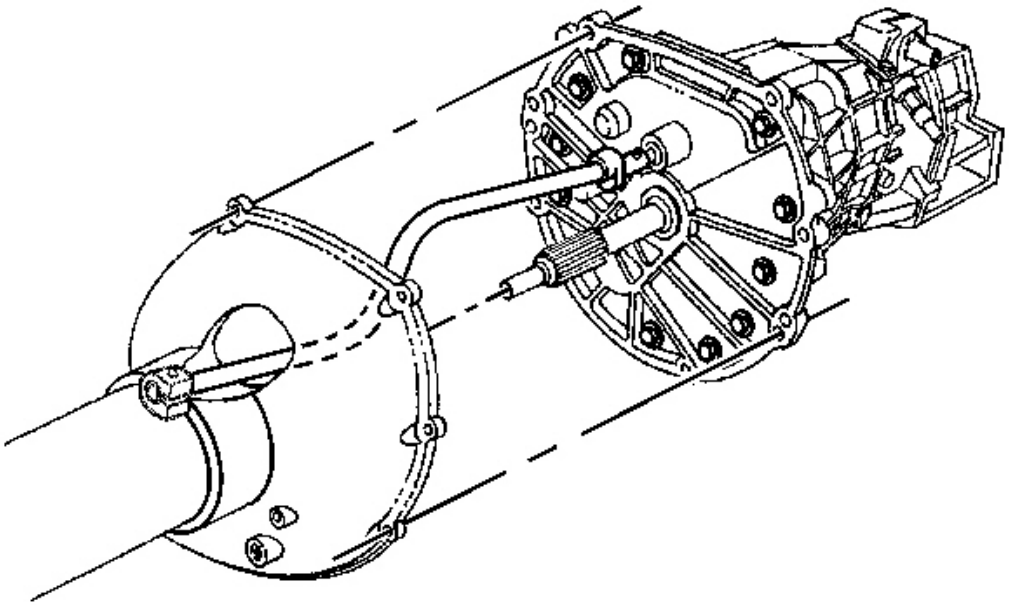

Fig. 119: Driveline Support Assembly & Transmission Shift Rod
Courtesy of GENERAL MOTORS CORP.

6. Slowly slide the driveline support assembly to the transmission, while guiding the transmission shift rod through the opening in the driveline support assembly.

cardiagn.com

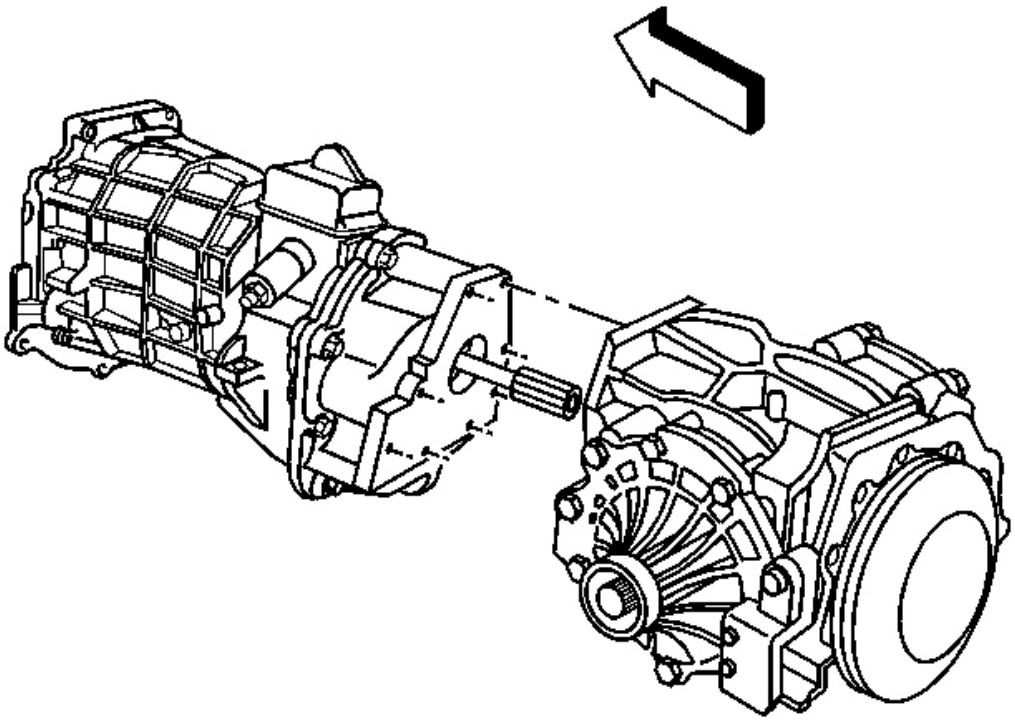

Fig. 120: Differential & Transmission
Courtesy of GENERAL MOTORS CORP.

7. Install the transmission to driveline support assembly bolts/studs.

   Tighten: Tighten the transmission to driveline support assembly bolts/studs to 50 N.m (37 lb ft).

cardiagn.com

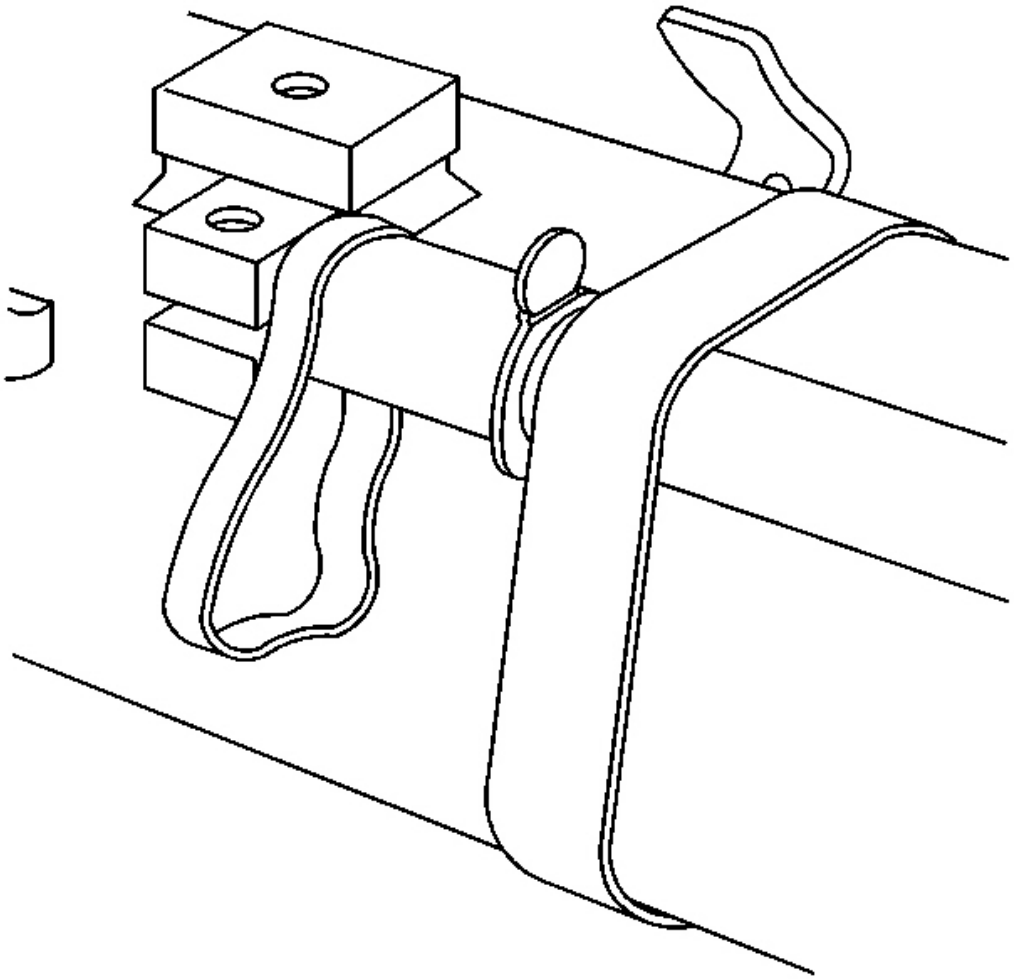

Fig. 121: Rubber Band & Transmission Shift Rod
Courtesy of GENERAL MOTORS CORP.

8. Loosely install a rubber band onto the transmission shift rod and position just behind the shift rod clamp.

   (The rubber band will be used to aid in installing the shift control assembly after the driveline has been installed.)

9. Using a piece of masking tape, or similar tape which can be easily broken, affix the transmission shift rod to the driveline support assembly and position the rod just to the outside of the mounting boss used for the shift control.

   (The tape is intended to keep the shift rod in position to aid in shift control installation after the driveline

cardiagn.com

has been installed.)

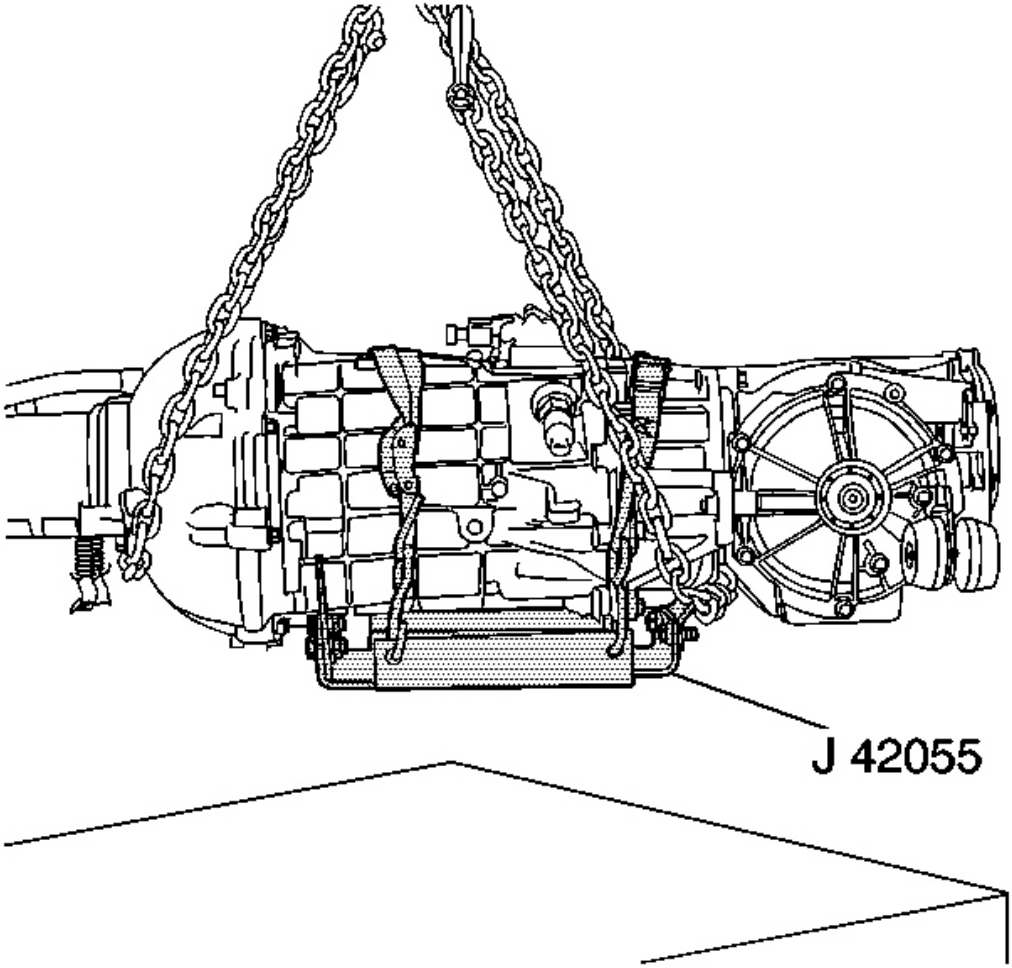

Fig. 122: J 42055 & Transmission Jack
Courtesy of GENERAL MOTORS CORP.

10. Position the chainfall, or equivalent, of a lift device in a way which will protect the rear exhaust hangers located on the driveline support assembly.

IMPORTANT: The aid of an assistant will be necessary for the following steps until the driveline is installed into the vehicle.

11. Using the lift device, raise the driveline off the workbench and position the driveline with the **J 42055** onto a transmission jack.

cardiagn.com

12. Connect the **J 42055** to the transmission jack.

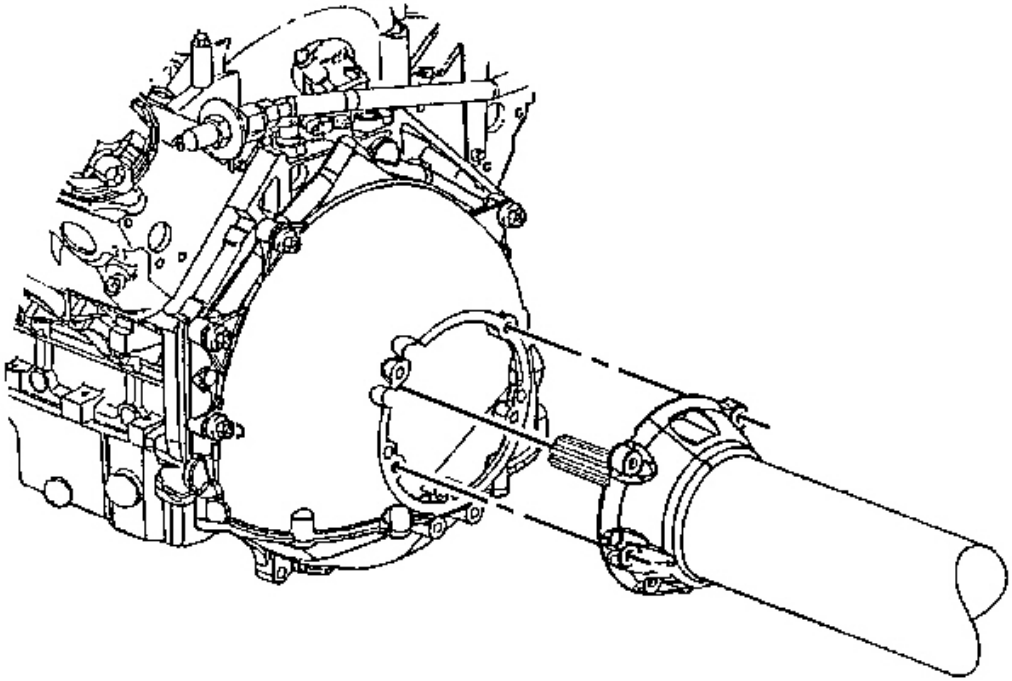

Fig. 123: Propeller Input Shaft & Clutch Driven Plate Hub
Courtesy of GENERAL MOTORS CORP.

13. Remove the lift device from the driveline.
14. Position the driveline under the vehicle.
15. Begin to raise the driveline at the approximate angle used during removal.
16. Position the wiring harness along the driveline support assembly and LOOSELY install the harness into the harness retaining slots.
17. Have an assistant guide the front of the driveline so the propeller input shaft is just to the rear of the engine flywheel housing, then raise the driveline to the PROPER HEIGHT and the PROPER ANGLE to install to the engine.
18. Have an assistant begin to insert the propeller input shaft into the clutch driven plate hub while maintaining the proper angle of the driveline; if necessary, use a screwdriver to rotate the shaft slightly to bring the splines into alignment.

cardiagn.com

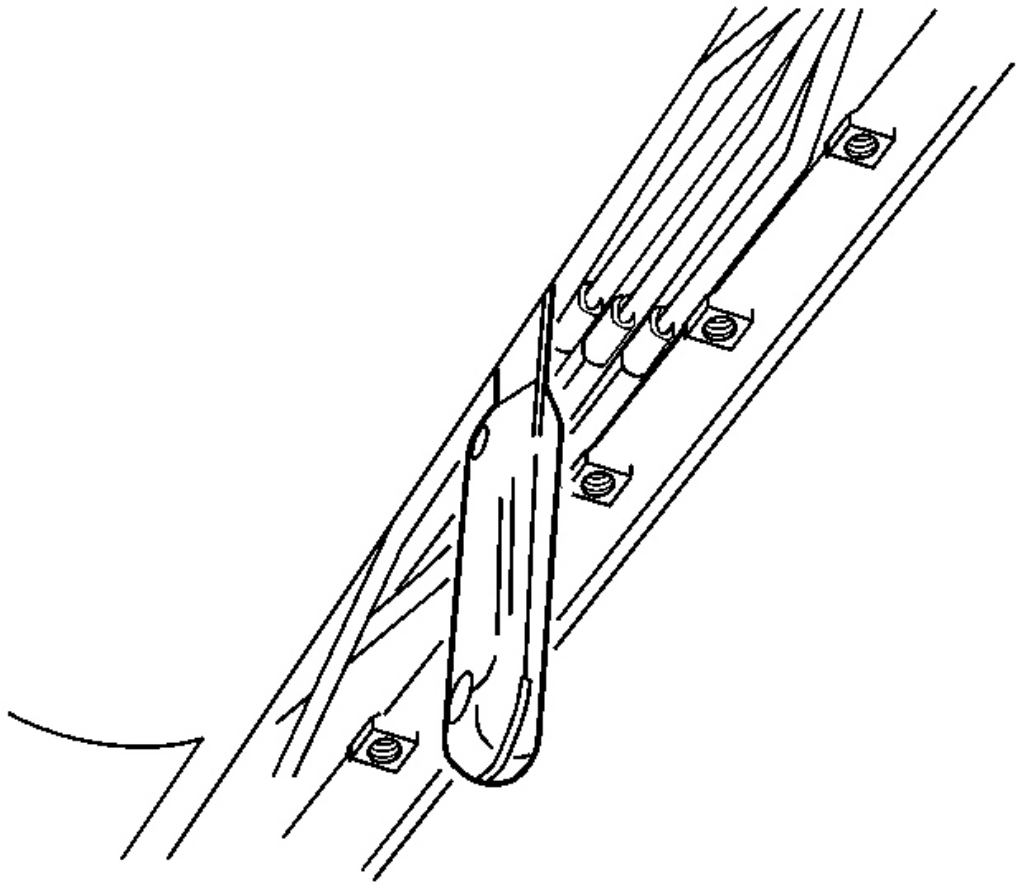

Fig. 124: Inserting Putty Knife Between Edge Of Shifter Bracket & Brake Pipe Retainer
Courtesy of GENERAL MOTORS CORP.

19. Insert a putty knife, or similar tool, between the edge of the shifter bracket on the side of the driveline support assembly and the brake pipe retainer on the wall of the driveline tunnel.

cardiagn.com

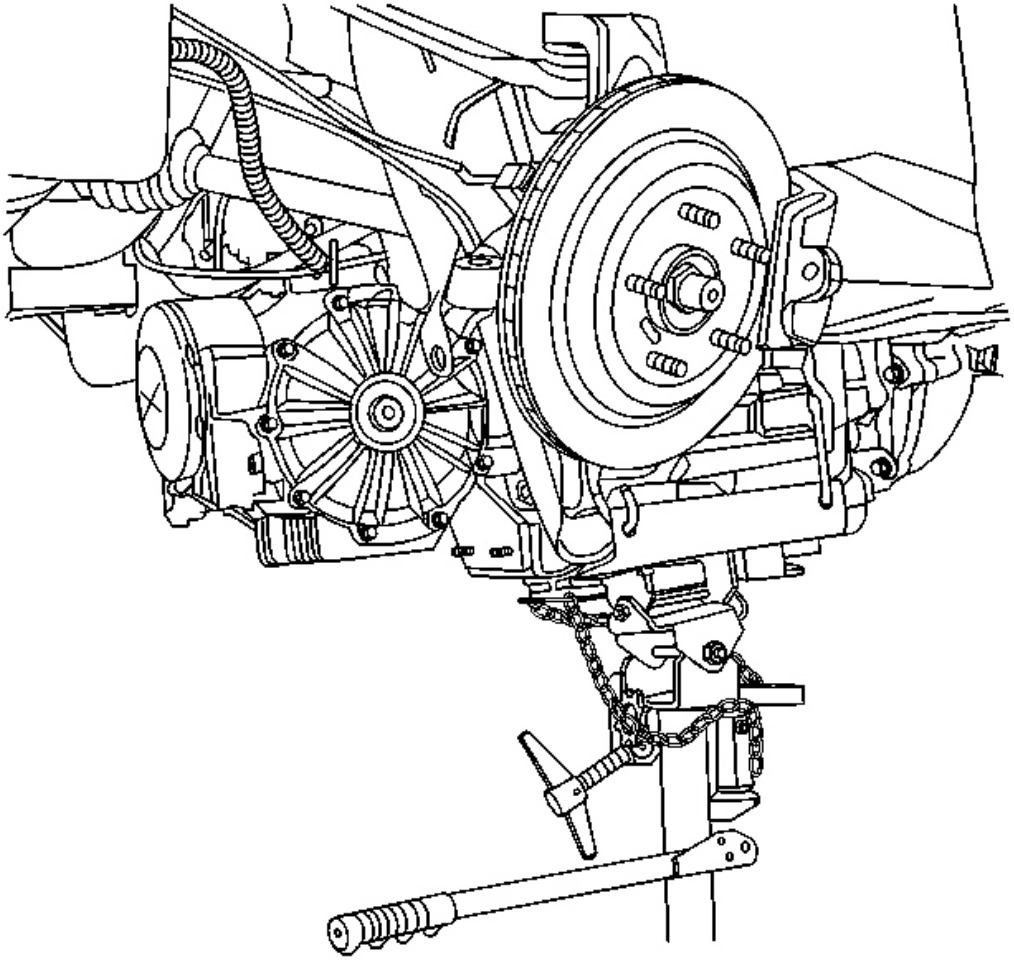

Fig. 125: Transmission Jack Supporting Differential
Courtesy of GENERAL MOTORS CORP.

20. SLOWLY seat the driveline to the engine flywheel housing while maintaining the proper angle of the driveline.
21. Reposition the wiring harness bracket from near the driveline tunnel wall to align with the appropriate driveline support assembly bolt hole.

cardiagn.com

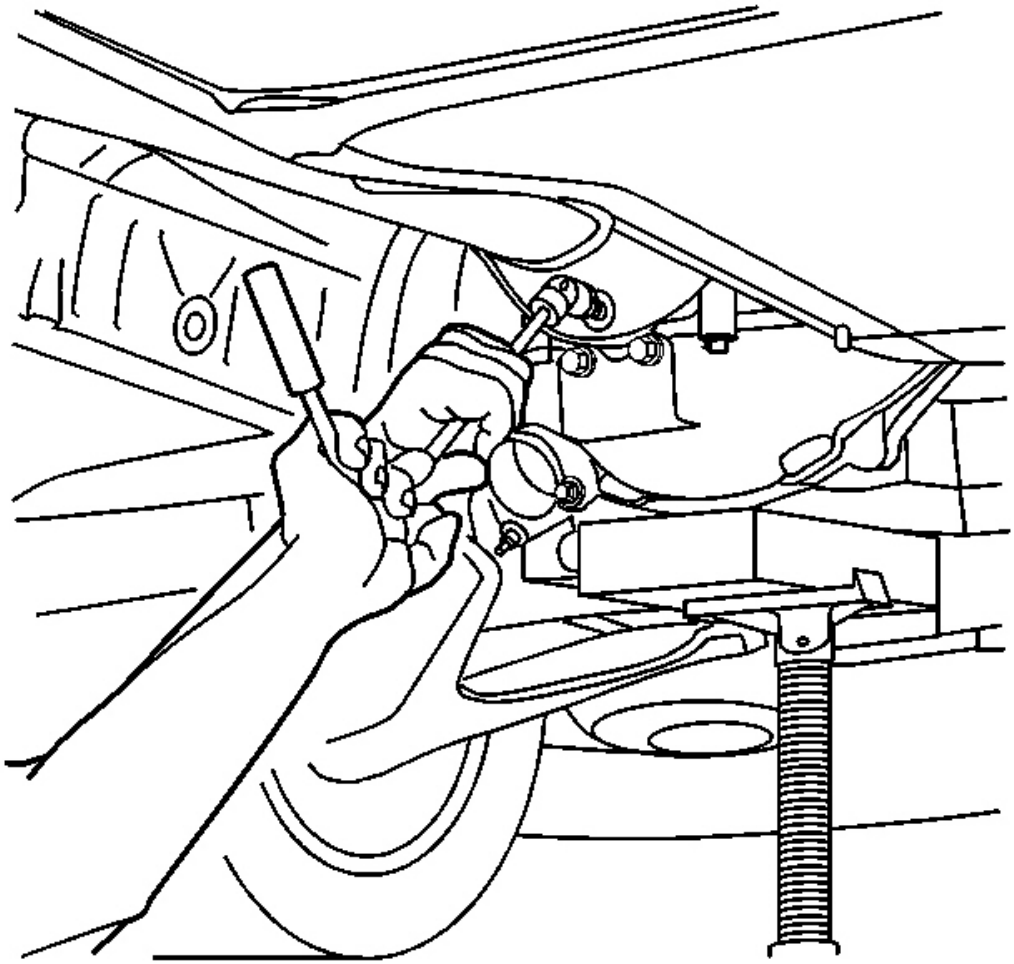

Fig. 126: Removing/Installing Five Driveline Support Assembly To Engine Flywheel Housing Bolts
Courtesy of GENERAL MOTORS CORP.

22. Install the five driveline support assembly to engine flywheel housing bolts.

    Tighten: Tighten the driveline support assembly to engine flywheel housing bolts to 50 N.m (37 lb ft).

23. Install the wiring harness to the wiring harness retainer along the top of the transmission.
24. SLOWLY raise the driveline to approximately 5 cm (2 in) BELOW the final installed height.

cardiagn.com

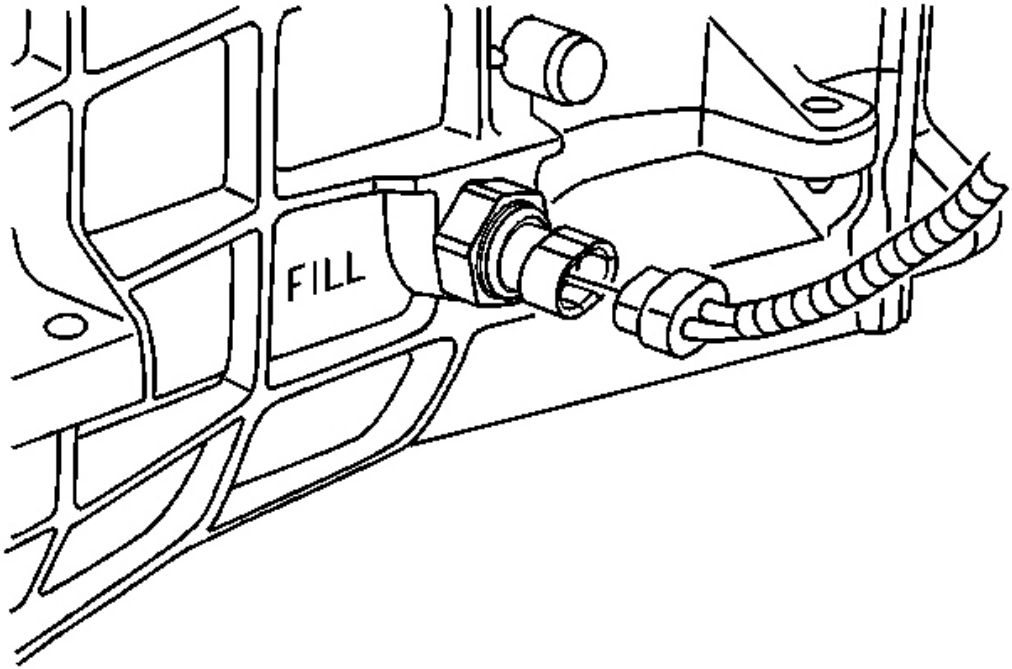

Fig. 127: TFT Sensor Electrical Connector
Courtesy of GENERAL MOTORS CORP.

25. Connect the transmission fluid temperature sensor electrical connector, if equipped.

cardiagn.com

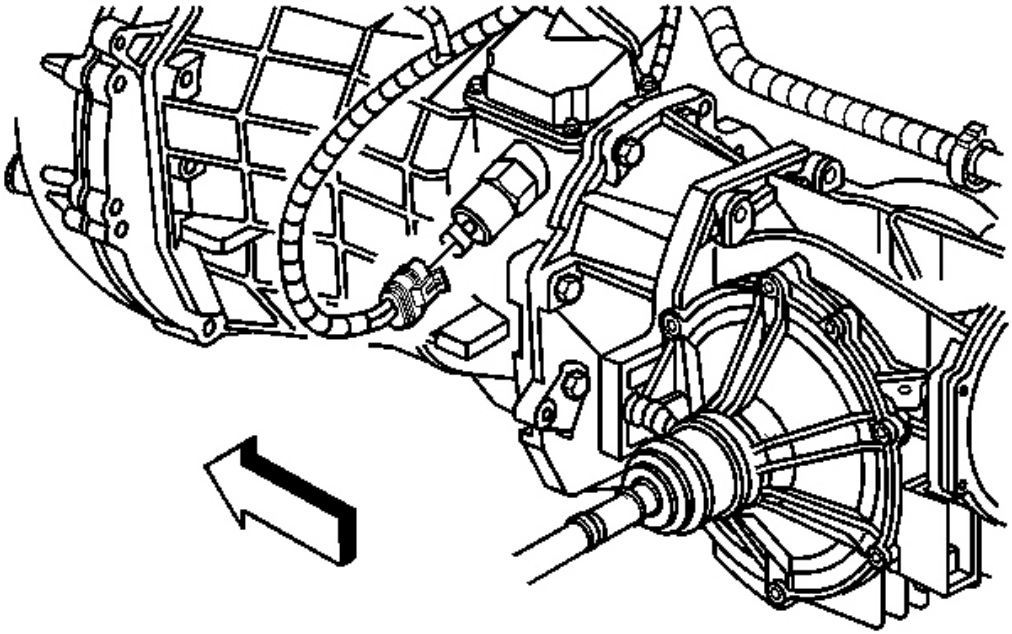

Fig. 128: Gear Select Solenoid Electrical Connector
Courtesy of GENERAL MOTORS CORP.

26. Connect the gear select (skip shift) solenoid electrical connector.

cardiagn.com

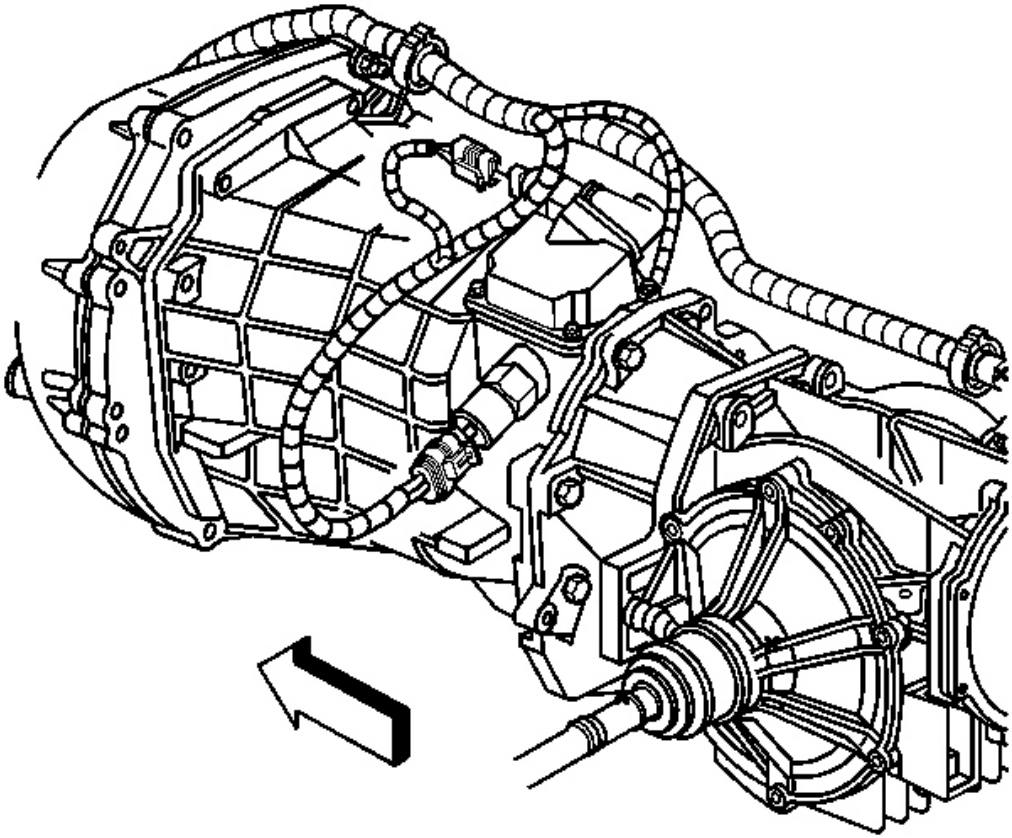

Fig. 129: Reverse Lockout Solenoid Electrical Connector
Courtesy of GENERAL MOTORS CORP.

27. Connect the reverse lockout solenoid electrical connector.

cardiagn.com

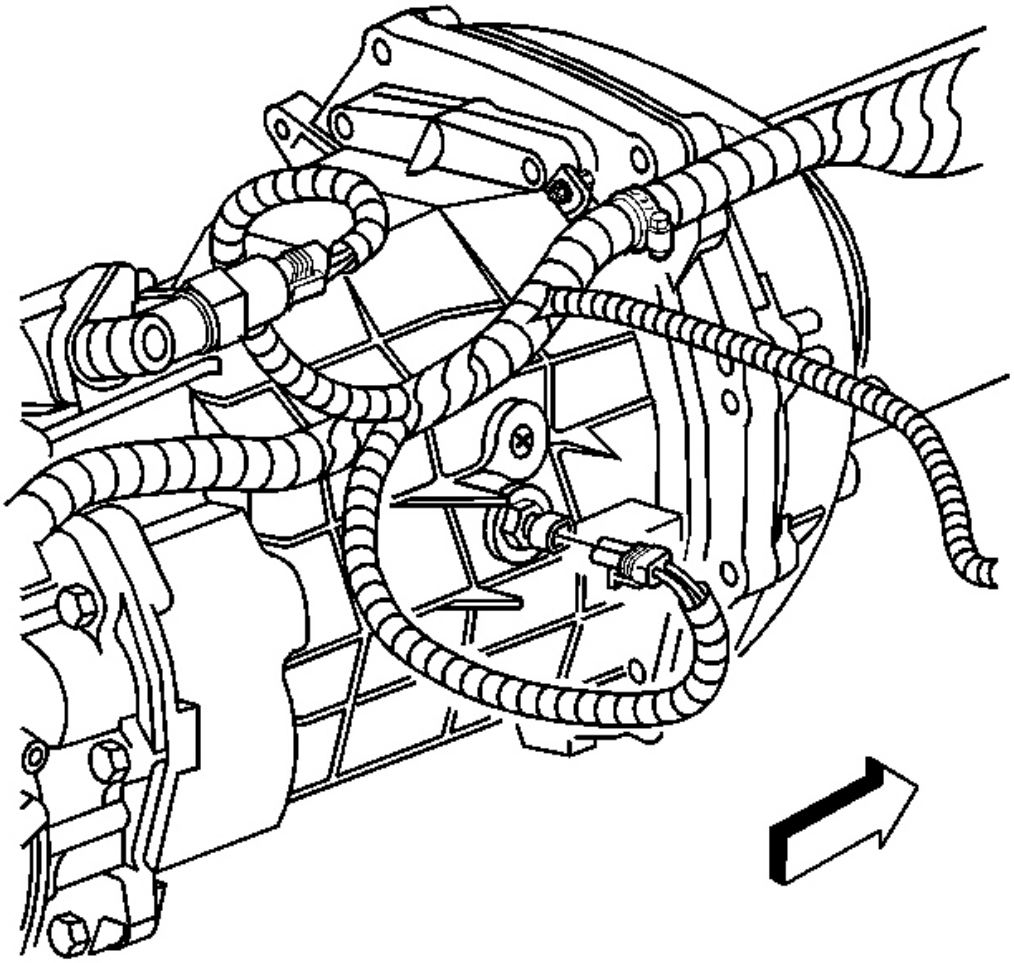

Fig. 130: Backup Lamp Switch Electrical Connector
Courtesy of GENERAL MOTORS CORP.

28. Connect the backup lamp switch electrical connector.

cardiagn.com

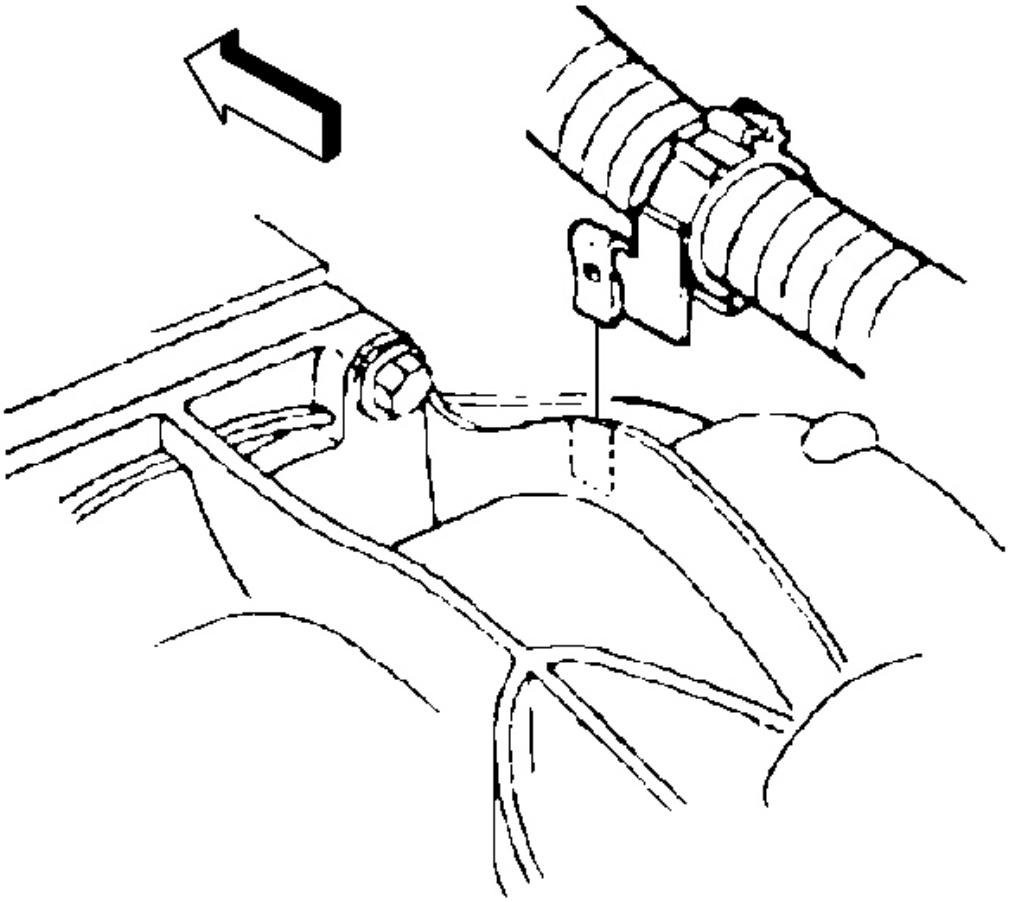

Fig. 131: Wiring Harness Retainer Clip
Courtesy of GENERAL MOTORS CORP.

29. Connect the wiring harness clip to the top of the differential.
30. Connect the wiring harness retainer to the stud at the differential rear cover.

cardiagn.com

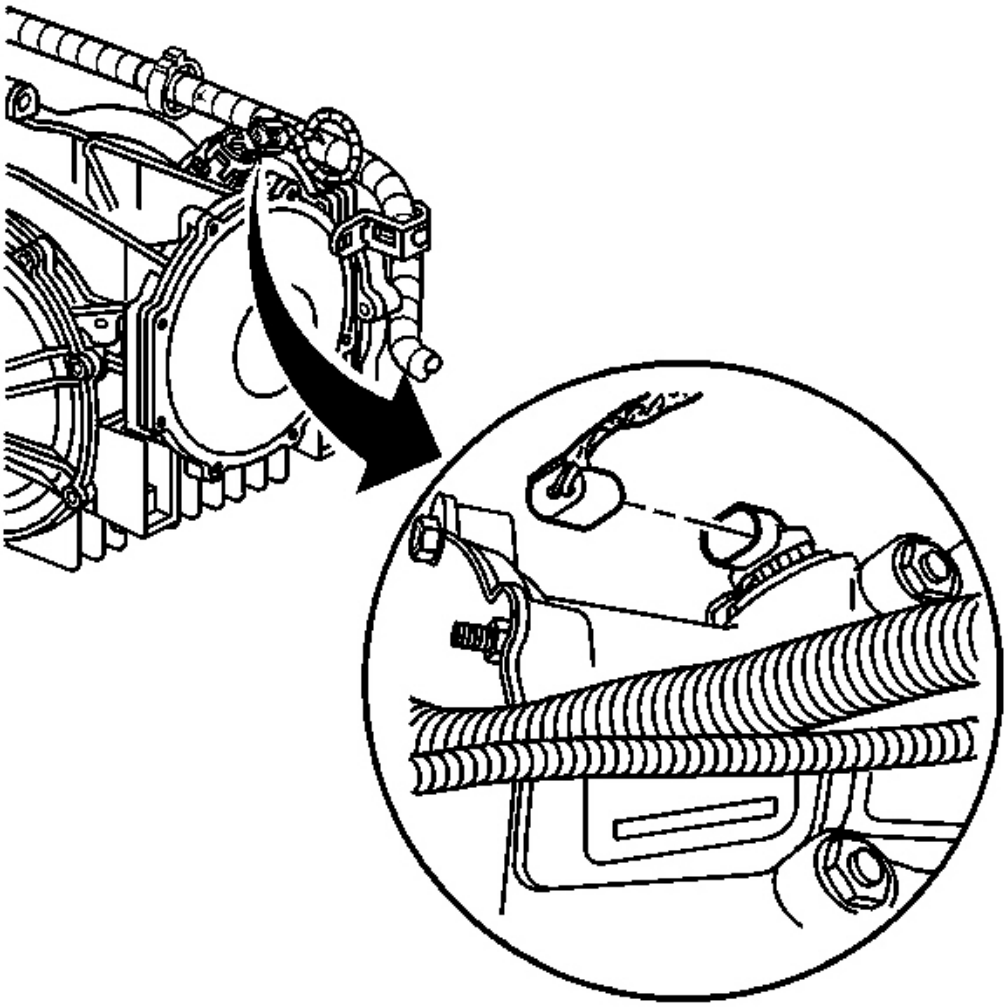

Fig. 132: VSS Electrical Connector
Courtesy of GENERAL MOTORS CORP.

31. Connect the vehicle speed sensor (VSS) electrical connector.

cardiagn.com

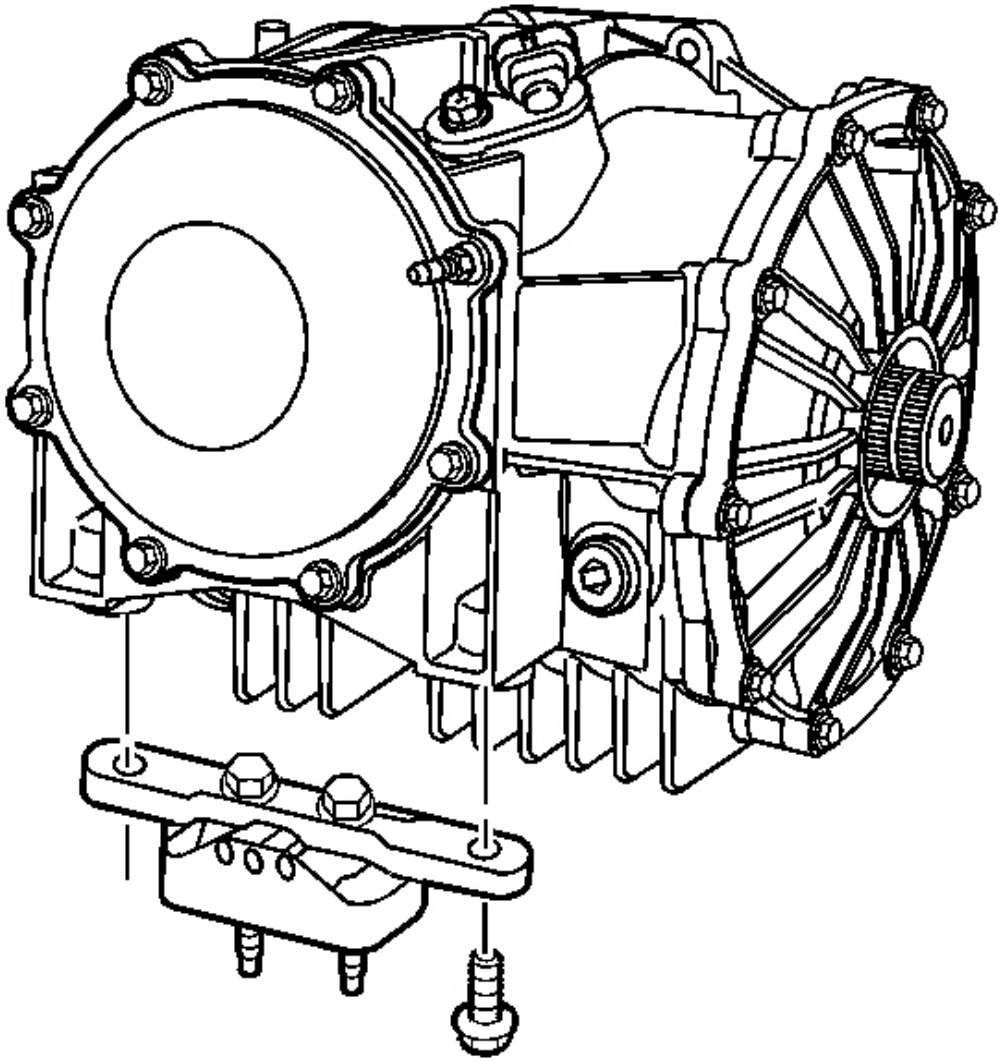

Fig. 133: Mount Location
Courtesy of GENERAL MOTORS CORP.

32. Slowly raise the driveline to final installation height.
33. Remove the putty knife, if still in position.
34. Remove the jack which supported the rear of the engine.
35. Remove the tie-off retainers from the axle shafts.
36. CAREFULLY align and seat the axle shafts to the differential.

cardiagn.com

37. Install the transaxle mount with bracket to the differential.
38. Install the transaxle mount bracket to differential bolts.

Tighten: Tighten the transaxle mount bracket to differential bolts to 50 N.m (37 lb ft).

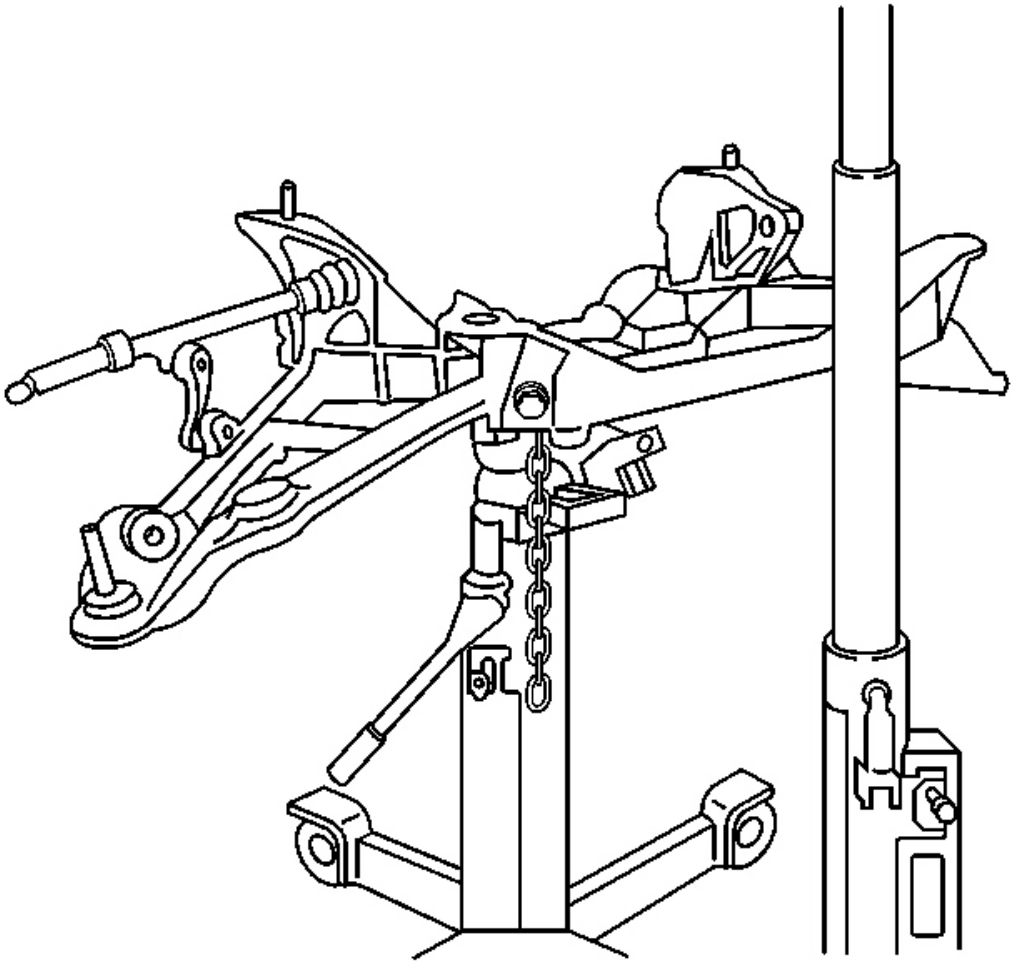

Fig. 134: Supporting Crossmember On Jack
Courtesy of GENERAL MOTORS CORP.

39. With the aid of an assistant, begin to raise the rear suspension crossmember (still firmly attached to a transmission jack), to the vehicle frame rails.
40. Guide the rear suspension crossmember alignment pins into the alignment holes in the vehicle frame rails, and guide the transaxle mount studs into the mounting holes in the crossmember, then raise the

cardiagn.com

crossmember to seat to the frame rails.

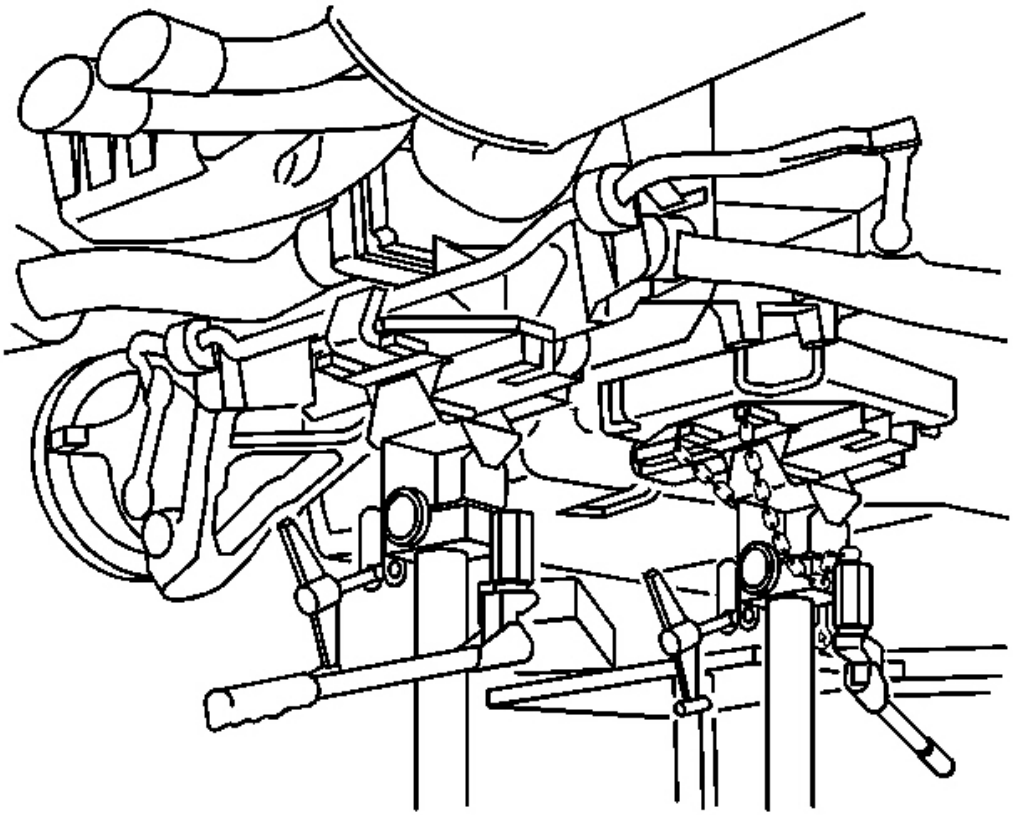

Fig. 135: View Of Jack Under Front End
Courtesy of GENERAL MOTORS CORP.

41. Using ONLY HAND TOOLS, install NEW rear suspension crossmember mounting nuts.

    Tighten: Tighten the rear suspension crossmember mounting nuts to 110 N.m (81 lb ft).

cardiagn.com

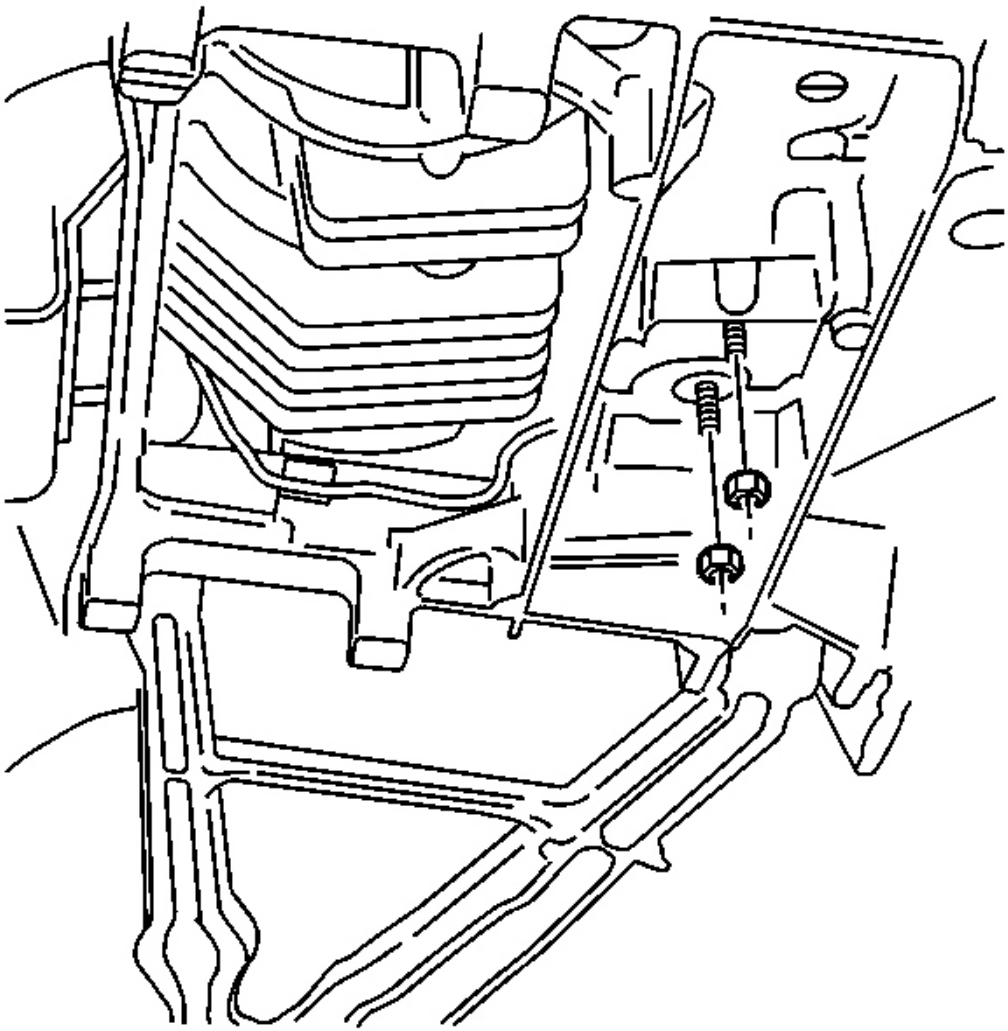

Fig. 136: Transaxle Mount To Rear Crossmember Nuts
Courtesy of GENERAL MOTORS CORP.

42. Remove the transmission jack from the rear suspension crossmember.
43. Release the **J 42055** from the transmission, then remove the **J 42055** and transmission jack.
44. Install the transaxle mount to rear suspension crossmember nuts.

    Tighten: Tighten the transaxle mount to rear suspension crossmember nuts to 50 N.m (37 lb ft).

45. Install the differential to transmission lower nut.

cardiagn.com

Tighten: Tighten the differential to transmission lower nut to 50 N.m (37 lb ft).

46. Connect the wiring harness and brake pipe clip retainers to the rear suspension crossmember.

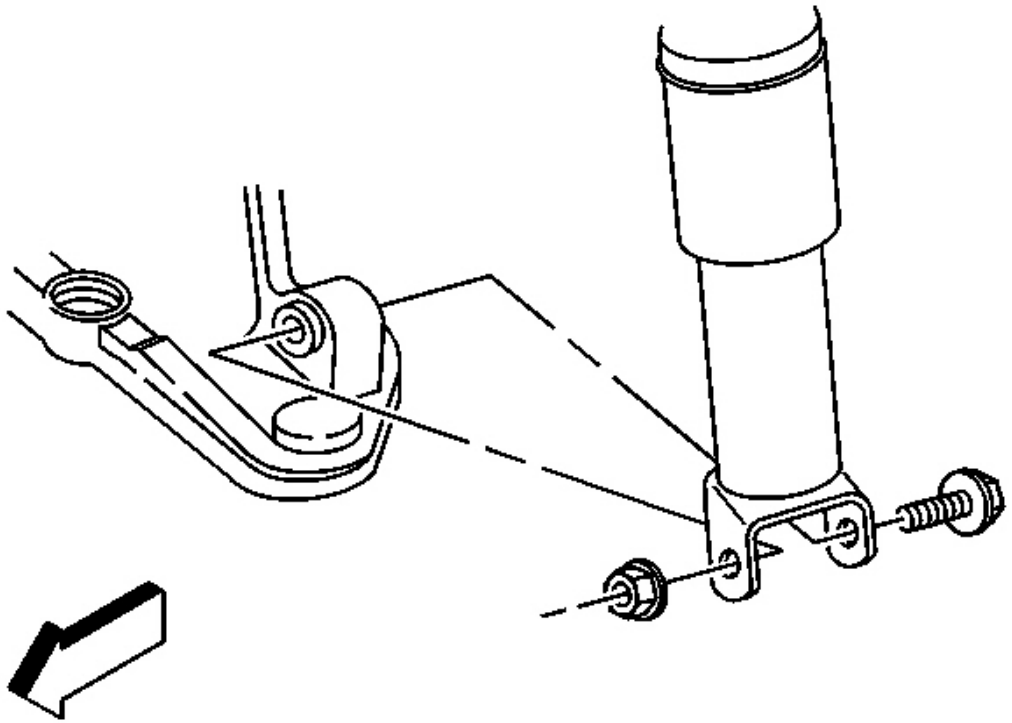

Fig. 137: Mounting Shock Absorber To Control Arm
Courtesy of GENERAL MOTORS CORP.

47. Support the lower control arm with a straight jack.
48. Connect the lower ball joint to the suspension knuckle. Refer to **Knuckle Replacement** in Rear Suspension.
49. Install the shock absorber lower mounting bolt.

    Tighten: Tighten the rear shock absorber lower mounting bolt to 220 N.m (162 lb ft).

50. Connect the outer tie rod end to the suspension knuckle. Refer to **Tie Rod Replacement (Outer End)** or **Tie Rod Replacement (Suspension Link)** in Rear Suspension.
51. Remove the straight jack from the suspension control arm.
52. Repeat steps 46 through 50 for the other side of the vehicle.

cardiagn.com

53. Install the rear transverse spring. Refer to **Rear Transverse Spring Replacement** in Rear Suspension.

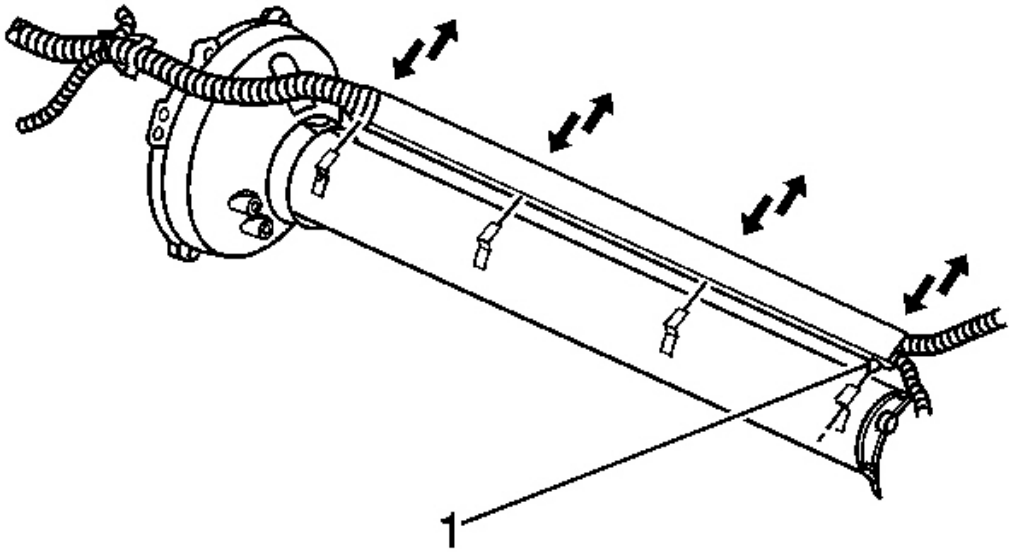

Fig. 138: Retainer Securing The Wiring Harness
Courtesy of GENERAL MOTORS CORP.

54. Carefully pull the wiring harness down into the L-shaped brackets along the driveline support assembly, align the harness retainer (locator) (1) to the hole in the forward bracket, then secure in place.

cardiagn.com

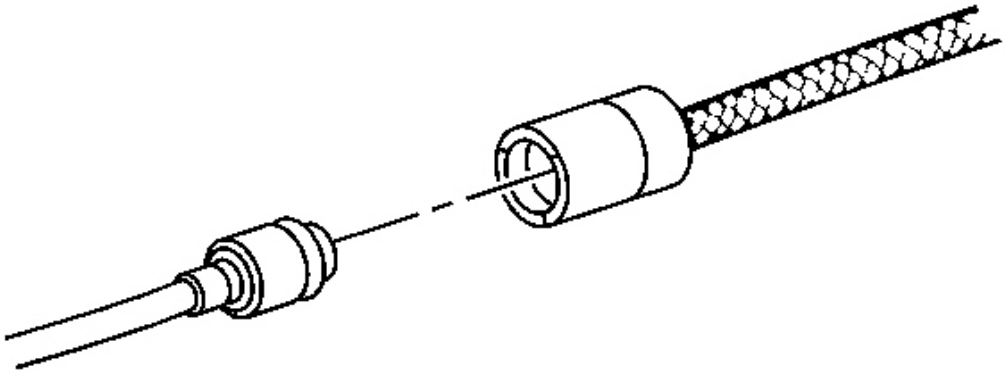

Fig. 139: Identifying White Circular Release Ring On The Actuator Hose
Courtesy of GENERAL MOTORS CORP.

IMPORTANT: DO NOT rely on an audible click or a visual verification of the clutch hydraulic hose quick connect fitting connection.

55. Connect the clutch actuator cylinder hose to the clutch master cylinder hose.

    Push together the clutch hydraulic hose quick connect fittings, then pull back on the fittings to verify engagement.

56. Check the clutch hydraulic hoses for twists or kinks.

cardiagn.com

Fig. 140: Clutch Actuator Cylinder Hose
Courtesy of GENERAL MOTORS CORP.

57. Install the clutch actuator cylinder hose to the hose retaining clip (at the rear of the engine).
58. Install the driveline tunnel closeout panel. Refer to **Driveline Tunnel Closeout Panel Replacement** in Propeller Shaft.
59. Remove the tie-off retainers from the muffler assemblies.

cardiagn.com

60. Install the catalytic converter. Refer to **Catalytic Converter Replacement** in Engine Exhaust.
61. Install the rear tire and wheel assemblies. Refer to **Tire and Wheel Removal and Installation** in Tires and Wheels.

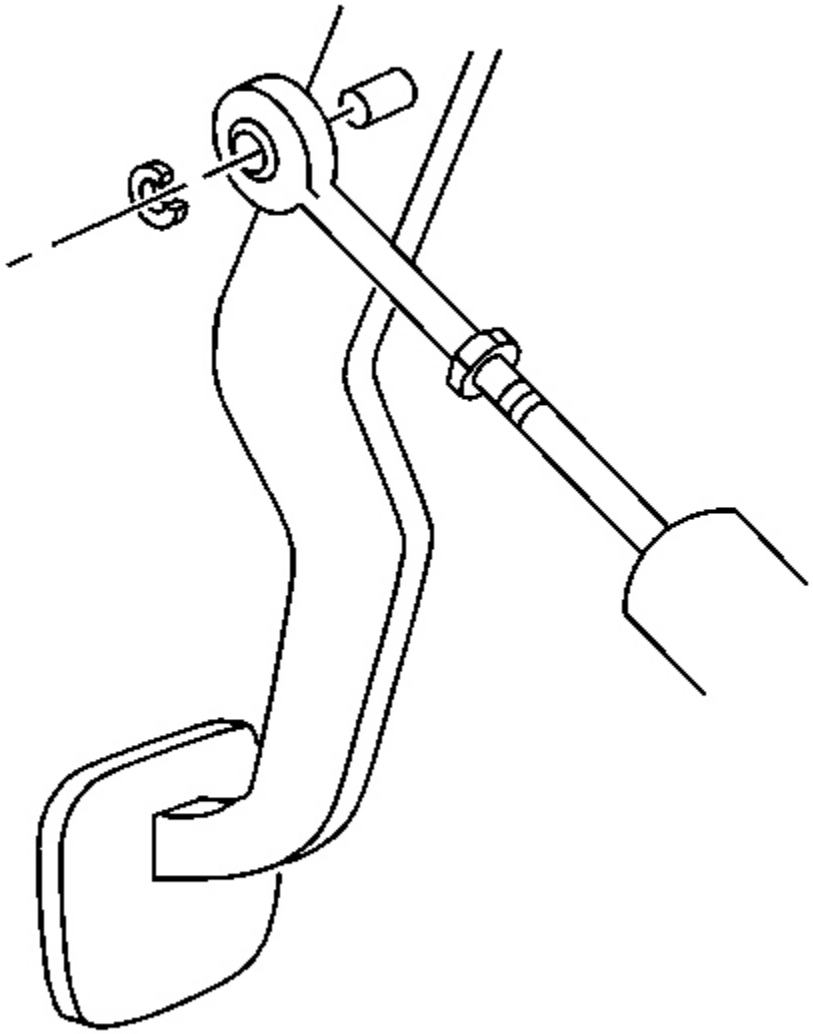

Fig. 141: Master Cylinder Push Rod From The Clutch Pedal
Courtesy of GENERAL MOTORS CORP.

62. Lower the vehicle.
63. Connect the clutch master cylinder pushrod to the clutch pedal.

cardiagn.com

64. Install the clutch master cylinder pushrod retainer.
65. Install the left IP lower insulator panel. Refer to **Closeout/Insulator Panel Replacement - Left** in Instrument Panel, Gages and Console.

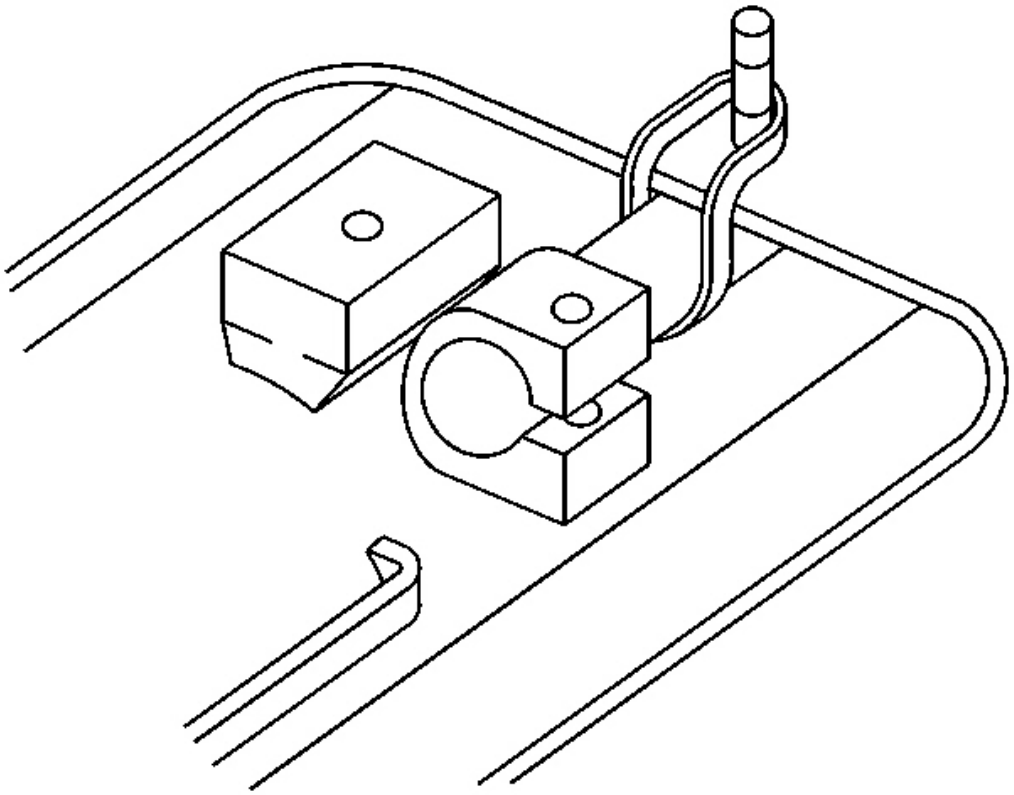

Fig. 142: Rubber Band, Transmission Shift Rod & Shift Control Assembly
Courtesy of GENERAL MOTORS CORP.

66. Grasp the transmission shift rod and pull up to break the masking tape installed earlier to maintain position during installation.
67. Stretch the rubber band, while still installed onto the transmission shift rod, over the rear stud on top of the driveline tunnel to aid in shift control installation.
68. Install the shift control assembly. Refer to **Shift Control Assembly Replacement** .
69. Break and remove the rubber band.

cardiagn.com

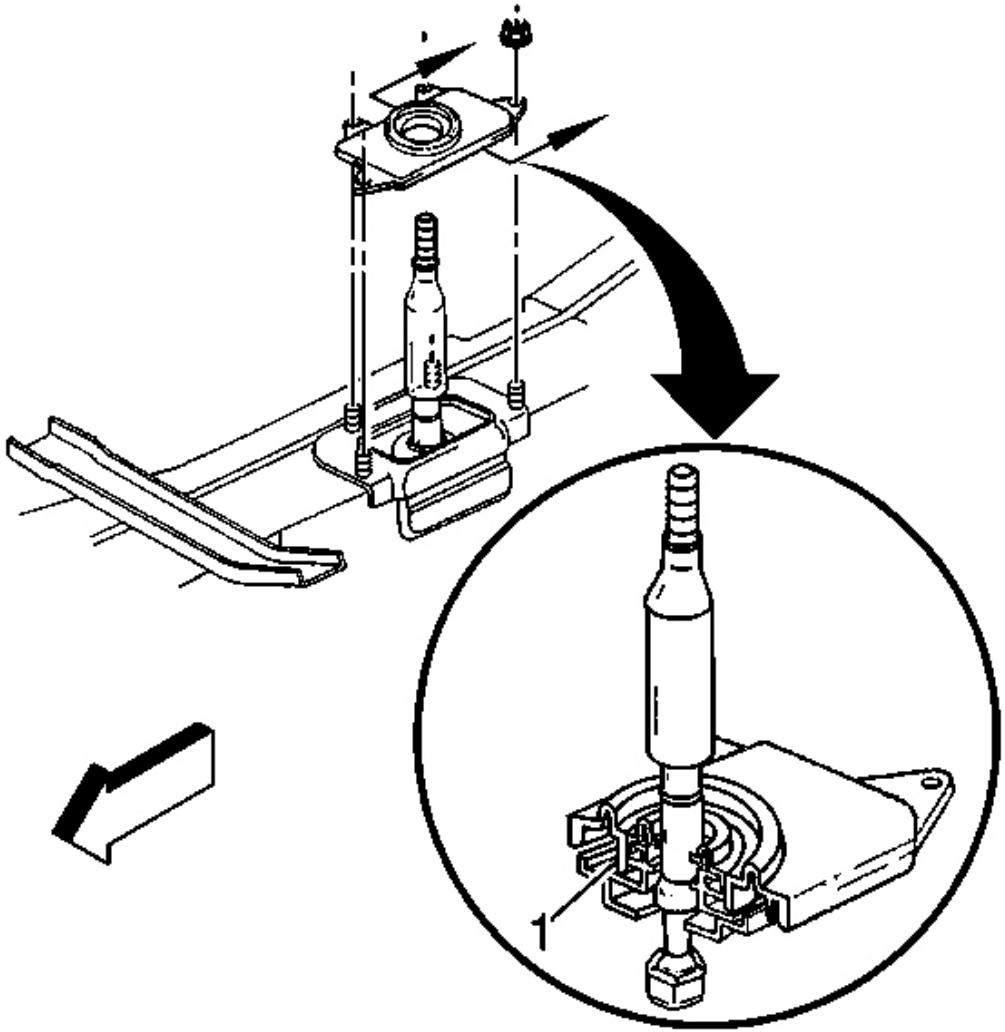

Fig. 143: Shift Control Closeout Boot, Retaining Nuts & Shift Control Assembly
Courtesy of GENERAL MOTORS CORP.

70. Install the shift control closeout boot.

    Check that the closeout boot fully seats to the shift control lever seal and the base of the shift control assembly (1).

71. Install the shift control closeout boot retaining nuts.

    Tighten: Tighten the shift control closeout boot retaining nuts to 12 N.m (106 lb in).

cardiagn.com

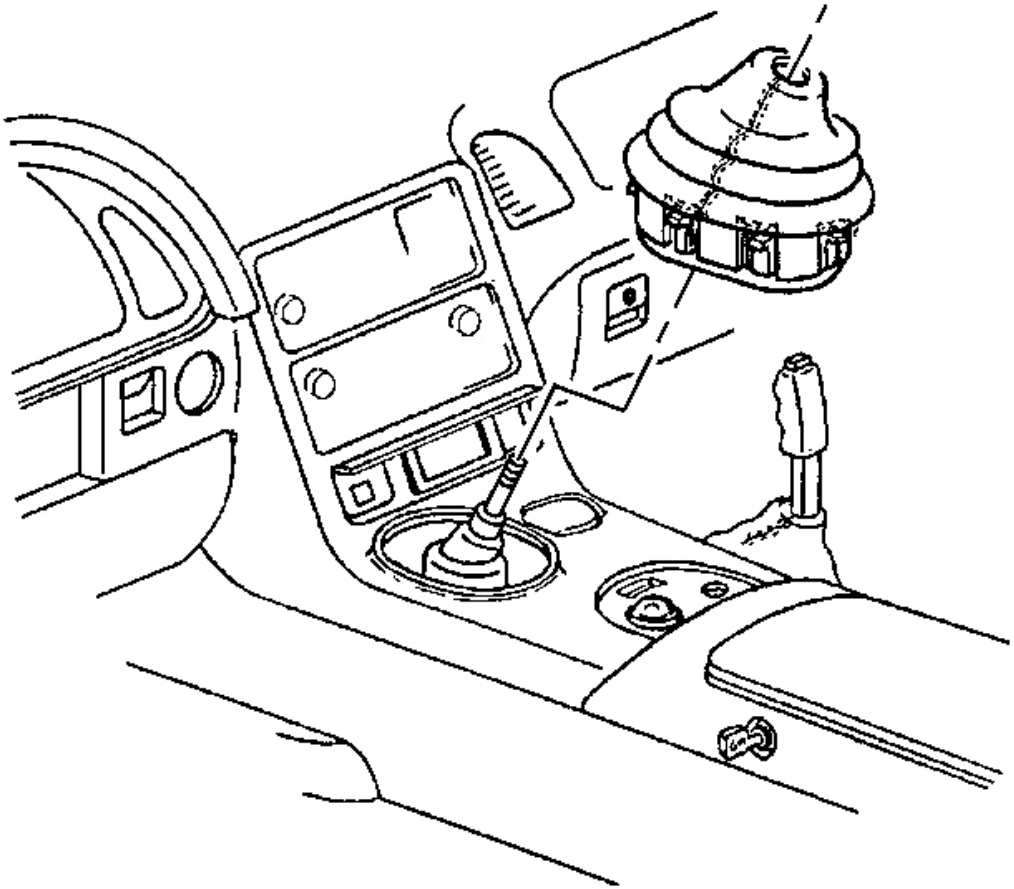

Fig. 144: Shift Control Boot, Shift Control Lever & IP Accessory Trim Plate
Courtesy of GENERAL MOTORS CORP.

72. Install the IP accessory trim plate. Refer to **Trim Plate Replacement - Instrument Panel (I/P) Accessory** in Instrument Panel, Gages and Console.
73. Install the shift control boot over the shift control lever.

cardiagn.com

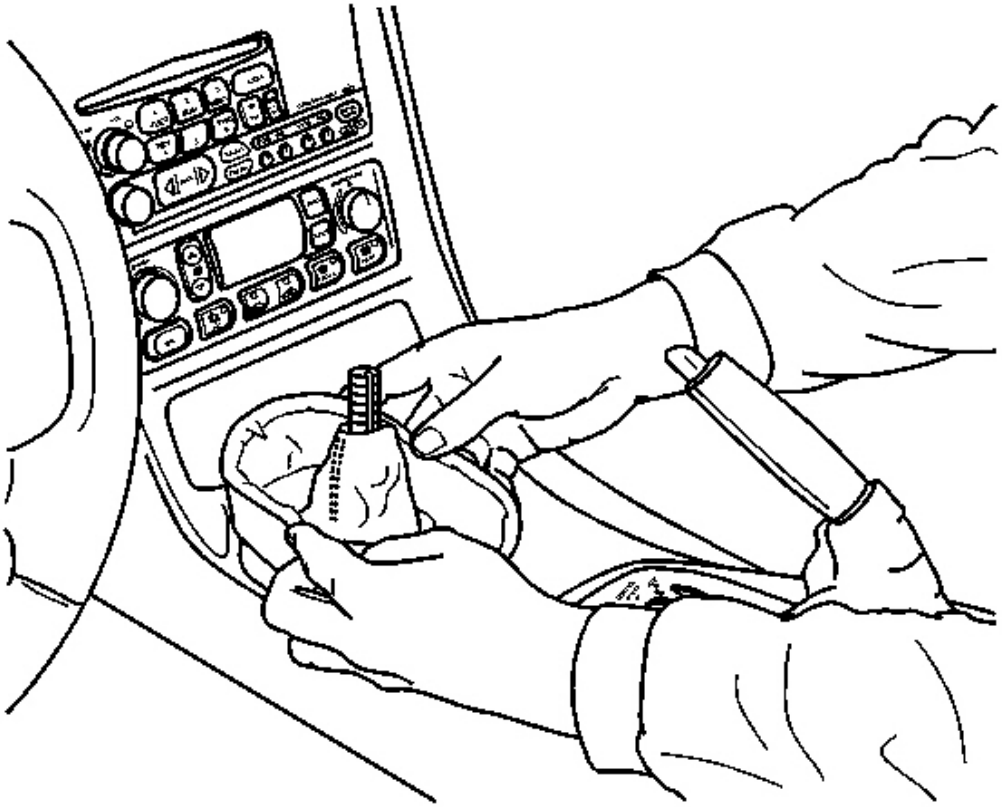

Fig. 145: Locking The Boot Retaining Tabs
Courtesy of GENERAL MOTORS CORP.

74. Align the shift control boot to the IP accessory trim plate opening, then press to lock the boot retaining tabs.
75. Adjust the shape of the boot for appearance, if necessary.

cardiagn.com

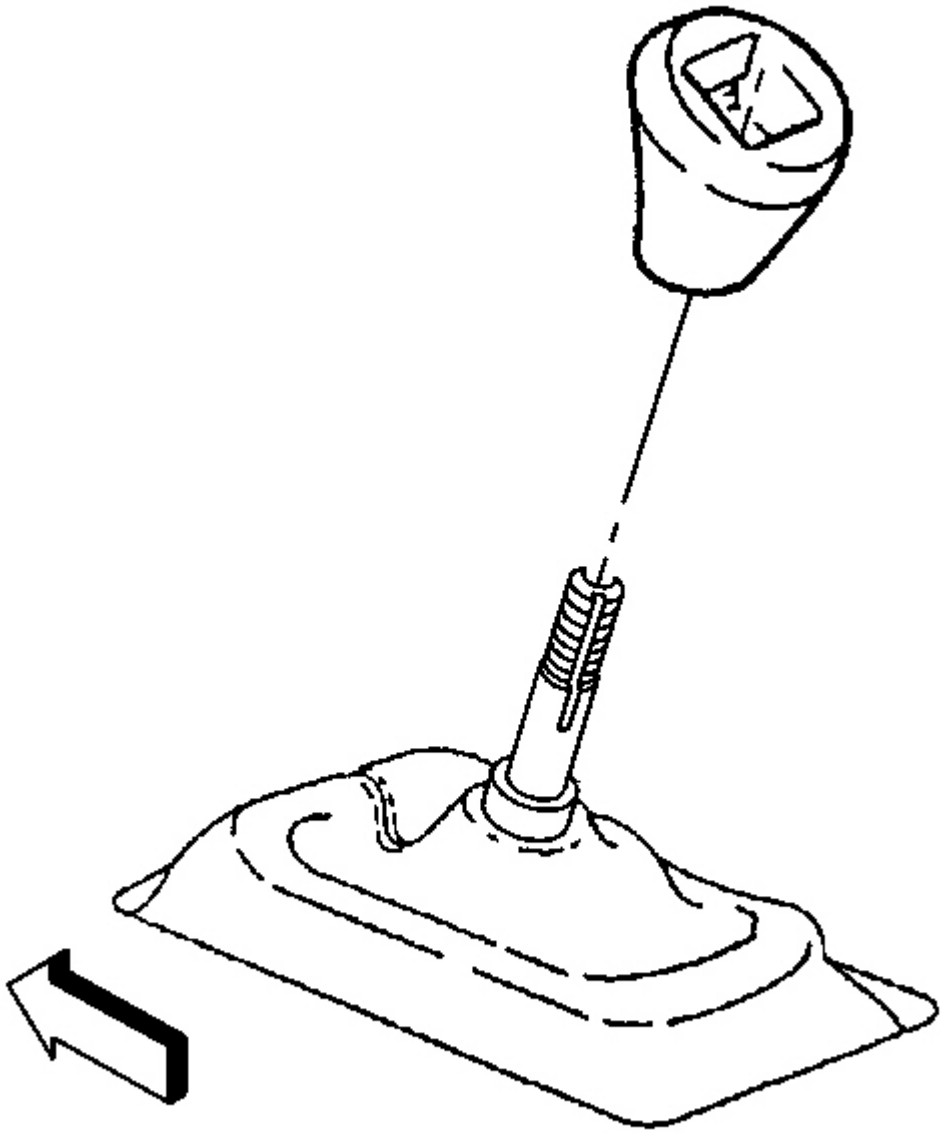

Fig. 146: Removing Gear Shift Knob
Courtesy of GENERAL MOTORS CORP.

76. Screw the shift control knob onto the shift control lever until the knob bottoms out.

cardiagn.com

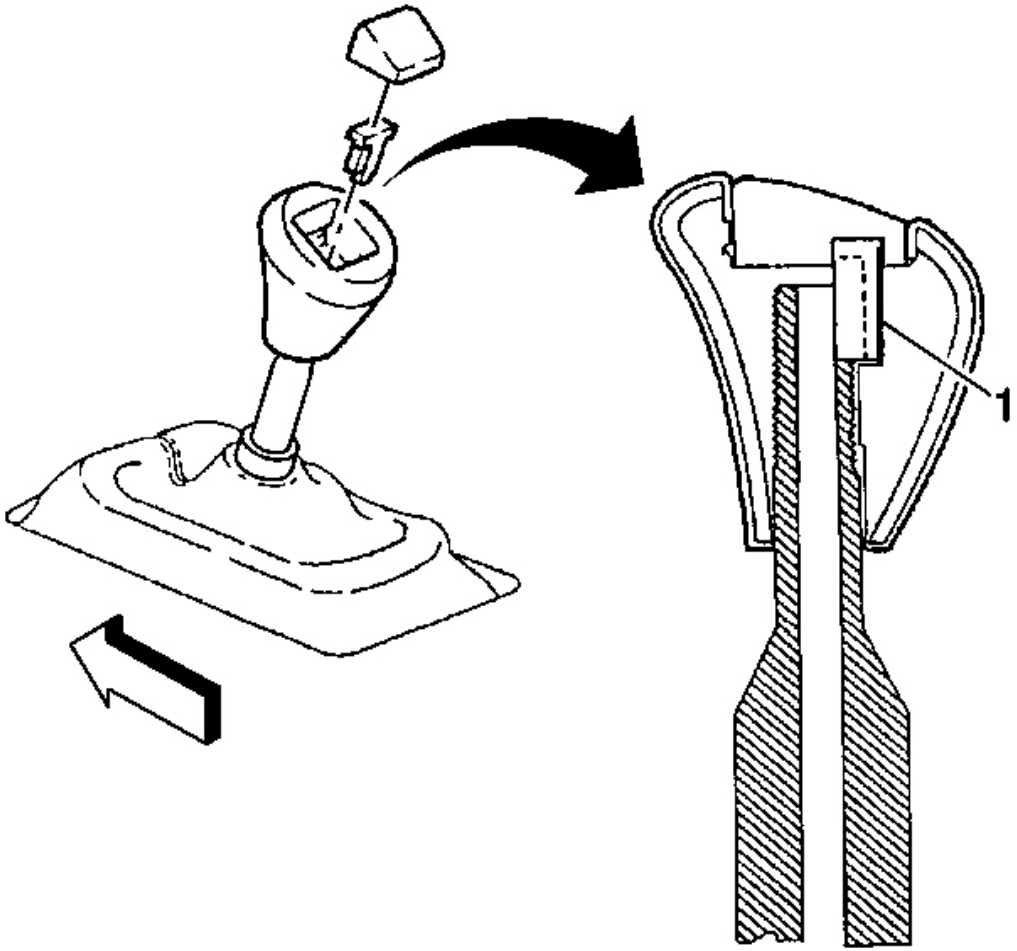

Fig. 147: Shift Control Knob Retainer, Shift Control Knob Button
Courtesy of GENERAL MOTORS CORP.

77. Unscrew the shift control knob just enough to align the retainer slot with the slot on the shift control lever.
78. Install the shift control knob retainer (1) into the slots and seat fully.
79. Install the shift control knob button.
80. Install the console. Refer to **Console Replacement** in Instrument Panel, Gages and Console.
81. Connect the negative battery cable.

Tighten: Tighten the negative battery cable bolt to 15 N.m (11 lb ft).

cardiagn.com

82. Program the transmitters. Refer to **Transmitter Programming** in Keyless Entry.
83. Bleed the clutch hydraulic system. Refer to **Hydraulic Clutch Bleeding** in Clutch.

DESCRIPTION AND OPERATION

MANUAL TRANSMISSION DESCRIPTION AND OPERATION

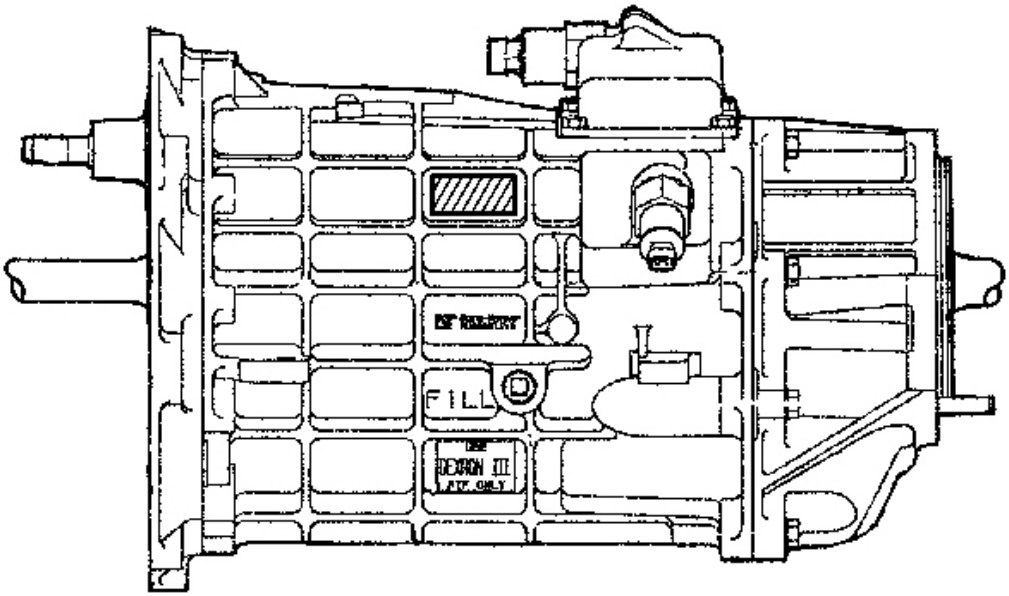

Fig. 148: Manual Transmission
Courtesy of GENERAL MOTORS CORP.

Manual transmissions are identified by the number of forward gears and the measured distance between the centerline of the output shaft and the counter gear.

The 6-speed manual transmission (RPO MM6/M12), used in Corvettes, incorporates the following features:

- An aluminum case
- Fully synchronized gearing with an enhanced synchronizer cone arrangement:
  - Triple-cone: FIRST, SECOND
  - Double-cone: THIRD, FOURTH, FIFTH, SIXTH
  - Single-cone: REVERSE
- An internal shift rail mechanism

cardiagn.com

- A remote transmission shift control mounted forward of the transmission
- An external transmission shift rod enabling the forward mount location of the transmission shift control
- An extended-length transmission output shaft mating directly to the rear axle drive pinion, in the rear of the differential housing
- Tapered roller bearings supporting the mainshaft and countershaft
- Caged roller bearings under all speed gears
- Solenoid inhibit of SECOND and THIRD gears
- Solenoid inhibit of REVERSE gear during predefined forward motion

These features combine to yield a rugged, reliable system capable of handling input torques of up to 610 N.m (450 lb ft) for the MM6 and 540 N.m (400 lb ft) for the M12.

The gear ratios are as follows:

Manual Transmission Description and Operation

Gear	MM6 Ratio (:1)	M12 Ratio (:1)
FIRST	2.66	2.97
SECOND	1.78	2.07
THIRD	1.30	1.43
FOURTH	1.00	1.00
FIFTH	0.74	0.84
SIXTH	0.50	0.57
REVERSE	2.90	3.28

Shift Control and Shift Rod

cardiagn.com

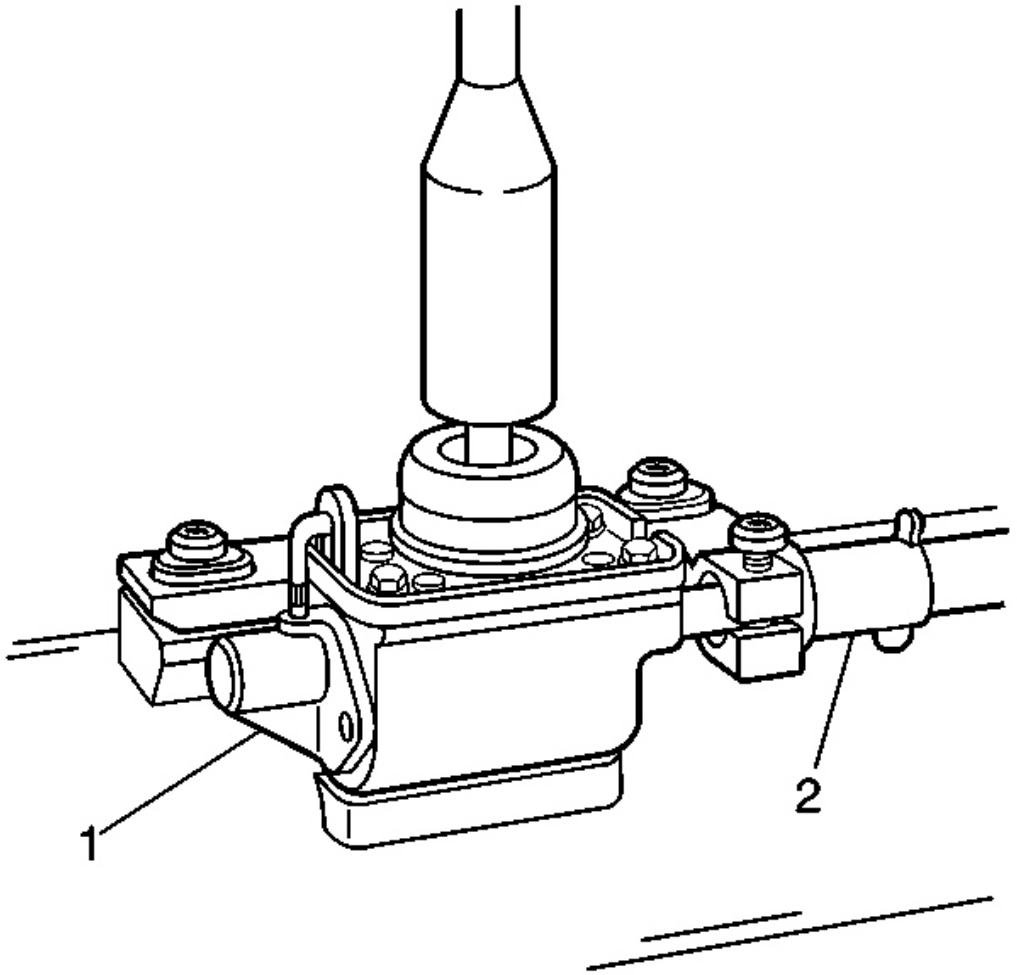

Fig. 149: Shift Control And Shift Rod
Courtesy of GENERAL MOTORS CORP.

To allow the rear-of-vehicle transmission location, the transmission shift shaft has been relocated to the front of the transmission. The shift shaft is connected to a transmission shift rod (2) which contains two sealed universal-style joints, enabling the range of motion necessary in order to shift gears. The shift rod (2) is connected to the transmission shift control (1) which is a lubricated and sealed unit, mounted to the driveline support assembly. The mounting system utilized for the shift control (1) incorporates rubber insulators. The cockpit of the vehicle is isolated from the driveline through the use of a shift control closeout boot which seals off the shift control and the driveline tunnel shift control opening.

Gear Select - Skip Shift

cardiagn.com

To ensure good fuel economy and compliance with federal fuel economy standards, SECOND and THIRD gears are inhibited when shifting out of FIRST gear under the following conditions:

- Coolant temperature is above 76°C (169°F).
- Vehicle speed is 24-31 km/h (15-19 mph).
- Throttle is opened 21 percent or less.

Reverse Lockout

A reverse lockout system, consisting of a reverse lockout solenoid which operates a reverse lockout mechanism, is utilized to prevent shifting into REVERSE gear when the vehicle is moving forward at a speed of 5 km/h (3 mph) or more.

REVERSE INHIBIT DESCRIPTION AND OPERATION

The reverse inhibit solenoid is a safety feature which prevents an inadvertent shift into reverse at speeds above 5 km/h (3 mph). The system consist of the following components:

- The powertrain control module (PCM).
- The reverse inhibit solenoid.

With the ignition ON, battery voltage is supplied directly to the reverse inhibit solenoid. At forward speeds above 5 kp/h (3 mph) the PCM grounds the control circuit of the reverse inhibit solenoid. This energizes the solenoid and mechanically blocks the shift lever from going into the REVERSE position.

SKIP SHIFT DESCRIPTION AND OPERATION

The skip shift solenoid is a performance feature which forces the driver to shift from first gear to fourth gear during light acceleration and low engine load conditions. This feature is used to ensure good fuel economy and compliance with federal economy standards. The skip shift system consist of the following components:

- The powertrain control module (PCM).
- The skip shift solenoid.
- The skip shift lamp.

With the ignition ON, battery voltage is supplied directly to the skip shift solenoid. The powertrain control module (PCM) controls the solenoid by grounding the control circuit. When the skip shift system is active the PCM also grounds the control circuit of the skip shift lamp. The lamp illuminates to inform the driver that the 1-4 skip shift is engaged. The PCM determines when the skip shift system is active when the following parameters are met:

- The vehicle speed is between 24-31 km/h (15-19 mph).
- The engine coolant temperature (ECT) is greater than 77°C (171°F).
- The BARO is greater than 76 kPa.
- The accelerator pedal position (APP) is less than 26 percent.

cardiagn.com

When the conditions are met the powertrain control module (PCM) grounds the skip shift solenoid control circuit. This energizes the skip shift solenoid and mechanically blocks the gear shift lever from going into the second or third gear positions. When the drivers pulls back on the shift lever with the system enabled the transmission will go into fourth gear.

When the conditions for skip shift engagement are no longer met the powertrain control module (PCM) disables the skip shift solenoid, allowing the driver to use second and third gears.

Once the skip shift solenoid is enabled the system will not be re-enabled until the vehicle speed returns to 0 km/h (0 mph) and the conditions for enabling skip shift solenoid are met.

SPECIAL TOOLS AND EQUIPMENT

SPECIAL TOOLS

Special Tools

Illustration	Tool Number/ Description
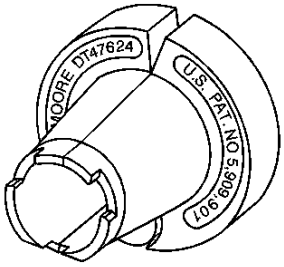	DT 47624 Cooler Quick Connect Tool
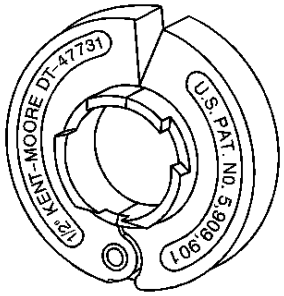	DT 47731 Cooler Quick Connect Tool
	J 41099 Gear Select/Reverse Lockout Solenoid Socket

cardiagn.com

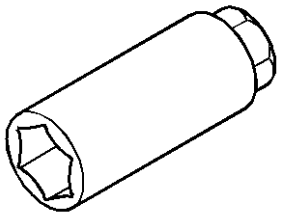	
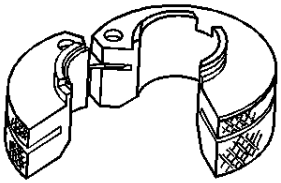	J 41623-B Cooler Quick Connect Tool
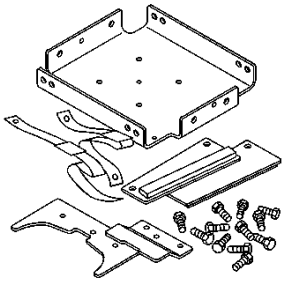	J 42055 Transmission Support Fixture
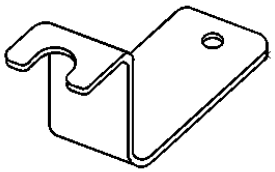	J 42371 Clutch Line Removal Tool
	J 35616-A Connector Test Adapter Kit

cardiagn.com

cardiagn.com

SPECIFICATIONS

FASTENER TIGHTENING SPECIFICATIONS

Fastener Tightening Specifications

Application	Specification	
	Metric	English
Adapter Plate Plug	27 N.m	20 lb ft
Adapter Plate to Transmission Case Bolts	48 N.m	36 lb ft
Backup Lamp Switch	27 N.m	20 lb ft
Computer Aided Gear Select Solenoid	40 N.m	30 lb ft
Cover Plate Bolts	20 N.m	15 lb ft
Extension Housing Plug	27 N.m	20 lb ft
Extension Housing to Transmission Case Bolts	48 N.m	36 lb ft
Neutral Return Cam Spring Retaining Bolt	25 N.m	18 lb ft
Reverse Idler Shaft Bracket Bolts	25 N.m	18 lb ft
Reverse Lockout Assembly Bolt	18 N.m	13 lb ft
Reverse Lockout Solenoid	40 N.m	30 lb ft
Shift Detent Assembly	40 N.m	30 lb ft
Shift Guide Plate Bolts	22 N.m	16 lb ft
Shift Lever Guide Bolts	27 N.m	20 lb ft
Temperature Switch (M12 Only)	41 N.m	30 lb ft
Transmission Case Drain Plug	18 N.m	13 lb ft
Transmission Case Fill Plug (MM6 Only)	18 N.m	13 lb ft

SEALERS, ADHESIVES, AND LUBRICANTS

Sealers, Adhesives, and Lubricants

Application	Type Of Material	GM Part Number	
		United States	Canada
Adapter Plate Plug	Sealant	12346004	10953480
Cover Plate	Sealant	12345739	10953472
Extension Housing Bolts	Sealant	12346004	10953480
Extension Housing to Transmission Case Mating Surface	Sealant	12345739	10953472
Reverse Idler Shaft Bracket Bolts	Threadlock	12345382	10953489
Reverse Lamp Switch	Sealant	12346004	10953480
Shift Lever Guide Bolts	Sealant	12346004	10953480

cardiagn.com

Temperature Switch - M12 Only	Sealant	12346004	10953480
Transmission Case Drain Plug	Sealant	12346004	10953480
Transmission Case Fill Plug - MM6 Only	Sealant	12346004	10953480
Transmission Case to Adapter Plate Mating Surface	Sealant	12345739	10953472
Transmission Fluid	Lubricant	DEXRON III (R)	DEXRON III (R)

LUBRICATION SPECIFICATIONS

Lubrication Specifications

Application	Specification	
	Metric	**English**
Dexron(tm) III, IIE	3.45 liters	3.65 quarts

SHIM SIZE SPECIFICATIONS

Shim Size Specifications

Application	Specification	
	Metric	English
Countershaft Extension Shim Axial Play	0.05-0.13 mm	0.002-0.005 in
Countershaft Shim Preload	0.0-0.05 mm	0.0-0.002 in
Input Shaft/Mainshaft Shim Preload	0.0-0.05 mm	0.0-0.002 in

COMPONENT LOCATOR

TRANSMISSION COMPONENT LOCATION (Y CAR)

cardiagn.com

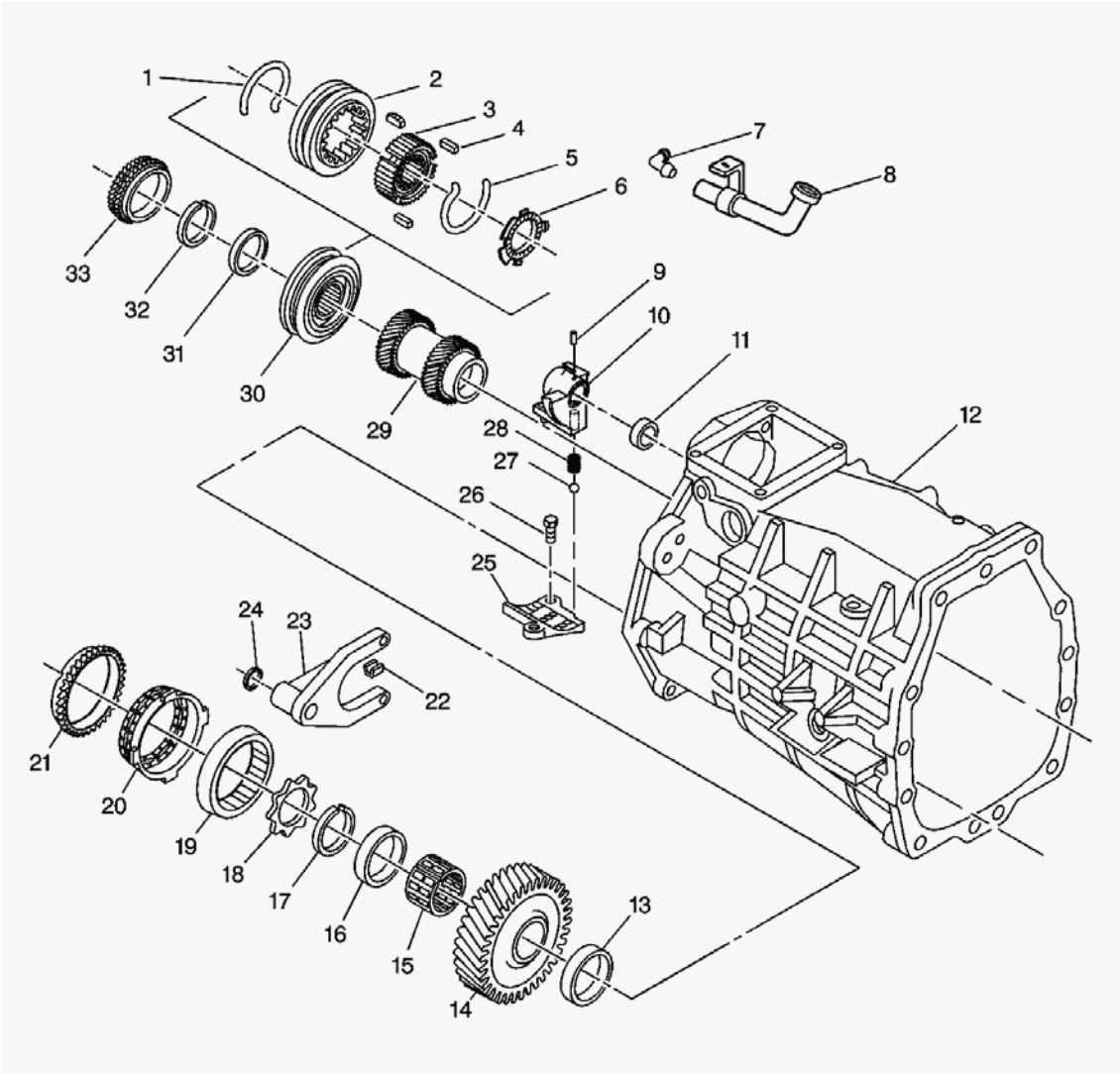

Fig. 1: Transmission Case Component Location (1 of 2) - Y Car
Courtesy of GENERAL MOTORS CORP.

Callouts For Fig. 1

Callout	Component Name
1	Reverse Synchronizer Spring
2	Reverse Synchronizer Sleeve
3	Reverse Synchronizer Hub
4	Reverse Synchronizer Key
5	Reverse Synchronizer Spring
6	Reverse Synchronizer Key Retainer
7	Vent
8	Vent Pipe
9	Offset Lever Roll Pin
10	Offset Shift Lever

cardiagn.com

11	Top Shift Shaft Bushing
12	Transmission Case
13	6th Speed Drive Gear Bearing Spacer
14	6th Speed Drive Gear
15	6th Speed Drive Gear Needle Bearing
16	6th Speed Drive Gear Bearing Spacer
17	Synchronizer Retainer Ring
18	6th Speed Drive Gear Thrust Washer
19	6th Speed Drive Gear Inner Cone
20	6th Speed Drive Gear Friction Cone
21	6th Speed Drive Gear Synchronizer Blocking Ring
22	Reverse Shift Fork Pad
23	Reverse Shift Fork
24	Reverse Shift Fork Retainer Ring
25	Guide Plate
26	Guide Plate Bolt
27	Shift Detent Ball
28	Shift Detent Ball Spring
29	5th and 6th Speed Driven Gear
30	Reverse Synchronizer Hub and Sleeve
31	Reverse Gear Thrust Washer
32	Reverse Synchronizer Retainer Ring
33	Reverse Synchronizer Blocking Ring

cardiagn.com

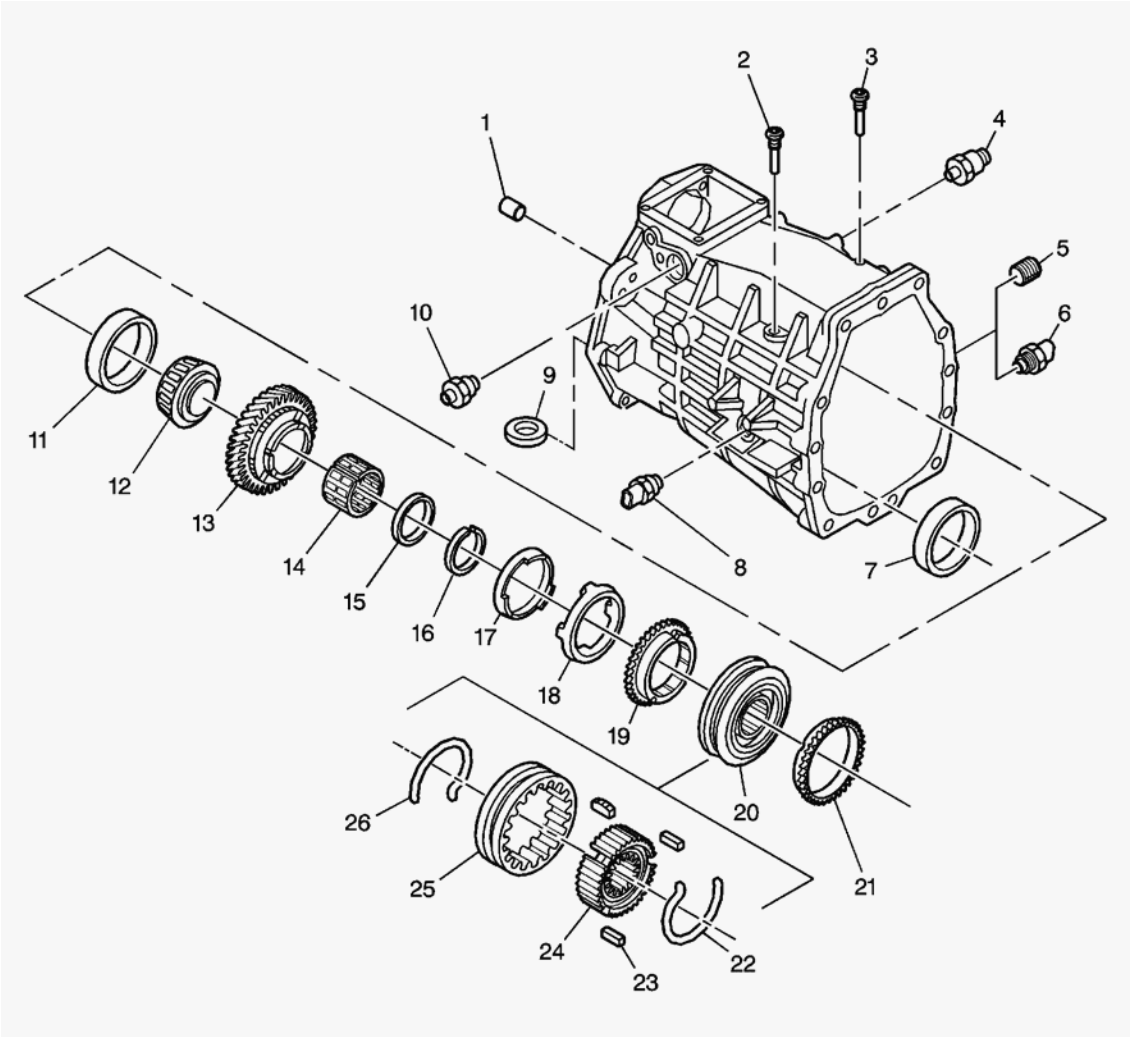

Fig. 2: Transmission Case Component Location (2 of 2) - Y Car
Courtesy of GENERAL MOTORS CORP.

Callouts For Fig. 2

Callout	Component Name
1	Case Rear Extension Pin
2	5th/6th Lever Guide Bolt
3	Interlock Guide Bolt
4	Computer Aided Gear Select Solenoid
5	Oil Fill Plug (MM6 Only)
6	Temperature Switch (M12 Only)
7	Countershaft Bearing Race
8	Backup Lamp Switch
9	Magnet
10	Shift Detent Assembly
11	Mainshaft Rear Bearing Race

cardiagn.com

12	Mainshaft Rear Bearing
13	1st Speed Drive Gear
14	1st Speed Drive Gear Needle Bearing
15	1st Speed Drive Gear Bearing Spacer
16	Synchronizer Retainer Ring
17	1st Speed Drive Gear Inner Cone
18	1st Speed Drive Gear Friction Cone
19	1st Gear Synchronizer Blocking Ring
20	1st/2nd Synchronizer Assembly
21	2nd Gear Synchronizer Blocking Ring
22	1st/2nd Synchronizer Spring
23	1st/2nd Synchronizer Key
24	1st/2nd Synchronizer Hub
25	1st/2nd Synchronizer Sleeve
26	1st/2nd Synchronizer Spring

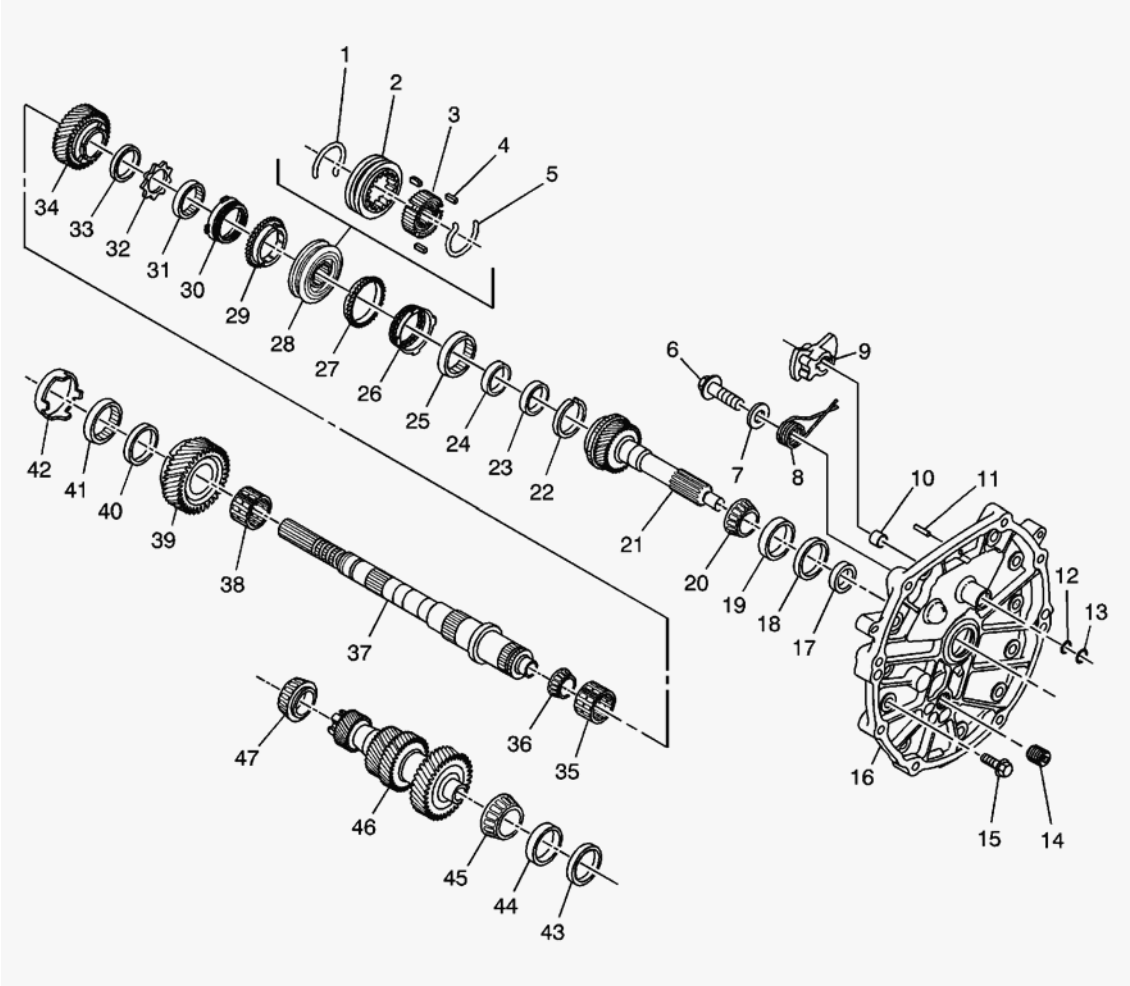

Fig. 3: Adapter Plate and Gears Component Location (Y Car)

cardiagn.com

Courtesy of GENERAL MOTORS CORP.

Callouts For Fig. 3

Callout	Component Name
1	3rd/4th Synchronizer Spring
2	3rd/4th Synchronizer Sleeve
3	3rd/4th Synchronizer Hub
4	3rd/4th Synchronizer Key
5	3rd/4th Synchronizer Spring
6	Neutral Return Cam Spring Bolt
7	Neutral Return Cam Spring Washer
8	Neutral Return Cam Spring
9	Neutral Return Cam
10	Top Shaft Rail Bushing
11	Dowel Pin
12	Inner Shift Shaft Seal
13	Outer Shift Shaft Seal
14	Adapter Plate Inspection Plug
15	Adapter to Transmission Case Bolt
16	Front Adapter Plate
17	Input Shaft Seal
18	Input Shaft Bearing Shim
19	Input Shaft Bearing Race
20	Input Shaft Bearing
21	Input Shaft
22	Input Shaft Bearing Race
23	3rd/4th Synchronizer Retaining Ring
24	4th Speed Drive Gear Thrust Washer
25	4th Speed Drive Gear Inner Cone
26	4th Speed Drive Gear Friction Cone
27	4th Speed Drive Gear Blocker Ring
28	3rd/4th Synchronizer Assembly
29	3rd Speed Drive Gear Synchronizer Blocking Ring
30	3rd Speed Drive Gear Friction Cone
31	3rd Speed Drive Gear Inner Cone
32	3rd Speed Drive Gear Thrust Washer
33	3rd Speed Drive Gear Thrust Washer
34	3rd Speed Drive Gear
35	3rd Speed Drive Gear Bearing
36	Mainshaft Small Tapered Bearing
37	Mainshaft

cardiagn.com

38	2nd Speed Drive Gear Needle Bearing
39	2nd Speed Drive Gear
40	2nd Speed Drive Gear Bearing Spacer
41	2nd Speed Drive Gear Inner Cone
42	2nd Speed Drive Gear Friction Cone
43	Countershaft Bearing Adjust Shim
44	Countershaft Bearing Race
45	Countershaft Front Bearing
46	Countershaft
47	Countershaft Rear Bearing

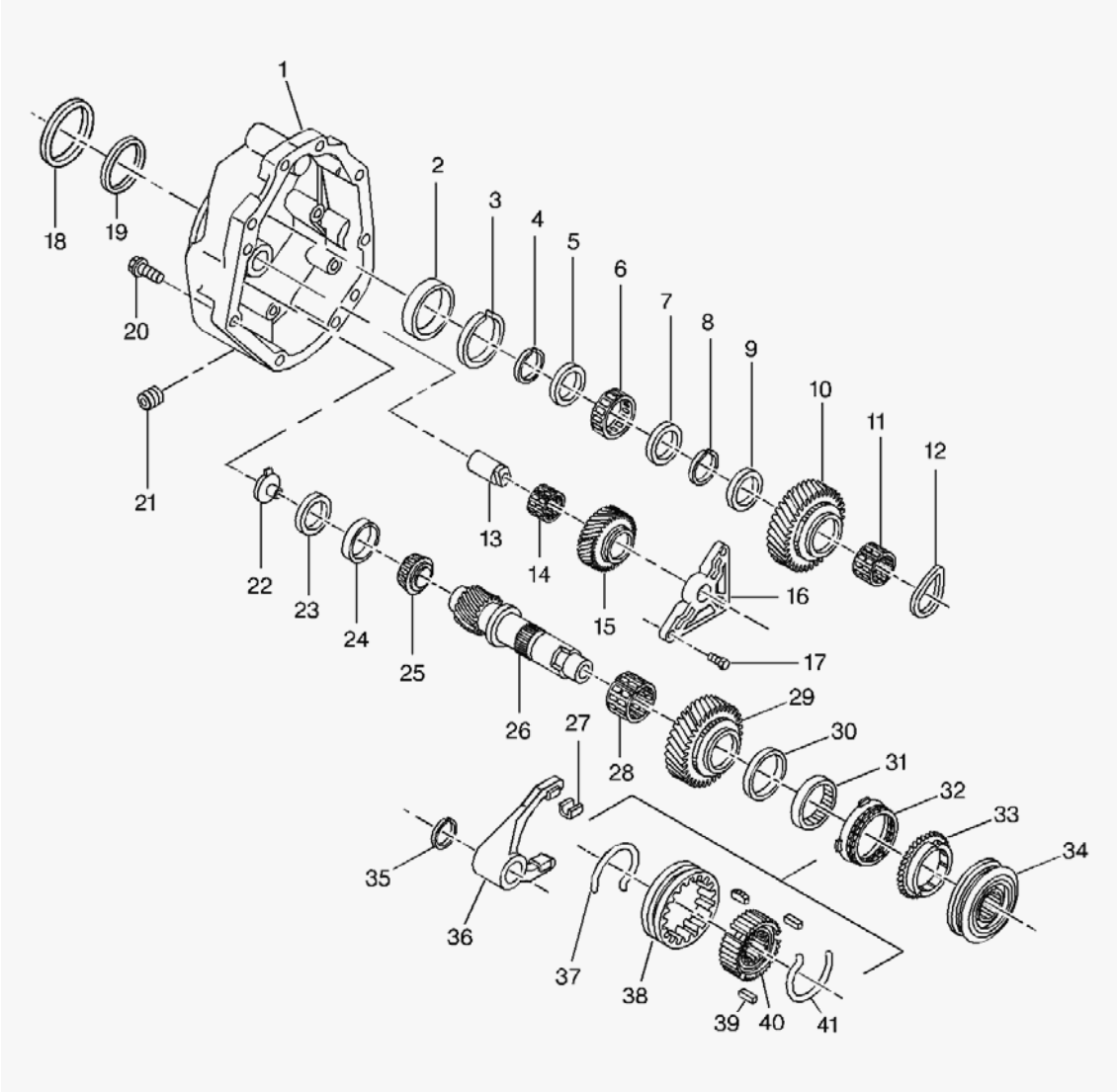

Fig. 4: Extension Housing Component Location (Y Car)
Courtesy of GENERAL MOTORS CORP.

cardiagn.com

Callouts For Fig. 4

Callout	Component Name
1	Extension Housing
2	Mainshaft Bearing Race
3	Mainshaft Rear Bearing Retainer Ring
4	Mainshaft Rear Bearing Retainer Ring
5	Mainshaft Gear Bearing Spacer
6	Mainshaft Rear Bearing
7	Mainshaft Gear Bearing Spacer
8	Synchronizer Retainer Ring
9	Reverse Gear Thrust Washer
10	Mainshaft Reverse Speed Gear
11	Reverse Gear Bearing
12	Reverse Gear Washer
13	Reverse Idler Gear Shaft
14	Reverse Idler Gear Needle Bearing
15	Reverse Idler Gear
16	Reverse Idler Bracket
17	Reverse Idler Bracket Bolt
18	Outer Output Shaft Seal
19	Inner Output Shaft Seal
20	Extension Housing to Transmission Case Bolt
21	Oil Drain Plug
22	Lubrication Funnel
23	Front Countershaft Extension Bearing Shim
24	Countershaft Extension Bearing Race
25	Countershaft Extension Bearing
26	Countershaft Extension
27	Shift Fork Pad
28	5th Speed Drive Gear Needle Bearing
29	5th Speed Drive Gear
30	5th Speed Drive Gear Thrust Washer
31	5th Speed Gear Inner Cone
32	5th Speed Gear Friction Cone
33	5th Gear Synchronizer Blocking Ring
34	5th/6th Synchronizer Assembly
35	5th Gear Shift Fork Retainer Ring
36	5th/6th Shift Fork
37	5th/6th Synchronizer Spring
38	5th/6th Synchronizer Sleeve
39	5th/6th and Reverse Synchronizer Key

cardiagn.com

40	5th/6th Synchronizer Hub
41	5th/6th Synchronizer Spring

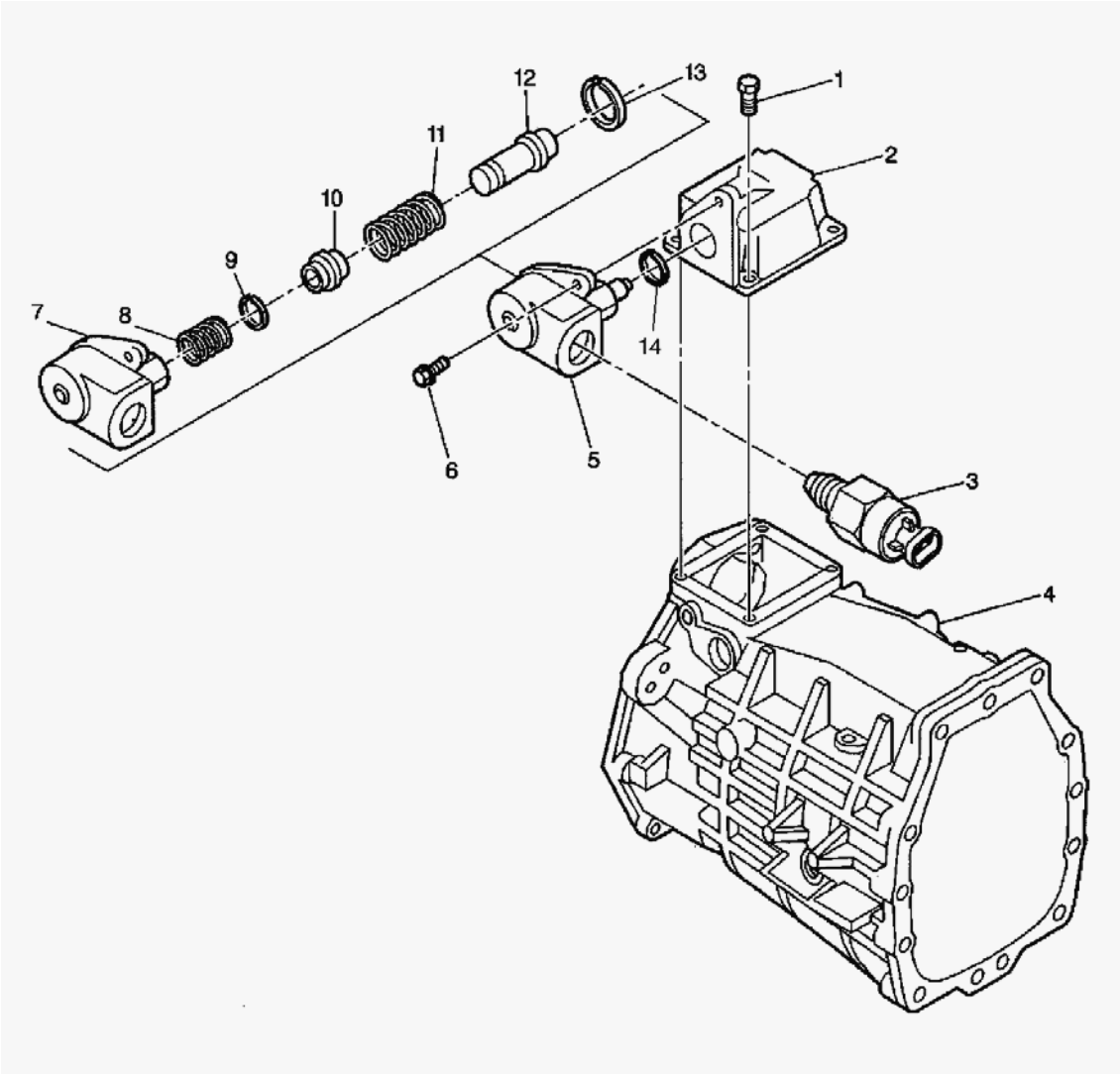

Fig. 5: Reverse Lockout Component Location (Y Car)
Courtesy of GENERAL MOTORS CORP.

Callouts For Fig. 5

Callout	Component Name
1	Transmission Case Cover Bolt
2	Transmission Case Cover
3	Reverse Lockout Solenoid
4	Transmission Case
5	Reverse Lockout Assembly
6	Reverse Lockout Solenoid Mounting Bolt
7	Reverse Lockout Body

cardiagn.com

8	Reverse Lockout Inner Spring
9	Snap Ring
10	Reverse Lockout Collar
11	Reverse Lockout Outer Spring
12	Reverse Lockout Plunger
13	Snap Ring
14	O-Ring

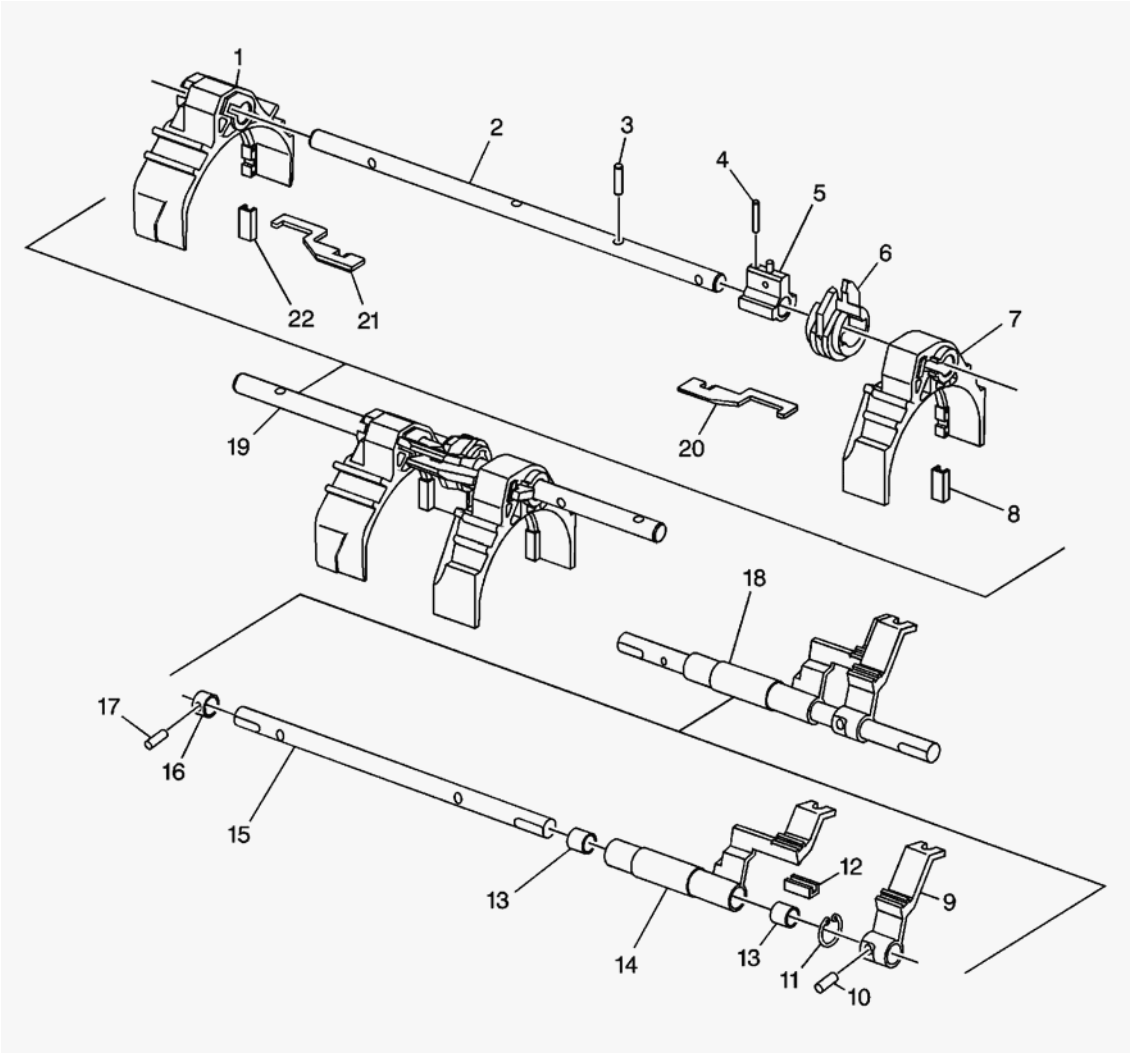

Fig. 6: Shift Shafts Component Location (Y Car)
Courtesy of GENERAL MOTORS CORP.

Callouts For Fig. 6

Callout	Component Name
1	1st/2nd Shift Fork
2	Shift Shaft

cardiagn.com

3	Neutral Return Cam Pin
4	1st/2nd Shift Fork Pin
5	Control Select Arm Pin
6	Gear Select Interlock Plate
7	3rd/4th Shift Fork
8	3rd/4th Shift Fork Pad
9	Offset Shift Lever
10	Reverse Shift Lever Pin
11	Retaining Ring
12	5th/6th Shift Lever Pad
13	5th/6th Shift Shaft Lever Bushing
13	5th/6th Shift Shaft Lever Bushing
14	5th/6th Shift Lever
15	5th/6th Reverse Shift Shaft
16	Reverse Shift Collar
17	Reverse Shift Collar Pin
18	5th/6th Shift Lever Assembly
19	1st/2nd Shift Shaft Assembly
20	Shift Interlock Plate
21	Interlock Shift Plate
22	1st/2nd Shift Fork Pad

TRANSMISSION COMPONENT LOCATION (CTSV)

cardiagn.com

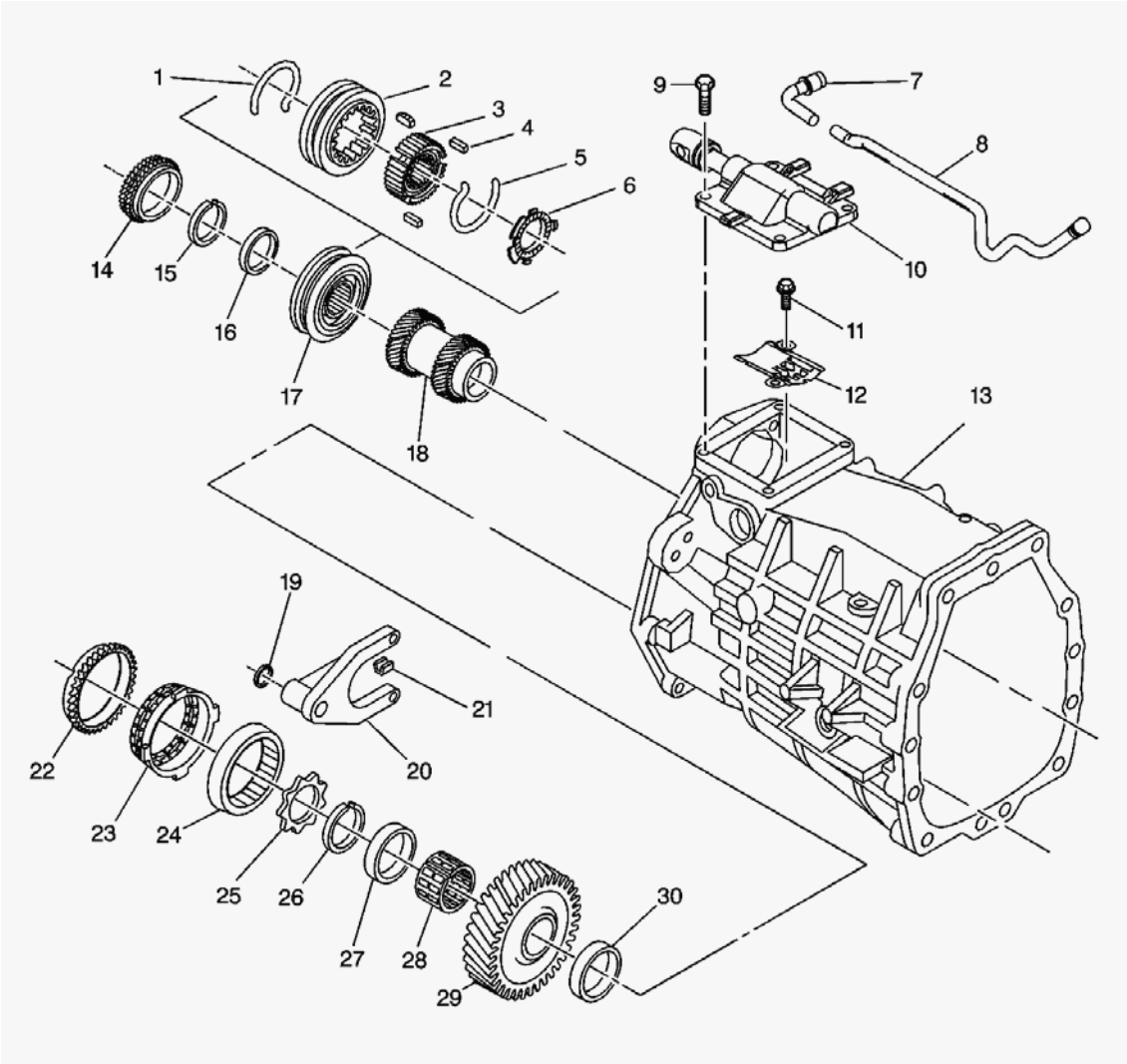

Fig. 7: Transmission Case Component Location (1 of 2) - CTSV
Courtesy of GENERAL MOTORS CORP.

Callouts For Fig. 7

Callout	Component Name
1	Reverse Synchronizer Spring
2	Reverse Synchronizer Sleeve
3	Reverse Synchronizer Hub
4	Reverse Synchronizer Key
5	Reverse Synchronizer Spring
6	Reverse Synchronizer Key Retainer
7	Vent
8	Vent Pipe
9	Shifter Cover Plate Bolt
10	Shifter Cover Plate

cardiagn.com

11	Guide Plate Bolt
12	Guide Plate
13	Transmission Case
14	Reverse Synchronizer Blocking Ring
15	Reverse Synchronizer Retainer Ring
16	Reverse Gear Thrust Washer
17	Reverse Synchronizer Hub and Sleeve
18	5th and 6th Speed Driven Gear
19	Reverse Shift Fork Retainer Ring
20	Reverse Shift Fork
21	Reverse Shift Fork Pad
22	6th Speed Drive Gear Synchronizer Blocking Ring
23	6th Speed Drive Gear Friction Cone
24	6th Speed Drive Gear Inner Cone
25	6th Speed Drive Gear Thrust Washer
26	Synchronizer Retainer Ring
27	6th Speed Drive Gear Bearing Spacer
28	6th Speed Drive Gear Needle Bearing
29	6th Speed Drive Gear
30	6th Speed Drive Gear Bearing Spacer

cardiagn.com

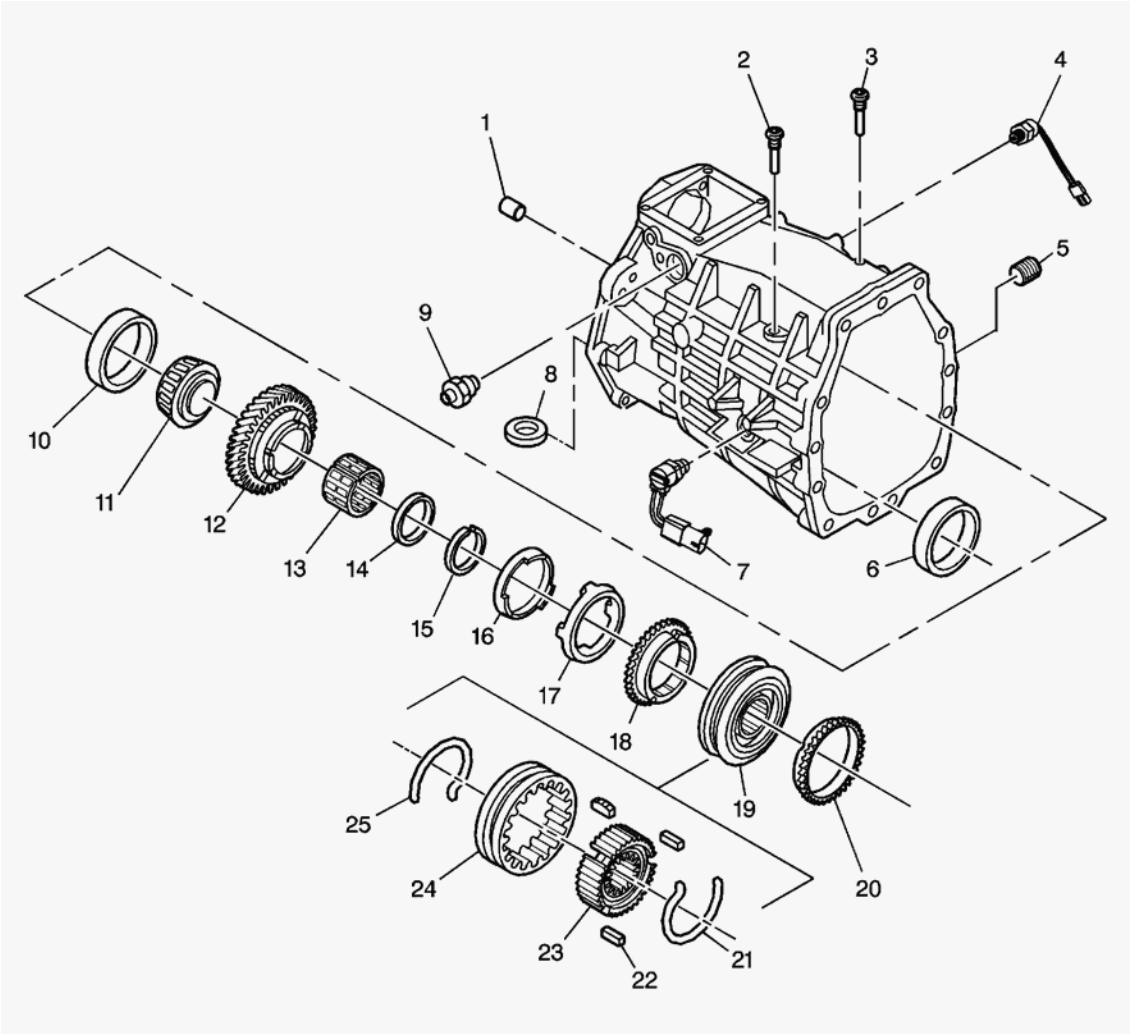

Fig. 8: Transmission Case Component Location (2 of 2) - CTSV)
Courtesy of GENERAL MOTORS CORP.

Callouts For Fig. 8

Callout	Component Name
1	Case Rear Extension Pin
2	5th/6th Lever Guide Bolt
3	Interlock Guide Bolt
4	Computer Aided Gear Select Solenoid
5	Oil Fill Plug
6	Countershaft Bearing Race
7	Backup Lamp Switch
8	Magnet
9	Shift Detent Assembly
10	Mainshaft Rear Bearing Race
11	Mainshaft Rear Bearing

cardiagn.com

12	1st Speed Drive Gear
13	1st Speed Drive Gear Needle Bearing
14	1st Speed Drive Gear Bearing Spacer
15	Synchronizer Retainer Ring
16	1st Speed Drive Gear Inner Cone
17	1st Speed Drive Gear Friction Cone
18	1st Gear Synchronizer Blocking Ring
19	1st/2nd Synchronizer Assembly
20	2nd Gear Synchronizer Blocking Ring
21	1st/2nd Synchronizer Spring
22	1st/2nd Synchronizer Key
23	1st/2nd Synchronizer Hub
24	1st/2nd Synchronizer Sleeve
25	1st/2nd Synchronizer Spring

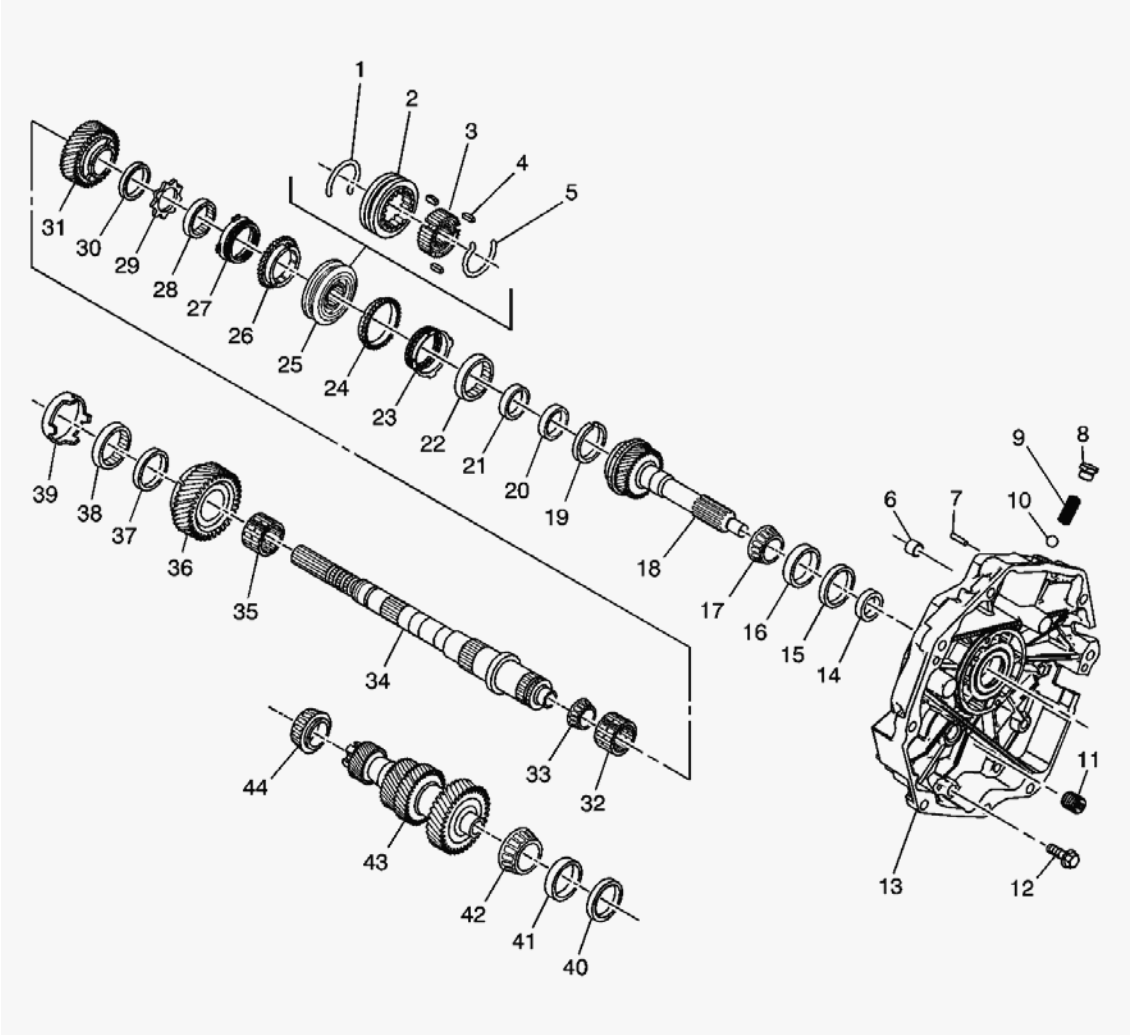

Fig. 9: Adapter Plate and Gears Component Location (CTSV)

cardiagn.com

Courtesy of GENERAL MOTORS CORP.

Callouts For Fig. 9

Callout	Component Name
1	3rd/4th Synchronizer Spring
2	3rd/4th Synchronizer Sleeve
3	3rd/4th Synchronizer Hub
4	3rd/4th Synchronizer Key
5	3rd/4th Synchronizer Spring
6	Top Shaft Rail Bushing
7	Dowel Pin
8	Shift Detent Plug
9	Shift Detent Spring
10	Shift Detent Ball
11	Adapter Plate Inspection Plug
12	Adapter to Transmission Case Bolt
13	Front Adapter Plate
14	Input Shaft Seal
15	Input Shaft Bearing Shim
16	Input Shaft Bearing Race
17	Input Shaft Bearing
18	Input Shaft
19	Input Shaft Bearing Race
20	3rd/4th Synchronizer Retaining Ring
21	4th Speed Drive Gear Thrust Washer
22	4th Speed Drive Gear Inner Cone
23	4th Speed Drive Gear Friction Cone
24	4th Speed Drive Gear Blocker Ring
25	3rd/4th Synchronizer Assembly
26	3rd Speed Drive Gear Synchronizer Blocking Ring
27	3rd Speed Drive Gear Friction Cone
28	3rd Speed Drive Gear Inner Cone
29	3rd Speed Drive Gear Thrust Washer
30	3rd Speed Drive Gear Thrust Washer
31	3rd Speed Drive Gear
32	3rd Speed Drive Gear Bearing
33	Mainshaft Small Tapered Bearing
34	Mainshaft
35	2nd Speed Drive Gear Needle Bearing
36	2nd Speed Drive Gear
37	2nd Speed Drive Gear Bearing Spacer

cardiagn.com

38	2nd Speed Drive Gear Inner Cone
39	2nd Speed Drive Gear Friction Cone
40	Countershaft Bearing Adjust Shim
41	Countershaft Bearing Race
42	Countershaft Front Bearing
43	Countershaft
44	Countershaft Rear Bearing

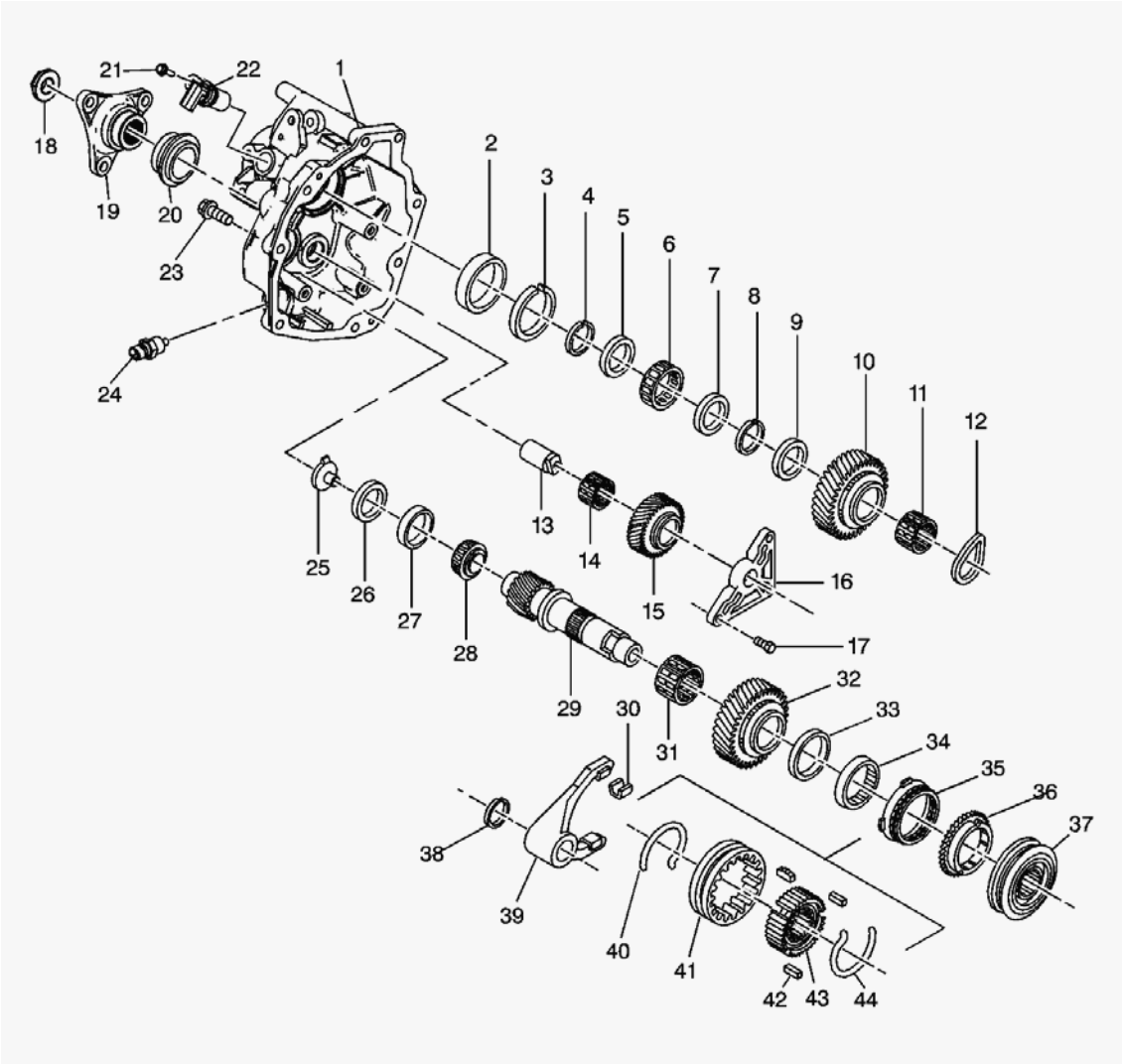

Fig. 10: Extension Housing Component Location (CTSV)
Courtesy of GENERAL MOTORS CORP.

Callouts For Fig. 10

Callout	Component Name
1	Extension Housing
2	Mainshaft Bearing Race

cardiagn.com

3	Mainshaft Rear Bearing Retainer Ring
4	Mainshaft Rear Bearing Retainer Ring
5	Mainshaft Gear Bearing Spacer
6	Mainshaft Rear Bearing
7	Mainshaft Gear Bearing Spacer
8	Synchronizer Retainer Ring
9	Reverse Gear Thrust Washer
10	Mainshaft Reverse Speed Gear
11	Reverse Gear Bearing
12	Reverse Gear Washer
13	Reverse Idler Gear Shaft
14	Reverse Idler Gear Needle Bearing
15	Reverse Idler Gear
16	Reverse Idler Bracket
17	Reverse Idler Bracket Bolt
18	Propshaft Connector Nut
19	Propshaft Connector
20	Output Shaft Seal
21	Vehicle Speed Sensor Bolt
22	Vehicle Speed Sensor
23	Extension Housing to Transmission Case Bolt
24	Temperature Sensor
25	Lubrication Funnel
26	Front Countershaft Extension Bearing Shim
27	Countershaft Extension Bearing Race
28	Countershaft Extension Bearing
29	Countershaft Extension
30	Shift Fork Pad
31	5th Speed Drive Gear Needle Bearing
32	5th Speed Drive Gear
33	5th Speed Drive Gear Thrust Washer
34	5th Speed Gear Inner Cone
35	5th Speed Gear Friction Cone
36	5th Gear Synchronizer Blocking Ring
37	5th/6th Synchronizer Assembly
38	5th Gear Shift Fork Retainer Ring
39	5th/6th Shift Fork
40	5th/6th Synchronizer Spring
41	5th/6th Synchronizer Sleeve
42	5th/6th and Reverse Synchronizer Key
43	5th/6th Synchronizer Hub

cardiagn.com

44	5th/6th Synchronizer Spring

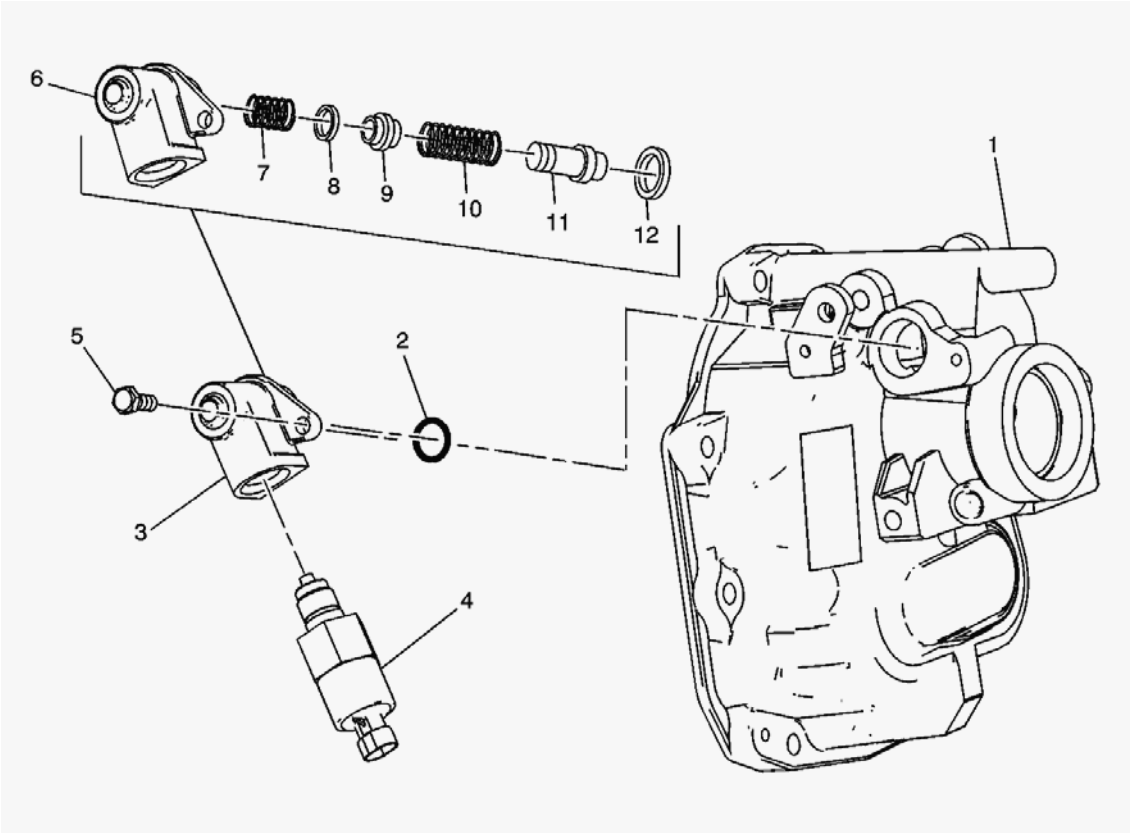

Fig. 11: Reverse Lockout Component Location (CTSV)
Courtesy of GENERAL MOTORS CORP.

Callouts For Fig. 11

Callout	Component Name
1	Extension Housing
2	O-ring
3	Reverse Lockout Assembly
4	Reverse Lockout Solenoid
5	Reverse Lockout Solenoid Mounting Bolt
6	Reverse Lockout Body
7	Reverse Lockout Inner Spring
8	Snap Ring
9	Reverse Lockout Collar
10	Reverse Lockout Outer Spring
11	Reverse Lockout Plunger
12	Snap Ring

cardiagn.com

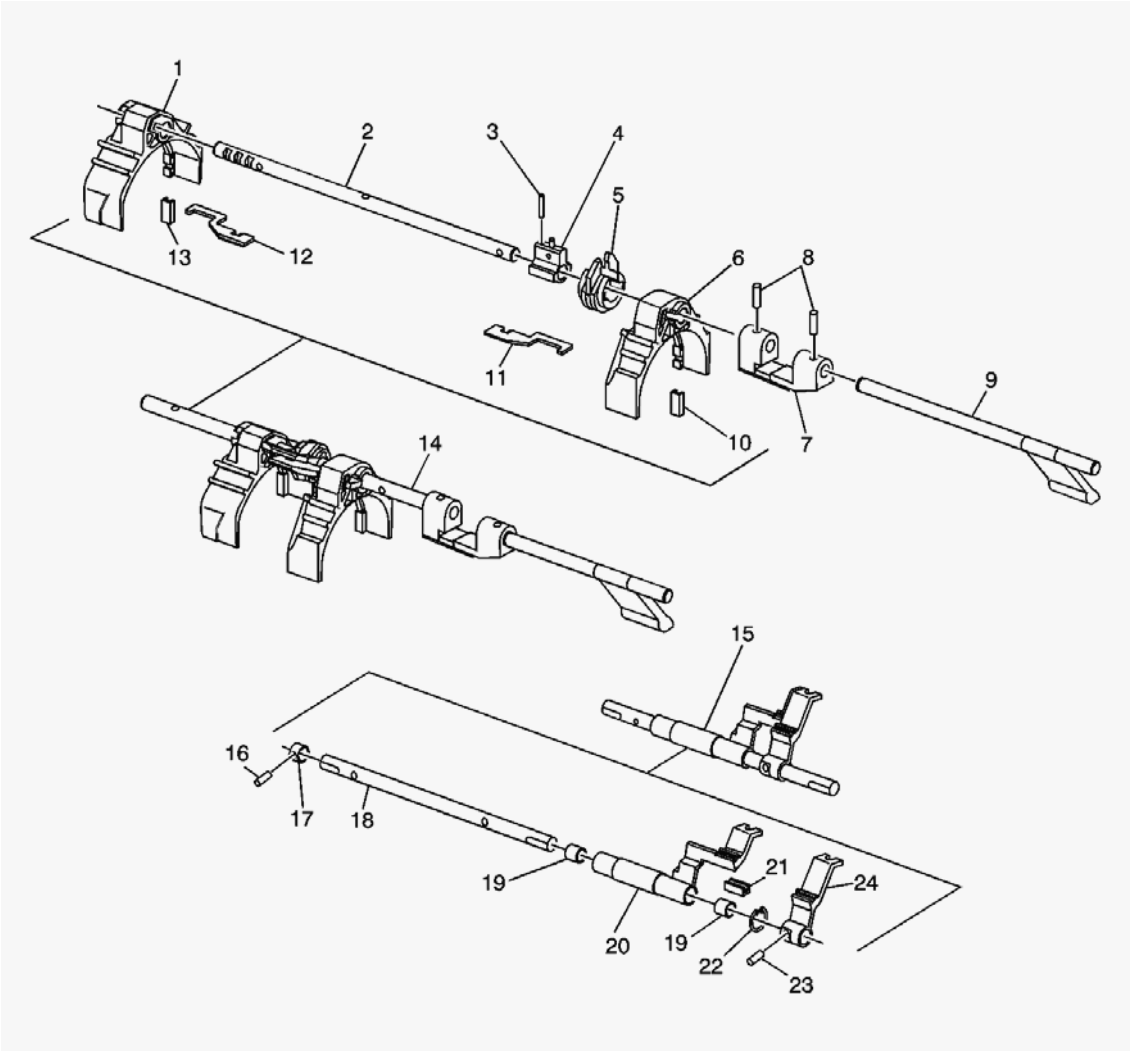

Fig. 12: Shift Shafts Component Location (CTSV)
Courtesy of GENERAL MOTORS CORP.

Callouts For Fig. 12

Callout	Component Name
1	1st/2nd Shift Fork
2	Shift Shaft
3	Control Select Arm Pin Roll Pin
4	Control Select Arm Pin
5	Gear Select Interlock Plate
6	3rd/4th Shift Fork
7	Shift Guide
8	Shift Guide Roll Pins
9	Shift Shaft Extension
10	3rd/4th Shift Fork Pad
11	Shift Interlock Plate

cardiagn.com

12	Interlock Shift Plate
13	1st/2nd Shift Fork Pad
14	1st/2nd Shift Shaft Assembly
15	5th/6th Shift Lever Assembly
16	Reverse Shift Collar Pin
17	Reverse Shift Collar
18	5th/6th Reverse Shift Shaft
19	5th/6th Shift Shaft Lever Bushing
19	5th/6th Shift Shaft Lever Bushing
20	5th/6th Shift Lever
21	5th/6th Shift Lever Pad
22	Retaining Ring
23	Reverse Shift Lever Pin
24	Offset Shift Lever

TRANSMISSION COMPONENT LOCATION (GTO)

cardiagn.com

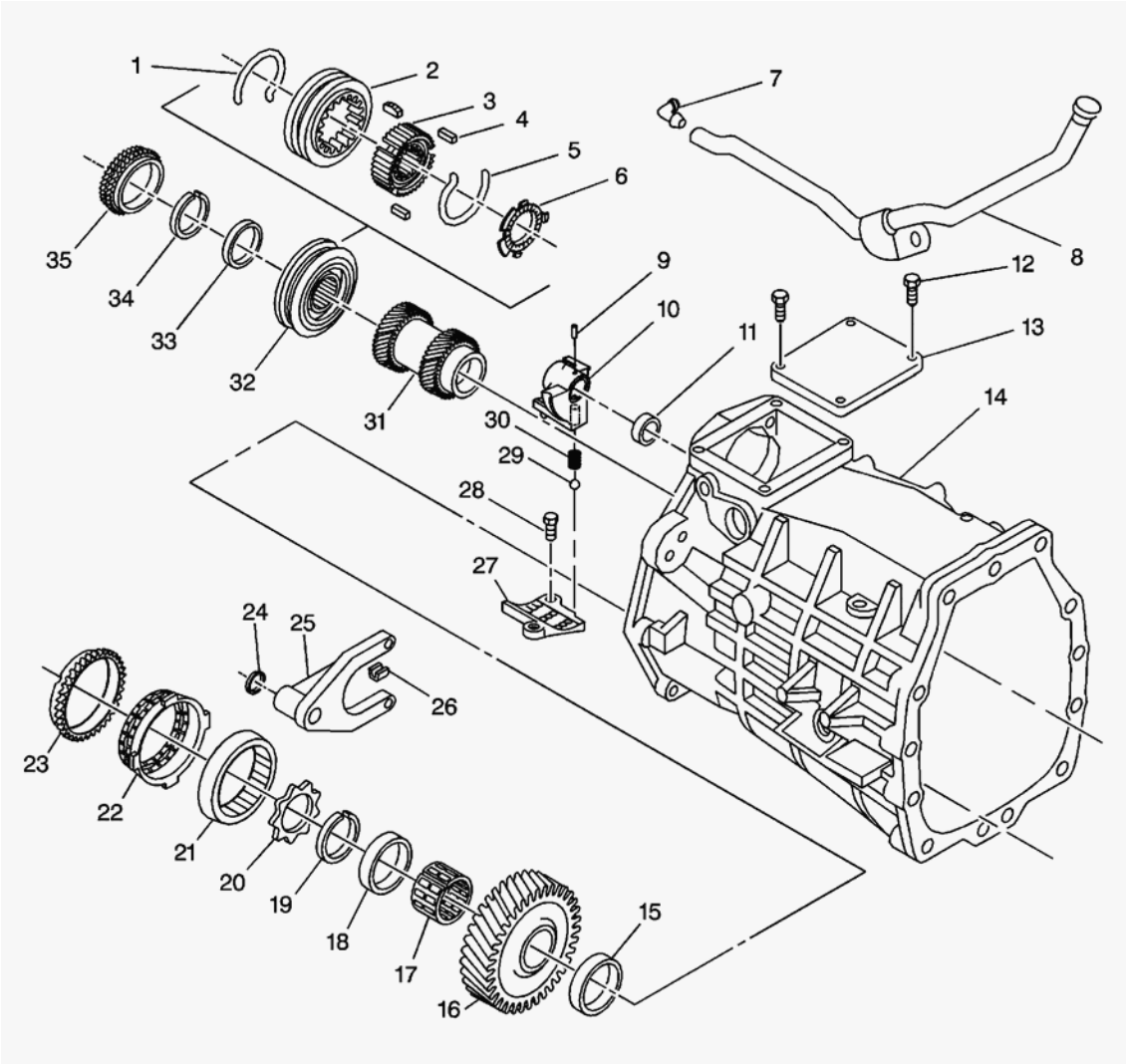

Fig. 13: Transmission Case Component Location (1 of 2) - GTO
Courtesy of GENERAL MOTORS CORP.

Callouts For Fig. 13

Callout	Component Name
1	Reverse Synchronizer Spring
2	Reverse Synchronizer Sleeve
3	Reverse Synchronizer Hub
4	Reverse Synchronizer Key
5	Reverse Synchronizer Spring
6	Reverse Synchronizer Key Retainer
7	Vent
8	Vent Pipe
9	Offset Lever Roll Pin
10	Offset Shift Lever

cardiagn.com

11	Top Shift Shaft Bushing
12	Cover Plate Bolt
13	Cover Plate
14	Transmission Case
15	6th Speed Drive Gear Bearing Spacer
16	6th Speed Drive Gear
17	6th Speed Drive Gear Needle Bearing
18	6th Speed Drive Gear Bearing Spacer
19	Synchronizer Retainer Ring
20	6th Speed Drive Gear Thrust Washer
21	6th Speed Drive Gear Inner Cone
22	6th Speed Drive Gear Friction Cone
23	6th Speed Drive Gear Synchronizer Blocking Ring
24	Reverse Shift Fork Retainer Ring
25	Reverse Shift Fork
26	Reverse Shift Fork Pad
27	Guide Plate
28	Guide Plate Bolt
29	Shift Detent Ball
30	Shift Detent Ball Spring
31	5th and 6th Speed Driven Gear
32	Reverse Synchronizer Hub and Sleeve
33	Reverse Gear Thrust Washer
34	Reverse Synchronizer Retainer Ring
35	Reverse Synchronizer Blocking Ring

cardiagn.com

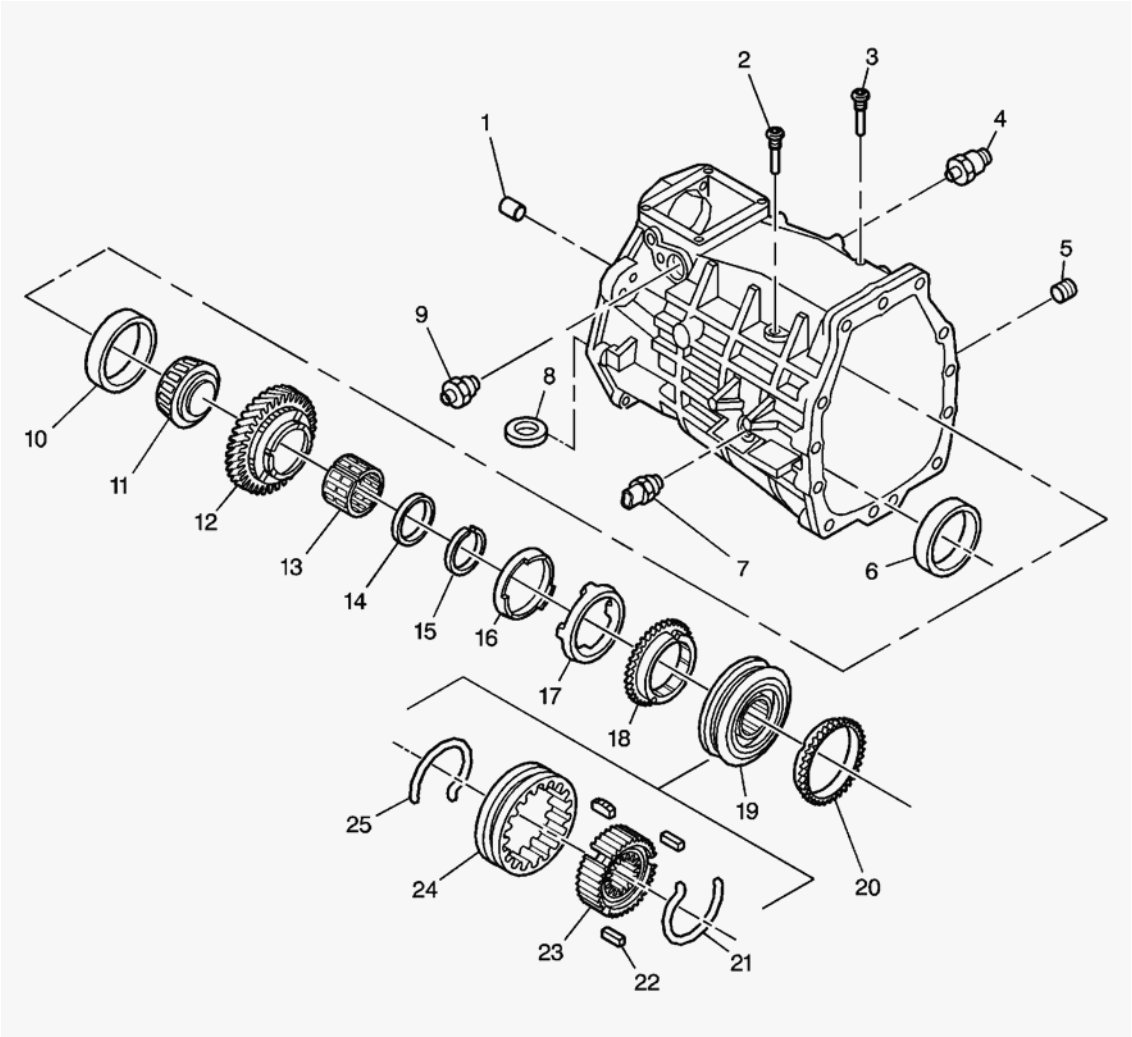

Fig. 14: Transmission Case Component Location (2 of 2) - GTO
Courtesy of GENERAL MOTORS CORP.

Callouts For Fig. 14

Callout	Component Name
1	Case Rear Extension Pin
2	5th/6th Lever Guide Bolt
3	Interlock Guide Bolt
4	Computer Aided Gear Select Solenoid
5	Oil Fill Plug
6	Countershaft Bearing Race
7	Backup Lamp Switch
8	Magnet
9	Shift Detent Switch
10	Mainshaft Rear Bearing Race
11	Mainshaft Rear Bearing

cardiagn.com

12	1st Speed Drive Gear
13	1st Speed Drive Gear Needle Bearing
14	Thrust Washer
15	Synchronizer Retainer Ring
16	1st Speed Gear Inner Cone
17	1st Speed Drive Gear Friction Cone
18	1st Gear Synchronizer Blocking Ring
19	1st/2nd Synchronizer Assembly
20	2nd Gear Synchronizer Blocking Ring
21	1st/2nd Synchronizer Spring
22	1st/2nd Synchronizer Key
23	1st/2nd Synchronizer Hub
24	1st/2nd Synchronizer Sleeve
25	1st/2nd Synchronizer Spring

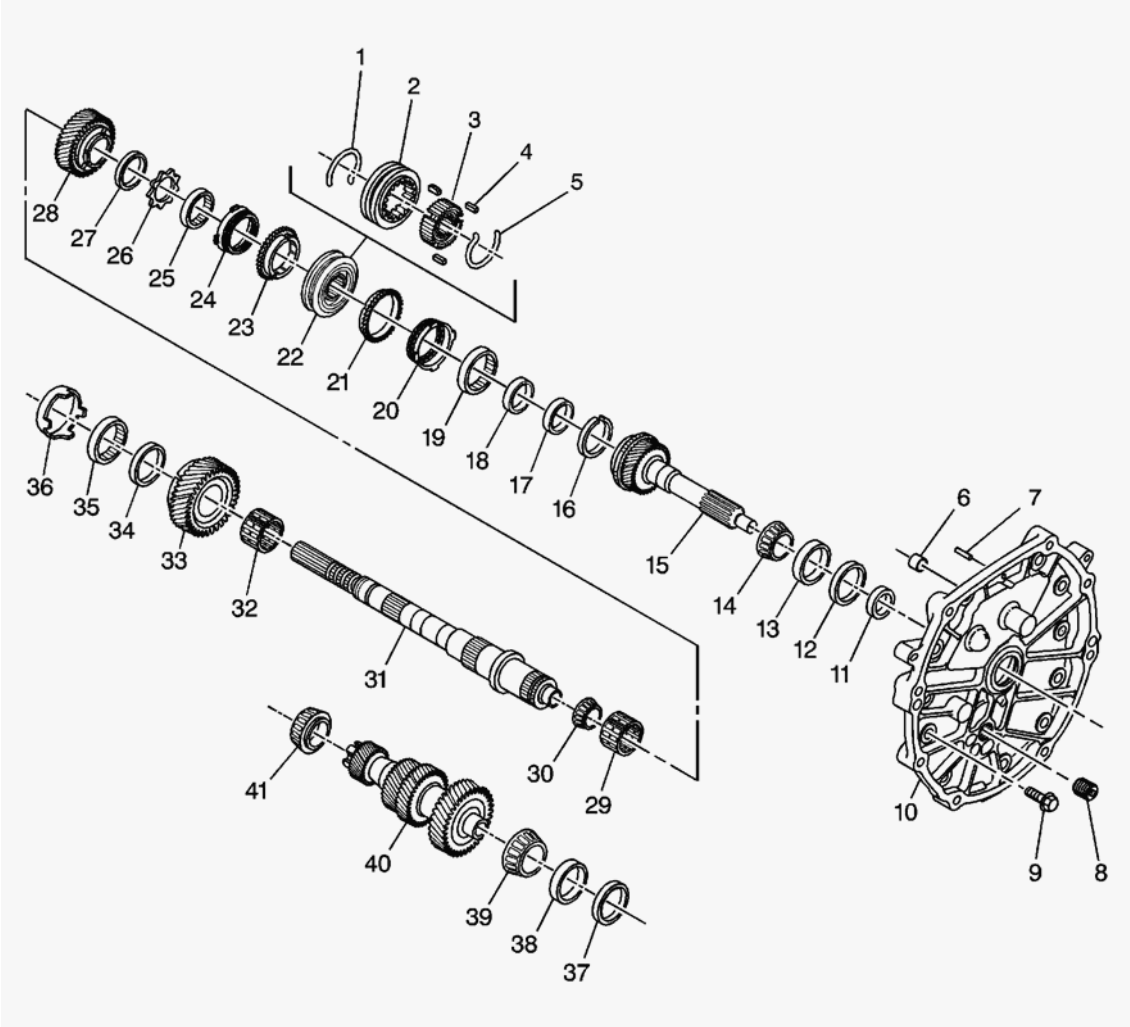

Fig. 15: Adapter Plate and Gears Component Location (GTO)

cardiagn.com

Courtesy of GENERAL MOTORS CORP.

Callouts For Fig. 15

Callout	Component Name
1	3rd/4th Synchronizer Spring
2	3rd/4th Synchronizer Sleeve
3	3rd/4th Synchronizer Hub
4	3rd/4th Synchronizer Key
5	3rd/4th Synchronizer Spring
6	Top Shaft Rail Bushing
7	Dowel Pin
8	Adapter Plate Inspection Plug
9	Adapter to Transmission Case Bolt
10	Front Adapter Plate
11	Input Shaft Seal
12	Input Shaft Bearing Shim
13	Input Shaft Bearing Race
14	Input Shaft Bearing
15	Input Shaft
16	Input Shaft Bearing Race
17	3rd/4th Synchronizer Retaining Ring
18	4th Speed Drive Gear Thrust Washer
19	4th Speed Drive Gear Inner Cone
20	4th Speed Drive Gear Friction Cone
21	4th Speed Drive Gear Blocker Ring
22	3rd/4th Synchronizer Assembly
23	3rd Speed Drive Gear Synchronizer Blocking Ring
24	3rd Speed Drive Gear Friction Cone
25	3rd Speed Drive Gear Inner Cone
26	3rd Speed Drive Gear Thrust Washer
27	3rd Speed Drive Gear Thrust Washer
28	3rd Speed Drive Gear
29	3rd Speed Drive Gear Bearing
30	Mainshaft Small Tapered Bearing
31	Mainshaft
32	2nd Speed Drive Gear Needle Bearing
33	2nd Speed Drive Gear
34	2nd Speed Drive Gear Bearing Spacer
35	2nd Speed Drive Gear Inner Cone
36	2nd Speed Drive Gear Friction Cone
37	Countershaft Bearing Adjust Shim

cardiagn.com

38	Countershaft Bearing Race
39	Countershaft Front Bearing
40	Countershaft
41	Countershaft Rear Bearing

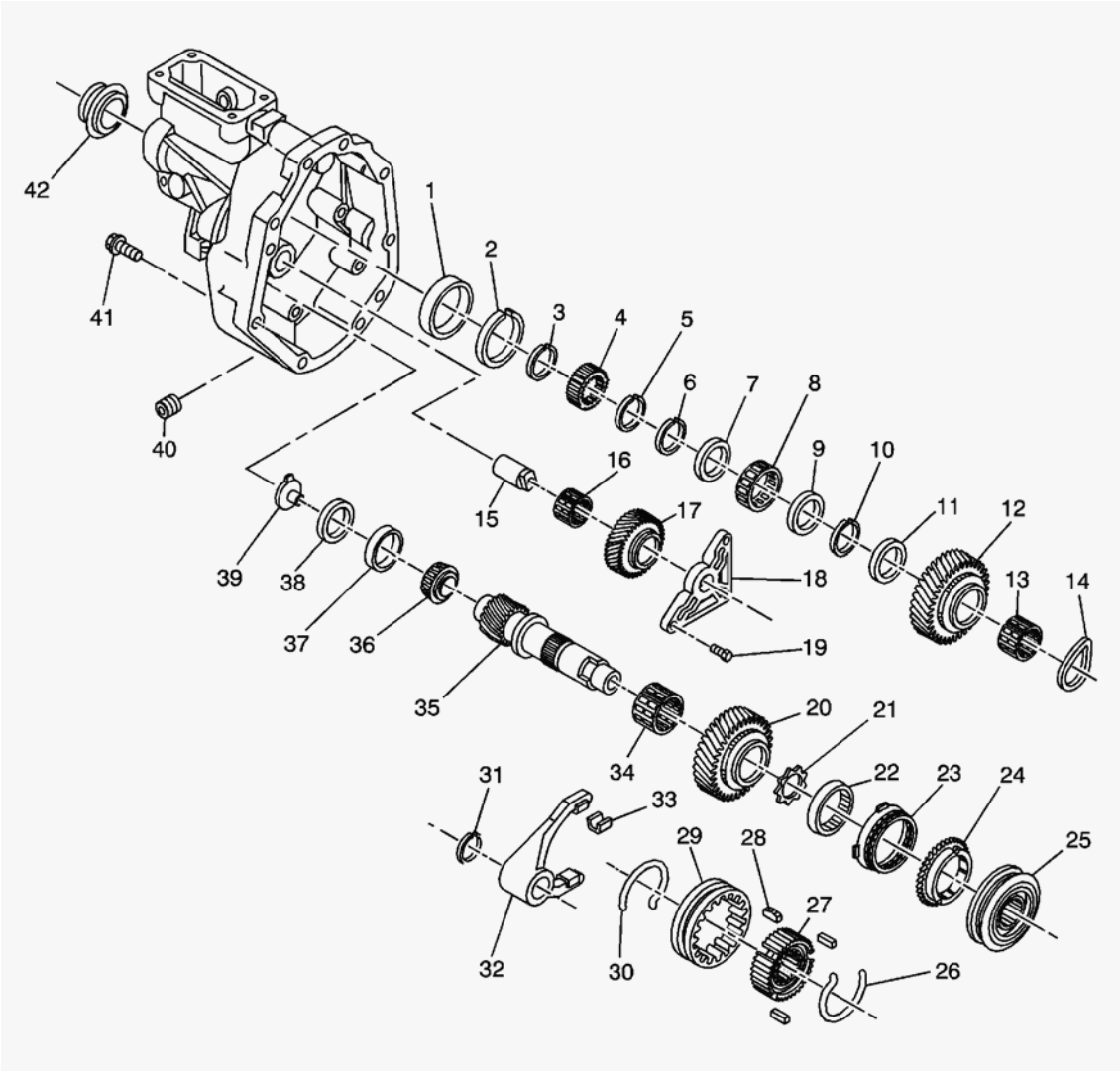

Fig. 16: Extension Housing Component Location (GTO)
Courtesy of GENERAL MOTORS CORP.

Callouts For Fig. 16

Callout	Component Name
1	Mainshaft Bearing Race
2	Mainshaft Rear Bearing Retainer Ring
3	Speedometer Sensor Gear Retainer Ring
4	Speedometer Sensor Gear
5	Speedometer Sensor Gear Retainer Ring

cardiagn.com

6	Mainshaft Rear Bearing Retainer Ring
7	Mainshaft Gear Bearing Spacer
8	Mainshaft Rear Bearing
9	Mainshaft Gear Bearing Spacer
10	Synchronizer Retaining Ring
11	Reverse Gear Thrust Washer
12	Mainshaft Reverse Speed Gear
13	Reverse Gear Needle Bearings
14	Reverse Gear Washer
15	Reverse Idler Gear Shaft
16	Reverse Idler Gear Needle Bearing
17	Reverse Idler Gear
18	Reverse Idler Bracket
19	Reverse Idler Bracket Bolt
20	5th Gear
21	5th Speed Drive Gear Thrust Washer
22	5th Speed Gear Inner Cone
23	5th Speed Gear Friction Cone
24	5th Gear Synchronizer Blocking Ring
25	5th/6th Synchronizer Assembly
26	5th/6th Synchronizer Spring
27	5th/6th Synchronizer Hub
28	5th/6th and Reverse Synchronizer Key
29	5th/6th Synchronizer Sleeve
30	5th Synchronizer Spring
31	5th/6th Gear Shift Fork Retainer Ring
32	5th Gear Shift Fork
33	Fork Pad
34	5th Gear Needle Bearing
35	Countershaft Extension
36	Countershaft Extension Bearing
37	Countershaft Extension Bearing Race
38	Countershaft Extension Bearing Shim
39	Lubrication Funnel
40	Oil Drain Plug
41	Extension Housing to Transmission Case Bolt
42	Mainshaft Seal

cardiagn.com

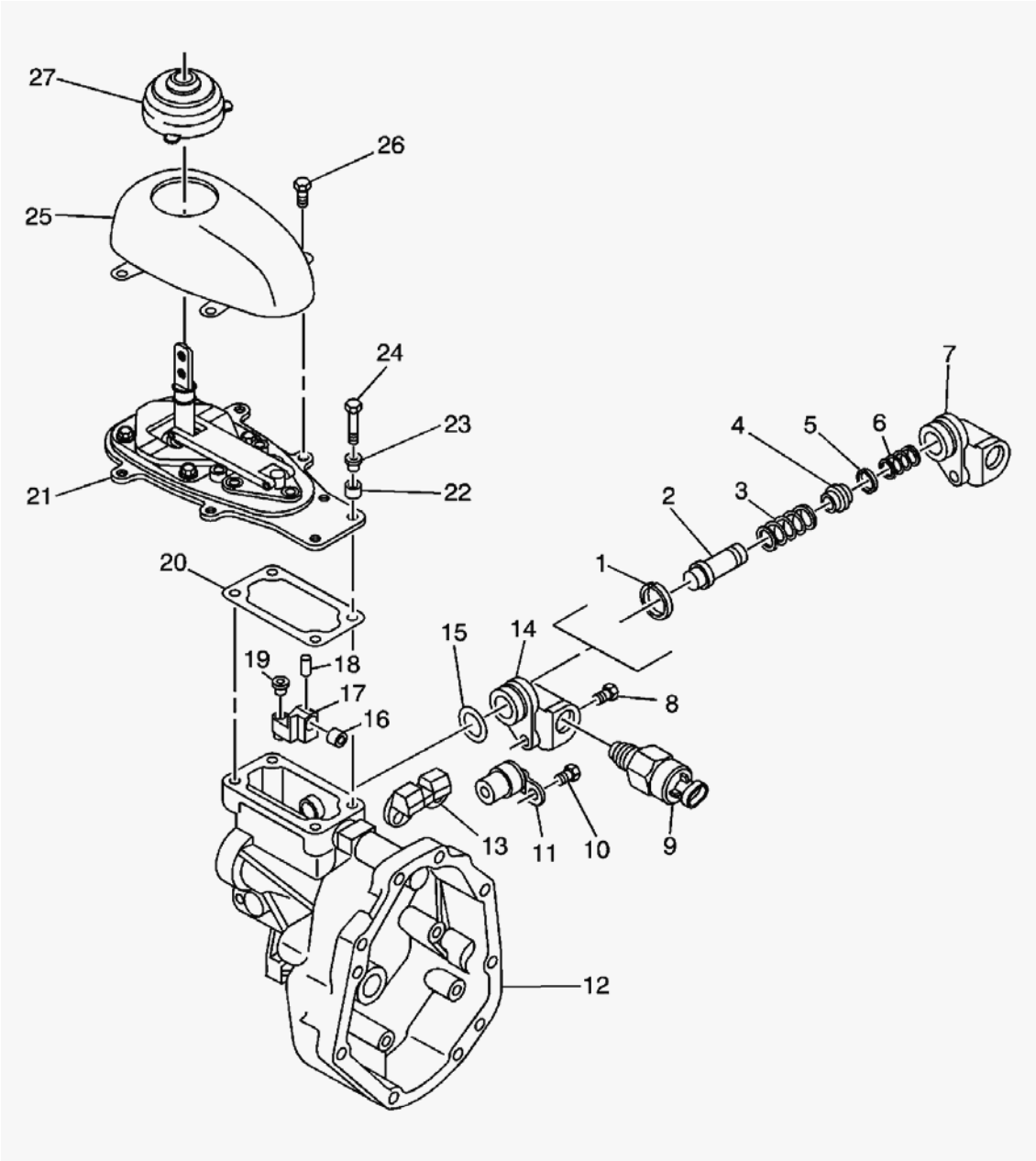

Fig. 17: Reverse Lockout Component Location (GTO)
Courtesy of GENERAL MOTORS CORP.

Callouts For Fig. 17

Callout	Component Name
1	Snap Ring
2	Reverse Lockout
3	Reverse Lockout Outer Spring
4	Reverse Lockout Seat
5	Snap Ring

cardiagn.com

6	Reverse Lockout Inner Spring
7	Reverse Lockout Body
8	Reverse Lockout Solenoid Mounting Bolt
9	Reverse Lockout Solenoid
10	Speed Sensor Bolt
11	Speed Sensor
12	Transmission Extension
13	Bumper
14	Reverse Lockout Assembly
15	Reverse Lockout O-ring Seal
16	Bushing
17	Offset Shift Lever
18	Offset Shift Lever Pin
19	Isolator Cup
20	Shifter Gasket
21	Shifter
22	Insulating Sleeve
23	Shift Cover Bolt Distance Piece
24	Shifter Assembly Bolt
25	Shifter Assembly Cover
26	Shifter Assembly Cover Screw
27	Shifter Boot

cardiagn.com

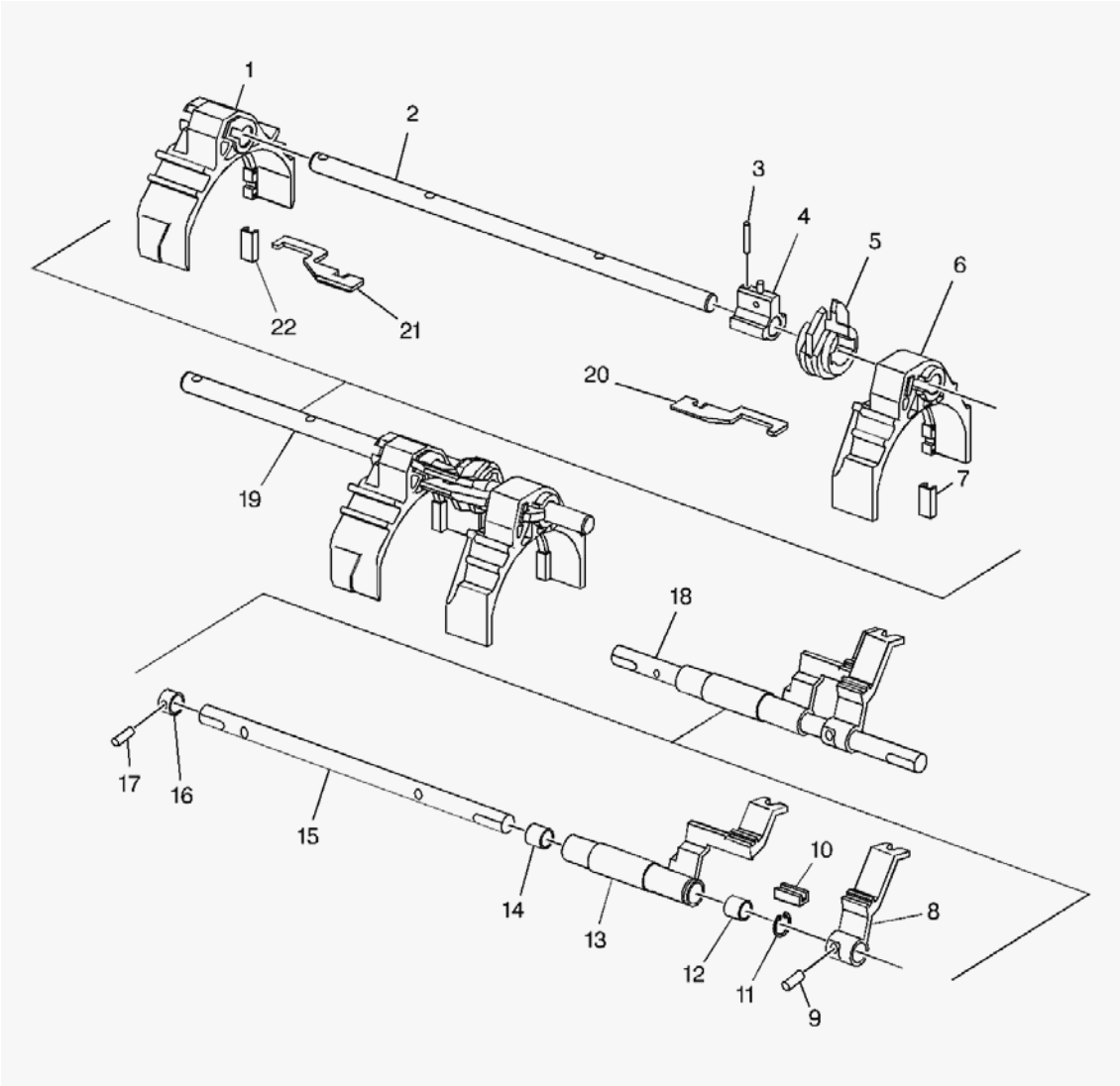

Fig. 18: Shift Shafts Component Location (GTO)
Courtesy of GENERAL MOTORS CORP.

Callouts For Fig. 18

Callout	Component Name
1	1st/2nd Shift Fork
2	Shift Shaft
3	1st/2nd Shift Fork Pin
4	Control Select Arm Pin
5	Gear Select Interlock Plate
6	3rd/4th Shift Fork
7	3rd/4th Shift Fork Pad
8	Offset Shift Lever
9	Reverse Shift Lever Pin

cardiagn.com

10	5th/6th Shift Lever Pad
11	Retaining Ring
12	5th/6th Shift Shaft Lever Bushing
13	5th/6th Shift Lever
14	5th/6th Shift Shaft Lever Bushing
15	5th/6th Reverse Shift Shaft
16	Collar
17	Reverse Shift Collar Pin
18	5th/6th Shift Lever Assembly
19	1st/2nd Shift Shaft Assembly
20	Shift Interlock Plate
21	Interlock Shift Plate
22	1st/2nd Shift Fork Pad

REPAIR INSTRUCTIONS

TRANSMISSION DISASSEMBLE (Y CAR)

Extension Housing Removal

Tools Required

- **J 3289-20** Holding Fixture. See **Special Tools** .
- **J 44395** Transmission Holding Fixture. See **Special Tools** .

cardiagn.com

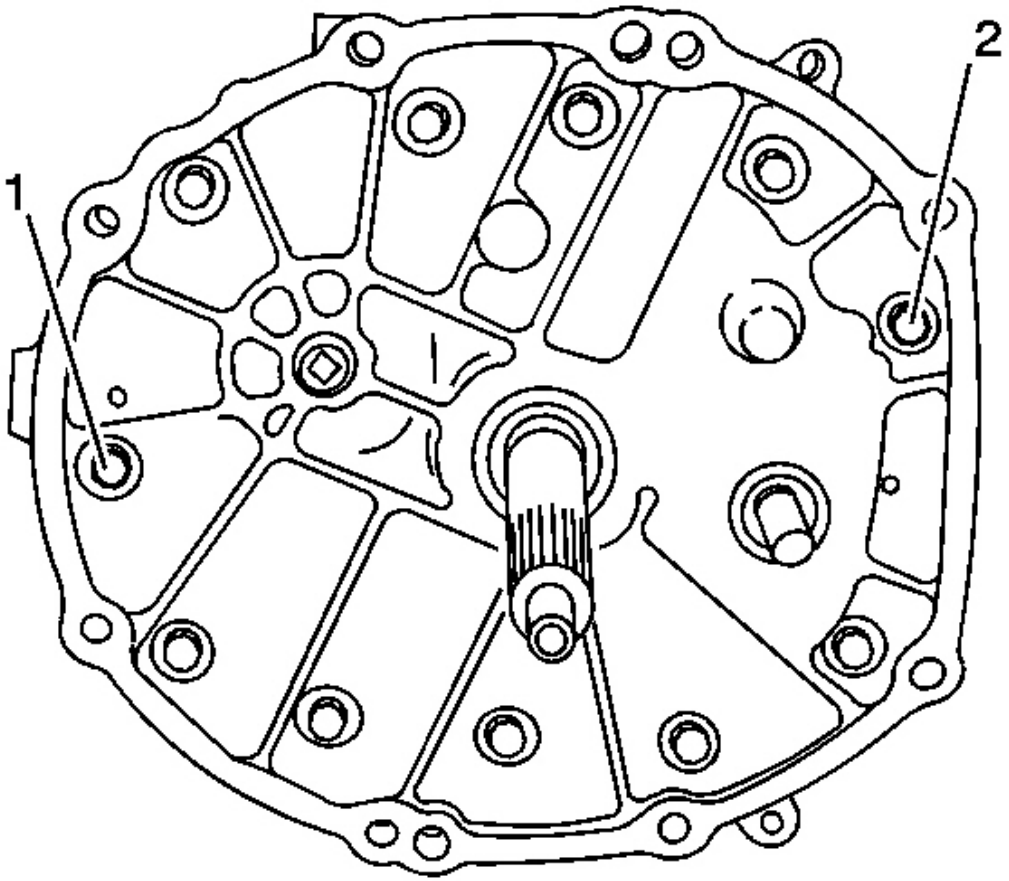

Fig. 19: Installing/Removing Two Adapter Plate Bolts
Courtesy of GENERAL MOTORS CORP.

1. Remove the adapter plate bolts (1) and (2).

cardiagn.com

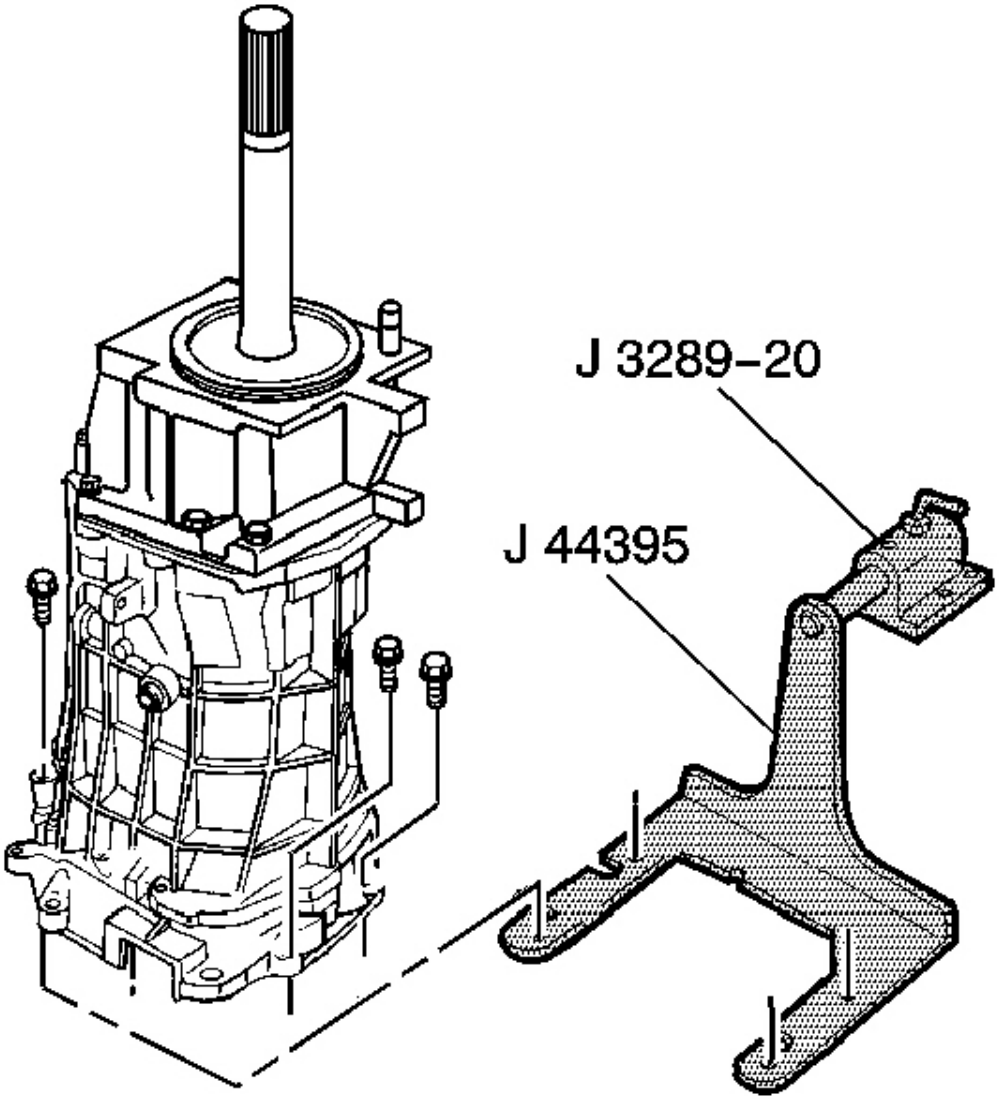

Fig. 20: Removing/Installing J 44395 On Transmission Case
Courtesy of GENERAL MOTORS CORP.

2. Install the **J 44395** .
3. Mount the transmission on a workbench using the **J 3289-20** .
4. Rotate the transmission into a horizontal position.
5. Remove the transmission drain plug and drain the transmission fluid.
6. Shift the transmission into neutral (N).

cardiagn.com

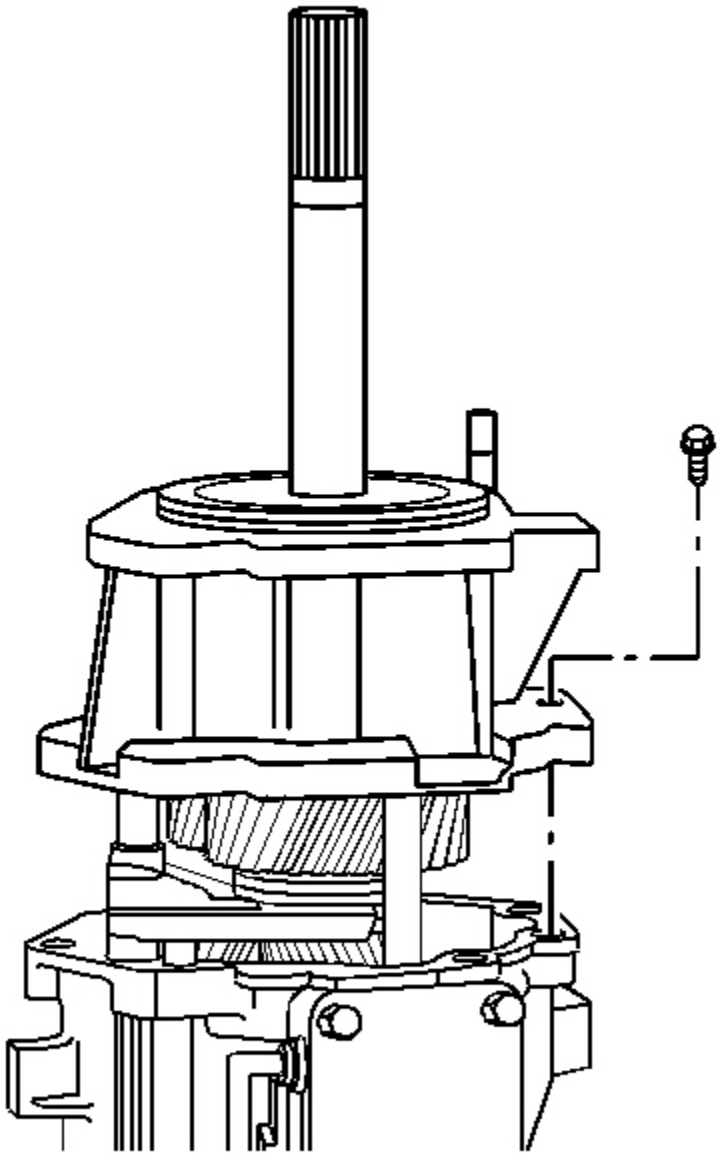

Fig. 21: View Of Extension Housing Bolts & Extension Housing
Courtesy of GENERAL MOTORS CORP.

7. Remove the rear extension housing bolts and the rear extension housing.

Reverse Speed Gear Removal

cardiagn.com

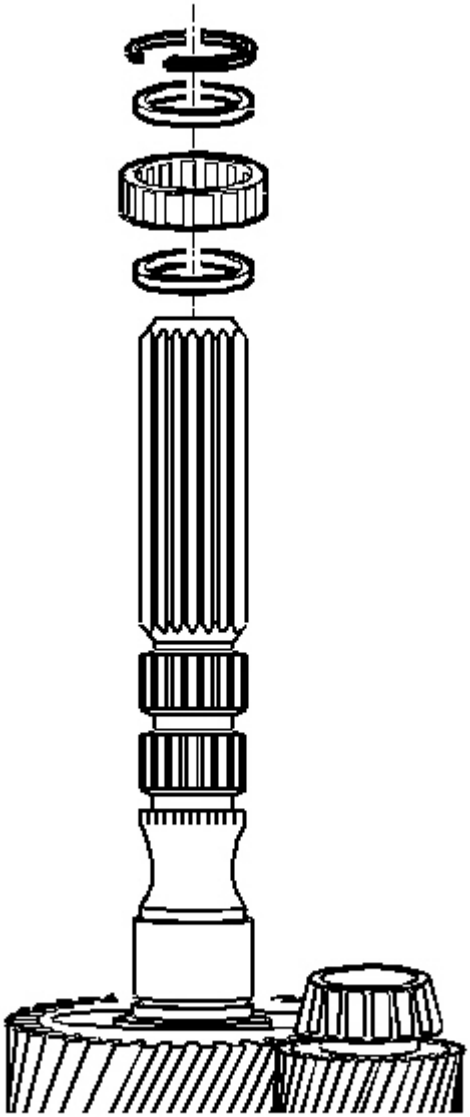

Fig. 22: View Of Mainshaft Rear Roller Bearing, Rear Bearing Retainer Ring & Spacers
Courtesy of GENERAL MOTORS CORP.

1. Remove the rear bearing retainer ring.
2. Remove the spacer.
3. Remove the mainshaft rear roller bearing.
4. Remove the spacer.

cardiagn.com

5. Remove the retainer ring.
6. Remove the reverse gear thrust washer.

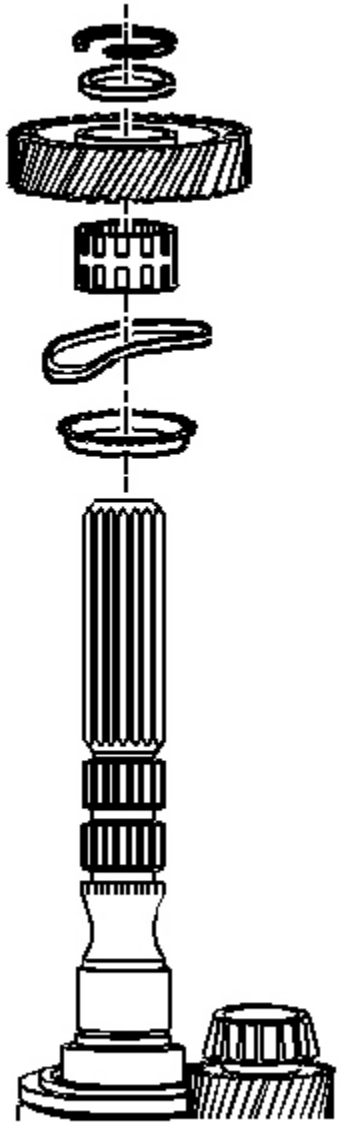

Fig. 23: Identifying Reverse Speed Gear Components
Courtesy of GENERAL MOTORS CORP.

7. Remove the reverse gear.

cardiagn.com

8. Remove the reverse gear caged needle bearing.
9. Remove the wave washer.
10. Remove the reverse gear synchronizer blocking ring.

Reverse Shift Fork Removal

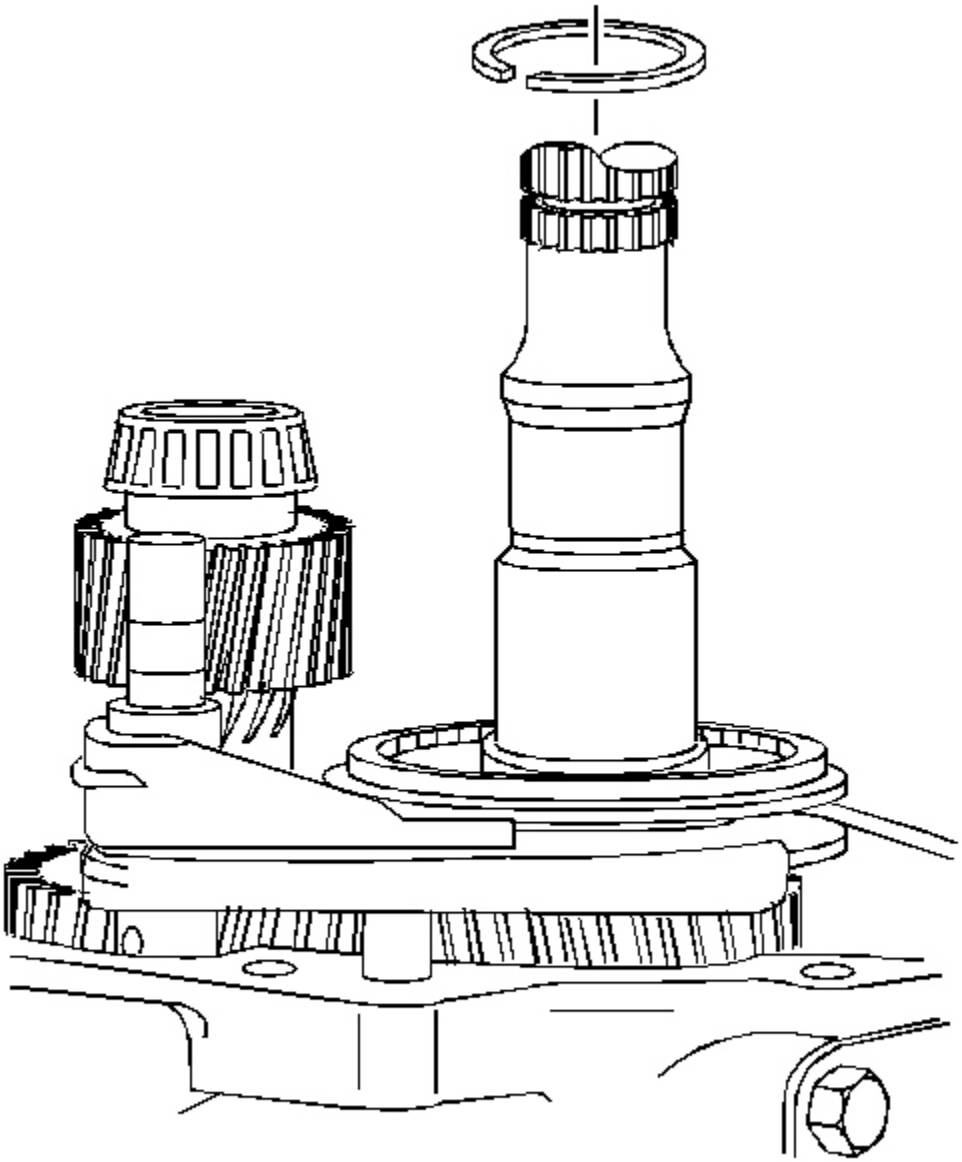

cardiagn.com

Fig. 24: View Of Reverse Synchronizer Retainer Ring
Courtesy of GENERAL MOTORS CORP.

1. Remove the reverse synchronizer retainer ring.

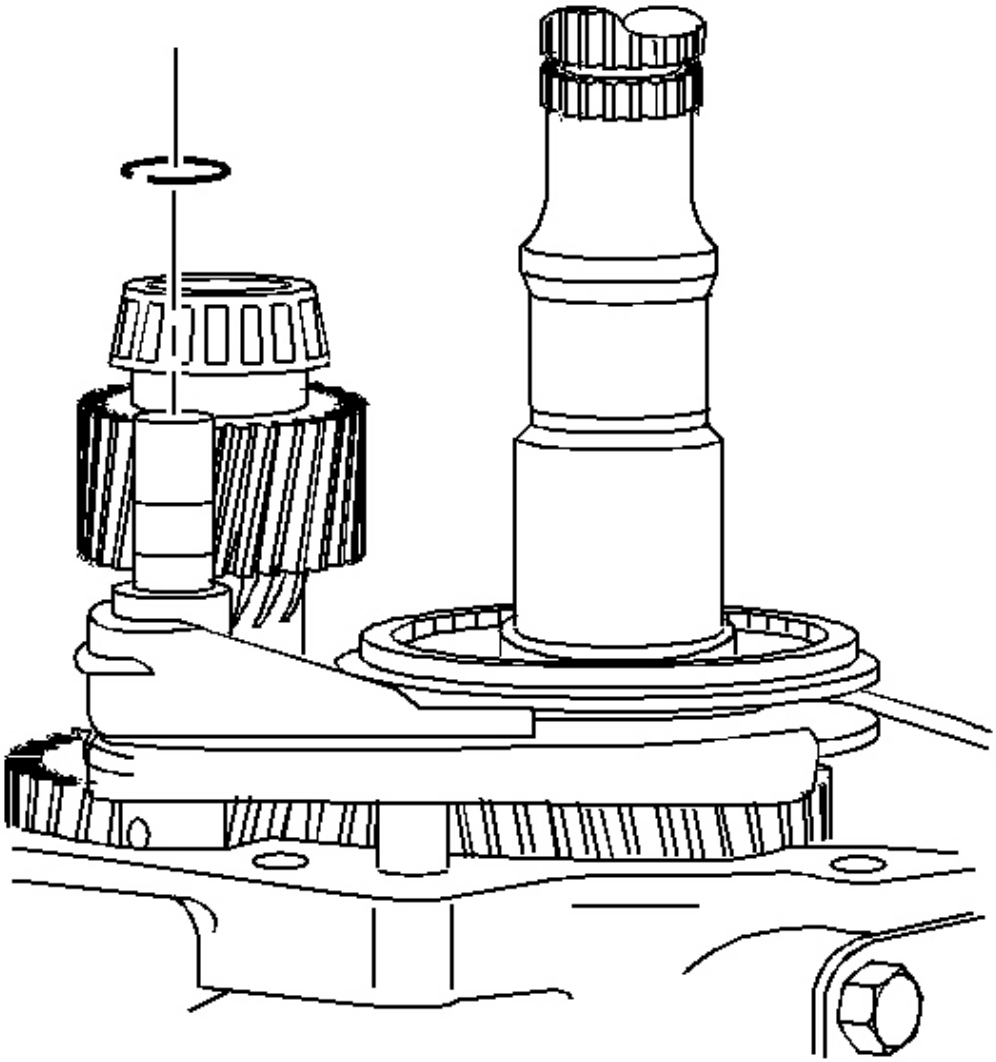

Fig. 25: Installing/Removing Shift Fork Retainer Ring
Courtesy of GENERAL MOTORS CORP.

2. Remove and discard the reverse shift fork retainer ring.

cardiagn.com

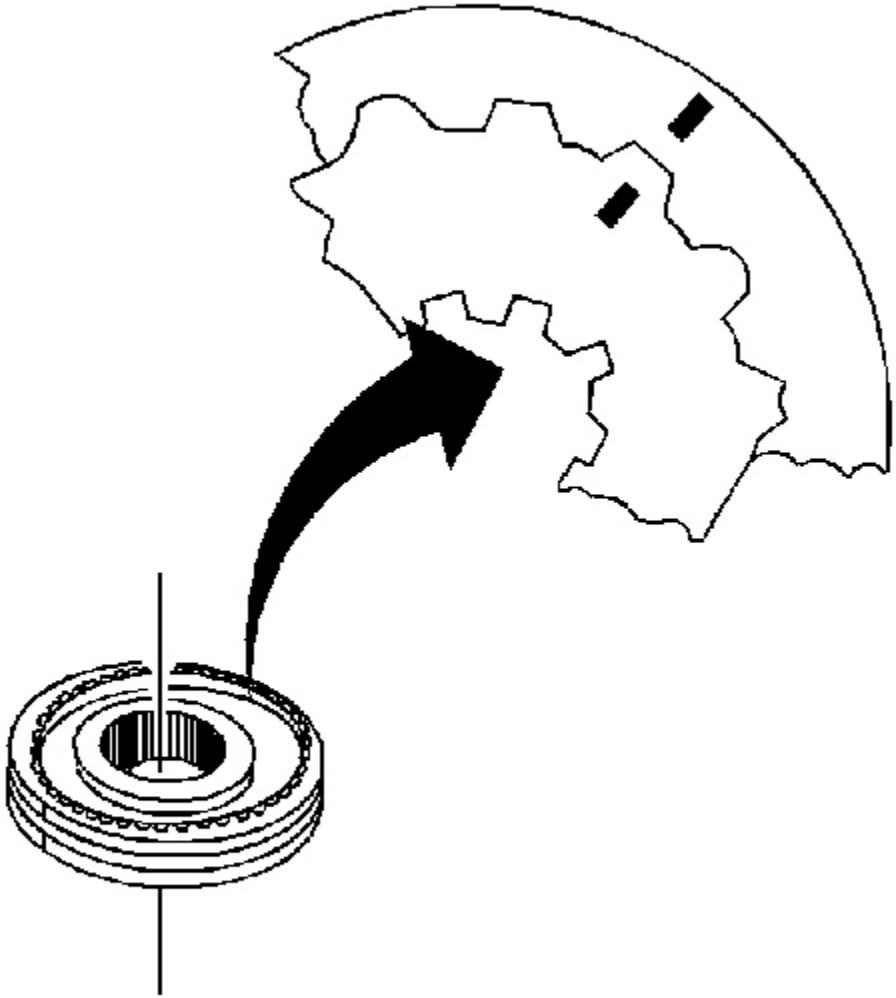

Fig. 26: Identifying Speed Gear Synchronizer Assembly Scribe Marks
Courtesy of GENERAL MOTORS CORP.

3. Scribe a mark on the synchronizer hub and on the sleeve. This will help you to reinstall the parts in the same position.

cardiagn.com

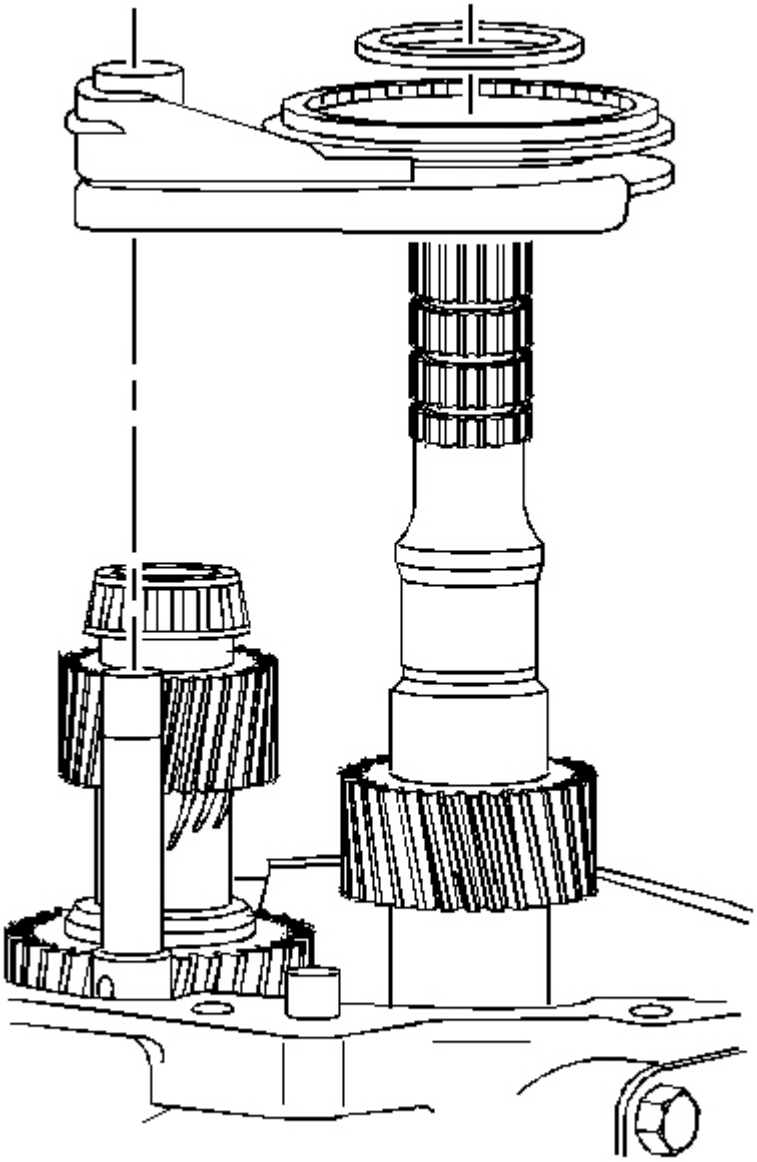

Fig. 27: Identifying Reverse Shift Fork, Synchronizer & Thrust Washer
Courtesy of GENERAL MOTORS CORP.

4. Remove the following parts in order:
    1. The thrust washer
    2. The reverse synchronizer assembly and the shift fork

cardiagn.com

5th/6th Speed Driven Gear Removal

Tools Required

- **J 8433** Universal Bridge Puller. See **Special Tools** .
- **J 39431-1** Gear Remover and Bolts. See **Special Tools** .

cardiagn.com

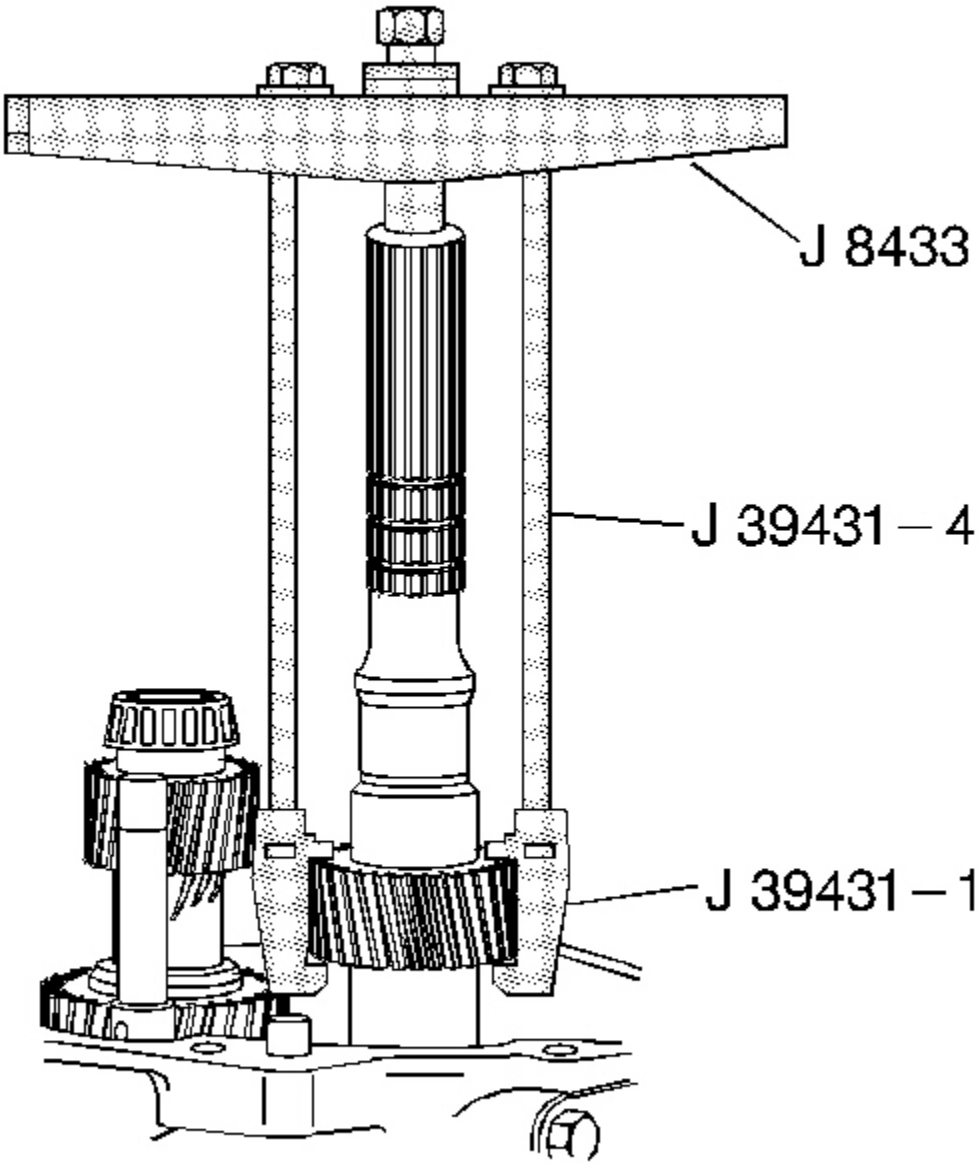

Fig. 28: Removing 5th/6th Speed Driven Gear Using J 8433, J 39431-4 & J 39431-1
Courtesy of GENERAL MOTORS CORP.

Remove the 5th/6th speed driven gear. Use the **J 8433** , the **J 39431-1** and the J 39431-4.

Countershaft Extension Removal

cardiagn.com

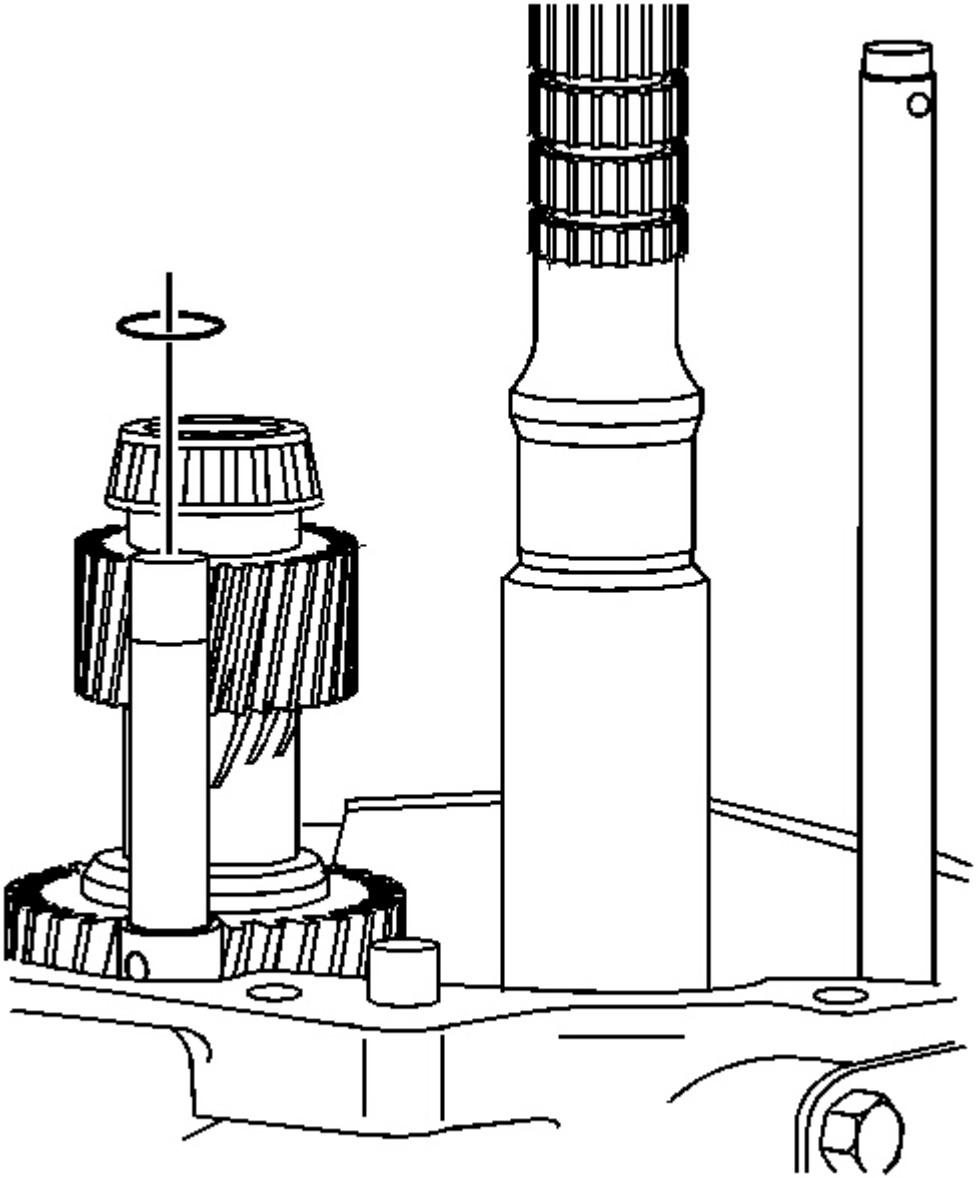

Fig. 29: View Of 5th/6th Shift Fork Retainer Ring
Courtesy of GENERAL MOTORS CORP.

1. Remove the 5th/6th speed shift fork retainer ring.

cardiagn.com

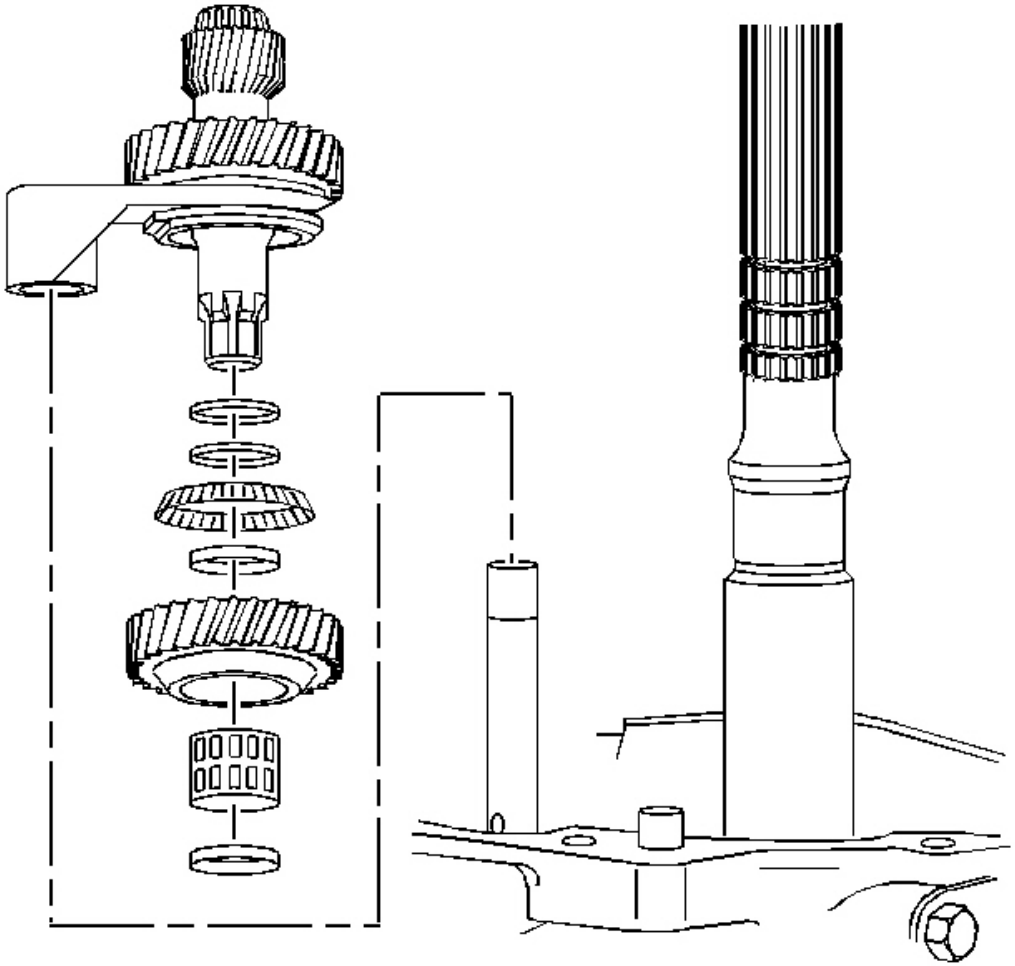

Fig. 30: Identifying Countershaft Extension Assembly & 5th/6th Shift Fork
Courtesy of GENERAL MOTORS CORP.

2. Rotate the transmission in the horizontal position with the guide plate up.
3. Remove the countershaft extension assembly with the 5th/6th speed shift fork, 6th speed gear bearing spacer, 6th speed drive gear, and caged needle bearing. The 6th speed gear bearing spacer will slide out during removal of the countershaft extension assembly.

Tools Required

J 41099 Skip Shift Sensor Remover/Installer. See **Special Tools** .

Transmission Case Removal

cardiagn.com

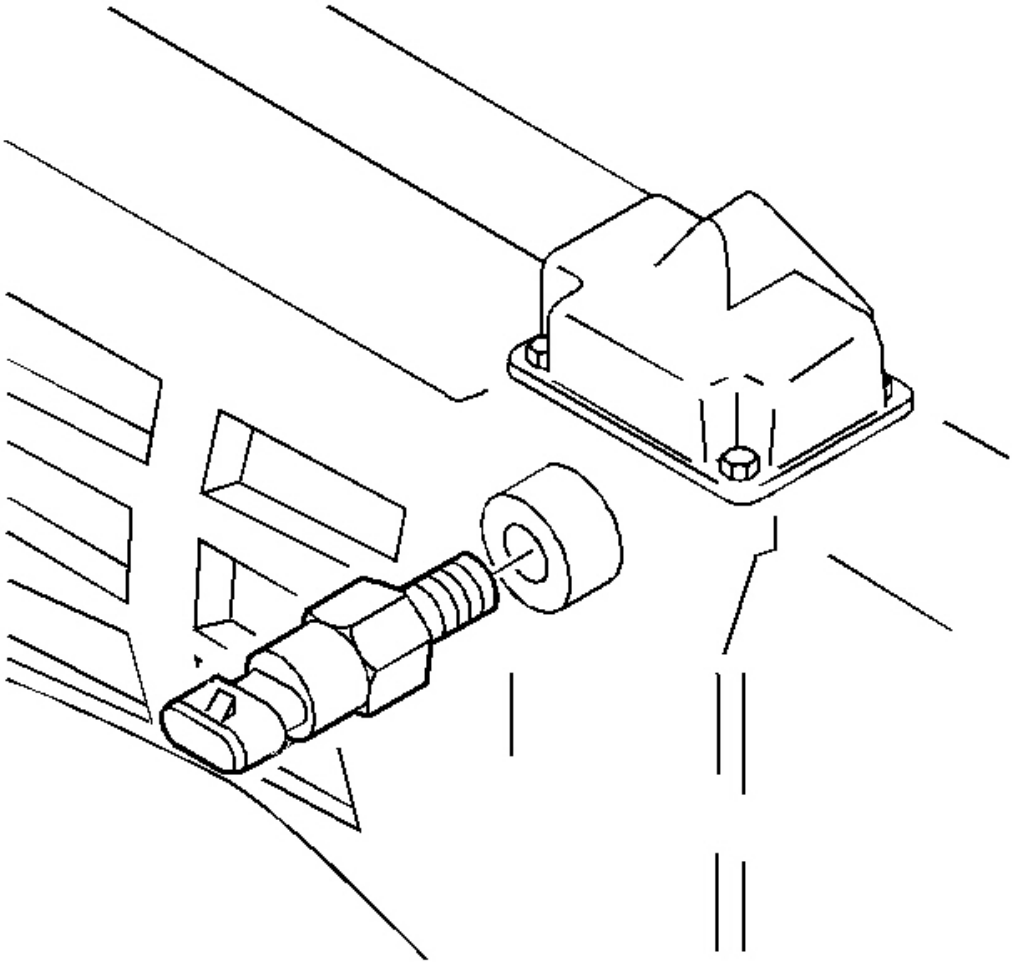

Fig. 31: Identifying Computer Aided Gear Select Solenoid
Courtesy of GENERAL MOTORS CORP.

1. Remove the computer aided gear select solenoid.

cardiagn.com

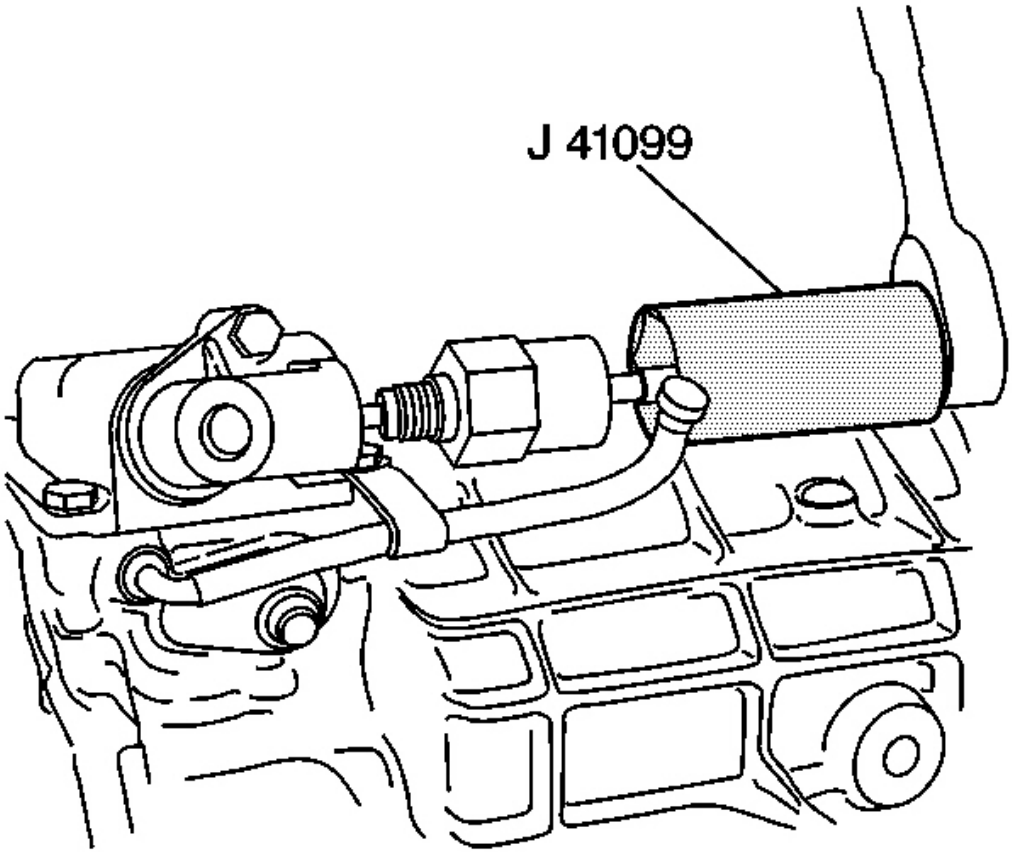

Fig. 32: Using J 41099 To Remove/Install Reverse Lockout Solenoid To Reverse Lockout Body Assembly
Courtesy of GENERAL MOTORS CORP.

2. Remove the reverse lockout solenoid from the reverse lockout body. Use the **J 41099** .

cardiagn.com

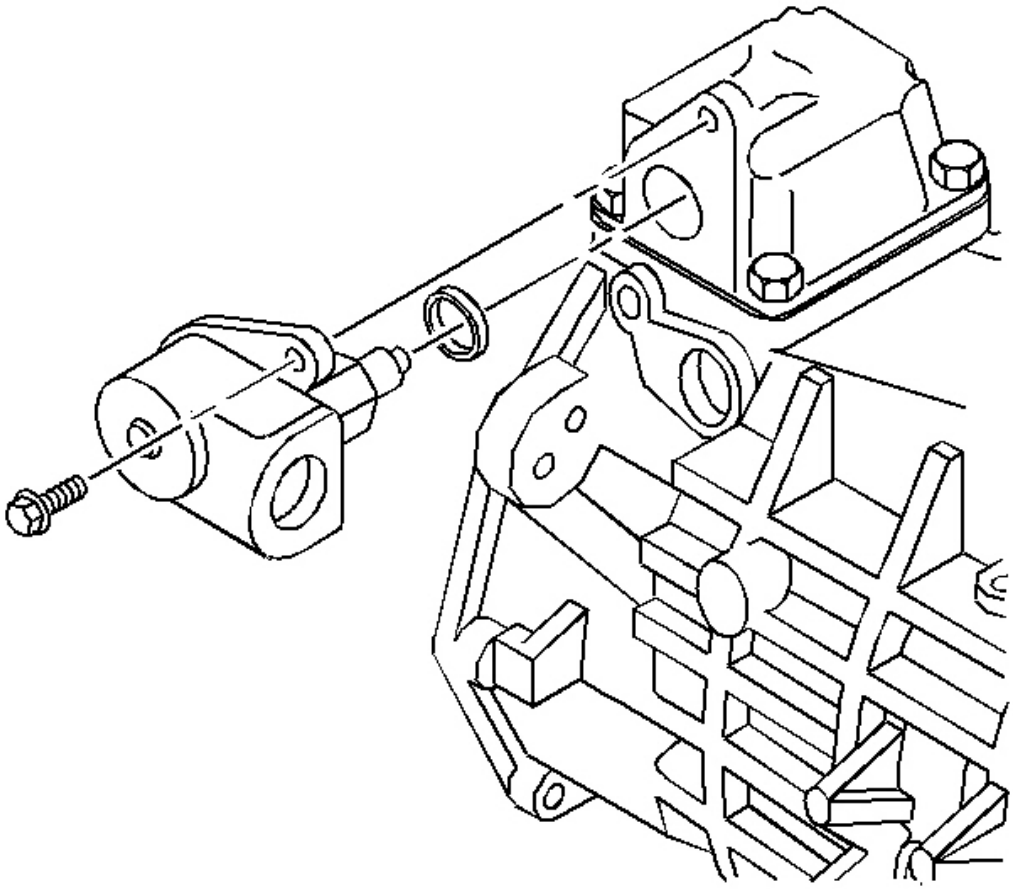

Fig. 33: Installing/Removing Reverse Lockout Body & Bolt
Courtesy of GENERAL MOTORS CORP.

3. Remove the reverse lockout assembly bolt and the reverse lockout body.

cardiagn.com

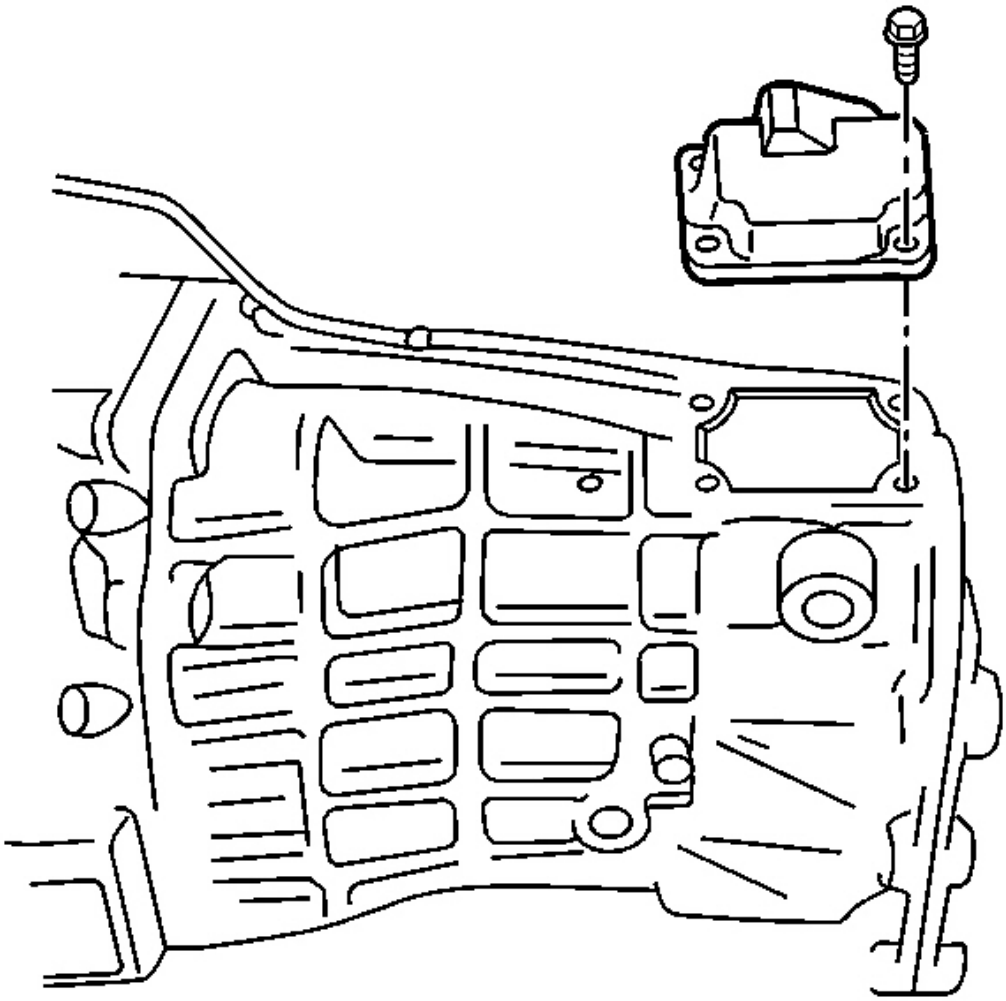

Fig. 34: View Of Transmission Case Cover & Case Cover Bolts
Courtesy of GENERAL MOTORS CORP.

4. Remove the shifter cover plate retainer bolts.
5. Remove the shifter cover plate.

cardiagn.com

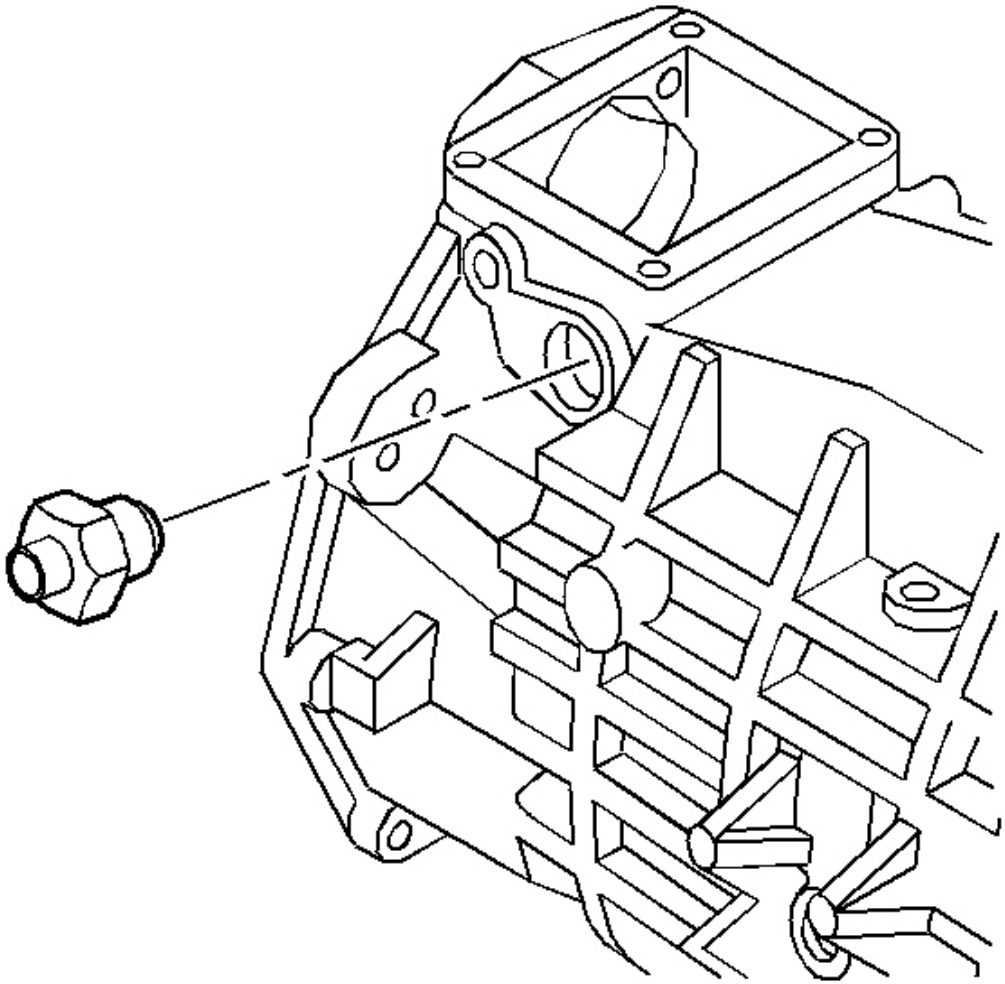

Fig. 35: View Of Shift Detent Assembly
Courtesy of GENERAL MOTORS CORP.

6. Remove the shift detent assembly.

cardiagn.com

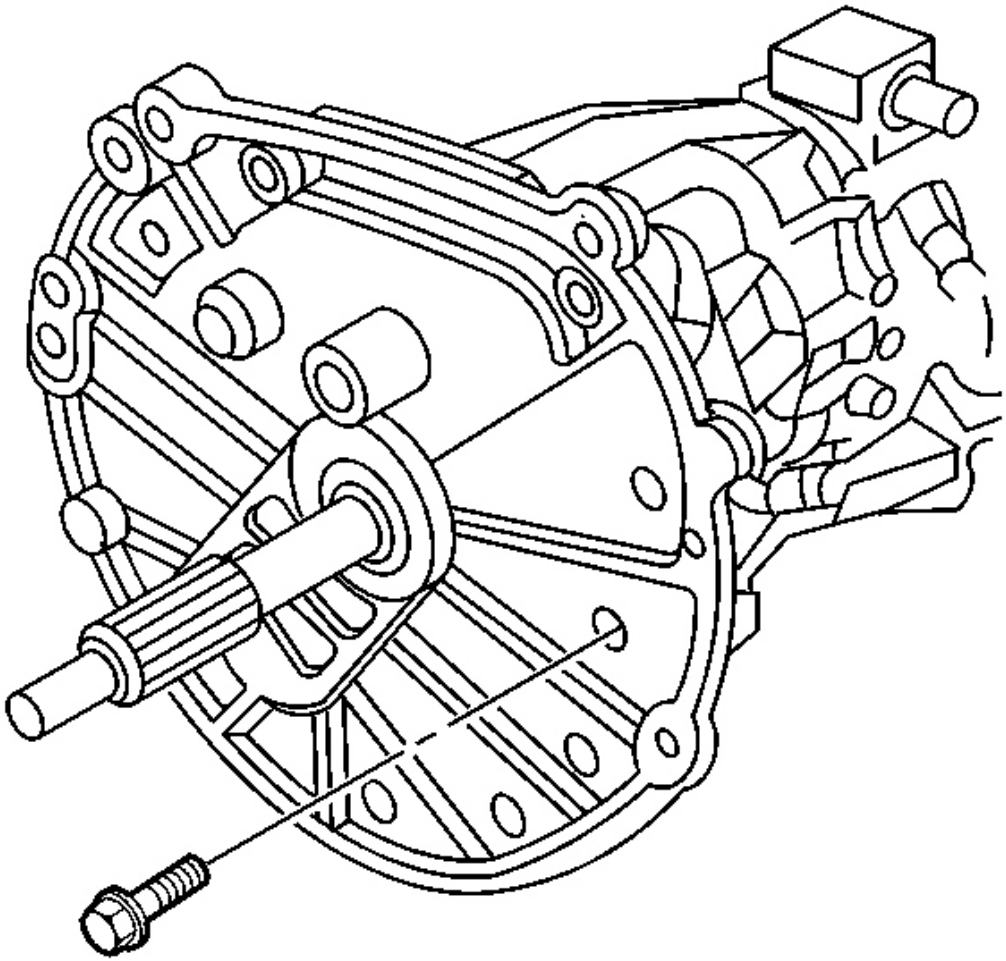

Fig. 36: View Of Adapter Plate & Transmission Case Bolts
Courtesy of GENERAL MOTORS CORP.

7. Remove 9 of the 11 adapter plate to transmission case bolts.
8. Rotate the transmission into the vertical position.
9. Remove the last 2 adapter plate to transmission case bolts.
10. Remove the shift lever guide bolts.

cardiagn.com

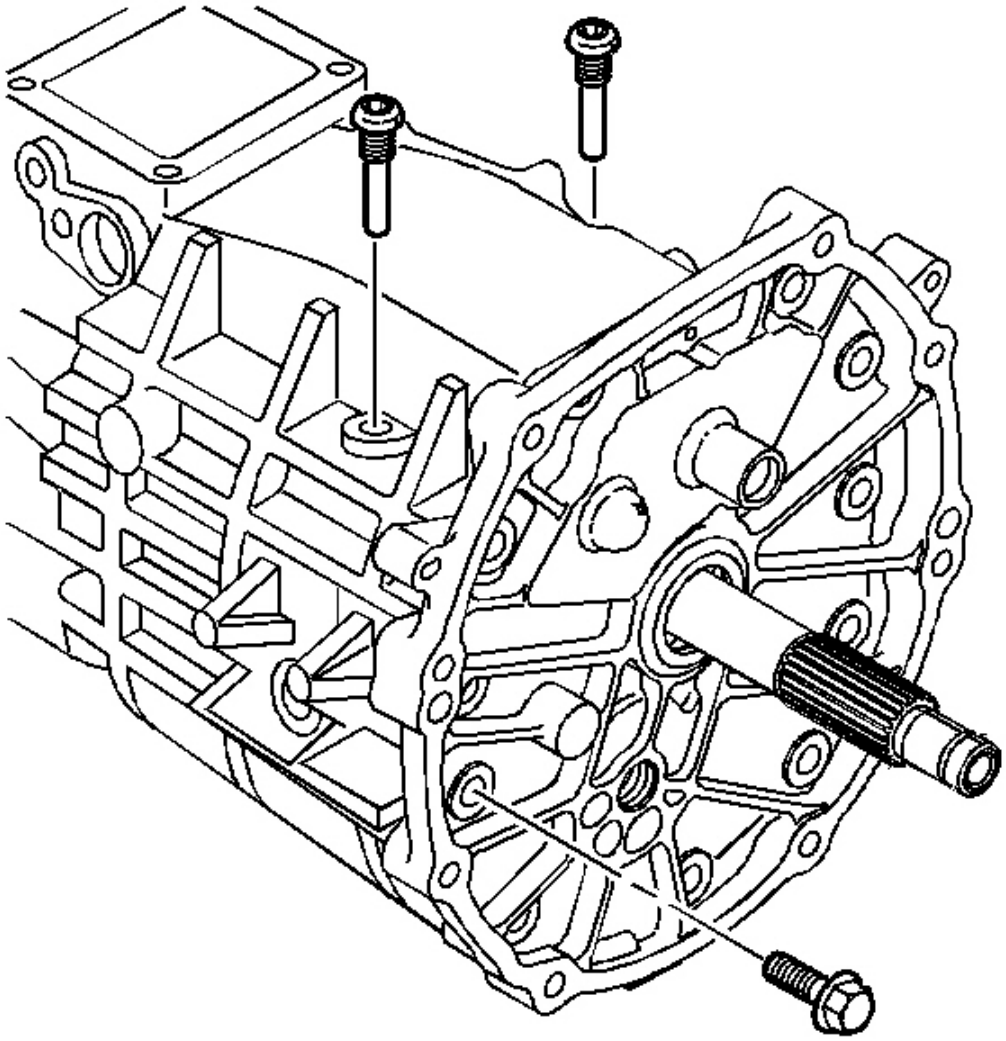

Fig. 37: Installing/Removing Shift Lever Guide Bolts
Courtesy of GENERAL MOTORS CORP.

cardiagn.com

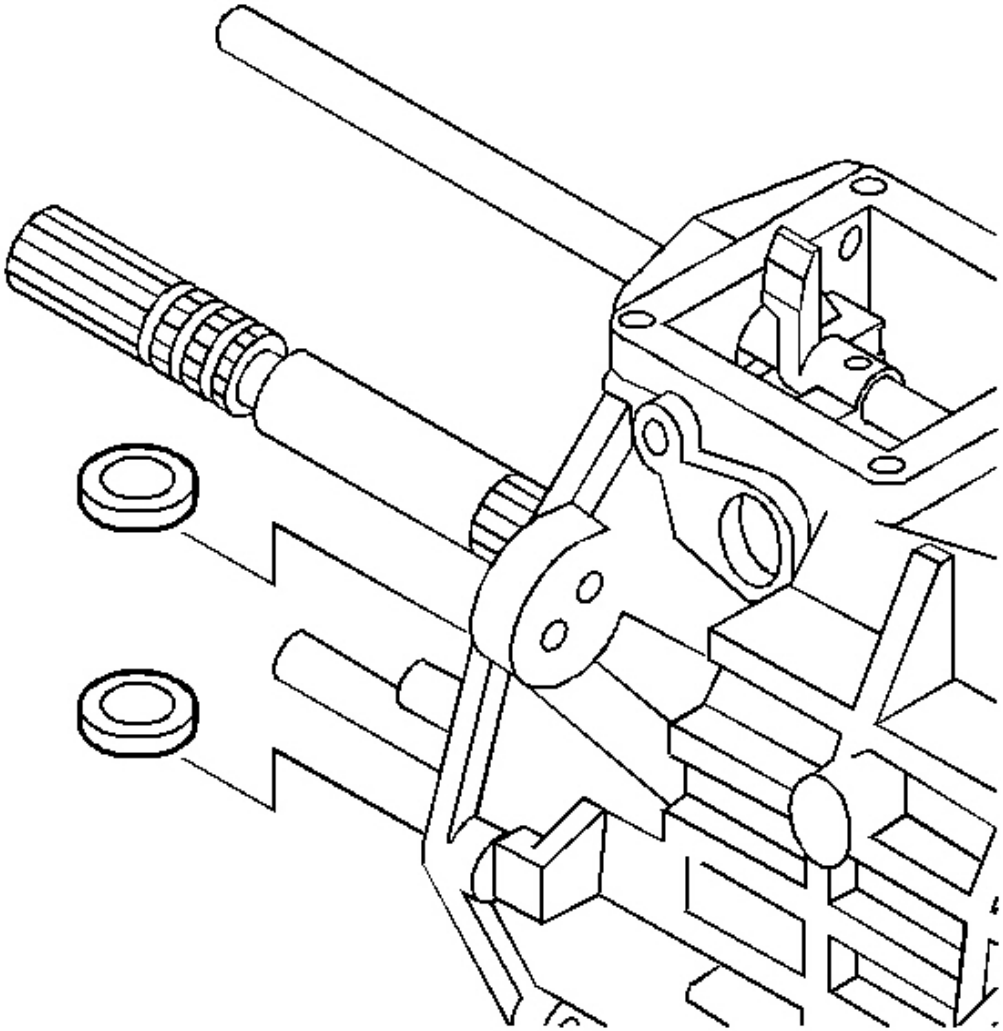

Fig. 38: View Of Transmission Magnets
Courtesy of GENERAL MOTORS CORP.

11. Remove the magnets from the transmission case.

cardiagn.com

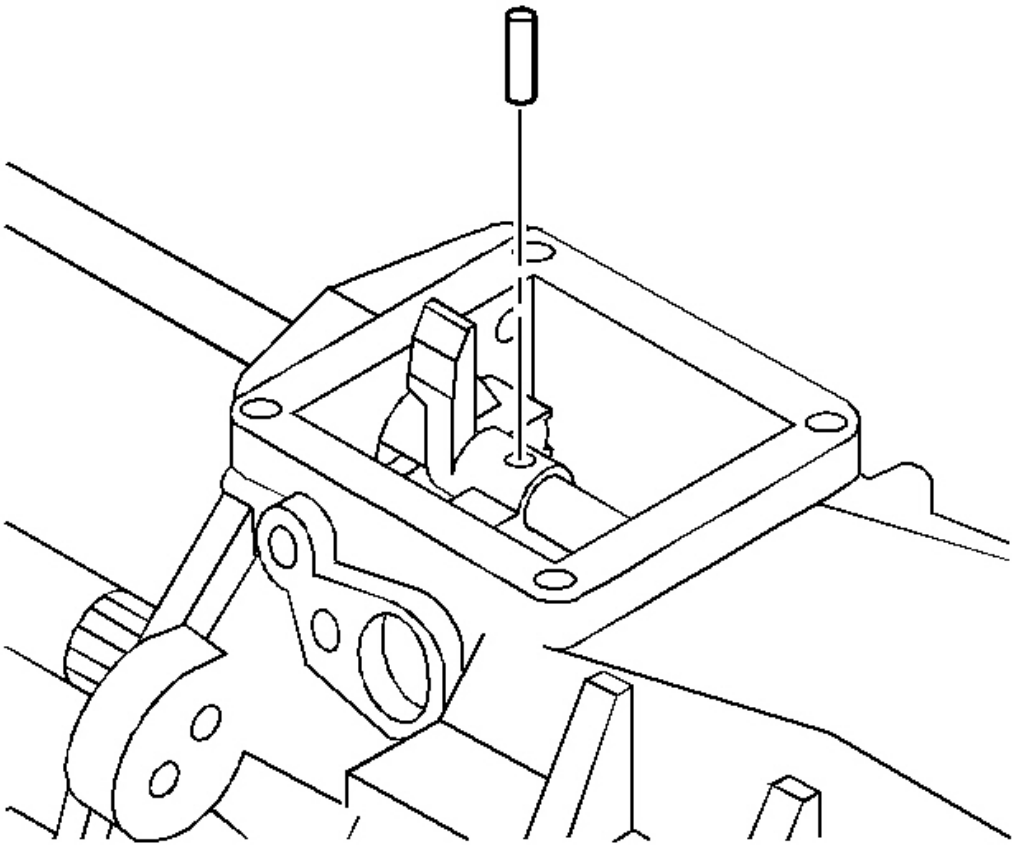

Fig. 39: Installing/Removing Offset Lever Roll Pin
Courtesy of GENERAL MOTORS CORP.

12. Remove the offset lever roll pin.

cardiagn.com

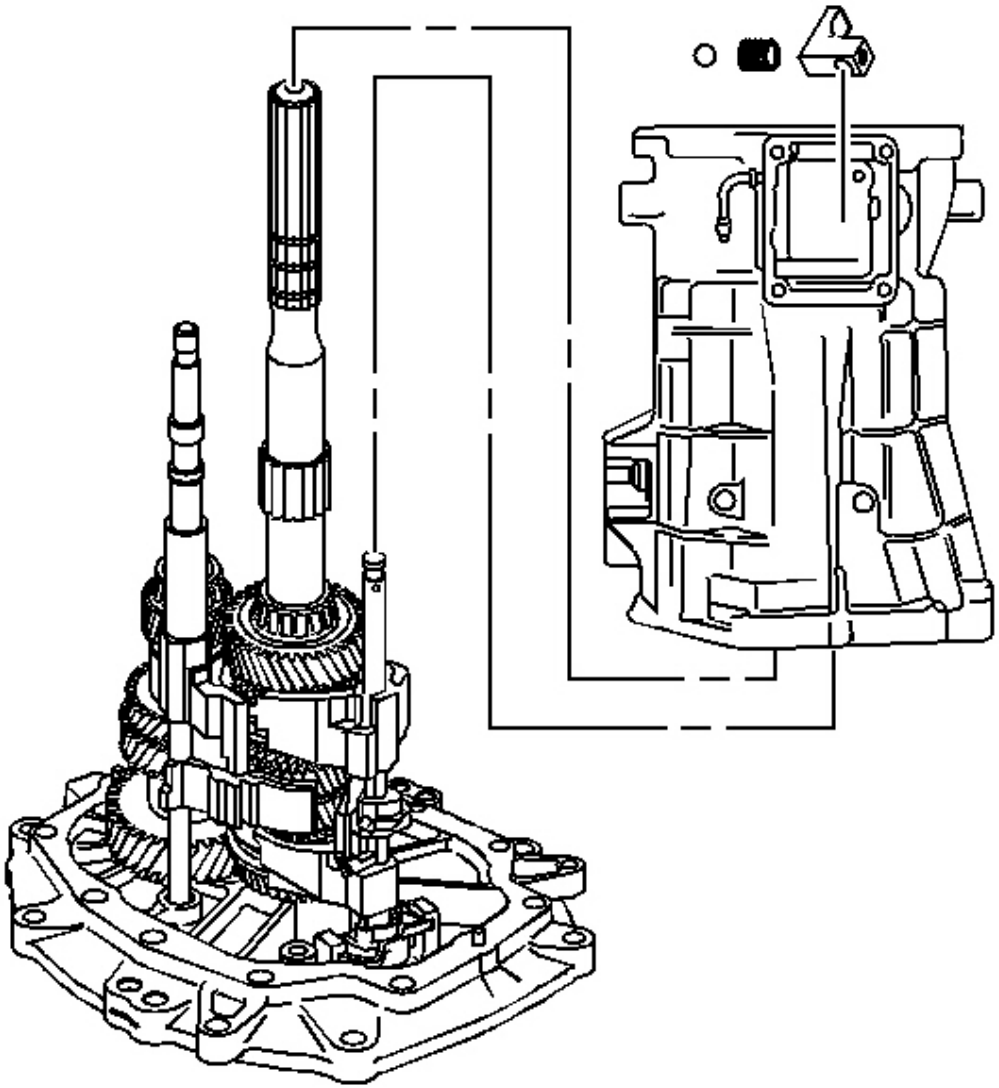

Fig. 40: View Of Front Offset Lever Components
Courtesy of GENERAL MOTORS CORP.

13. Remove the transmission case and the offset lever together as follows:
    1. Slide the transmission case up and off of the gear clusters and the shift shaft components.
    2. Hold the offset lever against the guide plate in order to prevent the release of the detent ball and the spring.
    3. Remove the offset lever from the transmission case.

cardiagn.com

Guide Plate Removal

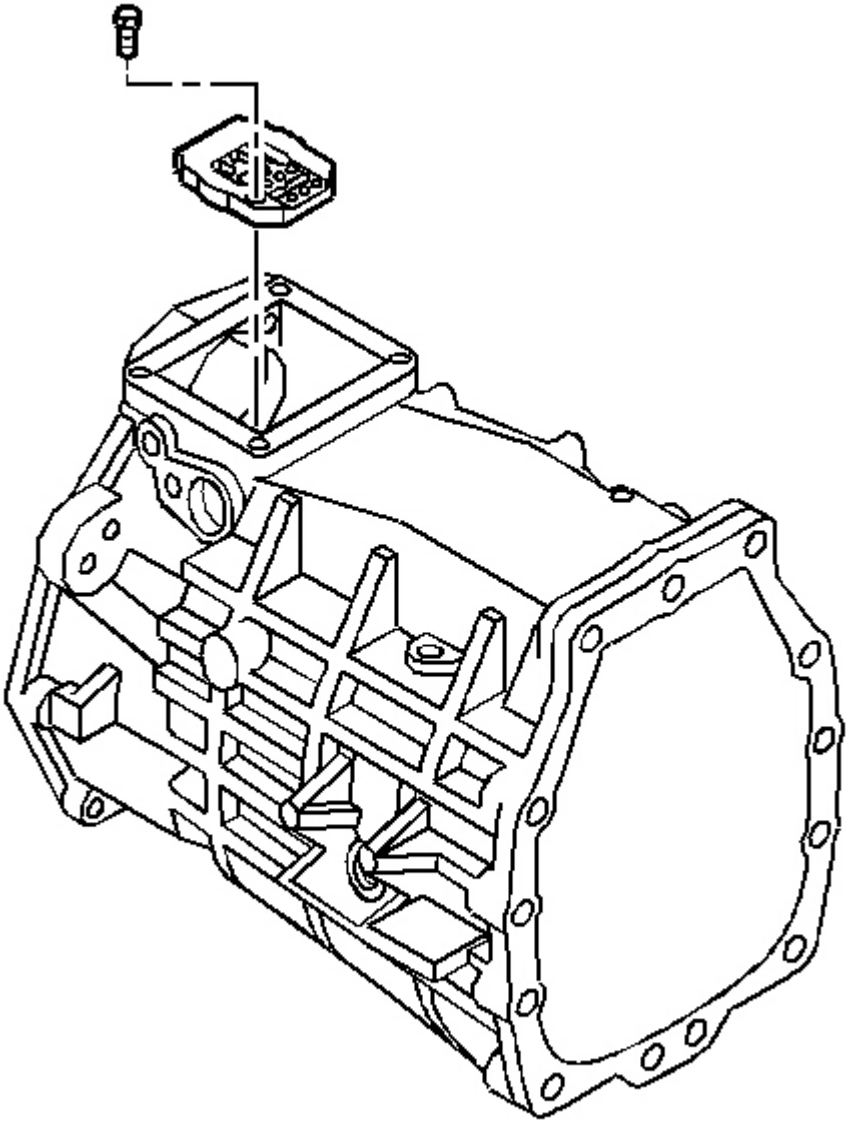

Fig. 41: Locating Detent Guide Plate & Attaching Bolts
Courtesy of GENERAL MOTORS CORP.

1. Remove the detent guide plate attaching bolts.
2. Remove the detent guide plate.

cardiagn.com

Reverse Lockout Assembly Disassemble

1. Remove the O-ring (8) from the body (1).

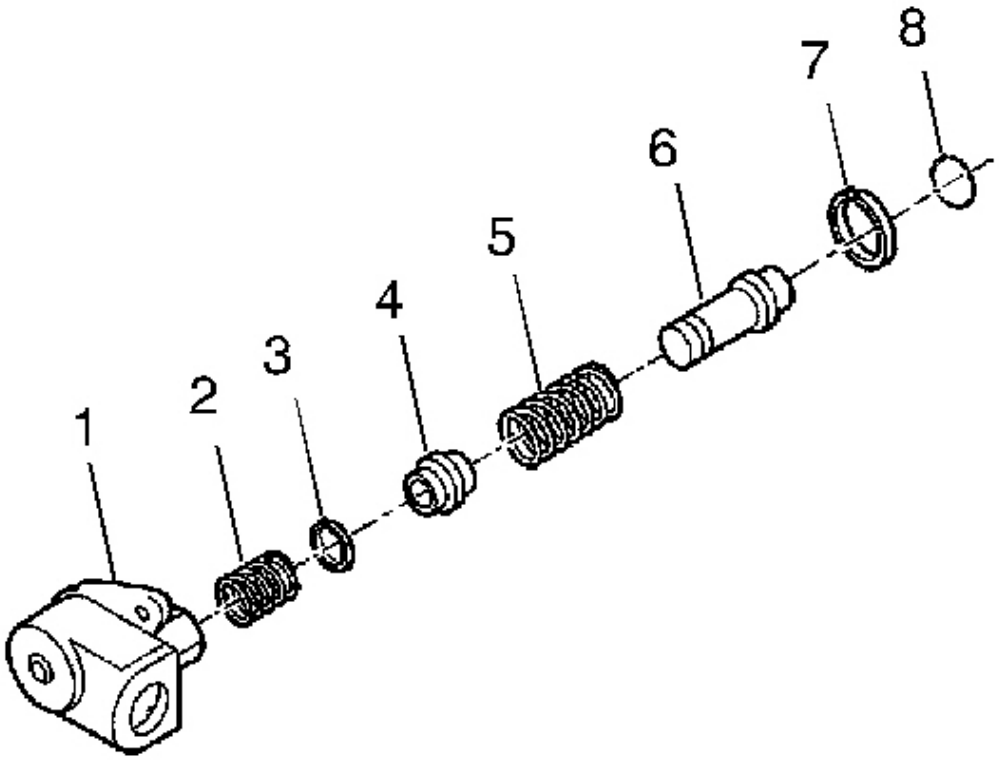

Fig. 42: Exploded View Of Reverse Lockout Assembly
Courtesy of GENERAL MOTORS CORP.

CAUTION: The reverse lockout assembly is under spring pressure. Exercise caution when removing the retainer ring, as bodily injury may result.

2. Remove the retainer ring (7) from the body (1).
3. Remove the reverse lockout inner spring (2).
4. Compress the reverse lockout plunger (6) and the collar (4) in a vise and remove the retainer ring (3).
5. Remove the reverse lockout plunger (6).
6. Remove the reverse lockout outer spring (5).
7. Remove the reverse lockout collar (4).

cardiagn.com

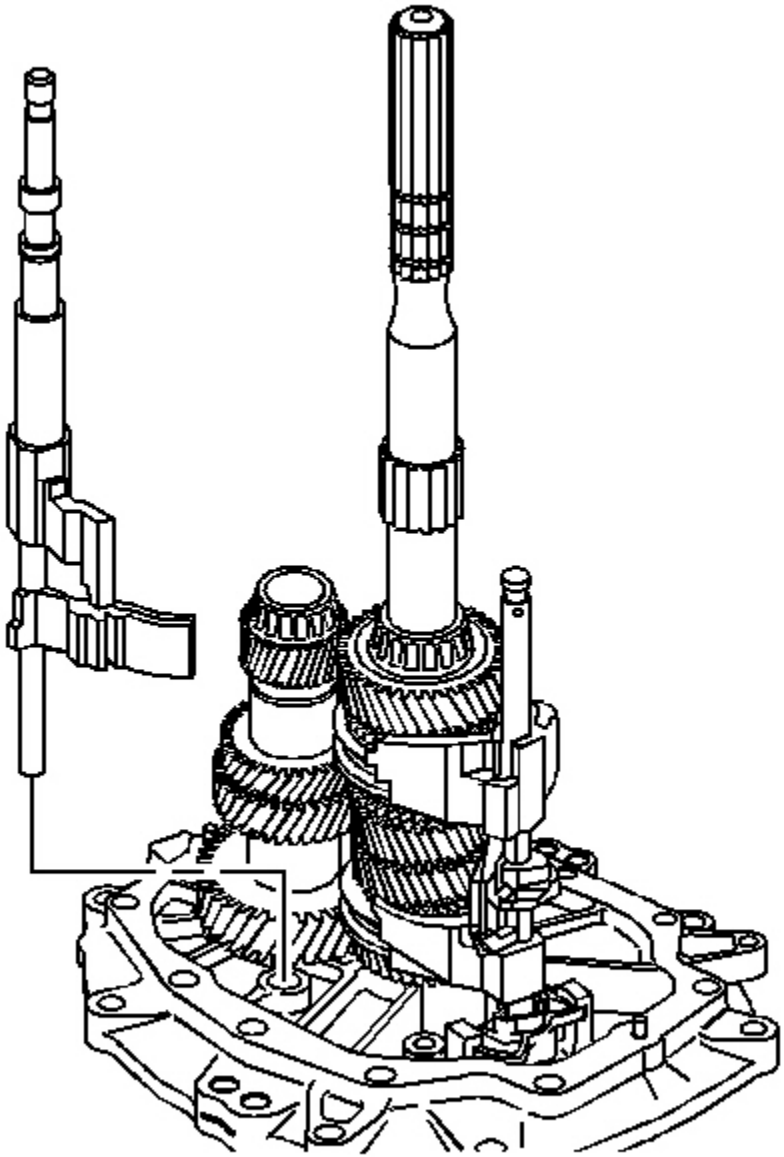

Fig. 43: View Of 5th/6th & Reverse Shift Shaft
Courtesy of GENERAL MOTORS CORP.

1. Rotate the 5th/6th and the reverse shift shaft levers off the shift interlock plate.

cardiagn.com

2. Remove the 5th/6th and the reverse shift shaft assembly.

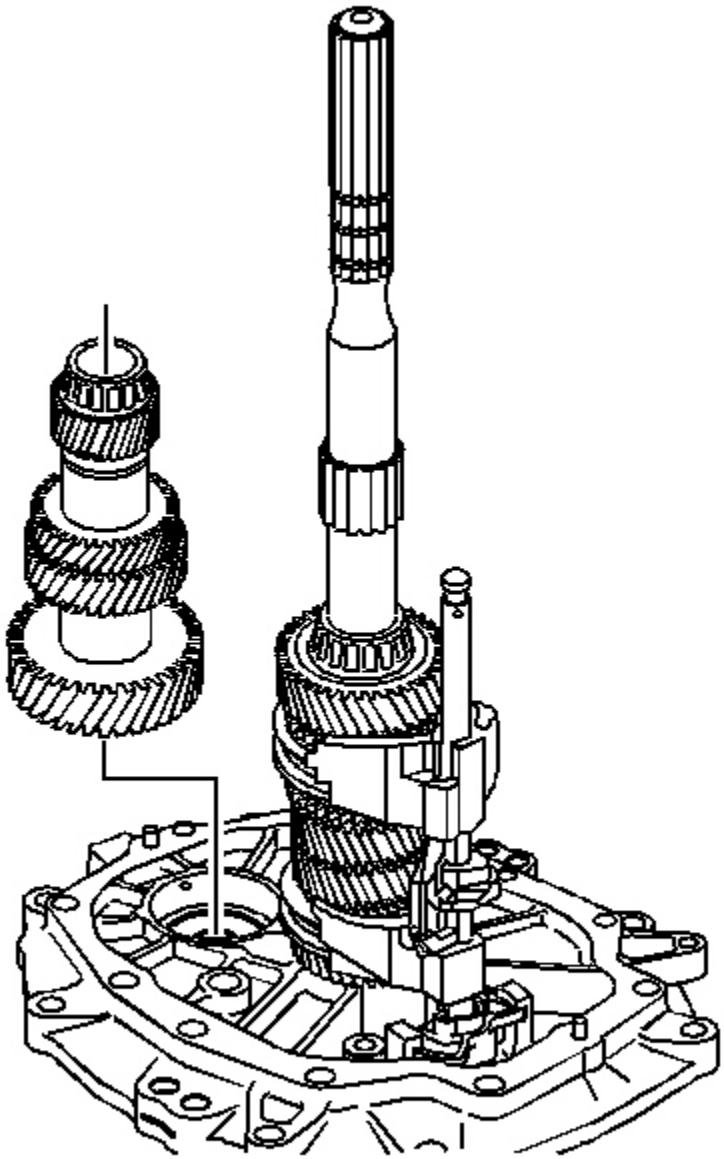

Fig. 44: Installing/Removing Countershaft Assembly
Courtesy of GENERAL MOTORS CORP.

3. Remove the countershaft. Lift up the mainshaft enough in order to remove the countershaft.

cardiagn.com

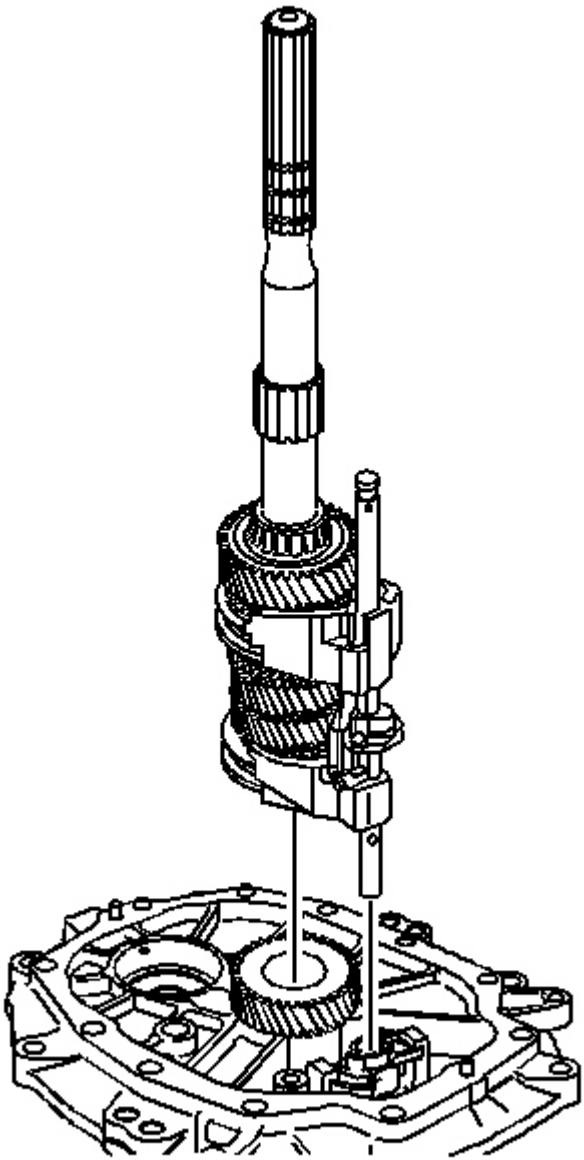

Fig. 45: Installing/Removing Mainshaft Assembly & Shift Shaft Components
Courtesy of GENERAL MOTORS CORP.

4. Remove the mainshaft and the shift shaft components as an assembly.

IMPORTANT: When removing the shift shaft be careful not to lose the dowel pin.

cardiagn.com

5. Remove the shift shaft assembly from the mainshaft.

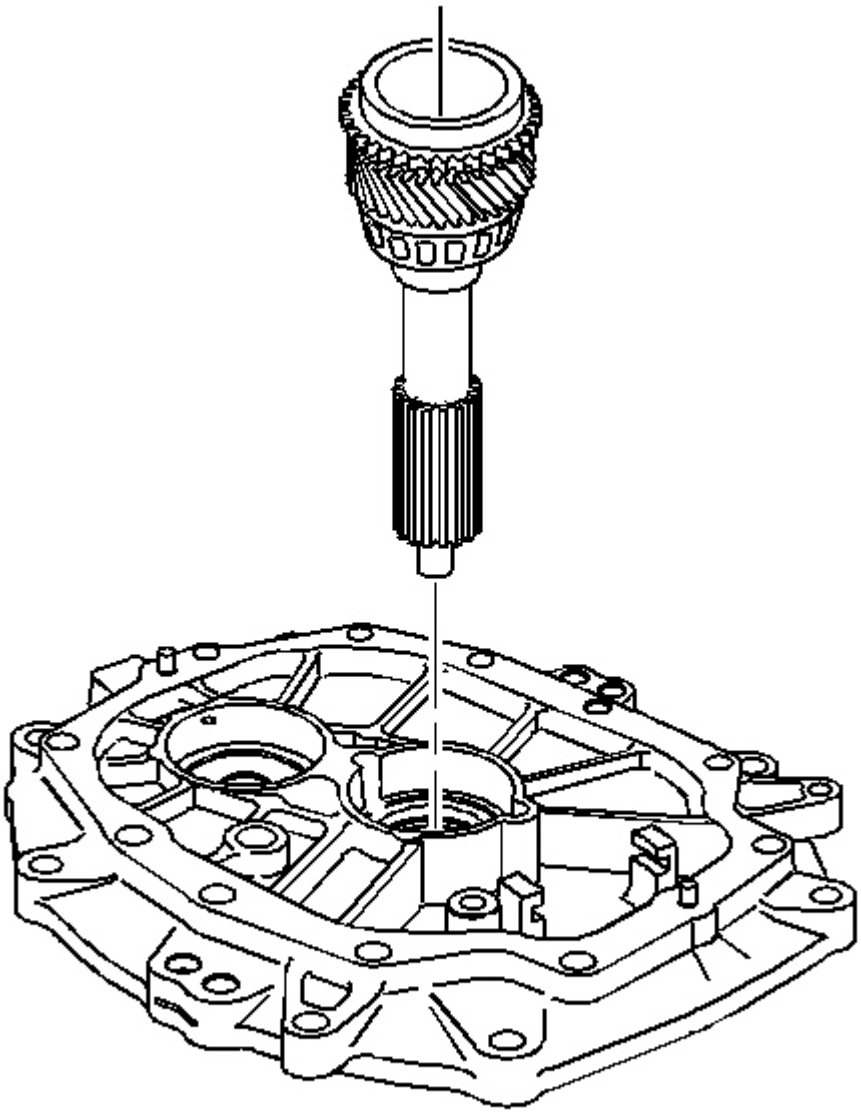

Fig. 46: View Of Input Shaft
Courtesy of GENERAL MOTORS CORP.

6. Remove the input shaft.

cardiagn.com

TRANSMISSION DISASSEMBLE (CTSV)

Extension Housing Removal

Tools Required

- **J 3289-20** Holding Fixture. See **Special Tools** .
- **J 44395** Transmission Holding Fixture. See **Special Tools** .

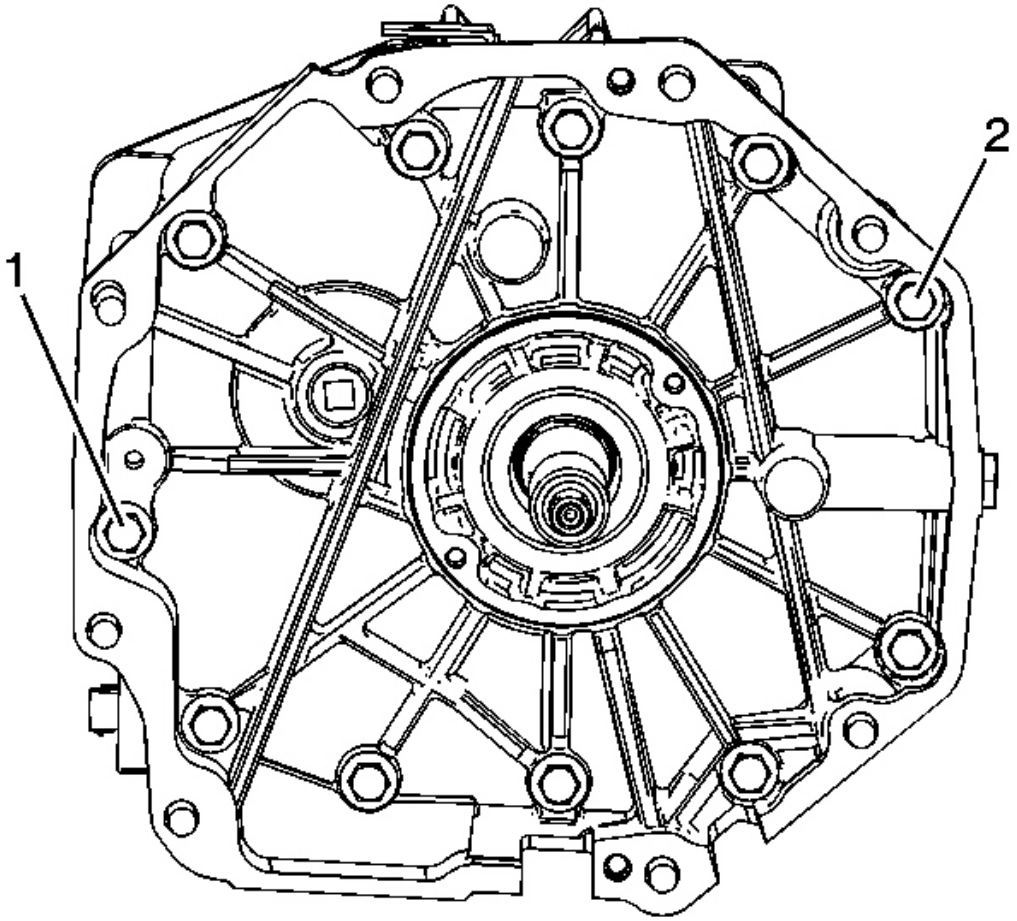

Fig. 47: Locating Adapter Plate Bolts
Courtesy of GENERAL MOTORS CORP.

1. Remove the adapter plate bolts (1) and (2).

cardiagn.com

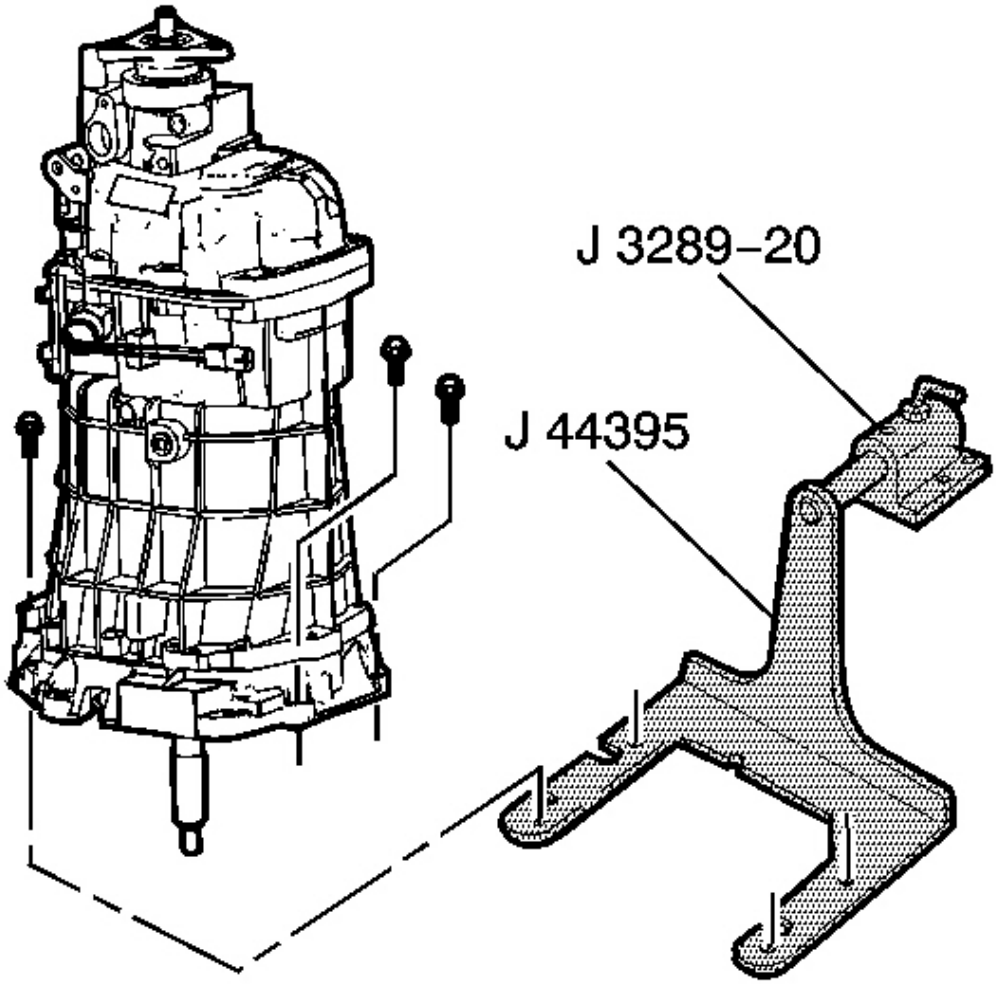

Fig. 48: Installing/Removing Transmission On J 44395 & J 3289-20
Courtesy of GENERAL MOTORS CORP.

2. Install the **J 44395** .
3. Mount the transmission on a workbench using the **J 3289-20** .
4. Rotate the transmission into a horizontal position.
5. Remove the transmission drain plug and drain the transmission fluid.
6. Shift the transmission into neutral (N).

cardiagn.com

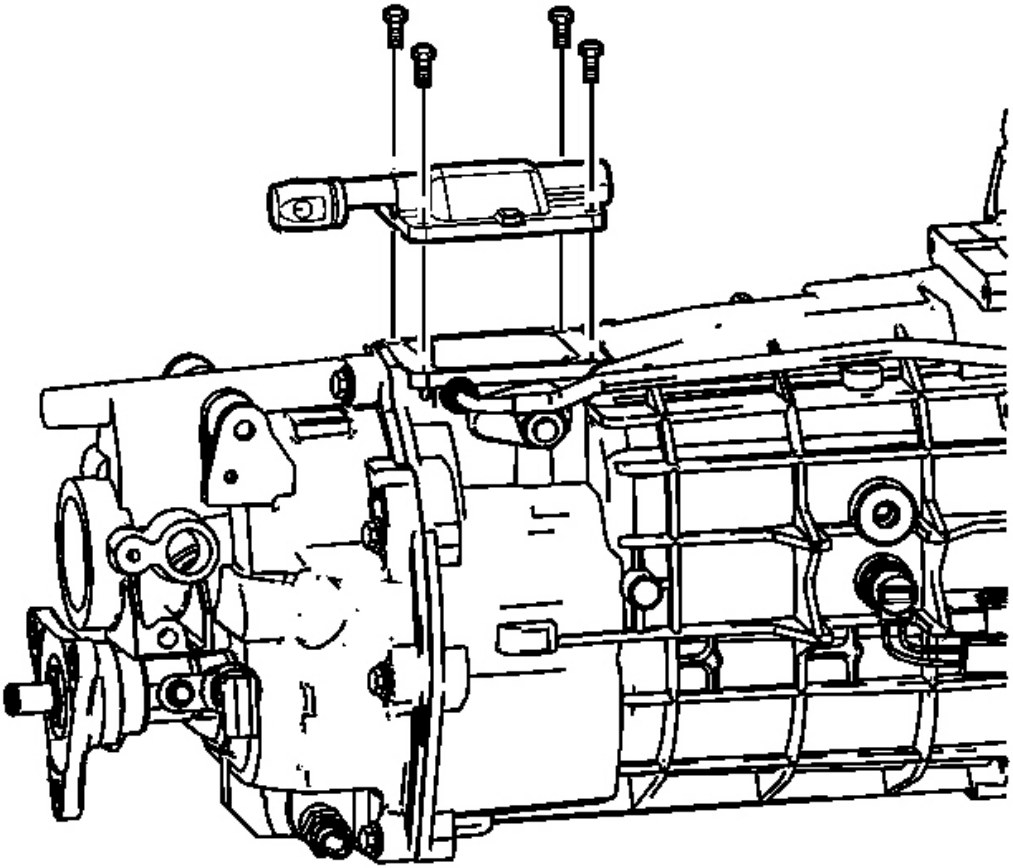

Fig. 49: Removing/Installing Shifter Cover Plate & Bolts
Courtesy of GENERAL MOTORS CORP.

7. Remove the shifter cover plate bolts.
8. Remove the shifter cover plate.

cardiagn.com

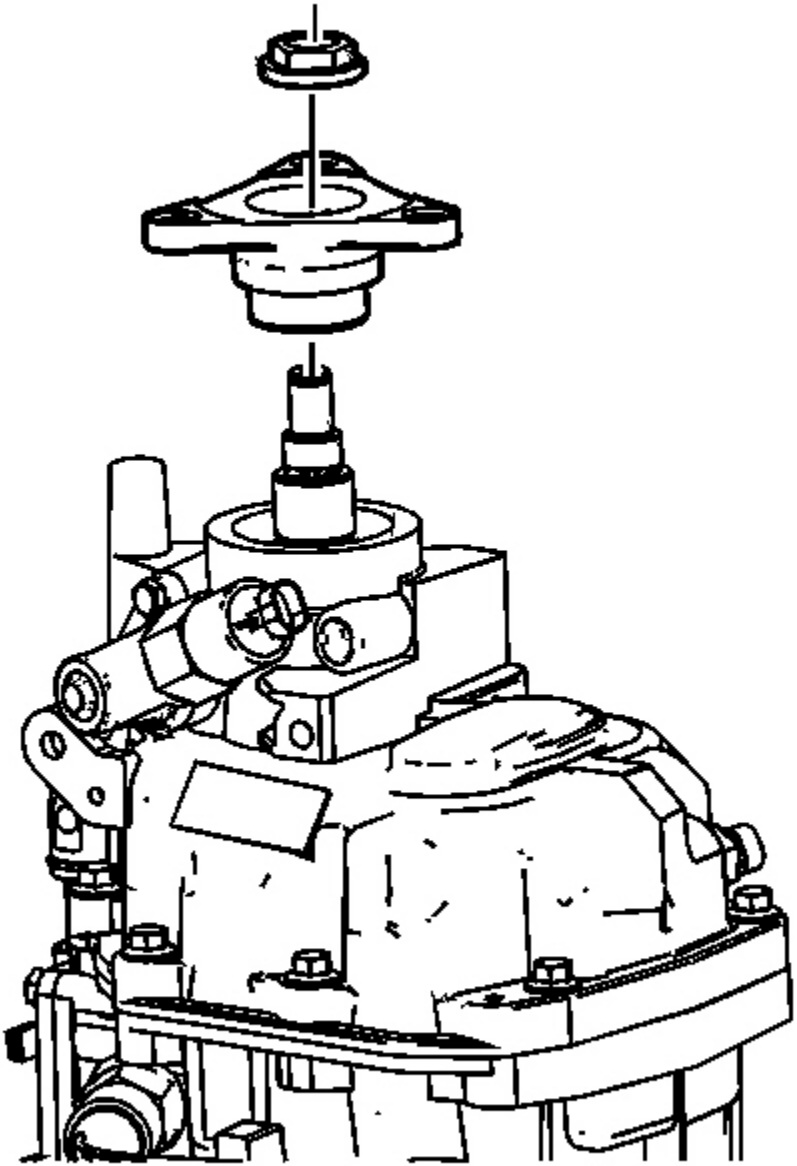

Fig. 50: Locating Propshaft & Connector Bolt
Courtesy of GENERAL MOTORS CORP.

9. Remove the propshaft connector bolt.
10. Remove the propshaft.

cardiagn.com

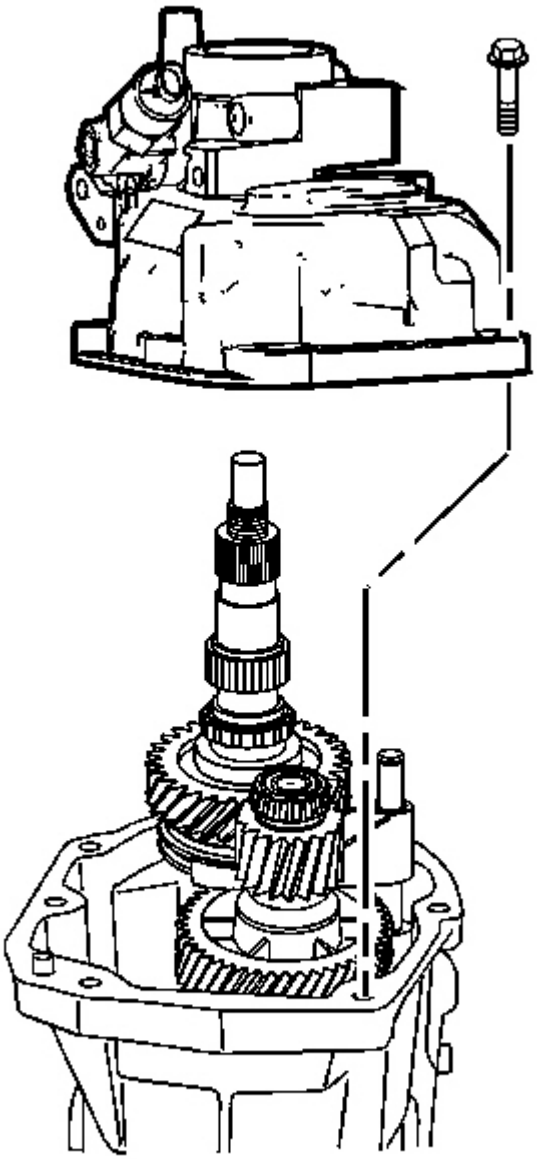

Fig. 51: View Of Rear Extension Housing Bolts & Rear Extension Housing
Courtesy of GENERAL MOTORS CORP.

11. Remove the rear extension housing bolts and the rear extension housing.

Reverse Speed Gear Removal

cardiagn.com

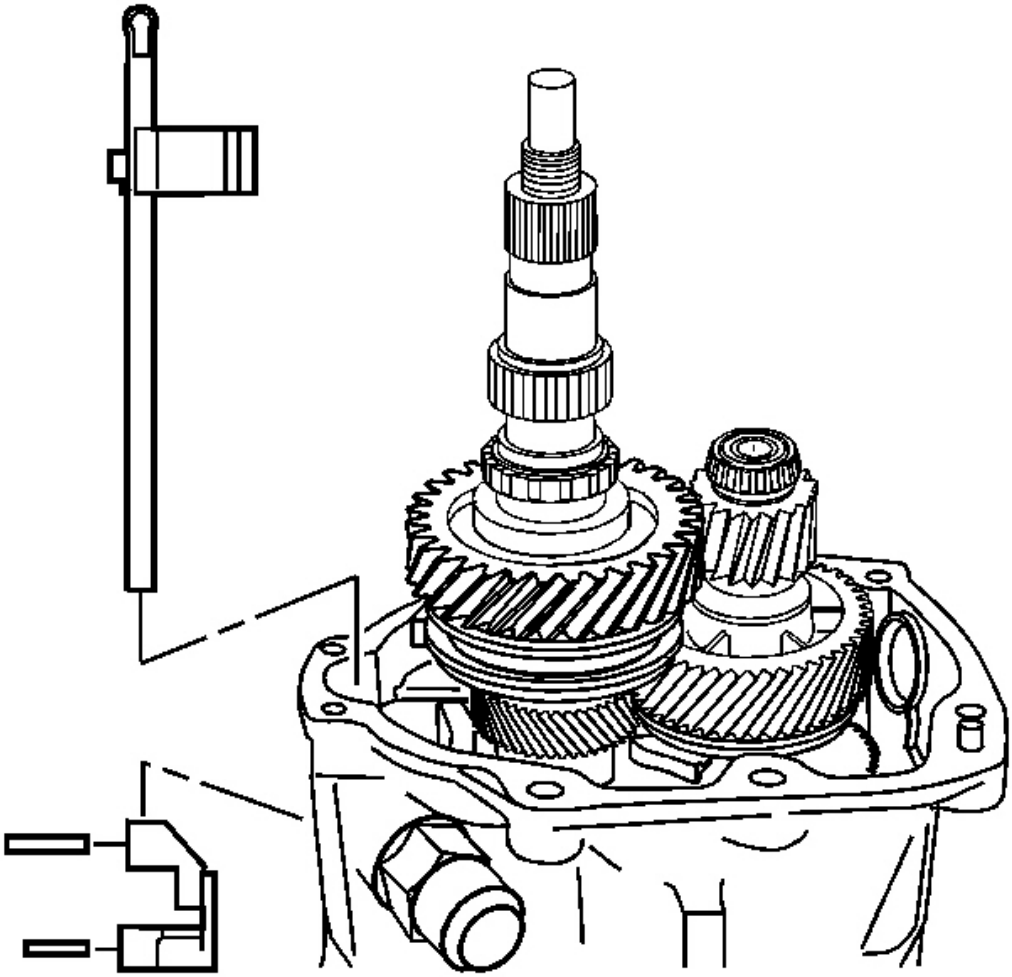

Fig. 52: Identifying Shift Guide, Rollpins & Shift Shaft Extension
Courtesy of GENERAL MOTORS CORP.

1. Roll the shift guide rollpins.
2. Remove the shift guide.
3. Remove the shift shaft extension.

cardiagn.com

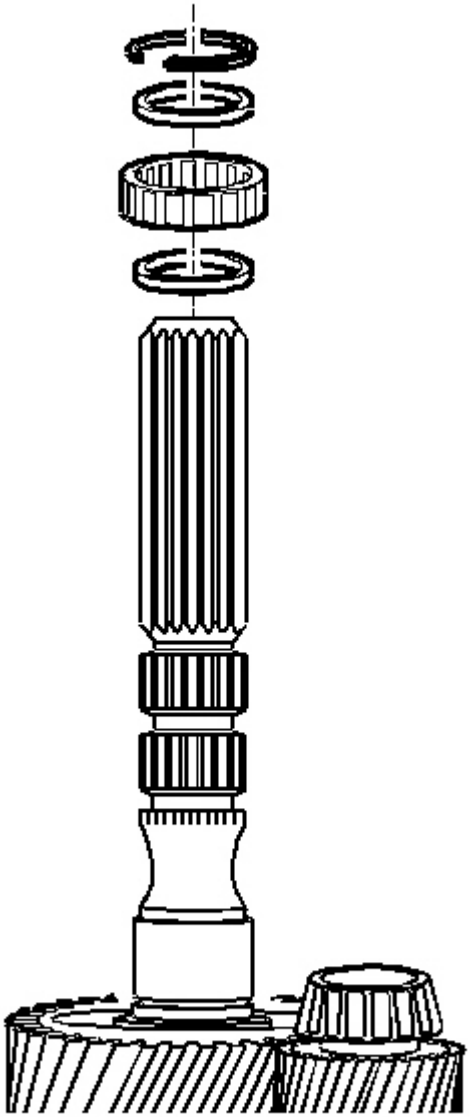

Fig. 53: View Of Mainshaft Rear Roller Bearing, Rear Bearing Retainer Ring & Spacers
Courtesy of GENERAL MOTORS CORP.

4. Remove the rear bearing retainer ring.
5. Remove the spacer.
6. Remove the mainshaft rear roller bearing.
7. Remove the spacer.

cardiagn.com

8. Remove the retainer ring.
9. Remove the reverse gear thrust washer.
10. Remove the reverse gear.

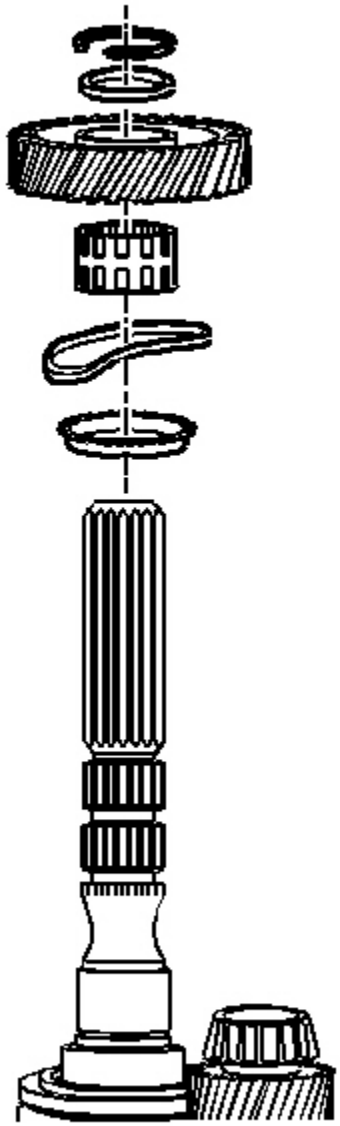

Fig. 54: Identifying Reverse Speed Gear Components
Courtesy of GENERAL MOTORS CORP.

cardiagn.com

11. Remove the reverse gear caged needle bearing.
12. Remove the wave washer.
13. Remove the reverse gear synchronizer blocking ring.

Reverse Shift Fork Removal

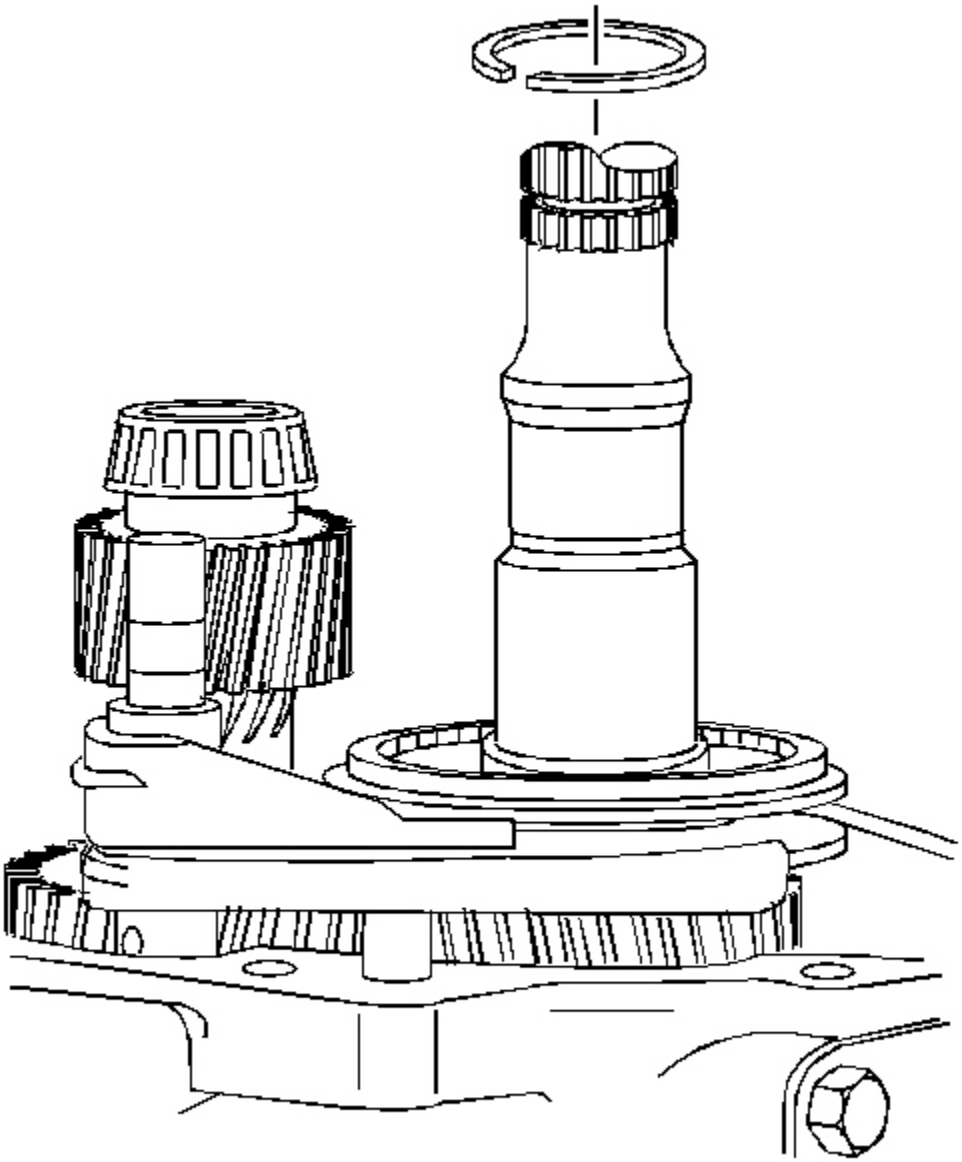

cardiagn.com

Fig. 55: View Of Reverse Synchronizer Retainer Ring
Courtesy of GENERAL MOTORS CORP.

1. Remove the reverse synchronizer retainer ring.

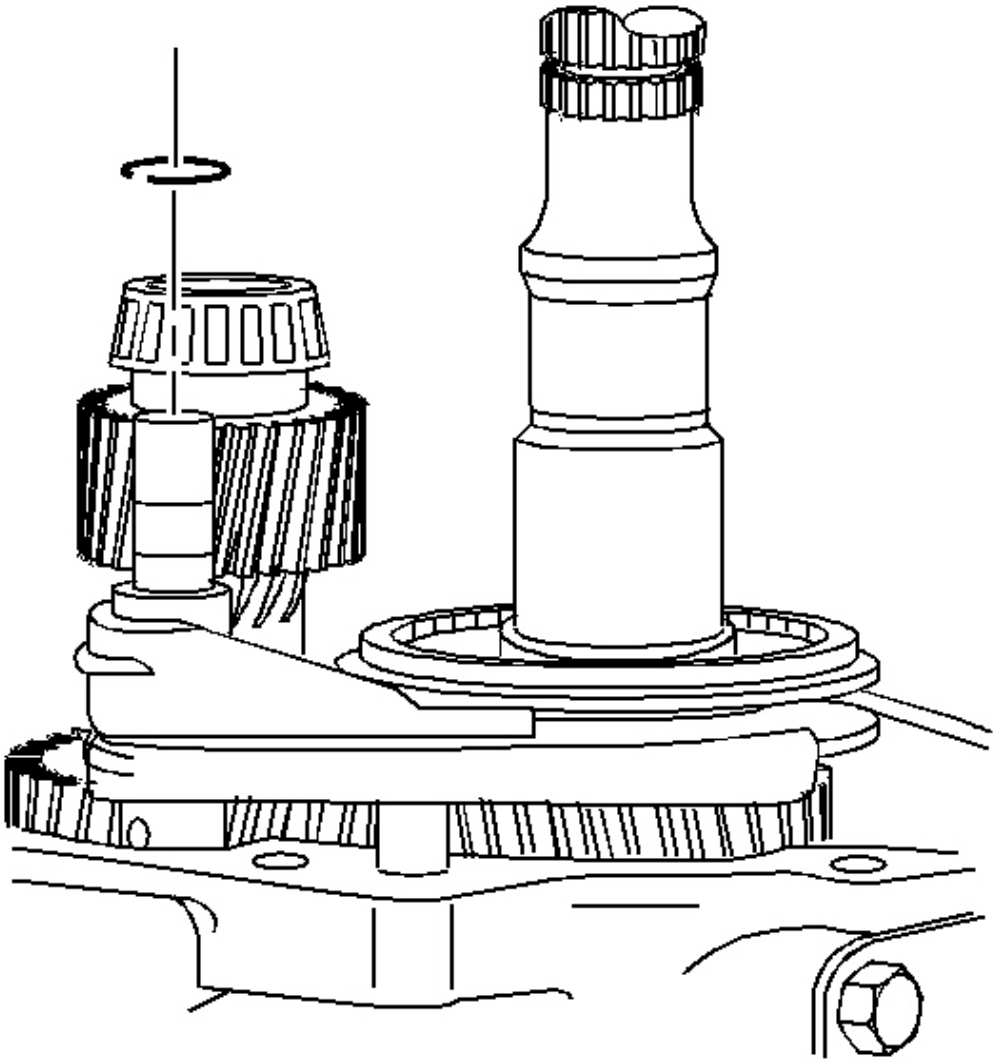

Fig. 56: Installing/Removing Shift Fork Retainer Ring
Courtesy of GENERAL MOTORS CORP.

2. Remove and discard the reverse shift fork retainer ring.

cardiagn.com

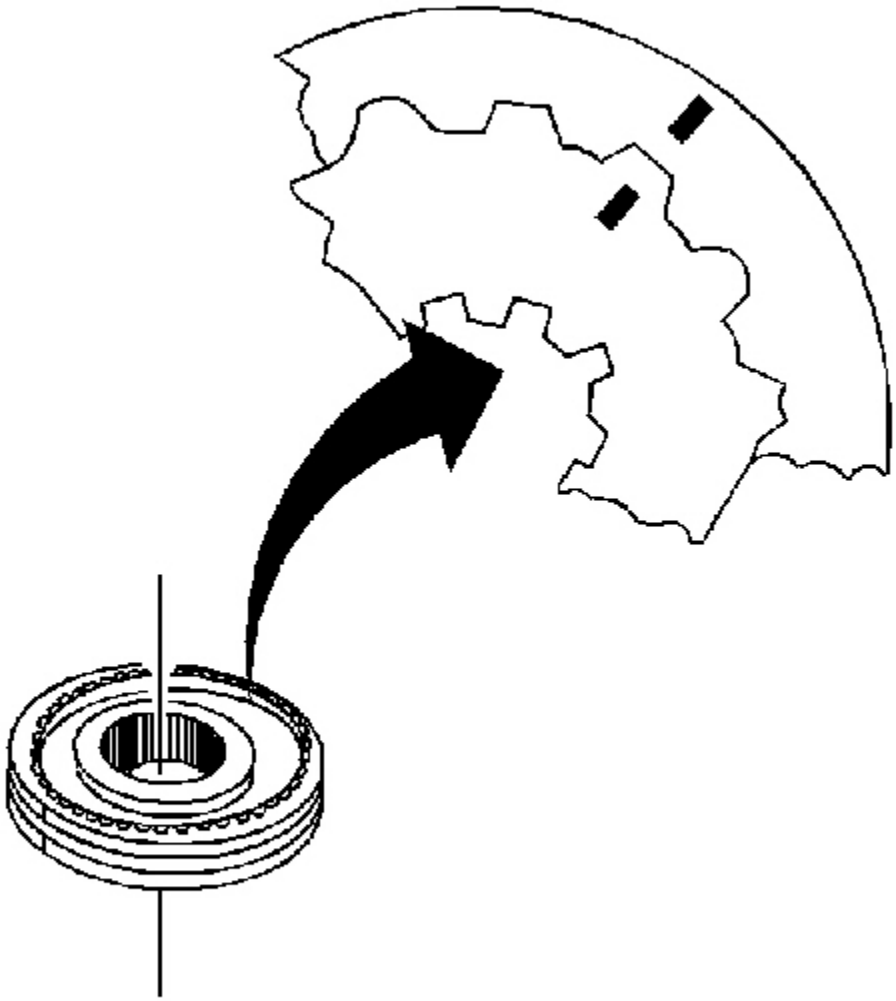

Fig. 57: Identifying Speed Gear Synchronizer Assembly Scribe Marks
Courtesy of GENERAL MOTORS CORP.

3. Scribe a mark on the synchronizer hub and on the sleeve. This will help you to reinstall the parts in the same position.

cardiagn.com

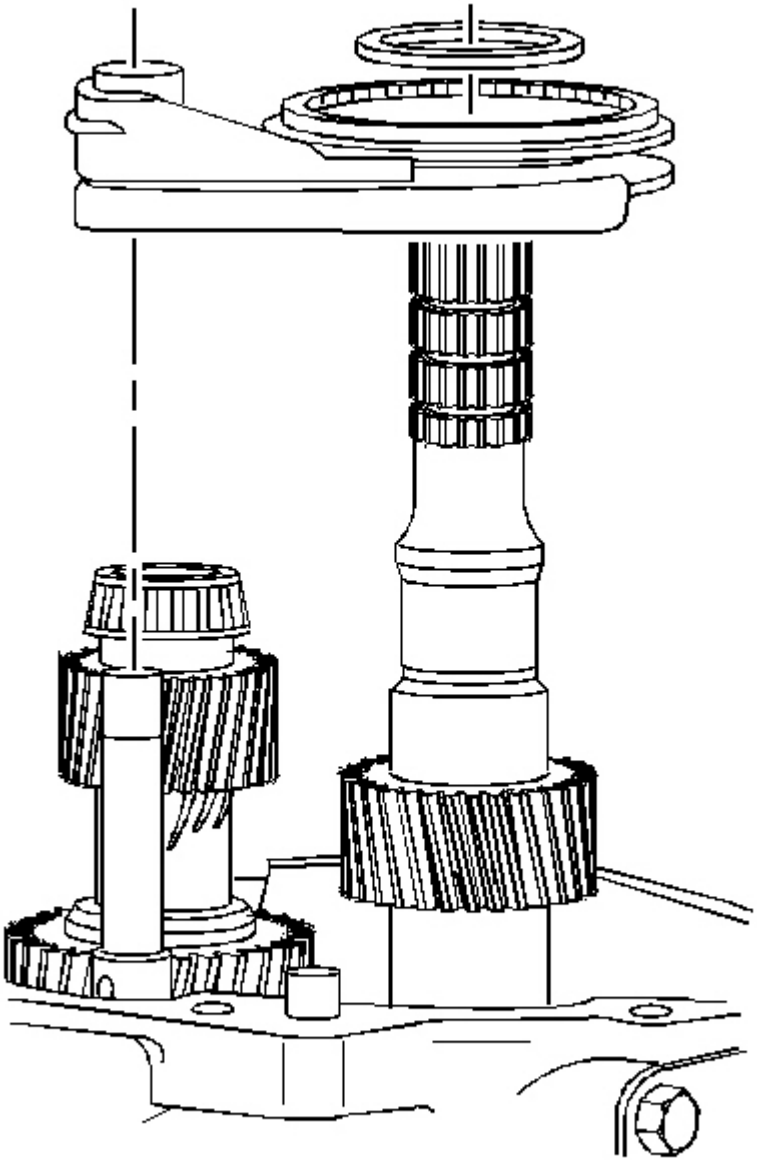

Fig. 58: Identifying Reverse Shift Fork, Synchronizer & Thrust Washer
Courtesy of GENERAL MOTORS CORP.

4. Remove the following parts in order:
    1. The thrust washer
    2. The reverse synchronizer assembly and the shift fork

cardiagn.com

5th/6th Speed Driven Gear Removal

Tools Required

- **J 8433** Universal Bridge Puller. See **Special Tools** .
- **J 39431-1** Gear Remover and Bolts. See **Special Tools** .

cardiagn.com

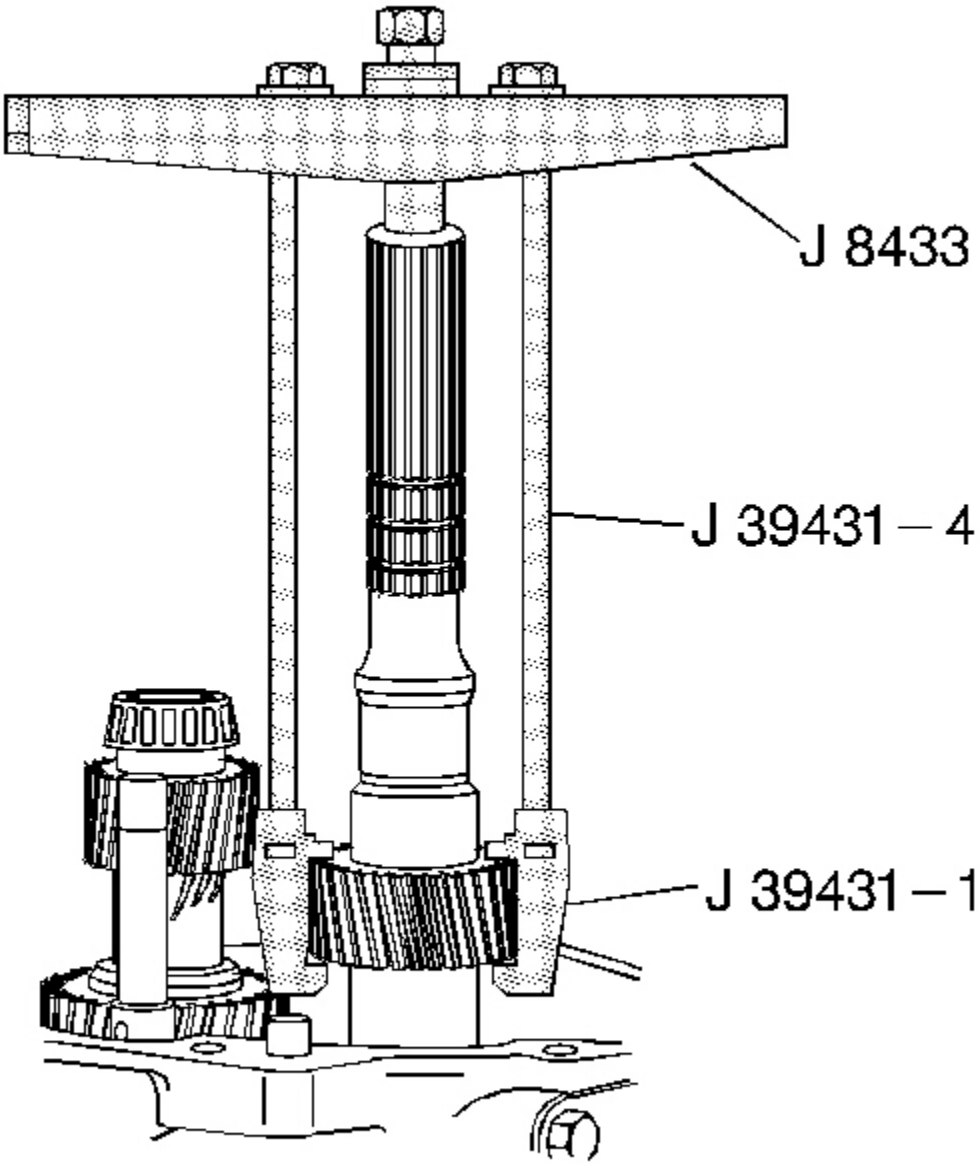

Fig. 59: Removing The 5Th/6Th Speed Driven Gear Using J 8433, J 39431-4 & J 39431-1
Courtesy of GENERAL MOTORS CORP.

Remove the 5th/6th speed driven gear. Use the **J 8433** , the **J 39431-1** and the J 39431-4.

Countershaft Extension Removal

cardiagn.com

1. Remove the 5th/6th speed shift fork retainer ring.

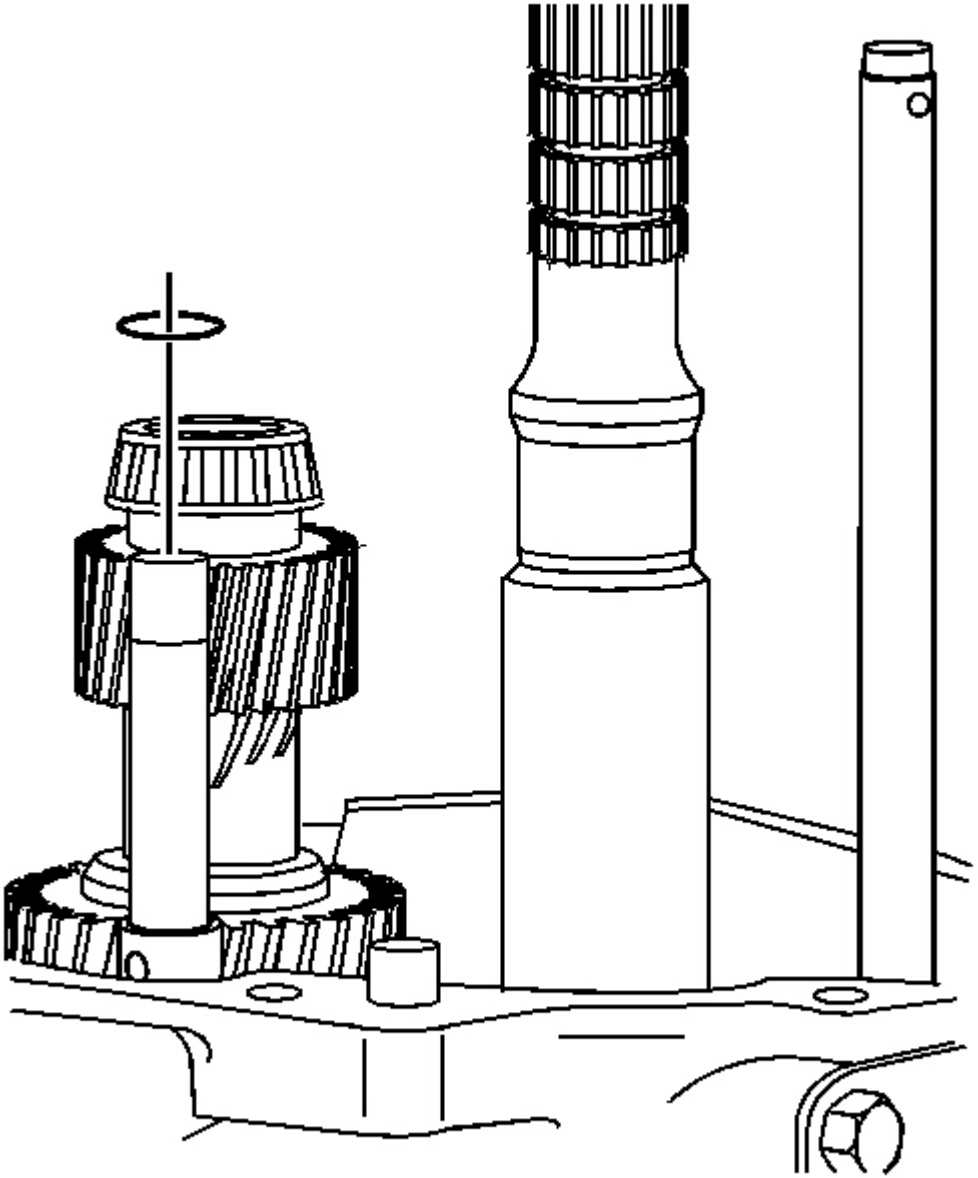

Fig. 60: View Of 5th/6th Shift Fork Retainer Ring
Courtesy of GENERAL MOTORS CORP.

2. Rotate the transmission in the horizontal position with the guide plate up.

cardiagn.com

3. Remove the countershaft extension assembly with the 5th/6th speed shift fork, 6th speed gear bearing spacer, 6th speed drive gear, and caged needle bearing. The 6th speed gear bearing spacer will slide out during removal of the countershaft extension assembly.

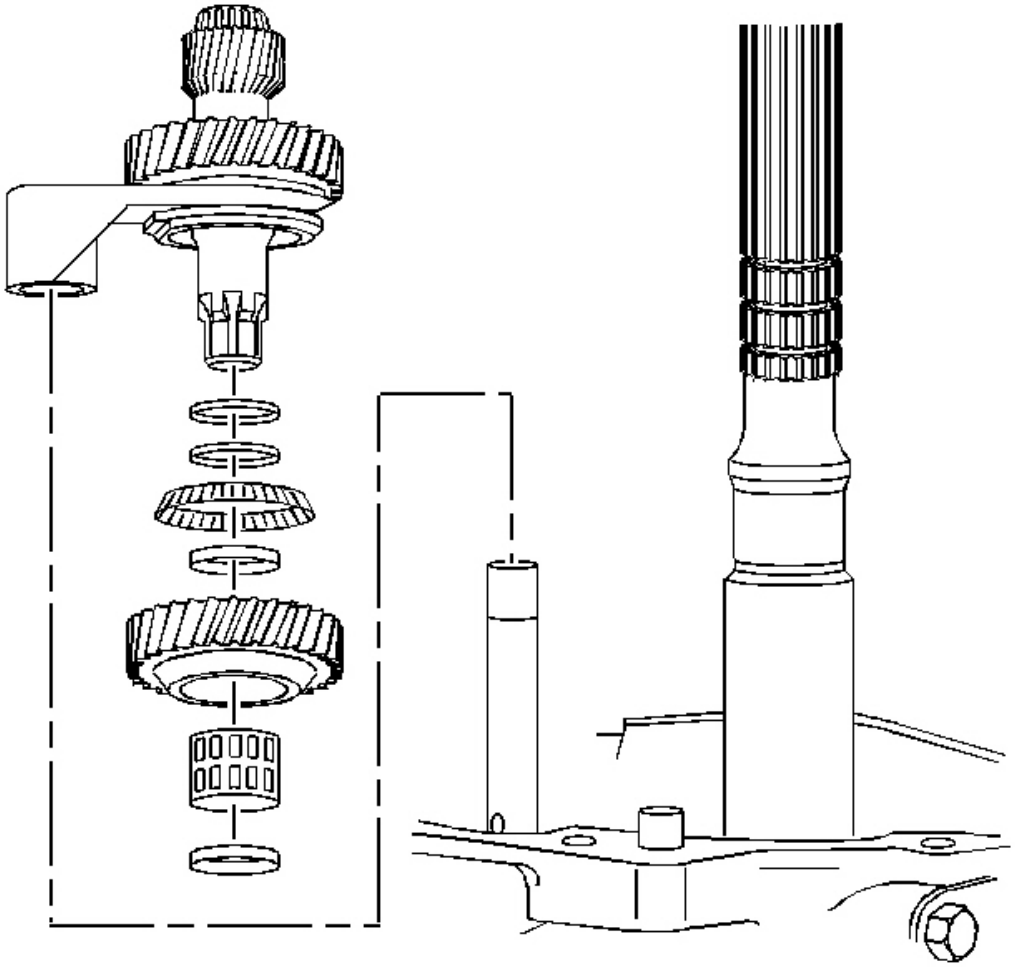

Fig. 61: Identifying Countershaft Extension Assembly & 5th/6th Shift Fork
Courtesy of GENERAL MOTORS CORP.

Tools Required

J 41099 Skip Shift Sensor Remover/Installer. See **Special Tools** .

Transmission Case Removal

cardiagn.com

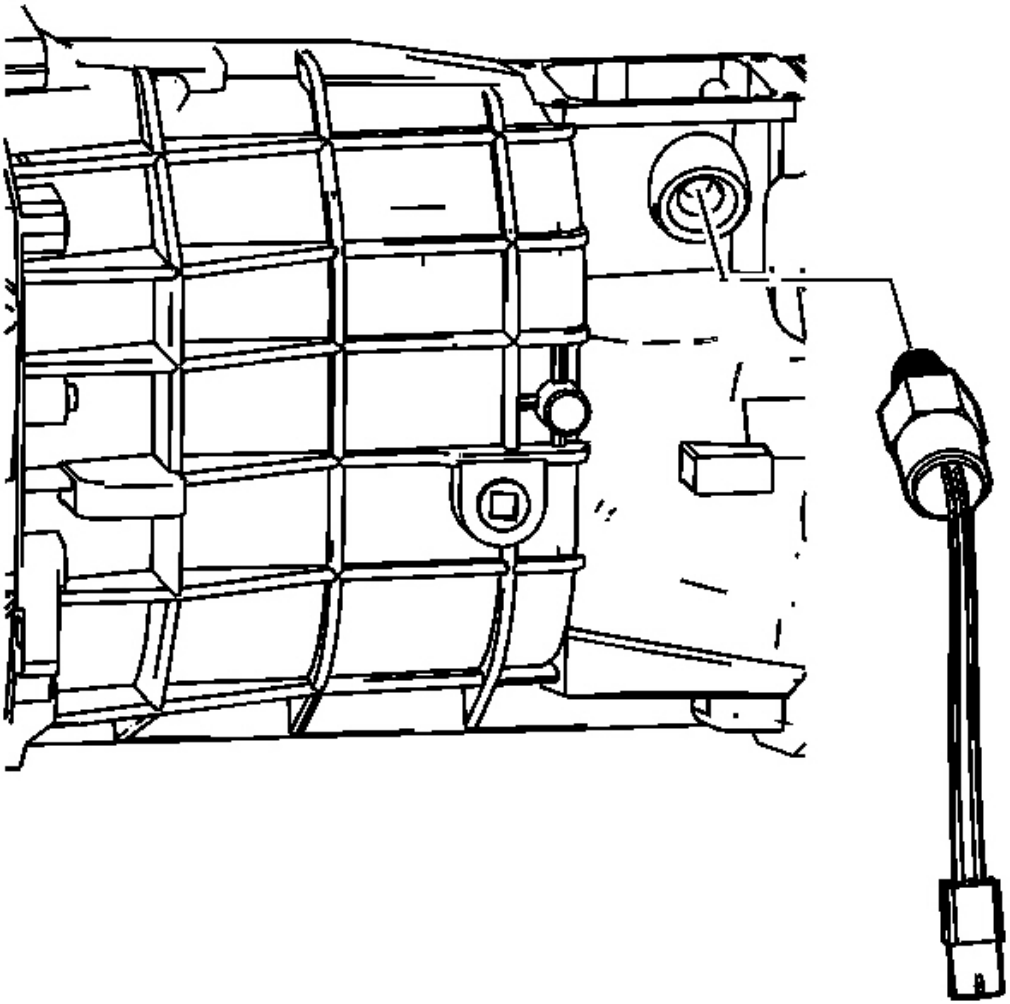

Fig. 62: Locating Computer Aided Gear Select Solenoid
Courtesy of GENERAL MOTORS CORP.

1. Remove the computer aided gear select solenoid.

cardiagn.com

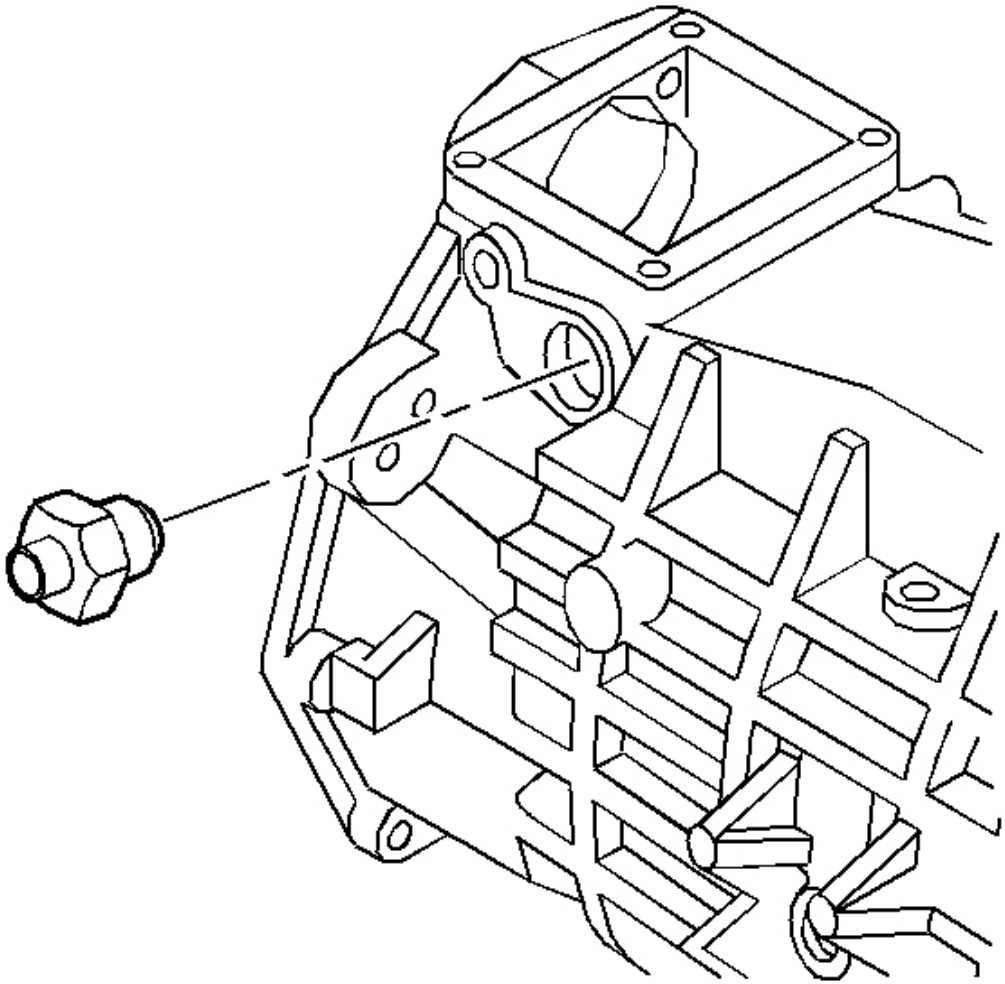

Fig. 63: View Of Shift Detent Assembly
Courtesy of GENERAL MOTORS CORP.

2. Remove the shift detent assembly.

cardiagn.com

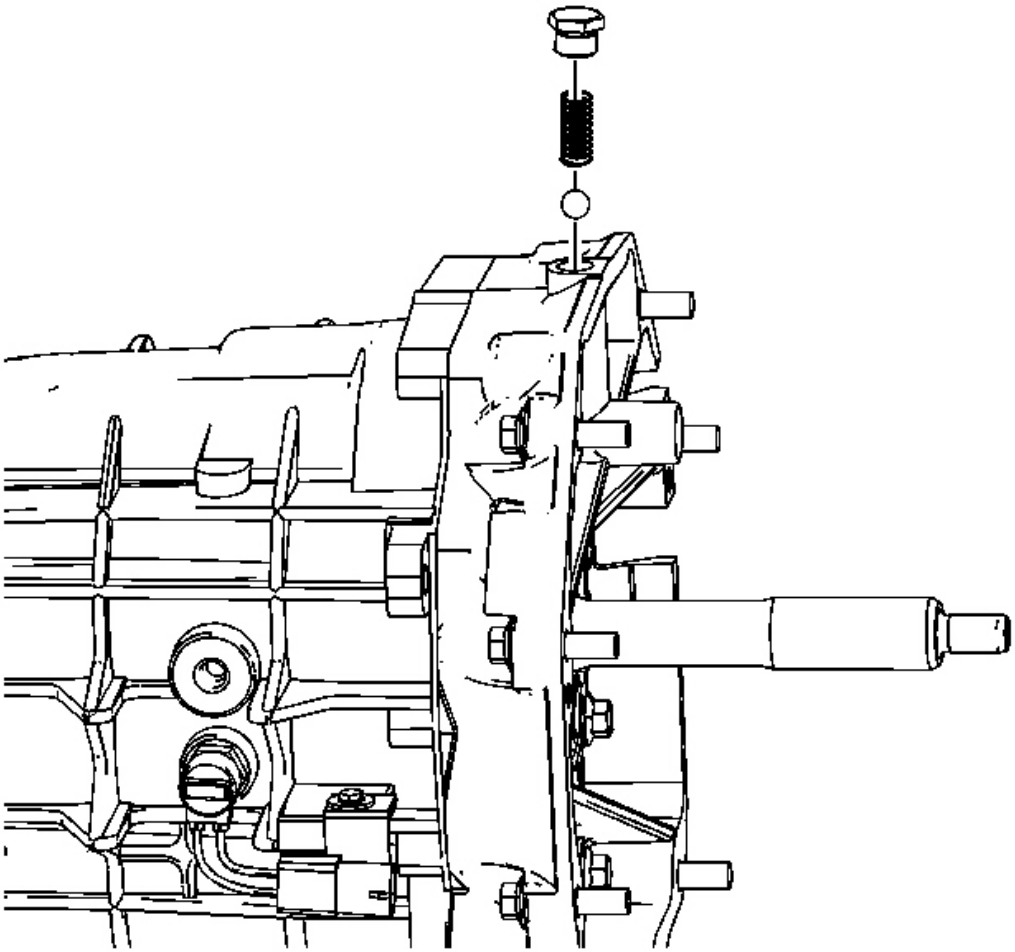

Fig. 64: Installing/Removing Shift Detent Plug, Spring And Ball
Courtesy of GENERAL MOTORS CORP.

3. Remove the shift detent plug, spring, and ball.

cardiagn.com

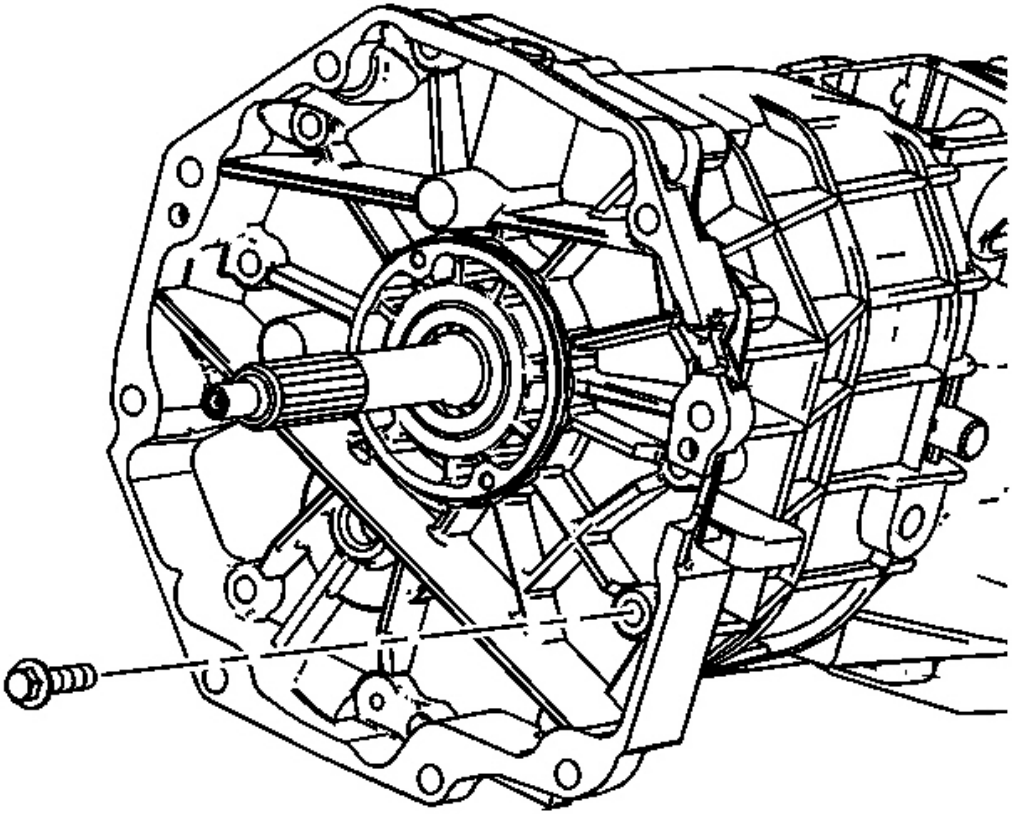

Fig. 65: Locating Adapter Plate To Transmission Case Bolts
Courtesy of GENERAL MOTORS CORP.

4. Remove 9 of the 11 adapter plate to transmission case bolts.
5. Rotate the transmission into the vertical position.

cardiagn.com

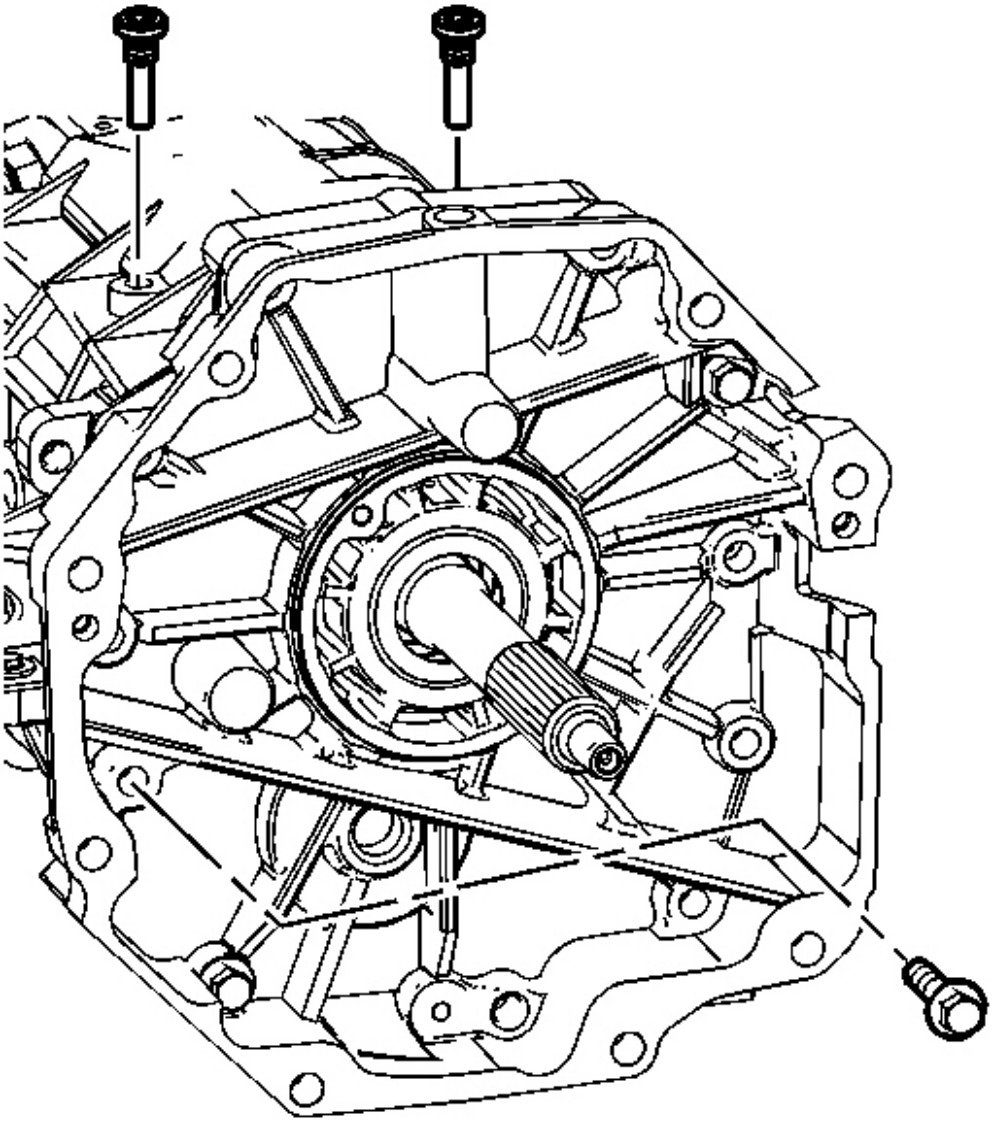

Fig. 66: View Of Adapter Plate To Transmission Case Bolts & Shift Lever Guide Bolts
Courtesy of GENERAL MOTORS CORP.

6. Remove the last 2 adapter plate to transmission case bolts.
7. Remove the shift lever guide bolts.

cardiagn.com

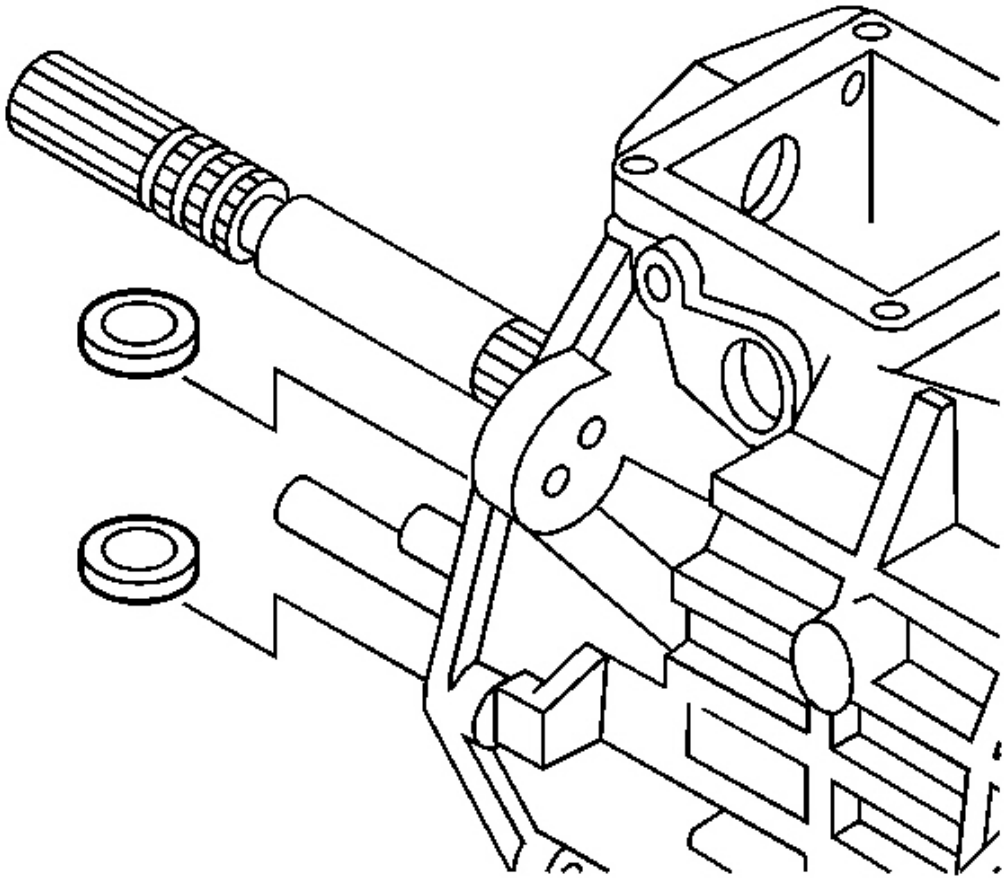

Fig. 67: Identifying Transmission Magnets
Courtesy of GENERAL MOTORS CORP.

8. Remove the magnets from the transmission case.

cardiagn.com

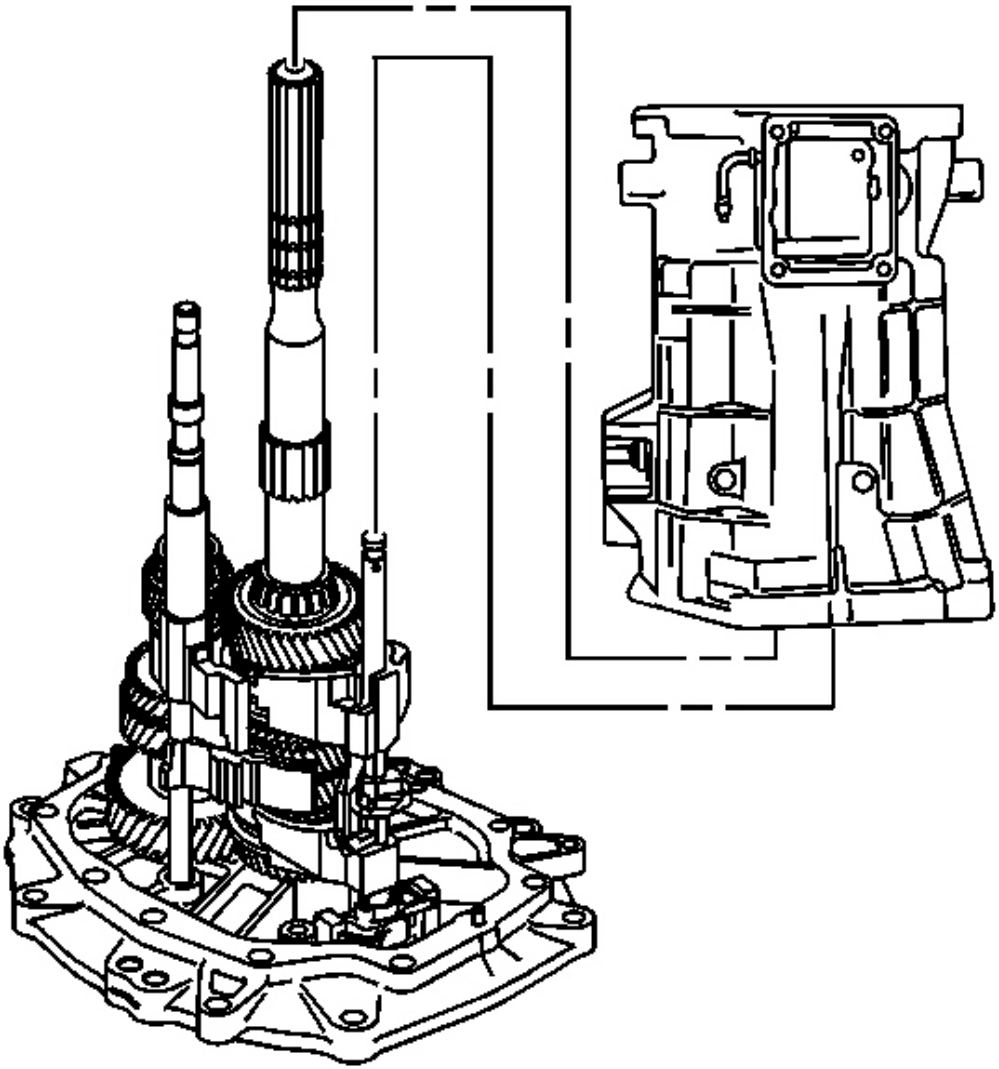

Fig. 68: Installing/Removing Transmission Case
Courtesy of GENERAL MOTORS CORP.

9. Remove the transmission case and the offset lever together as follows:
    1. Slide the transmission case up and off of the gear clusters and the shift shaft components.
    2. Hold the offset lever against the guide plate in order to prevent the release of the detent ball and the spring.
    3. Remove the offset lever from the transmission case.

cardiagn.com

Guide Plate Removal

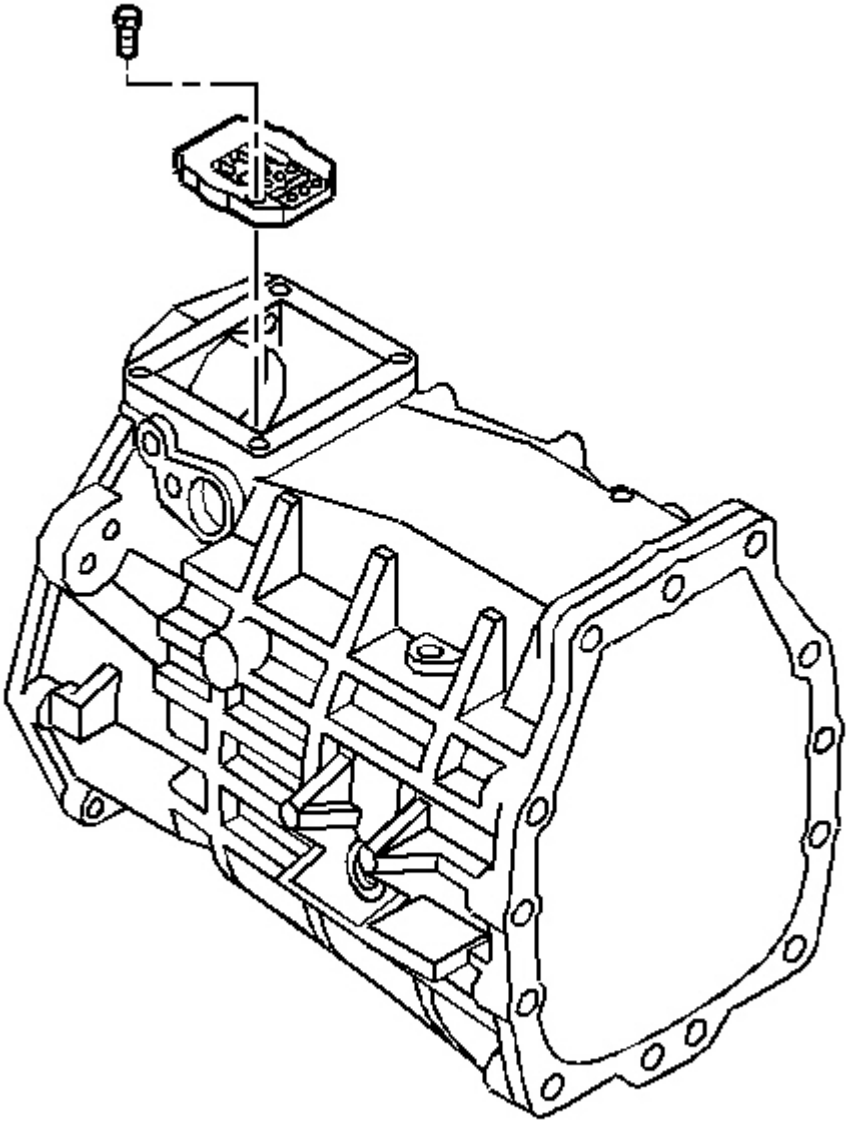

Fig. 69: Locating Detent Guide Plate & Attaching Bolts
Courtesy of GENERAL MOTORS CORP.

1. Remove the detent guide plate attaching bolts.
2. Remove the detent guide plate.

cardiagn.com

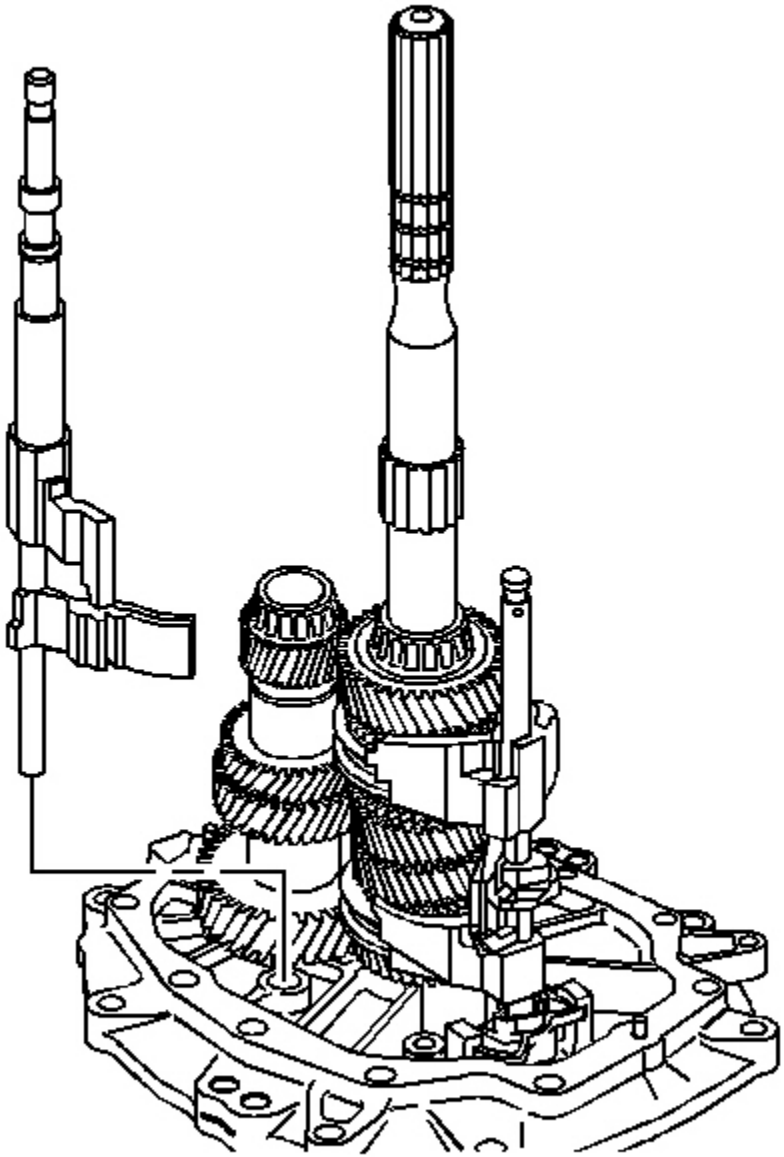

Fig. 70: View Of 5th/6th & Reverse Shift Shaft
Courtesy of GENERAL MOTORS CORP.

1. Rotate the 5th/6th and the reverse shift shaft levers off the shift interlock plate.

cardiagn.com

2. Remove the 5th/6th and the reverse shift shaft assembly.

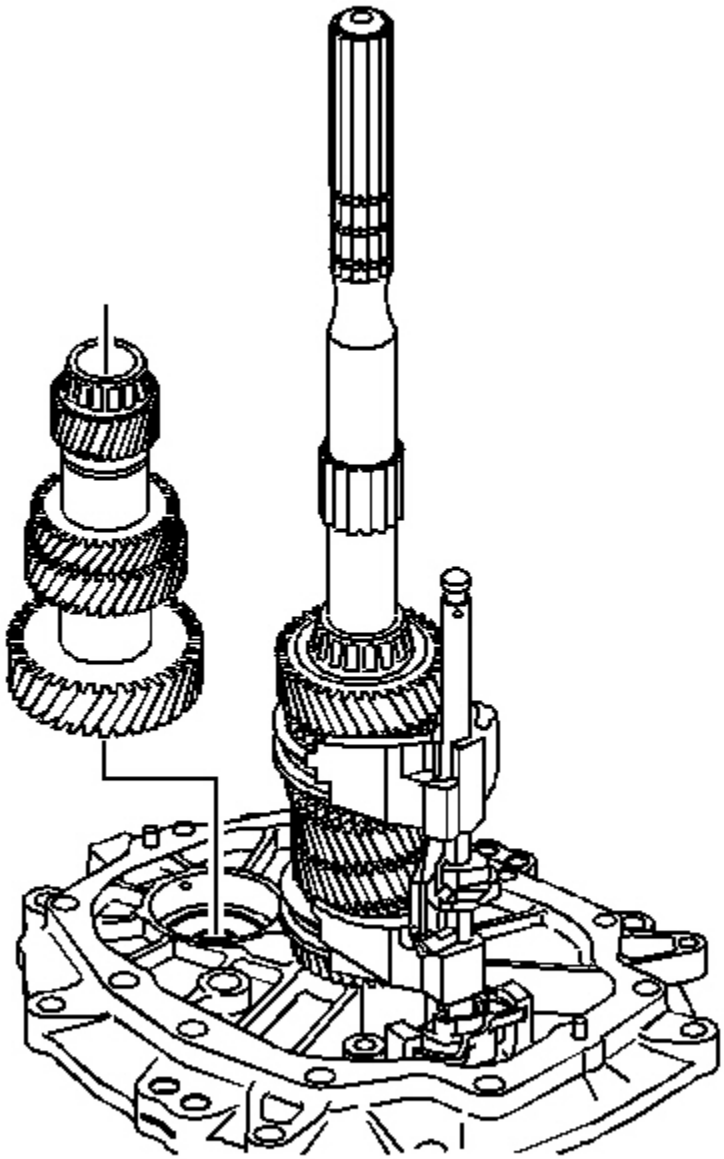

Fig. 71: Installing/Removing Countershaft Assembly
Courtesy of GENERAL MOTORS CORP.

3. Remove the countershaft. Lift up the mainshaft enough in order to remove the countershaft.

cardiagn.com

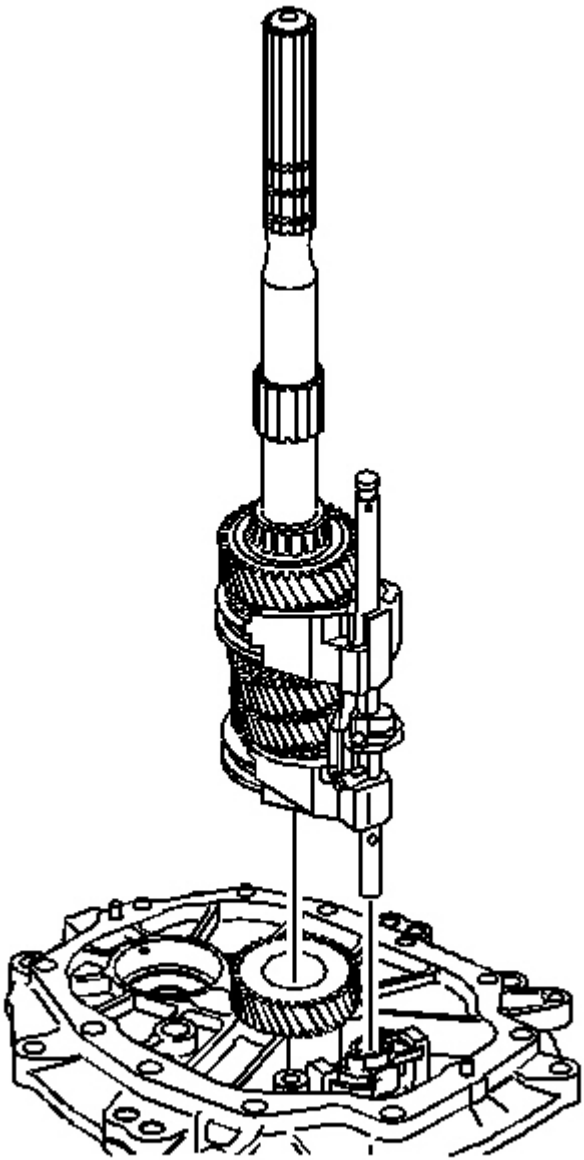

Fig. 72: Installing/Removing Mainshaft Assembly & Shift Shaft Components
Courtesy of GENERAL MOTORS CORP.

4. Remove the mainshaft and the shift shaft components as an assembly.

IMPORTANT: When removing the shift shaft be careful not to lose the dowel pin.

cardiagn.com

5. Remove the shift shaft assembly from the mainshaft.

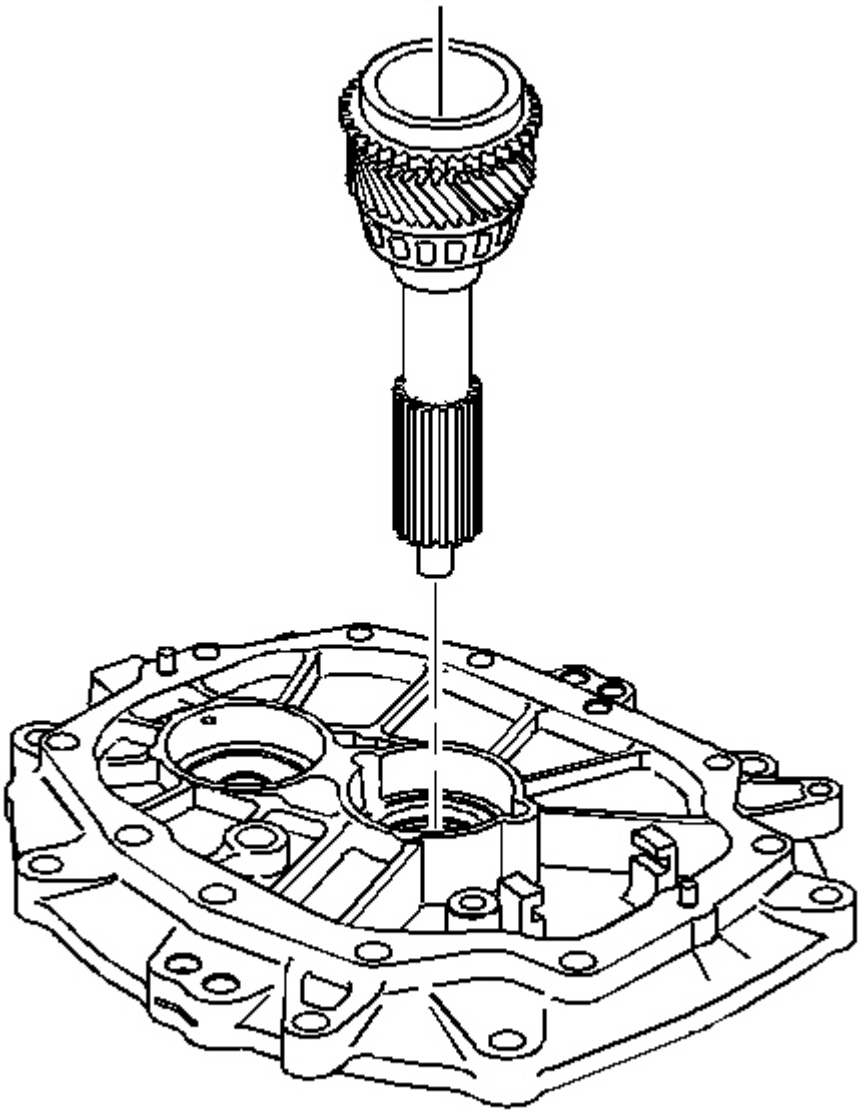

Fig. 73: View Of Input Shaft
Courtesy of GENERAL MOTORS CORP.

6. Remove the input shaft.

cardiagn.com

TRANSMISSION DISASSEMBLE (GTO)

Extension Housing Removal

Tools Required

- **J 3289-20** Holding Fixture Bench Mount. See **Special Tools** .
- J 39430 Transmission Support Fixture
- **J 39431-1** Gear Remover and Bolts. See **Special Tools** .
- **J 8433** Universal Bridge Puller. See **Special Tools** .
- **J 41099** Solenoid Socket. See **Special Tools** .

cardiagn.com

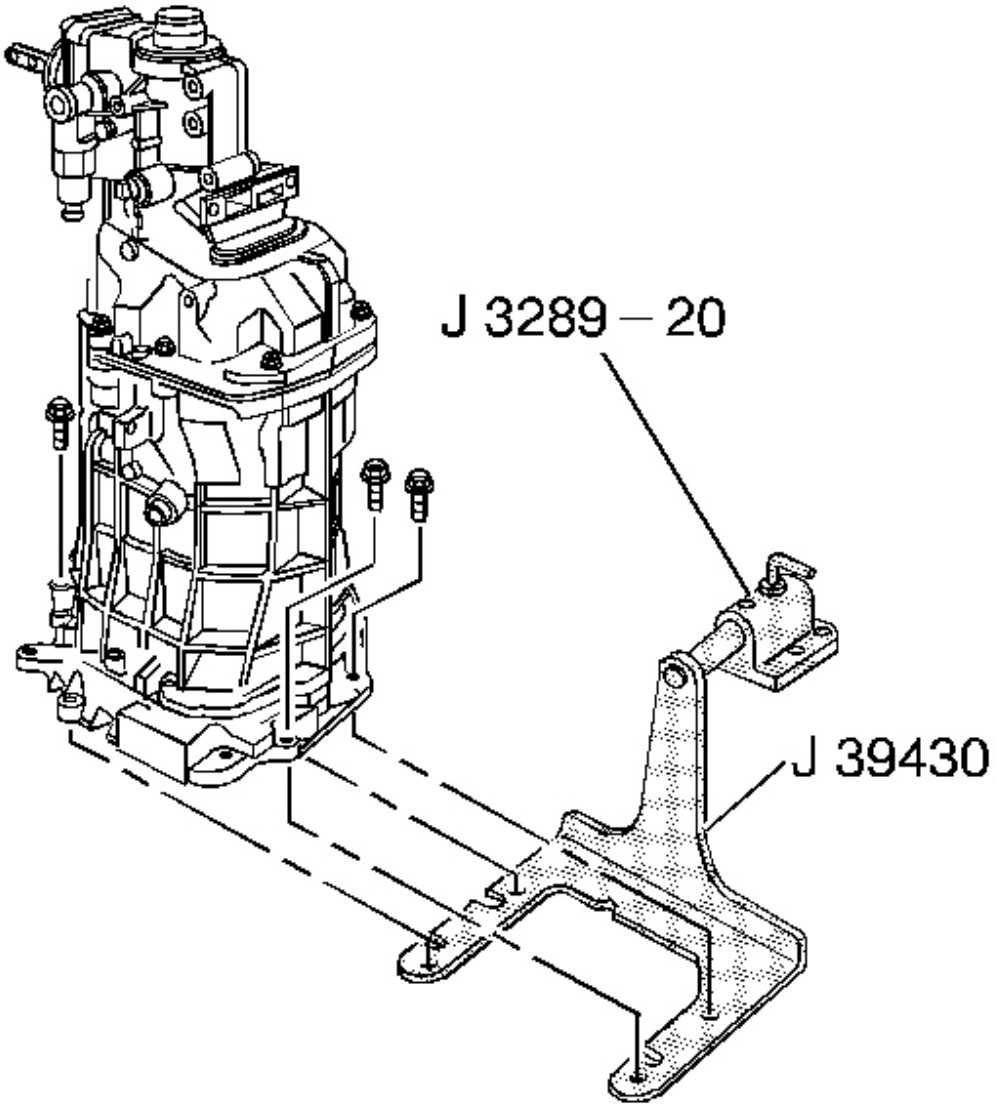

Fig. 74: Mounting Transmission On Workbench Using J 3289-20
Courtesy of GENERAL MOTORS CORP.

1. Remove the vent pipe.
2. Install the J 39430 .
3. Mount the transmission on a workbench using the **J 3289-20** .
4. Rotate the transmission into a horizontal position.

cardiagn.com

5. Remove the transmission drain plug and drain the transmission fluid.
6. Shift the transmission into neutral (N).

cardiagn.com

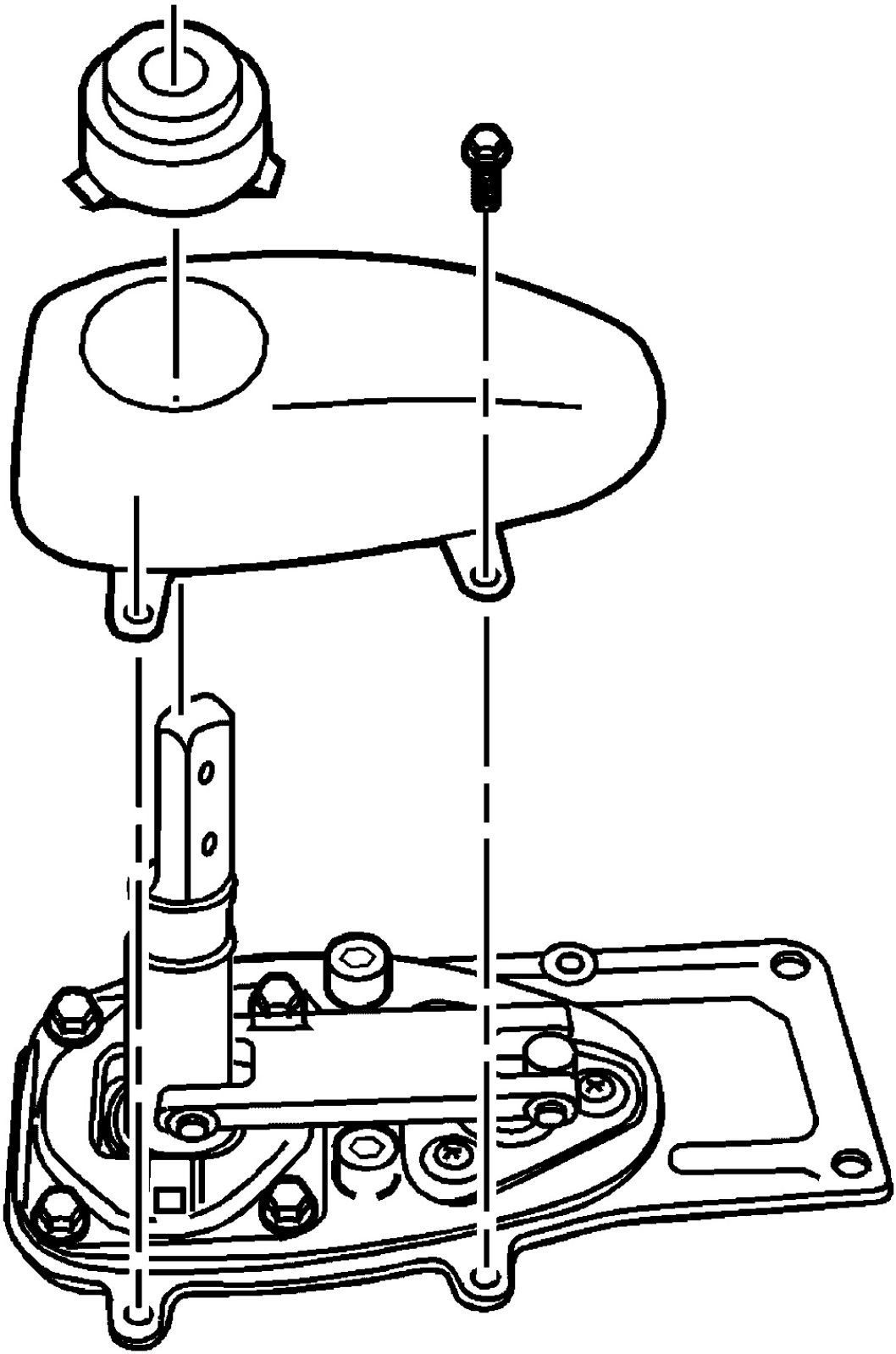

cardiagn.com

Fig. 75: View Of Shift Lever Cover & Retaining Screws
Courtesy of GENERAL MOTORS CORP.

7. Remove the shifter boot.
8. Remove the shift lever cover screws.
9. Remove the shift lever cover.

cardiagn.com

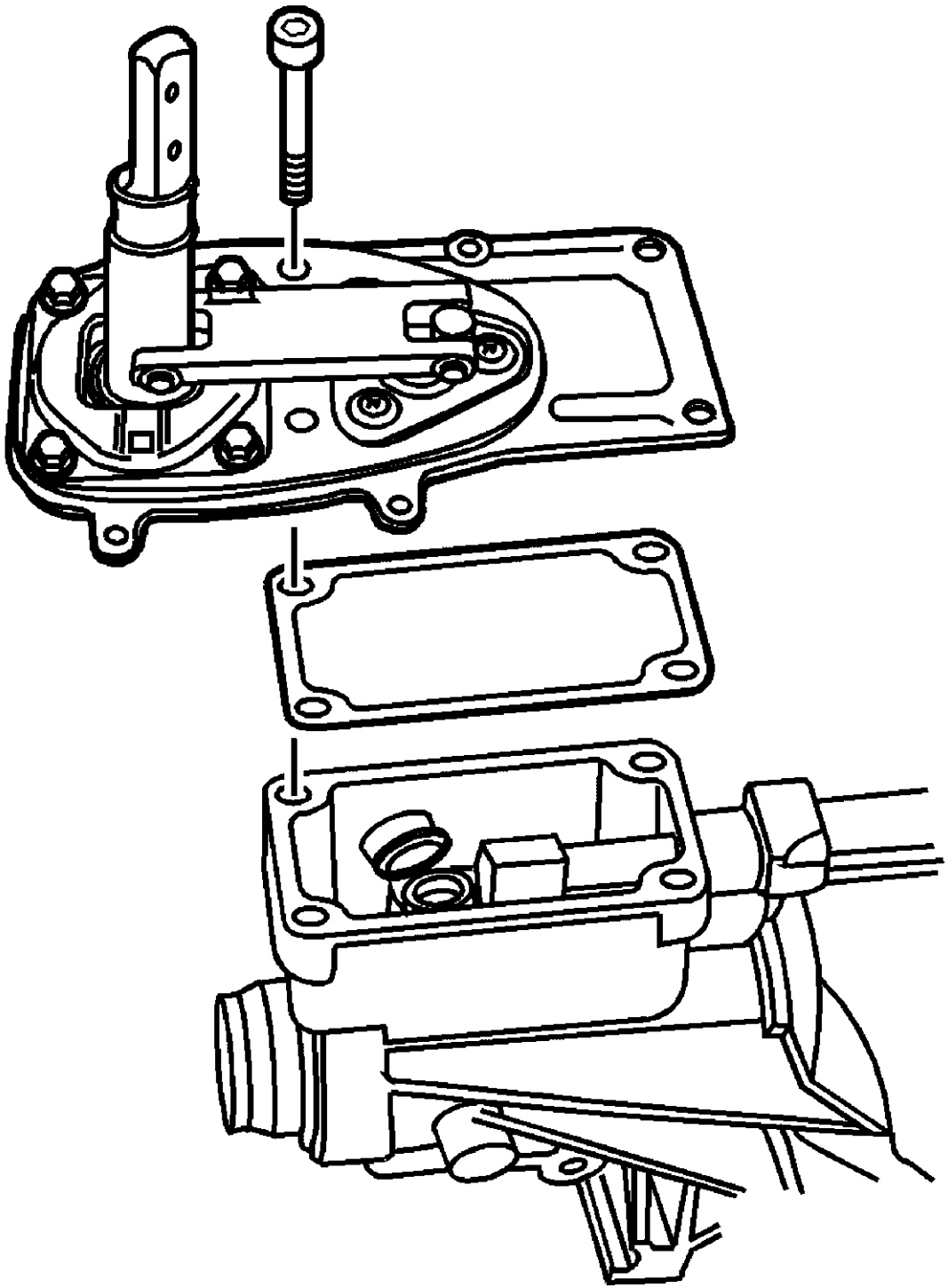

Fig. 76: Identifying Shifter, Gasket & Retaining Bolts
Courtesy of GENERAL MOTORS CORP.

cardiagn.com

10. Remove the shifter bolts.
11. Remove the shifter and shifter gasket.

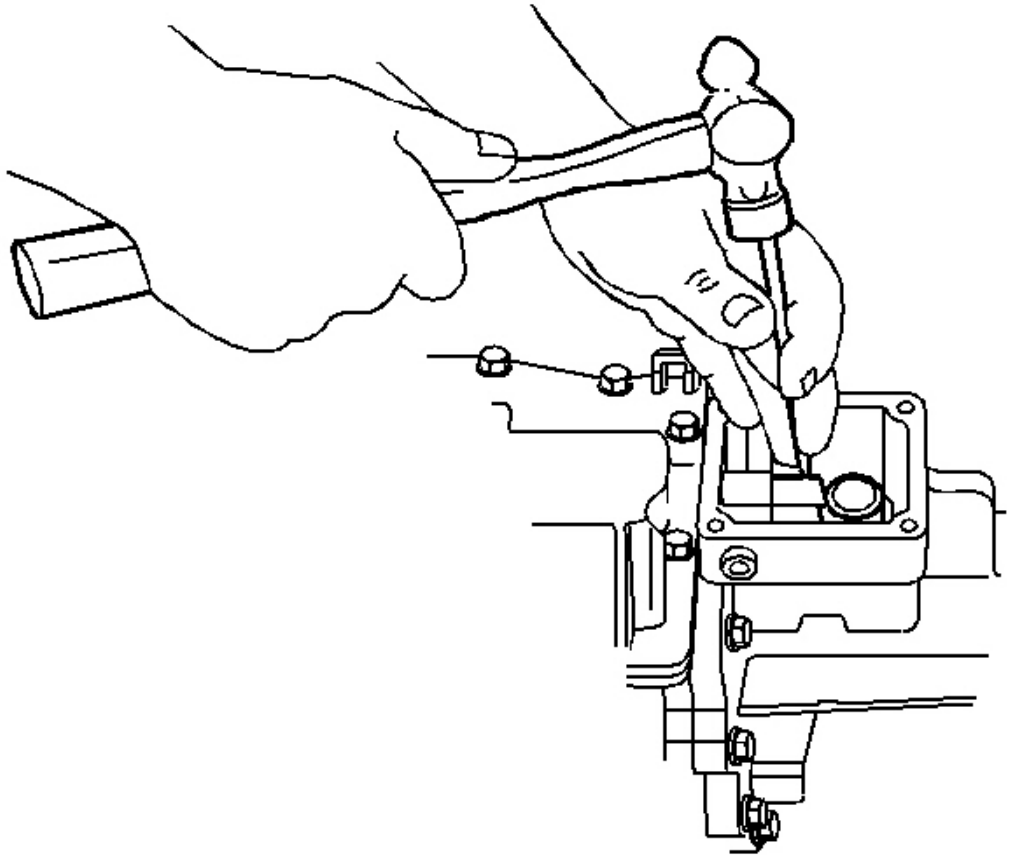

Fig. 77: Installing Rear Offset Shift Lever Roll Pin
Courtesy of GENERAL MOTORS CORP.

12. Remove rear offset shift lever roll pin.

cardiagn.com

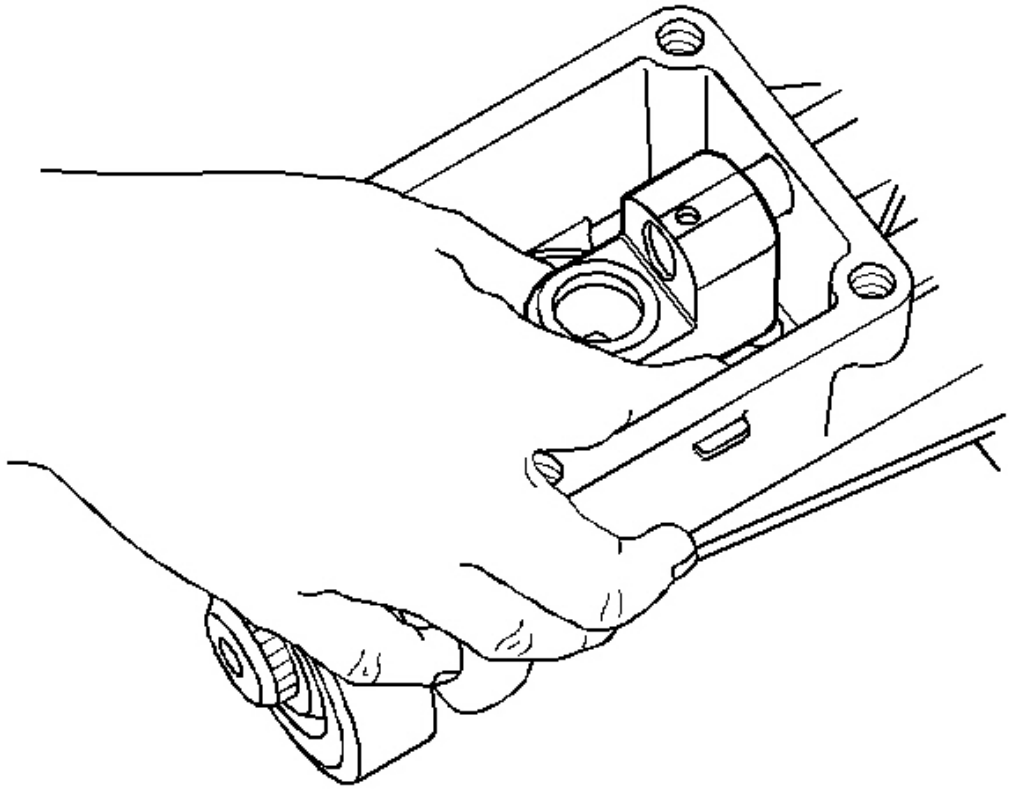

Fig. 78: View Of Rear Offset Shift Lever & Isolator Cup
Courtesy of GENERAL MOTORS CORP.

13. Remove rear offset shift lever and isolator cup.

cardiagn.com

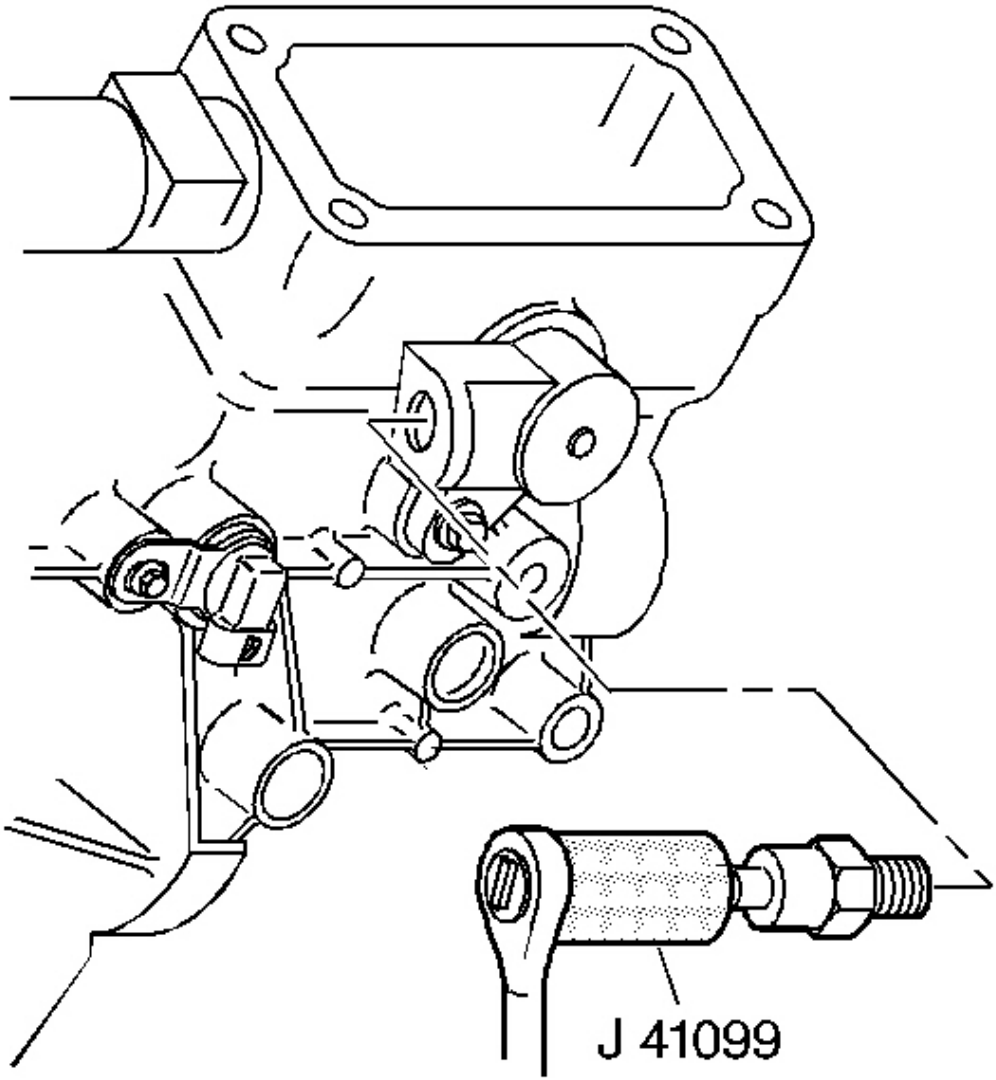

Fig. 79: Installing Reverse Lockout Solenoid Into Reverse Lockout Body Using J 41099
Courtesy of GENERAL MOTORS CORP.

14. Remove the reverse lockout solenoid from the reverse lockout body using **J 41099** .

cardiagn.com

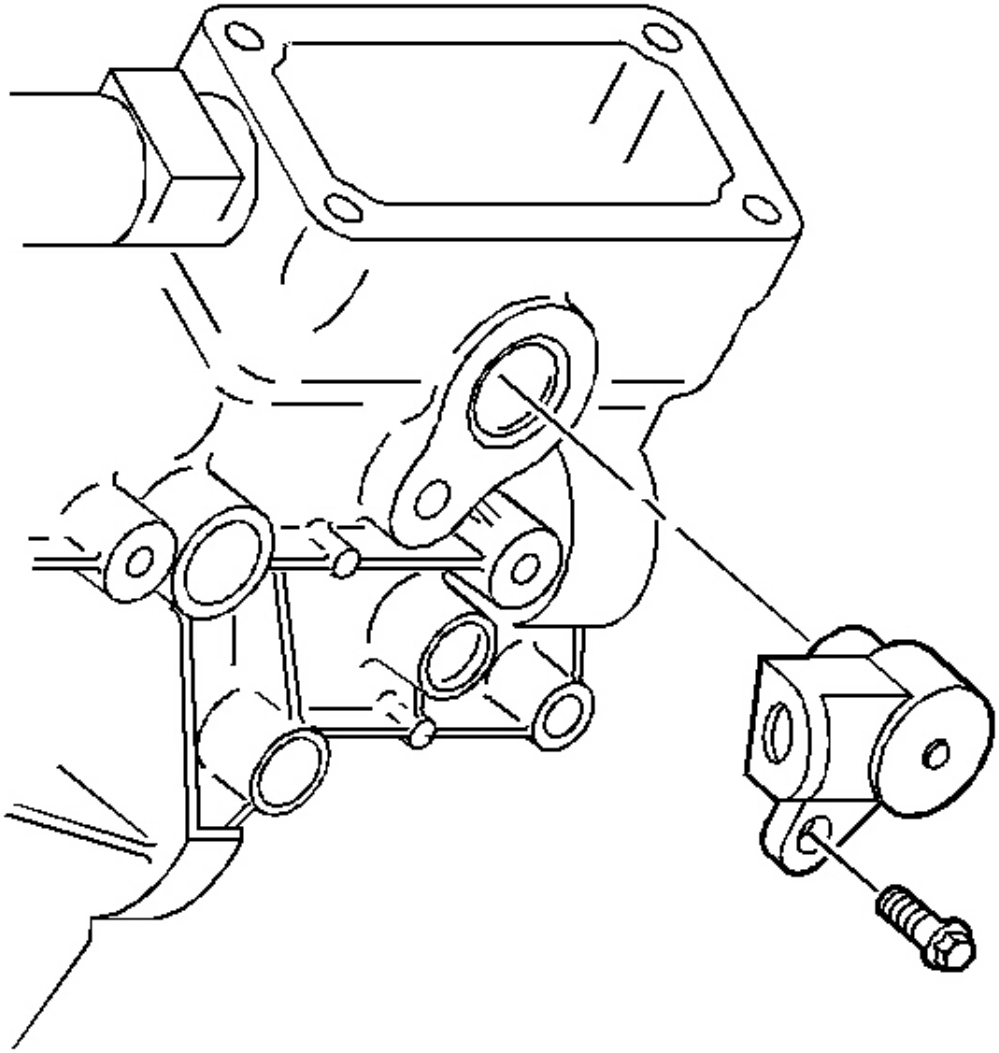

Fig. 80: Installing Reverse Lockout Body & Bolt To Extension Housing
Courtesy of GENERAL MOTORS CORP.

15. Remove the reverse lockout assembly bolt and reverse lockout body.

cardiagn.com

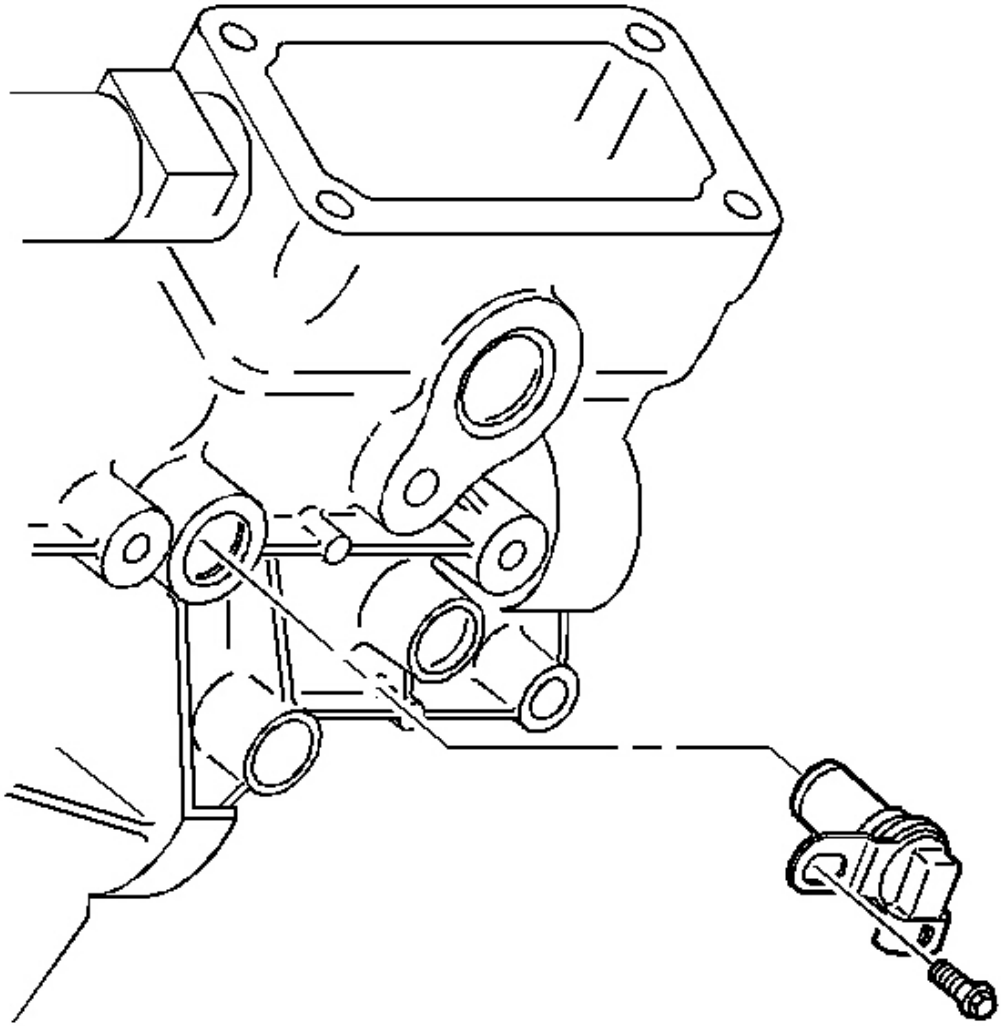

Fig. 81: View Of Vehicle Speed Sensor (VSS)
Courtesy of GENERAL MOTORS CORP.

16. Remove the speed sensor bolt and the speed sensor.

cardiagn.com

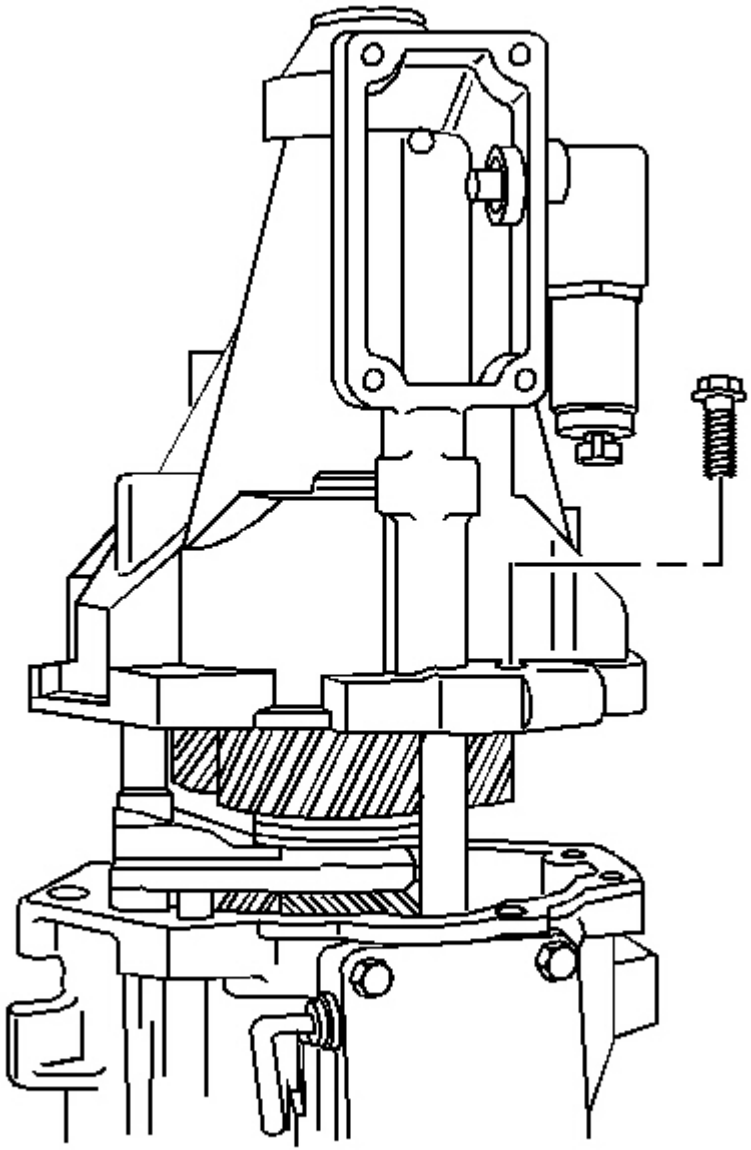

Fig. 82: View Of Extension Housing Bolts & Extension Housing
Courtesy of GENERAL MOTORS CORP.

17. Remove the rear extension housing bolts and the rear extension housing.

cardiagn.com

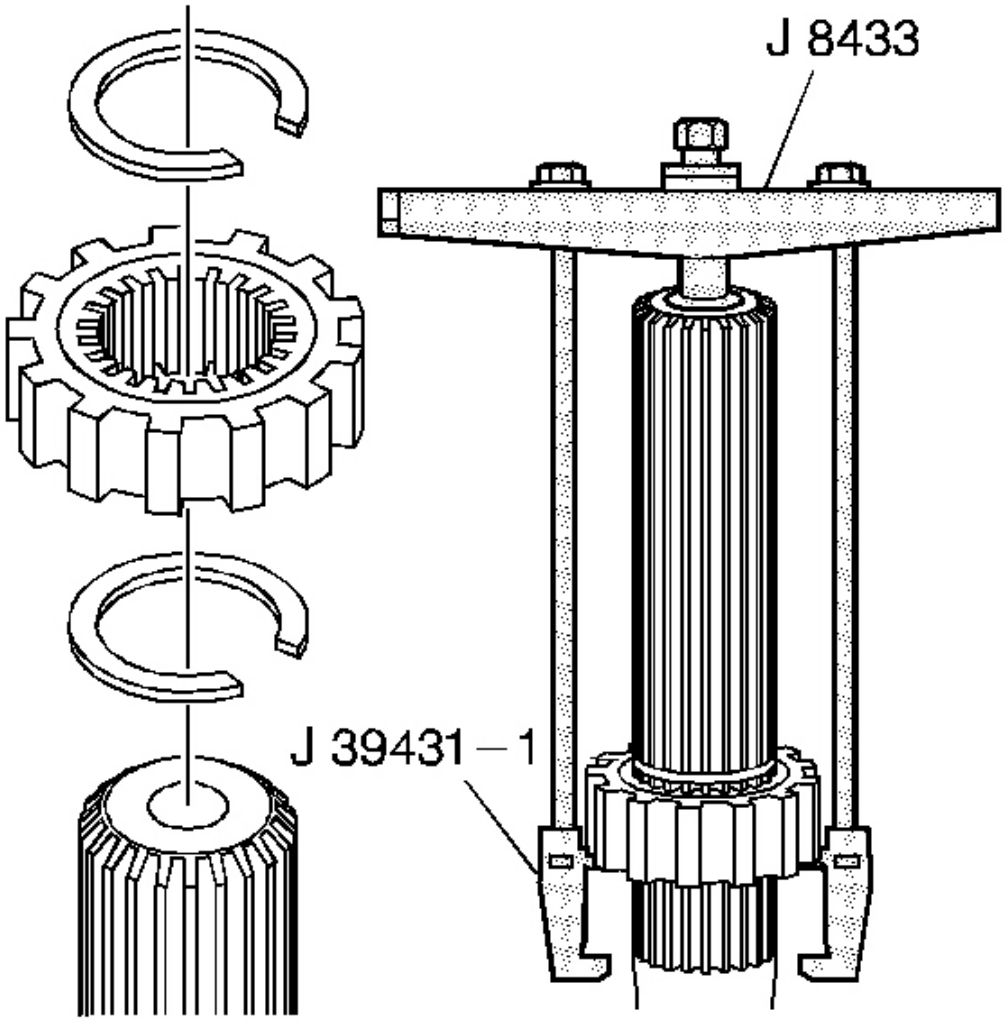

Fig. 83: Locating Speed Sensor Reluctor Wheel & Retaining Ring
Courtesy of GENERAL MOTORS CORP.

18. Remove the speed sensor reluctor wheel retaining ring.
19. Remove the speed sensor reluctor wheel using **J 39431-1** and **J 8433** .
20. Remove the speed sensor reluctor wheel retaining ring.

Reverse Speed Gear Removal

cardiagn.com

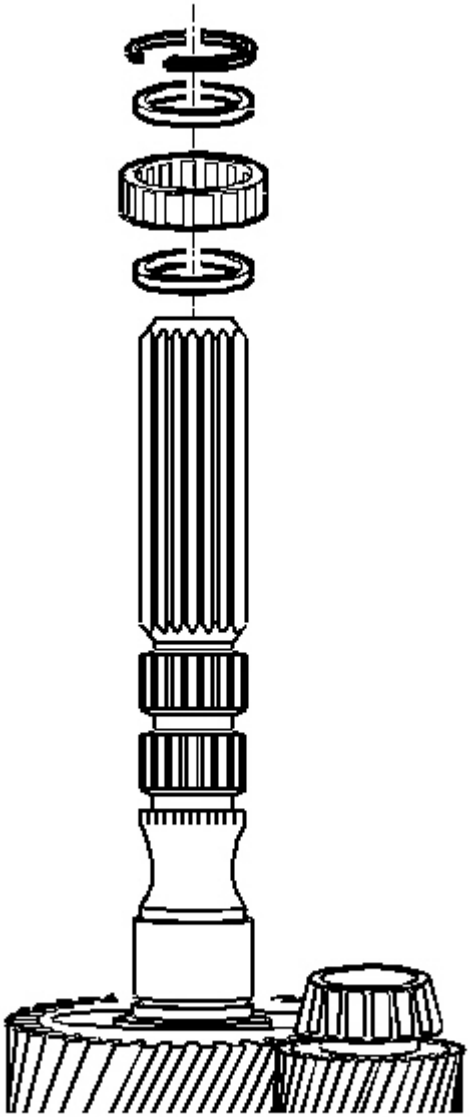

Fig. 84: View Of Mainshaft Rear Roller Bearing, Rear Bearing Retainer Ring & Spacers
Courtesy of GENERAL MOTORS CORP.

1. Remove the rear bearing retainer ring.
2. Remove the spacer.
3. Remove the mainshaft rear roller bearing.
4. Remove the spacer.

cardiagn.com

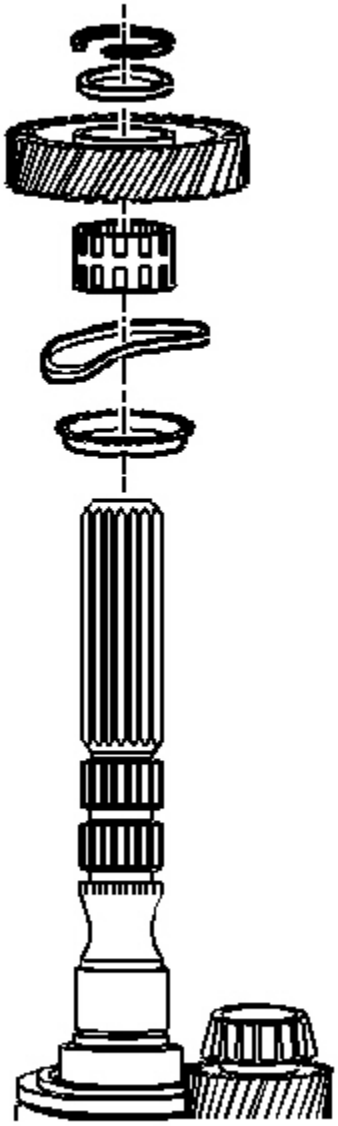

Fig. 85: Identifying Reverse Speed Gear Components
Courtesy of GENERAL MOTORS CORP.

5. Remove the retainer ring.
6. Remove the reverse gear thrust washer.
7. Remove the reverse gear.
8. Remove the reverse gear caged needle bearing.

cardiagn.com

9. Remove the wave washer.
10. Remove the reverse gear synchronizer blocking ring.

Reverse Shift Fork Removal

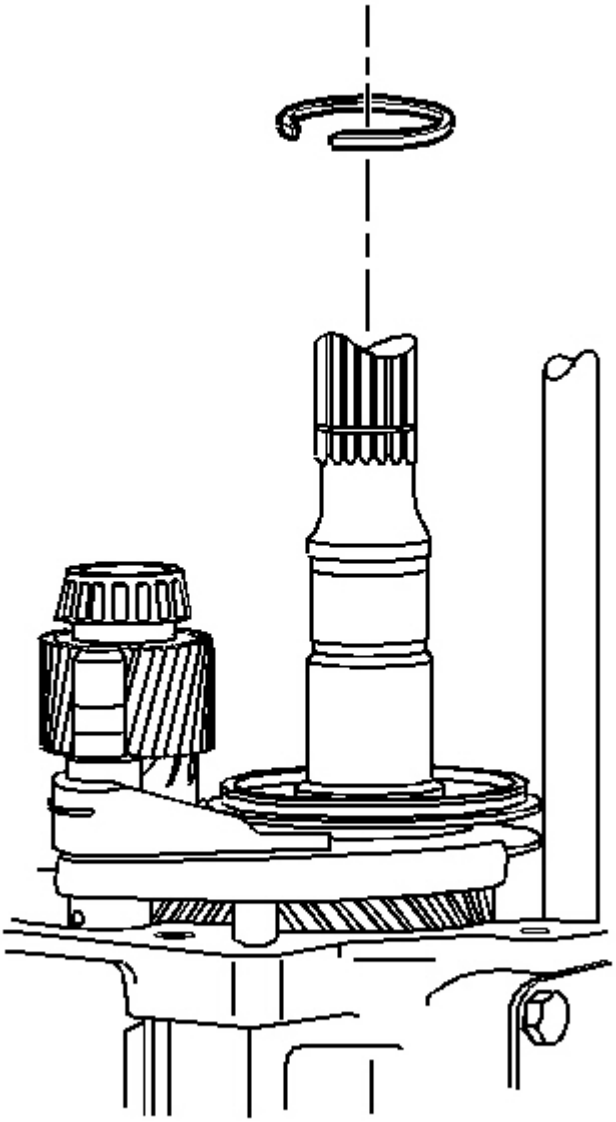

Fig. 86: View Of Reverse Synchronizer Retainer Ring
Courtesy of GENERAL MOTORS CORP.

cardiagn.com

1. Remove the reverse synchronizer retainer ring.

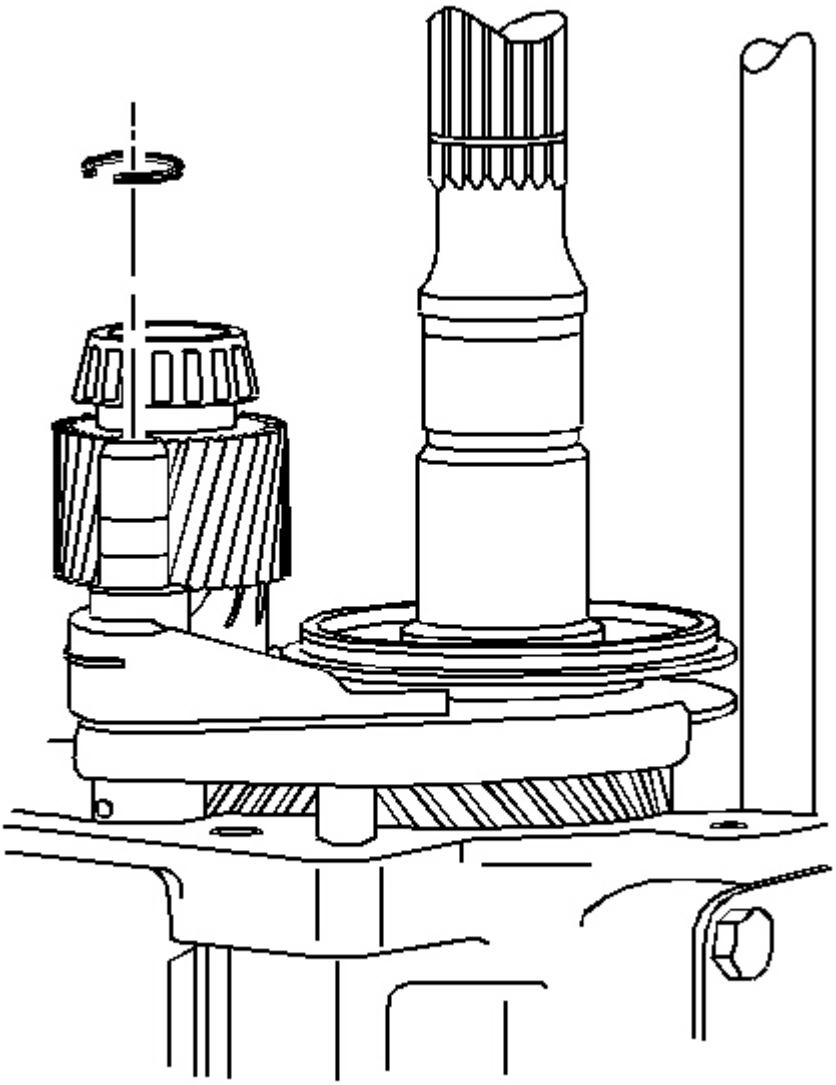

Fig. 87: Locating Shift Fork Retainer Ring
Courtesy of GENERAL MOTORS CORP.

2. Remove the reverse shift fork retainer ring. Discard the retainer ring.

cardiagn.com

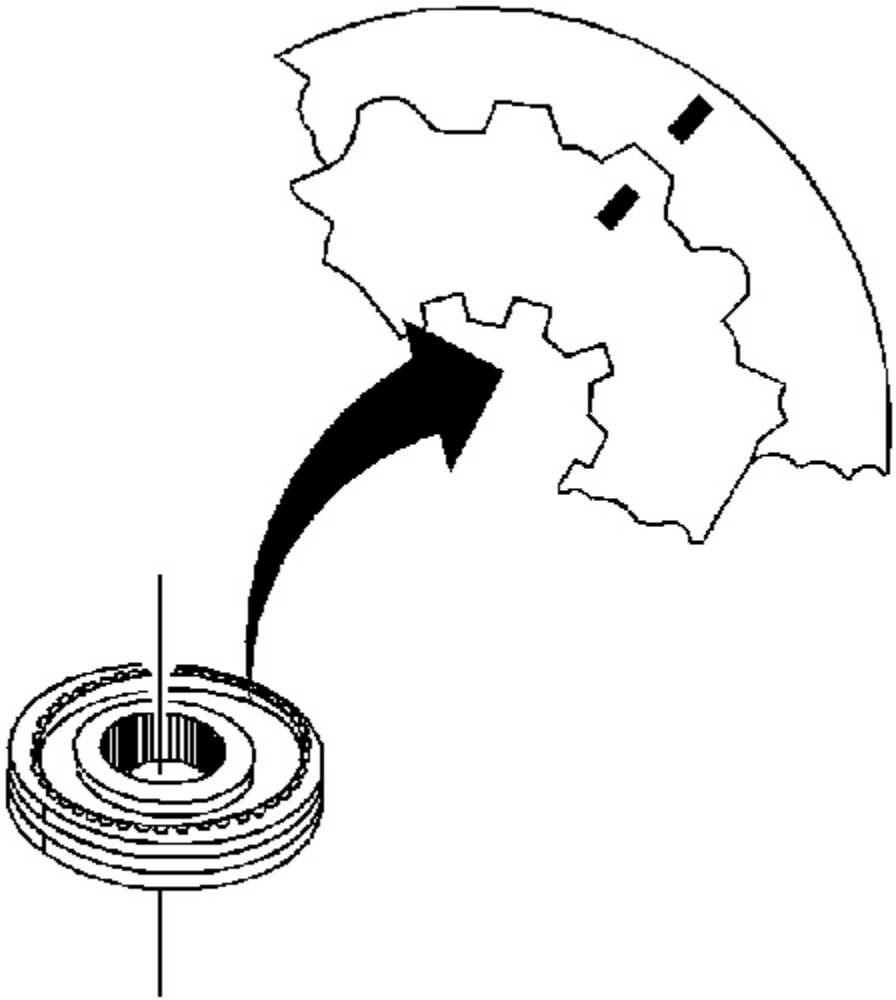

Fig. 88: Identifying Speed Gear Synchronizer Assembly Scribe Marks
Courtesy of GENERAL MOTORS CORP.

3. Scribe a mark on the synchronizer hub and on the sleeve. This will help you to reinstall the parts in the same position.

cardiagn.com

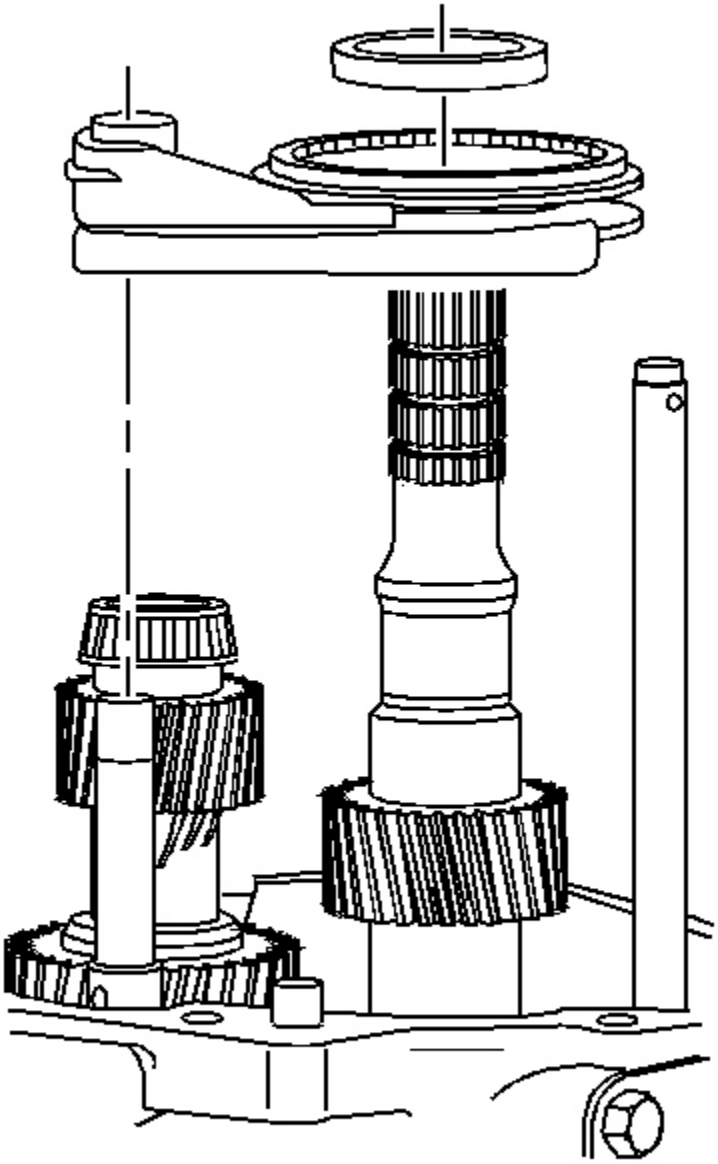

Fig. 89: Installing/Removing Reverse Shift Fork, Synchronizer & Thrust Washer
Courtesy of GENERAL MOTORS CORP.

4. Remove the following parts in order:
    1. The thrust washer
    2. The reverse synchronizer assembly and the shift fork

cardiagn.com

5th/6th Speed Driven Gear Removal

Tools Required

- **J 8433** Universal Bridge Puller. See **Special Tools** .
- **J 39431-1** Gear Remover. See **Special Tools** .

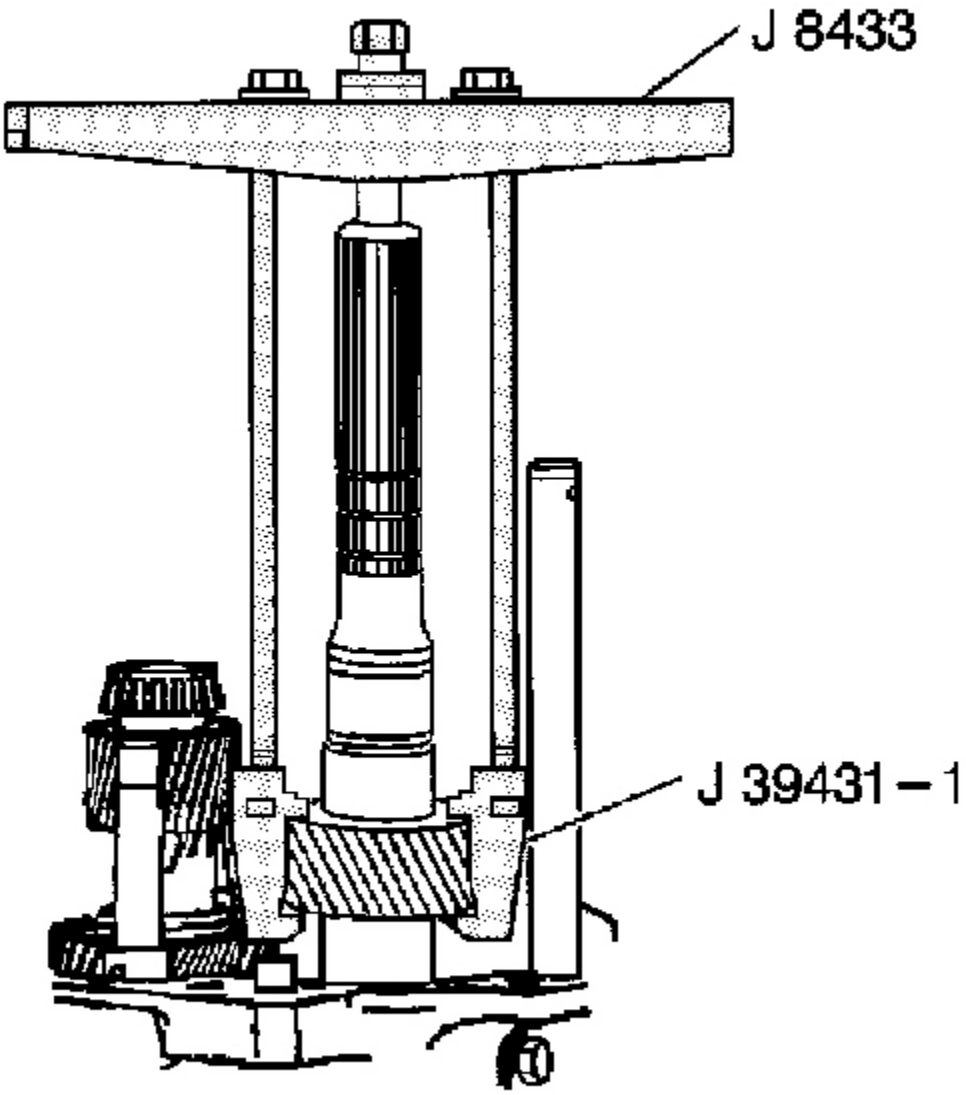

Fig. 90: Removing 5th/6th Speed Driven Gear Using J 8433 & J 39431-1

cardiagn.com

Courtesy of GENERAL MOTORS CORP.

Remove the 5th/6th speed driven gear, using the **J 8433** and the **J 39431-1** .

Countershaft Extension Removal

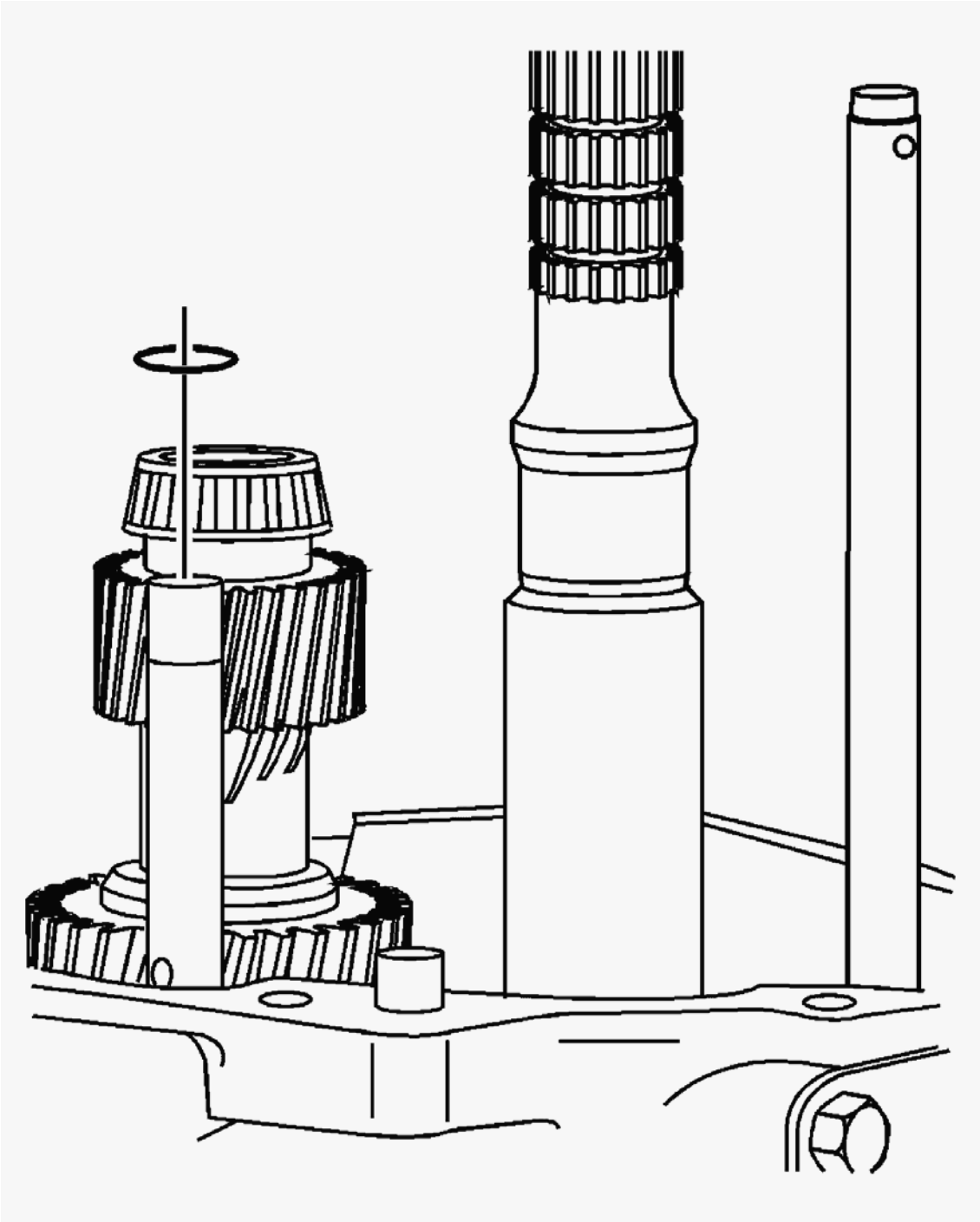

Fig. 91: View Of 5th/6th Shift Fork Retainer Ring
Courtesy of GENERAL MOTORS CORP.

cardiagn.com

1. Remove the 5th/6th speed shift fork retainer ring.

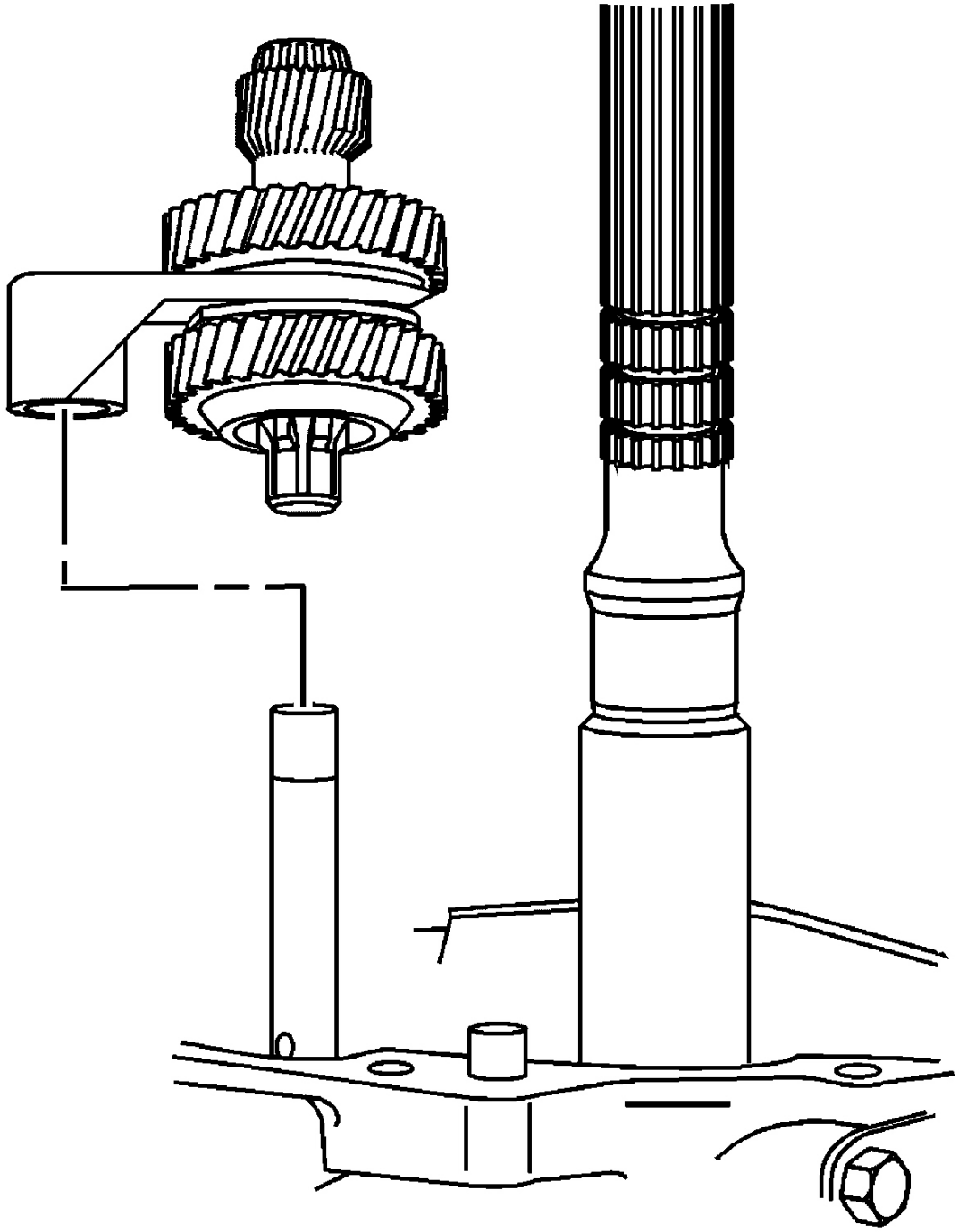

Fig. 92: Installing/Removing Countershaft Extension Assembly & 5th/6th Shift Fork
Courtesy of GENERAL MOTORS CORP.

cardiagn.com

2. Rotate the transmission in the horizontal position with the guide plate up.
3. Remove the countershaft extension assembly with the 5th/6th speed shift fork.

Tools Required

J 41099 Reverse Solenoid Socket. See **Special Tools** .

Transmission Case Removal

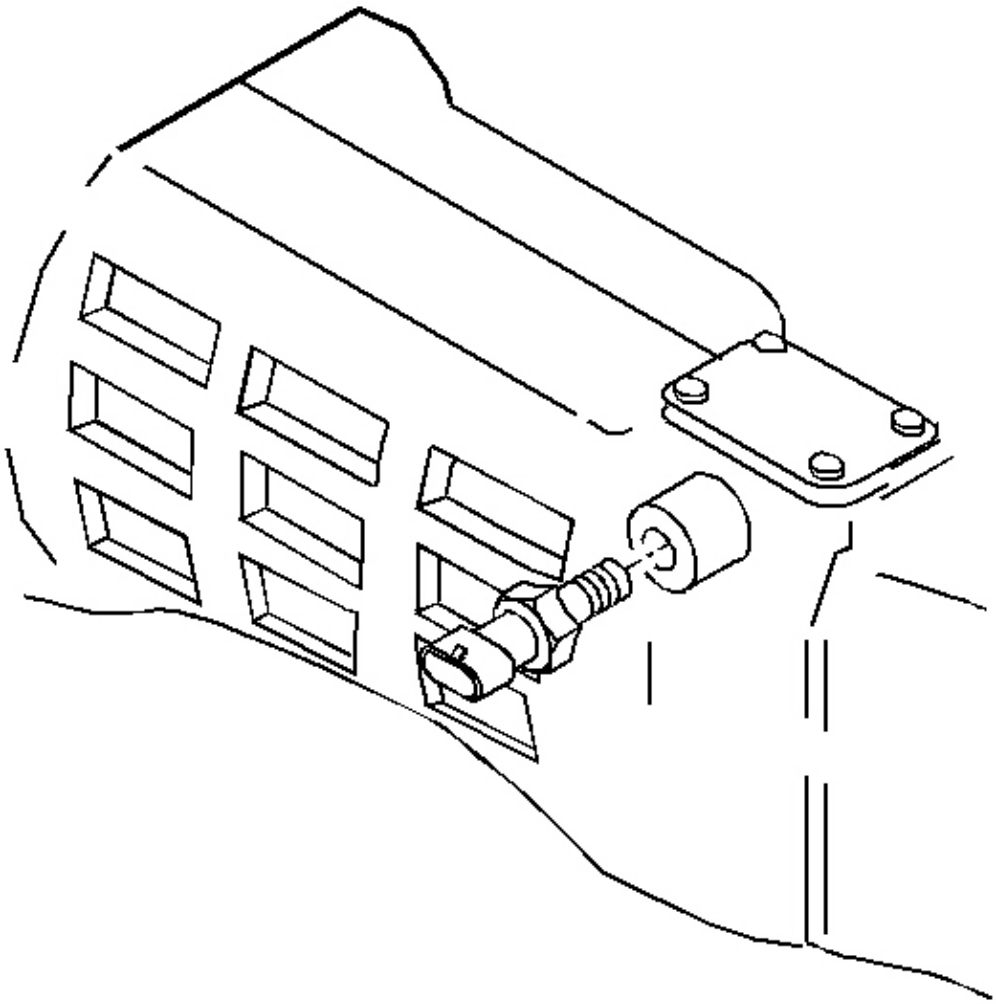

Fig. 93: View Of Computer Aided Gear Select Solenoid
Courtesy of GENERAL MOTORS CORP.

cardiagn.com

1. Remove the computer aided gear select solenoid.

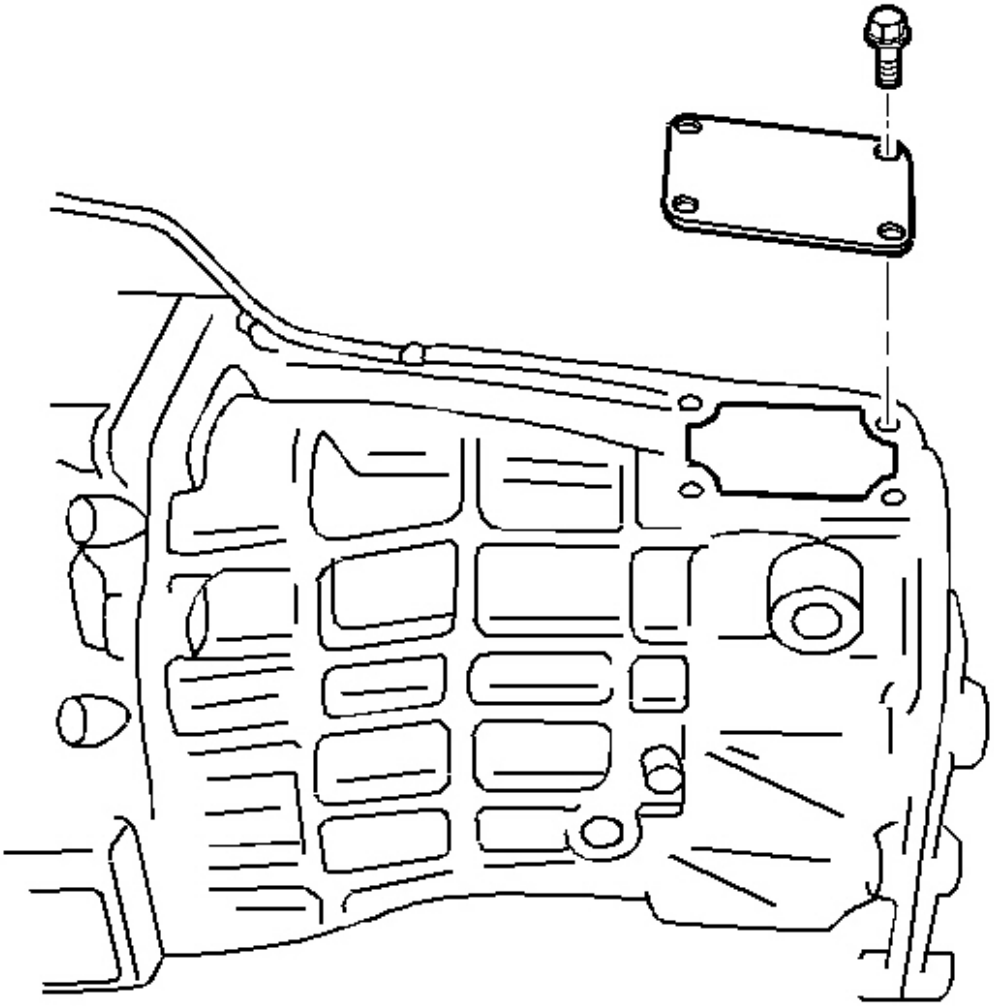

Fig. 94: Installing/Removing Cover Plate & Cover Plate Bolts
Courtesy of GENERAL MOTORS CORP.

2. Remove the shifter cover plate retainer bolts.
3. Remove the shifter cover plate.

cardiagn.com

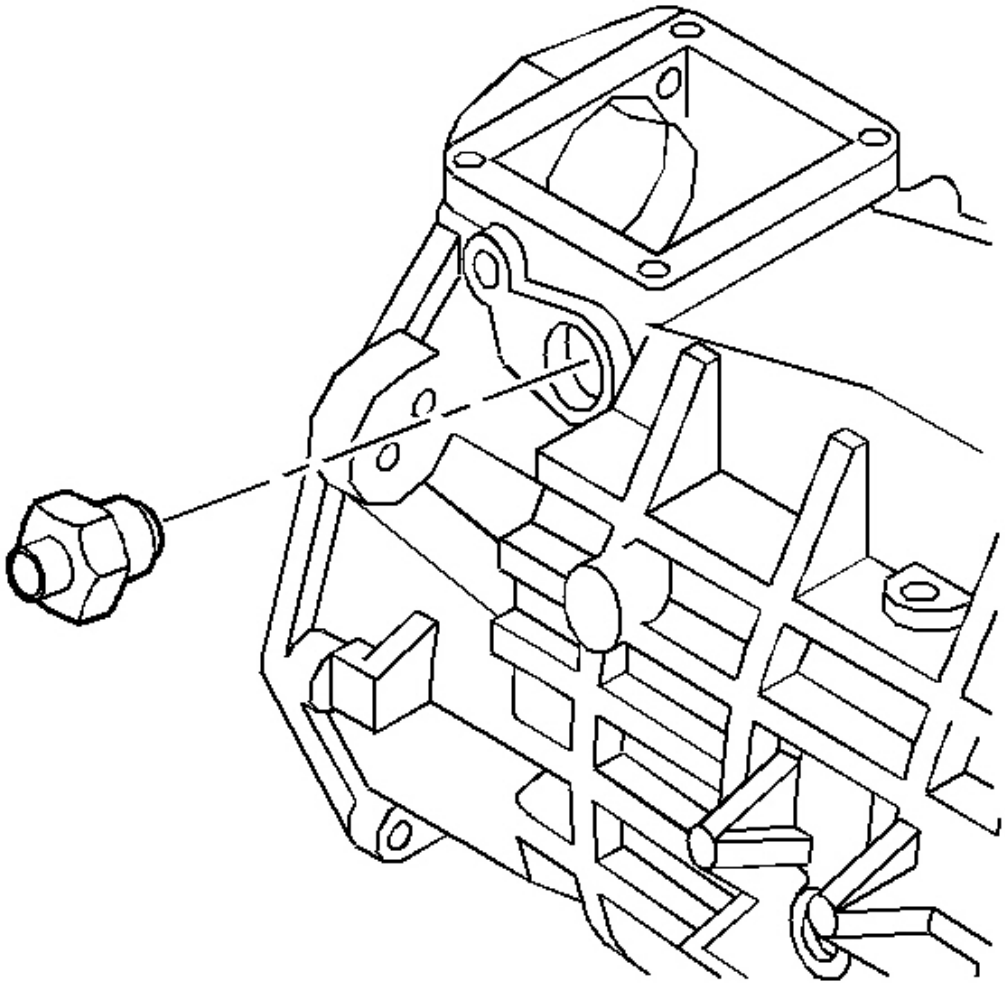

Fig. 95: View Of Shift Detent Assembly
Courtesy of GENERAL MOTORS CORP.

4. Remove the shift detent assembly.

cardiagn.com

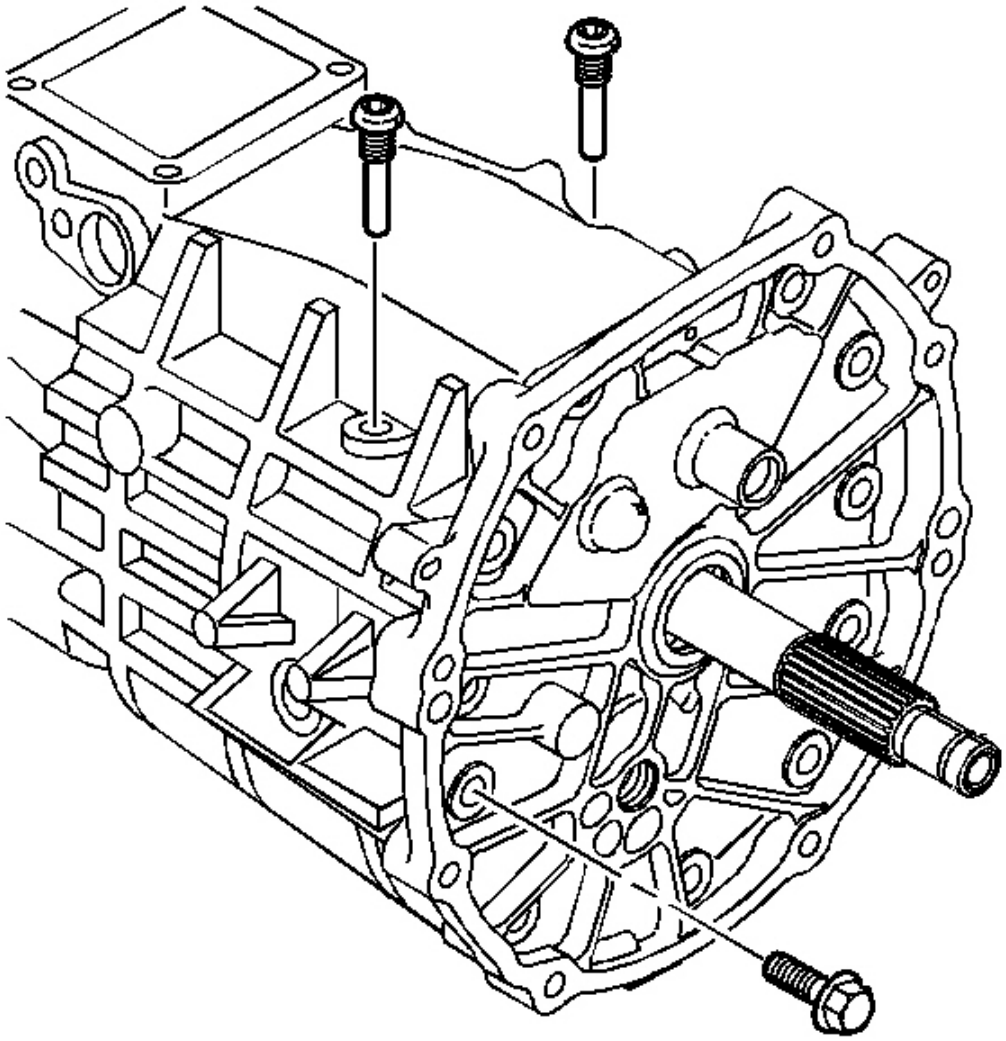

Fig. 96: Installing/Removing Shift Lever Guide Bolts
Courtesy of GENERAL MOTORS CORP.

5. Remove 9 of the 11 adapter plate to transmission case bolts.
6. Rotate the transmission into the vertical position.
7. Remove the last 2 adapter plate to transmission case bolts.
8. Remove the shift lever guide bolts.

cardiagn.com

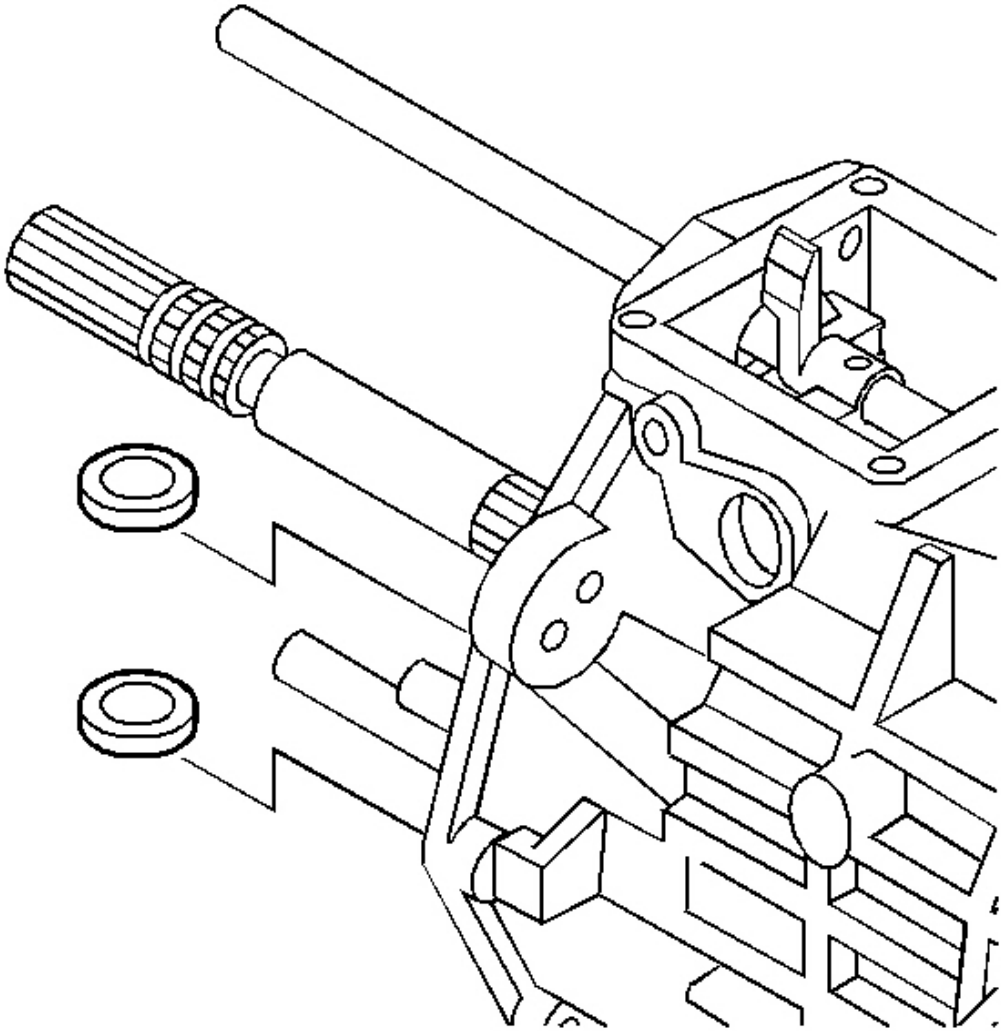

Fig. 97: View Of Transmission Magnets
Courtesy of GENERAL MOTORS CORP.

9. Remove the magnets from the transmission case.

cardiagn.com

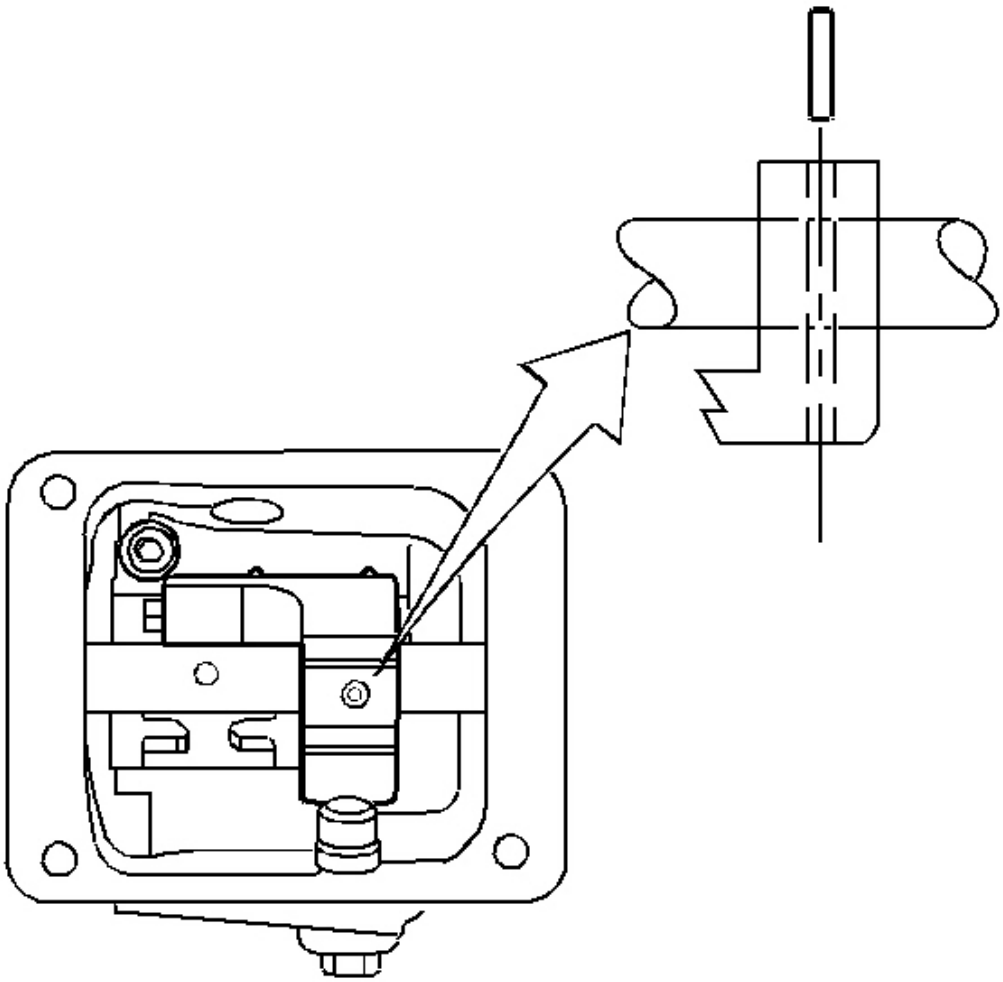

Fig. 98: Installing/Removing Offset Lever Roll Pin
Courtesy of GENERAL MOTORS CORP.

10. Remove the offset lever roll pin.

cardiagn.com

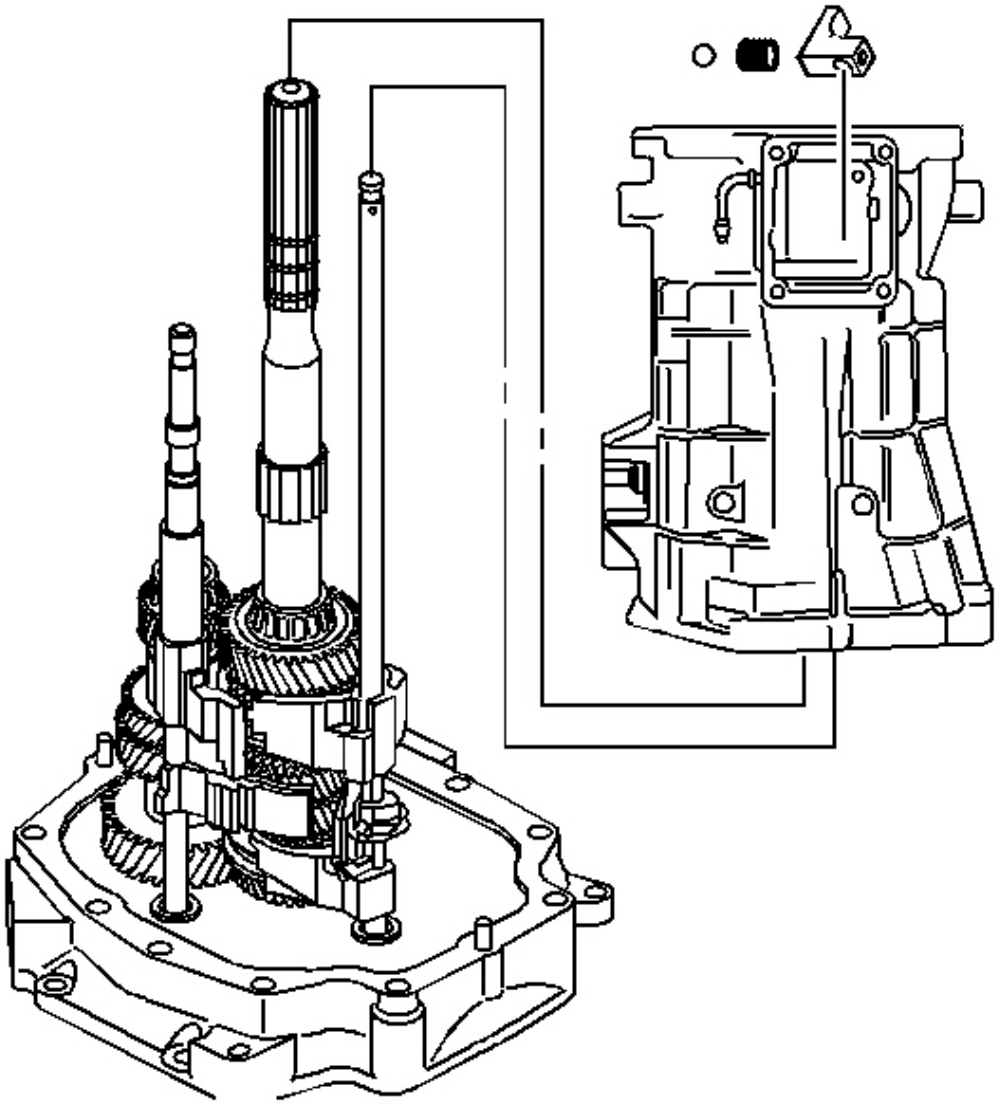

Fig. 99: View Of Offset Lever Components
Courtesy of GENERAL MOTORS CORP.

11. Remove the transmission case and the offset lever together as follows:
    1. Slide the transmission case up and off of the gear clusters and the shift shaft components.
    2. Hold the offset lever against the guide plate in order to prevent the release of the detent ball and the spring.
    3. Remove the offset lever from the transmission case.

cardiagn.com

Guide Plate Removal

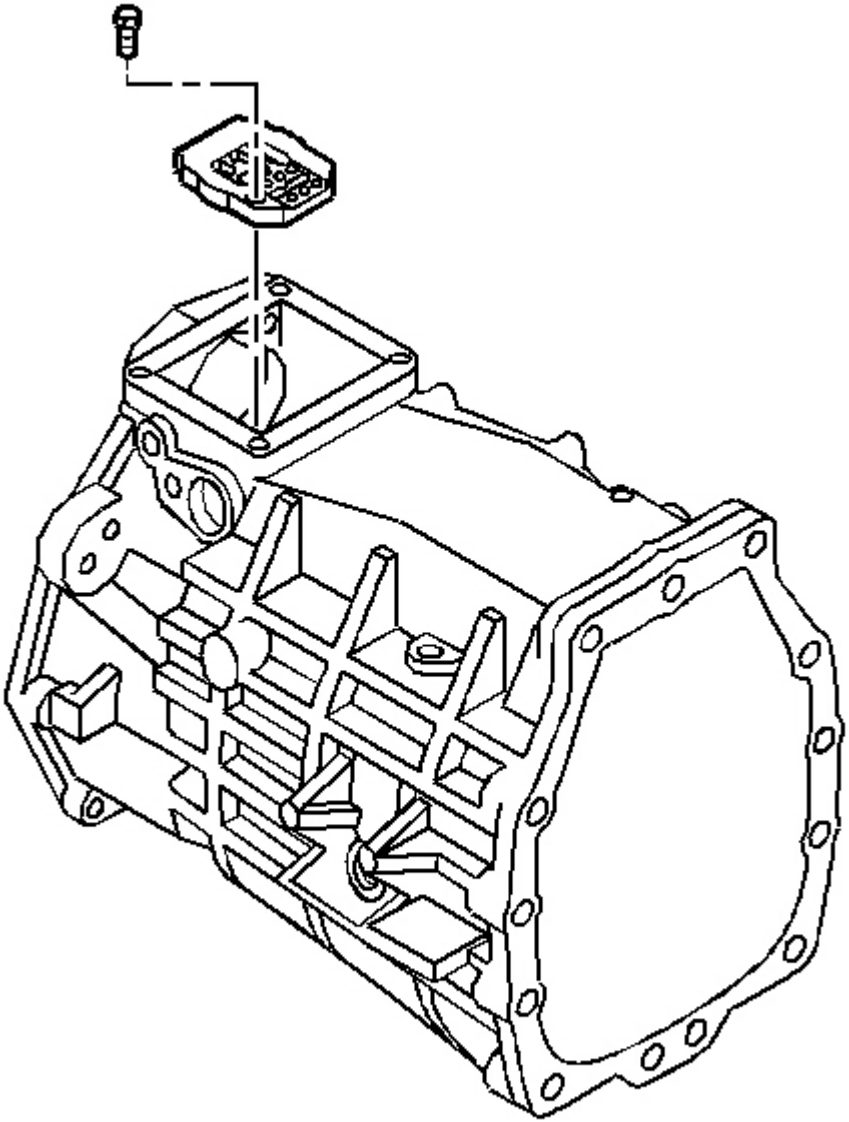

Fig. 100: Locating Detent Guide Plate & Attaching Bolts
Courtesy of GENERAL MOTORS CORP.

1. Remove the detent guide plate attaching bolts.
2. Remove the detent guide plate.

cardiagn.com

Reverse Lockout Assembly Disassemble

1. Disassemble the reverse lockout assembly in the following sequence:
2. Remove the O-ring (8) from the body (1).

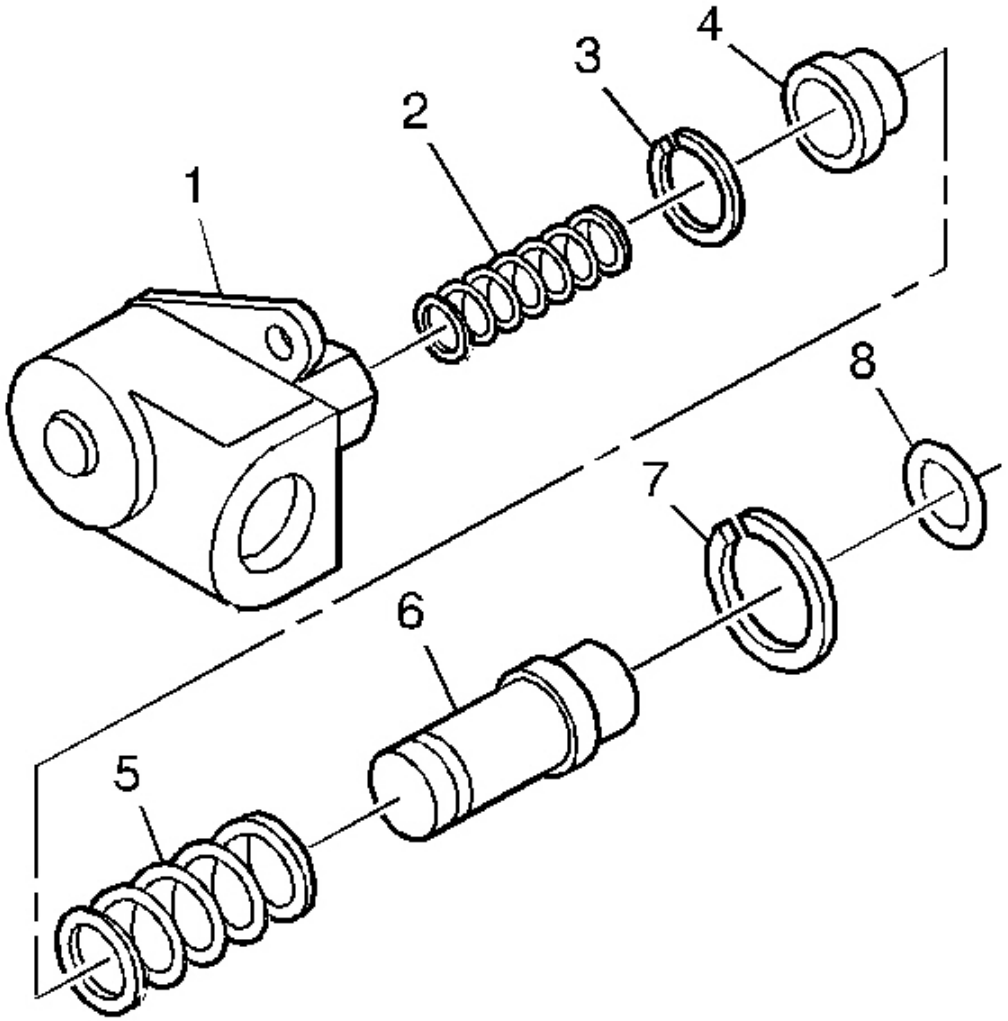

Fig. 101: Exploded View Of Reverse Lockout Assembly
Courtesy of GENERAL MOTORS CORP.

CAUTION: The reverse lockout assembly is under spring pressure. Exercise caution when removing the retainer ring, as bodily injury may result.

cardiagn.com

3. Remove the retainer ring (7) from the body (1).
4. Remove the reverse lockout inner spring (2).
5. Compress the reverse lockout plunger (6) and the collar (4) in a vise and remove the retainer ring (3).
6. Remove the reverse lockout plunger (6).
7. Remove the reverse lockout outer spring (5).
8. Remove the reverse lockout collar (4).

Shift Shaft Assemblies and Gear Cluster Removal

1. Rotate the 5th/6th and the reverse shift shaft levers off the shift interlock plate.
2. Remove the 5th/6th and the reverse shift shaft assembly.

cardiagn.com

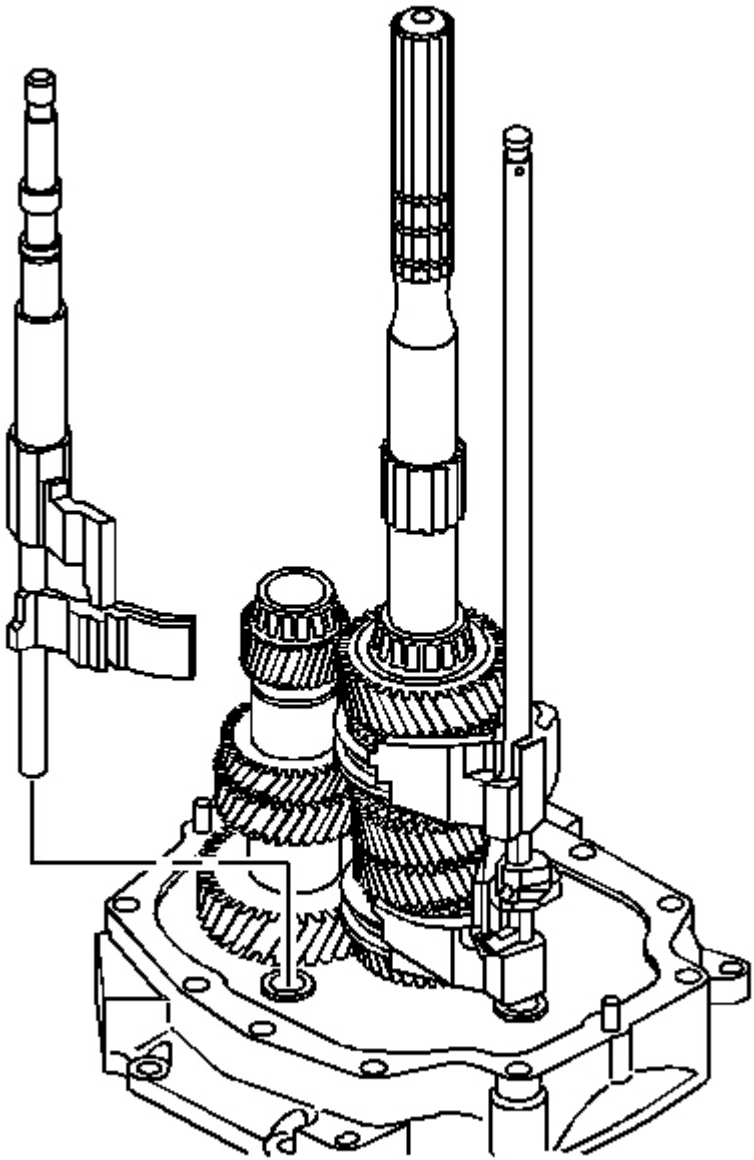

Fig. 102: View Of 5th/6th & Reverse Shift Shaft
Courtesy of GENERAL MOTORS CORP.

cardiagn.com

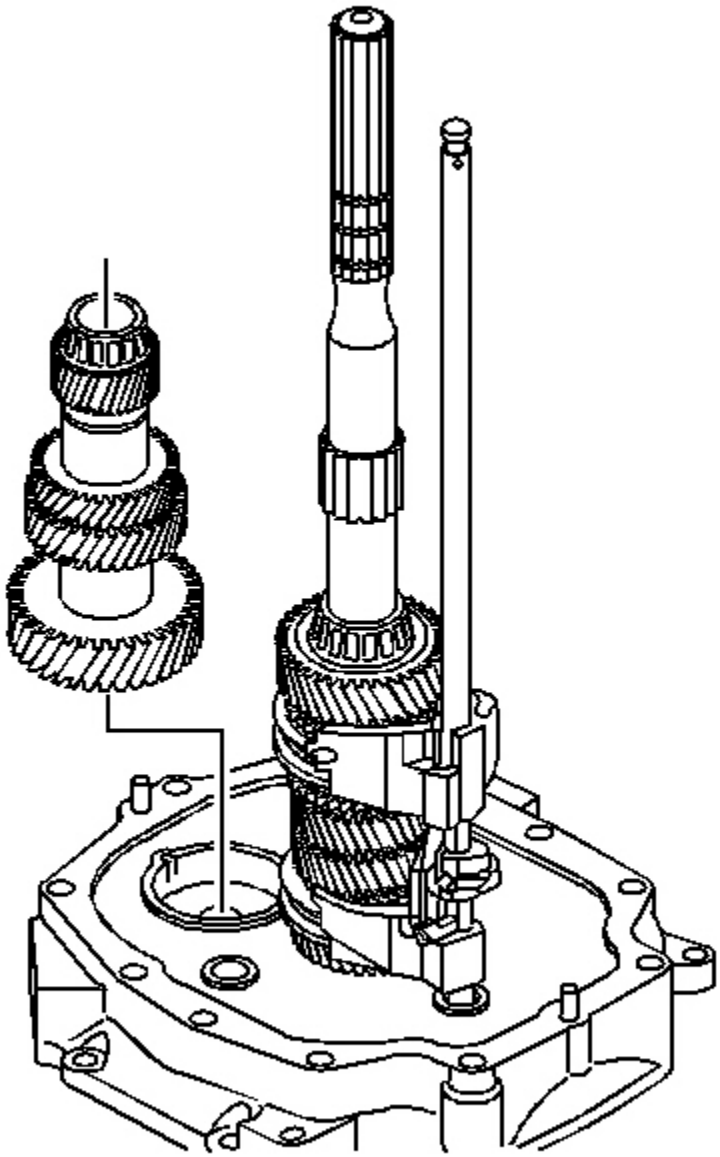

Fig. 103: Identifying Countershaft Assembly
Courtesy of GENERAL MOTORS CORP.

3. Remove the countershaft. Lift up the mainshaft enough in order to remove the countershaft.

cardiagn.com

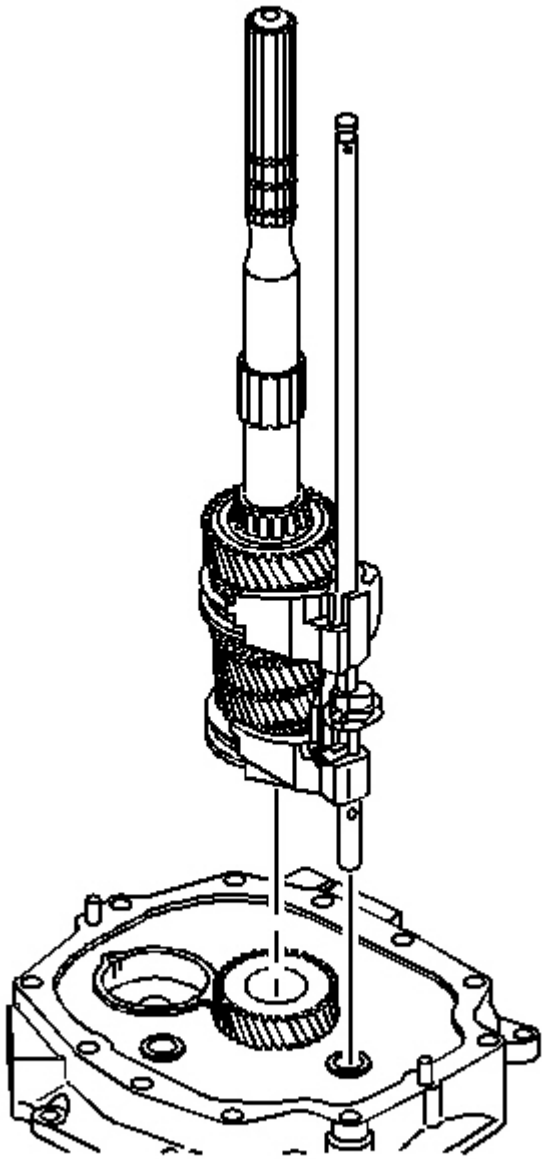

Fig. 104: Installing/Removing Mainshaft & Shift Shaft Assembly
Courtesy of GENERAL MOTORS CORP.

4. Remove the mainshaft and the shift shaft components as an assembly.
5. Remove the shift shaft assembly from the mainshaft.

cardiagn.com

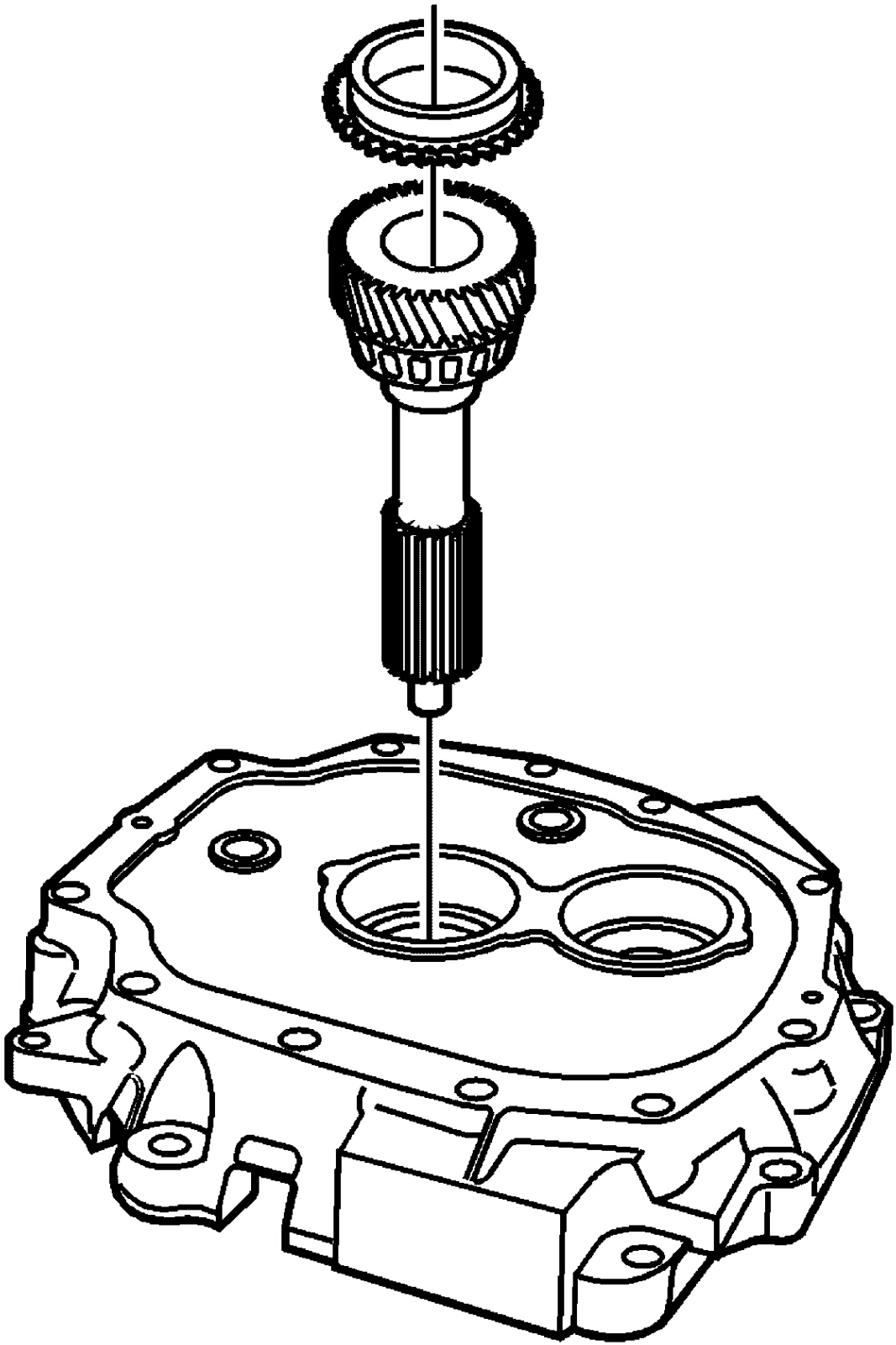

cardiagn.com

Fig. 105: View Of 4th Speed Gear Blocker Ring & Input Shaft
Courtesy of GENERAL MOTORS CORP.

6. Remove the 4th speed gear blocker ring.
7. Remove the input shaft.

MAINSHAFT AND INPUT SHAFT DISASSEMBLE

Mainshaft

Tools Required

- **J 36513** Split Plate. See **Special Tools** .
- **J 39442** Press Adapter. See **Special Tools** .
- **J 39443** Split Plate. See **Special Tools** .
- **J 39473** Mainshaft Bearing Installer. See **Special Tools** .

1. Install the input shaft in the adapter plate.

IMPORTANT: Measure the 4th speed gear synchronizer wear gap before disassembling the mainshaft.

2. Install the mainshaft on the input shaft.

cardiagn.com

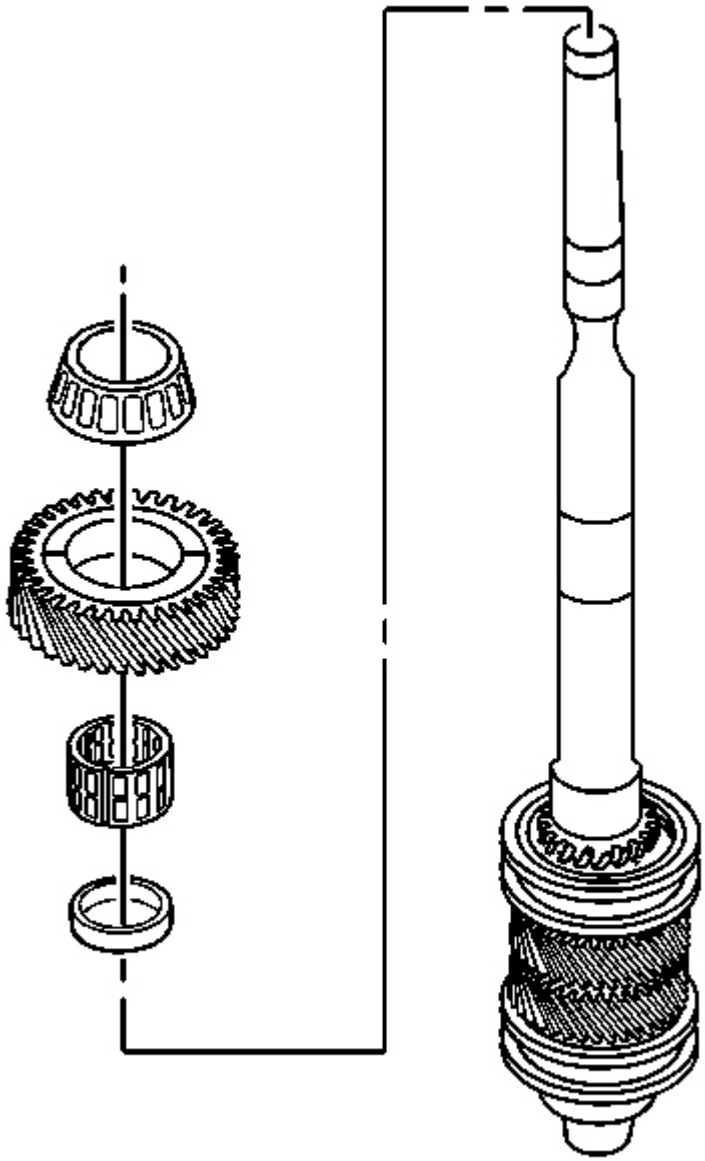

Fig. 106: View Of 1st Speed Gear Components
Courtesy of GENERAL MOTORS CORP.

3. Using a feeler gauge measure the gap between the 4th speed gear blocking ring and the 4th speed gear.
4. Replace the 4th speed gear friction cone and blocking ring when the gap is less than 1.27 mm (0.050 in).

cardiagn.com

NOTE: **Do not overtighten the J 36513 split plate past the gear teeth or damage to gear may occur.**

5. Using the **J 36513** , close the split plate only enough to support the gear teeth, and the **J 39442** , remove the following parts in order:
    1. If an O-ring is present on the mainshaft, remove and discard the O-ring. The O-ring was used for manufacturing purposes only.
    2. The mainshaft large tapered bearing
    3. The 1st speed gear
    4. The 1st speed gear caged needle bearing
    5. The 1st speed bearing spacer

cardiagn.com

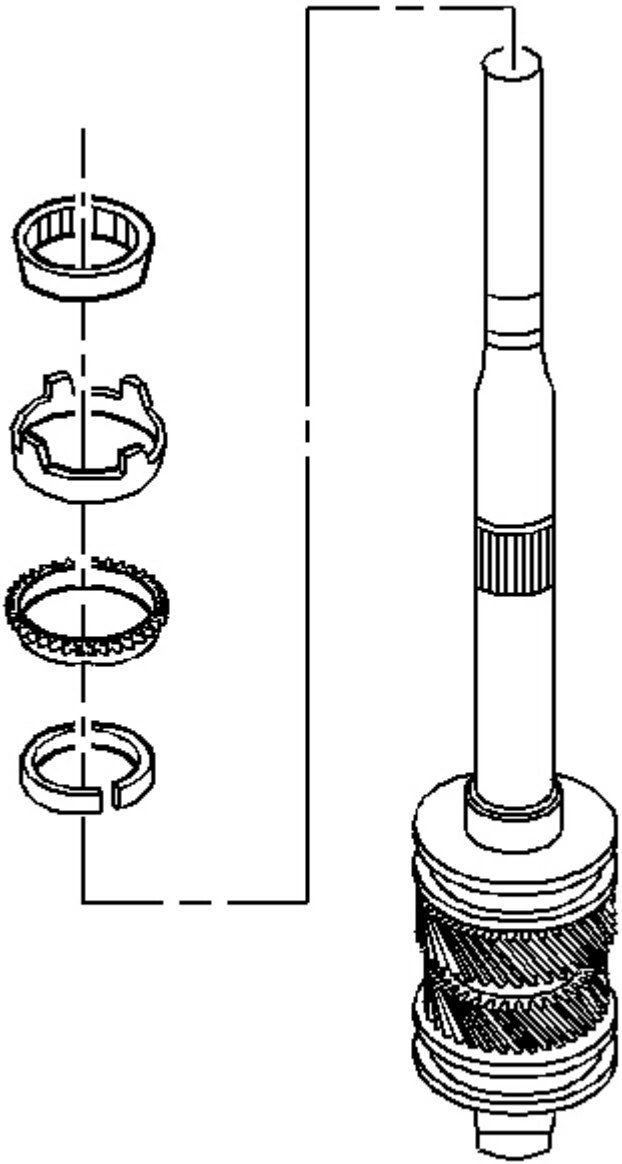

Fig. 107: View Of 1st Speed Gear Cones & Rings
Courtesy of GENERAL MOTORS CORP.

6. Remove the following parts in order:
    1. The 1st speed gear inner cone
    2. The 1st speed gear friction cone

cardiagn.com

3. The 1st speed gear blocking ring
4. The retainer ring

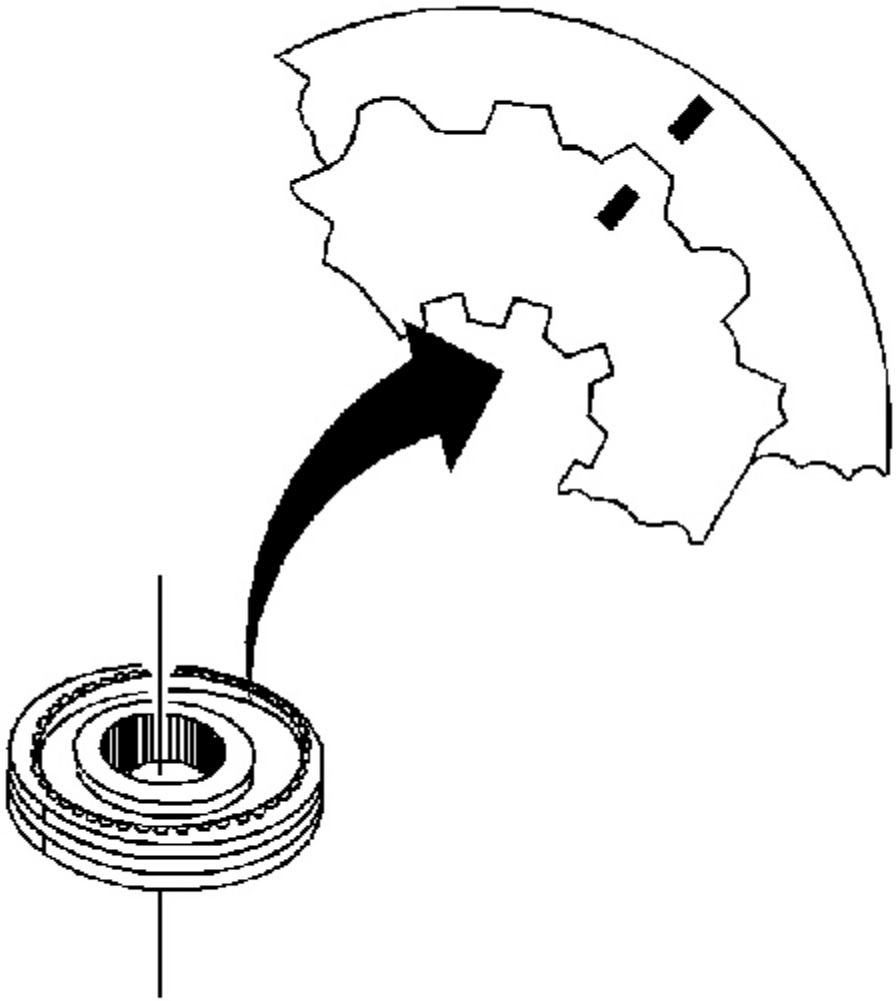

Fig. 108: Identifying Speed Gear Synchronizer Assembly Scribe Marks
Courtesy of GENERAL MOTORS CORP.

IMPORTANT: The synchronizer hubs and sliding sleeves are a selected assembly. Keep these parts together as originally assembled.

7. Scribe a mark on the synchronizer hub and on the sleeve. This will help you to reinstall the parts in the

cardiagn.com

same position.

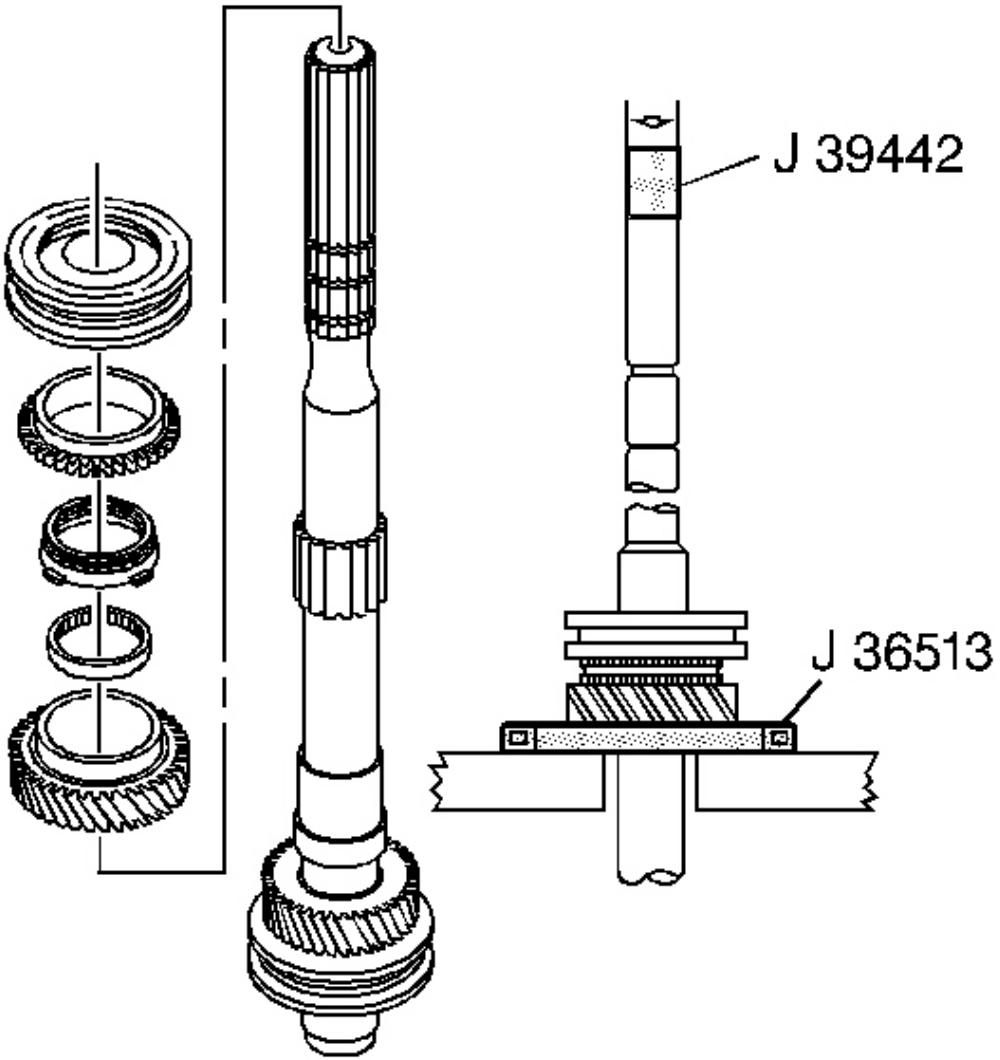

Fig. 109: Locating 2nd Speed Gear Assembly
Courtesy of GENERAL MOTORS CORP.

8. Remove the 2nd speed gear. The 1st/2nd speed synchronizer assembly, the 2nd speed gear blocking ring, the 2nd speed gear friction cone, and the 2nd speed gear inner cone will press off with the 2nd speed gear. Use the **J 36513** in an inverted position, **J 39442** and a hydraulic press.

cardiagn.com

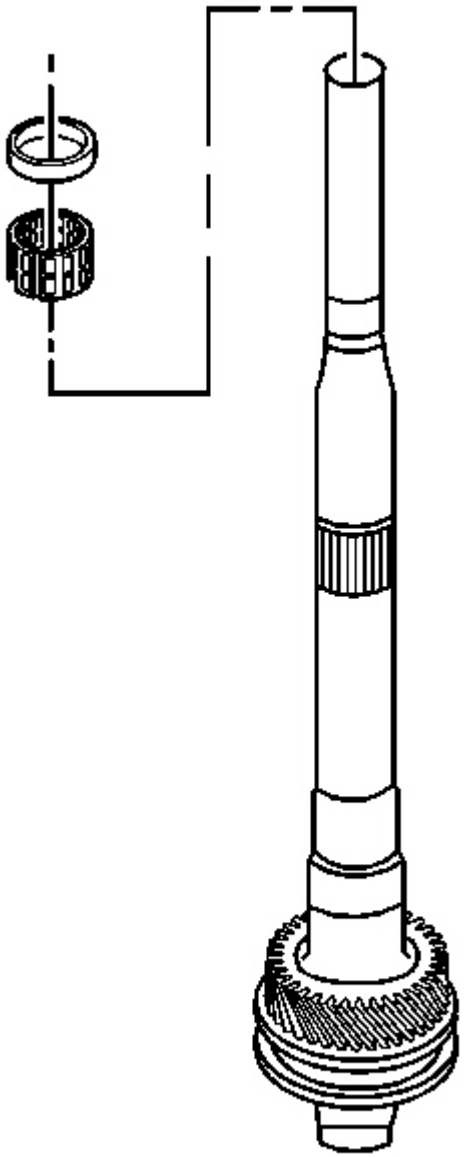

Fig. 110: View Of 2nd Speed Gear Caged Needle Bearing & Bearing Spacer
Courtesy of GENERAL MOTORS CORP.

9. Remove the 2nd speed gear spacer and caged needle bearing.

cardiagn.com

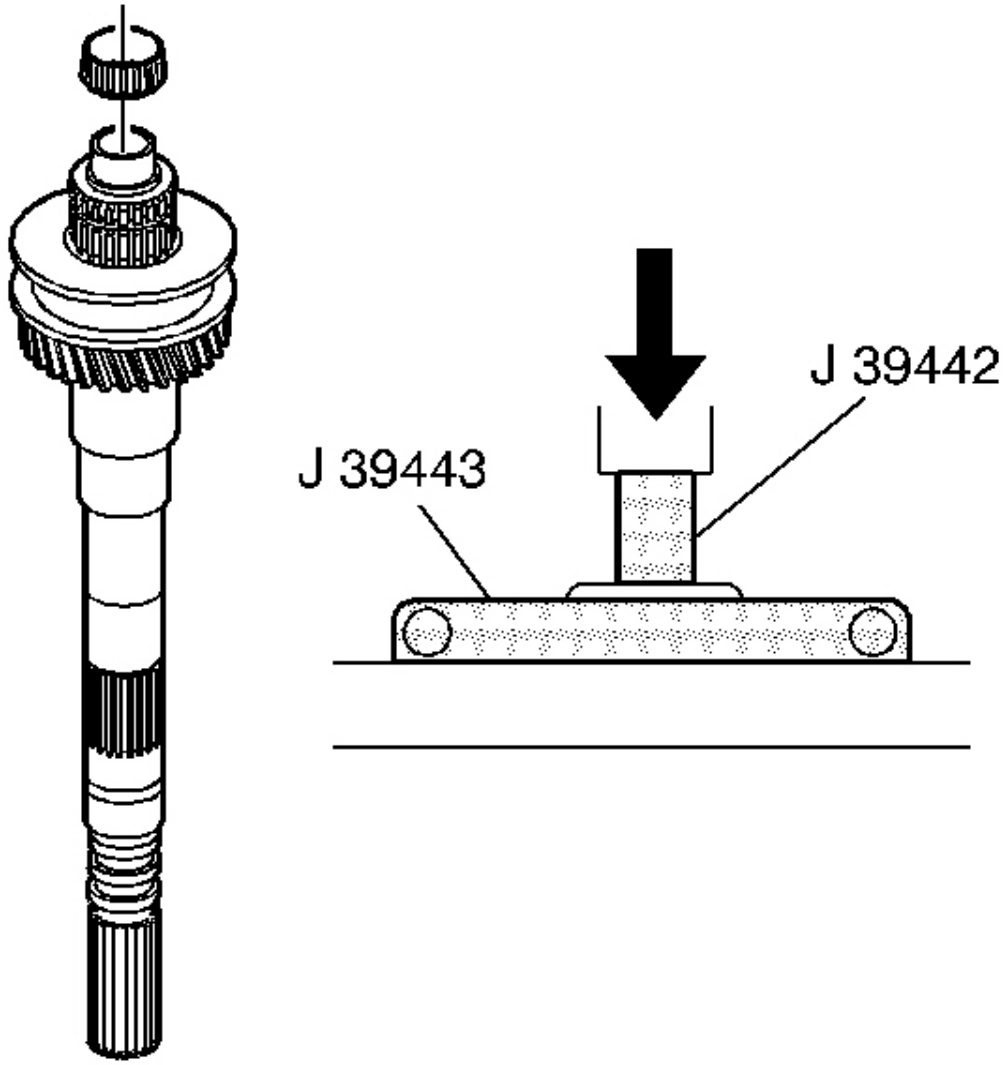

Fig. 111: Removing Mainshaft Small Tapered Bearing Using J 39442 & J 39443
Courtesy of GENERAL MOTORS CORP.

10. Remove the mainshaft small tapered bearing. Use the **J 39442** , the **J 39443** , and a hydraulic press.
11. Discard the small tapered bearing.

cardiagn.com

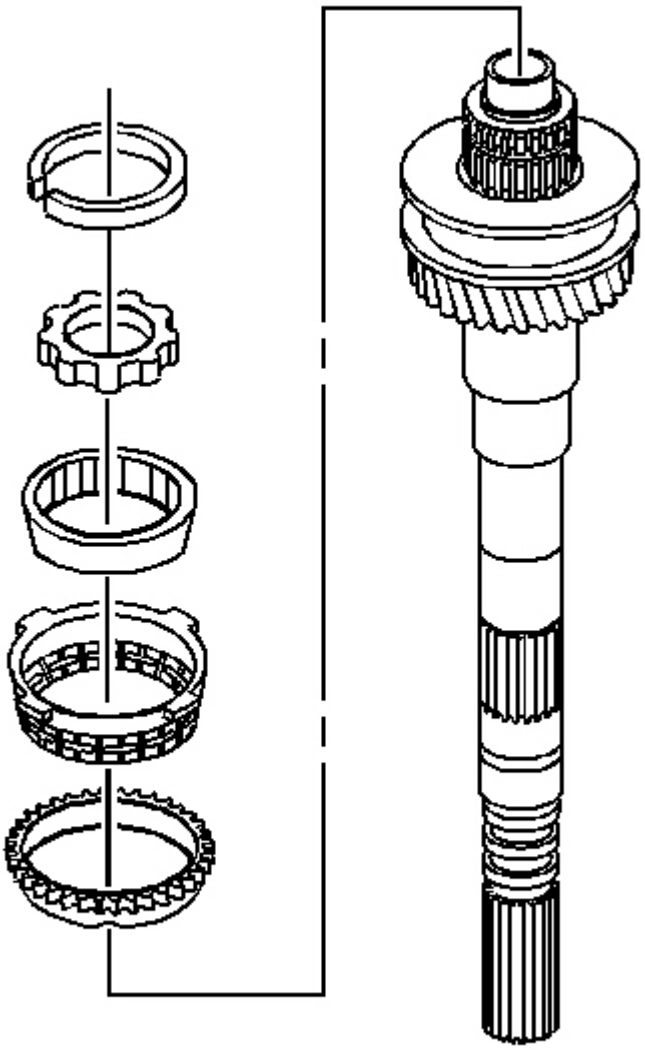

Fig. 112: Exploded View Of 4th Gear Assembly
Courtesy of GENERAL MOTORS CORP.

12. Remove the following parts in order:
    1. Retainer
    2. 4th gear thrust washer
    3. 4th gear inner cone
    4. 4th gear friction cone

cardiagn.com

5. 4th gear blocking ring

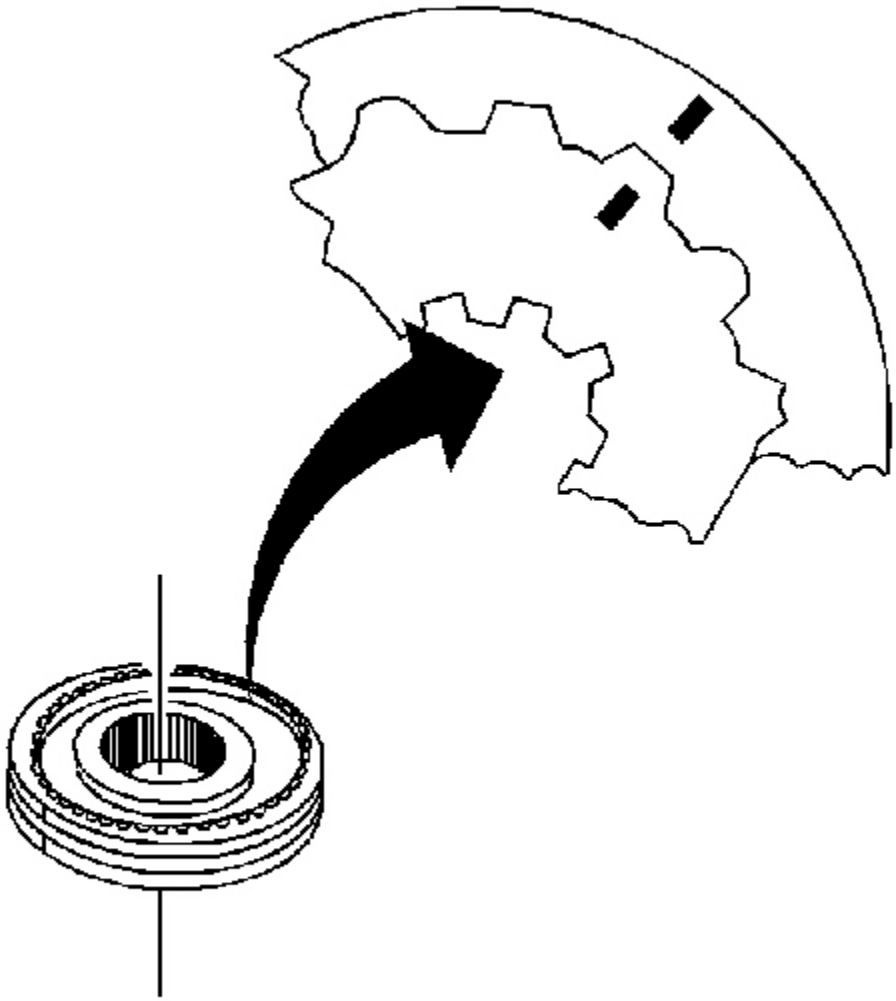

Fig. 113: Identifying Gear Synchronizer Assembly Scribe Marks
Courtesy of GENERAL MOTORS CORP.

IMPORTANT: The synchronizer hubs and sliding sleeves are a selected assembly. Keep these parts together as originally assembled.

13. Scribe a mark on the synchronizer hub and on the sleeve. This will help you to reinstall the parts in the same position.

cardiagn.com

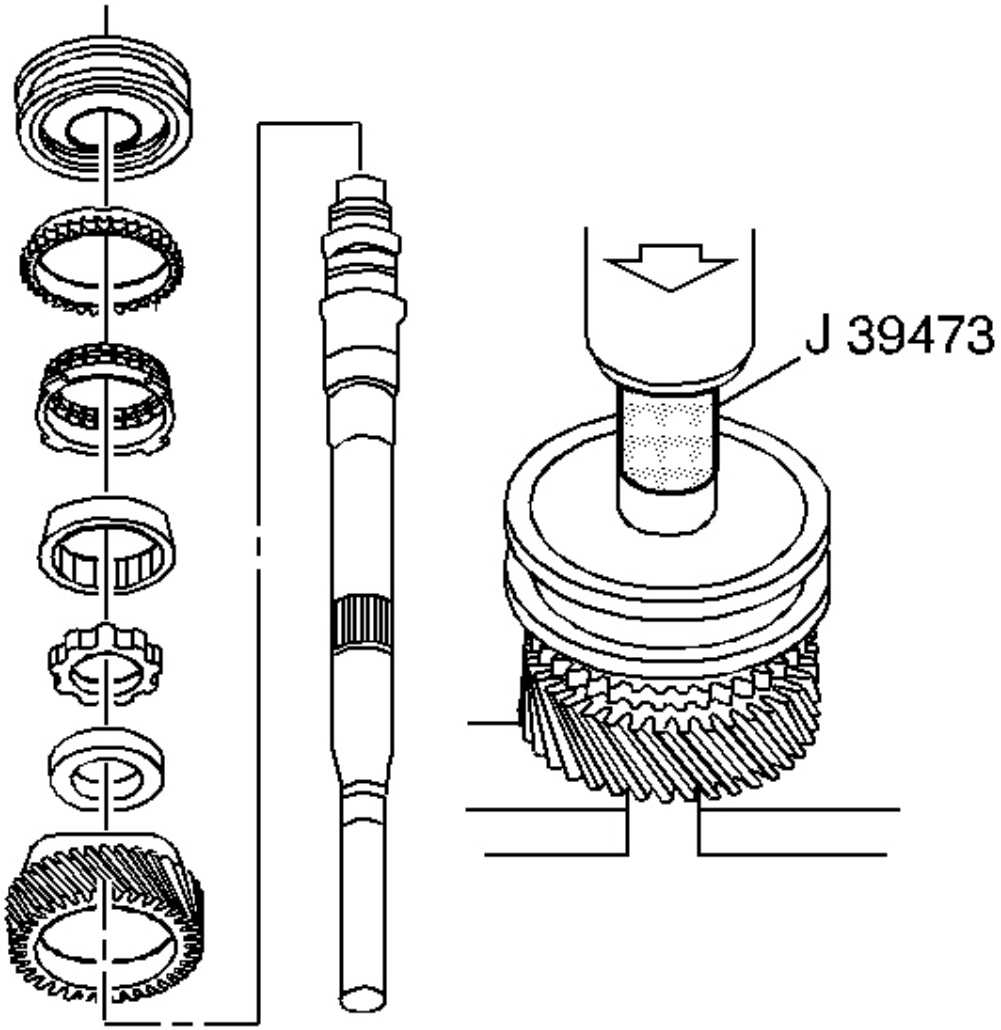

Fig. 114: Identifying 3rd/4th Speed Synchronizer Assembly, Blocking Ring, Cones, Washer & Spacer
Courtesy of GENERAL MOTORS CORP.

14. Use the **J 39473** , V-blocks, and a hydraulic press to remove the 3rd speed gear. The 3rd/4th speed synchronizer assembly, the 3rd speed gear blocking ring, the 3rd speed gear friction cone, the 3rd speed gear inner cone, thrust washer, and spacer will press off with the 3rd speed gear.

cardiagn.com

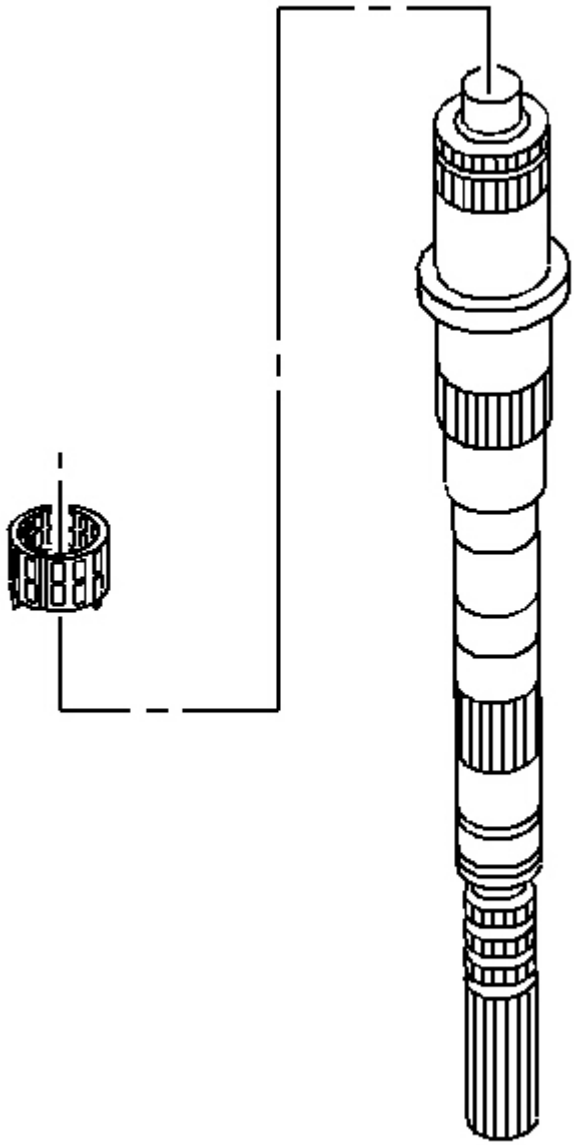

Fig. 115: View Of 3rd Speed Gear Caged Needle Bearing & Spacer
Courtesy of GENERAL MOTORS CORP.

15. Remove the 3rd speed gear caged needle bearing.

Input Shaft

cardiagn.com

Tools Required

- J 22912-O1 Split Plate
- **J 23907** Slide Hammer. See **Special Tools** .
- **J 39594** Bearing Race Remover. See **Special Tools** .

IMPORTANT: Do not replace the tapered bearing or the bearing race unless inspection shows that the bearing or the race are damaged.

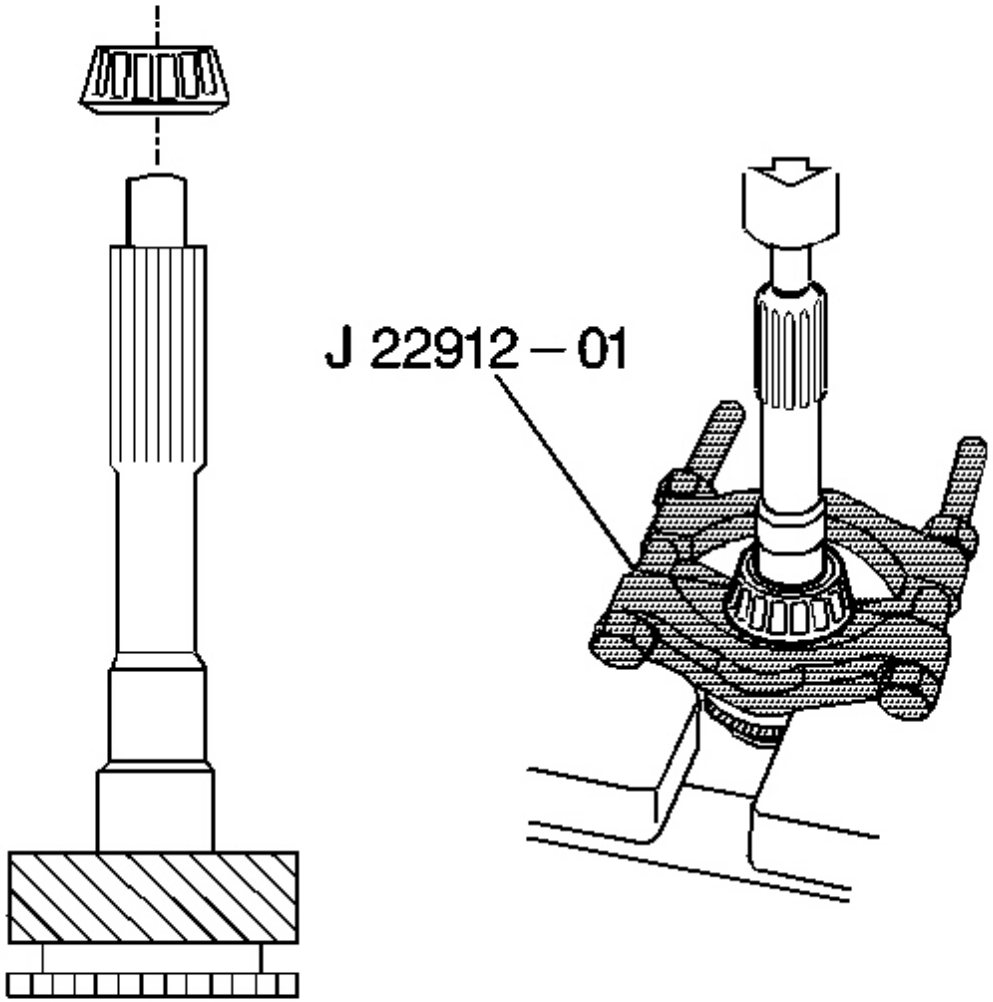

Fig. 116: Using J 22912-O1 To Remove Tapered Bearing From Input Shaft

cardiagn.com

Courtesy of GENERAL MOTORS CORP.

1. Remove the tapered bearing from the input shaft, using the J 22912-O1 and a hydraulic press.

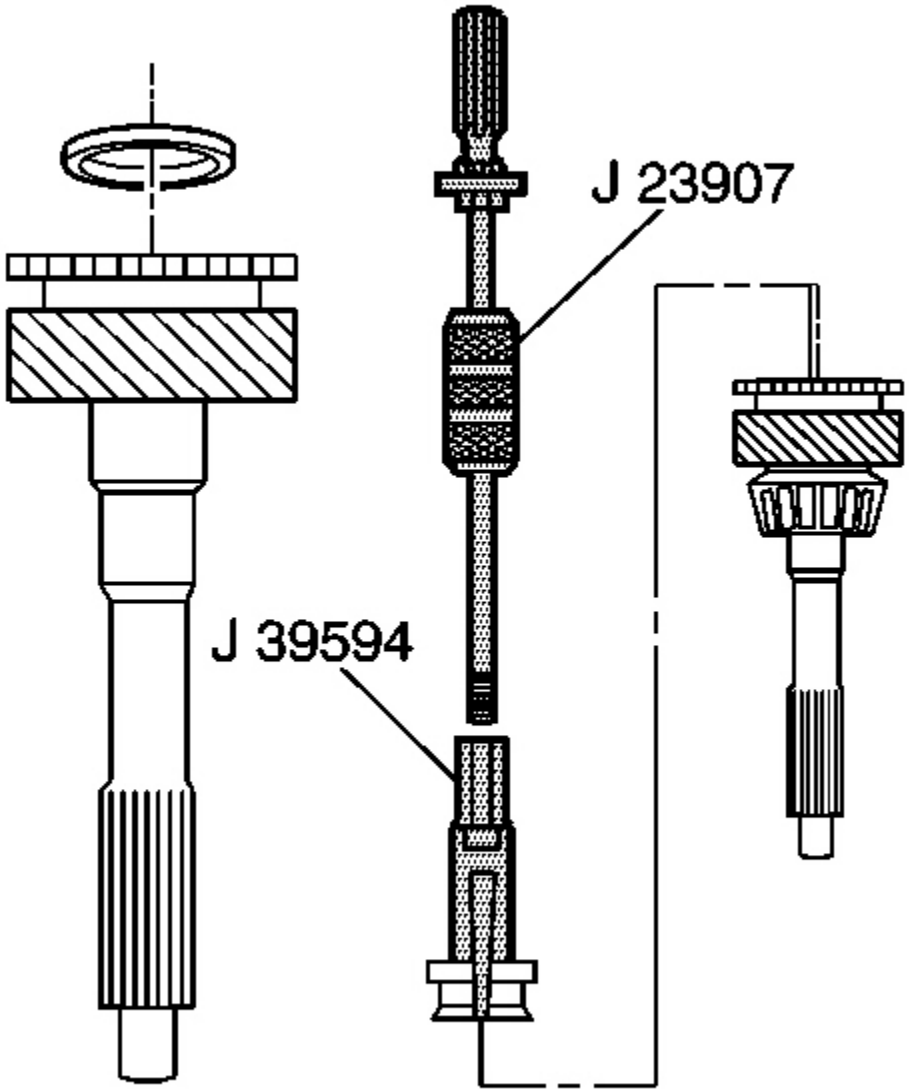

Fig. 117: Removing Bearing Race From Input Shaft Using J 23907 And J 39594
Courtesy of GENERAL MOTORS CORP.

2. Remove the bearing race from the input shaft, using the **J 23907** and the **J 39594** .

cardiagn.com

COUNTERSHAFT DISASSEMBLE

Tools Required

- J 22912-O1 Split Plate
- **J 39473** Mainshaft Bearing Installer. See **Special Tools** .
- **J 39511** Split Plate. See **Special Tools** .
- **J 39547** Press Adapter. See **Special Tools** .

IMPORTANT: Do not replace tapered bearings unless inspection shows bearing damage.

1. Remove the small tapered bearing, using the J 22912-O1 with the **J 39473** and a hydraulic press.

cardiagn.com

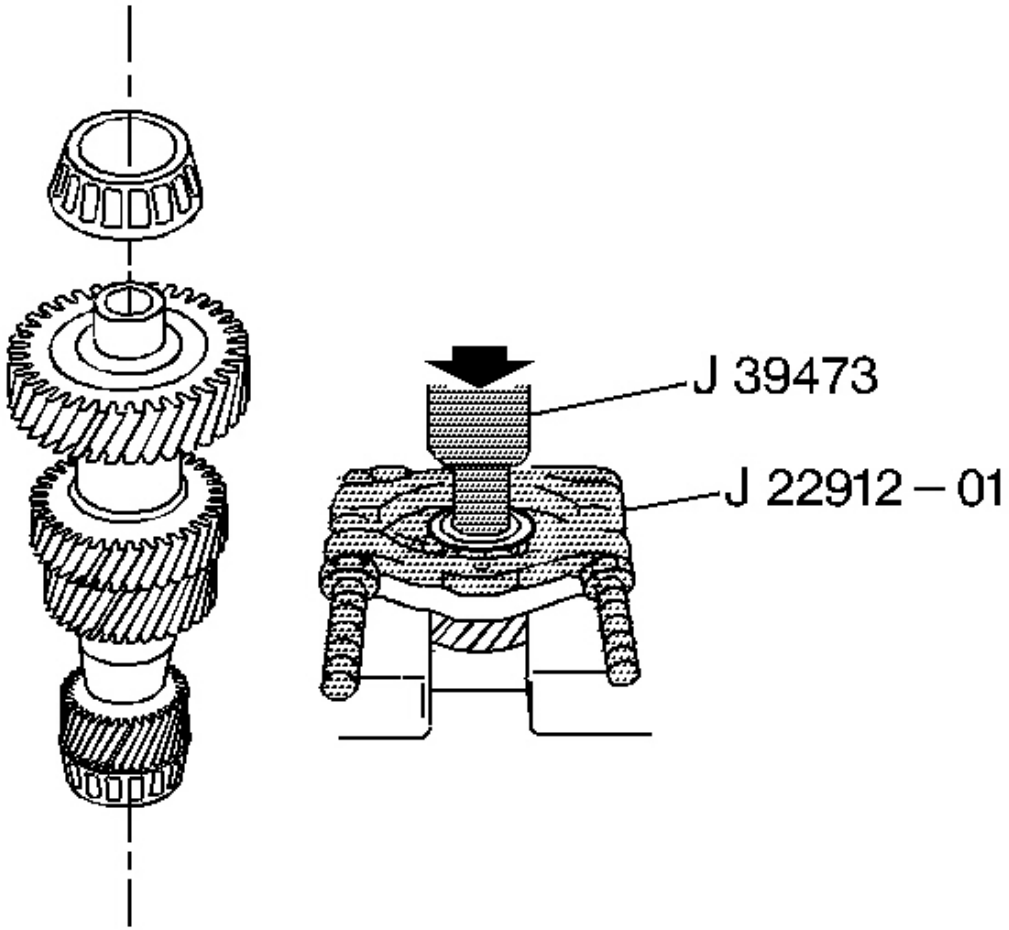

Fig. 118: View Of Small Tapered Countershaft Bearing
Courtesy of GENERAL MOTORS CORP.

2. Discard the small tapered bearing.

cardiagn.com

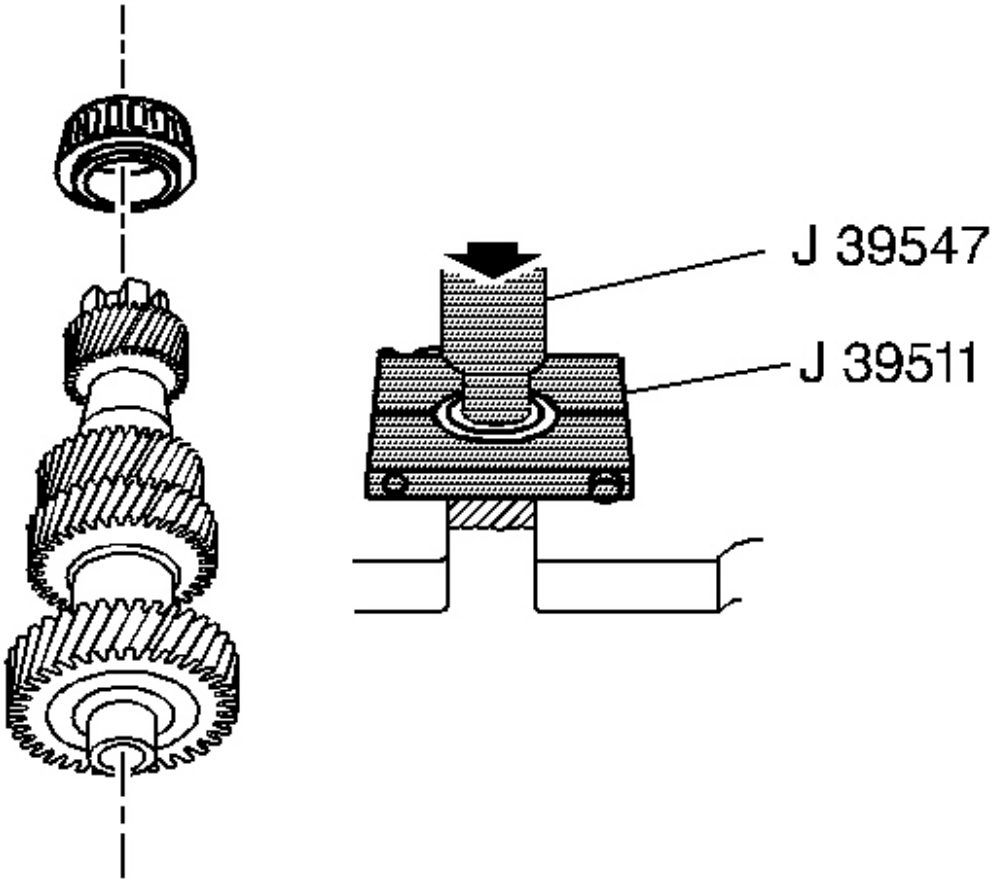

Fig. 119: Identifying Large Tapered Countershaft Bearing
Courtesy of GENERAL MOTORS CORP.

3. Remove the large tapered bearing, using the **J 39511** , the **J 39547** , and a hydraulic press.
4. Discard the large tapered bearing.

COUNTERSHAFT EXTENSION DISASSEMBLE

Tools Required

- **J 22910-01** Split Plate. See **Special Tools** .
- **J 39442** Press Adapter. See **Special Tools** .
- **J 39443** Split Plate. See **Special Tools** .

cardiagn.com

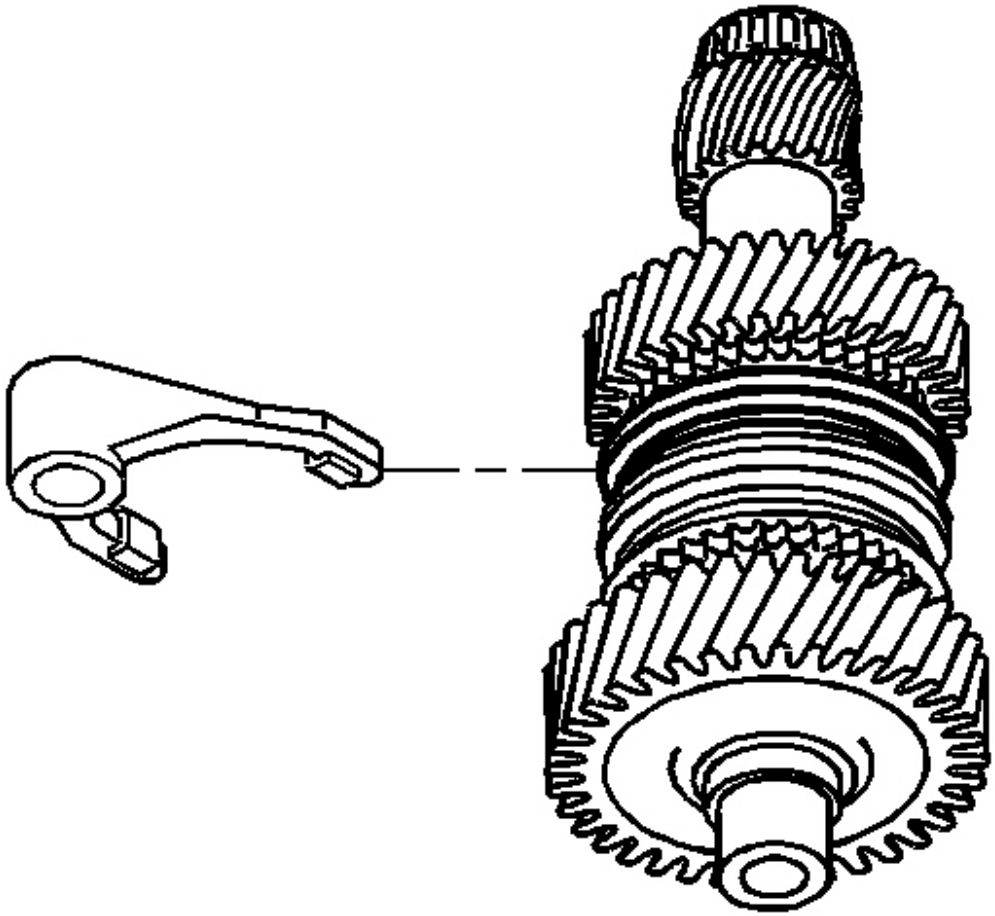

Fig. 120: View Of 5th/6th Speed Shift Fork
Courtesy of GENERAL MOTORS CORP.

1. Remove the 5th/6th speed shift fork.

cardiagn.com

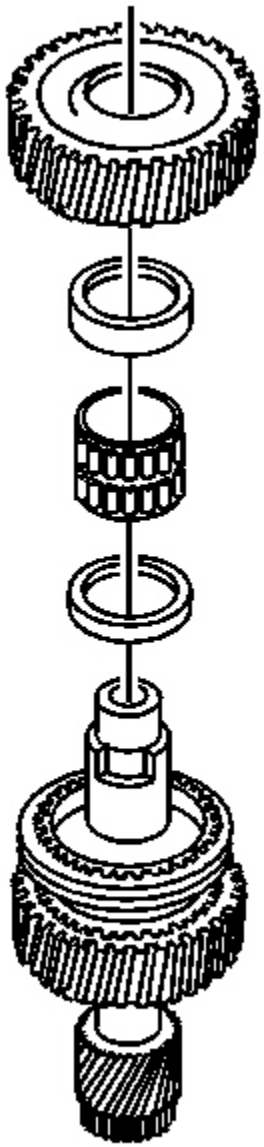

Fig. 121: View Of 6th Speed Assembly
Courtesy of GENERAL MOTORS CORP.

2. Remove the following parts in order:
    1. The 6th speed drive gear
    2. The 6th speed gear bearing spacer

cardiagn.com

3. The caged needle bearing
4. The 6th speed gear bearing spacer

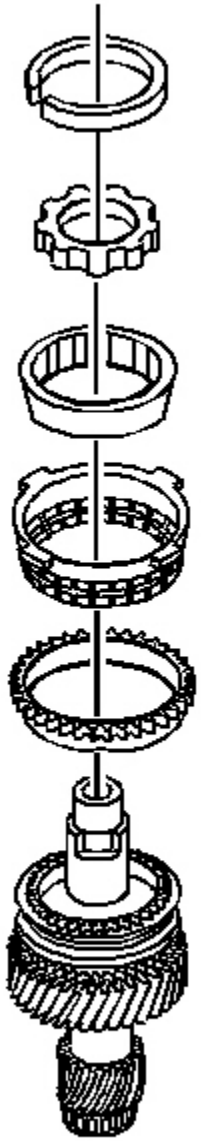

Fig. 122: Identifying 6th Speed Cones & Rings
Courtesy of GENERAL MOTORS CORP.

cardiagn.com

3. Remove the following parts in order:
    1. The 5th/6th speed synchronizer retainer ring
    2. The thrust washer
    3. The 6th speed drive gear inner cone
    4. The 6th speed drive gear friction cone
    5. The 6th speed drive gear blocking ring
4. Discard the retainer ring.

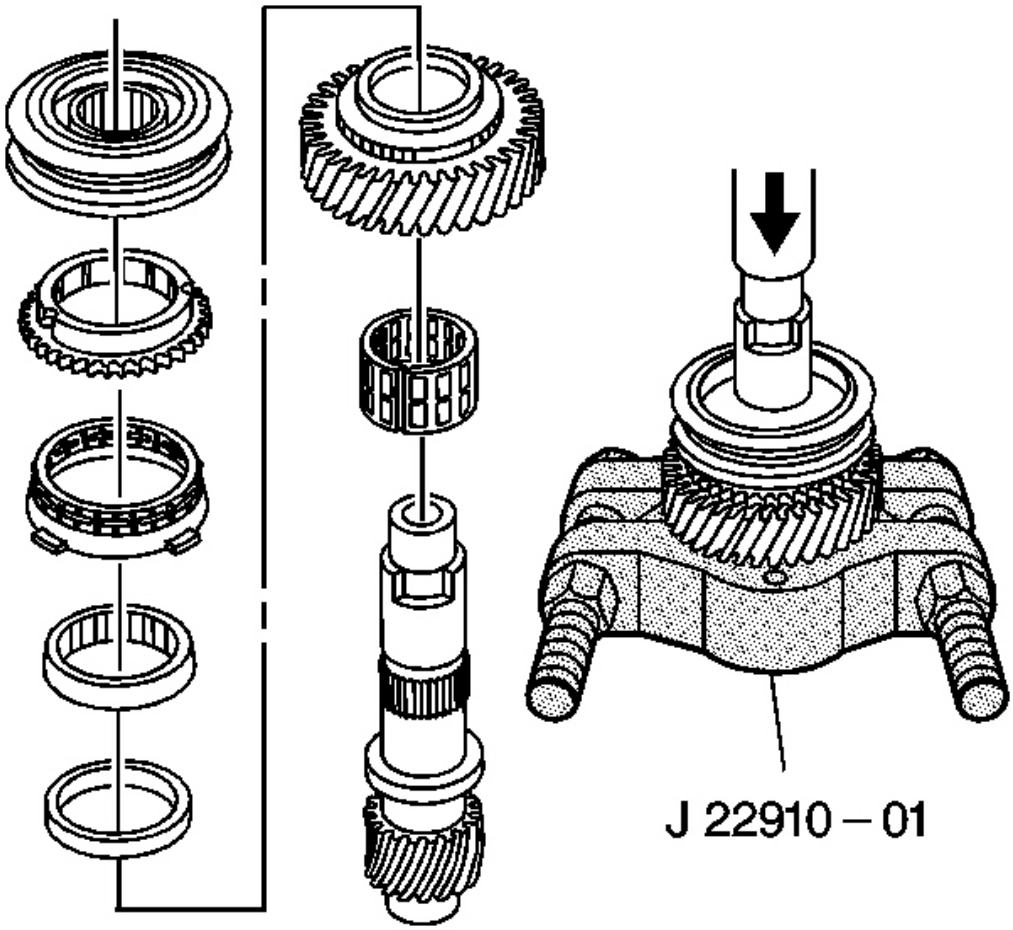

Fig. 123: View Of 5th/6th Speed Synchronizer Assembly, Rings, Cones, Washer & Needle Bearing
Courtesy of GENERAL MOTORS CORP.

5. Remove the 5th speed drive gear, using the **J 22910-01** and a hydraulic press.

cardiagn.com

The 5th/6th speed synchronizer assembly, and the 5th speed drive gear blocking ring, friction cone, inner cone and thrust washer will press off with the 5th speed drive gear.

6. Remove the 5th speed drive gear caged needle bearing.

IMPORTANT: Do not replace the small tapered bearing unless inspection shows bearing damage.

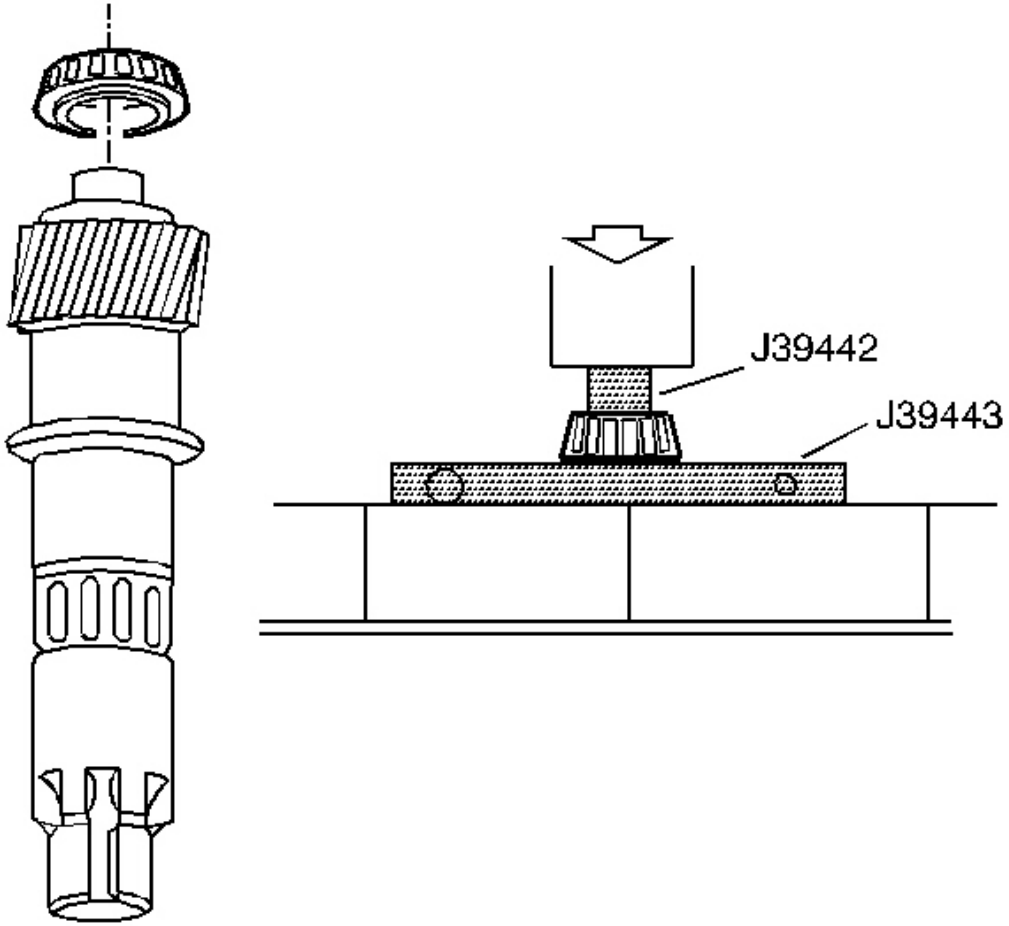

Fig. 124: Removing Small Tapered Bearing Using J 39442 & J 39443
Courtesy of GENERAL MOTORS CORP.

7. Remove the small tapered bearing, using the **J 39442** , the **J 39443** , and a hydraulic press.

cardiagn.com

SYNCHRONIZERS DISASSEMBLE

1st/2nd, 3rd/4th, 5th/6th Synchronizers

IMPORTANT: Synchronizer components are not interchangeable. Keep all the synchronizer components separate. The synchronizer hubs and the sliding sleeves are a selected assembly. Keep the hubs and the sliding sleeves together as originally assembled.

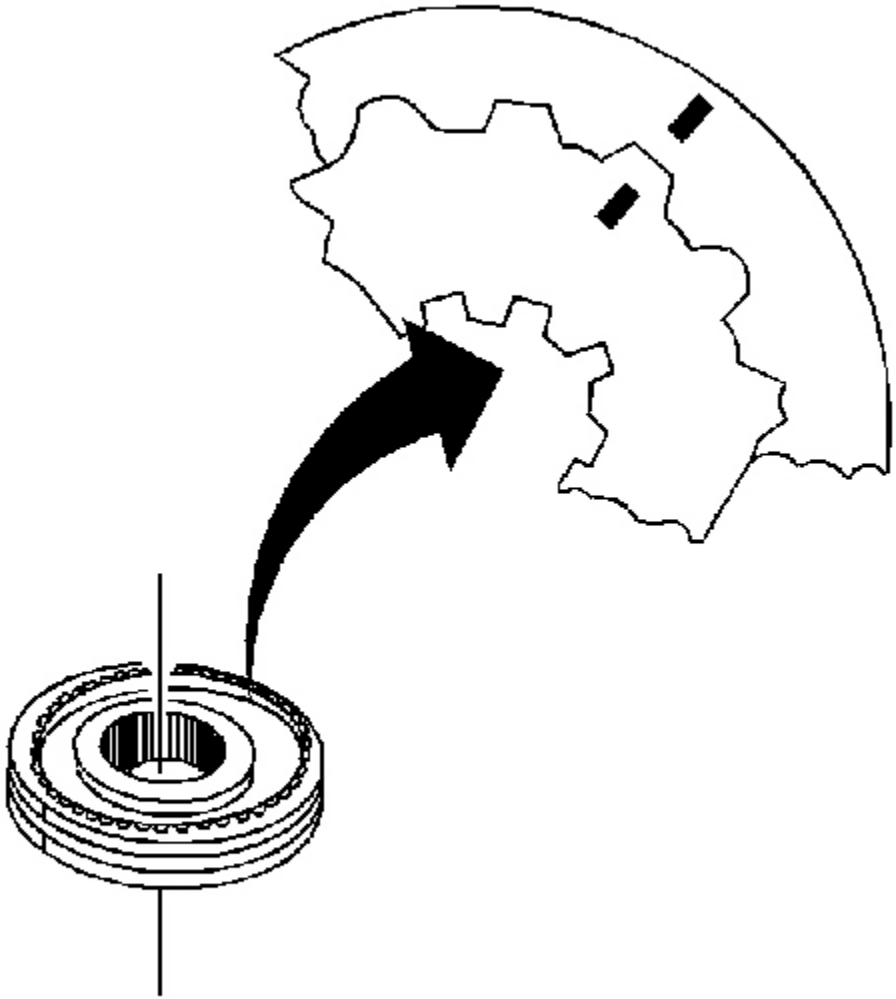

Fig. 125: Identifying Speed Gear Synchronizer Assembly Scribe Marks
Courtesy of GENERAL MOTORS CORP.

cardiagn.com

1. Scribe a mark on the synchronizer hub and on the sleeve. This will help you to reinstall the parts in the same position.

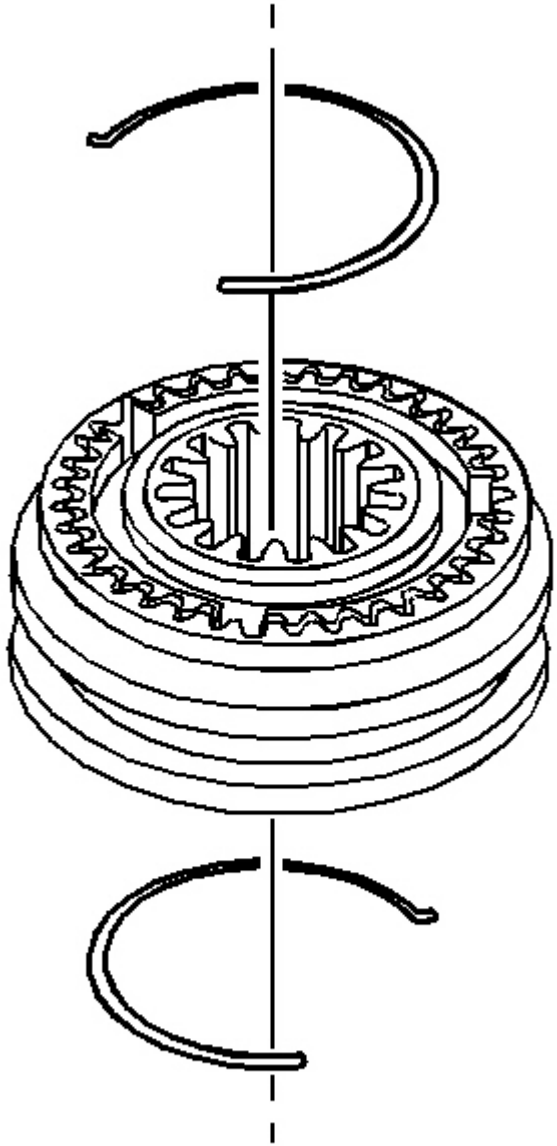

Fig. 126: View Of Synchronizer Springs
Courtesy of GENERAL MOTORS CORP.

cardiagn.com

2. Remove the synchronizer springs. Use a small-blade screwdriver.

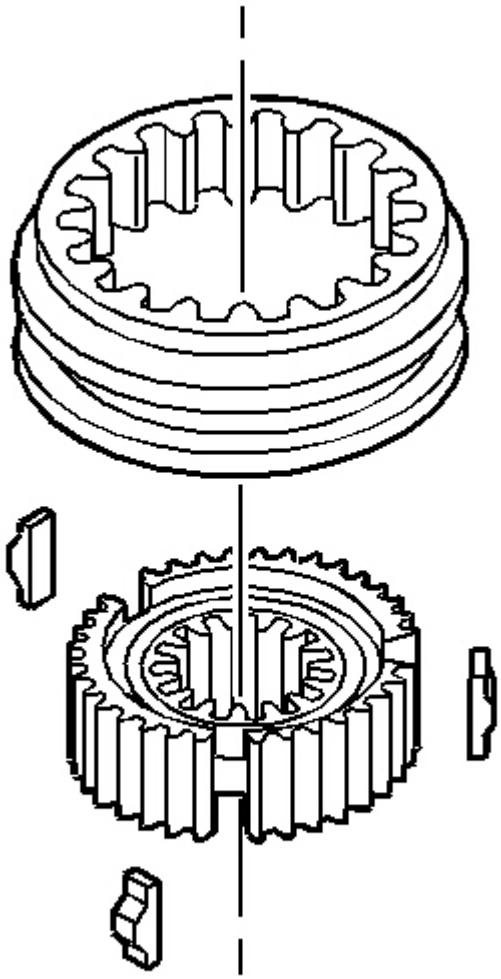

Fig. 127: Installing/Removing Synchronizer Sleeve & Keys On Hub
Courtesy of GENERAL MOTORS CORP.

3. Remove the synchronizer sleeve and the keys from the hub.

Reverse Synchronizer

1. Scribe a mark on the synchronizer hub and on the sleeve. This will help you to reinstall the parts in the same position.

cardiagn.com

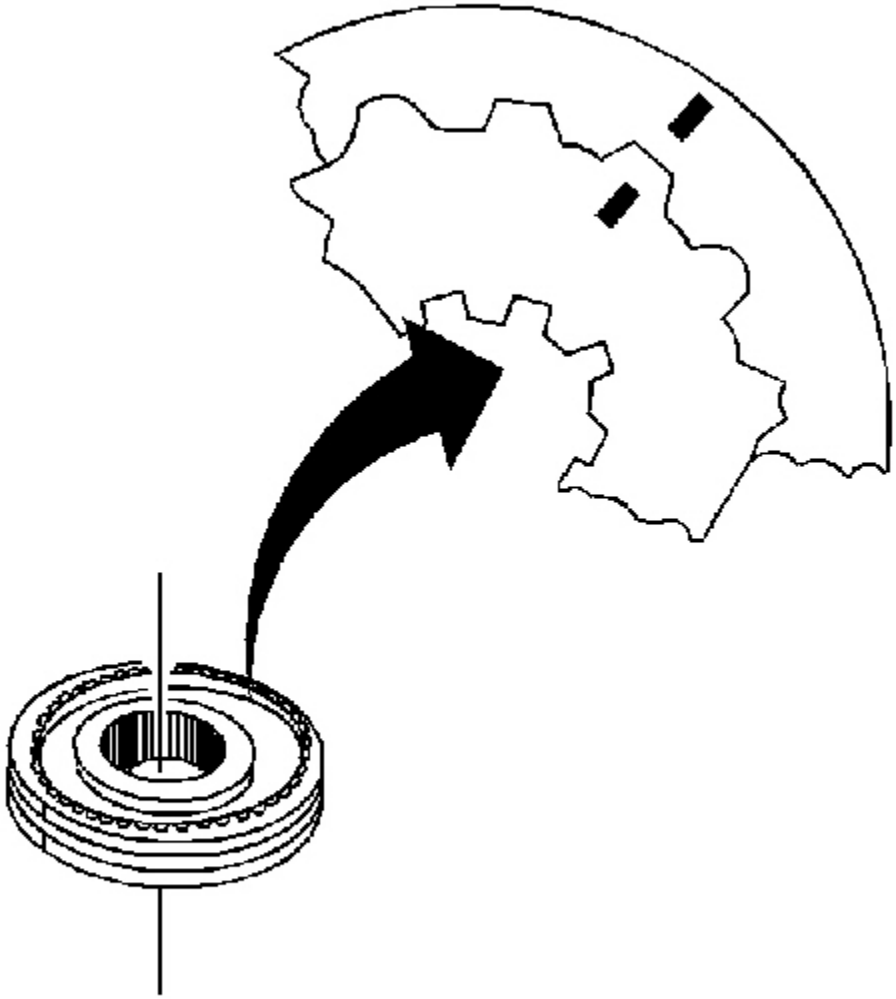

Fig. 128: Identifying Speed Gear Synchronizer Assembly Scribe Marks
Courtesy of GENERAL MOTORS CORP.

cardiagn.com

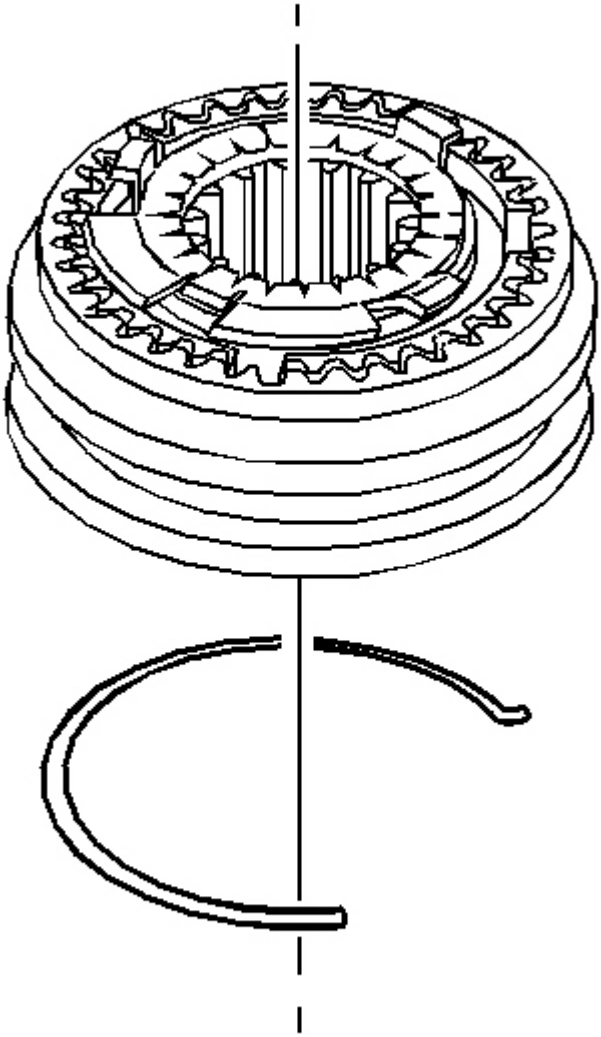

Fig. 129: Locating Synchronizer Spring
Courtesy of GENERAL MOTORS CORP.

2. Remove the synchronizer spring. Use a small-bladed screwdriver.

cardiagn.com

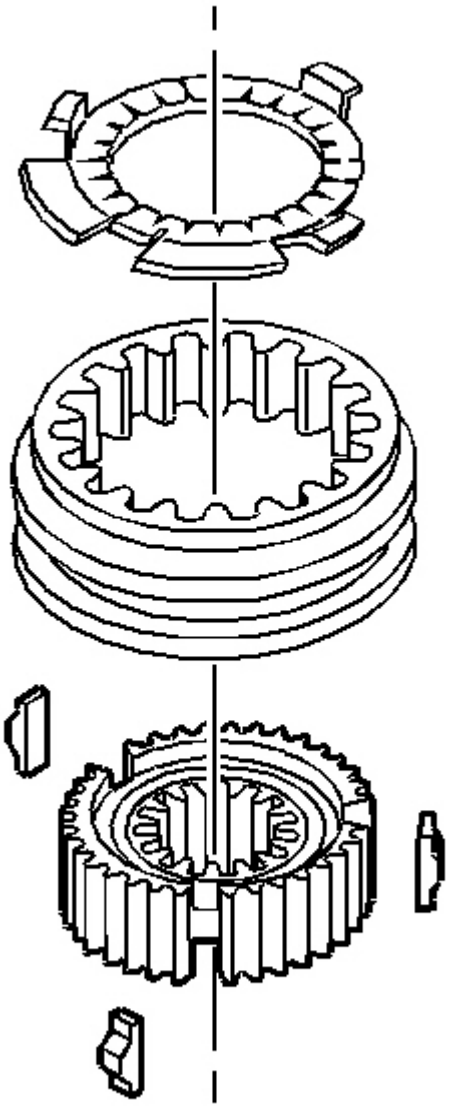

Fig. 130: Installing/Removing Synchronizer Sleeve & Keys On Hub
Courtesy of GENERAL MOTORS CORP.

3. Remove the synchronizer sleeve from the hub. Press against the inner hub.
4. Turn the hub over. The keys will slide out from the hub.

cardiagn.com

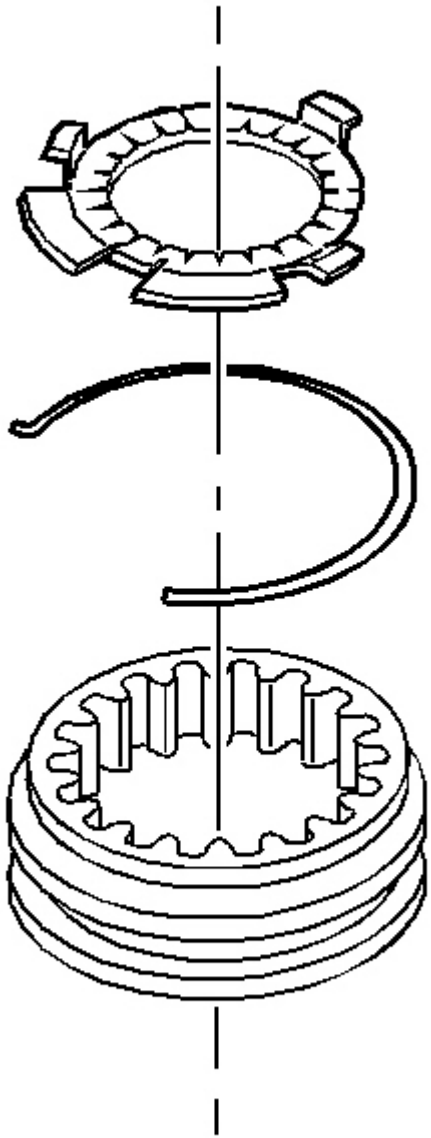

Fig. 131: Identifying Synchronizer Key Retainer & Spring
Courtesy of GENERAL MOTORS CORP.

5. Remove the following parts using a small-blade screwdriver:
    1. The synchronizer key retainer
    2. The synchronizer spring

cardiagn.com

6. Discard the synchronizer key retainer.

SYNCHRONIZERS CLEANING AND INSPECTION

1. Clean all the synchronizer parts in a suitable solvent. Air dry all the synchronizer parts.
2. Inspect the synchronizer parts for the following conditions:
    - Burrs
    - Cracks
    - Chamfer for excessive wear
    - Free movement of the clutching sleeves on their hubs
    - Worn or damaged clutch teeth
    - Distorted springs
3. Replace synchronizer parts that are worn or damaged.

    Replace a burred or nicked part that cannot be reconditioned by hand. Use a soft stone or a crocus cloth.

cardiagn.com

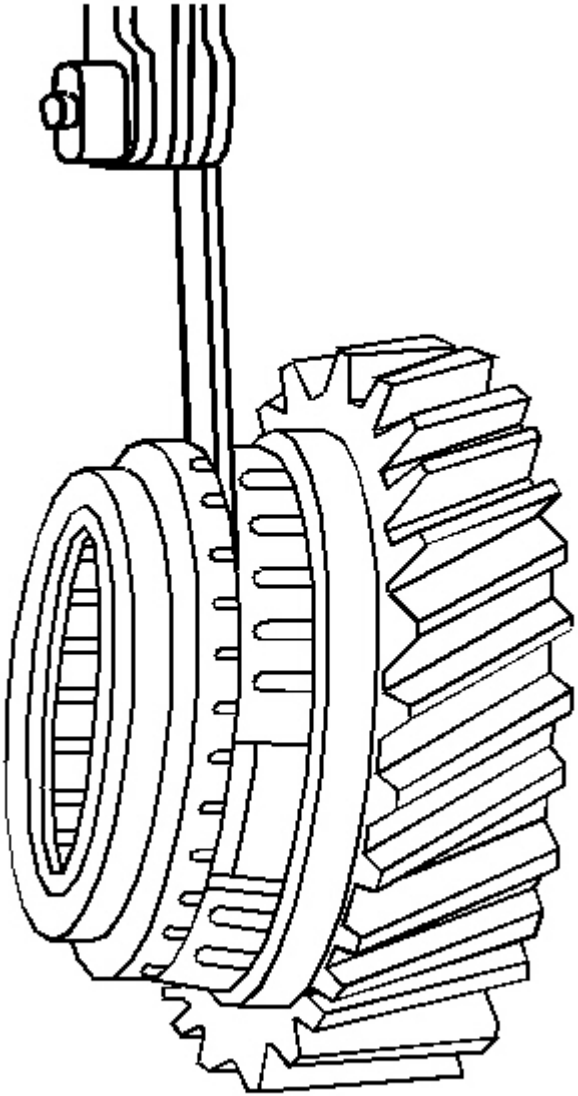

Fig. 132: Measuring Gap Between Blocking Ring & Speed Gear
Courtesy of GENERAL MOTORS CORP.

4. Measure the gap between the vertical faces of the blocking ring teeth and the speed gear as follows:
    1. Assemble the correct blocking ring with the correct speed gear.
    2. The blocking ring must be fully seated on the gear.
    3. Use a feeler gauge to measure the forward gear gap.

cardiagn.com

4. Use a feeler gauge to measure the reverse gear gap.

   Measure the gap without the wave washer in between the blocking ring and the reverse gear.

   The nominal gap is 1.27-2.16 mm (0.050-0.085 in) for the 1st and 2nd gear.

   The nominal gap is 1.27-2.03 mm (0.050-0.080 in) for the 3rd, 4th, 5th and 6th gear.

   Replace the friction cones and blocker rings when the gap is significantly less than specified.

SYNCHRONIZERS ASSEMBLE

1st/2nd Synchronizer

cardiagn.com

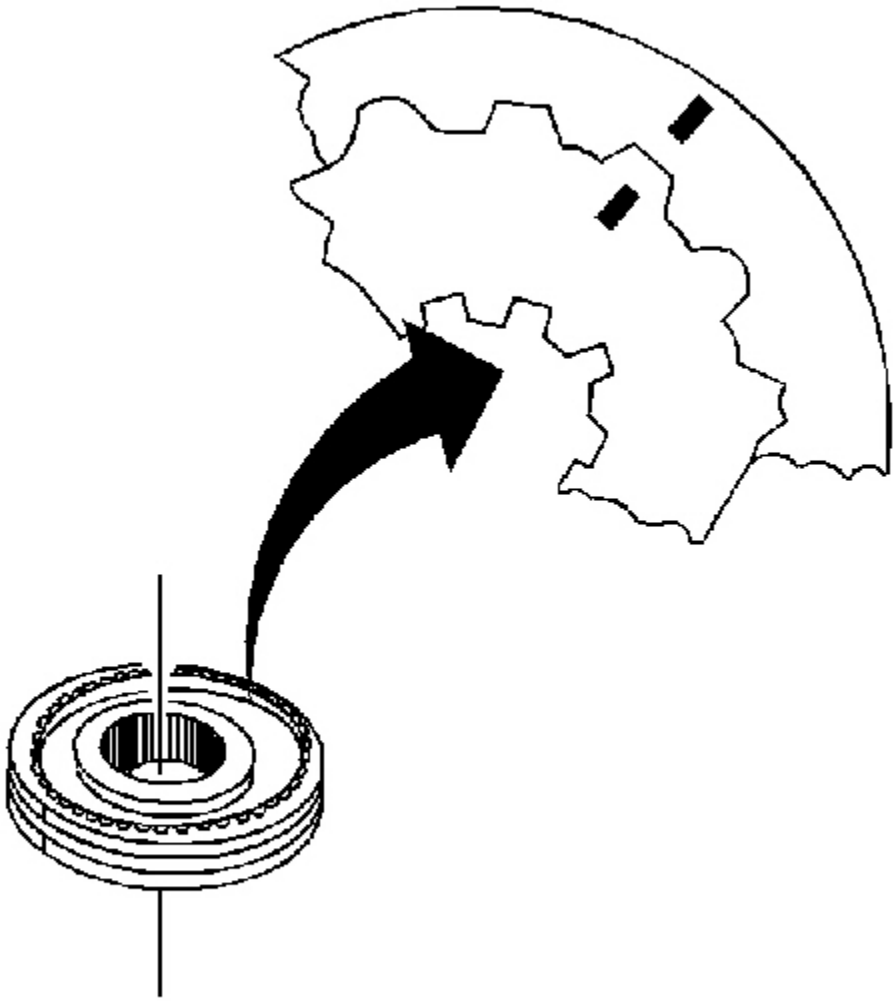

Fig. 133: Identifying Speed Gear Synchronizer Assembly Scribe Marks
Courtesy of GENERAL MOTORS CORP.

1. Check the synchronizer assembly scribe marks for correct positions.

cardiagn.com

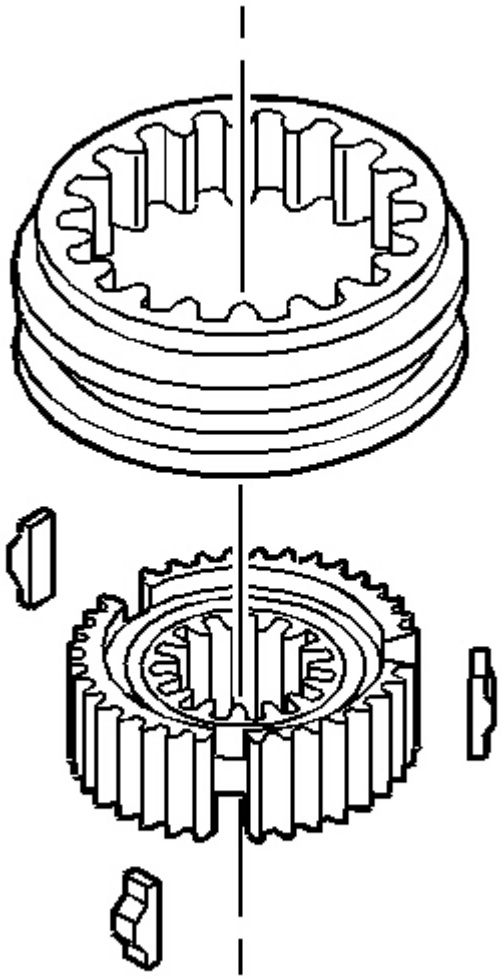

Fig. 134: Installing/Removing Synchronizer Sleeve & Keys On Hub
Courtesy of GENERAL MOTORS CORP.

2. Install the synchronizer sleeve to the hub (align the key openings in the hub with the cuts in the synchronizer sleeve).
3. Install the keys with the slots facing the hub.

cardiagn.com

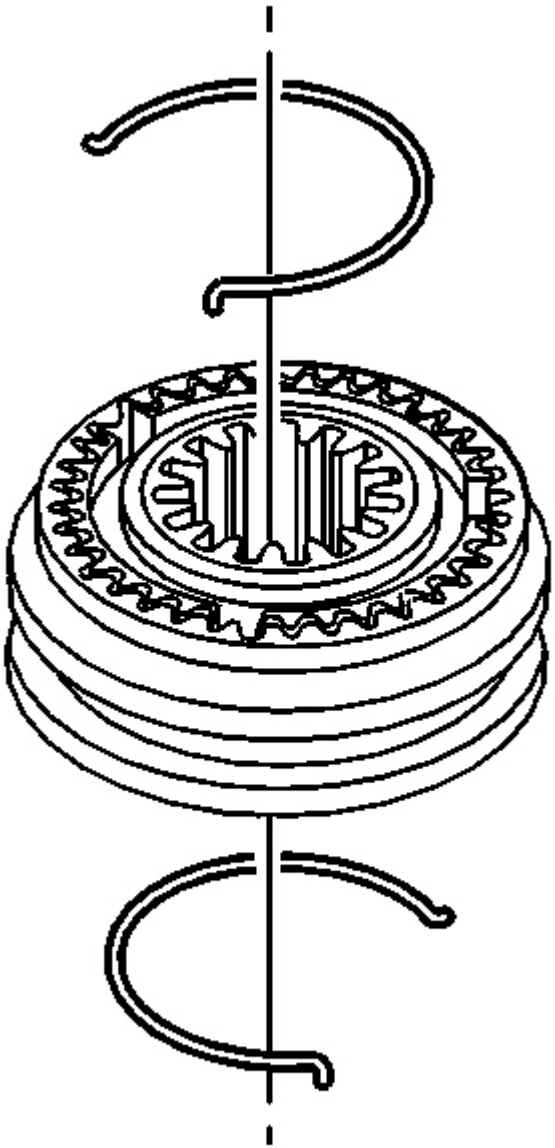

Fig. 135: View Of Reverse Synchronizer Springs
Courtesy of GENERAL MOTORS CORP.

4. Assemble the first spring (assemble the spring tangs to the side of two keys).
5. Assemble the second spring (assemble the spring tangs to the side of two keys such that the gap is not between the same two keys as the first spring).

cardiagn.com

3rd/4th, 5th/6th Synchronizers

1. Check the synchronizer assembly scribe marks for correct positions.

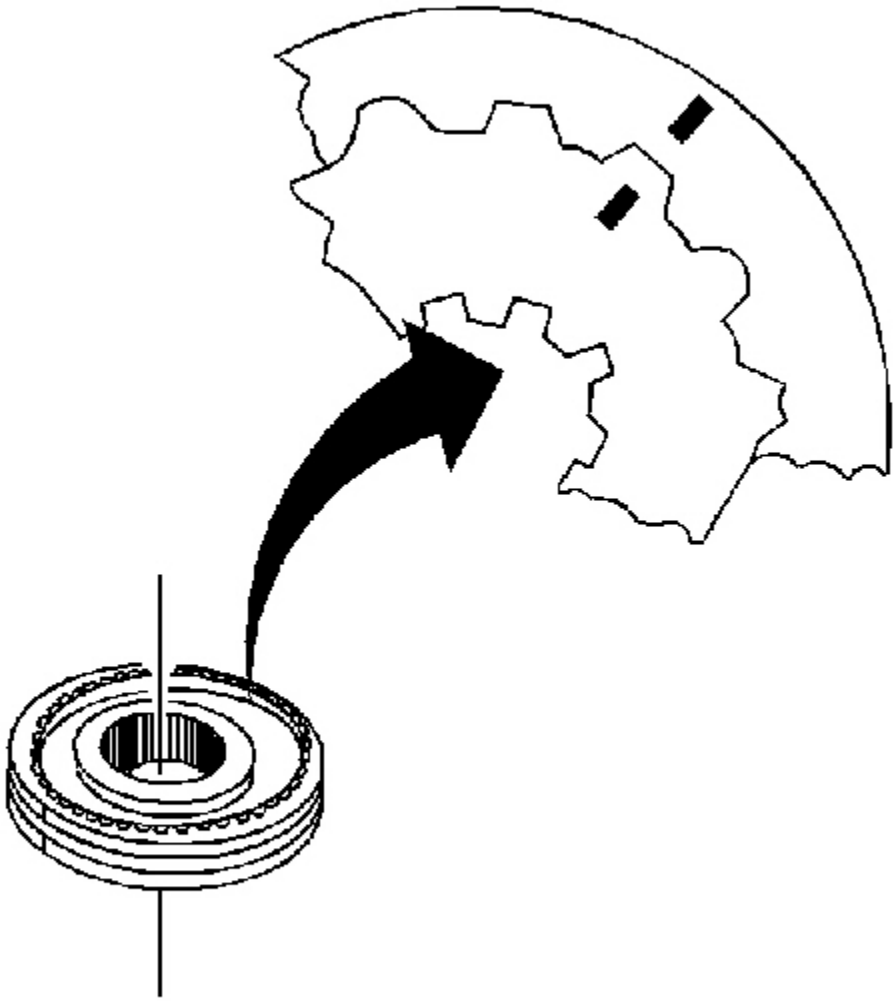

Fig. 136: Identifying Speed Gear Synchronizer Assembly Scribe Marks
Courtesy of GENERAL MOTORS CORP.

cardiagn.com

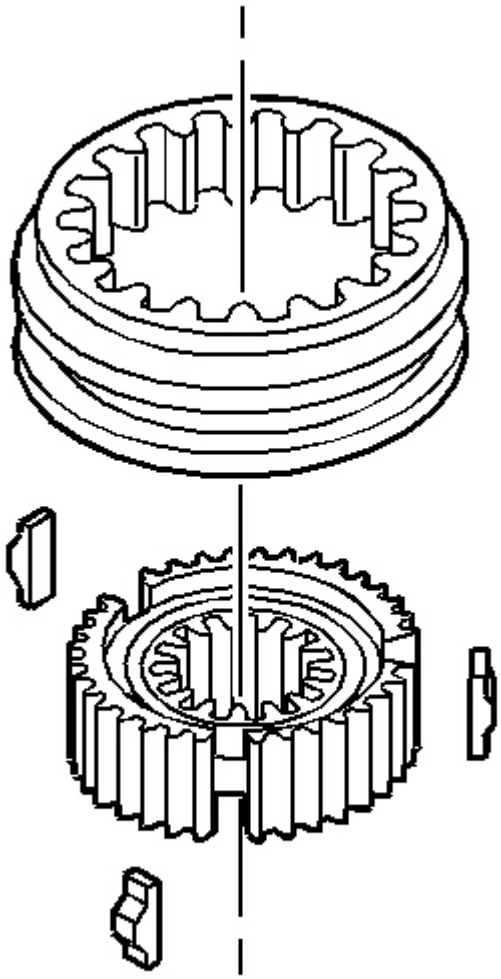

Fig. 137: Installing/Removing Synchronizer Sleeve & Keys On Hub
Courtesy of GENERAL MOTORS CORP.

2. Install the synchronizer sleeve to the hub (align the key openings in the hub with the cuts in the synchronizer sleeve).
3. Install the keys with the slots facing the hub.

cardiagn.com

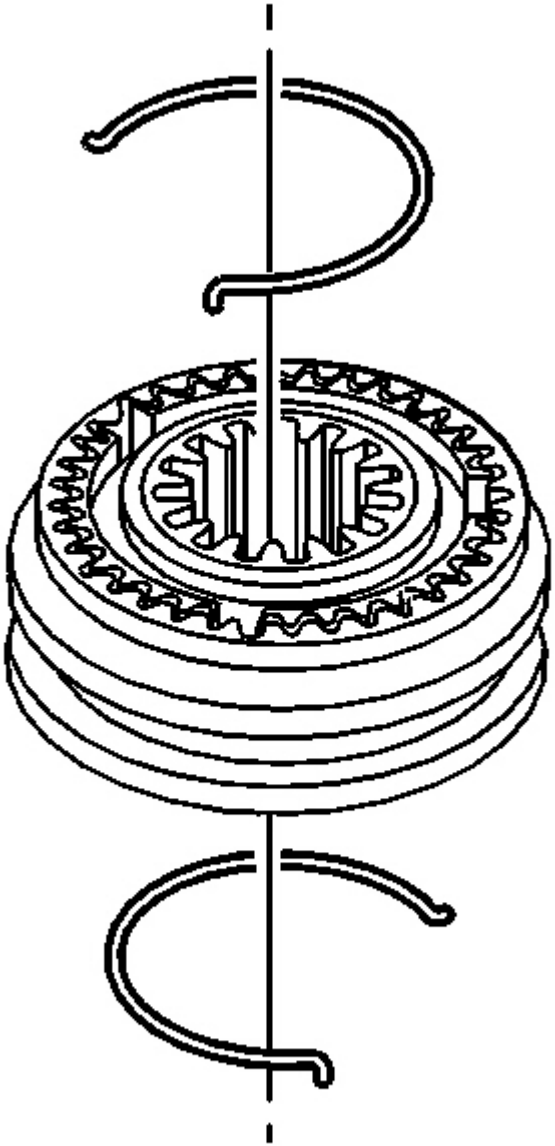

Fig. 138: View Of Reverse Synchronizer Springs
Courtesy of GENERAL MOTORS CORP.

4. Assemble the first spring (assemble the spring tang to one of the key slots).
5. Assemble the second spring (assemble the spring tang on the same key but in the opposite direction).

cardiagn.com

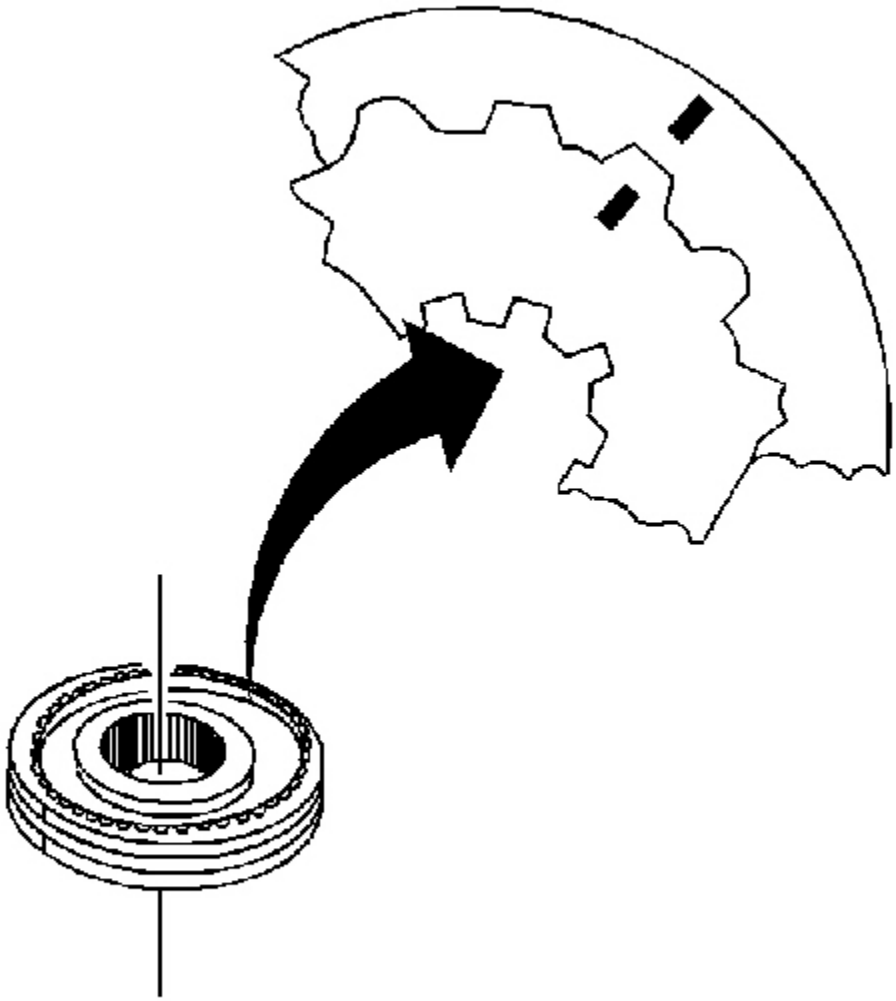

Fig. 139: Identifying Gear Synchronizer Assembly Scribe Marks
Courtesy of GENERAL MOTORS CORP.

1. Check the synchronizer assembly scribe marks for correct positions.

cardiagn.com

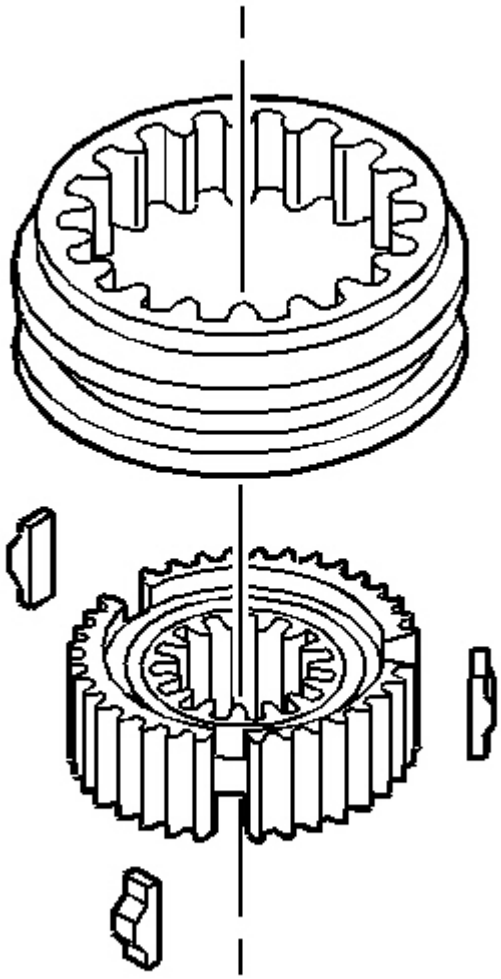

Fig. 140: Installing/Removing Synchronizer Sleeve & Keys On Hub
Courtesy of GENERAL MOTORS CORP.

2. Install the synchronizer sleeve to the hub (align the key openings in the hub with the cuts in the synchronizer sleeve).
3. Install the keys with the slots facing the hub.

cardiagn.com

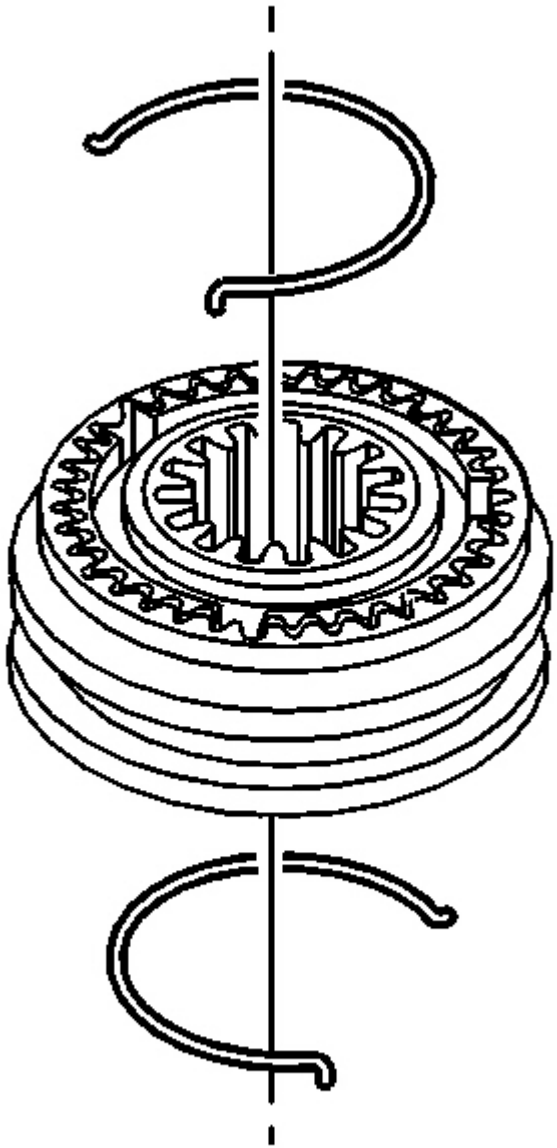

Fig. 141: View Of Reverse Synchronizer Springs
Courtesy of GENERAL MOTORS CORP.

4. Assemble the first spring (assemble the spring tang to one of the key slots).
5. Assemble the second spring (assemble the spring tang on the same key but in the opposite direction).

cardiagn.com

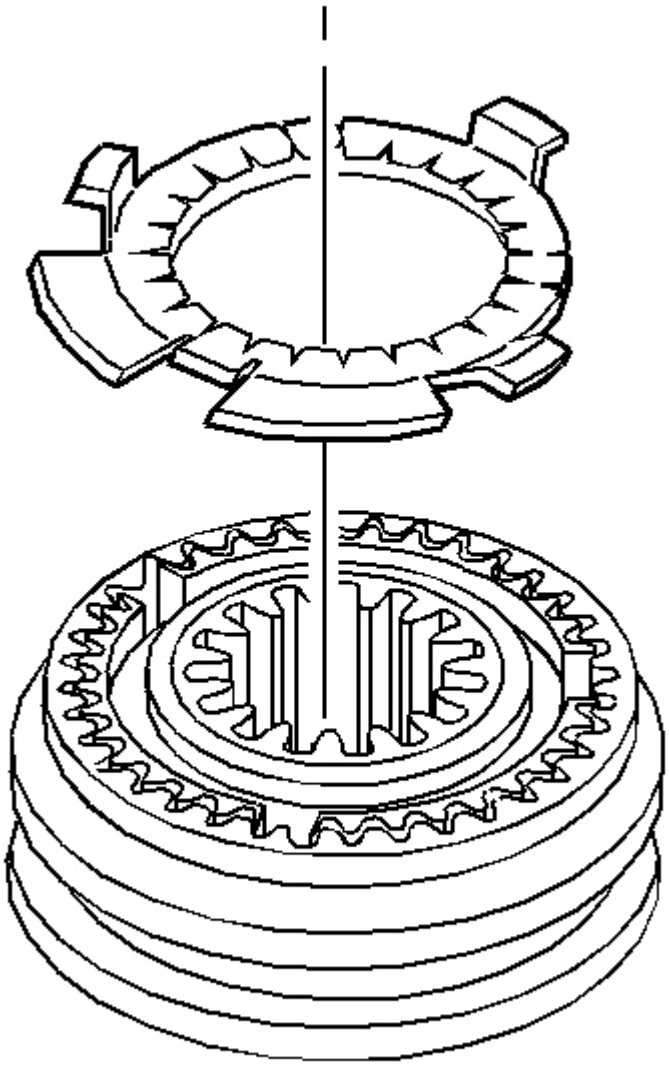

Fig. 142: Aligning Synchronizer Key Retainer Tangs Over Synchronizer Keys
Courtesy of GENERAL MOTORS CORP.

6. Install a new synchronizer key retainer with the key retainer tangs over the synchronizer keys.

SHIFT RAIL AND FORK ASSEMBLIES DISASSEMBLE

1st/2nd, 3rd/4th Shift Rail Assembly

cardiagn.com

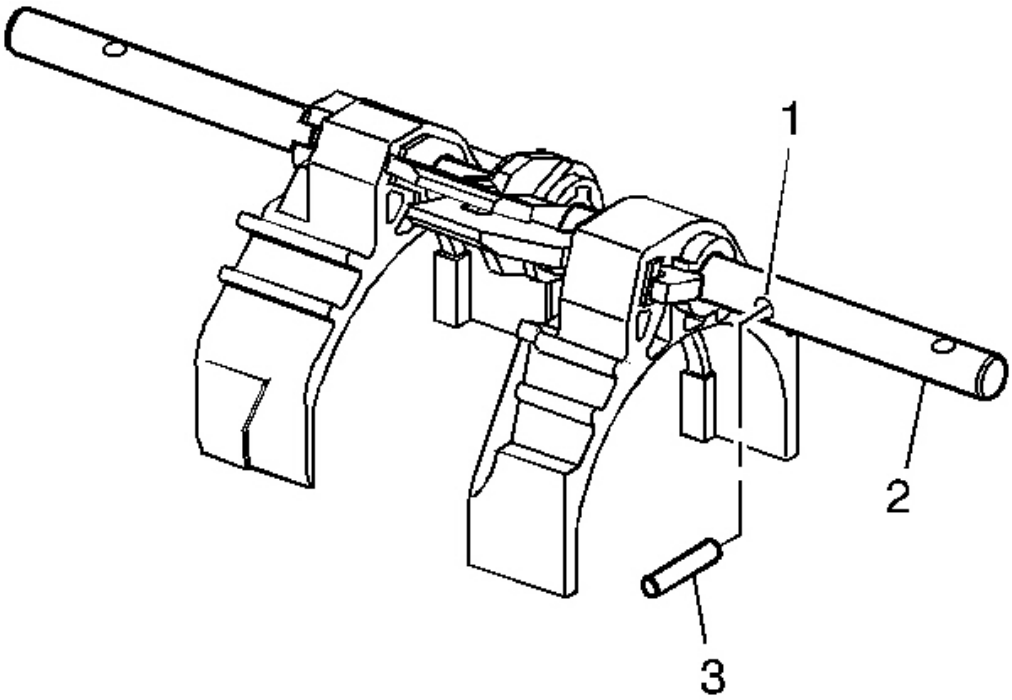

Fig. 143: View Of Neutral Return Cam Pin In Shift Shaft
Courtesy of GENERAL MOTORS CORP.

1. Remove the neutral return cam pin (3) from the shift shaft (2).

cardiagn.com

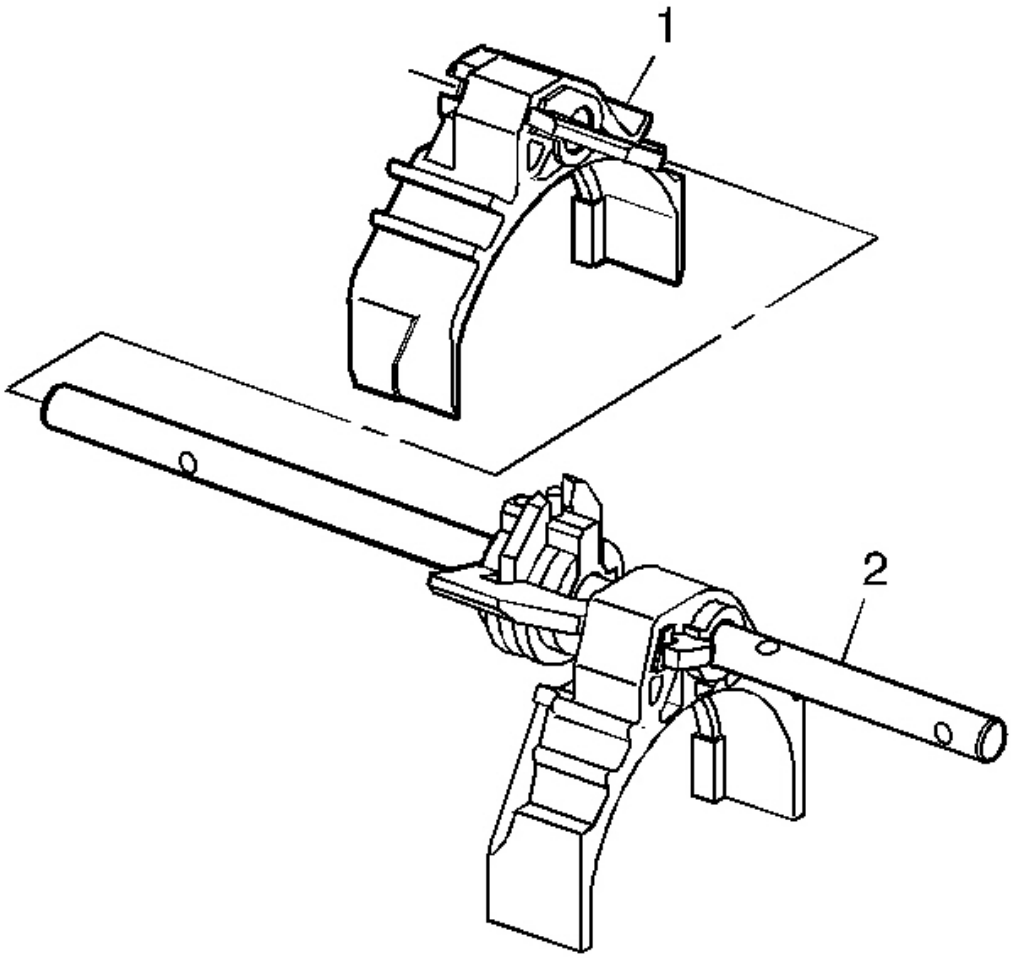

Fig. 144: View Of 1st/2nd Shift Fork On Shift Shaft
Courtesy of GENERAL MOTORS CORP.

2. Remove the 1st/2nd shift fork (1) from the shift shaft (2).

cardiagn.com

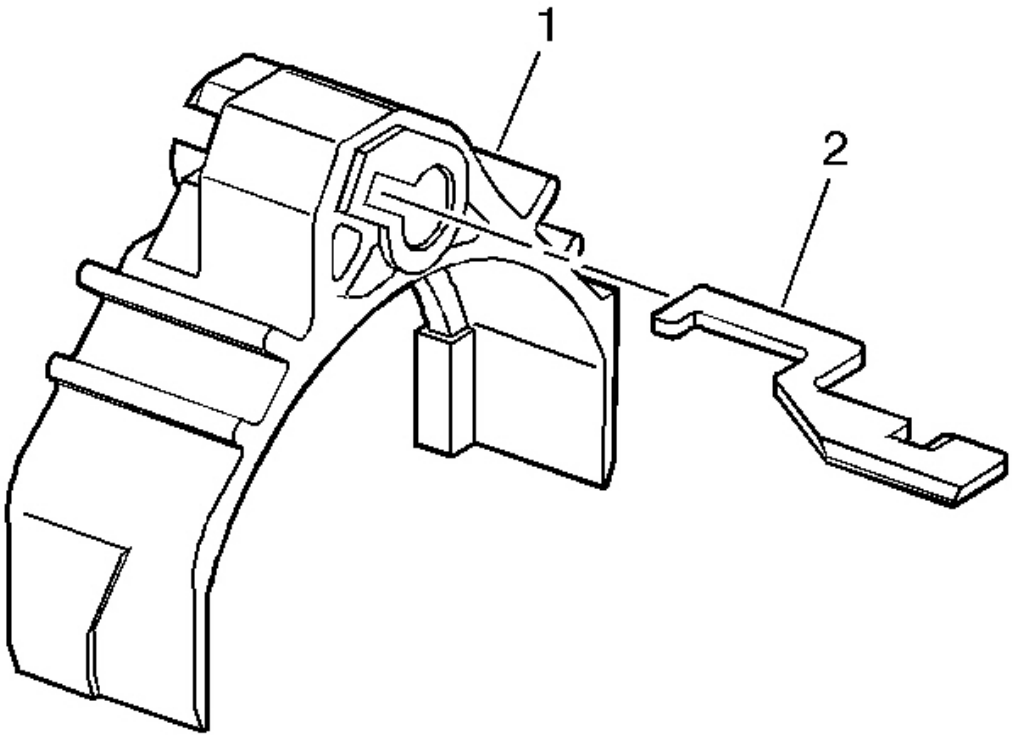

Fig. 145: Locating Shift Link & 1st/2nd Shift Fork
Courtesy of GENERAL MOTORS CORP.

3. Remove the shift link (2) from the 1st/2nd shift fork (1).

cardiagn.com

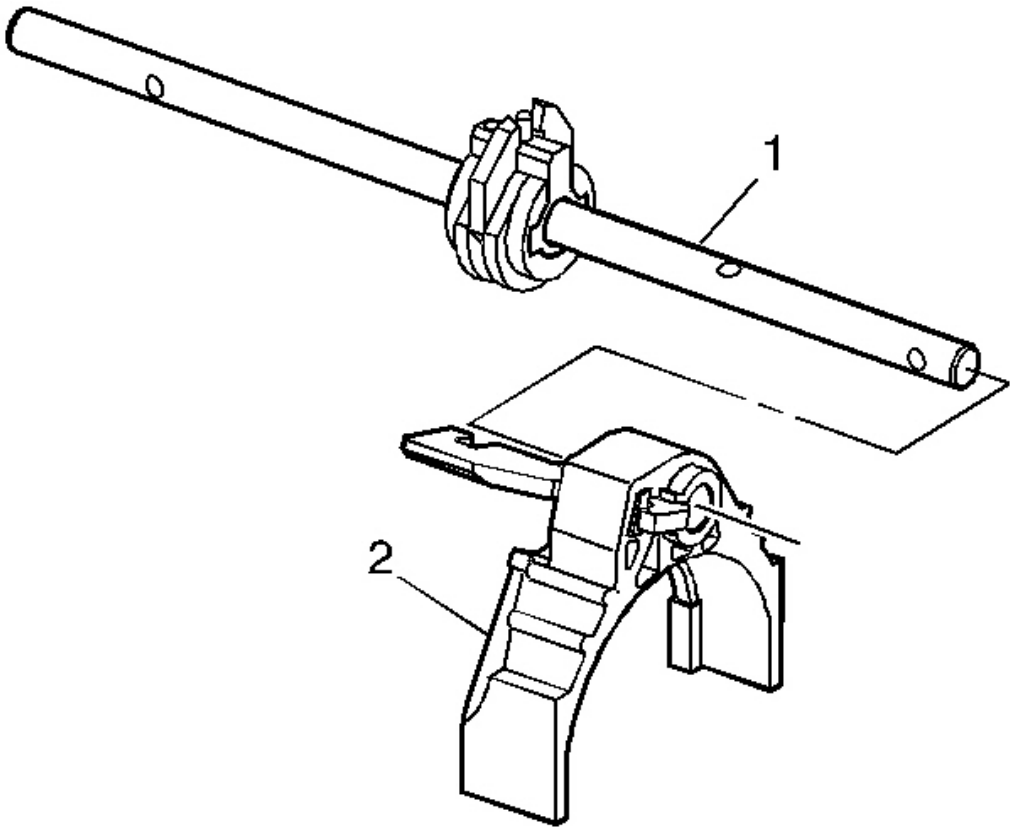

Fig. 146: Identifying 3rd/4th Shift Fork & Shift Shaft
Courtesy of GENERAL MOTORS CORP.

4. Remove the 3rd/4th shift fork (2) from the shift shaft (1).

cardiagn.com

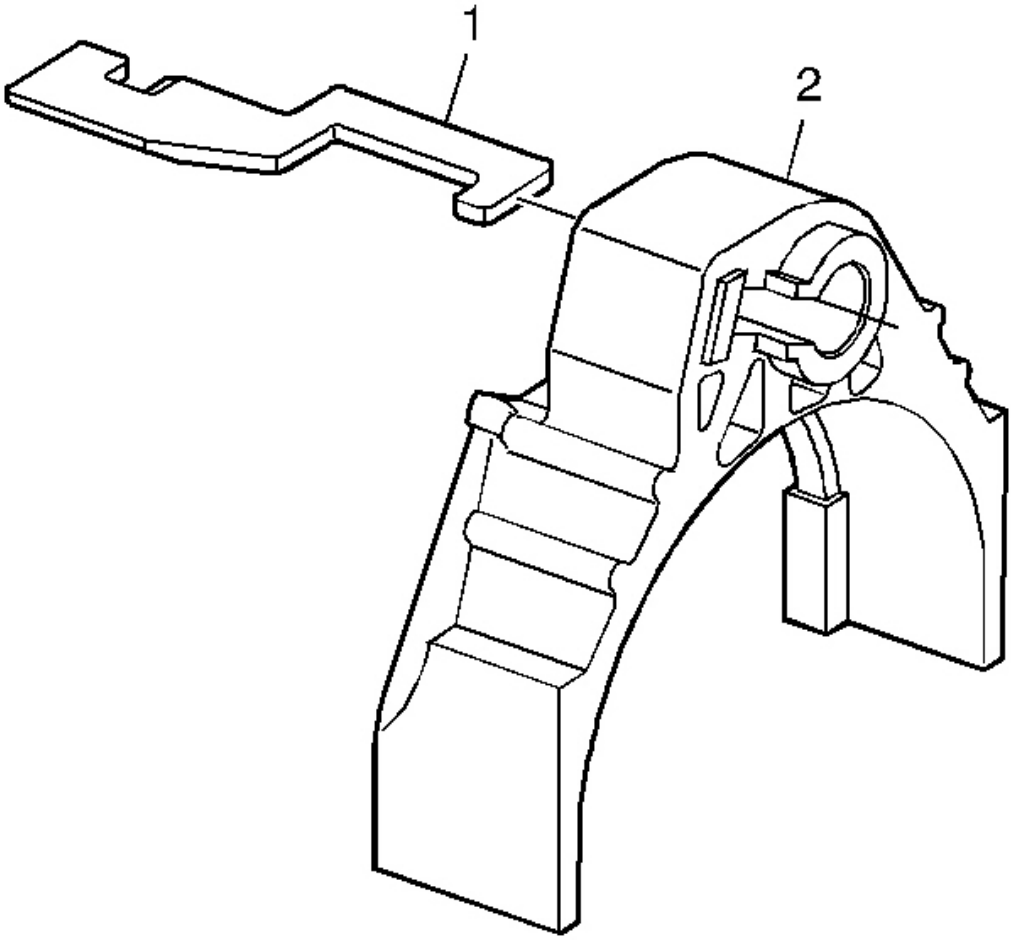

Fig. 147: View Of Shift Link In 3rd/4th Shift Fork
Courtesy of GENERAL MOTORS CORP.

5. Remove the shift link (1) from the 3rd/4th shift fork (2).

cardiagn.com

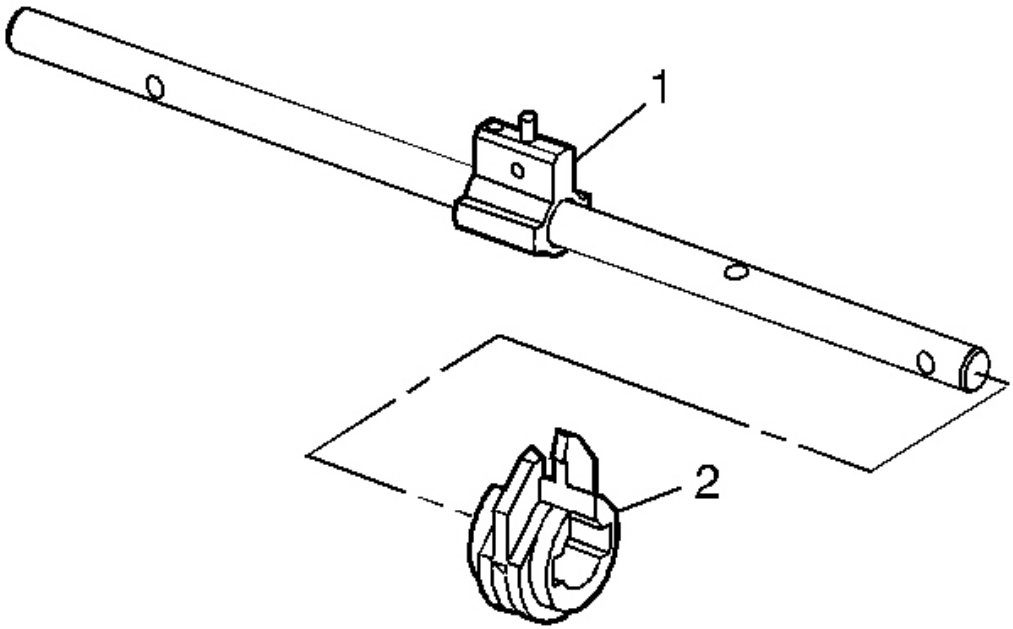

Fig. 148: Locating Interlocking Plate On Selector Pin
Courtesy of GENERAL MOTORS CORP.

6. Remove the interlocking plate (2) from the selector pin (1).

cardiagn.com

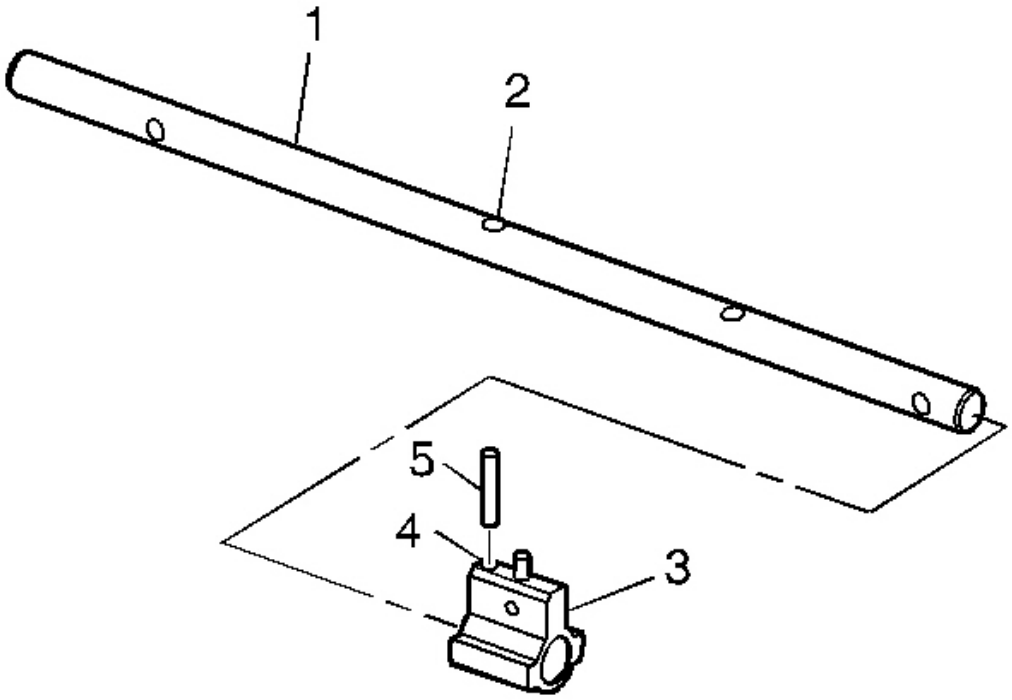

Fig. 149: Installing/Removing Selector Pin & Roll Pin On Shift Shaft
Courtesy of GENERAL MOTORS CORP.

7. Remove the selector roll pin (5).
8. Remove the selector pin (3) from the shift shaft (1).

5th/6th, Reverse Shift Rail Assembly

Tools Required

- **J 23907** Slide Hammer. See **Special Tools** .
- **J 39439-2** Bushing Remover. See **Special Tools** .

cardiagn.com

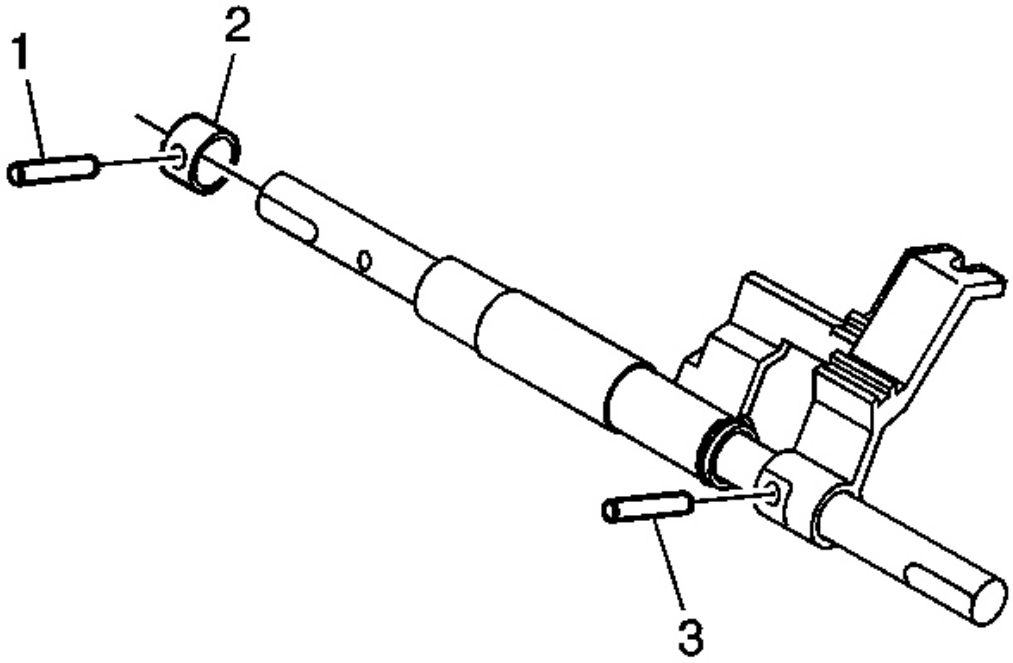

Fig. 150: View Of Reverse Lever Roll Pin, Reverse Collar & Reverse Collar Roll Pin
Courtesy of GENERAL MOTORS CORP.

1. Remove the reverse collar roll pin (1).
2. Remove the reverse collar (2).
3. Remove the reverse shift lever roll pin (3).

cardiagn.com

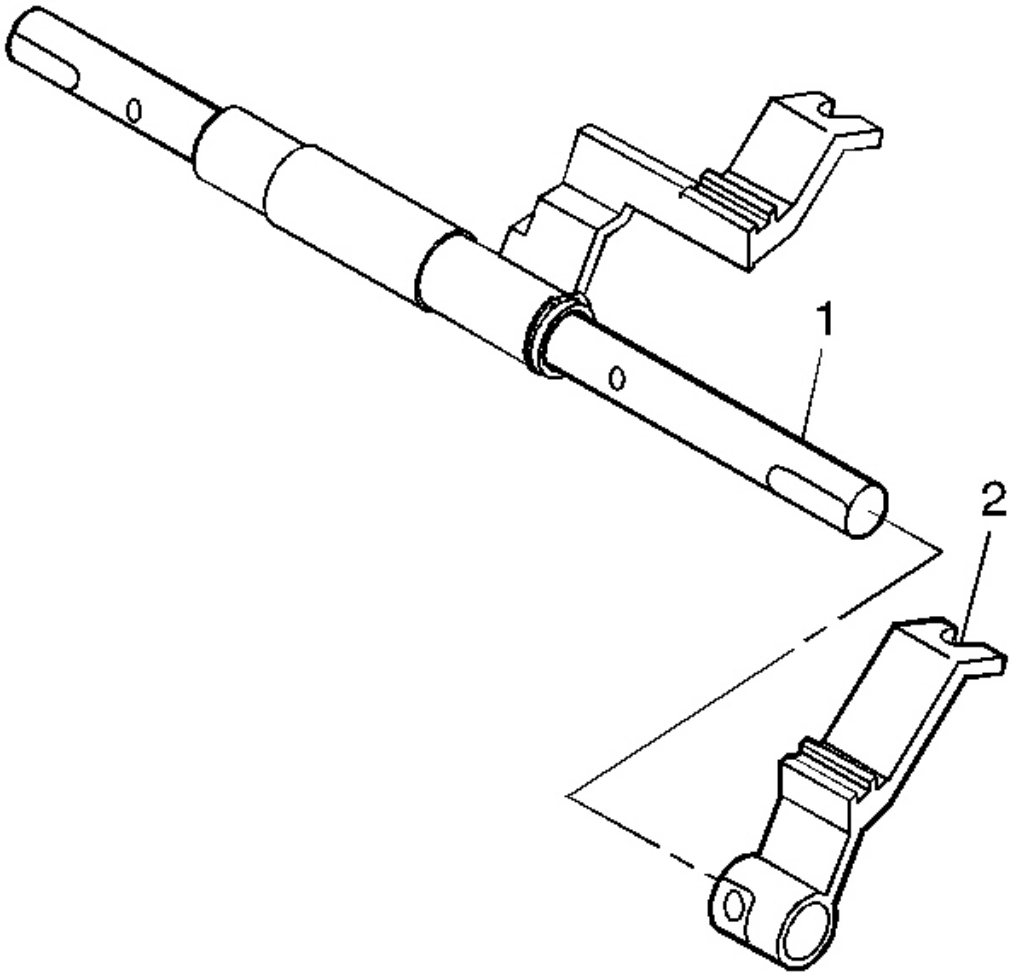

Fig. 151: Installing/Removing Reverse Shift Lever Onto Shift Shaft
Courtesy of GENERAL MOTORS CORP.

4. Remove the reverse shift lever (2) from the shift shaft (1).

cardiagn.com

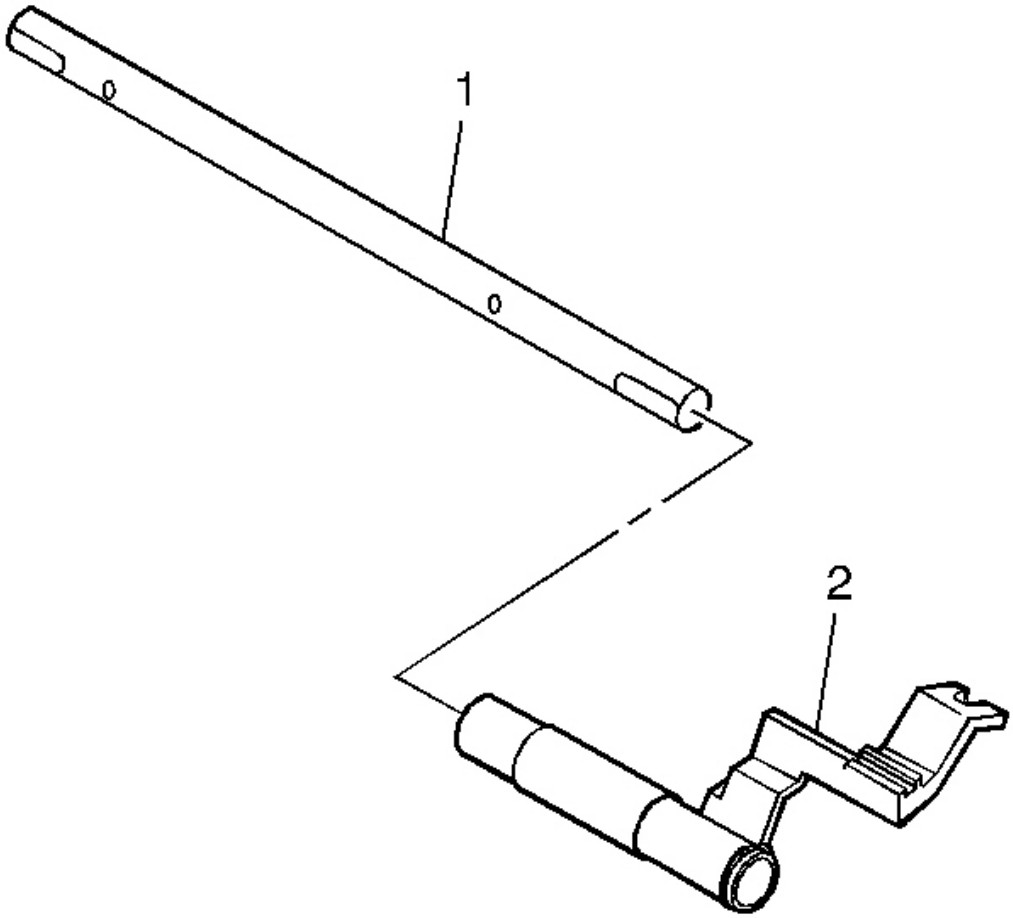

Fig. 152: Identifying 5th/6th Shift Lever
Courtesy of GENERAL MOTORS CORP.

5. Remove the 5th/6th shift lever (2) from the shift rail (1).

cardiagn.com

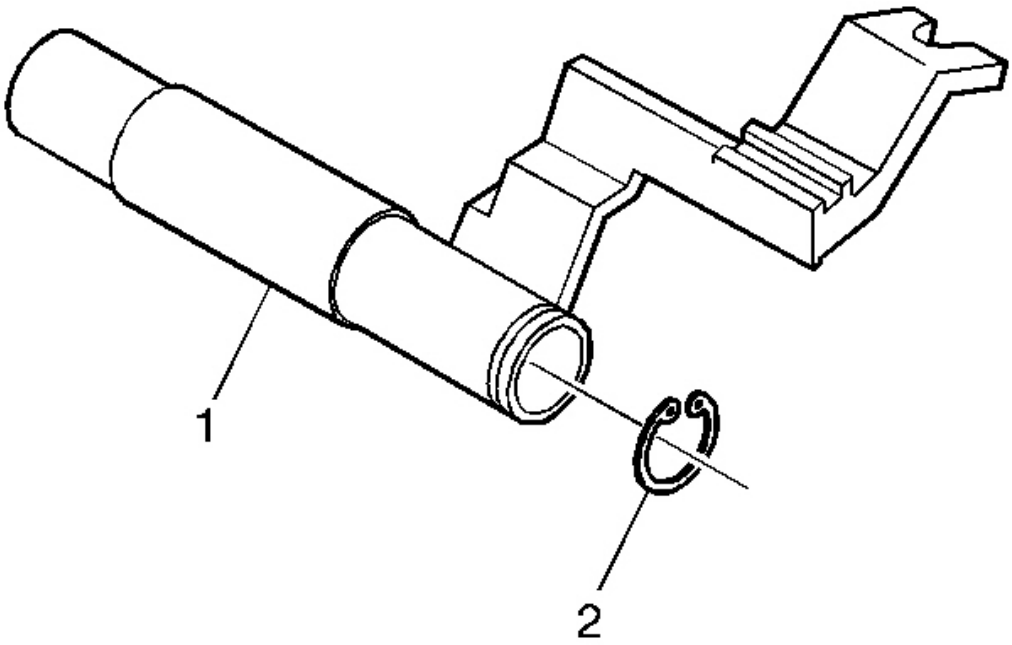

Fig. 153: Locating Retainer Ring On 5th/6th Shift Lever
Courtesy of GENERAL MOTORS CORP.

6. Remove the snap ring (1) from the 5th/6th shift lever (2).

cardiagn.com

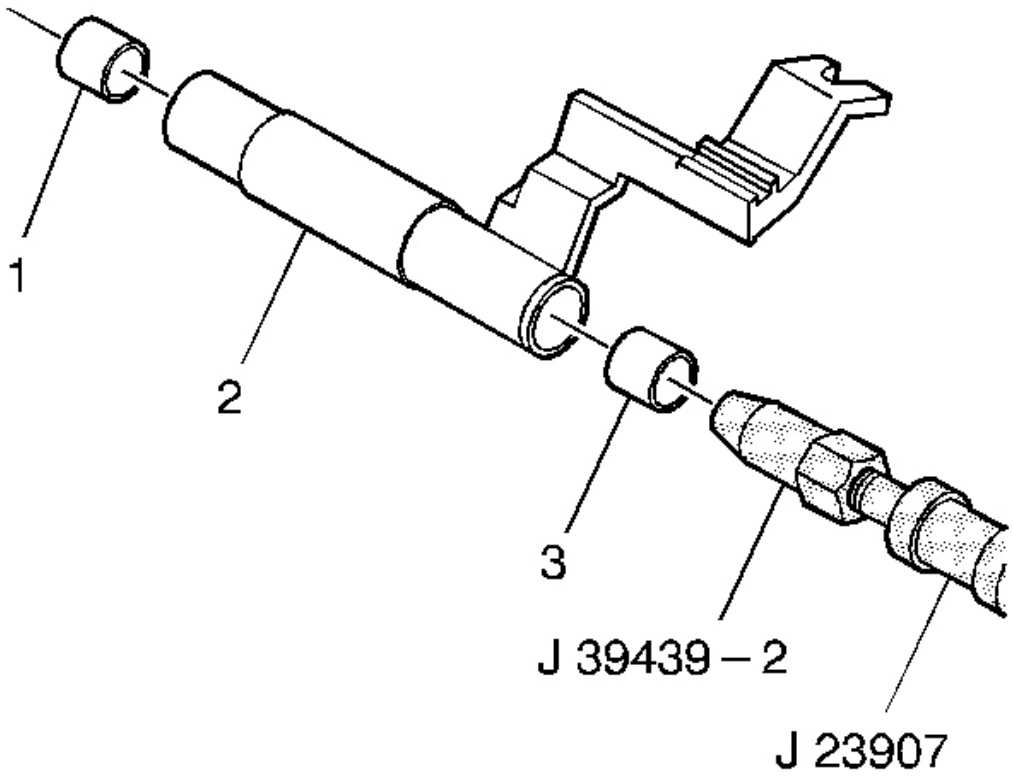

Fig. 154: Removing 5Th/6Th Shift Shaft Lever Bushings From 5Th/6Th Shift Lever Using J 23907 And The J 39439-2
Courtesy of GENERAL MOTORS CORP.

IMPORTANT: Do not replace the bushings unless inspection shows bushing damage.

7. Remove the 5th/6th shift shaft lever bushings (1) and (3) from the 5th/6th shift lever (2) using the **J 23907** and the **J 39439-2** .

SHIFT RAIL AND FORK ASSEMBLIES CLEANING AND INSPECTION (Y CAR)

cardiagn.com

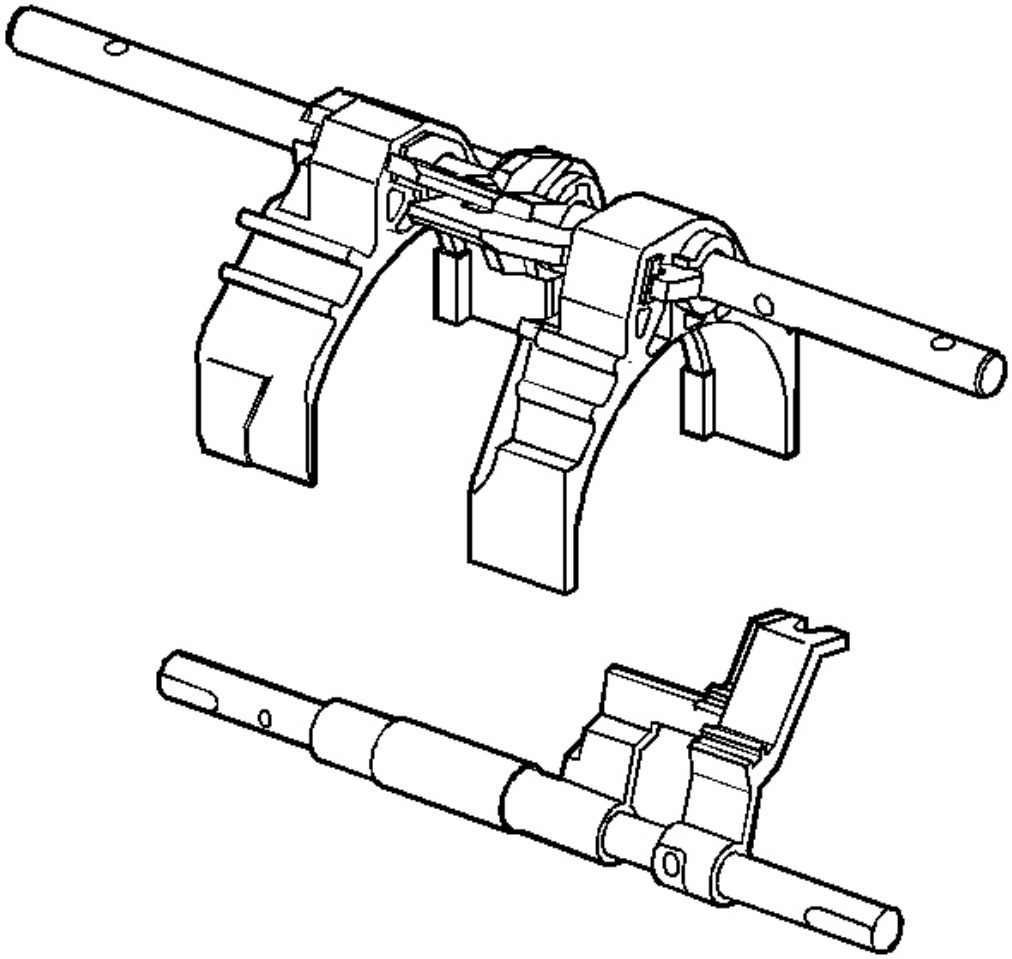

Fig. 155: Fork Assembly & Shift Shaft
Courtesy of GENERAL MOTORS CORP.

1. Clean the shift shaft and fork assembly parts with a suitable solvent. Air dry all the parts.

cardiagn.com

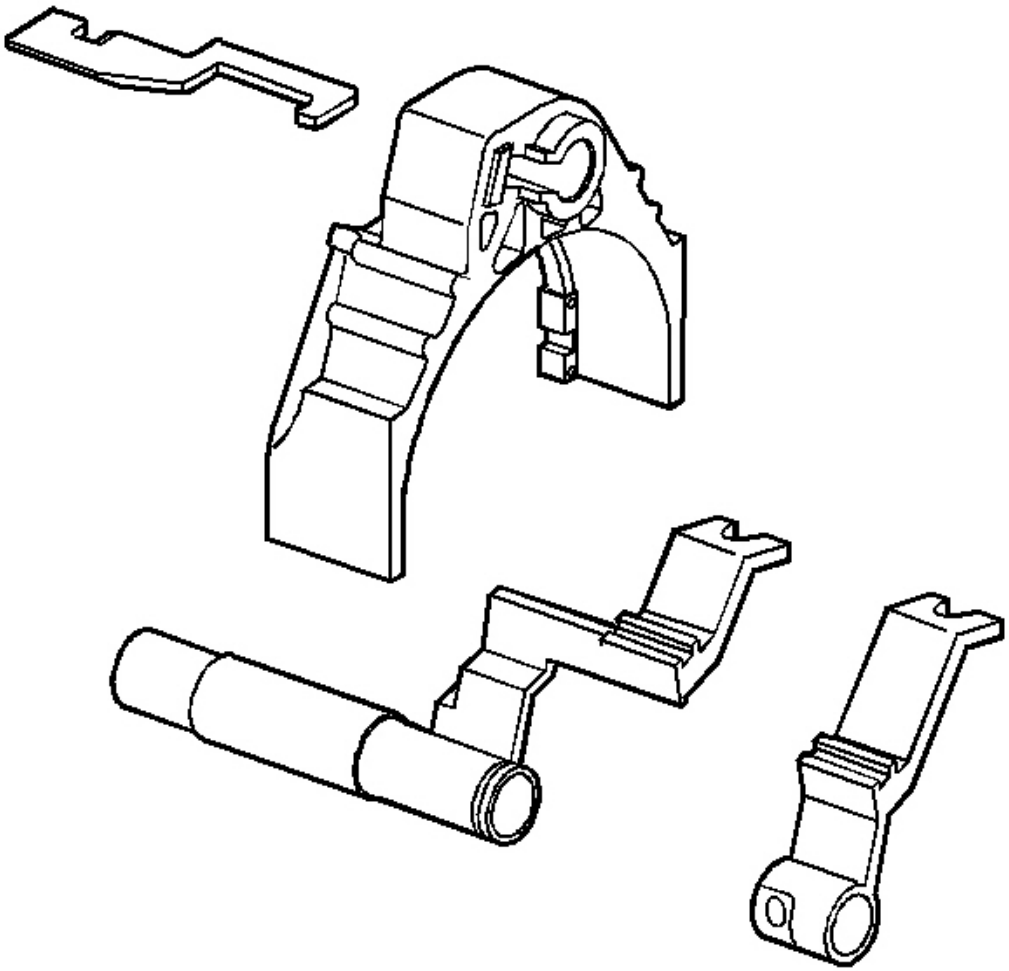

Fig. 156: Shift Links & Shift Forks
Courtesy of GENERAL MOTORS CORP.

2. Inspect the shift forks and the shift links for excessive wear, fractures or distortion.

cardiagn.com

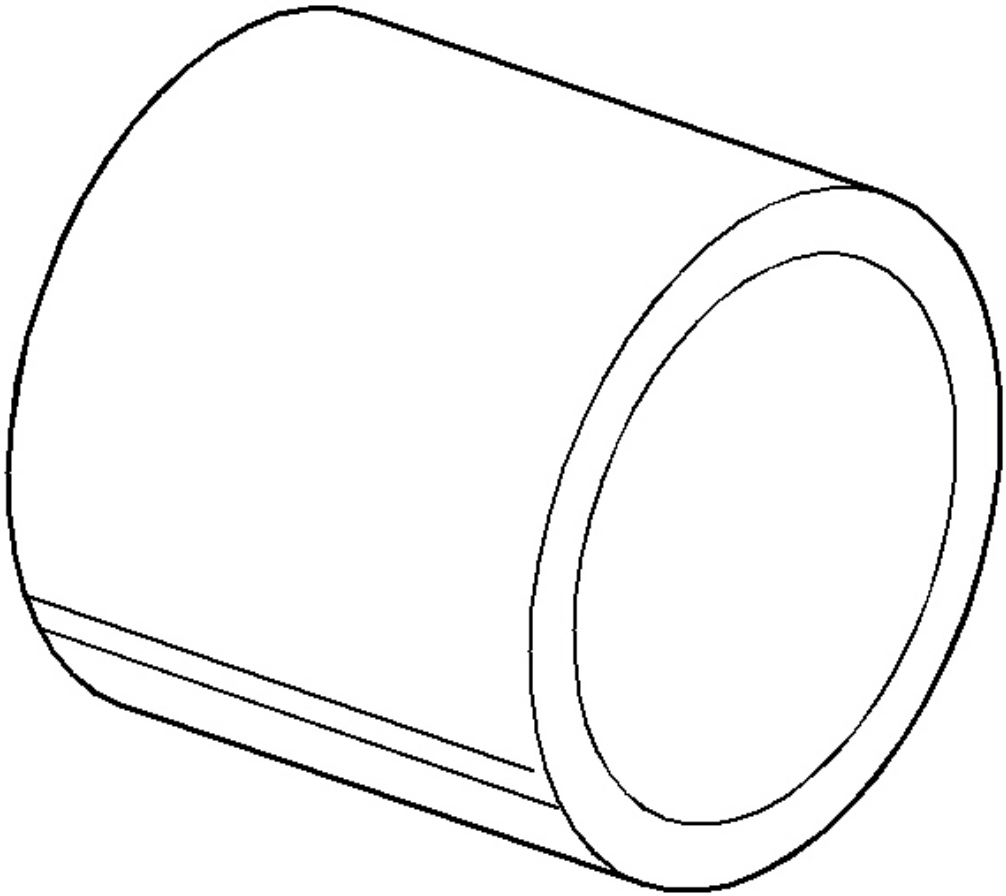

Fig. 157: View Of Shift Shaft Lever Bushing
Courtesy of GENERAL MOTORS CORP.

3. Inspect the shift shaft lever bushings for excessive wear.

cardiagn.com

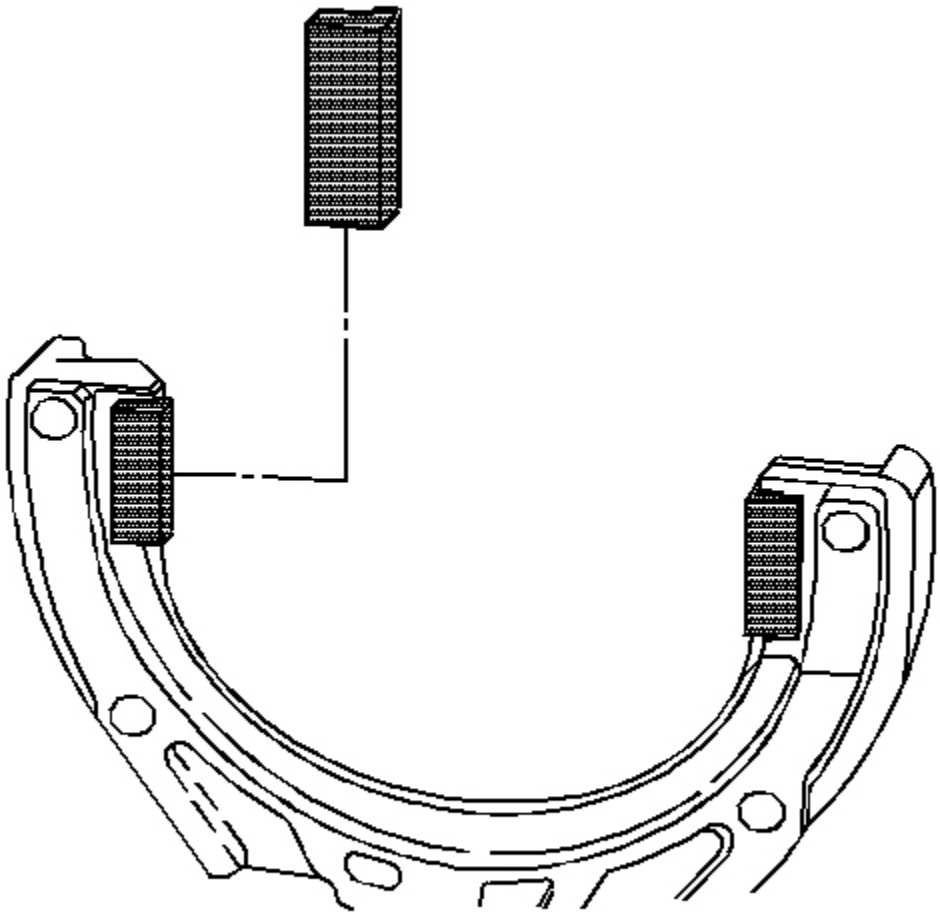

Fig. 158: Identifying Inspection Areas On Shift Fork Nylon Inserts
Courtesy of GENERAL MOTORS CORP.

4. Inspect the shift fork nylon inserts for wear.
5. Replace parts that are fractured, excessively worn, or distorted.
6. Replace an excessively worn or burred shift shaft.

SHIFT RAIL AND FORK ASSEMBLIES CLEANING AND INSPECTION (CTSV)

cardiagn.com

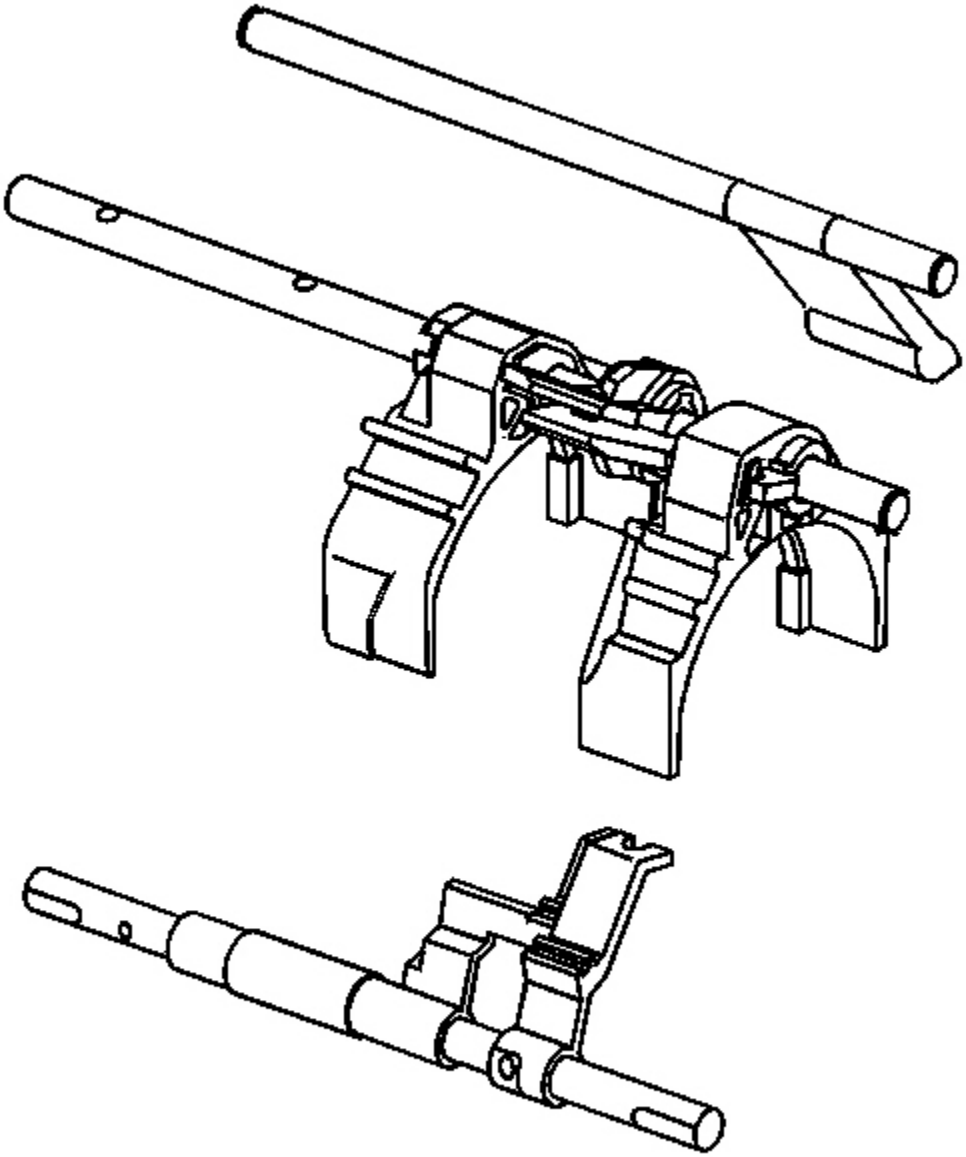

Fig. 159: Shift Shaft & Fork Assembly
Courtesy of GENERAL MOTORS CORP.

1. Clean the shift shaft and fork assembly parts with a suitable solvent. Air dry all the parts.

cardiagn.com

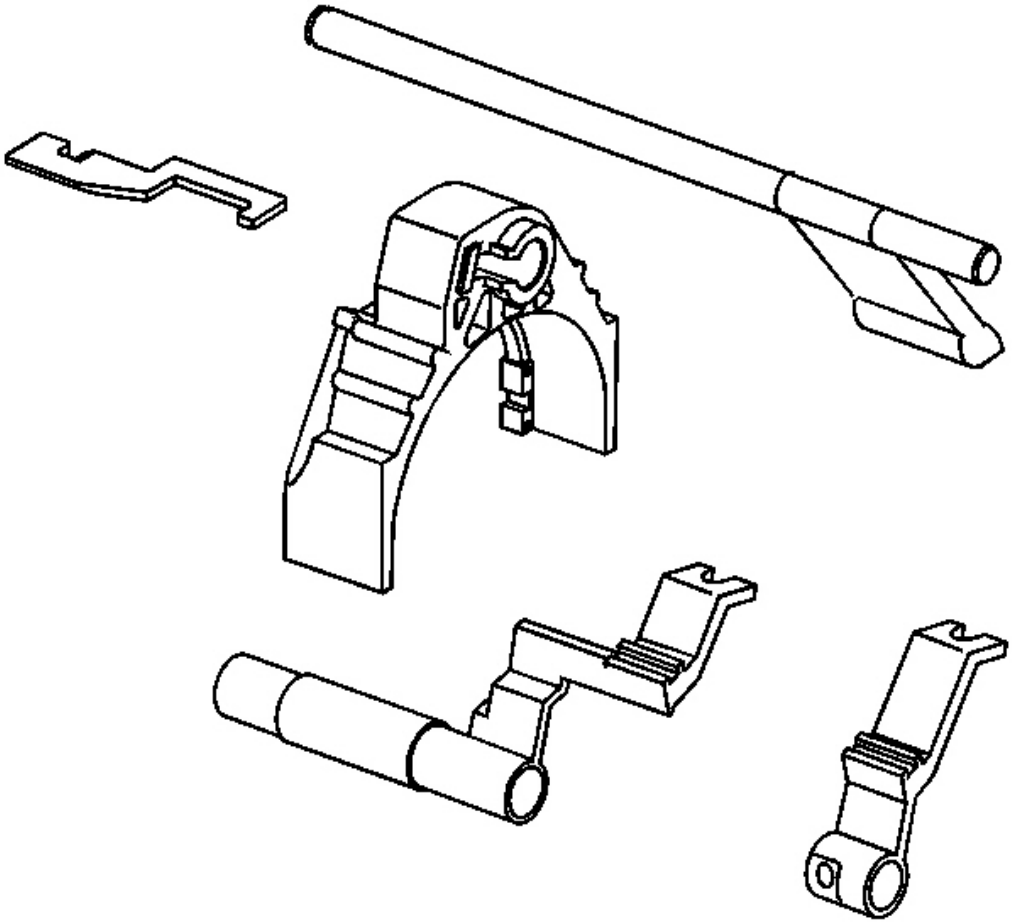

Fig. 160: Shift Forks & Shift Links
Courtesy of GENERAL MOTORS CORP.

2. Inspect the shift forks and the shift links for excessive wear, fractures or distortion.

cardiagn.com

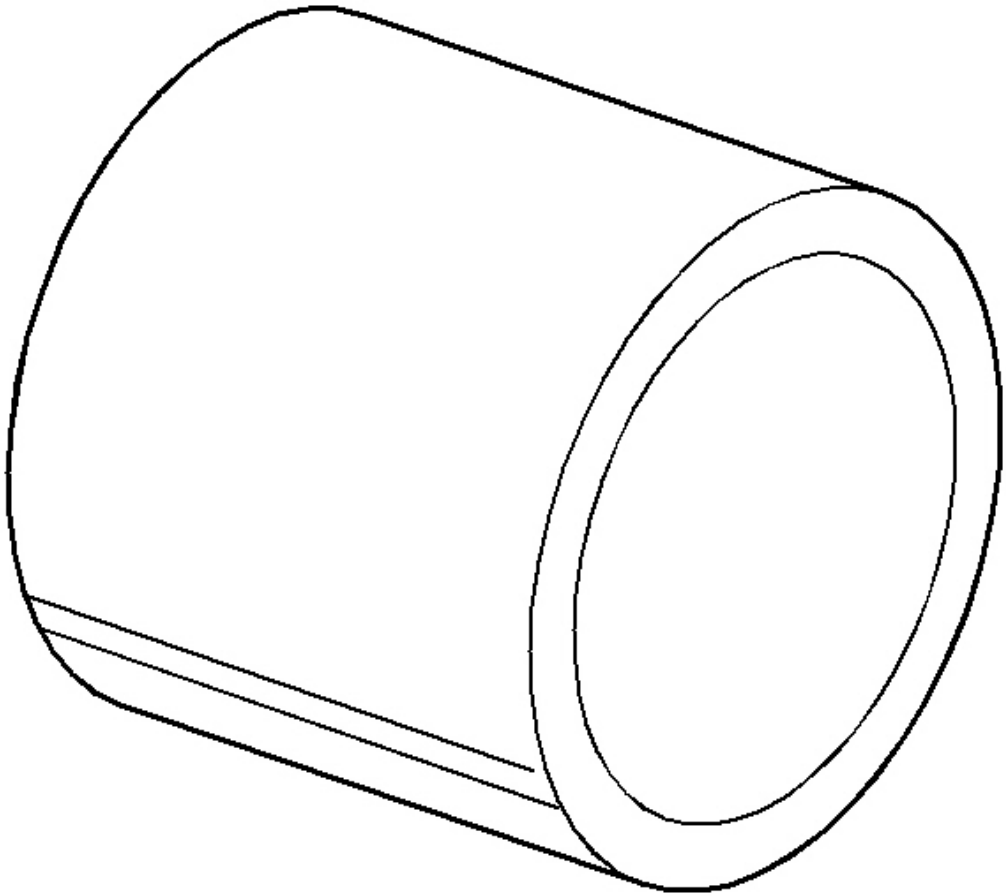

Fig. 161: View Of Shift Shaft Lever Bushing
Courtesy of GENERAL MOTORS CORP.

3. Inspect the shift shaft lever bushings for excessive wear.

cardiagn.com

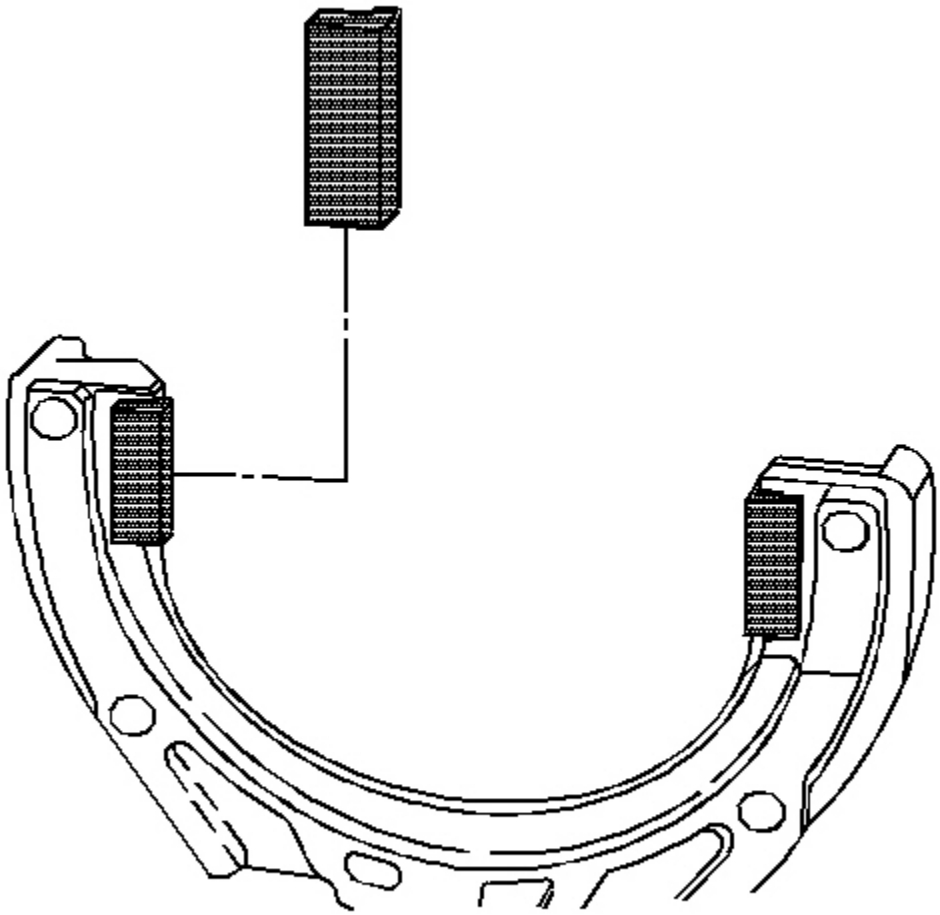

Fig. 162: Identifying Inspection Areas On Shift Fork Nylon Inserts
Courtesy of GENERAL MOTORS CORP.

4. Inspect the shift fork nylon inserts for wear.
5. Replace parts that are fractured, excessively worn, or distorted.
6. Replace an excessively worn or burred shift shaft.

SHIFT RAIL AND FORK ASSEMBLIES ASSEMBLE

Tools Required

J 36850 Transjel Lubricant. See **Special Tools** .

cardiagn.com

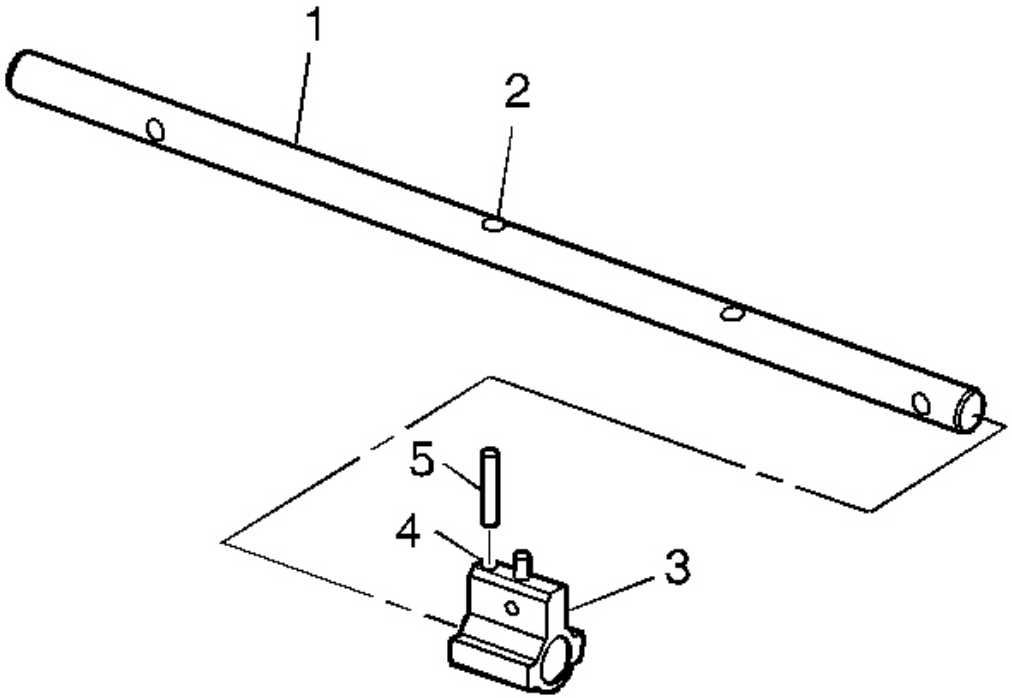

Fig. 163: Installing/Removing Selector Pin & Roll Pin On Shift Shaft
Courtesy of GENERAL MOTORS CORP.

1. Install the selector pin (3) on the shift shaft (4).
2. Align the roll pin hole on the selector pin (4) with the roll pin hole on the shift shaft (2).
3. Install the roll pin (5) through the selector pin (3) and the shift shaft (1).

cardiagn.com

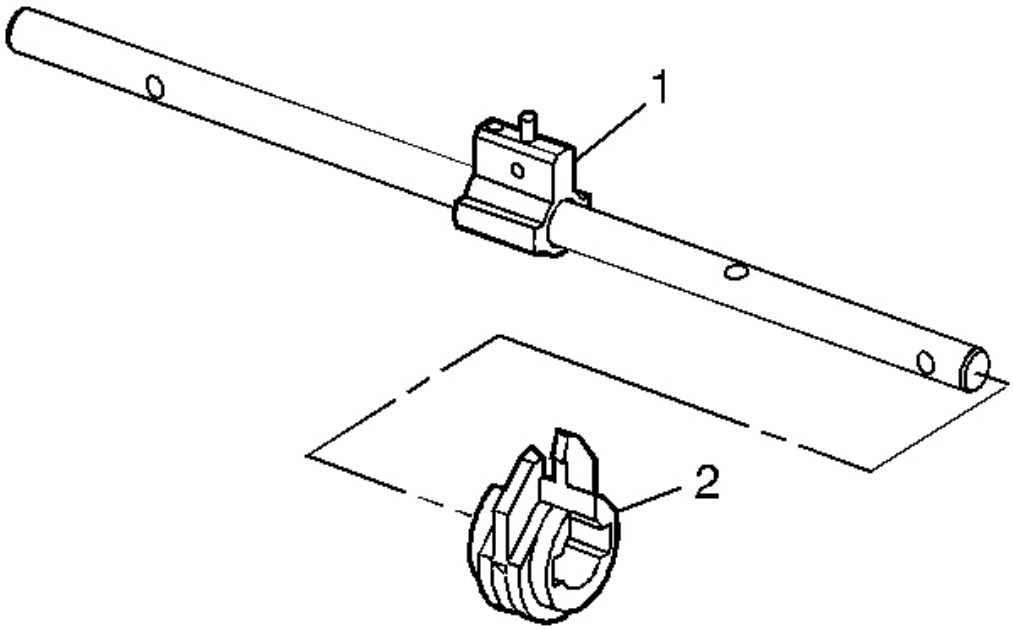

Fig. 164: Locating Interlocking Plate On Selector Pin
Courtesy of GENERAL MOTORS CORP.

4. Install the interlocking plate (2) on the selector pin (1).

cardiagn.com

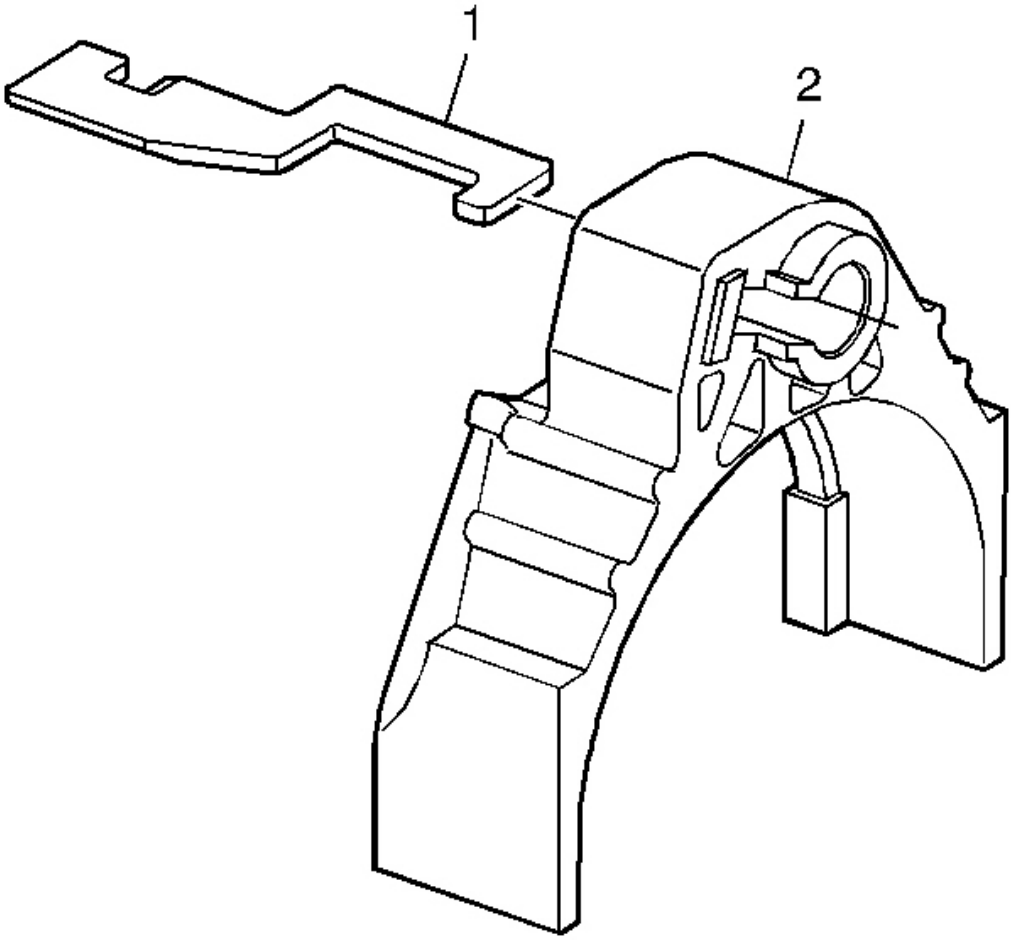

Fig. 165: View Of Shift Link In 3rd/4th Shift Fork
Courtesy of GENERAL MOTORS CORP.

5. Install the shift link (1) in the 3rd/4th shift fork (2).

cardiagn.com

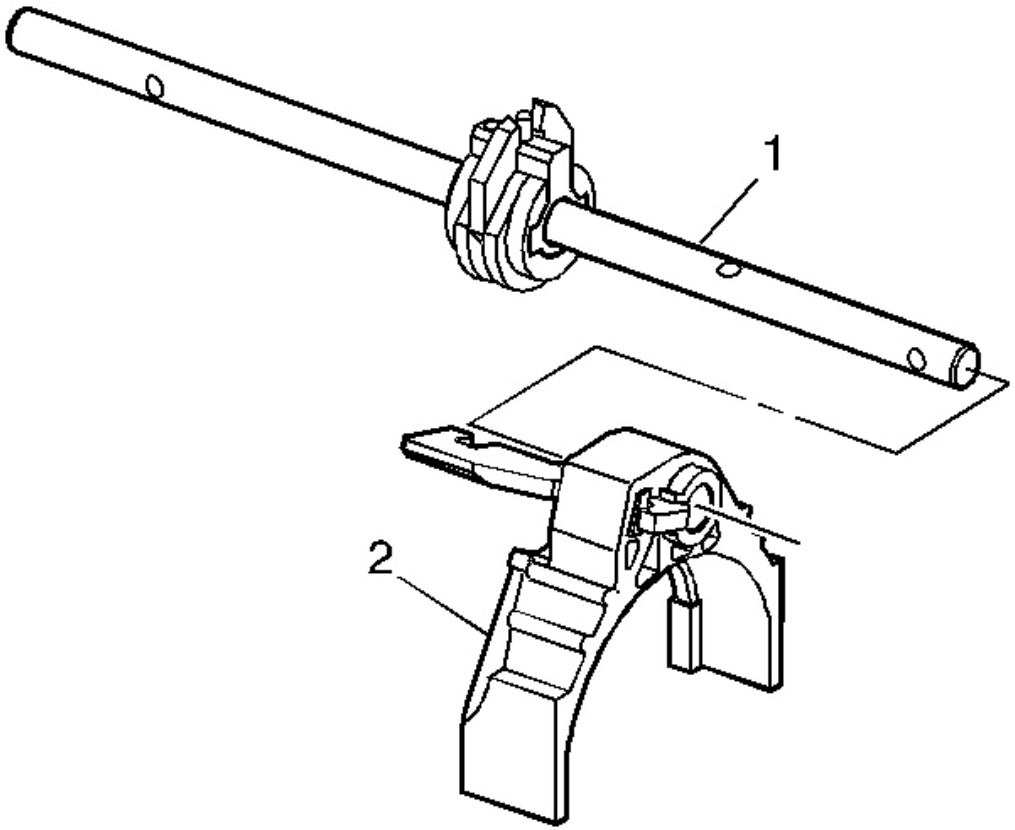

Fig. 166: Identifying 3rd/4th Shift Fork & Shift Shaft
Courtesy of GENERAL MOTORS CORP.

6. Install the 3rd/4th shift fork (2) on the shift shaft (1).

cardiagn.com

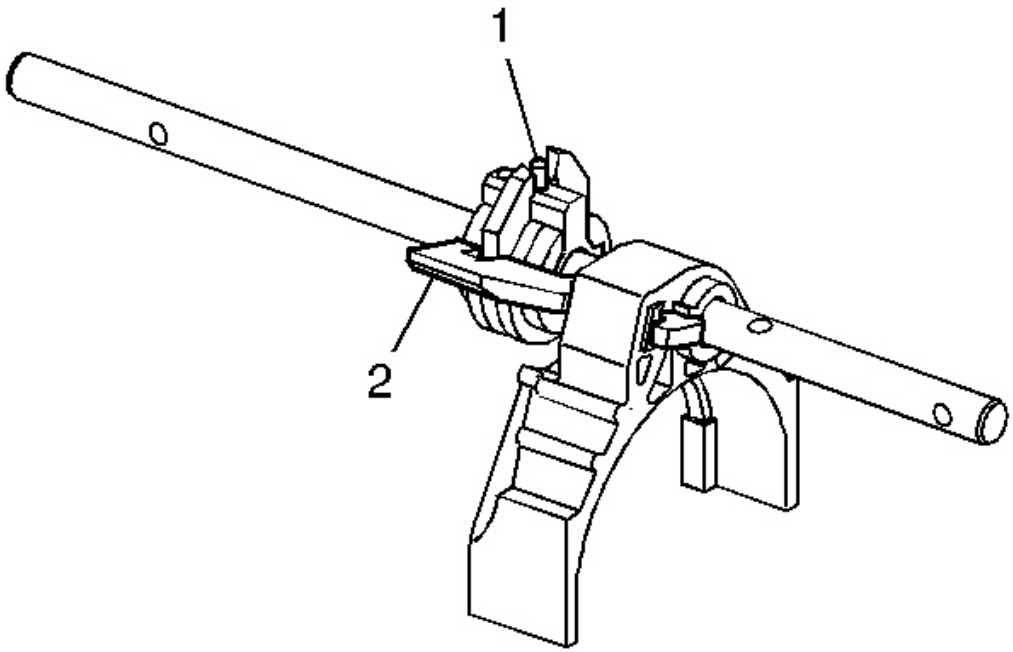

Fig. 167: Aligning Notch On Shift Link With Selector Roll Pin
Courtesy of GENERAL MOTORS CORP.

7. Align the notch on the shift link (2) with the selector roll pin (1).

cardiagn.com

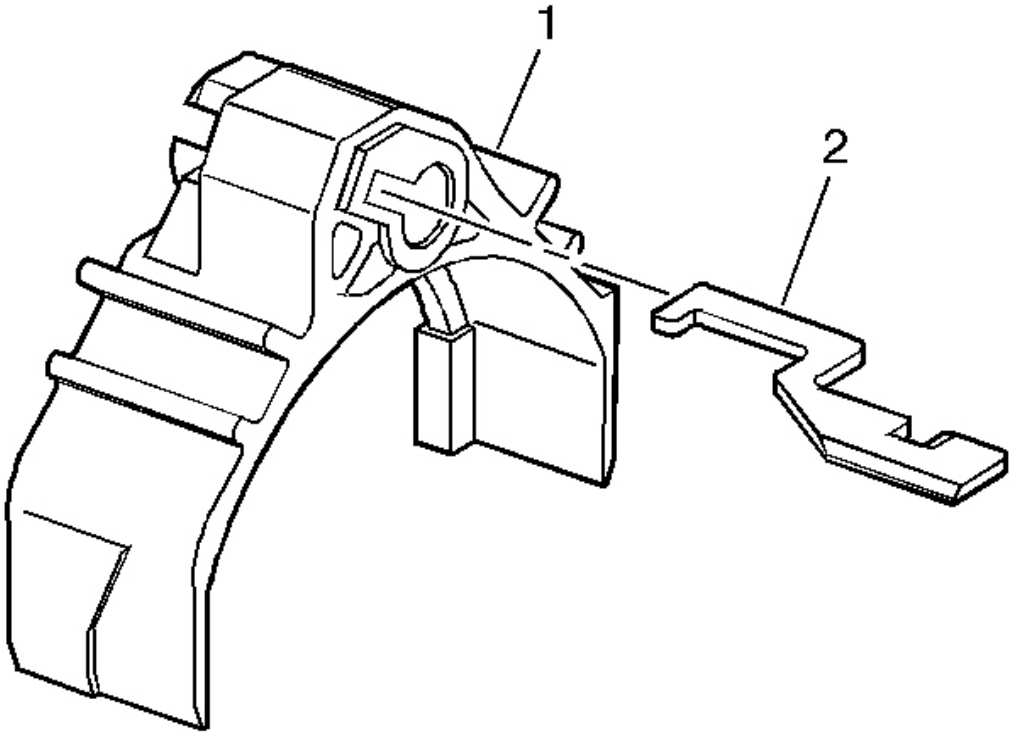

Fig. 168: Locating Shift Link & 1st/2nd Shift Fork
Courtesy of GENERAL MOTORS CORP.

8. Install the shift link (2) with the 1st/2nd shift fork (1).

cardiagn.com

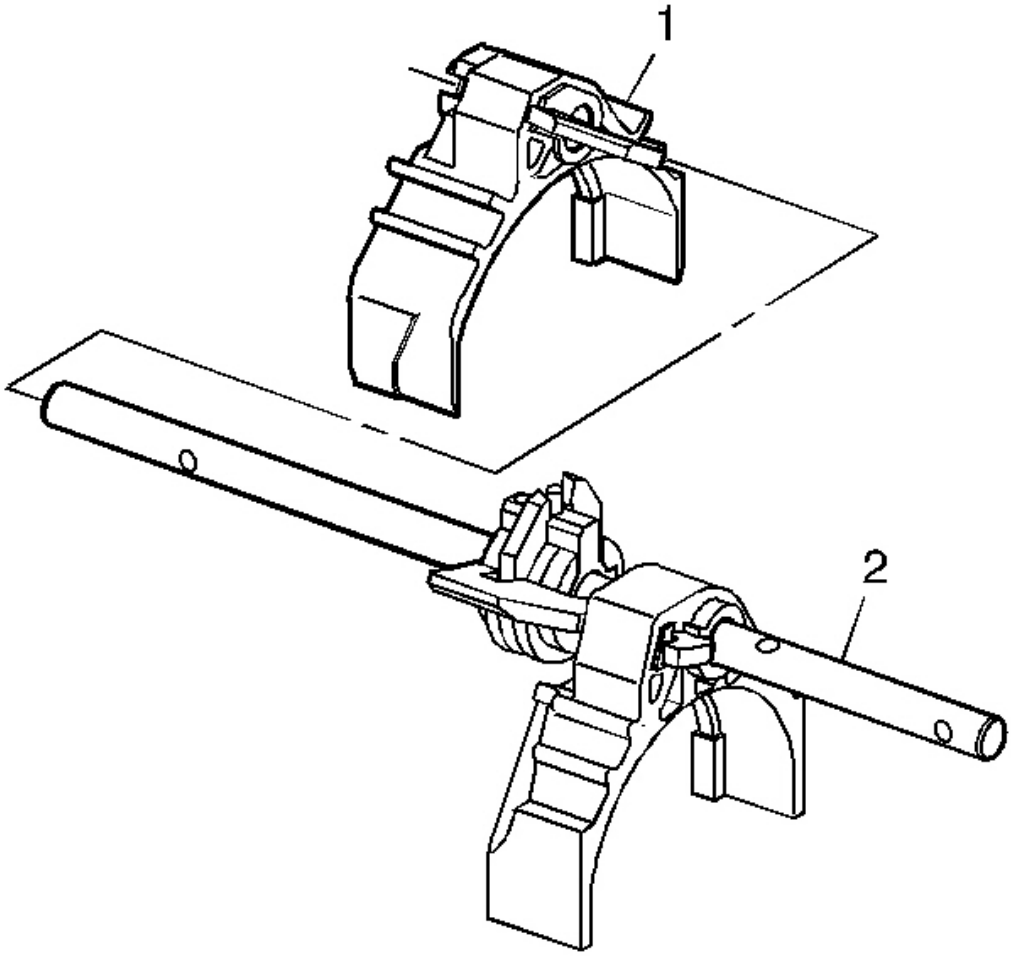

Fig. 169: View Of 1st/2nd Shift Fork On Shift Shaft
Courtesy of GENERAL MOTORS CORP.

9. Install the 1st/2nd shift fork (1) on the shift shaft (2).

cardiagn.com

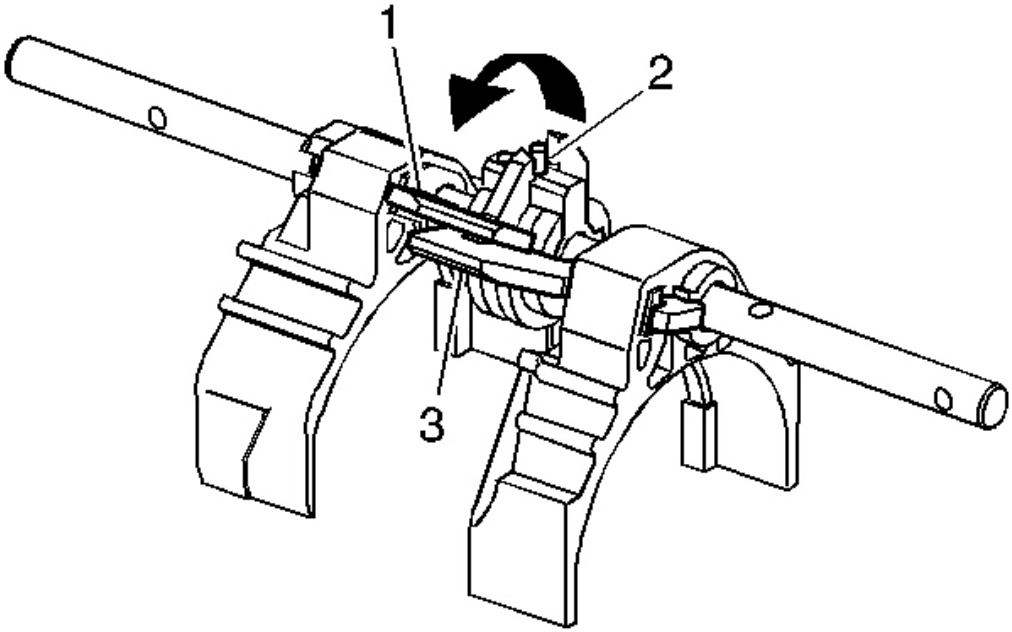

Fig. 170: Installing 1st/2nd Shift Shaft Link On Top Of 3rd/4th Shift Shaft Link
Courtesy of GENERAL MOTORS CORP.

10. Install the 1st/2nd shift shaft link (1) on top of the 3rd/4th shift shaft link (3) on the interlocking plate and the selector roll pin assembly (2).

cardiagn.com

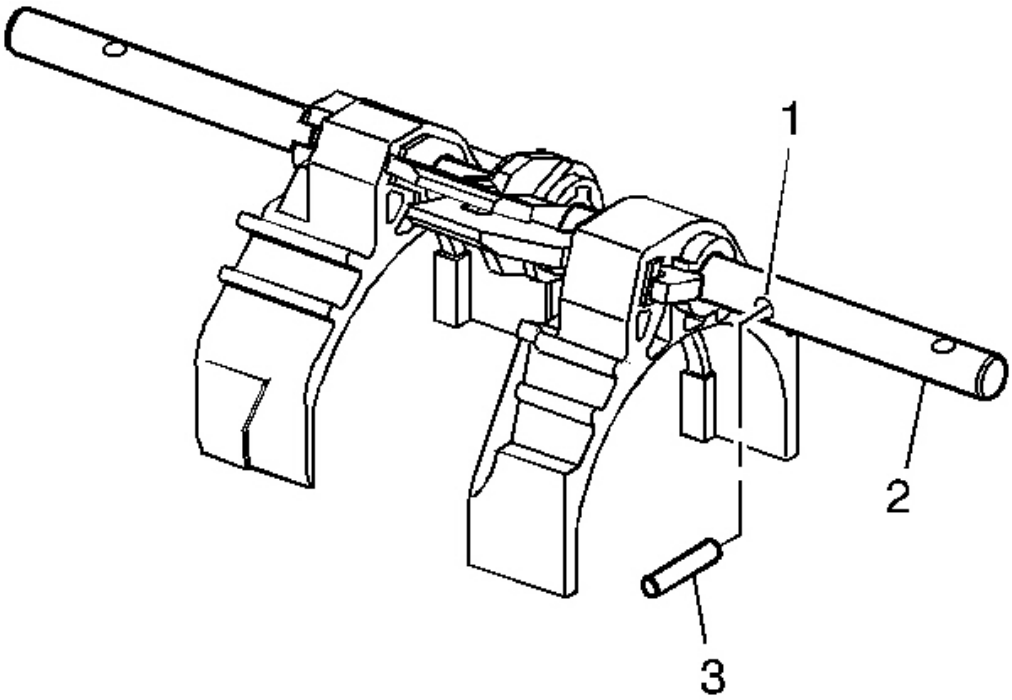

Fig. 171: View Of Neutral Return Cam Pin In Shift Shaft
Courtesy of GENERAL MOTORS CORP.

IMPORTANT: The neutral return cam pin fits loosely in the shift shaft. Use the J 36850 to hold the neutral return cam pin in place.

11. Install the neutral return cam pin (3) in the neutral return can pin hole (1) on the shift shaft (2).

Tools Required

J 39437 Bushing Installer. See **Special Tools** .

5th/6th, Reverse Shift Rail Assembly

cardiagn.com

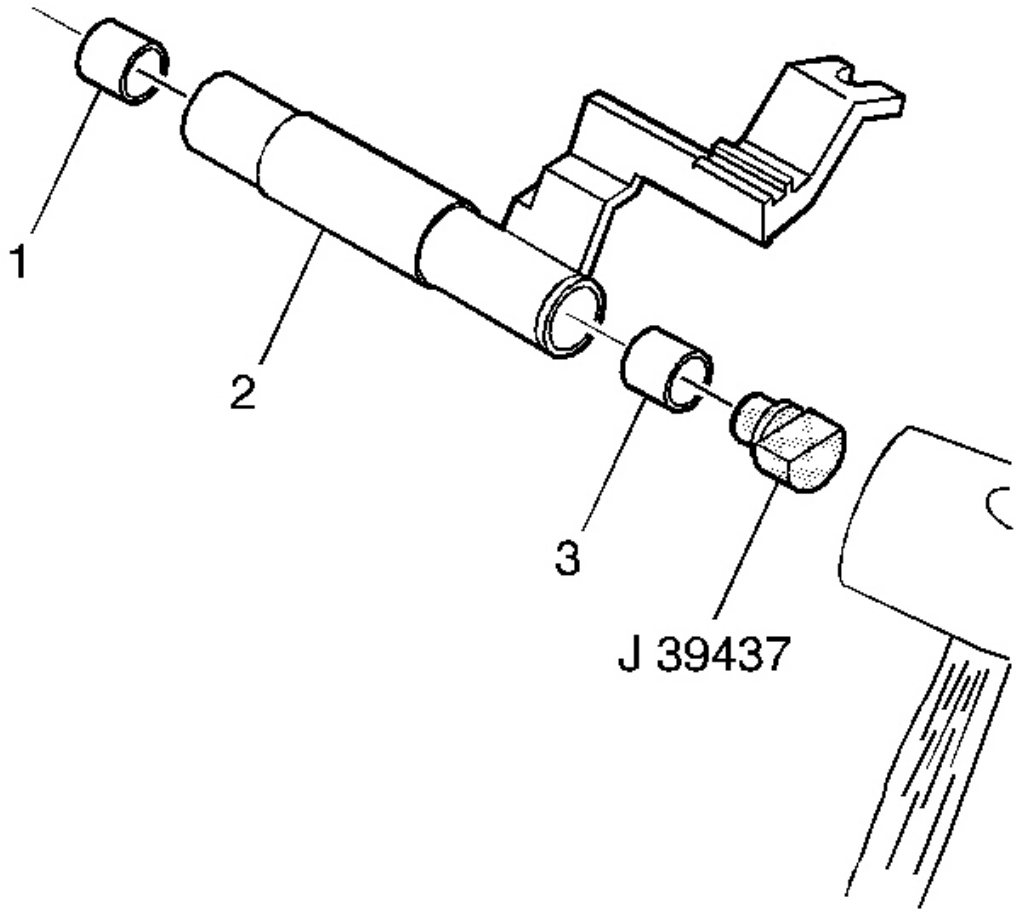

Fig. 172: Installing 5th/6th Shift Shaft Lever Bushings On 5th/6th Shift Lever
Courtesy of GENERAL MOTORS CORP.

1. Install the 5th/6th shift shaft lever bushings (1) and (3) in the 5th/6th shift lever (2) using the **J 39437** and a hammer.

cardiagn.com

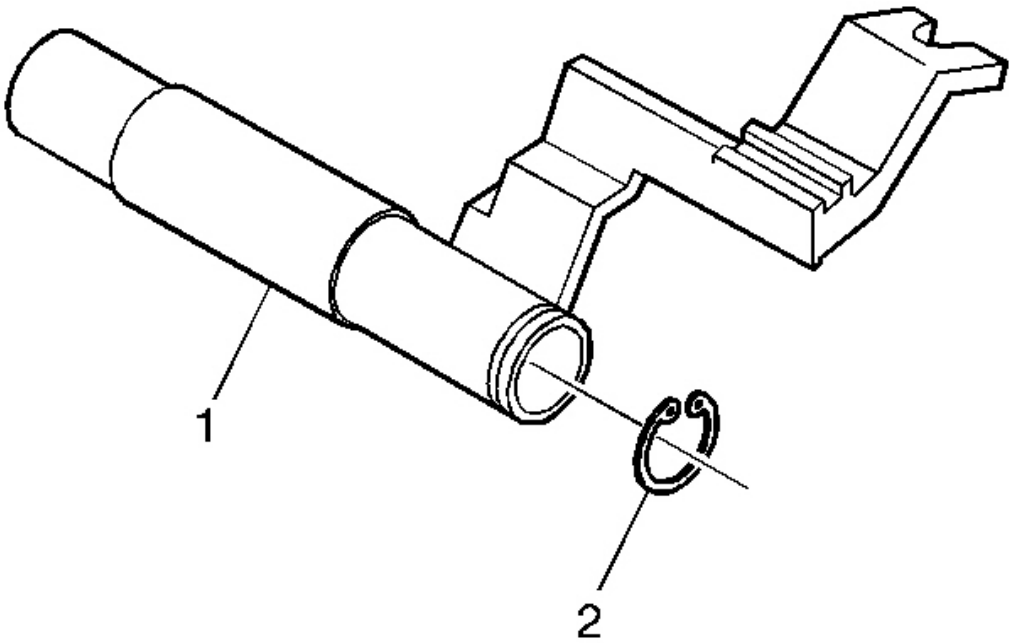

Fig. 173: Locating Retainer Ring On 5th/6th Shift Lever
Courtesy of GENERAL MOTORS CORP.

2. Install the retainer ring (1) on the 5th/6th shift lever (2).

cardiagn.com

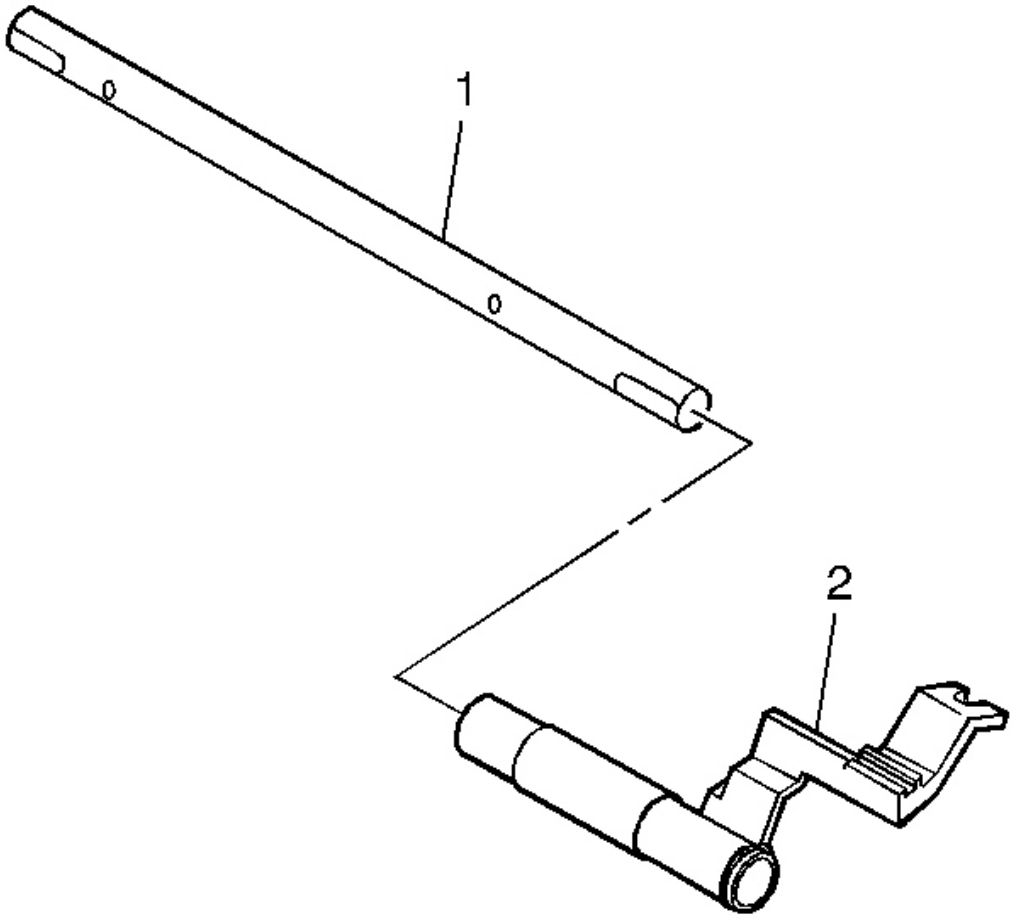

Fig. 174: Identifying 5th/6th Shift Lever
Courtesy of GENERAL MOTORS CORP.

3. Install the 5th/6th shift lever (2) on the shift shaft (1).

cardiagn.com

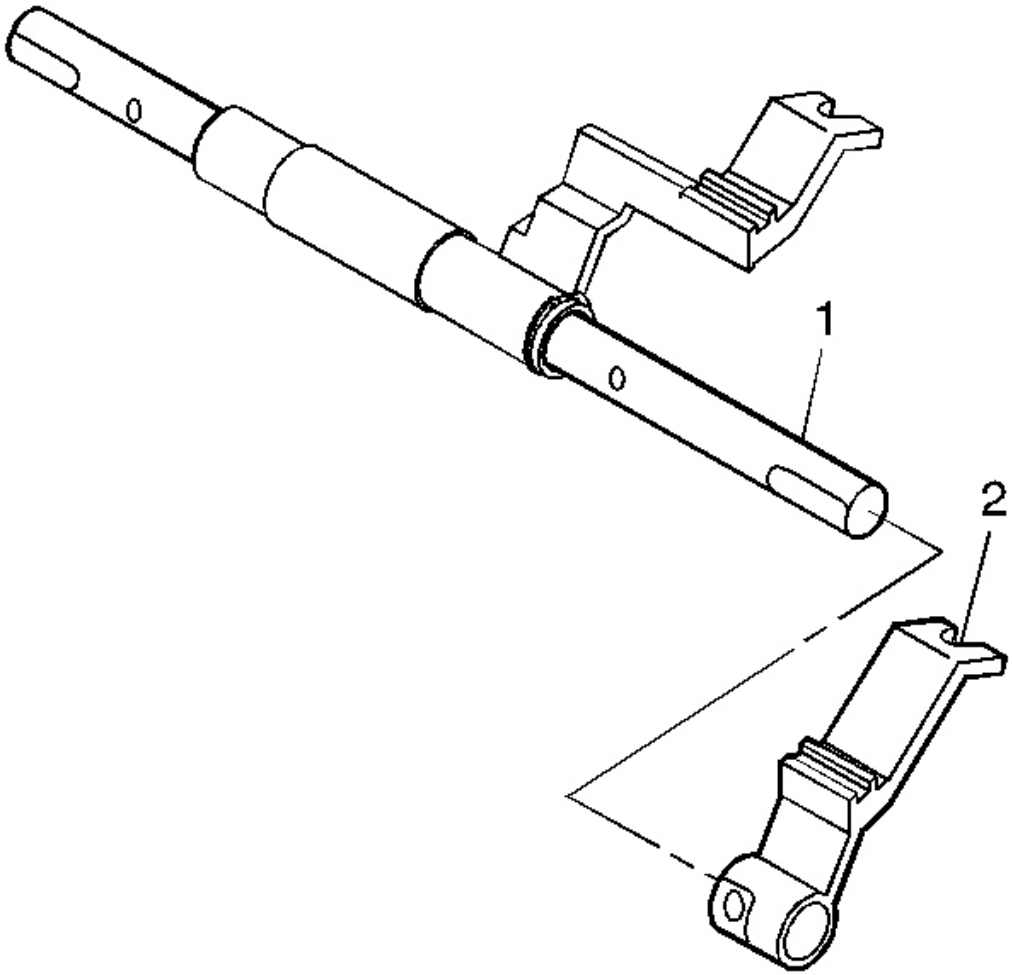

Fig. 175: Installing/Removing Reverse Shift Lever Onto Shift Shaft
Courtesy of GENERAL MOTORS CORP.

4. Install the reverse shift lever (2) on the shift shaft (1).

cardiagn.com

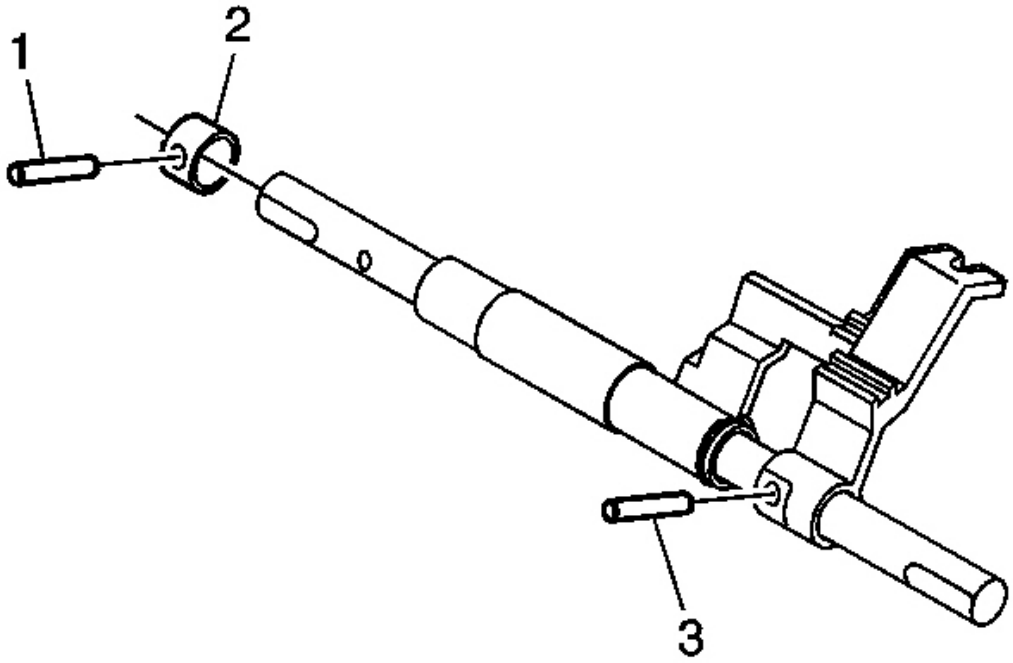

Fig. 176: View Of Reverse Lever Roll Pin, Reverse Collar & Reverse Collar Roll Pin
Courtesy of GENERAL MOTORS CORP.

5. Install the reverse lever roll pin (3).
6. Install the reverse collar (2).
7. Install the reverse collar roll pin (1).

TRANS CASE AND ADAPTER PLATE DISASSEMBLE (Y CAR)

Transmission Case

Tools Required

- **J 8092** Universal Driver Handle. See **Special Tools** .
- **J 23907** Slide Hammer. See **Special Tools** .
- **J 39439-2** Bushing Remover. See **Special Tools** .
- **J 39790** Mainshaft Bearing Race Remover. See **Special Tools** .
- **J 39791** Countershaft Bearing Race Remover. See **Special Tools** .

cardiagn.com

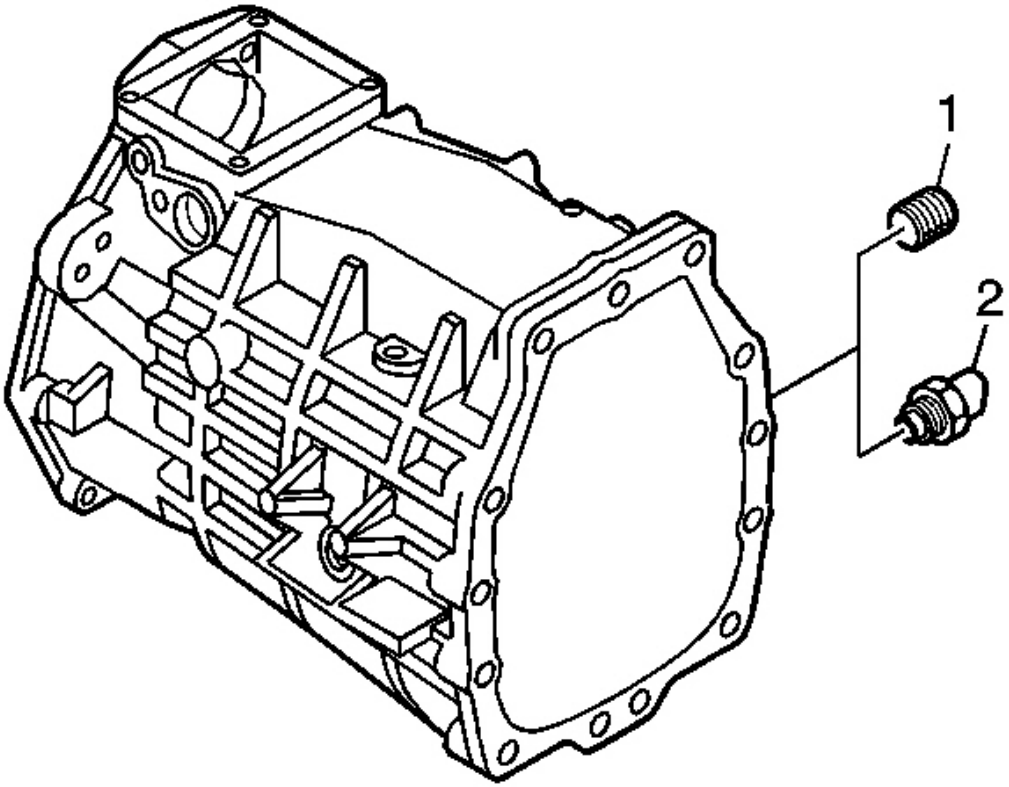

Fig. 177: View Of Transmission Case Fill Plug & Temperature Switch
Courtesy of GENERAL MOTORS CORP.

1. Remove the transmission case fill plug (1) (MM6 only).
2. Remove the temperature switch (2) (M12 only).

cardiagn.com

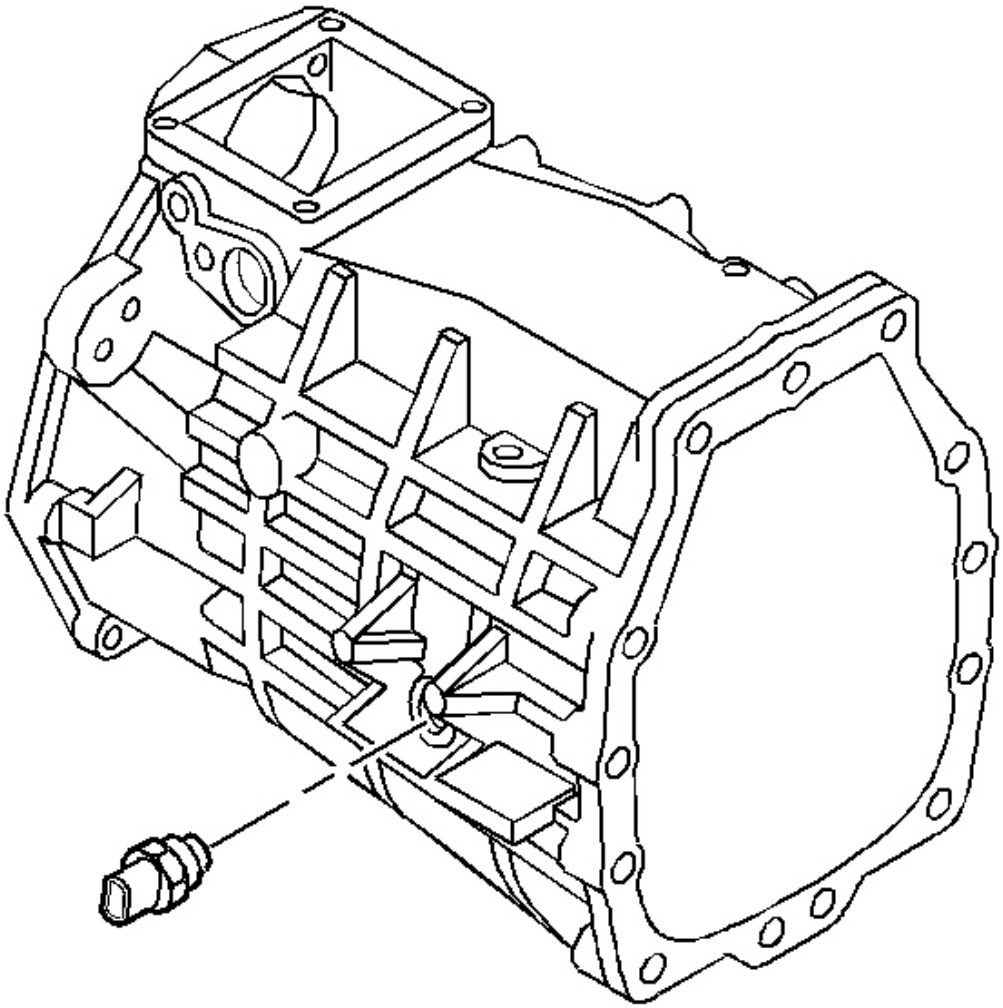

Fig. 178: Locating Reverse Lamp Switch
Courtesy of GENERAL MOTORS CORP.

3. Remove the reverse lamp switch.

cardiagn.com

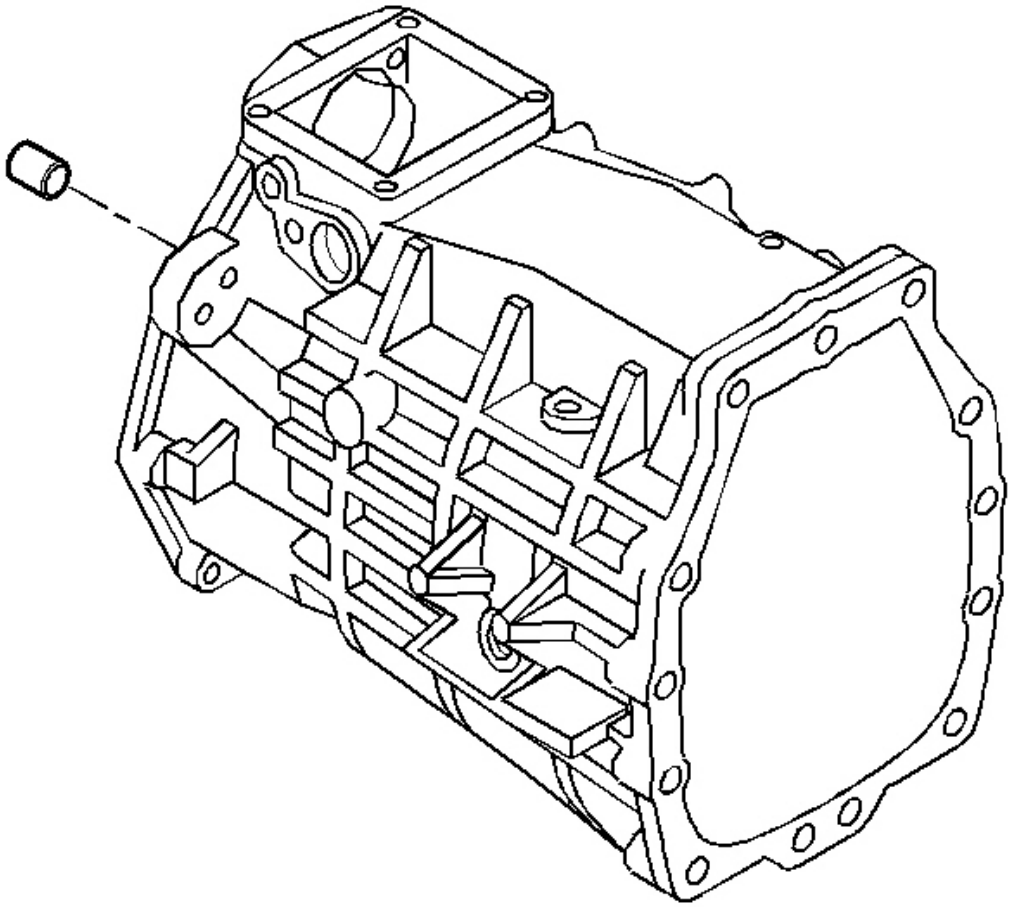

Fig. 179: Identifying Transfer Case Dowel Pins
Courtesy of GENERAL MOTORS CORP.

4. Remove the dowel pins.

IMPORTANT: Do not replace the bearing race unless inspection shows bearing race damage.

cardiagn.com

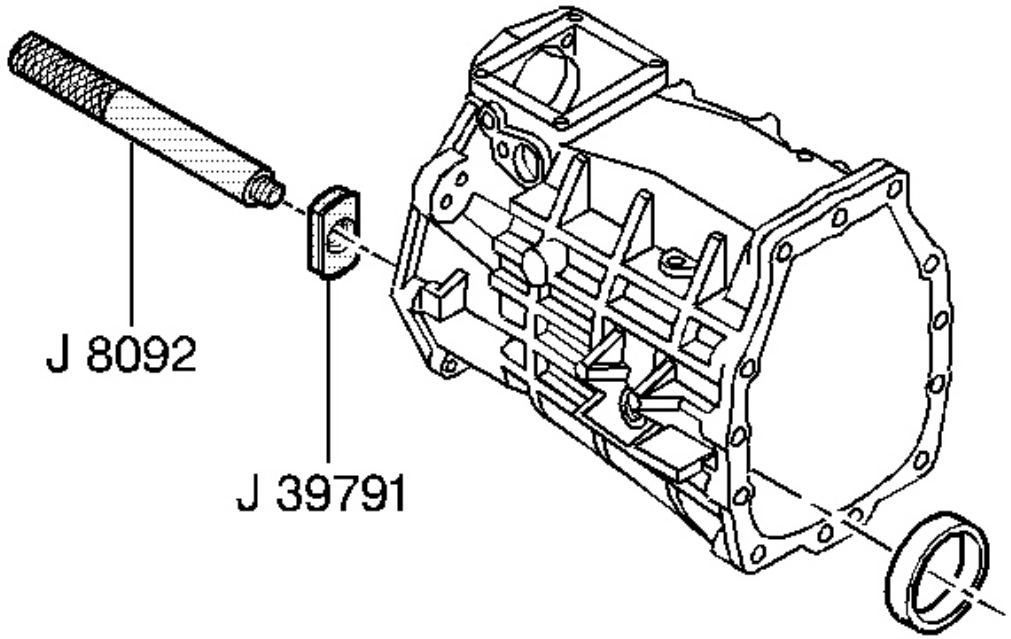

Fig. 180: Removing Countershaft Bearing Race Using J 8092 & J 39791
Courtesy of GENERAL MOTORS CORP.

5. Remove the countershaft bearing race, using the **J 8092** and the **J 39791** .

cardiagn.com

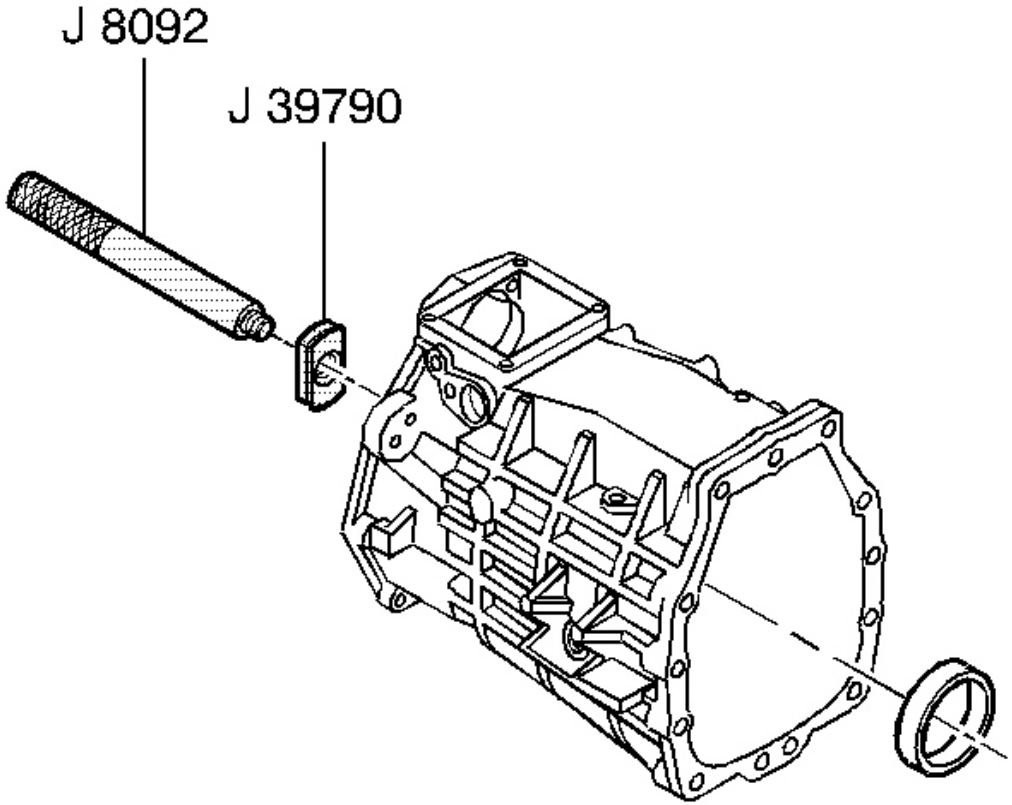

Fig. 181: Removing Mainshaft Bearing Race
Courtesy of GENERAL MOTORS CORP.

IMPORTANT: Do not replace the bearing race unless inspection shows bearing race damage.

6. Remove the mainshaft bearing race, using the **J 8092** and the **J 39790** .

cardiagn.com

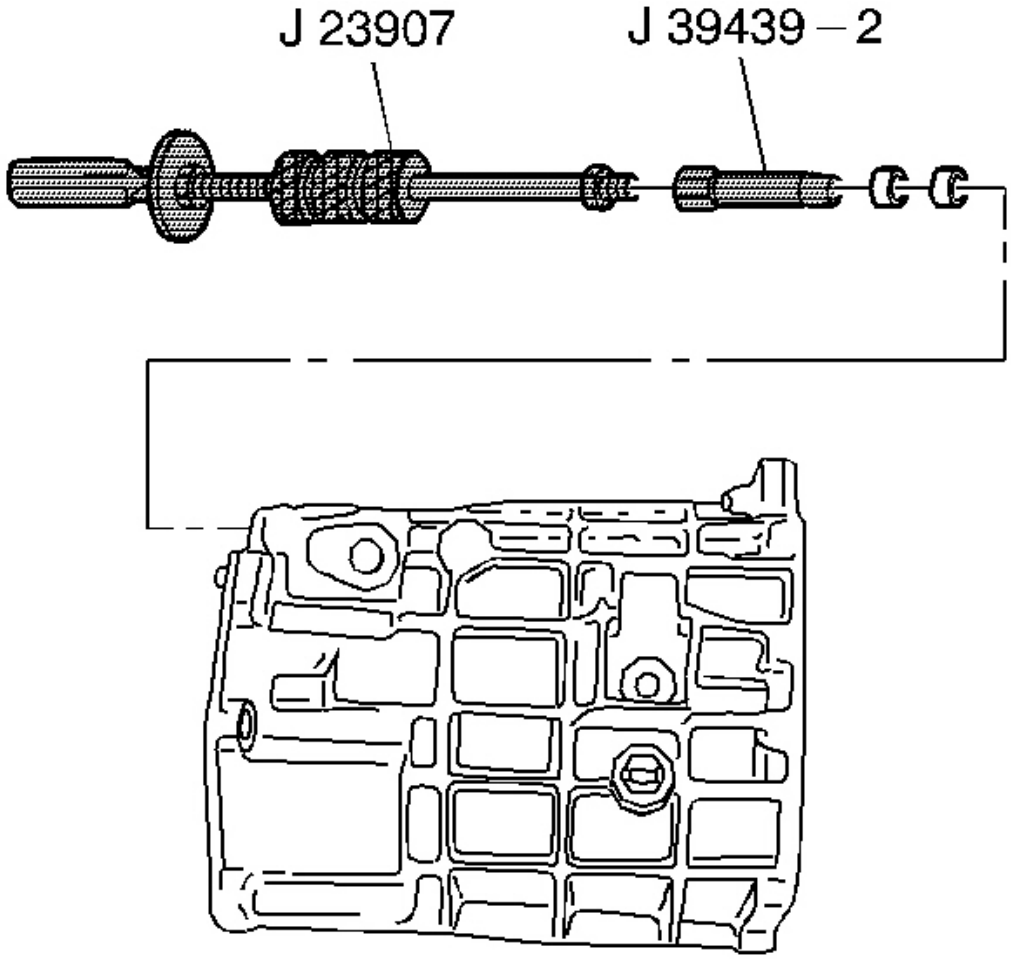

Fig. 182: Removing 1st/2nd & 3rd/4th Shift Shaft Bushings
Courtesy of GENERAL MOTORS CORP.

7. Remove the 1st/2nd and the 3rd/4th shift shaft bushings, using the **J 23907** and the **J 39439-2** .

Adapter Plate

Tools Required

- **J 23907** Slide Hammer. See **Special Tools** .
- **J 39439-2** Bushing Remover. See **Special Tools** .

1. Remove the neutral return cam.

cardiagn.com

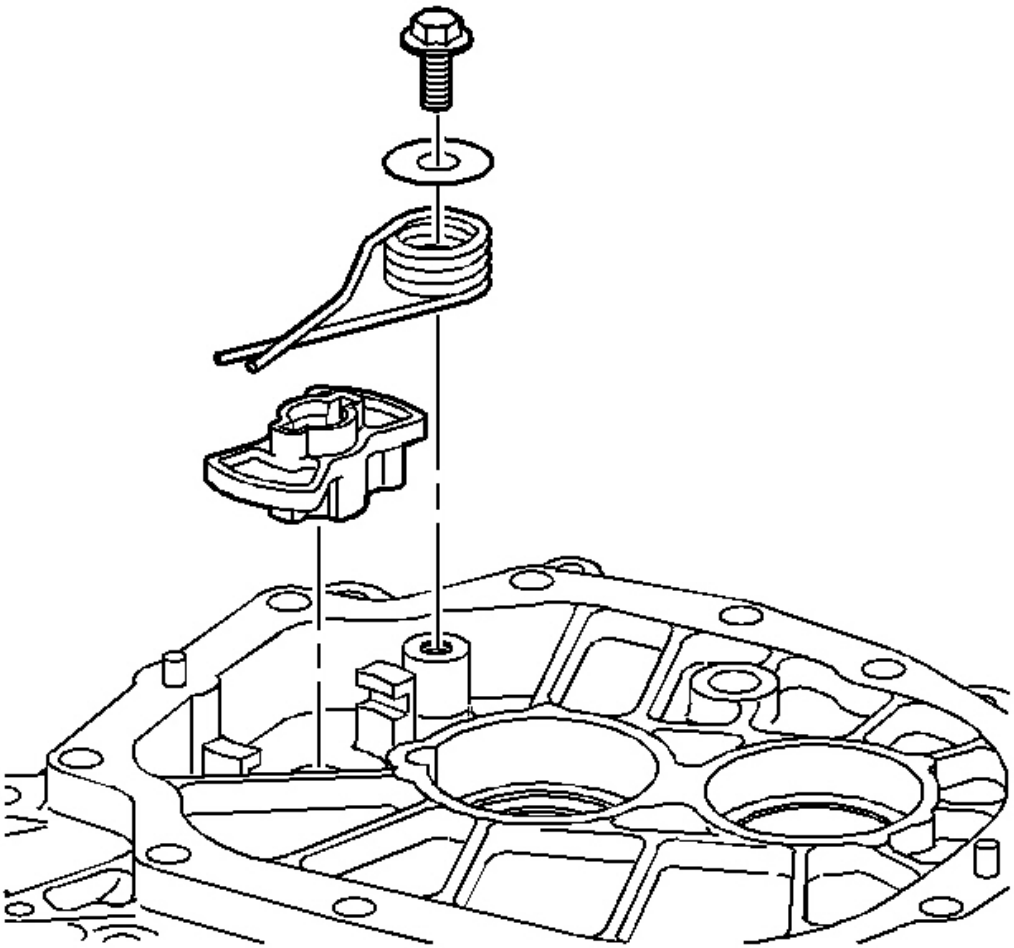

Fig. 183: View Of Neutral Return Cam Assembly
Courtesy of GENERAL MOTORS CORP.

2. Remove the neutral return cam spring retaining bolt and washer.
3. Remove the neutral return cam spring.

cardiagn.com

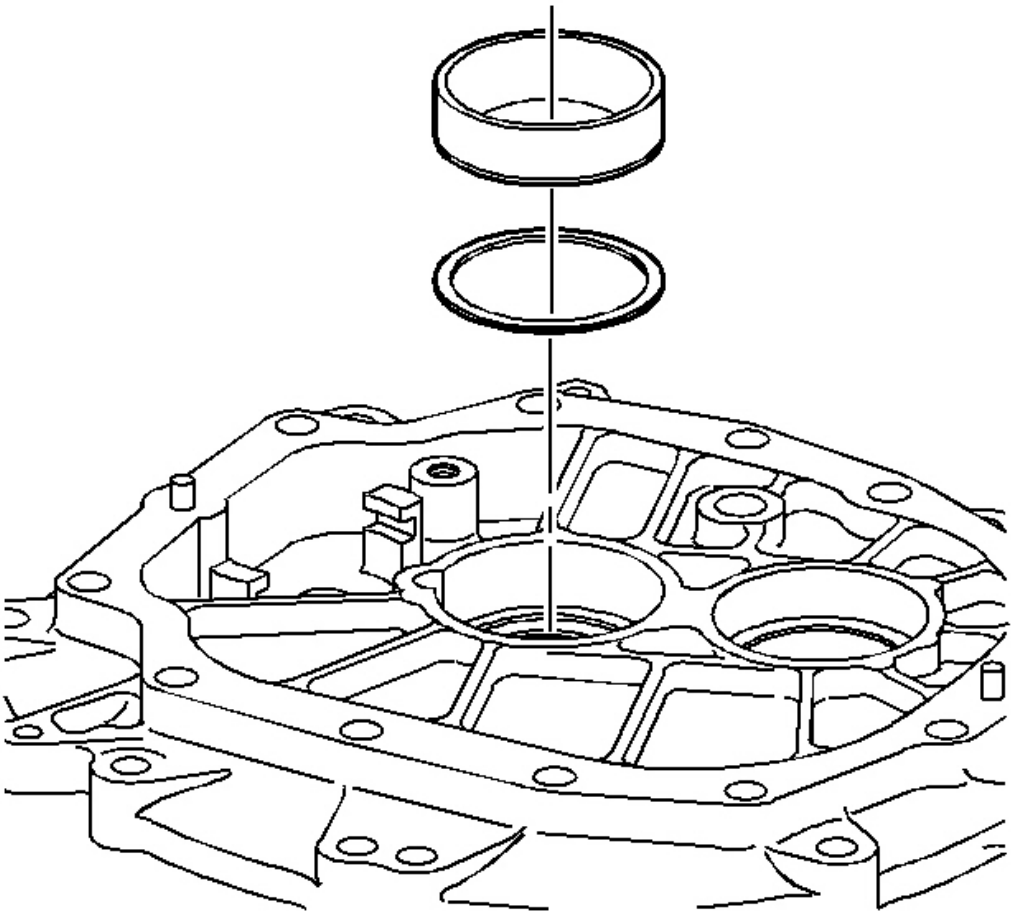

Fig. 184: Installing/Removing Input Shaft Bearing Shim And Bearing Race
Courtesy of GENERAL MOTORS CORP.

4. Remove the input shaft bearing race and the shim.

cardiagn.com

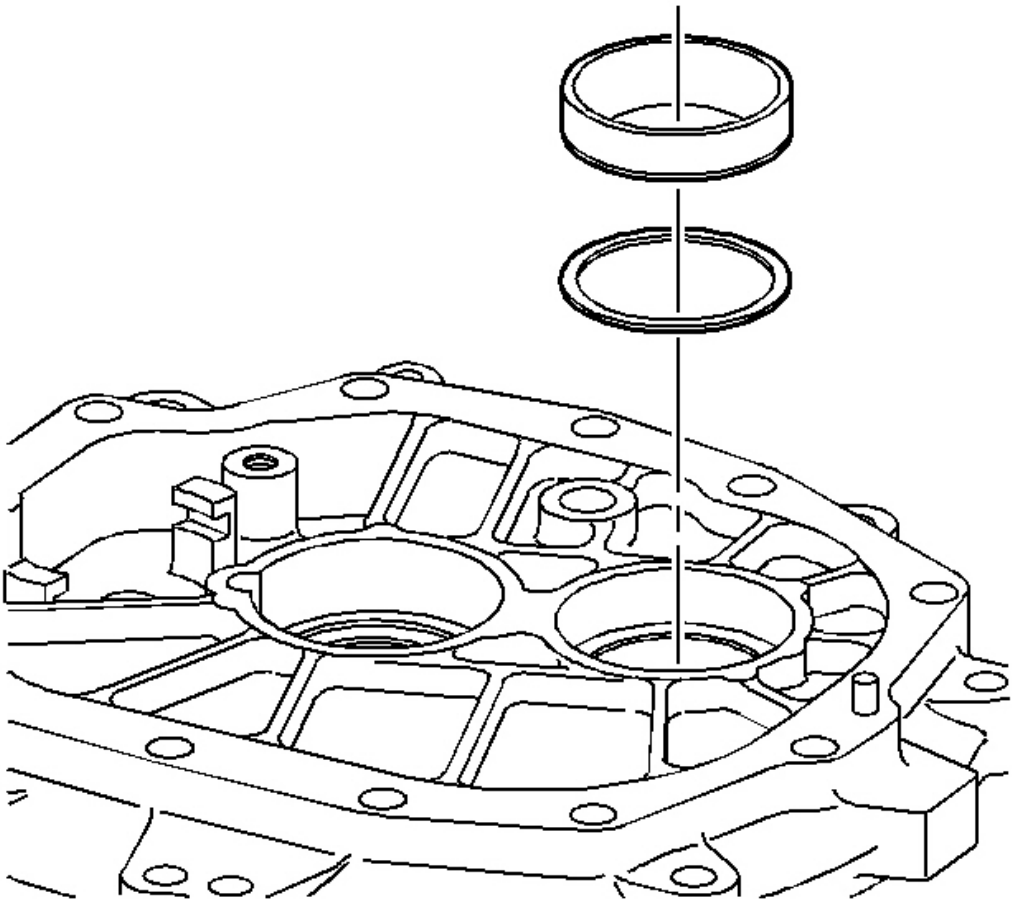

Fig. 185: Identifying Countershaft Bearing Shim & Bearing Race
Courtesy of GENERAL MOTORS CORP.

5. Remove the countershaft bearing race and the shim.

cardiagn.com

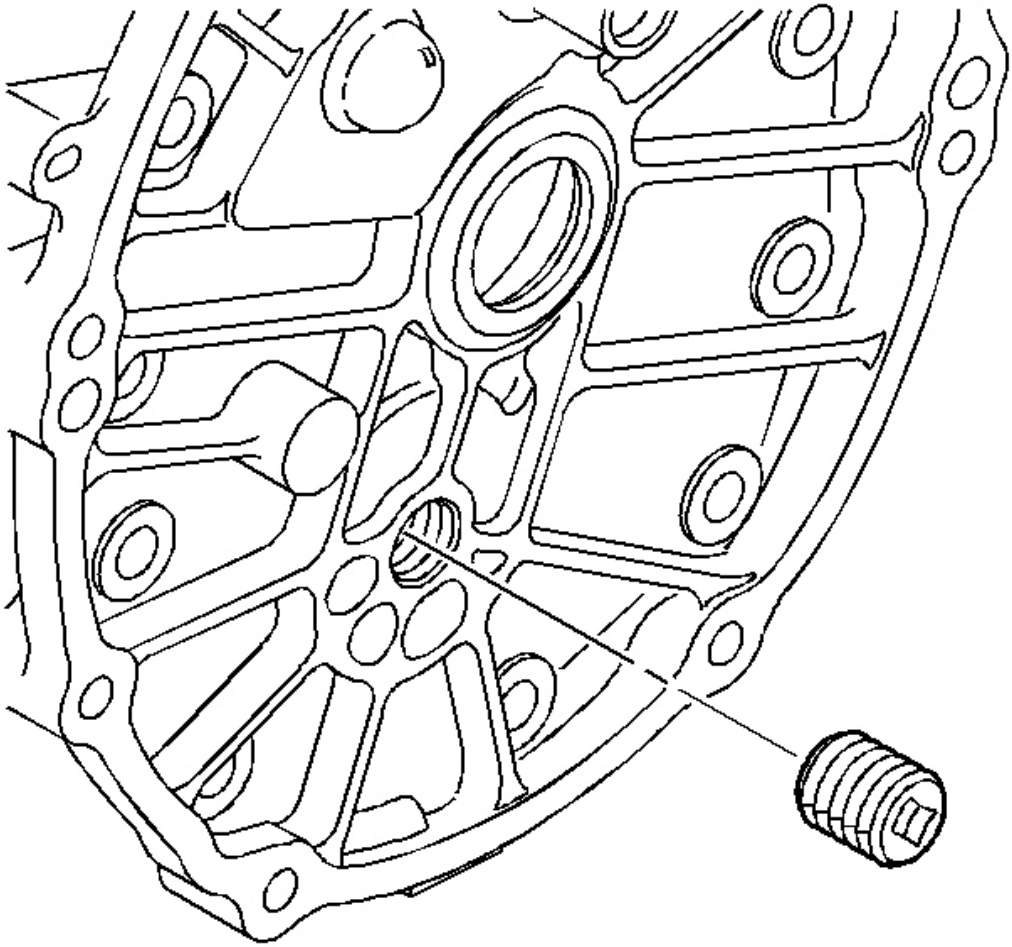

Fig. 186: Locating Adapter Plate Plug
Courtesy of GENERAL MOTORS CORP.

6. Remove the adapter plate plug.

cardiagn.com

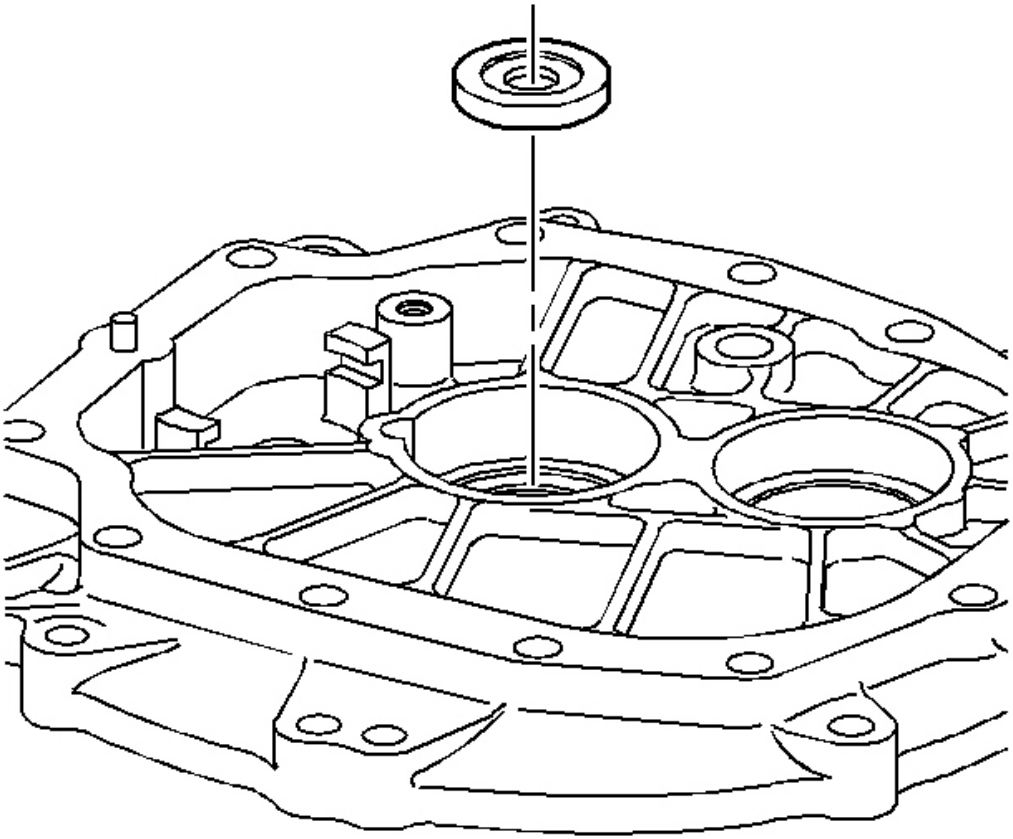

Fig. 187: Identifying Input Shaft Seal
Courtesy of GENERAL MOTORS CORP.

7. Remove the input shaft seal.

cardiagn.com

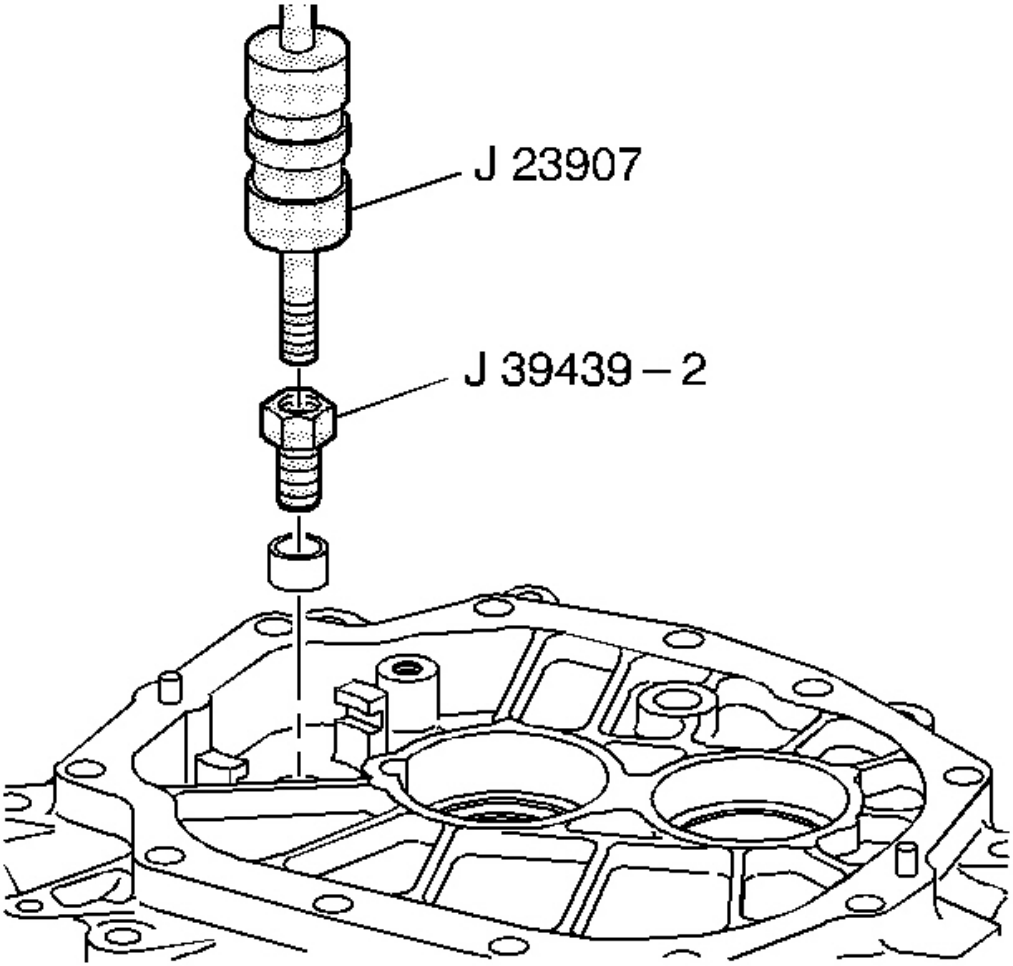

Fig. 188: Removing 1st/2nd & 3rd/4th Shift Shaft Bushing
Courtesy of GENERAL MOTORS CORP.

IMPORTANT: Do not replace the bushing unless inspection shows bushing damage.

8. Remove the 1st/2nd and the 3rd/4th shift shaft bushing, using the **J 23907** with the **J 39439-2** .

cardiagn.com

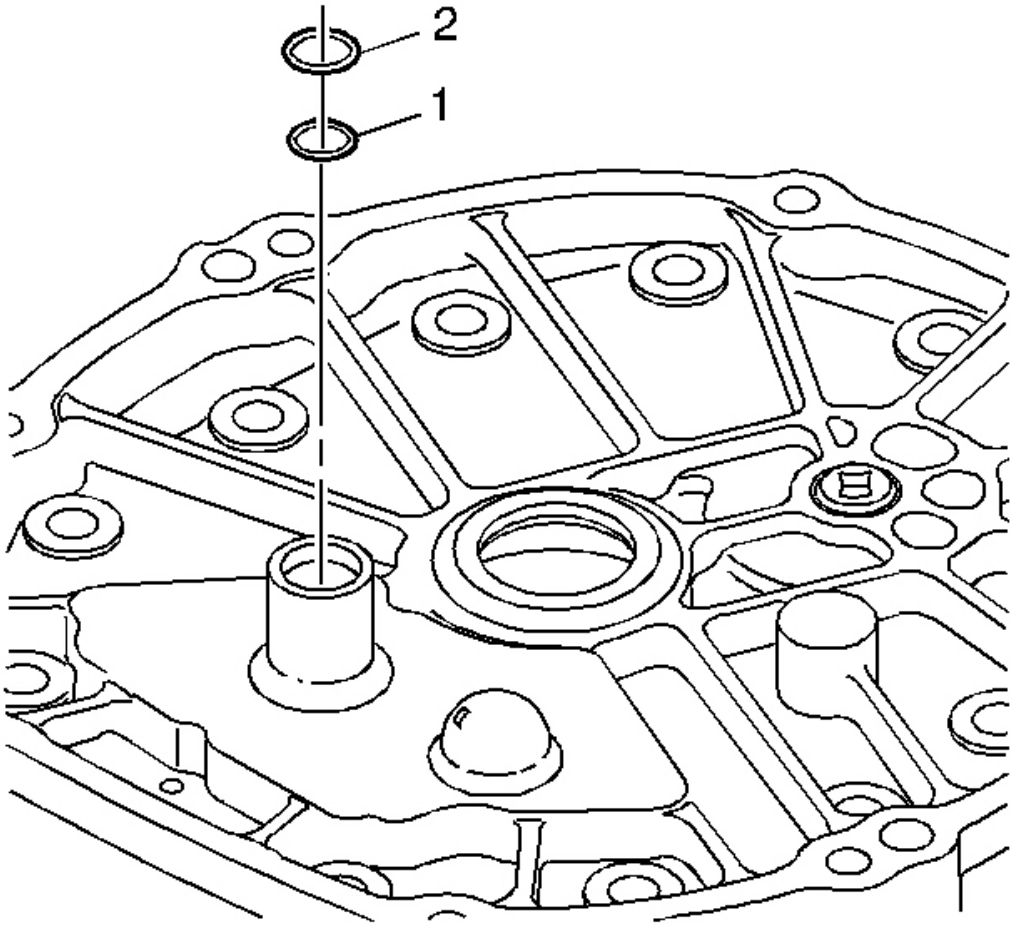

Fig. 189: Installing/Removing Inner Shift Rail Seal & Outer Shift Rail Seal
Courtesy of GENERAL MOTORS CORP.

9. Remove the 1st/2nd and the 3rd/4th shift shaft seals (1) and (2).

cardiagn.com

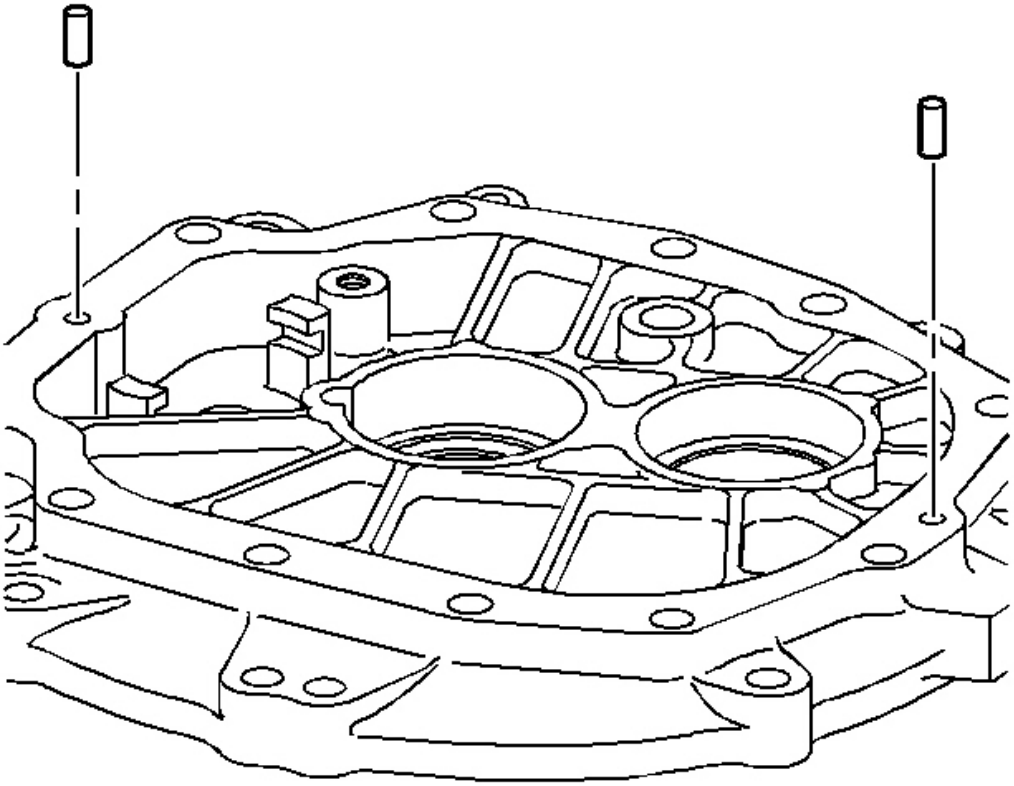

Fig. 190: Installing/Removing Transmission Dowel Pins
Courtesy of GENERAL MOTORS CORP.

10. Remove the dowel pins.

TRANS CASE AND ADAPTER PLATE DISASSEMBLE (CTSV)

Transmission Case

Tools Required

- **J 8092** Drive Handle. See **Special Tools** .
- **J 23907** Slide Hammer. See **Special Tools** .
- **J 39439-2** Bushing Remover. See **Special Tools** .
- **J 39790** Mainshaft Bearing Race Remover. See **Special Tools** .
- **J 39791** Countershaft Beating Race Remover. See **Special Tools** .

cardiagn.com

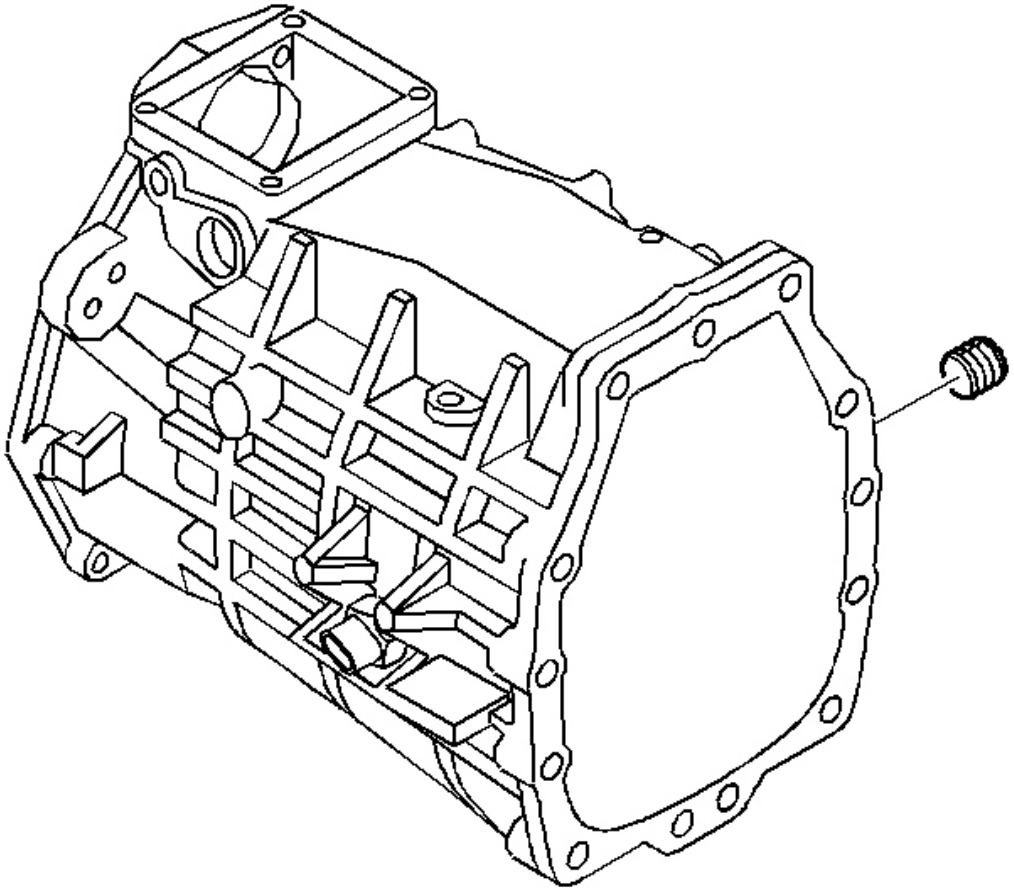

Fig. 191: View Of Transmission Case Fill Plug
Courtesy of GENERAL MOTORS CORP.

1. Remove the transmission case fill plug.

cardiagn.com

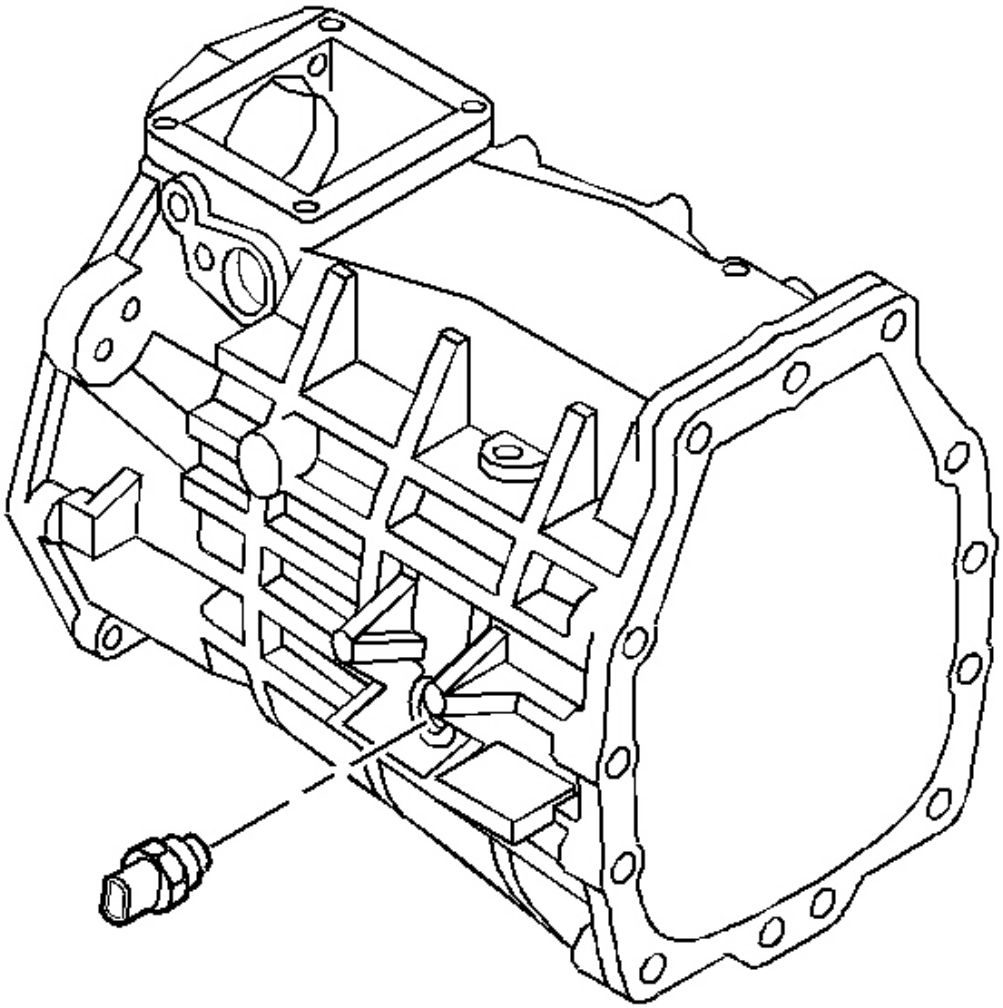

Fig. 192: Locating Reverse Lamp Switch
Courtesy of GENERAL MOTORS CORP.

2. Remove the reverse lamp switch.

cardiagn.com

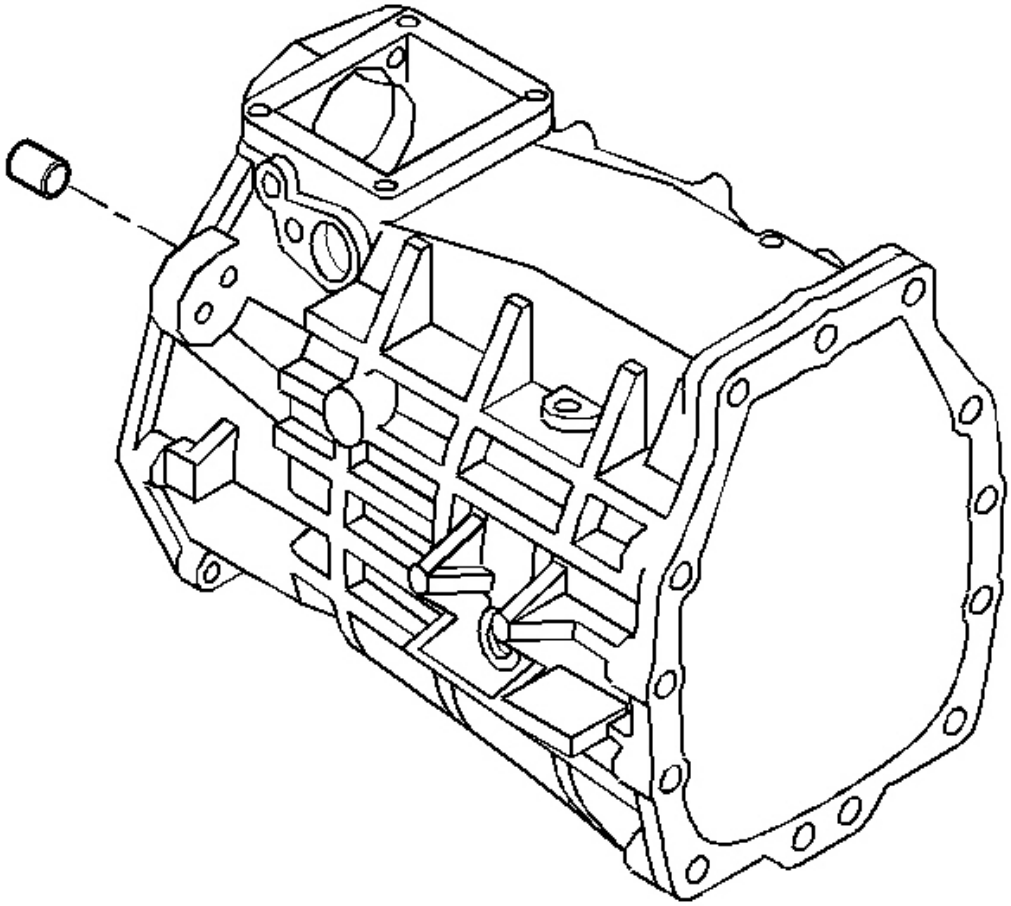

Fig. 193: Identifying Transfer Case Dowel Pins
Courtesy of GENERAL MOTORS CORP.

3. Remove the dowel pins.

cardiagn.com

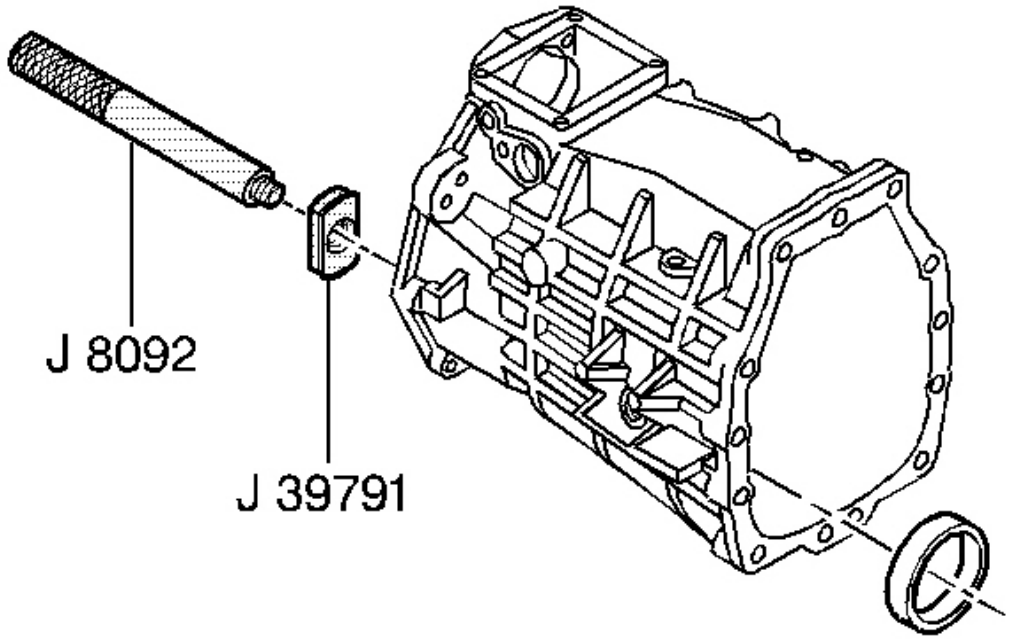

Fig. 194: Removing Countershaft Bearing Race Using J 8092 & J 39791
Courtesy of GENERAL MOTORS CORP.

IMPORTANT: Do not replace the bearing race unless inspection shows bearing race damage.

4. Remove the countershaft bearing race, using the **J 8092** and the **J 39791** .

cardiagn.com

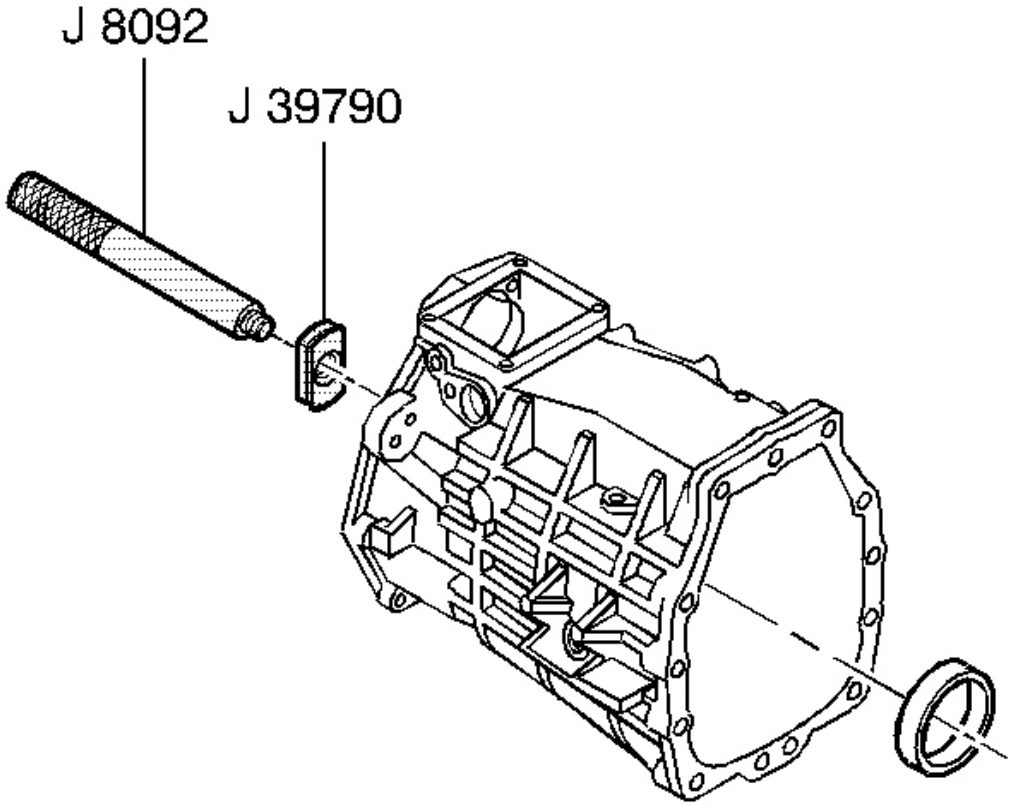

Fig. 195: Installing/Removing Mainshaft Bearing Race
Courtesy of GENERAL MOTORS CORP.

IMPORTANT: Do not replace the bearing race unless inspection shows bearing race damage.

5. Remove the mainshaft bearing race, using the **J 8092** and the **J 39790** .

cardiagn.com

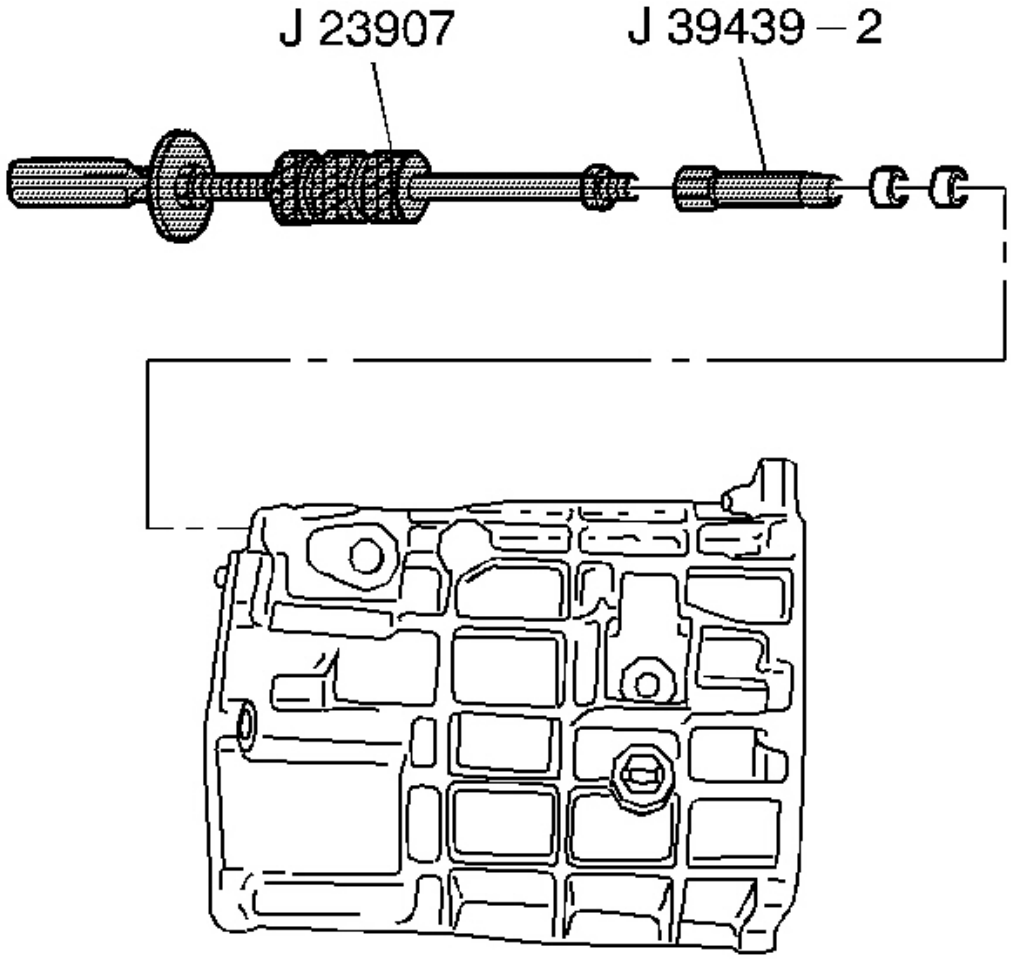

Fig. 196: Removing 1st/2nd & 3rd/4th Shift Shaft Bushings
Courtesy of GENERAL MOTORS CORP.

6. Remove the 1st/2nd and the 3rd/4th shift shaft bushings using the **J 23907** and the **J 39439-2** .

Adapter Plate

Tools Required

- **J 23907** Slide Hammer. See **Special Tools** .
- **J 39439-2** Bushing Remover. See **Special Tools** .

cardiagn.com

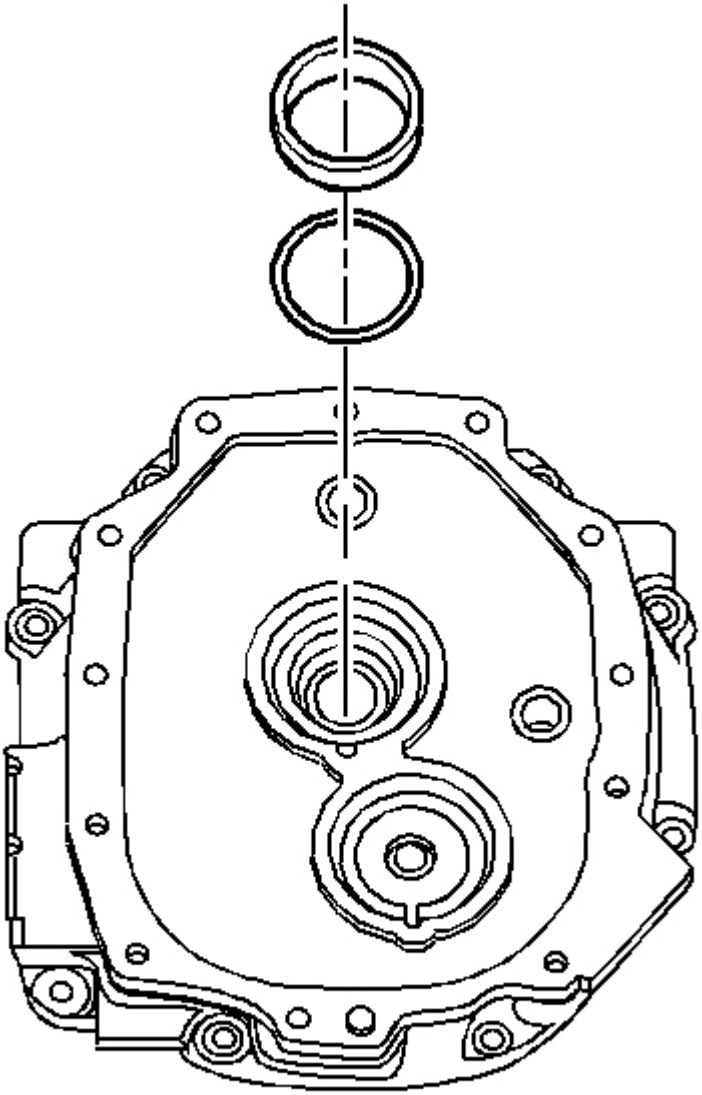

Fig. 197: Installing/Removing Input Shaft Bearing Shim And Bearing Race
Courtesy of GENERAL MOTORS CORP.

1. Remove the input shaft bearing race and the shim.

cardiagn.com

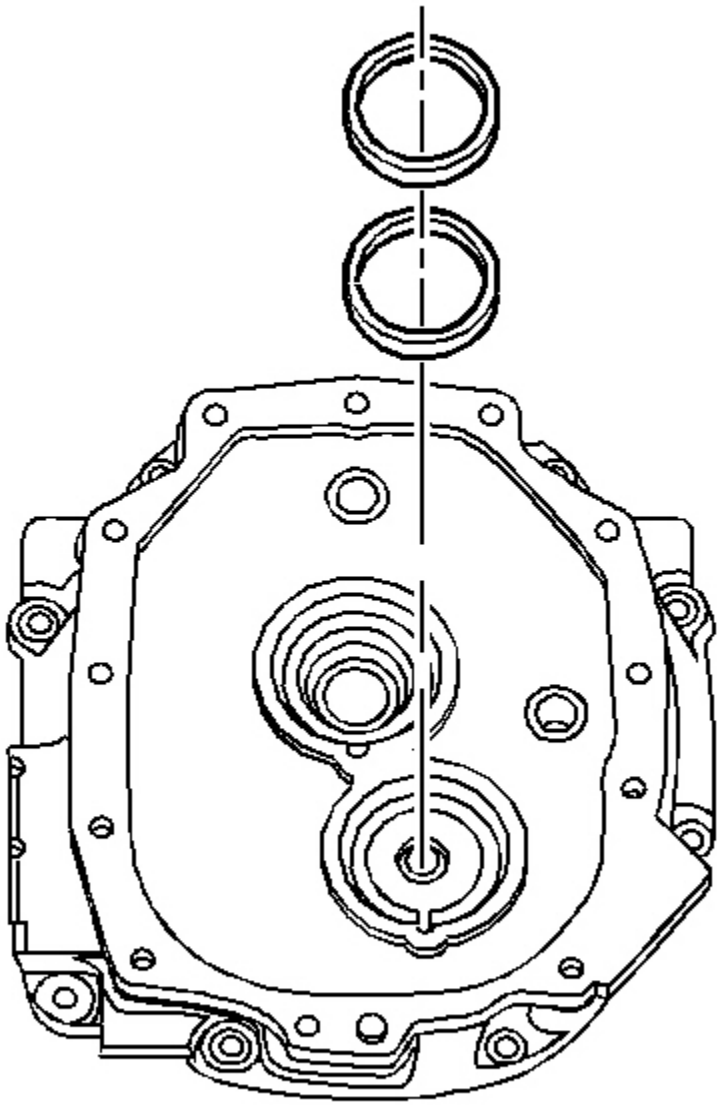

Fig. 198: View Of Countershaft Bearing Shim & Bearing Race
Courtesy of GENERAL MOTORS CORP.

2. Remove the countershaft bearing race and the shim.

cardiagn.com

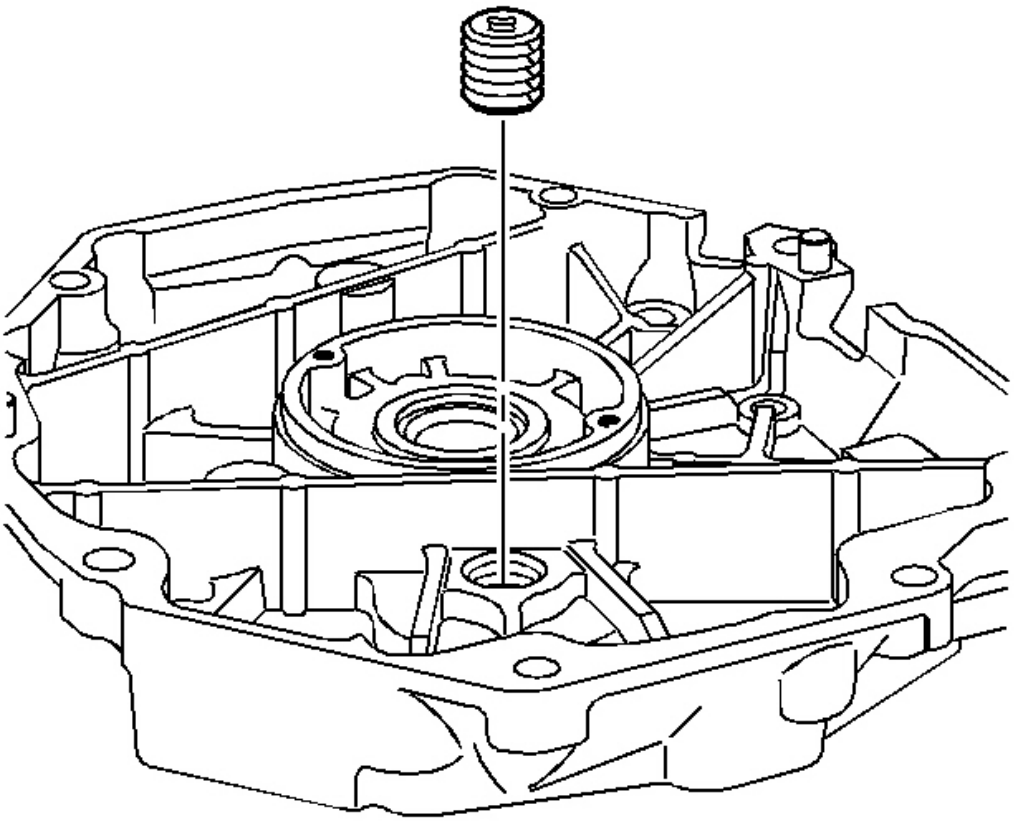

Fig. 199: Identifying Adapter Plate Plug
Courtesy of GENERAL MOTORS CORP.

3. Remove the adapter plate plug.

cardiagn.com

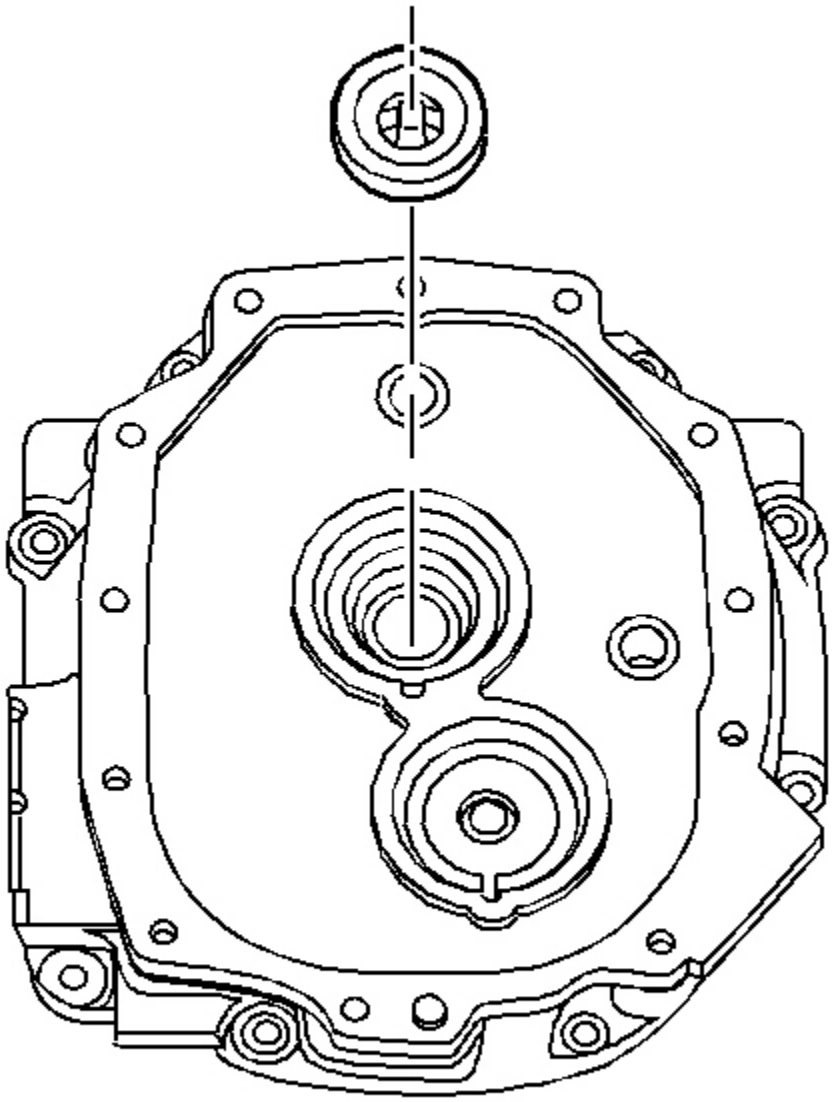

Fig. 200: Locating Input Shaft Seal
Courtesy of GENERAL MOTORS CORP.

4. Remove the input shaft seal.

IMPORTANT: Do not replace the bushing unless inspection shows bushing damage.

cardiagn.com

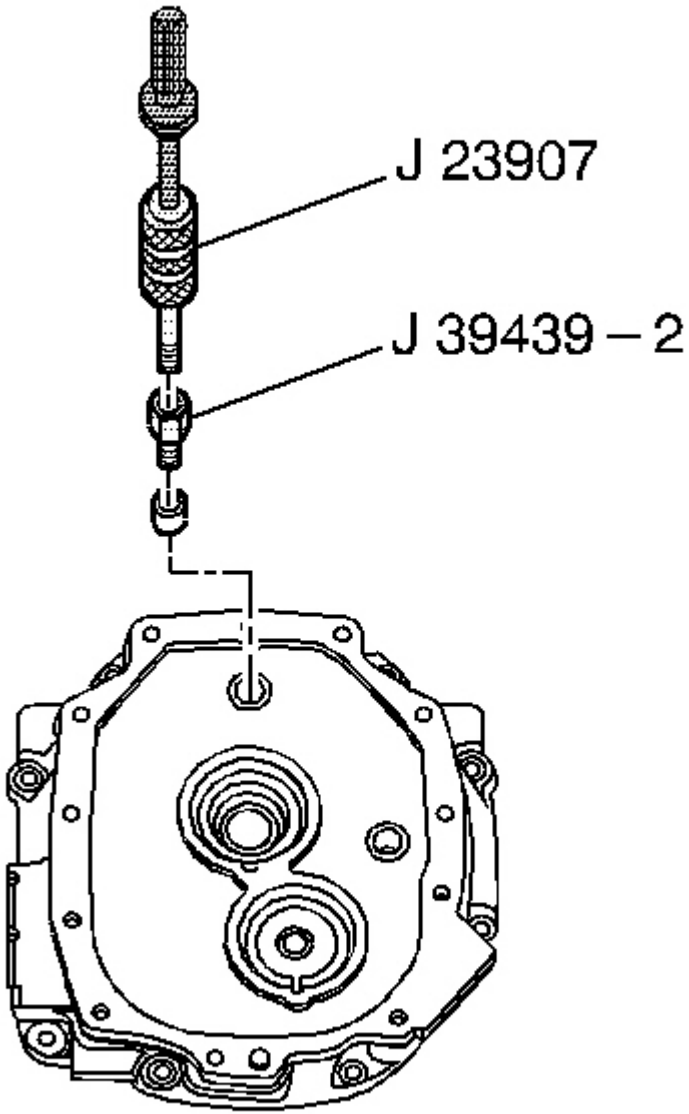

Fig. 201: Removing 1st/2nd And The 3rd/4th Shift Shaft Bushing Using J 39439-2 & J 23907
Courtesy of GENERAL MOTORS CORP.

5. Remove the 1st/2nd and the 3rd/4th shift shaft bushing, using the **J 23907** with the **J 39439-2** .

cardiagn.com

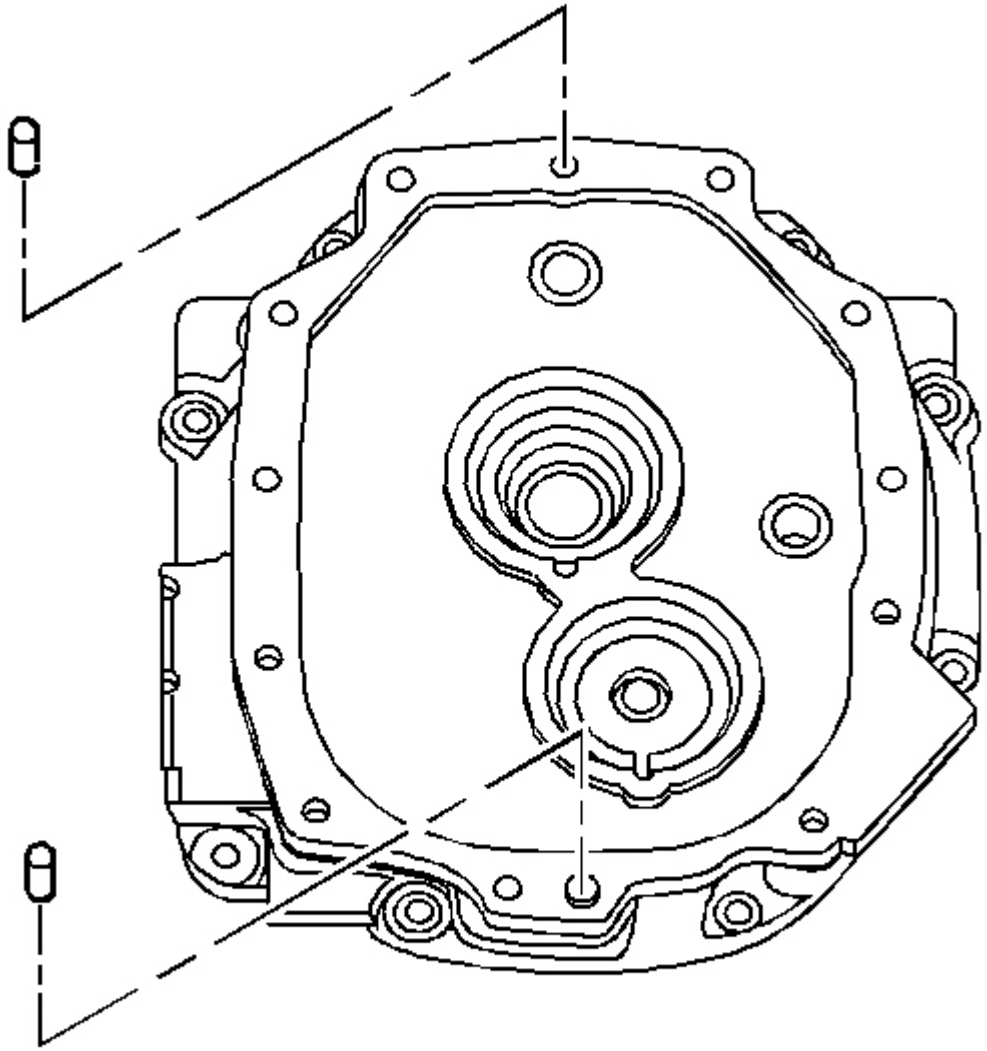

Fig. 202: Locating Extension Housing Dowel Pins
Courtesy of GENERAL MOTORS CORP.

6. Remove the dowel pins.

TRANS CASE AND ADAPTER PLATE DISASSEMBLE (GTO)

Transmission Case

cardiagn.com

Tools Required

- **J 8092** Drive Handle. See **Special Tools** .
- **J 23907** Slide Hammer. See **Special Tools** .
- **J 39439-2** Bushing Remover. See **Special Tools** .
- **J 39790** Mainshaft Bearing Race Remover. See **Special Tools** .
- **J 39791** Countershaft Beating Race Remover. See **Special Tools** .

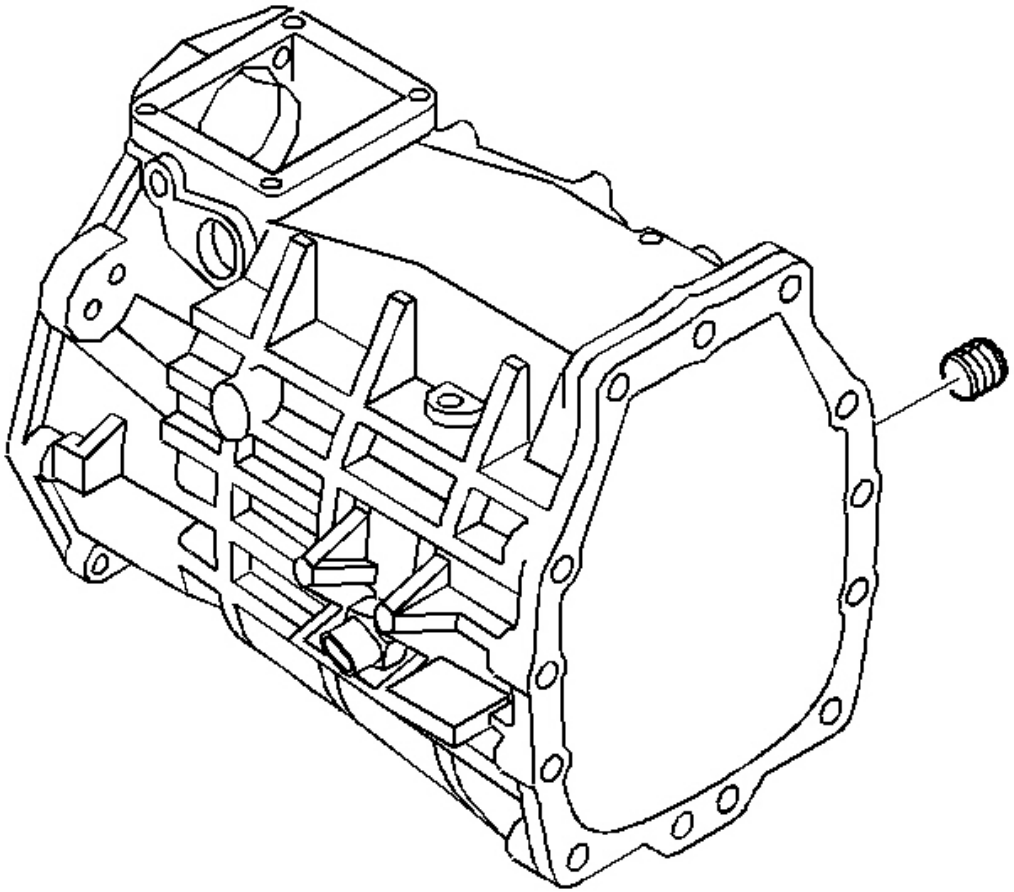

Fig. 203: View Of Transmission Case Fill Plug
Courtesy of GENERAL MOTORS CORP.

1. Remove the transmission case fill plug.

cardiagn.com

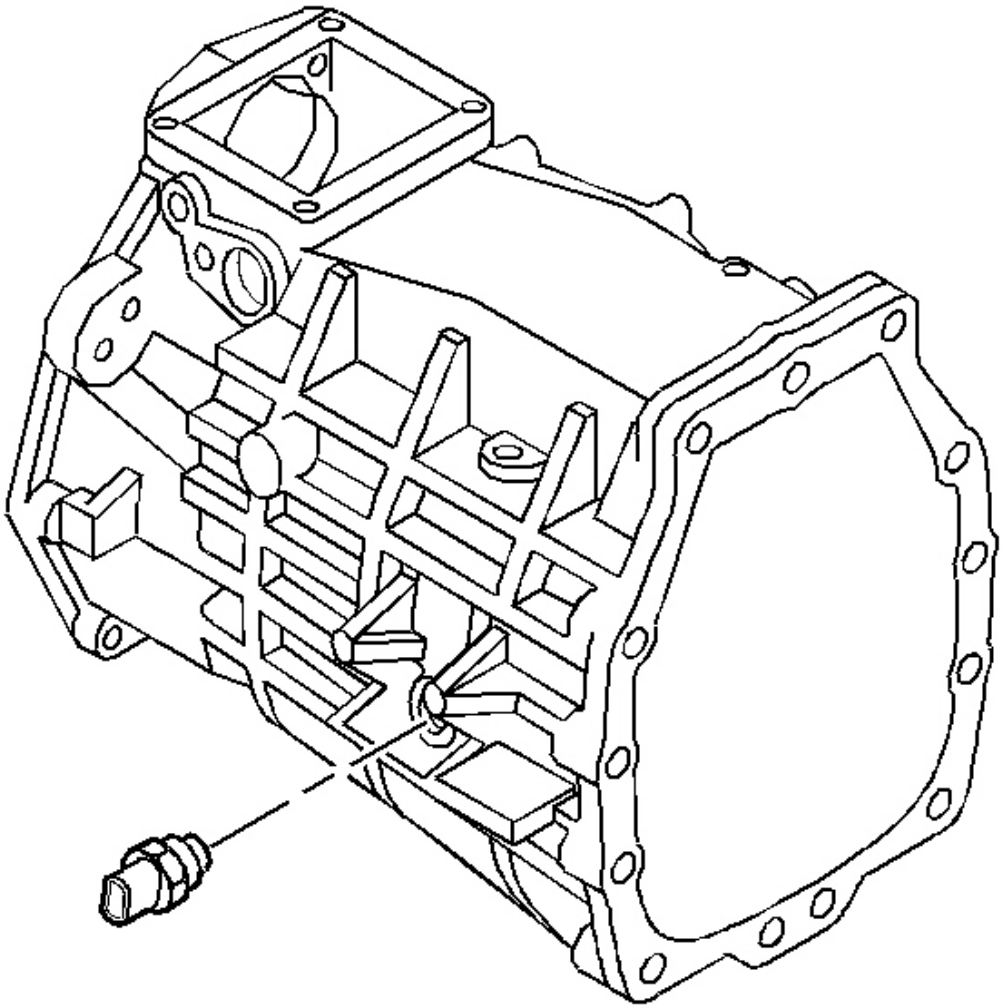

Fig. 204: Locating Reverse Lamp Switch
Courtesy of GENERAL MOTORS CORP.

2. Remove the reverse lamp switch.

cardiagn.com

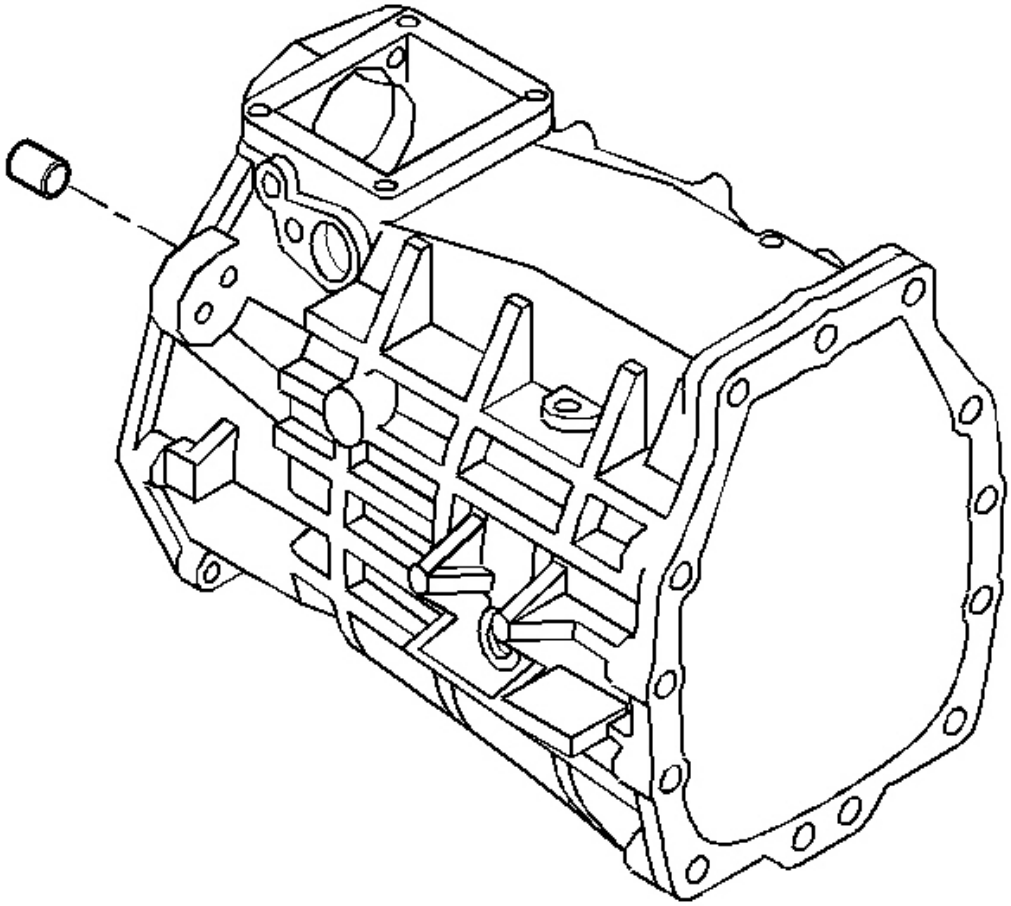

Fig. 205: Identifying Transfer Case Dowel Pins
Courtesy of GENERAL MOTORS CORP.

3. Remove the dowel pins.

cardiagn.com

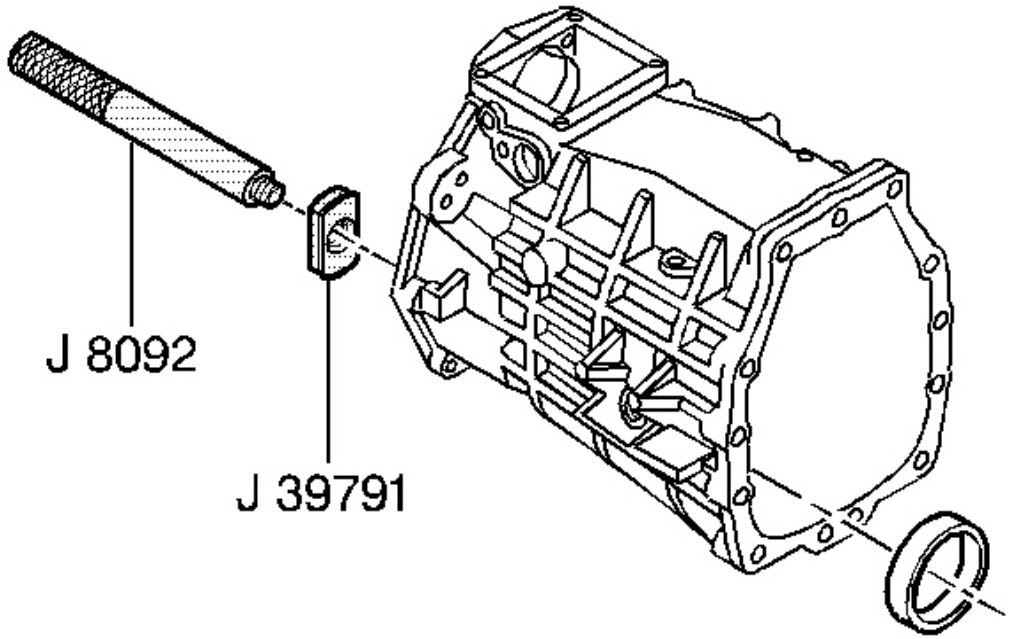

Fig. 206: Removing Countershaft Bearing Race Using J 8092 & J 39791
Courtesy of GENERAL MOTORS CORP.

IMPORTANT: Do not replace the bearing race unless inspection shows bearing race damage.

4. Remove the countershaft bearing race, using the **J 8092** and the **J 39791** .

IMPORTANT: Do not replace the bearing race unless inspection shows bearing race damage.

cardiagn.com

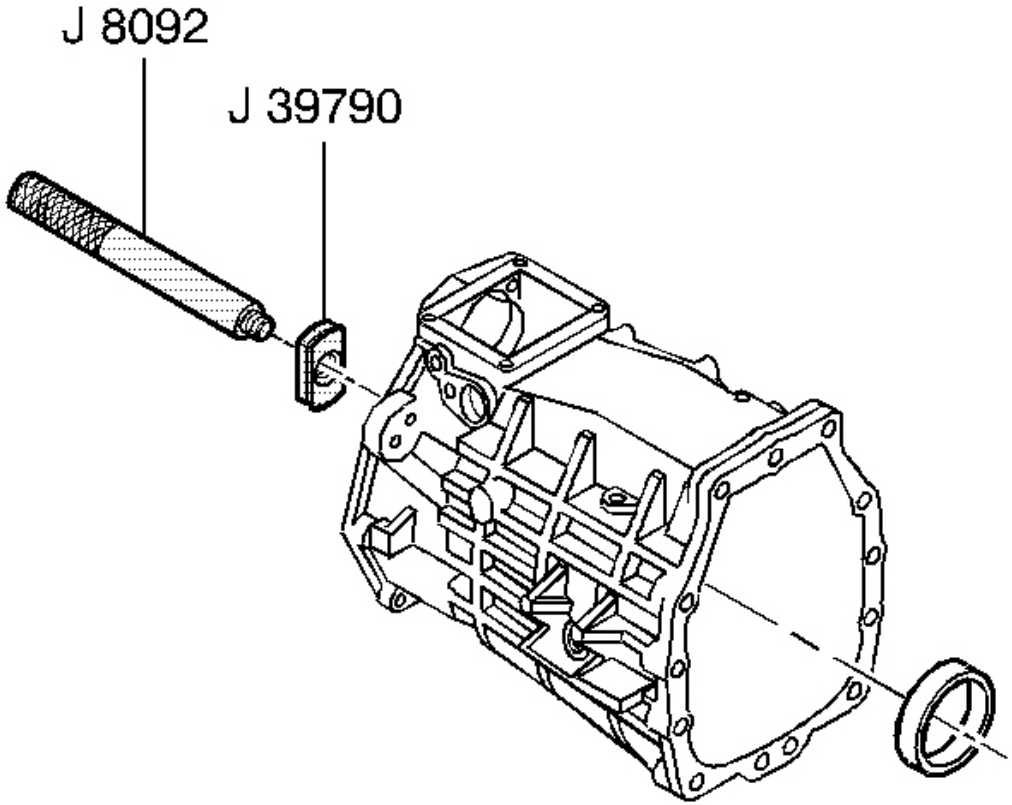

Fig. 207: Removing Mainshaft Bearing Race
Courtesy of GENERAL MOTORS CORP.

5. Remove the mainshaft bearing race, using the **J 8092** and the **J 39790** .

cardiagn.com

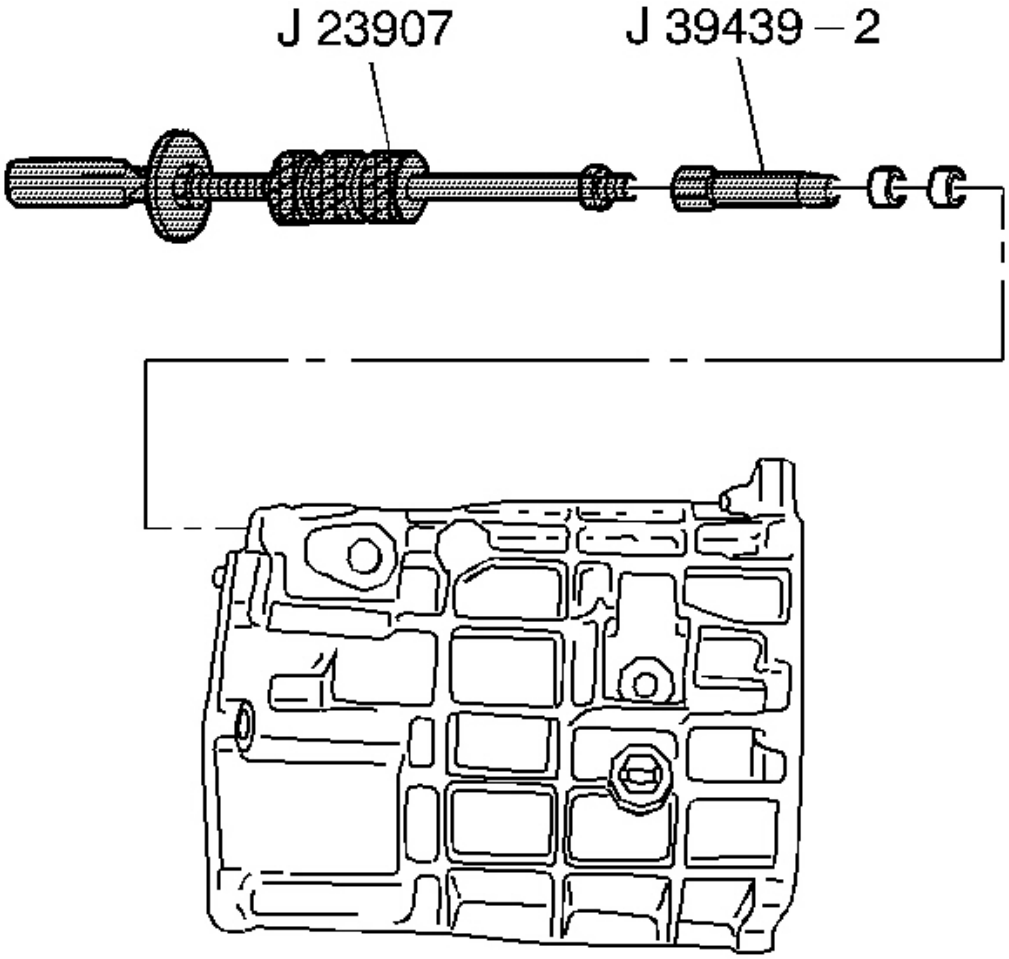

Fig. 208: Removing 1st/2nd & 3rd/4th Shift Shaft Bushings Using The J 23907
Courtesy of GENERAL MOTORS CORP.

6. Remove the 1st/2nd and the 3rd/4th shift shaft bushings, using the **J 23907** and the **J 39439-2** .

Adapter Plate

Tools Required

- **J 23907** Slide Hammer. See **Special Tools** .
- **J 39439-2** Bushing Remover. See **Special Tools** .

cardiagn.com

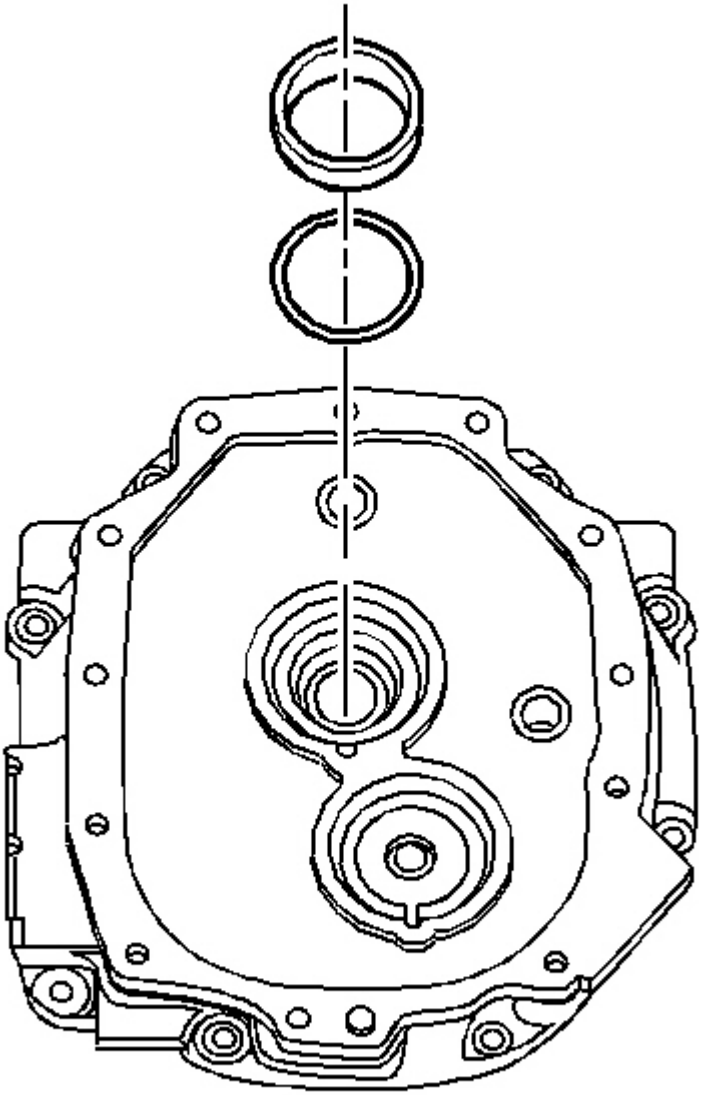

Fig. 209: Installing/Removing Input Shaft Bearing Shim And Bearing Race
Courtesy of GENERAL MOTORS CORP.

1. Remove the input shaft bearing race and the shim.

cardiagn.com

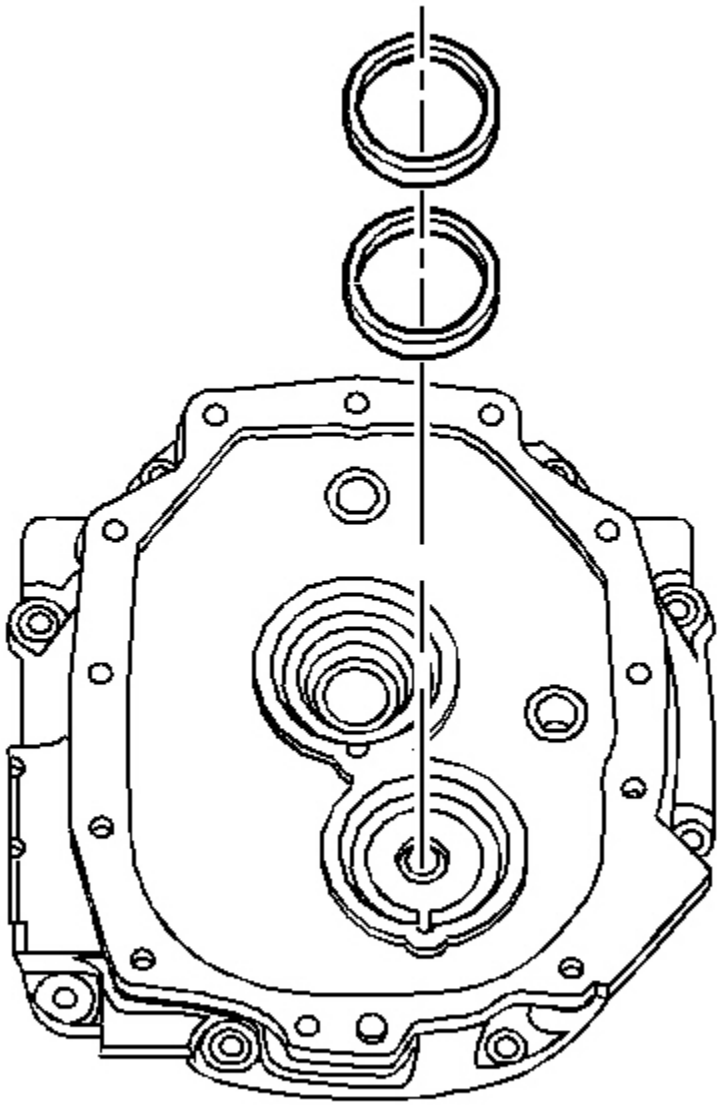

Fig. 210: View Of Countershaft Bearing Shim & Bearing Race
Courtesy of GENERAL MOTORS CORP.

2. Remove the countershaft bearing race and the shim.

cardiagn.com

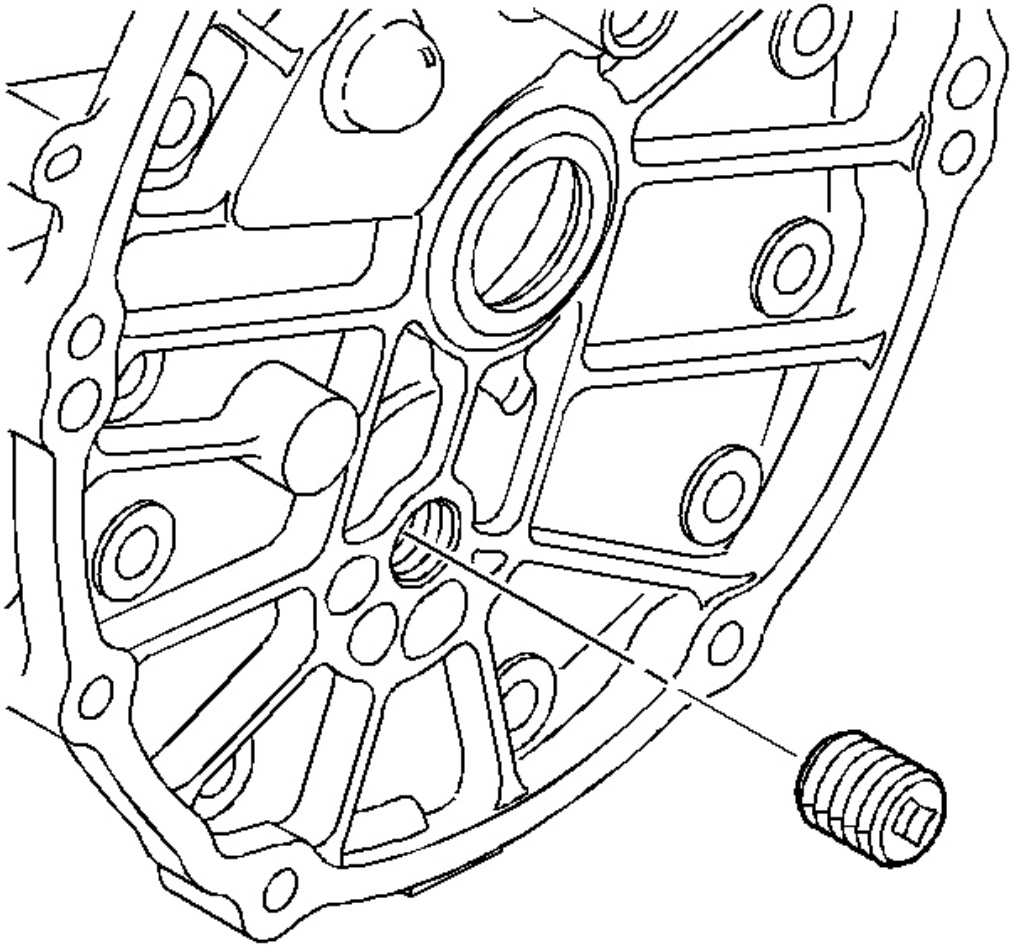

Fig. 211: Locating Adapter Plate Plug
Courtesy of GENERAL MOTORS CORP.

3. Remove the adapter plate plug.

cardiagn.com

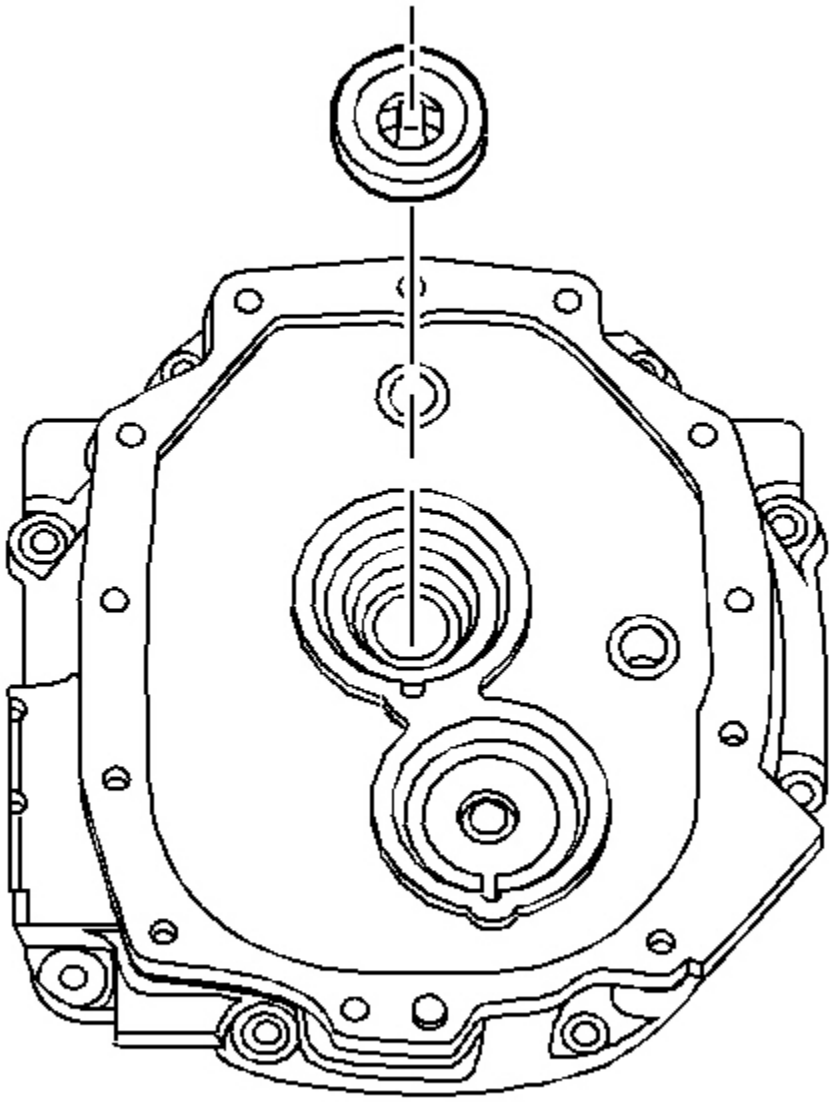

Fig. 212: Locating Input Shaft Seal
Courtesy of GENERAL MOTORS CORP.

4. Remove the input shaft seal.

IMPORTANT: Do not replace the bushing unless inspection shows bushing damage.

cardiagn.com

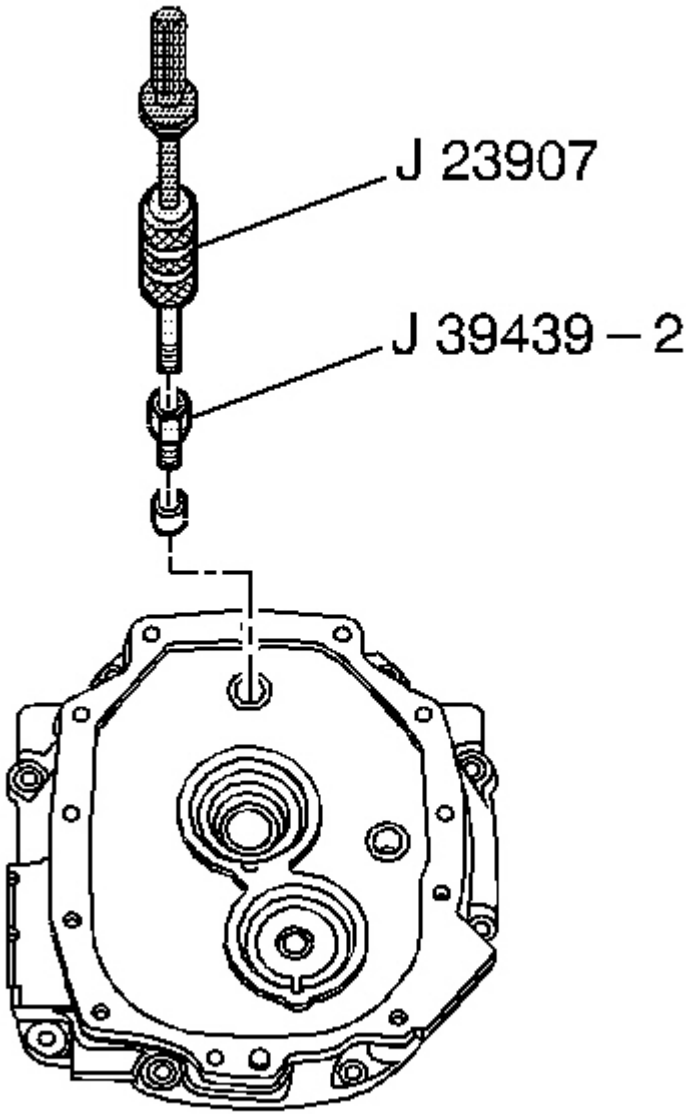

Fig. 213: Removing 1St/2Nd And The 3Rd/4Th Shift Shaft Bushing Using J 39439-2 & J 23907
Courtesy of GENERAL MOTORS CORP.

5. Remove the 1st/2nd and the 3rd/4th shift shaft bushing, using the **J 23907** with the **J 39439-2** .

cardiagn.com

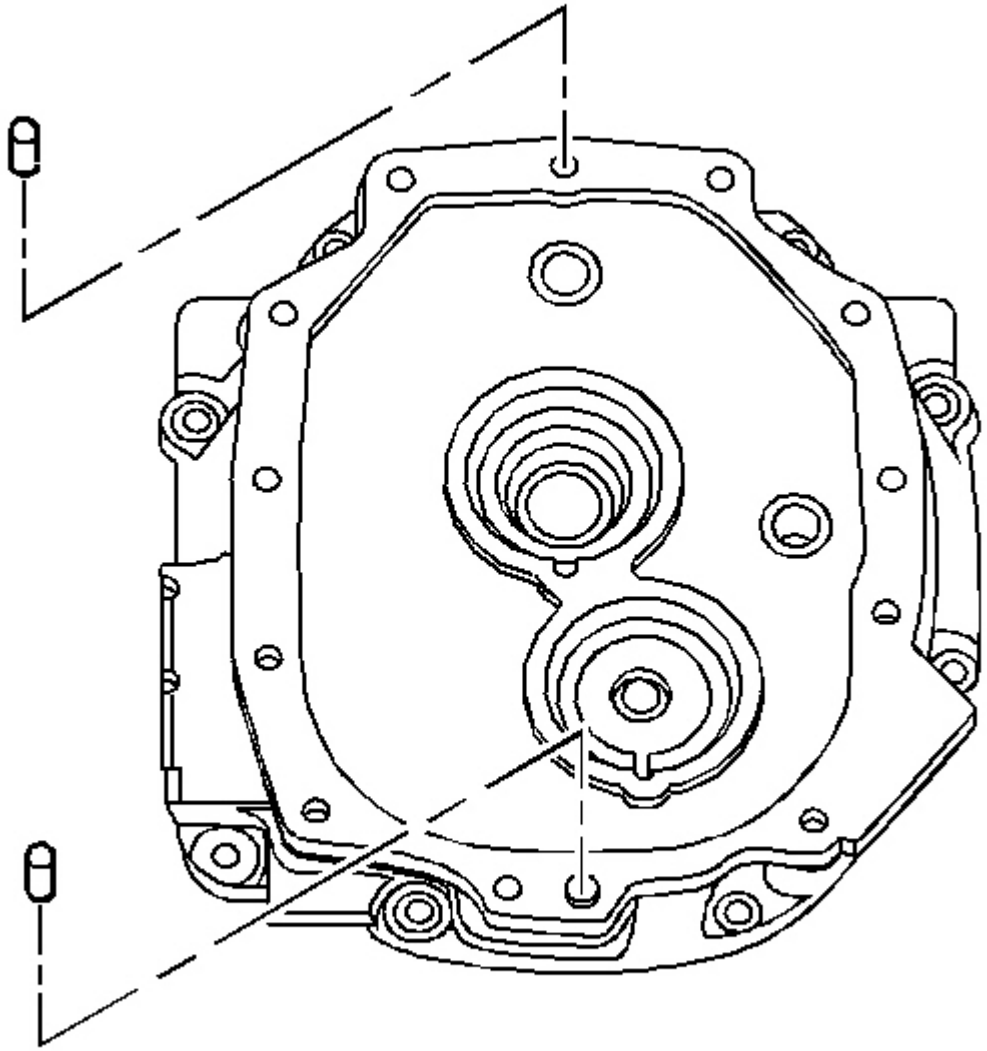

Fig. 214: Locating Extension Housing Dowel Pins
Courtesy of GENERAL MOTORS CORP.

6. Remove the dowel pins.

TRANS CASE AND ADAPTER PLATE CLEANING AND INSPECTION (Y CAR)

Transmission Case

cardiagn.com

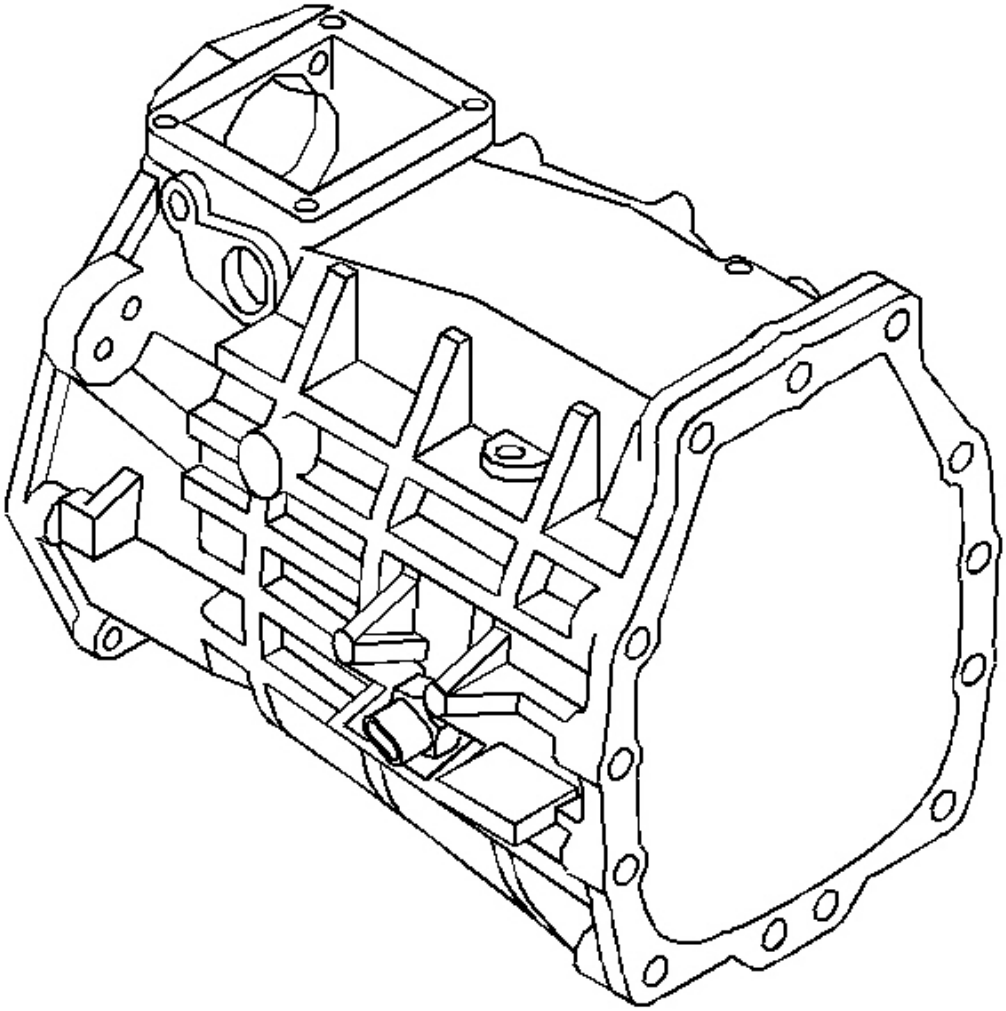

Fig. 215: Identifying Transmission Case
Courtesy of GENERAL MOTORS CORP.

1. Clean the transmission case in a suitable solvent. Air dry the transmission case.
2. Clean all sealant material from retainer bolt threads.
3. Inspect the transmission case for the following conditions:
    1. Cracks
    2. Scratches
    3. Damaged threads
    4. Burrs

cardiagn.com

5. Nicked mounting surfaces
6. Damaged sealing surfaces
7. Damaged front or rear bearing bores

4. Inspect the machined mating surfaces for flatness with a straight edge.
5. Inspect the bearing races and bores for wear, scratches or grooves.
6. Inspect the bushing for excessive wear.
7. Use a fine mill file to dress minor scratches or burrs.
8. If scratches, or grooves or scoring cannot be removed by hand with a soft stone or crocus cloth, replace the component.
9. Clean up damaged threads with the correct size tap.
10. Replace a cracked housing.
11. Replace worn bushings.

Adapter Plate

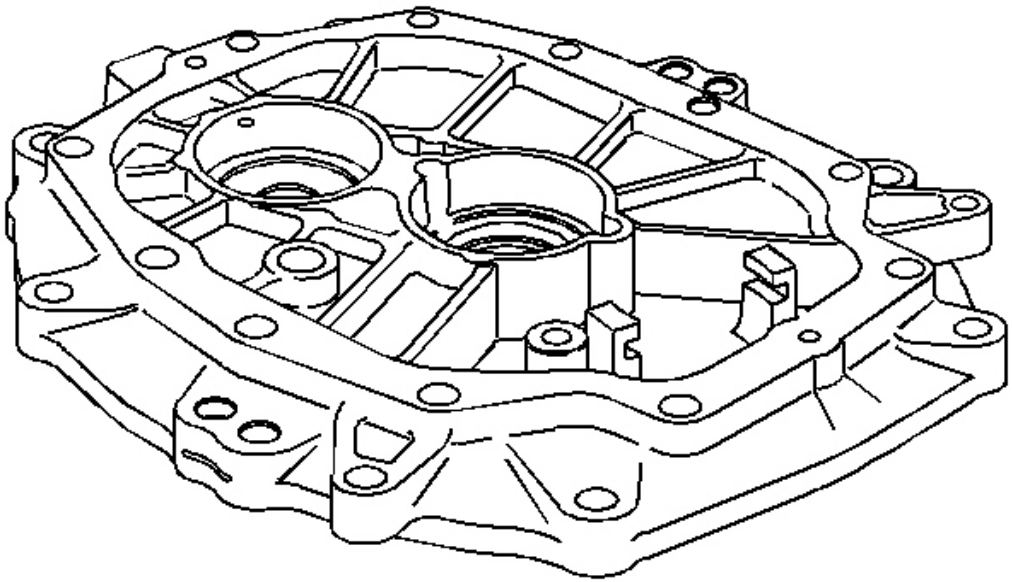

Fig. 216: View Of Adapter Plate
Courtesy of GENERAL MOTORS CORP.

1. Clean the adapter plate parts with a suitable solvent. Air dry all the parts.
2. Inspect the adapter plate parts for the following conditions:

cardiagn.com

    1. Cracks (replace a cracked adapter plate.)
    2. Scratches
    3. Burrs
    4. Nicked mounting surfaces
    5. Damaged sealing surfaces
    6. Damaged front or rear bearing bores
3. Inspect the machined mating surfaces for flatness. Check the mating surfaces with a straight edge.
4. Inspect the bearing races and bores for wear, scratches or grooves.
5. Inspect the bushing for excessive wear. Replace worn bushings.
6. Use a fine mill file to dress minor scratches or burrs.
7. If scratches, or grooves or scoring cannot be removed by hand with a soft stone or crocus cloth, replace the component.

TRANS CASE AND ADAPTER PLATE CLEANING AND INSPECTION (CTSV)

Transmission Case

cardiagn.com

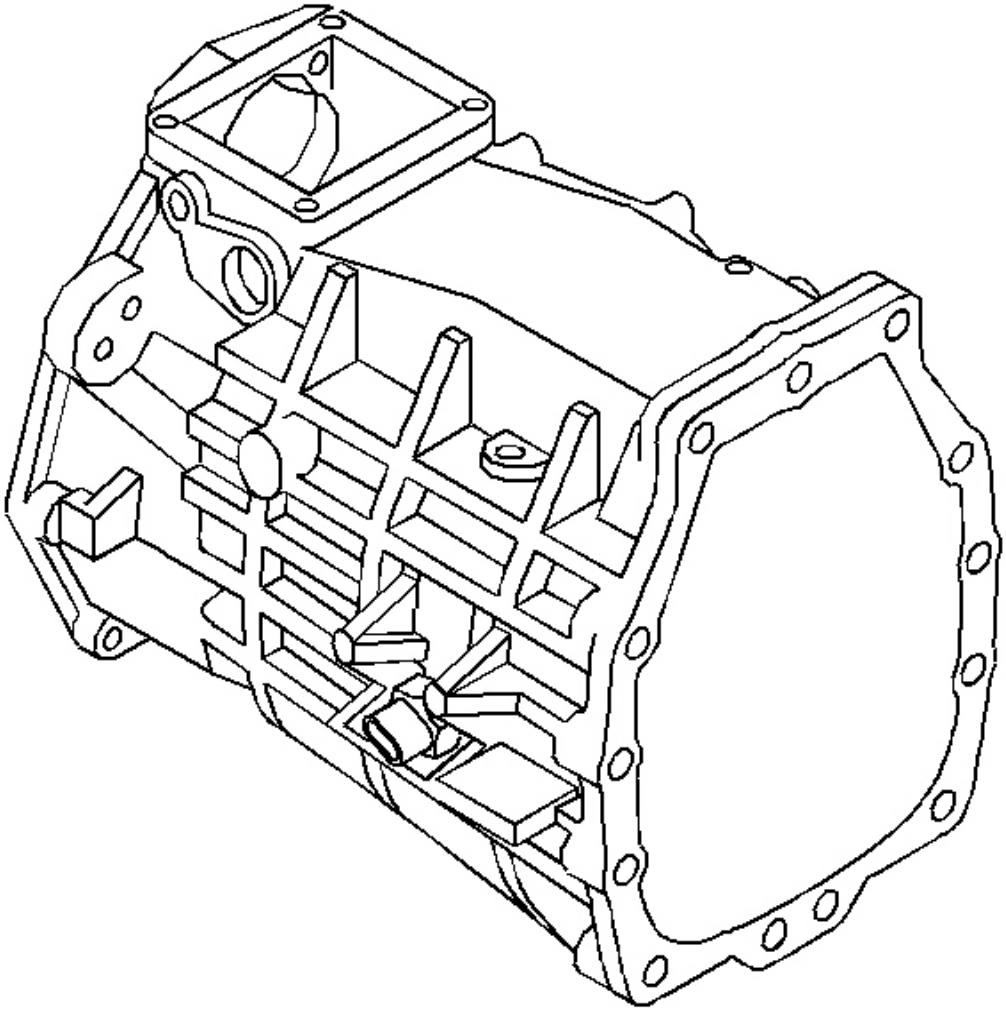

Fig. 217: Identifying Transmission Case
Courtesy of GENERAL MOTORS CORP.

1. Clean the transmission case in a suitable solvent. Air dry the transmission case.
2. Clean all sealant material from retainer bolt threads.
3. Inspect the transmission case for the following conditions:
    1. Cracks
    2. Scratches
    3. Damaged threads
    4. Burrs

cardiagn.com

5. Nicked mounting surfaces
6. Damaged sealing surfaces
7. Damaged front or rear bearing bores

4. Inspect the machined mating surfaces for flatness with a straight edge.
5. Inspect the bearing races and bores for wear, scratches or grooves.
6. Inspect the bushing for excessive wear.
7. Use a fine mill file to dress minor scratches or burrs.
8. If scratches, or grooves or scoring cannot be removed by hand with a soft stone or crocus cloth, replace the component.
9. Clean up damaged threads with the correct size tap.
10. Replace a cracked housing.
11. Replace worn bushings.

Adapter Plate

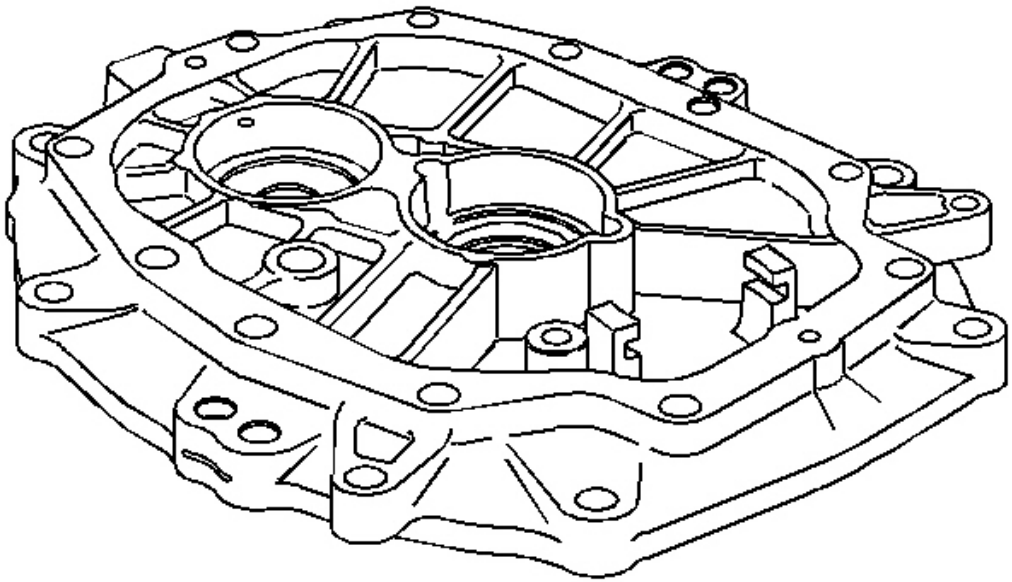

Fig. 218: View Of Adapter Plate
Courtesy of GENERAL MOTORS CORP.

1. Clean the adapter plate parts with a suitable solvent. Air dry all the parts.
2. Inspect the adapter plate parts for the following conditions:

cardiagn.com

    1. Cracks (replace a cracked adapter plate.)
    2. Scratches
    3. Burrs
    4. Nicked mounting surfaces
    5. Damaged sealing surfaces
    6. Damaged front or rear bearing bores
3. Inspect the machined mating surfaces for flatness. Check the mating surfaces with a straight edge.
4. Inspect the bearing races and bores for wear, scratches or grooves.
5. Inspect the bushing for excessive wear. Replace worn bushings.
6. Use a fine mill file to dress minor scratches or burrs.
7. If scratches, or grooves or scoring cannot be removed by hand with a soft stone or crocus cloth, replace the component.

TRANS CASE AND ADAPTER PLATE CLEANING AND INSPECTION (GTO)

Transmission Case

cardiagn.com

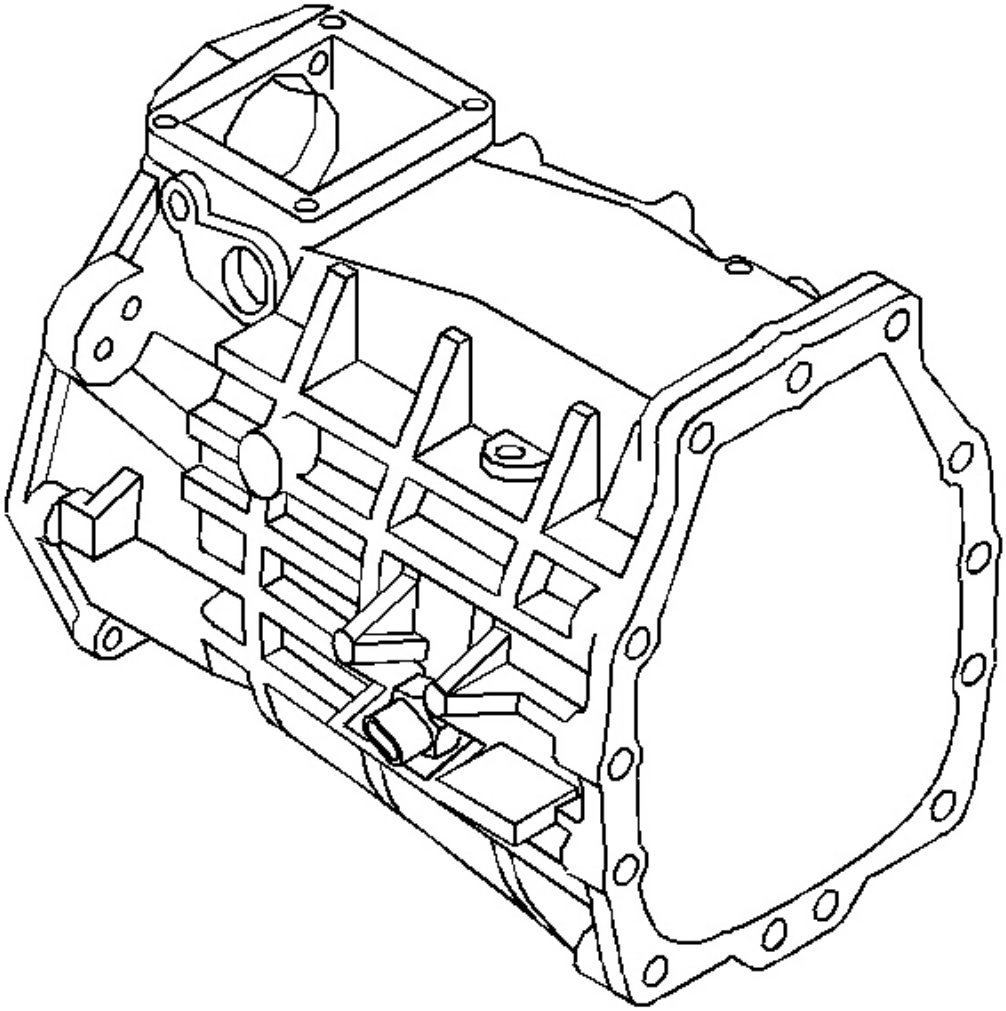

Fig. 219: Identifying Transmission Case
Courtesy of GENERAL MOTORS CORP.

1. Clean the transmission case in a suitable solvent. Air dry the transmission case.
2. Clean all sealant material from retainer bolt threads.
3. Inspect the transmission case for the following conditions:
    1. Cracks
    2. Scratches
    3. Damaged threads
    4. Burrs

cardiagn.com

5. Nicked mounting surfaces
6. Damaged sealing surfaces
7. Damaged front or rear bearing bores

4. Inspect the machined mating surfaces for flatness with a straight edge.
5. Inspect the bearing races and bores for wear, scratches or grooves.
6. Inspect the bushing for excessive wear.
7. Use a fine mill file to dress minor scratches or burrs.
8. If scratches, or grooves or scoring cannot be removed by hand with a soft stone or crocus cloth, replace the component.
9. Clean up damaged threads with the correct size tap.
10. Replace a cracked housing.
11. Replace worn bushings.

Adapter Plate

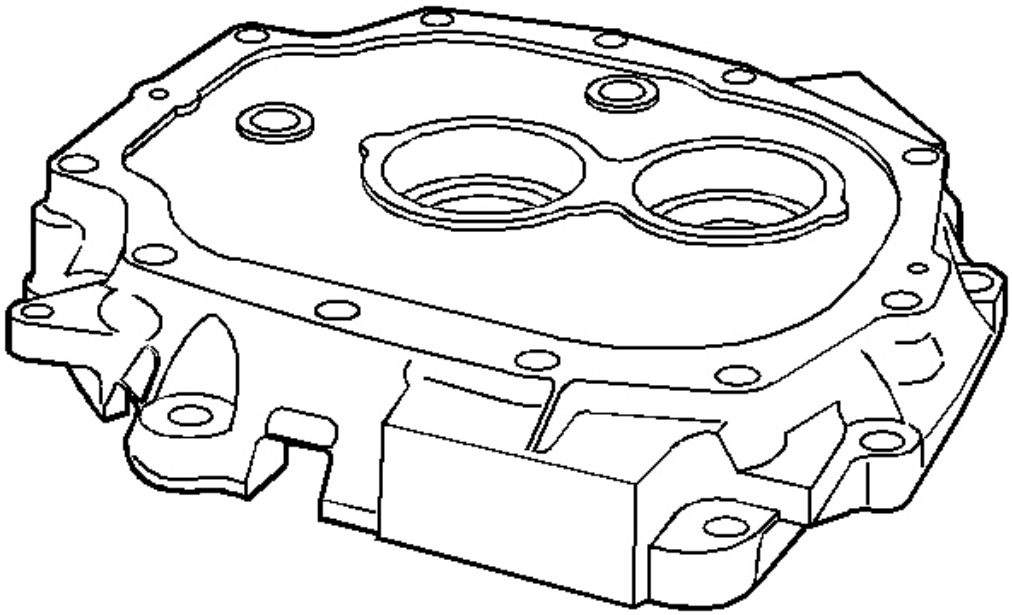

Fig. 220: View Of Adapter Plate
Courtesy of GENERAL MOTORS CORP.

1. Clean the adapter plate parts with a suitable solvent. Air dry all the parts.
2. Inspect the adapter plate parts for the following conditions:

cardiagn.com

1. Cracks

   (replace a cracked adapter plate.)

2. Scratches
3. Burrs
4. Nicked mounting surfaces
5. Damaged sealing surfaces
6. Damaged front or rear bearing bores

3. Inspect the machined mating surfaces for flatness. Check the mating surfaces with a straight edge.
4. Inspect the bearing races and bores for wear, scratches or grooves.
5. Inspect the bushing for excessive wear. Replace worn bushings.
6. Use a fine mill file to dress minor scratches or burrs.
7. If scratches, or grooves or scoring cannot be removed by hand with a soft stone or crocus cloth, replace the component.

TRANS CASE AND ADAPTER PLATE ASSEMBLE (Y CAR)

Transmission Case

Tools Required

- **J 8092** Universal Driver Handle. See **Special Tools** .
- **J 36190** Universal Driver Handle. See **Special Tools** .
- **J 39435** Bearing Race Installer. See **Special Tools** .
- **J 39439-4** Bushing Installer. See **Special Tools** .
- **J 39439-3** Bushing Installer. See **Special Tools** .

cardiagn.com

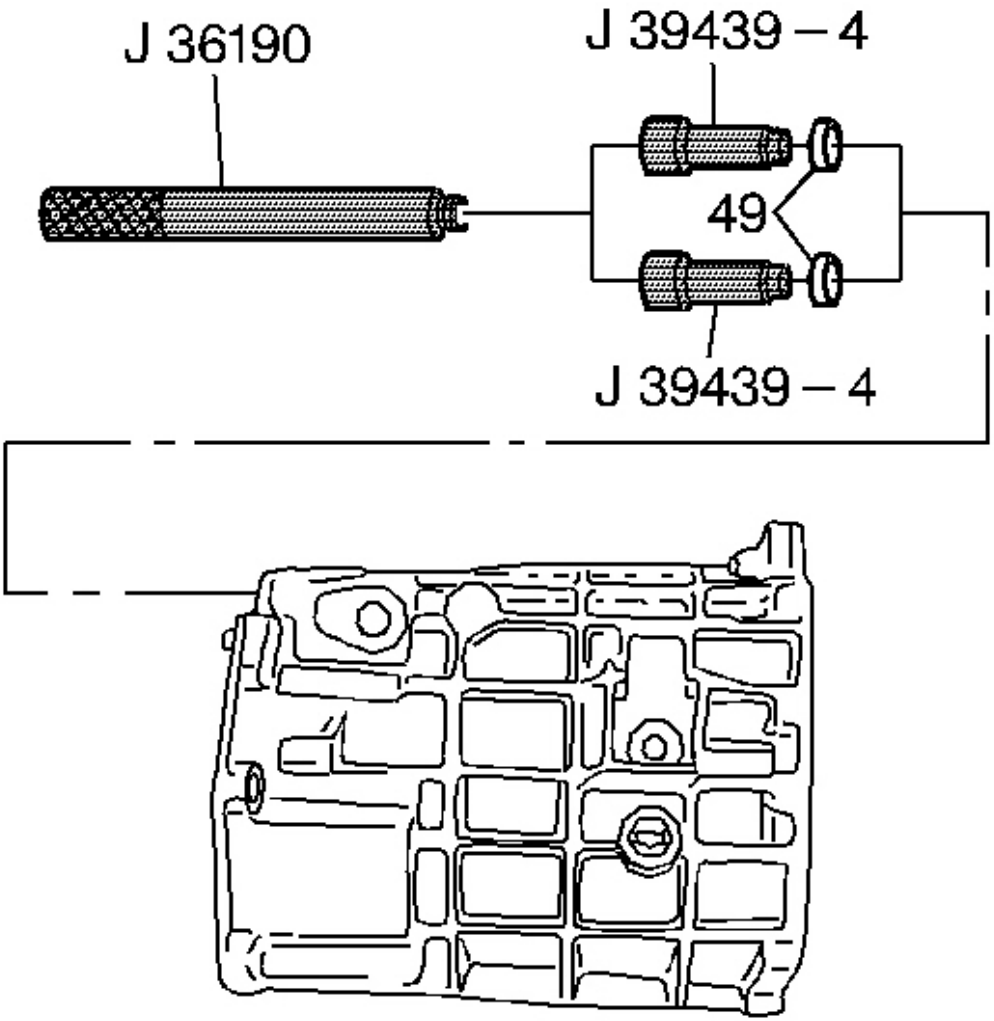

Fig. 221: Installing 1st/2nd & 3rd/4th Shift Shaft Bushings
Courtesy of GENERAL MOTORS CORP.

1. Install the 1st/2nd and the 3rd/4th shift shaft bushings. Use the **J 36190** , the **J 39439-4** , and the **J 39439-3** .

cardiagn.com

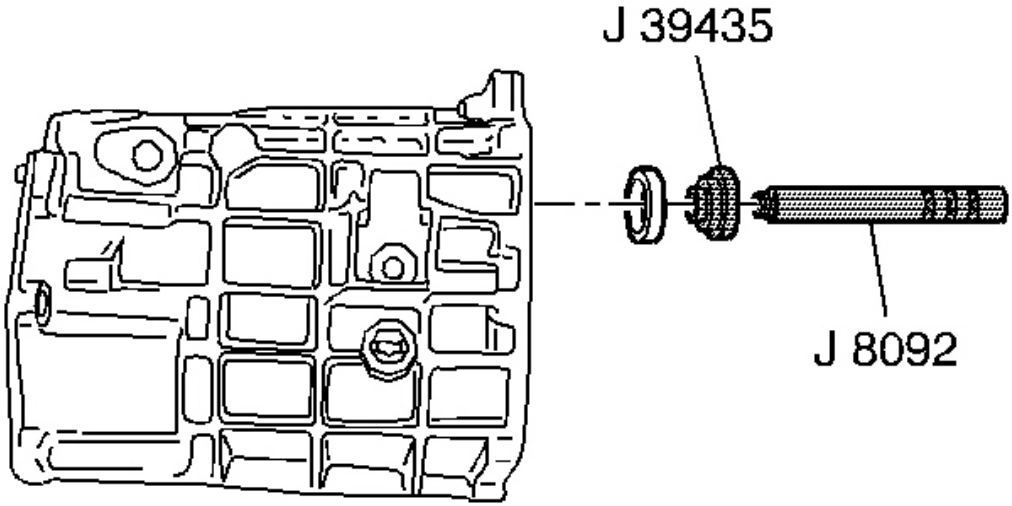

Fig. 222: Installing Mainshaft Bearing Race Using J 8092 & J 39435
Courtesy of GENERAL MOTORS CORP.

2. Install the mainshaft bearing race, using the **J 8092** and the **J 39435** .

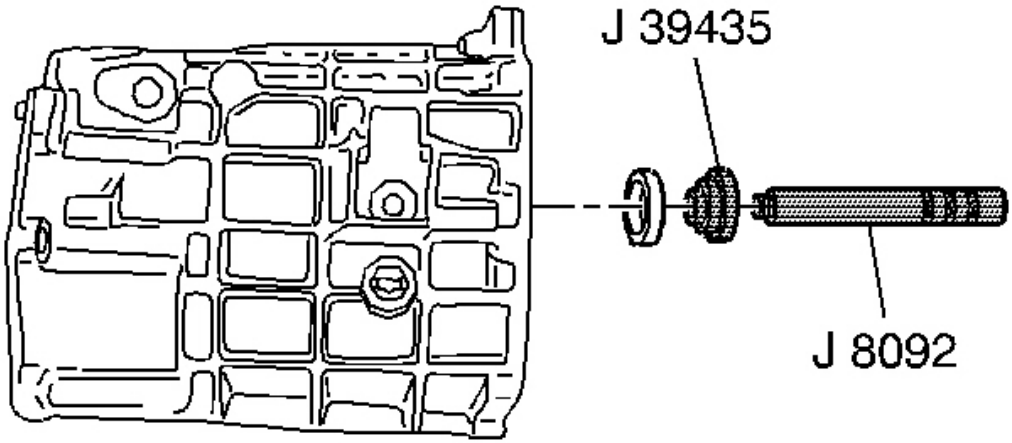

Fig. 223: Installing/Removing Countershaft Bearing Race Using J 8092 & J 39435
Courtesy of GENERAL MOTORS CORP.

cardiagn.com

3. Install the countershaft bearing race, using the **J 8092** and the **J 39435** .

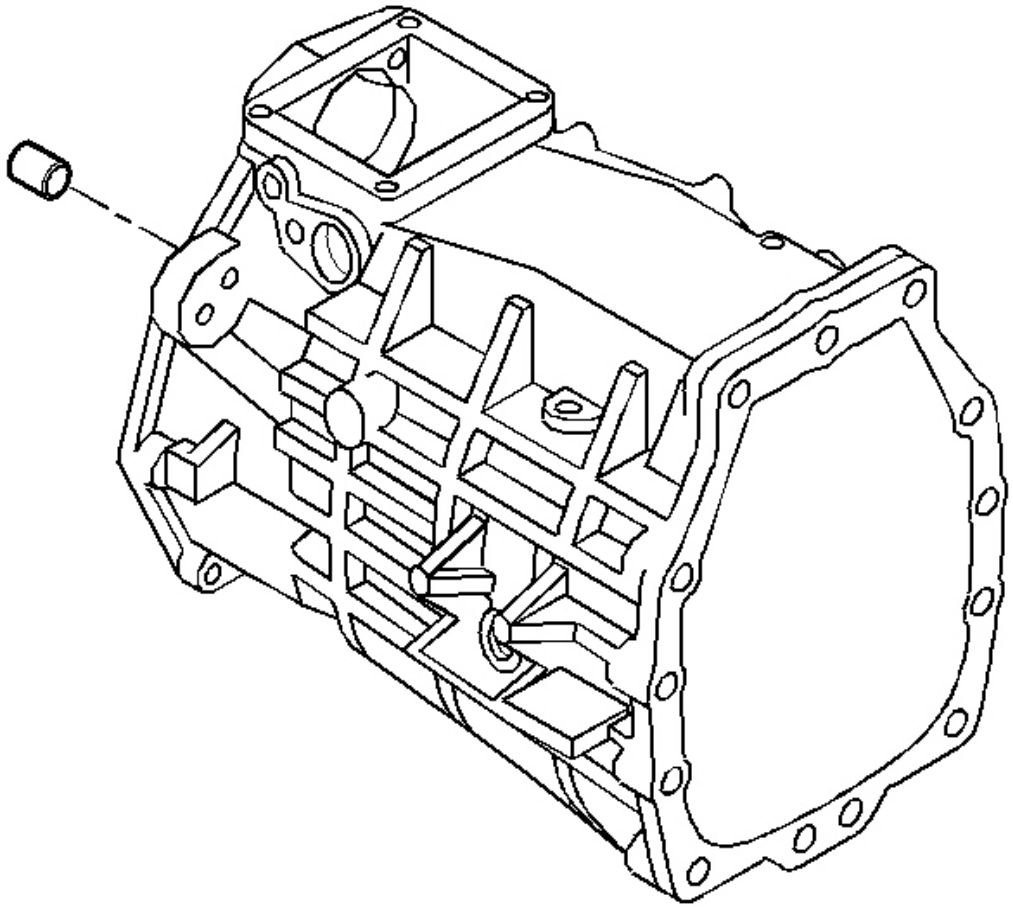

Fig. 224: Identifying Transfer Case Dowel Pins
Courtesy of GENERAL MOTORS CORP.

4. Install the dowel pins.

cardiagn.com

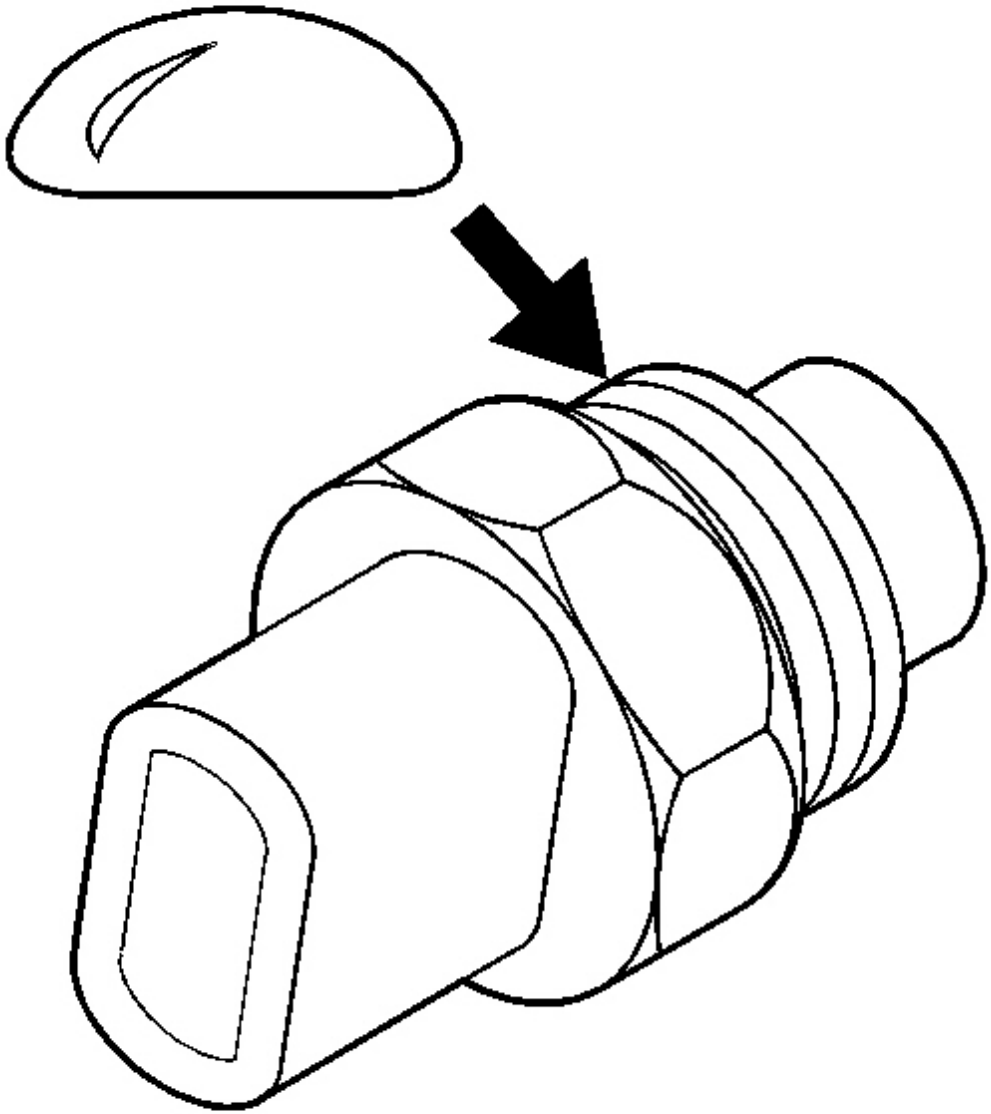

Fig. 225: Applying Sealant To Threads On Reverse Lamp Switch
Courtesy of GENERAL MOTORS CORP.

5. Apply sealant GM P/N United States 12346004, GM P/N Canada 10953480 or equivalent to the threads of the reverse lamp switch.

cardiagn.com

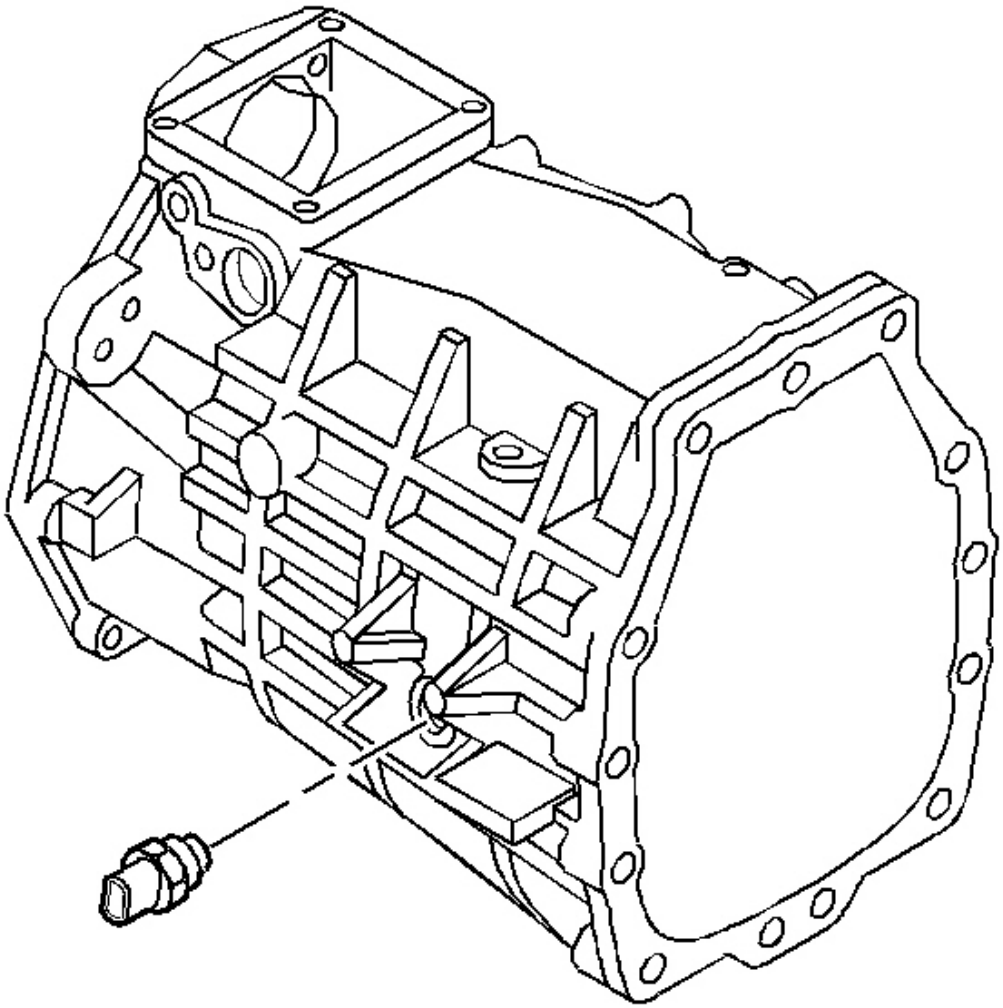

Fig. 226: Locating Reverse Lamp Switch
Courtesy of GENERAL MOTORS CORP.

NOTE: Refer to Fastener Notice in Cautions and Notices.

6. Install the reverse lamp switch.

   Tighten: Tighten the switch to 27 N.m (20 lb ft).

cardiagn.com

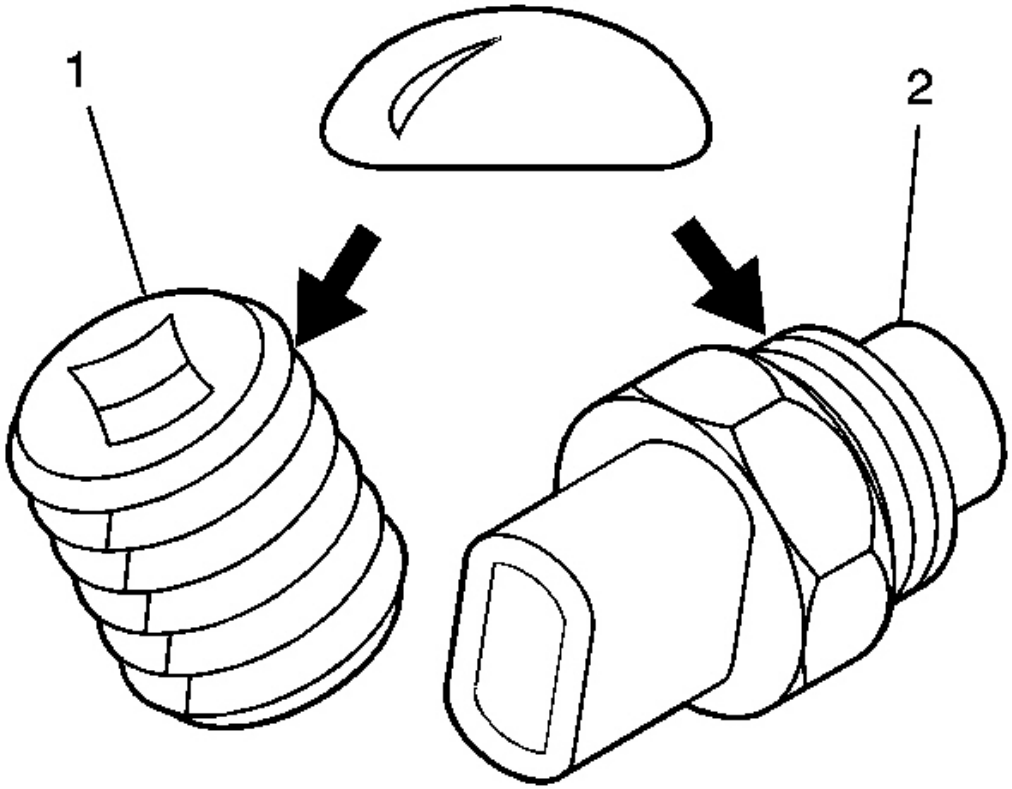

Fig. 227: Applying Sealant To Transmission Case Fill Plug & Temperature Switch
Courtesy of GENERAL MOTORS CORP.

7. Apply sealant GM P/N United States 12346004, GM P/N Canada 10953480 or equivalent to the threads of the transmission case fill plug (1), MM6 only.
8. Apply sealant GM P/N United States 12346004, GM P/N Canada 10953480 or equivalent to the threads of the temperature switch, M12 only.

cardiagn.com

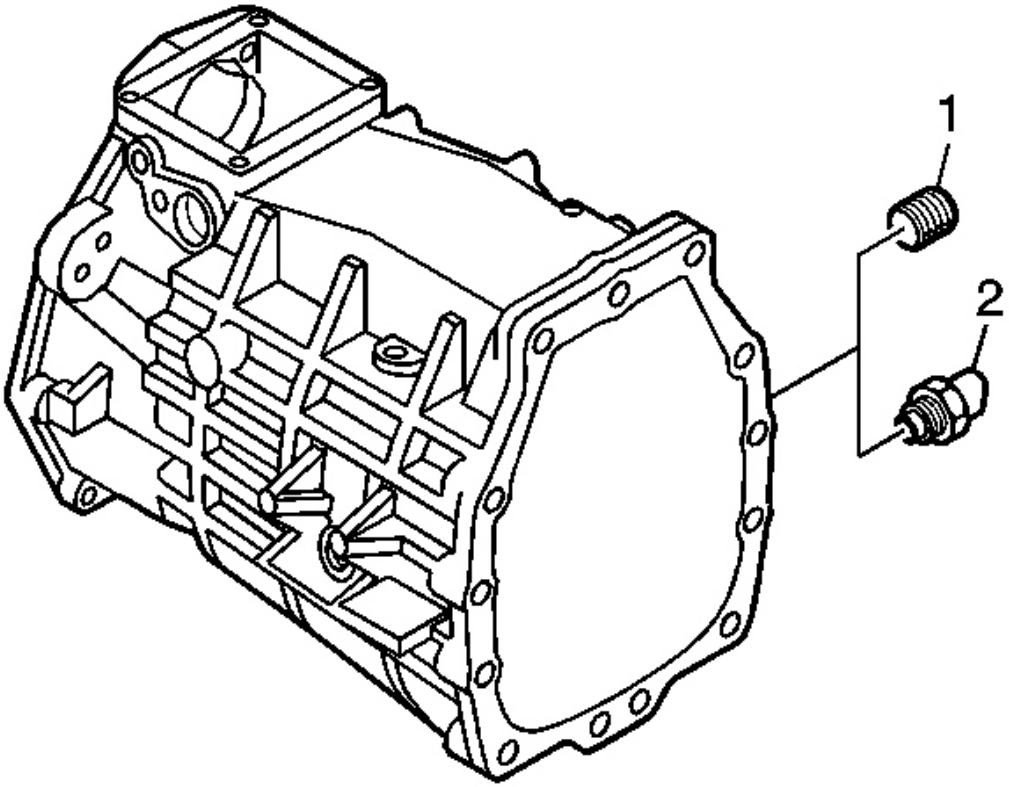

Fig. 228: View Of Transmission Case Fill Plug & Temperature Switch
Courtesy of GENERAL MOTORS CORP.

9. Install the transmission case fill plug (1), MM6 only.

   Tighten: Tighten the transmission case fill plug to 18 N.m (13 lb ft).

10. Install the temperature switch (2), M12 only.

    Tighten: Tighten the temperature switch to 41 N.m (30 lb ft).

cardiagn.com

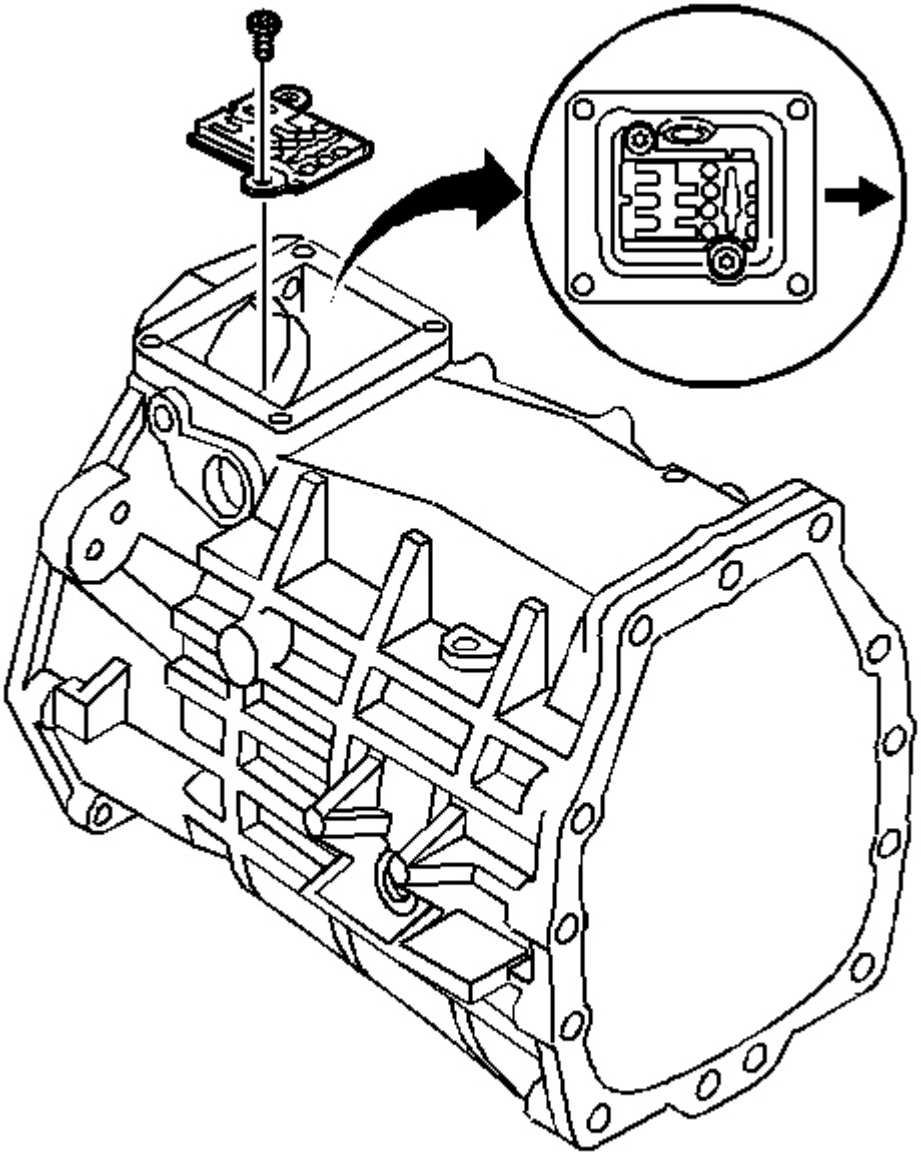

Fig. 229: Installing/Removing Guide Plate & Guide Plate Bolts
Courtesy of GENERAL MOTORS CORP.

NOTE: **The H-pattern on the guide plate must face the extension housing. If the guide plate is installed incorrectly, then damage will occur.**

cardiagn.com

11. Install the guide plate and the guide plate bolts.

    Tighten: Tighten the bolts to 22 N.m (16 1b ft).

Adapter Plate

Tools Required

- **J 39433** Input Shaft Seal Installer. See **Special Tools** .
- **J 39439-1** Shift Rail Bushing Remover/lnstaller. See **Special Tools** .
- **J 42464** Shift Shaft Seal lnstaller. See **Special Tools** .
- **J 42496** Inner Shift Rail Inner Seal lnstaller. See **Special Tools** .

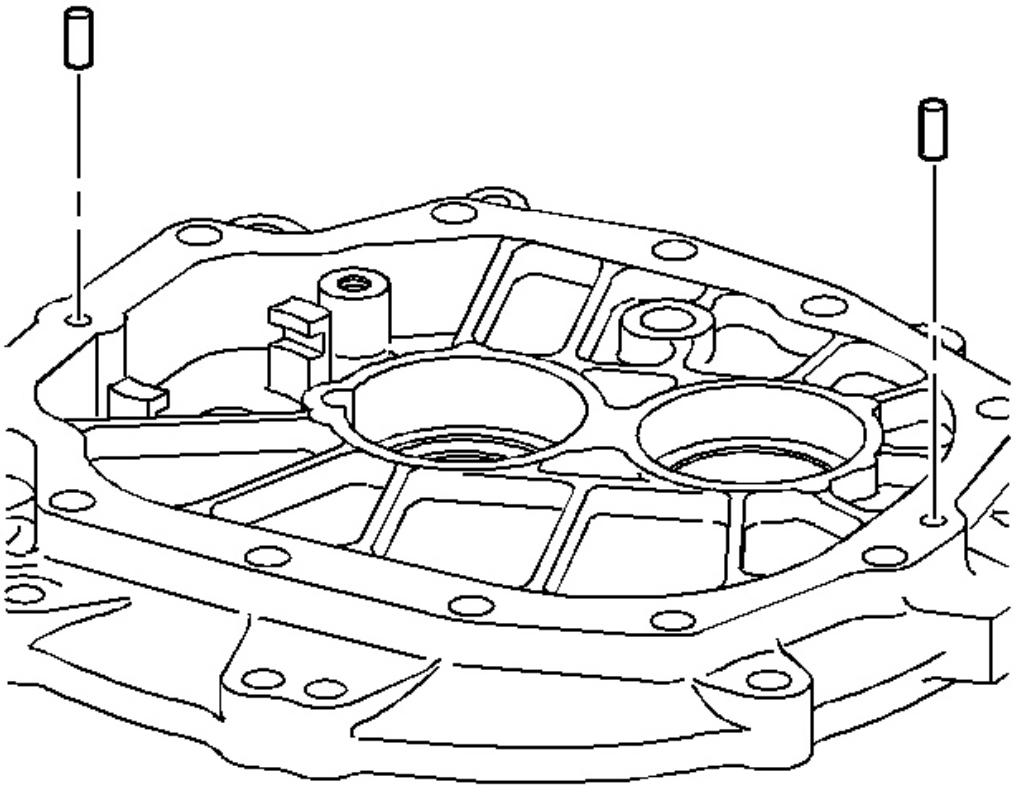

Fig. 230: Installing/Removing Transmission Dowel Pins
Courtesy of GENERAL MOTORS CORP.

1. Install the dowel pins.

cardiagn.com

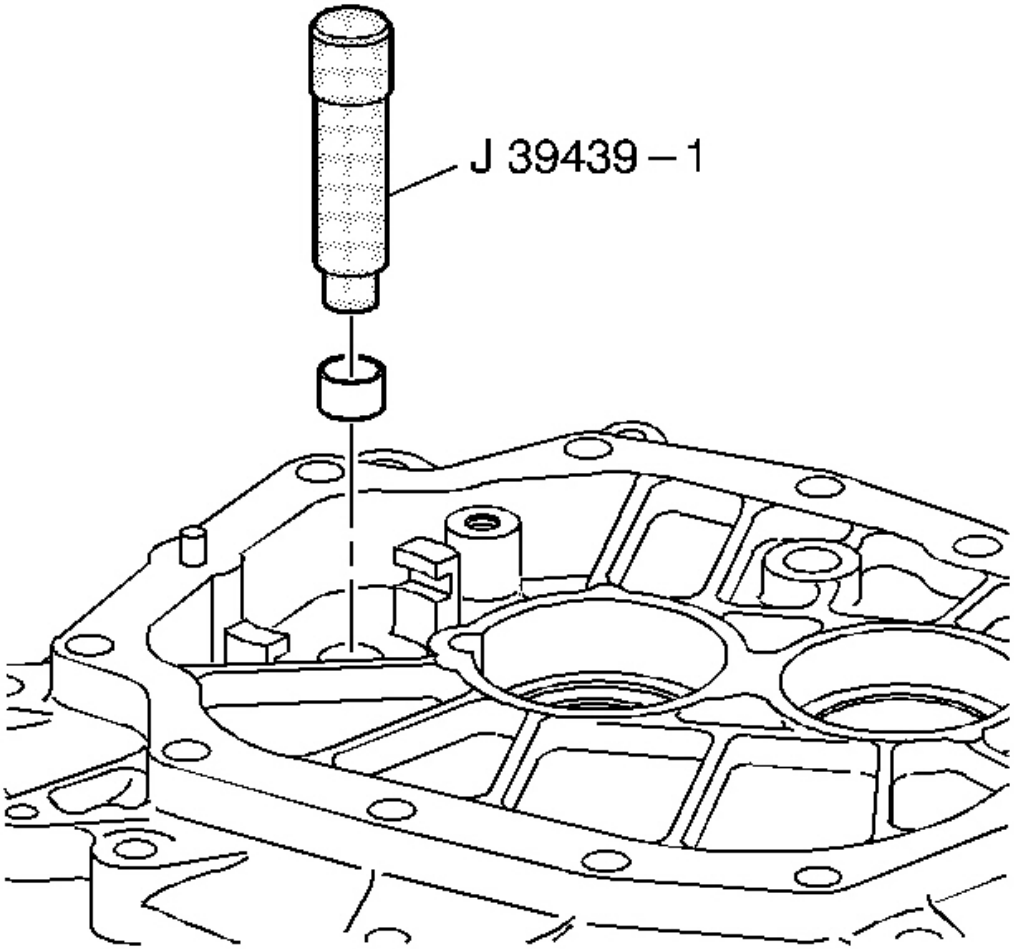

Fig. 231: Identifying 1st/2nd, 3rd/4th Speed Shift Shaft Bushing
Courtesy of GENERAL MOTORS CORP.

NOTE: **If the 1st/2nd, 3rd/4th speed shift shaft bushing is installed incorrectly it will interfere with the inner shift rail seal causing a leak.**

2. Install the 1st/2nd, 3rd/4th speed shift shaft bushing flush with adapter plate, using the **J 39439-1** .

cardiagn.com

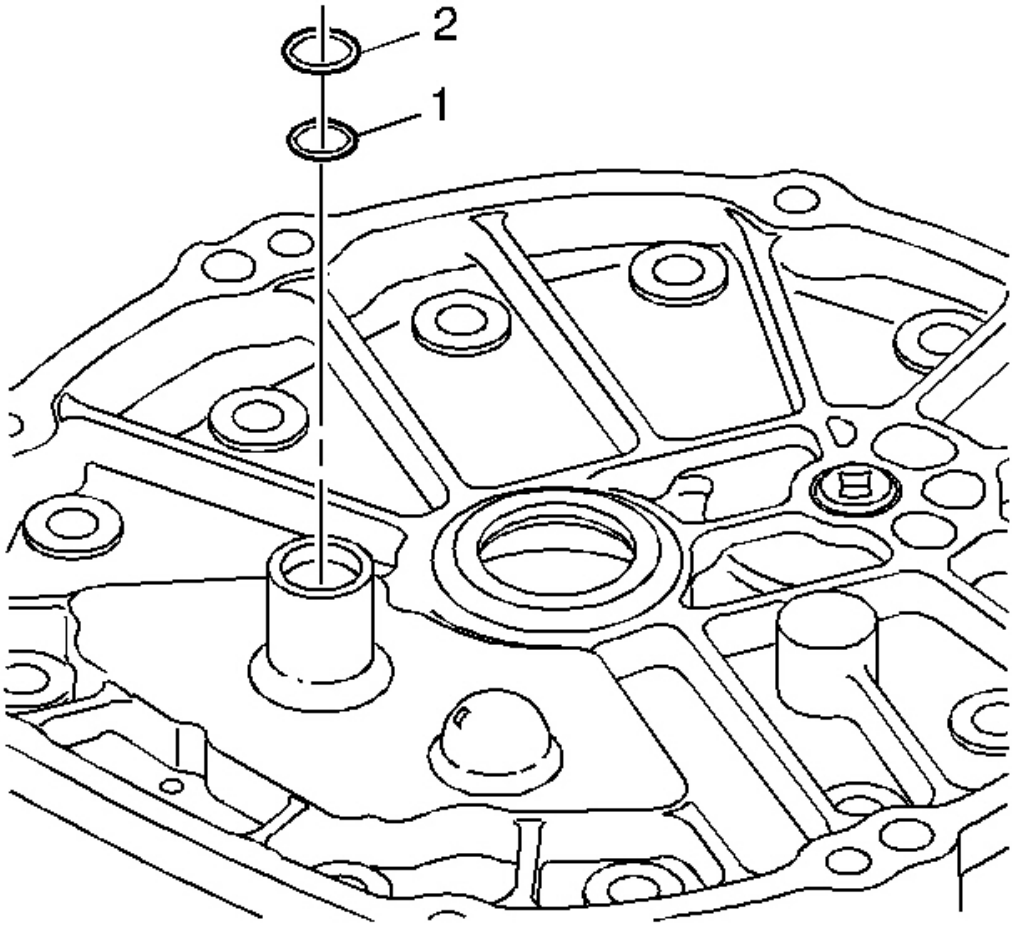

Fig. 232: Installing/Removing Inner Shift Rail Seal & Outer Shift Rail Seal
Courtesy of GENERAL MOTORS CORP.

3. Install the inner shift rail seal (1) using the **J 42496** . Garter spring should face inside of transmission.
4. Install the outer shift rail seal (2) using the **J 42464** .

cardiagn.com

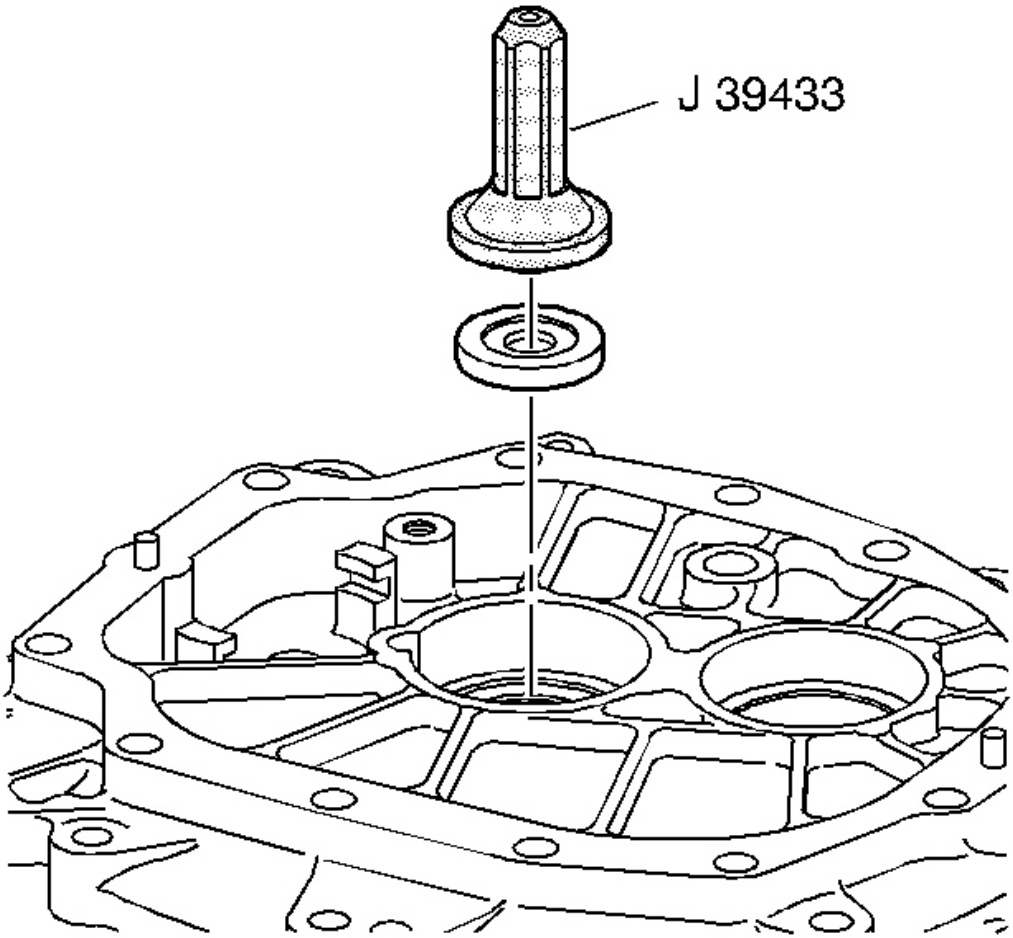

Fig. 233: Installing Input Shaft Seal Using J 39433
Courtesy of GENERAL MOTORS CORP.

5. Install the input shaft seal using the **J 39433** .

cardiagn.com

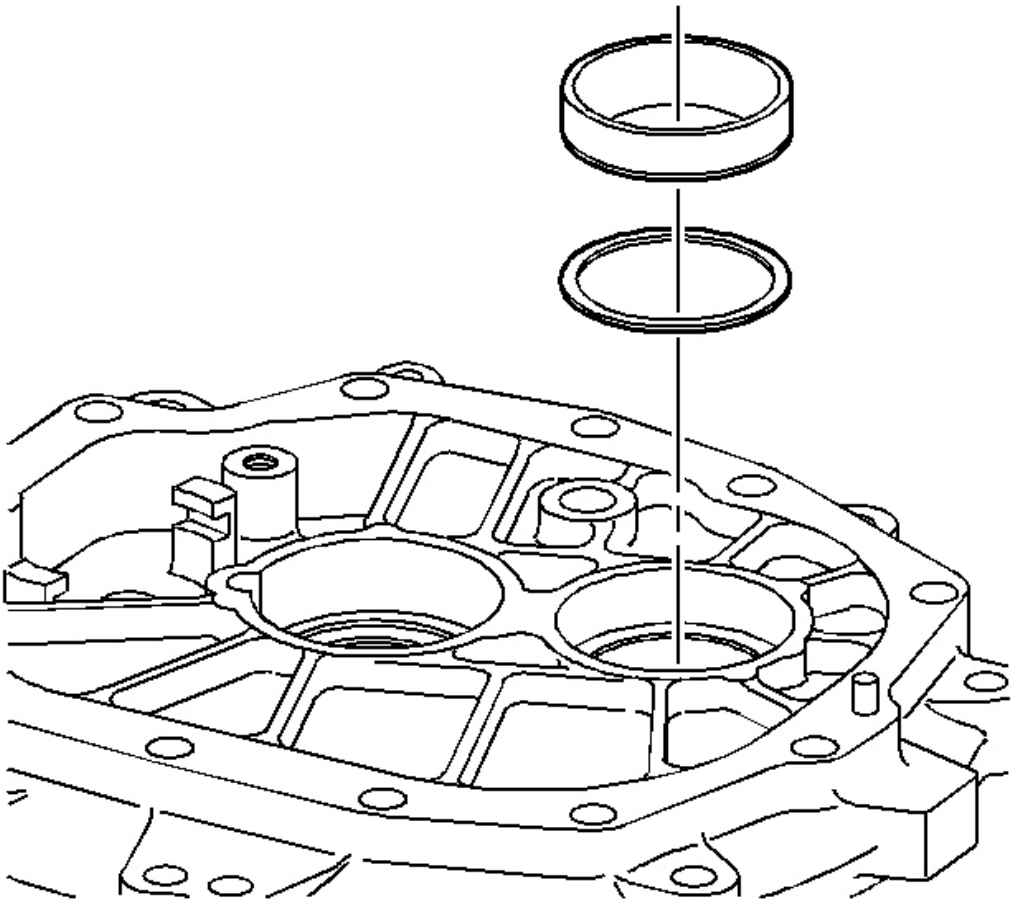

Fig. 234: Identifying Countershaft Bearing Shim & Bearing Race
Courtesy of GENERAL MOTORS CORP.

6. Install the countershaft bearing shim and bearing race. Refer to Input Shaft, Mainshaft and Countershaft in **Shimming Procedures (Y Car)** or **Shimming Procedures (CTSV)** or **Shimming Procedures (GTO)** .

cardiagn.com

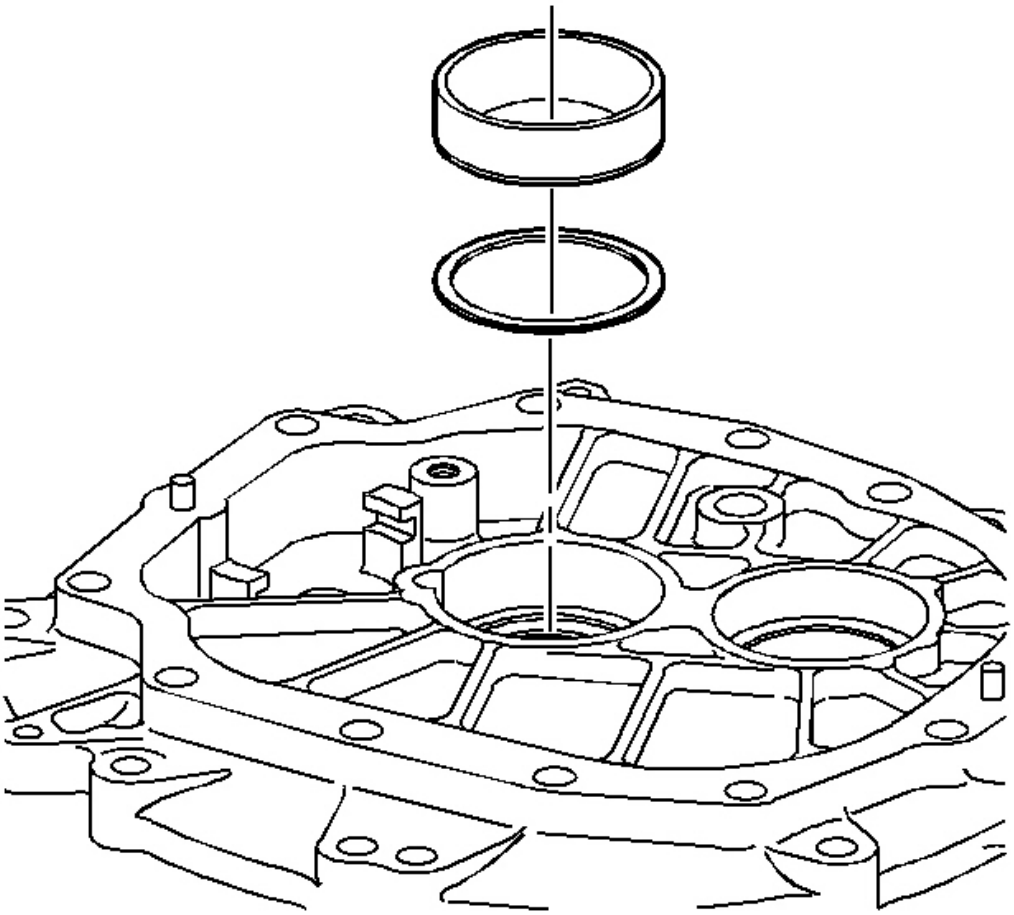

Fig. 235: Installing/Removing Input Shaft Bearing Shim And Bearing Race
Courtesy of GENERAL MOTORS CORP.

7. Install the input shaft bearing shim and bearing race. Refer to Input Shaft, Mainshaft and Countershaft in **Shimming Procedures (Y Car)** or **Shimming Procedures (CTSV)** or **Shimming Procedures (GTO)** .

cardiagn.com

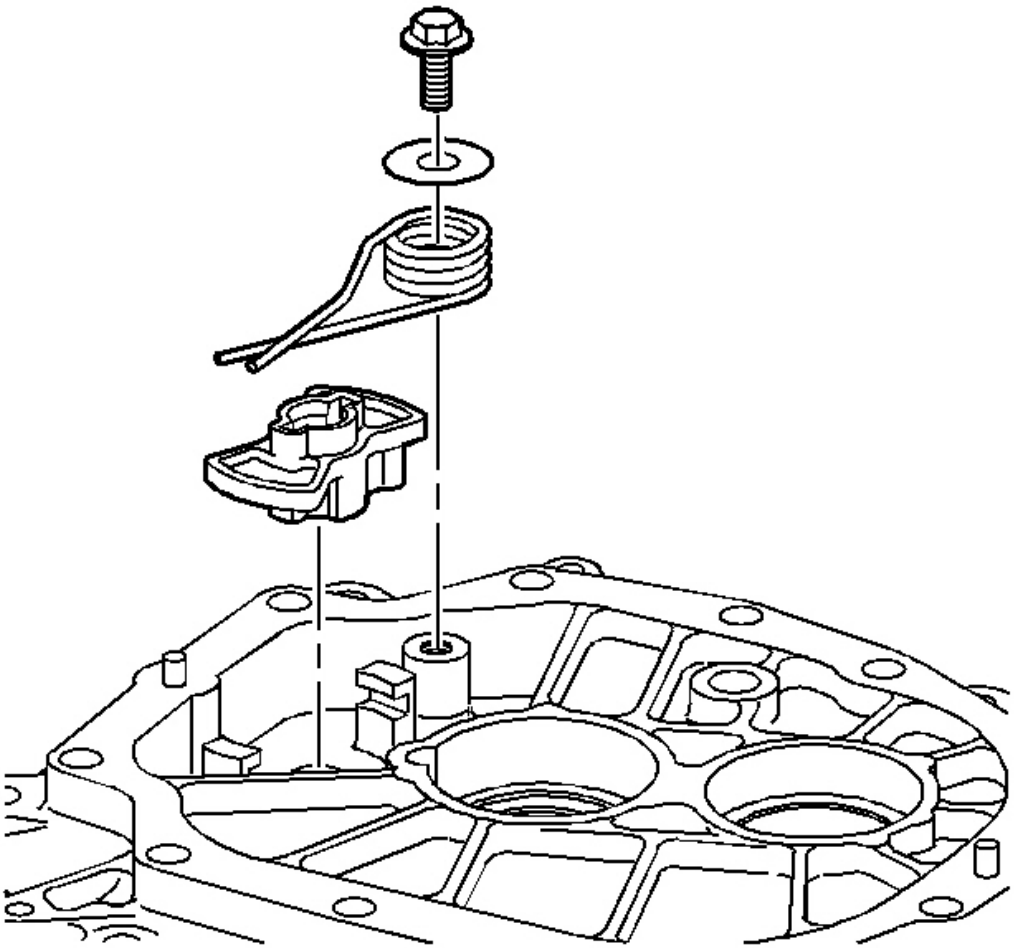

Fig. 236: View Of Neutral Return Cam Assembly
Courtesy of GENERAL MOTORS CORP.

8. Install the neutral return cam spring.
9. Install the neutral return cam spring retaining bolt and washer.
10. Install the neutral return cam.

Tighten: Tighten the bolt to 25 N.m (18 lb ft).

TRANS CASE AND ADAPTER PLATE ASSEMBLE (CTSV)

Transmission Case

cardiagn.com

Tools Required

- **J 36190** Drive Handle. See **Special Tools** .
- **J 39435** Mainshaft and Countershaft Bearing Race Installer. See **Special Tools** .
- **J 39439-4** Bushing Installer. See **Special Tools** .
- **J 39439-3** Bushing Installer. See **Special Tools** .

1. Install the 1st/2nd and the 3rd/4th shift shaft bushings. Use the **J 36190** , the **J 39439-4** , and the **J 39439-3** .

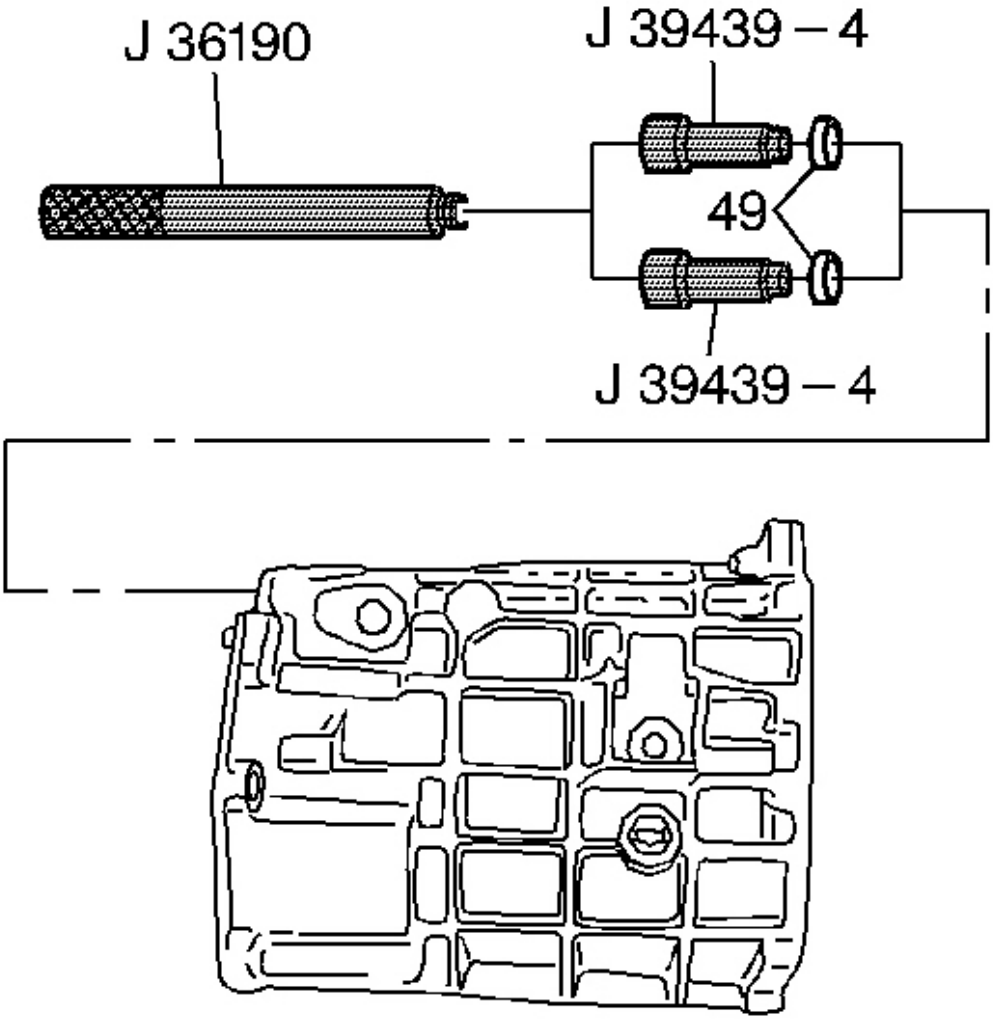

cardiagn.com

Fig. 237: Installing 1st/2nd & 3rd/4th Shift Shaft Bushings
Courtesy of GENERAL MOTORS CORP.

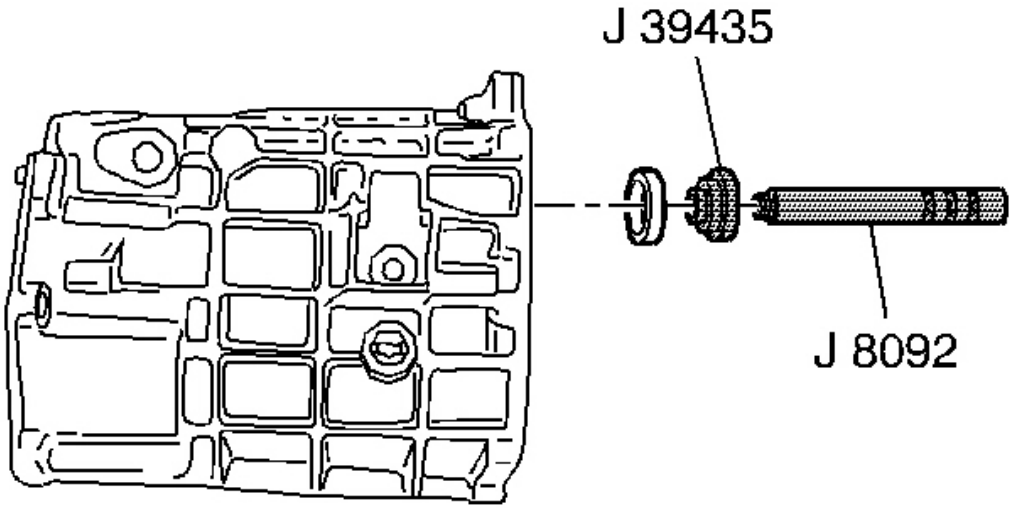

Fig. 238: Installing Mainshaft Bearing Race Using J 8092 & J 39435
Courtesy of GENERAL MOTORS CORP.

2. Install the mainshaft bearing race, using the **J 8092** and the **J 39435** .

cardiagn.com

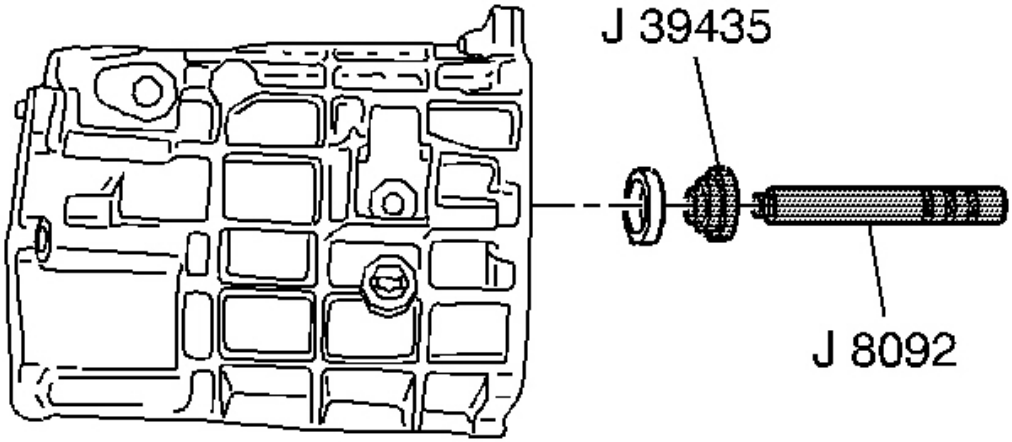

Fig. 239: Installing/Removing Countershaft Bearing Race Using J 8092 & J 39435
Courtesy of GENERAL MOTORS CORP.

3. Install the countershaft bearing race, using the **J 8092** and the **J 39435** .

cardiagn.com

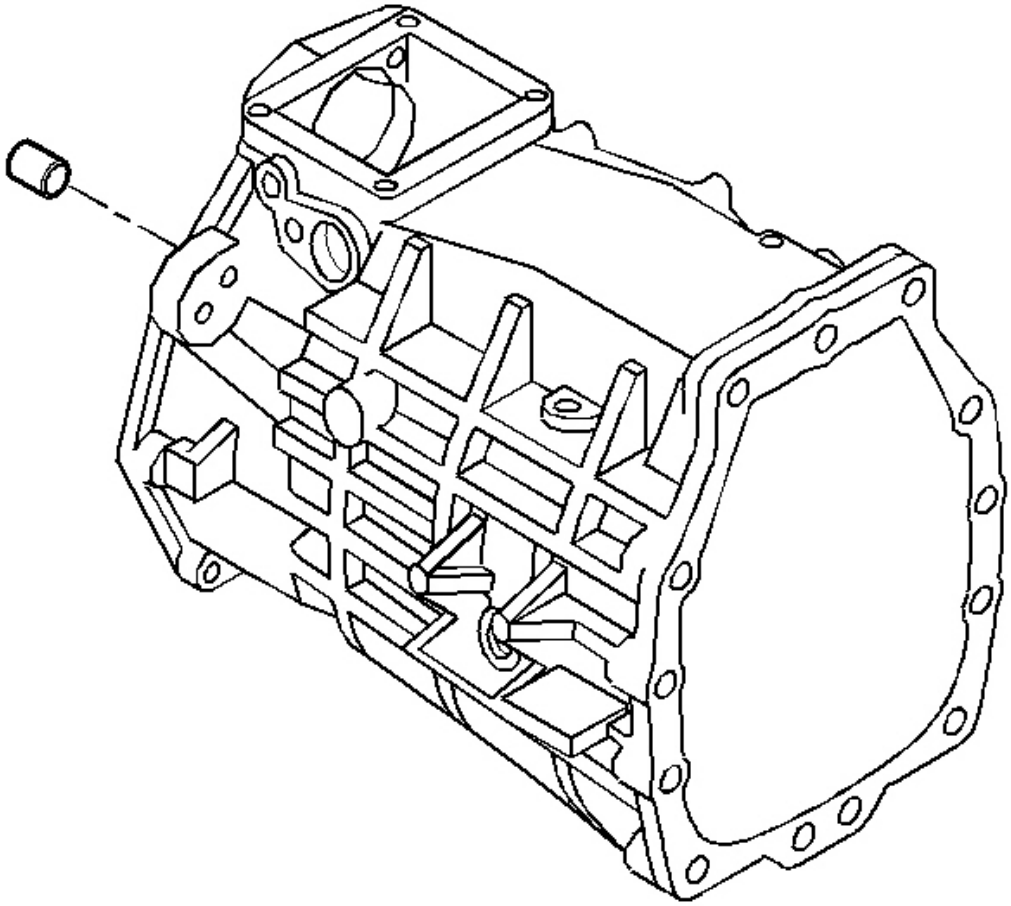

Fig. 240: Identifying Transfer Case Dowel Pins
Courtesy of GENERAL MOTORS CORP.

4. Install the dowel pins.

cardiagn.com

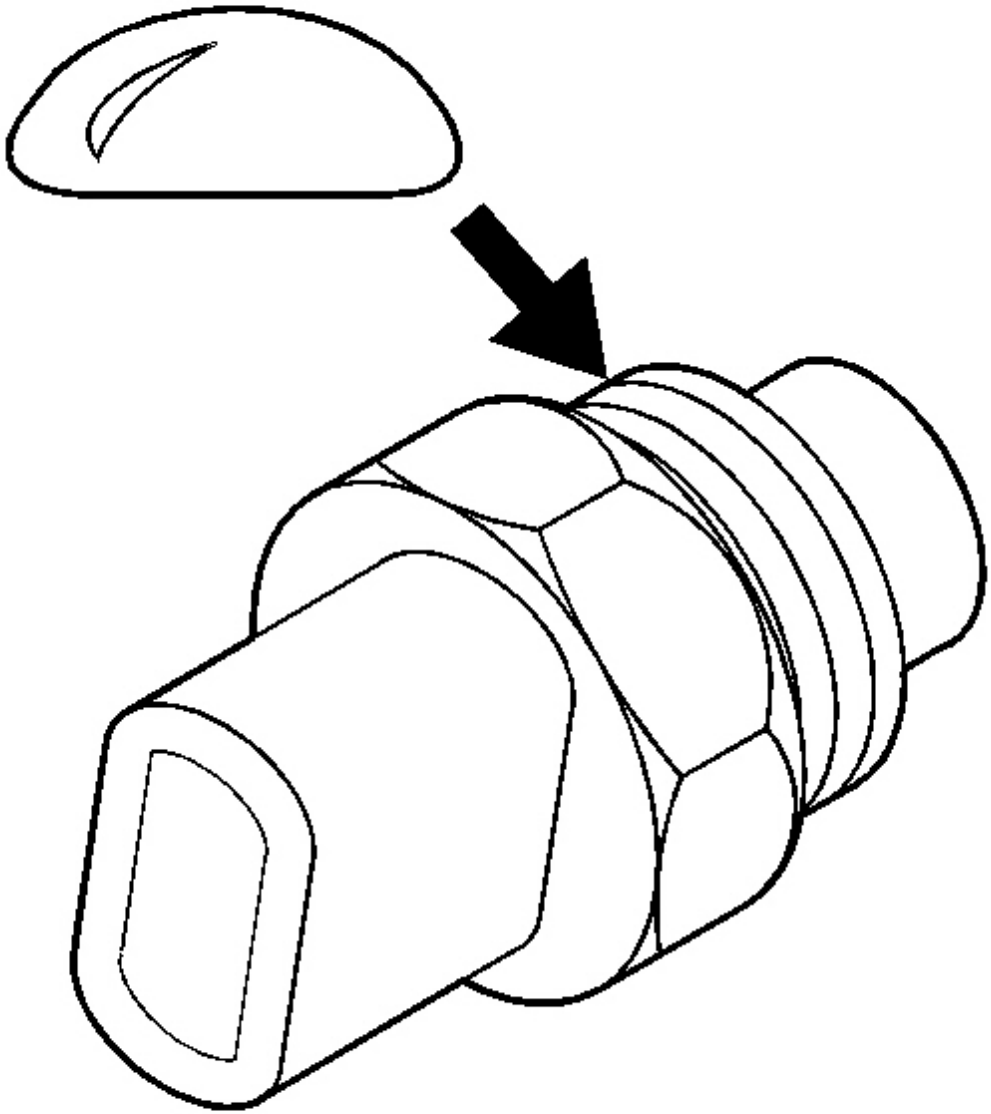

Fig. 241: Applying Sealant To Threads On Reverse Lamp Switch
Courtesy of GENERAL MOTORS CORP.

5. Apply sealant GM P/N United States 12346004, GM P/N Canada 10953480 or equivalent to the threads of the reverse lamp switch.

cardiagn.com

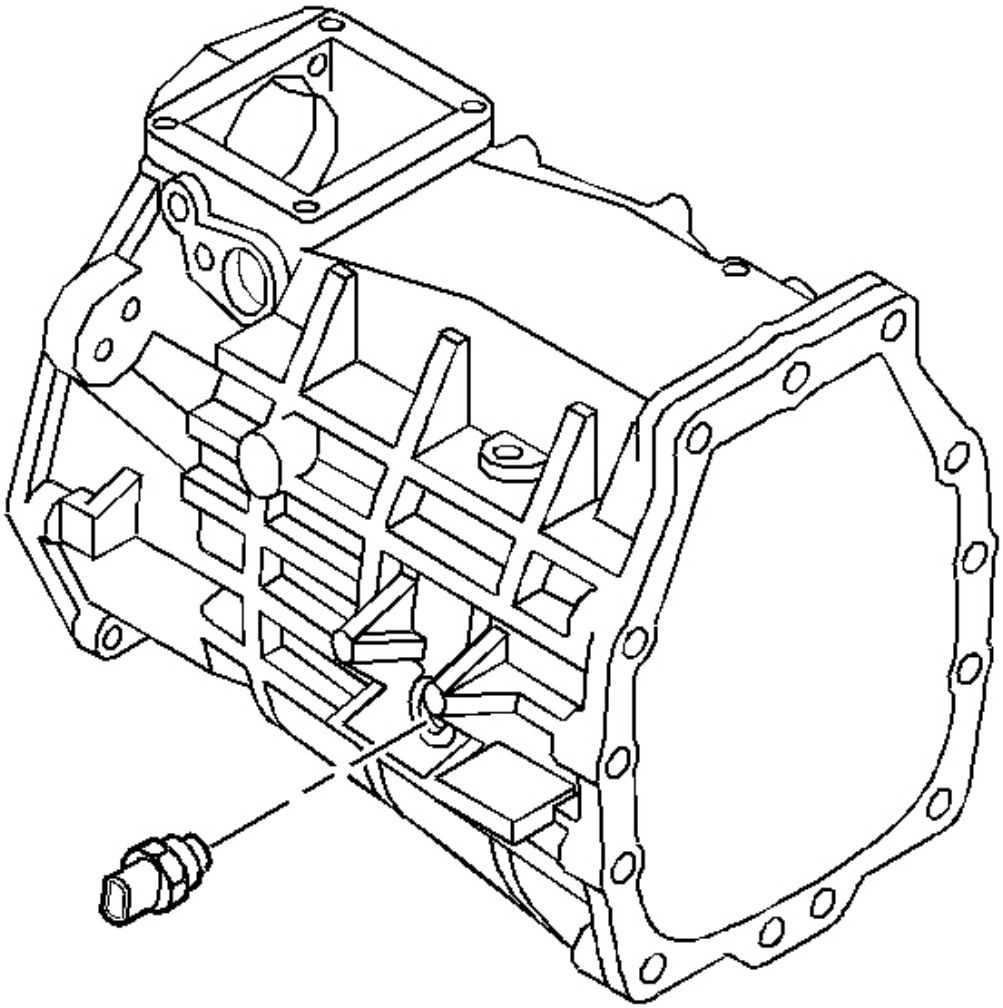

Fig. 242: Locating Reverse Lamp Switch
Courtesy of GENERAL MOTORS CORP.

NOTE: Refer to Fastener Notice in Cautions and Notices.

6. Install the reverse lamp switch.

   Tighten: Tighten the switch to 27 N.m (20 lb ft).

cardiagn.com

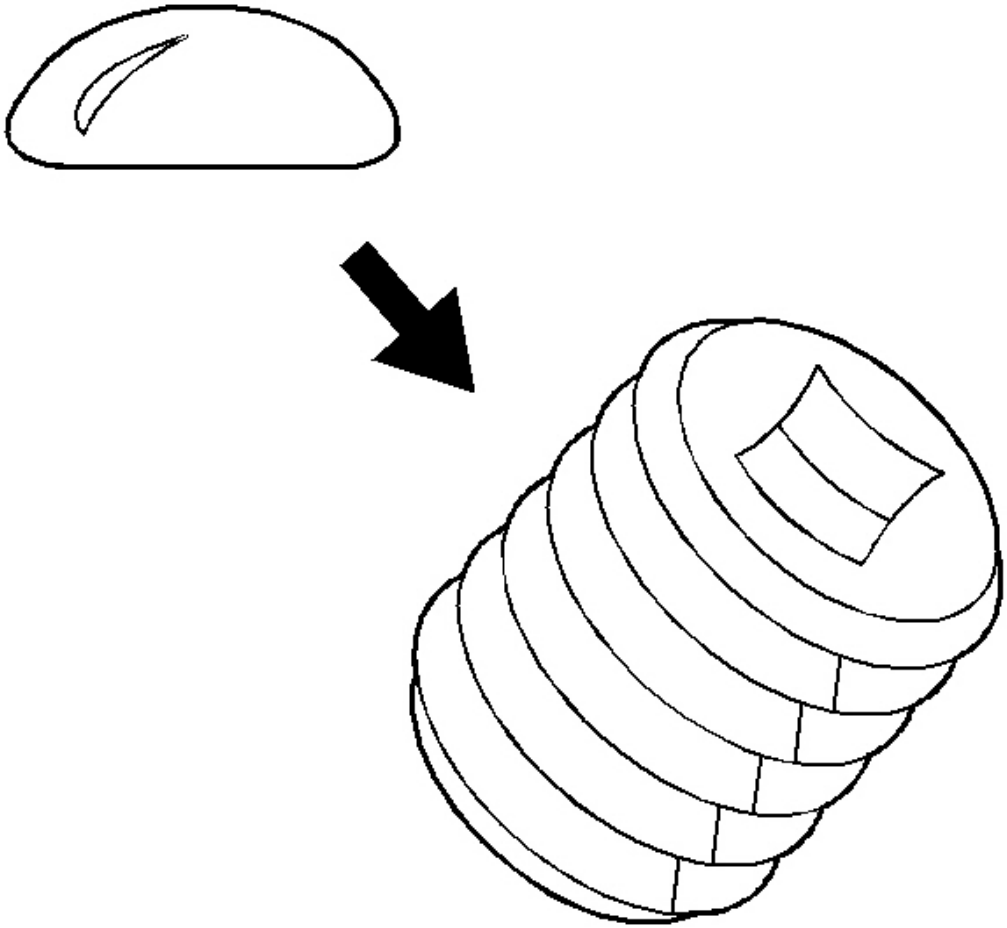

Fig. 243: Applying Sealant To Adapter Plate Plug Threads
Courtesy of GENERAL MOTORS CORP.

7. Apply sealant GM P/N United States 12346004, GM P/N Canada 10953480 or equivalent to the transmission case fill plug threads.

cardiagn.com

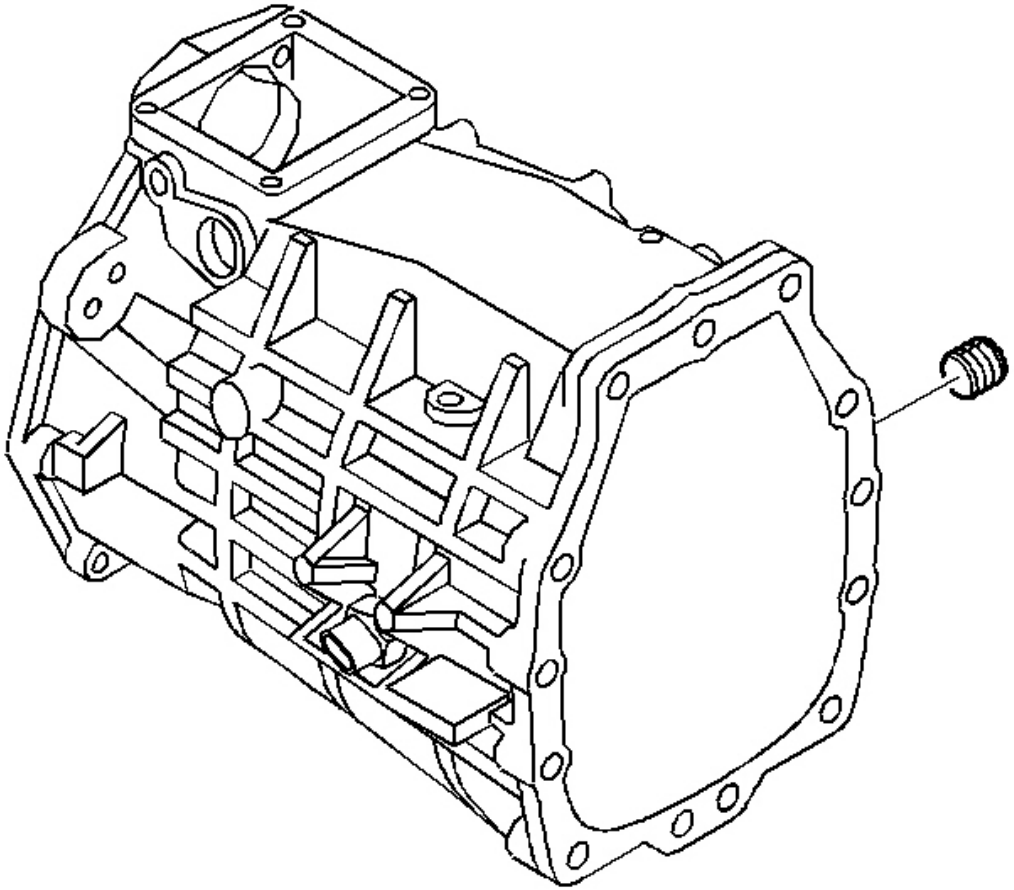

Fig. 244: View Of Transmission Case Fill Plug
Courtesy of GENERAL MOTORS CORP.

8. Install the transmission case fill plug.

   Tighten: Tighten the oil fill plug to 18 N.m (13 lb ft).

cardiagn.com

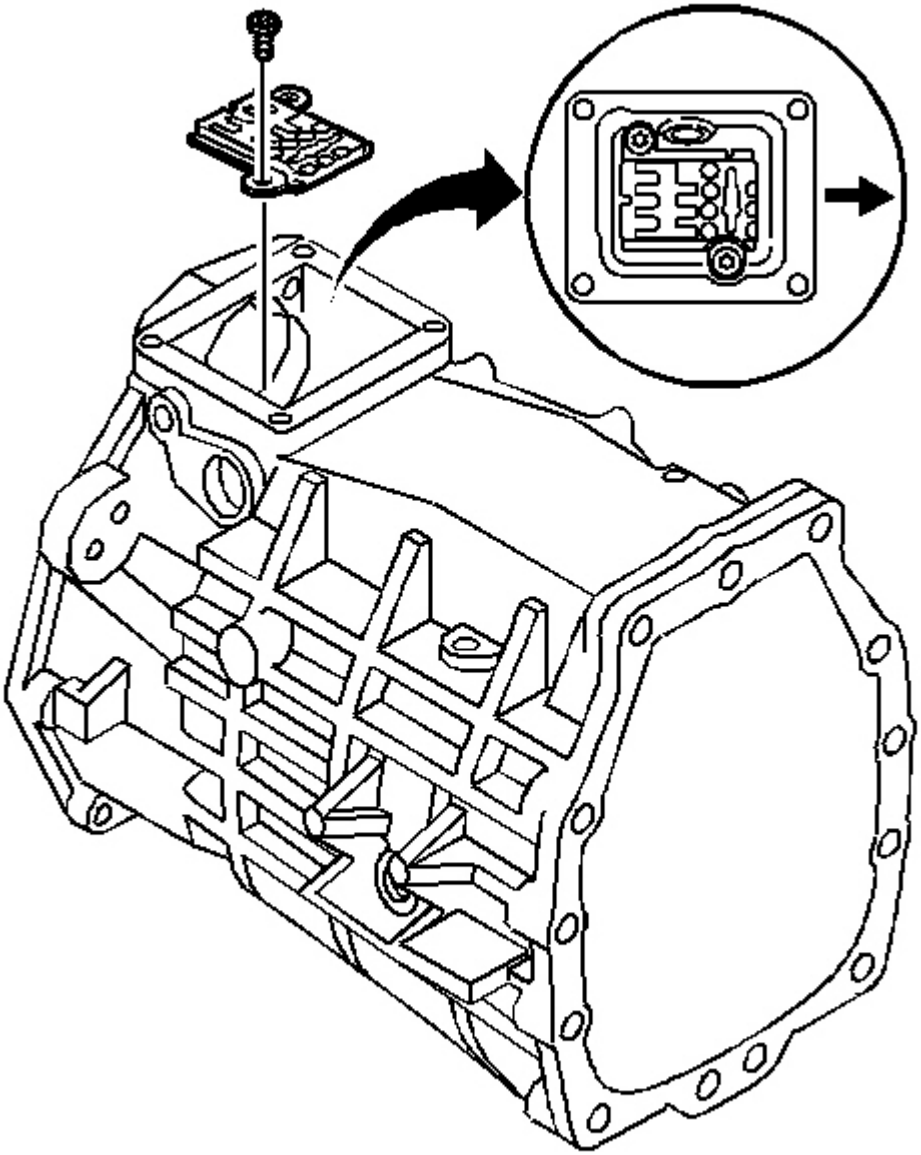

Fig. 245: Installing/Removing Guide Plate & Guide Plate Bolts
Courtesy of GENERAL MOTORS CORP.

NOTE: **The H-pattern on the guide plate must face the extension housing. If the guide plate is installed incorrectly, then damage will occur.**

cardiagn.com

9. Install the guide plate and the guide plate bolts.

   Tighten: Tighten the bolts to 22 N.m (16 Ib. ft).

Adapter Plate

Tools Required

- **J 39433** Input Shaft Seal Installer. See **Special Tools** .
- **J 39439-1** Bushing Remover/lnstaller. See **Special Tools** .

cardiagn.com

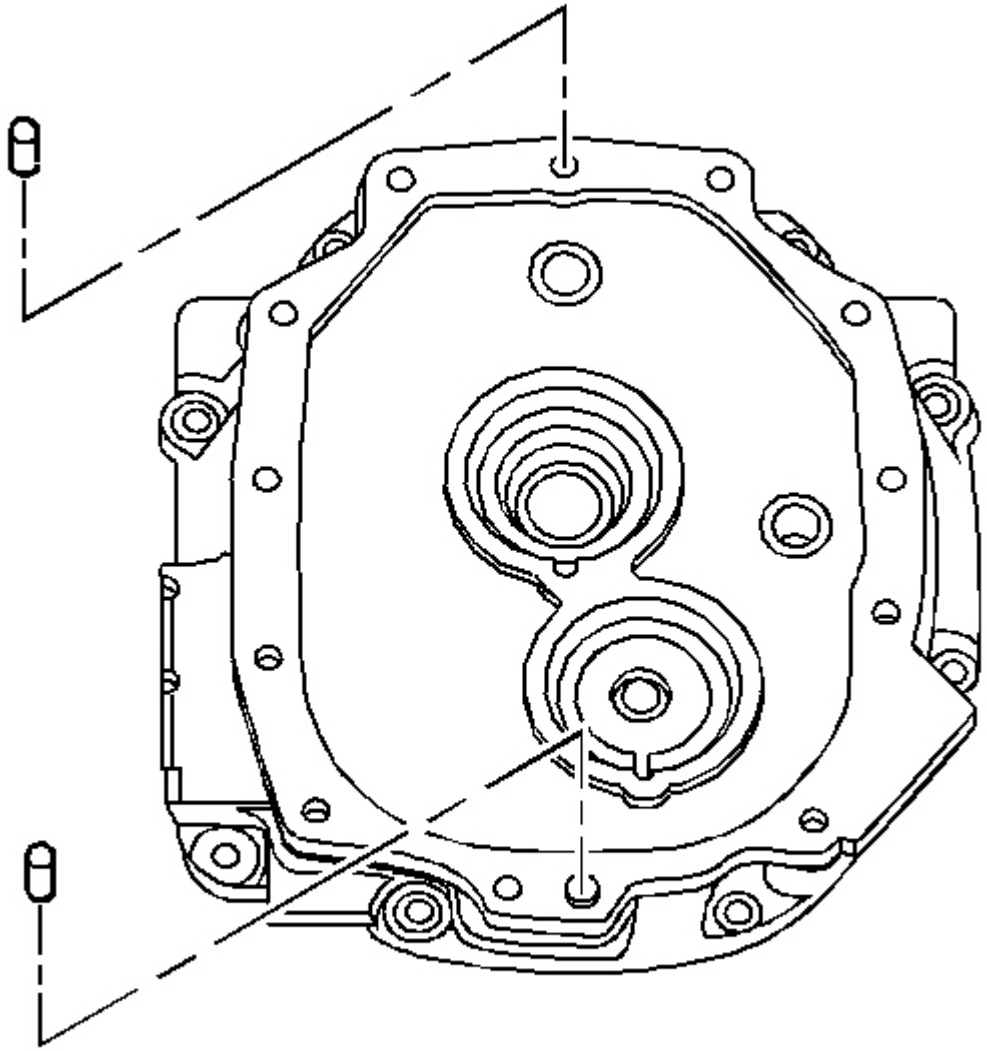

Fig. 246: Locating Extension Housing Dowel Pins
Courtesy of GENERAL MOTORS CORP.

1. Install the dowel pins.

cardiagn.com

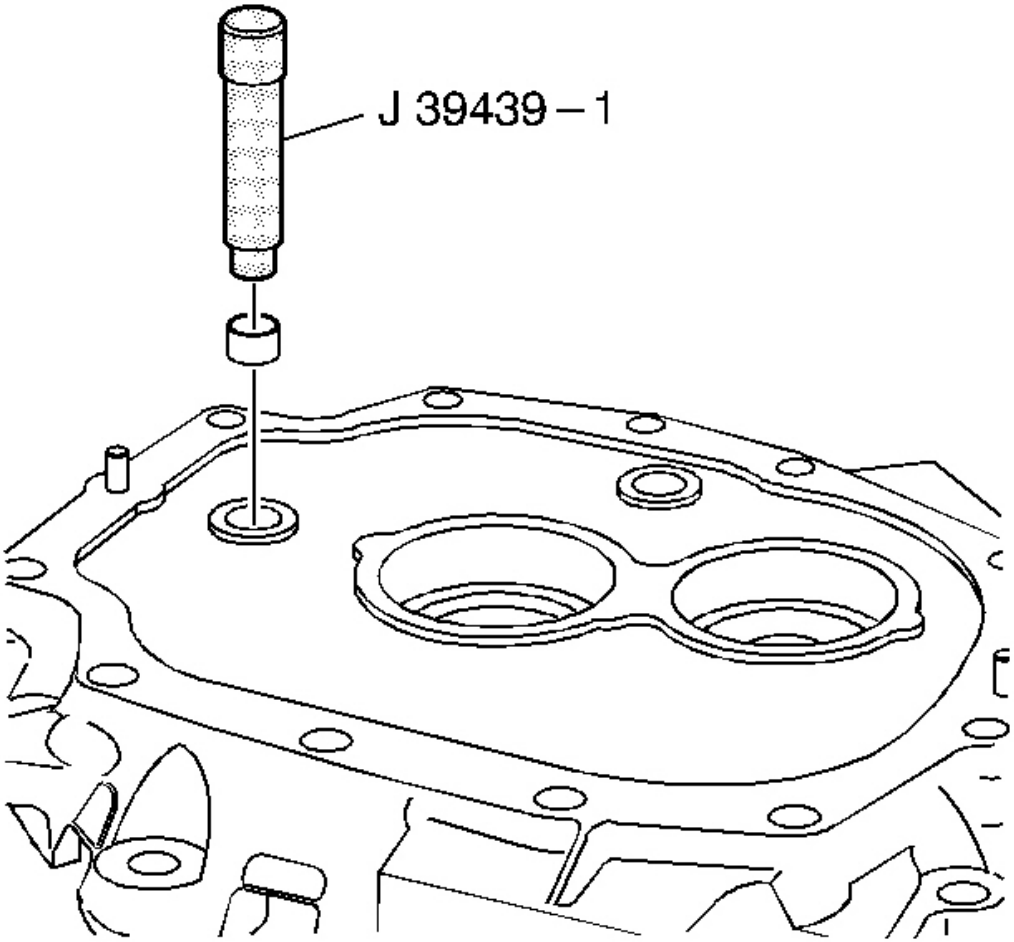

Fig. 247: Installing 1st/2nd, 3rd/4th Speed Shift Shaft Bushing
Courtesy of GENERAL MOTORS CORP.

2. Install the 1st/2nd, 3rd/4th speed shift shaft bushing, using the **J 39439-1** .

cardiagn.com

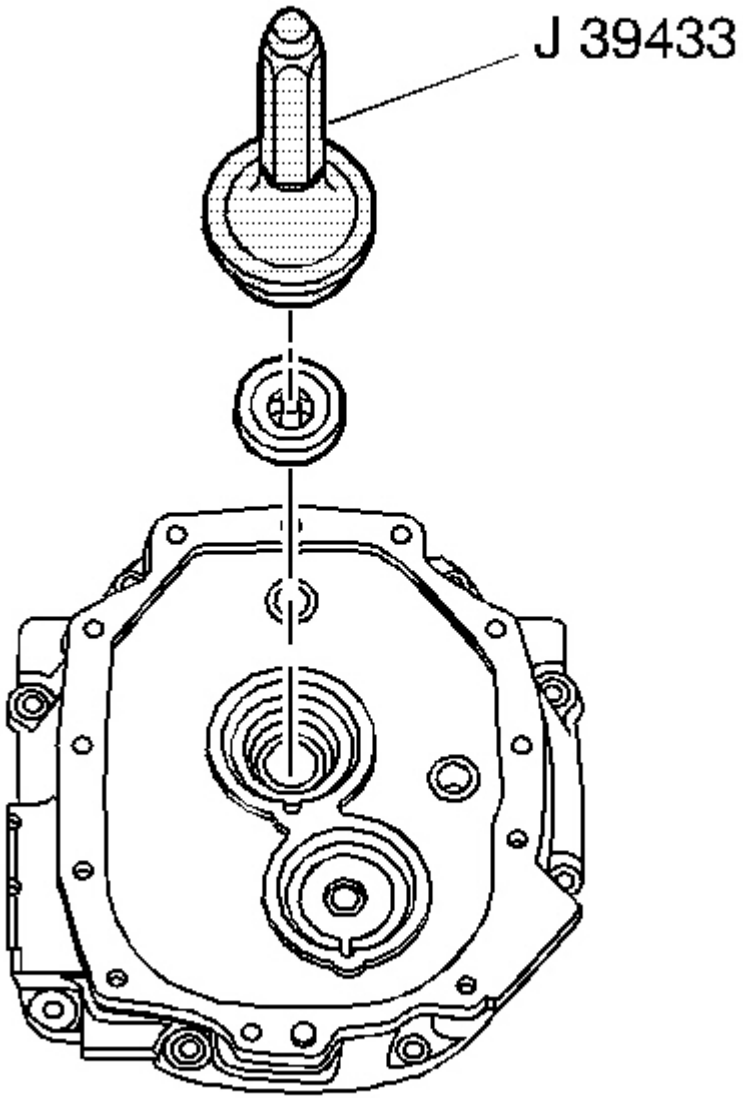

Fig. 248: Installing Input Shaft Seal Using J 39433
Courtesy of GENERAL MOTORS CORP.

3. Install the input shaft seal, using the **J 39433** .
4. Install the input shaft seal and the upper seal on the other side of the adapter plate, using the **J 39433** .

cardiagn.com

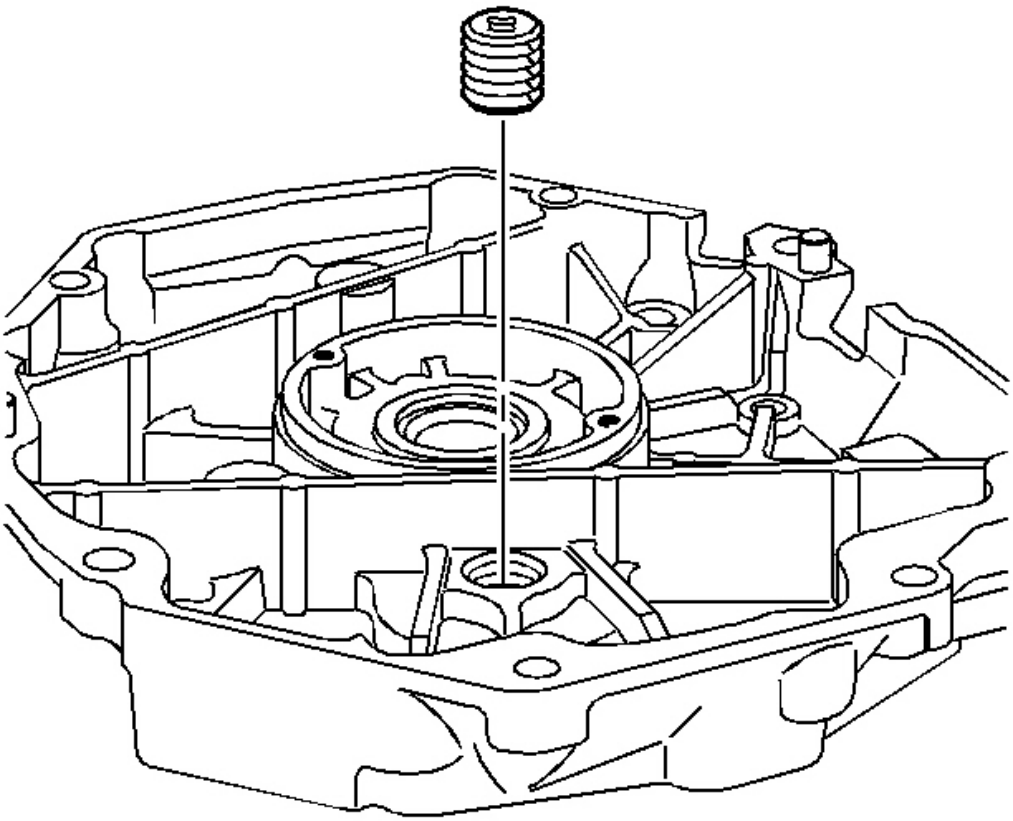

Fig. 249: Identifying Adapter Plate Plug
Courtesy of GENERAL MOTORS CORP.

5. Install adapter plate plug.

cardiagn.com

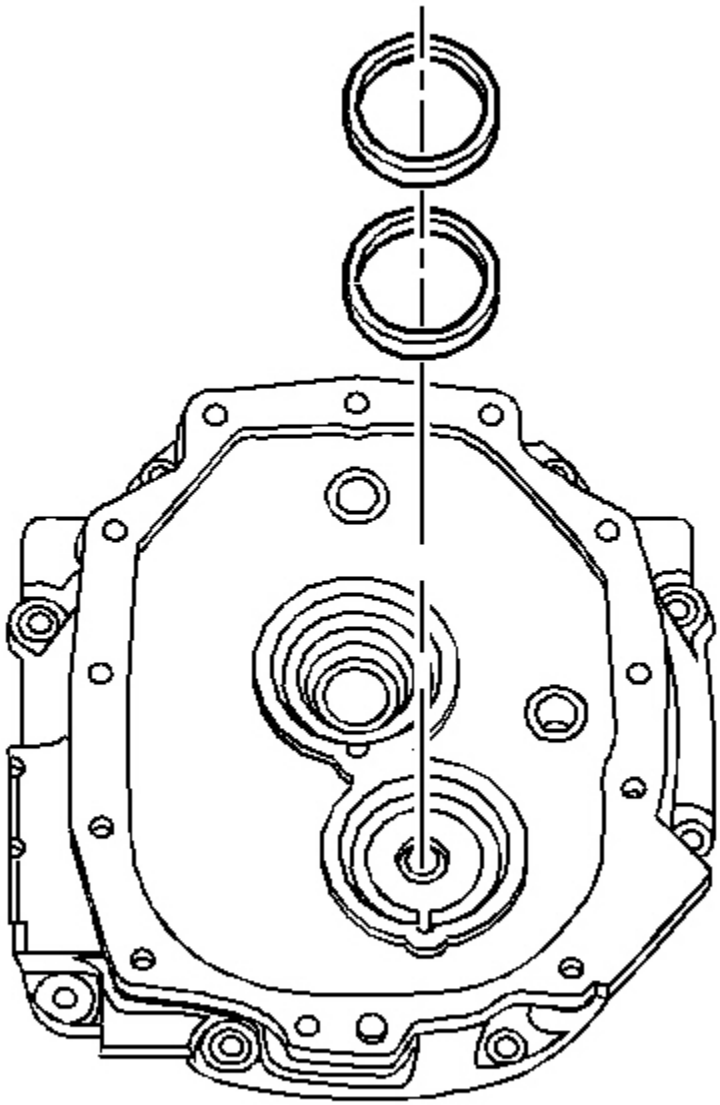

Fig. 250: View Of Countershaft Bearing Shim & Bearing Race
Courtesy of GENERAL MOTORS CORP.

6. Install countershaft bearing shim and bearing race.

cardiagn.com

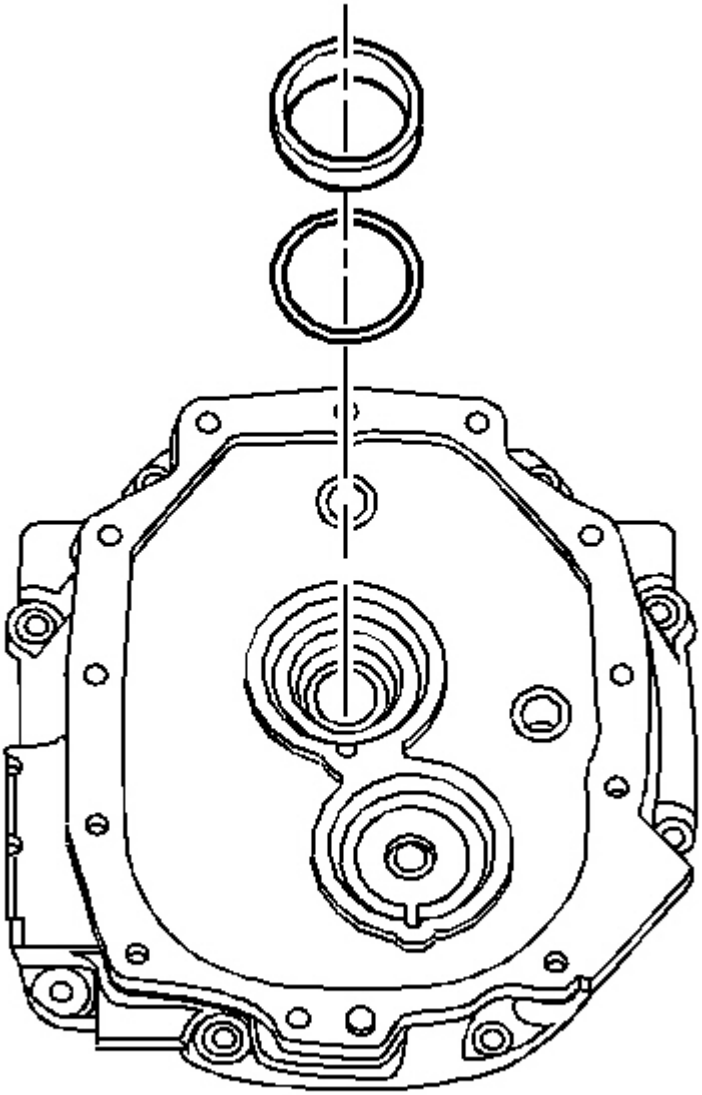

Fig. 251: Installing/Removing Input Shaft Bearing Shim And Bearing Race
Courtesy of GENERAL MOTORS CORP.

7. Install input shaft bearing shim and bearing race.

TRANS CASE AND ADAPTER PLATE ASSEMBLE (GTO)

Transmission Case

cardiagn.com

Tools Required

- **J 36190** Drive Handle. See **Special Tools** .
- **J 39435** Mainshaft and Countershaft Bearing Race Installer. See **Special Tools** .
- **J 39439-4** Bushing Installer. See **Special Tools** .
- **J 39439-3** Bushing Installer. See **Special Tools** .

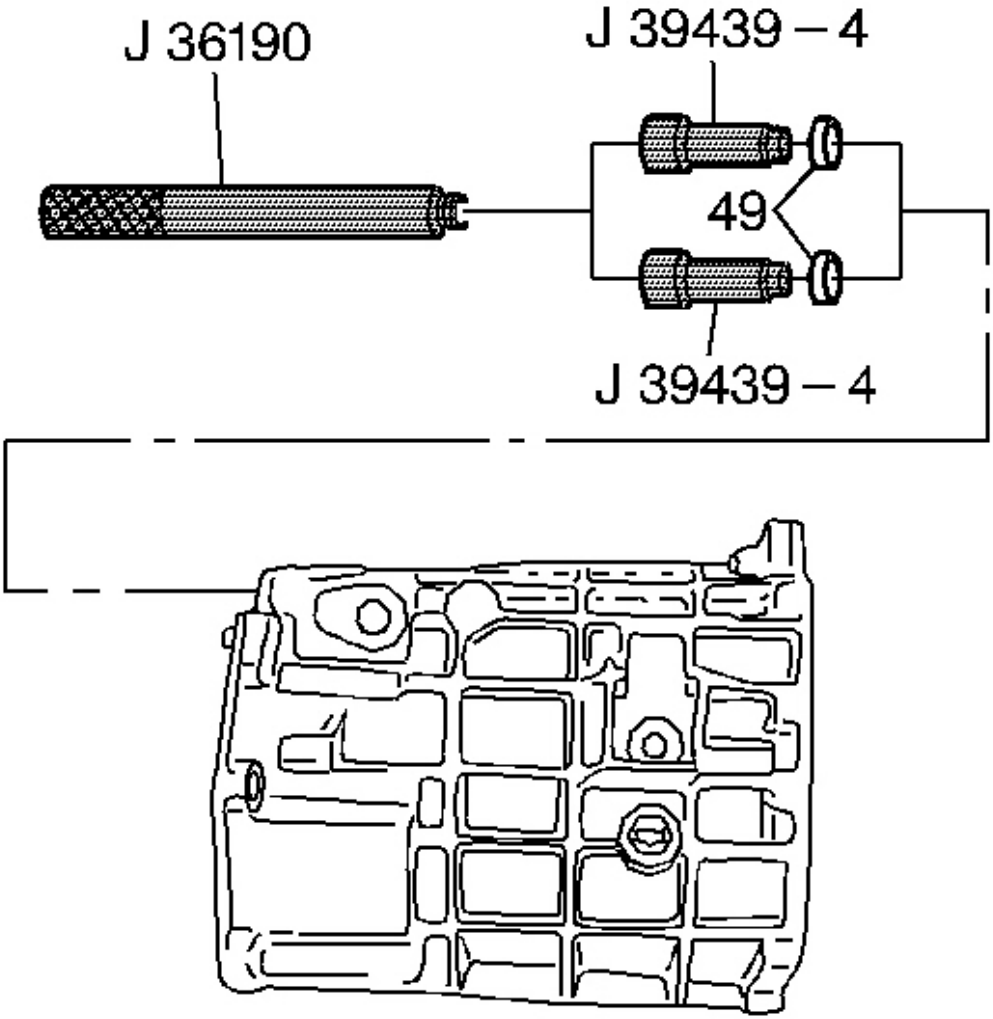

Fig. 252: Installing 1st/2nd & 3rd/4th Shift Shaft Bushings
Courtesy of GENERAL MOTORS CORP.

cardiagn.com

1. Install the 1st/2nd and the 3rd/4th shift shaft bushings. Use the **J 36190** , the **J 39439-4** , and the **J 39439-3** .

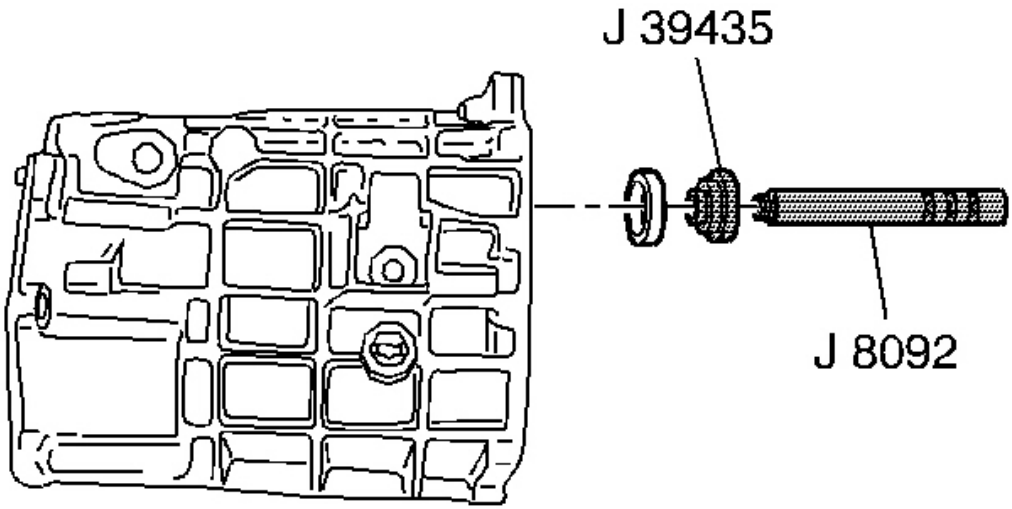

Fig. 253: Installing Mainshaft Bearing Race Using J 8092 & J 39435
Courtesy of GENERAL MOTORS CORP.

2. Install the mainshaft bearing race, using the **J 8092** and the **J 39435** .

cardiagn.com

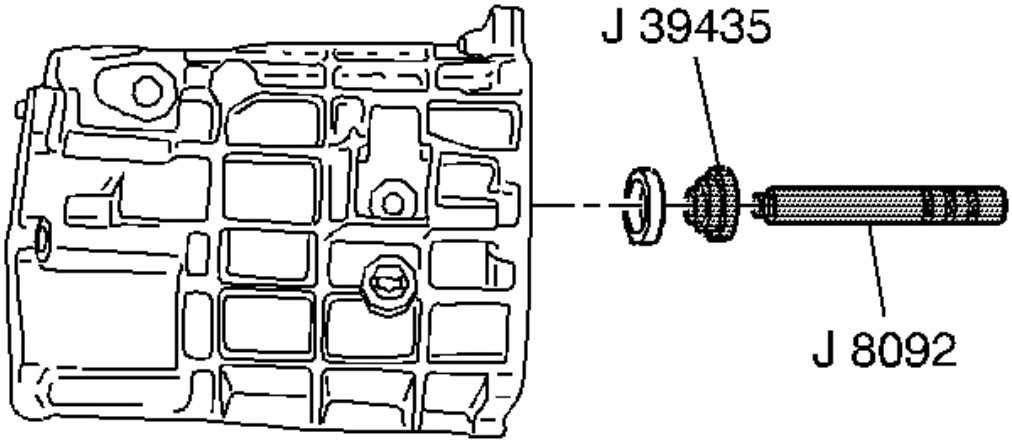

Fig. 254: Installing/Removing Countershaft Bearing Race Using J 8092 & J 39435
Courtesy of GENERAL MOTORS CORP.

3. Install the countershaft bearing race, using the **J 8092** and the **J 39435** .

cardiagn.com

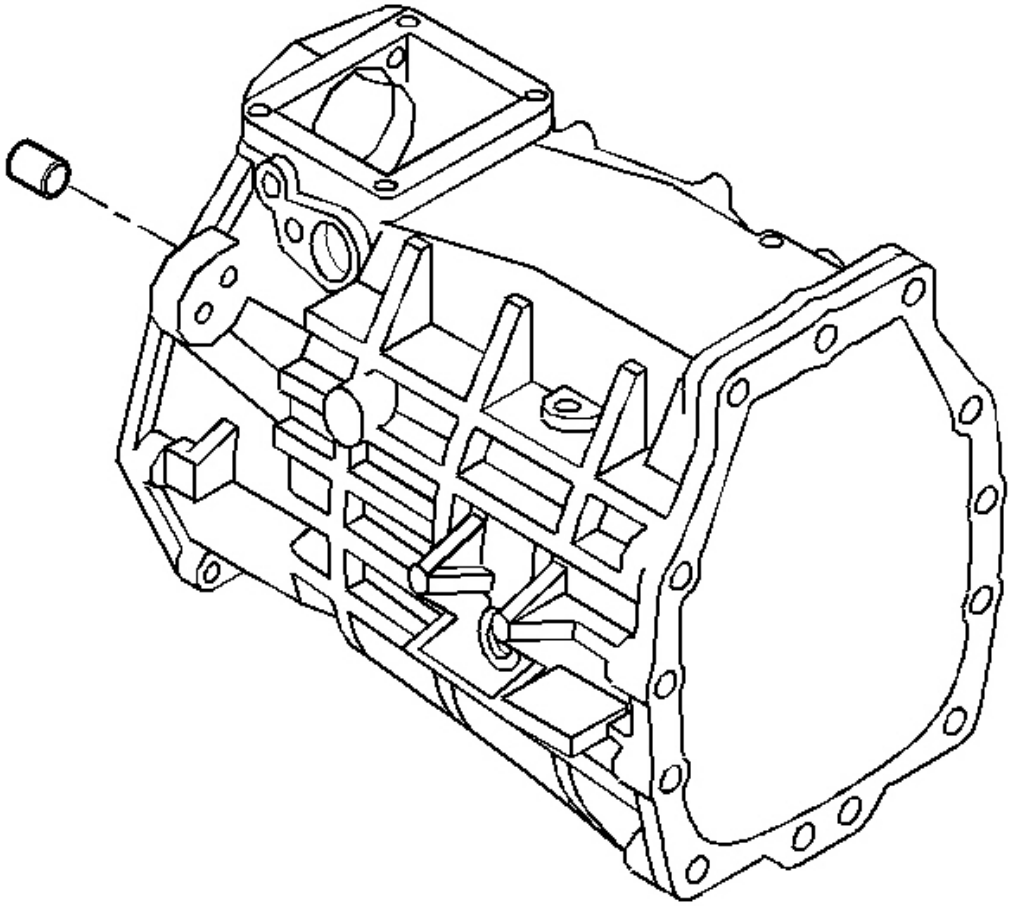

Fig. 255: Identifying Transfer Case Dowel Pins
Courtesy of GENERAL MOTORS CORP.

4. Install the dowel pins.

cardiagn.com

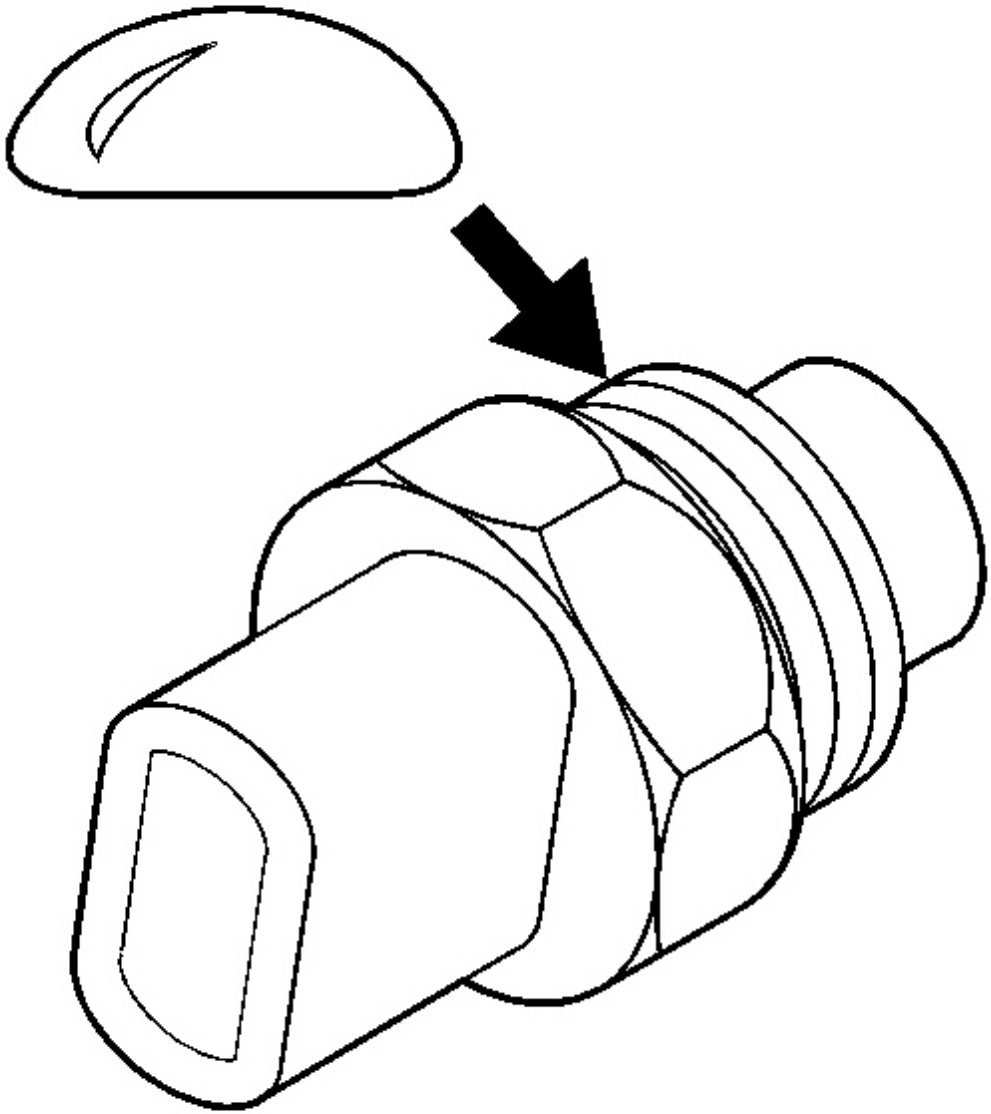

Fig. 256: Applying Sealant To Threads On Reverse Lamp Switch
Courtesy of GENERAL MOTORS CORP.

5. Apply sealant GM P/N 12346004 (Canadian P/N 10953480) or equivalent to the threads of the reverse lamp switch.

cardiagn.com

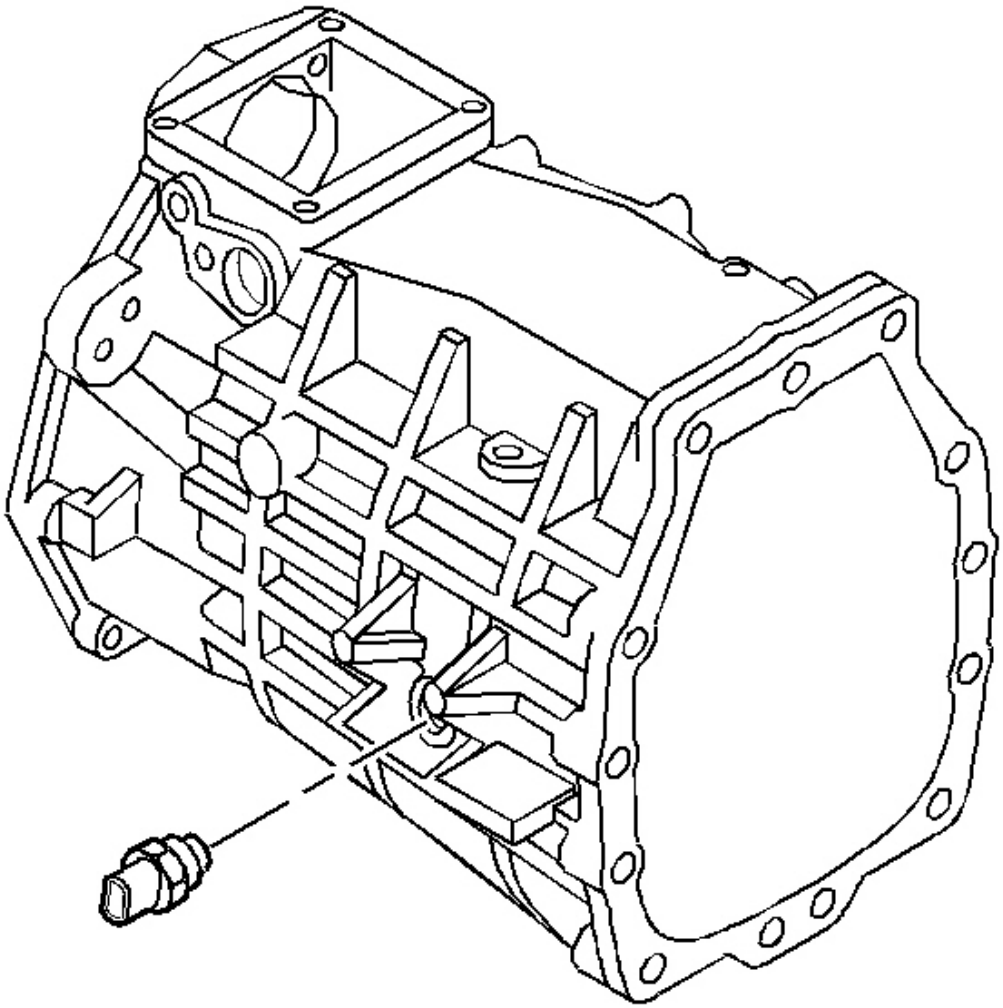

Fig. 257: Locating Reverse Lamp Switch
Courtesy of GENERAL MOTORS CORP.

NOTE: Refer to Fastener Notice in Cautions and Notices.

6. Install the reverse lamp switch.

   Tighten: Tighten the switch to 27 N.m (20 lb ft).

cardiagn.com

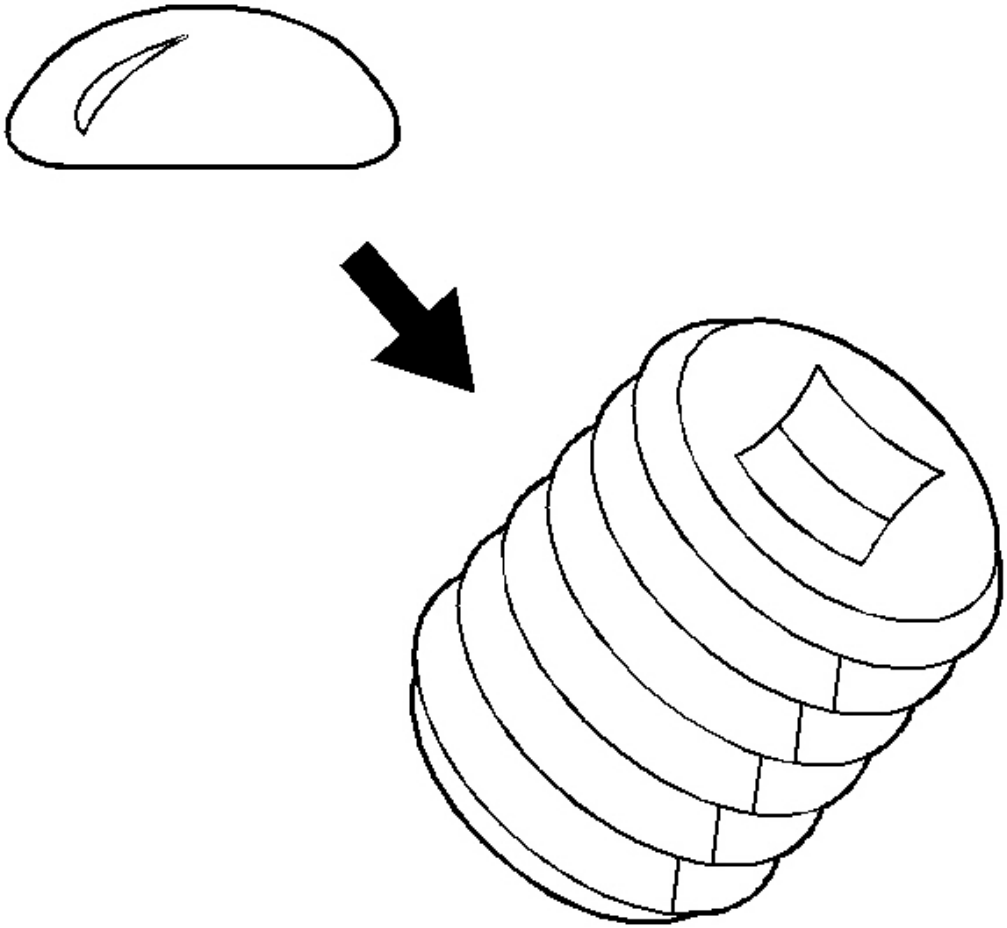

Fig. 258: Applying Sealant To Adapter Plate Plug Threads
Courtesy of GENERAL MOTORS CORP.

7. Apply sealant GM P/N 12346004 (Canadian P/N 10953480) or equivalent to the transmission case fill plug threads.

cardiagn.com

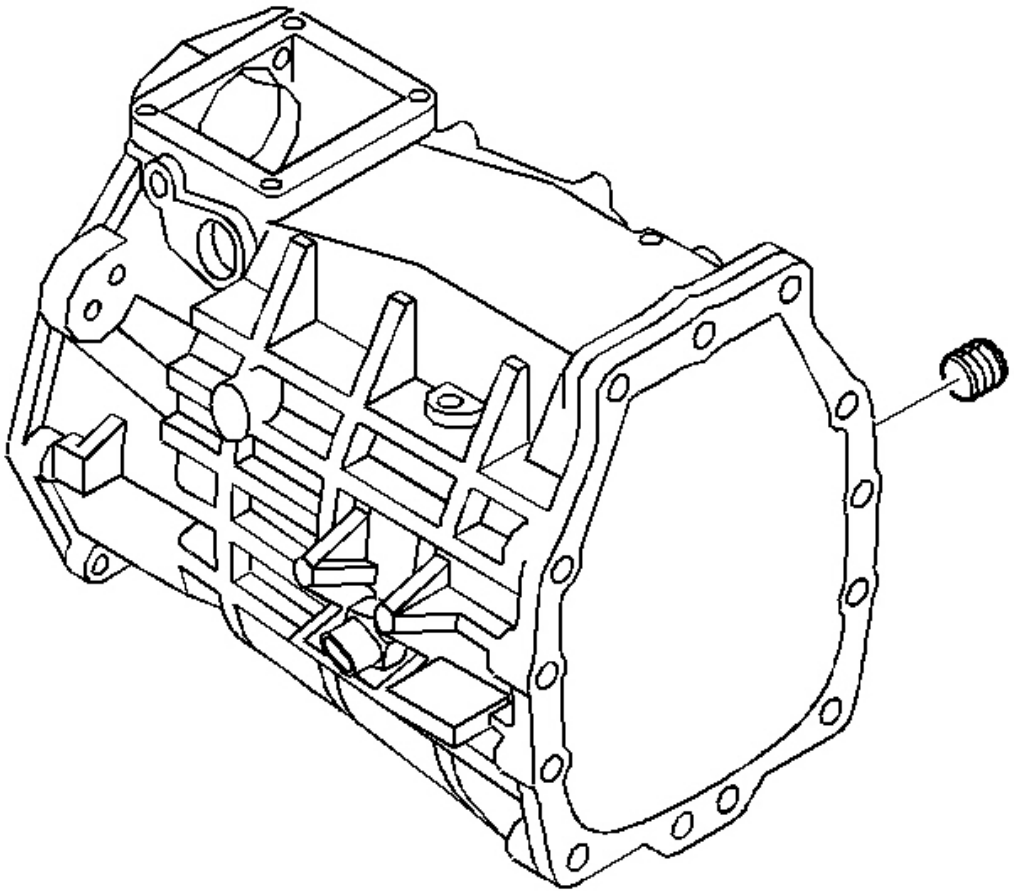

Fig. 259: View Of Transmission Case Fill Plug
Courtesy of GENERAL MOTORS CORP.

8. Install the transmission case fill plug.

   Tighten: Tighten the oil fill plug to 18 N.m (13 lb ft).

cardiagn.com

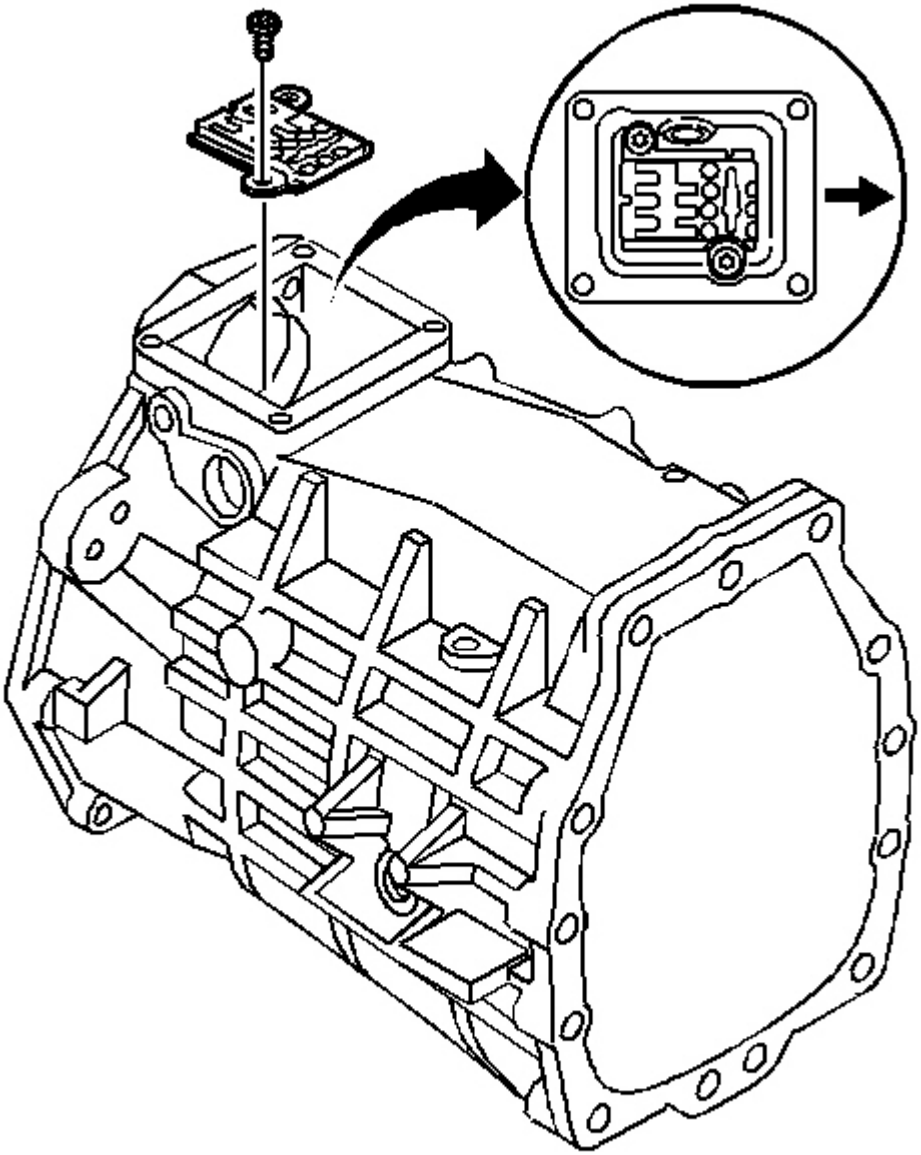

Fig. 260: Installing/Removing Guide Plate & Guide Plate Bolts
Courtesy of GENERAL MOTORS CORP.

NOTE: **The H-pattern on the guide plate must face the extension housing. If the guide plate is installed incorrectly, then damage will occur.**

cardiagn.com

9. Install the guide plate and the guide plate bolts.

   Tighten: Tighten the bolts to 22 N.m (16 Ib. ft).

Adapter Plate

Tools Required

- **J 39433** Input Shaft Seal Installer. See **Special Tools** .
- **J 39439-1** Bushing Remover/lnstaller. See **Special Tools** .

cardiagn.com

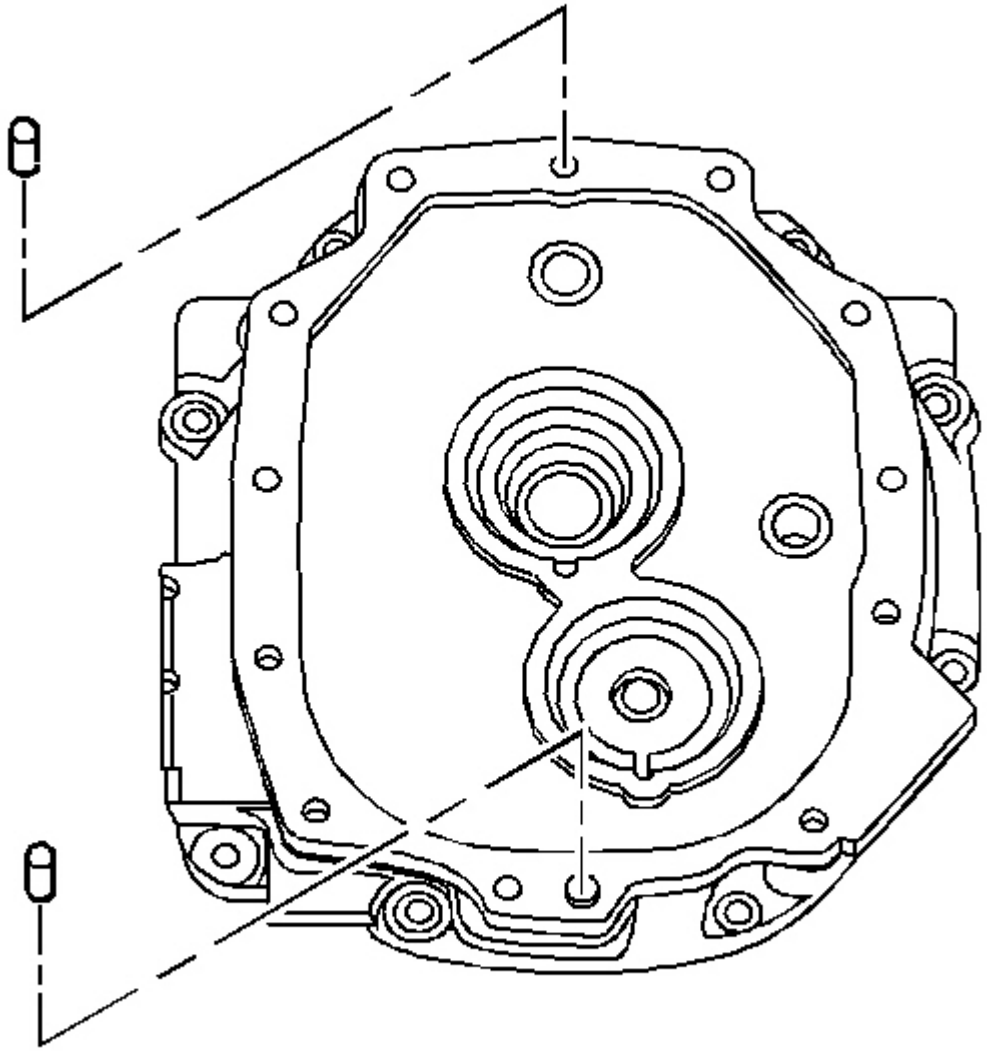

Fig. 261: Locating Extension Housing Dowel Pins
Courtesy of GENERAL MOTORS CORP.

1. Install the dowel pins.

cardiagn.com

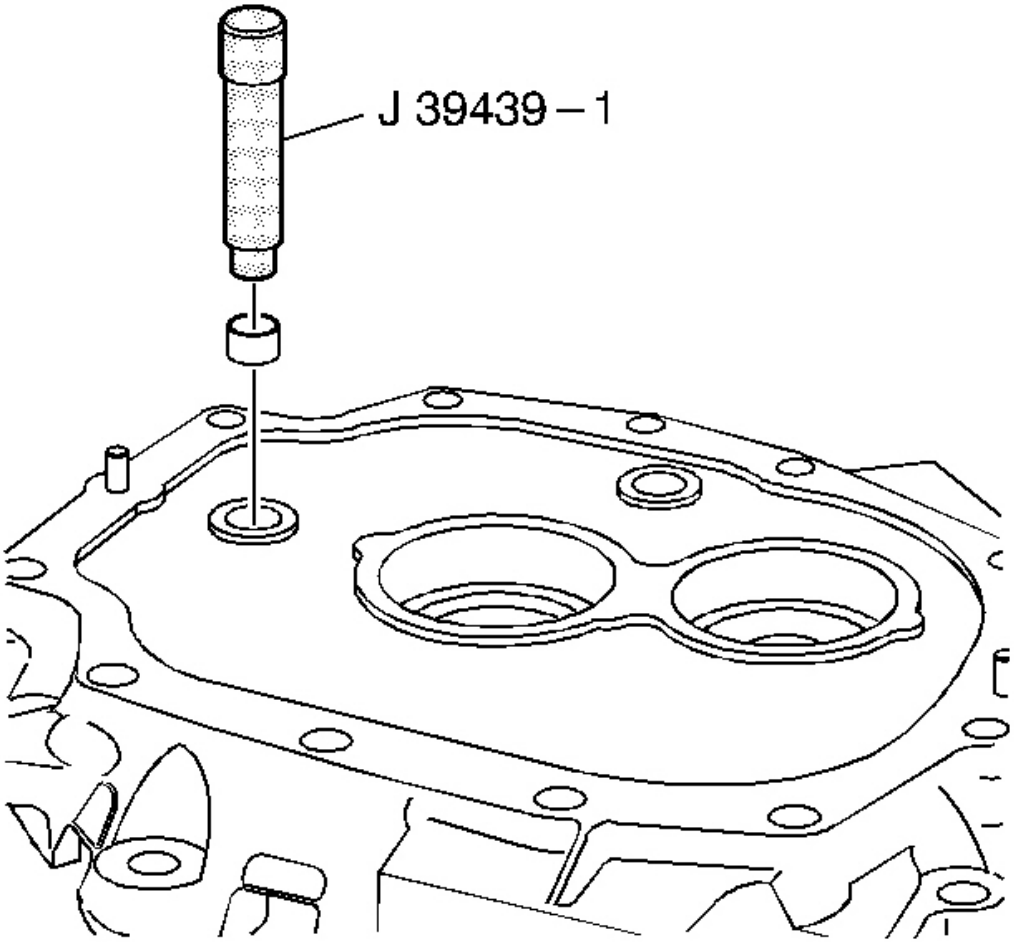

Fig. 262: Installing 1st/2nd, 3rd/4th Speed Shift Shaft Bushing
Courtesy of GENERAL MOTORS CORP.

2. Install the 1st/2nd, 3rd/4th speed shift shaft bushing, using the **J 39439-1** .

cardiagn.com

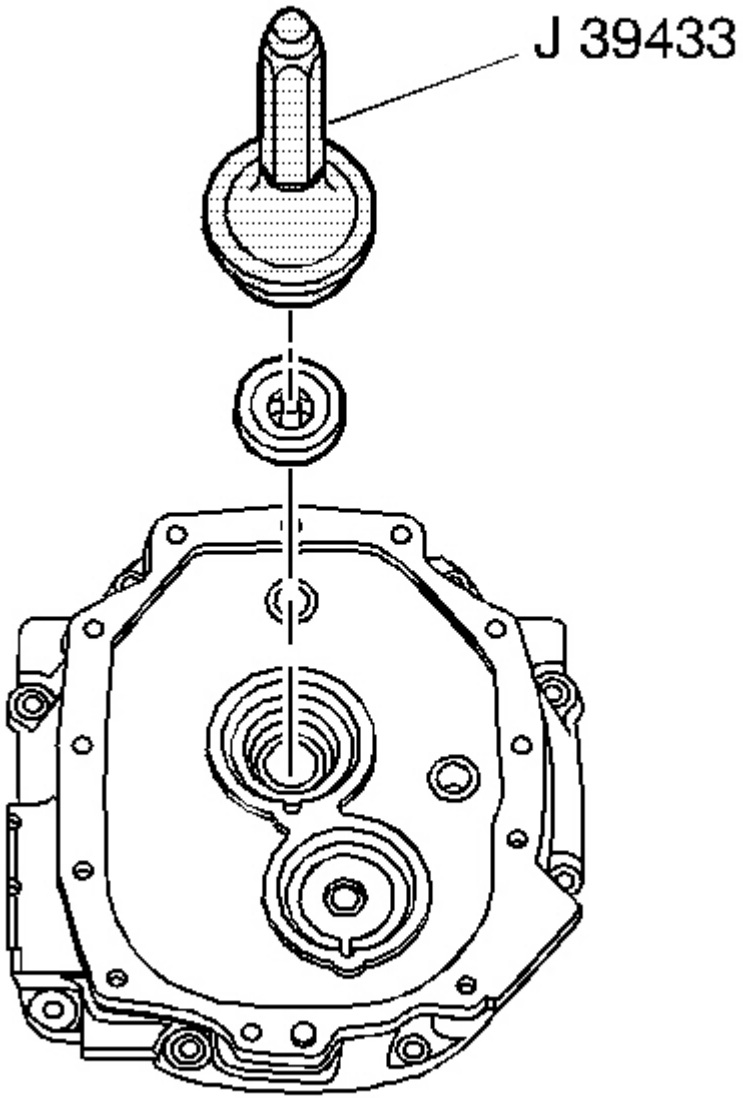

Fig. 263: Installing Input Shaft Seal Using J 39433
Courtesy of GENERAL MOTORS CORP.

3. Install the input shaft seal, using the **J 39433** .
4. Install the input shaft seal and the upper seal on the other side of the adapter plate, using the **J 39433** .

cardiagn.com

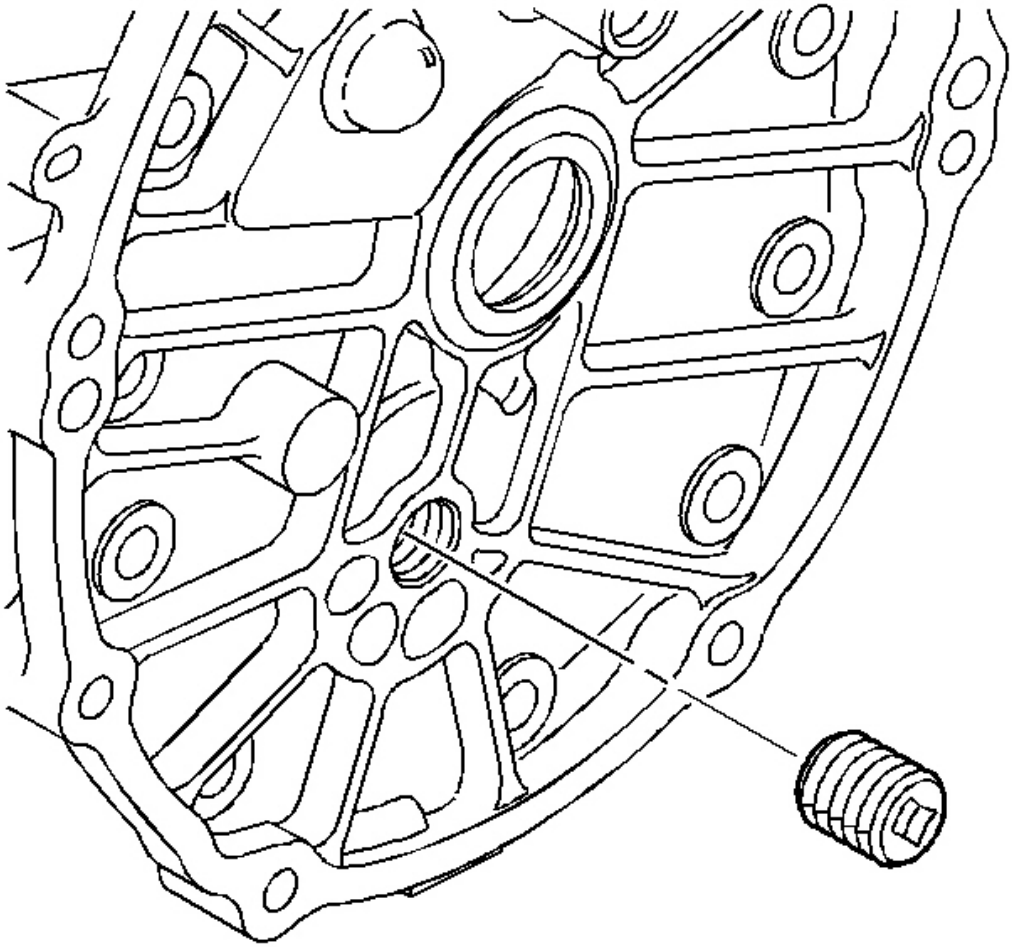

Fig. 264: Locating Adapter Plate Plug
Courtesy of GENERAL MOTORS CORP.

5. Install adapter plate plug.

cardiagn.com

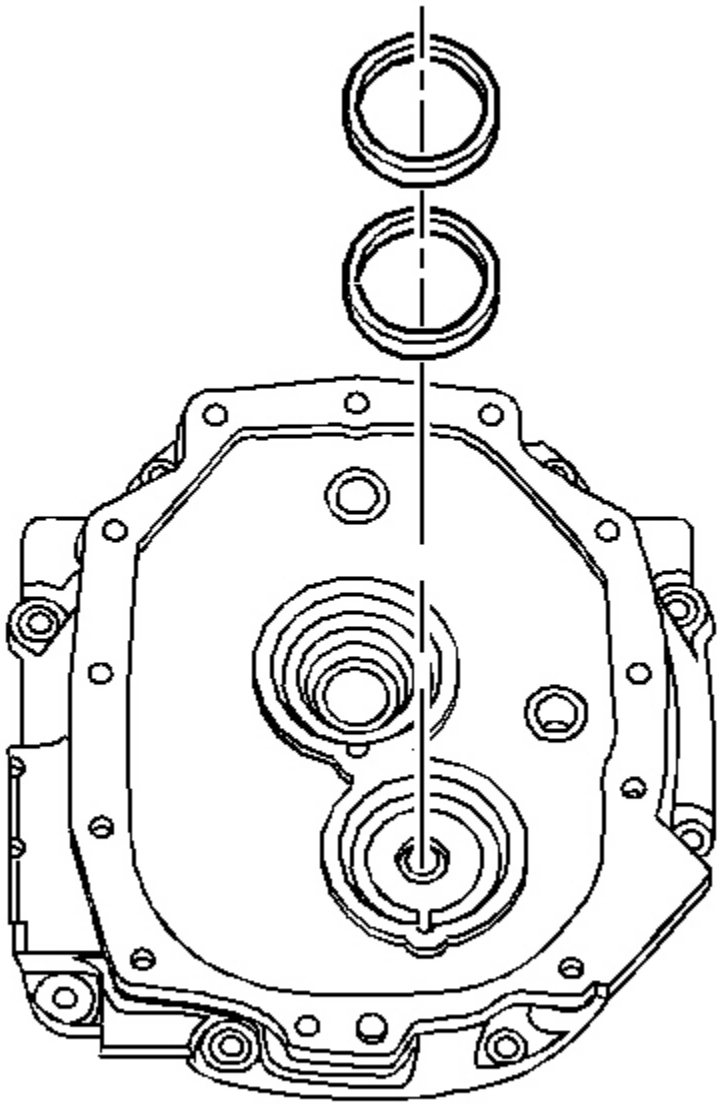

Fig. 265: View Of Countershaft Bearing Shim & Bearing Race
Courtesy of GENERAL MOTORS CORP.

6. Install countershaft bearing shim and bearing race.

cardiagn.com

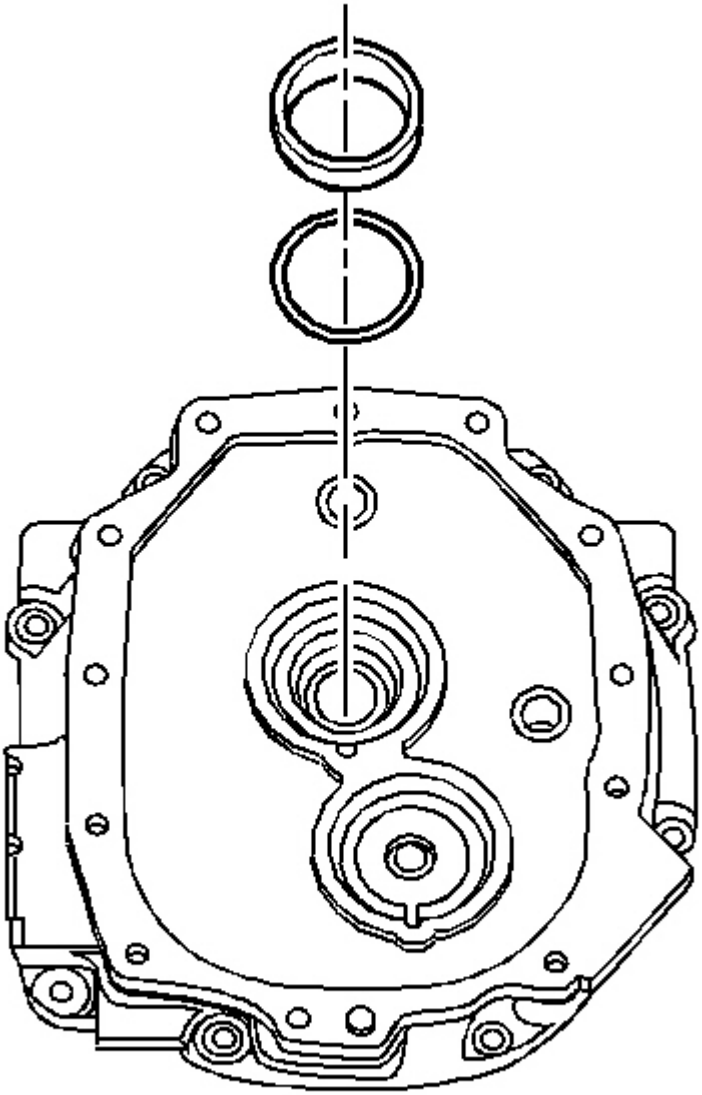

Fig. 266: Installing/Removing Input Shaft Bearing Shim And Bearing Race
Courtesy of GENERAL MOTORS CORP.

7. Install input shaft bearing shim and bearing race.

EXTENSION HOUSING DISASSEMBLE (Y CAR)

Tools Required

cardiagn.com

- **J 26941** Bearing Race Remover. See **Special Tools** .
- **J 23907** Slide Hammer. See **Special Tools** .

1. Remove the reverse idler shaft bracket bolts.

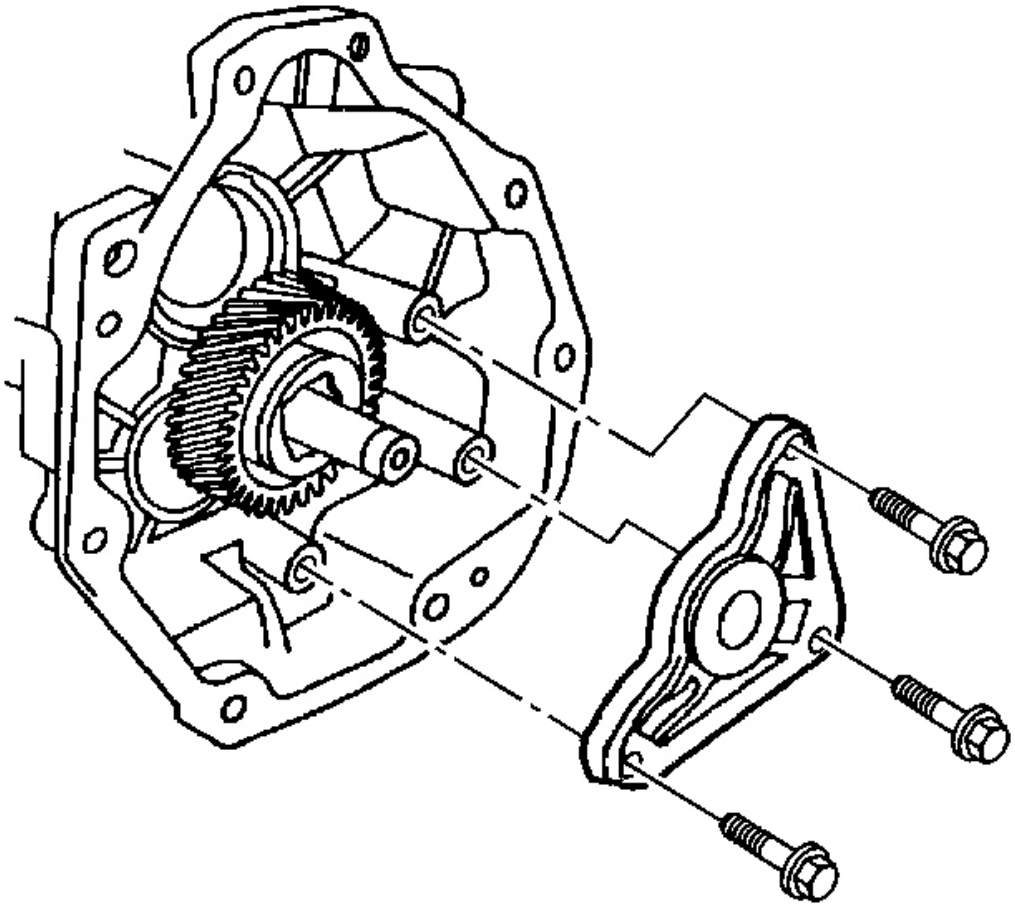

Fig. 267: View Of Reverse Idler Shaft Bracket & Mounting Bolts
Courtesy of GENERAL MOTORS CORP.

2. Remove the bracket.

cardiagn.com

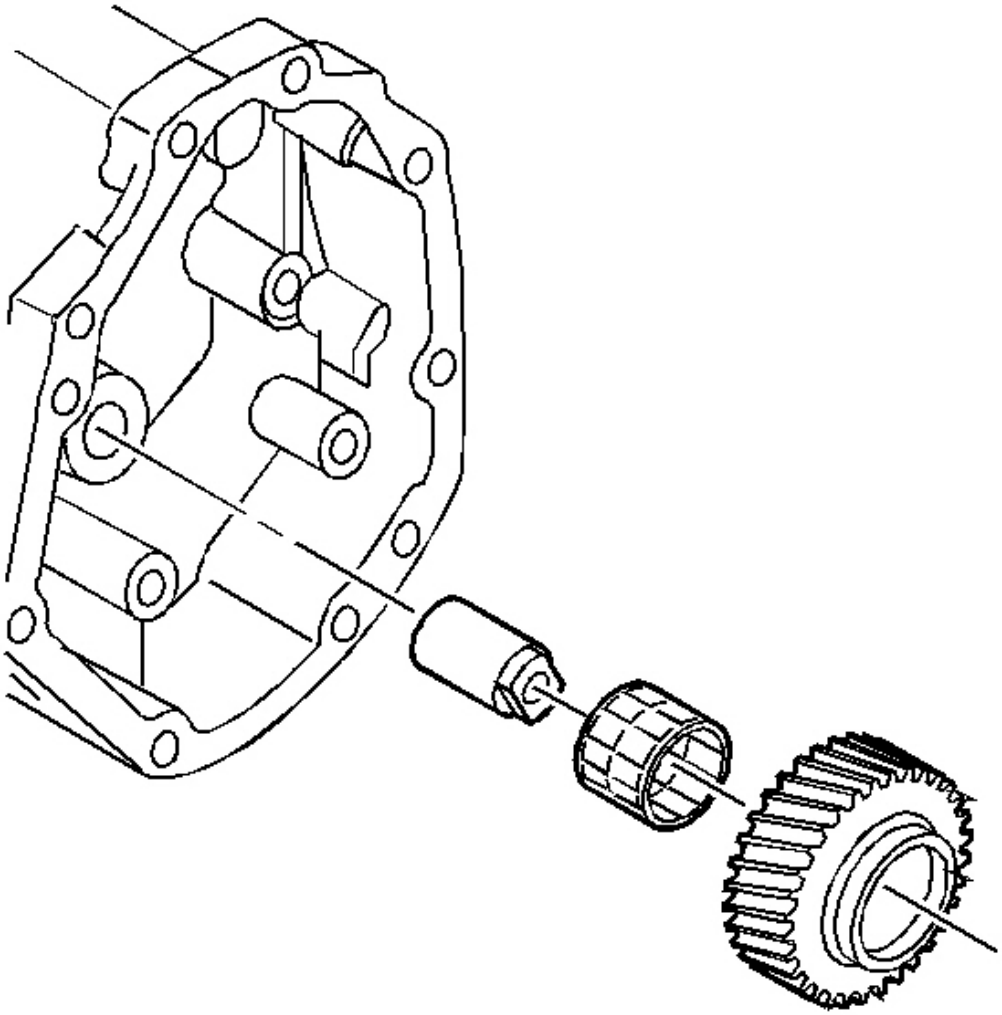

Fig. 268: Identifying Reverse Idler Shaft, Roller Bearing & Reverse Idler Gear
Courtesy of GENERAL MOTORS CORP.

3. Remove the following parts in order:
    1. The reverse idler gear
    2. The roller bearing
    3. The reverse idler shaft

cardiagn.com

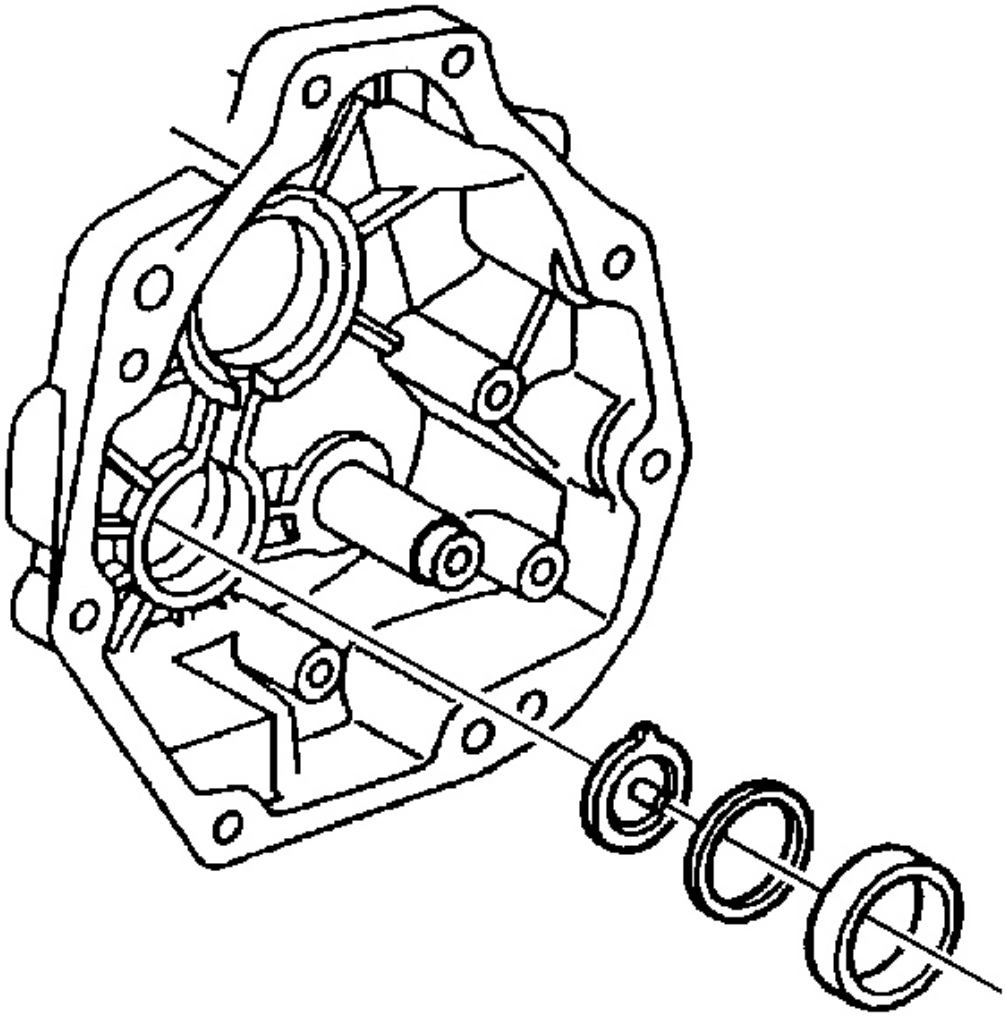

Fig. 269: View Of Countershaft Extension Bearing Race, Funnel & Shim
Courtesy of GENERAL MOTORS CORP.

4. Remove the following parts in order:
    1. The countershaft extension bearing race
    2. The shim
    3. The funnel
    4. Remove the outer and inner output shaft seals (pry out the seals with a suitable tool).

cardiagn.com

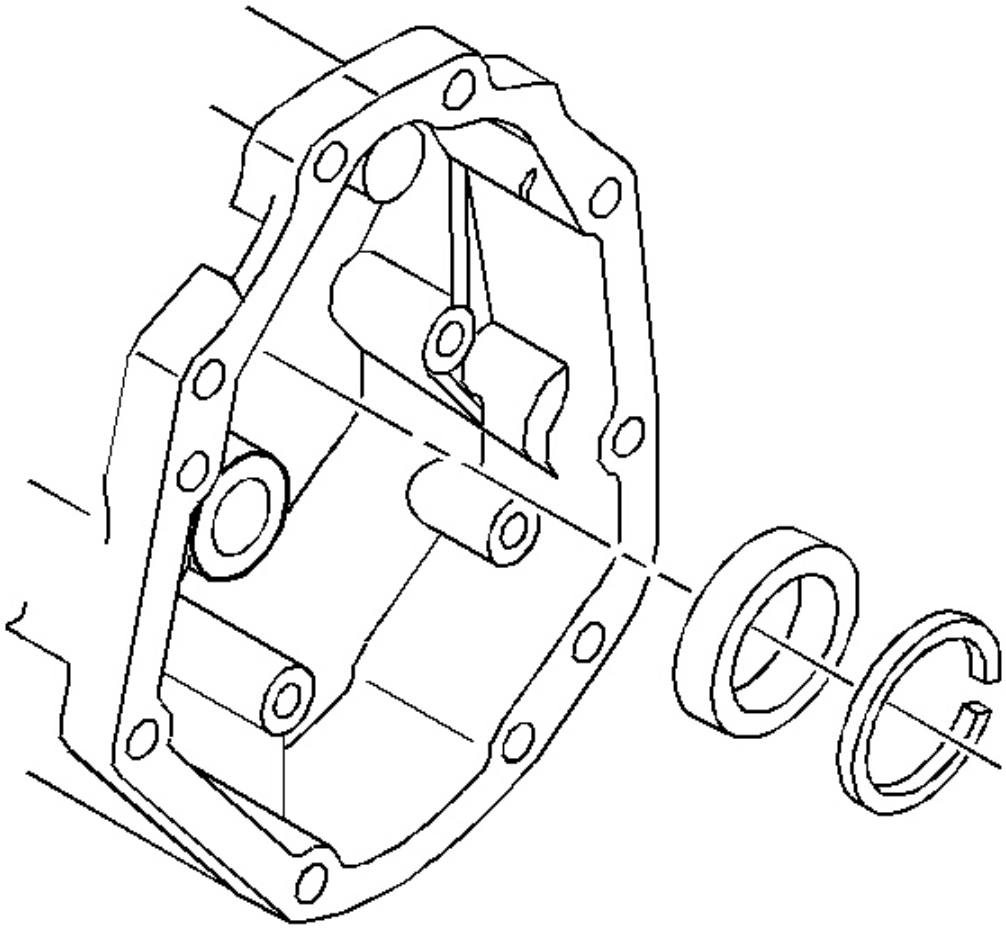

Fig. 270: Locating Mainshaft Bearing Race Retainer Ring & Race
Courtesy of GENERAL MOTORS CORP.

5. Remove the mainshaft bearing race retainer ring.

IMPORTANT: Do not replace the bearing race unless inspection shows bearing race damage.

6. Remove the mainshaft bearing race using the **J 26941** and the **J 23907** .

EXTENSION HOUSING DISASSEMBLE (CTSV)

Tools Required

cardiagn.com

- **J 26941** Bearing Race Remover. See **Special Tools** .
- **J 23907** Slide Hammer. See **Special Tools** .

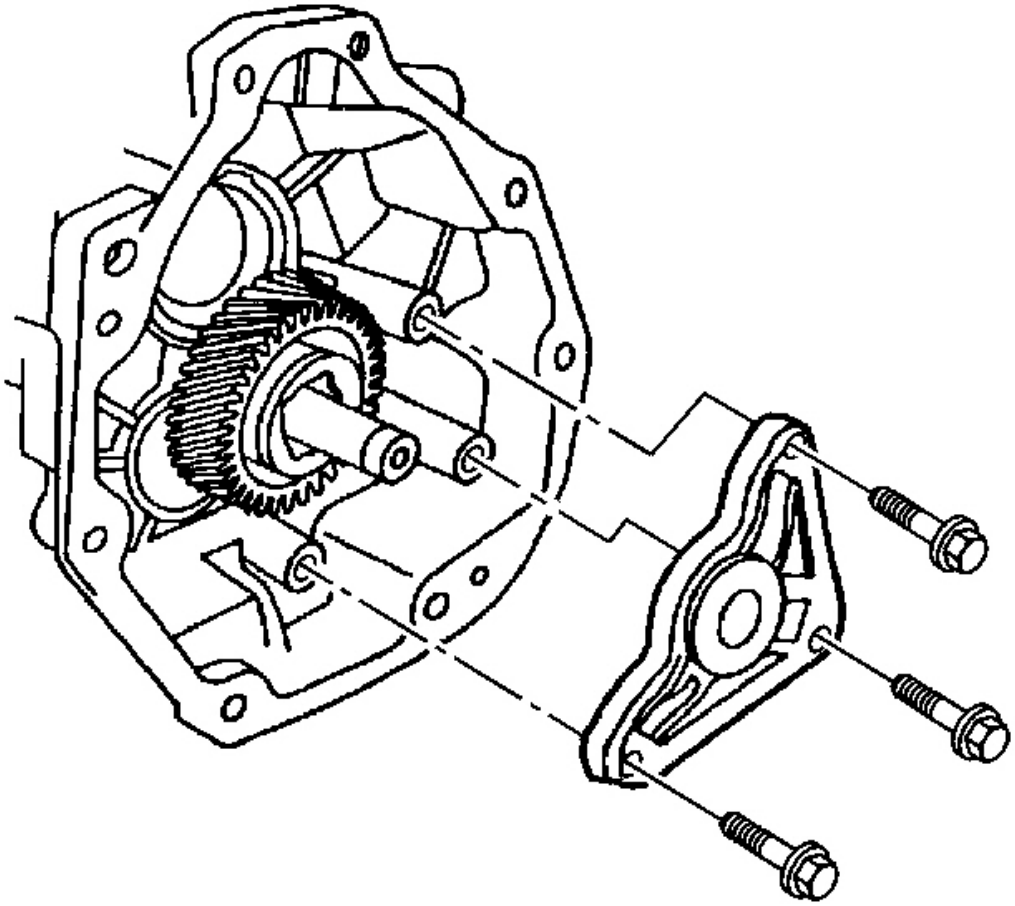

Fig. 271: View Of Reverse Idler Shaft Bracket & Mounting Bolts
Courtesy of GENERAL MOTORS CORP.

1. Remove the reverse idler shaft bracket bolts.

cardiagn.com

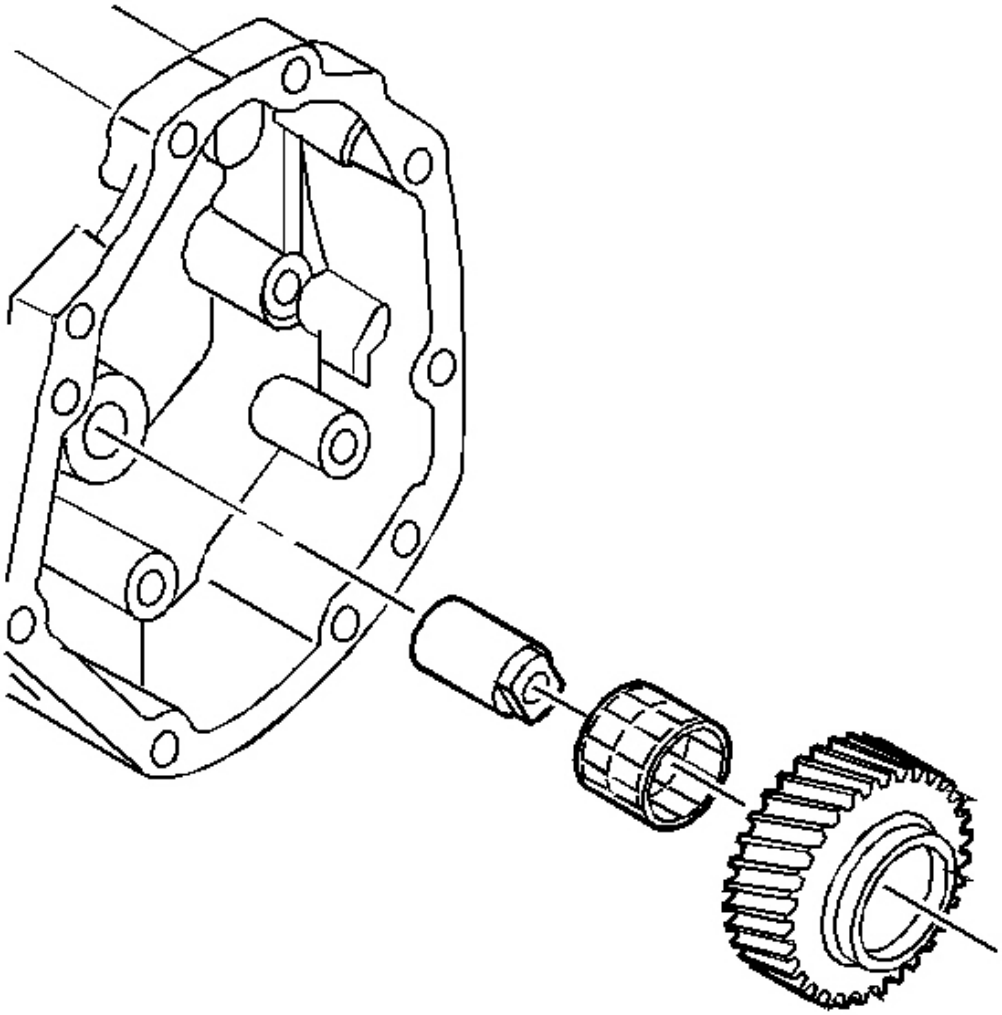

Fig. 272: Identifying Reverse Idler Shaft, Roller Bearing & Reverse Idler Gear
Courtesy of GENERAL MOTORS CORP.

2. Remove the reverse idler gear, the roller bearing, and the reverse idler shaft.

cardiagn.com

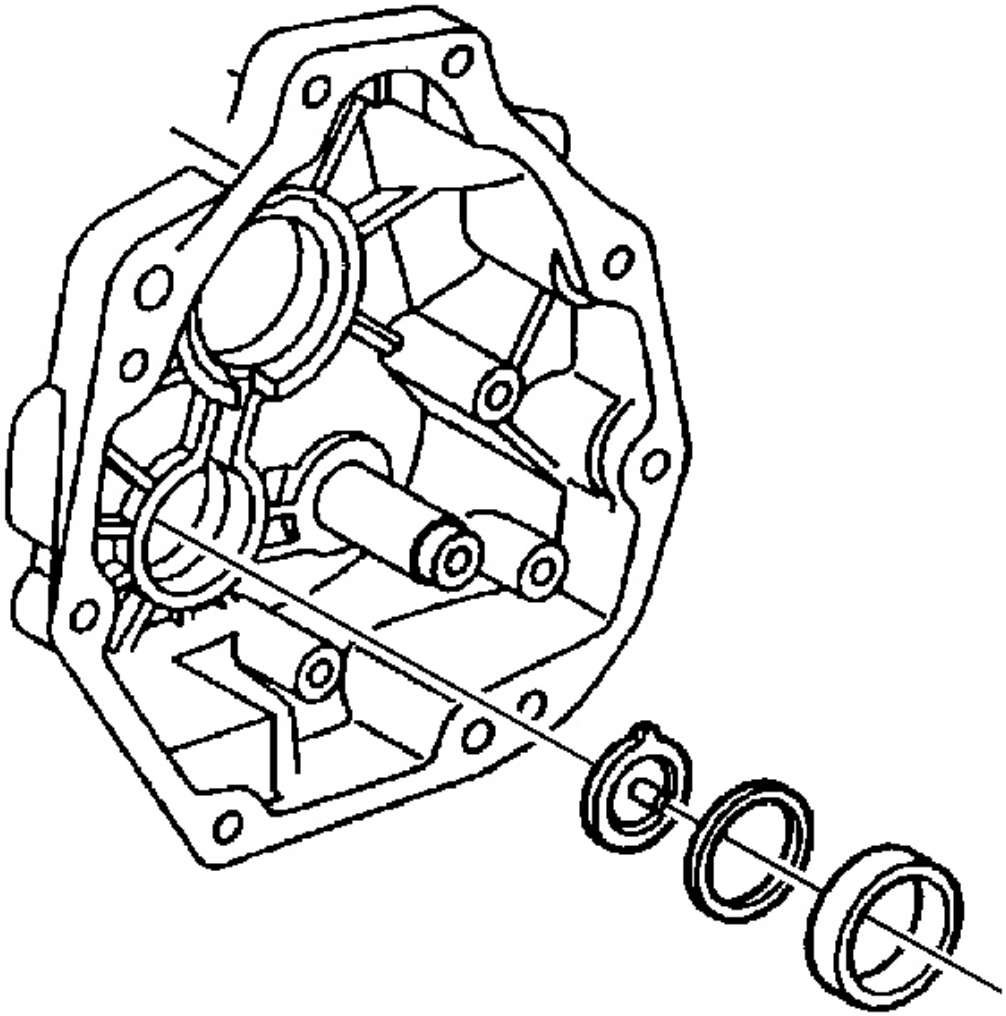

Fig. 273: View Of Countershaft Extension Bearing Race, Funnel & Shim
Courtesy of GENERAL MOTORS CORP.

3. Remove the countershaft extension bearing race, the shim, and the funnel.

cardiagn.com

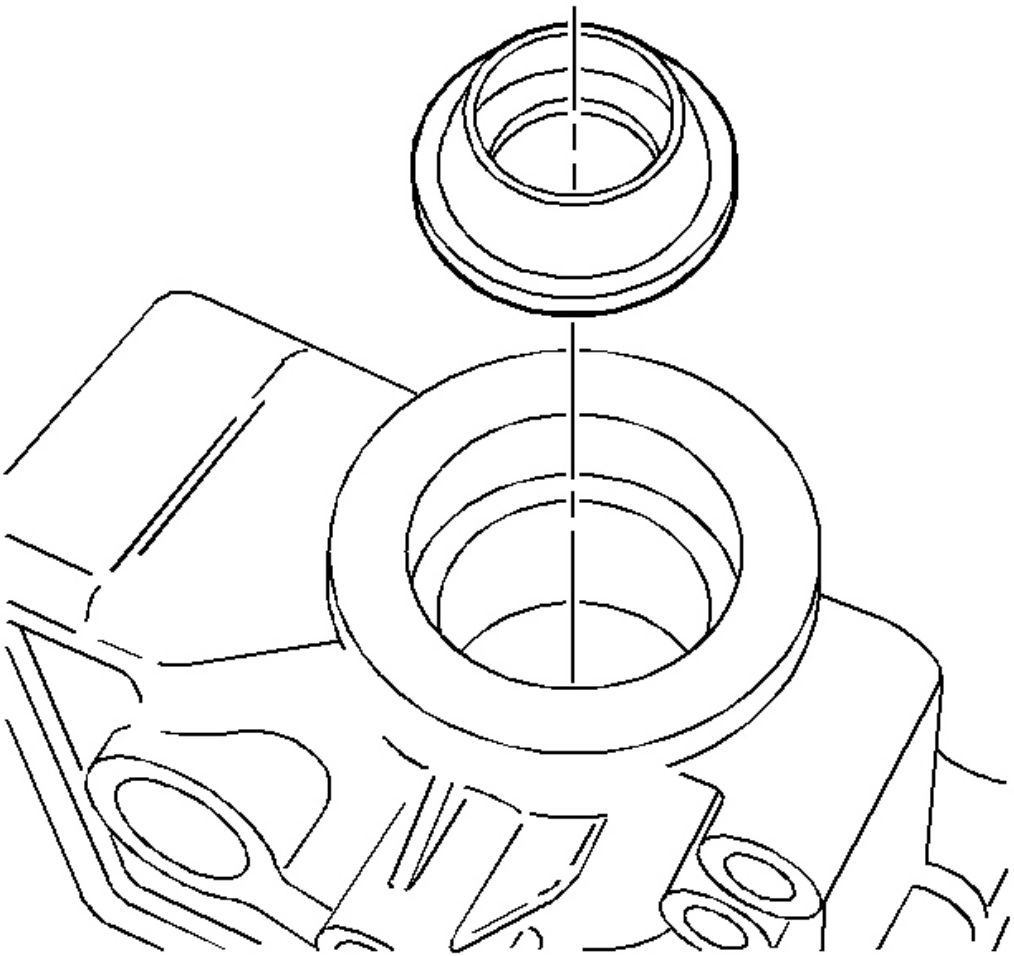

Fig. 274: View Of Output Shaft Seal
Courtesy of GENERAL MOTORS CORP.

4. Remove the output shaft seal.

   Pry out the seal with a suitable tool.

cardiagn.com

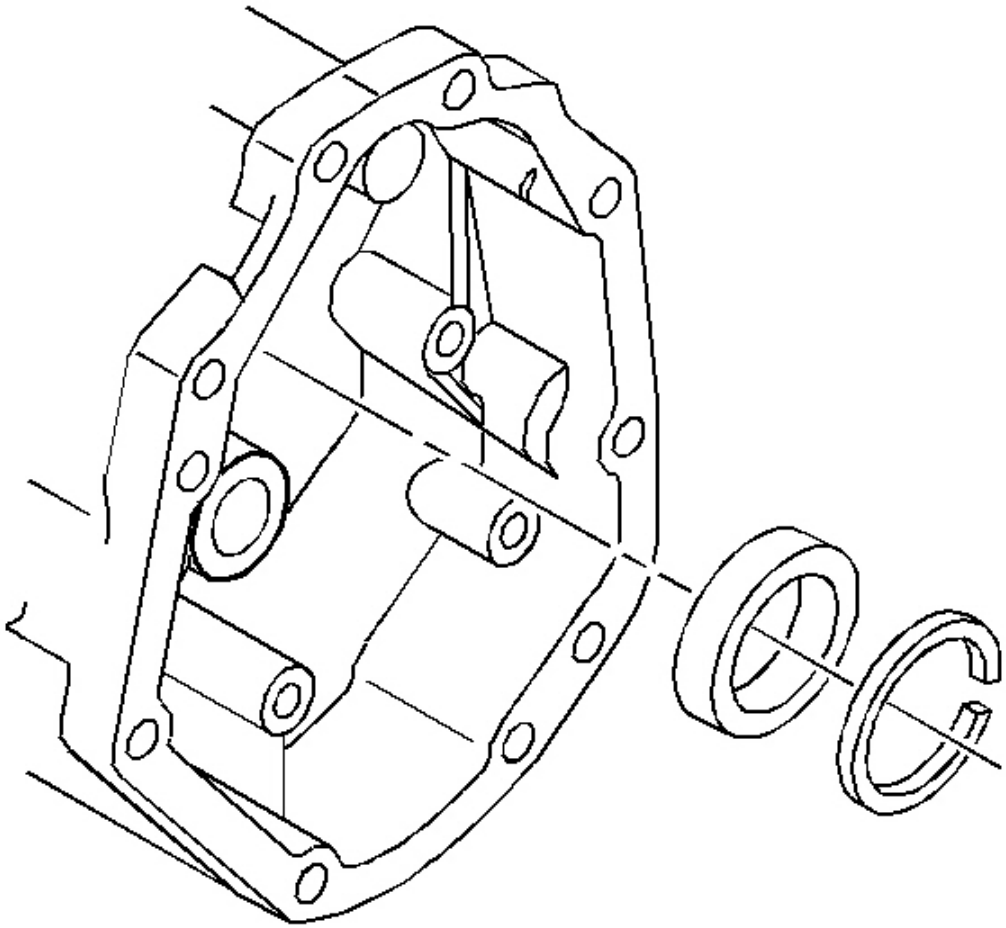

Fig. 275: Locating Mainshaft Bearing Race Retainer Ring & Race
Courtesy of GENERAL MOTORS CORP.

5. Remove the mainshaft bearing race retainer ring.

IMPORTANT: Do not replace the bearing race unless inspection shows bearing race damage.

6. Remove the mainshaft bearing race using **J 26941** and **J 23907** .

EXTENSION HOUSING CLEANING AND INSPECTION

cardiagn.com

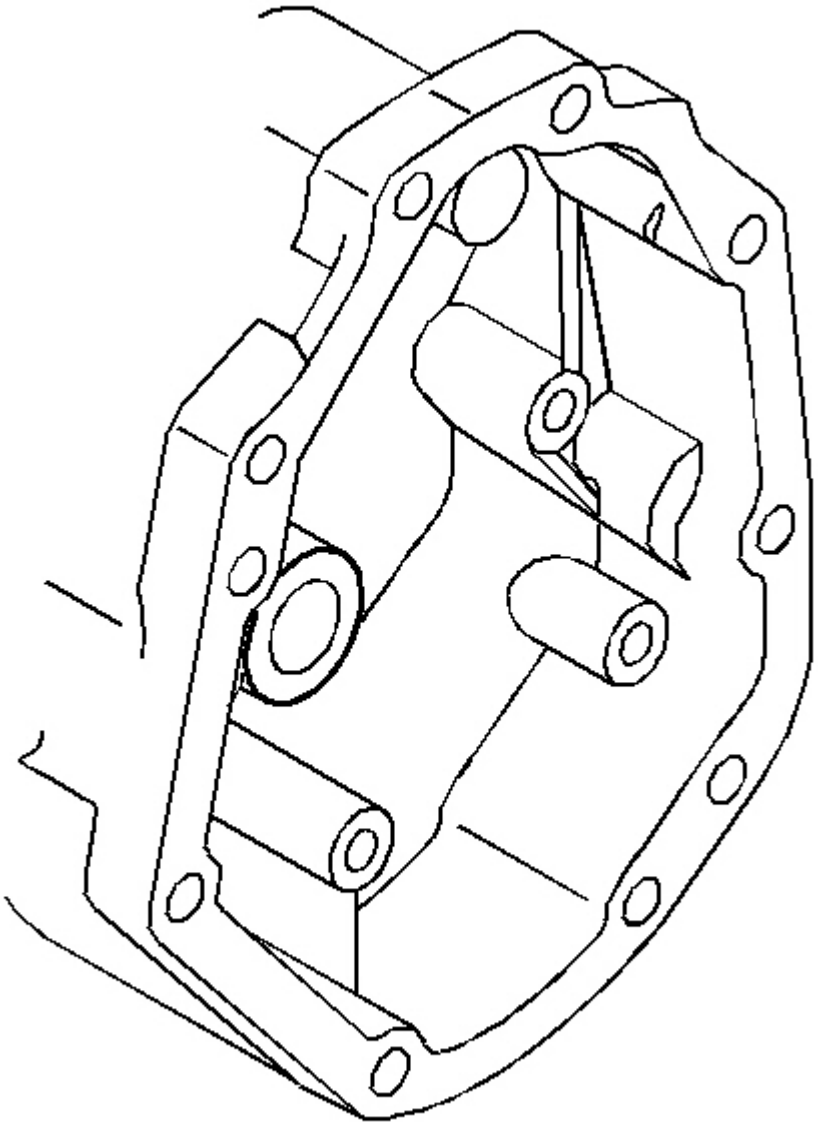

Fig. 276: View Of Rear Extension Housing
Courtesy of GENERAL MOTORS CORP.

1. Clean the rear extension housing in a suitable solvent. Air dry the housing.
2. Inspect the extension housing for the following:
    - Cracks
    - Scratches

cardiagn.com

    - Damaged threads
    - Burrs
    - Nicked mounting surfaces
    - Damaged sealing surfaces
    - Damaged front or rear bearing bores
3. Replace a cracked housing.
4. Clean up damaged threads with the correct size thread tap.
5. Inspect the machined mating surfaces for flatness (Check the mating surfaces with a straight edge).
6. Use a fine mill file to dress minor scratches or burrs.

EXTENSION HOUSING ASSEMBLE (Y CAR)

Tools Required

- **J 8092** Drive Handle. See **Special Tools** .
- **J 26508-A** Transmission Rear Seal Installer. See **Special Tools** .
- **J 39546** Bearing Race Installer. See **Special Tools** .
- **J 42198** Transmission Rear Seal Installer. See **Special Tools** .

cardiagn.com

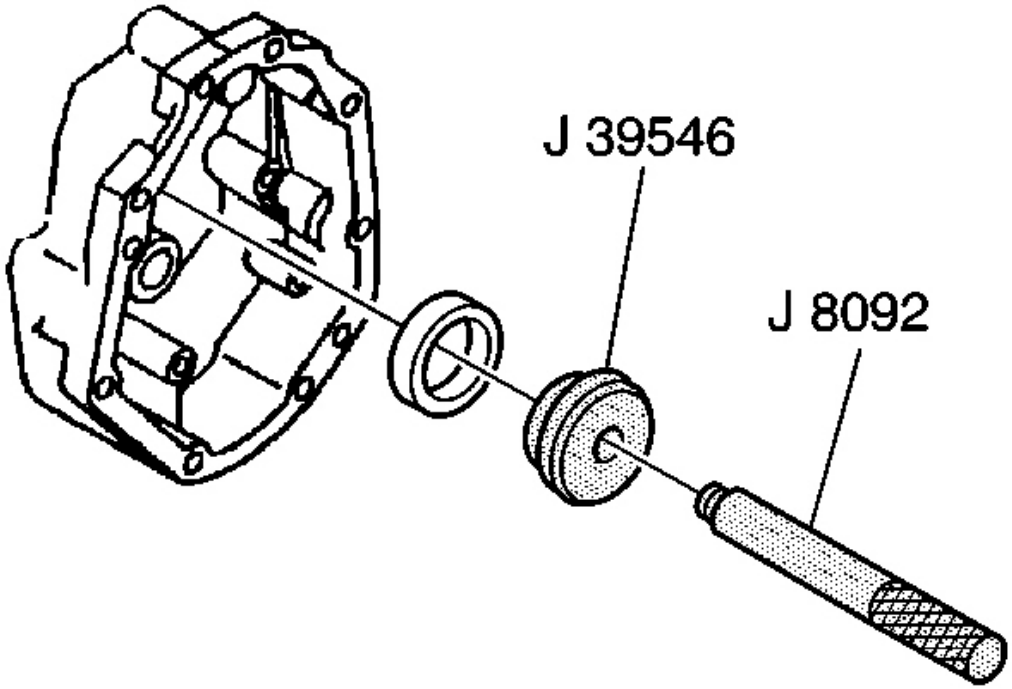

Fig. 277: Installing Mainshaft Bearing Race
Courtesy of GENERAL MOTORS CORP.

1. Install the mainshaft bearing race. Use the **J 39546** and the **J 8092** .

cardiagn.com

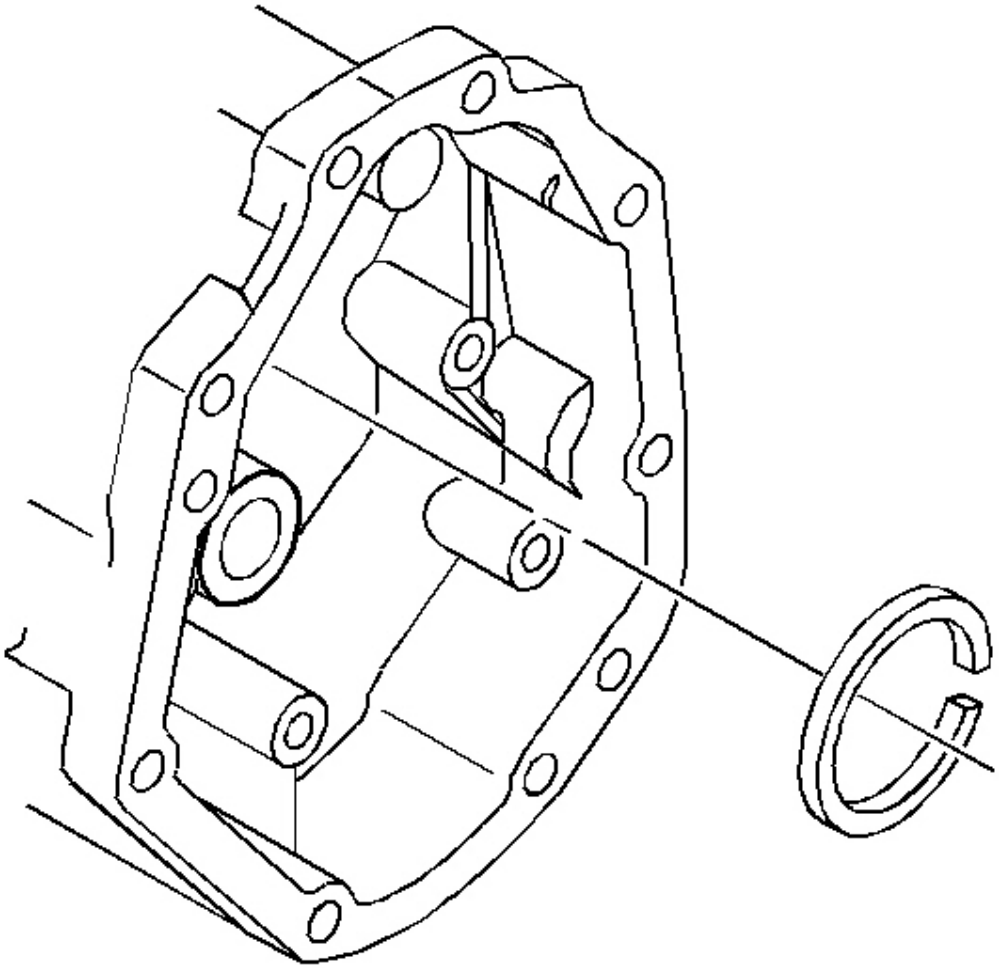

Fig. 278: Locating Mainshaft Bearing Race Retainer Ring
Courtesy of GENERAL MOTORS CORP.

2. Install the mainshaft bearing race retainer ring.

NOTE: **Failure to install the inner output shaft seal correctly will cause a leak.**

3. Install the inner output shaft seal with garter spring facing inward, using **J 26508-A** .

NOTE: **Failure to install the outer output shaft seal correctly will cause a leak.**

cardiagn.com

4. Install the outer output shaft seal with garter spring facing outward, using **J 42198** .

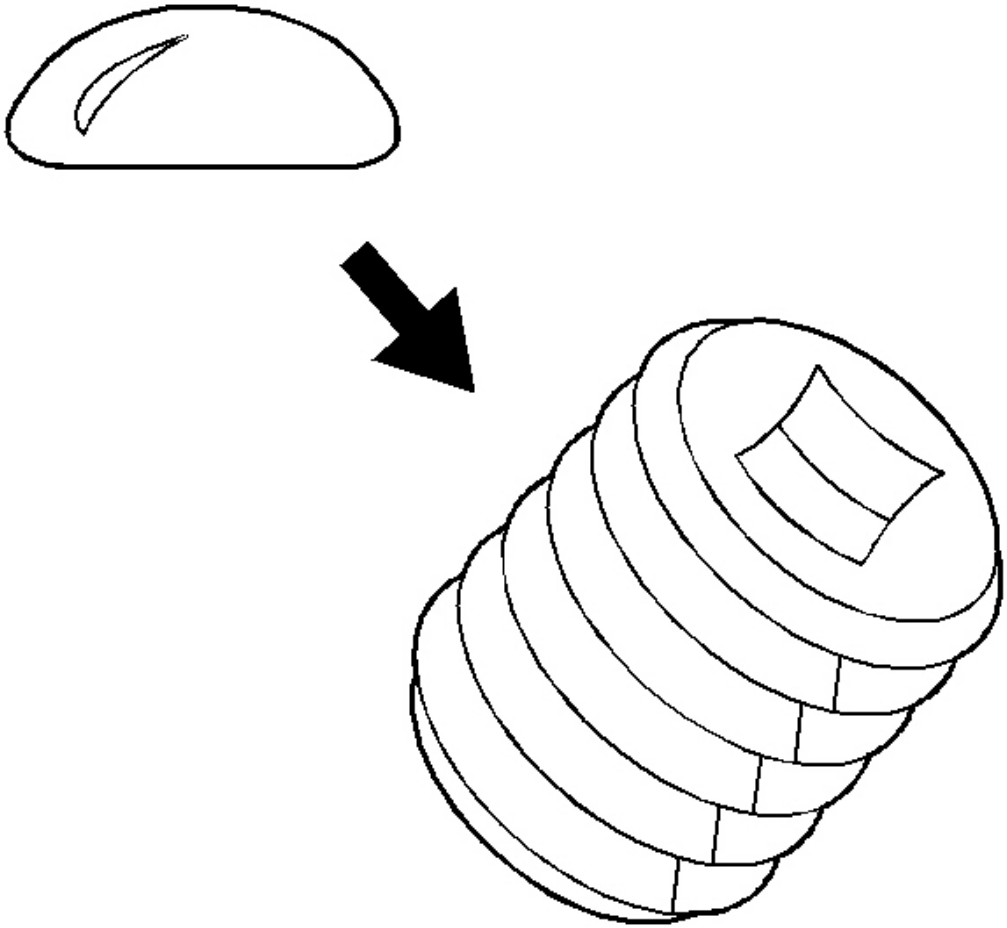

Fig. 279: Applying Sealant To Adapter Plate Plug Threads
Courtesy of GENERAL MOTORS CORP.

5. Apply thread sealer GM P/N 12346004 (Canadian P/N 10953480) to the transmission case drain plug.

NOTE: **Refer to Fastener Notice in Cautions and Notices.**

cardiagn.com

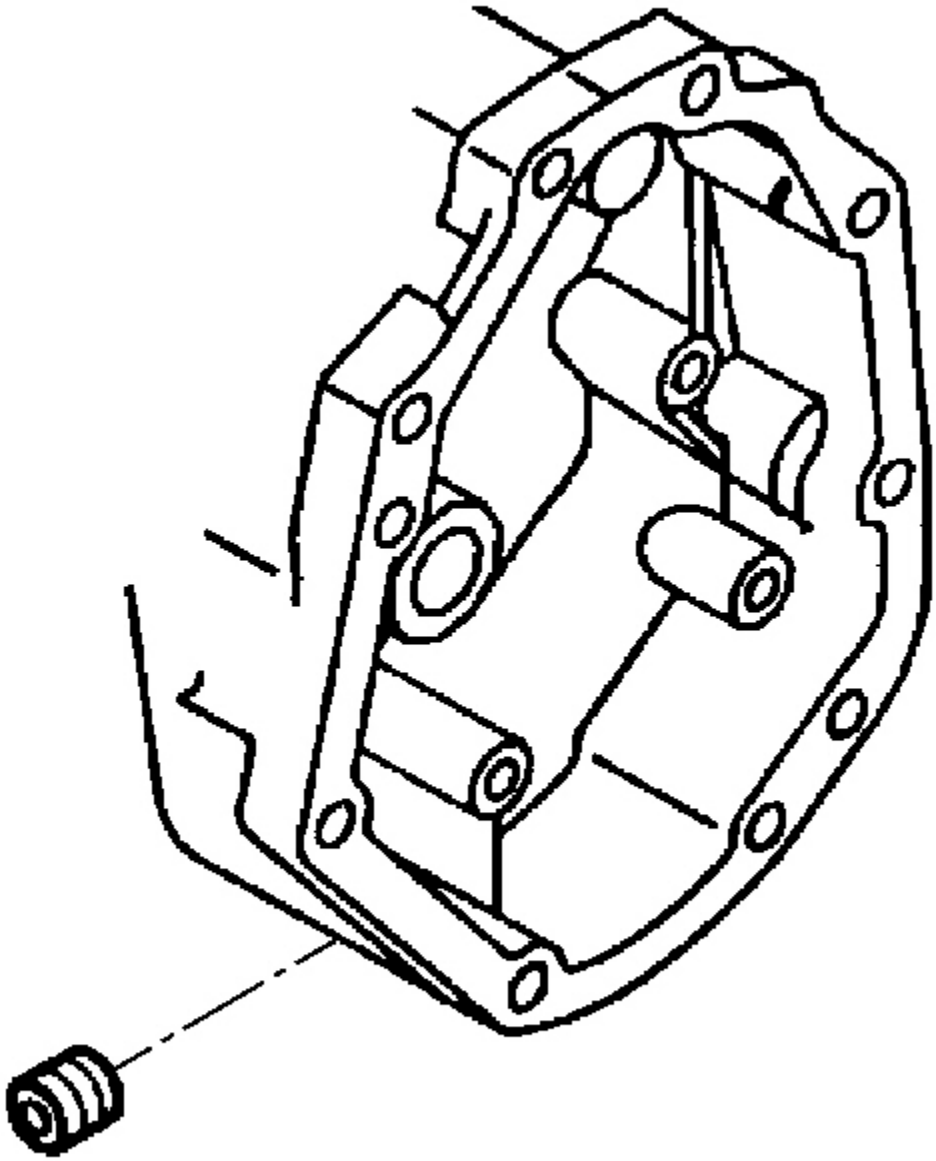

Fig. 280: Identifying Transmission Case Drain Plug
Courtesy of GENERAL MOTORS CORP.

6. Install the transmission case drain plug.

   Tighten: Tighten the plug to 18 N.m (13 Ib. ft).

cardiagn.com

EXTENSION HOUSING ASSEMBLE (CTSV)

Tools Required

- **J 8092** Drive Handle. See **Special Tools** .
- **J 26508-A** Transmission Rear Seal Installer. See **Special Tools** .
- **J 21426** Outer Output Shaft Seal Installer. See **Special Tools** .
- **J 39546** Bearing Race Installer. See **Special Tools** .
- **J 39437** Bushing Installer. See **Special Tools** .

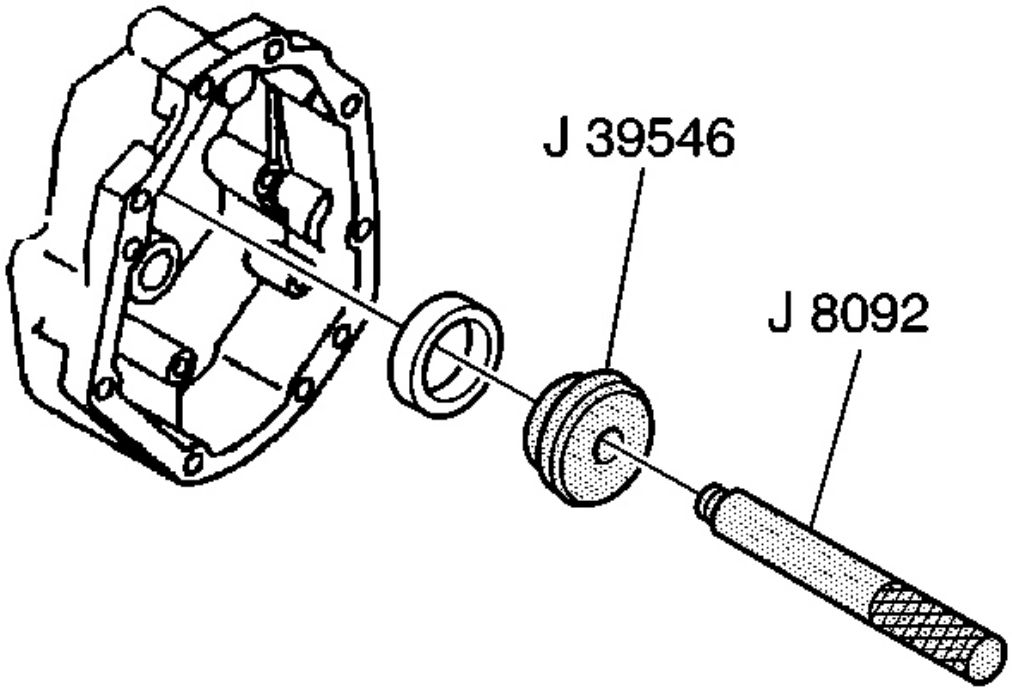

Fig. 281: Installing Mainshaft Bearing Race
Courtesy of GENERAL MOTORS CORP.

1. Install the mainshaft bearing race, using the **J 39546** and the **J 8092** .

cardiagn.com

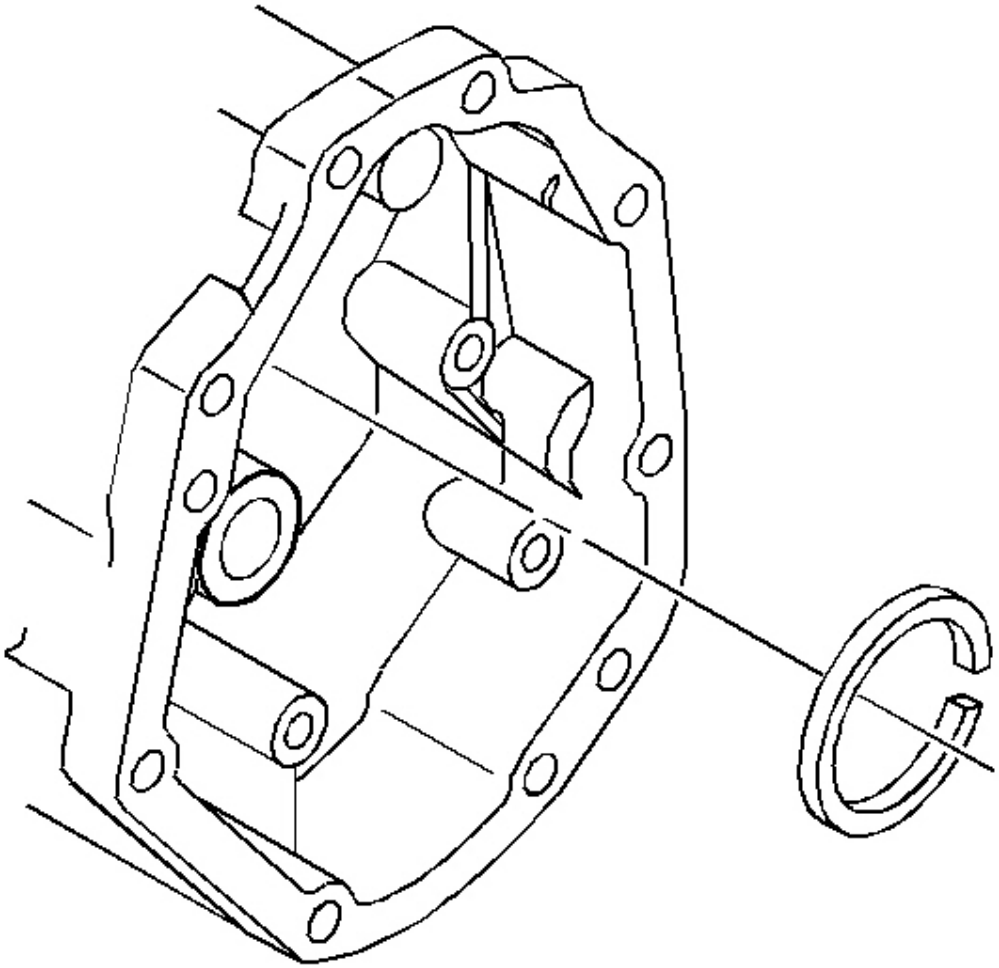

Fig. 282: Locating Mainshaft Bearing Race Retainer Ring
Courtesy of GENERAL MOTORS CORP.

2. Install the mainshaft bearing race retainer ring.

cardiagn.com

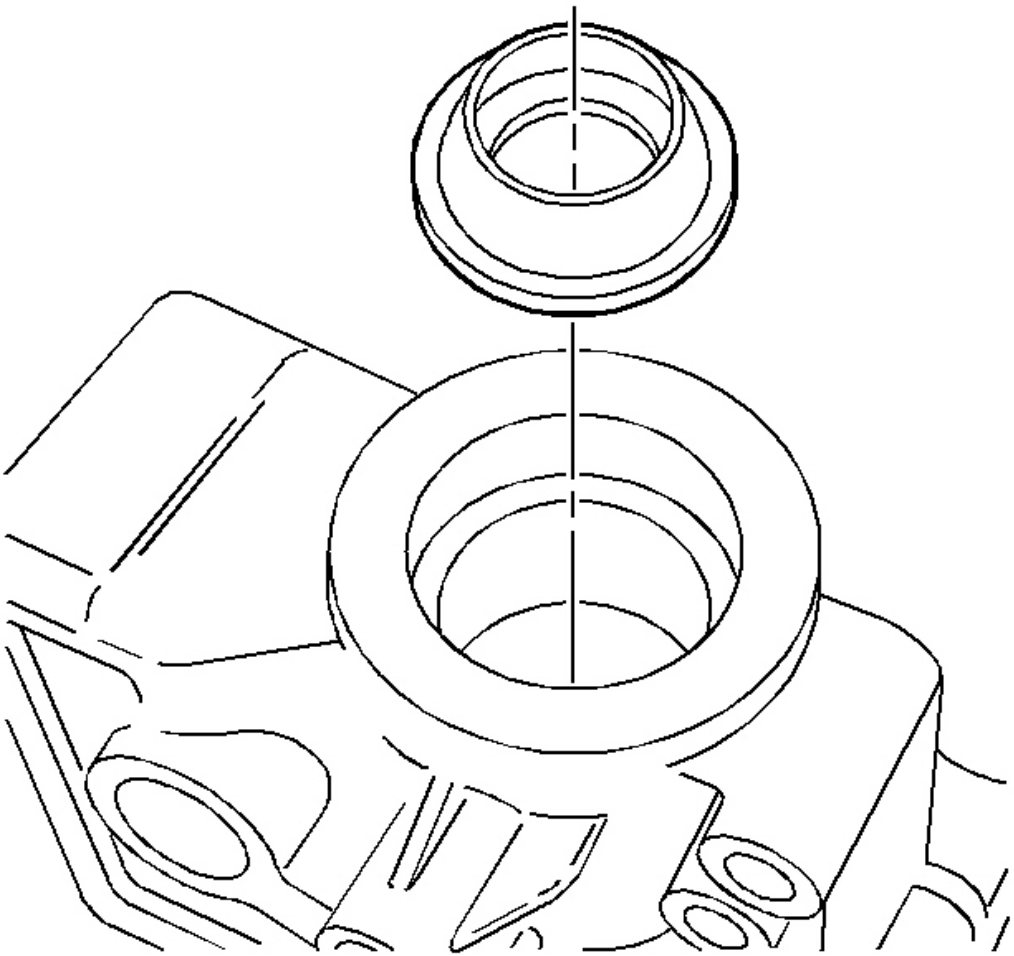

Fig. 283: Installing Output Shaft Seal
Courtesy of GENERAL MOTORS CORP.

3. Install the output shaft seal using the **J 21426** .

cardiagn.com

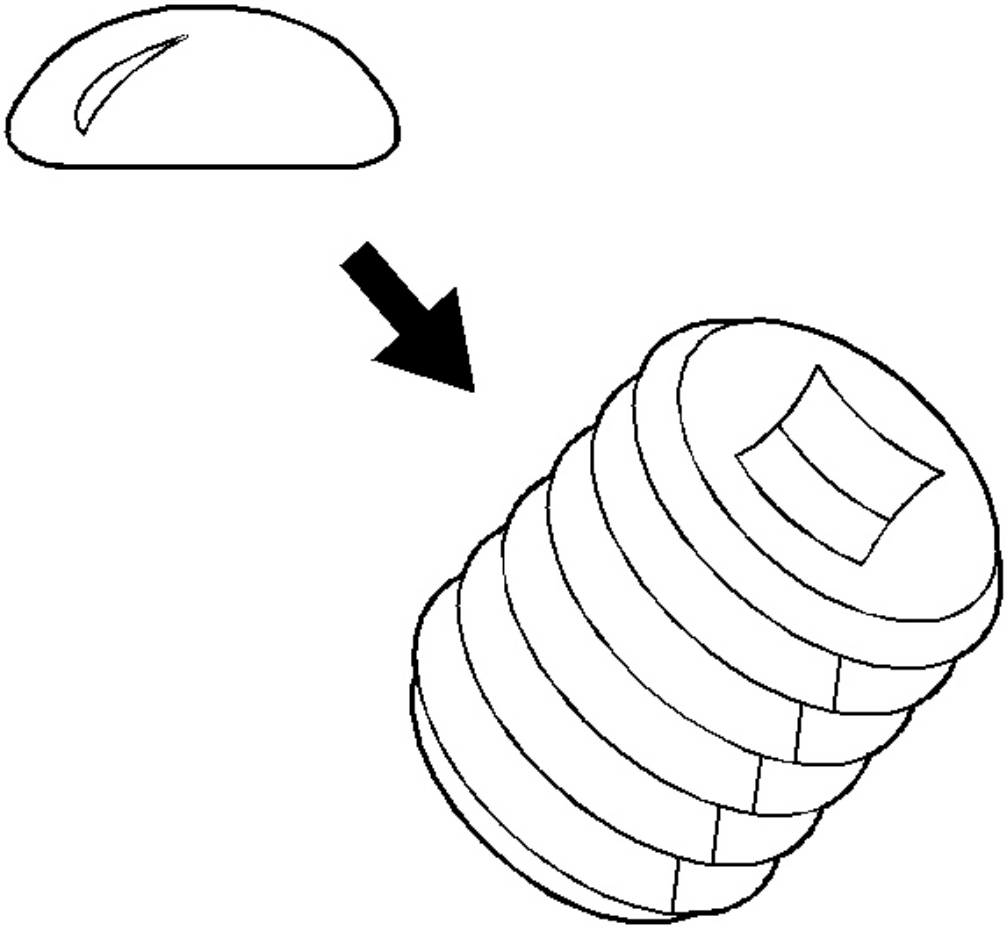

Fig. 284: Applying Sealant To Adapter Plate Plug Threads
Courtesy of GENERAL MOTORS CORP.

4. Apply sealer GM P/N 12346004 (Canadian P/N 10953480) or equivalent to the transmission case drain plug.

cardiagn.com

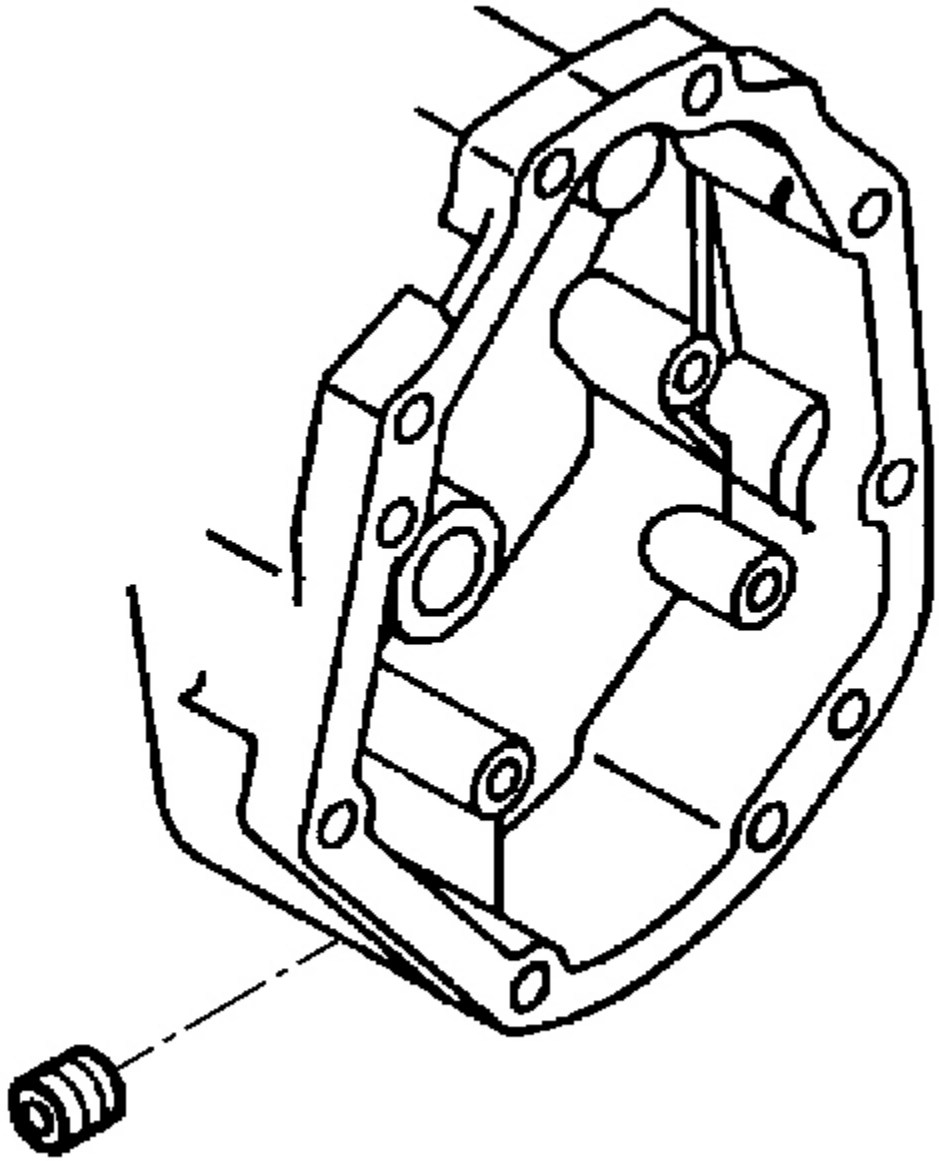

Fig. 285: Identifying Transmission Case Drain Plug
Courtesy of GENERAL MOTORS CORP.

NOTE: Refer to Fastener Notice in Cautions and Notices.

5. Install the transmission case drain plug.

cardiagn.com

Tighten: Tighten the plug to 18 N.m (13 Ib. ft).

BEARINGS AND SPACERS CLEANING AND INSPECTION

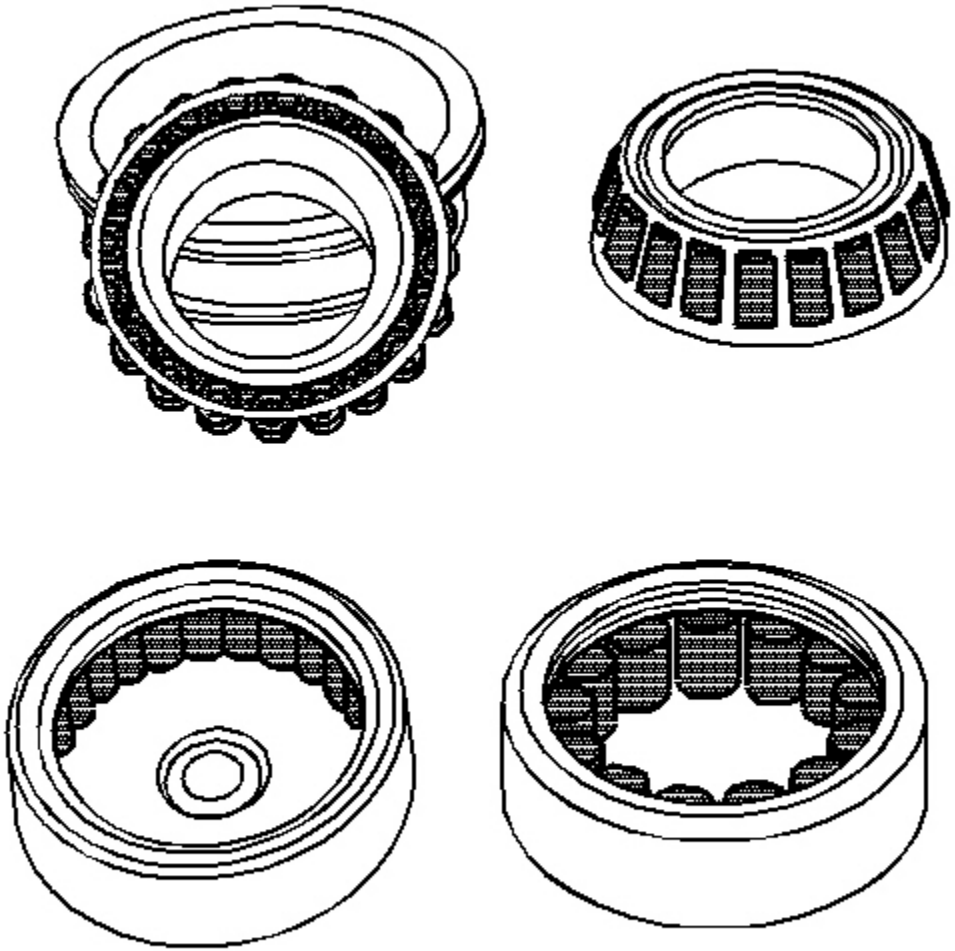

Fig. 286: View of Bearings & Spacers
Courtesy of GENERAL MOTORS CORP.

NOTE: **Do not allow the bearings to spin. Turn them slowly by hand. Spinning the bearings may damage the race and the rollers.**

1. Clean all the bearing parts in a suitable solvent. Air dry all the parts.

cardiagn.com

2. Lubricate the bearings. Use Dexron(R) III transmission lubricant.
3. Inspect the bearings and journals for roughness and unusual wear or damage.
4. Inspect the mainshaft bearing journals for wear.
5. Inspect the mainshaft speed gear bearings for wear.
6. Inspect the main drive gear pilot bearing rollers for wear.
7. Replace parts which show signs of excessive wear.
8. Do not file surfaces which have been hardened and precision ground.
9. Replace worn or damaged bearings.
10. Replace mated bearing parts when only one part is damaged.

GEARS CLEANING AND INSPECTION

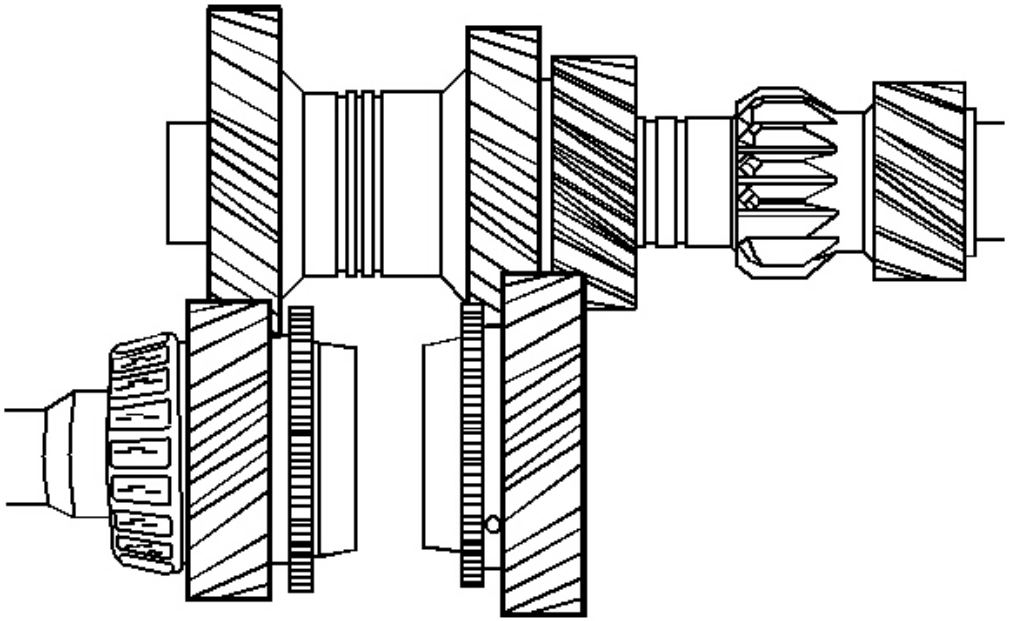

Fig. 287: View Of Gears
Courtesy of GENERAL MOTORS CORP.

1. Clean all the parts in a suitable solvent. Air dry all the parts.
2. Inspect the gear tooth surfaces on all the gear sets for the following conditions:
   - Cracks
   - Pitting

cardiagn.com

    - Nicks
    - Chipped gear teeth
    - High spots (Small-shiny spots on the gear teeth mating surface) that could cause gear noise
3. Inspect for damaged splines on the input shaft, mainshaft, and the countershaft extension.
4. Remove nicks and burrs with a soft stone or a crocus cloth.
5. Replace a burred or nicked part that cannot be reconditioned by hand.
6. Replace gears and gear assemblies that are worn or damaged.

COUNTERSHAFT EXTENSION ASSEMBLE

Tools Required

- **J 5590** Press Tube. See **Special Tools** .
- **J 39473** Mainshaft Bearing Installer. See **Special Tools** .

cardiagn.com

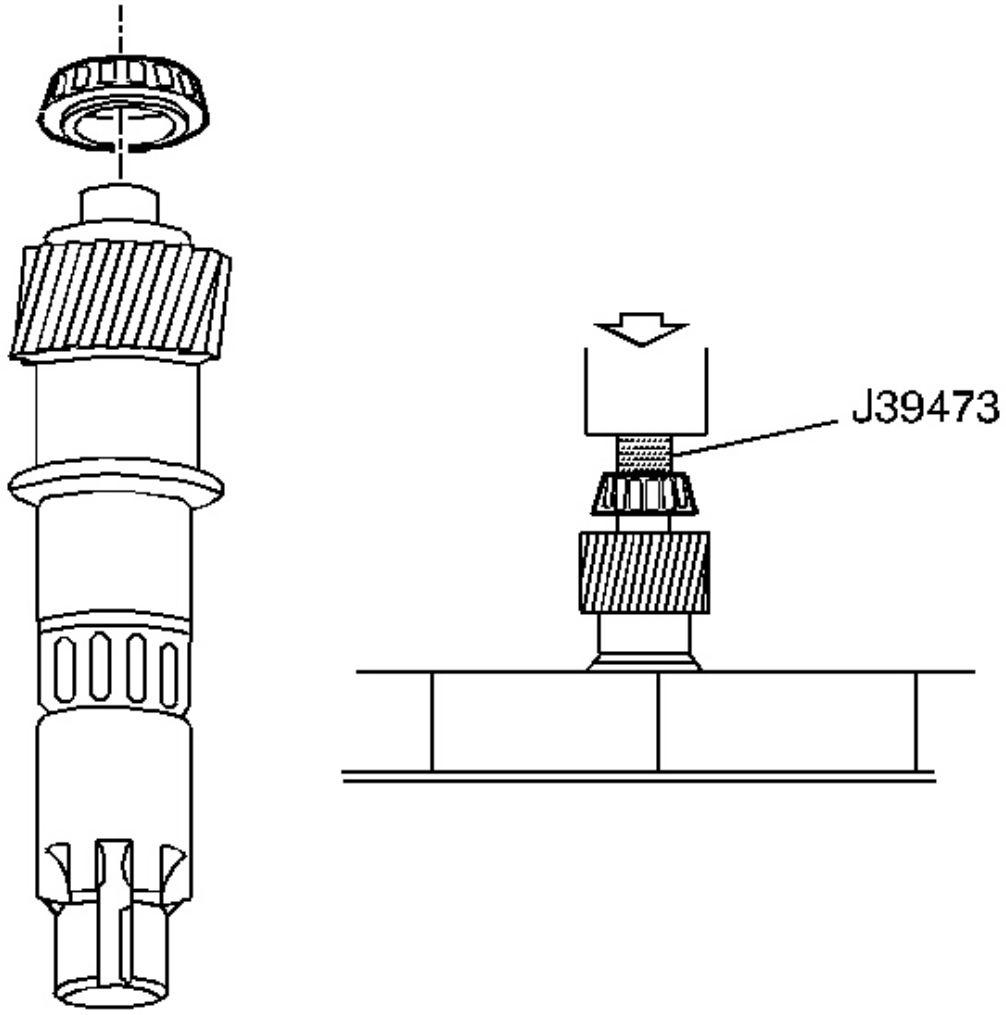

Fig. 288: Installing Small Tapered Bearing Using J 39473
Courtesy of GENERAL MOTORS CORP.

1. Install a new small tapered bearing, using the **J 39473** , V-blocks, and a hydraulic press.

cardiagn.com

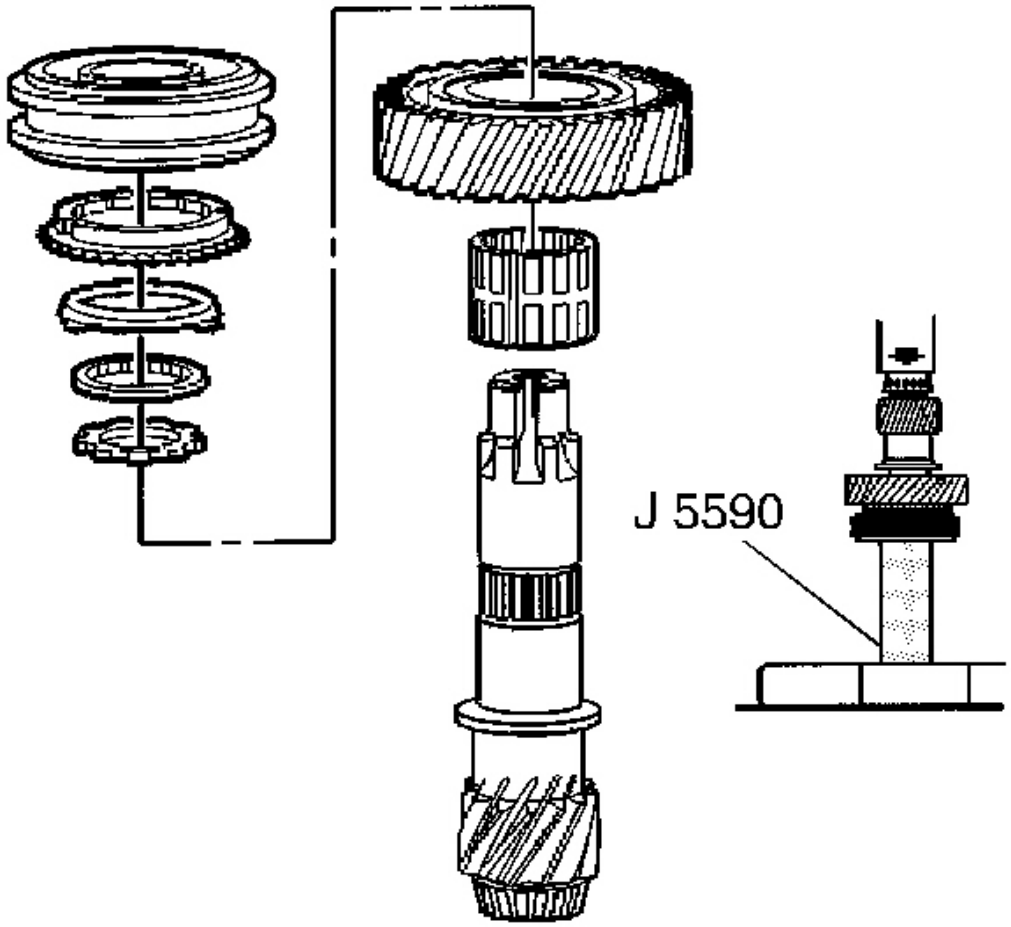

Fig. 289: Installing 5th/6th Speed Synchronizer Assembly
Courtesy of GENERAL MOTORS CORP.

2. Do the following when installing the 5th/6th speed synchronizer assembly:
    1. Start the press operation.
    2. Stop pressing before the keys engage the blocking ring slots.
    3. Lift and rotate the 5th speed gear in order to engage the keys with the blocking ring.
    4. Continue pressing until the synchronizer is seated.
3. Install the following parts in order:
    1. The 5th speed drive gear caged needle bearing
    2. The 5th speed drive gear
    3. The thrust washer

cardiagn.com

4. The 5th speed drive gear inner cone
5. The 5th speed drive gear friction cone
6. The 5th speed drive gear blocking ring
7. The 5th/6th speed synchronizer assembly (The inside diameter (ID) groove on the sleeve faces 5th speed gear.) Use the **J 5590** and a hydraulic press.

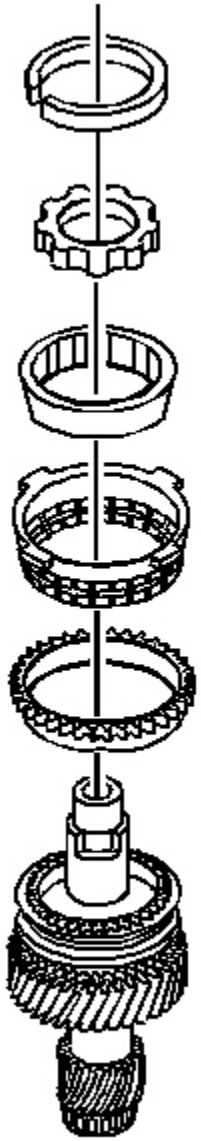

cardiagn.com

Fig. 290: Identifying 6th Speed Cones & Rings
Courtesy of GENERAL MOTORS CORP.

4. Install the following parts in order:
    1. The 6th speed drive gear blocking ring
    2. The 6th speed drive gear friction cone
    3. The 6th speed drive gear inner cone
    4. The thrust washer
    5. A new 5th/6th speed synchronizer retainer ring

cardiagn.com

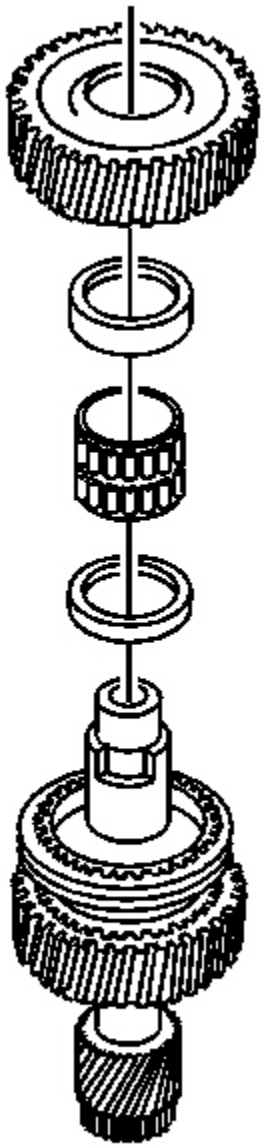

Fig. 291: View Of 6th Speed Assembly
Courtesy of GENERAL MOTORS CORP.

5. Install the following parts in order:
    1. The 6th speed drive gear spacer
    2. The 6th speed drive gear caged needle bearing

cardiagn.com

3. The 6th speed drive gear spacer
4. The 6th speed drive gear

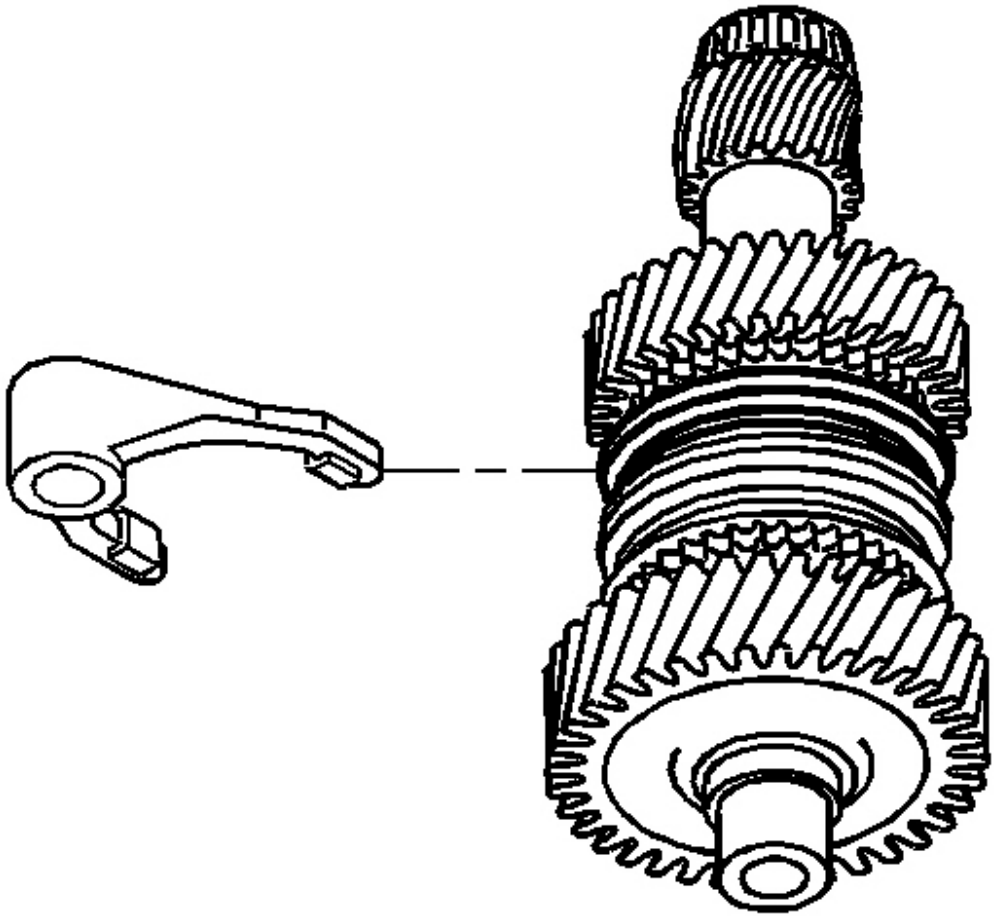

Fig. 292: View Of 5th/6th Speed Shift Fork
Courtesy of GENERAL MOTORS CORP.

6. Install the 5th/6th speed shift fork.

COUNTERSHAFT ASSEMBLE (MAIN SHAFT)

Tools Required

- **J 39438** Bearing Installer. See **Special Tools** .

cardiagn.com

- **J 5590** Press Tube. See **Special Tools** .

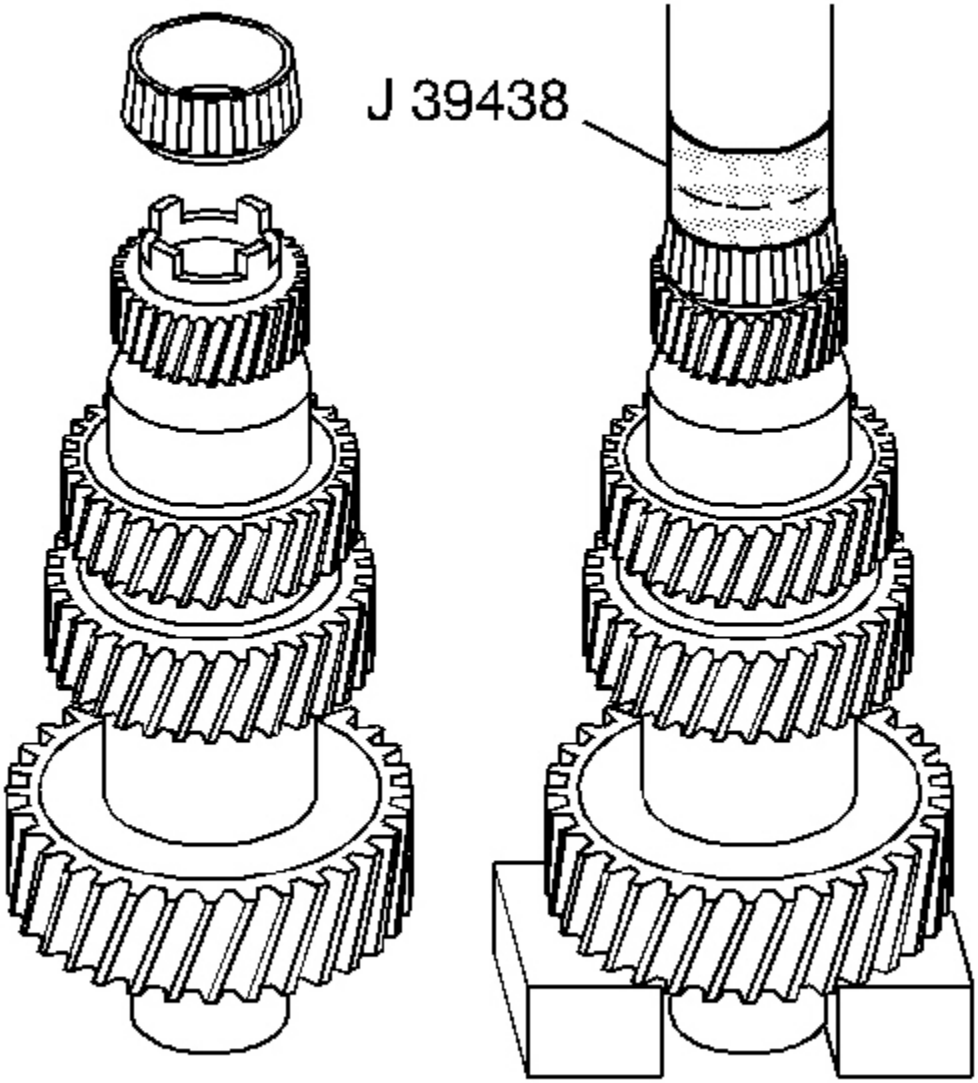

Fig. 293: Installing Large Tapered Countershaft Bearing
Courtesy of GENERAL MOTORS CORP.

1. Install a new large tapered bearing, using the **J 39438** , U-blocks and a hydraulic press.

cardiagn.com

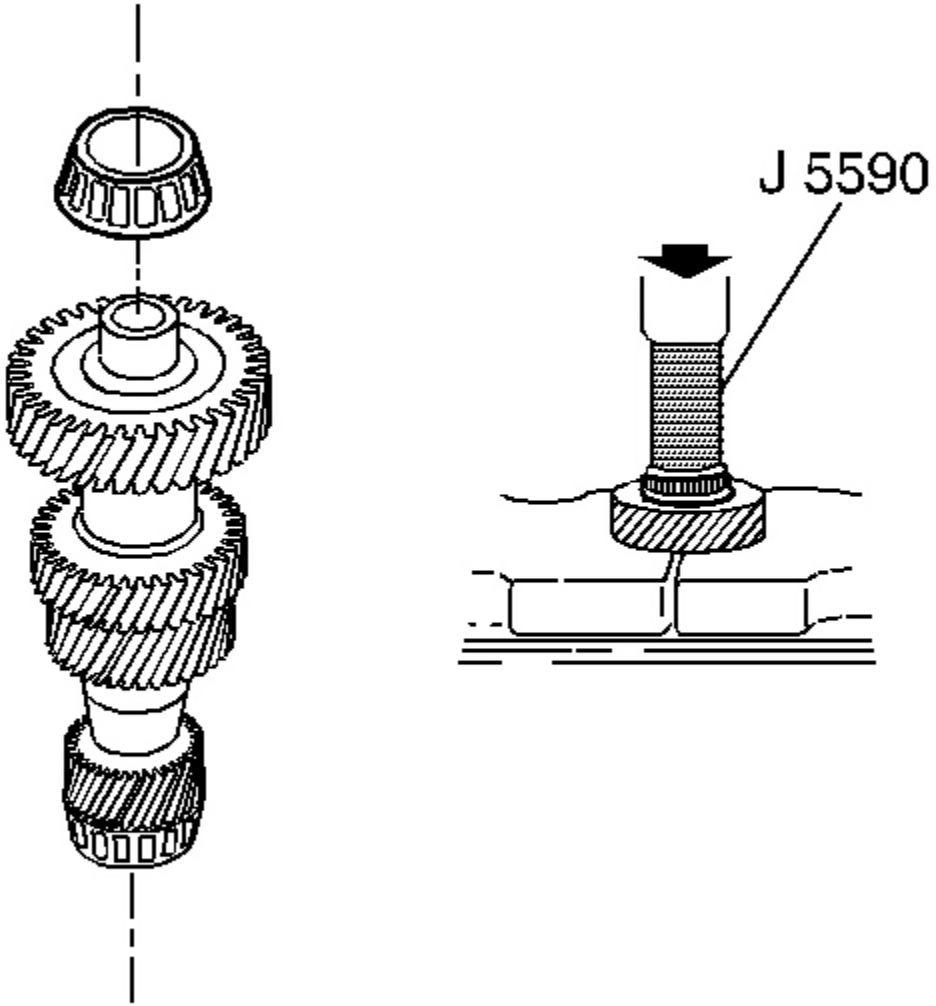

Fig. 294: Installing Countershaft Small Tapered Bearing
Courtesy of GENERAL MOTORS CORP.

2. Install a new small tapered bearing, using the **J 5590** and a hydraulic press.

MAINSHAFT AND INPUT SHAFT ASSEMBLE

Mainshaft

Tools Required

cardiagn.com

- **J 36183** Press Tube. See **Special Tools** .
- **J 36184** Press Tube Adapter. See **Special Tools** .
- **J 39371** 1st/2nd Synchronizer Installer. See **Special Tools** .
- **J 39473** Mainshaft Bearing Installer. See **Special Tools** .

1. Install the 3rd speed gear caged needle bearing and the spacer.

cardiagn.com

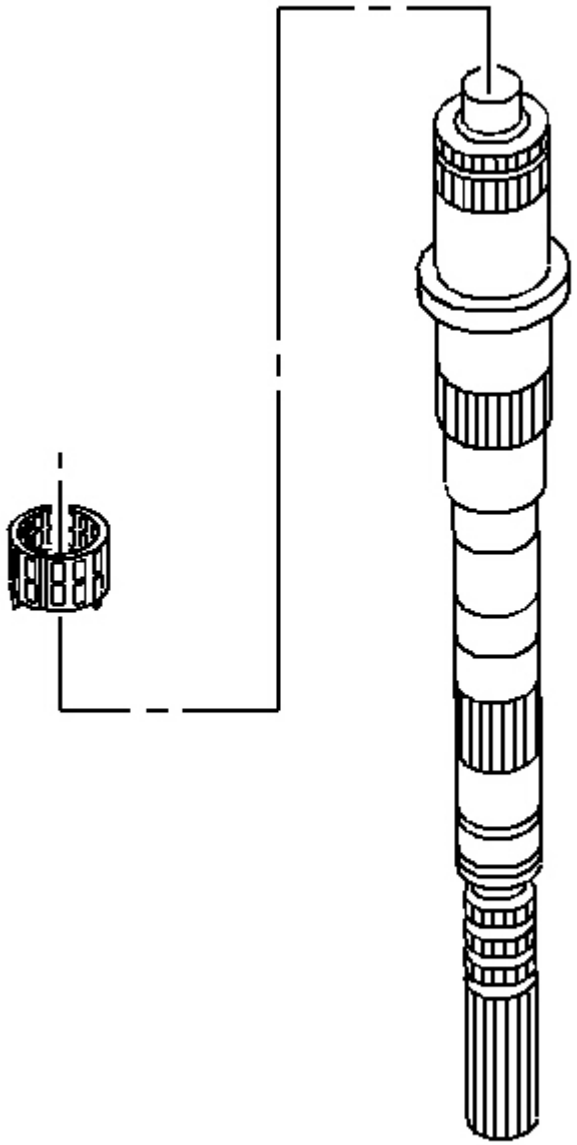

Fig. 295: View Of 3rd Speed Gear Caged Needle Bearing & Spacer
Courtesy of GENERAL MOTORS CORP.

2. Check the 3rd/4th speed gear synchronizer assembly scribe marks for correct positions.

cardiagn.com

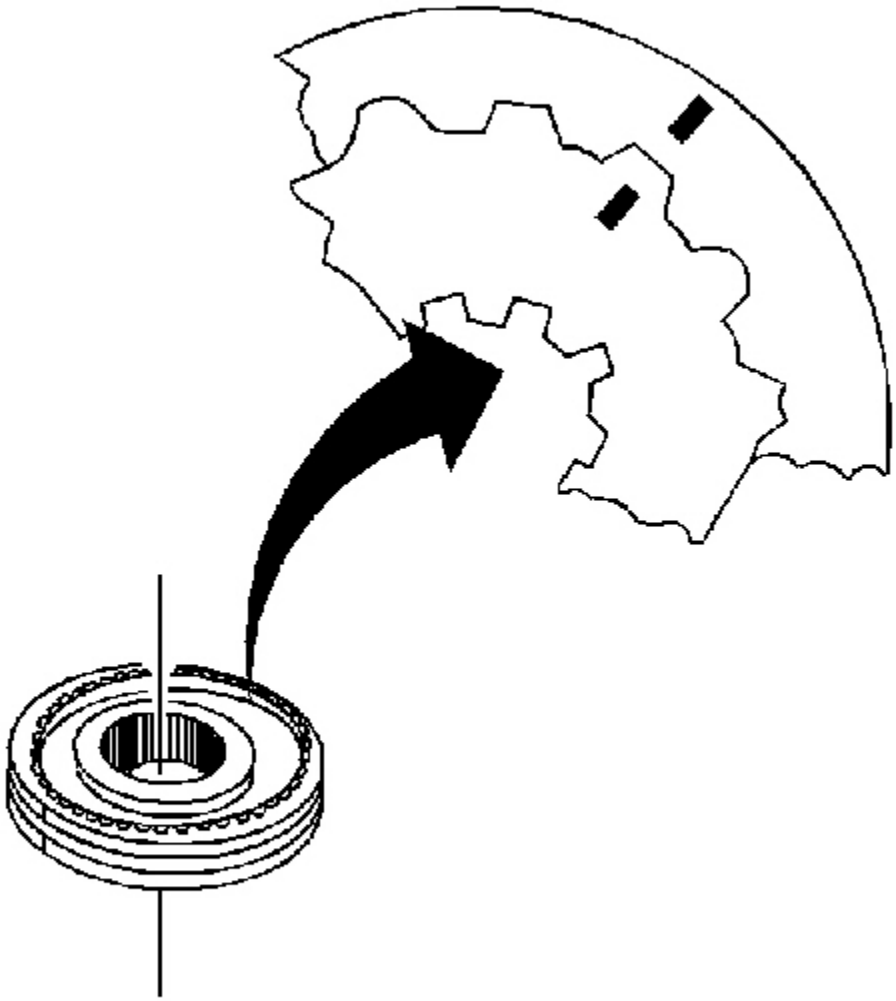

Fig. 296: Identifying Gear Synchronizer Assembly Scribe Marks
Courtesy of GENERAL MOTORS CORP.

cardiagn.com

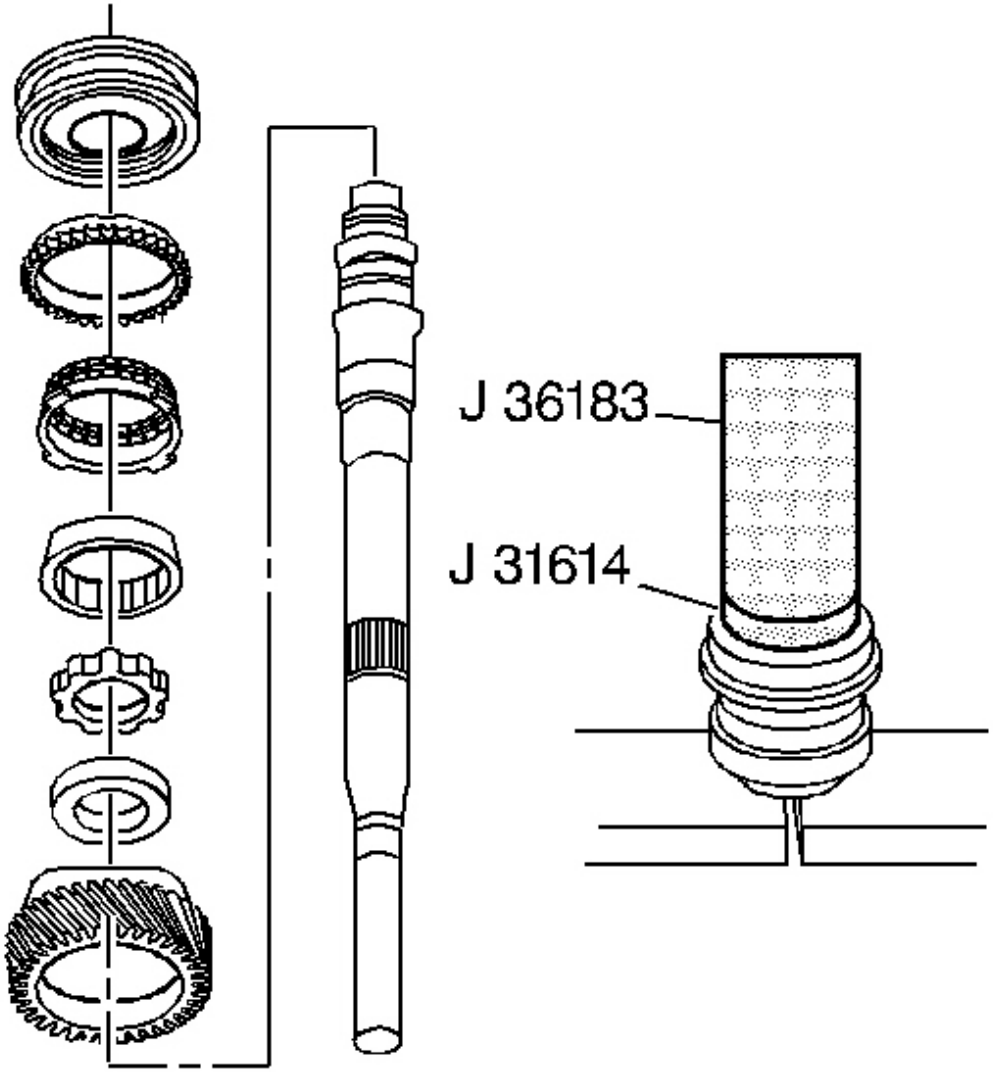

Fig. 297: Installing 3rd/4th Synchronizer Assembly
Courtesy of GENERAL MOTORS CORP.

3. Install the 3rd/4th synchronizer assembly as follows:
    1. Start the press operation.
    2. STOP pressing before the keys engage the blocking ring slots.
    3. Lift and rotate the 3rd speed gear in order to engage the keys with the blocking ring.
    4. Continue pressing until the synchronizer is seated.

cardiagn.com

4. Install the following parts in order, using the **J 36183** , the **J 36184** , and a hydraulic press:
    1. The 3rd speed gear
    2. The spacer
    3. The thrust washer
    4. The 3rd speed gear inner cone
    5. The 3rd speed gear friction cone
    6. The 3rd speed gear blocking ring
    7. The 3rd/4th speed gear synchronizer assembly (the groove on the sleeve faces the 3rd speed gear).

cardiagn.com

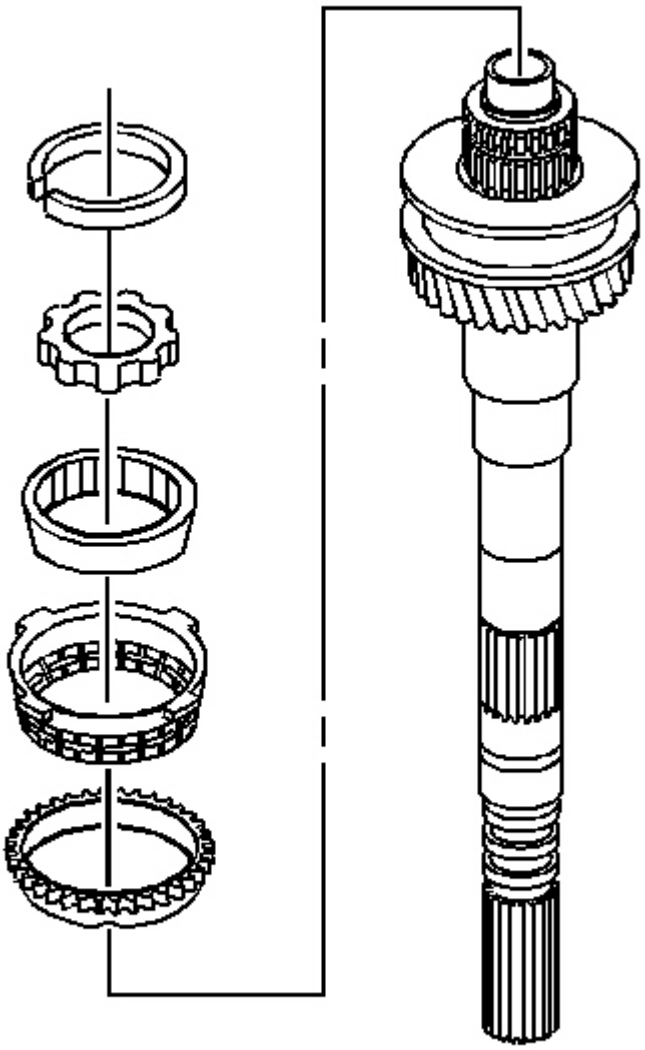

Fig. 298: Exploded View Of 4th Gear Assembly
Courtesy of GENERAL MOTORS CORP.

5. Install in the following order:
    1. 4th gear blocking ring
    2. 4th gear friction cone
    3. 4th gear inner cone
    4. 4th gear thrust washer

cardiagn.com

5. 3rd/4th synchronizer retainer ring

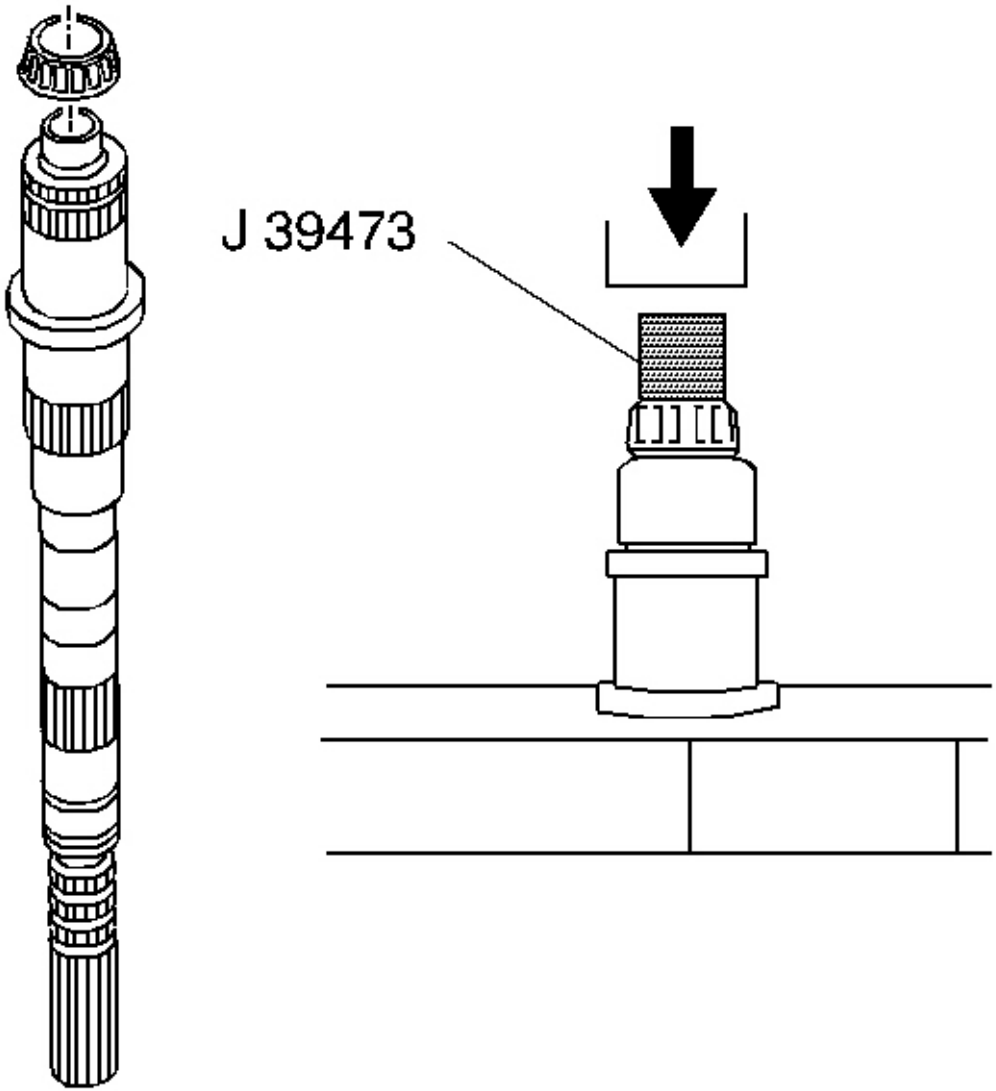

Fig. 299: Installing Mainshaft Small Tapered Bearing
Courtesy of GENERAL MOTORS CORP.

6. Install a new mainshaft small tapered bearing, using the **J 39473** , V-blocks, and a hydraulic press.

cardiagn.com

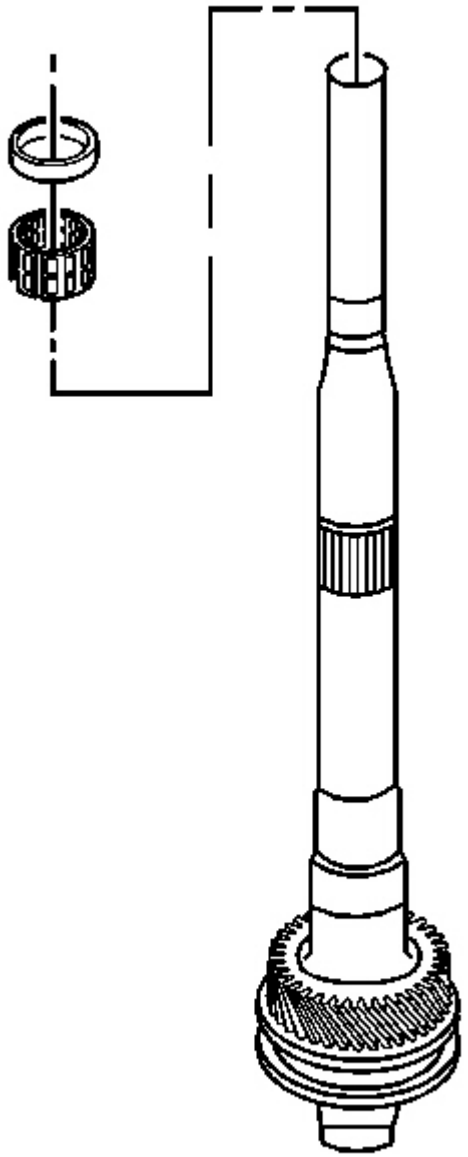

Fig. 300: View Of 2nd Speed Gear Caged Needle Bearing & Bearing Spacer
Courtesy of GENERAL MOTORS CORP.

7. Install the 2nd speed gear caged needle bearing and bearing spacer.
8. Do the following when installing the 1st/2nd synchronizer assembly:
    1. Start the press operation.

cardiagn.com

2. Stop pressing before the keys engage the blocking ring slots.
3. Lift and rotate the 2nd speed gear in order to engage the keys with the blocking ring.
4. Continue pressing until the synchronizer is seated.

9. Install the following parts in order using the **J 39371** and a hydraulic press:

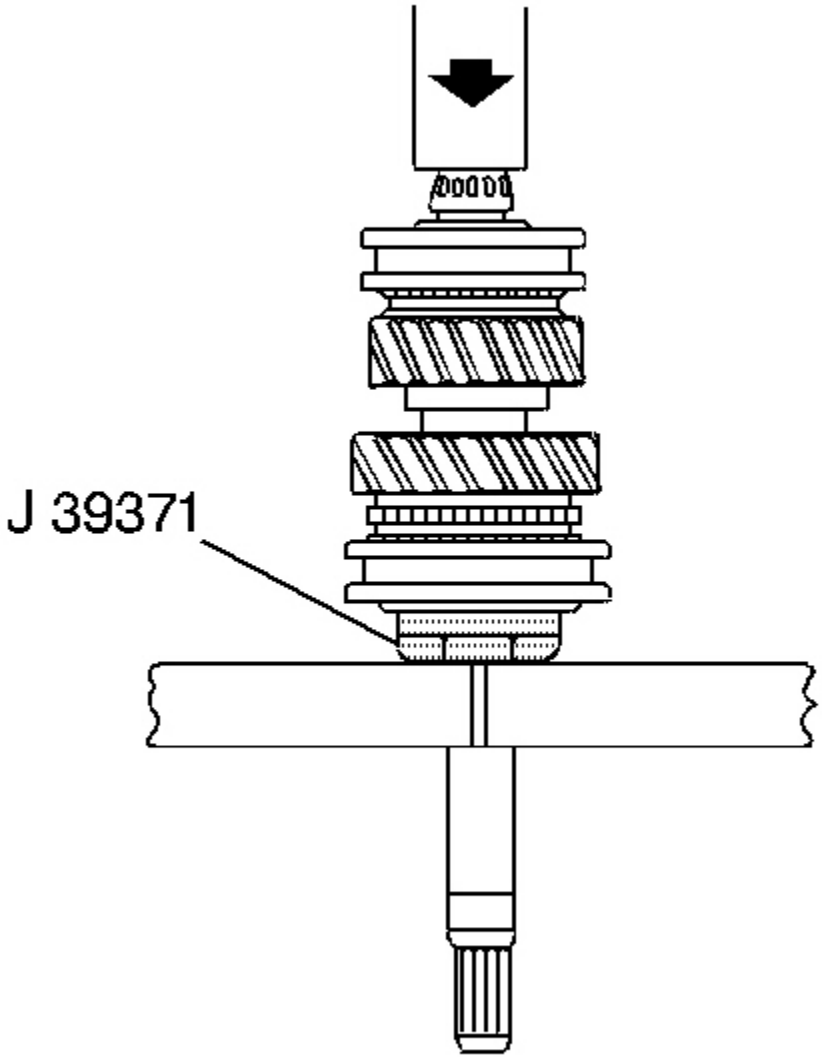

Fig. 301: Identifying J 39371
Courtesy of GENERAL MOTORS CORP.

cardiagn.com

1. The 2nd speed gear
2. The 2nd speed gear inner cone
3. The 2nd speed gear friction cone
4. The 2nd speed gear blocking ring
5. The 1st/2nd synchronizer assembly (The ID groove on the sleeve faces the 1st speed gear.)

cardiagn.com

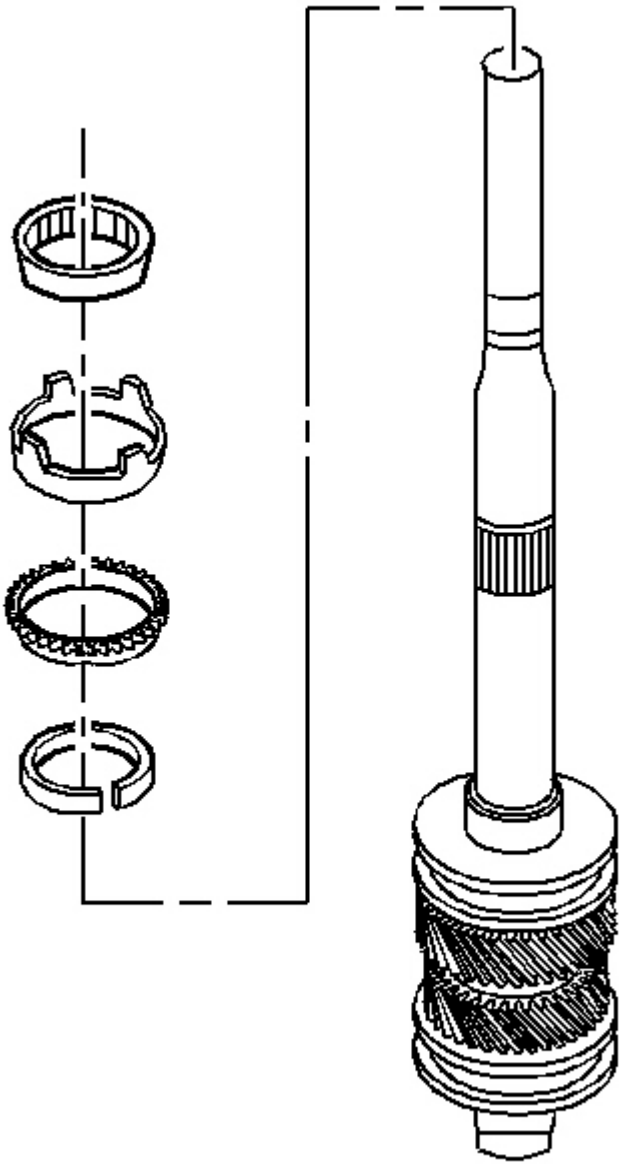

Fig. 302: View Of 1st Speed Gear Cones & Rings
Courtesy of GENERAL MOTORS CORP.

10. Install the following parts in order:
    1. The retainer ring
    2. The blocking ring

cardiagn.com

3. The friction cone
4. The inner cone

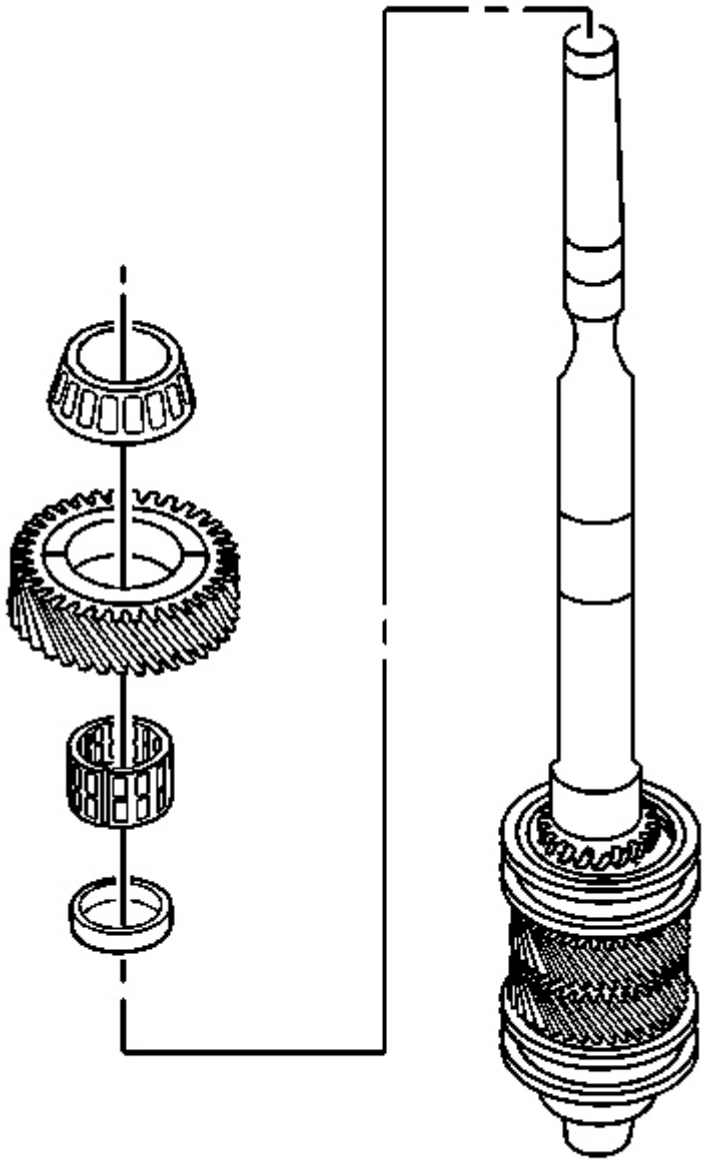

Fig. 303: View Of 1st Speed Gear Components
Courtesy of GENERAL MOTORS CORP.

cardiagn.com

11. Install the following parts in order:
    1. The 1st speed gear bearing spacer
    2. The 1st speed gear caged needle bearing
    3. The 1st speed gear
    4. The mainshaft large tapered bearing and the O-ring seal

Input Shaft

Tools Required

- **J 28537-17** Bearing Race Installer. See **Special Tools** .
- **J 25234** Press Tube. See **Special Tools** .

1. Install a new bearing race on the input shaft, using the **J 28537-17** and a hydraulic press.

cardiagn.com

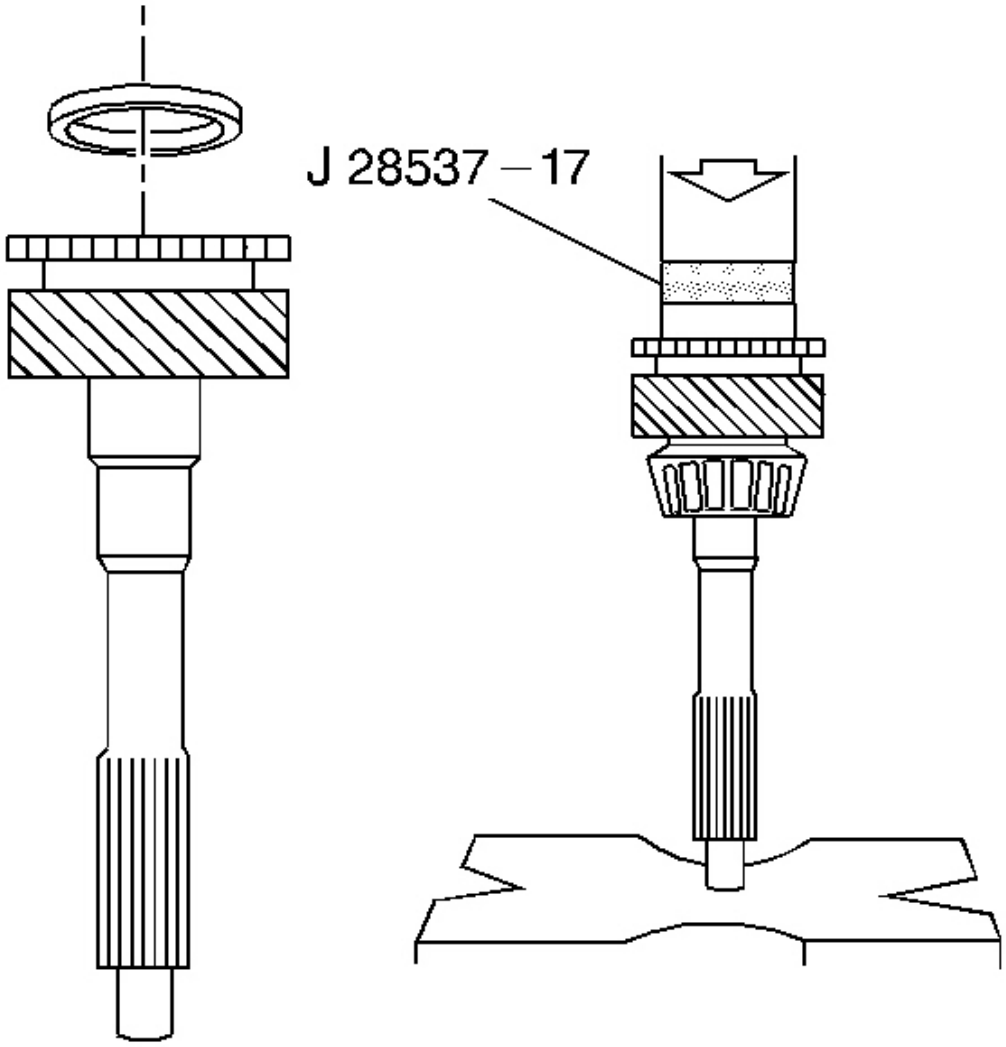

Fig. 304: Installing Input Shaft Bearing Race Using J 28537-17
Courtesy of GENERAL MOTORS CORP.

cardiagn.com

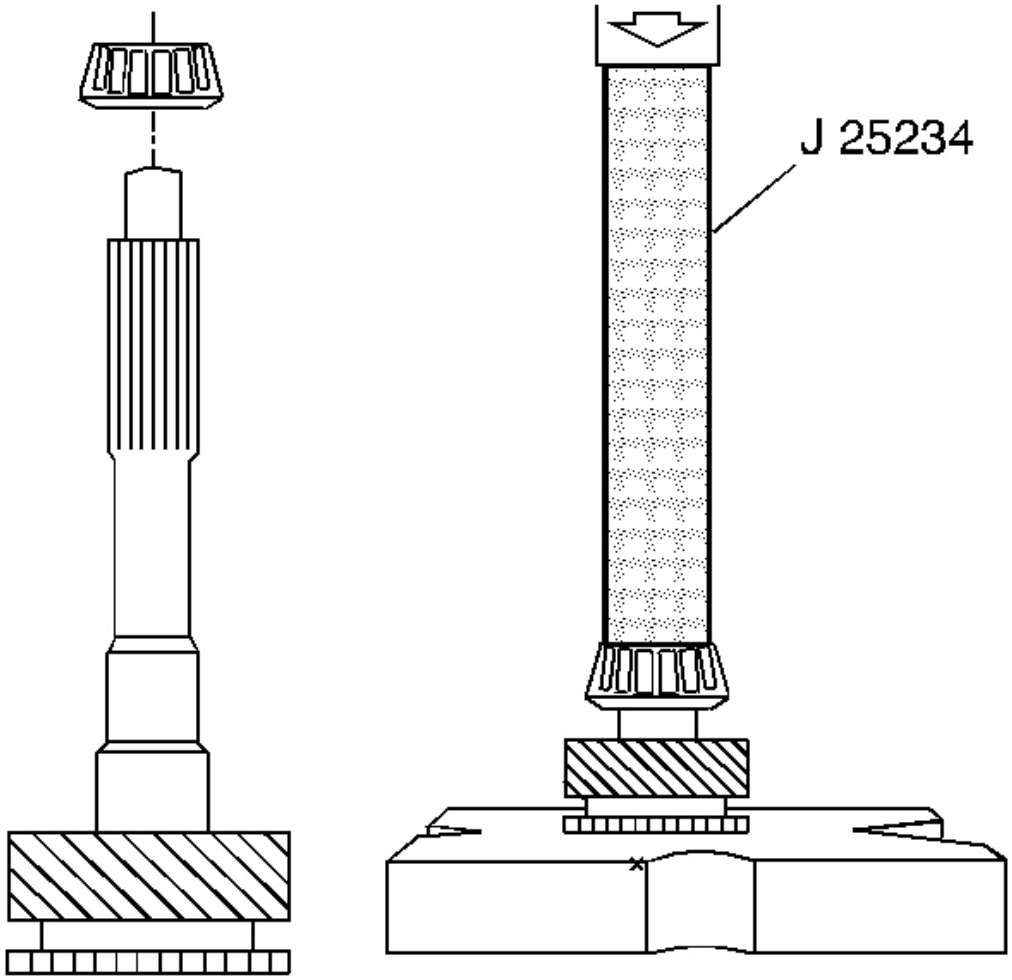

Fig. 305: Installing Tapered Bearing On Input Shaft Using J 25234
Courtesy of GENERAL MOTORS CORP.

2. Install a new tapered bearing on the input shaft. Use the **J 25234** and a hydraulic press.

TRANSMISSION ASSEMBLE (Y CAR)

Tools Required

J 36850 Transjel(R) Lubricant Assembly Lube. See **Special Tools** .

Shift Shaft Assemblies and Gear Clusters Installation

cardiagn.com

1. Lubricate all components as assembly progresses, using **J 36850** .

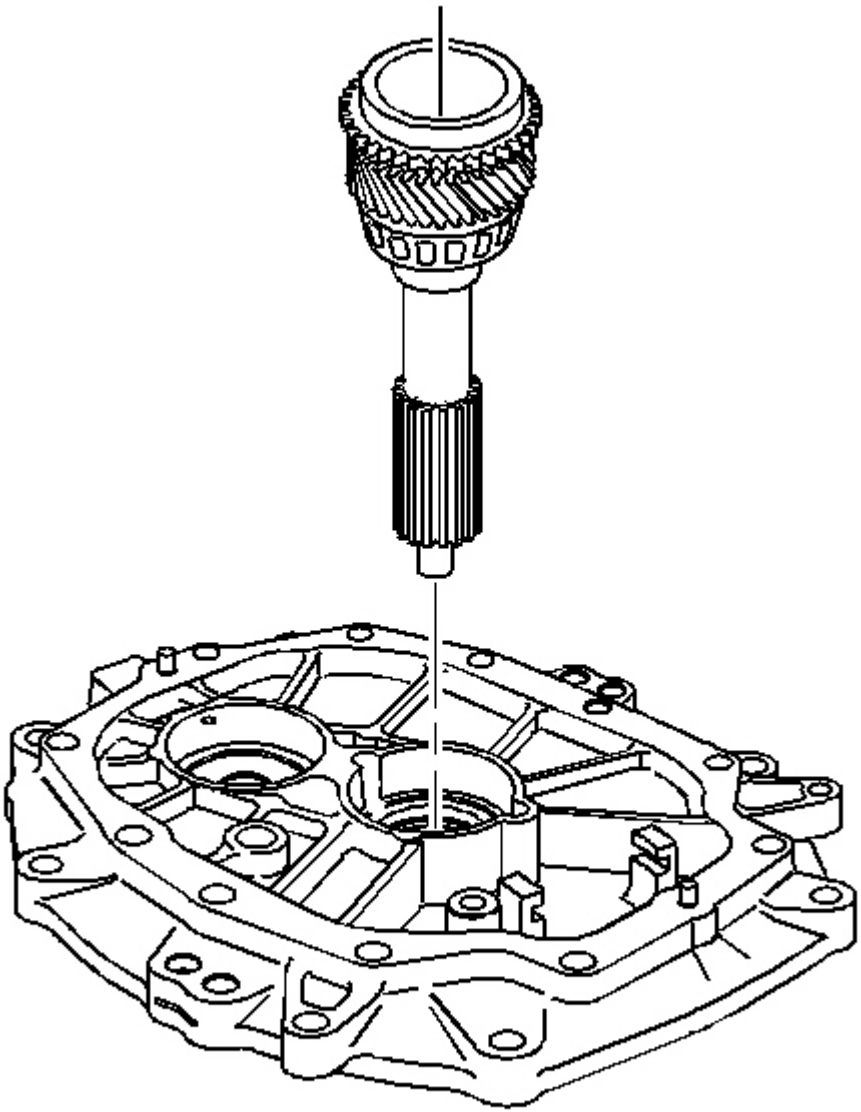

Fig. 306: View Of Input Shaft
Courtesy of GENERAL MOTORS CORP.

2. Install the input shaft in the adapter plate.

cardiagn.com

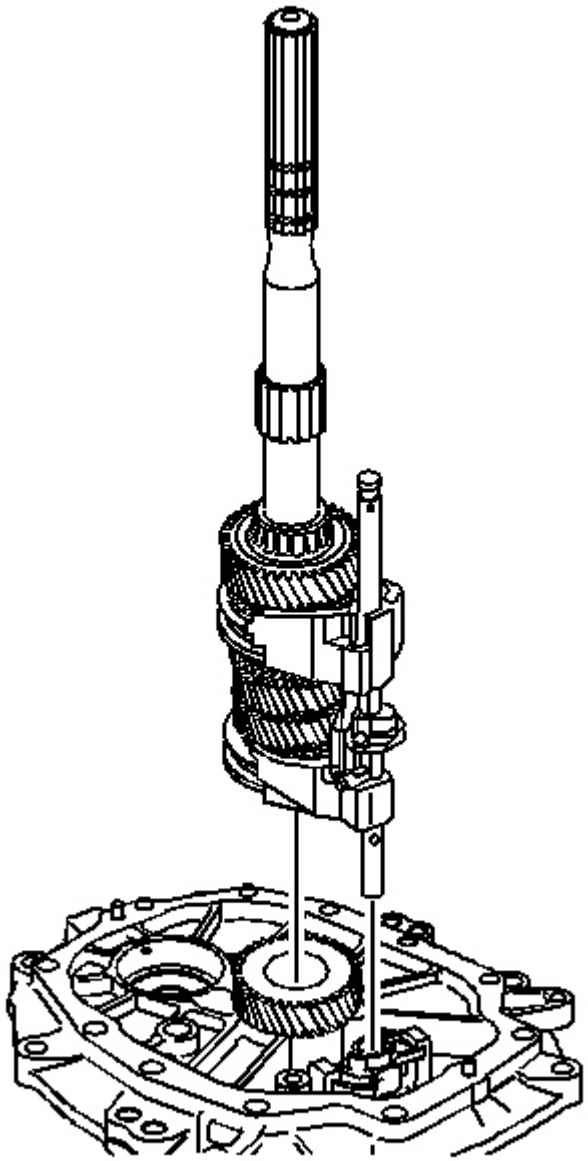

Fig. 307: Installing/Removing Mainshaft Assembly & Shift Shaft Components
Courtesy of GENERAL MOTORS CORP.

3. Assemble the shift shaft to the mainshaft.
4. Install the neutral return roll pin to the shift shaft.
5. Install the mainshaft and the shift shaft assembly into the adapter plate.

cardiagn.com

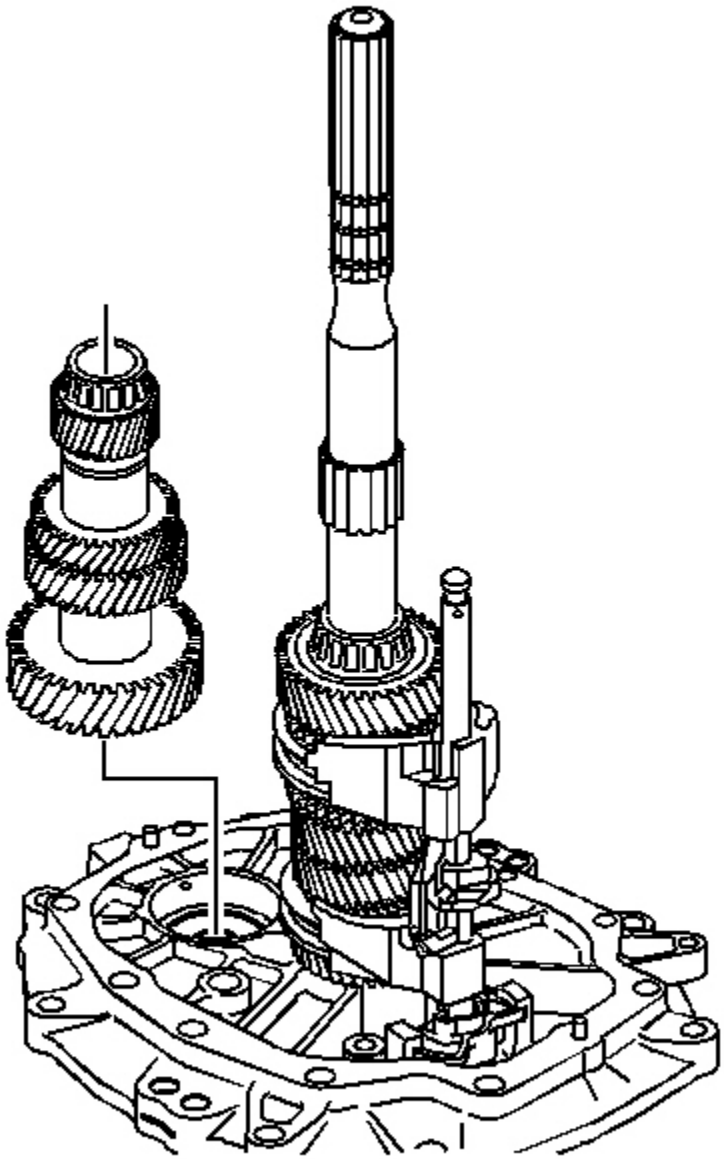

Fig. 308: Installing/Removing Countershaft Assembly
Courtesy of GENERAL MOTORS CORP.

6. Install the countershaft assembly using the following sequence:
    1. Lift up the mainshaft assembly enough in order to install the countershaft assembly.
    2. Install the countershaft assembly.

cardiagn.com

3. Lift the mainshaft assembly enough in order to rotate the input shaft to engage the synchronizer keys with 4th gear blocking ring.

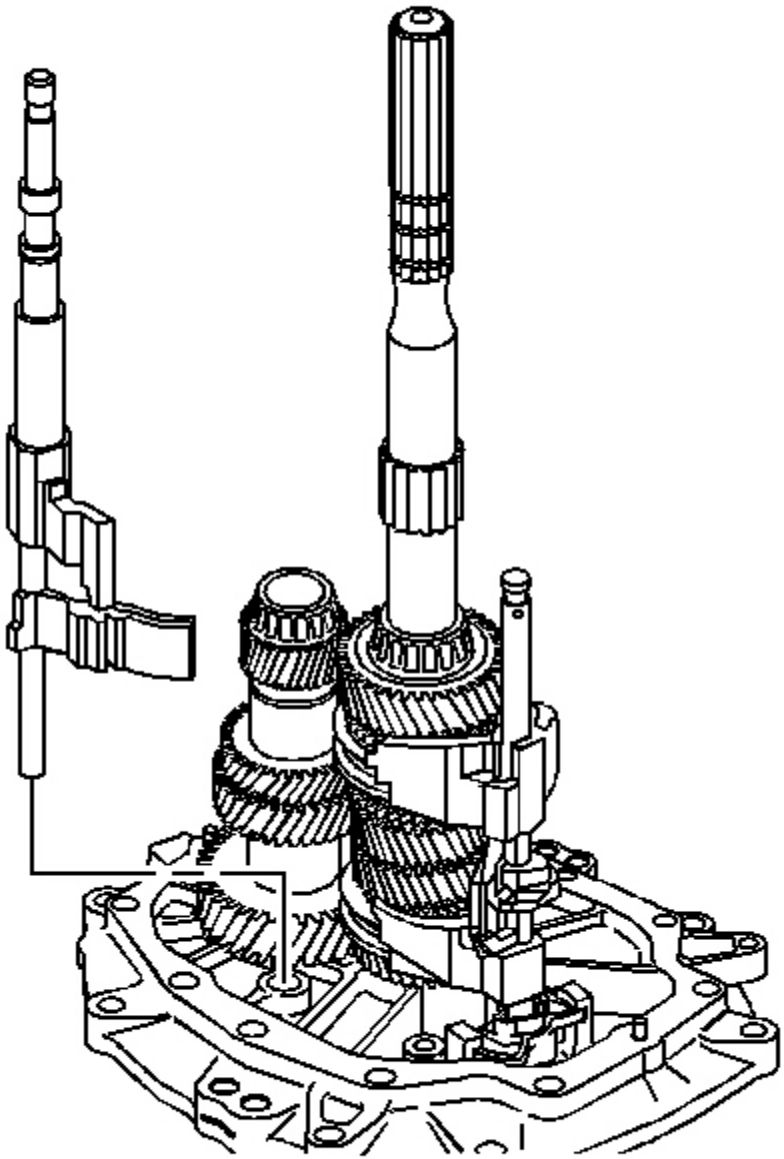

Fig. 309: View Of 5th/6th & Reverse Shift Shaft
Courtesy of GENERAL MOTORS CORP.

cardiagn.com

7. Install the 5th/6th and the reverse shift shaft.

   Align the slots of the shift shaft levers with the interlock plate.

Reverse Lockout Assembly Assemble

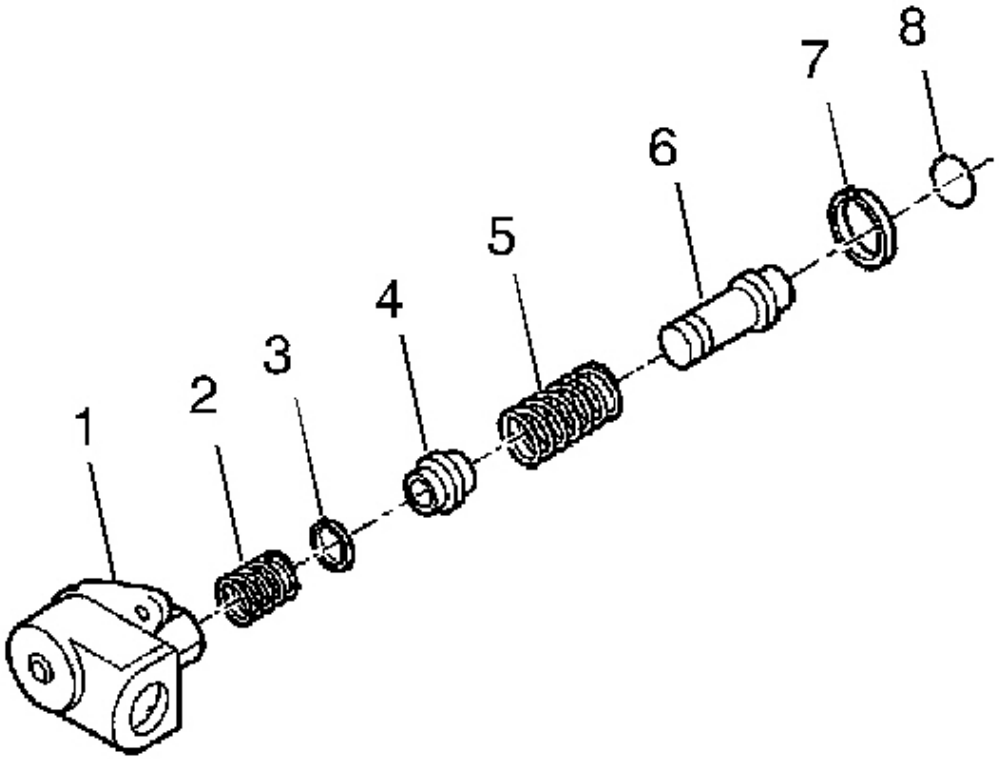

Fig. 310: Exploded View Of Reverse Lockout Assembly
Courtesy of GENERAL MOTORS CORP.

CAUTION: The reverse lockout assembly is under spring pressure. Exercise caution when removing the retainer ring, as bodily injury may result.

1. Install the reverse lockout plunger (6).
2. Install the reverse lockout outer spring (5).
3. Install the reverse lockout collar (4).
4. Compress the reverse lockout plunger and the collar (4) in a vise and Install the retainer ring (3).

cardiagn.com

5. Install the reverse lockout inner spring (2).
6. Install the reverse lockout components in the body (1).
7. Install the retainer ring (7).
8. Install the O-ring to body (8).

Transmission Case Installation

Tools Required

- **J 41099** Skip Shift Sensor Remover/Installer. See **Special Tools** .
- **J 36850** Transjel(R) Lubricant. See **Special Tools** .

IMPORTANT: Lubricate all components as the assembly progresses. Use J 36850 or the equivalent.

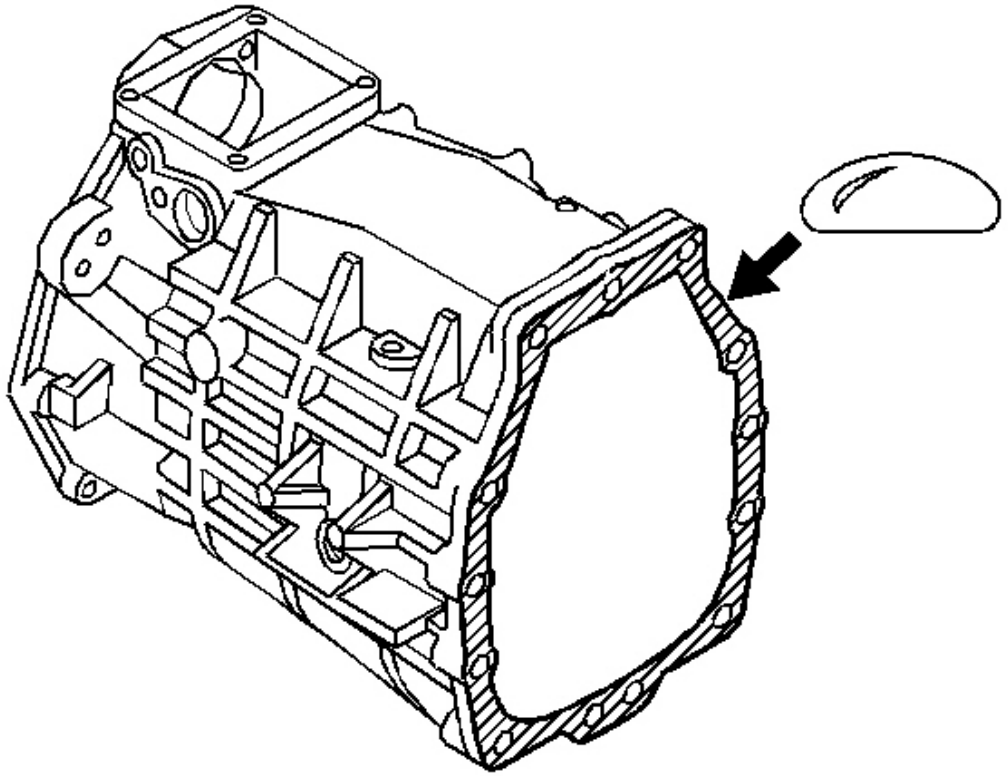

Fig. 311: Apply Sealer To Transmission Case To Adapter Plate Mating Surface

cardiagn.com

Courtesy of GENERAL MOTORS CORP.

1. Apply sealant GM P/N United States 12345739, GM P/N Canada 10953472 or equivalent to the transmission case to adapter plate mating surface.

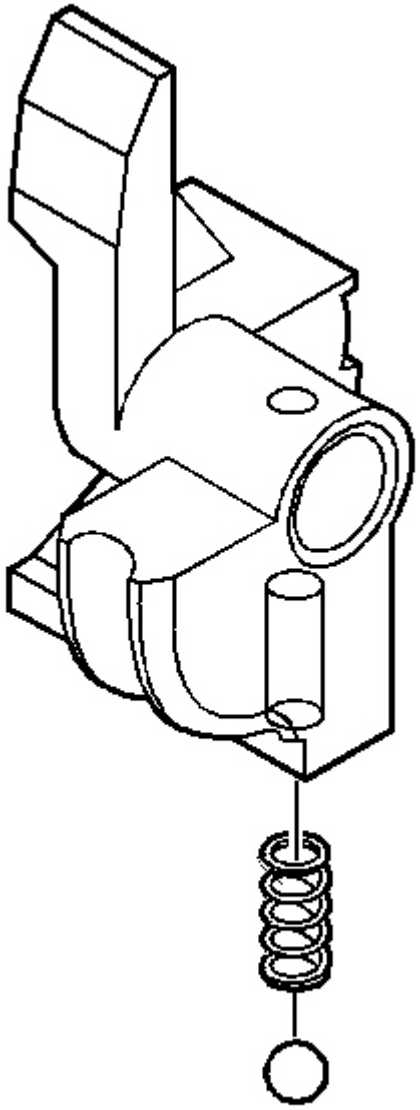

Fig. 312: Inserting Ball Detent & Spring Into Front Offset Lever
Courtesy of GENERAL MOTORS CORP.

cardiagn.com

2. Install the ball detent and the spring in the front offset lever.

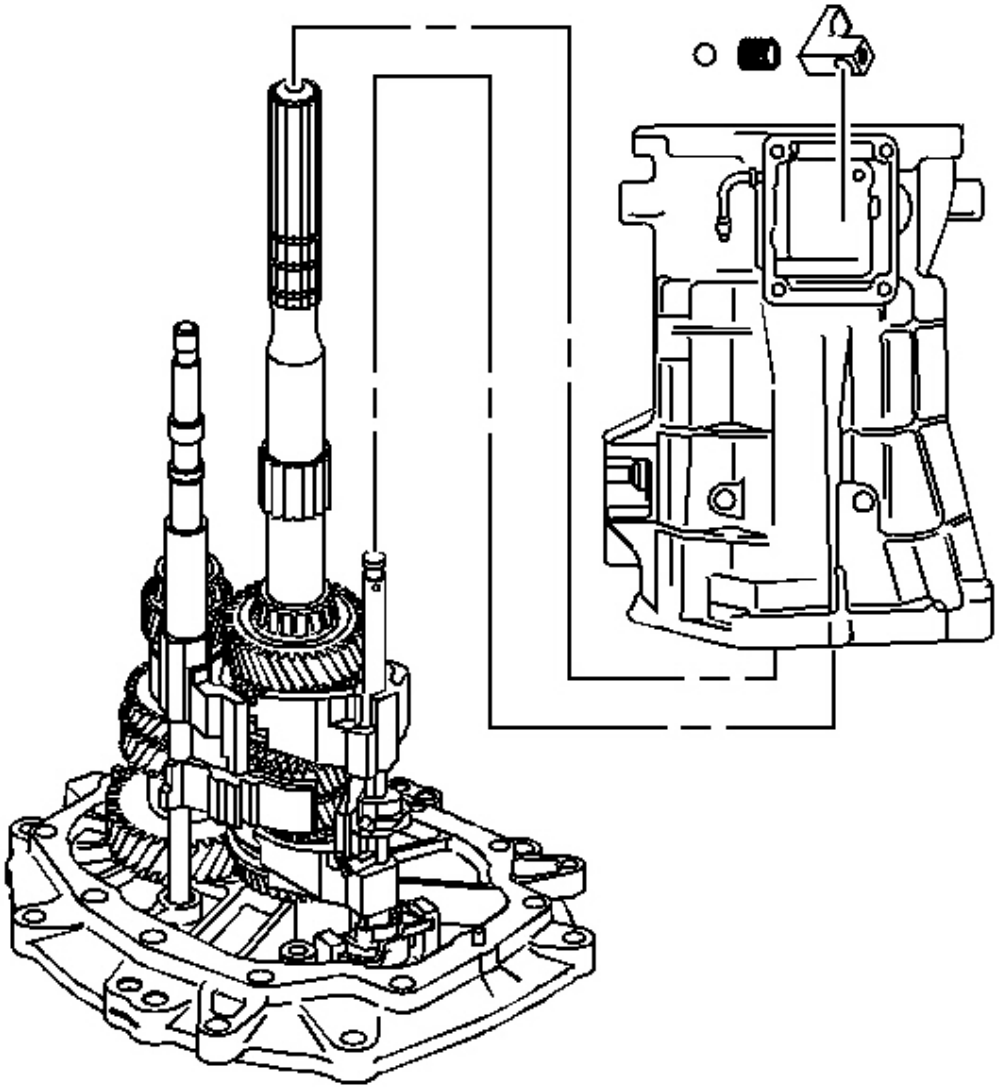

Fig. 313: View Of Front Offset Lever Components
Courtesy of GENERAL MOTORS CORP.

3. Do the following in order to install the transmission case and the offset lever:
    1. Shift the transmission into NEUTRAL in order to keep the 3rd/4th shift shaft from engaging.
    2. Install the offset lever.

cardiagn.com

3. Compress the front offset lever together while sliding it onto the shift shaft. This will prevent the spring release of the inner components.
4. Slide the transmission case onto the gear clusters and the shift rail components.

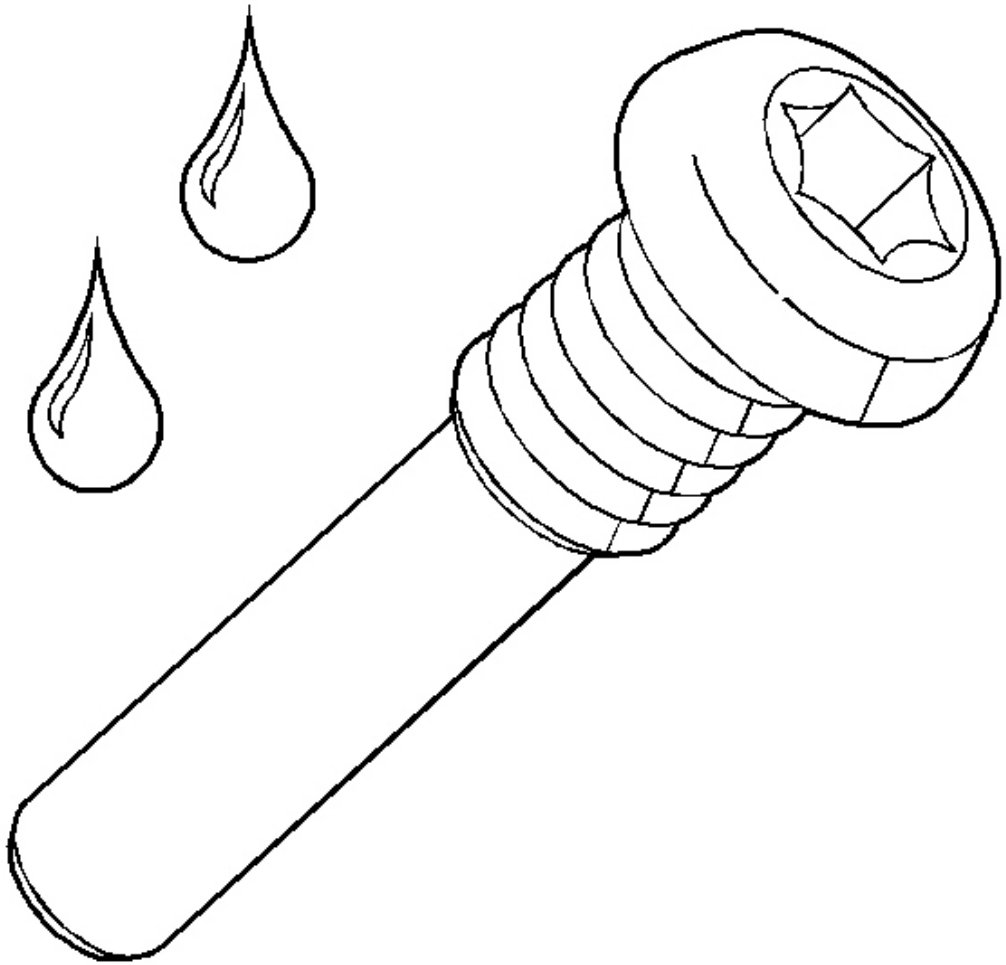

Fig. 314: Applying Sealer To Shift Lever Guide Bolts Threads
Courtesy of GENERAL MOTORS CORP.

4. Apply threadlock GM P/N United States 12346004, GM P/N Canada 10953480 or equivalent to the threads of the shift lever guide bolts.

NOTE: Refer to Fastener Notice in Cautions and Notices.

cardiagn.com

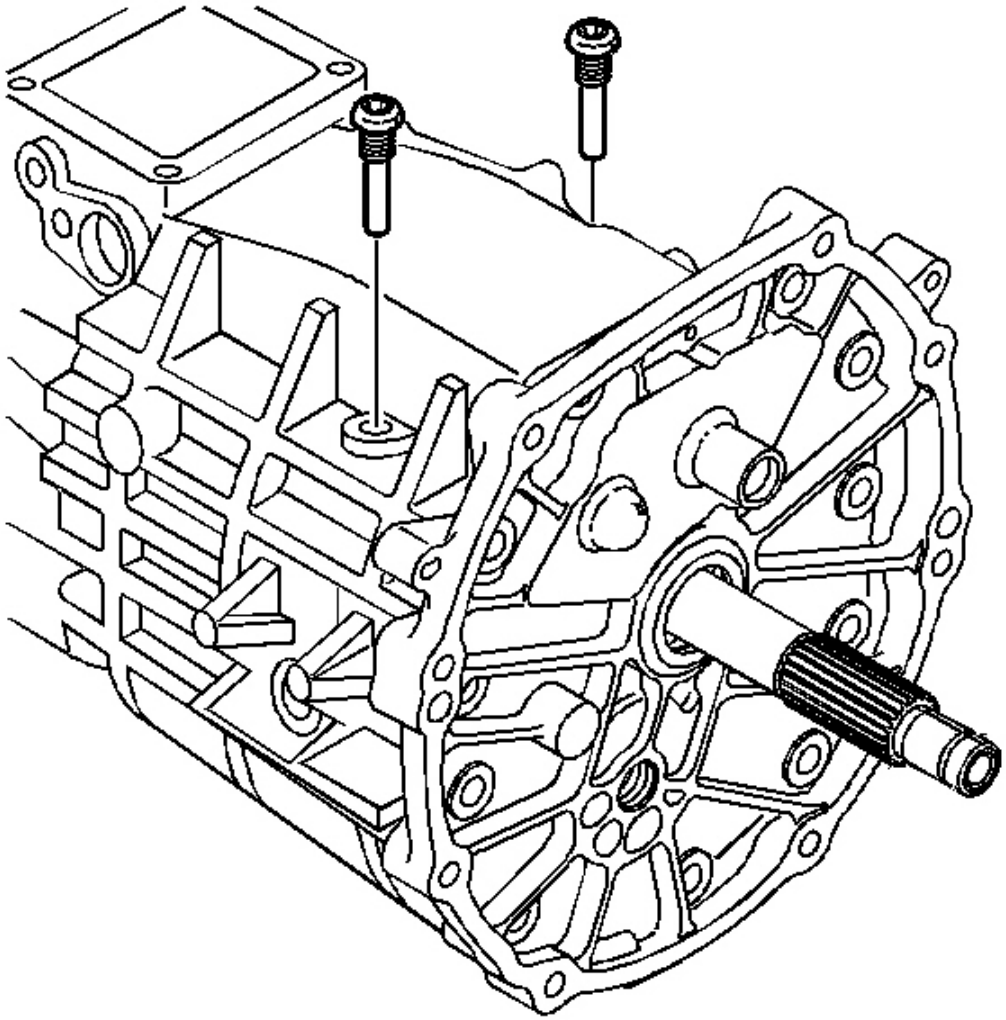

Fig. 315: Locating Shift Lever Guide Bolts
Courtesy of GENERAL MOTORS CORP.

5. Install the shift lever guide bolts and pull up on 5th/6th and reverse shift rail assembly. This will help align the slot of the shift interlock plate with the guide bolt hole.

   Tighten: Tighten the bolts to 27 N.m (20 Ib. ft).

cardiagn.com

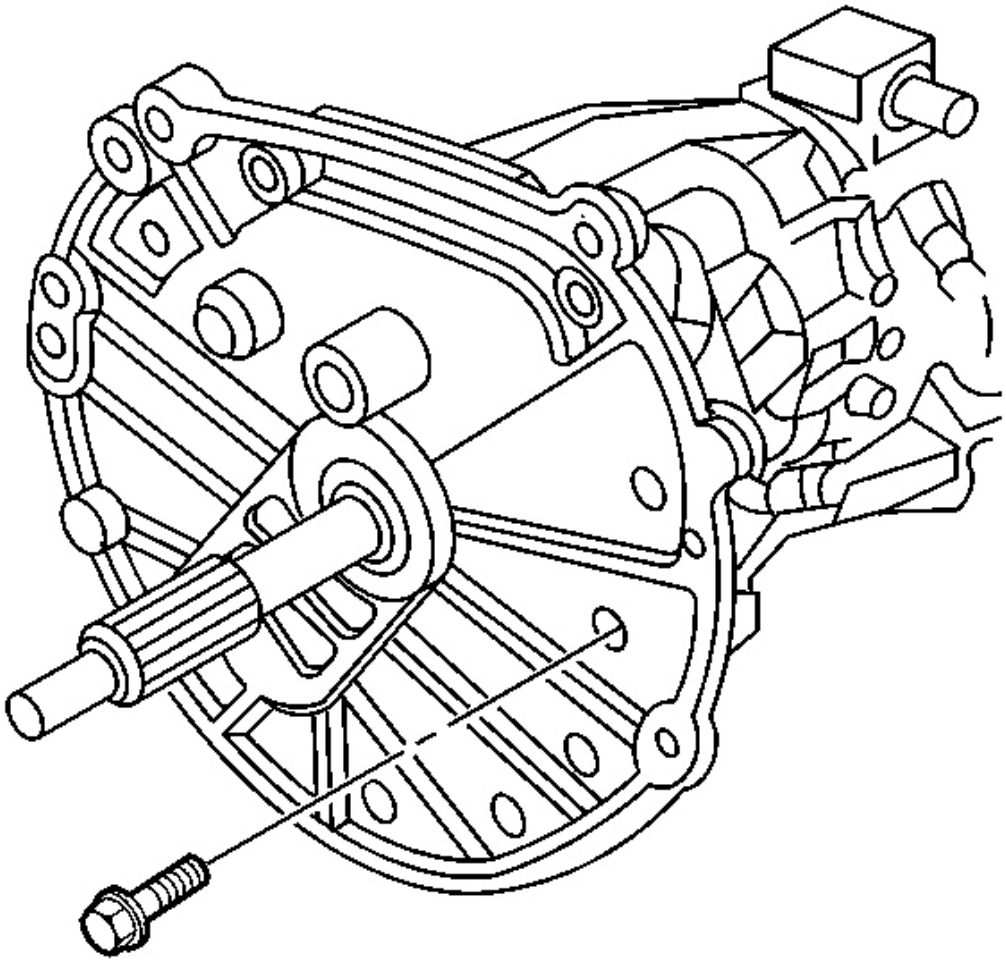

Fig. 316: View Of Adapter Plate & Transmission Case Bolts
Courtesy of GENERAL MOTORS CORP.

6. Install the adapter plate to transmission case bolts.

   Tighten: Tighten the bolts to 48 N.m (36 Ib. ft).

cardiagn.com

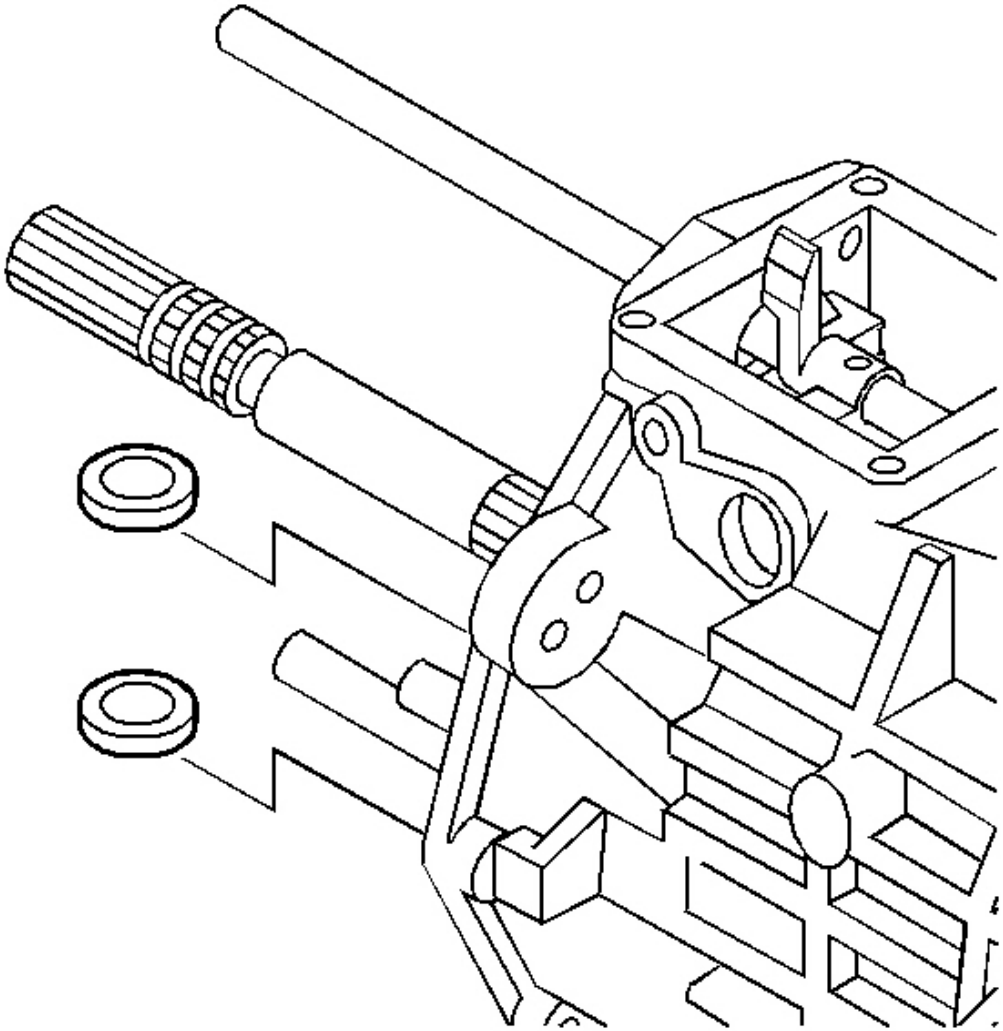

Fig. 317: View Of Transmission Magnets
Courtesy of GENERAL MOTORS CORP.

7. Install the magnets into the transmission case.

cardiagn.com

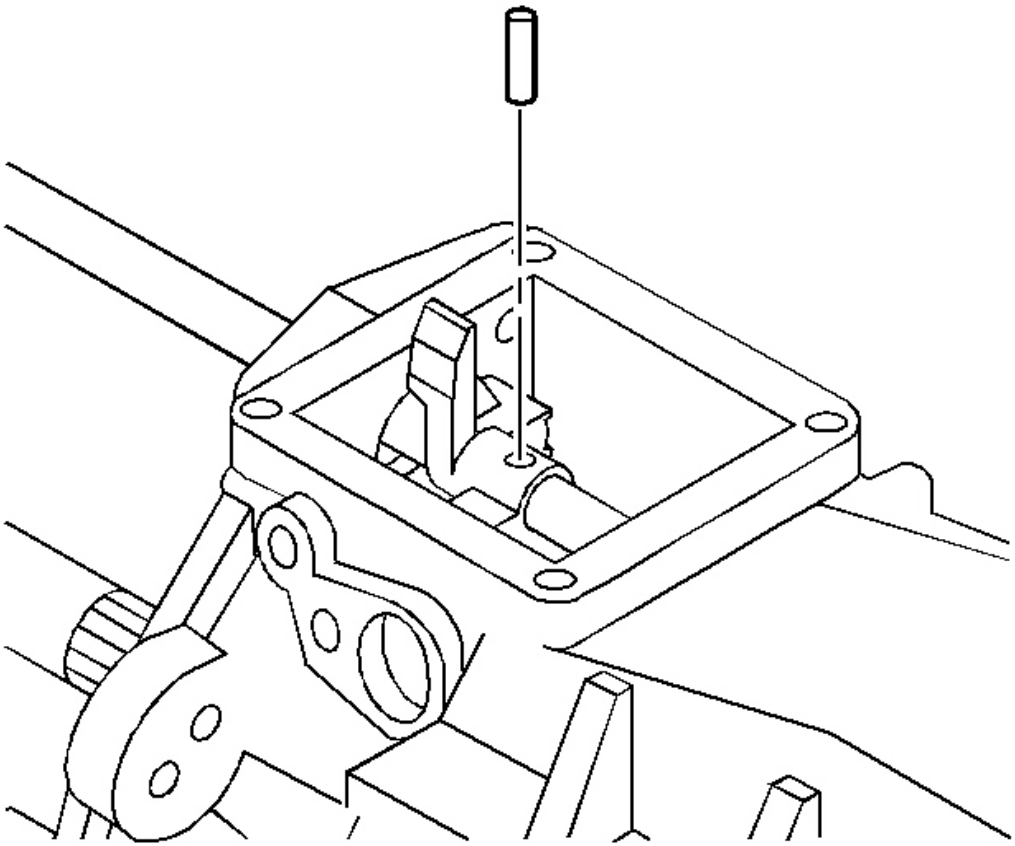

Fig. 318: Installing/Removing Offset Lever Roll Pin
Courtesy of GENERAL MOTORS CORP.

8. Install the offset lever roll pin.

cardiagn.com

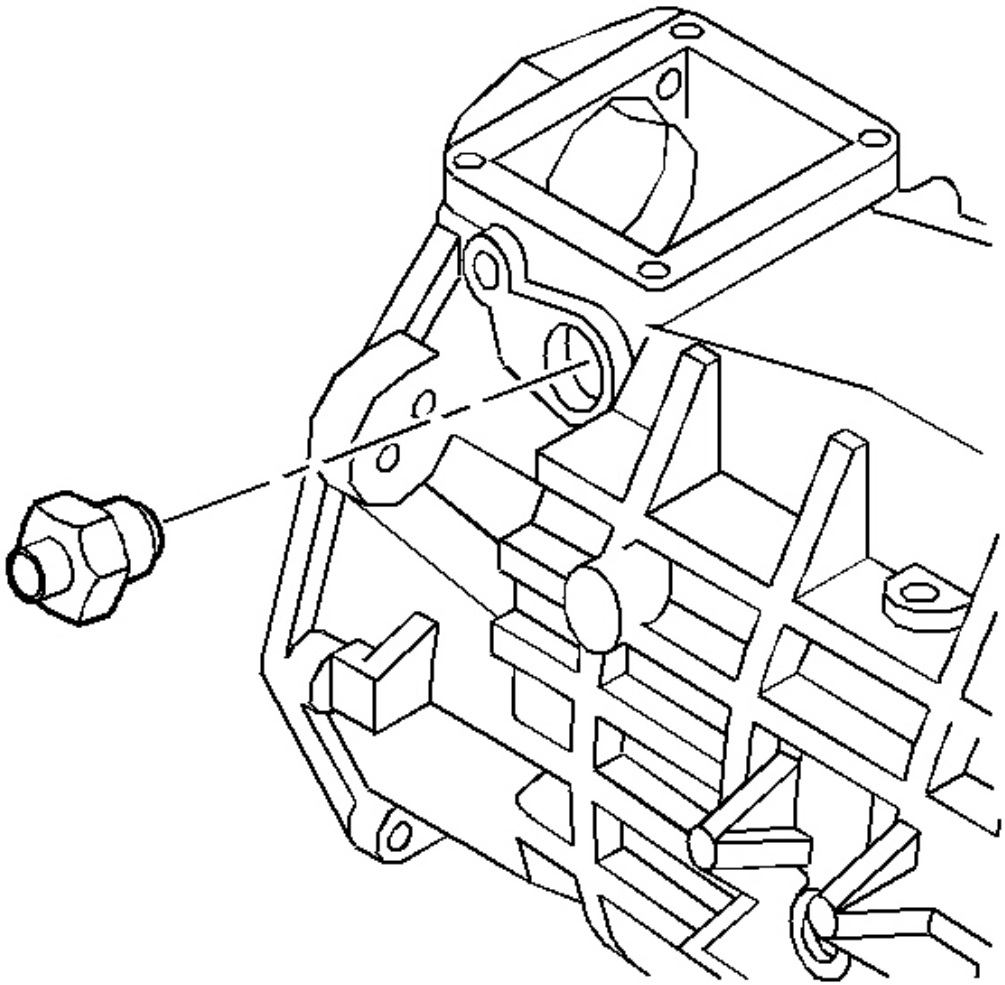

Fig. 319: View Of Shift Detent Assembly
Courtesy of GENERAL MOTORS CORP.

9. Install the shift detent assembly.

   Tighten: Tighten the detent assembly to 40 N.m (30 Ib. ft).

cardiagn.com

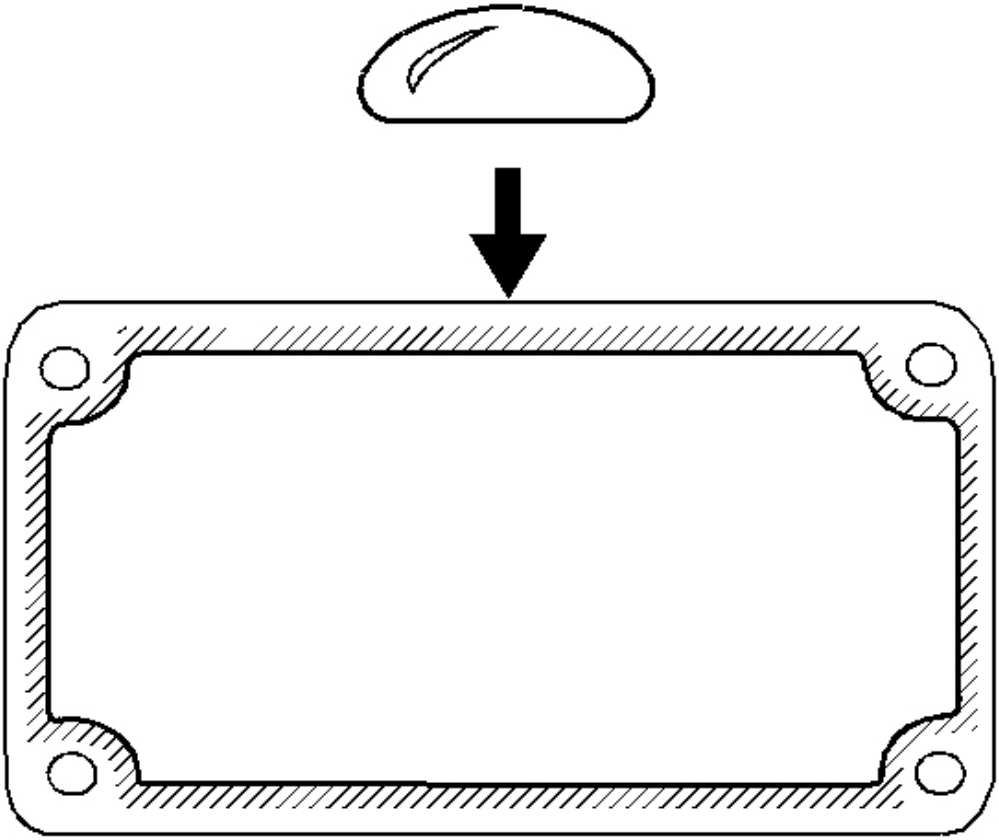

Fig. 320: Applying Sealer To Mating Surface Of Cover Plate
Courtesy of GENERAL MOTORS CORP.

10. Apply sealant GM P/N United States 12345739, GM P/N Canada 10953472 or the equivalent to the mating surface of the cover plate.

cardiagn.com

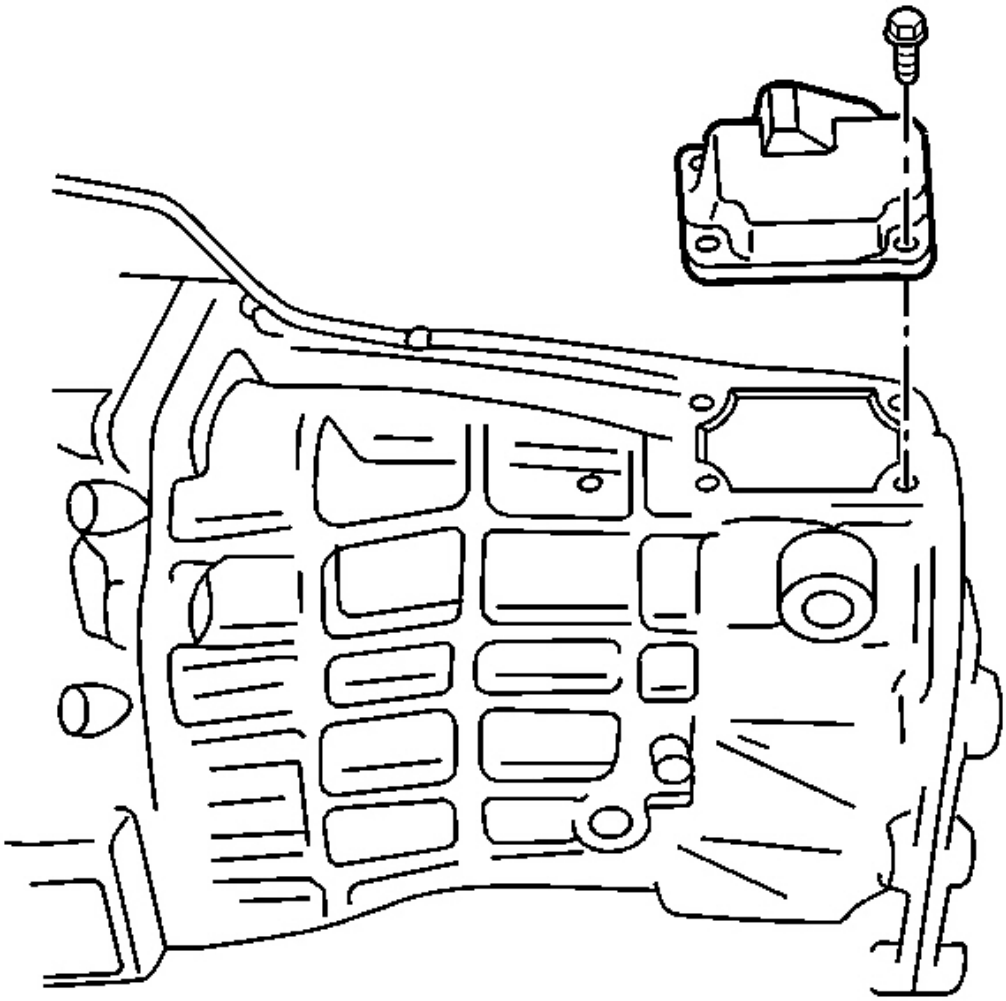

Fig. 321: View Of Transmission Case Cover & Case Cover Bolts
Courtesy of GENERAL MOTORS CORP.

11. Install the transmission case cover and the case cover bolts.

    Tighten: Tighten the bolts to 20 N.m (15 Ib. ft).

cardiagn.com

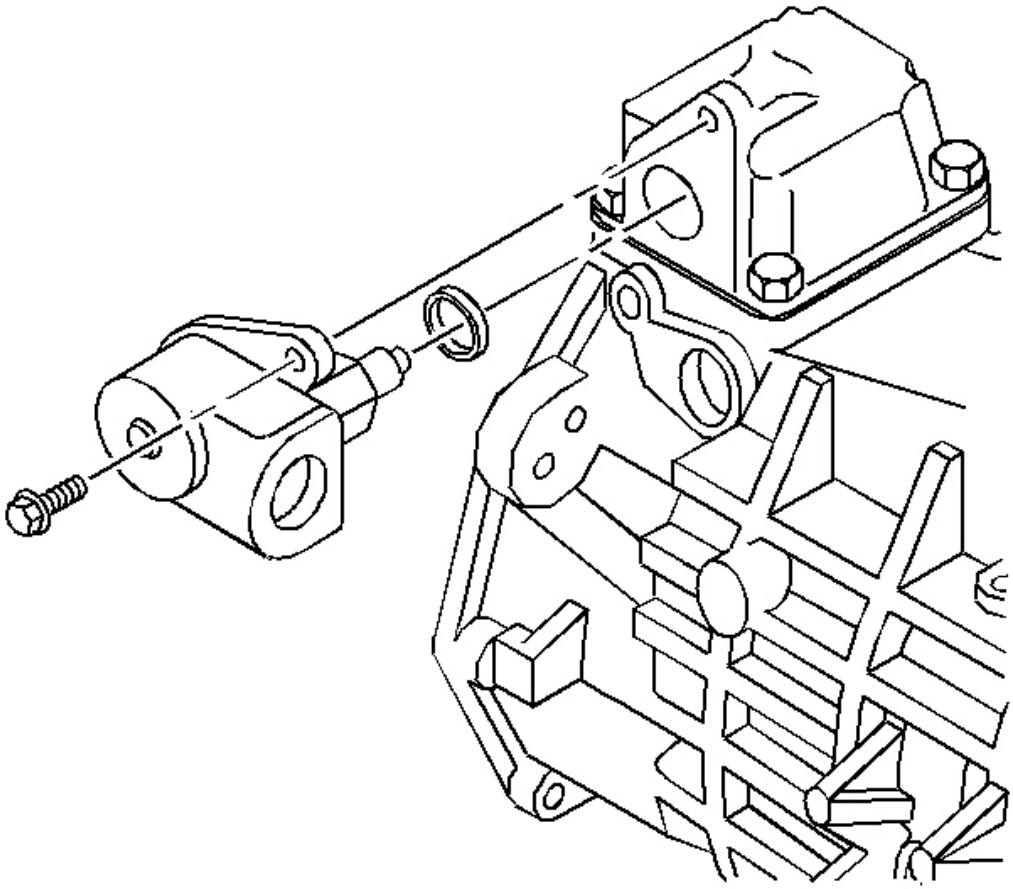

Fig. 322: Installing/Removing Reverse Lockout Body & Bolt
Courtesy of GENERAL MOTORS CORP.

12. Install the reverse lockout body and bolt in the cover plate.

    Tighten: Tighten the bolts to 18 N.m (13 Ib. ft).

cardiagn.com

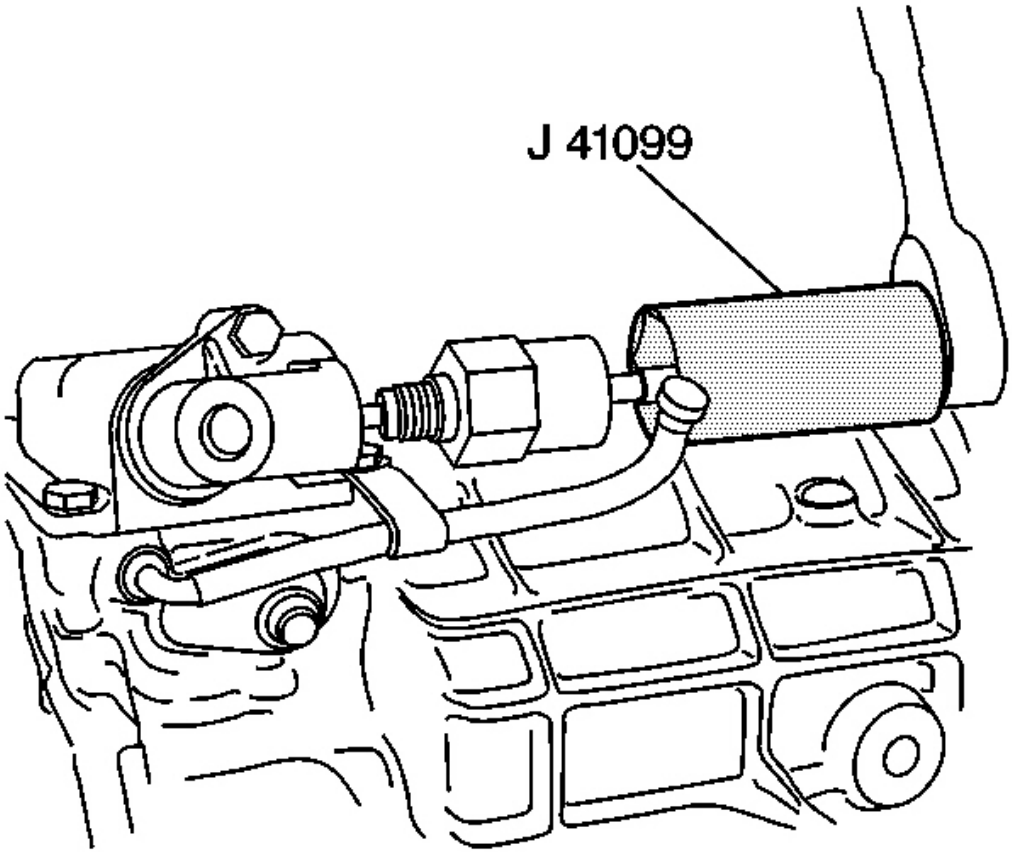

Fig. 323: Using J 41099 To Remove/Install Reverse Lockout Solenoid To Reverse Lockout Body Assembly
Courtesy of GENERAL MOTORS CORP.

13. Install the, using the **J 41099** .

    Tighten: Tighten the solenoid to 40 N.m (30 Ib. ft).

cardiagn.com

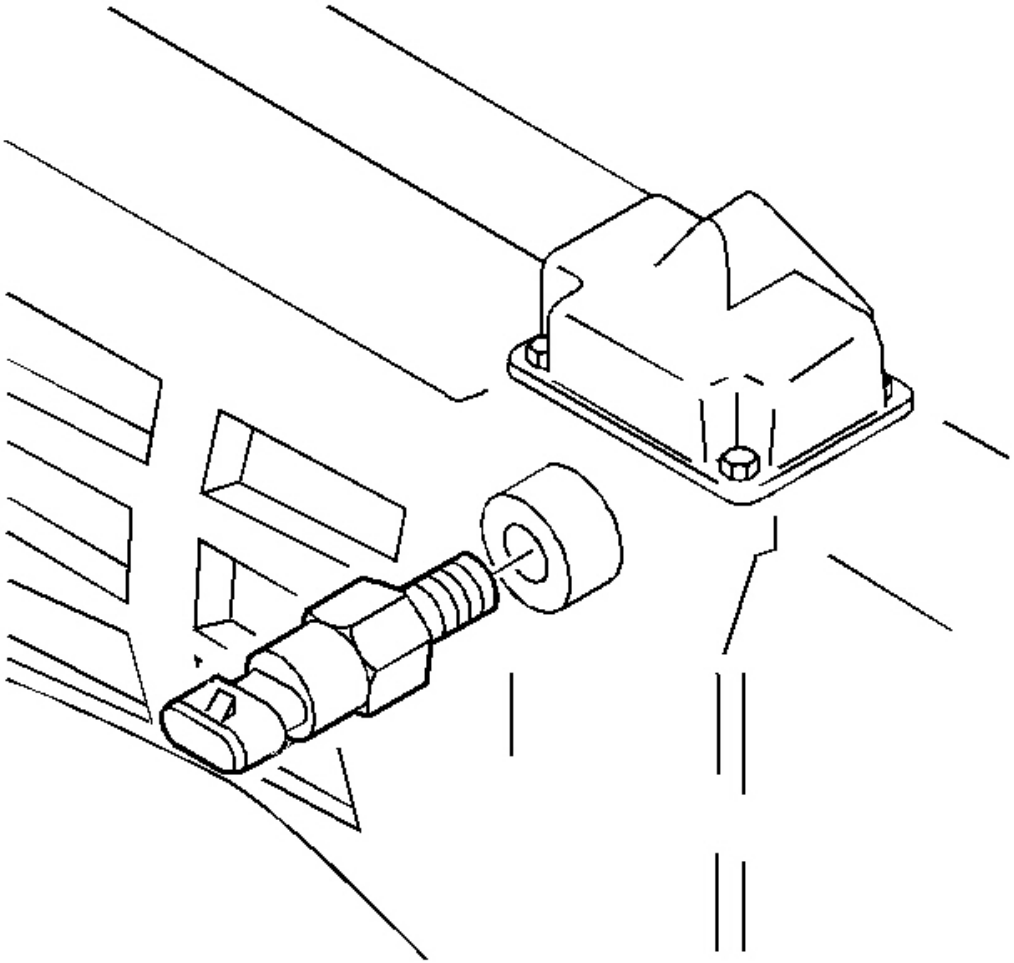

Fig. 324: Identifying Computer Aided Gear Select Solenoid
Courtesy of GENERAL MOTORS CORP.

14. Install the computer aided gear select solenoid.

    Tighten: Tighten the solenoid to 40 N.m (30 Ib. ft).

Countershaft Extension Installation

1. Position the transmission in the horizontal position.
2. Install the countershaft extension assembly and the 5th/6th shift fork. The splines of the countershaft extension must engage the splines of the countershaft.

cardiagn.com

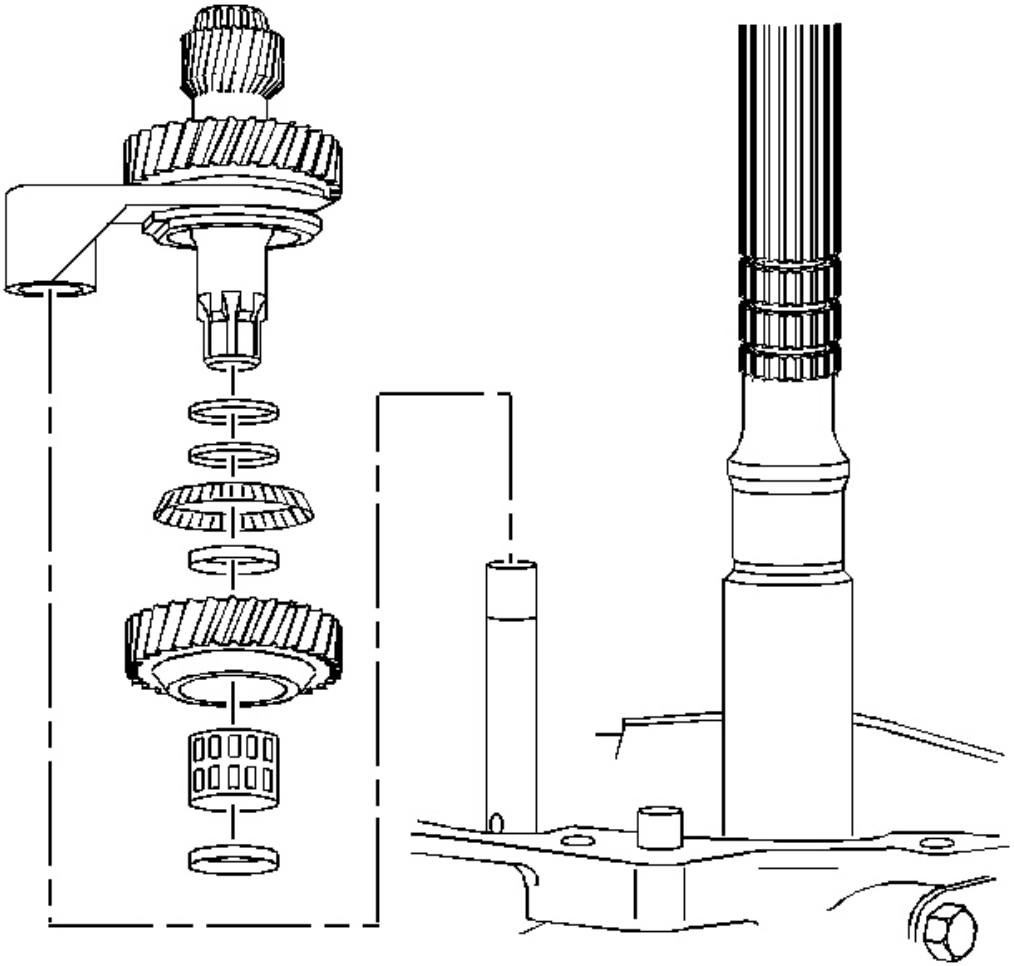

Fig. 325: Identifying Countershaft Extension Assembly & 5th/6th Shift Fork
Courtesy of GENERAL MOTORS CORP.

cardiagn.com

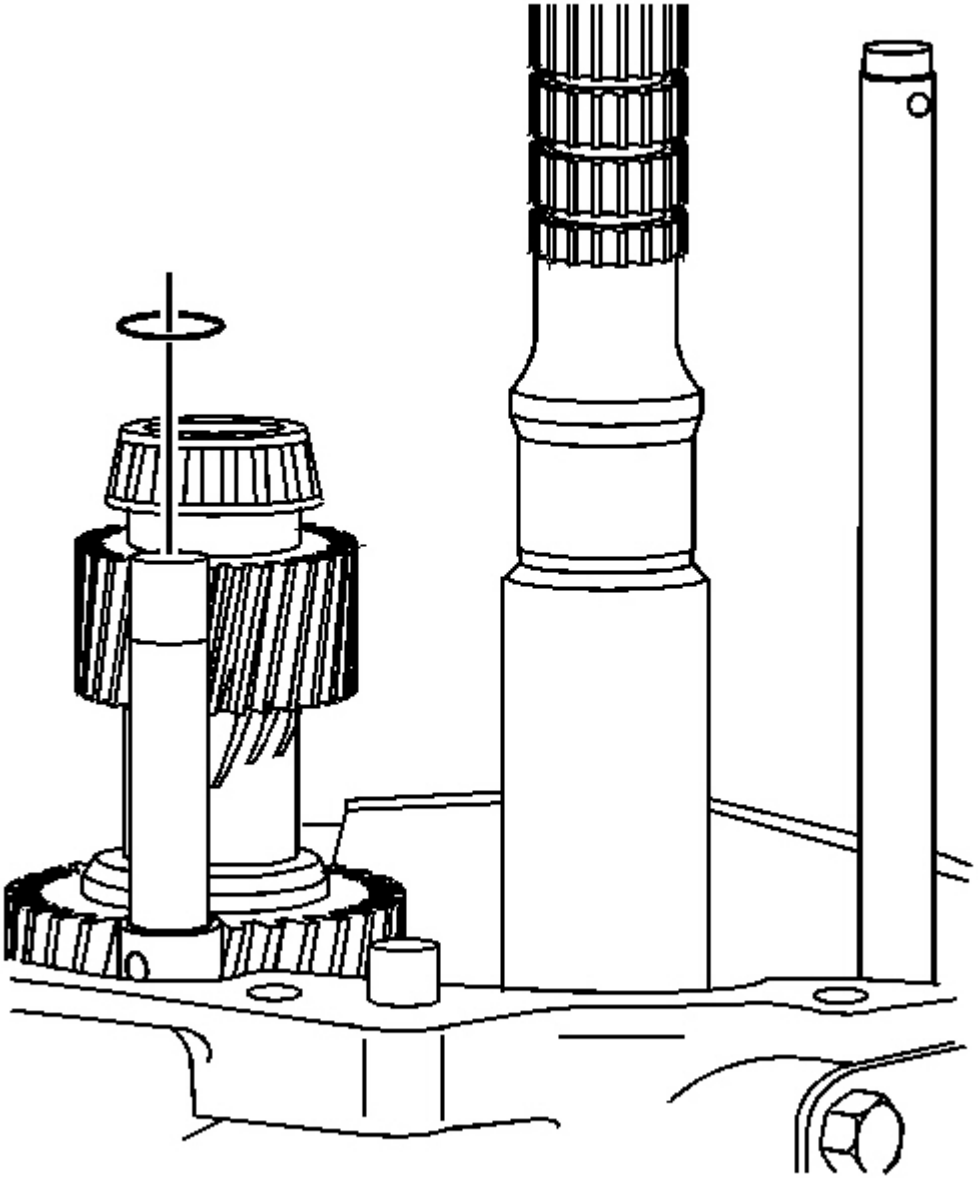

Fig. 326: View Of 5th/6th Shift Fork Retainer Ring
Courtesy of GENERAL MOTORS CORP.

3. Install the 5th/6th shift fork retainer ring.

5th/6th Speed Driven Gear Installation

cardiagn.com

Tools Required

- **J 39441** 5th/6th Driven Gear Installer. See **Special Tools** .
- **J 39441-10** 5th Gear Installer Adapter. See **Special Tools** .

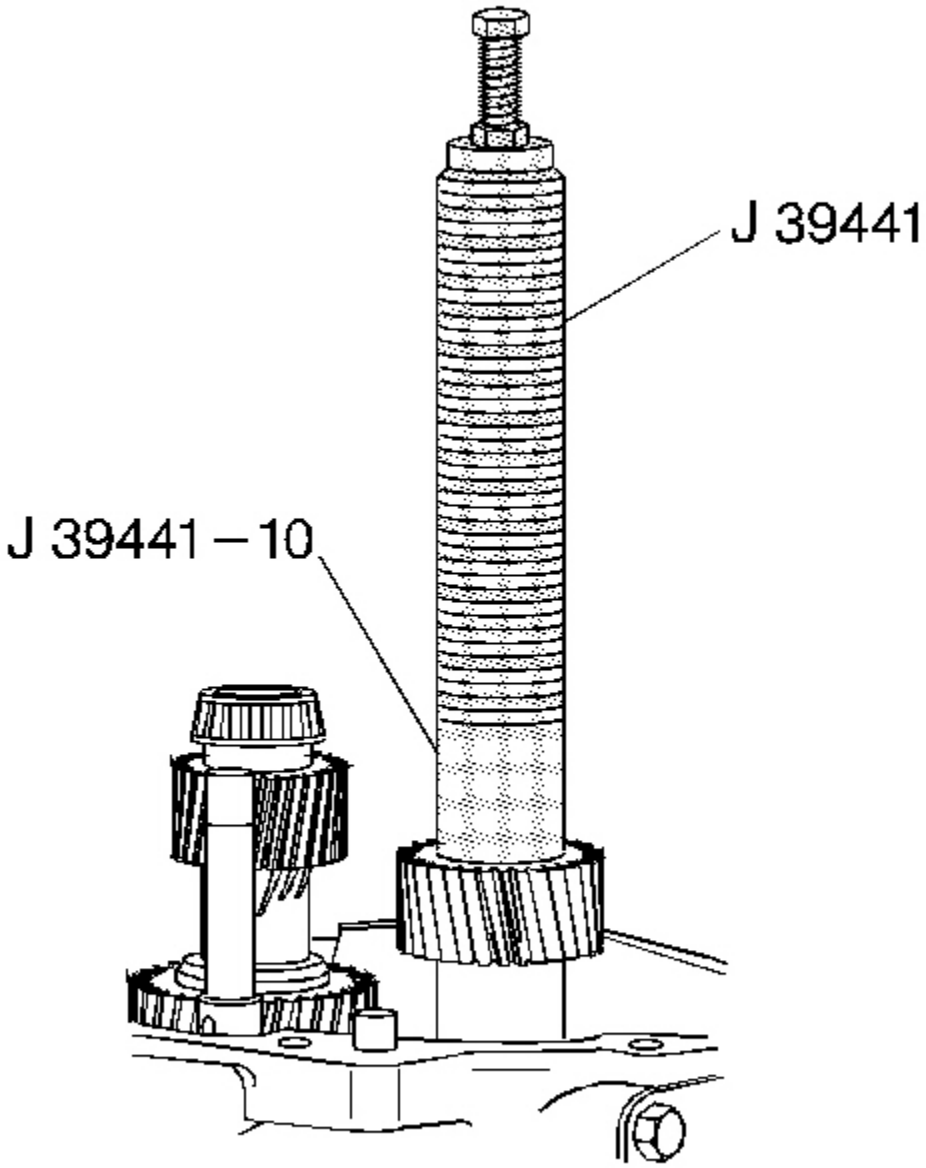

Fig. 327: Installing 5th/6th Speed Driven Gear Using J 39441 & J 39441-10

cardiagn.com

Courtesy of GENERAL MOTORS CORP.

Install the 5th/6th speed driven gear using the **J 39441** and **J 39441-10** . The smaller outside diameter (OD) of the gear faces down.

Reverse Shift Fork Installation

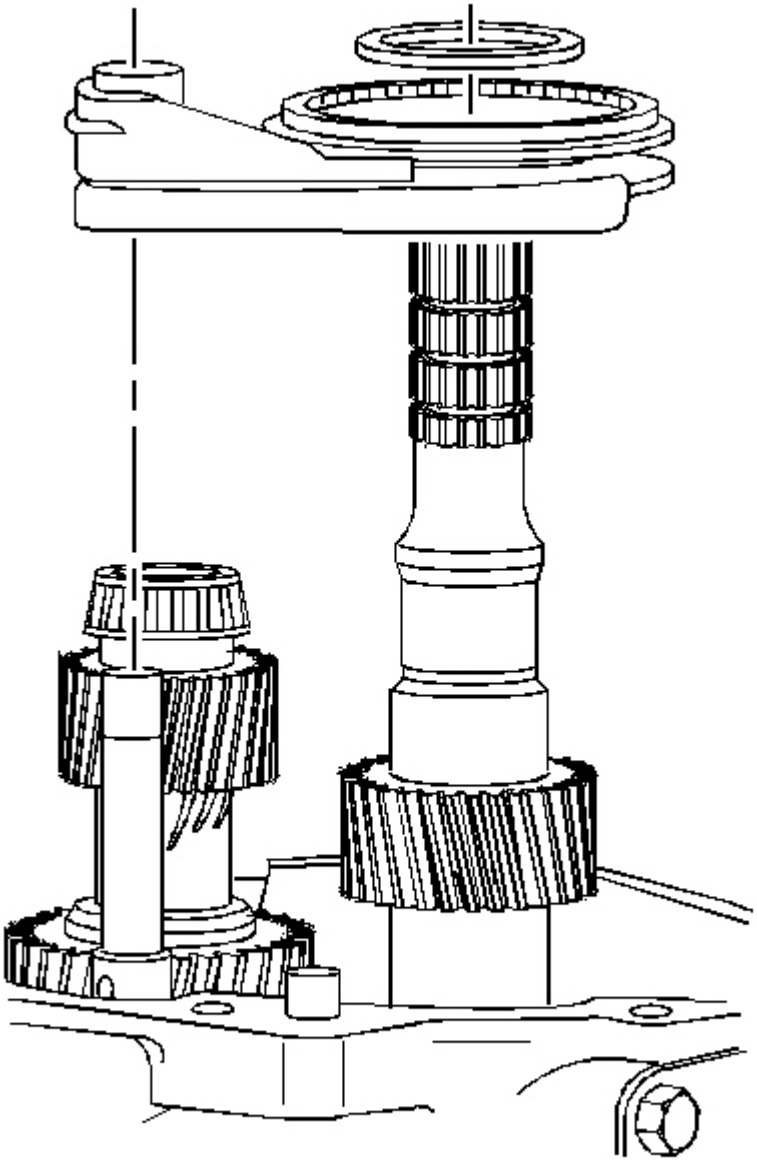

cardiagn.com

Fig. 328: Identifying Reverse Shift Fork, Synchronizer & Thrust Washer
Courtesy of GENERAL MOTORS CORP.

1. Install the reverse shift fork, the synchronizer and the thrust washer.

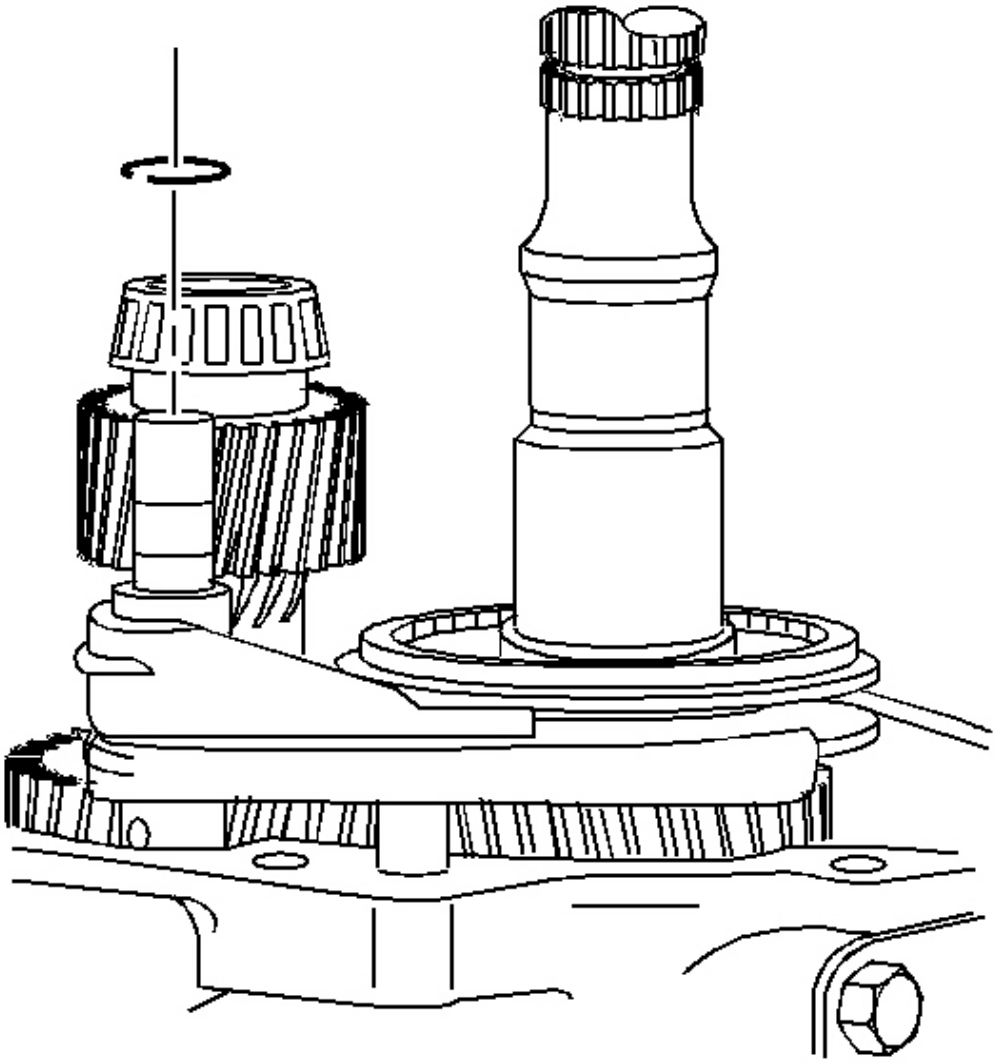

Fig. 329: Installing/Removing Shift Fork Retainer Ring
Courtesy of GENERAL MOTORS CORP.

2. Install a new shift fork retainer ring.

cardiagn.com

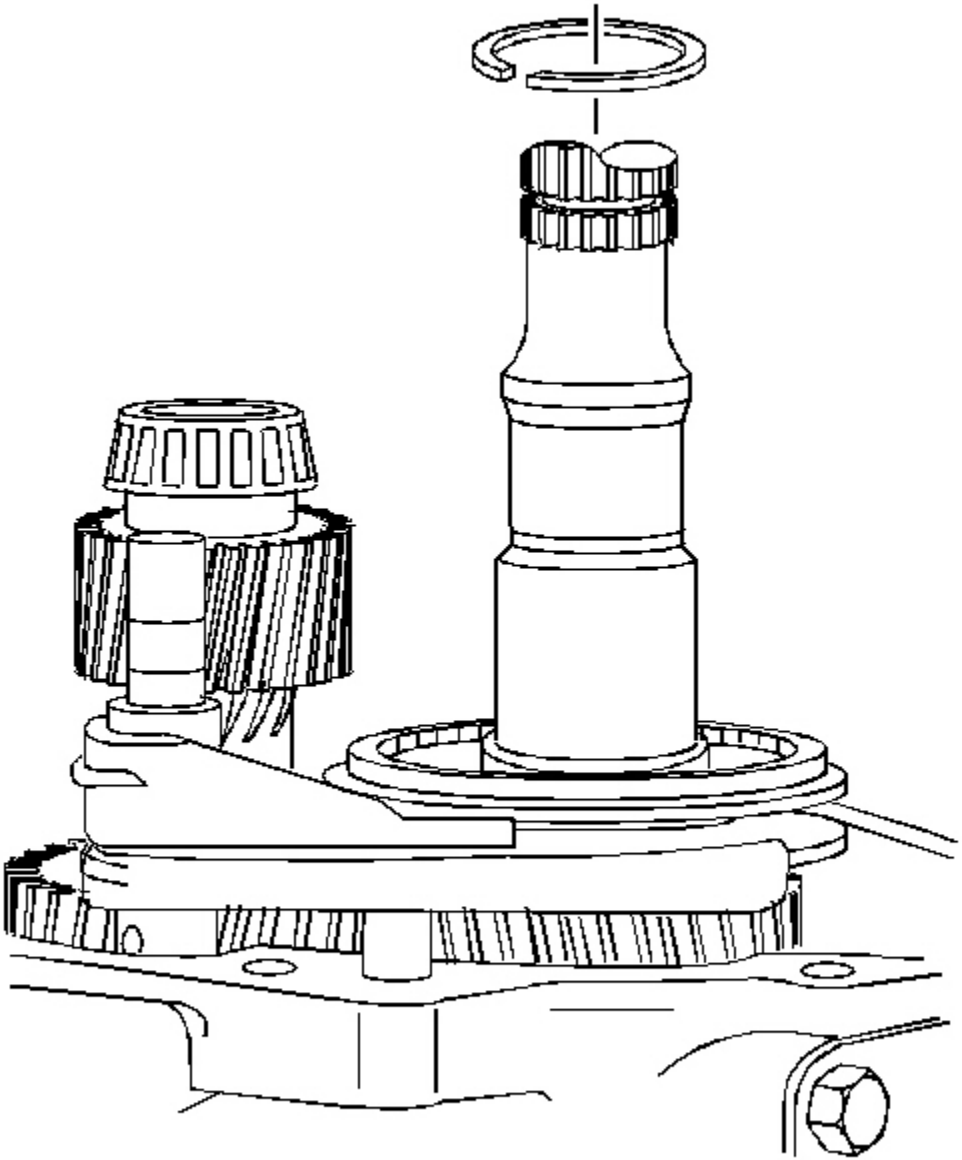

Fig. 330: View Of Reverse Synchronizer Retainer Ring
Courtesy of GENERAL MOTORS CORP.

3. Install the reverse synchronizer retainer ring.

Reverse Speed Gear Installation

cardiagn.com

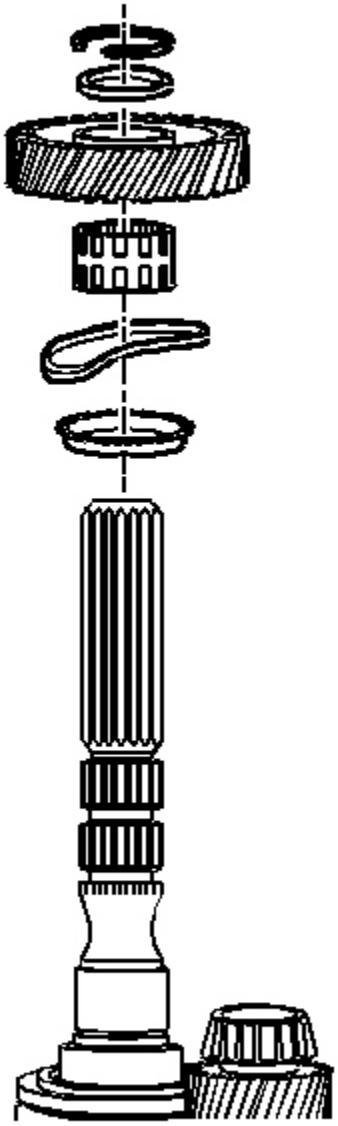

Fig. 331: Identifying Reverse Speed Gear Components
Courtesy of GENERAL MOTORS CORP.

1. Install the following parts in order:
    1. The blocking ring
    2. The wave washer
    3. The wave washer so the concave side faces the blocking ring

cardiagn.com

4. The caged needle bearing
5. The reverse speed gear
6. The thrust washer
7. The retainer ring

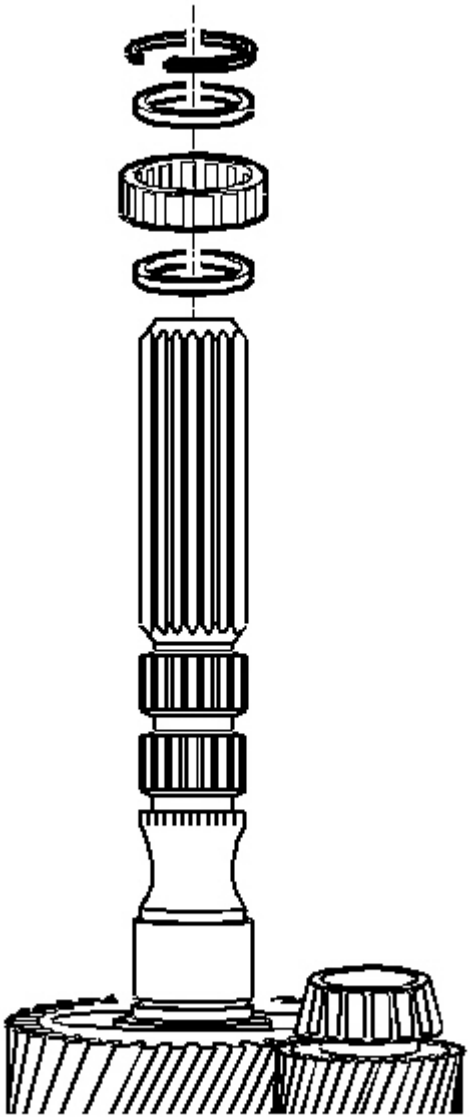

Fig. 332: View Of Mainshaft Rear Roller Bearing, Rear Bearing Retainer Ring & Spacers
Courtesy of GENERAL MOTORS CORP.

cardiagn.com

2. Install the following parts in order:
    1. The spacer
    2. The roller bearing
    3. The spacer
    4. The roller bearing retainer ring

Tools Required

J 44395 Transmission Holding Fixture. See **Special Tools** .

Extension Housing Assemble

cardiagn.com

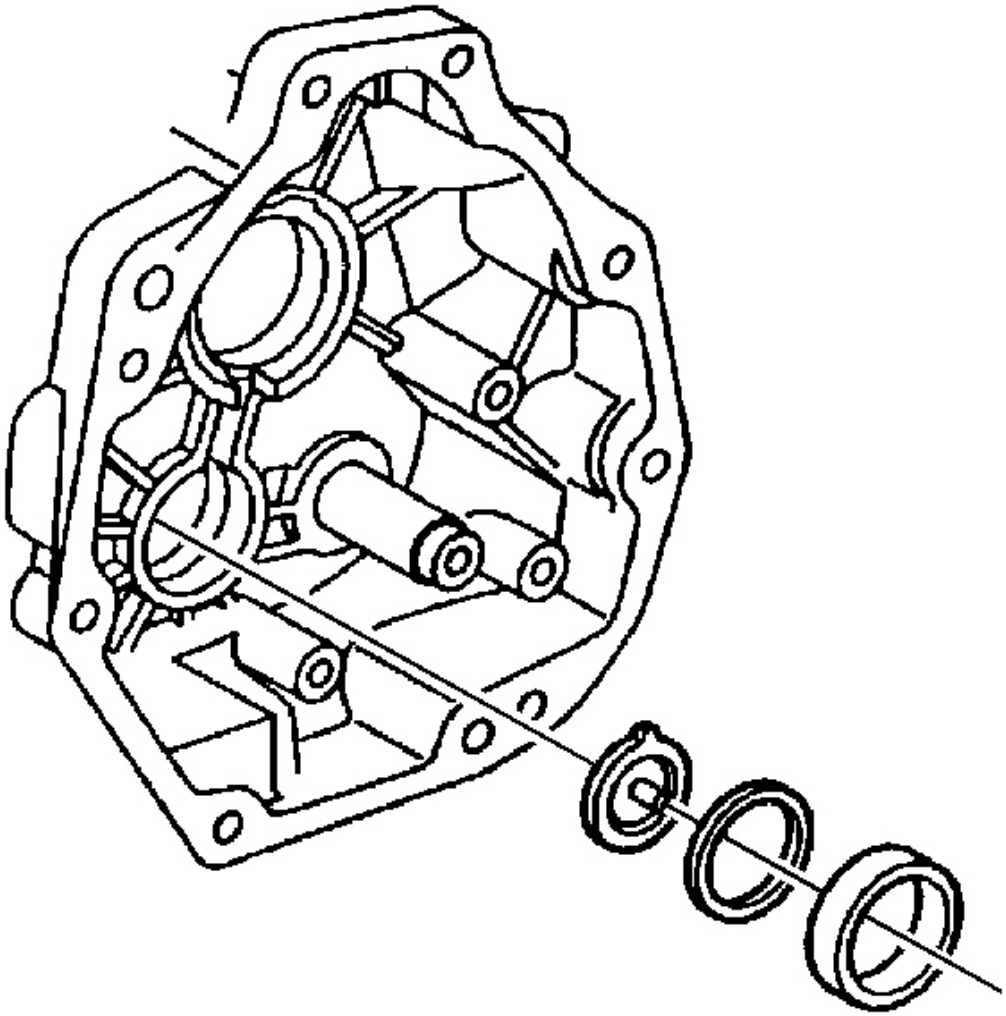

Fig. 333: View Of Countershaft Extension Bearing Race, Funnel & Shim
Courtesy of GENERAL MOTORS CORP.

1. Install the following parts in order:
    1. The funnel
    2. The selective shims. Refer to the Countershaft Extension in **Shimming Procedures (Y Car)** or **Shimming Procedures (CTSV)** or **Shimming Procedures (GTO)** .
    3. The countershaft extension bearing race

cardiagn.com

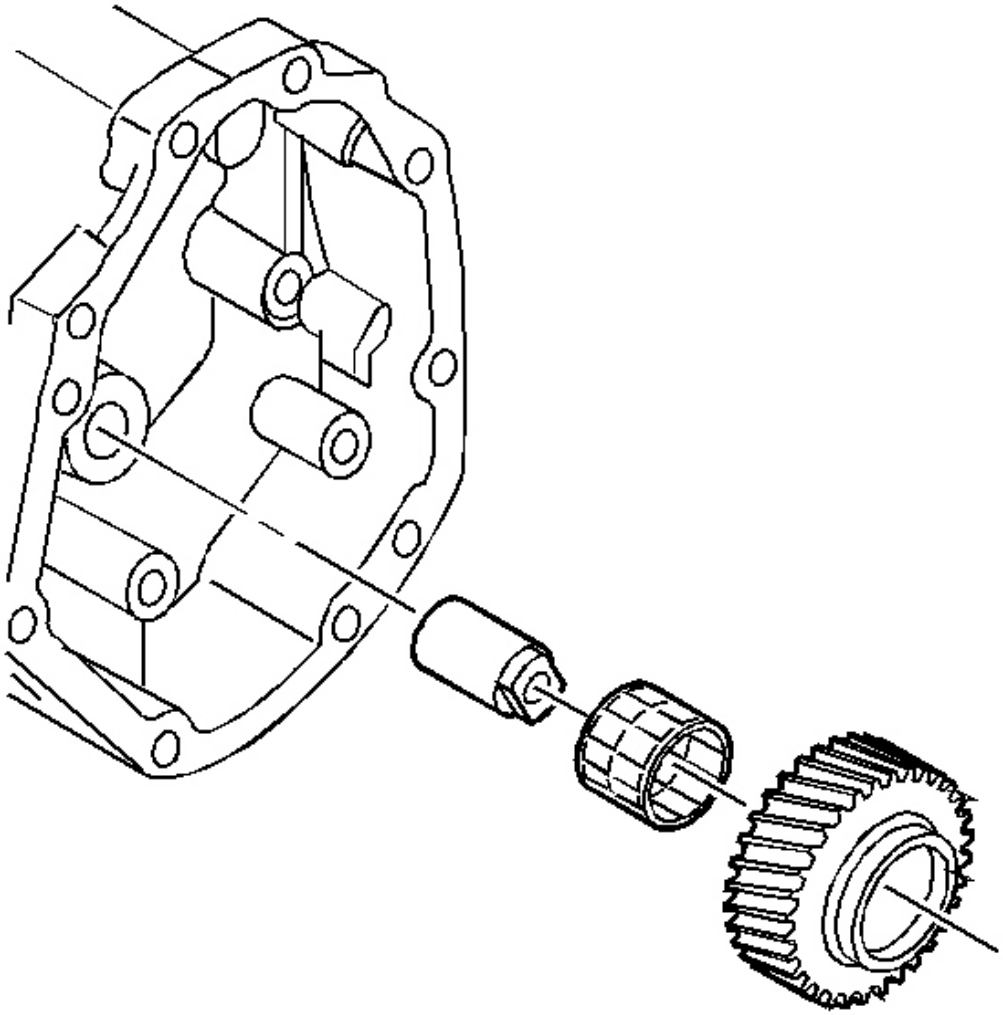

Fig. 334: Identifying Reverse Idler Shaft, Roller Bearing & Reverse Idler Gear
Courtesy of GENERAL MOTORS CORP.

2. Install the following parts in order:
    1. The reverse idler shaft
    2. The roller bearing
    3. The reverse idler gear

cardiagn.com

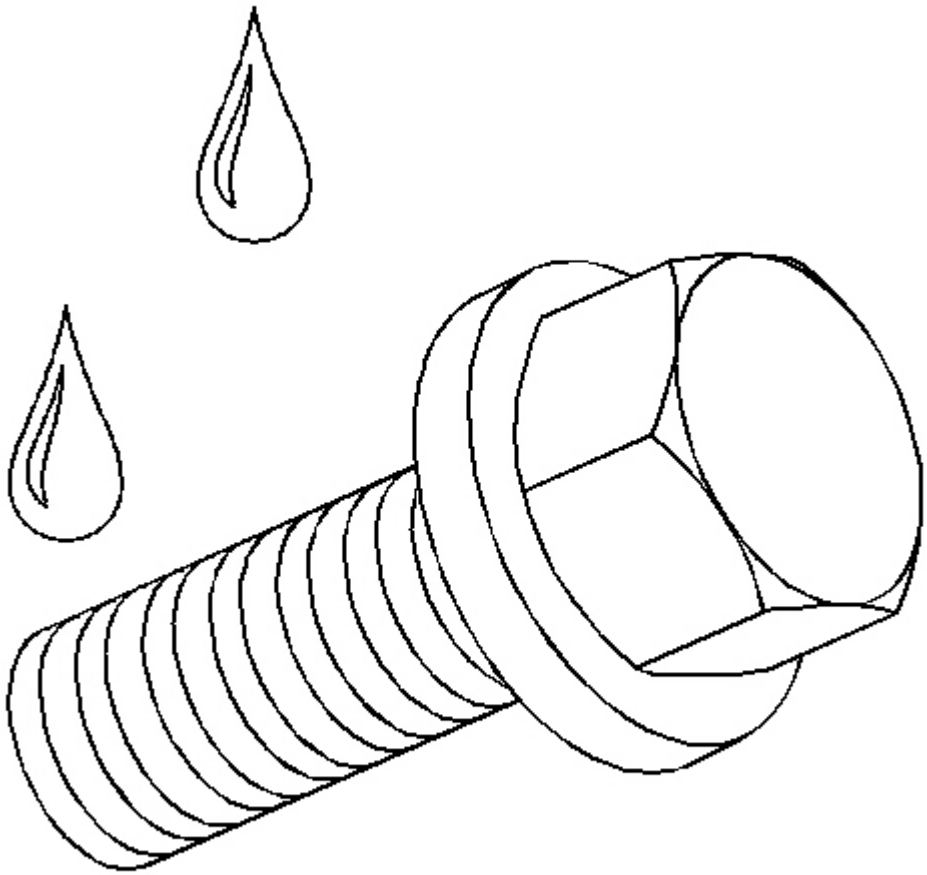

Fig. 335: Applying Sealant To Reverse Idler Shaft Brackets Bolt Threads
Courtesy of GENERAL MOTORS CORP.

3. Apply GM P/N United States 12345382, GM P/N Canada 10953489 or the equivalent to the reverse idler shaft brackets bolt threads.

cardiagn.com

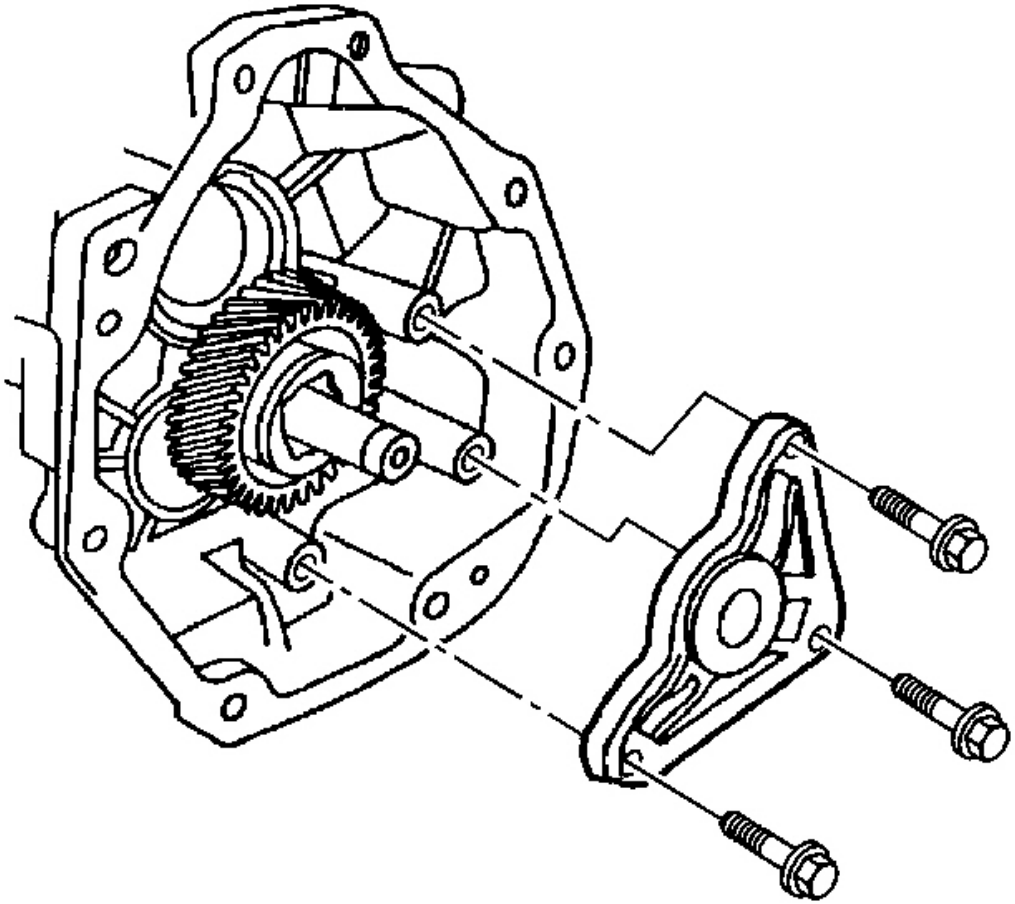

Fig. 336: View Of Reverse Idler Shaft Bracket & Mounting Bolts
Courtesy of GENERAL MOTORS CORP.

NOTE: Refer to Fastener Notice in Cautions and Notices.

4. Install the following parts in order:
    1. The reverse idler shaft bracket.
    2. The reverse idler shaft bracket bolts.

    Tighten: Tighten the bolts to 25 N.m (18 Ib. ft).

cardiagn.com

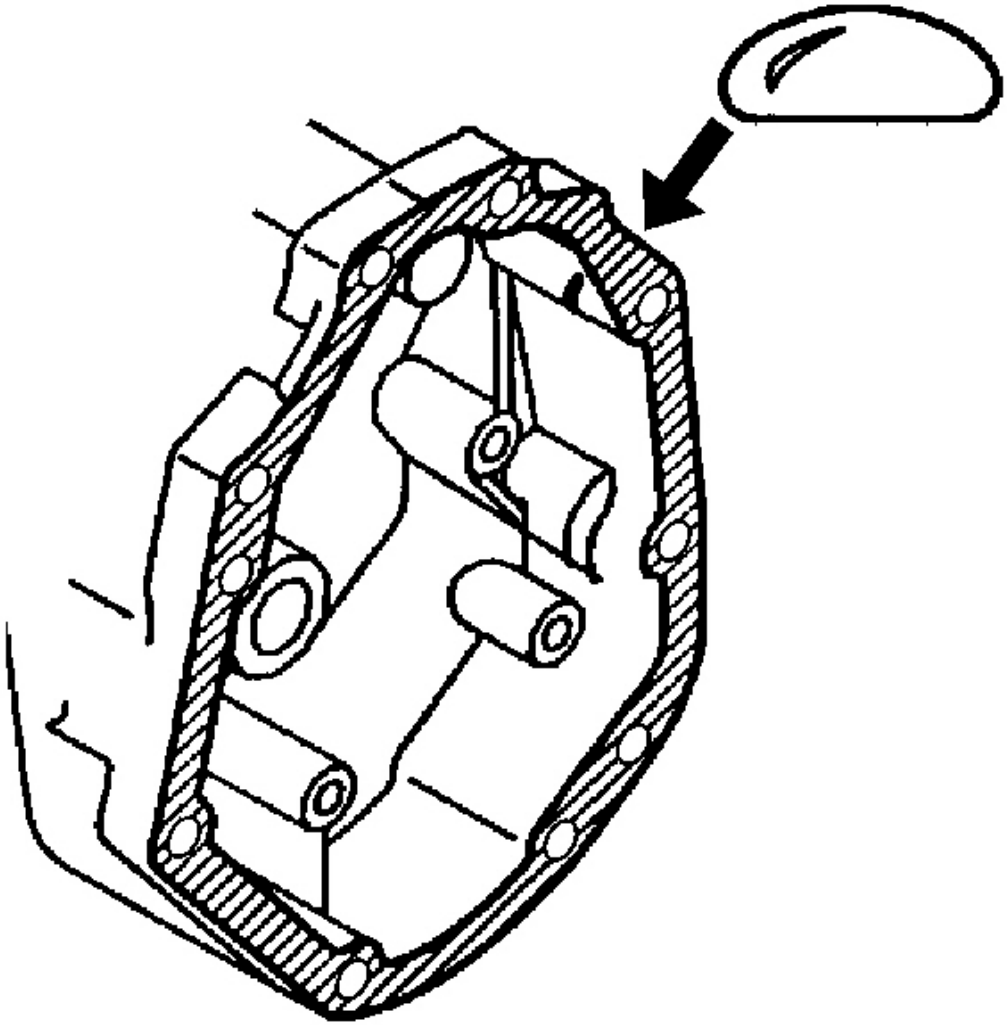

Fig. 337: Applying Sealant To Extension Housing To Transmission Case Mating Surface
Courtesy of GENERAL MOTORS CORP.

5. Apply sealant GM P/N United States 12345739, GM P/N Canada 10953472 or equivalent to the extension housing to the transmission case mating surface.

cardiagn.com

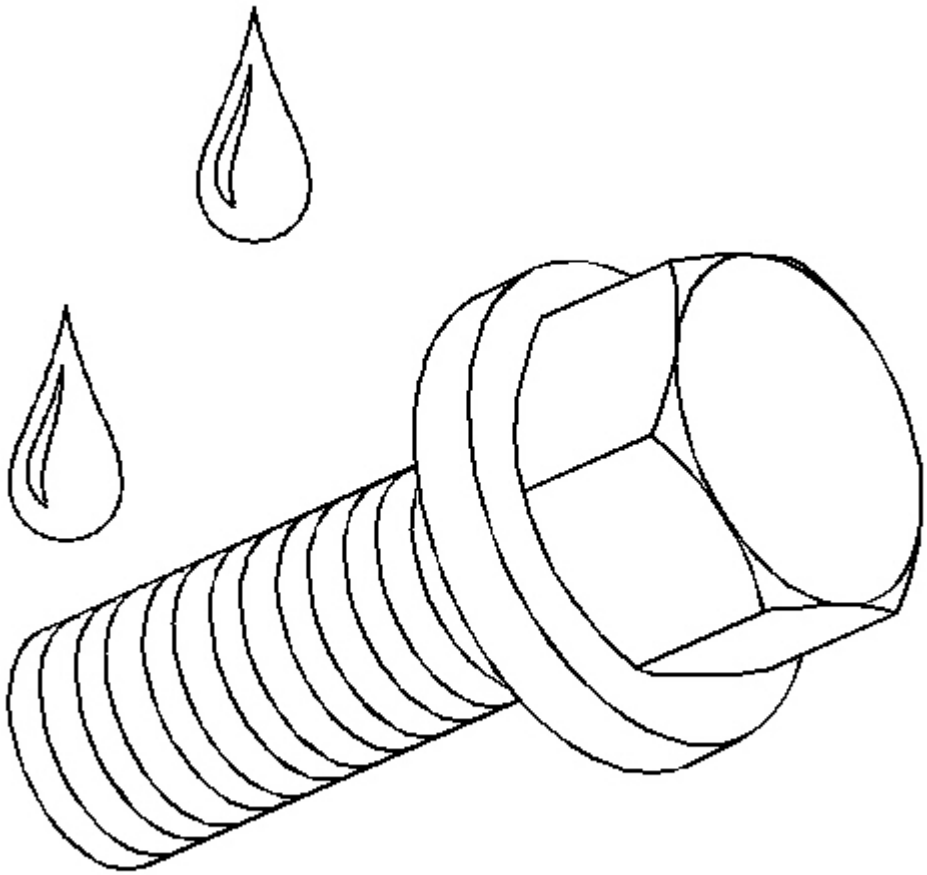

Fig. 338: Applying Sealant To Top Extension Housing Bolt
Courtesy of GENERAL MOTORS CORP.

6. Apply thread sealer GM P/N United States 12346004, GM P/N Canada 10953480 or equivalent to the top two extension housing bolts.

cardiagn.com

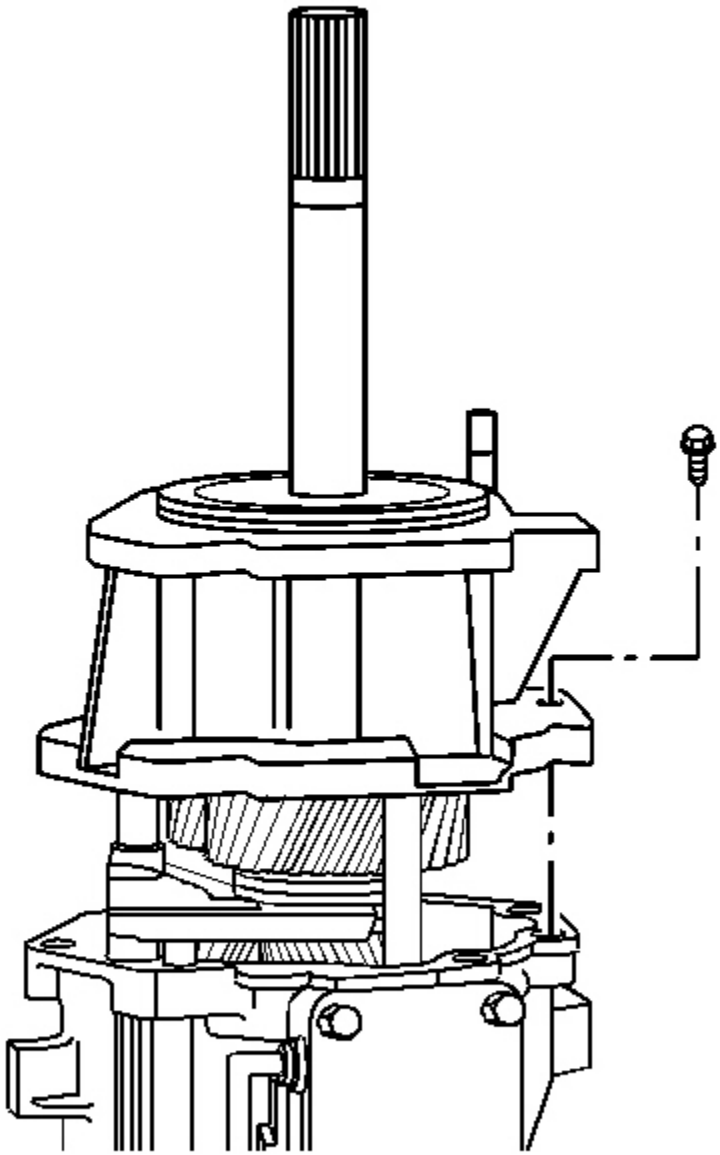

Fig. 339: View Of Extension Housing Bolts & Extension Housing
Courtesy of GENERAL MOTORS CORP.

IMPORTANT: Align the 5th/6th shift shaft to the extension housing bore in order to install the extension housing.

cardiagn.com

7. Install the extension housing.
8. Install the extension housing bolts.

   Tighten: Tighten the bolts to 48 N.m (36 lb ft).

9. Install the vent tube.

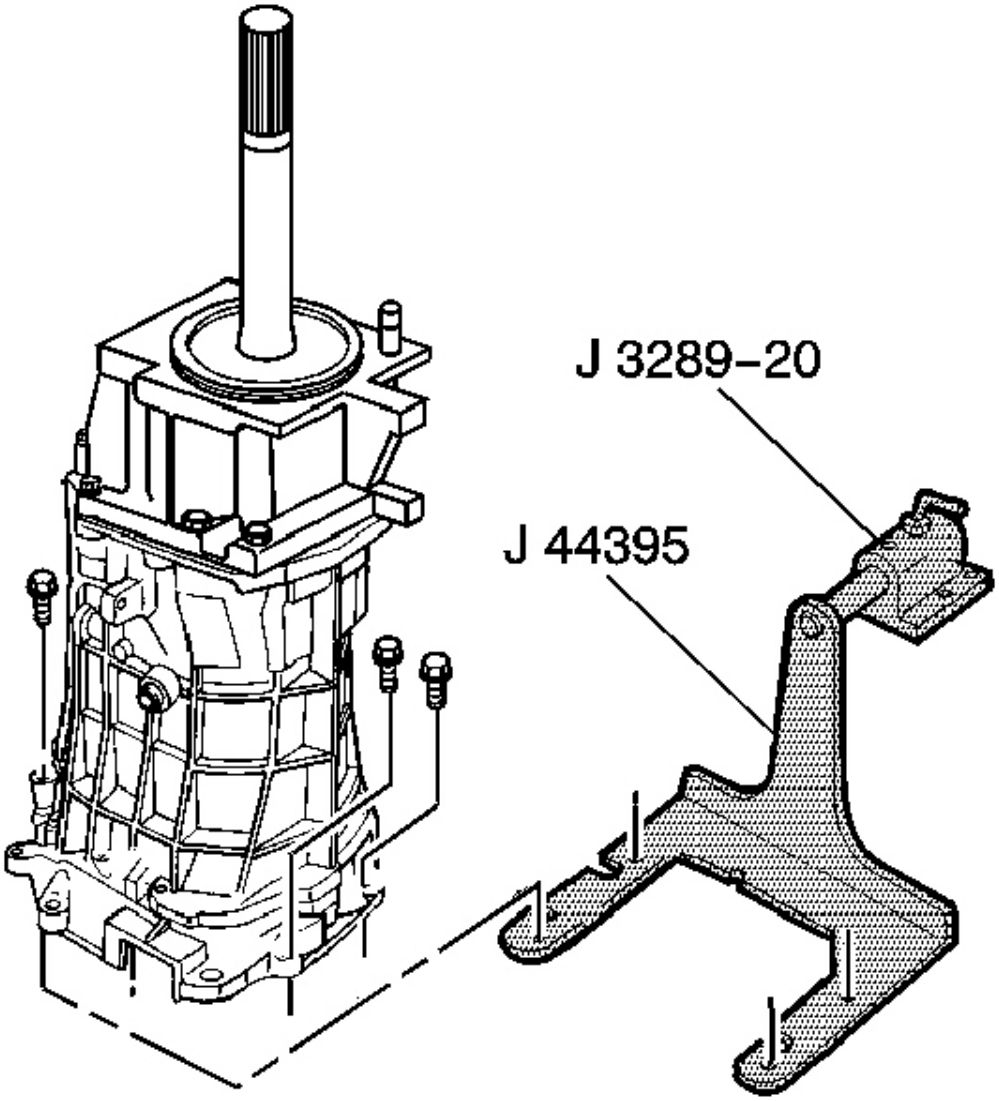

Fig. 340: Removing/Installing J 44395 On Transmission Case

cardiagn.com

Courtesy of GENERAL MOTORS CORP.

10. Remove the **J 44395** .

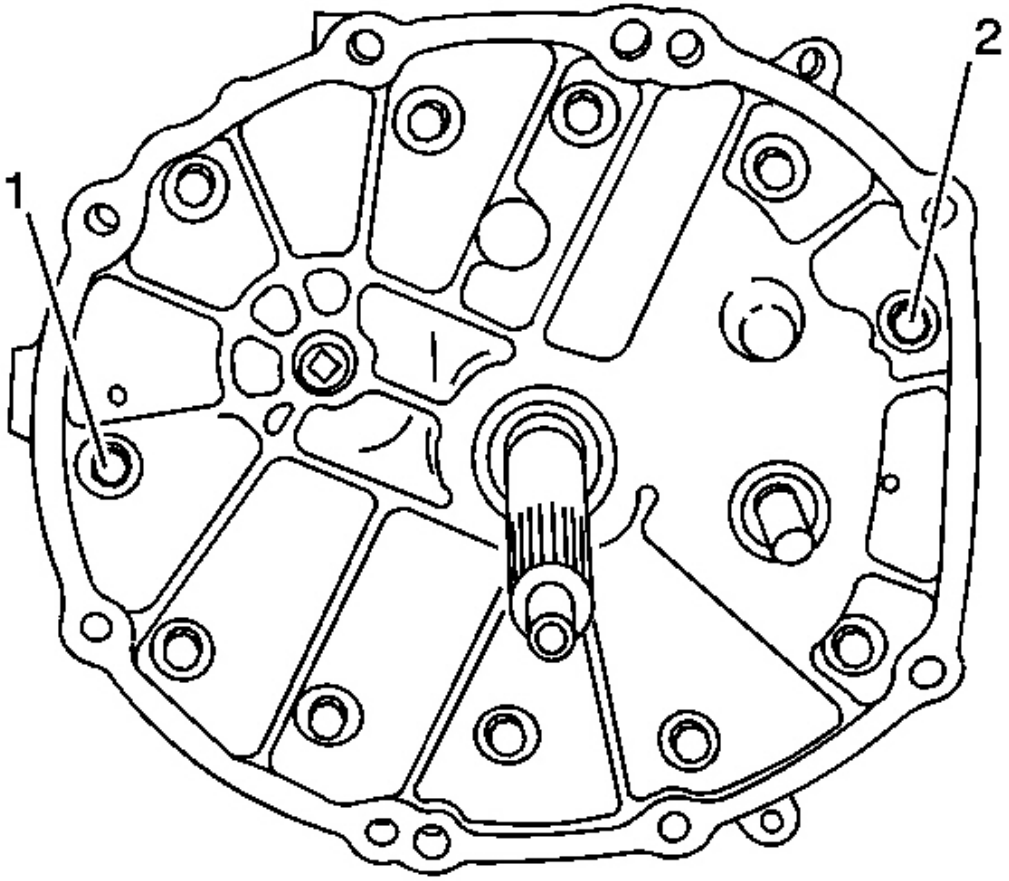

Fig. 341: Installing/Removing Two Adapter Plate Bolts
Courtesy of GENERAL MOTORS CORP.

11. Install the remaining two adapter plate bolts (1) and (2).

    Tighten: Tighten the adapter plate bolts to 48 N.m (36 lb ft).

TRANSMISSION ASSEMBLE (CTSV)

Tools Required

cardiagn.com

J 36850 Transjel(R) Lubricant Assembly Lube. See **Special Tools** .

Shift Shaft Assemblies and Gear Clusters Installation

1. Lubricate all components as assembly progresses, using **J 36850** .

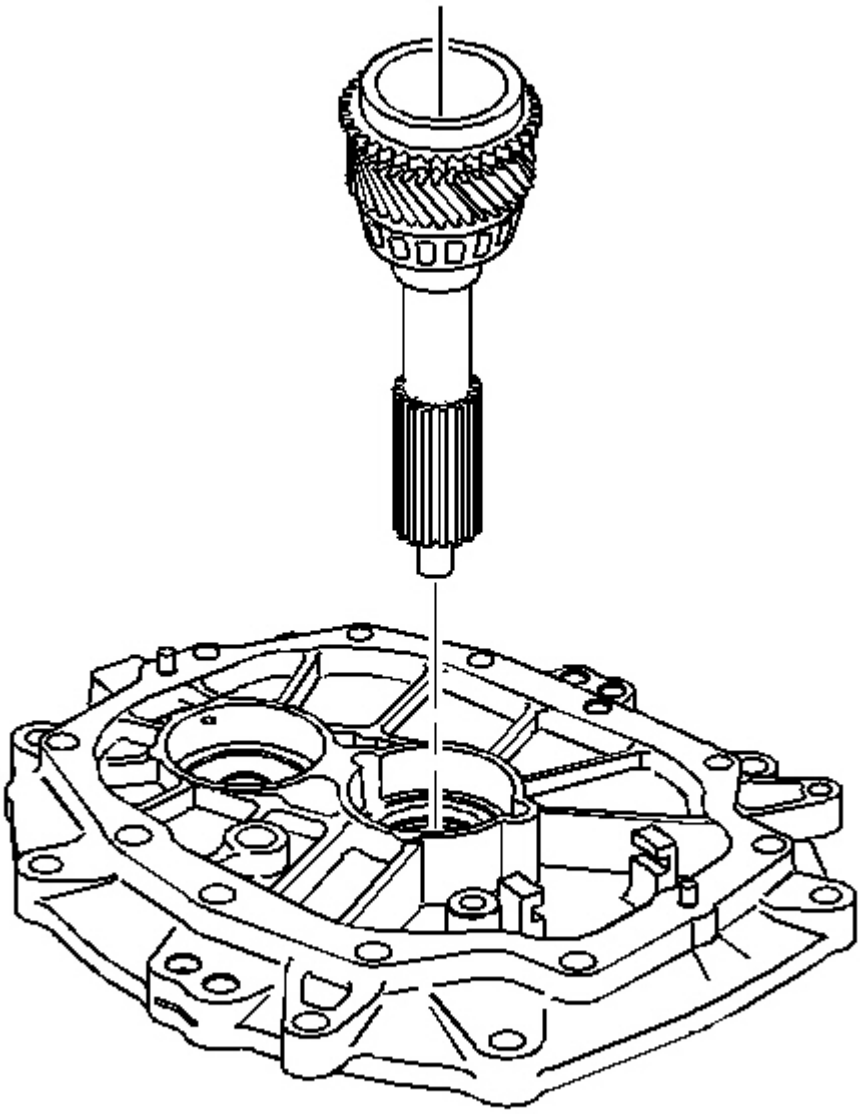

Fig. 342: View Of Input Shaft
Courtesy of GENERAL MOTORS CORP.

cardiagn.com

2. Install the input shaft in the adapter plate.

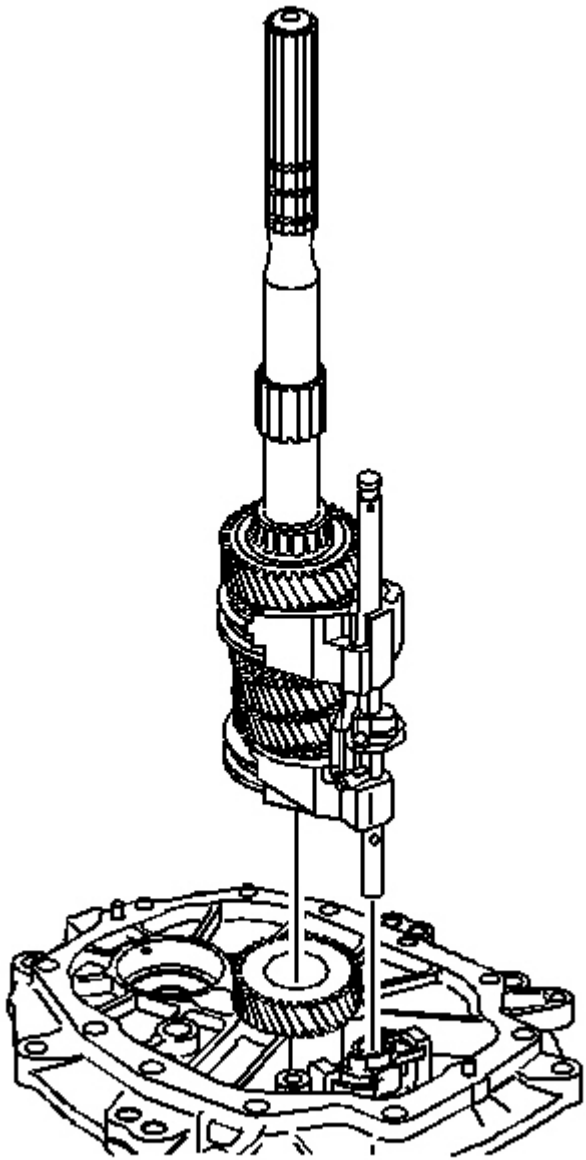

Fig. 343: Installing/Removing Mainshaft Assembly & Shift Shaft Components
Courtesy of GENERAL MOTORS CORP.

3. Assemble the shift shaft to the mainshaft.

cardiagn.com

4. Install the neutral return roll pin to the shift shaft.
5. Install the mainshaft and the shift shaft assembly into the adapter plate.

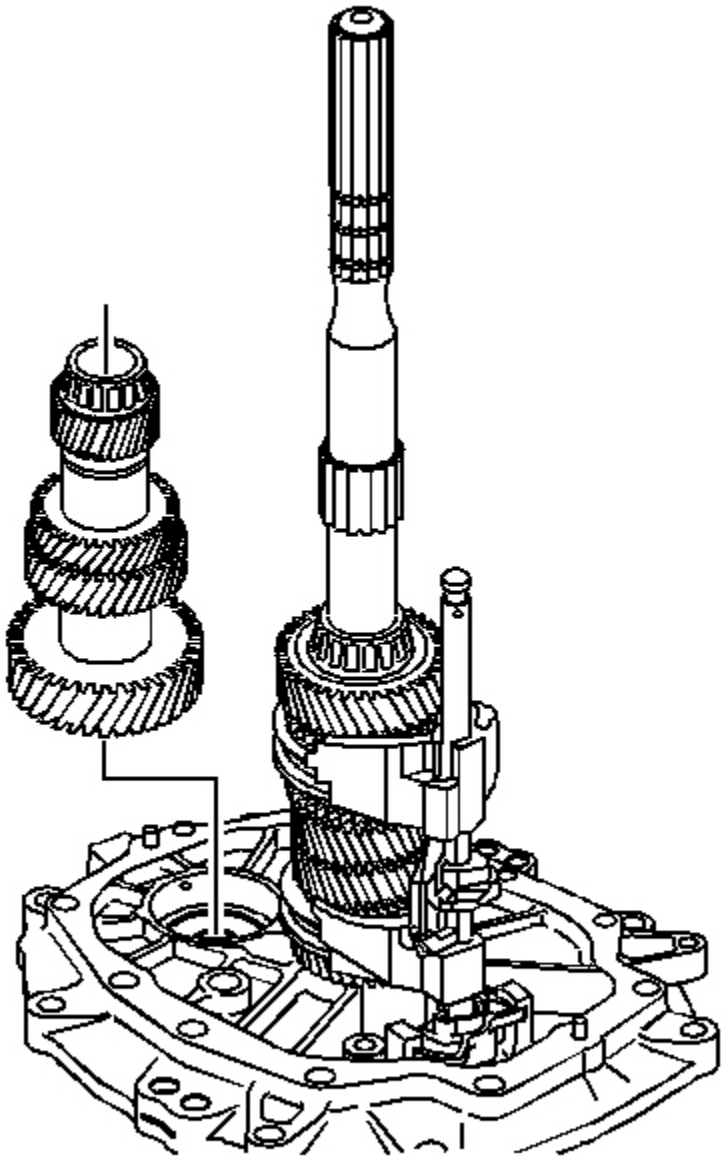

Fig. 344: Installing/Removing Countershaft Assembly
Courtesy of GENERAL MOTORS CORP.

cardiagn.com

6. Install the countershaft assembly using the following sequence:
    1. Lift up the mainshaft assembly enough in order to install the countershaft assembly.
    2. Install the countershaft assembly.
    3. Lift the mainshaft assembly enough in order to rotate the input shaft to engage the synchronizer keys with 4th gear blocking ring.

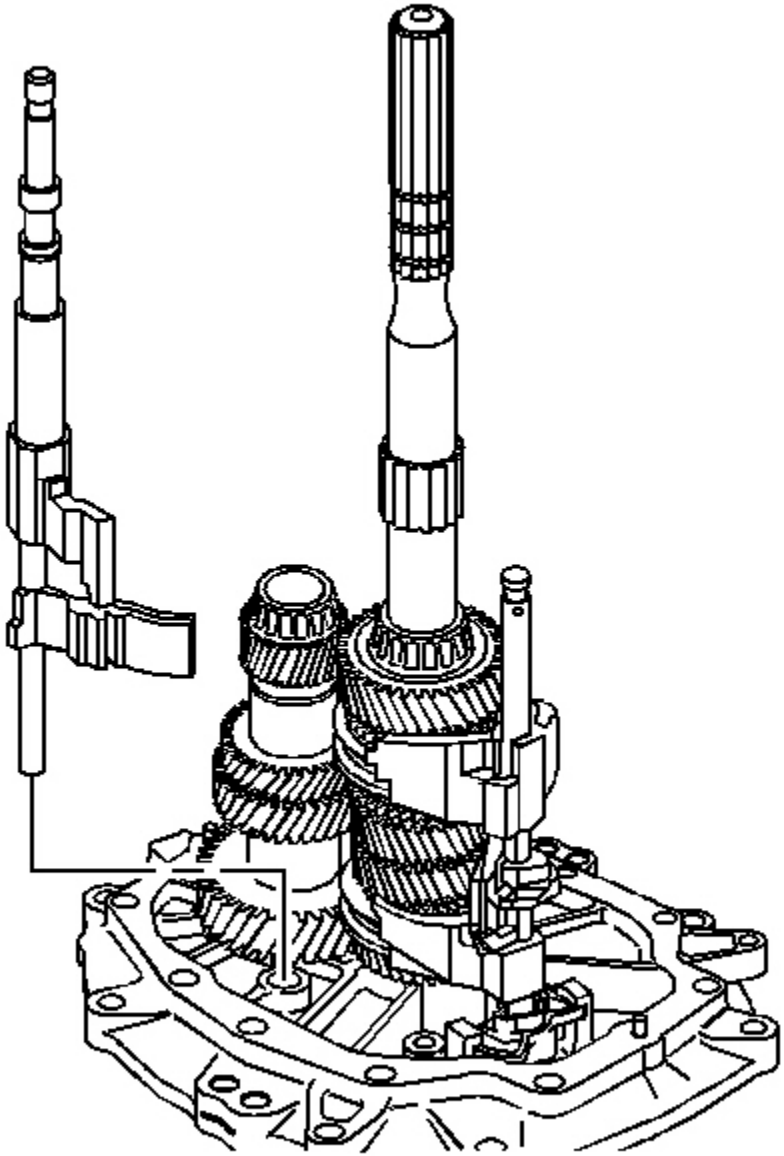

cardiagn.com

Fig. 345: View Of 5th/6th & Reverse Shift Shaft
Courtesy of GENERAL MOTORS CORP.

7. Install the 5th/6th and the reverse shift shaft.

   Align the slots of the shift shaft levers with the interlock plate.

Transmission Case Installation

Tools Required

- **J 41099** Skip Shift Sensor Remover/Installer. See **Special Tools** .
- **J 36850** Transjel(R) Lubricant. See **Special Tools** .

IMPORTANT: Lubricate all components as the assembly progresses. Use J 36850 or the equivalent.

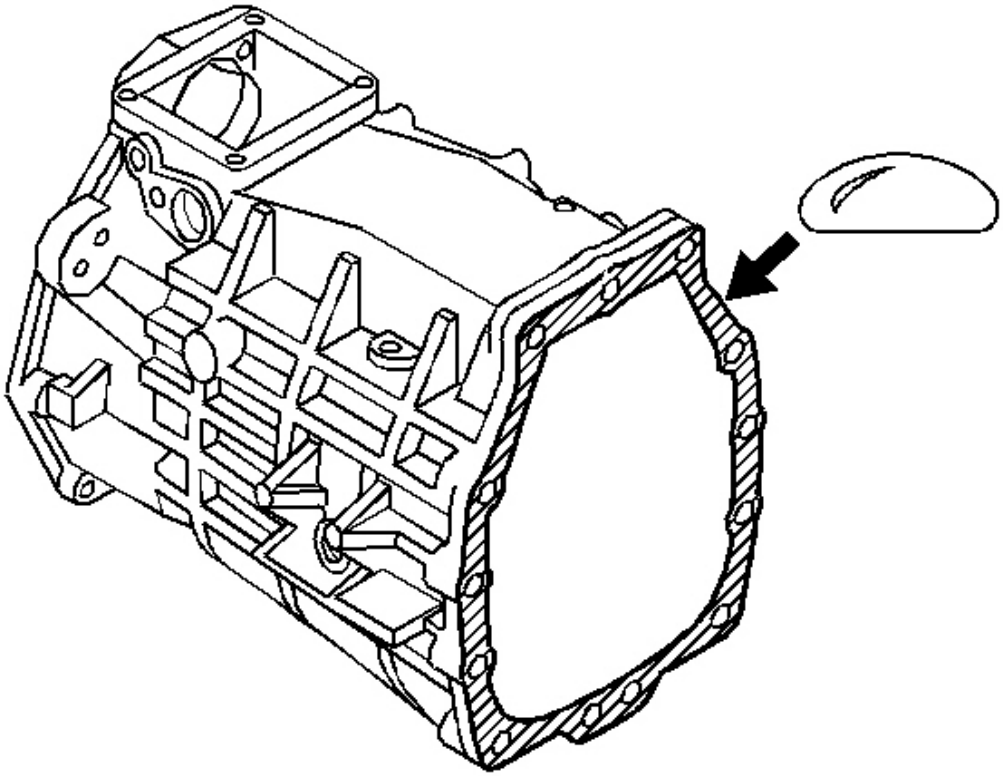

cardiagn.com

Fig. 346: Apply Sealer To Transmission Case To Adapter Plate Mating Surface
Courtesy of GENERAL MOTORS CORP.

1. Apply sealant GM P/N 12345739, (Canadian P/N 10953472) or equivalent to the transmission case to adapter plate mating surface.

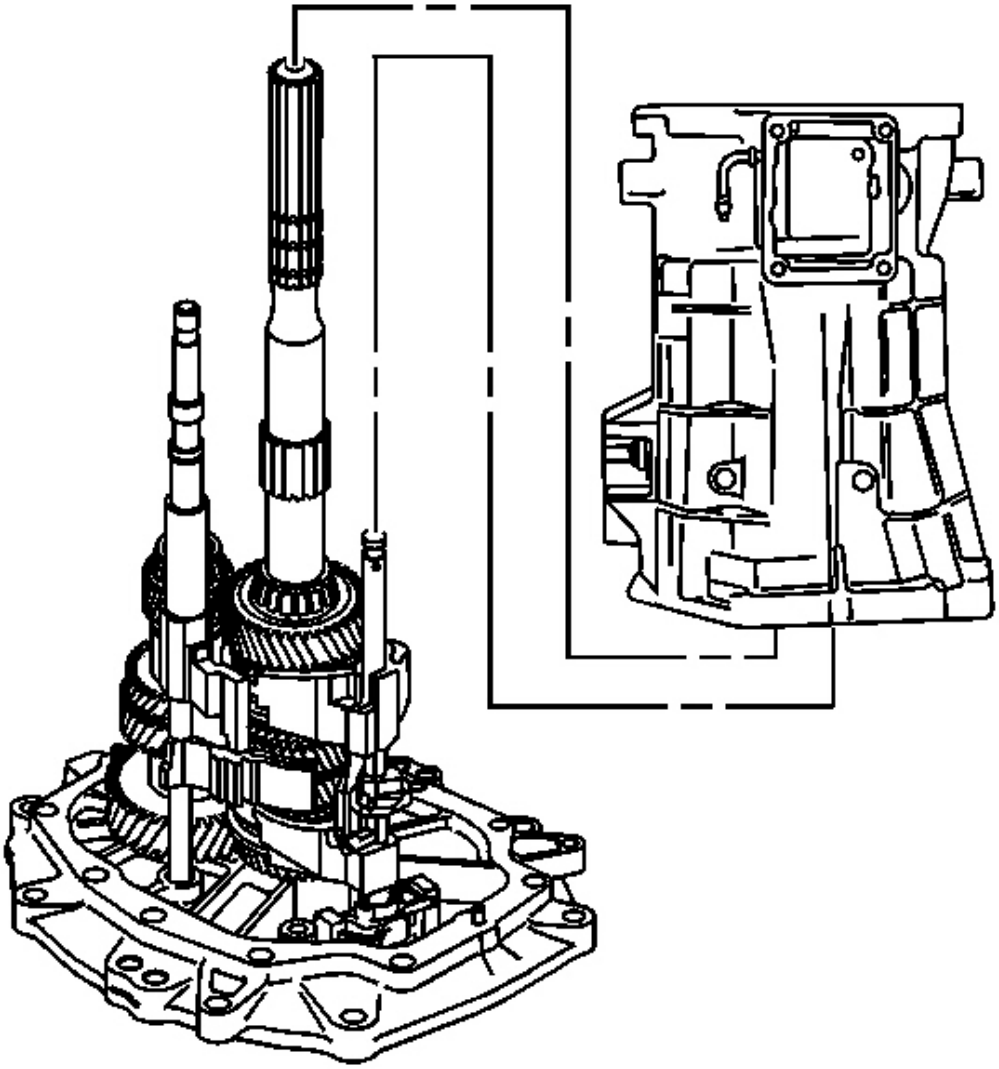

Fig. 347: Installing/Removing Transmission Case
Courtesy of GENERAL MOTORS CORP.

cardiagn.com

2. Do the following in order to install the transmission case and the offset lever:
    1. Shift the transmission into NEUTRAL in order to keep the 3rd/4th shift shaft from engaging.
    2. Install the offset lever.
    3. Slide the transmission case onto the gear clusters and the shift rail components.

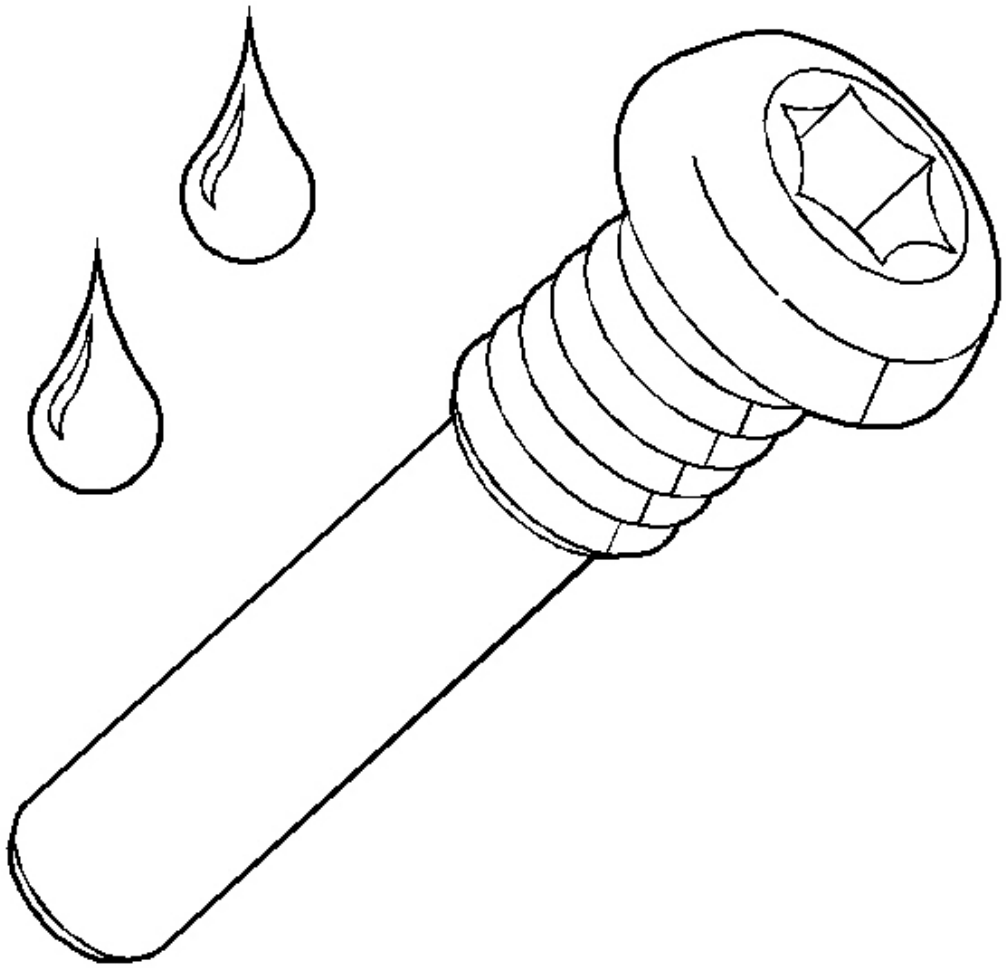

Fig. 348: Applying Sealer To Shift Lever Guide Bolts Threads
Courtesy of GENERAL MOTORS CORP.

3. Apply threadlock GM P/N 12346004, (Canadian P/N 10953480) or equivalent to the threads of the shift lever guide bolts.

cardiagn.com

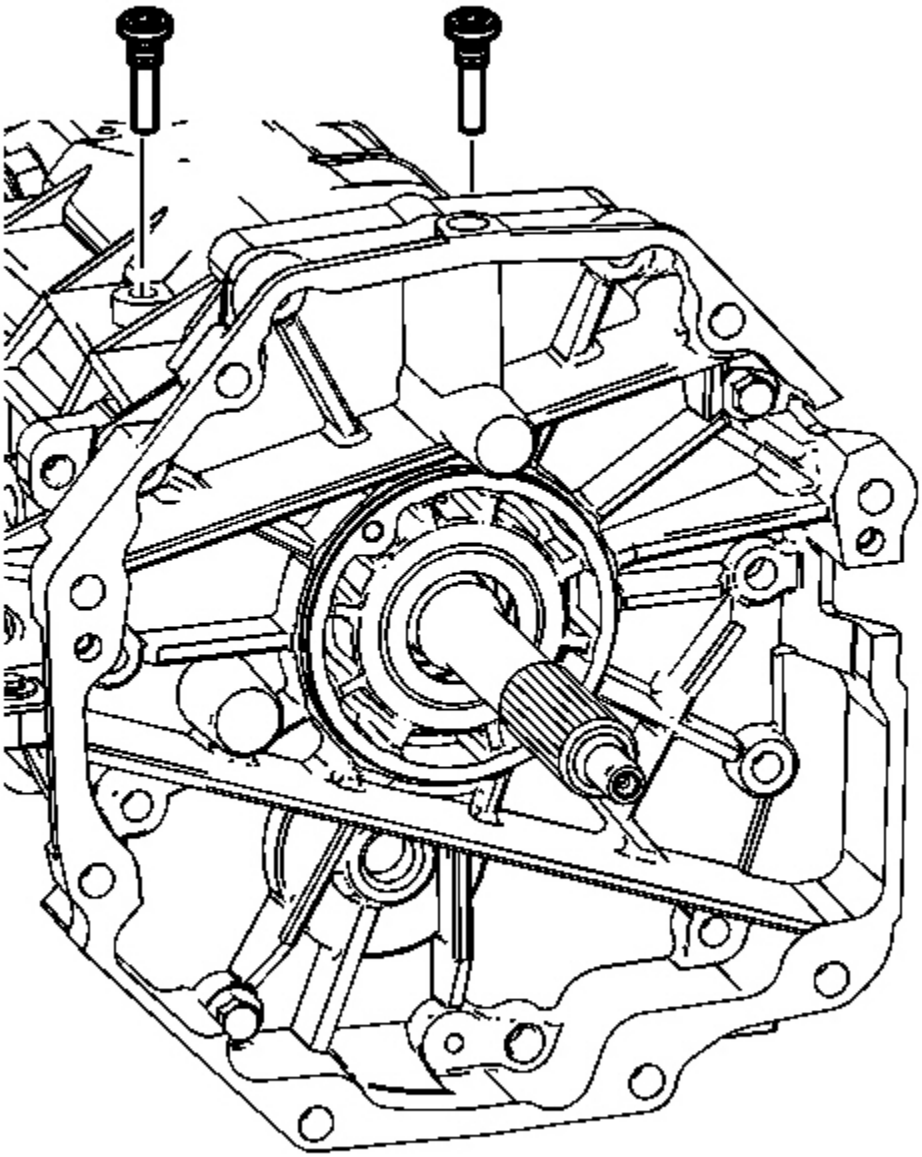

Fig. 349: View Of Shift Lever Guide Bolts
Courtesy of GENERAL MOTORS CORP.

NOTE: Refer to Fastener Notice in Cautions and Notices.

4. Install the shift lever guide bolts and pull up on 5th/6th and reverse shift rail assembly. This will help

cardiagn.com

align the slot of the shift interlock plate with the guide bolt hole.

Tighten: Tighten the bolts to 27 N.m (20 Ib. ft).

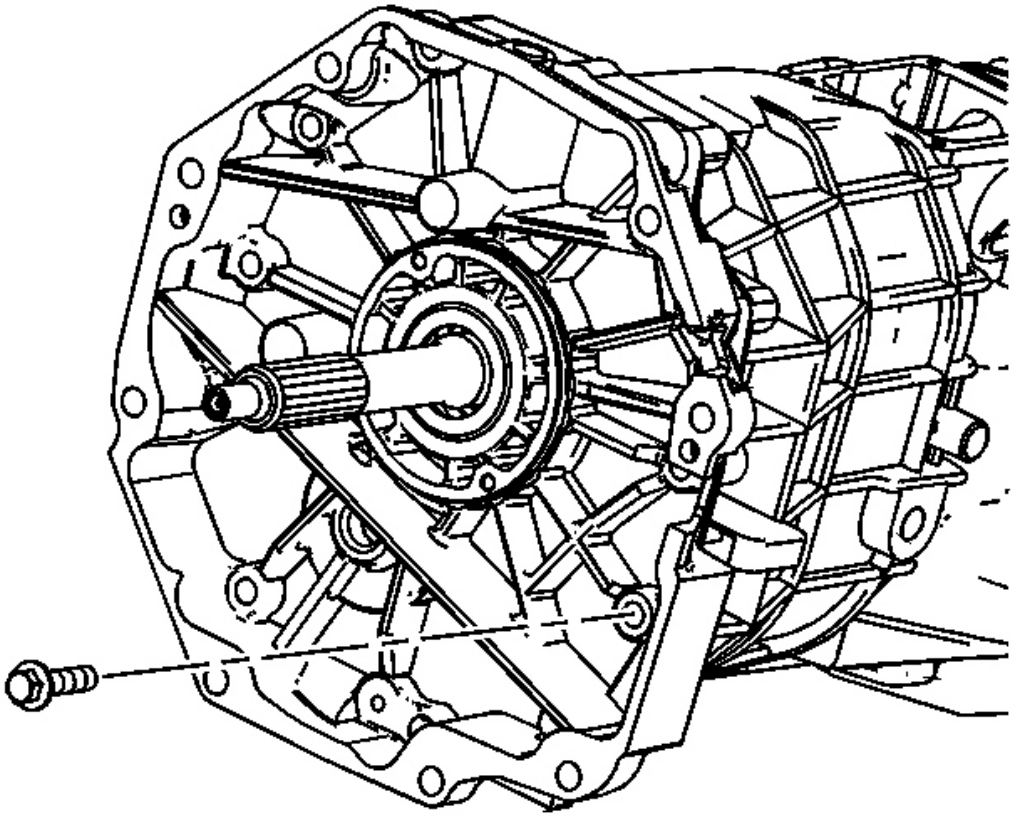

Fig. 350: Locating Adapter Plate To Transmission Case Bolts
Courtesy of GENERAL MOTORS CORP.

5. Install the adapter plate to transmission case bolts.

   Tighten: Tighten the bolts to 48 N.m (36 Ib. ft).

cardiagn.com

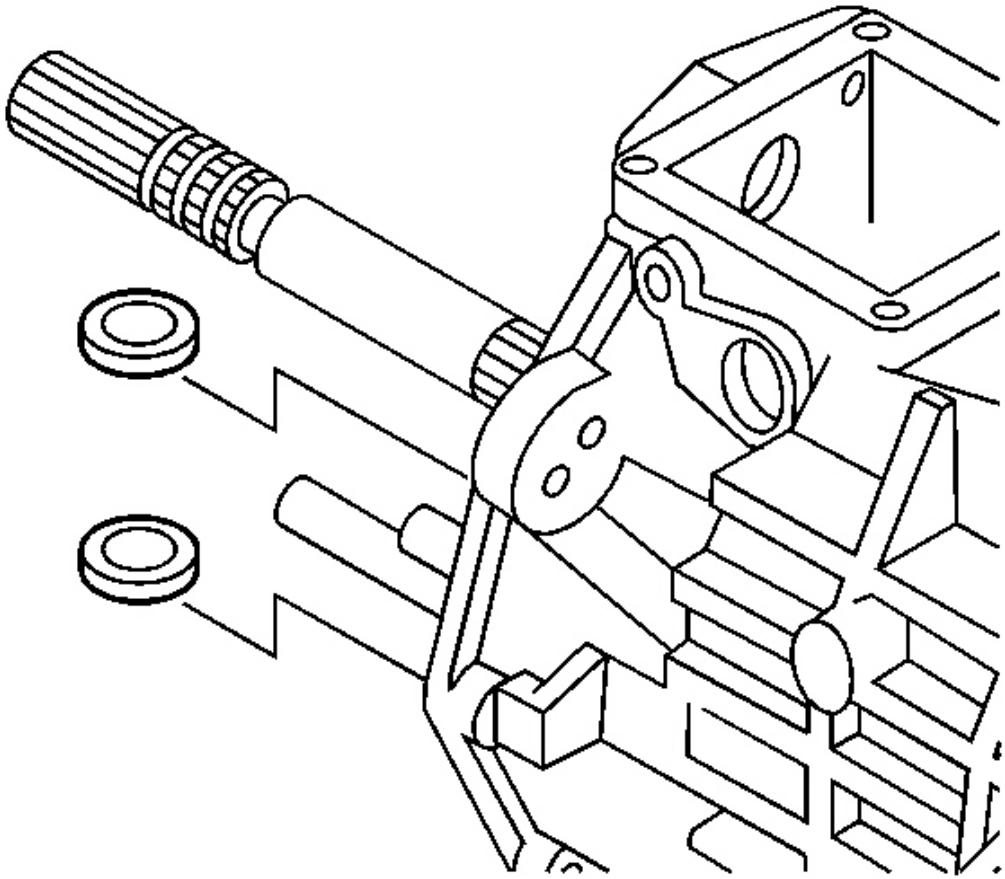

Fig. 351: Identifying Transmission Magnets
Courtesy of GENERAL MOTORS CORP.

6. Install the magnets into the transmission case.

cardiagn.com

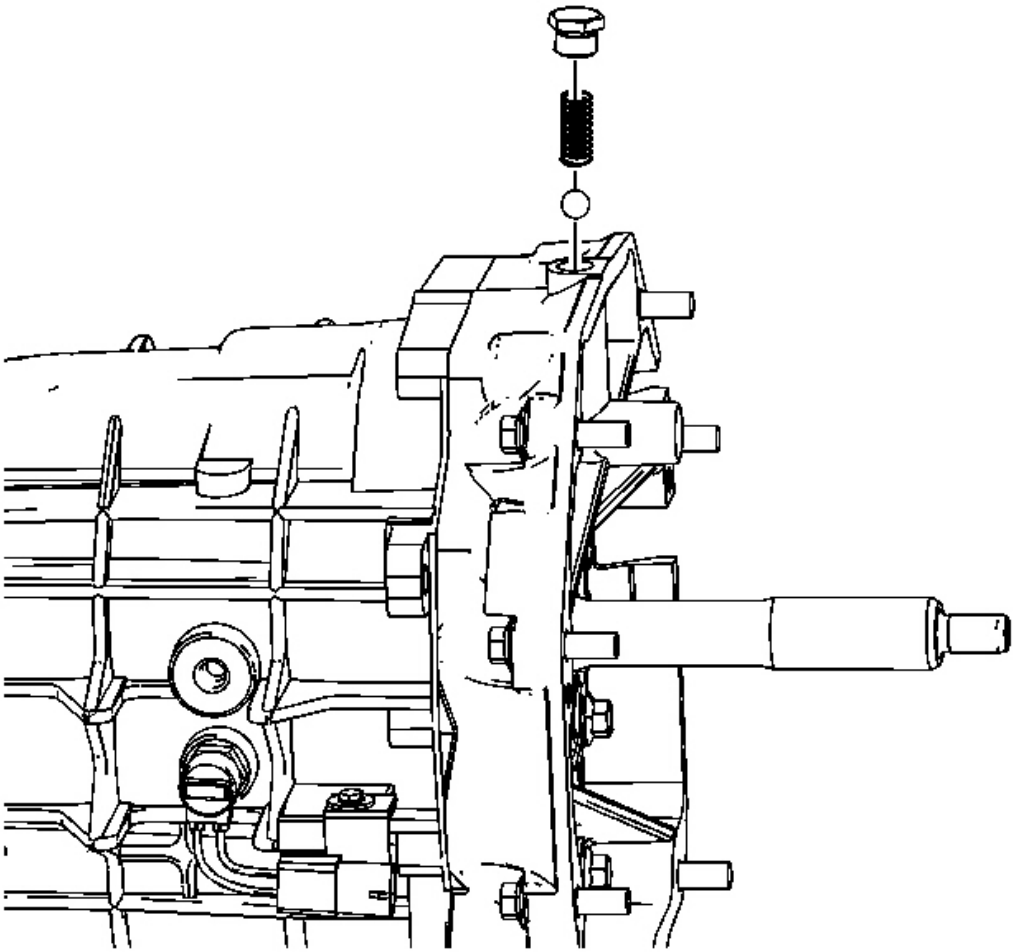

Fig. 352: Installing/Removing Shift Detent Plug, Spring And Ball
Courtesy of GENERAL MOTORS CORP.

7. Install the shift detent plug, spring and ball.

cardiagn.com

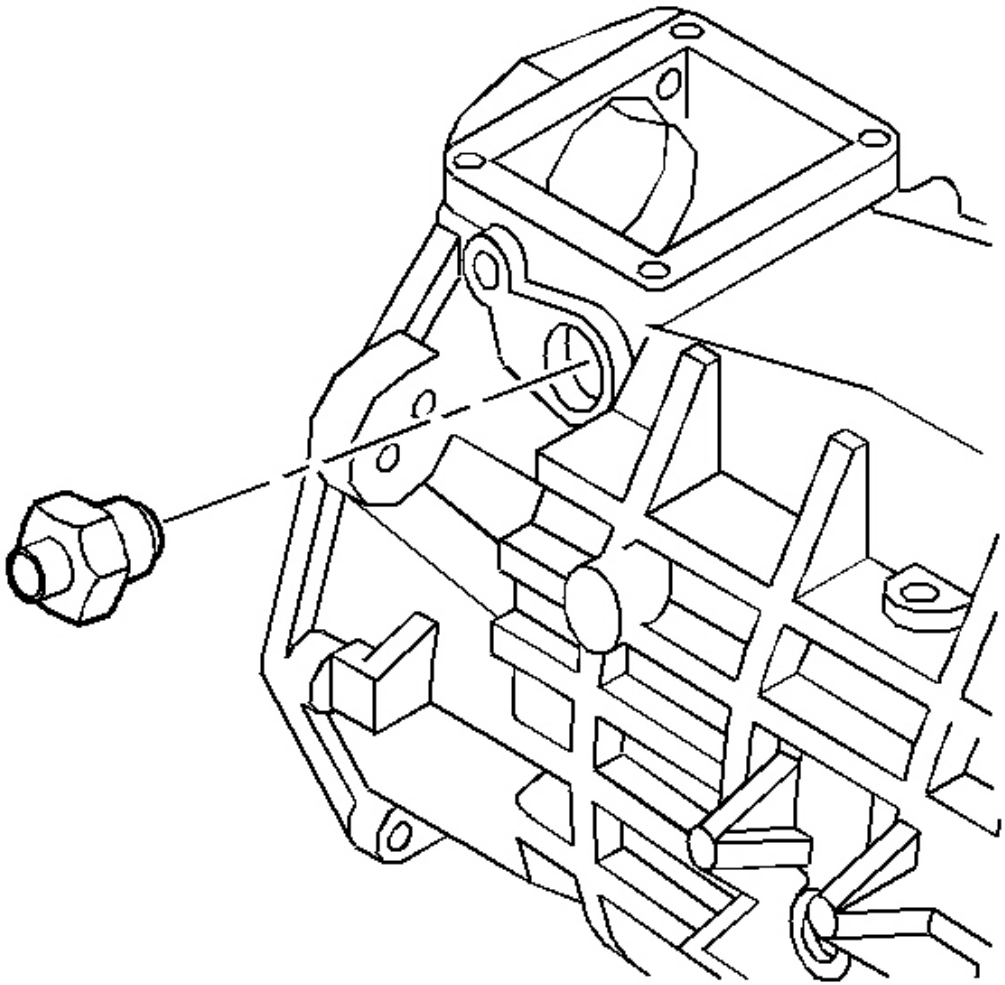

Fig. 353: View Of Shift Detent Assembly
Courtesy of GENERAL MOTORS CORP.

8. Install the shift detent assembly.

   Tighten: Tighten the detent assembly to 40 N.m (30 Ib. ft).

cardiagn.com

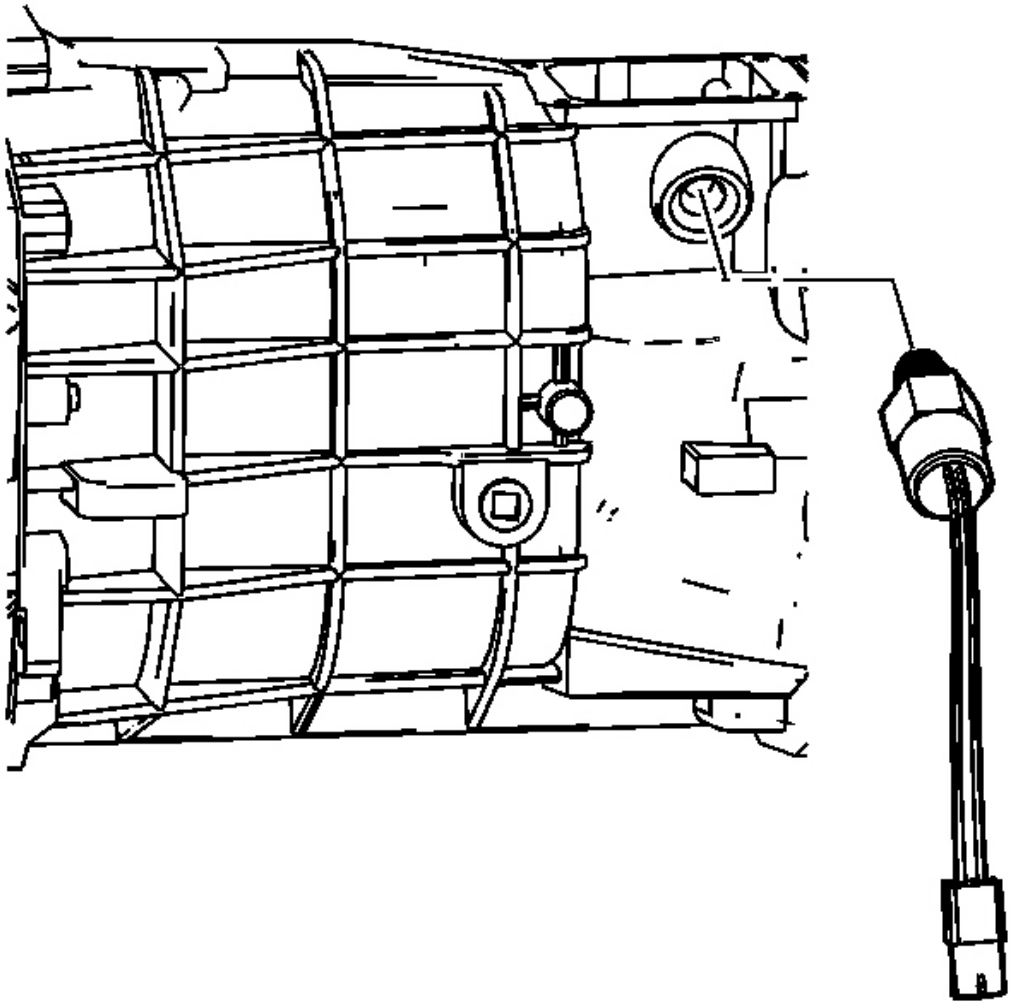

Fig. 354: Locating Computer Aided Gear Select Solenoid
Courtesy of GENERAL MOTORS CORP.

9. Install the computer aided gear select solenoid.

   Tighten: Tighten the solenoid to 40 N.m (30 Ib. ft).

Countershaft Extension Installation

cardiagn.com

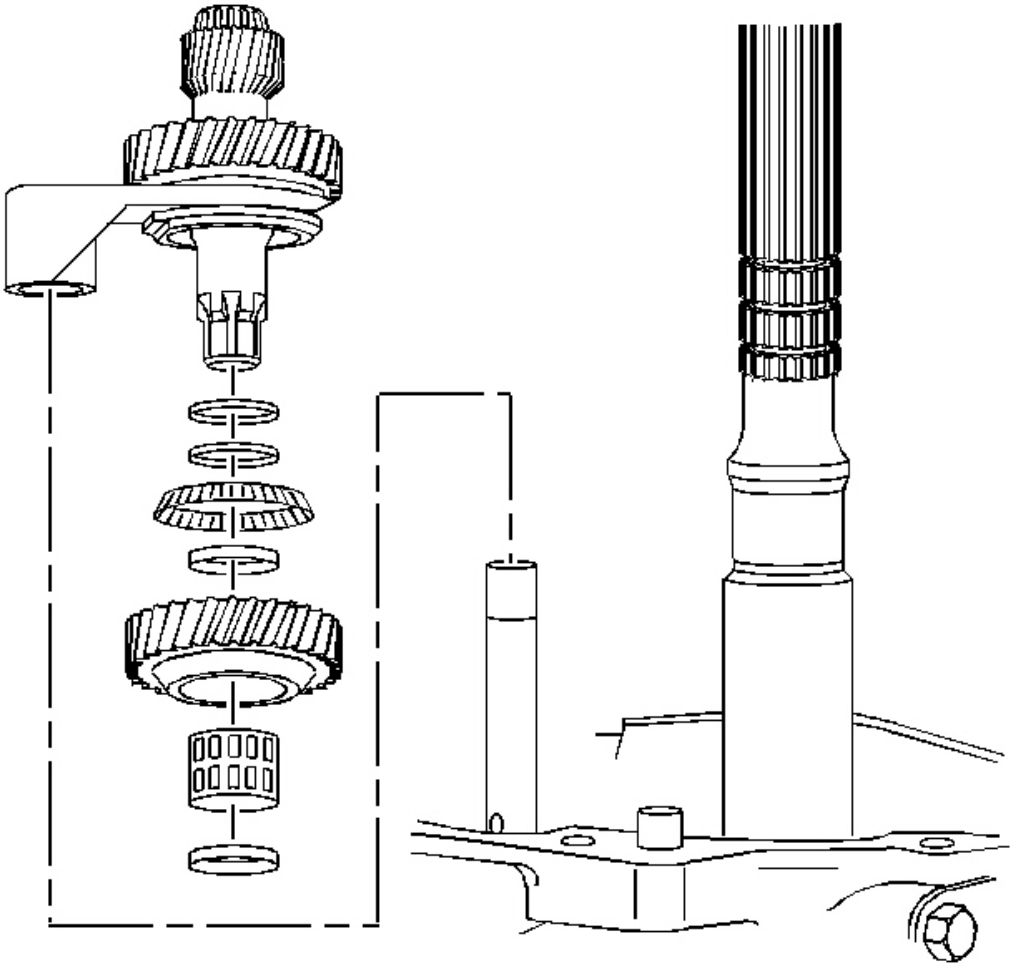

Fig. 355: Identifying Countershaft Extension Assembly & 5th/6th Shift Fork
Courtesy of GENERAL MOTORS CORP.

1. Position the transmission in the horizontal position.
2. Install the countershaft extension assembly and the 5th/6th shift fork. The splines of the countershaft extension must engage the splines of the countershaft.

cardiagn.com

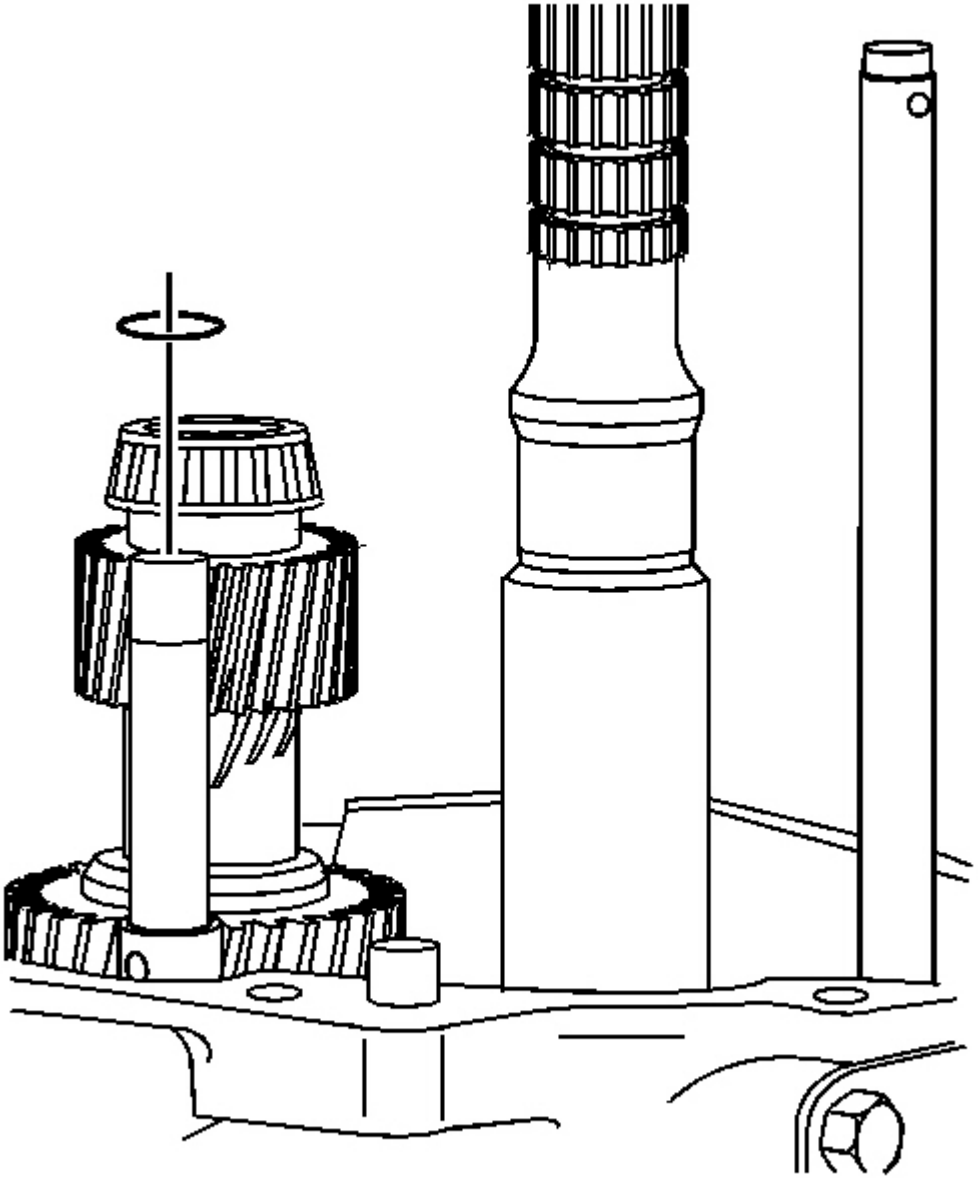

Fig. 356: View Of 5th/6th Shift Fork Retainer Ring
Courtesy of GENERAL MOTORS CORP.

3. Install the 5th/6th shift fork retainer ring.

5th/6th Speed Driven Gear Installation

cardiagn.com

Tools Required

- **J 39441** 5th/6th Driven Gear Installer. See **Special Tools** .
- **J 39441-10** 5th Gear Installer Adapter. See **Special Tools** .

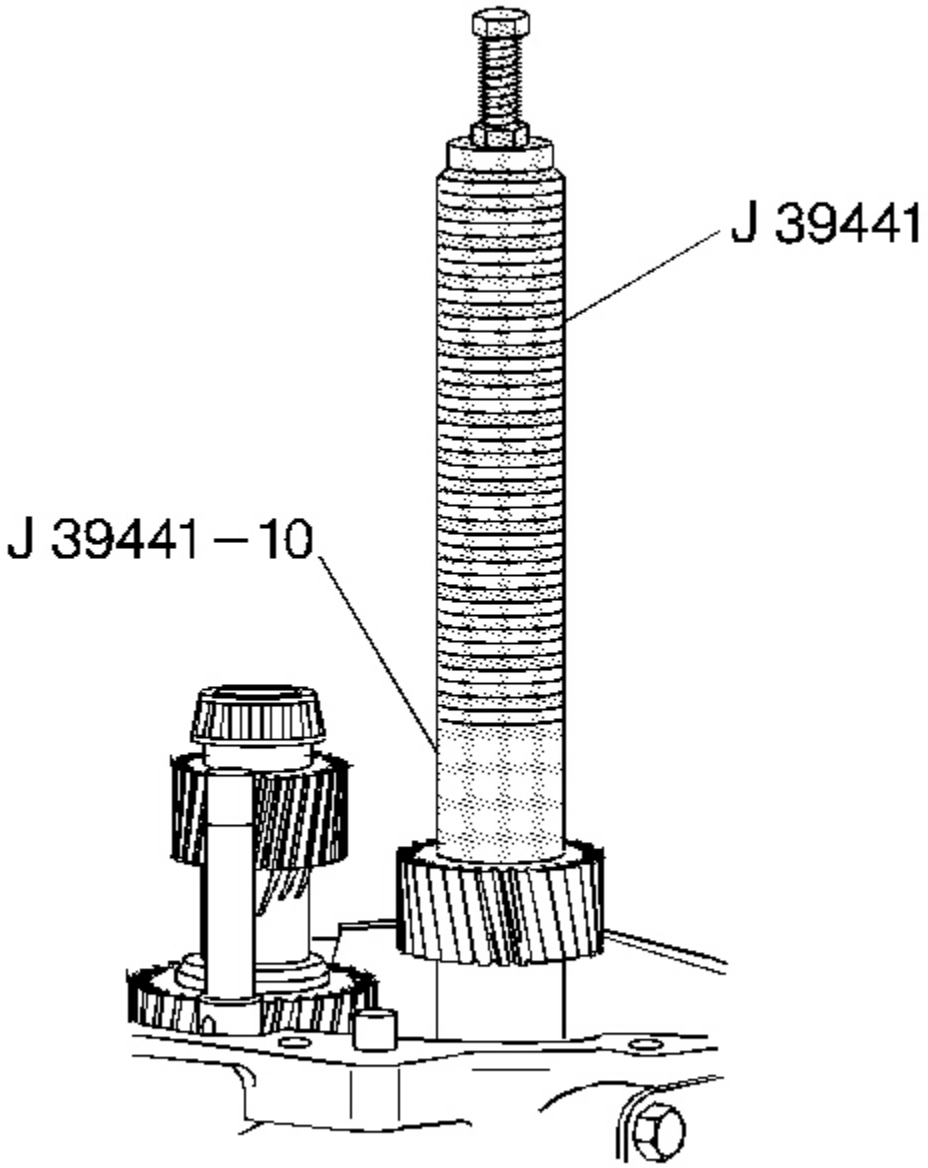

Fig. 357: Installing 5th/6th speed Driven Gear Using J 39441 & J 39441-10

cardiagn.com

Courtesy of GENERAL MOTORS CORP.

Install the 5th/6th speed driven gear using the **J 39441** and **J 39441-10** . The smaller outside diameter (OD) of the gear faces down.

Reverse Shift Fork Installation

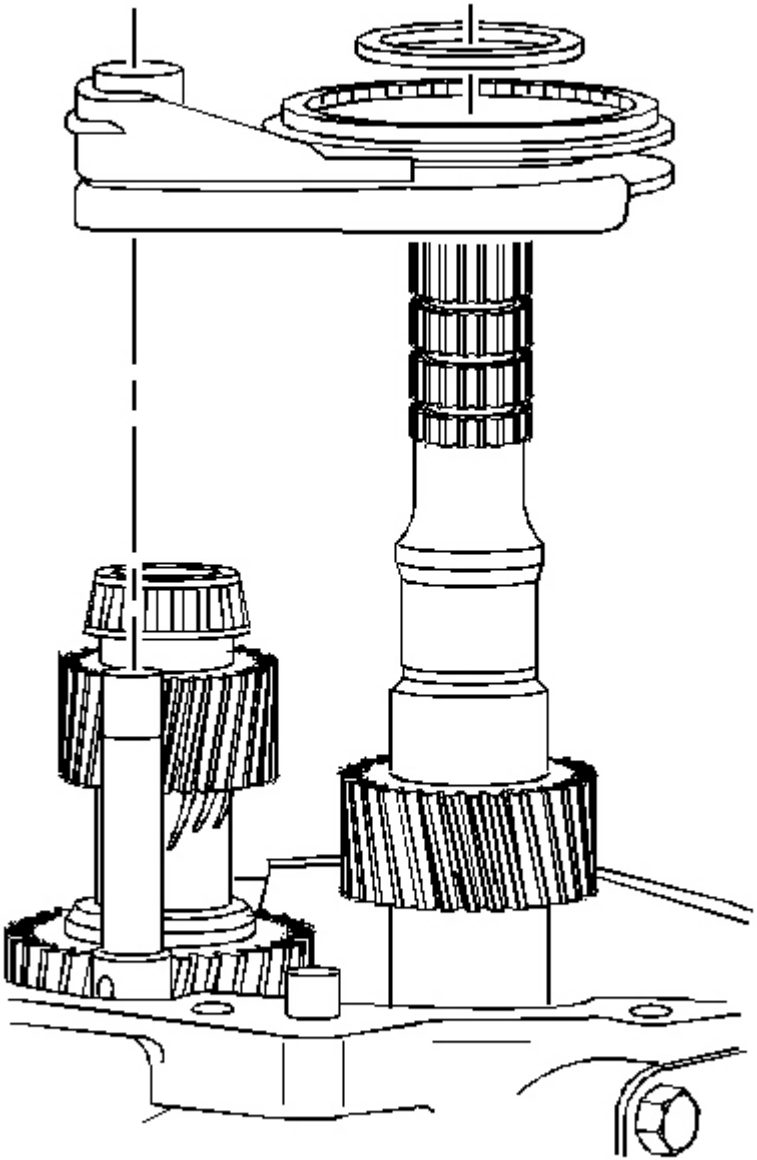

cardiagn.com

Fig. 358: Identifying Reverse Shift Fork, Synchronizer & Thrust Washer
Courtesy of GENERAL MOTORS CORP.

1. Install the reverse shift fork, the synchronizer and the thrust washer.

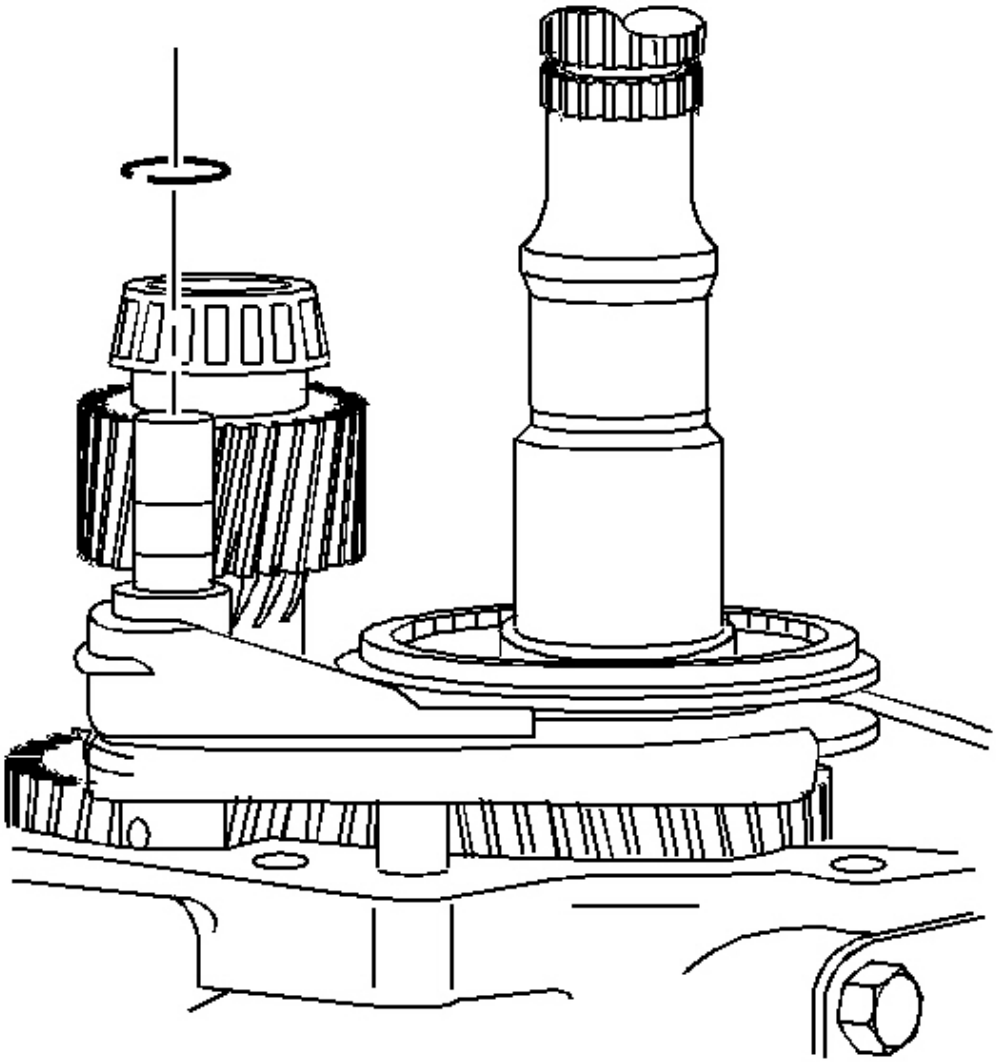

Fig. 359: Installing/Removing Shift Fork Retainer Ring
Courtesy of GENERAL MOTORS CORP.

2. Install a new shift fork retainer ring.

cardiagn.com

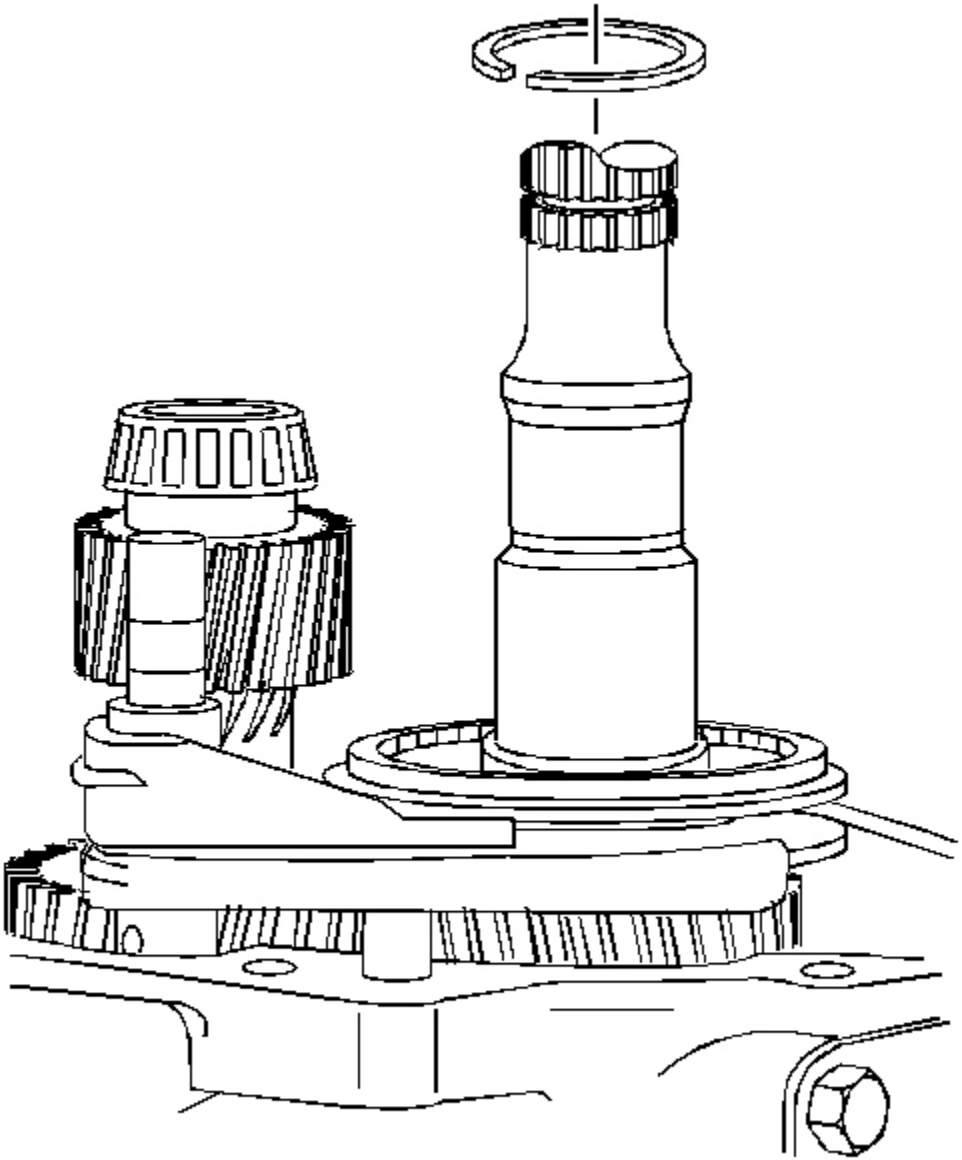

Fig. 360: View Of Reverse Synchronizer Retainer Ring
Courtesy of GENERAL MOTORS CORP.

3. Install the reverse synchronizer retainer ring.

Reverse Speed Gear Installation

cardiagn.com

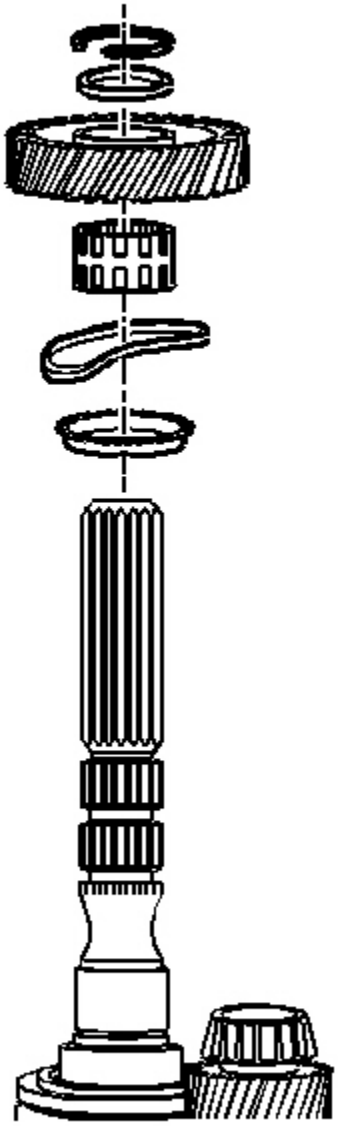

Fig. 361: Identifying Reverse Speed Gear Components
Courtesy of GENERAL MOTORS CORP.

1. Install the following parts in order:
    1. The blocking ring
    2. The wave washer
    3. The wave washer so the concave side faces the blocking ring

cardiagn.com

4. The caged needle bearing
5. The reverse speed gear
6. The thrust washer
7. The retainer ring

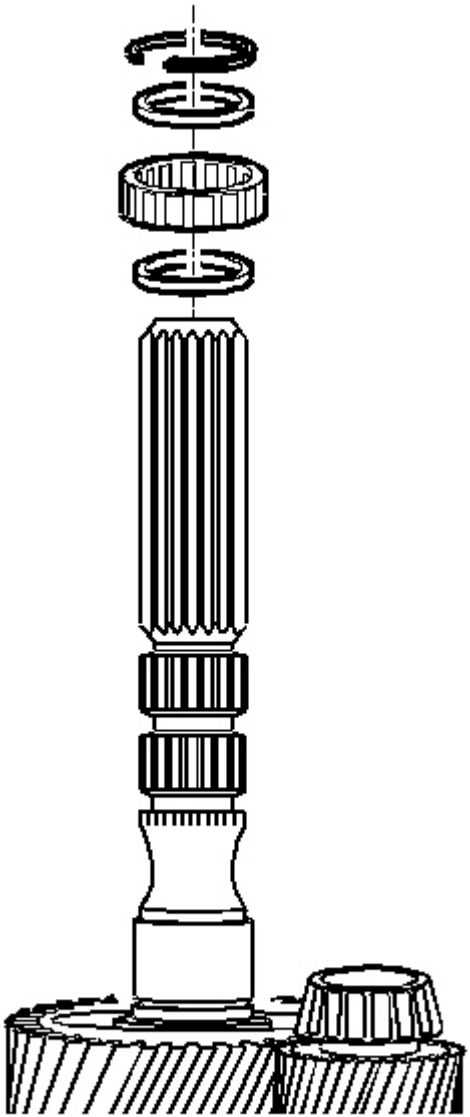

Fig. 362: View Of Mainshaft Rear Roller Bearing, Rear Bearing Retainer Ring & Spacers
Courtesy of GENERAL MOTORS CORP.

cardiagn.com

2. Install the following parts in order:
    1. The spacer
    2. The roller bearing
    3. The spacer
    4. The roller bearing retainer ring

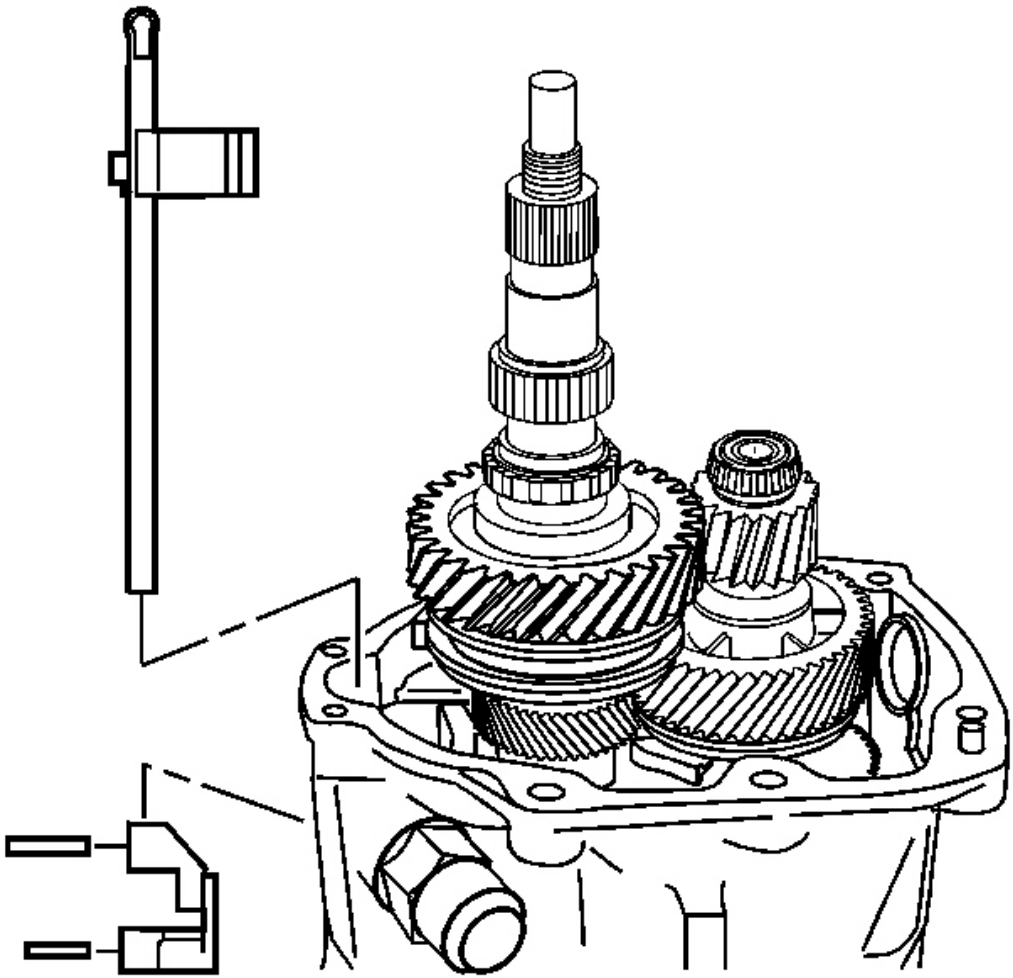

Fig. 363: Identifying Shift Guide, Rollpins & Shift Shaft Extension
Courtesy of GENERAL MOTORS CORP.

3. Install the shift shaft extension.
4. Install the shift guide.

cardiagn.com

5. Install NEW shift guide roll pins.

Tools Required

J 44395 Transmission Holding Fixture. See **Special Tools** .

Extension Housing Assemble

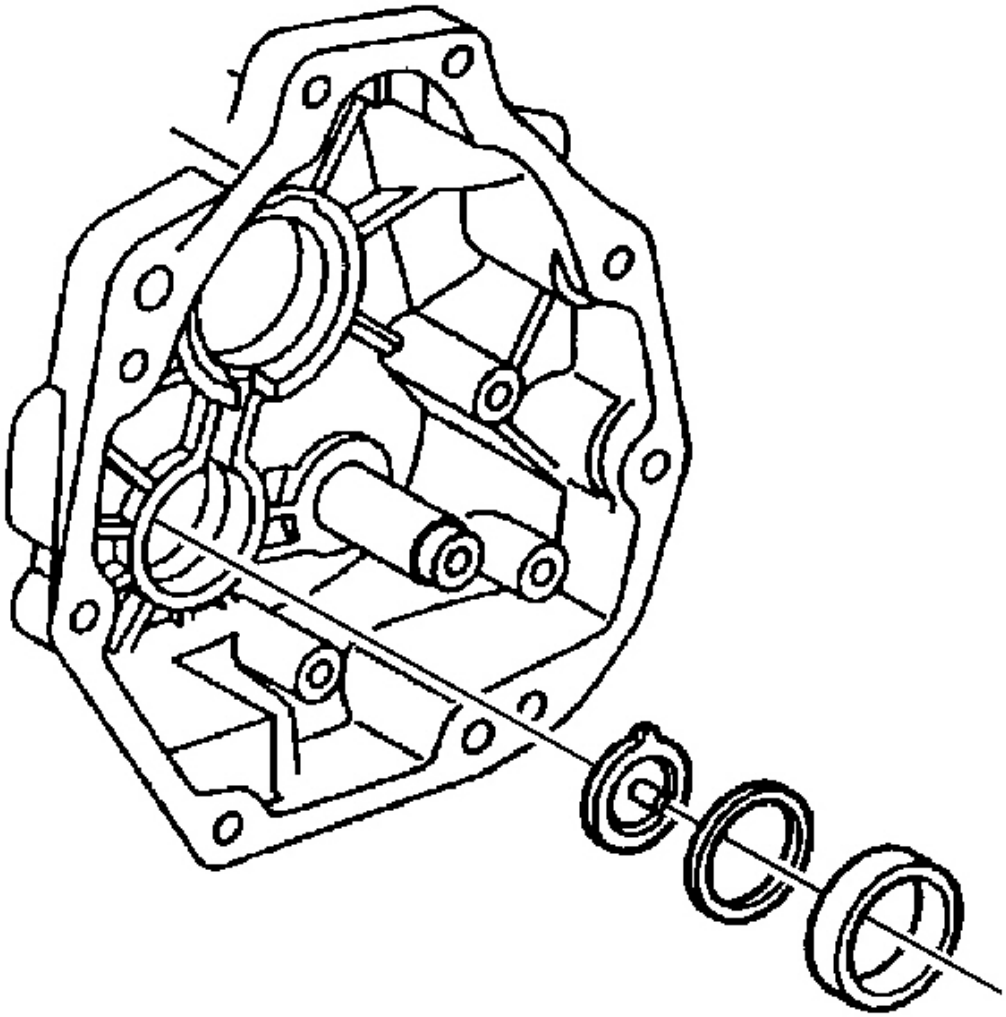

Fig. 364: View Of Countershaft Extension Bearing Race, Funnel & Shim
Courtesy of GENERAL MOTORS CORP.

cardiagn.com

1. Install the following parts in order:
    1. The funnel
    2. The selective shims. Refer to the Countershaft Extension in **Shimming Procedures (Y Car)** or **Shimming Procedures (CTSV)** or **Shimming Procedures (GTO)** .
    3. The countershaft extension bearing race

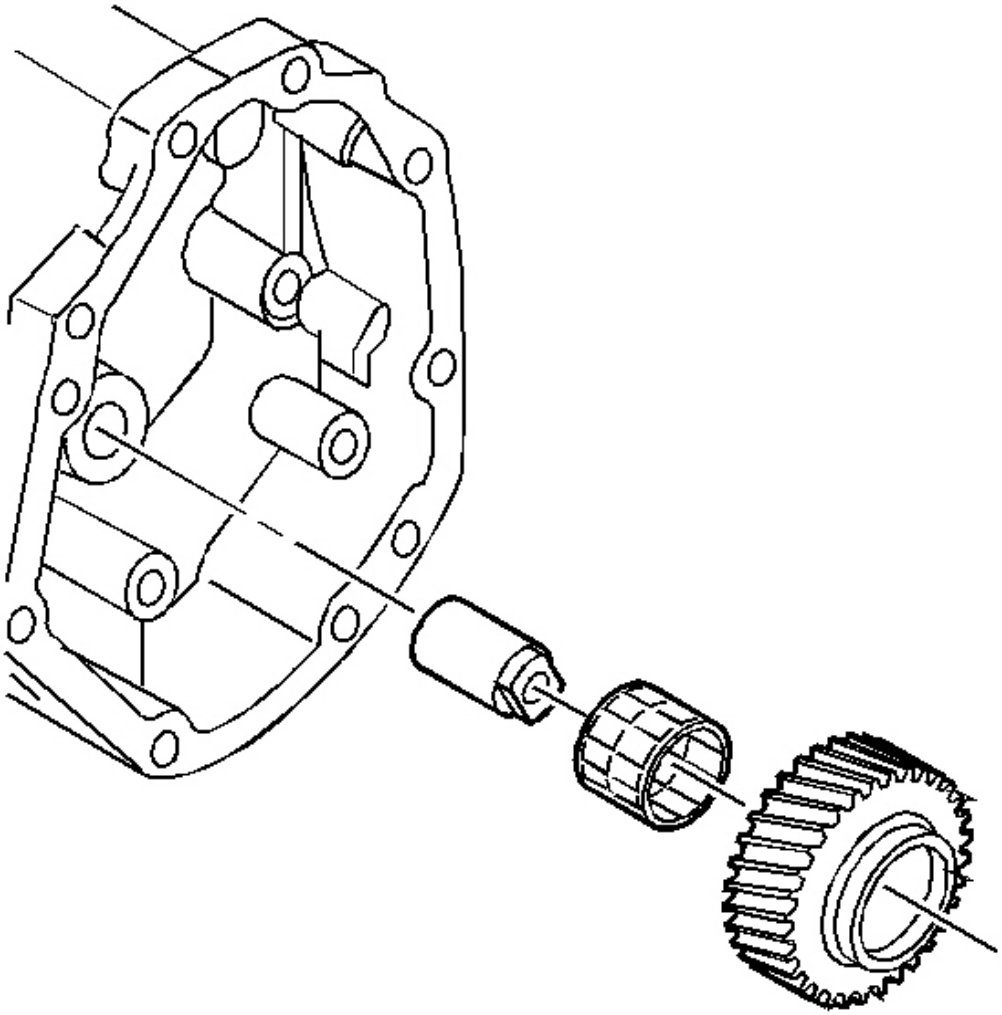

Fig. 365: Identifying Reverse Idler Shaft, Roller Bearing & Reverse Idler Gear
Courtesy of GENERAL MOTORS CORP.

2. Install the following parts in order:

cardiagn.com

1. The reverse idler shaft
2. The roller bearing
3. The reverse idler gear

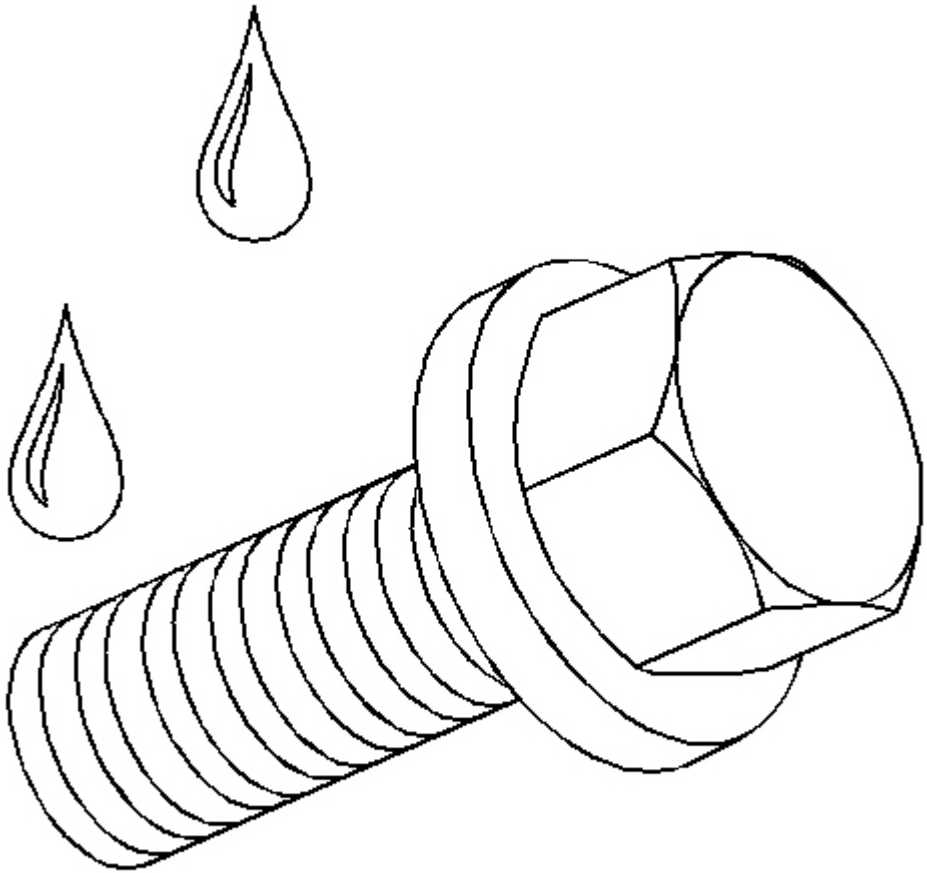

Fig. 366: Applying Sealant To Reverse Idler Shaft Brackets Bolt Threads
Courtesy of GENERAL MOTORS CORP.

3. Apply GM P/N 12345382, (Canadian P/N 10953489) or the equivalent to the reverse idler shaft brackets bolt threads.

NOTE: Refer to Fastener Notice in Cautions and Notices.

cardiagn.com

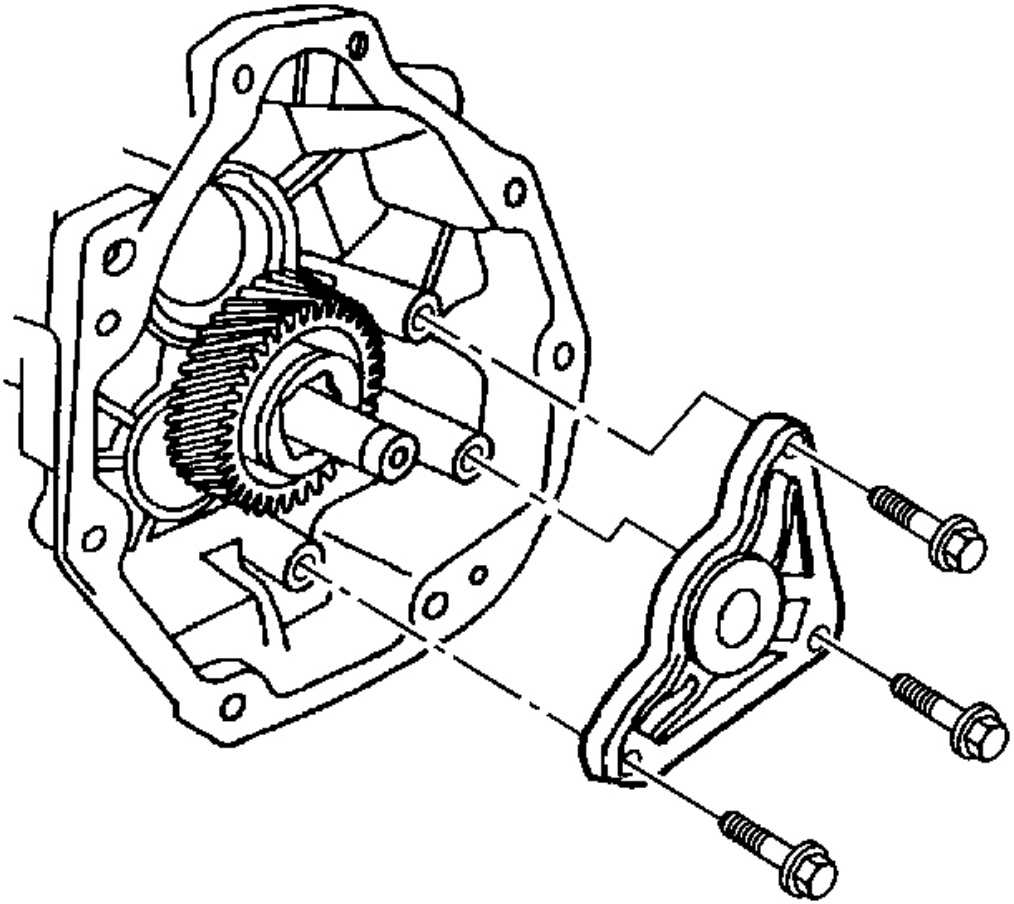

Fig. 367: View Of Reverse Idler Shaft Bracket & Mounting Bolts
Courtesy of GENERAL MOTORS CORP.

4. Install the following parts in order:
    1. The reverse idler shaft bracket.
    2. The reverse idler shaft bracket bolts.

    Tighten: Tighten the bolts to 25 N.m (18 Ib. ft).

cardiagn.com

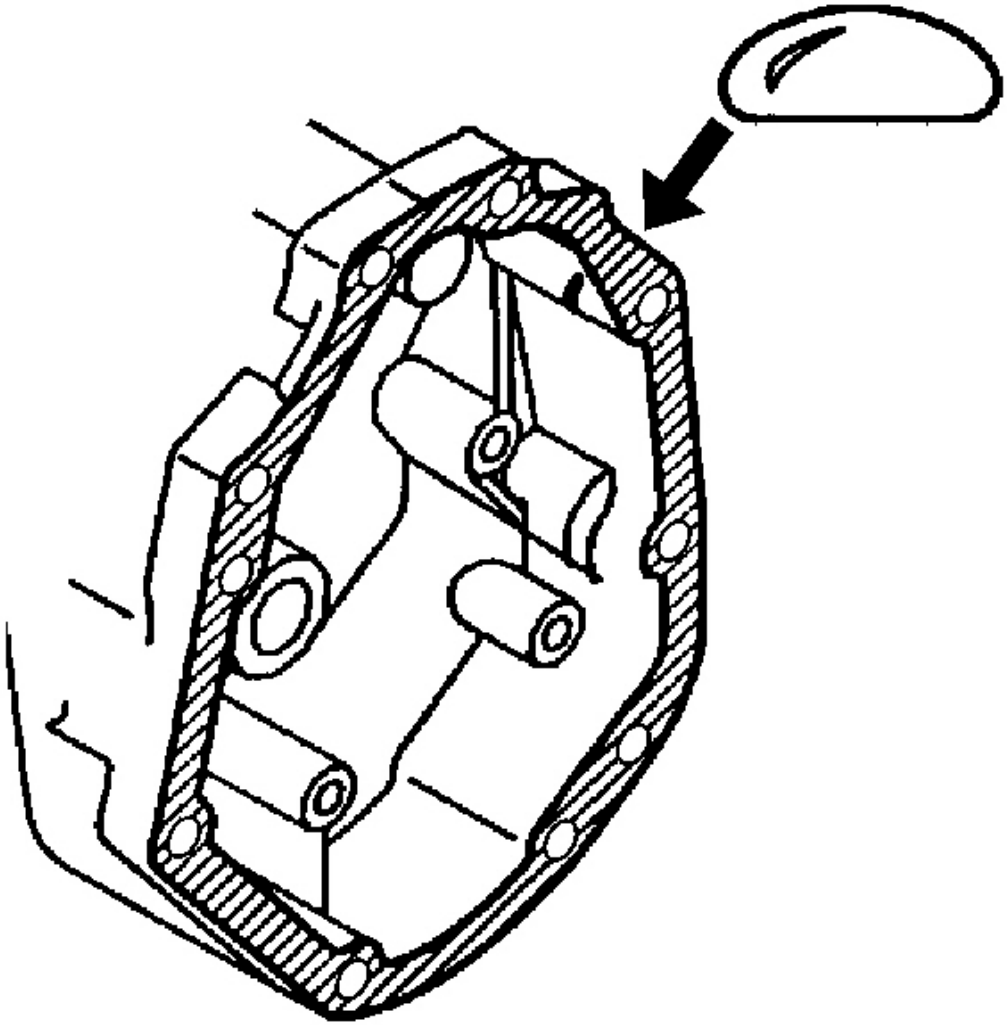

Fig. 368: Applying Sealant To Extension Housing To Transmission Case Mating Surface
Courtesy of GENERAL MOTORS CORP.

5. Apply sealant GM P/N 12345739, (Canadian P/N 10953472) or equivalent to the extension housing to the transmission case mating surface.

cardiagn.com

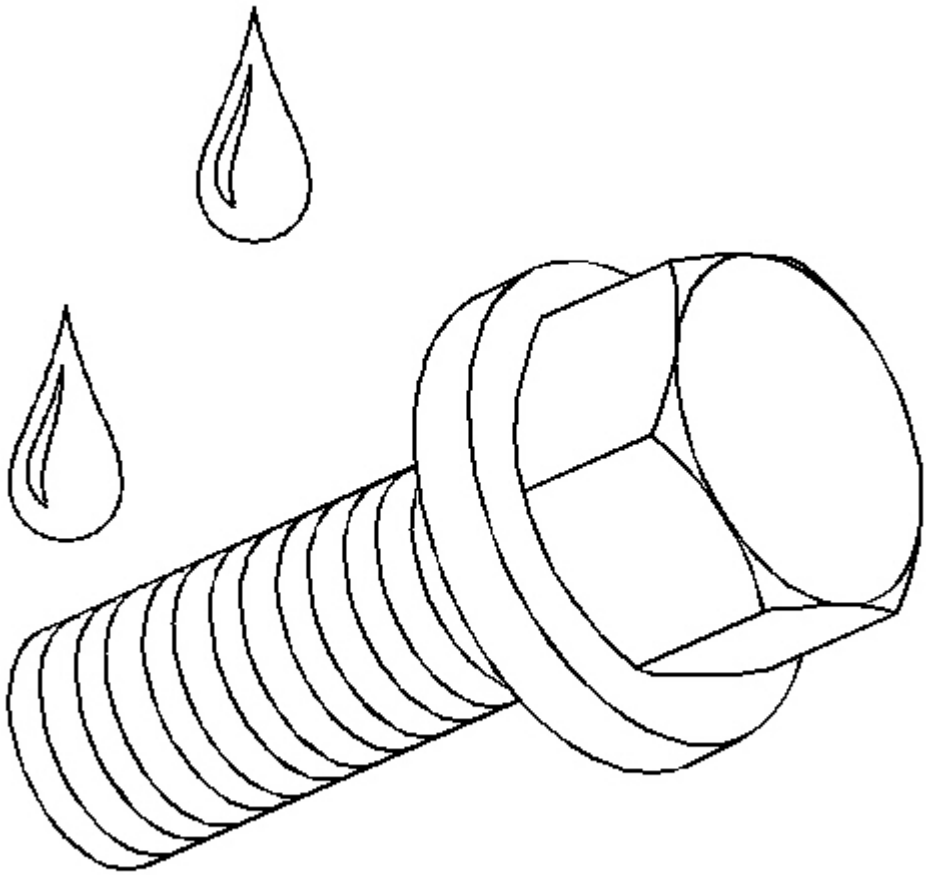

Fig. 369: Applying Sealant To Top Extension Housing Bolt
Courtesy of GENERAL MOTORS CORP.

6. Apply thread sealer GM P/N 12346004, (Canadian P/N 10953480) or equivalent to the top 2 extension housing bolts.

cardiagn.com

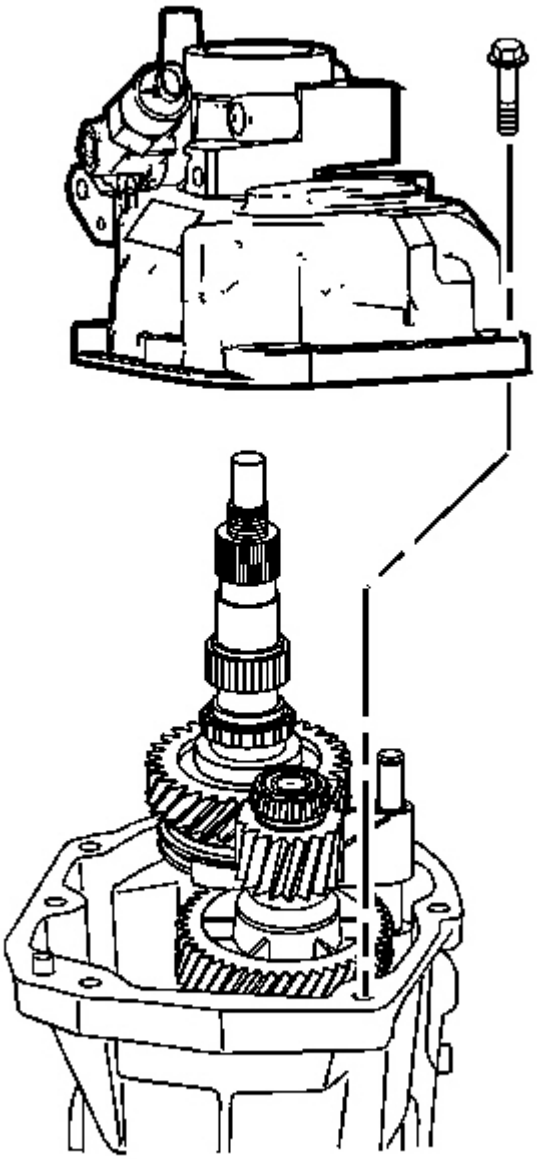

Fig. 370: View Of Rear Extension Housing Bolts & Rear Extension Housing
Courtesy of GENERAL MOTORS CORP.

IMPORTANT: Align the 5th/6th shift shaft to the extension housing bore in order to install the extension housing.

cardiagn.com

7. Install the extension housing.
8. Install the extension housing bolts.

   Tighten: Tighten the bolts to 48 N.m (36 lb ft).

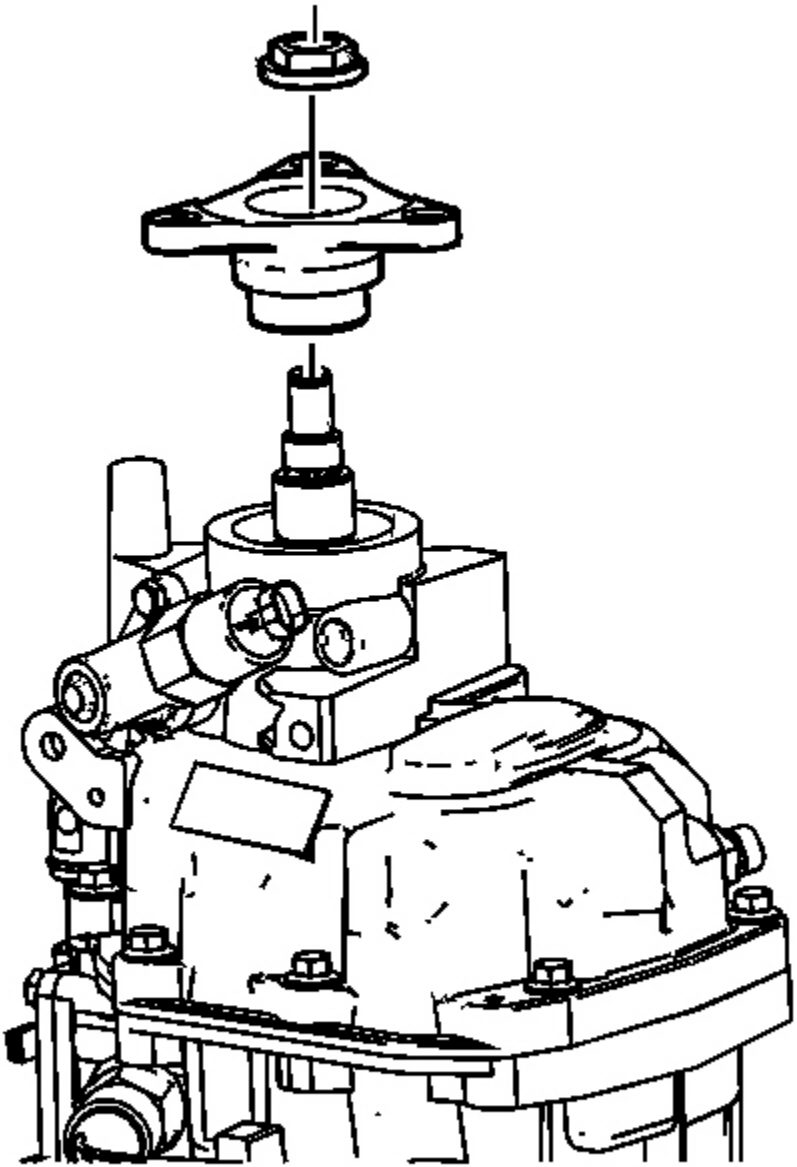

Fig. 371: Locating Propshaft Connector Bolt

cardiagn.com

Courtesy of GENERAL MOTORS CORP.

9. Install the propshaft connector.
10. Install the propshaft connector nut.

Tighten: Tighten the nut to 128-142 N.m (95-105 lb ft).

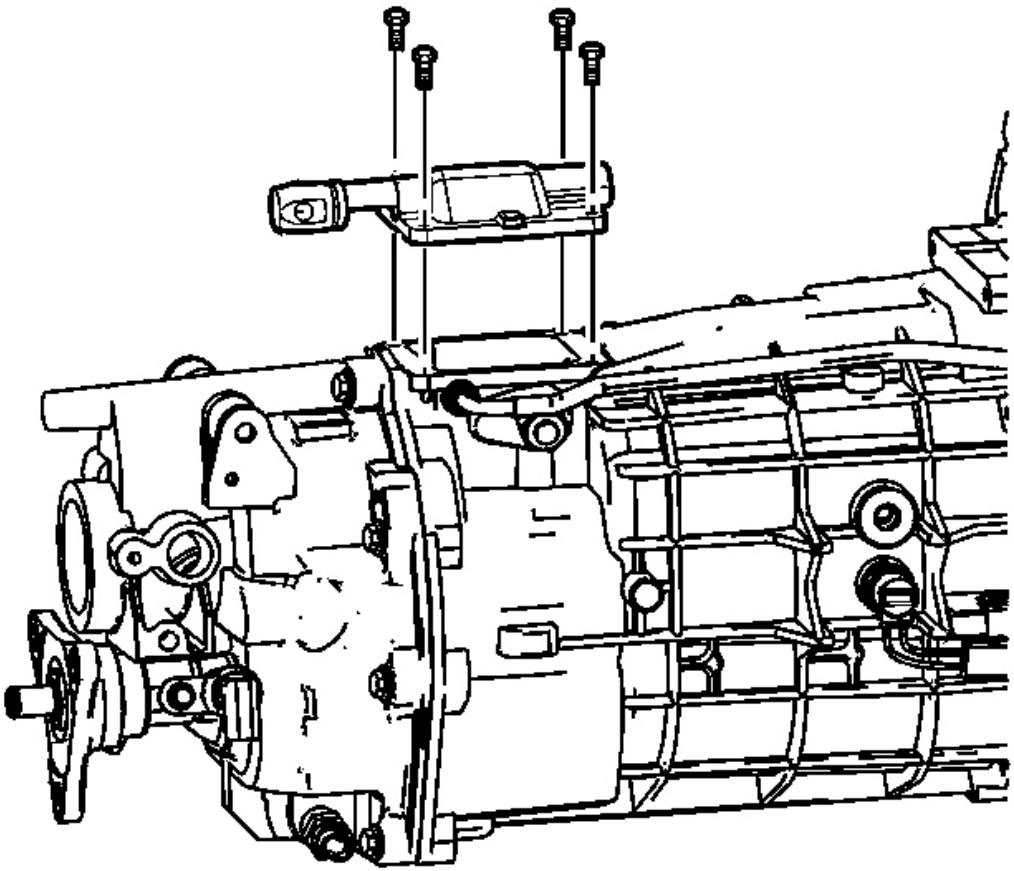

Fig. 372: Removing/Installing Shifter Cover Plate & Bolts
Courtesy of GENERAL MOTORS CORP.

11. Install the shifter cover plate.
12. Install the shifter cover plate bolts.

Tighten: Tighten the bolts to 20 N.m (15 lb ft).

cardiagn.com

13. Install the vent tube.

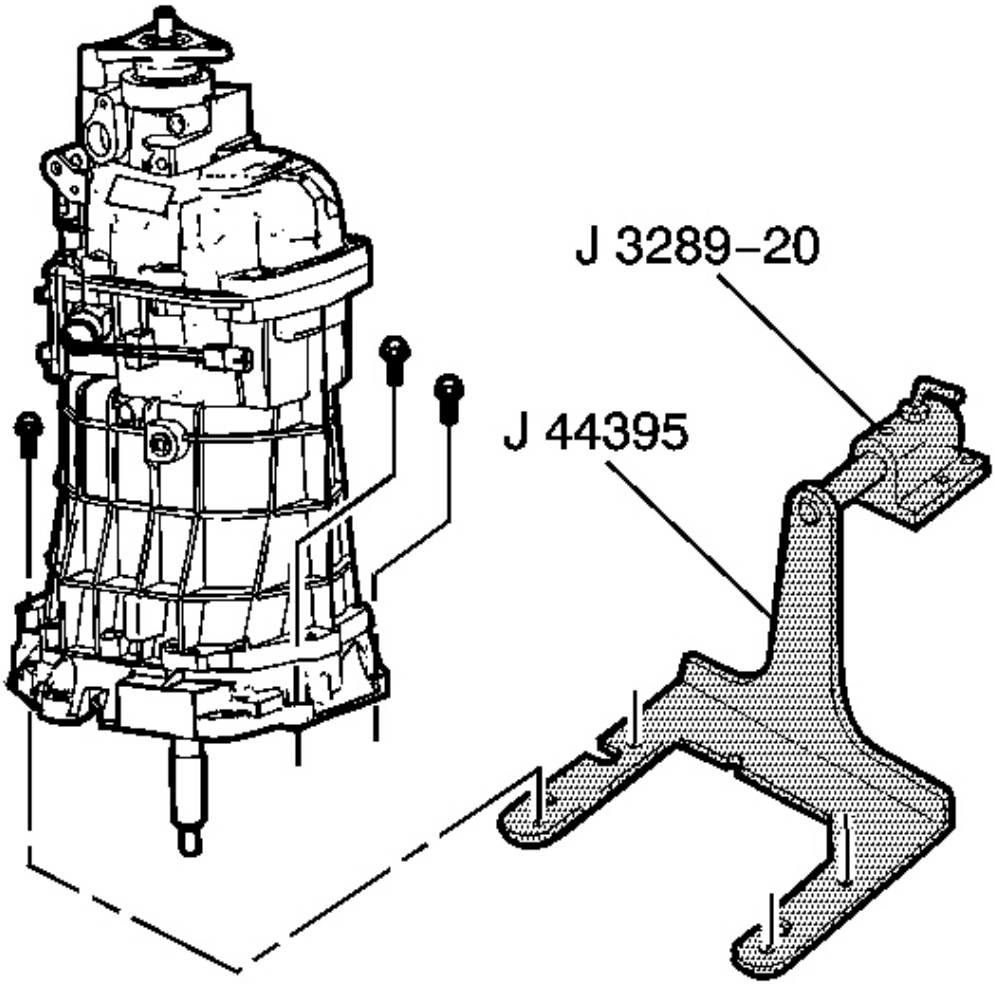

Fig. 373: Installing/Removing Transmission On J 44395 & J 3289-20
Courtesy of GENERAL MOTORS CORP.

14. Remove the **J 44395** .

cardiagn.com

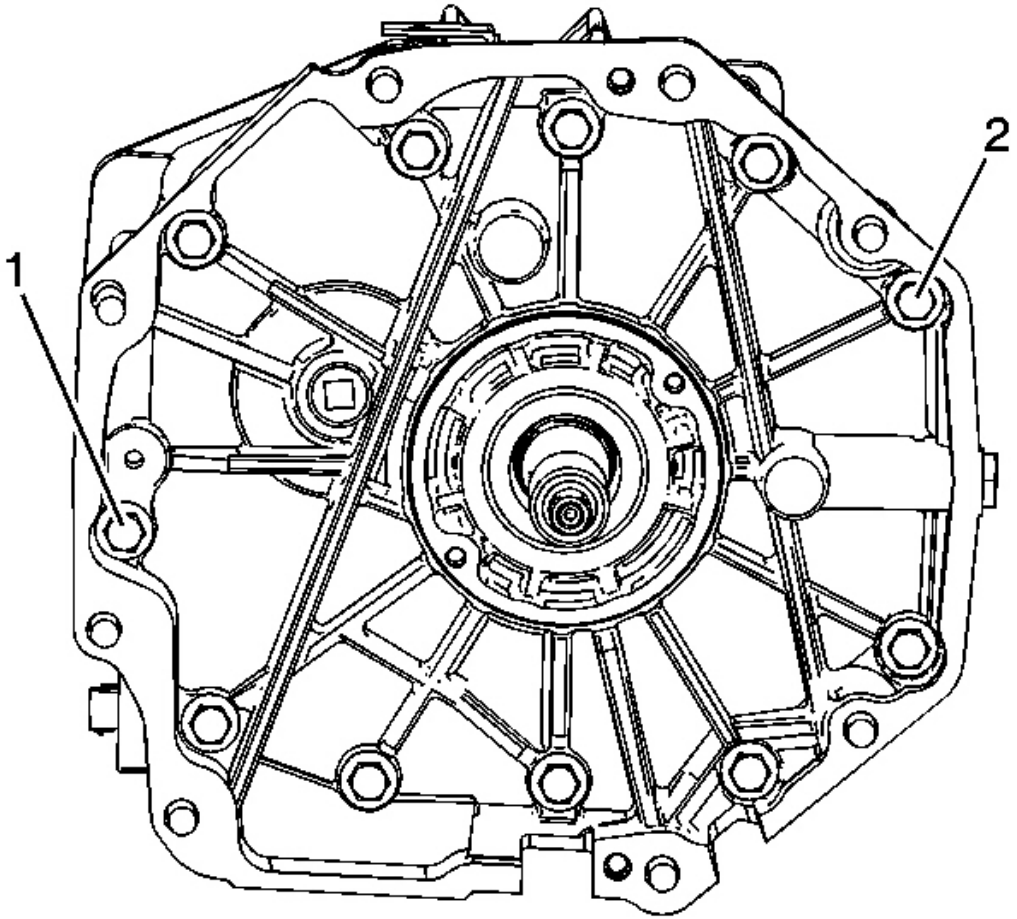

Fig. 374: Locating Adapter Plate Bolts
Courtesy of GENERAL MOTORS CORP.

15. Install the remaining 2 adapter plate bolts (1) and (2).

    Tighten: Tighten the adapter plate bolts to 48 N.m (36 lb ft).

TRANSMISSION ASSEMBLE (GTO)

Tools Required

J 36850 Transjel(R) Transmission Assembly Lube

Shift Shaft Assemblies and Gear Clusters Installation

cardiagn.com

1. Lubricate all components as assembly progresses, using the **J 36850** .
2. Install the input shaft in the adapter plate.
3. Install the 4th speed gear blocker ring.

cardiagn.com

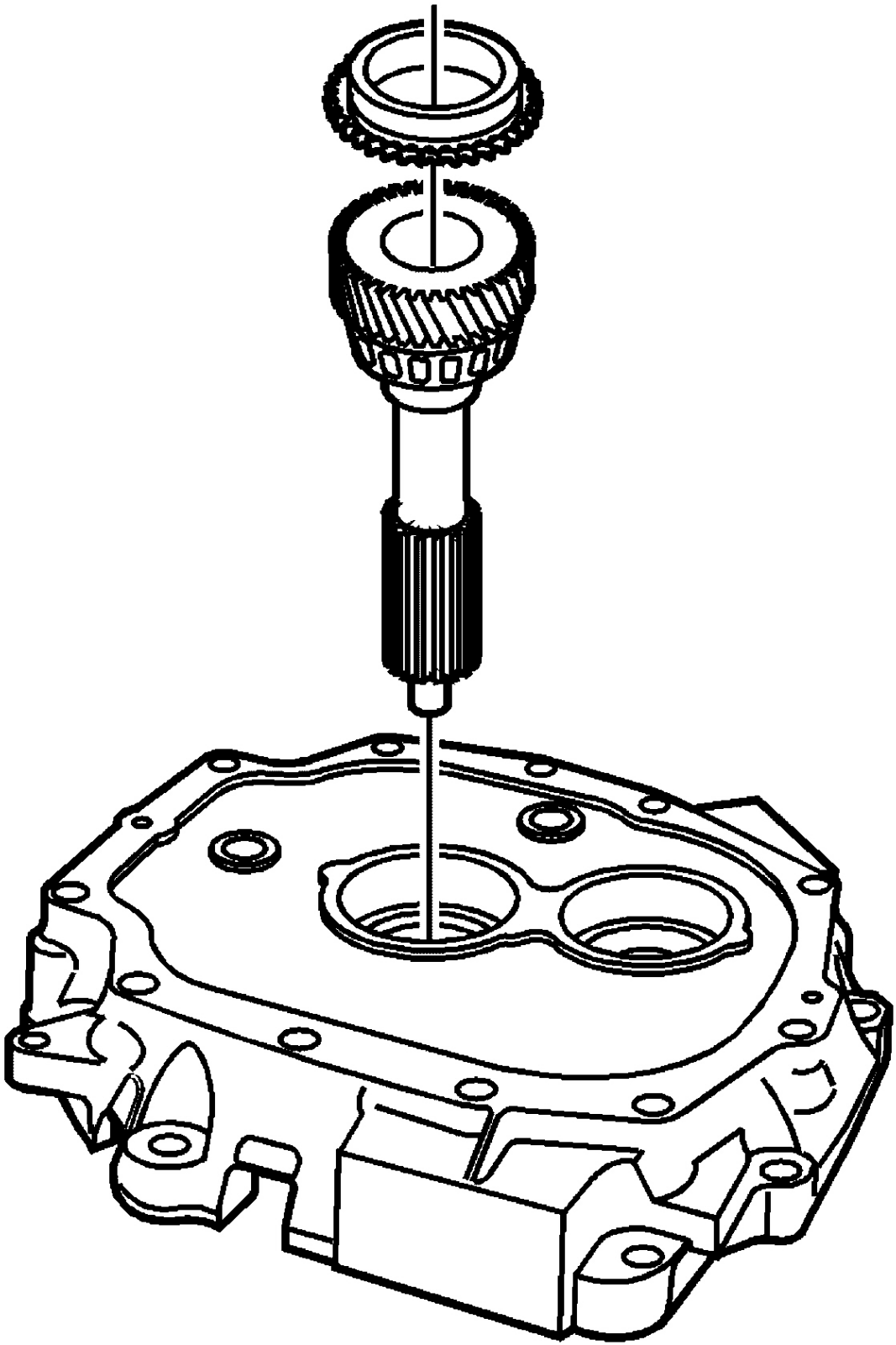

cardiagn.com

Fig. 375: View Of Input Shaft & 4th Speed Gear Blocker Ring
Courtesy of GENERAL MOTORS CORP.

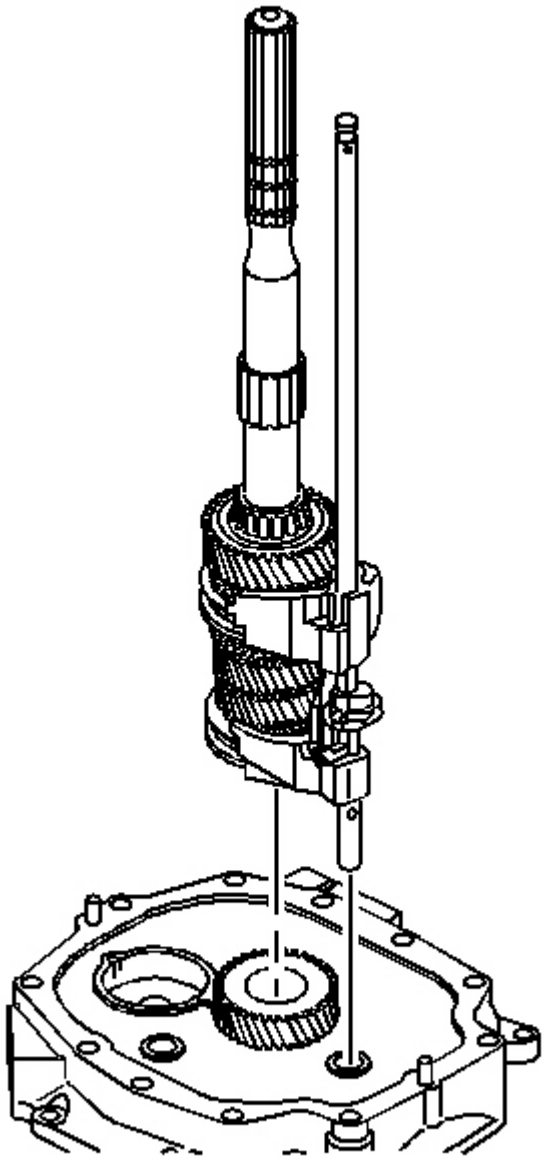

Fig. 376: Installing/Removing Mainshaft & Shift Shaft Assembly
Courtesy of GENERAL MOTORS CORP.

cardiagn.com

4. Assemble the shift shaft to the mainshaft.
5. Install the mainshaft and the shift shaft assembly.

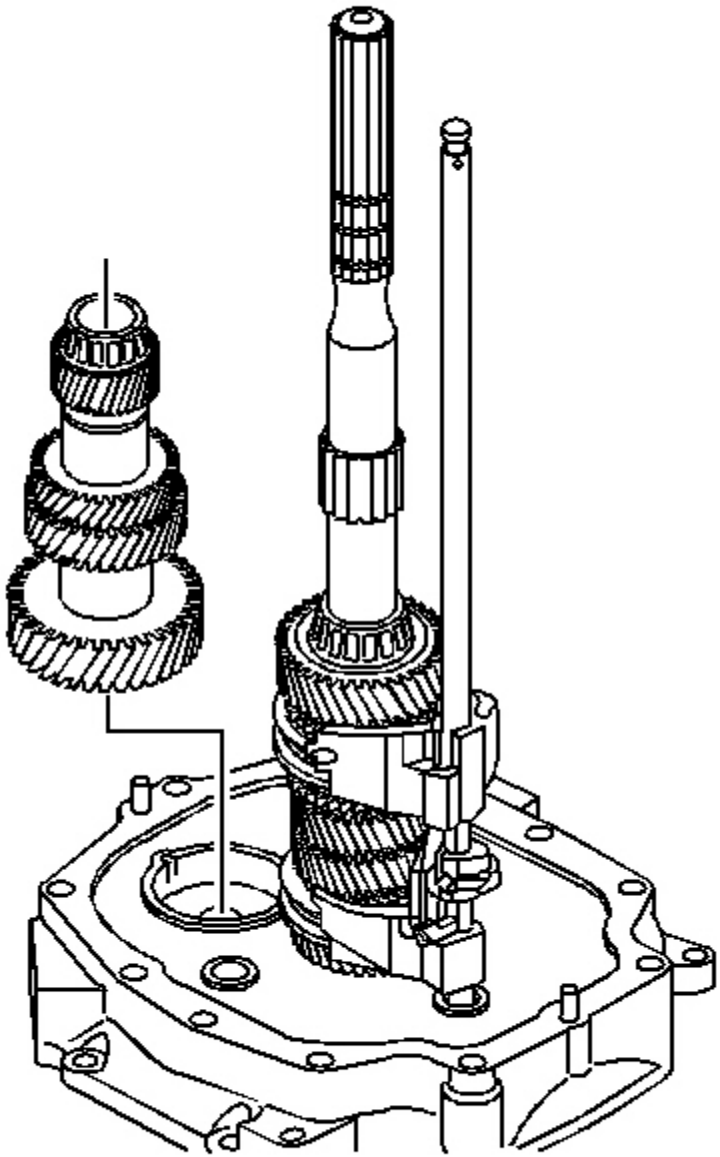

Fig. 377: Identifying Countershaft Assembly
Courtesy of GENERAL MOTORS CORP.

cardiagn.com

6. Install the countershaft assembly using the following sequence:
    1. Lift up the mainshaft assembly enough in order to install the countershaft assembly.
    2. Install the countershaft assembly.
    3. Lift the mainshaft assembly enough in order to rotate the input shaft to engage the synchronizer keys with 4th gear blocking ring.

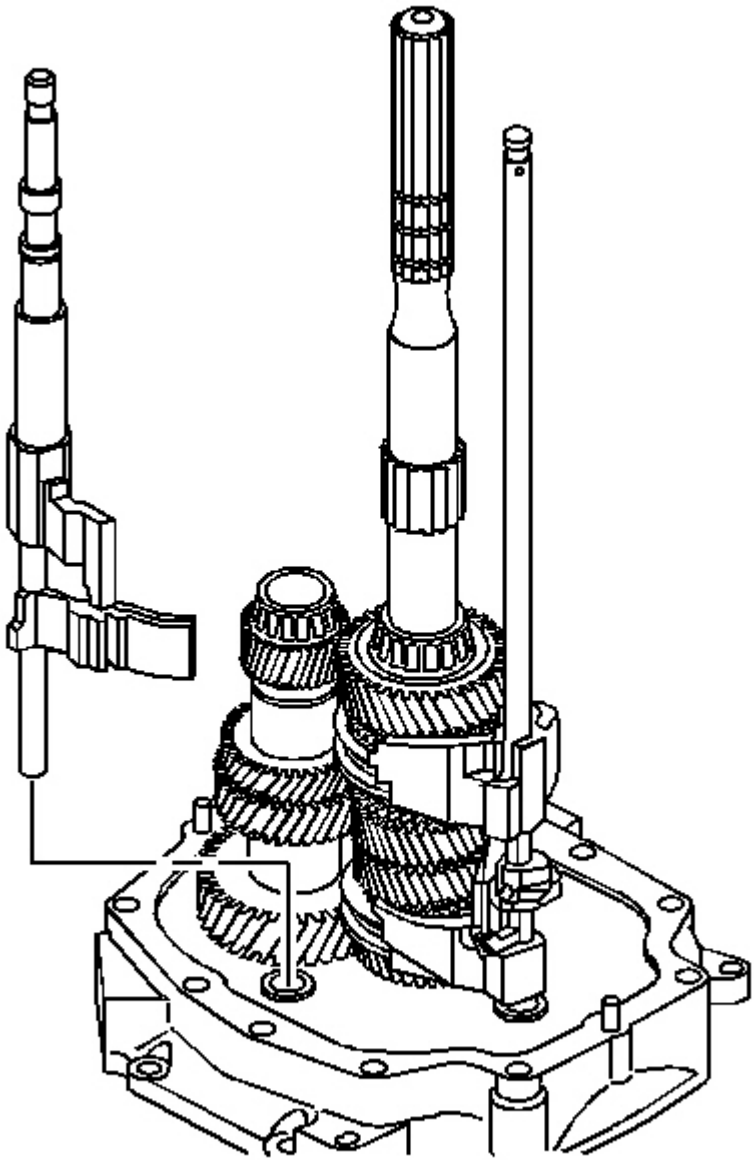

cardiagn.com

Fig. 378: View Of 5th/6th & Reverse Shift Shaft
Courtesy of GENERAL MOTORS CORP.

7. Install the 5th/6th and the reverse shift shaft.

   Align the slots of the shift shaft levers with the interlock plate.

Reverse Lockout Assembly Assemble

CAUTION: The reverse lockout assembly is under spring pressure. Exercise caution when removing the retainer ring, as bodily injury may result.

cardiagn.com

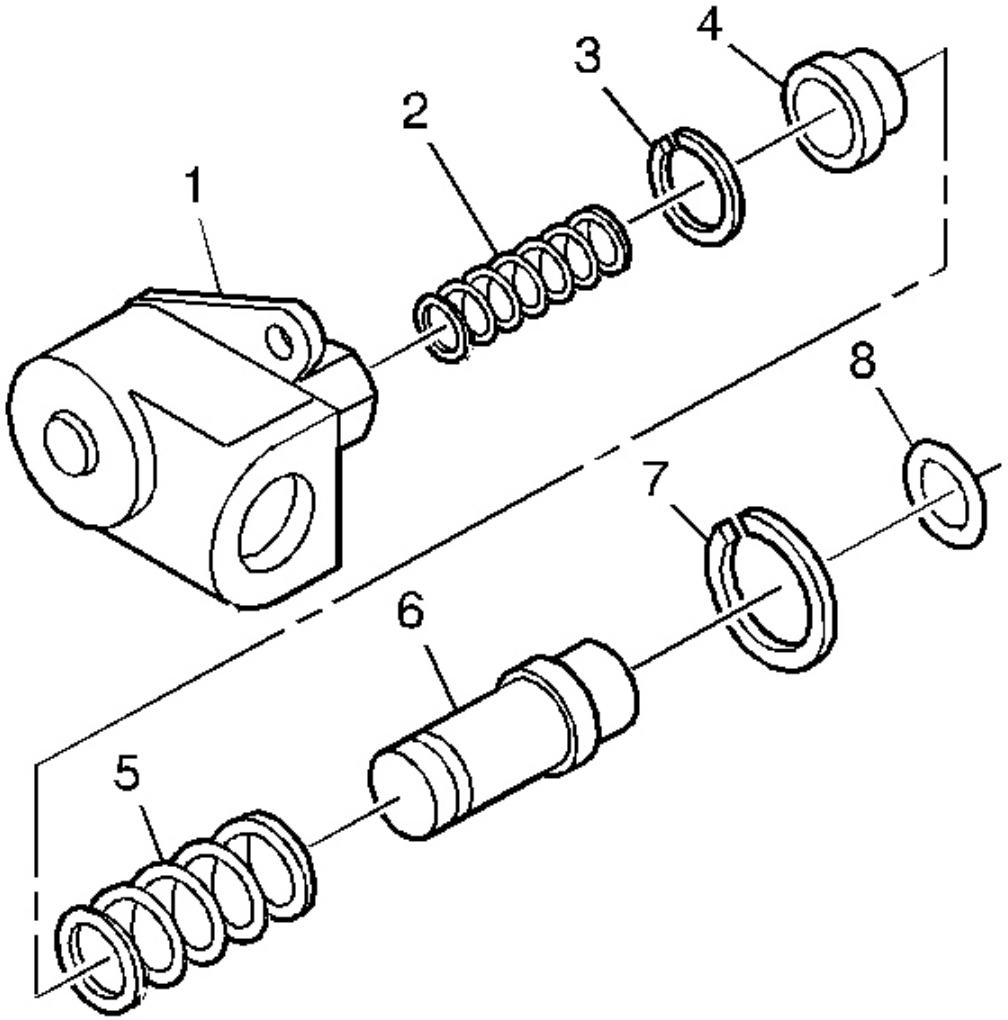

Fig. 379: Exploded View Of Reverse Lockout Assembly
Courtesy of GENERAL MOTORS CORP.

1. Install the reverse lockout plunger (6).
2. Install the reverse lockout outer spring (5).
3. Install the reverse lockout collar (4).
4. Compress the reverse lockout plunger and the collar (4) in a vise and Install the retainer ring (3).
5. Install the reverse lockout inner spring (2).
6. Install the reverse lockout components in the body (1).
7. Install the retainer ring (7).

cardiagn.com

8. Install the O-ring to body (8).

Transmission Case Installation

Tools Required

- **J 41099** Reverse Solenoid Socket. See **Special Tools** .
- **J 36850** Transmission Assembly Lubricant. See. See **Special Tools** .

IMPORTANT: Lubricate all components as the assembly progresses, using the J 36850 or the equivalent.

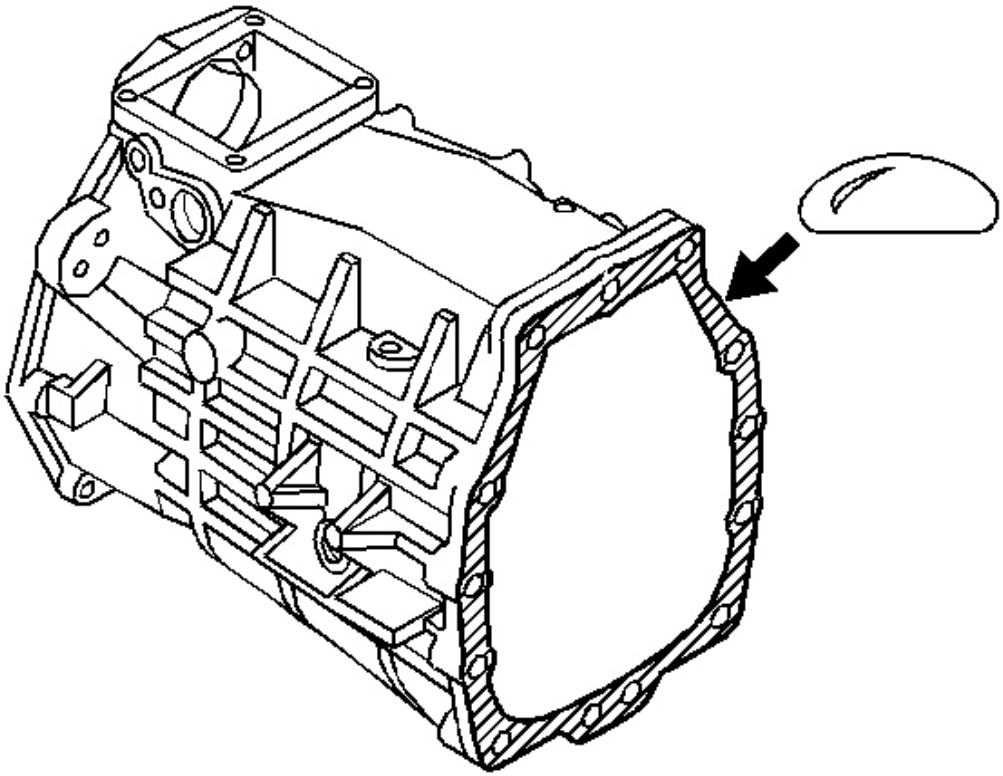

Fig. 380: Apply Sealer To Transmission Case To Adapter Plate Mating Surface
Courtesy of GENERAL MOTORS CORP.

1. Apply sealant GM P/N 12345739 (Canadian P/N 10953472) or the equivalent, to the transmission case to adapter plate mating surface.

cardiagn.com

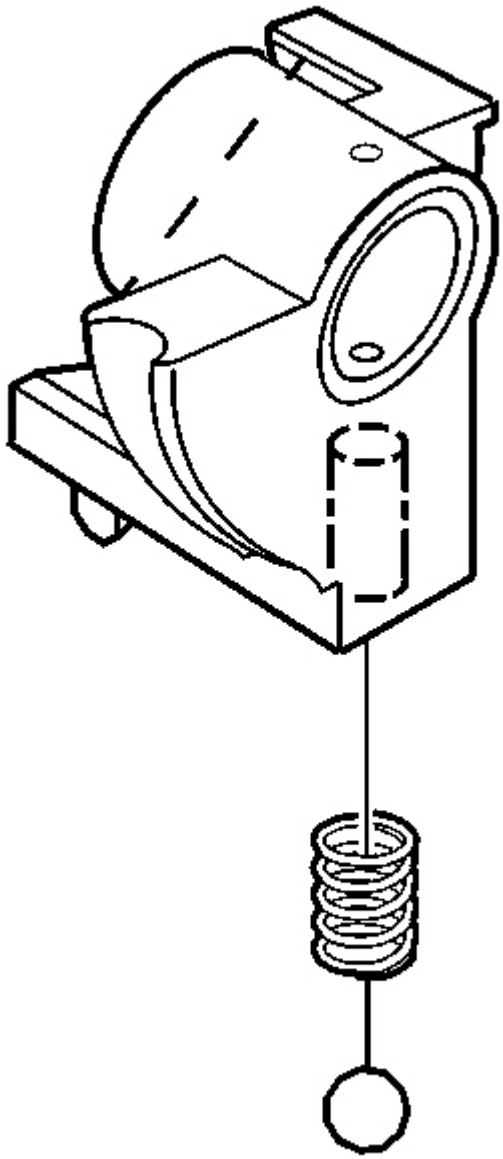

Fig. 381: Identifying Ball Detent & Spring In Front Offset Lever
Courtesy of GENERAL MOTORS CORP.

2. Install the ball detent and the spring in the front offset lever.

cardiagn.com

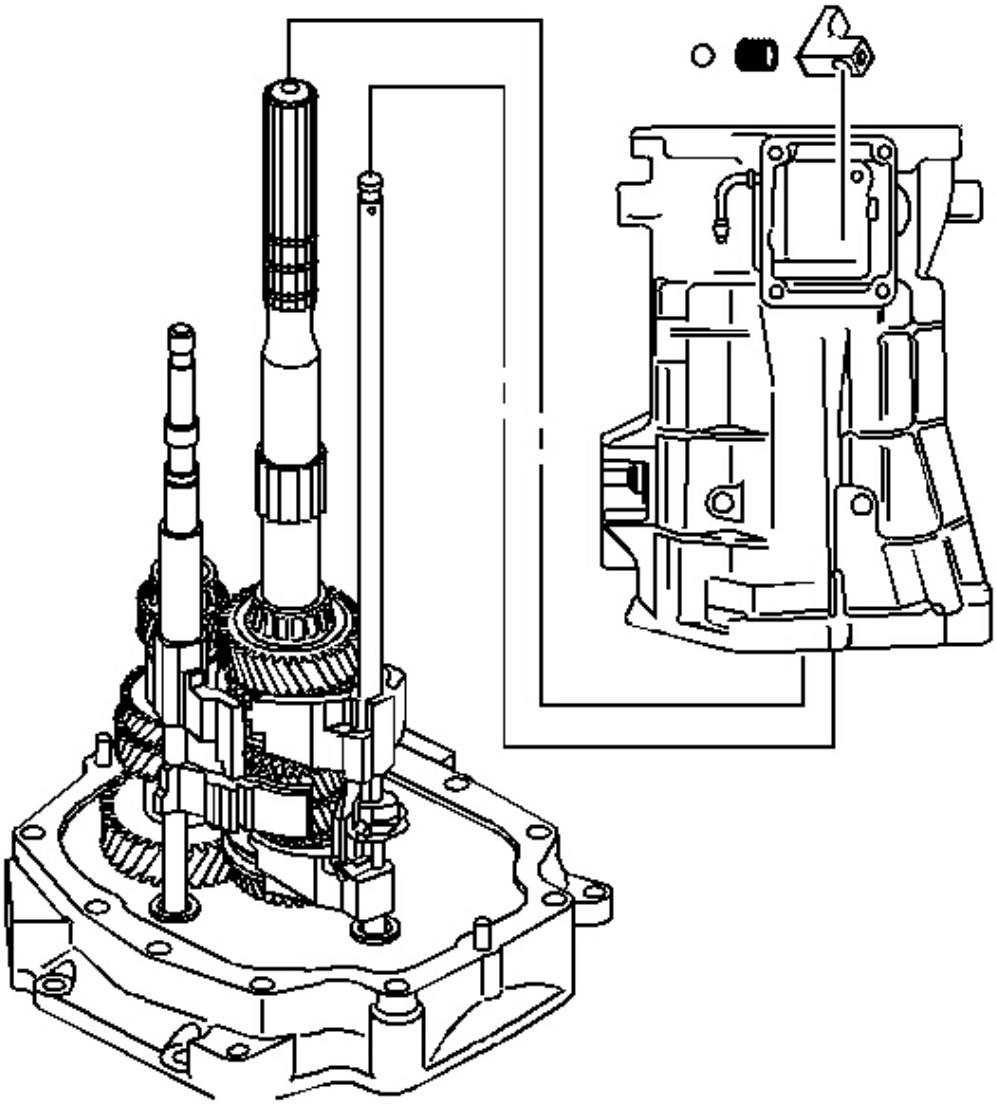

Fig. 382: View Of Offset Lever Components
Courtesy of GENERAL MOTORS CORP.

3. Do the following in order to install the transmission case and the offset lever:
    1. Shift the transmission into NEUTRAL in order to keep the 3rd/4th shift shaft from engaging.
    2. Install the offset lever.
    3. Compress the front offset lever together while sliding it onto the shift shaft. This will prevent the spring release of the inner components.

cardiagn.com

4. Slide the transmission case onto the gear clusters and the shift rail components.

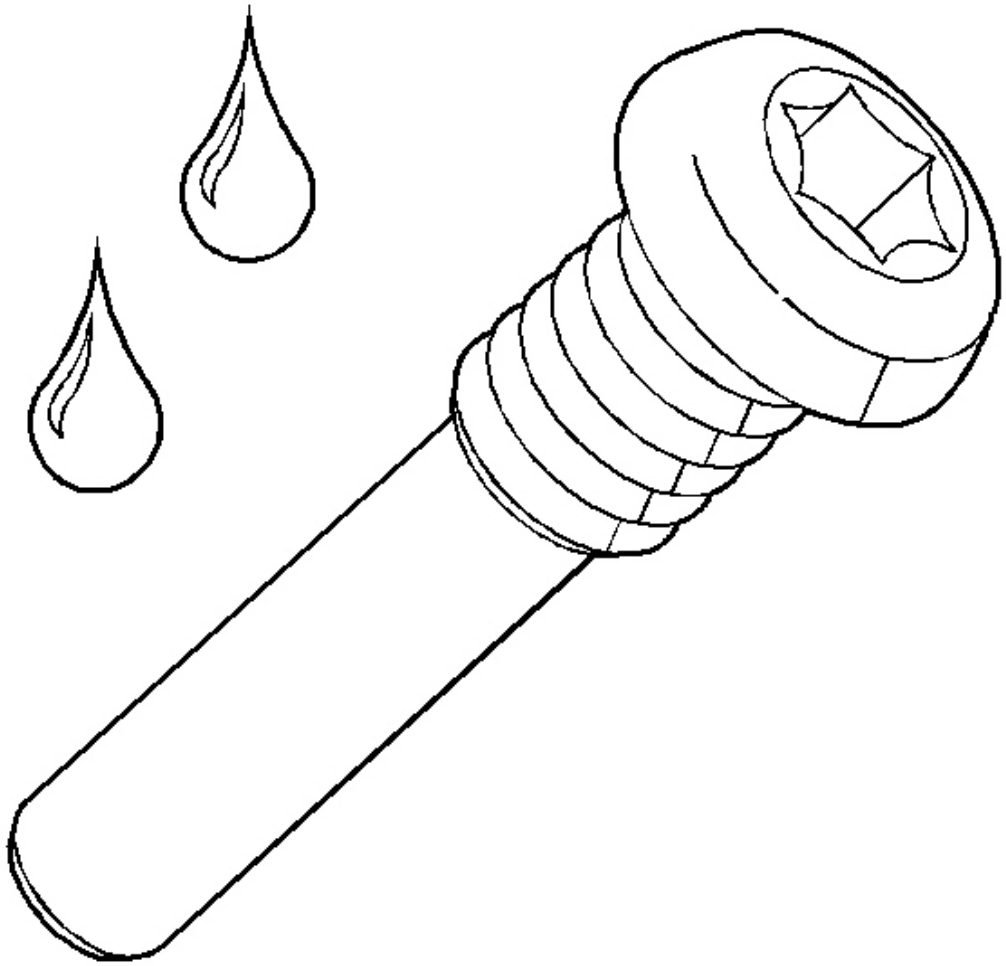

Fig. 383: Applying Sealer To Shift Lever Guide Bolts Threads
Courtesy of GENERAL MOTORS CORP.

4. Apply sealant GM P/N 12346004 (Canadian P/N 10953480) or the equivalent to the threads of the shift lever guide bolts.

NOTE: Refer to Fastener Notice in Cautions and Notices.

cardiagn.com

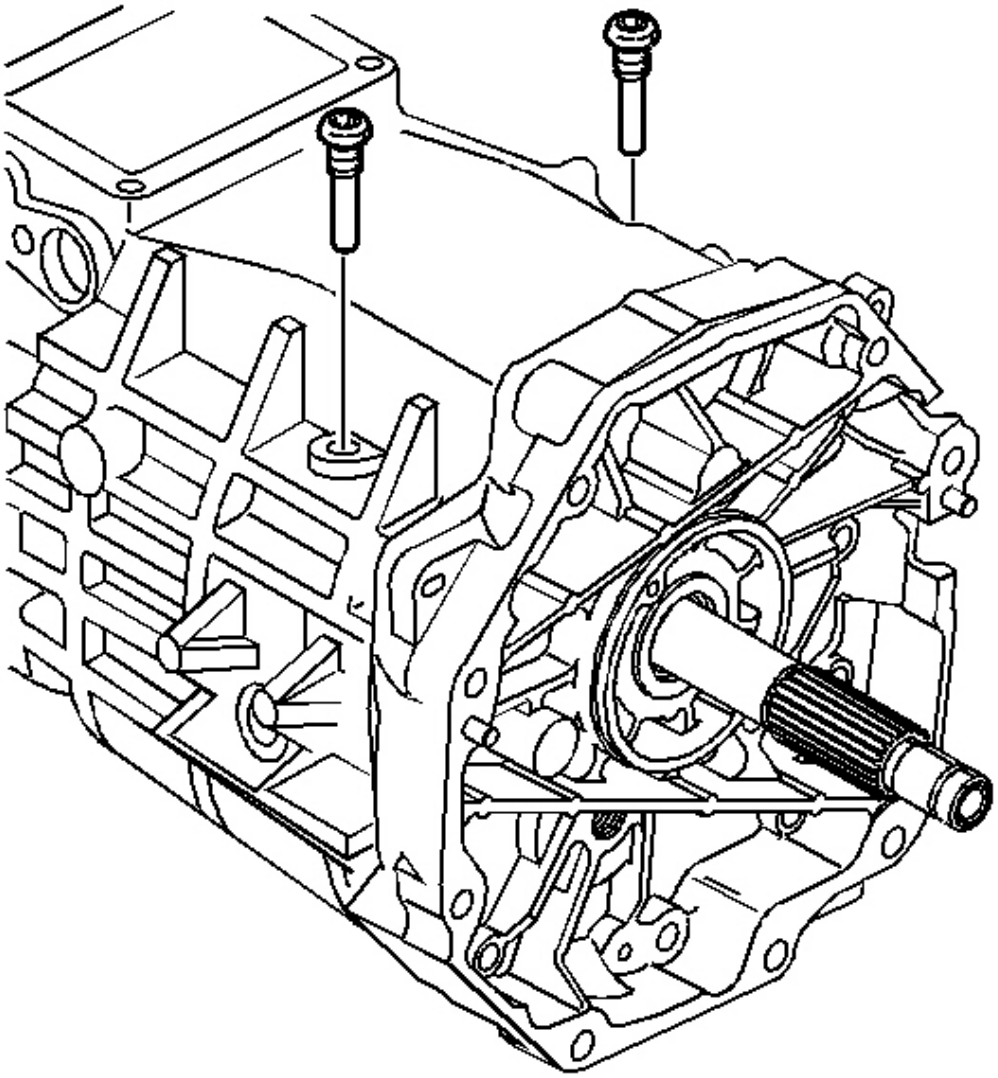

Fig. 384: View Of Shift Lever Guide Bolts
Courtesy of GENERAL MOTORS CORP.

5. Install the shift lever guide bolts and pull up on 5th/6th and reverse shift rail assembly. This will help align the slot of the shift interlock plate with the guide bolt hole.

   Tighten: Tighten the bolts to 27 N.m (20 Ib. ft).

6. Install the adapter plate to transmission case bolts.

cardiagn.com

Tighten: Tighten the bolts to 48 N.m (36 Ib. ft).

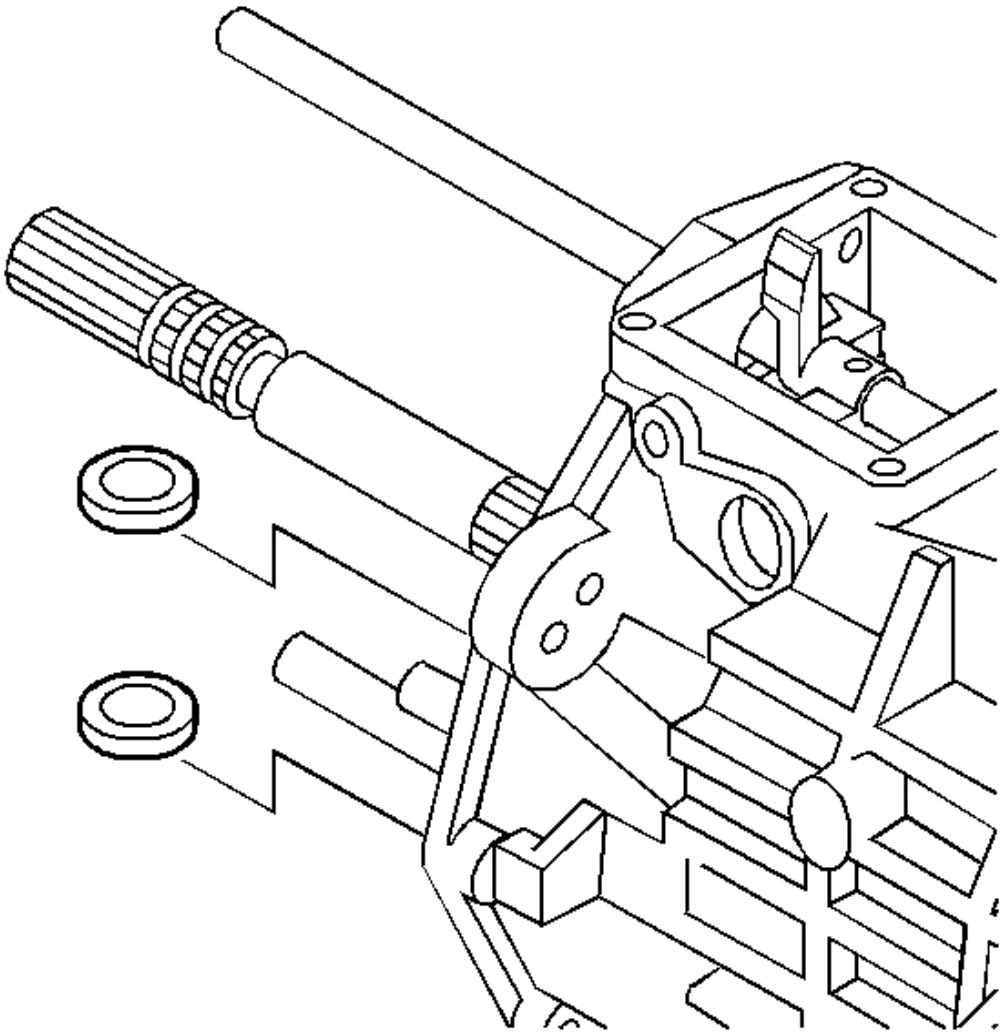

Fig. 385: View Of Transmission Magnets
Courtesy of GENERAL MOTORS CORP.

7. Install the magnets into the transmission case.

cardiagn.com

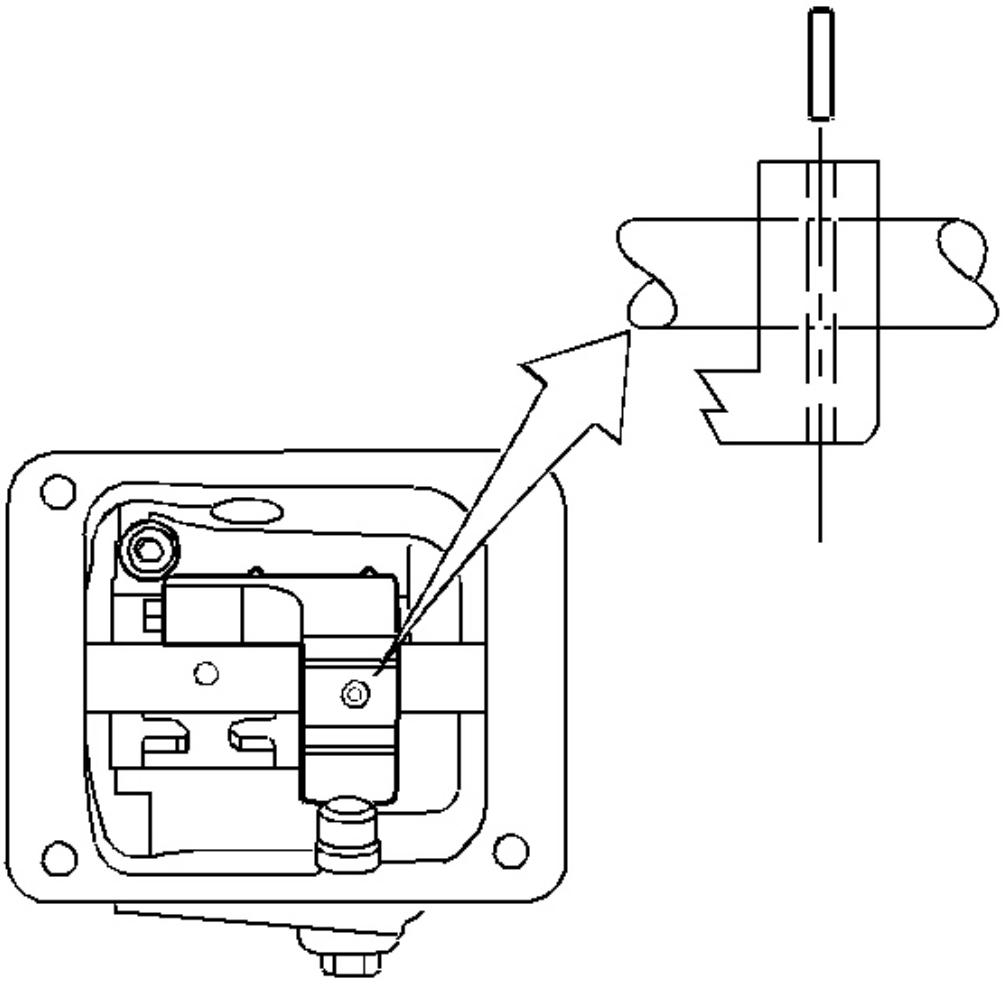

Fig. 386: Installing/Removing Offset Lever Roll Pin
Courtesy of GENERAL MOTORS CORP.

8. Install the offset lever roll pin.

cardiagn.com

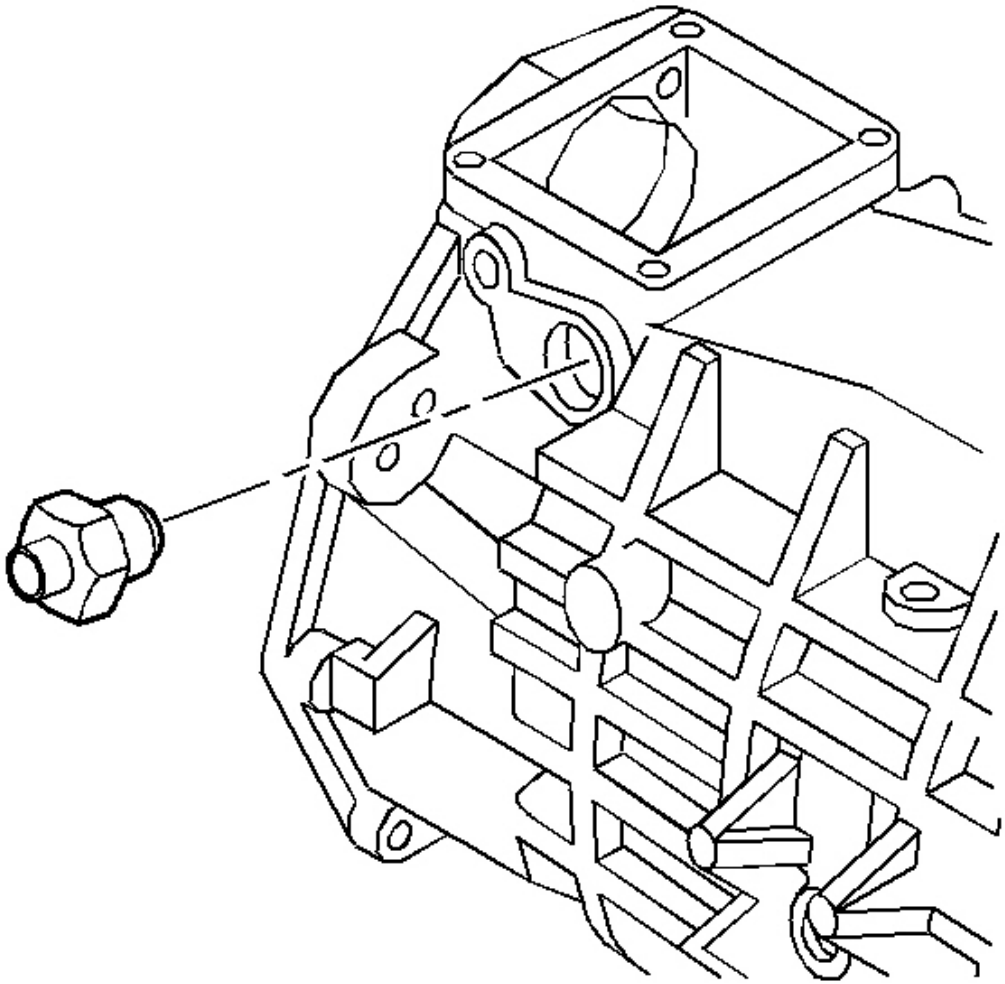

Fig. 387: View Of Shift Detent Assembly
Courtesy of GENERAL MOTORS CORP.

9. install the shift detent assembly.

   Tighten: Tighten the bolts to 40 N.m (30 Ib. ft).

cardiagn.com

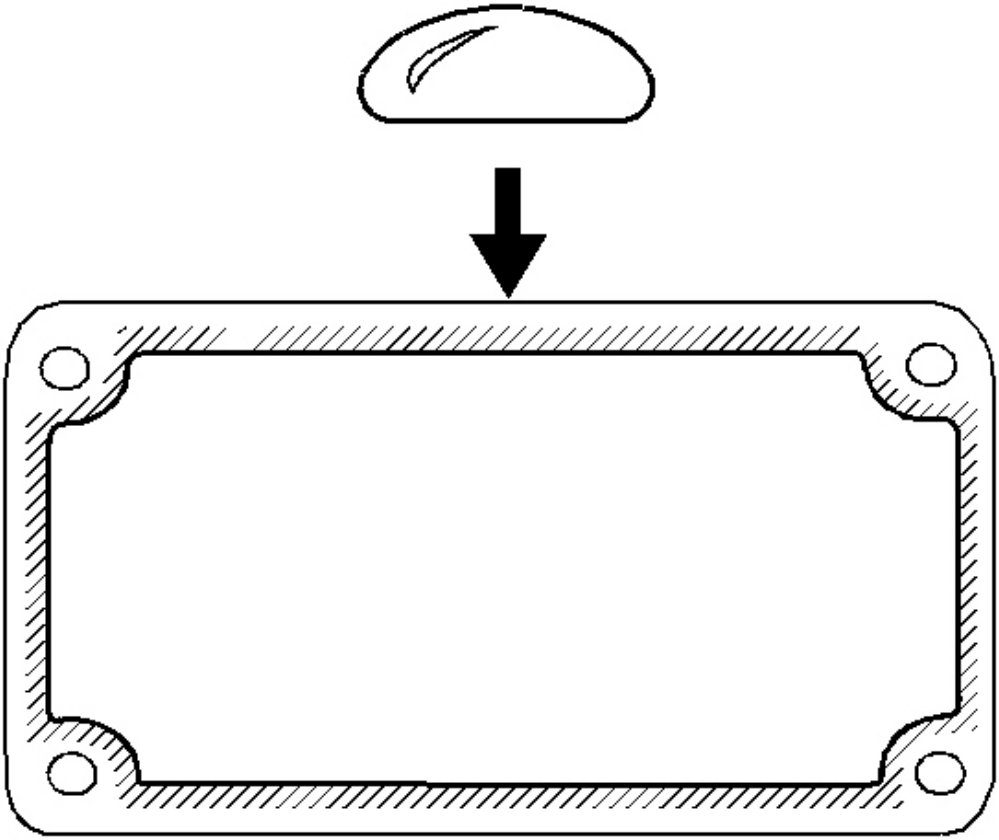

Fig. 388: Applying Sealer To Mating Surface Of Cover Plate
Courtesy of GENERAL MOTORS CORP.

10. Apply sealant GM P/N 12345739 (Canadian P/N 10953472) or equivalent to the mating surface of the cover plate.

cardiagn.com

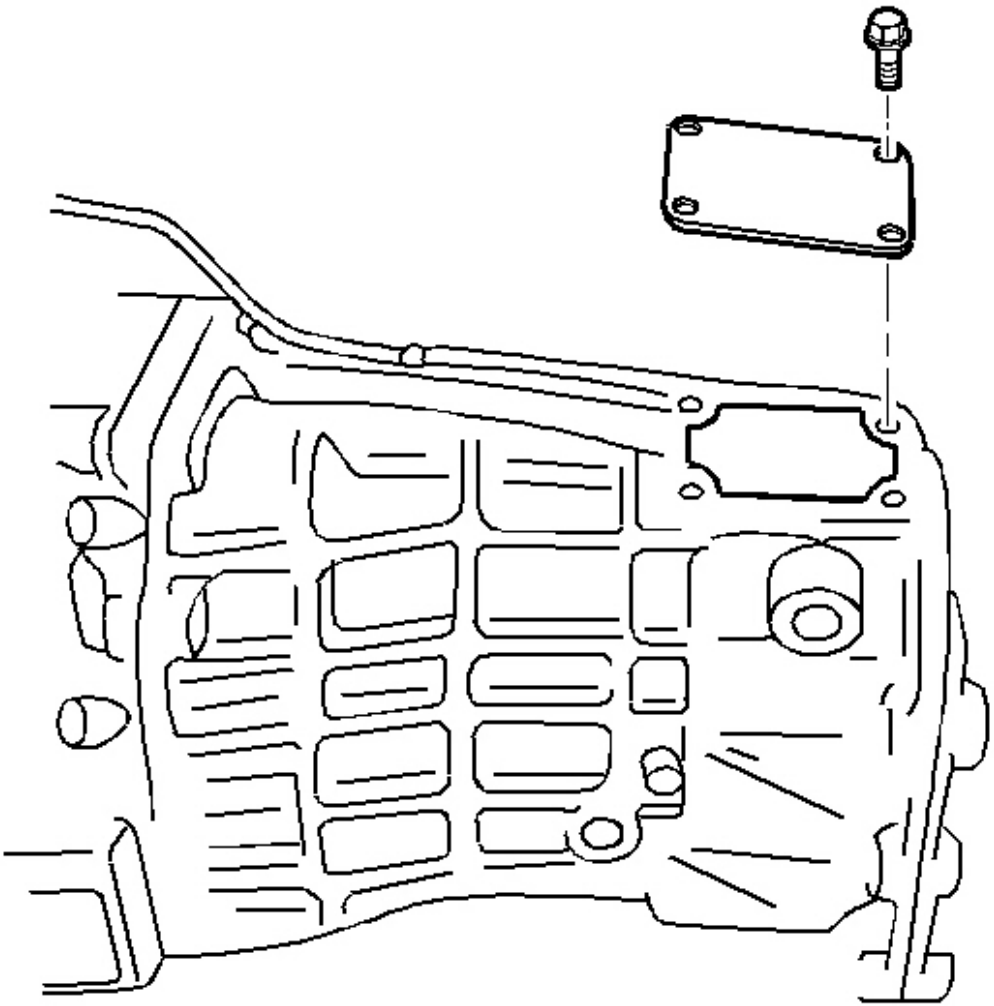

Fig. 389: Installing/Removing Cover Plate & Cover Plate Bolts
Courtesy of GENERAL MOTORS CORP.

11. Install the cover plate and the cover plate bolts.

    Tighten: Tighten the bolts to 20 N.m (15 Ib. ft).

cardiagn.com

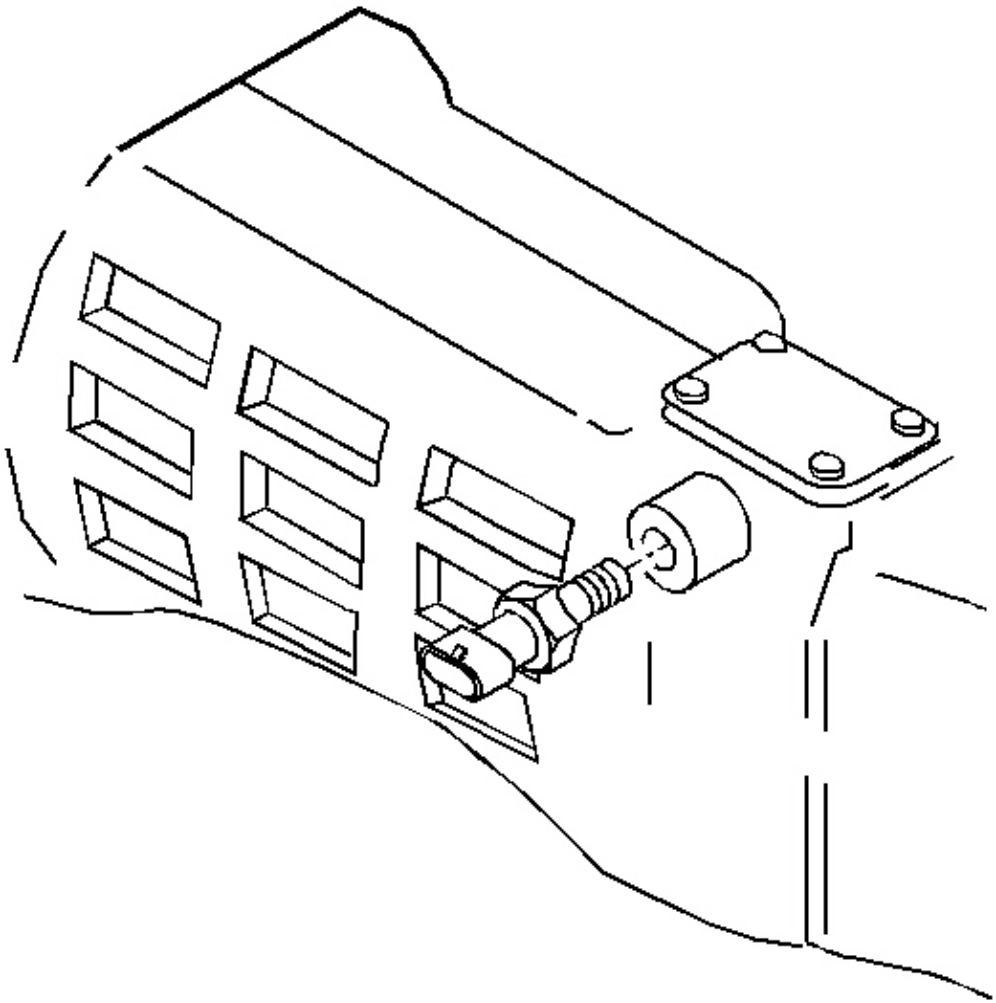

Fig. 390: View Of Computer Aided Gear Select Solenoid
Courtesy of GENERAL MOTORS CORP.

12. Install the computer aided gear select solenoid.

    Tighten: Tighten the solenoid to 40 N.m (30 Ib. ft).

Countershaft Extension Installation

1. Position the transmission in the horizontal position.
2. Install the countershaft extension assembly and the 5th/6th shift fork. The splines of the countershaft

cardiagn.com

extension must engage the splines of the countershaft.

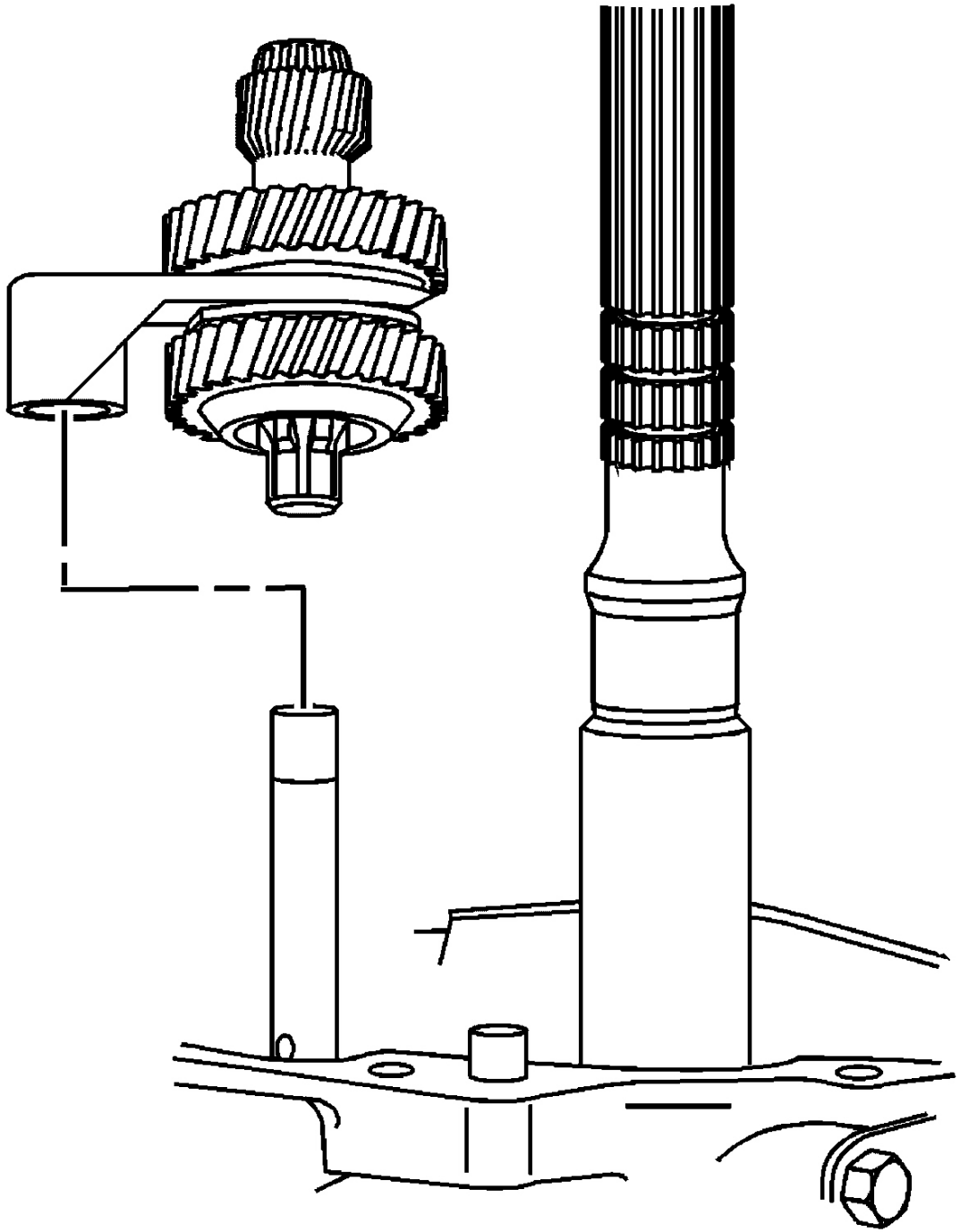

Fig. 391: Installing/Removing Countershaft Extension Assembly & 5th/6th Shift Fork
Courtesy of GENERAL MOTORS CORP.

cardiagn.com

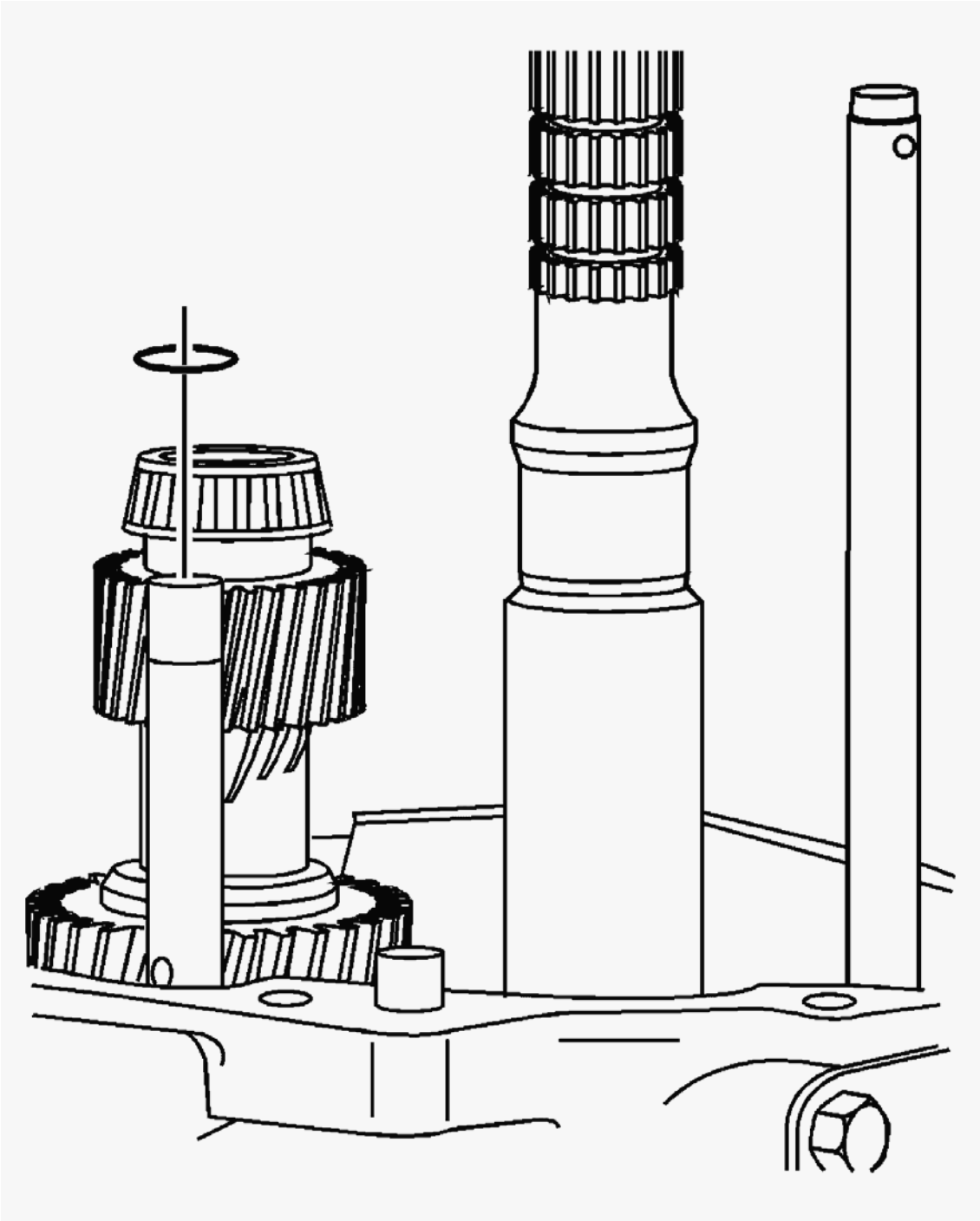

Fig. 392: View Of 5th/6th Shift Fork Retainer Ring
Courtesy of GENERAL MOTORS CORP.

3. Install the 5th/6th shift fork retainer ring.

5th/6th Speed Driven Gear Installation

Tools Required

cardiagn.com

- **J 39441** Gear Installer. See **Special Tools** .
- **J 39441-10** Gear Installer Adapter. See **Special Tools** .

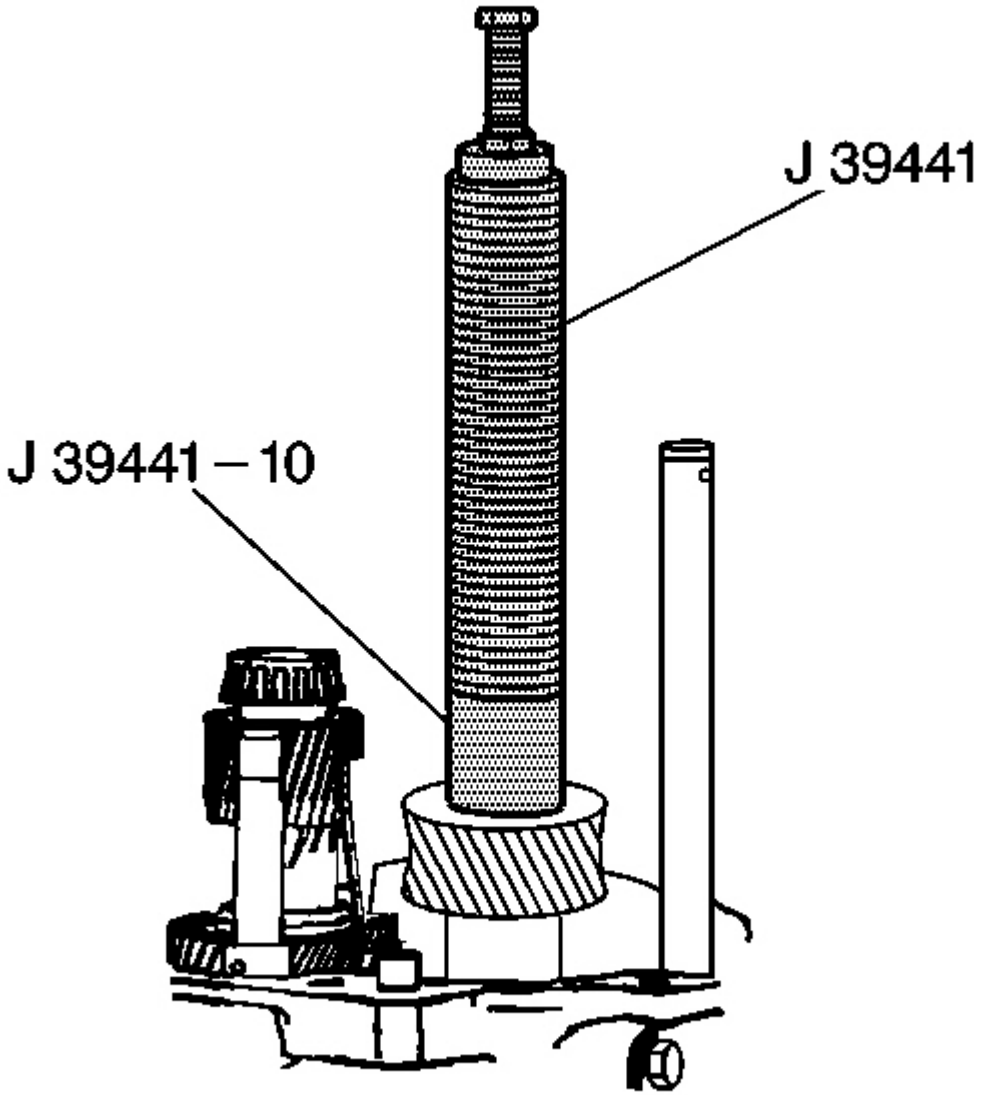

Fig. 393: Installing/Removing 5th/6th Speed Driven Gear
Courtesy of GENERAL MOTORS CORP.

Install the 5th/6th speed driven gear using the **J 39441** and the **J 39441-10** . The smaller outside diameter (OD) of the gear faces down.

cardiagn.com

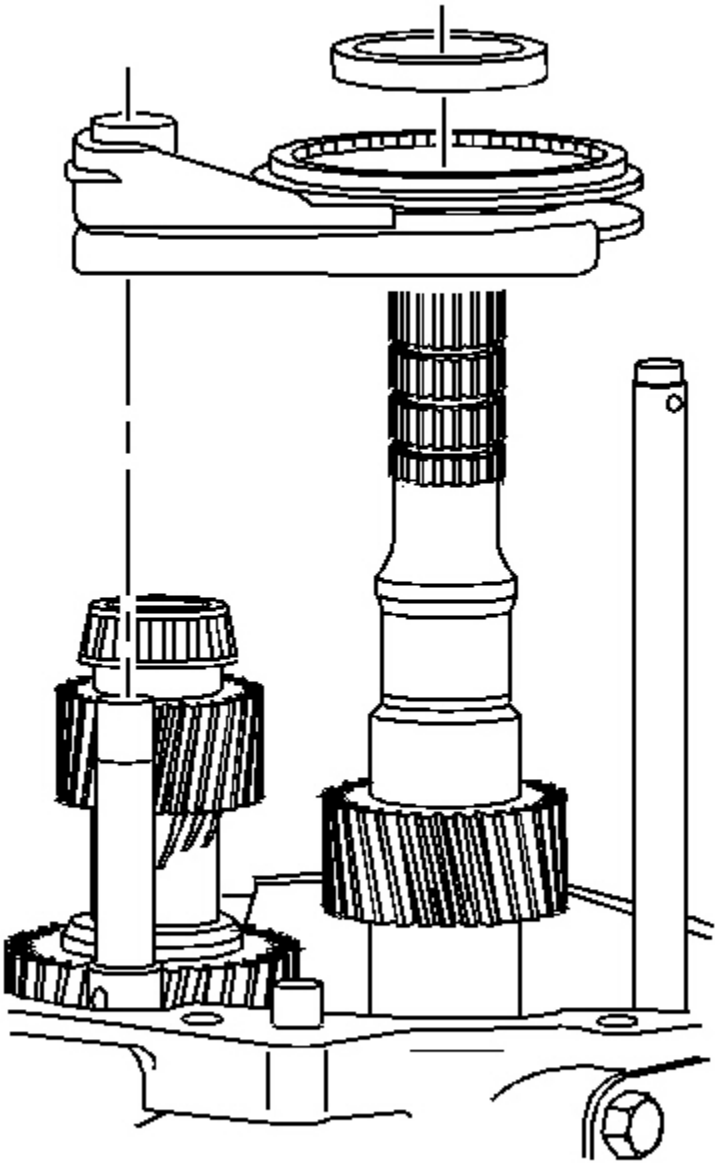

Fig. 394: Installing/Removing Reverse Shift Fork, Synchronizer & Thrust Washer
Courtesy of GENERAL MOTORS CORP.

1. Install the reverse shift fork, the synchronizer and the thrust washer.

cardiagn.com

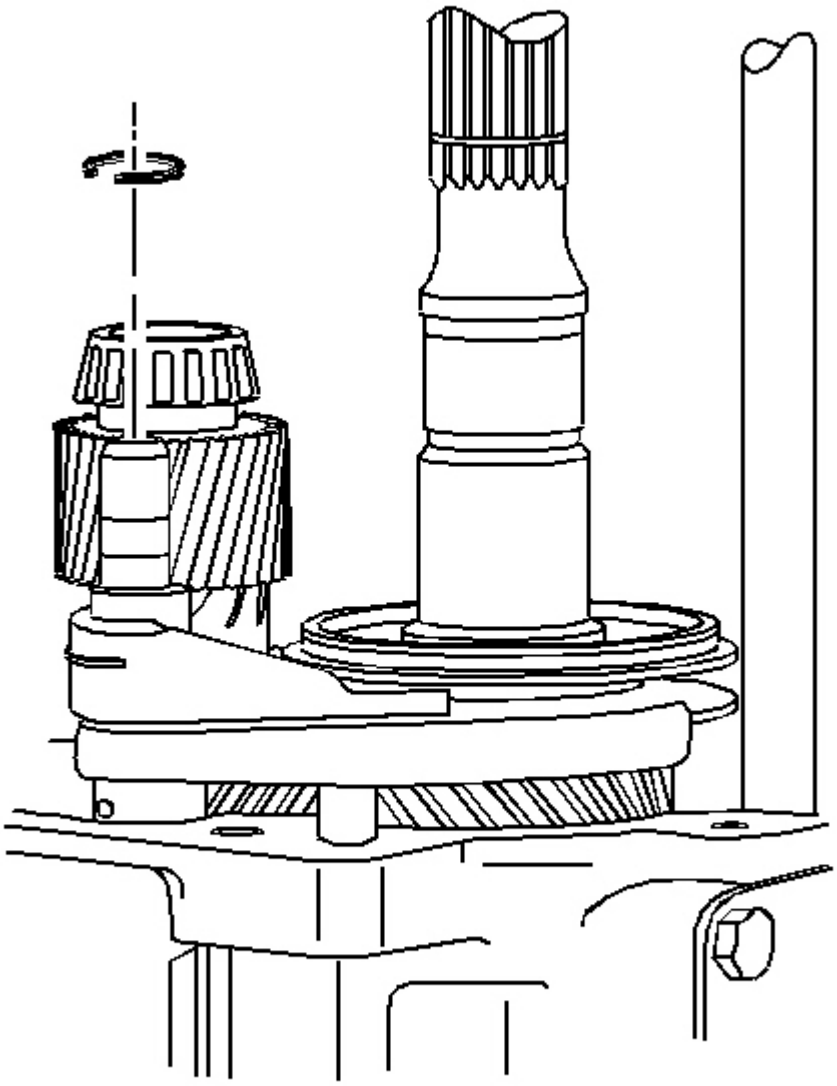

Fig. 395: Locating Shift Fork Retainer Ring
Courtesy of GENERAL MOTORS CORP.

2. Install a new shift fork retainer ring.

cardiagn.com

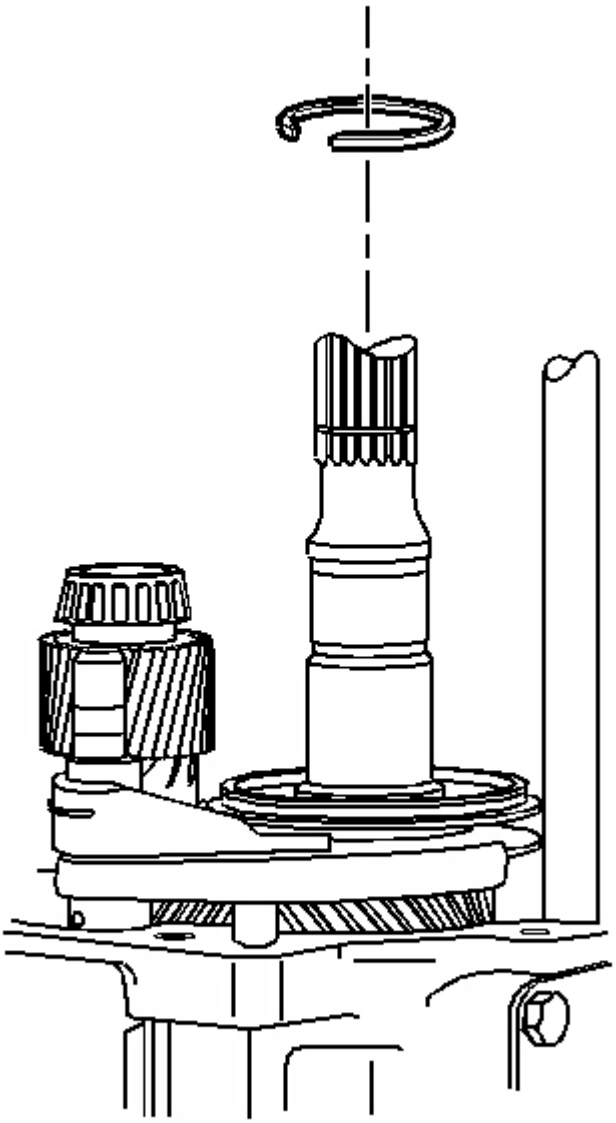

Fig. 396: View Of Reverse Synchronizer Retainer Ring
Courtesy of GENERAL MOTORS CORP.

3. Install the reverse synchronizer retainer ring.

Tools Required

J 5590 Crankshaft Gear Installer. See **Special Tools** .

cardiagn.com

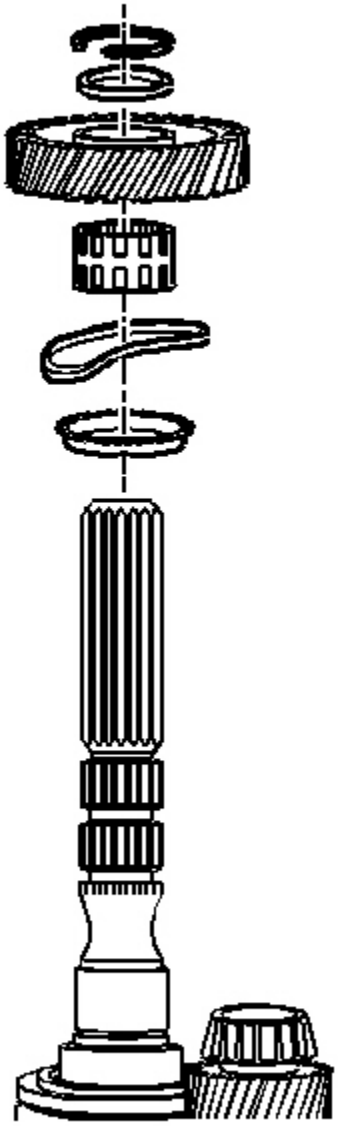

Fig. 397: Identifying Reverse Speed Gear Components
Courtesy of GENERAL MOTORS CORP.

1. Install the following parts in order:
    1. The blocking ring

cardiagn.com

2. The wave washer
3. The wave washer so the concave side faces the blocking ring
4. The caged needle bearing
5. The reverse speed gear
6. The thrust washer
7. The retainer ring

cardiagn.com

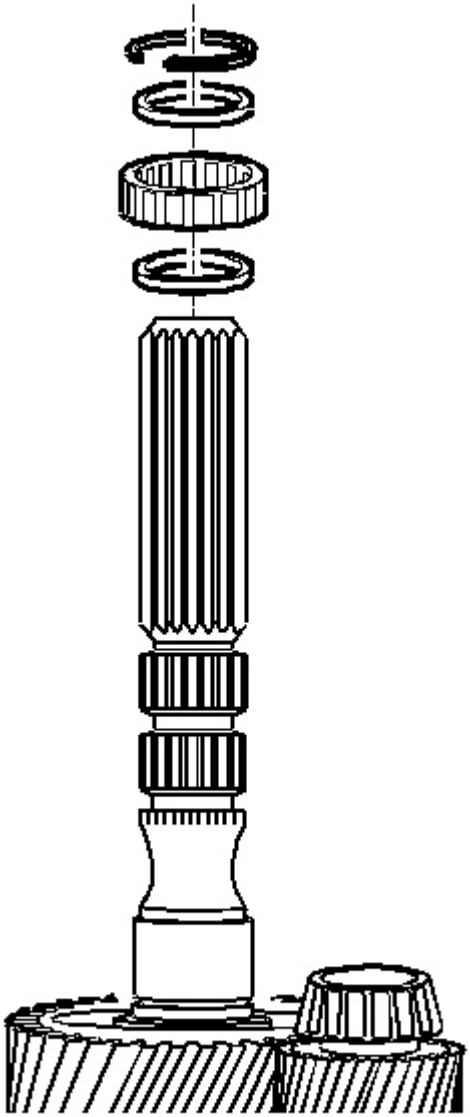

Fig. 398: View Of Mainshaft Rear Roller Bearing, Rear Bearing Retainer Ring & Spacers
Courtesy of GENERAL MOTORS CORP.

2. Install the following parts in order:
    1. The spacer
    2. The roller bearing
    3. The spacer

cardiagn.com

4. The roller bearing retainer ring

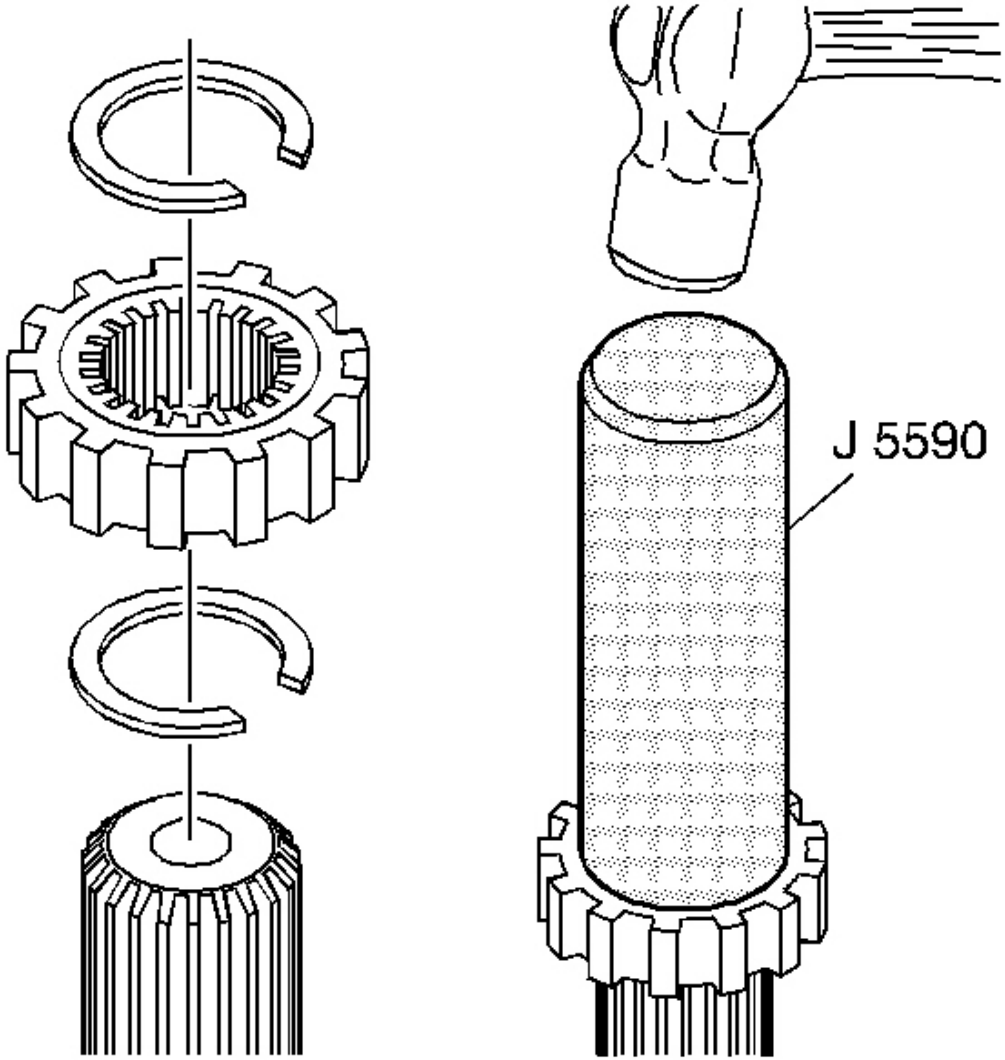

Fig. 399: Installing Speed Sensor Reluctor Wheel & Retainer Ring Using J 5590
Courtesy of GENERAL MOTORS CORP.

3. Install the retainer ring.
4. Install the speed sensor reluctor wheel using **J 5590** .
5. Install the retainer ring.

cardiagn.com

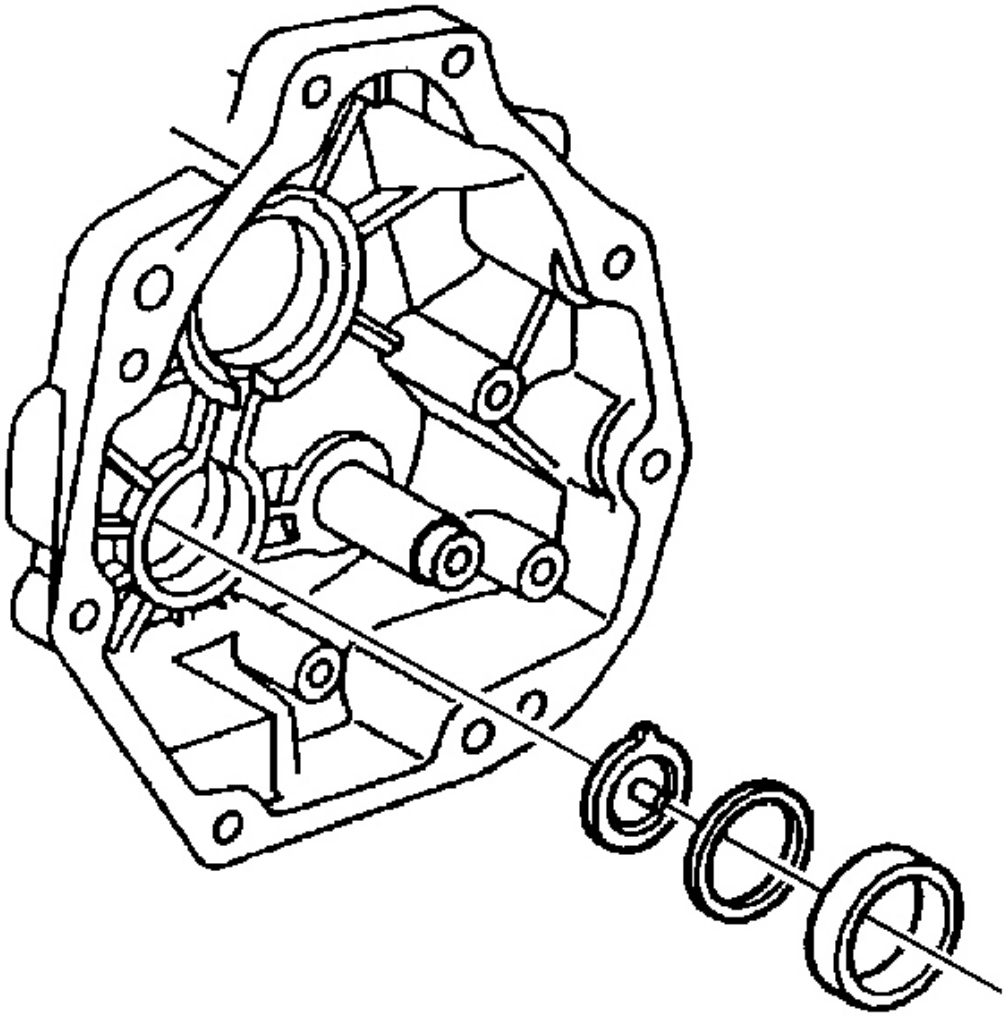

Fig. 400: View Of Countershaft Extension Bearing Race, Funnel & Shim
Courtesy of GENERAL MOTORS CORP.

1. Install the funnel.
2. Install the selective shims. Refer to the Countershaft Extension in **Shimming Procedures (Y Car)** or **Shimming Procedures (CTSV)** or **Shimming Procedures (GTO)** .
3. Install the countershaft extension bearing race.

cardiagn.com

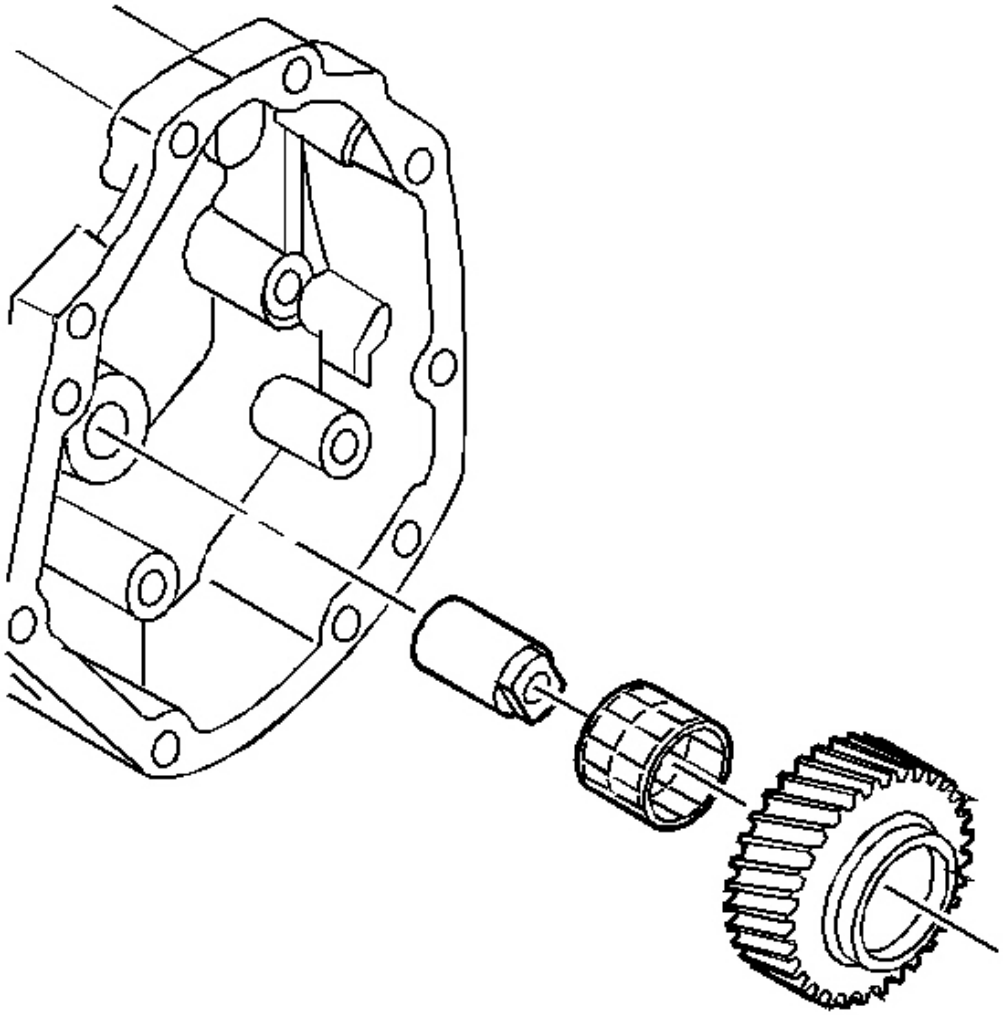

Fig. 401: Identifying Reverse Idler Shaft, Roller Bearing & Reverse Idler Gear
Courtesy of GENERAL MOTORS CORP.

4. Install the following parts in order:
    1. The reverse idler shaft
    2. The roller bearing
    3. The reverse idler gear

cardiagn.com

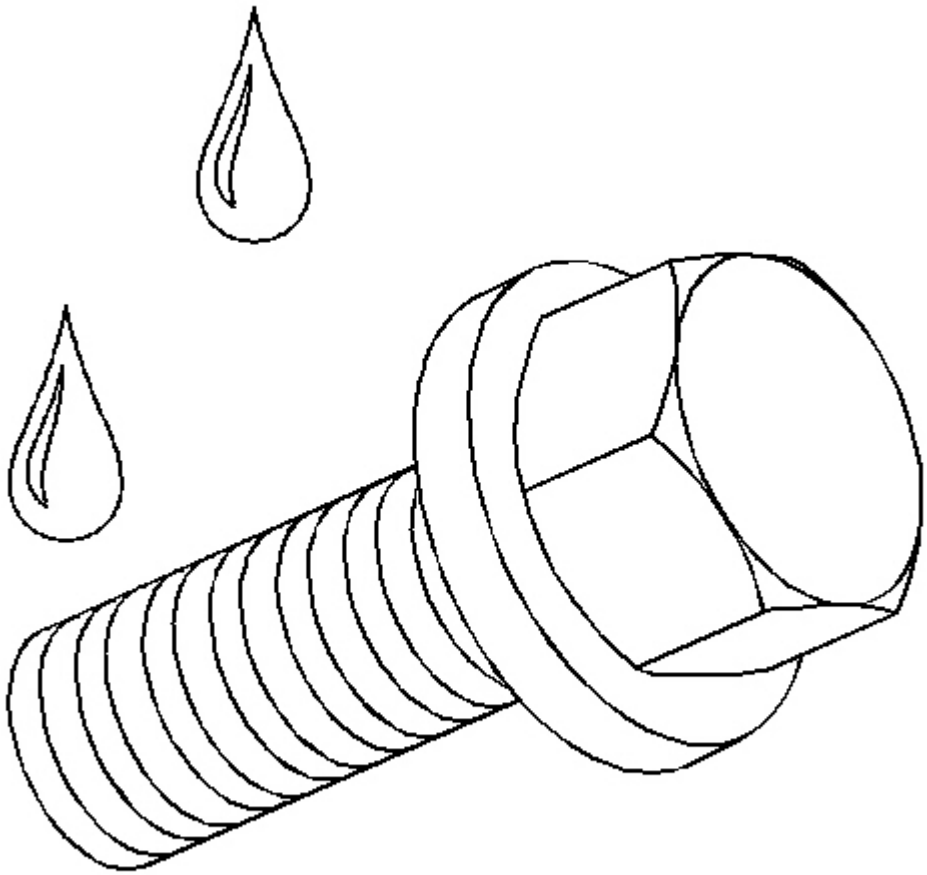

Fig. 402: Applying Sealant To Reverse Idler Shaft Brackets Bolt Threads
Courtesy of GENERAL MOTORS CORP.

5. Apply GM P/N 12345382 (Canadian P/N 10953489) or the equivalent to the reverse idler shaft brackets bolt threads.

NOTE: **Refer to Fastener Notice in Cautions and Notices.**

6. Install the reverse idler shaft bracket.
7. Install the reverse idler shaft bracket bolts.

Tighten: Tighten the bolts to 25 N.m (18 Ib. ft).

cardiagn.com

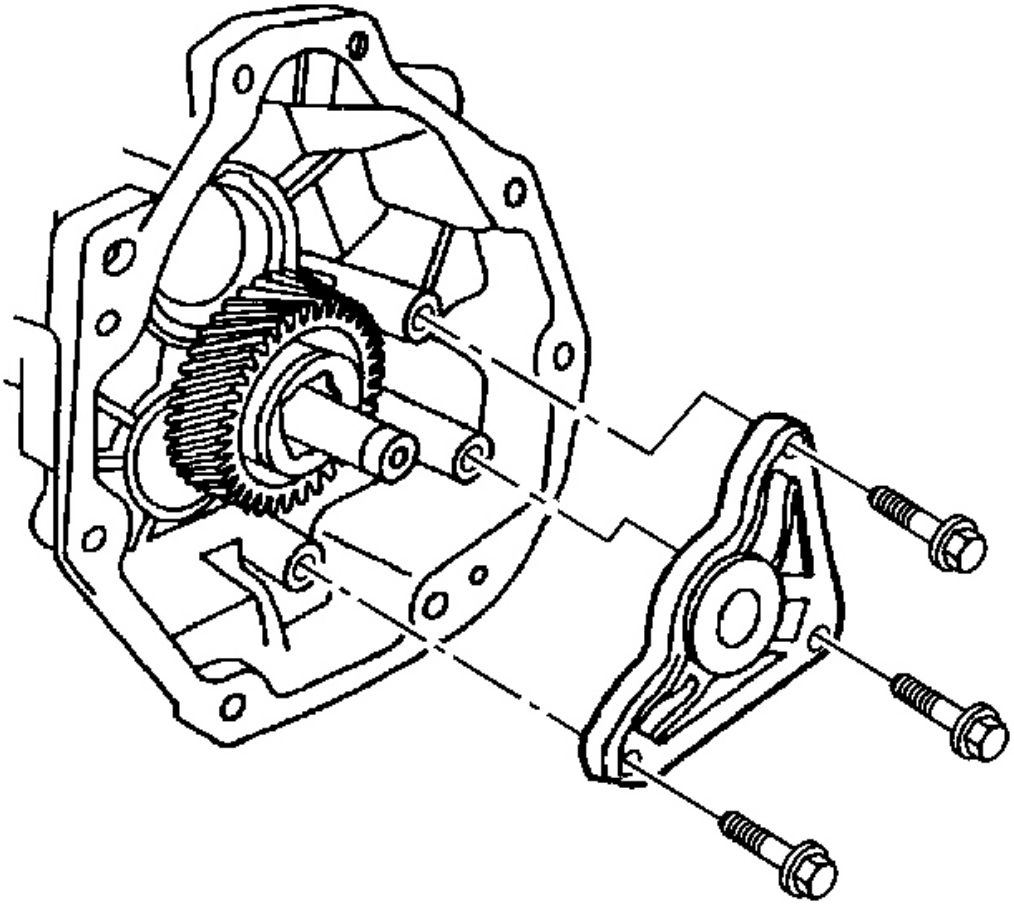

Fig. 403: View Of Reverse Idler Shaft Bracket & Mounting Bolts
Courtesy of GENERAL MOTORS CORP.

cardiagn.com

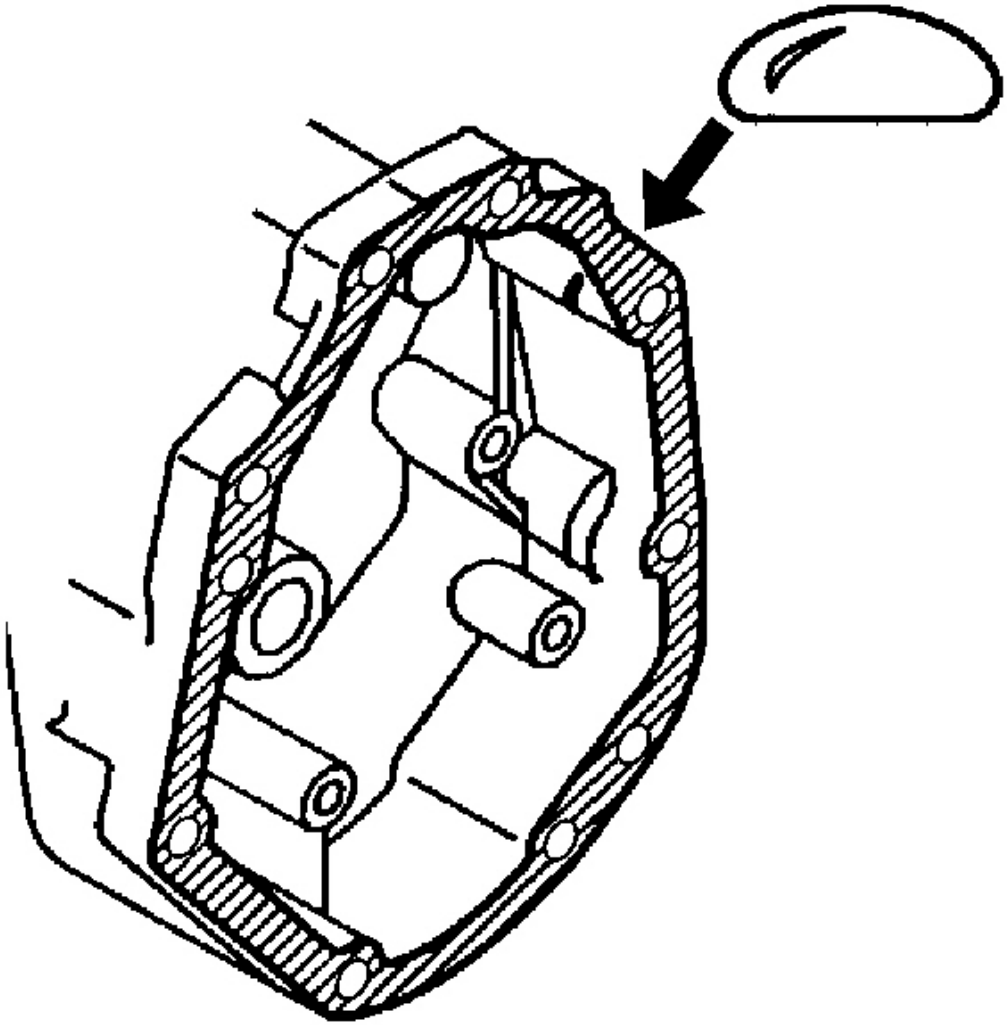

Fig. 404: Applying Sealant To Extension Housing To Transmission Case Mating Surface
Courtesy of GENERAL MOTORS CORP.

8. Apply sealant GM P/N 12345739 (Canadian P/N 10953472) or equivalent to the extension housing to the transmission case mating surface.

cardiagn.com

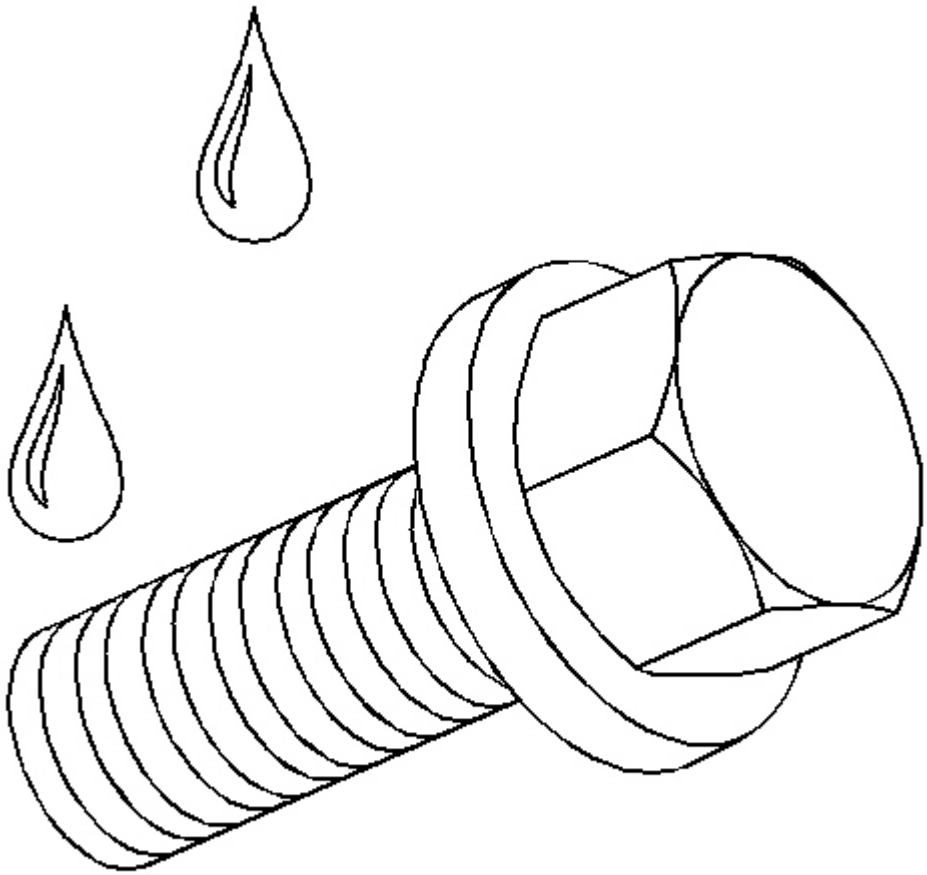

Fig. 405: Applying Sealant To Top Extension Housing Bolt
Courtesy of GENERAL MOTORS CORP.

9. Apply sealant GM P/N 12346004 (Canadian P/N 10953480) or equivalent to the top two extension housing bolts.

cardiagn.com

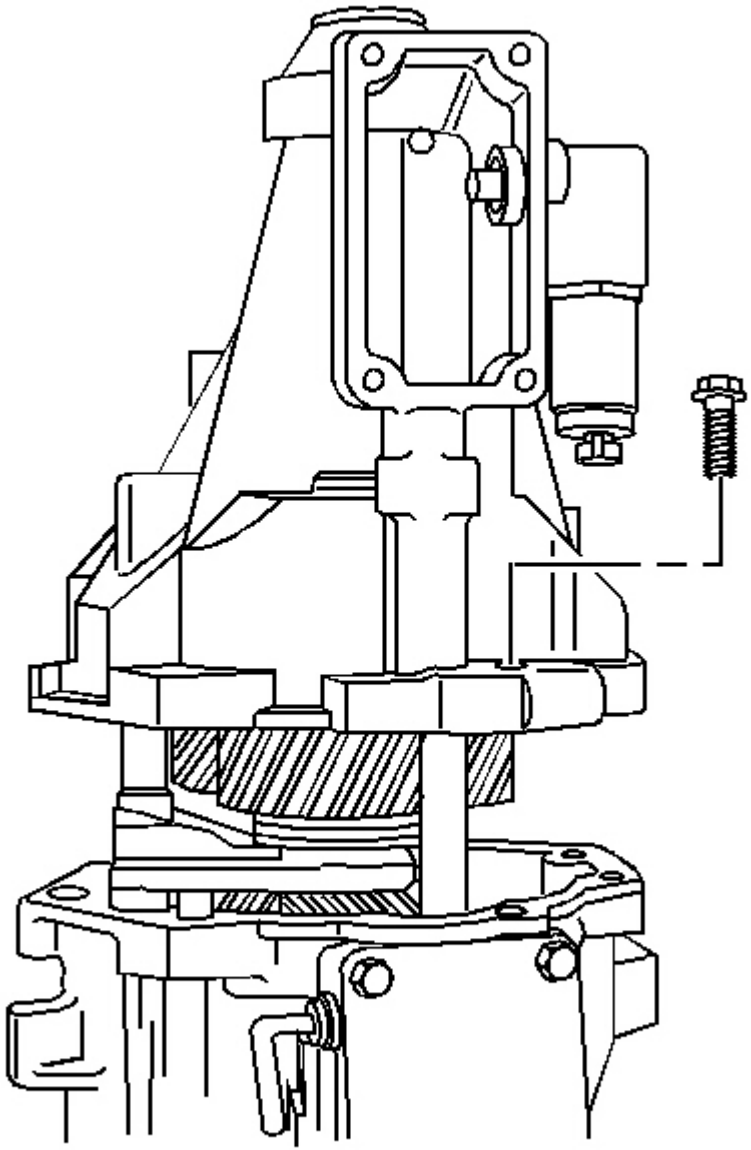

Fig. 406: View Of Extension Housing Bolts & Extension Housing
Courtesy of GENERAL MOTORS CORP.

10. Install the extension housing.
11. Install the extension housing bolts and the transmission bumper.

cardiagn.com

Tighten: Tighten the bolts to 48 N.m (36 lb ft).

12. Install the vent tube and bolt, if removed.

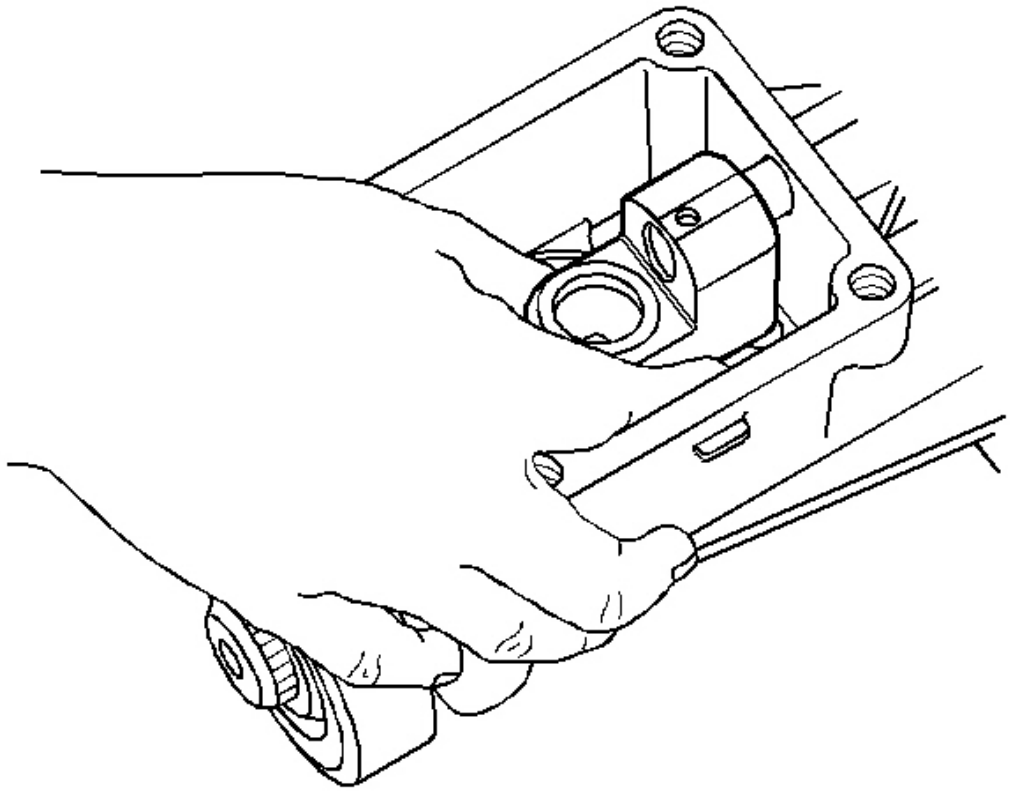

Fig. 407: View Of Rear Offset Shift Lever & Isolator Cup
Courtesy of GENERAL MOTORS CORP.

13. Install the rear offset shift lever and the isolator cup.

cardiagn.com

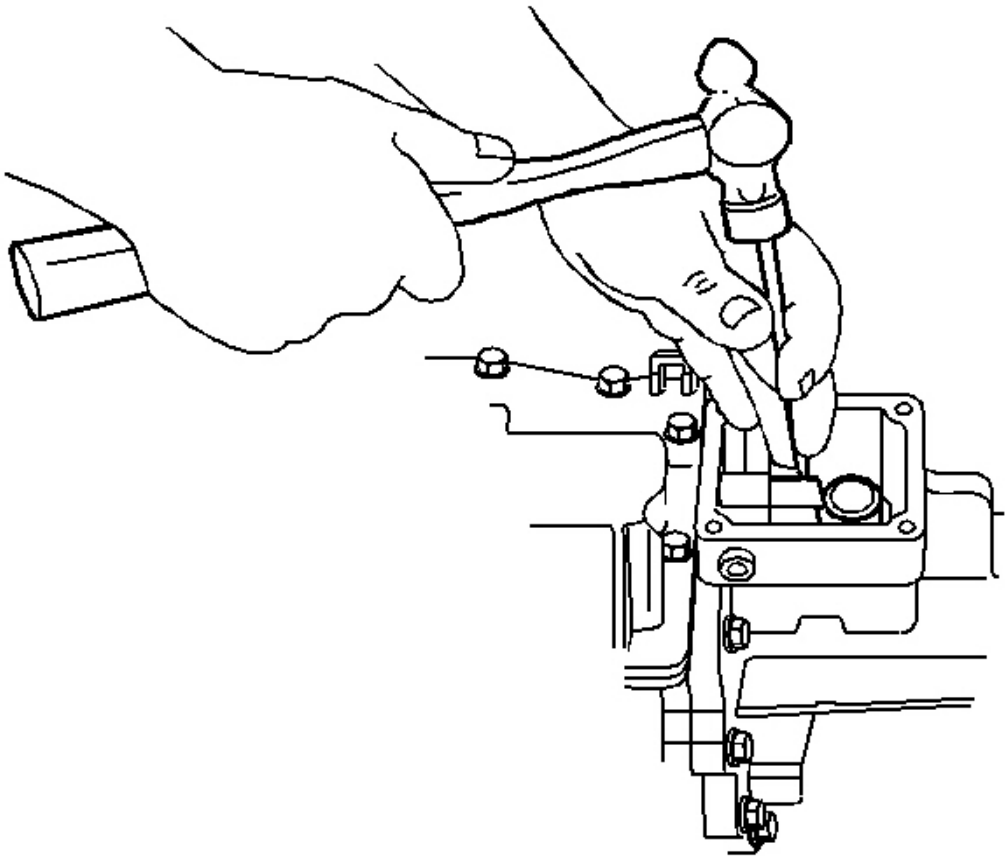

Fig. 408: Installing/Removing Rear Offset Shift Lever Roll Pin
Courtesy of GENERAL MOTORS CORP.

14. Install the rear offset shift lever roll pin.

cardiagn.com

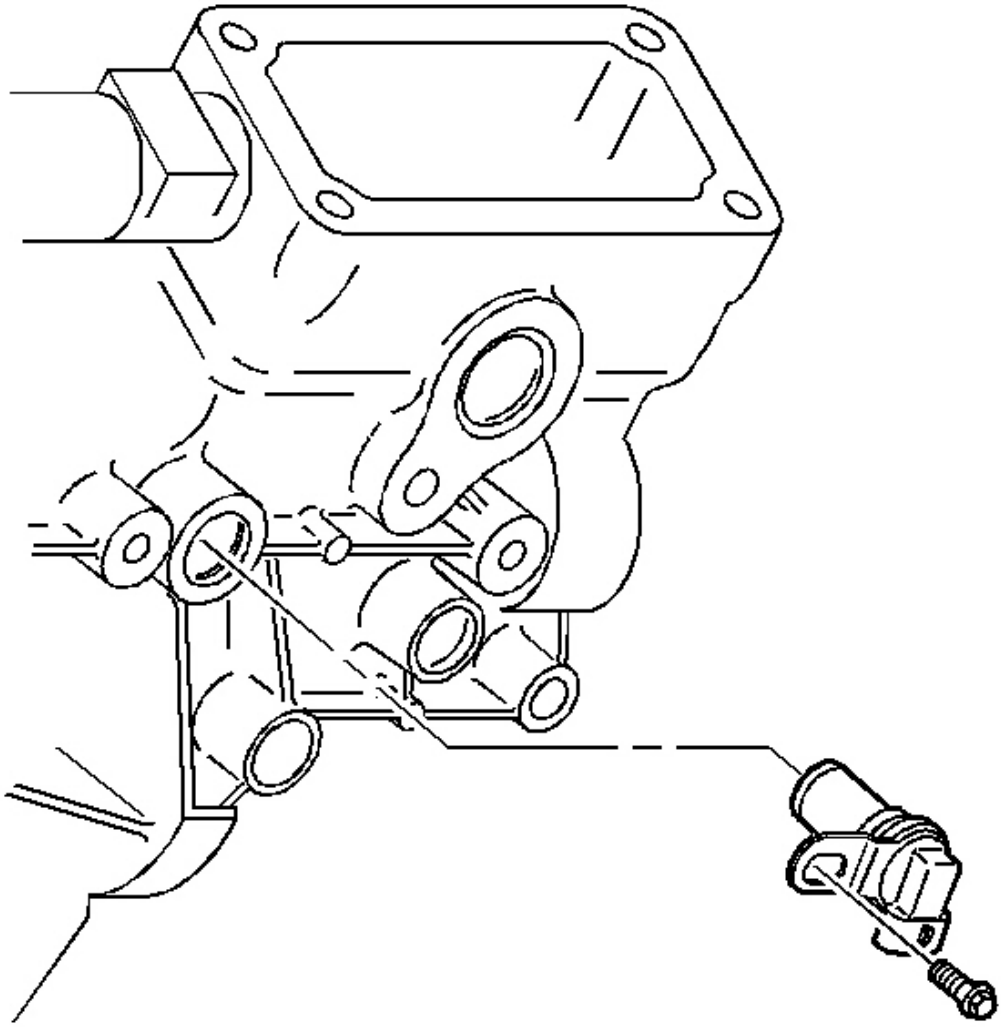

Fig. 409: View Of Vehicle Speed Sensor (VSS)
Courtesy of GENERAL MOTORS CORP.

15. Install the vehicle speed sensor.
16. Install the vehicle speed sensor bolt.

Tighten: Tighten the bolts to 10 N.m (89 lb in).

cardiagn.com

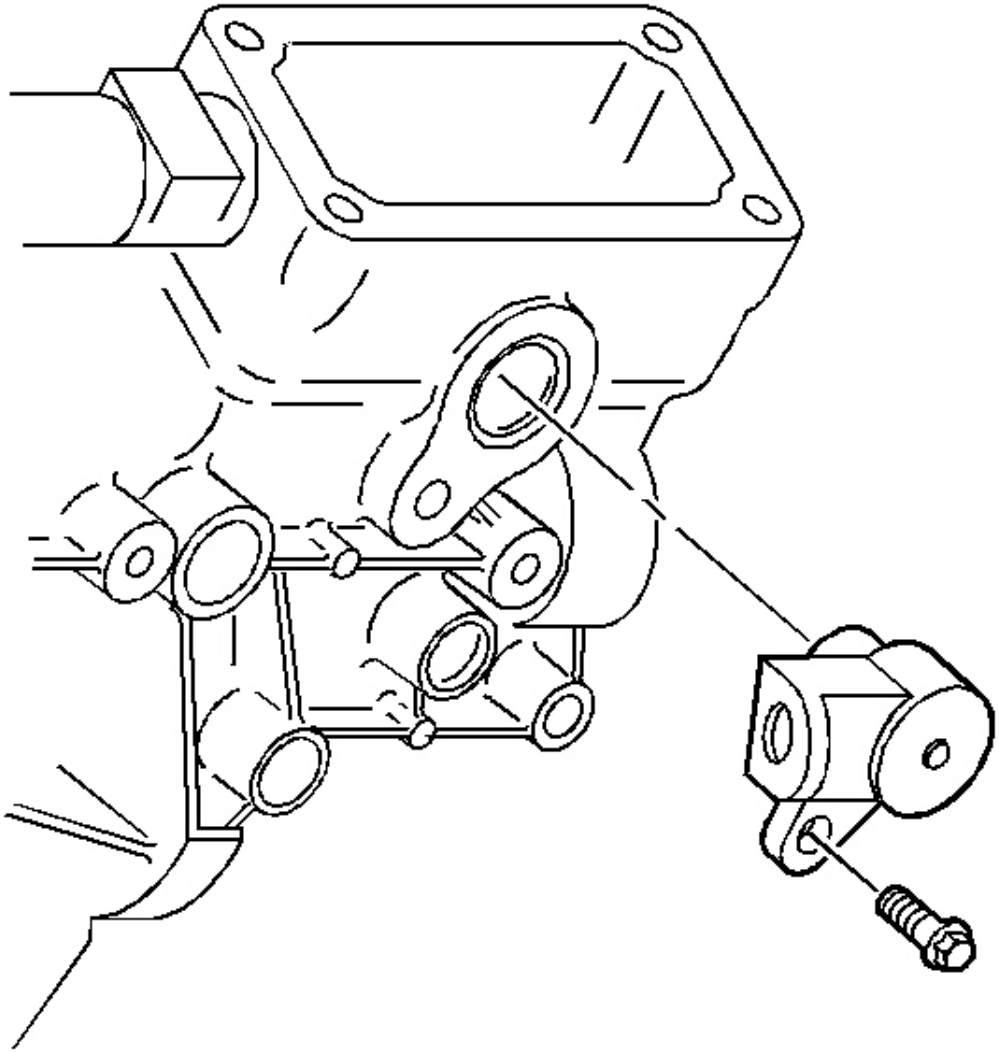

Fig. 410: Installing/Removing Reverse Lockout Body & Bolt To Extension Housing
Courtesy of GENERAL MOTORS CORP.

17. Install the reverse lockout body and bolt to the extension housing.

    Tighten: Tighten the bolts to 18 N.m (13 lb ft).

cardiagn.com

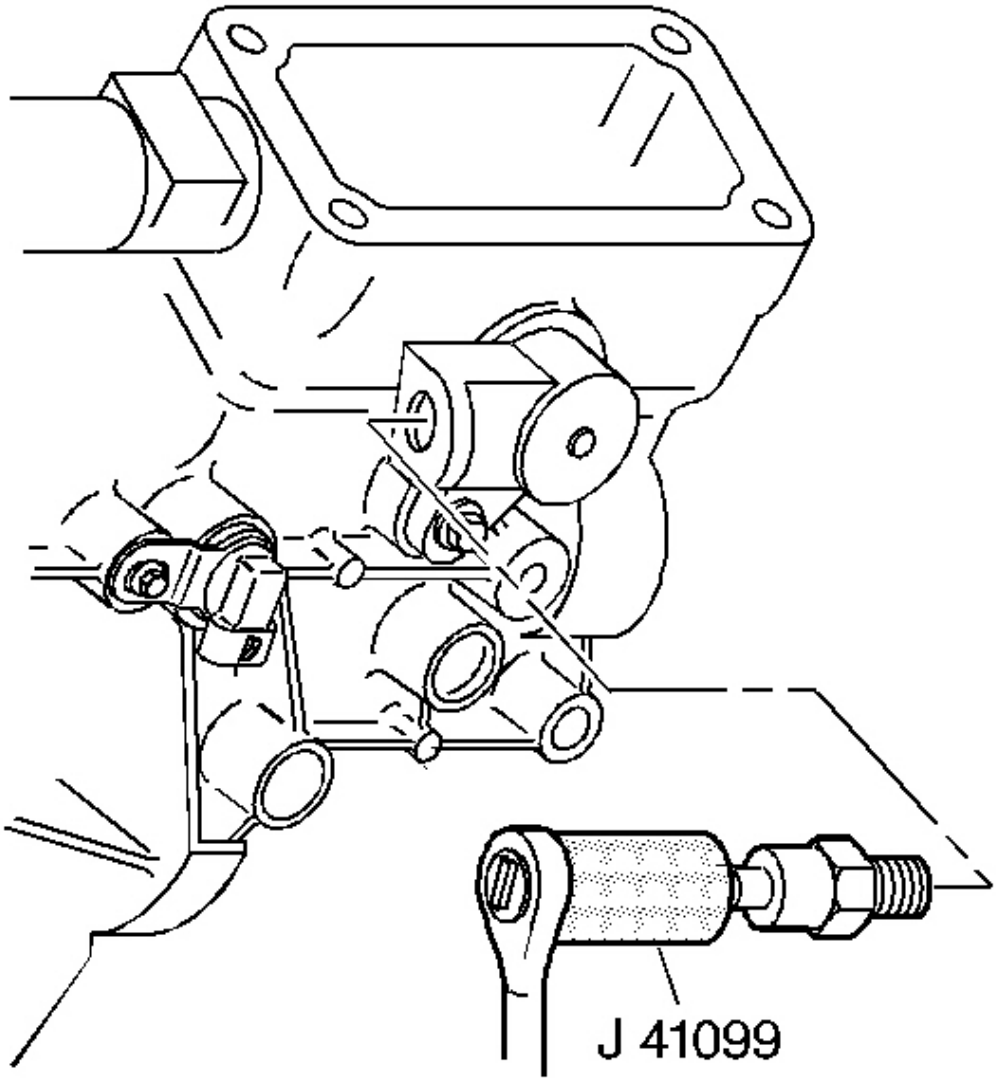

Fig. 411: Installing/Removing Reverse Lockout Solenoid Into Reverse Lockout Body Using J 41099
Courtesy of GENERAL MOTORS CORP.

18. Install the reverse lockout solenoid into the reverse lockout body using the **J 41099** .

    Tighten: Tighten the bolts to 40 N.m (30 lb ft).

cardiagn.com

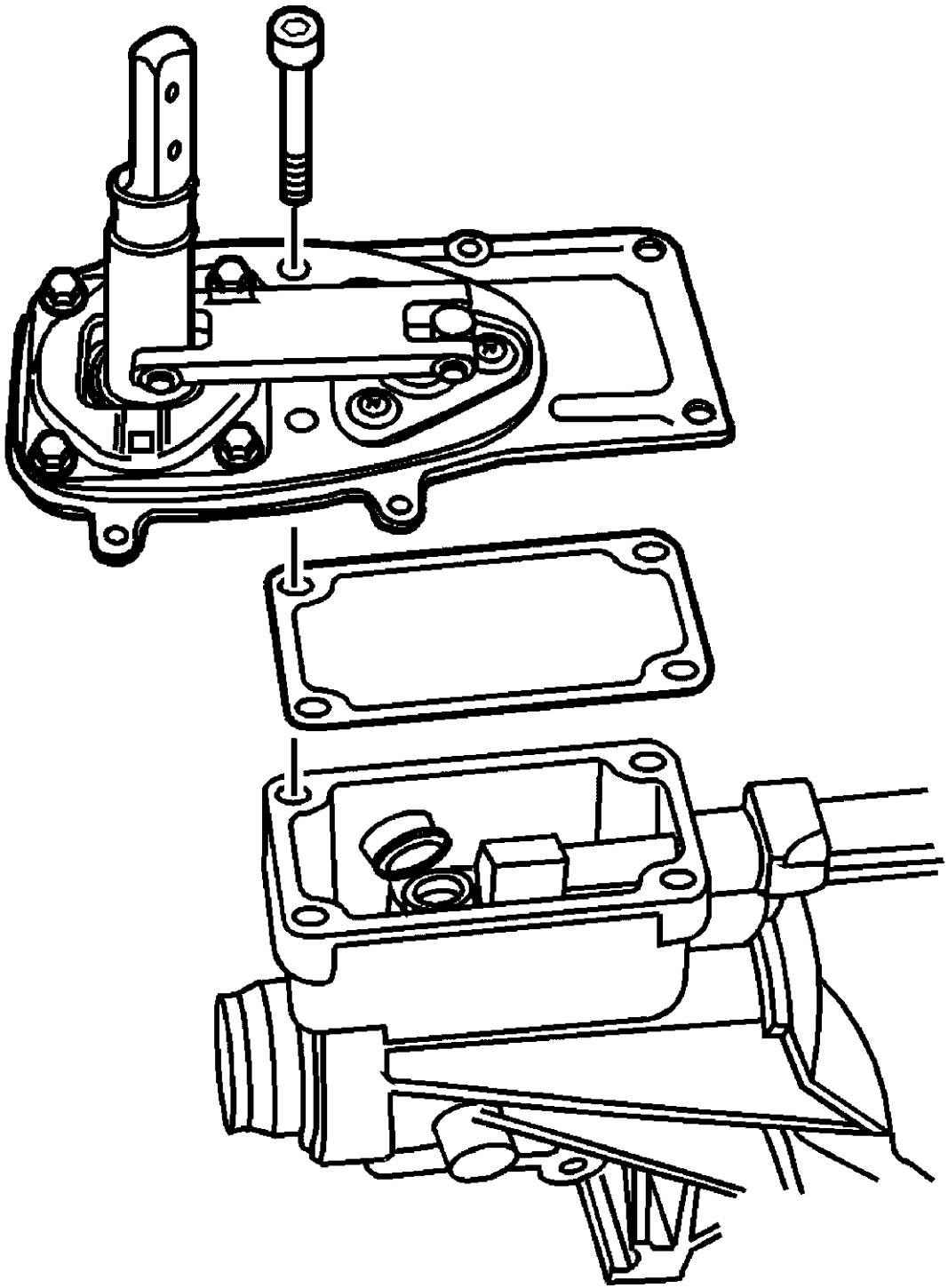

Fig. 412: Identifying Shifter, Gasket & Retaining Bolts
Courtesy of GENERAL MOTORS CORP.

cardiagn.com

19. Install the shifter gasket.
20. Install the shifter.
21. Install the shifter bolts.

    Tighten: Tighten the bolts to 22 N.m (16 lb ft).

cardiagn.com

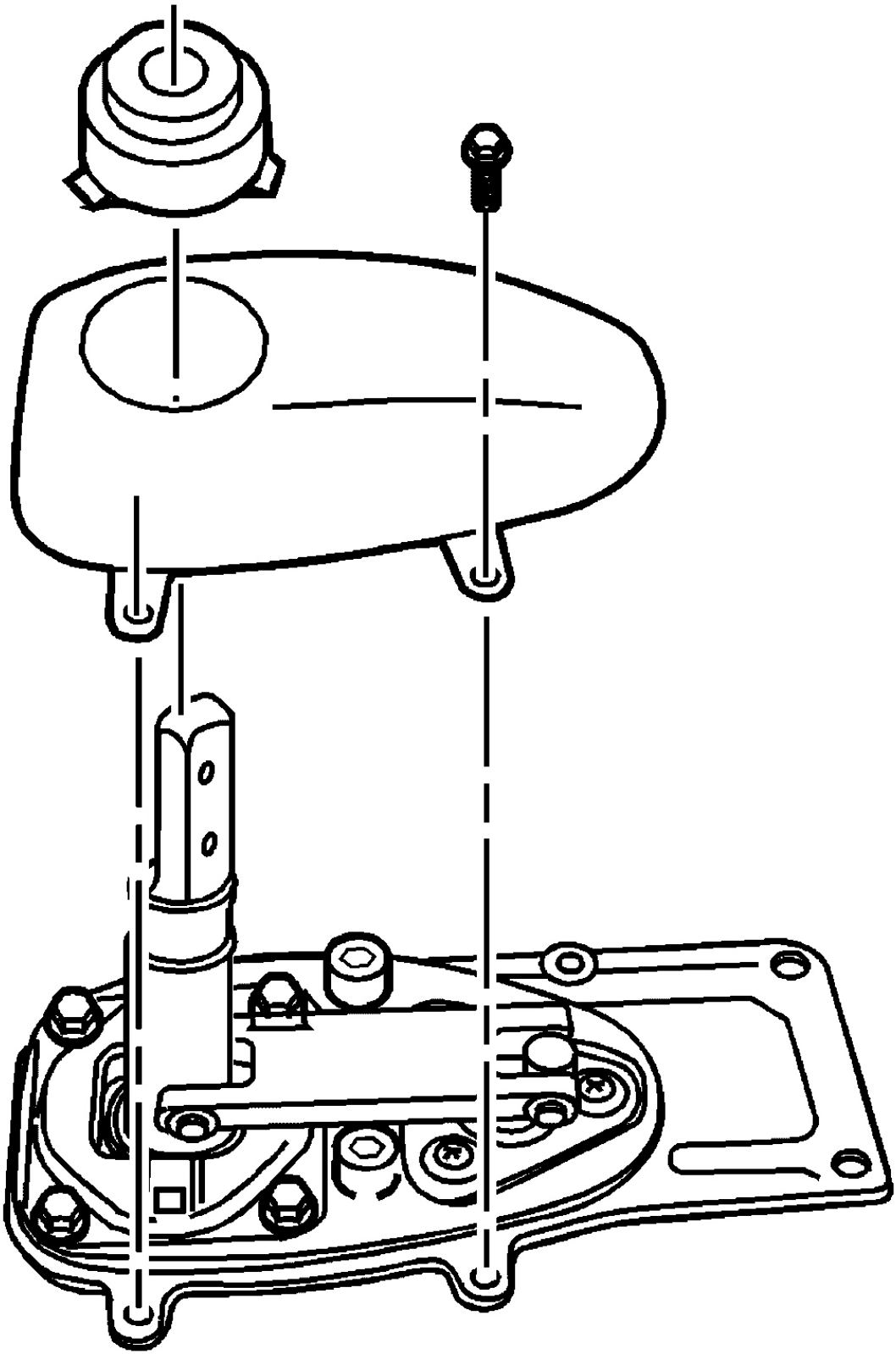

cardiagn.com

Fig. 413: View Of Shift Lever Cover & Retaining Screws
Courtesy of GENERAL MOTORS CORP.

22. Install the shift lever cover.
23. Install the shift lever cover screws.

    Tighten: Tighten the bolts to 4 N.m (35 lb in).

24. Install the shifter boot.

SHIMMING PROCEDURES (Y CAR)

Input Shaft, Mainshaft, and Countershaft

Tools Required

- **J 8001** Dial Indicator Set. See **Special Tools** .
- **J 39444-1** Countershaft End Play Rod. See **Special Tools** .

1. Rotate the transmission adapter plate to the vertical position.

cardiagn.com

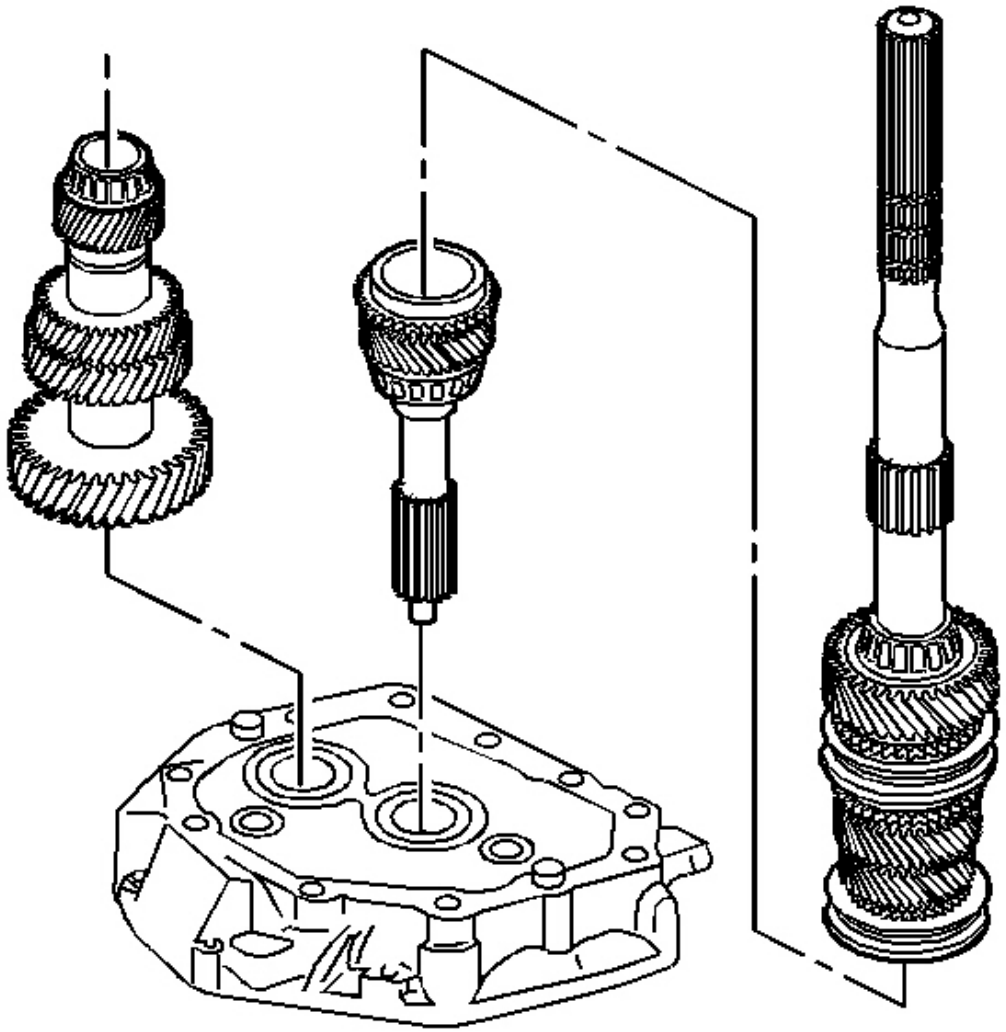

Fig. 414: View Of Transmission Components
Courtesy of GENERAL MOTORS CORP.

2. Install the following assemblies in order:
    1. The input shaft to the adapter plate
    2. Align the 4th speed gear blocking ring to the input shaft.
    3. The mainshaft assembly
    4. The countershaft (lift up the mainshaft enough to install the countershaft.)

cardiagn.com

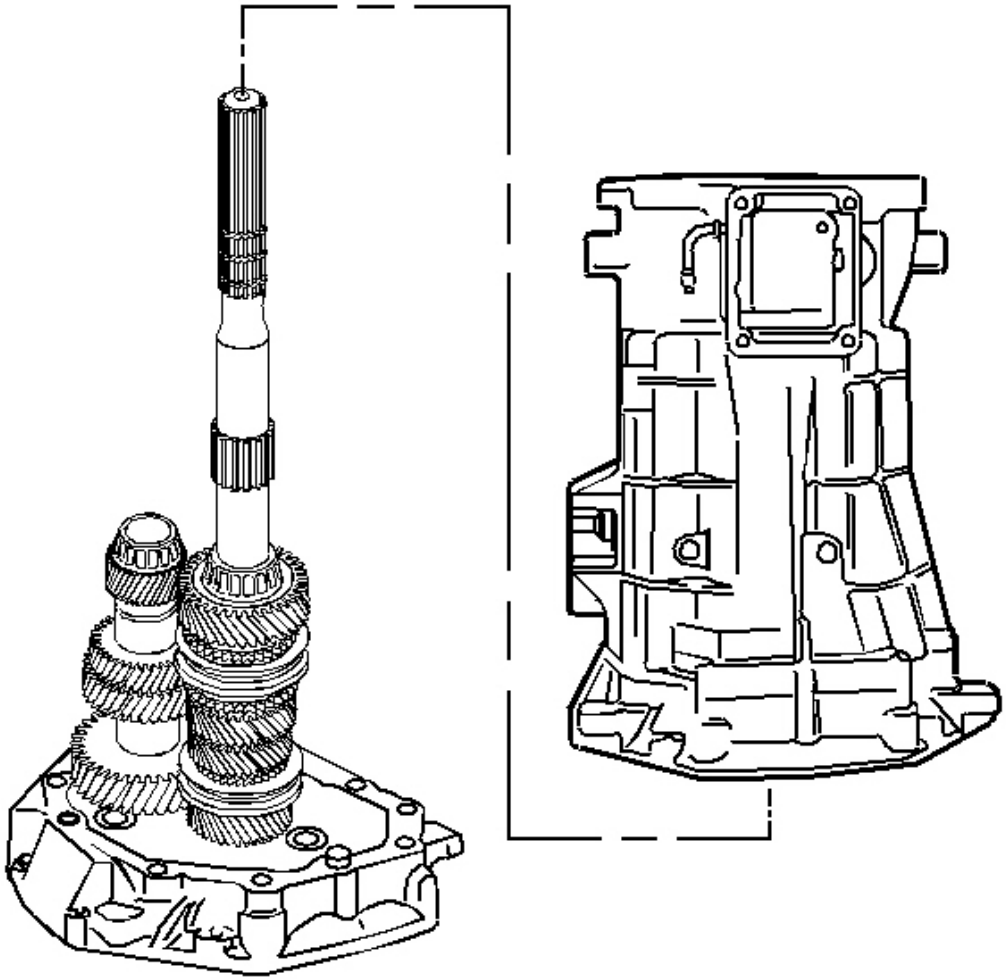

Fig. 415: Identifying Transmission Case
Courtesy of GENERAL MOTORS CORP.

3. Install the transmission case.

cardiagn.com

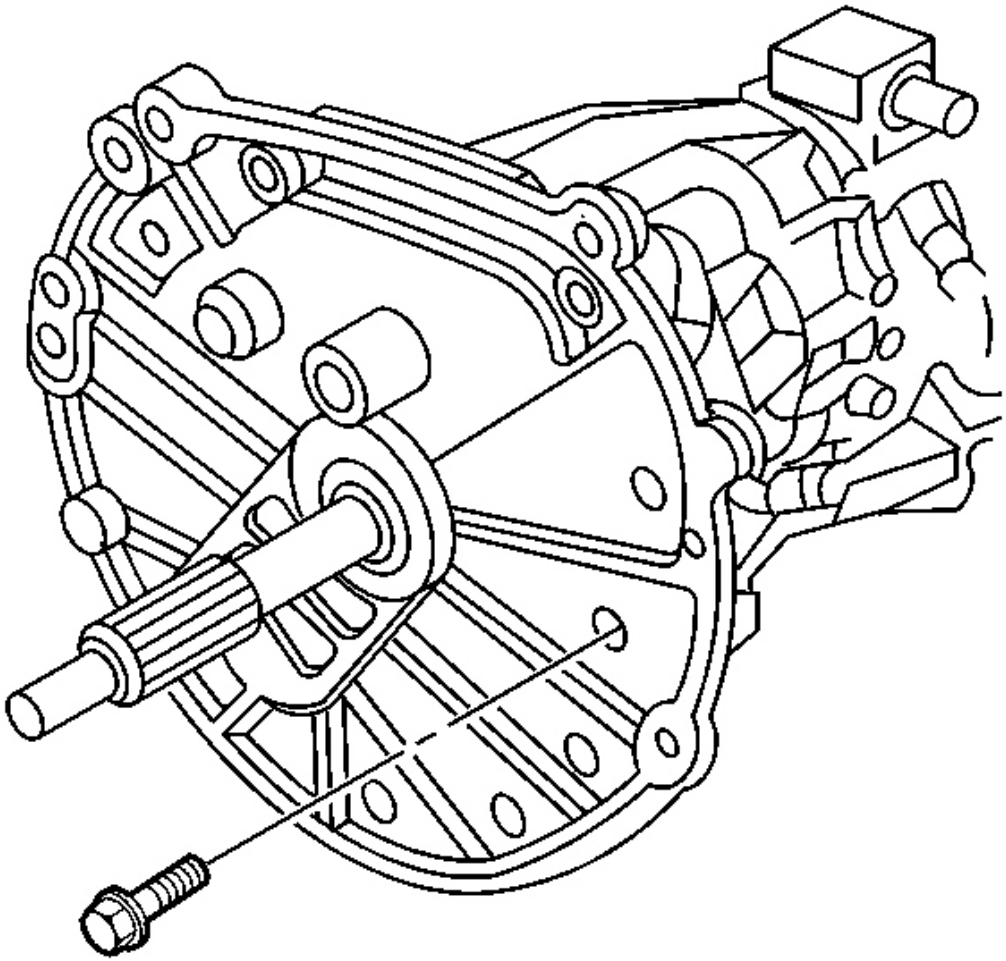

Fig. 416: View Of Adapter Plate & Transmission Case Bolts
Courtesy of GENERAL MOTORS CORP.

NOTE: Refer to Fastener Notice in Cautions and Notices.

4. Install the adapter plate to transmission case bolts.

   Tighten: Tighten the bolts to 35 N.m (26 Ib. ft).

cardiagn.com

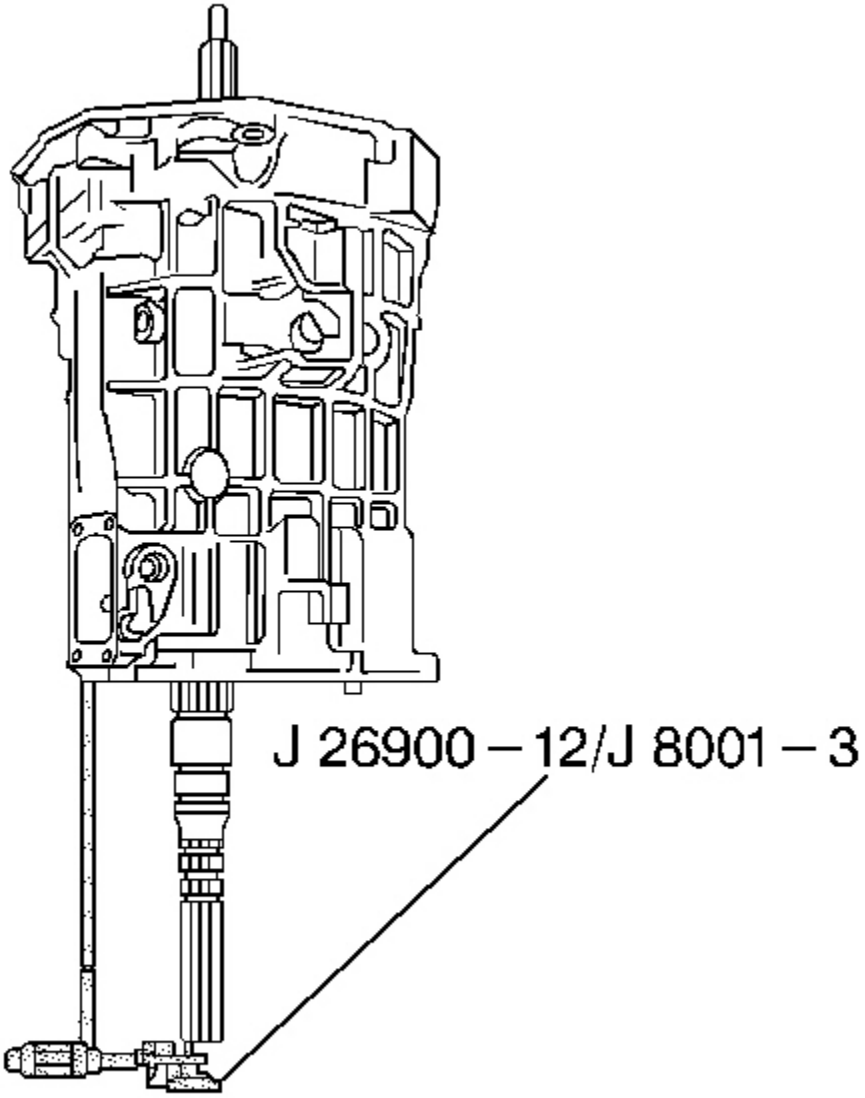

Fig. 417: Measuring Input Shaft/Mainshaft End Play Using J 8001-3
Courtesy of GENERAL MOTORS CORP.

5. Measure the input shaft/mainshaft end play using the following procedure:
    1. Place the tip of the **J 8001** -3 on the end of the mainshaft.
    2. Move the input shaft up and down.
    3. Record the measurement.

cardiagn.com

6. Select a shim to achieve 0.00-0.05 mm (0.000-0.002 in) preload.
7. Remove the **J 8001** -3.

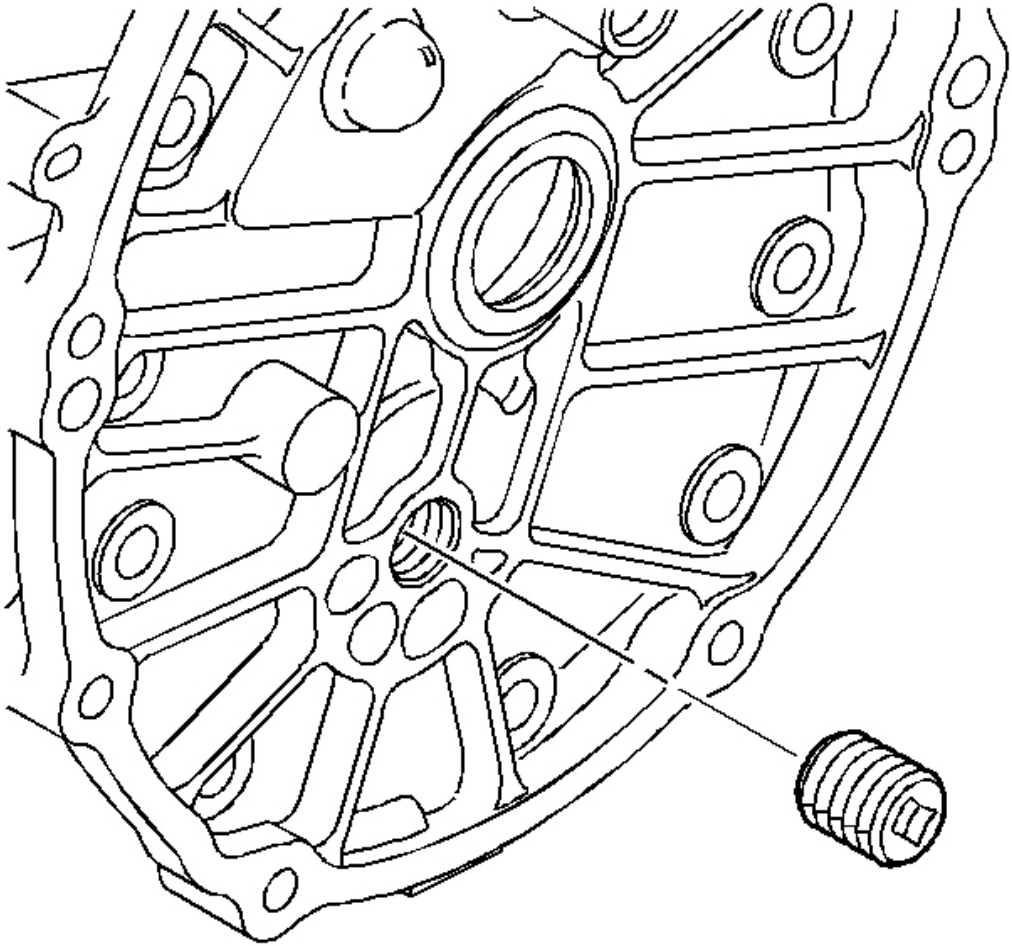

Fig. 418: Locating Adapter Plate Plug
Courtesy of GENERAL MOTORS CORP.

8. Remove the adapter plate plug.

cardiagn.com

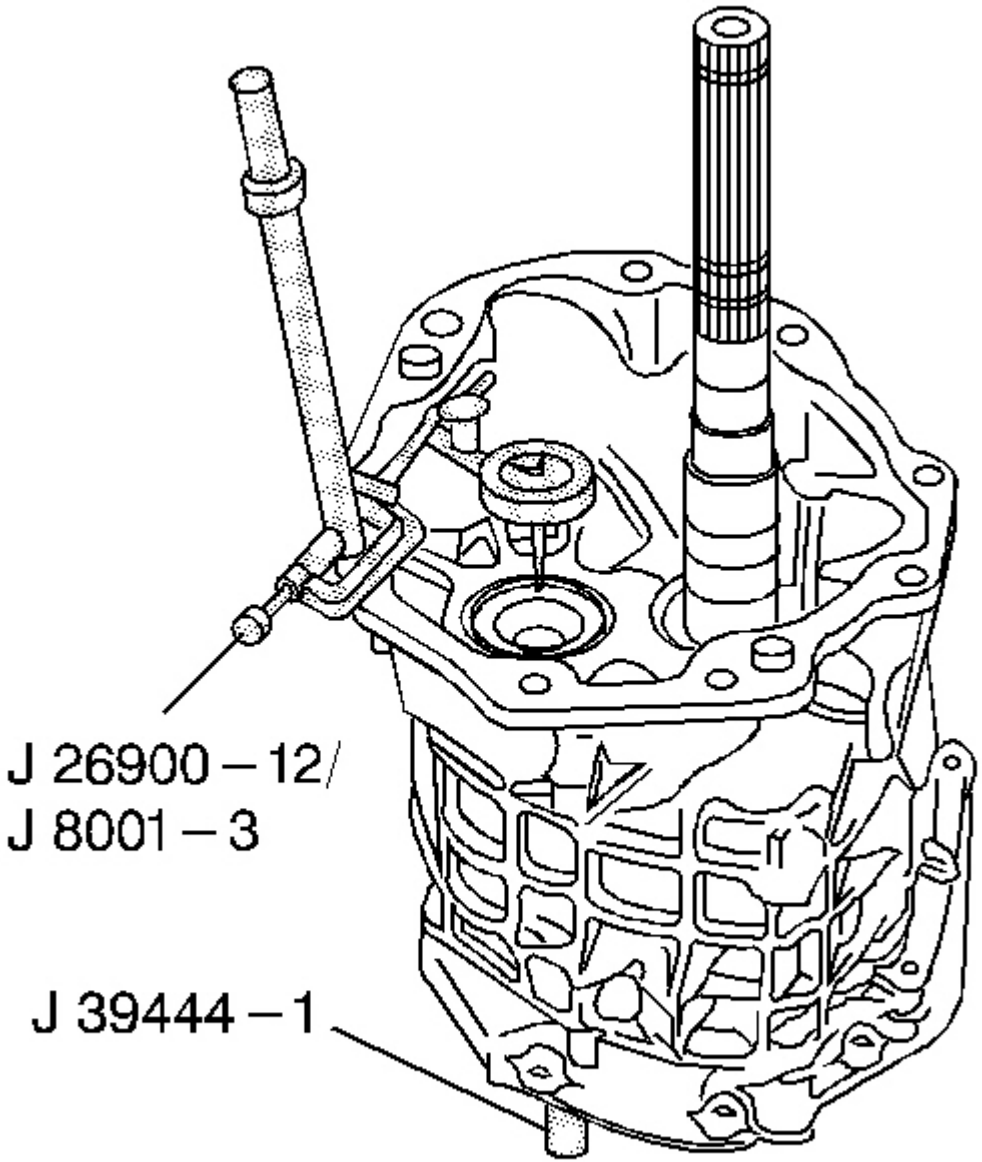

Fig. 419: Measuring Countershaft End Play With J 8001 & J 39444-1
Courtesy of GENERAL MOTORS CORP.

9. Place the tip of the **J 8001** -3 on the end of the countershaft.
10. Measure the countershaft end play using the following procedure:
    1. Install the **J 39444-1** through the adapter plate plug hole. Screw the **J 39444-1** into the

cardiagn.com

countershaft.

2. Move the countershaft up and down with the countershaft end play rod **J 39444-1** .
3. Record the measurement.

11. Select a shim to achieve 0.00-0.05 mm (0.000-0.002 in) preload.
12. Remove the **J 8001** -3.
13. Remove the **J 39444-1** .

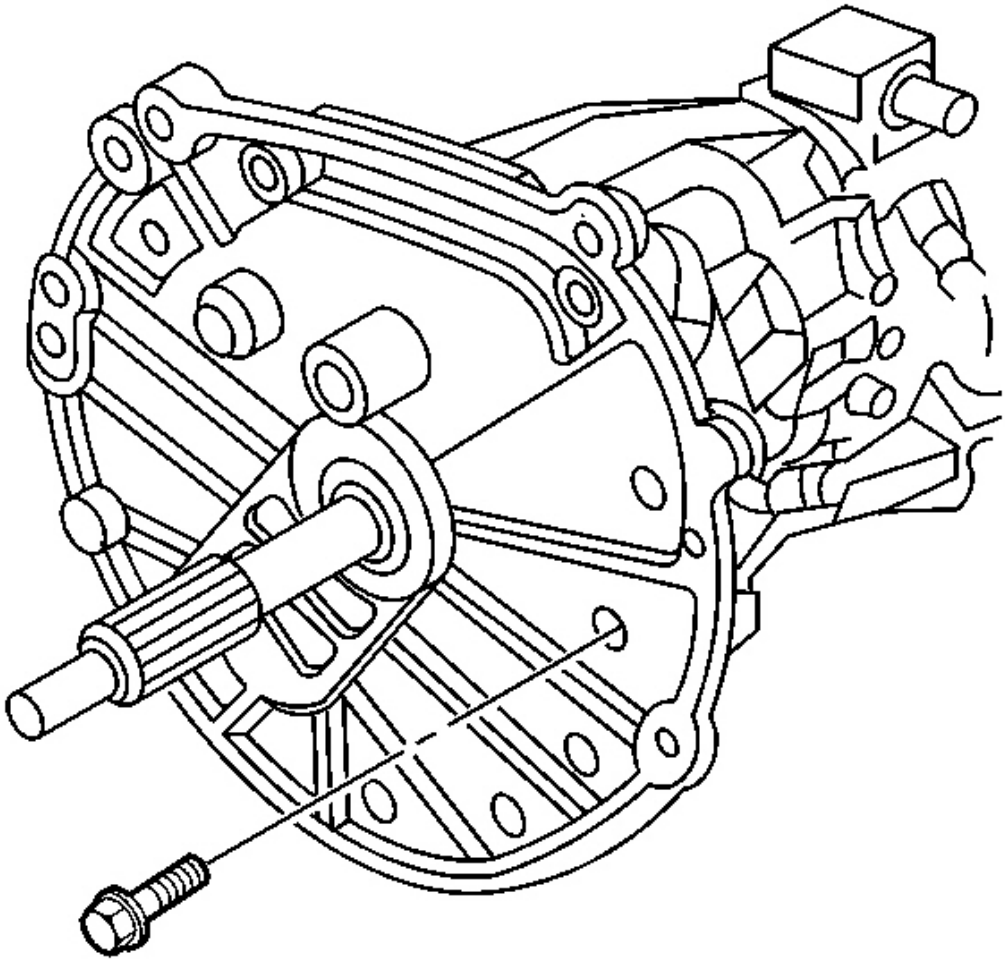

Fig. 420: View Of Adapter Plate & Transmission Case Bolts
Courtesy of GENERAL MOTORS CORP.

14. Remove the adapter plate to the transmission case bolts.

cardiagn.com

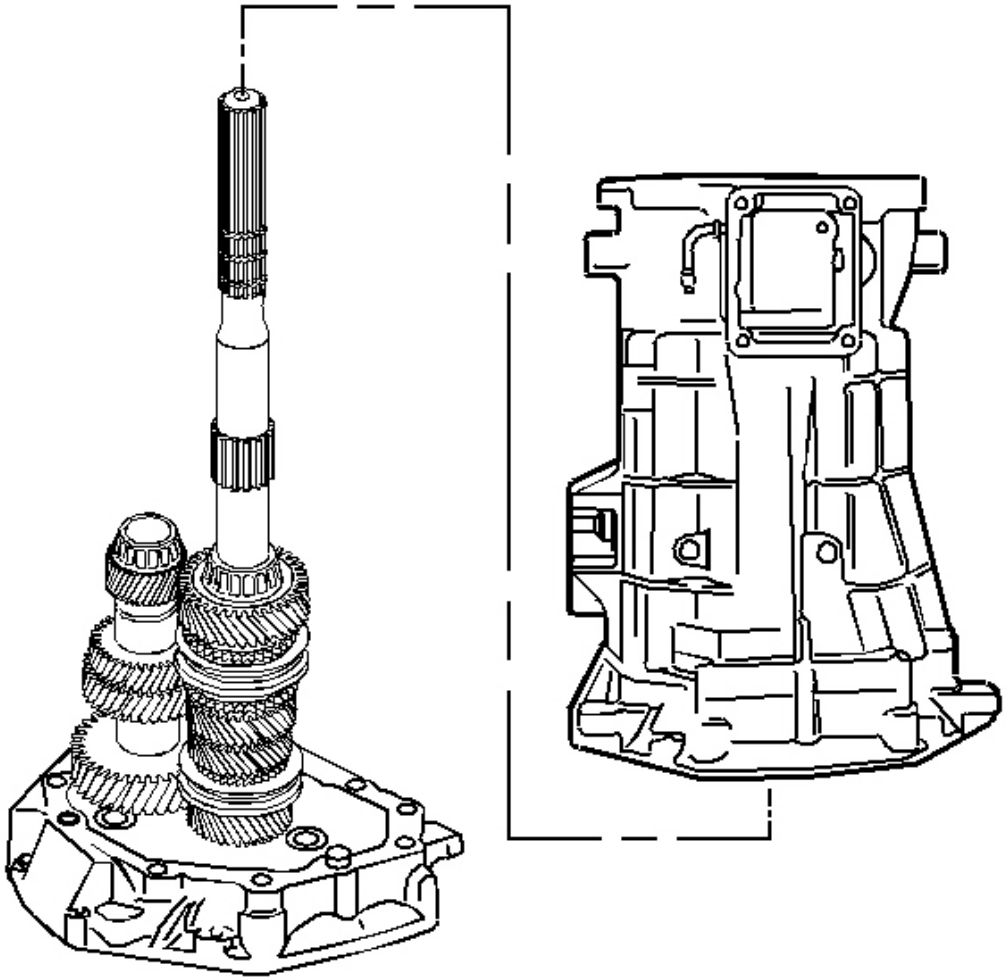

Fig. 421: Identifying Transmission Case
Courtesy of GENERAL MOTORS CORP.

15. Remove the transmission case.

cardiagn.com

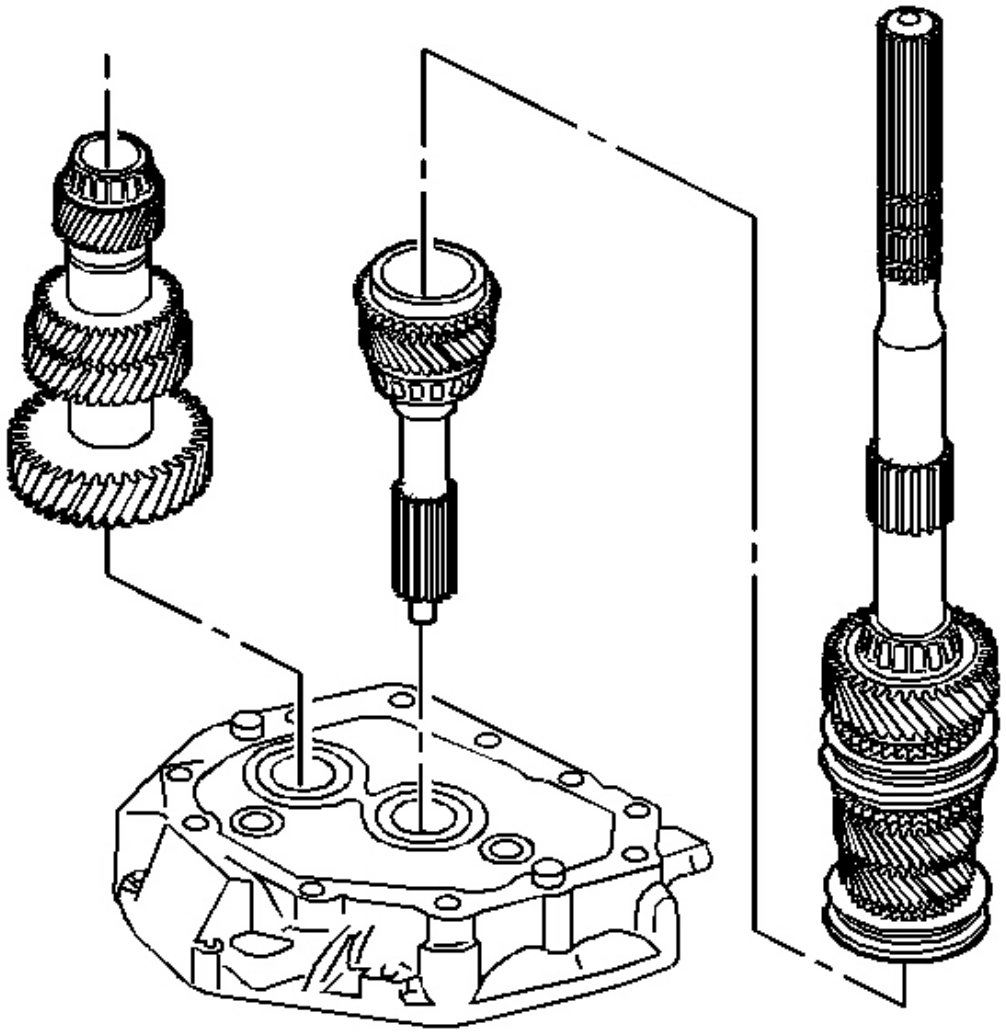

Fig. 422: View Of Transmission Components
Courtesy of GENERAL MOTORS CORP.

16. Remove the following parts in order:
    1. The countershaft (lift up the mainshaft enough to remove the countershaft).
    2. The mainshaft assembly
    3. The input shaft from the adapter plate
    4. The input shaft bearing race
    5. The countershaft bearing race

cardiagn.com

Countershaft Extension

Tools Required

- **J 8001** Dial Indicator Set. See **Special Tools** .
- **J 39444-2** Countershaft Extension End Play Rod. See **Special Tools** .

IMPORTANT: The following procedure cannot be performed accurately until the countershaft shimming procedure has been completed and the transmission has been assembled to the point of installing the countershaft extension.

1. Rotate the transmission in the horizontal position.
2. Install the countershaft extension to the countershaft. Make sure the splines fully engage.

cardiagn.com

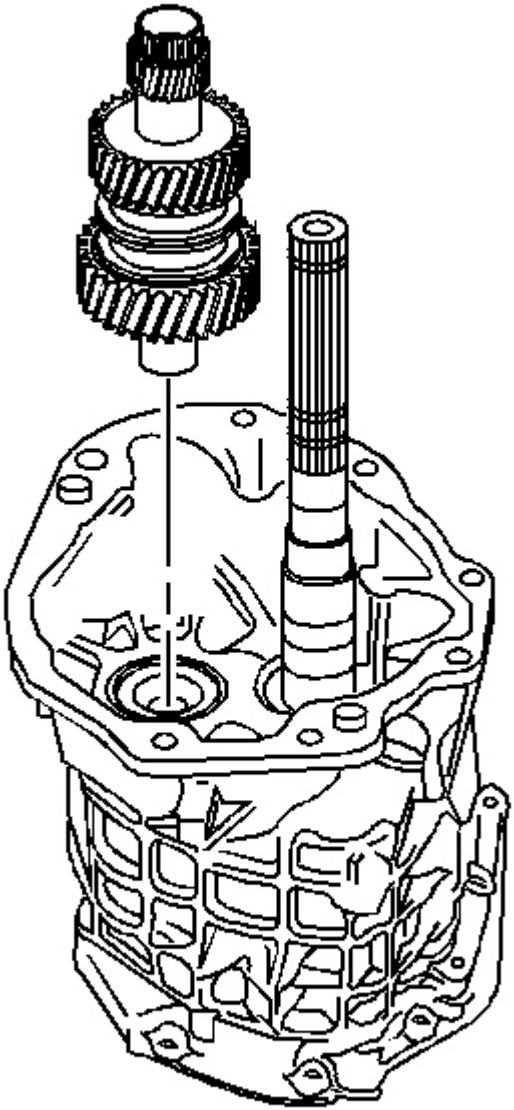

Fig. 423: Identifying Countershaft Extension
Courtesy of GENERAL MOTORS CORP.

cardiagn.com

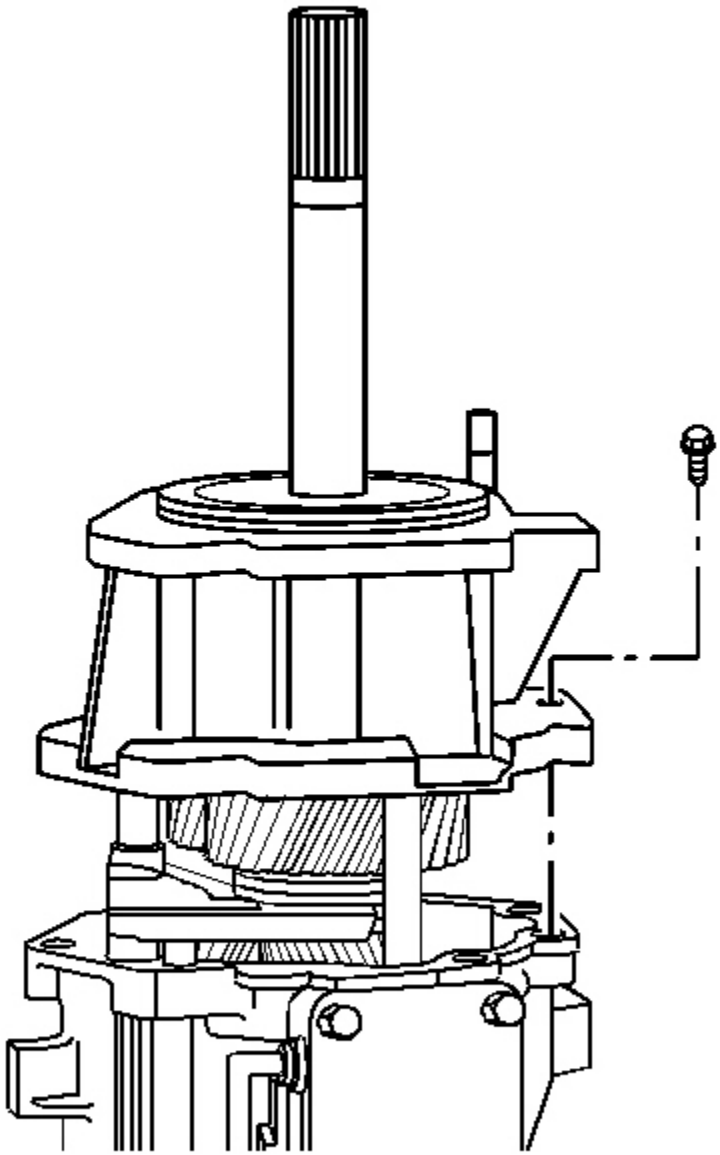

Fig. 424: View Of Extension Housing Bolts & Extension Housing
Courtesy of GENERAL MOTORS CORP.

NOTE: Refer to Fastener Notice in Cautions and Notices.

3. Install the extension housing and the extension housing retainer bolts.

cardiagn.com

Tighten: Tighten the bolts to 35 N.m (26 Ib. ft).

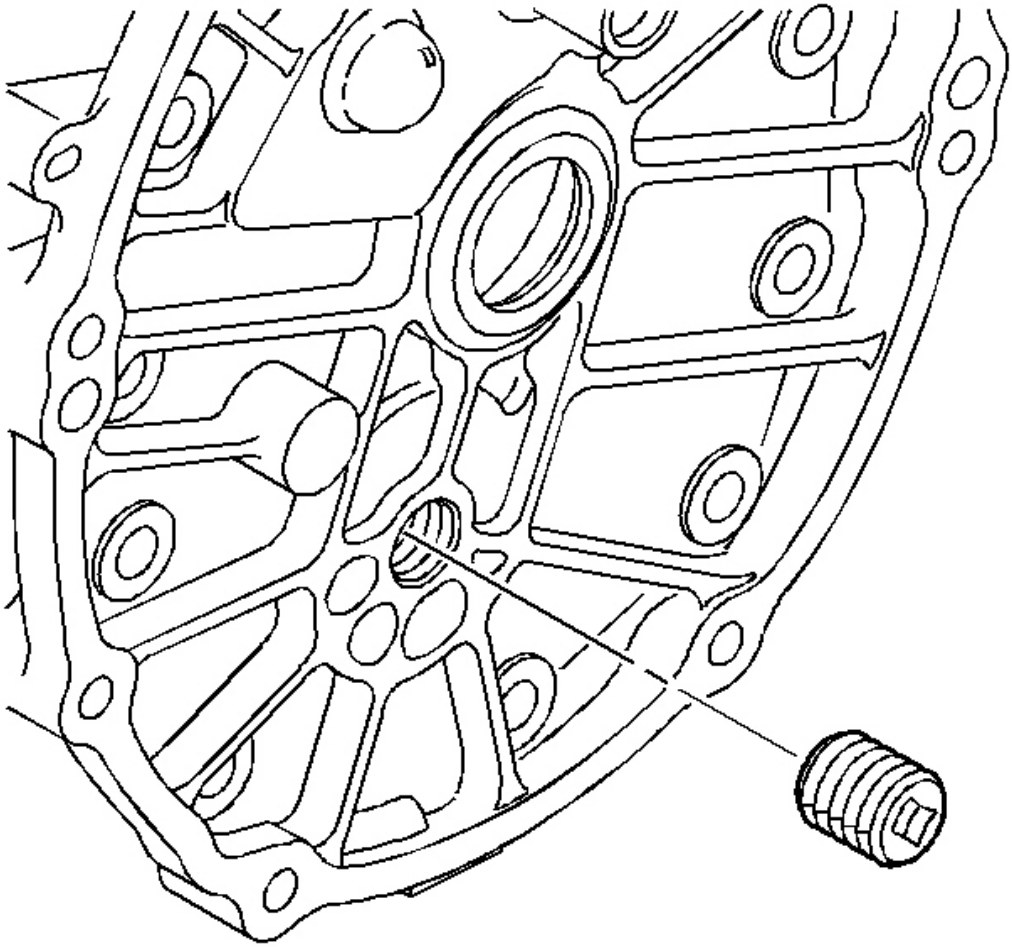

Fig. 425: Locating Adapter Plate Plug
Courtesy of GENERAL MOTORS CORP.

4. Remove the plug from the adapter plate.

cardiagn.com

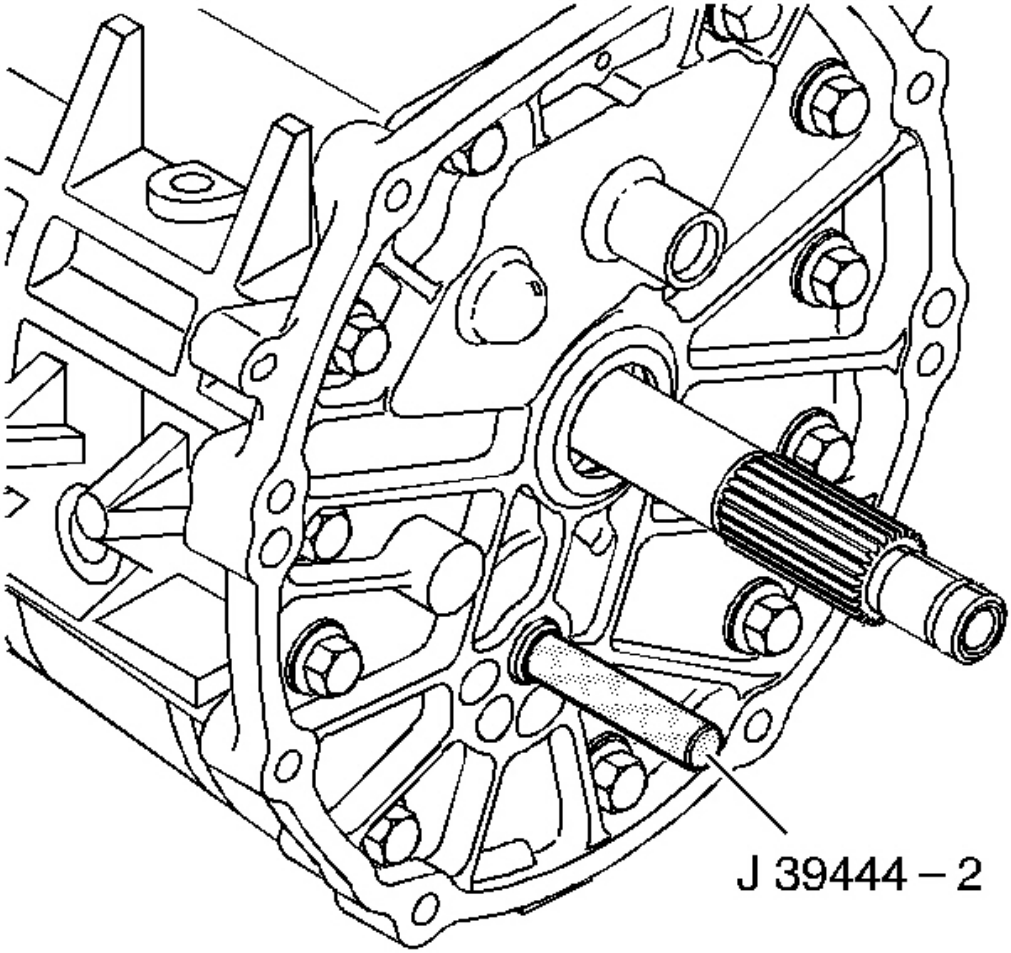

Fig. 426: Installing/Installing J 39444-2 In Adapter Plate Plug Hole
Courtesy of GENERAL MOTORS CORP.

5. Install the **J 39444-2** through the adapter plate plug hole.
6. Screw **J 39444-2** into the countershaft extension.

cardiagn.com

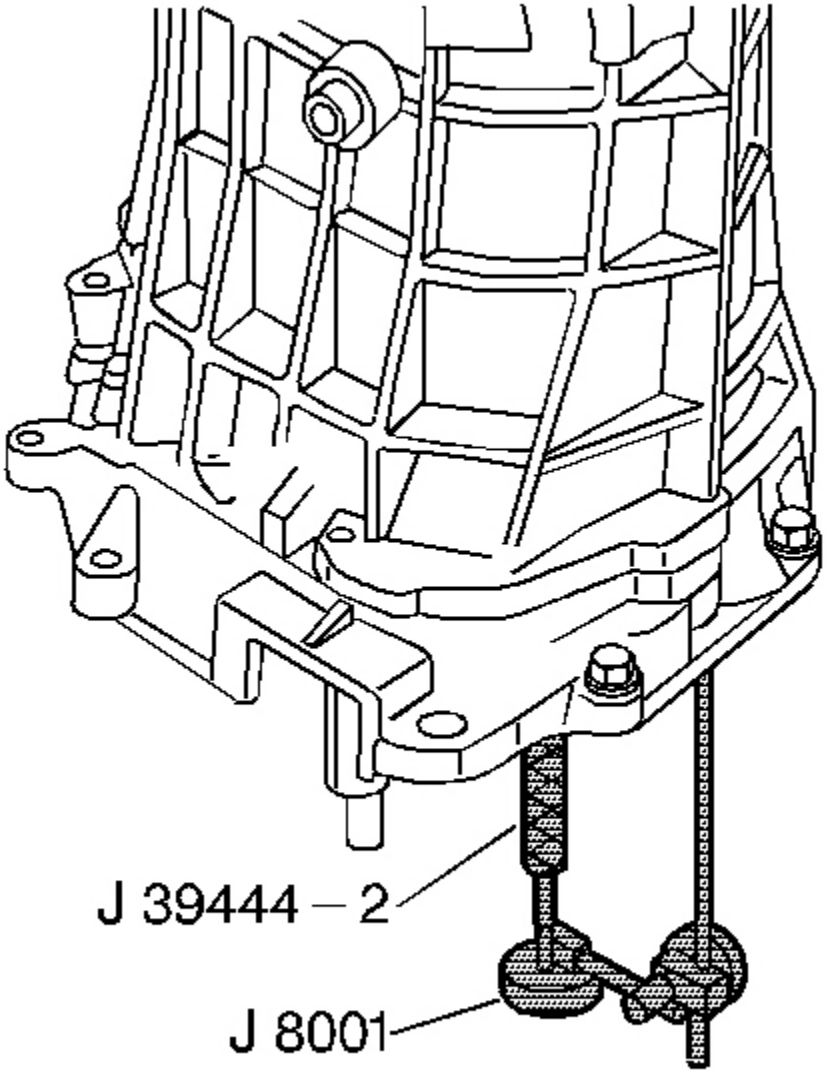

Fig. 427: Measure Countershaft Extension End Play Using J 8001 & J 39444-2
Courtesy of GENERAL MOTORS CORP.

7. Measure the countershaft extension end play using the following procedure:
    1. Install a **J 8001** so the tip is on the end of the countershaft extension end play rod.
    2. Rotate the transmission in the vertical position.
    3. Move the countershaft extension up and down using the **J 39444-2** .
    4. Record the measurement.

cardiagn.com

8. Select a shim to achieve 0.05-0.13 mm (0.002-0.005 in) axial play.
9. Remove the **J 8001** .
10. Remove the **J 39444-2** .

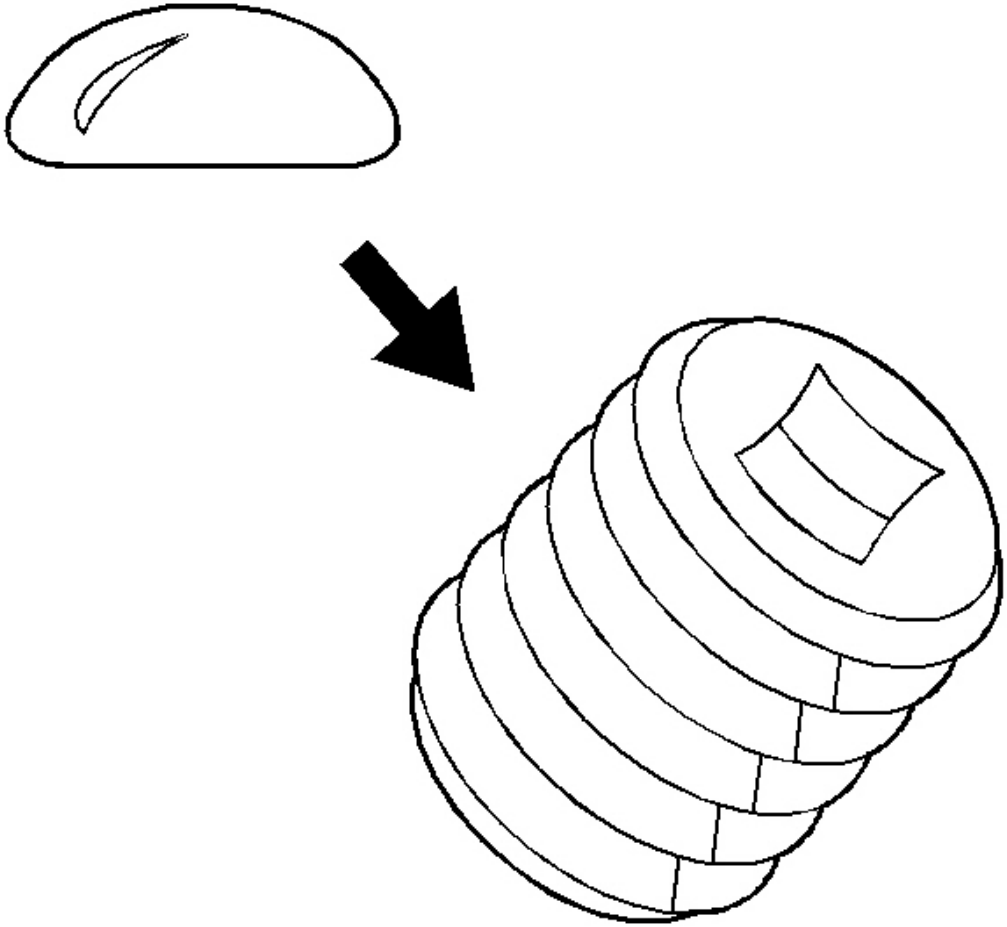

Fig. 428: Applying Sealant To Adapter Plate Plug Threads
Courtesy of GENERAL MOTORS CORP.

11. Apply sealant GM P/N United States 12346004, GM P/N Canada 10953480 or the equivalent to the plug threads.

cardiagn.com

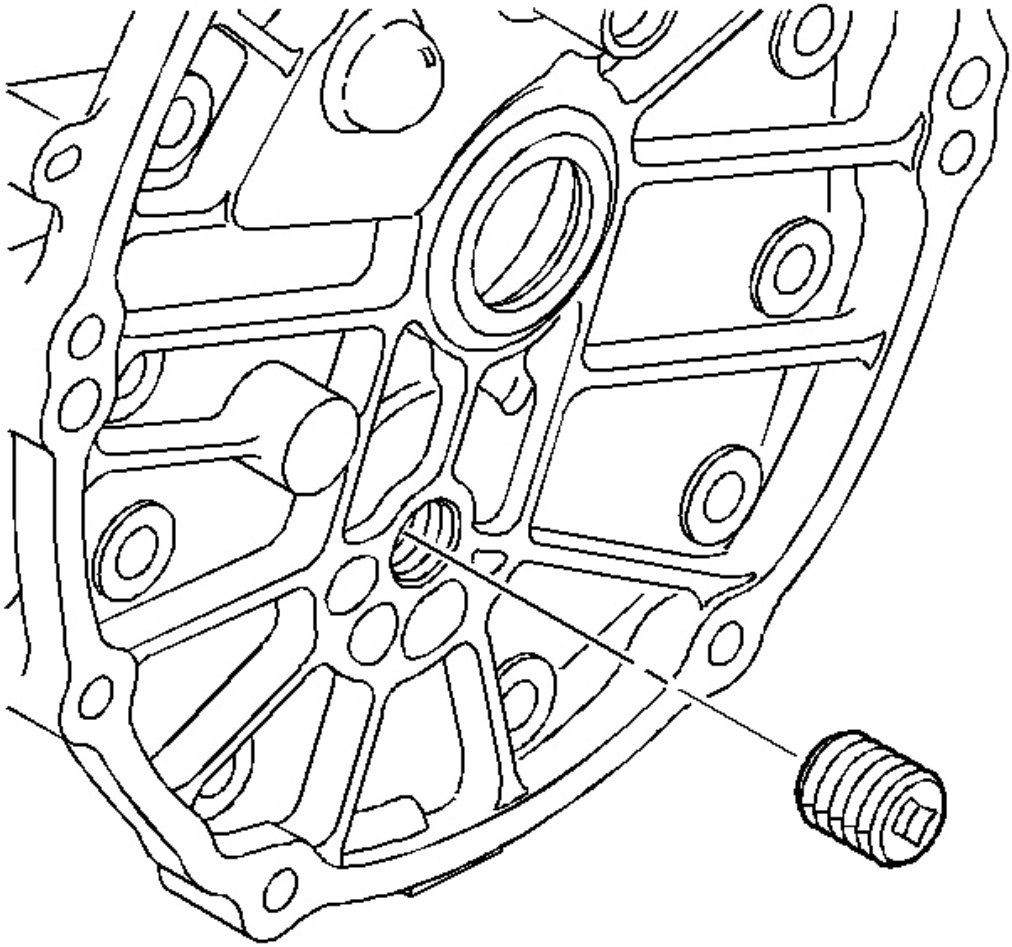

Fig. 429: Locating Adapter Plate Plug
Courtesy of GENERAL MOTORS CORP.

12. Install the adapter plate plug.

    Tighten: Tighten the plug to 27 N.m (20 Ib. ft).

cardiagn.com

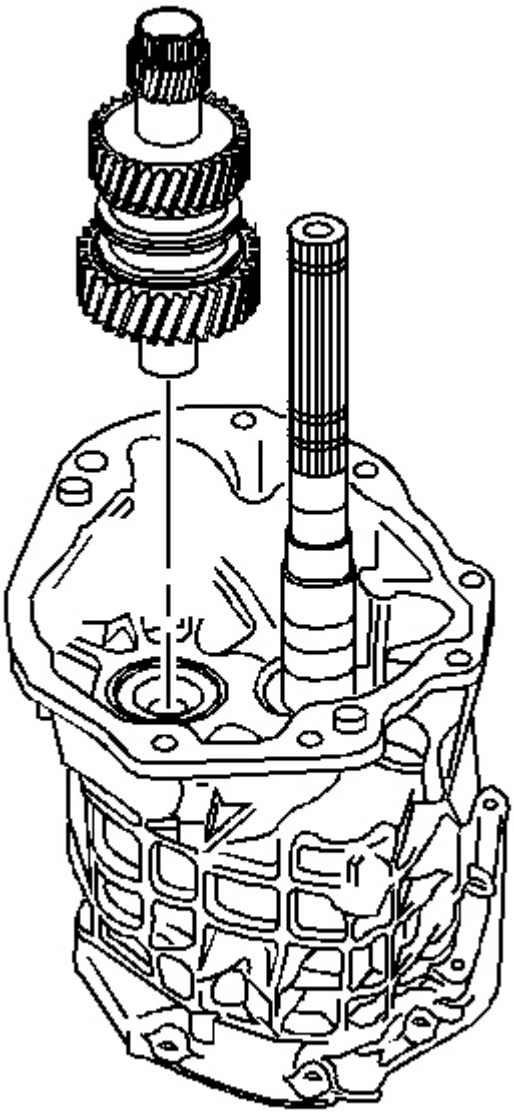

Fig. 430: Identifying Countershaft Extension
Courtesy of GENERAL MOTORS CORP.

13. Install the countershaft extension.
14. Install the countershaft extension bearing race.

cardiagn.com

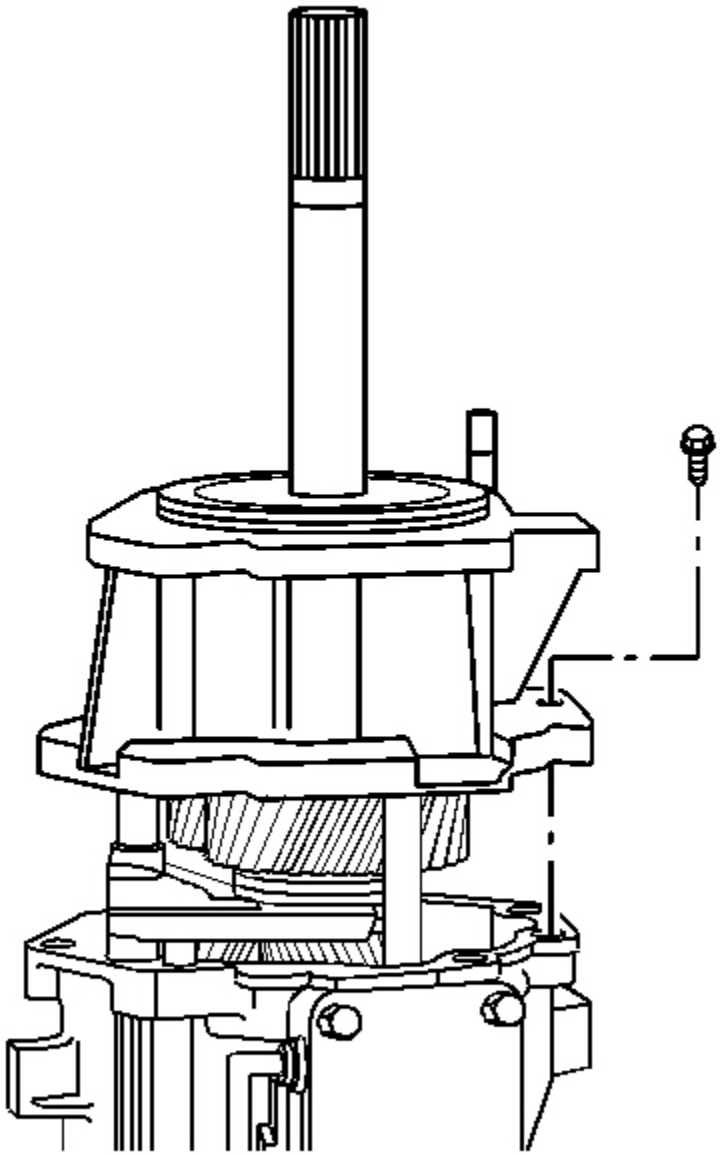

Fig. 431: View Of Extension Housing Bolts & Extension Housing
Courtesy of GENERAL MOTORS CORP.

15. Install the extension housing bolts and the extension housing.

SHIMMING PROCEDURES (CTSV)

cardiagn.com

Input Shaft, Mainshaft, and Countershaft

Tools Required

- **J 8001** Dial Indicator Set. See **Special Tools** .
- **J 39444-1** Countershaft End Play Rod. See **Special Tools** .

1. Rotate the transmission adapter plate to the vertical position.

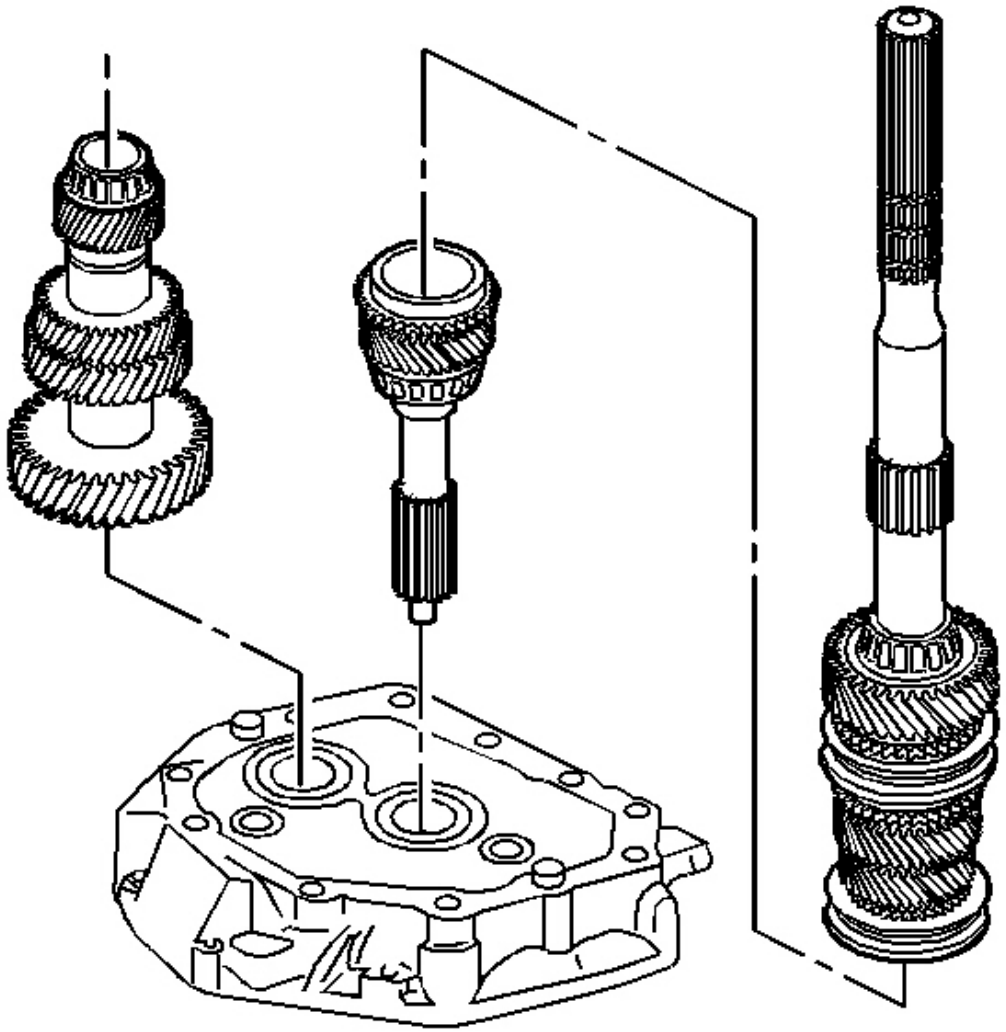

Fig. 432: View Of Transmission Components

cardiagn.com

Courtesy of GENERAL MOTORS CORP.

2. Install the following assemblies in order:
    1. The input shaft to the adapter plate
    2. The 4th speed gear blocking ring
    3. The mainshaft assembly
    4. The countershaft (Lift up the mainshaft enough to install the countershaft.)

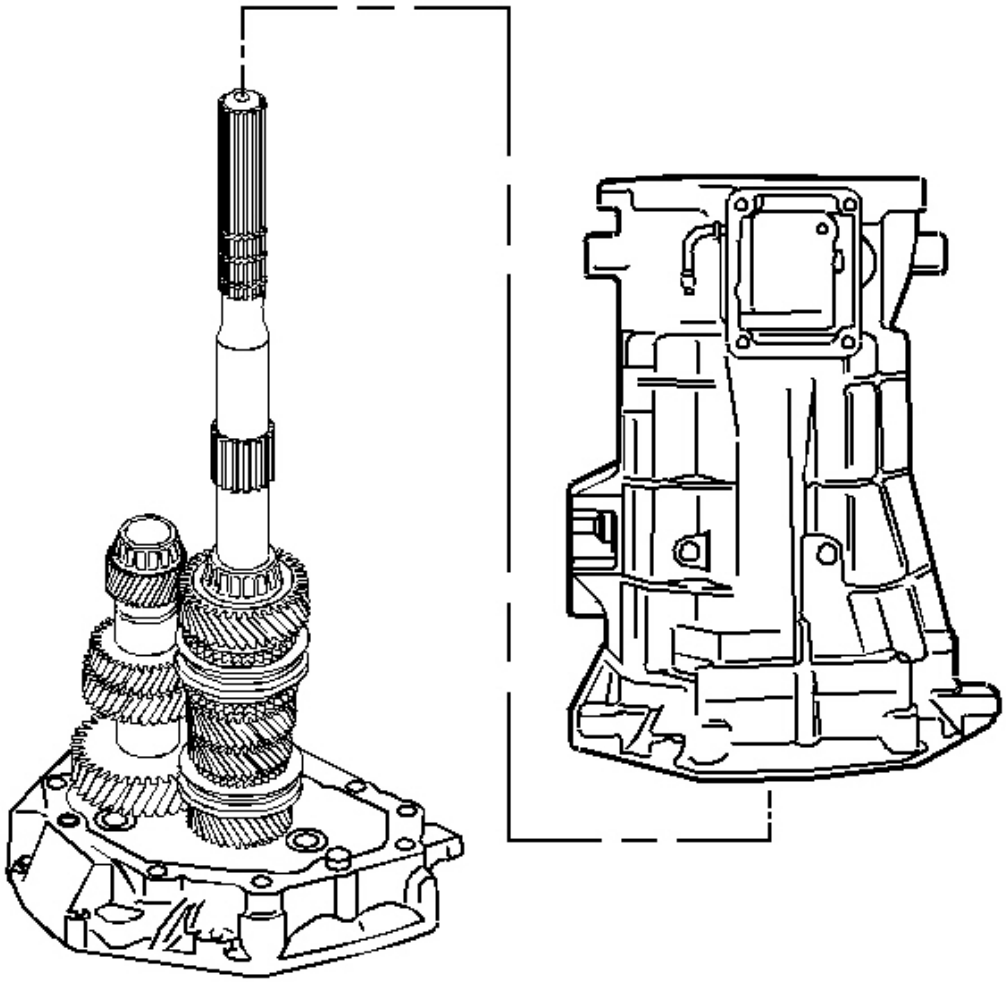

Fig. 433: Identifying Transmission Case
Courtesy of GENERAL MOTORS CORP.

cardiagn.com

3. Install the transmission case.

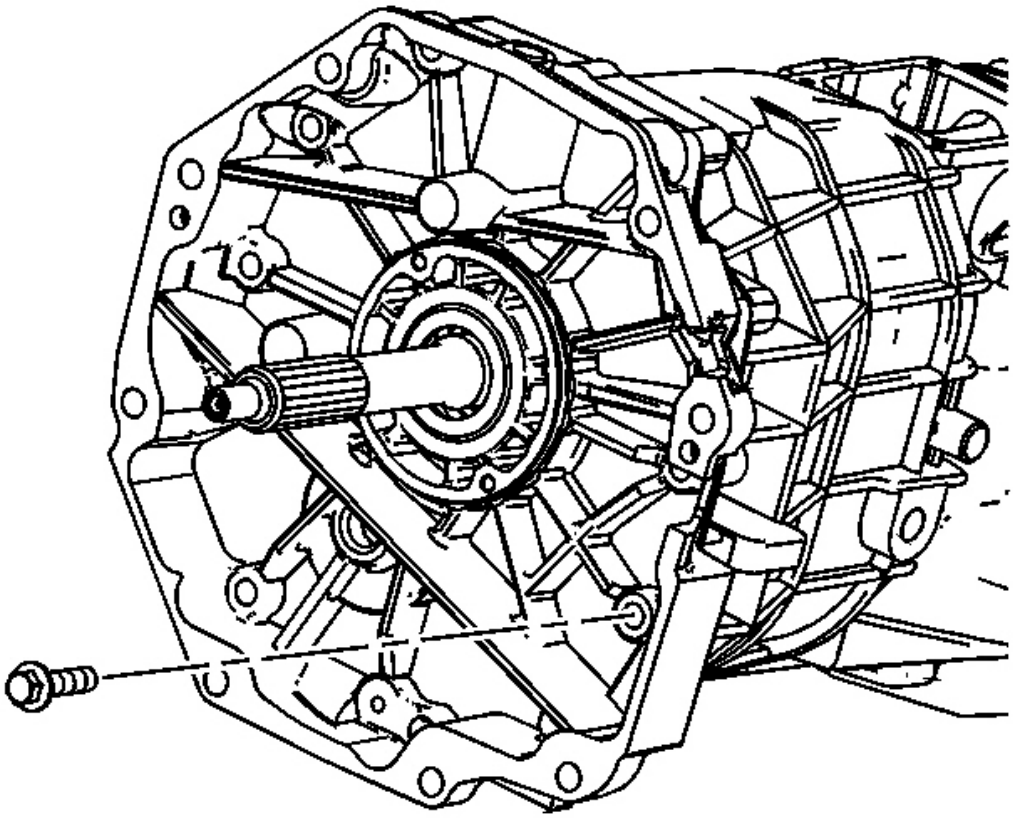

Fig. 434: Locating Adapter Plate To Transmission Case Bolts
Courtesy of GENERAL MOTORS CORP.

NOTE: Refer to Fastener Notice in Cautions and Notices.

4. Install the adapter plate to transmission case bolts.

   Tighten: Tighten the bolts to 35 N.m (26 Ib. ft).

cardiagn.com

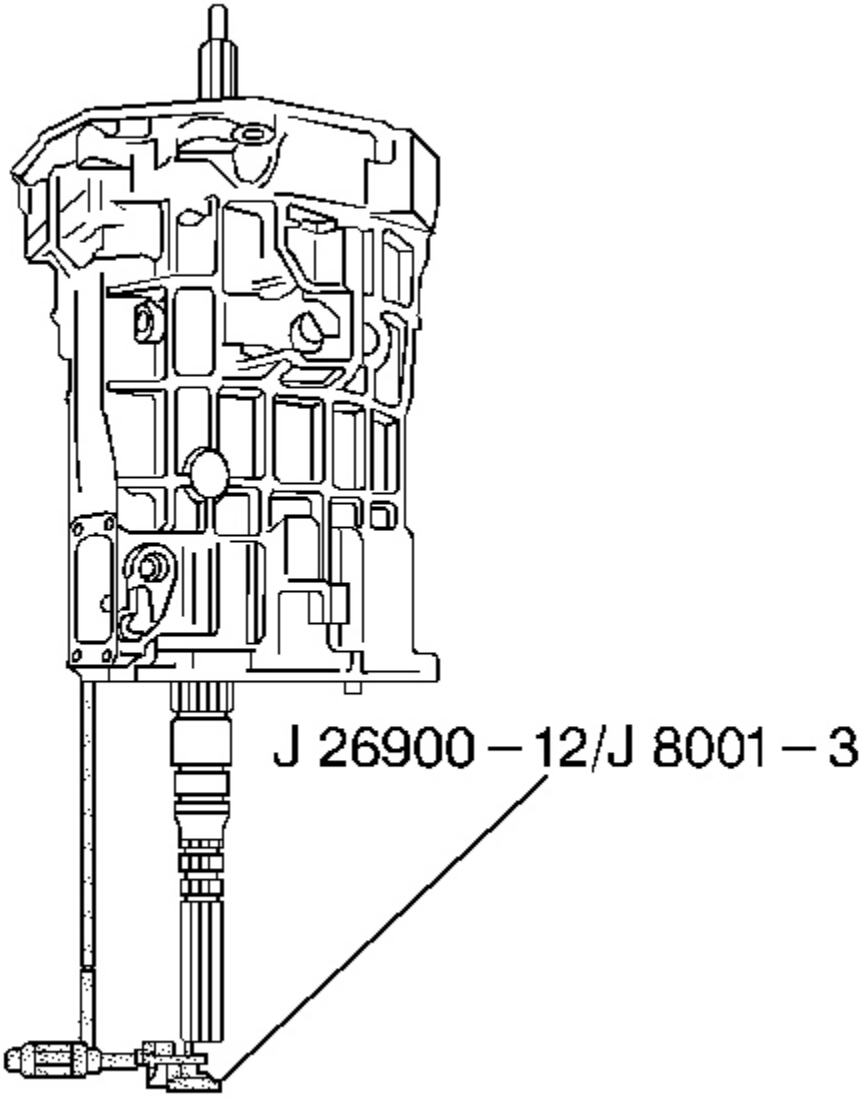

Fig. 435: Measuring Input Shaft/Mainshaft End Play Using J 8001-3
Courtesy of GENERAL MOTORS CORP.

5. Measure the input shaft/mainshaft end play using the following procedure:
    1. Place the tip of the **J 8001-3** on the end of the mainshaft.
    2. Move the input shaft up and down.
    3. Record the measurement.

cardiagn.com

6. Select a shim to achieve 0.00-0.05 mm (0.000-0.002 in) preload.
7. Remove the **J 8001-3** .

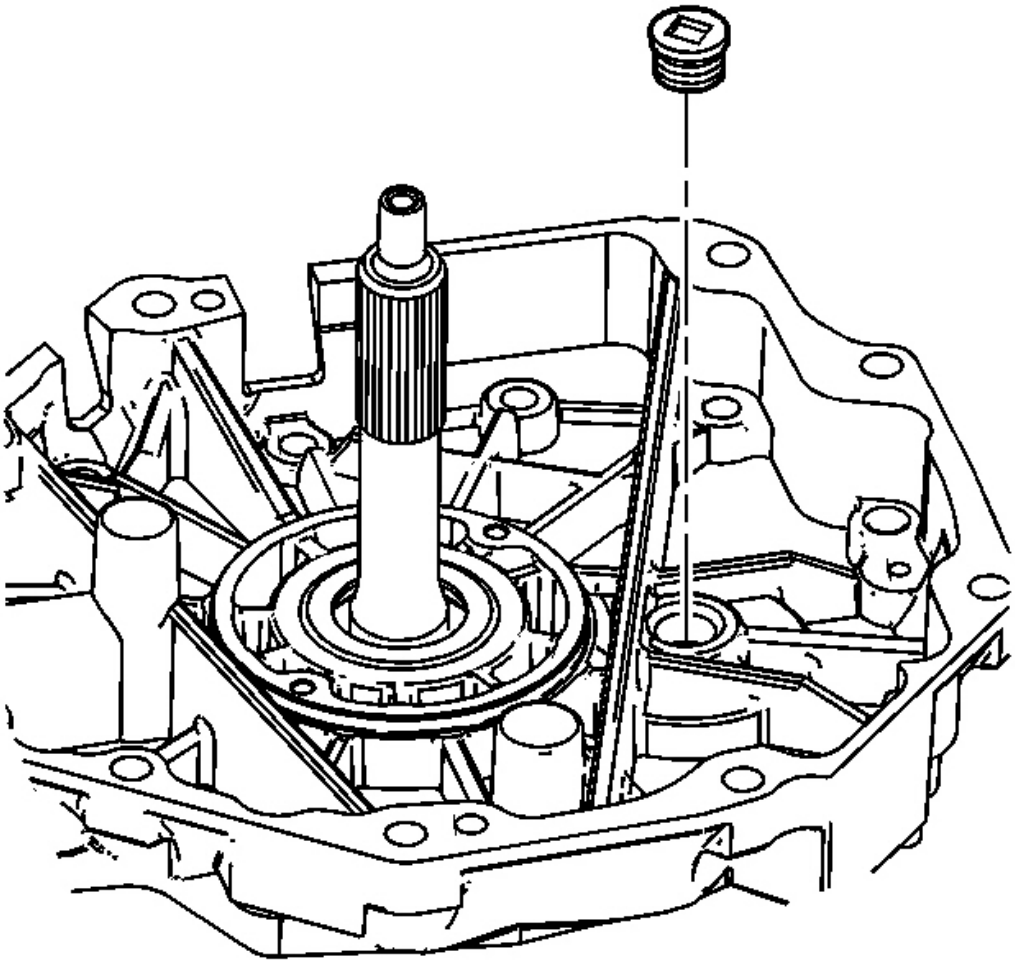

Fig. 436: View Of Adapter Plate Plug
Courtesy of GENERAL MOTORS CORP.

8. Remove the adapter plate plug.

cardiagn.com

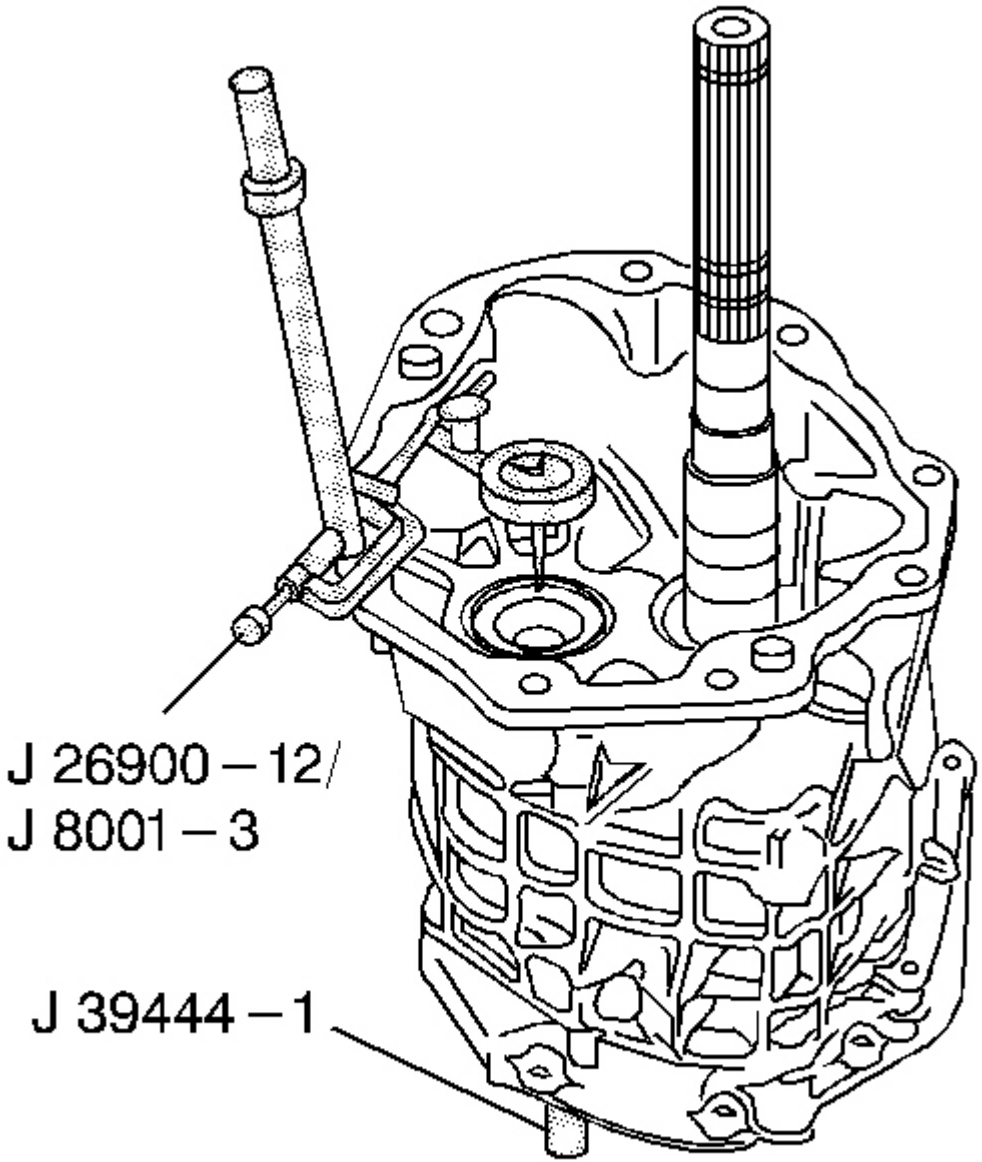

Fig. 437: Measuring Countershaft End Play With J 8001 & J 39444-1
Courtesy of GENERAL MOTORS CORP.

9. Place the tip of the **J 8001** -3 on the end of the countershaft.
10. Measure the countershaft end play using the following procedure:
    1. Install the **J 39444-1** through the adapter plate plug hole. Screw the **J 39444-1** into the

cardiagn.com

countershaft.

2. Move the countershaft up and down with the countershaft end play rod **J 39444-1** .
3. Record the measurement.

11. Select a shim to achieve 0.00-0.05 mm (0.000-0.002 in) preload.
12. Remove the **J 8001** -3.
13. Remove the **J 39444-1** .

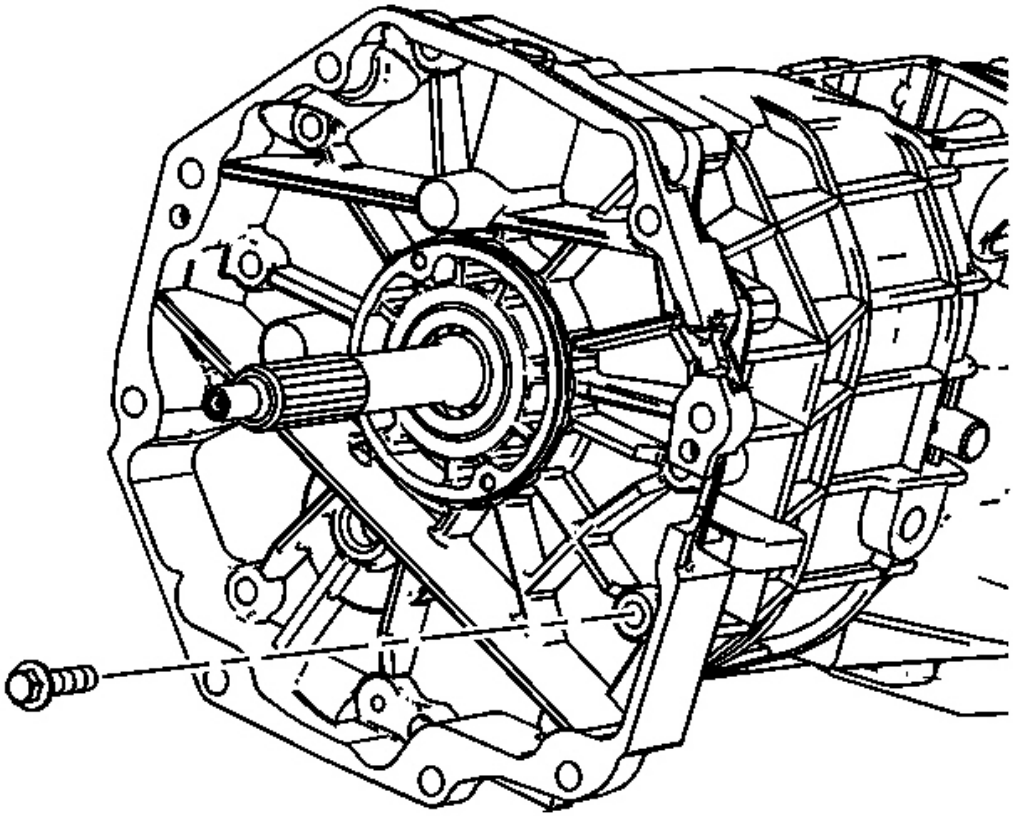

Fig. 438: Locating Adapter Plate To Transmission Case Bolts
Courtesy of GENERAL MOTORS CORP.

14. Remove the adapter plate to the transmission case bolts.

cardiagn.com

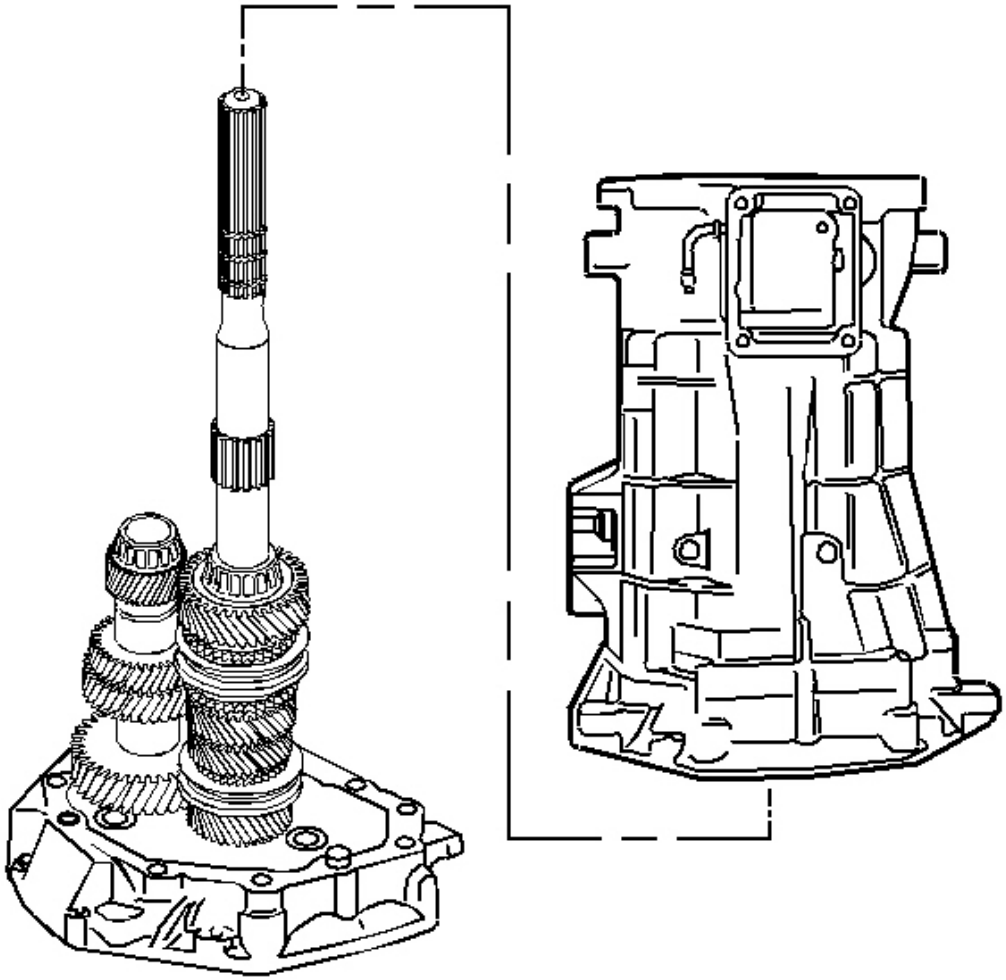

Fig. 439: Identifying Transmission Case
Courtesy of GENERAL MOTORS CORP.

15. Remove the transmission case.

cardiagn.com

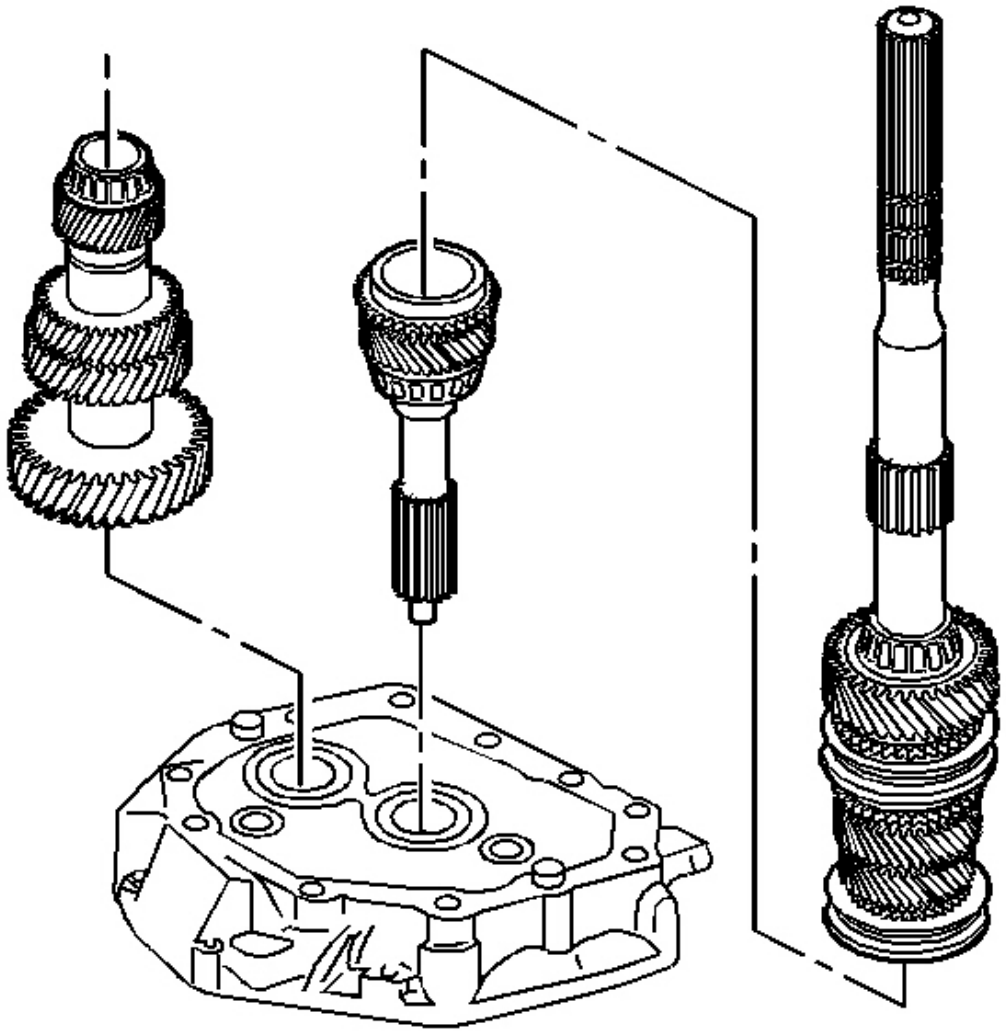

Fig. 440: View Of Transmission Components
Courtesy of GENERAL MOTORS CORP.

16. Remove the following parts in order:
    1. The countershaft (Lift up the mainshaft enough to remove the countershaft).
    2. The mainshaft assembly
    3. The 4th speed gear blocking ring and the input shaft from the adapter plate
    4. The input shaft bearing race
    5. The countershaft bearing race

cardiagn.com

Countershaft Extension

Tools Required

- **J 8001** Dial Indicator Set. See **Special Tools** .
- **J 39444-2** Countershaft Extension End Play Rod. See **Special Tools** .

IMPORTANT: The following procedure cannot be performed accurately until the countershaft shimming procedure has been completed and the transmission has been assembled to the point of installing the countershaft extension.

1. Rotate the transmission in the horizontal position.

cardiagn.com

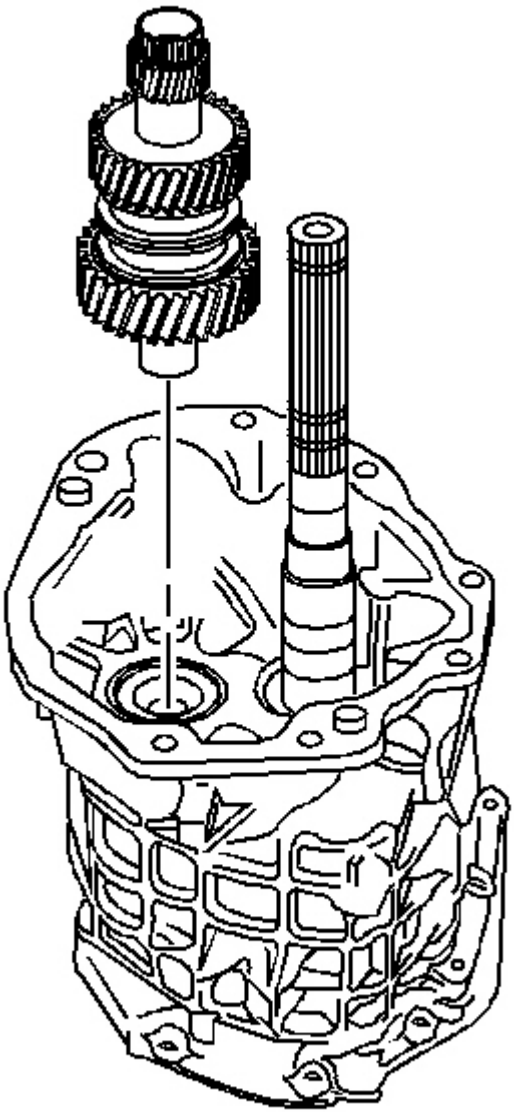

Fig. 441: Identifying Countershaft Extension
Courtesy of GENERAL MOTORS CORP.

2. Install the countershaft extension to the countershaft. Make sure the splines fully engage.

cardiagn.com

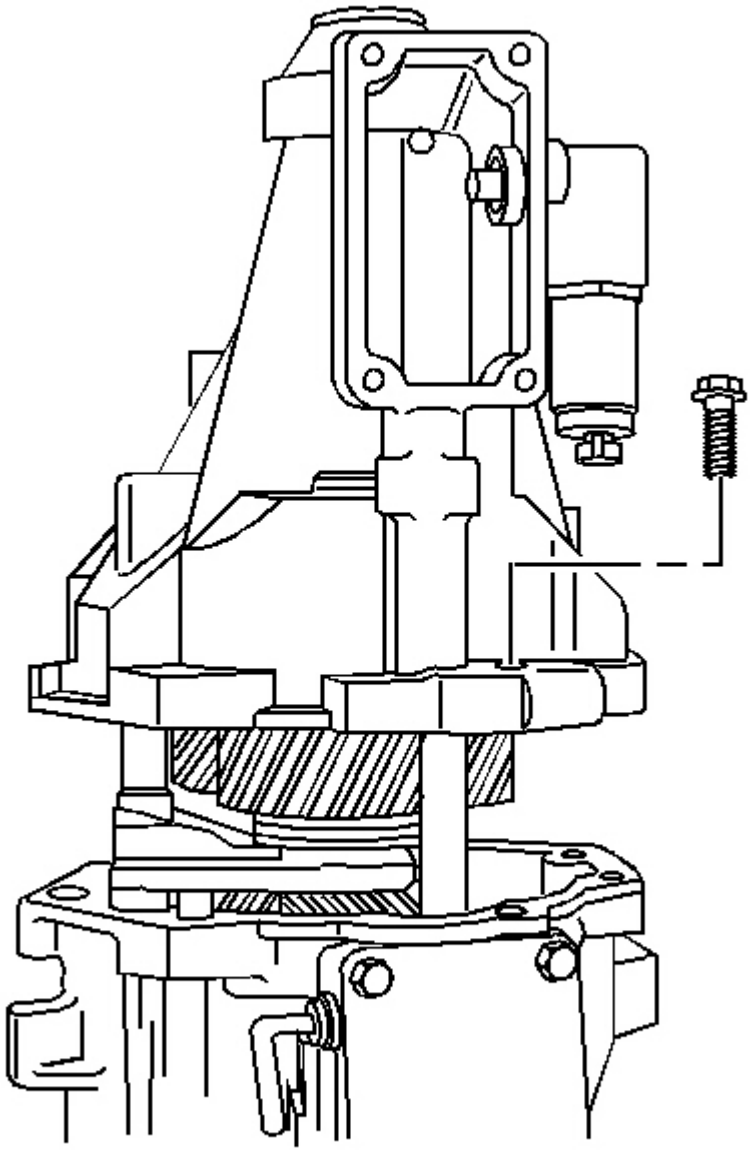

Fig. 442: View Of Extension Housing Bolts & Extension Housing
Courtesy of GENERAL MOTORS CORP.

NOTE: Refer to Fastener Notice in Cautions and Notices.

3. Install the extension housing and the extension housing retainer bolts.

cardiagn.com

Tighten: Tighten the bolts to 35 N.m (26 Ib. ft).

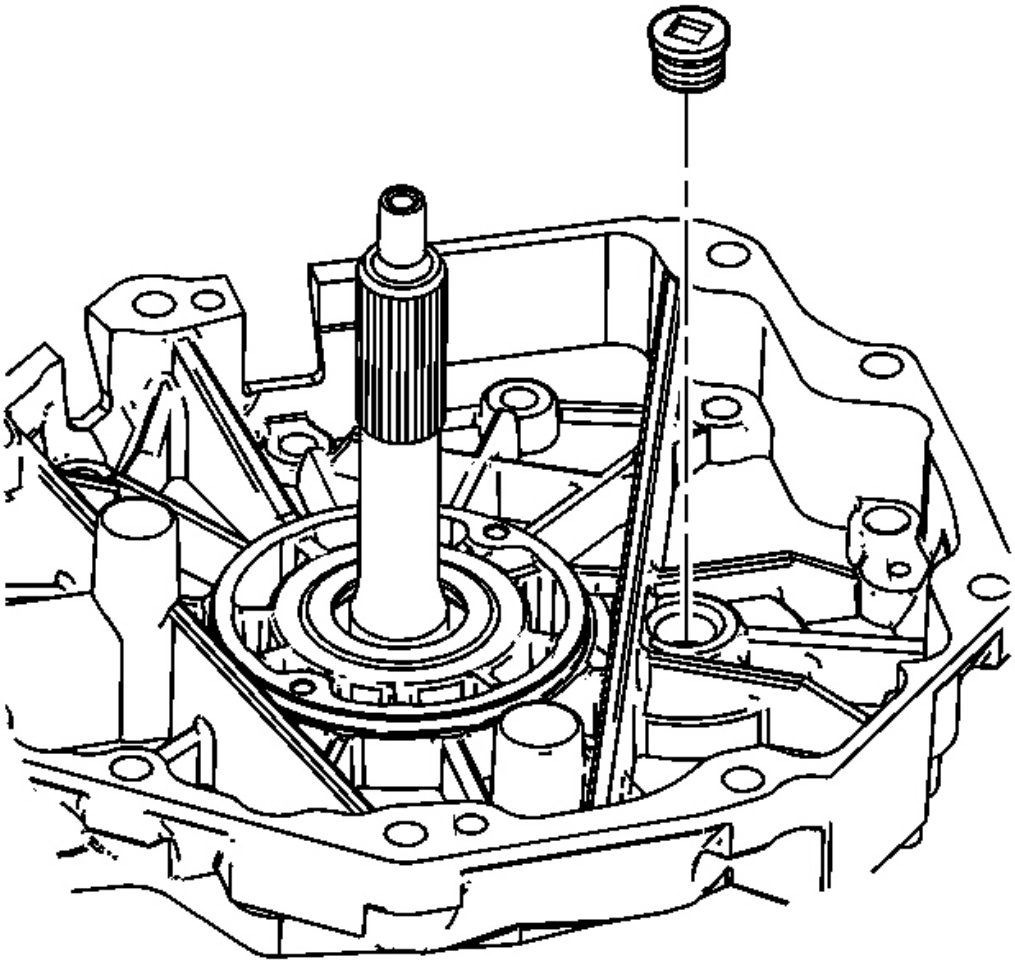

Fig. 443: View Of Adapter Plate Plug
Courtesy of GENERAL MOTORS CORP.

4. Remove the plug from the adapter plate.

cardiagn.com

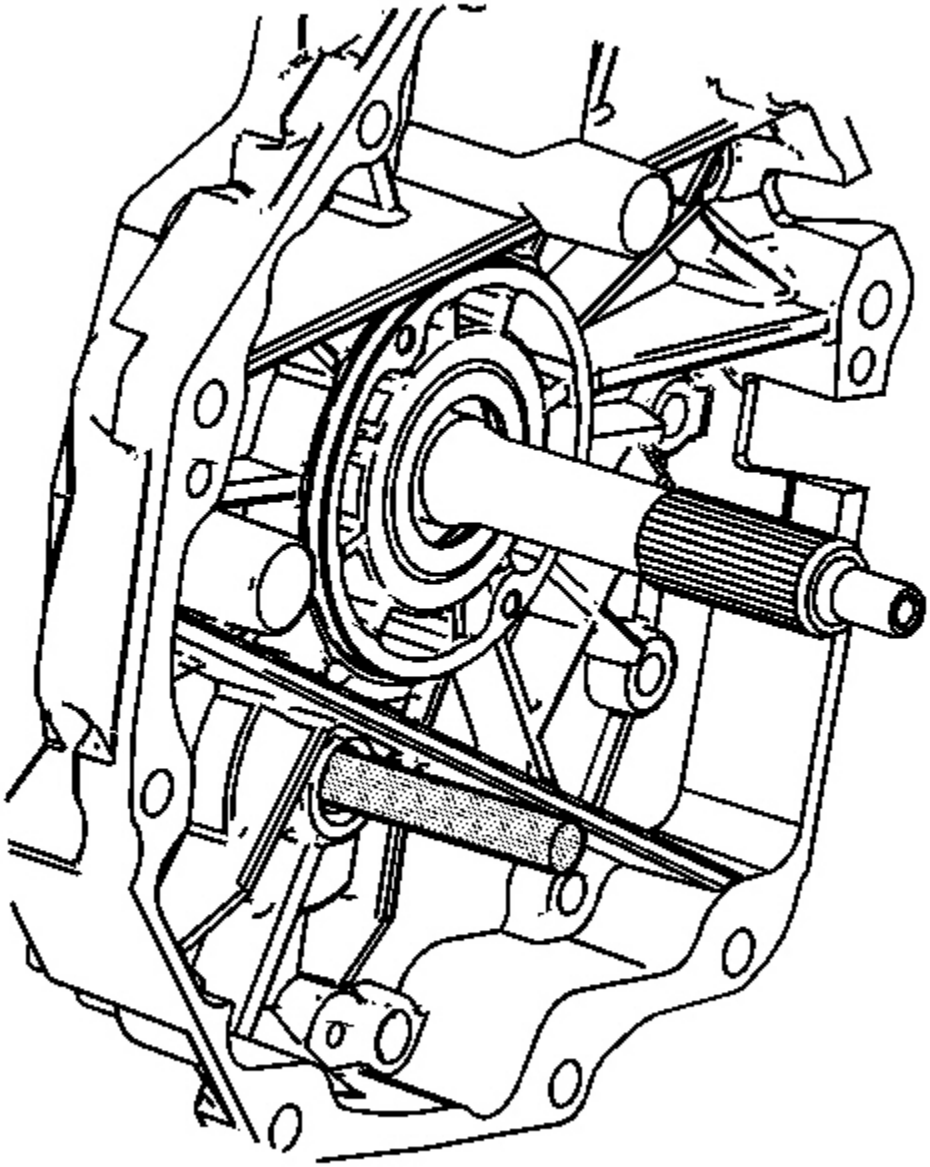

Fig. 444: Installing/Removing J 39444-2 Through Adapter Plate Plug Hole
Courtesy of GENERAL MOTORS CORP.

5. Install the **J 39444-2** through the adapter plate plug hole.
6. Screw **J 39444-2** into the countershaft extension.

cardiagn.com

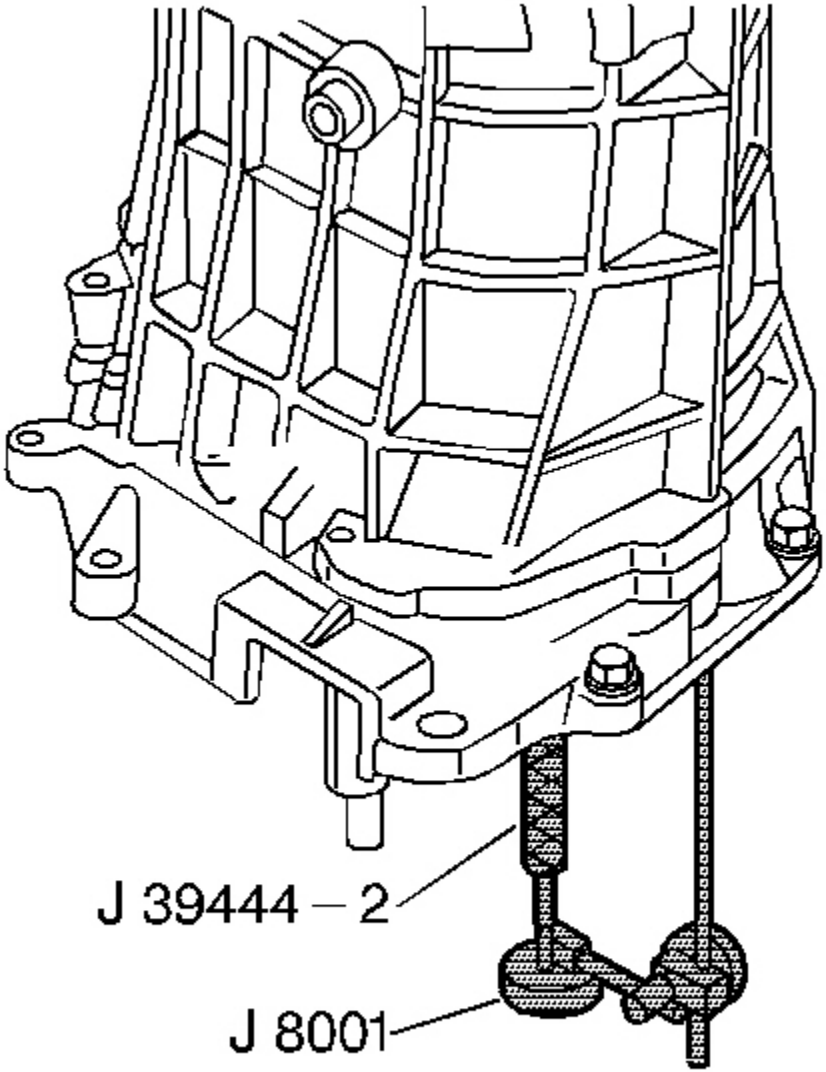

Fig. 445: Measuring Countershaft Extension End Play Using J 8001 & J 39444-2
Courtesy of GENERAL MOTORS CORP.

7. Measure the countershaft extension end play using the following procedure:
    1. Install a **J 8001** so the tip is on the end of the countershaft extension end play rod.
    2. Rotate the transmission in the vertical position.
    3. Move the countershaft extension up and down using the **J 39444-2** .
    4. Record the measurement.

cardiagn.com

8. Select a shim to achieve 0.05-0.13 mm (0.002-0.005 in) axial play.
9. Remove the **J 8001** .
10. Remove the **J 39444-2** .

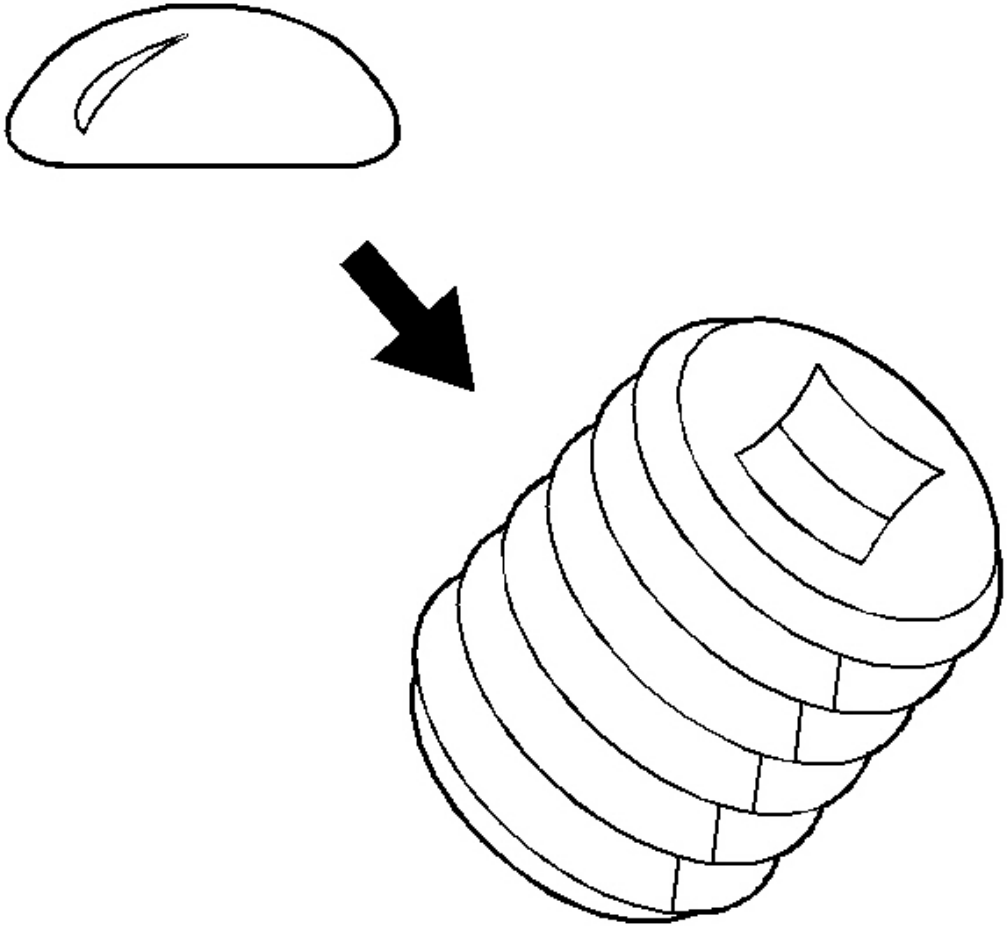

Fig. 446: Applying Sealant To Adapter Plate Plug Threads
Courtesy of GENERAL MOTORS CORP.

11. Apply sealant GM P/N 12346004 (Canadian P/N 10953480) or the equivalent to the plug threads.

cardiagn.com

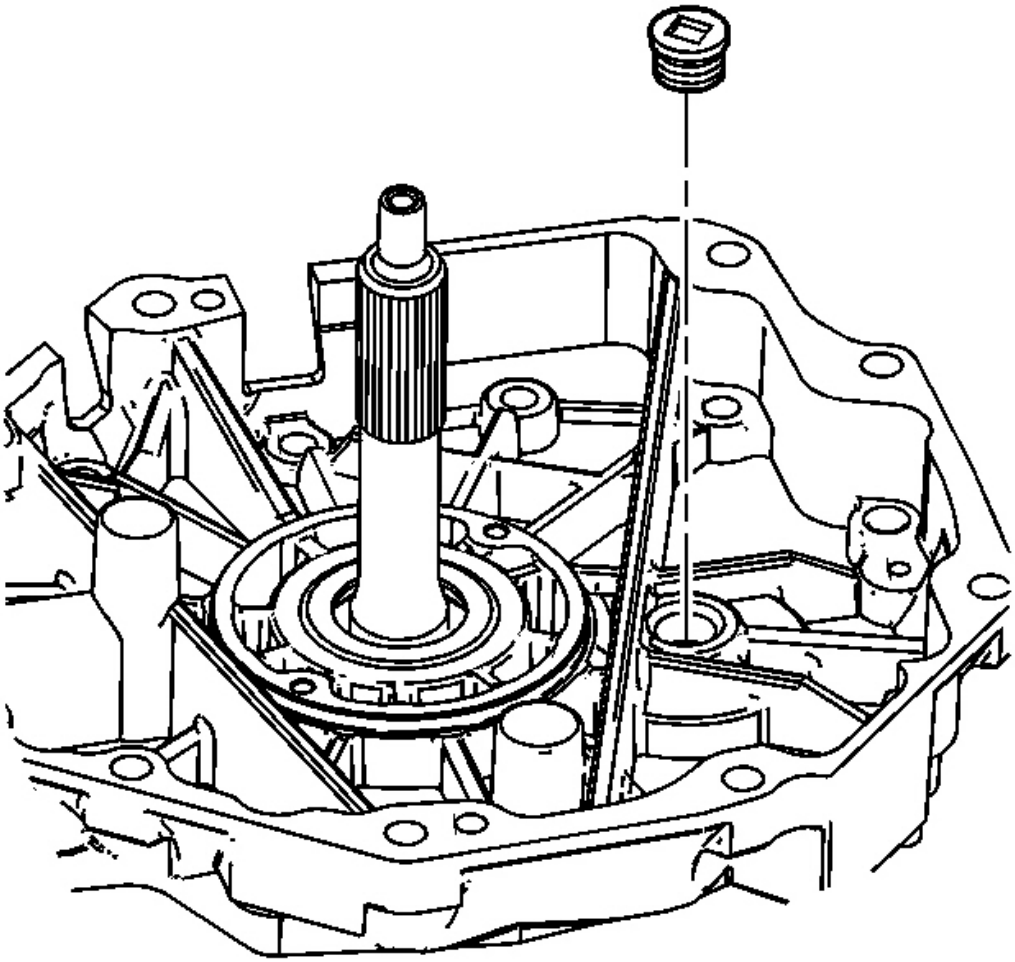

Fig. 447: View Of Adapter Plate Plug
Courtesy of GENERAL MOTORS CORP.

12. Install the adapter plate plug.

    Tighten: Tighten the plug to 27 N.m (20 Ib. ft).

cardiagn.com

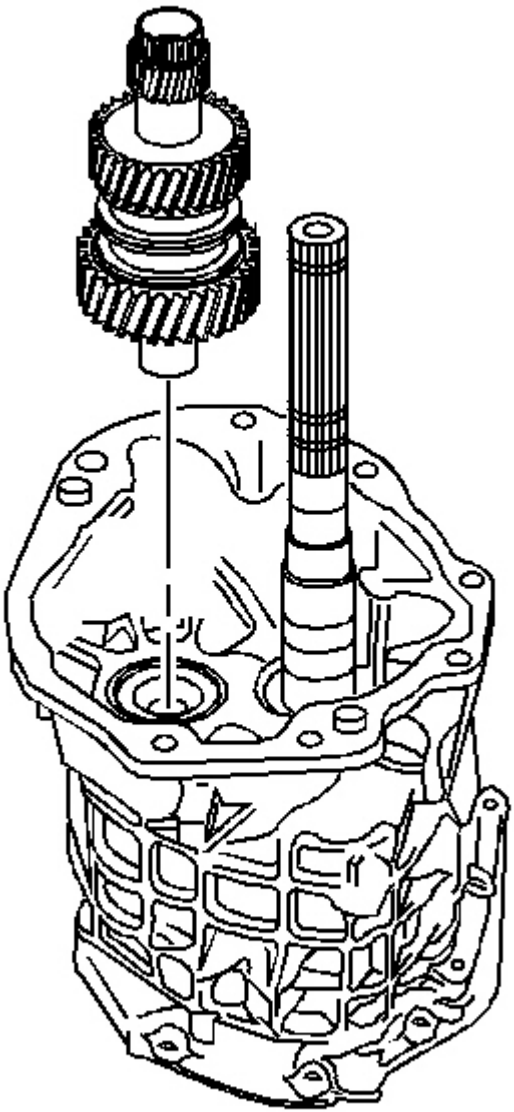

Fig. 448: Identifying Countershaft Extension
Courtesy of GENERAL MOTORS CORP.

13. Install the countershaft extension.
14. Install the countershaft extension bearing race.

cardiagn.com

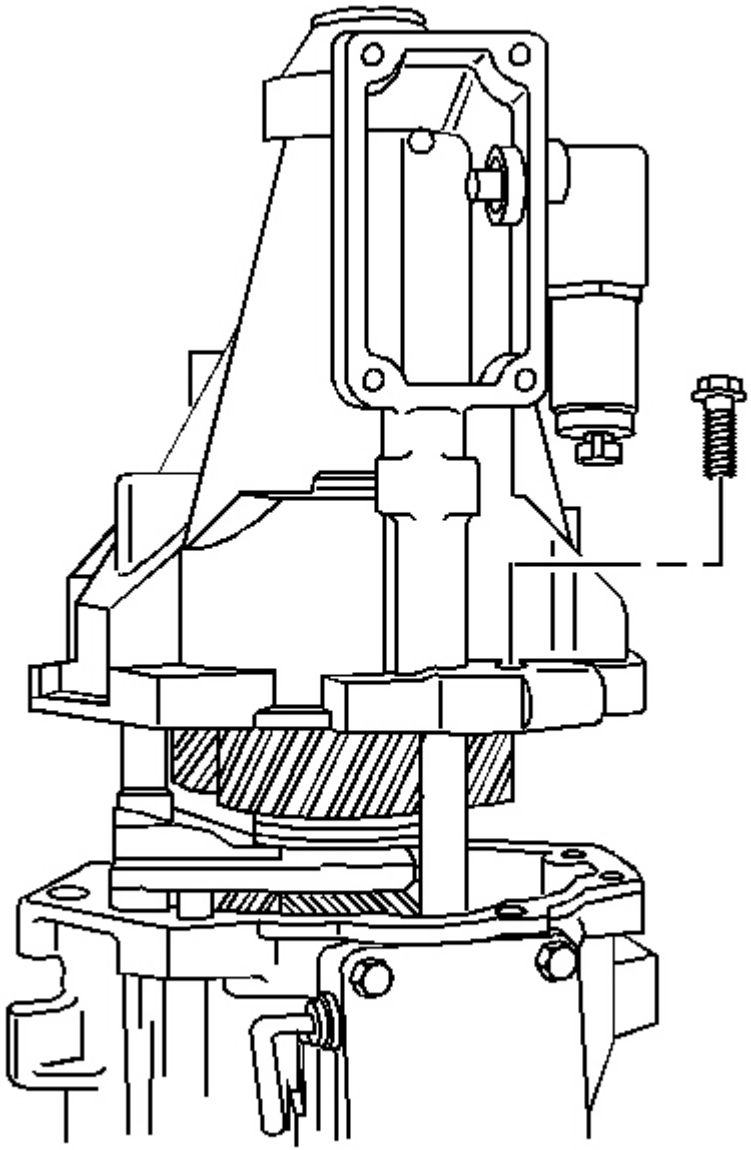

Fig. 449: View Of Extension Housing Bolts & Extension Housing
Courtesy of GENERAL MOTORS CORP.

15. Install the extension housing bolts and the extension housing.

SHIMMING PROCEDURES (GTO)

cardiagn.com

Input Shaft, Mainshaft, and Countershaft

Tools Required

- **J 8001** Dial Indicator Set. See **Special Tools** .
- **J 39444-1** Countershaft End Play Rod. See **Special Tools** .

1. Rotate the transmission adapter plate to the vertical position.

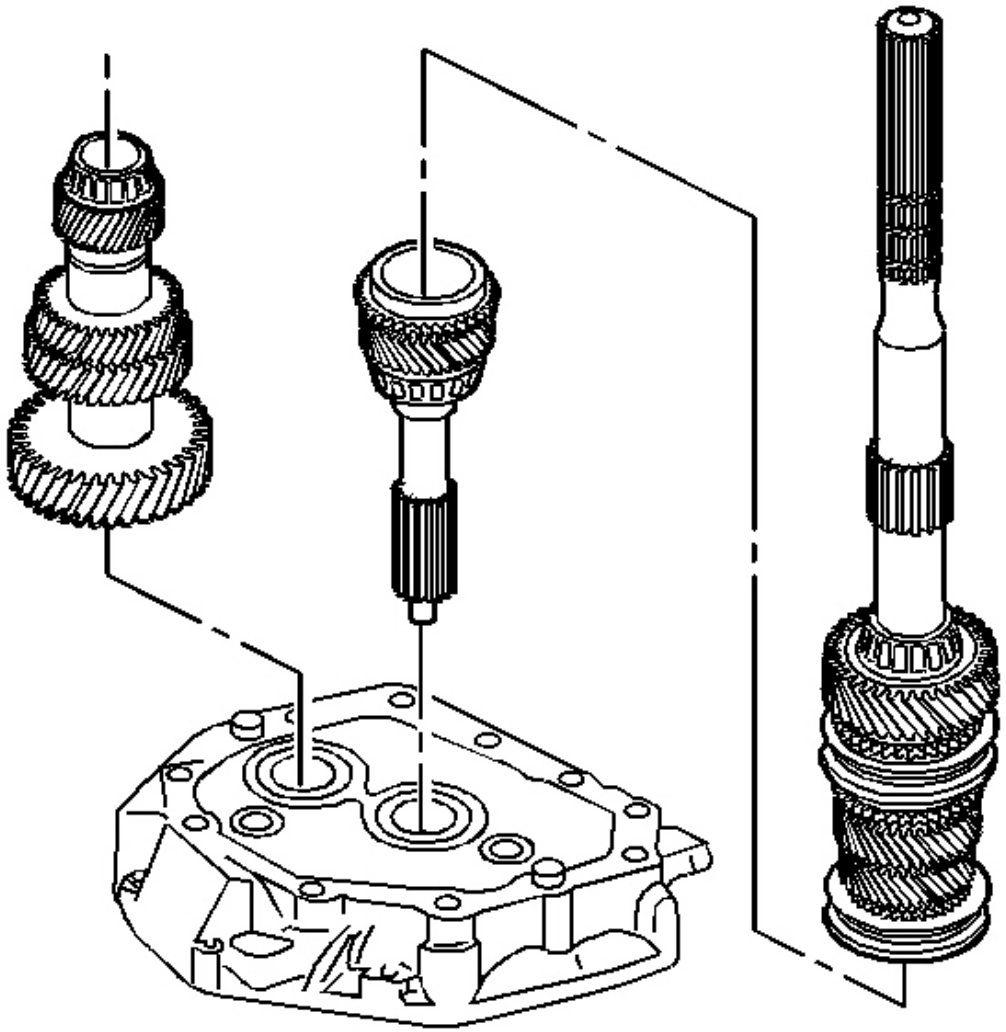

Fig. 450: View Of Transmission Components

cardiagn.com

Courtesy of GENERAL MOTORS CORP.

2. Install the following assemblies in order:
    1. The input shaft to the adapter plate
    2. The 4th speed gear blocking ring
    3. The mainshaft assembly
    4. The countershaft (Lift up the mainshaft enough to install the countershaft.)

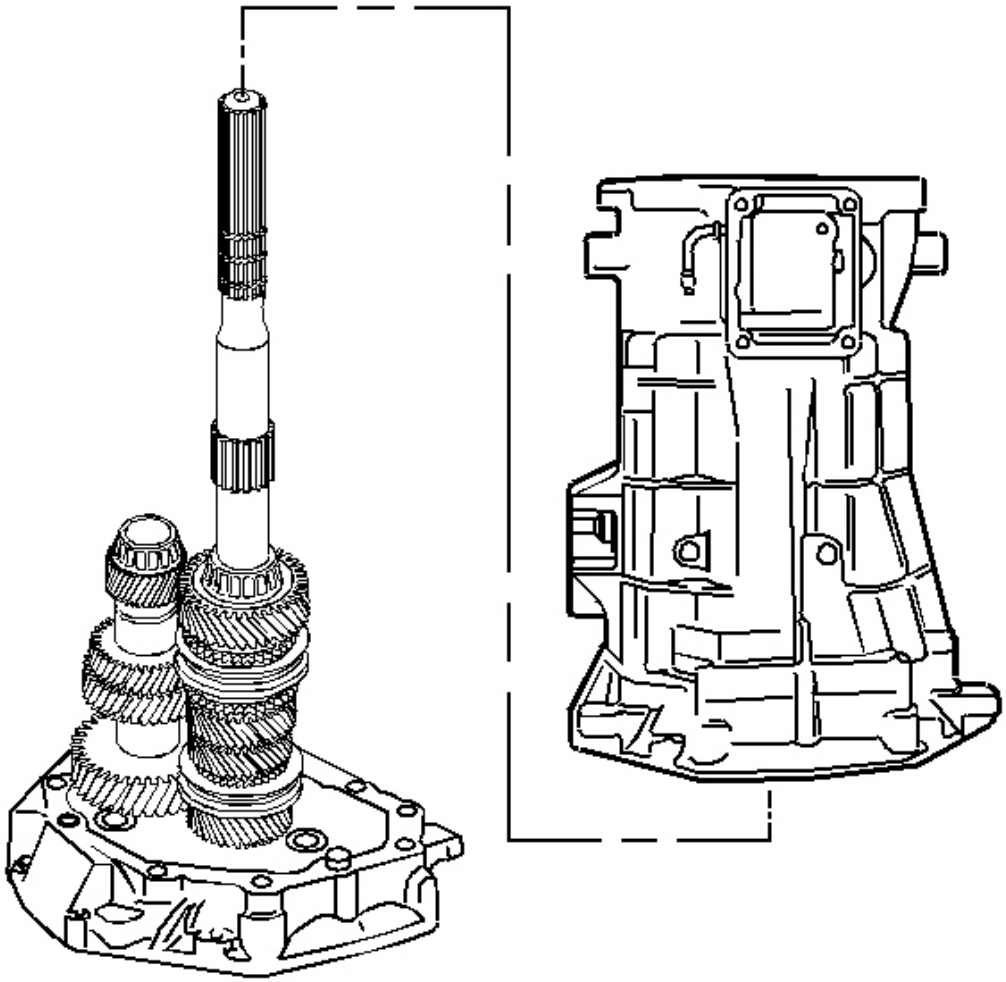

Fig. 451: Identifying Transmission Case
Courtesy of GENERAL MOTORS CORP.

cardiagn.com

3. Install the transmission case.

cardiagn.com

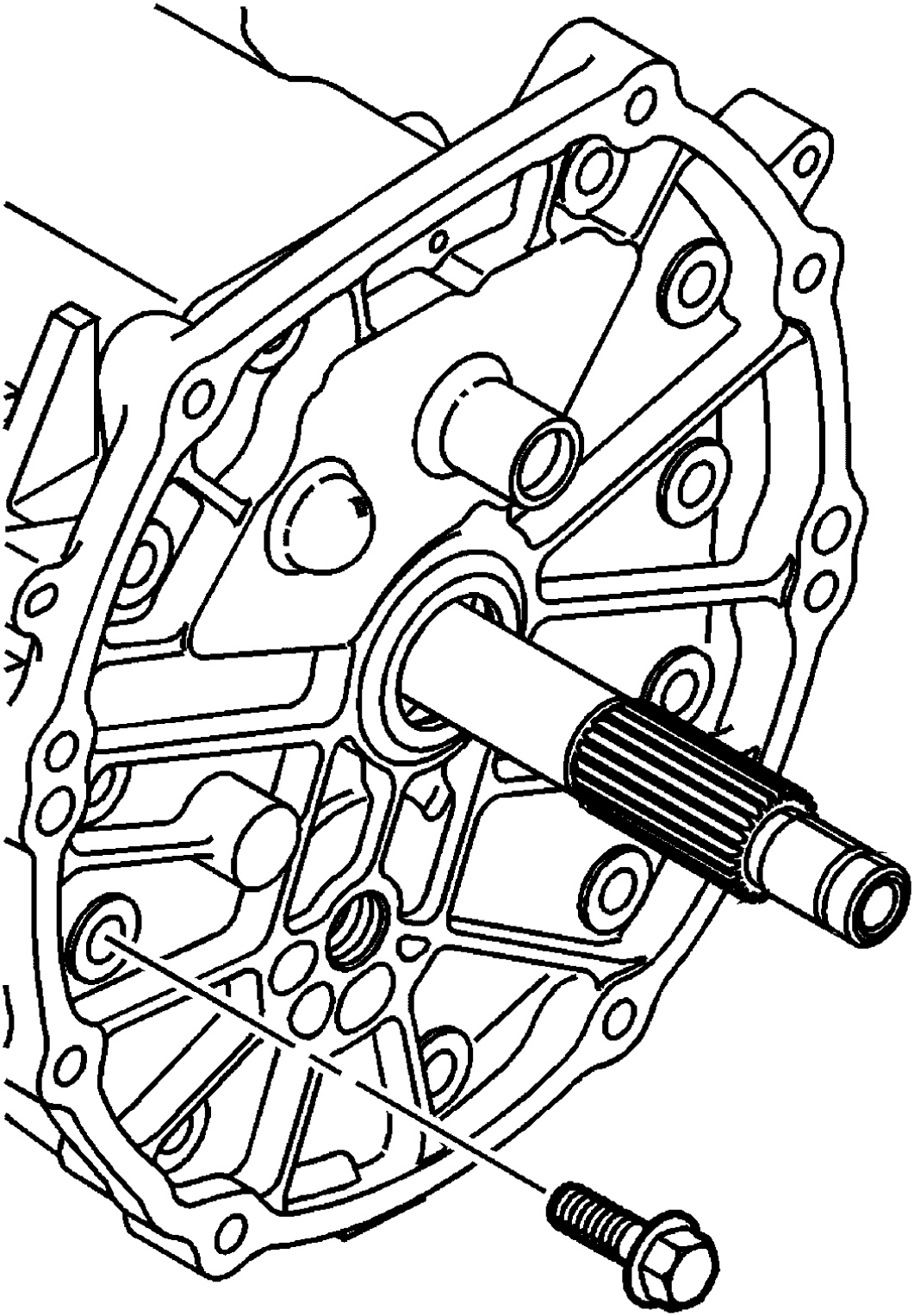

cardiagn.com

Fig. 452: Locating Adapter Plate To Transmission Case Bolts
Courtesy of GENERAL MOTORS CORP.

NOTE: Refer to Fastener Notice in Cautions and Notices.

4. Install the adapter plate to transmission case bolts.

   Tighten: Tighten the bolts to 35 N.m (26 Ib. ft).

cardiagn.com

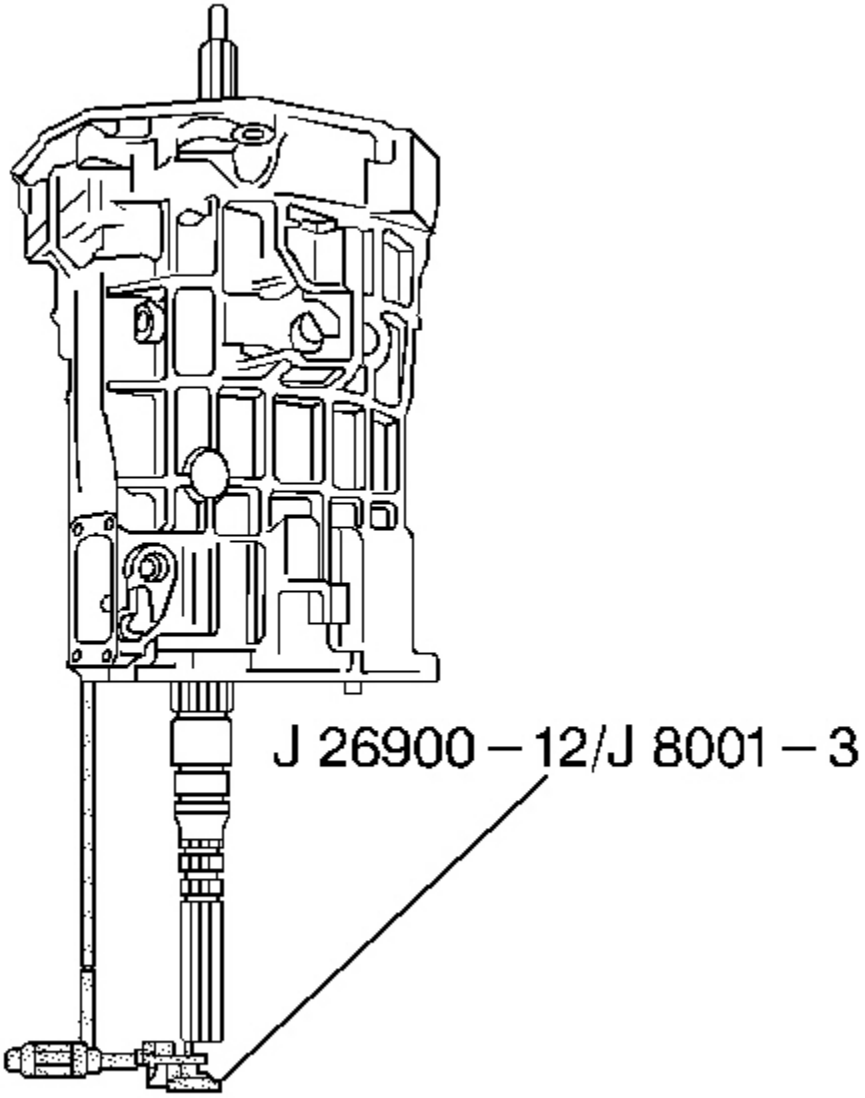

Fig. 453: Measuring Input Shaft/Mainshaft End Play Using J 8001-3
Courtesy of GENERAL MOTORS CORP.

5. Measure the input shaft/mainshaft end play using the following procedure:
    1. Place the tip of the **J 8001-3** on the end of the mainshaft.
    2. Move the input shaft up and down.
    3. Record the measurement.

cardiagn.com

6. Select a shim to achieve 0.00-0.05 mm (0.000-0.002 in) preload.
7. Remove the **J 8001-3** .

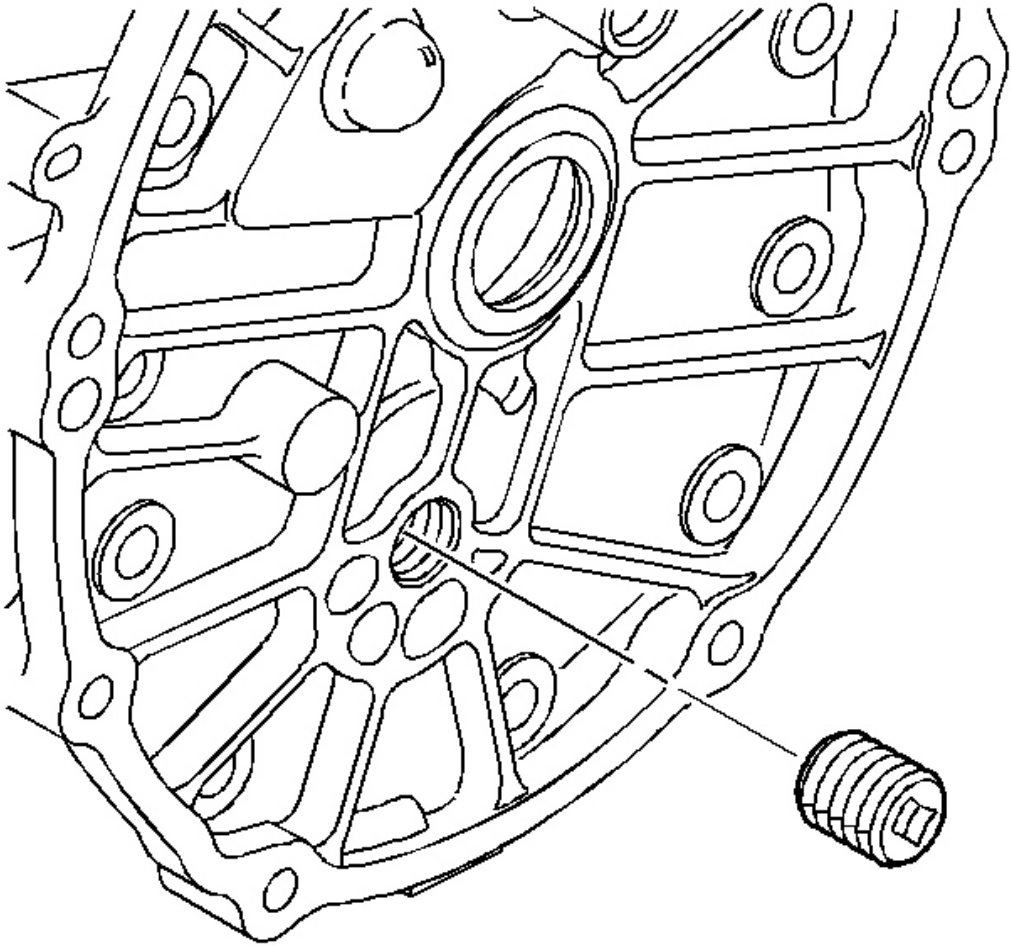

Fig. 454: Locating Adapter Plate Plug
Courtesy of GENERAL MOTORS CORP.

8. Remove the adapter plate plug.

cardiagn.com

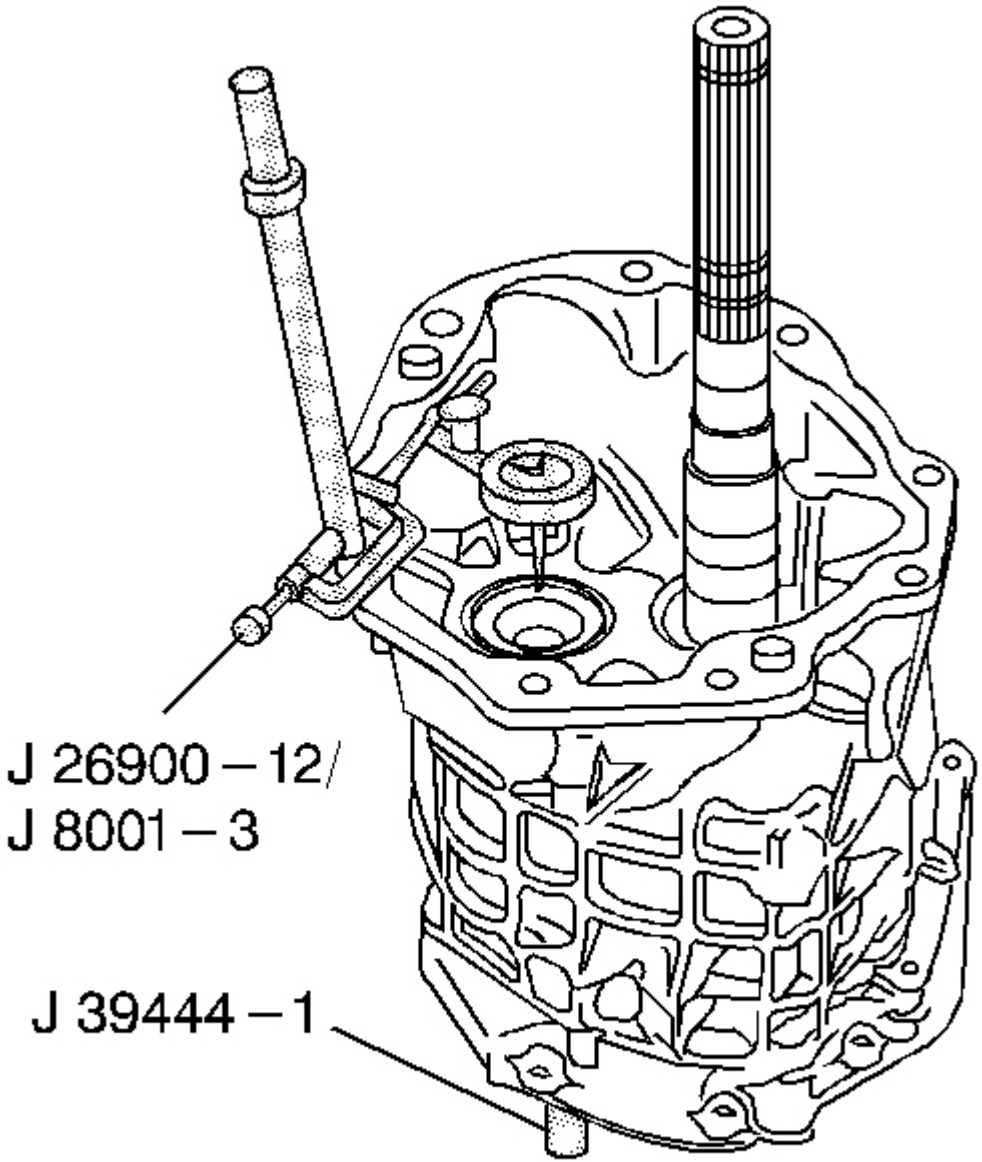

Fig. 455: Measuring Countershaft End Play With J 8001 & J 39444-1
Courtesy of GENERAL MOTORS CORP.

9. Place the tip of the **J 8001** -3 on the end of the countershaft.
10. Measure the countershaft end play using the following procedure:
    1. Install the **J 39444-1** through the adapter plate plug hole. Screw the **J 39444-1** into the

cardiagn.com

countershaft.

2. Move the countershaft up and down with the countershaft end play rod **J 39444-1** .
3. Record the measurement.

11. Select a shim to achieve 0.00-0.05 mm (0.000-0.002 in) preload.
12. Remove the **J 8001** -3.
13. Remove the **J 39444-1** .

cardiagn.com

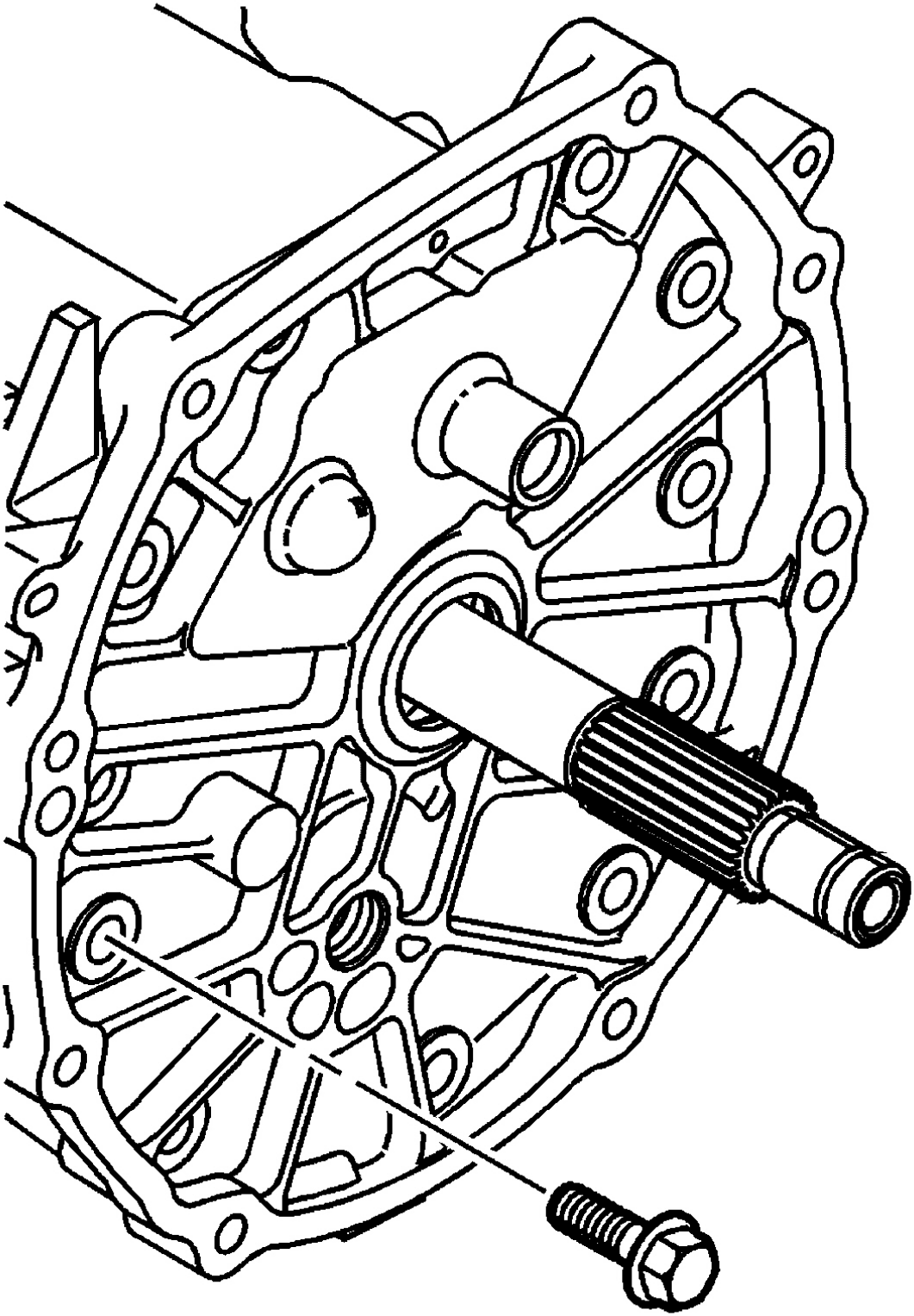

cardiagn.com

Fig. 456: Locating Adapter Plate To Transmission Case Bolts
Courtesy of GENERAL MOTORS CORP.

14. Remove the adapter plate to the transmission case bolts.

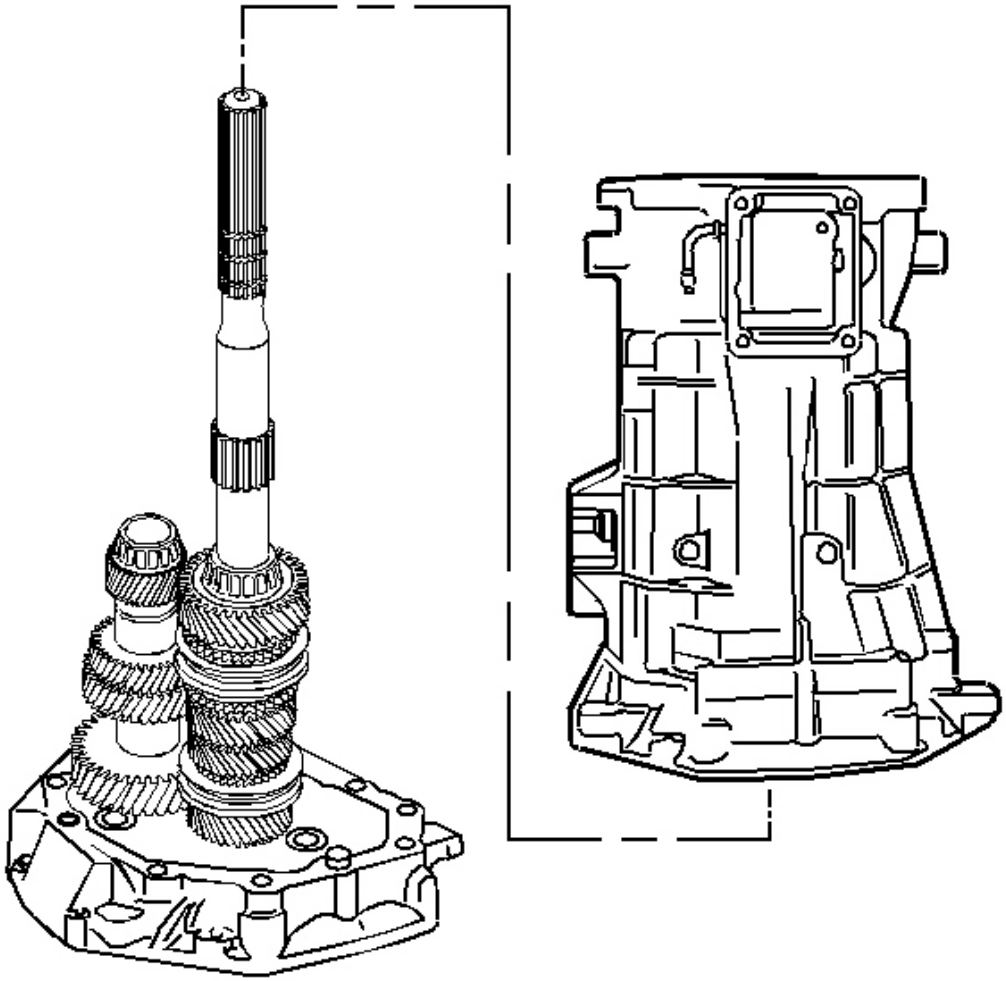

Fig. 457: Identifying Transmission Case
Courtesy of GENERAL MOTORS CORP.

15. Remove the transmission case.

cardiagn.com

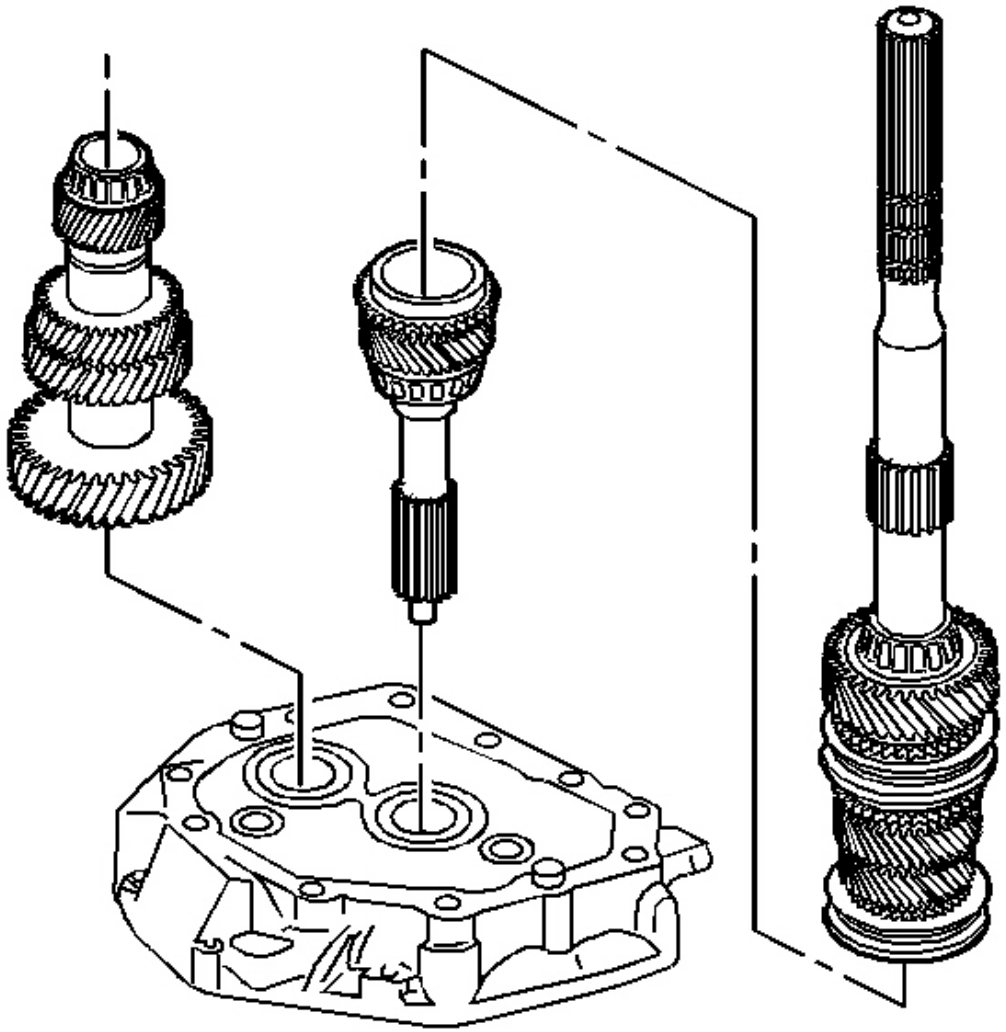

Fig. 458: View Of Transmission Components
Courtesy of GENERAL MOTORS CORP.

16. Remove the following parts in order:
    1. The countershaft (Lift up the mainshaft enough to remove the countershaft).
    2. The mainshaft assembly
    3. The 4th speed gear blocking ring and the input shaft from the adapter plate
    4. The input shaft bearing race
    5. The countershaft bearing race

cardiagn.com

Countershaft Extension

Tools Required

- **J 8001** Dial Indicator Set. See **Special Tools** .
- **J 39444-2** Countershaft Extension End Play Rod. See **Special Tools** .

IMPORTANT: The following procedure cannot be performed accurately until the countershaft shimming procedure has been completed and the transmission has been assembled to the point of installing the countershaft extension.

1. Rotate the transmission in the horizontal position.

cardiagn.com

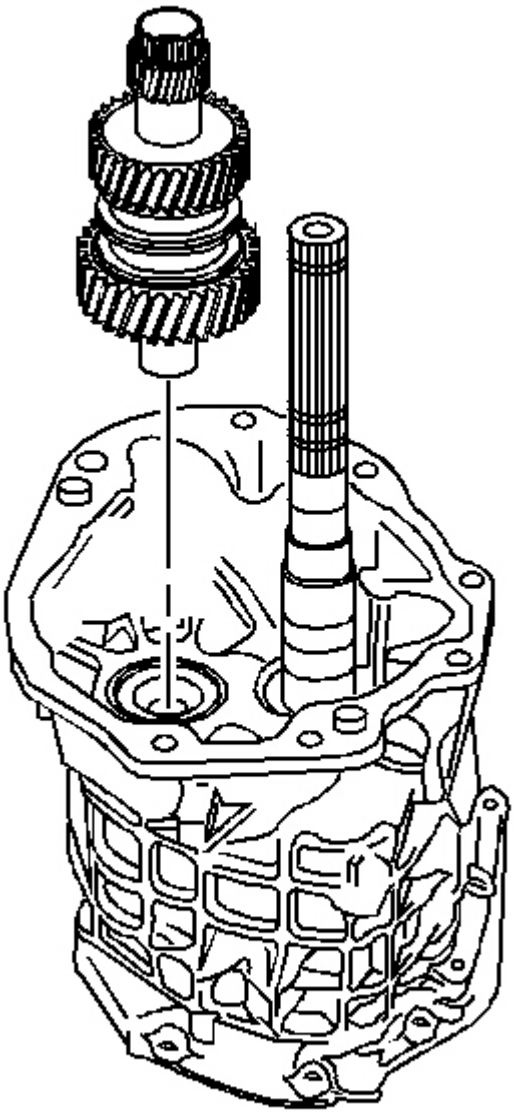

Fig. 459: Identifying Countershaft Extension
Courtesy of GENERAL MOTORS CORP.

2. Install the countershaft extension to the countershaft. Make sure the splines fully engage.

cardiagn.com

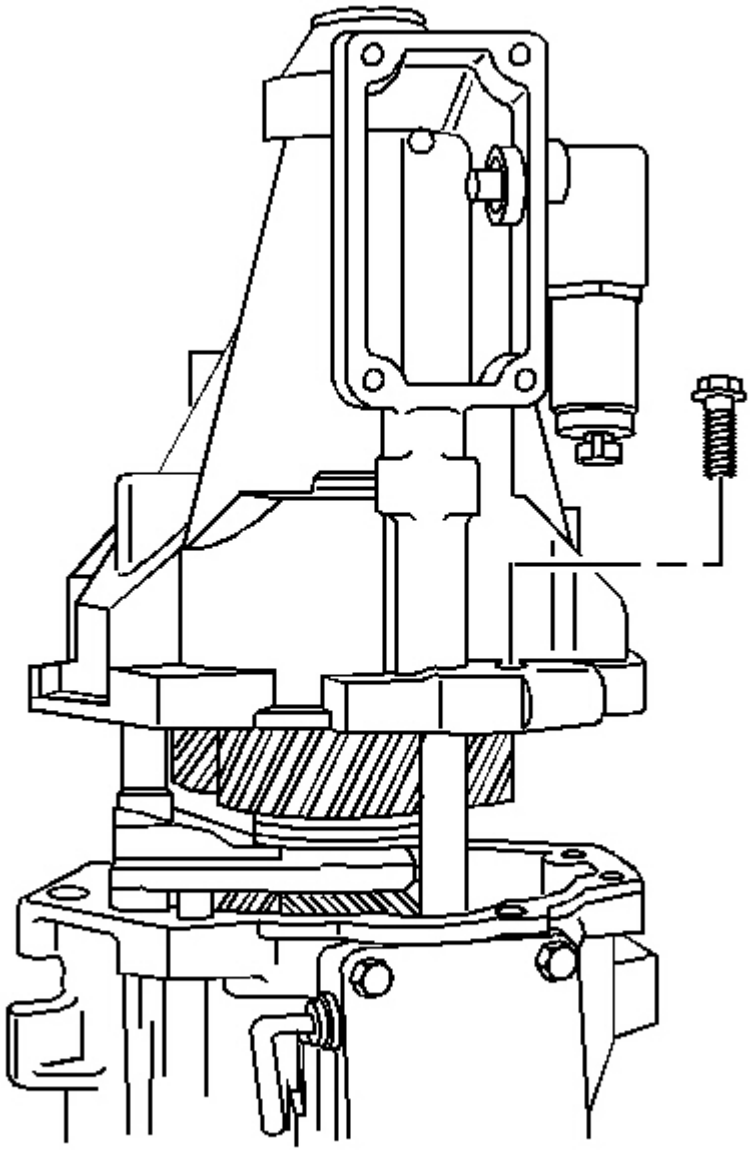

Fig. 460: View Of Extension Housing Bolts & Extension Housing
Courtesy of GENERAL MOTORS CORP.

NOTE: Refer to Fastener Notice in Cautions and Notices.

3. Install the extension housing and the extension housing retainer bolts.

cardiagn.com

Tighten: Tighten the bolts to 35 N.m (26 Ib. ft).

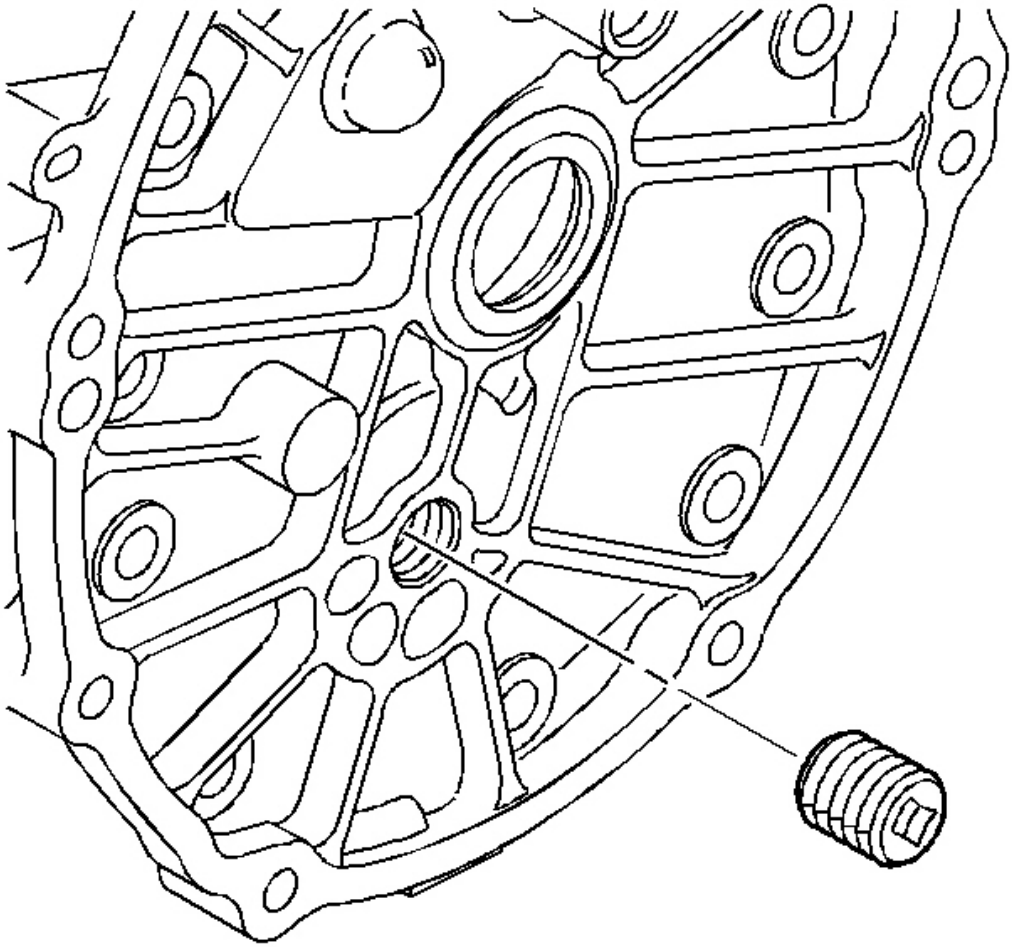

Fig. 461: Locating Adapter Plate Plug
Courtesy of GENERAL MOTORS CORP.

4. Remove the plug from the adapter plate.

cardiagn.com

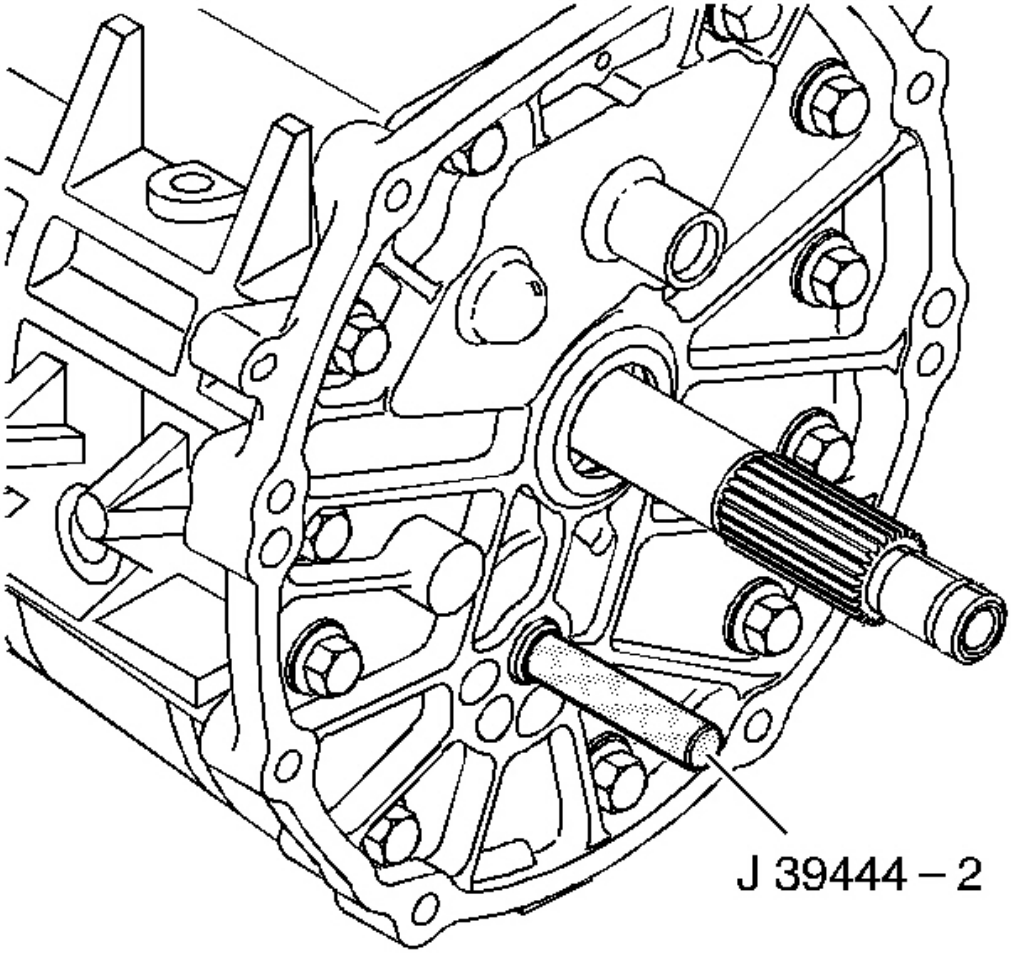

Fig. 462: Installing/Removing J 39444-2 In Adapter Plate Plug Hole
Courtesy of GENERAL MOTORS CORP.

5. Install the **J 39444-2** through the adapter plate plug hole.
6. Screw **J 39444-2** into the countershaft extension.

cardiagn.com

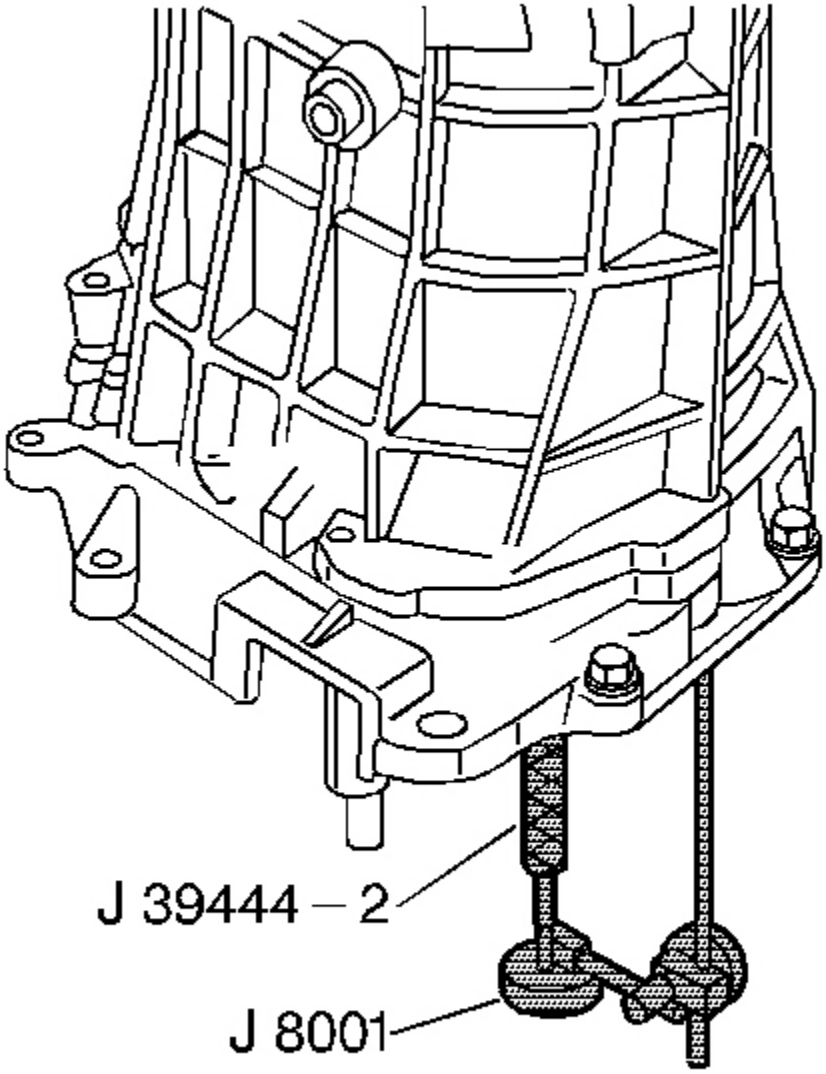

Fig. 463: Measuring Countershaft Extension End Play Using J 8001 & J 39444-2
Courtesy of GENERAL MOTORS CORP.

7. Measure the countershaft extension end play using the following procedure:
    1. Install a **J 8001** so the tip is on the end of the countershaft extension end play rod.
    2. Rotate the transmission in the vertical position.
    3. Move the countershaft extension up and down using the **J 39444-2** .
    4. Record the measurement.

cardiagn.com

8. Select a shim to achieve 0.05-0.13 mm (0.002-0.005 in) axial play.
9. Remove the **J 8001** .
10. Remove the **J 39444-2** .

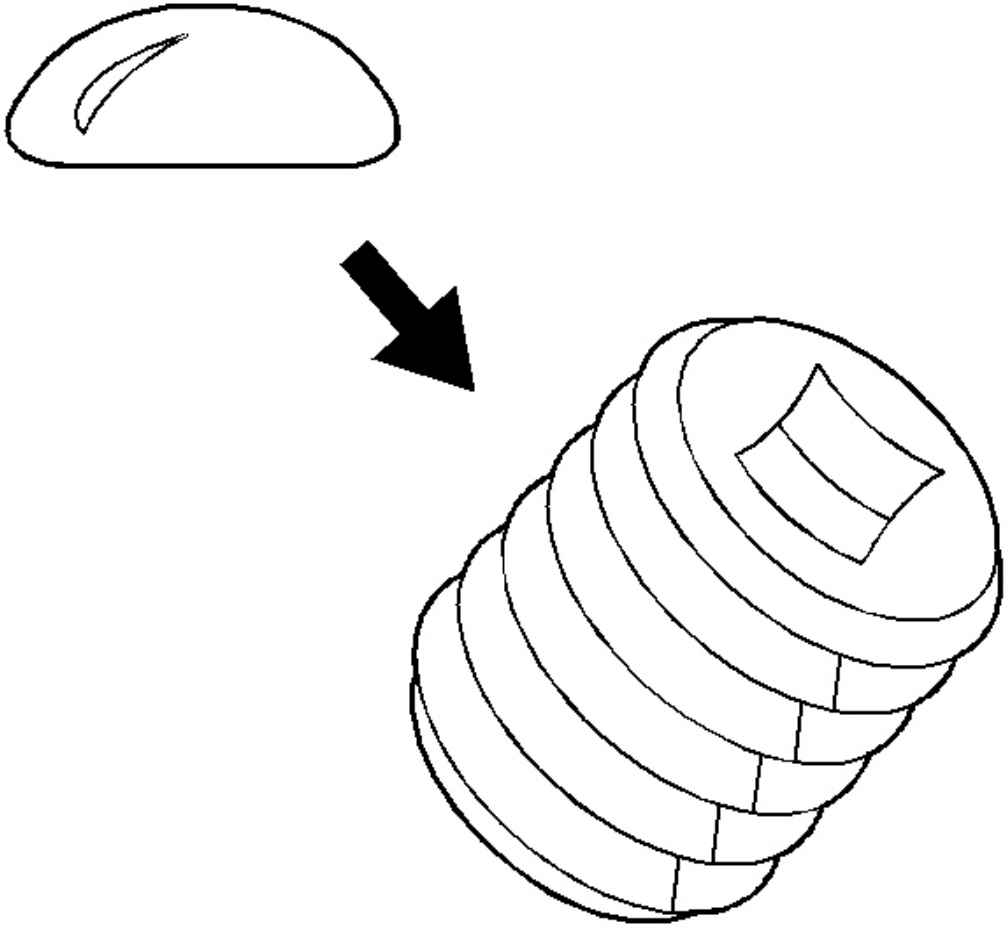

Fig. 464: Applying Sealant To Adapter Plate Plug Threads
Courtesy of GENERAL MOTORS CORP.

11. Apply sealant GM P/N 12346004 (Canadian P/N 10953480) or the equivalent to the plug threads.

cardiagn.com

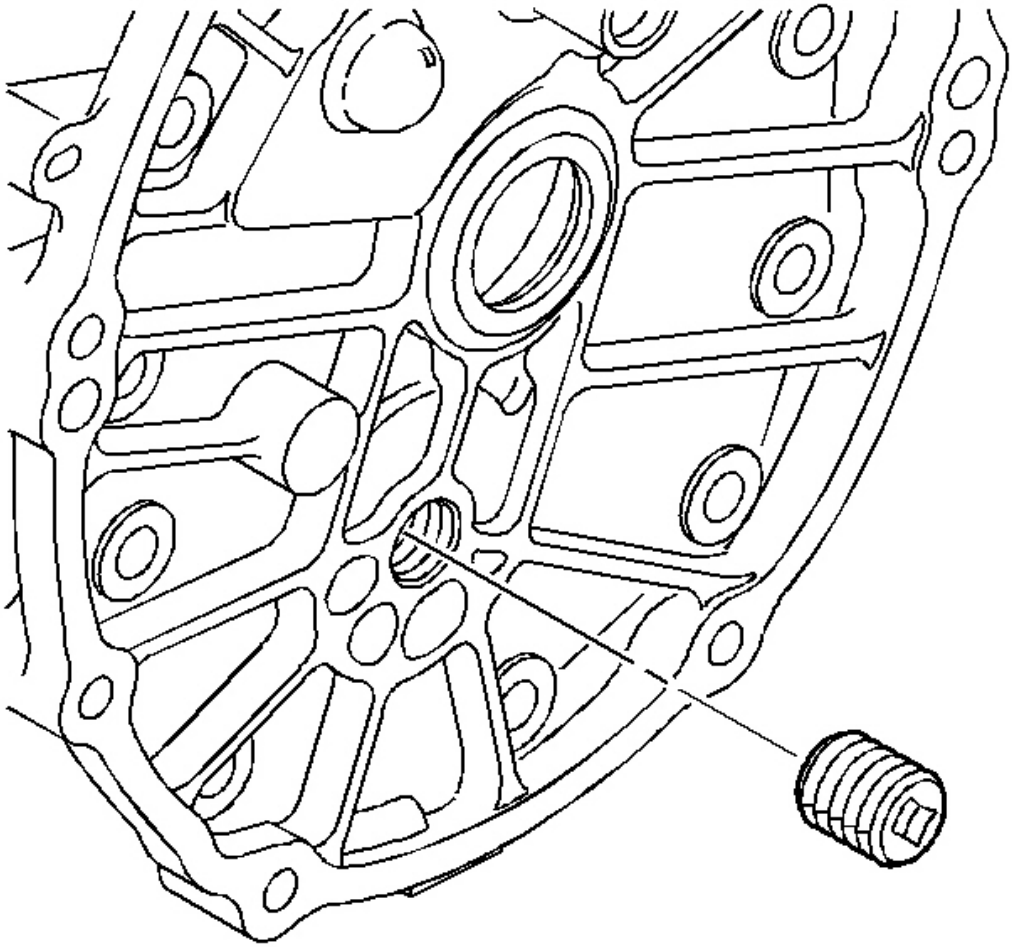

Fig. 465: Locating Adapter Plate Plug
Courtesy of GENERAL MOTORS CORP.

12. Install the adapter plate plug.

    Tighten: Tighten the plug to 27 N.m (20 Ib. ft).

cardiagn.com

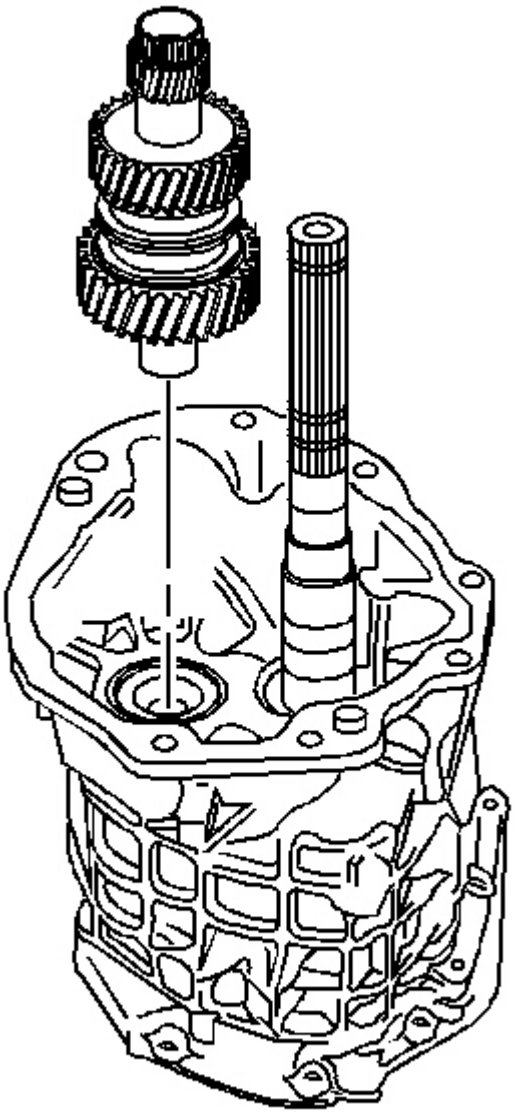

Fig. 466: Identifying Countershaft Extension
Courtesy of GENERAL MOTORS CORP.

13. Install the countershaft extension.
14. Install the countershaft extension bearing race.

cardiagn.com

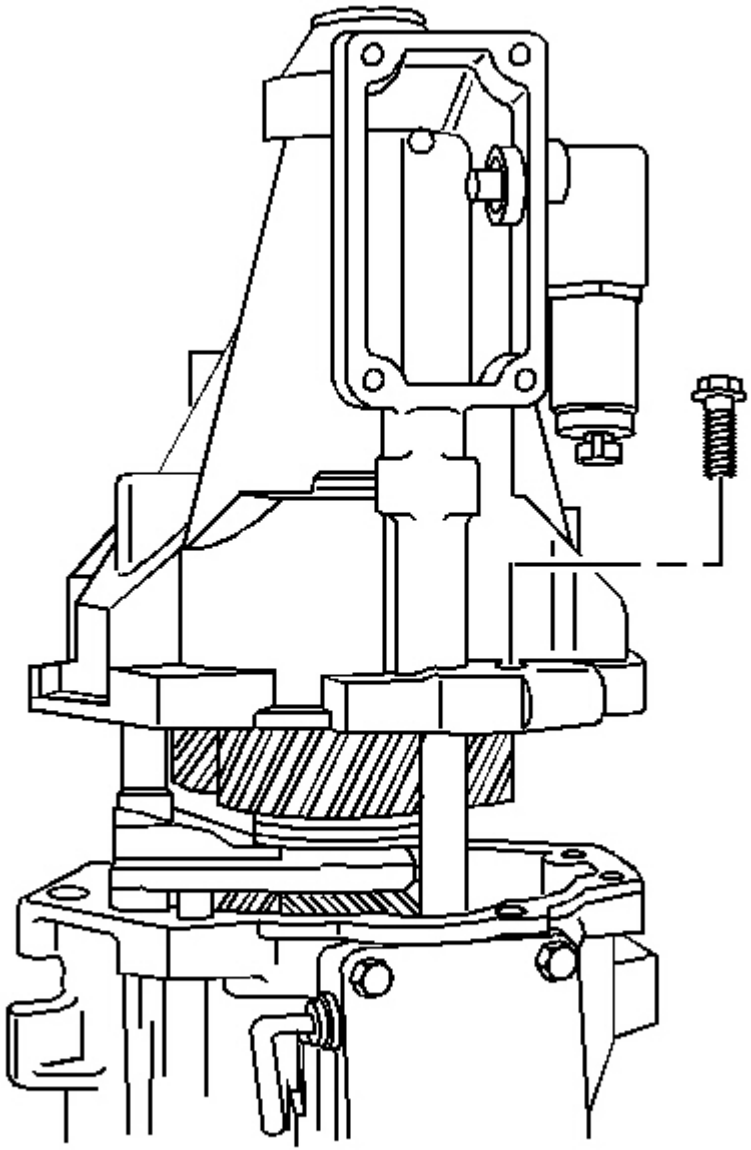

Fig. 467: View Of Extension Housing Bolts & Extension Housing
Courtesy of GENERAL MOTORS CORP.

15. Install the extension housing bolts and the extension housing.

DESCRIPTION AND OPERATION

cardiagn.com

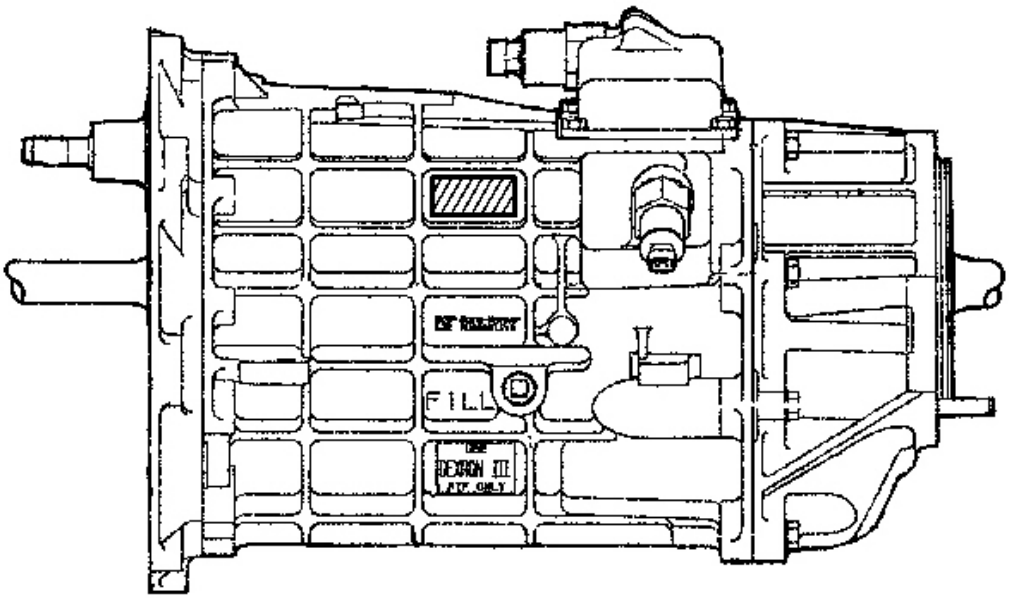

Fig. 468: 6-Speed Manual Transmission (RPO MM6/M12)
Courtesy of GENERAL MOTORS CORP.

Manual transmissions are identified by the number of forward gears and the measured distance between the centerline of the output shaft and the counter gear.

The 6-speed manual transmission (RPO MM6/M12) incorporates the following features:

- An aluminum case
- Fully synchronized gearing with an enhanced synchronizer cone arrangement:
  - Triple-cone: FIRST, SECOND
  - Double-cone: THIRD, FOURTH, FIFTH, SIXTH
  - Single-cone: REVERSE
- An internal shift rail mechanism
- A remote transmission shift control mounted forward of the transmission
- An external transmission shift rod enabling the forward mount location of the transmission shift control
- An extended-length transmission output shaft mating directly to the rear axle drive pinion, in the rear of the differential housing
- Tapered roller bearings supporting the mainshaft and countershaft

cardiagn.com

- Caged roller bearings under all speed gears
- Solenoid inhibit of SECOND and THIRD gears
- Solenoid inhibit of REVERSE gear during predefined forward motion

These features combine to yield a rugged, reliable system capable of handling input torques of up to 610 N.m (450 lb ft) for the MM6 and 540 N.m (400 lb ft) for the M12.

The gear ratios are as follows:

Manual Transmission Description and Operation

Gear	MM6 Ratio (:1)	M12 Ratio (:1)
FIRST	2.66	2.97
SECOND	1.78	2.07
THIRD	1.30	1.43
FOURTH	1.00	1.00
FIFTH	0.74	0.84
SIXTH	0.50	0.57
REVERSE	2.90	3.28

Shift Control and Shift Rod

cardiagn.com

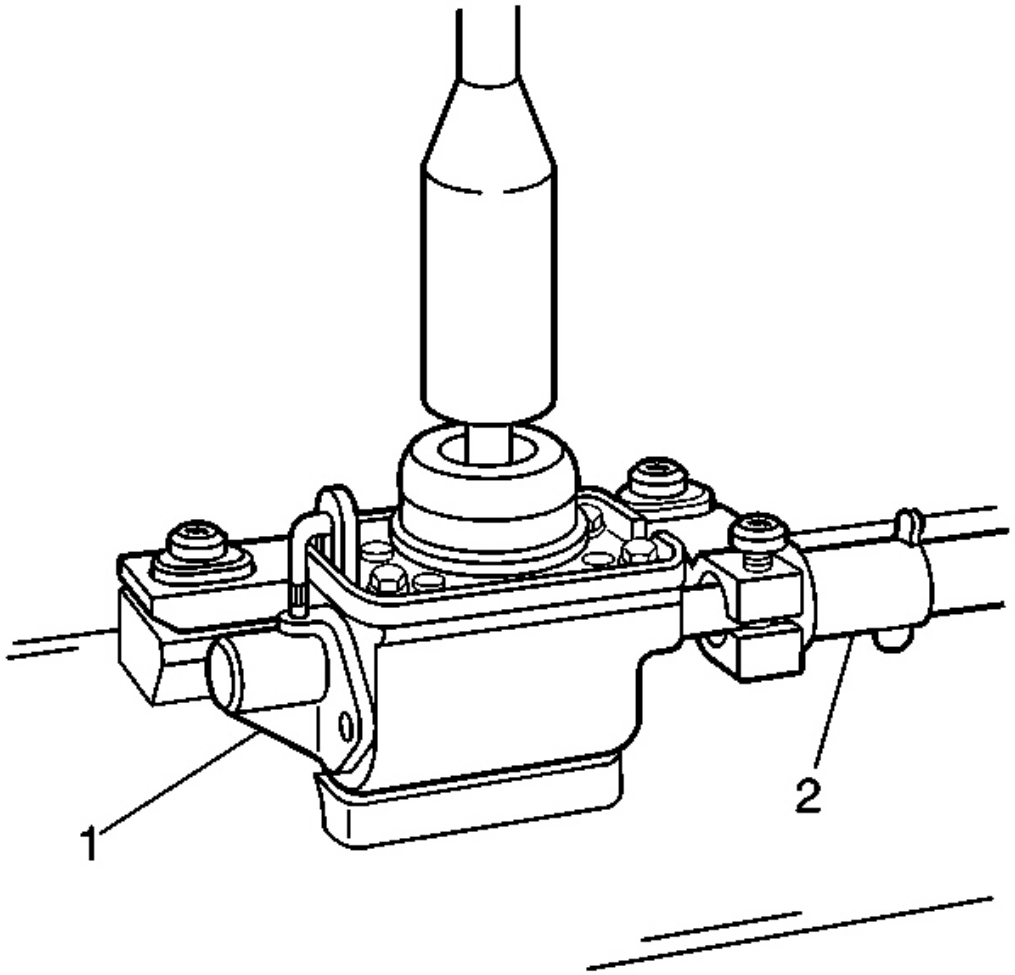

Fig. 469: Shift Control and Shift Rod
Courtesy of GENERAL MOTORS CORP.

To allow the rear-of-vehicle transmission location, the transmission shift shaft has been relocated to the front of the transmission. The shift shaft is connected to a transmission shift rod (2) which contains two sealed universal-style joints, enabling the range of motion necessary in order to shift gears. The shift rod (2) is connected to the transmission shift control (1) which is a lubricated and sealed unit, mounted to the driveline support assembly. The mounting system utilized for the shift control (1) incorporates rubber insulators. The cockpit of the vehicle is isolated from the driveline through the use of a shift control closeout boot which seals off the shift control and the driveline tunnel shift control opening.

Gear Select - Skip Shift

cardiagn.com

To ensure good fuel economy and compliance with federal fuel economy standards, SECOND and THIRD gears are inhibited when shifting out of FIRST gear under the following conditions:

- Coolant temperature is above 76°C (169°F).
- Vehicle speed is 24-31 km/h (15-19 mph).
- Throttle is opened 21 percent or less.

Reverse Lockout

A reverse lockout system, consisting of a reverse lockout solenoid which operates a reverse lockout mechanism, is utilized to prevent shifting into REVERSE gear when the vehicle is moving forward at a speed of 5 km/h (3 mph) or more.

SPECIAL TOOLS AND EQUIPMENT

SPECIAL TOOLS

Special Tools

Illustration	Tool Number/Description
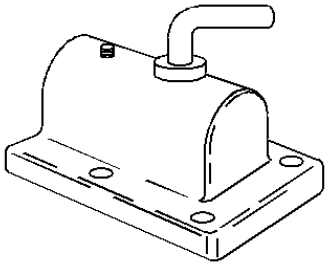	J 3289-20 Holding Fixture
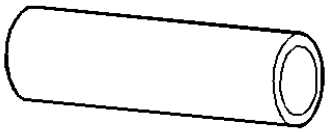	J 5590 Press Tube
	J 8001 Dial Indicator Set

cardiagn.com

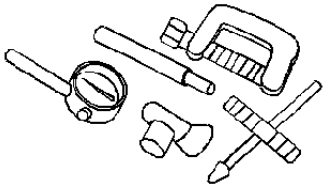

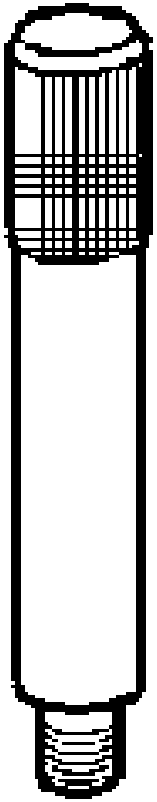

J 8092
Universal Driver Handle

cardiagn.com

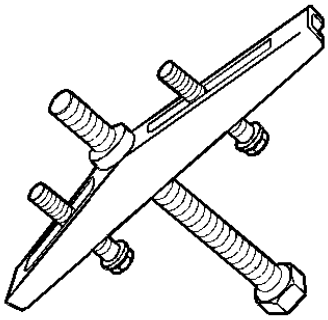	J 8433 Universal Bridge Puller
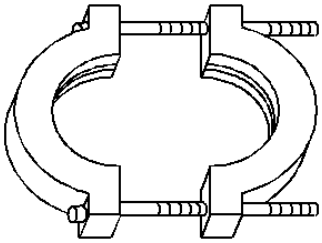	J 22910-01 Split Plate
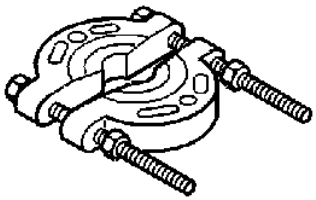	J 22912-01 Split Plate
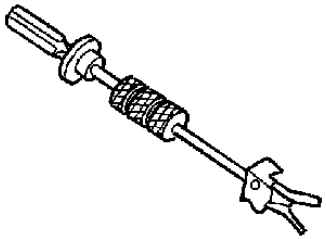	J 23907 Slide Hammer

cardiagn.com

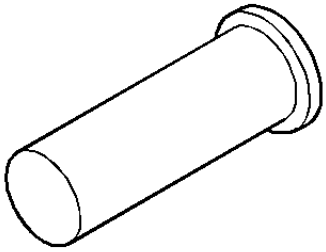	J 25234 Press Tube
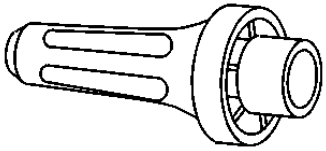	J 26508-A Transmission Rear Seal Installer
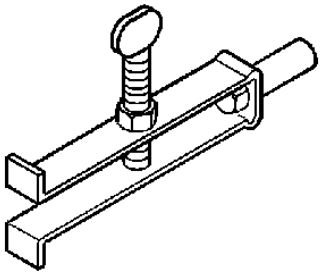	J 26941 Bearing Race Remover
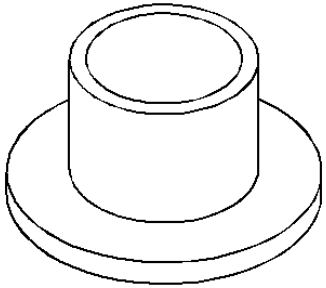	J 28537-17 Bearing Race Installer

cardiagn.com

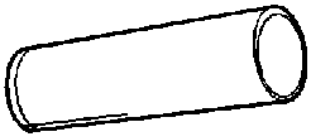	J 36183 Press Tube
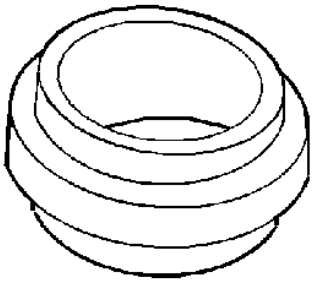	J 36184 Press Tube Adapter
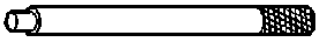	J 36190 Universal Driver Handle
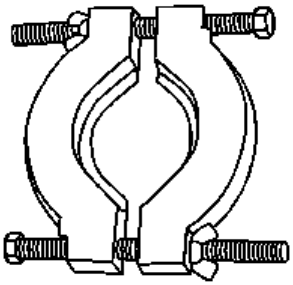	J 36513 Split Plate

cardiagn.com

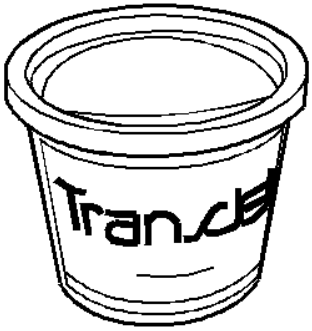	J 36850 Transjel(R) Lubricant
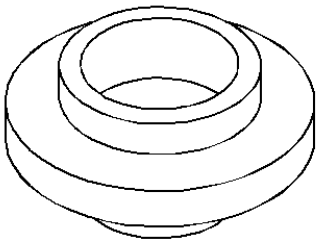	J 39371 1st/2nd Synchronizer Installer
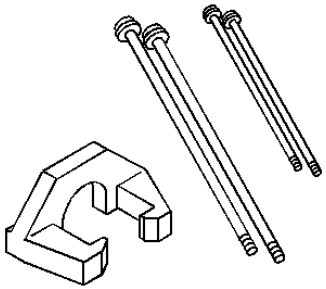	J 39431-1, -2, -4 Gear Remover and Bolts
	J 39433 Input Shaft Seal Installer

cardiagn.com

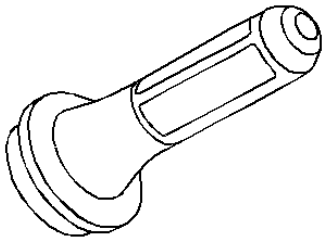	
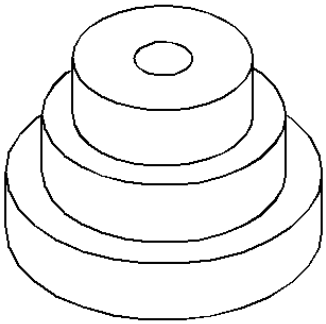	J 39435 Bearing Race Installer
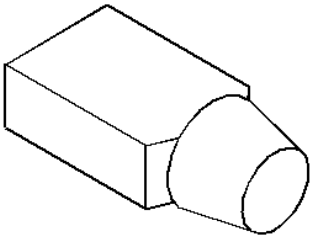	J 39437 Bushing Installer
	J 39438 Bearing Installer

cardiagn.com

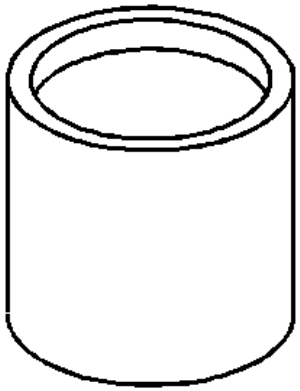	
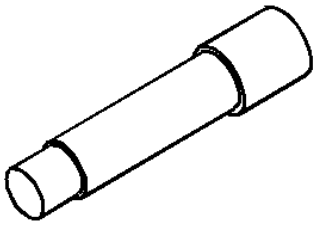	J 39439-1 Shift Rail Bushing Remover/Installer
	J 39439-2 Bushing Remover

cardiagn.com

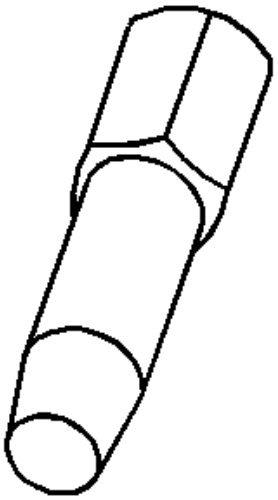	
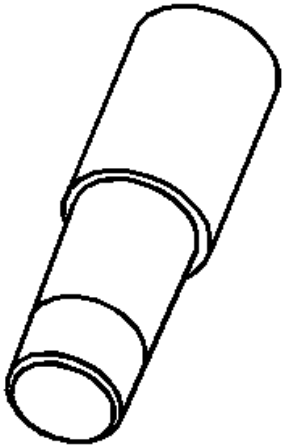	J 39439-3 Bushing Installer

cardiagn.com

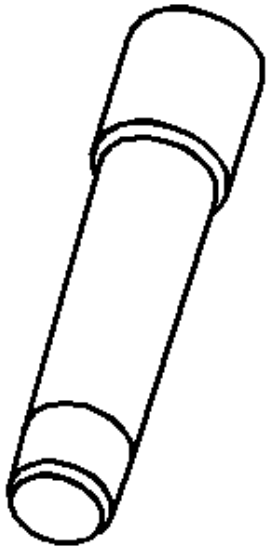	J 39439-4 Bushing Installer
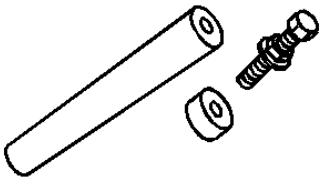	J 39441 5th/6th Driven Gear Installer
	J 39441-10 5th Gear Installer Adapter

cardiagn.com

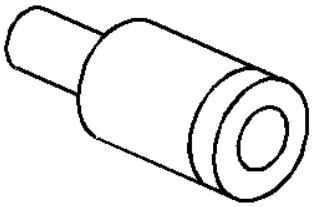	J 39442 Press Adapter
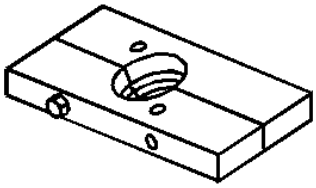	J 39443 Split Plate
	J 39444-1 Countershaft End Play Rod

cardiagn.com

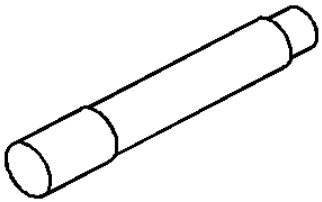	
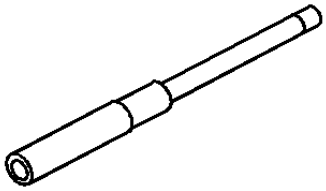	J 39444-2 Countershaft Extension End Play Rod
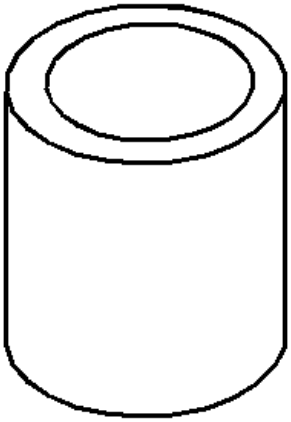	J 39473 Mainshaft Bearing Installer/Adapter
	J 39511 Split Plate

cardiagn.com

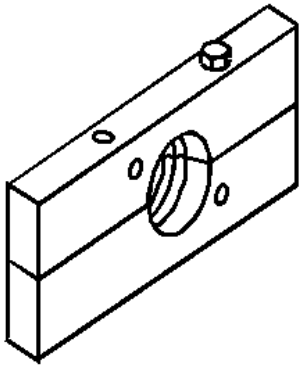	
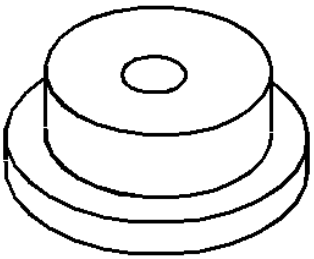	J 39546 Bearing Race Installer
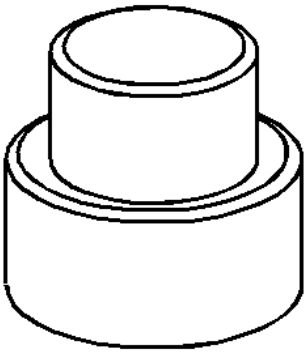	J 39547 Press Adapter

cardiagn.com

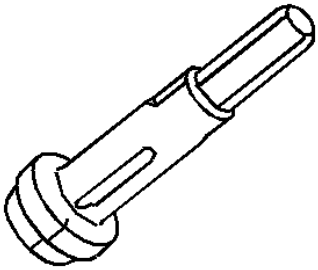	J 39594 Bearing Race Remover
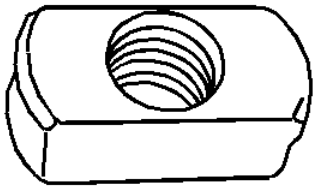	J 39790 Mainshaft Bearing Race Remover
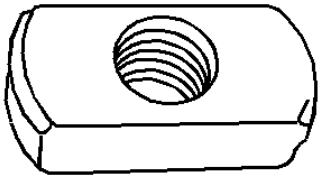	J 39791 Countershaft Bearing Race Remover
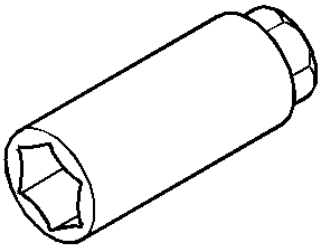	J 41099 Skip Shift Sensor Remover/Installer

cardiagn.com

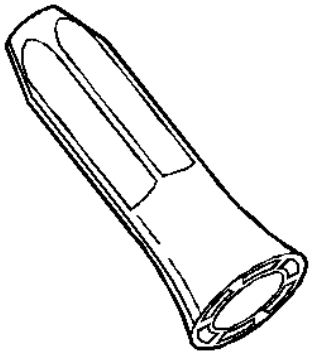	J 42198 Transmission Rear Seal Installer
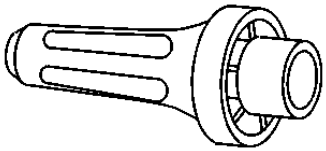	J 42464 Shift Shaft Seal Installer
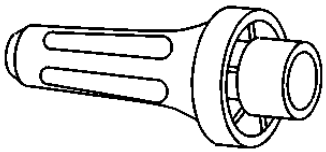	J 42496 Inner Shift Rail Seal Installer
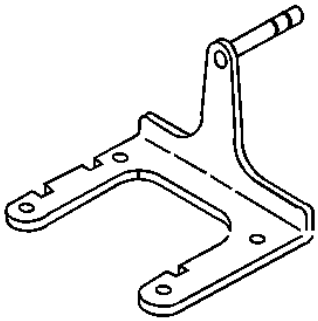	J 44395 Transmission Holding Fixture

cardiagn.com