Service Training

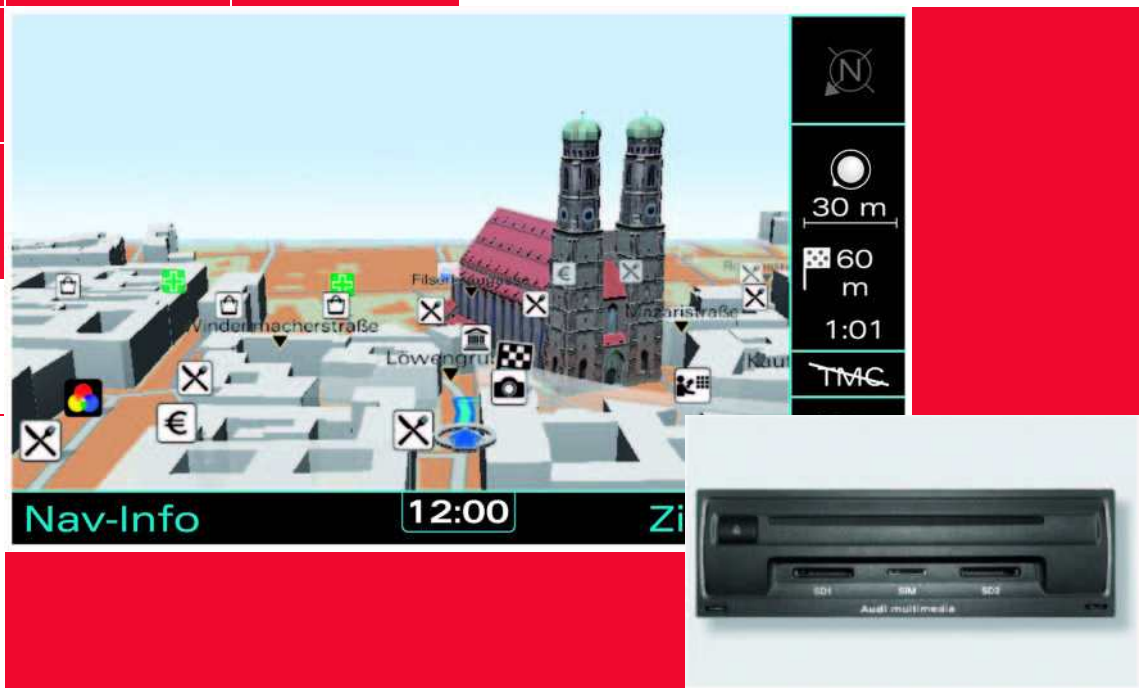

3rd Generation Audi MMI System

Self Study Programme 435

3rd generation MMI

– Introducing the latest generation of the best system on the market today
– Even higher performance and easier operation

Audi is increasing its lead in infotainment technology even further. A new generation of the MMI – the supreme solution for multimedia, communications and operation – has been unveiled. With a large hard drive, a DVD drive and its high-speed processors, it has become even more versatile and more powerful.

When the Audi MMI (Multi Media Interface) was launched in the A8 in 2002, journalists and the general public were unanimous: the Audi concept was the best on the market. With its control knob on the centre tunnel and large function keys used for selecting the main menus, it was effortless to use, with self-evident logicthat was repeated on the MMI display. Audio, TV, information, telephone and navigation – never before had the driver been able to control all these menus so intuitively.

The MMI set new standards from the outset and became the benchmark for the competition. Its status was confirmed by many wins in comparative tests. The system was also adopted for the A6 and Q7 model lines, and for the new A4. In this area of technology, too, the brand with the four-ring emblem has pioneered progress from the head of the field.

Audi has been intensively developing every aspect of its MMI system. The full version, MMI Navigation plus, is now a state-of-the-art high-end system. The basic operating principle has been retained, but the innovative joystick makes it even more convenient. This joystick is located on the central knob and can be moved in eight directions – with high precision and the high-quality feel that the Audi driver expects.

Apart from the control terminal, the monitor screen is the second important interface between the system and its users. For the new MMI, Audi has provided a large TFT display measuring seven inches from corner to corner. It is located in an ergonomically favourable position high up on the centre console. With a very high resolution of 800 x 480 pixels and LED backlighting, this monitor produces an exceptionally sharp image with plenty of contrast. Even in poor light conditions, the colours stand out sharply against the black background.

The new central processor, the information electronics control unit -1- J794, integrates all functions, previously distributed among up to six separate control units. Additional features, such as the SD card reader and hard drive, which are integrated in the MMI Navigation plus, make the control unit into a truly high-tech product.

The second new unit is the radio control unit R. It brings together the functions of the tuner and sound system, previously distributed among up to three control units. This means, therefore, that the total number control units in the MOST bus system has been reduced. Although the 3rd generation MMI has more functions and equipment options, it requires less space on the whole and saves more than 4 kg in the full version.

The new MMI will extend Audi’s lead over its competitors.

Contents

Control unit topology 4

Feature options 5

System versions 8

Information electronics control unit -1- J794 12

Radio 32

Sound systems 42

Other components 44

Service 46

Glossary* 48

*Terms shown in italics and marked by an asterisk are explained in the glossary at the back of this Self Study Programme.

The Self Study Programme provides basic information about the design and functioning of new models, automotive components or technology.

The Self Study Programme is not a Repair Manual.
Values specified are for easier understanding only, and refer to the software version valid at the time of publication of the SSP.

For information about maintenance and repair work, always refer to the current technical literature.

Reference

Note

Control unit topology of the 3rd generation MMI

The MOST bus is used for exchanging data between the control units in the 3rd generation MMI system. It facilitates a very high data transfer rate, which, for example, is necessary for the transfer of audio data.

Video signals from the TV tuner or rear-view camera are transmitted across an analogue video line to the information electronics control unit -1- J794 as *CVBS** signals (refer to Glossary).

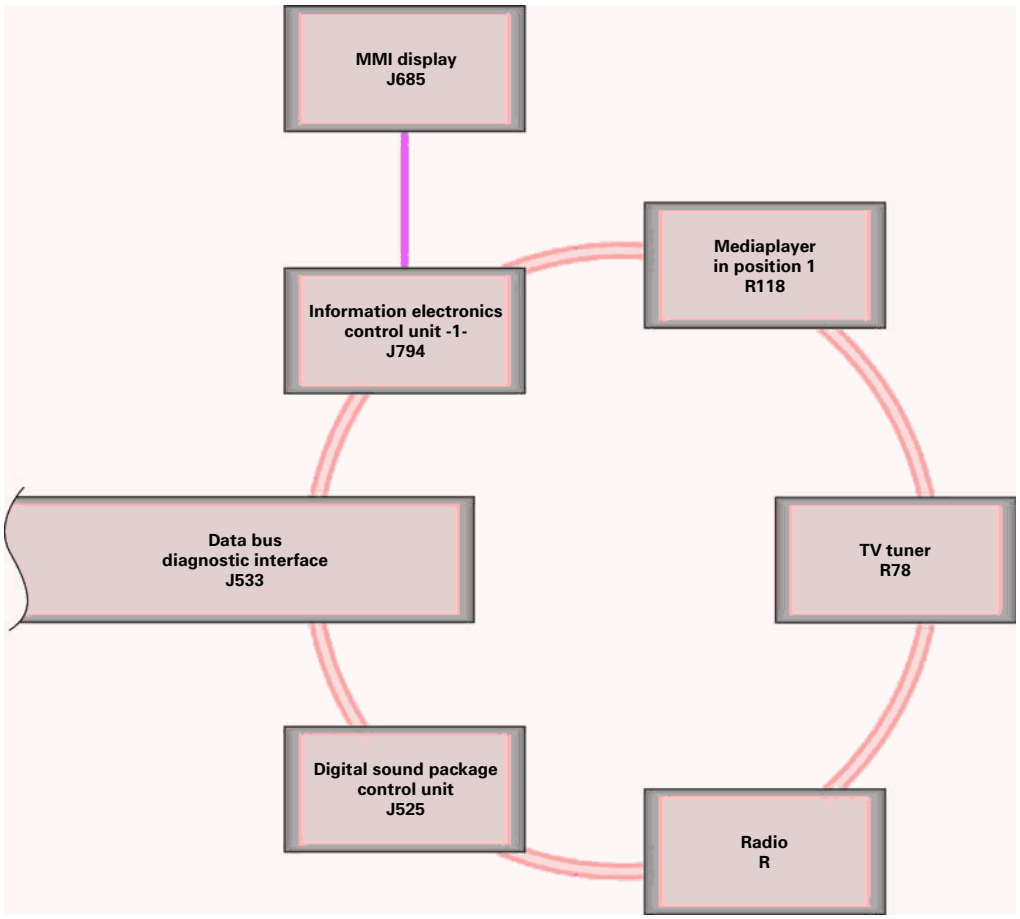

435_020

MOST bus
LIN bus

System overview for Audi A8 with 3rd generation MMI (available in Europe only)

	MMI Navigation plus
	Basic functions
	Hard drive navigation
	Remote control console with joystick
	7" display with 800 x 480 pixel resolution
	AM/FM** radio with phase diversity and background tuner
	Car menu, climate display, clock, etc.
	Single-*DVD** drive
	Premium speech control
	*SD** card reader (2 x)
	MP3, WMA*, AAC**
	Standard Sound System (6-channel)
	Optional features
	Premium Sound System (Bose)
	Advanced Sound System (Bang&Olufsen)
	*CD** changer (MP3, WMA)
	Audi music interface
	Digital radio *DAB** (Sirius in North America)
	Universal mobile phone preparation (*UHV**)
	Audi Bluetooth car phone
	TV hybrid, 2 x *AV input**
	Rear-view camera, Park Assist plus

System overview for Audi A6/Q7 with 3rd generation MMI

MMI Radio	MMI Radio plus	MMI Navigation	MMI Navigation plus
Basic functions			
		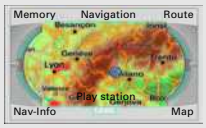	
		DVD navigation	Hard drive navigation
Remote MMI control console			Remote MMI control console with joystick
6.5" display with 400 x 240 pixel resolution			7" display with 800 x 480 pixel resolution
AM/FM radio with phase diversity and background tuner			
Car menus, climate display, clock, etc.			
Basic Sound System	Standard Sound System (6-channel)		
CD audio			Single DVD drive
		Basic speech control	Premium speech control
	SD card reader (2 x)		
	MP3, WMA		MP3, WMA, AAC
Optional features			
CD changer (MP3, WMA)			
	Audi music interface		
	Premium Sound System (Bose)		
	Digital radio DAB (Sirius in North America)		
	Rear-view camera, Park Assist plus		
	Universal mobile phone preparation (UHV)		
		Audi Bluetooth car phone	
			TV hybrid, 2 x AV input

System overview for Audi A4/A5/Q5 with 3rd generation MMI

MMI Navigation	MMI Navigation plus
Basic functions	
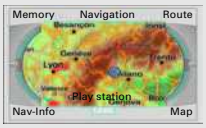	
DVD Navigation	Hard drive navigation
Remote MMI control console	Remote MMI control console with joystick
6.5" display with 400 x 240 pixel resolution	7" display with 800 x 480 pixel resolution
AM/FM radio with phase diversity and background tuner	
Car menus, climate display, clock, etc.	
Basic speech control	Premium speech control
Basic Sound System	
CD audio	Single DVD drive
SD card reader (2 x)	
MP3, WMA	MP3, WMA, AAC
*AUX**-In in centre console (not available with Audi music interface)	
Optional features	
Audi music interface	
CD changer (MP3, WMA)	
Standard Sound System (6-channel)	
Premium Sound System (Bang&Olufsen)	
Digital radio DAB (Sirius in North America)	
Rear-view camera, Park Assist plus	
Universal mobile phone preparation (UHV)	
Audi Bluetooth car phone	
	TV hybrid, 2 x AV input

Versions of the 3rd generation MMI system

In all, there are four different versions of the 3rd generation MMI system.
They are:
- MMI Radio
- MMI Radio plus
- MMI Navigation
- MMI Navigation plus

These systems are currently available as follows:

	A4/A5/Q5	A6	Q7	A8
MMI Radio		√	√	
MMI Radio plus		√	√	
MMI Navigation	√	√	√	
MMI Navigation plus	√	√	√	√

Brief description of the four MMI systems

MMI Radio
The MMI Radio system basically has the same functions as the previous 2nd generation MMI Basic system. It has a single-CD drive and a radio with an FM triple tuner. The radio is identical in all 3rd generation MMI systems. It also has a 6.5" colour screen. A CD changer is optional.

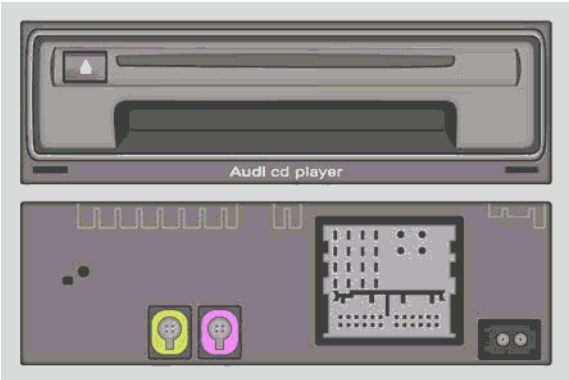

435_007

Control unit J794 for MMI Radio on an Audi A6

MMI Radio plus
Compared with the MMI Radio, the MMI Radio plus is additionally equipped with the Audi Sound System (Standard Sound). The single-CD drive can play MP3 files. The MMI Radio plus has two SD card readers and can, as an option, be equipped with a digital tuner. It is also optionally available with a Premium Sound System, the universal mobile phone preparation (UHV) or the Audi music interface. If the MMI Radio plus has an UHV, then a speech dialogue system is integrated.

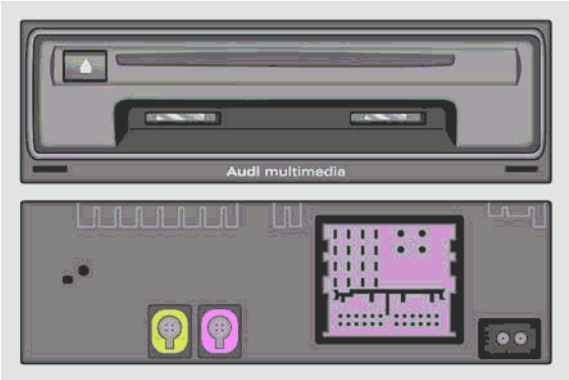

435_008

Control unit J794 for MMI Radio plus on an Audi A6

MMI navigation systems
Two types of navigation system are available for the 3rd generation MMI:
– MMI Navigation and
– MMI Navigation plus.

MMI Navigation (available in Europe only)
The MMI Navigation system is a DVD navigation system which provides two-dimensional map display on the 6.5" colour screen. The navigation electronics are integrated in the information electronics control unit -1- J794.

Compared with previous Audi DVD navigation systems, the 3rd generation MMI Navigation system will function even without a loaded navigation DVD. For this purpose, the complete navigation data must be transferred to an *SDHC** card with at least 8 GB of memory, and this SDHC card inserted into the SD card reader.
Data can be copied from the navigation DVD to the SDHC card in the information electronics control unit -1- J794 using the Setup menu. However, a quicker way to transfer data from a DVD to an SDHC card is using a PC.

Several distinctive equipment features and functions of the MMI Navigation system are listed below:
– DVD navigation
– Navigation is possible using an 8 GB SDHC card
– 6.5" colour screen
– 2D maps with colour-coded topographic features
– Speech control

435_012

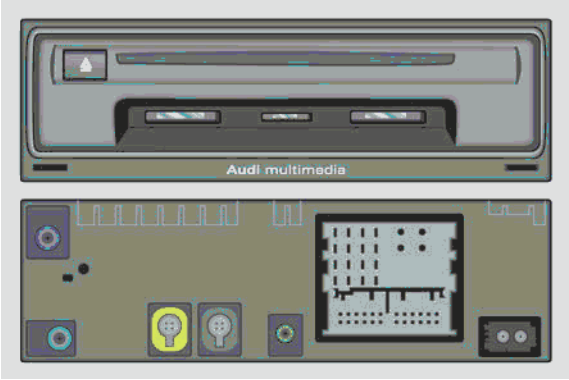

435_011

Control unit J794 for MMI Navigation on an Audi A6 or Q7

MMI Navigation plus
The MMI Navigation plus is the top-of-the-line model among the navigation systems. Outstanding features include three-dimensional display and high-speed route calculation.
To provide high-speed access to the huge volume of available data, the MMI Navigation plus system has 30 GB of memory on the 2.5" hard drive in the information electronics control unit -1- J794.
The MMI Navigation plus system has an improved *splitscreen function** with *manoeuvre list** and lane recommendations - well known from the RNS-E system.

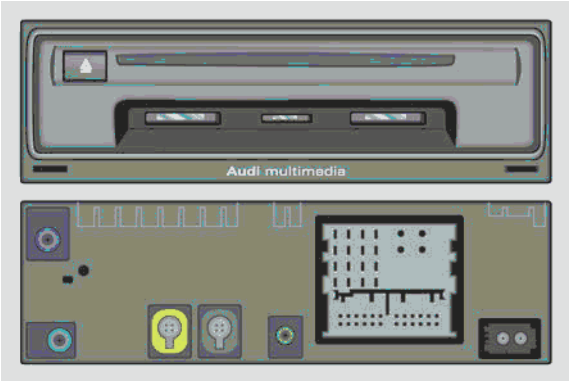

435_011

Control unit J794 for MMI Navigation plus on an Audi A6, A8 or Q7

435_014

Control unit J794 for MMI Navigation plus on an Audi A4, A5 or Q5

Distinctive new functions of the MMI Navigation plus system
Alternative routes:
The driver can choose from three route options. The route information (distance, trip time, motorways, toll roads, etc.) is displayed on the right-hand margin of the screen

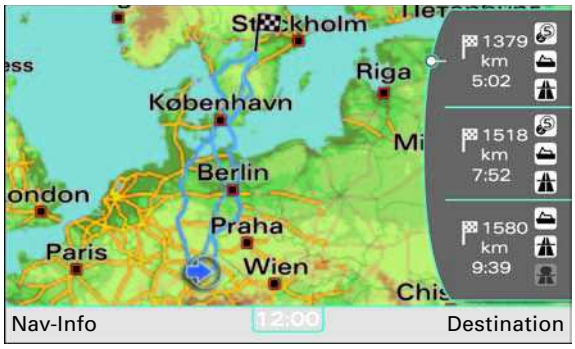

435_015

3D terrain model display:
The MMI Navigation plus system provides an authentic three-dimensional terrain model display (*Birdview**) with colour-coded topographic features (similar to regular maps).

435_016

3D city models:
In a number of large city centres, buildings are represented in 3D. Key buildings are displayed true to detail.

435_017

3D intersection and lane display:
When the vehicle approaches an intersection or a motorway exit, a true-to-detail lane display shows the correct route.

435_018

Route list display:
The next three upcoming route manoeuvres are displayed on the left-hand side of the screen.

435_019

Information electronics control unit -1- J794 (Main Unit)

The information electronics control unit -1- J794 is the master control unit of the MMI infotainment system.
In the case of the 3rd generation MMI system, the master control unit J794 is always installed in the same position on a vehicle model.

Compared with the 2nd generation MMI High system, up to six previously independent control units are integrated in the information electronics control unit -1- J794 of the 3rd generation MMI system. This means, therefore, that the total number control units in the MOST bus has been reduced. As a result, the
MMI Navigation plus is over 4.5 kg lighter in its full version.

The following control units have been integrated in the J794:
- Front information control unit J523
- CD single drive R89
- Navigation control unit J401 (optional)
- Telephone transmitter and receiver unit R36 (optional)
- Speech input control unit J507 (in combination with telephone or navigation only)
- External audio devices control unit R199 (Audi music interface) (optional)

The information electronics control unit -1- J794 can incorporate the following components:
- SD card reader (not available in combination with MMI Radio)
- Hard drive (only available in combination with MMI Navigation plus)
- SIM card reader in combination with Audi Bluetooth car phone (optional with MMI Navigation and MMI Navigation plus)

The information electronics control unit -1- J794 has the address word
"5F – Information electronics 1".
All functions integrated in J794 can be diagnosed using this address word.

Separate control units (on the 2nd generation MMI)

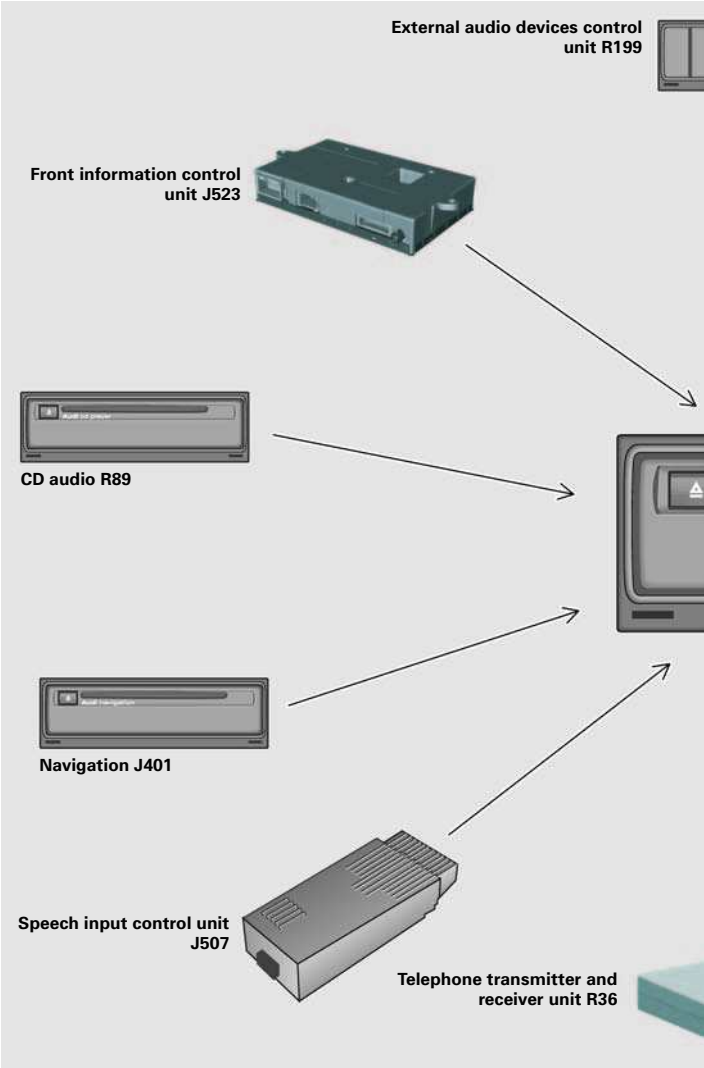

New components

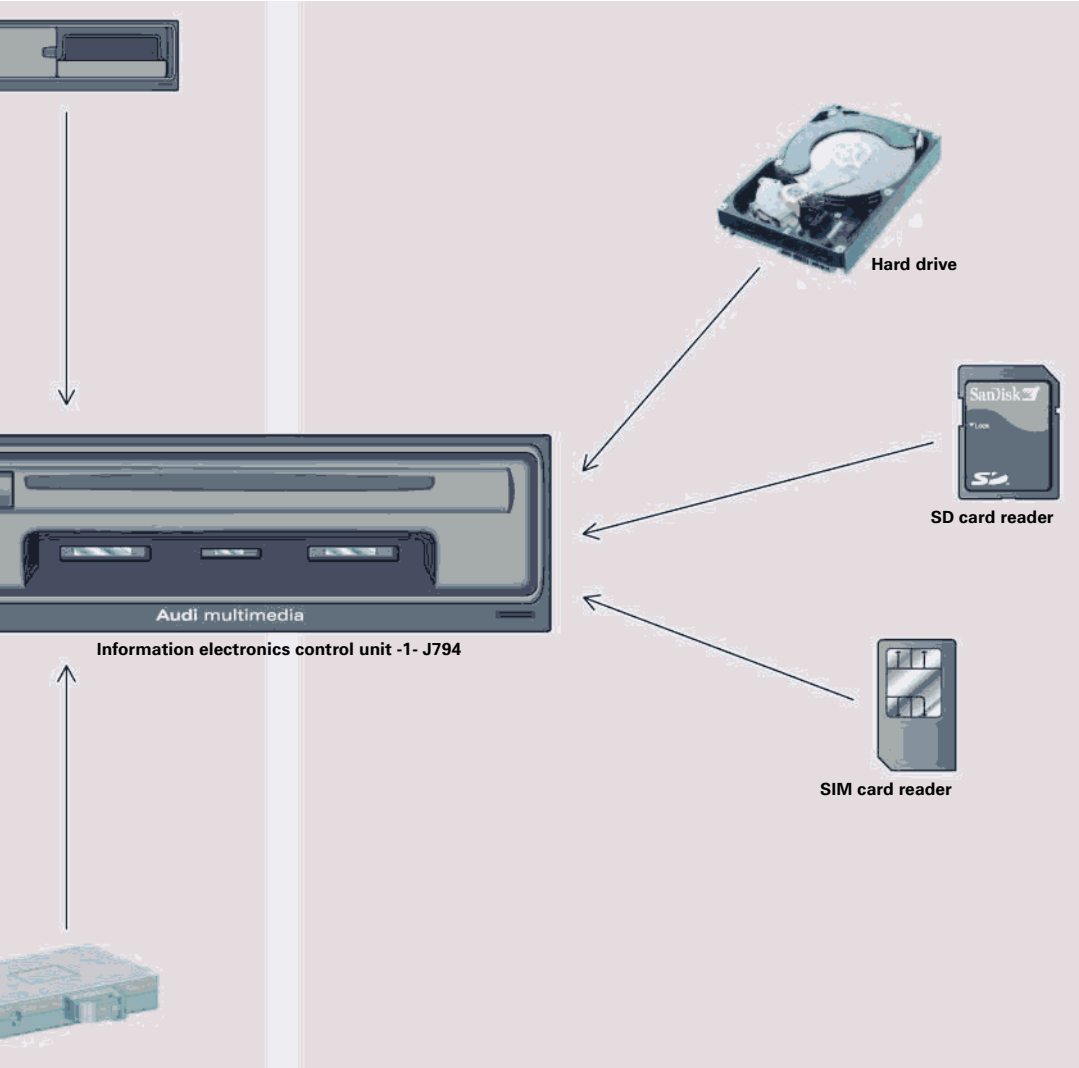

435_021

Note

The drawing shows all available control units.

Systems

	MMI Radio	MMI Radio plus	MMI Navigation	MMI Navigation plus
Standard equipment				
Single CD player	√	√		
Single DVD player			√	√
Two SD card drives		√	√	√
Hard drives for navigation and music data				√
Navigation electronics			√	√
Speech dialogue system		√ [1]	√	√
Optional equipment				
Universal mobile phone preparation (UHV)		√	√	√
Audi Bluetooth car phone including SIM card reader			√	√
Connectivity for external audio sources (Audi music interface)		√	√	√

[1] in combination with UHV only

Tasks

- Controlling communications on the MOST bus. The J794 is the system master for the MOST bus.
- Reading in information from the multimedia system operating unit E380 (MMI operating unit)
- Activation and diagnosis of the MMI display J685 for the display of MMI information
- Communication with the control unit with display in dash panel insert J285 via the data bus diagnostic interface J533 for the display of MMI information
- Diagnosis of the multimedia system operating unit E380 and the MMI display J685

Icons for drives and media

	Medium		Option	Note
	Jukebox			only available in combination with MMI Navigation plus
	DVD			only available in combination with MMI Navigation plus
	CD			
	CD1			in combination with optional CD changer
	CD2			in combination with optional CD changer
	CD3			in combination with optional CD changer
	CD4			in combination with optional CD changer
	CD5			in combination with optional CD changer
	CD6			in combination with optional CD changer
	TV tuner			optional
	external AV		AV1	only if TV installed
			AV2	only if TV installed
	AUX[1)]			A4/A5 and Q5 only
	AMI		*USB**	optional
			iPod	optional
			AUX[1)]	optional
	SD1			with MMI Radio plus or higher
	SD2			with MMI Radio plus or higher

[1)] External audio input

Drives

Depending on system version, the following drives are integrated in the information electronics control unit -1- J794:
- CD/DVD drive
- Dual memory card readers
- Hard drive
- SIM card reader

435_022

CD/DVD drive

A single DVD drive is integrated in the MMI Navigation and MMI Navigation plus versions.
A single-CD drive is integrated in the MMI Radio and MMI Radio Plus.

Depending on MMI version, the drives can play various audio and video formats.

CDs with up to 700 MB capacity and current DVD formats can be used.

	CD drives				DVD drives			
	Audio CD	WMA	mp3	AAC	WMA	mp3	AAC	DVD VIDEO
MMI Radio	√							
MMI Radio plus	√	√	√					
MMI Navigation	√	√	√					
MMI Navigation plus	√	√	√	√	√	√	√	√

Reference

For details of compatibility, refer to the vehicle Owner's Manual.

Memory card reader

In the following versions, dual memory card readers are installed in the information electronics control unit -1- J794:
- MMI Radio plus
- MMI Navigation and
- MMI Navigation plus.

The memory card readers are compatible with SD, SDHC and *MMC** cards. Memory cards with up to 32 GB of storage capacity are supported. The cards must be formatted in the *FAT16** or *FAT32** format.

Music files in the MP3, WMA and AAC[1)] formats are readable. Playlists are in the *M3U** and *PLS** formats are supported.
*DRM** (Digital Rights Management) protected files are non-readable.
Up to 4000 tracks from SD cards can be managed.

435_023

[1)] Files with the ending ".*m4a"**

Reference

For further information, refer to the vehicle Owner's Manual.

SIM card reader

The SIM card reader is only installed if the optional Audi Bluetooth car phone is integrated. It serves as a mechanical receptacle the *SIM card**.

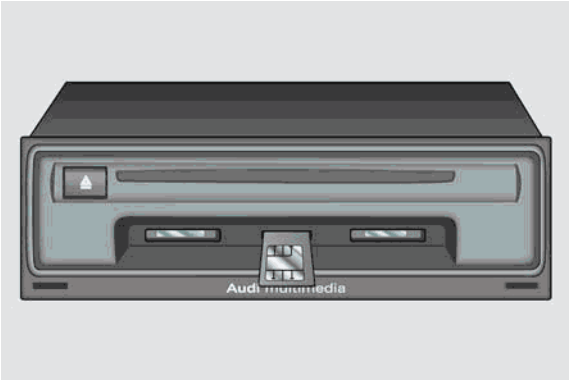

435_028

Hard drive

In the MMI Navigation plus version, the information electronics control unit -1- J794 is equipped with a hard drive. The hard drive has a capacity of 40 GB and is divided into two fixed *partitions** of 30 GB and 10 GB.

The 30 GB partition is used for navigation data, while the 10 GB partition is for the Jukebox.

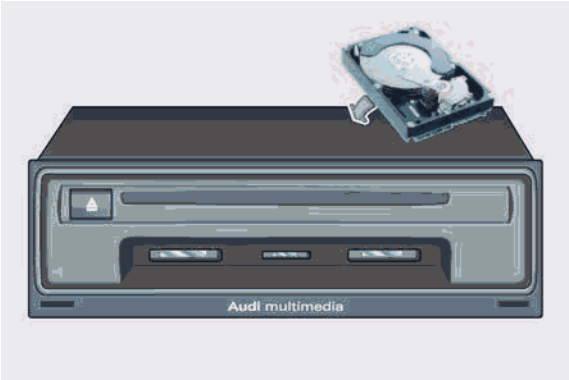

435_069

Jukebox

The Jukebox is available for the storage of music files. Up to 3000 tracks can be stored in the Jukebox. The actual number of tracks is dependent on the compression of the audio files.

Import function
Music files in MP3, WMA and AAC formats can be read in from the following interfaces and imported into the Jukebox:
- DVD drive in J794
- Memory card reader in J794
- Medium at USB port of Audi music interface (USB stick, hard drive, etc.)

Music files on audio CDs cannot be imported.

Playlists (files with endings M3U and PLS) and DRM protected files are non-readable.

435_026

Display of imported tracks in the operating menu of the MMI
Only files can be imported, not folders. Music files are organised by artist, album, track and genre for easy selectability.
The artist, album, track and genre are read out of the *meta information**, included with the track (e.g. *ID3 tag**).
If the source file does not contain any meta information, then the files are stored under Unknown artist, Unknown album, etc.

435_002

Exporting and deleting music files
Files cannot be exported from the Jukebox.
Files can be deleted individually, by folder or entirely.
If the Jukebox is reset to the factory default configuration, all tracks will be deleted from the Jukebox.

435_027

Audi music interface (AMI)

The MMI is optionally available with the Audi music interface. The electronics of the Audi music interface are integrated in the information electronics control unit -1- J794.

The functions of the Audi music interface in the 3rd generation MMI are largely identical to the functions of the Audi music interface in the 2nd generation MMI.

Music files can also be imported from USB media into the Jukebox of the MMI Navigation plus system via the Audi music interface.

435_068

Installation location of the connector on various vehicles:

435_031

AMI connection on an Audi Q5

435_032

AMI connection on an Audi A6

Adaptor cable for the Audi music interface

To connect a terminal device to the Audi music interface, an adaptor cable available through Audi Original Accessories is required.
Various adaptors are available for the following types of connection:

- iPod
- USB
- Mini USB
- AUX In

Nearly all adaptor cables of the Audi music interface from the 2nd generation MMI can be used.
The adaptor cable with the blue sheath must be used for connecting an iPod.

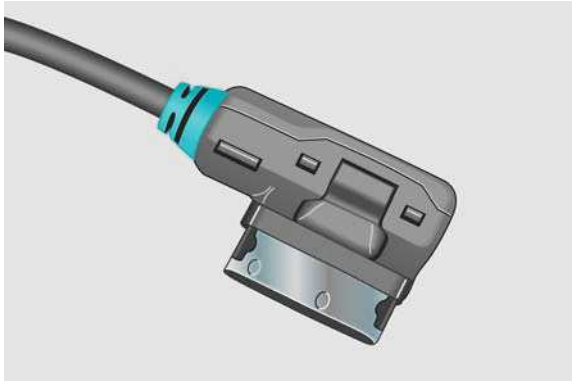

435_033

Reference

For further information about the functioning of the Audi music interface and the use of the adaptor cable, refer to Self Study Programme 387 – Audi Infotainment Systems ´07.

Telephone

As an option, either the universal mobile phone preparation (UHV) or the Audi Bluetooth car phone can be integrated in the information electronics control unit -1- J794, depending on model and market.

Universal mobile phone preparation (UHV)

The functions have largely been adopted from the previous version.
The mobile phone can manage up to 2000 address cards. Each address card can contain up to 5 phone numbers (refer to "Address book").

Data can only be exchanged between the 3rd generation MMI and the mobile phone by Bluetooth. There are no longer any data lines between the mobile phone adaptor and the mounting plate on the vehicle. As before, the power supply and the aerial line are routed from the mounting plate to the mobile phone adapter through contacts.

Since there are no direct data lines between the MMI and mobile phone, the mobile phone in the adaptor is not switched off at "ignition OFF".

New mobile phone adaptor cradles were developed for use on the 3rd generation MMI.
In order to avoid complaints, the new mobile phone cradles and the mounting plate are mechanically coded.

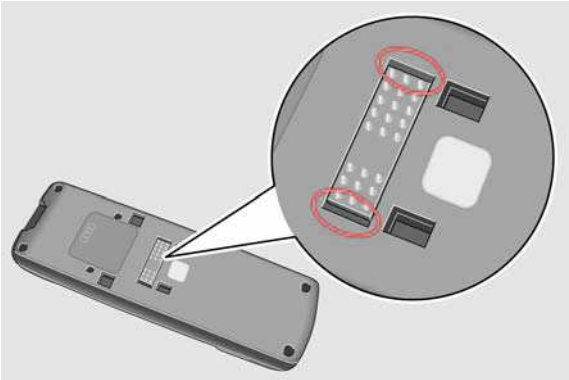

435_024

Back of a mobile phone adaptor cradle

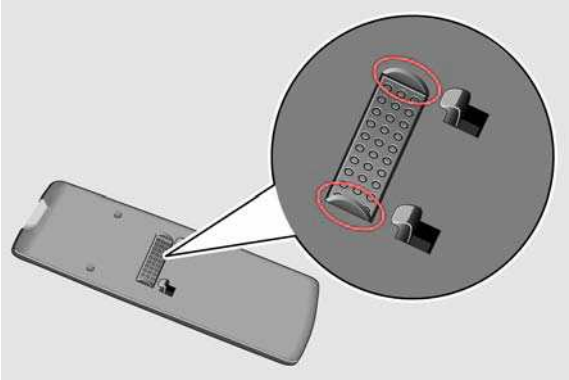

435_013

Mounting plate

Note

The mobile phone cradle mounting plate is not available in all markets.

Audi Bluetooth car phone (not available in all markets)

In the case of the optional Audi Bluetooth car phone, a *GSM** module is integrated in the information electronics control unit -1- J794. The GSM module is a Quadband module which supports GSM 850, GSM 900, GSM 1800 and GSM 1900 frequencies.

In the case of the Audi Bluetooth car phone, an SIM card reader is integrated in the information electronics control unit -1- J794. This means that the Audi Bluetooth car phone can be used without a handset or coupled mobile phone.

A Bluetooth handset is available as an optional extra. It uses different software to the handset of the 2nd generation MMI.

Prioritisation of SIM cards

In the case of the Audi Bluetooth car phone, it is possible to insert two SIM cards simultaneously. One card can be inserted into the SIM card holder on the handset and the other into the SIM card reader in the J794. The SIM card reader in the J794 has priority, causing the SIM card in the handset to be disabled.

The connection to a Bluetooth coupled mobile phone is terminated when a SIM card is inserted directly into a SIM card reader.

The priorities are therefore as follows:
1. SIM card reader in J794
2. SIM card reader in handset
3. SIM card use in mobile phone based on SIM Access Profile

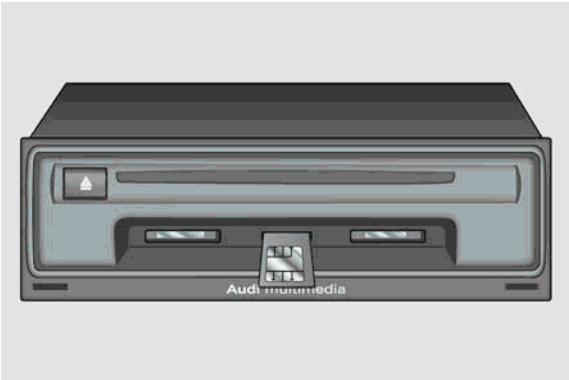

435_034

1. SIM card reader in J794

435_035

2. SIM card reader in handset

435_036

3. SIM card use in mobile phone based on SIM Access Profile

Address book

The MMI system will include an extensive address book if at least one of the optional systems is installed:
– Universal mobile phone preparation (UHV)
– Audi Bluetooth car phone
– Navigation

The address book has storage capacity for 5000 entries. Each entry can, in turn, contain up to 5 phone numbers (e.g. mobile number, land line number, work number, etc.).

As regards address book entries, a distinction is made between entries in the local memory and entries in a coupled mobile phone. Regardless of where the entries are stored, they are displayed in a common address book. Special icons are used for purposes of differentiation.

The local memory has storage capacity for 100 address book entries per profile. Entries in the local memory are represented by a vehicle icon. Both private and business navigation destinations can be generated for each entry in the local memory.

The address book can manage up to 2000 address cards of a coupled mobile phone. Two icons are used for this purpose: the mobile phone icon – for data stored in the mobile phone address book – and the SIM card icon – for data stored on the SIM card.
The mobile phone address book entries are displayed in the address book under "Current profile". All entries can be read out in the "Storage capacity" menu.

Address book profiles

One general profile and up to four personal profiles are available in the address book.

General profile
The general profile shows the address book entries in the local memory and those of the currently connected mobile phone or inserted SIM card[1)].
This only applies if no personal profile has been created for the connected mobile phone or SIM card[1)].
If no mobile phone is connected, only the general entries in the local memory are displayed.

Personal profile
A user can create a personal profile if a mobile phone is coupled or an SIM card[1)] inserted.
The advantage of a personal profile is that the entries in a user's local memory are access protected. The entries in the local memory of a personal profile are only available if an accompanying mobile phone is connected or an accompanying SIM card[1)] is inserted.
Furthermore, these address book entries are immediately available when the mobile phone is reconnected.

Up to 2000 entries from the mobile phone can be stored in each personal profile.
It should be noted that the maximum total capacity of the address book is 5000 entries.
Once 5000 entries have been reached, no further entries will be imported.

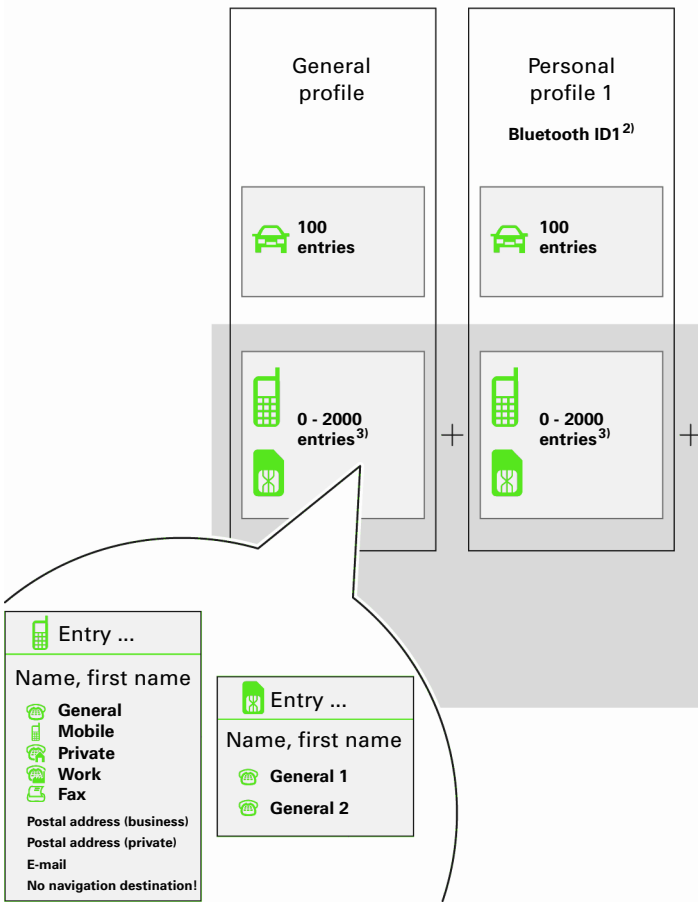

[1)] inserted in SIM card reader of the J794 or the optional handset (available with Bluetooth car phone)

Personal profile with mobile phone
The mobile phone address book entries and the local memory entries currently displayed – vehicle icon – are saved to this profile. Whenever the mobile phone is reconnected to the vehicle, the most recent mobile phone entries are automatically loaded into the vehicle in a background process.
Entries which no longer exist in the mobile phone are deleted from the personal profile.

A mobile phone is assigned to a personal profile based on the mobile phone's Bluetooth ID.

Personal profile with SIM card
The telephone numbers on the SIM card and the local memory entries currently displayed – vehicle icon – are saved to this profile.

Reference

For a detailed description of the procedure for creating a personal profile, refer to the vehicle Owner's Manual.

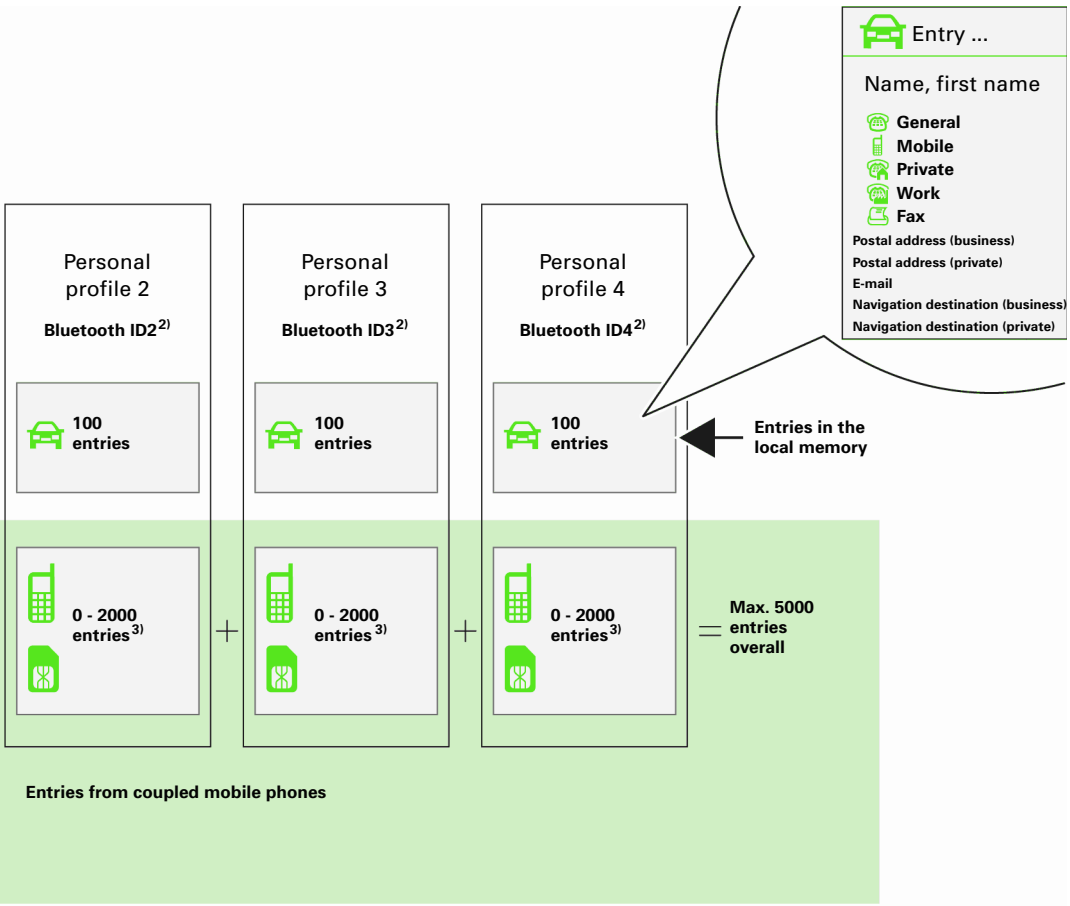

2) If a SIM card is inserted into the SIM card reader on the Audi Bluetooth car phone, then the personal profile is assigned on the basis of the SIM card number.
3) If a SIM card is inserted into the SIM card reader on the Audi Bluetooth car phone, then the maximum number of entries is dependent on the storage capacity of the SIM card. Today's standard SIM cards have storage capacity for up to 250 entries, with two numbers per entry.

435_029

Creating address book entries

There are two ways to create entries in the local memory of the MMI.
The first way is to create an entry using the control button.
The second - more convenient - way is to import complete address cards from a memory card or an USB mass storage device.

435_039

Importing address cards
Address cards – referred to in the menu as "Contacts" – can be imported in *vCard** format (.vcf) using a memory card or an USB mass storage device – in combination with the optional AMI.
The storage medium has capacity for up to 100 vCards.

vCards are "electronic business cards", which, for example, can be created using e-mail programs such as MS Outlook.

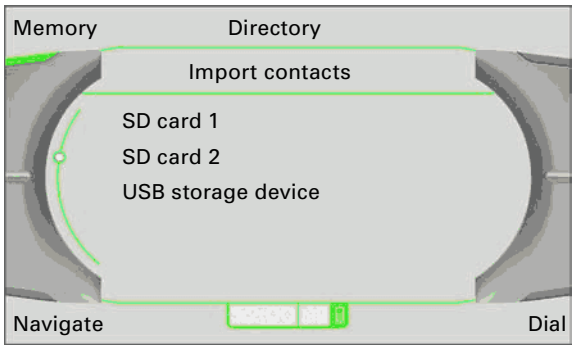

435_040

Exporting address cards
1. The address book entries currently displayed are exported to the memory card or USB mass storage device in vCard format (.vcf).
2. The user receives a copy of his/her selected entries.
3. The user can in turn import these entries into a different vehicle.

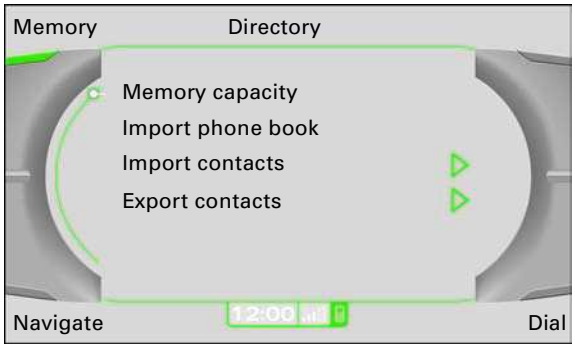

435_041

The entries can be exported individually or packaged – in a single vCard file.

vCards exported from the address book can also be imported into an e-mail program.

435_042

Note

The navigation destinations are exported too, and can be reimported into a vehicle as long as the vCard is not edited on a PC. Navigation destinations are generally not readable by e-mail programs.

Delete address cards

There are several ways to delete address book entries. Choose between

1. Delete entries individually

435_043

2. Delete complete profiles

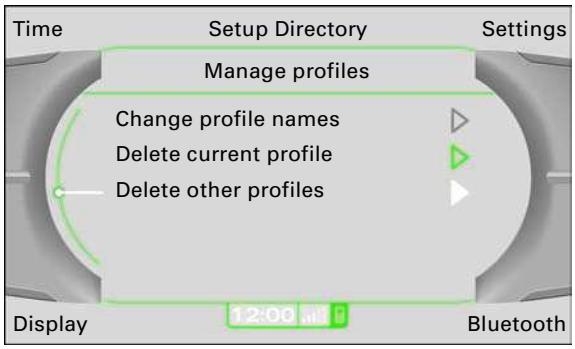

435_044

3. Delete complete address book by reloading factory default settings

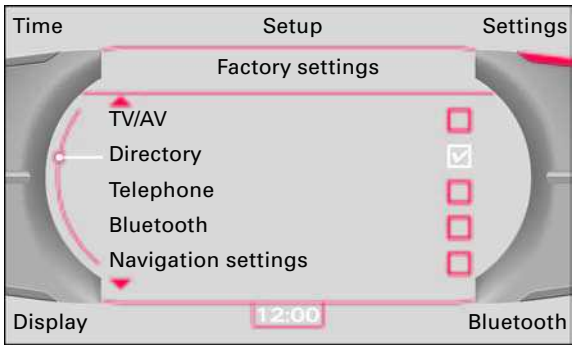

435_045

Reference

For a detailed description of the procedure, refer to the vehicle Owner's Manual.

Speech Dialogue System (SDS)

The speech dialogue system (SDS) makes it easier to operate key navigation, telephone and address book functions. The speech dialogue system always installed whenever the MMI is equipped with at least one of the following options:
– Universal mobile phone preparation (UHV)
– Audi Bluetooth car phone
– Navigation

In the case of the speech dialogue system, each telephone number in the phone book /address book can be called without having to make a speech input beforehand. It is enough to enter the command "Call", followed by a first name and surname. It is also possible to navigate to a stored destination by selecting "Navigate to", followed by a first name and surname.
With whole-word input of navigation destinations, both place names and street names can be pronounced as whole words.

This user-friendly feature is made facilitated by an integral speech processor which generates speech from written words (place names and street names from the navigation system and proper names from the phone book).
Speech output is provided by a "synthesised voice". The speech synthesiser does not play recorded texts, but reads information it is given. This process is known as "Text-to-Speech". As a result, the speech dialogue system can also output variable content such as personal names, place names and street names.

To make the system easier to operate, a number of synonyms were created for each individual command. Example: A call can be initiated using the "Call" or "Phone" commands.

Reference

The various individual commands can be found in the vehicle Owner's Manual, or in the speech dialogue system using the "Help" command.

In addition to the automatically generated speech inputs, up to 50 personal speech inputs can be saved for address cards, e.g. for not easily pronounceable proper names.

The "Custom speech adaptation" function allows the speech operating system to be adapted better to the driver's voice. For this purpose, the driver must repeat 40 specified terms and number combinations.

Note

Whole-word input of navigation destinations and Text-to-Speech output are only available for the MMI Navigation plus system.

A "Short dialogue" can be activated under "Setup"-"Speech dialogue system". This reduces the number and length of feedback messages from the speech dialogue system.

The following beep tones can be deactivated for multistep voice dialogues under "Setup"-"Speech dialogue system" -"Input signal off". The first beep tone is, however, always output.

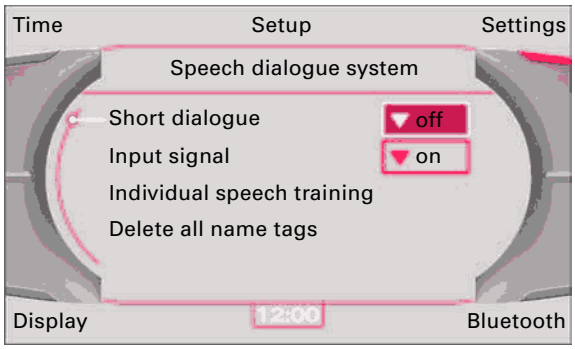

435_046

Note

The speech dialogue system is not available in all languages.
No speech dialogue system is installed on Cabriolet models.

Display
(front information display unit J685)

The 3rd generation MMI has two different displays, both of which are colour-only.

The MMI Navigation plus system features 7-inch *LCD** in *TFT** technology.

Resolution:	800 x 480 pixels
Size:	152.4 x 91.4 mm
Connector colour:	grey

The other versions feature 6.5-inch LCD in TFT technology.

Resolution:	400 x 240 pixels
Size:	143.4 x 79.3 mm
Connector colour:	lilac

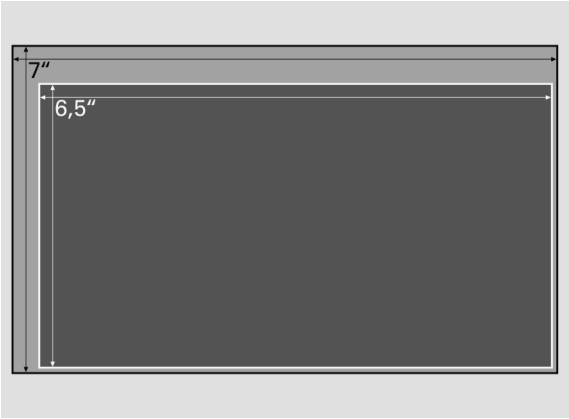

435_047

Comparison of display sizes

Screens can be connected to the information electronics control unit -1- J794 by means of a 4-pin *FAKRA** connector. This multipin connector is used to exchange data across a LIN bus line and transmit video signals across dual *LVDS** lines.
Power is supplied through a separate cable.

*Pop-up window**

In air conditioning settings display mode, the displayed settings are moved transparently across the current menu. This is done making a smooth transition.

435_048

Video signal inputs

The information electronics control unit -1- J794 has two video inputs with different uses. The video signal from the optional TV tuner is fed into the control unit through a separate FAKRA connector. The video signal from the optional rear-view camera is fed in via two pins of the connector block.

TV images are only broadcast when the vehicle is stationary.

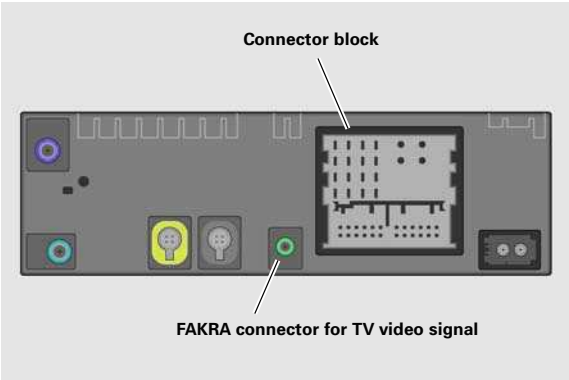

435_049

Multimedia system operating unit E380

The various operating units (4 or 8 buttons for left-hand drive or right-hand drive) were adopted from the 2nd generation MMI.

An additional joystick is only available in combination with the MMI Navigation plus system. The 8-way joystick is integrated in the central turn/push button. The joystick can be used to move the crosshair cursor across the navigation map or to operate the main menu of a video DVD.

435_050

Reference

For more information about the Multimedia system operating unit E380, please refer to SSP 293.

Component protection

The information electronics control unit -1- J794 has a component protection feature.
When the component protection feature is active, all audio outputs entertainment sources are muted. A message text is displayed on the MMI display when the system starts.

The audio outputs for telephone and navigation announcements remain active.

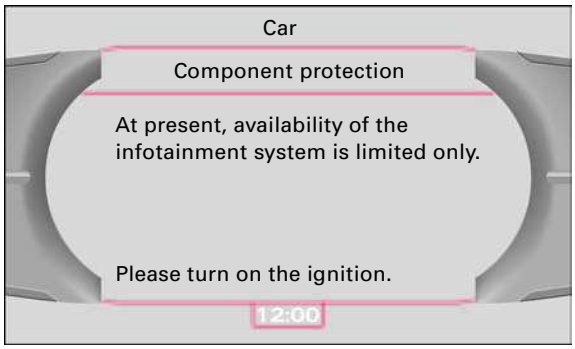

435_025

Radio R (Radio Unit)

The analogue radio, digital radio and basic or standard audio amplifier are integrated in radio R.

435_051

435_052

Reception concept of the analogue tuner

Tuner 1 is an AM/FM tuner. AM reception is provided by tuner 1 only. Tuner 2 is an additional FM tuner. During FM reception, the selected station is received continuously through both tuners 1 and 2 simultaneously.
The signals are then combined to create a composite signal.
The combining of signals works in much the same way as the multituner principle of the hybrid TV tuner (refer to SSP 366).
Tuner 3 is used as a separate tuner for continuous station scanning and reception of *TMC** data. It is not used for the reception of audio from the radio station currently selected.
Because station scanning is performed continuously, all currently receivable FM radio stations are always displayed on the main screen of the FM radio menu. The station list is, therefore, updated on an ongoing basis, and stations no longer available are deleted from the list.
The separate station memory can be used to create a customised station list. Up to 50 stations from all reception bands can be displayed in the order selected by the user.

The reception concept of the digital tuner (DAB tuner) is described on page 36.

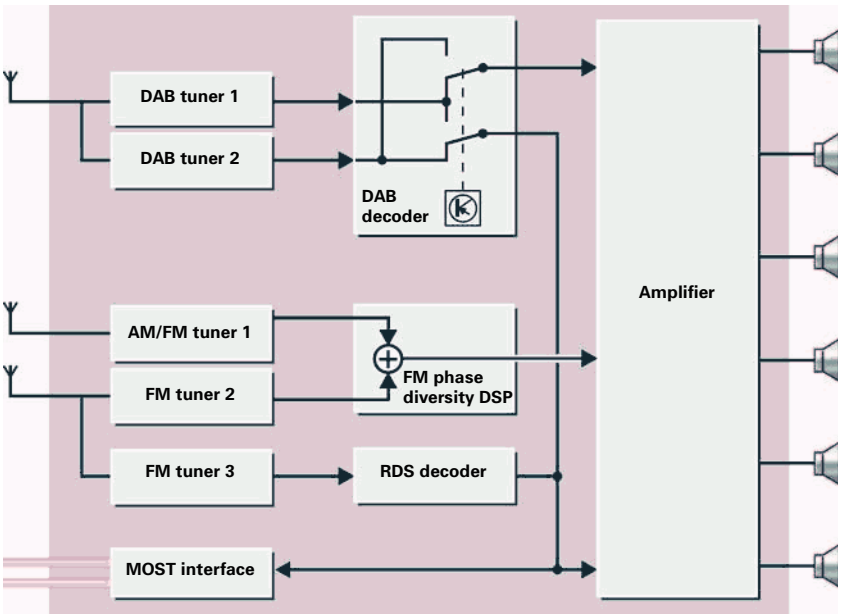

435_053

Schematic of the radio tuner

Station scanning in the analogue radio

FM radio
The frequency bands and interchannel spacings between individual FM stations vary from country to country. The radio station scanning function is matched to the different interchannel spacings according to radio version and how the radio is encoded. In detail, these are:

FM radio for Europe and rest of world	87.5 MHz - 108.0 MHz	0.1 MHz scan increments
FM radio for North and South America	87.9 MHz - 107.9 MHz	0.2 MHz scan increments
FM radio for Japan	76.0 MHz - 90.0 MHz	0.1 MHz scan increments

MW radio
Depending on country code, the following frequency bands are available in the radio:

MW radio for Europe and rest of world	531 kHz - 1602 kHz	9 MHz scan increments
MW radio for North and South America	530 kHz - 1710 kHz	10 MHz scan increments
MW radio for Japan	531 kHz - 1602 kHz	9 MHz scan increments
MW radio for Australia	531 kHz - 1602 kHz	9 MHz scan increments

LW radio
The reception band from 153 kHz to 279 kHz is available for long wave radio.

Reception of Radio Data Signals (RDS)

The radio of the 3rd generation MMI supports most *RDS** services commonly used today.
The RDS service varies depending on which station is selected.
The services used by radio R are described in the following table.

Table listing supported RDS services

PS = Programme Service Name	Indication of programme name on MMI display J685
PTY = Programme Type	Programme type broadcast (pop, classical, news, etc.) In the radio setup, the number of selectable stations can be limited to the channel types selected.
PTY-31	Coding of emergency and disaster announcements Announcements encoded PTY-31 are broadcast over the radio, regardless of which station is currently being listened to. This allows announcements to reach the listeners of all stations simultaneously through only one station. PTY-31 cannot be deactivated.
TP = Traffic Programme	The station provides traffic information.
TA = Traffic Announcement	is broadcast by a traffic radio station during the traffic announcement The radio R records the last announcements up to an overall length of 8 minutes. These announcements can be played repeatedly using the TP memory function. In the INFO Setup of the MMI, two timers can be programmed to record traffic information after the driver exits the vehicle.
EON = Enhanced Other Networks	provides TA reception within a station group When traffic announcements are broadcast by a station within the same station group, the radio switches automatically to the radio station broadcasting traffic information.
TMC = Traffic Message Channel	Reception of traffic radio data for the purposes of dynamic navigation. Dynamic Navigation can be activated through the "Route criteria" menu.
AF = Alternative Frequency	List of frequencies at which the same programme can be received. The radio can, therefore, change over automatically while the vehicle is in motion to a frequency that offers better reception.
PI = Program Identification	Four-digit hexadecimal number which clearly identifies the AF station PS is unsuitable for this purpose since it is a freely defined text box only.
RT = Radio Text	For the transmission of text information from a selected programme; Examples: current artist, track, etc.
REG = Regional	For differentiation between various programmes having same Program Identification (PI), e.g. if a programme broadcasts different content for different regions of the coverage area for a few hours a day

Free traffic information services TMC

The RDS service broadcasts traffic congestion alerts issued by radio stations as data information, together with the other RDS data (e.g. station name, TMC code, etc.). TMC reports can be selected using the INFO button.
Tuner 3 (background tuner) performs this task so that all receivable TMC data can be evaluated with the MMI. The Dynamic Navigation feature can also evaluate traffic reports broadcast by various FM radio stations. In addition, tuner 3 provides optimal display of the station list on the main screen of the radio menu.

435_054

Japanese traffic information services:
In the Japanese version, the FM3 tuner of the navigation unit can be used to record traffic data through the DARC channel (VICS).

Commercial traffic information services

Commercial TMC data providers have been in operation for some time now. Commercial traffic information services broadcast their information in an encrypted form. This TMC data is relayed from the radio directly to the navigation unit. To allow this encrypted data to be evaluated, rights-managed software is integrated in the navigation control unit. In the case of the 3rd generation MMI, the navigation control unit is integrated in the information electronics control unit -1- J794.

Commercial traffic information services are processed by the MMI Navigation plus system for France and the United Kingdom. The licensing fee is included in the purchase price of the MMI Navigation plus system. The MMI Navigation plus system supports services provided by Mediamobile for France and by RAC Trafficmaster Telematics (RTT) for the United Kingdom.

In the USA, we support commercial TMC data supplied by Sirius Satellite Radio.

Digital radio

The radio in the 3rd generation MMI system optionally supports two different digital radio systems. DAB is available virtually world-wide, while the *SDARS** tuner is designed exclusively for the North-American market.
The digital tuner is optional and integrated in the radio R.

435_056

DAB tuner

The DAB tuner is configured as a twin tuner system (refer to diagram 435_053). As a result, the DAB tuner is able to continuously and automatically update the list of receivable stations.
Manual updating is not required - unlike in previous Audi DAB tuners.

Both tuners of the DAB tuner have equal priority and can switch roles: If the programme selected is being received through tuner 1, tuner 2 functions as the station search tuner.
When the DAB twin tuners change over automatically to a different channel, tuner 2 becomes the reception tuner and tuner 1 the station search tuner. In this way, the selected programme can still be received while driving.
If the selected programme can no longer be received via DAB, but only via FM, while driving, then the radio changes over automatically to the same programme in the FM band. This "station tracking" feature can be activated or deactivated via the radio setup. With the "Station tracking" menu, automatic changeover from DAB to FM and from DAB to DAB can be activated or deactivated.

The DAB tuner supports radio text data (Dynamic Label) and image display (Slide Show). This means that, for example, studio images, current photos of artists or cover of music albums can be displayed, provided they are broadcast by the radio station.

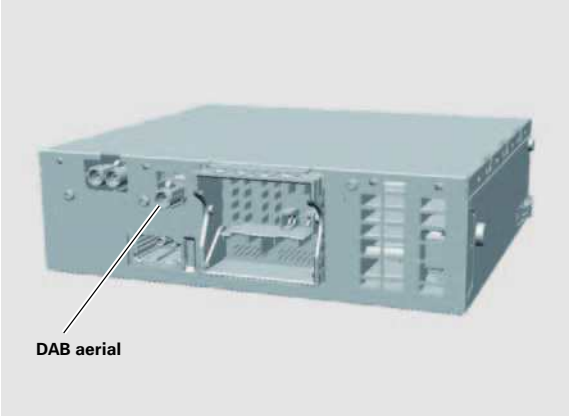

435_052

Note

The DAB tuner is encoded for the country of use, because there are various intermediate frequency bands between channels that can be can be used. If the DAB tuner is not correctly encoded, then reception will be impaired.

SDARS tuner for North America

The SDARS tuner for the North American market is optional, depending on country.
The SDARS module is permanently integrated in the radio. The SDARS tuner receives programmes from the provider Sirius.

For the first time, the digital tuner can also evaluate SAT TMC information.

This pay-on-demand TMC data for the North American market is much more detailed than the information available in Europe. In this case, so-called *Speed & Flow data** is transmitted.
This data is then displayed on the navigation screen.

435_058

435_005

Audio amplifier in radio

An audio amplifier is integrated in radio R, depending on sound system version. A separate amplifier is, therefore, not absolutely necessary.
The individual sound systems are listed below together with their respective internal amplifiers and power output.

Audi A4, A5 and Q5		
Basic Sound System	**4-channel amplifier**	**80 watt amplifier power**
Audi Sound System (standard)	**6-channel amplifier**	**180 watt amplifier power**
Premium Sound System (Bang & Olufsen)	**External amplifier**	
Audi A6 and Q7		
Basic Sound System	**4-channel amplifier**	**80 watt amplifier power**
Standard Sound System	**6-channel amplifier**	**180 watt amplifier power**
Premium Sound System (Bose)	**External amplifier**	
Audi A8		
Standard Sound System	**6-channel amplifier**	**180 watt amplifier power**
Premium Sound System (Bose)	**External amplifier**	
Advanced Sound System (Bang & Olufsen)	**Two external amplifiers**	

Function diagram of the radio with Audi Sound System (standard)

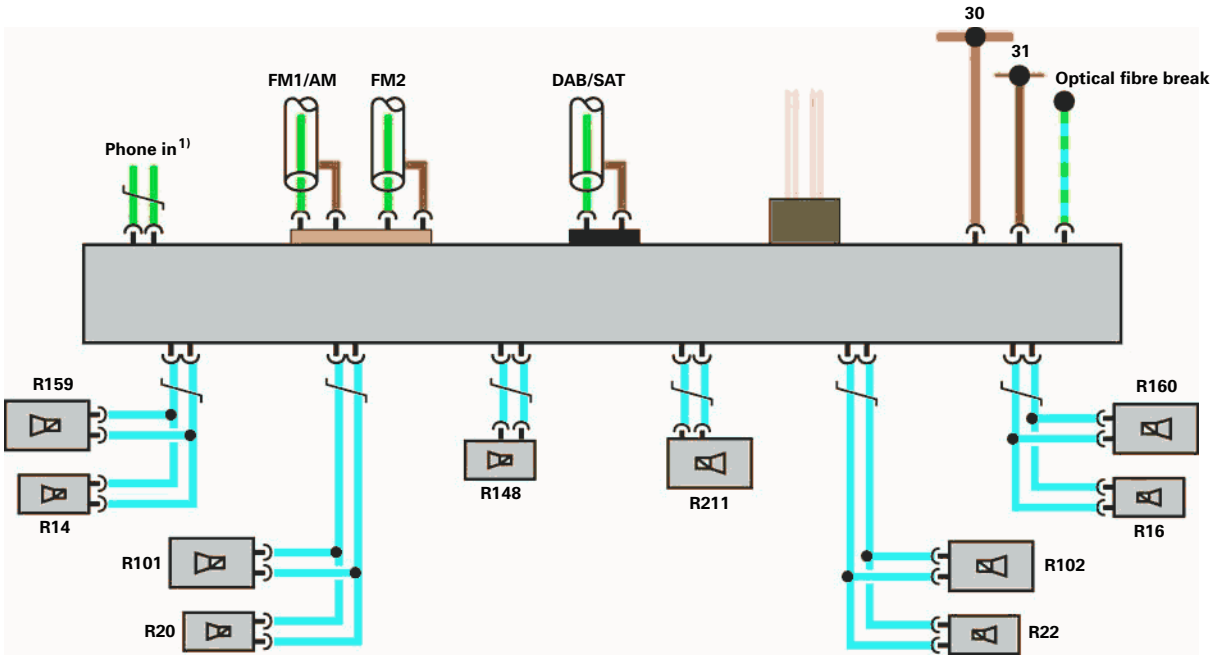

435_062

Legend

R14 Rear left treble loudspeaker
R16 Rear right treble loudspeaker
R20 Front left treble loudspeaker
R22 Front right left treble loudspeaker
R101 Mid-range/bass loudspeaker, front left
R102 Mid-range/bass loudspeaker, front right
R148 Centre loudspeaker
R159 Mid-range/bass loudspeaker, rear left
R160 Mid-range/bass loudspeaker, rear right
R211 Subwoofer

Most
Output
Input
Terminal 30
Terminal 31
bidirectional

[1] **"Phone in" for handsfree set: The audio input for external handsfree sets is only active on vehicles equipped with the optional +9VD (preparation for handsfree set to VDA standard).**

Diagnostics

Both the radio and the amplifier in radio R can addressed using diagnostic address "56 Radio".

Aerial diagnostics

The phase diversity in the radio now also simplifies diagnosis of AM/FM aerials in the 3rd generation MMI. Both the AM/FM1 aerial and the FM2 aerial are now fully diagnosable. This means that a faulty line on the downstream side of the aerial amplifiers can now be detected and a diagnostic trouble code entered in the fault memory.

Schematic diagram

Aerial (AM/FM1)

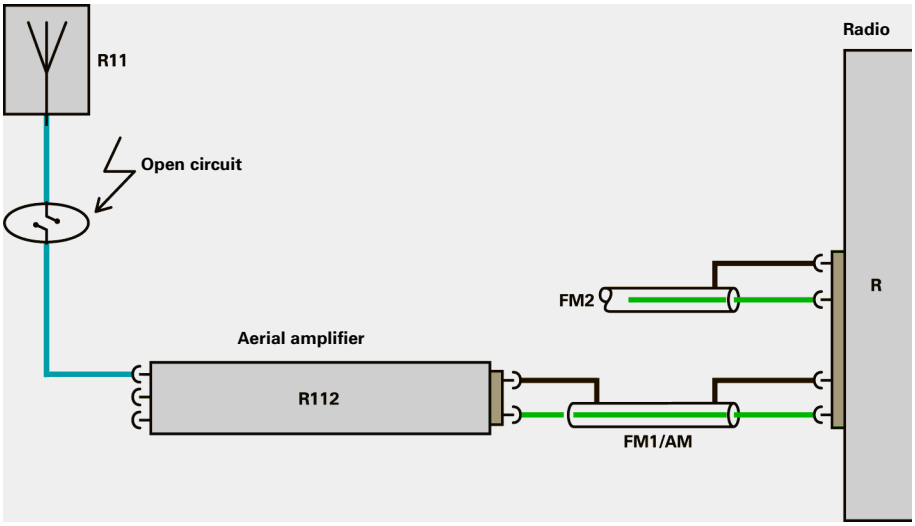

435_059

If the above mentioned fault exists, the following diagnostic trouble code will be entered in the fault memory:
Connection between impedance converter and window aerial: broken

Sound configuration

The sound configuration is the numeric values used to adapt the integrated digital equaliser to the vehicle interior. The amplifier receives sound parameters computed individually for the vehicle online from software database. Consequently, the sound parameters can then be easily optimised by means of an online update, without having to replace the complete amplifier software.
This vehicle-specific configuration replaces the previous coding information used in the amplifiers for vehicle, body shape, engine and seat upholstery (fabric/leather), etc.

Component protection

The radio control unit has a component protection feature. When the component protection function is active, its response varies according to trim level, and will be explained in a separate section later:

Radio with external amplifier:
The audio signal is interrupted cyclically for 1 second during AM/FM/DAB/Sirius reception.

Radio with internal amplifier:
The audio signal is interrupted cyclically for 1 second during AM/FM/DAB/Sirius reception. In addition, the left audio channel is muted for all entertainment sources.

Telephone calls and navigation directions are transmitted unobstructed.

Installation location and attachment

The radio is located in the luggage compartment on the left hand side, behind the cover in the Audi A4, A5, Q5, A6 and A8 (D3).
The radio is made with two different housings. A version with a spring clip attachment system is, for example, used on the Audi A6, so the radio fits into the existing mounting bracket in the luggage compartment.
The version with screw plate attachment system is used on the Audi A8 only.

Basic Sound System

The Basic Sound System consists of radio R with an integrated 4-channel amplifier and 4 or 8 loudspeakers, depending on market. All loudspeakers are connected to radio R.

In the case of the Basic Sound System, the radio receives all audio signals from other control units, such as the CD changer, via MOST bus and relays them to the loudspeakers.

All diagnostic functions for the Basic Sound System can be invoked using the address word "56 Radio".

Standard Sound

The Standard Sound System is also known as the Audi Sound System. It consists of radio R, together with an integrated six-channel amplifier and a total of 10 loudspeakers (11 loudspeakers in the Audi Q7). All loudspeakers are connected to radio R.

In the case of the Standard Sound System, the radio receives all audio signals from other control units, such as the CD changer, via MOST bus and relays them to the loudspeakers.

All diagnostic functions for the Standard Sound System can be invoked using the address word "56 Radio".

Premium and Advanced Sound

Premium Sound Systems are:
- Bang & Olufsen Sound System on the Audi A4, A5 and Q5
- Bose Sound System on the Audi A6 and Q7
- Bose Sound System on the Audi A8

Advanced Sound systems are:
- Bang & Olufsen Advanced Sound system on the Audi A8 and Audi Q7

All Premium Sound Systems have external amplifiers. The total number of loudspeakers varies from model to model. The amplifiers were adopted from the 2nd generation MMI system and the software adapted to the new features of the 3rd generation MMI system. The accompanying loudspeakers and the microphones for noise compensation system are unchanged compared with the 2nd generation MMI system. For details of each sound system, refer to the SSPs covering the respective vehicles.

All diagnostic functions of the Premium and Advanced Sound Systems can be invoked using address word "47".

Reference

For more information about the Advanced Sound System, refer to SSP 366.

Component protection feature of external amplifiers

If component protection is active, then all entertainment signals are output through the front left channel only.

Telephone calls and navigation directions are transmitted unobstructed.

Surround Sound with DVD playback

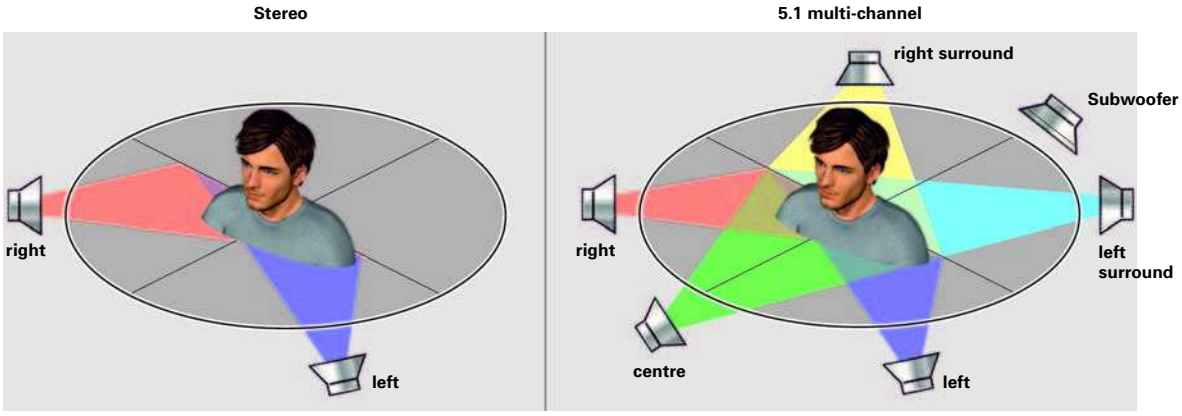

435_004

In the case of DVD videos, the Dolby Digital or DTS (Digital Theatre System) audio format is often used for sound reproduction. Both systems save audio signals to six different channels. In technical jargon, this is also known as 5.1 multi-channel sound.

The individual channels are:

- front left
- front centre
- front right
- rear left
- rear right
- Subwoofer

5

1

5.1 multi-channel sound

The 3rd generation MMI also transfers audio from video DVDs to the Premium amplifier through six separate audio channels. This provides an authentic video DVD sound experience.

All other media (CD, digital radio, FM radio, MP3) are transferred to the amplifier in stereo. If a surround setting for stereo sources is selected in the MMI audio setup, the signals to the surround loudspeakers in the amplifier are slightly delayed compared with the signals to the other loudspeakers. This also creates an ambience effect.

TV tuner R78

DVB-T Hybrid Tuner

The well-known hardware of the *DVB** T Hybrid Tuner from the 2nd generation MMI is used.
The TV tuner software was adapted to the special communication and diagnostic requirements of the 3rd generation MMI system.
A number of customer-benefitting improvements and new functions were also included in the TV tuner software.

The DVB T Hybrid Tuner is configured for reception of country-specific analogue *PAL**, *SECAM** and *NTSC** signals and the digital DVB T Standard (Digital Video Broadcast over Terrestrial with *MPEG-2** Video Coding).

Due to the difficult conditions for reception by an in-vehicle TV receiver, the TV tuner has three receiver units (tuners) specially designed for mobile reception. These units are operated on three independent aerial systems.

The TV tuner is configured as a fully mobile-capable "diversity receiver", i.e. "multi-path receiver".
Interference-free analogue video signal reception or interruption-free DVB T reception are ensured by clever combination and correction of the three reception signals.
Depending on which analogue or digital TV station is selected by the user, the signals received from each path are analysed, evaluated and combined by the analogue and digital diversity systems integrated in the tuner.
In addition, the TV tuner runs special scans to ensure that the customer is always offered a current station list of all analogue and digital stations with good reception.

The Audi DVB T receiver uses real triple DVB T Diversity with circuitry and HF receivers optimised specially for DVB T reception.

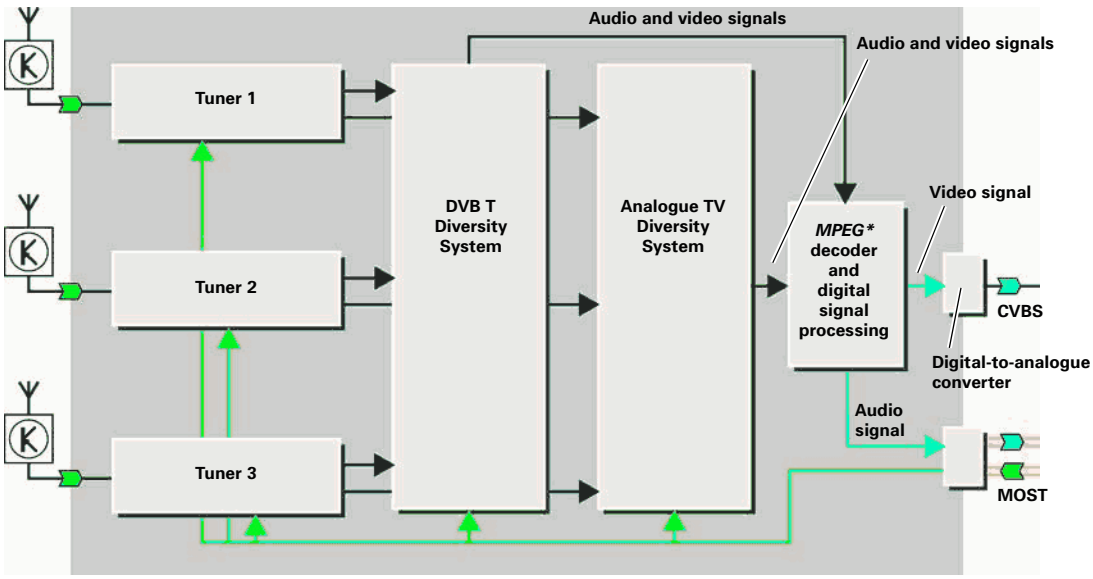

435_063

The DVB T receiver has the following basic functions:
- Automatic scanning of analogue and digital TV programmes and digital DVB T radio stations in the background
- Teletext capability with page memory (1000 pages)
- Electronic Program Guide (*EPG* *) with overview and detailed information
- Clear and user-friendly on-screen display of additional information
- Selection of multilingual audio channels (dual audio)
- Connectivity for two external audio/video sources (e. g. Mediaplayer, games console, etc.)

The TV hybrid tuner is optional and located in the luggage compartment at the rear left.
It can be diagnosed with diagnostic address "57 TV tuner".

Reference

For further information, refer to the vehicle Owner's Manual.

The technology of the TV hybrid tuner is described in Self Study Programme 366.

CD changer R41

The well-known CD changer from the 2nd generation MMI is used. The software was adapted to the characteristics of the 3rd generation MMI.

The CD changer R41 supports the Red Book Standard for audio CDs, and both MP3 and WMA compression, as well as their metadata. For the current specification, refer to the vehicle Owner's Manual.

The CD changer is optional and housed in the glove box. It can be diagnosed with diagnostic address "0E Mediaplayer 1".

Data bus diagnostic interface J533

The data bus diagnostic interface is the diagnostic master for the MOST bus. It is responsible for optical fibre break diagnostics and transfers the diagnostic data generated by the control units in the MOST bus to the diagnostic tester.

The data bus diagnostic interface has the address word "19 diagnostic interface with MOST".

Software update

The MMI software can be flashed using the CD in the CD/DVD drive of the information electronics control unit -1- J794.
The MOST control units can also be flashed in the SD card reader of the information electronics control unit -1- J794 using an SD card, or at the Audi music interface using an USB stick.

435_064

Reference

For a detailed description of the procedure, please refer to the current service literature.

Encoding

The 3rd generation MMI system can only be encoded using Software Version Management (SVM), and by making an online connection to the vehicle diagnostic tester.
No information on encoding the control unit is available in the vehicle diagnostic tester.
This simplifies encoding at the dealership and helps to avoid malfunctioning of the control units due to incorrect encoding.

435_065

Note

Online encoding applies to the 3rd generation MMI on all vehicles.

Replacing control units

If a fault occurs in a component of information electronics control unit -1- J794, then the control unit has to be replaced completely.
In the case of the MMI Navigation plus system, customer data can be saved before removing the faulty unit. This means, for example, that the customer does not have to re-enter any navigation destinations.
Examples of customer data include stored address books, navigation destinations and various sound settings.

435_066

Reference

For a detailed description of the procedure for replacing the information electronics control unit -1- J794, please refer to "Guided Fault Finding" function of the diagnostic tester.

Glossary

This glossary explains all terms shown in italics or marked with an asterisk (*) in this Self Study Programme.

(ID3) tag
Label
Additional information (e.g. track, artist) stored in an MP3 file.

AAC
Advanced Audio Codec
Compression standard for audio data

AM
Amplitude Modulation
Modulation process in which the amplitude of the carrier frequency is modulated.

AUX
Auxiliary
Signal input on audio amplifiers which differs only from other available inputs (such as CD or tuner) in that it has no fixed device name and can be used for any devices with a Line output.

AV input
Audio/Video input
Signal input on video amplifiers

Birdview
Bird's-eye view
The map display on the navigation system is a three-dimensional perspective view from the front and above – much like a flying bird would see it.

CD
Compact Disc
Optical storage medium, where data is etched by laser onto a plastic disc coated with a thin layer of metal.

DAB
Digital Audio Broadcast
Digital transmission standard for terrestrial reception of radio programmes.

DRM
Digital Rights Management
Digital rights management system, for example, for media protection or billing (websites, such as Napster).

DVB
Digital Video Broadcast
Digital TV as DVB-T (terrestrial), DVB-S (via satellite), DVB-C (via cable) or DVB-H (for handhelds).

DVD
Digital Versatile Disc
Further development of the CD with 4.7 GB of storage capacity for singlelayer DVDs (DVD, DVD±R, DVD±RW) and 8.5 GB for dual/double-layer DVDs (DVD±R-DL, DVD±RW-DL).

EPG
Electronic Program Guide
EPG can often be received from digital stations as an additional service.

FAKRA
Technical Standards Committee of the Motor Vehicle Industry
The FAKRA develops, adopts and represents national standards in the automotive field. The term FAKRA connector therefore refers to a specially standardised connector in automotive manufacture.

FAT16
File Allocation Table
FAT is a file system and was developed by Microsoft. Today, FAT16 is used for most types of mobile data media up to a size of 2 GB.

FAT32
File Allocation Table
FAT is a file system and was developed by Microsoft. FAT32 can, for example, be used for mobile data media with a capacity of 2 GB or higher.

CVBS
Colour Video Blanking Signal
A form of video transmission where all signals are transmitted across a single cable.

FM
Frequency Modulation
Modulation process in which the carrier frequency by the signal to be transmitted is modulated.

GSM
Global System for Mobile Communications
Standard for digital mobile radio networks, which is mainly used for telephony, but also for data transfer and SMS.

HFP
Handsfree Profile
Refer to SSP 387

JPEG
Joint Photographic Experts Group
Special video data format used for the compression of video data.

LCD
Liquid Crystal Display

LVDS
Low Voltage Differential Signalling
Interface standard for high-speed data transfer; Data is transferred by relatively low, alternating (differential) voltage.

M3U
Open playlist file format (MP3-URL)
File format used for the storage of playlists.

M4A
mp4a (MPEG-4 audio)
Refer to MP4 (non DRM protected audio file to MP4 standard)

M4V
mp4v (MPEG-4 video)
Refer to MP4 (non DRM protected video file to MP4 standard)

Manoeuvre list
List containing information on upcoming changes of direction.

Meta information
Data containing additional information about other data. In the case of music files, this is, for example, artist, album, track, etc.

MPEG
Moving Pictures Expert Group
Expert group tasked with the standardisation of video compression technology.

MPEG-2
Compression standard for video and audio formats, mainly used for DVDs and DVB.

MMC
Multimedia Card
Digital memory card

MP3
Moving Pictures Expert Group Layer 3
(MPEG-1 Audio Layer 3)
Compression standard for video, audio and picture formats.

MP4
Abbreviated form of MPEG-4
Compression standard for video, audio and picture formats. To make data easier to differentiate, the data files have endings such as .m4a or .m4v.

NTSC
National Television Systems Committee
US institution; Today NTSC defines a television standard mainly used in North America and Japan.

PAL
Phase Alternation Line
A system used for the analogue picture transfer in colour television. Every second picture line, the red colour differential signal is transmitted with a phase offset of 180° relative to the preceding picture line. As a result, transmission errors are less noticeable to the viewer.

Partition
A computer hard drive can be divided (partitioned) into several partitions. The operating system treats each individual partition as separate hard drive.

PBAP
Phone Book Access Profile
Profile for the transmission of vCards from the mobile phone's phone book to a coupled device.

PLS
Playlists
File format used for the storage of playlists.

Pop-up window
An additional on-screen display or information field.

RDS
Radio Data System

SAP
SIM Access Profile
Refer to SSP 387

SD
Secure Digital Memory Card
A memory card used, for example, for MP3 players, digital photos, etc.

SDARS
Satellite Digital Audio Radio Services
Digital radio standard for commercial satellite radio in North America.

SDHC
SD High Capacity
Special SD cards which, based on the extended standard, have a higher storage capacity of up to 32 GB.

SECAM
Séquentiel couleur à mémoire
"Sequential Colour with Memory" is an analogue television standard which today is predominantly used in France and Eastern Europe.

SIM card
Subscriber Identity Module card
A telephone chipcard used for user identification in the network.

SMS
Short Message Service
A telecommunications service for the transmission of text messages.

Speed & Flow Data
Current traffic flow data which, for instance, is separately available for major roads in Los Angeles.

Splitscreen function
Additional information is displayed on the left side of the screen.

TFT
Thin Film Transistor
Each pixel on a TFT display is rendered by 3 thin film transistors.

TMC
Traffic Message Channel
Reception of traffic radio data for dynamic navigation purposes.

UHV
Universal mobile phone preparation

USB
Universal Serial Bus
A port used for data exchange between computers and auxiliary devices.

vCard
Electronic business card
File format used for the direct incorporation of address cards into e-mail programs. The standard file ending is .vcf.

WMA
Windows Media Audio
Special audio format under Microsoft Windows

Vorsprung durch Technik **www.audi.de**

435

All rights reserved. Technical specifications are subject to change without notice.

Copyright
AUDI AG
I/VK-35
Service.training@audi.de
Fax +49-841/89-36367

AUDI AG
D-85045 Ingolstadt
Technical status: 04/09

Printed in Germany
A08.5S00.51.20