Body Electrical System

GENERAL

REFERENCE SERVICE TOOLS EFCBCDBB

Tool Number	Tool Name
TRK00A	Wiring Repair Kit
TRK001	Wire Stripper Set
TRK002	Remover Tool Set
TRK003	Terminal Tension Gauge Set
TRK004	Cable Tie Set
TRK005	Shrink Tube Set
TRK006	Jump Connector kit(A)
TRK007~10	General Connector Kit(B~E)
TRK011	Terminal With Lead Wire Kit(F)
TRK012	Composition Kit(G)
TRK013	Lead Wire Set
TRK014	Carrying Case
TRK015	User's Guide & Parts Information
TRK016	Inner Box(Large)
TRK017	Inner Box(Small)

* For the wiring repair kit, refer to the User's guide & parts Information of the Wiring Repair Kit (Pub. No. : OSG200208).

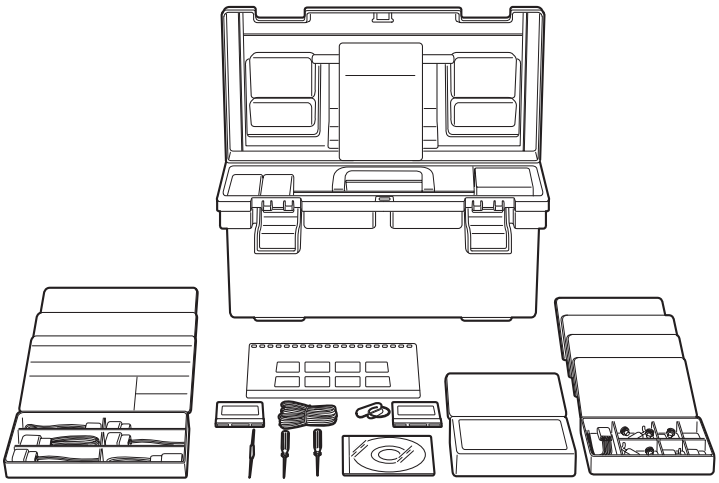

LTLG990B

GENERAL TROUBLESHOOTING INFORMATION ECBDF6CC

BEFORE TROUBLESHOOTING

1. Check applicable fuses in the appropriate fuse/relay box.

2. Using the battery checker (MCR-570 KIT), check the battery for damage, state of charge, and clean and tight connections.
(Refer to the Engine Electrical System - Battery)

NOTE

- *Do not quick-charge a battery unless the battery ground cable has been disconnected, otherwise you will damage the alternator diodes.*
- *Do not attempt to crank the engine with the battery ground cable loosely connected or you will severely damage the wiring.*

3. Check the alternator belt tension.

HANDLING CONNECTORS

1. Make sure the connectors are clean and have no loose wire terminals.

2. Make sure multiple cavity connectors are packed with grease (except watertight connectors).

3. All connectors have push-down release type locks (A).

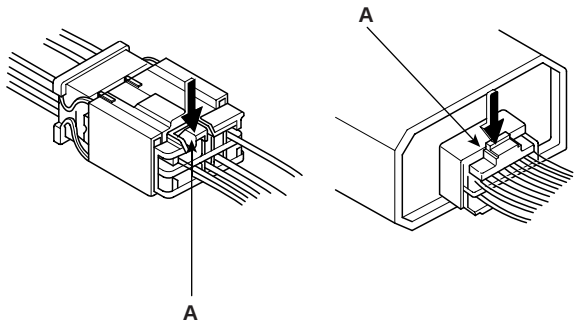

ETKD150A

4. Some connectors have a clip on their side used to attach them to a mount bracket on the body or on another component. This clip has a pull type lock.

5. Some mounted connectors cannot be disconnected unless you first release the lock and remove the connector from its mount bracket (A).

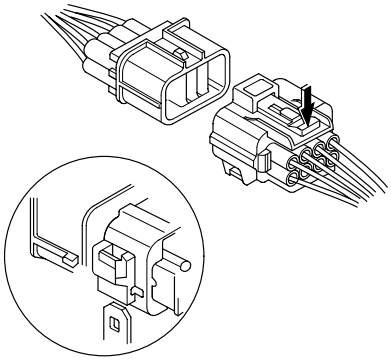

ETKD150B

6. Never try to disconnect connectors by pulling on their wires; pull on the connector halves instead.

7. Always reinstall plastic covers.

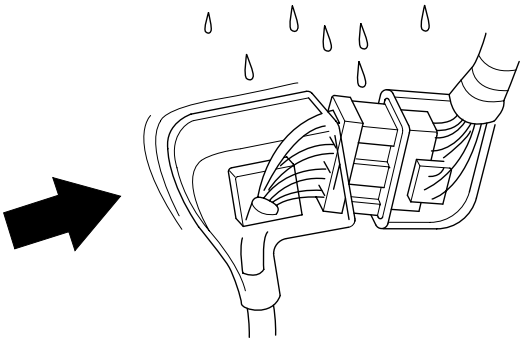

ETKD150C

8. Before connecting connectors, make sure the terminals (A) are in place and not bent.

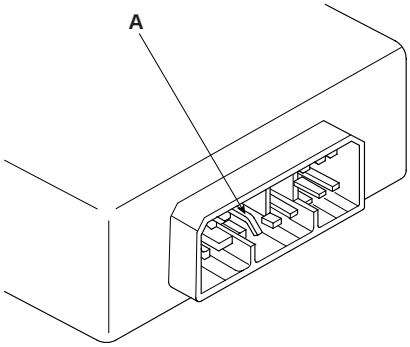

ETKD150D

9. Check for loose retainer (A) and rubber seals (B).

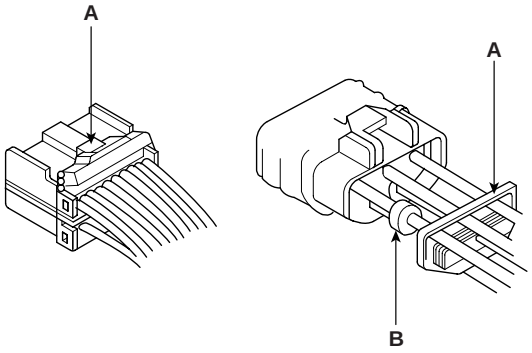

ETKD150E

10. The backs of some connectors are packed with grease. Add grease if necessary. If the grease (A) is contaminated, replace it.

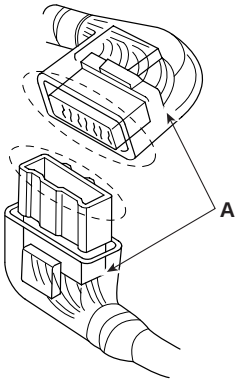

ETKD150F

11. Insert the connector all the way and make sure it is securely locked.

12. Position wires so that the open end of the cover faces down.

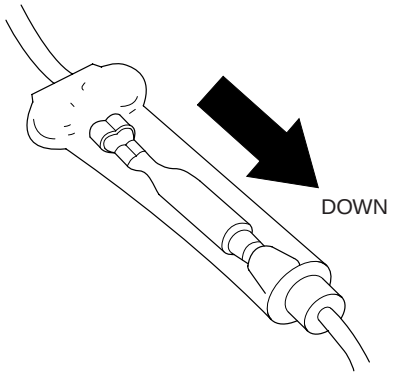

ETKD150G

HANDLING WIRES AND HARNESSES

1. Secure wires and wire harnesses to the frame with their respective wire ties at the designated locations.

2. Remove clips carefully; don't damage their locks (A).

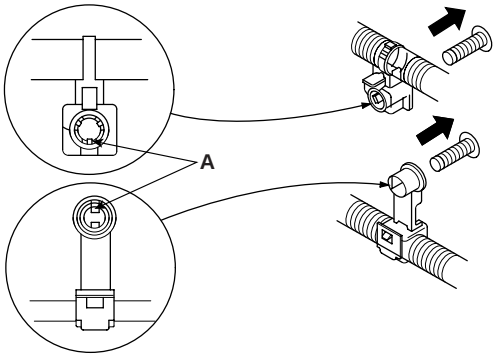

ETKD150H

3. Slip pliers (A) under the clip base and through the hole at an angle, and then squeeze the expansion tabs to release the clip.

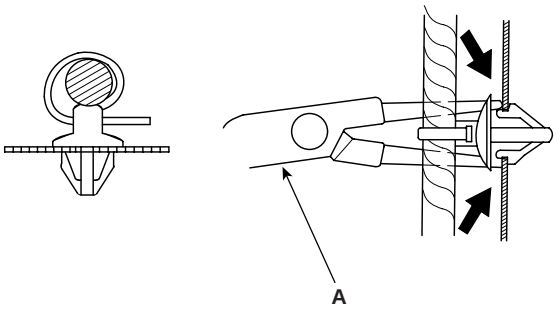

ETKD150I

4. After installing harness clips, make sure the harness doesn't interfere with any moving parts.

5. Keep wire harnesses away from exhaust pipes and other hot parts, from sharp edges of brackets and holes, and from exposed screws and bolts.

6. Seat grommets in their grooves properly (A). Do not leave grommets distorted (B).

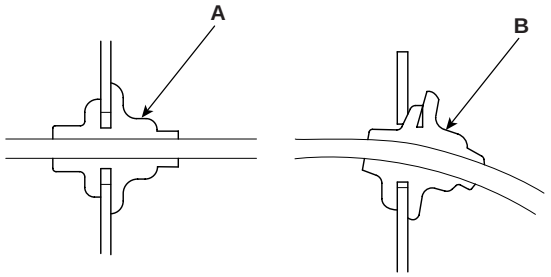

ETKD150J

TESTING AND REPAIRS

1. Do not use wires or harnesses with broken insulation. Replace them or repair them by wrapping the break with electrical tape.

2. After installing parts, make sure that no wires are pinched under them.

3. When using electrical test equipment, follow the manufacturer's instructions and those described in this manual.

4. If possible, insert the remover tool from the wire side (except waterproof connector).

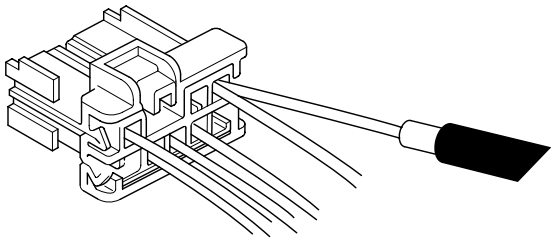

ETKD150K

5. Use a probe with a tapered tip.
   Refer to the user's guide in the wiring repair kit (Pub No. : TRK 015.)

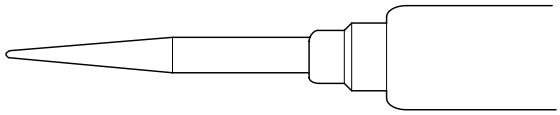

ETKD150L

FIVE-STEP TROUBLESHOOTING

1. Verify the complaint
   Turn on all the components in the problem circuit to verify the customer complaint. Note the symptoms. Do not begin disassembly or testing until you have narrowed down the problem area.

2. Analyze the schematic
   Look up the schematic for the problem circuit.
   Determine how the circuit is supposed to work by tracing the current paths from the power feed through the circuit components to ground. If several circuits fail at the same time, the fuse or ground is a likely cause.
   Based on the symptoms and your understanding of the circuit operation, identify one or more possible causes of the problem.

3. Isolate the problem by testing the circuit.
   Make circuit tests to check the diagnosis you made in step 2. Keep in mind that a logical, simple procedure is the key to efficient troubleshooting.
   Test for the most likely cause of failure first. Try to make tests at points that are easily accessible.

4. Fix the problem
   Once the specific problem is identified, make the repair. Be sure to use proper tools and safe procedures.

5. Make sure the circuit works
   Turn on all components in the repaired circuit in all modes to make sure you've fixed the entire problem. If the problem was a blown fuse, be sure to test all of the circuits on the fuse. Make sure no new problems turn up and the original problem does not recur.

AUDIO SYSTEM

SPECIFICATION EDB048F2

AUDIO

Item		Specification			
Model		RADIO/CD (M445)	RADIO / TAPE / CD/MP3 (M455)	RADIO / TAPE / 6CDC / MP3 (M465)	RADIO / 6CDC / MP3 (D466)
Power supply		DC 14.4V			
Rated output		Max 43W x 4		Max 3.2Vrms	Max 4.5Vrms
Antenna		80PF 75Ω			
Tuning type		PLL synthesized type			
Frequency range / Channel space	FM	87.5 ~ 108.0 MHz/100 KHz (General), 50KHz(Europe)			
	AM	531 ~ 1602 KHz/9 KHz (General)			
	MW	522 ~ 1620 KHz/9 KHz (Europe)			
	LW	153 ~ 279 KHz/1 KHz (Europe)			

SPEAKER & EXTERNAL AMPLIFIER

Item		M445 (Internal Amplifier)	M455	M465	D466
Input Power (W)	Front	50	50	50	40
	Rear	50	50	50	40
	Tailgate	-	-	-	32
	Tweeter	50	50	50	20
	Front center	-	-	-	32
	Sub woofer	-	-	50	64
Speaker Impedance (Ω)	Front	3.4 ± 0.5	3.4 ± 0.5	2 ± 0.3	2 ± 0.4
	Rear	3.4 ± 0.5	3.4 ± 0.5	2 ± 0.3	2 ± 0.4
	Tailgate	-	-	-	2.15 ± 0.25
	Tweeter	3.4 ± 0.5	3.4 ± 0.5	3.4 ± 0.5	4 ± 0.8
	Front center	-	-	-	2.15 ± 0.25
	Sub woofer	-	-	2 ± 0.3	1.4 ± 0.25
Speaker Number		6	6	7	10
External Amplifier	Power supply	DC 14.4V	DC 14.4V	DC 14.4V	DC 14.4V
	Output power	MAX 43W x 4	MAX 43W x 4	MAX 310W (55W x 4CH + 45W x 2CH)	MAX 660W (55W x 12CH)
	Speaker Impedance (Ω)	4Ω x 4	4Ω x 4	2Ω x 5 + 3.4Ω x 2	2Ω x 5 + 3.4Ω x 2 + 1.4V

COMPONENT LOCATION E713F673

This illustration shows the LHD type.
RHD type is symmetrical.

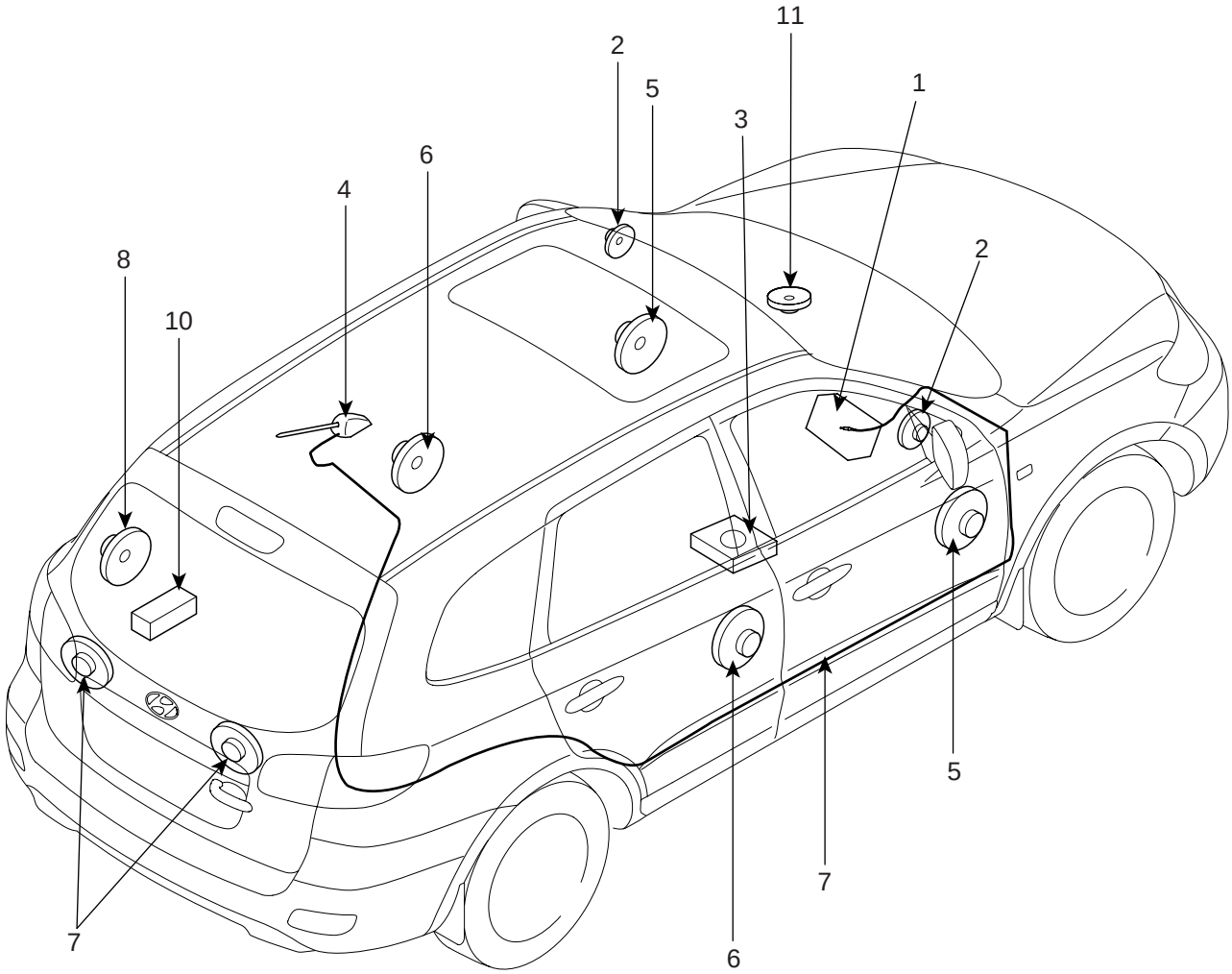

1. Audio unit
2. Tweeter speaker
3. External amplifier
4. Roof antenna
5. Front door speaker
6. Rear door speaker
7. Tailgate speaker
8. Sub-woofer speaker
9. Antenna feeder cable
10. 6CD changer
11. Crash pad center speaker

SCMBE6001L

TROUBLESHOOTING EABDCBC8

CUSTOMER COMPLAINT ANALYSIS CHECK SHEET

TROUBLE IN	☐ ALL ☐ AM ☐ FM ☐ TAPE ☐ CD ☐ MP3 ☐ CD changer ☐ AMP ☐ Others
TROUBLE OCCURS	☐ Always ☐ Engine start ☐ Engine Running ☐ Cold ☐ Warm ☐ Sometimes ☐ Most of the time ☐ Engine off
TYPE OF TROUBLE	☐ Will not play ☐ Tape speed not proper ☐ Weak ☐ Squealing noise ☐ Eats tape ☐ Display/illumination poor ☐ CD skips & jumps ☐ Tape/CD will not eject or insert ☐ Others (Describe) :
OTHERS	▶ Customer complaint contents : ▶ Have you checked customer's defects :
* Using the customer complaint analysis check sheet for reference, ask the customer for as much detail as possible about the problem.	

BT1G001A

There are six areas where a problem can occur: wiring harness, the radio, the cassette tape deck, the CD player, and speaker. Troubleshooting enables you to confine the problem to a particular area.

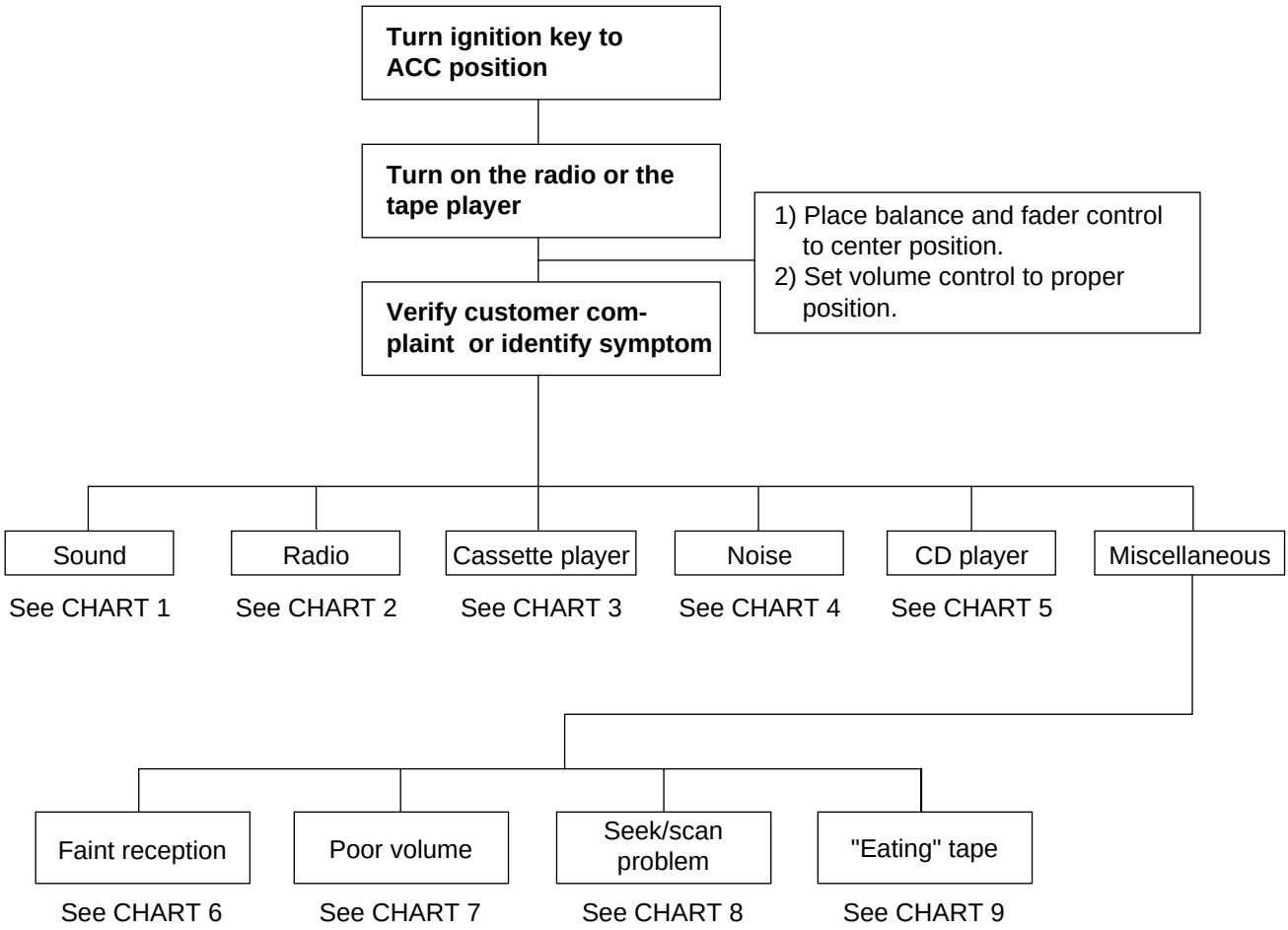

LTIF001A

CHART 1

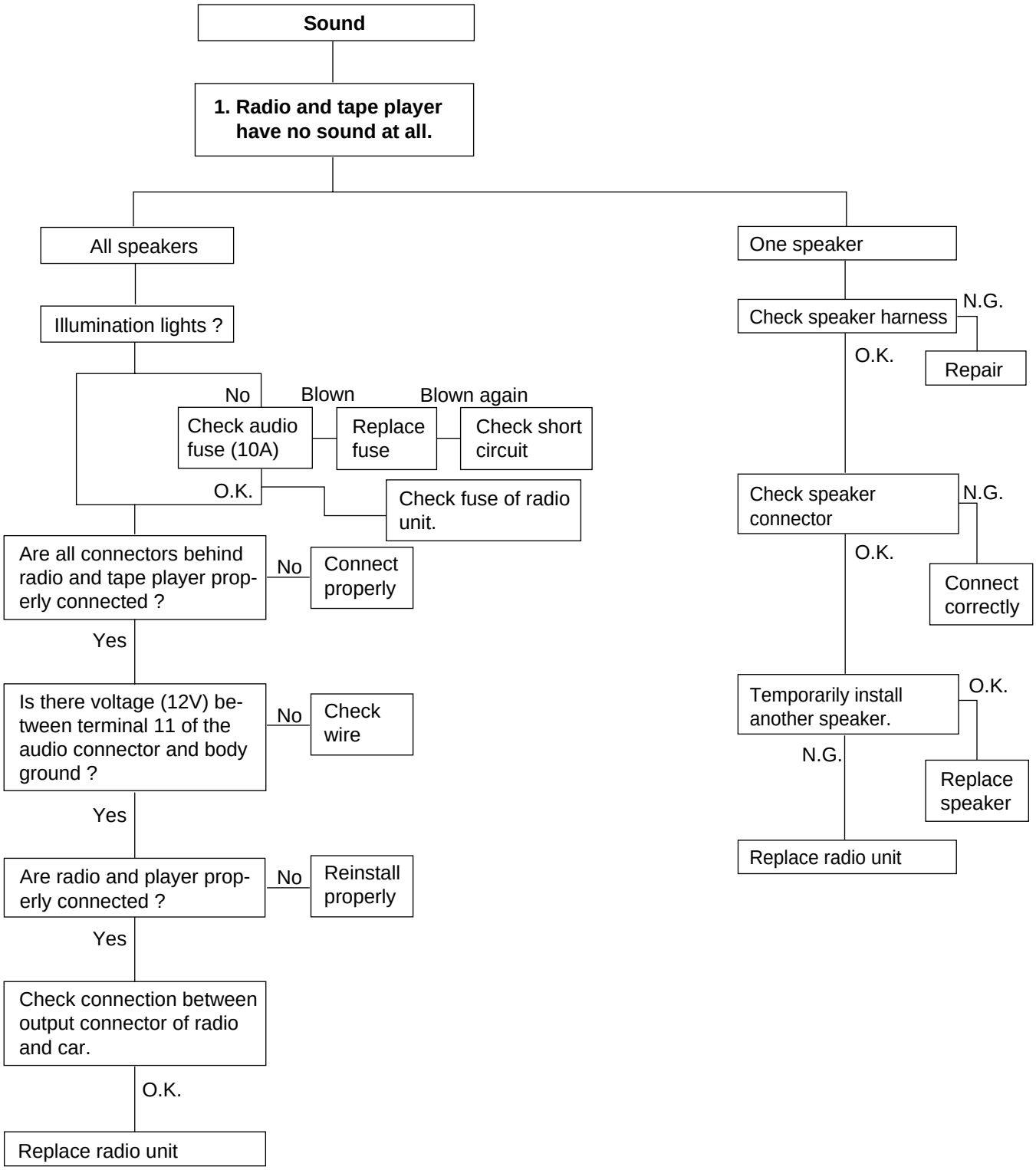

LTJF001B

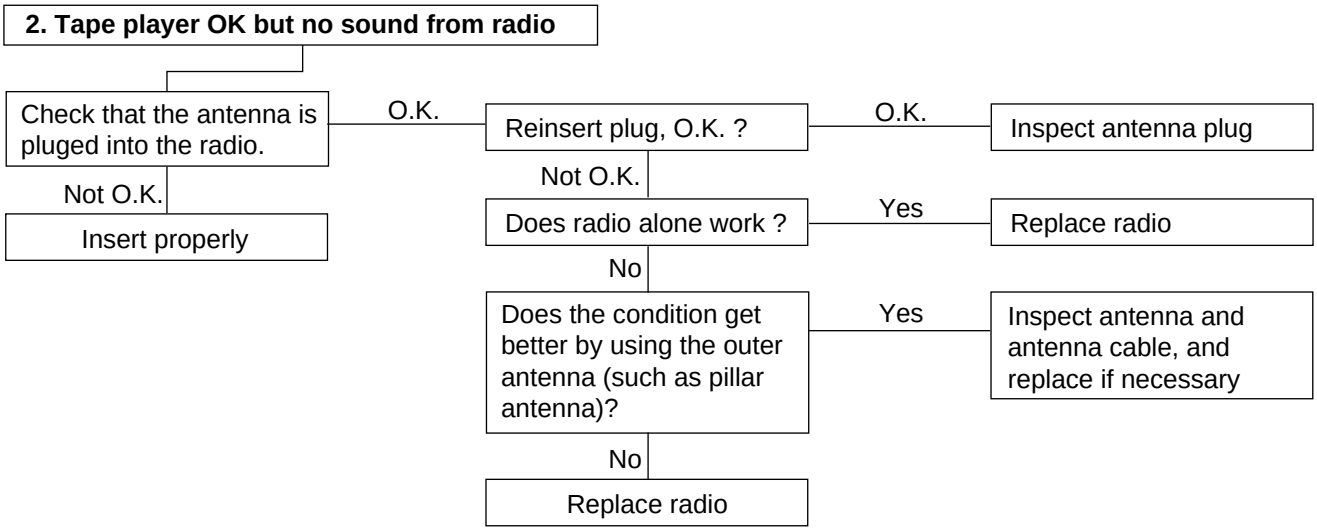

LTIF001C

CHART 2

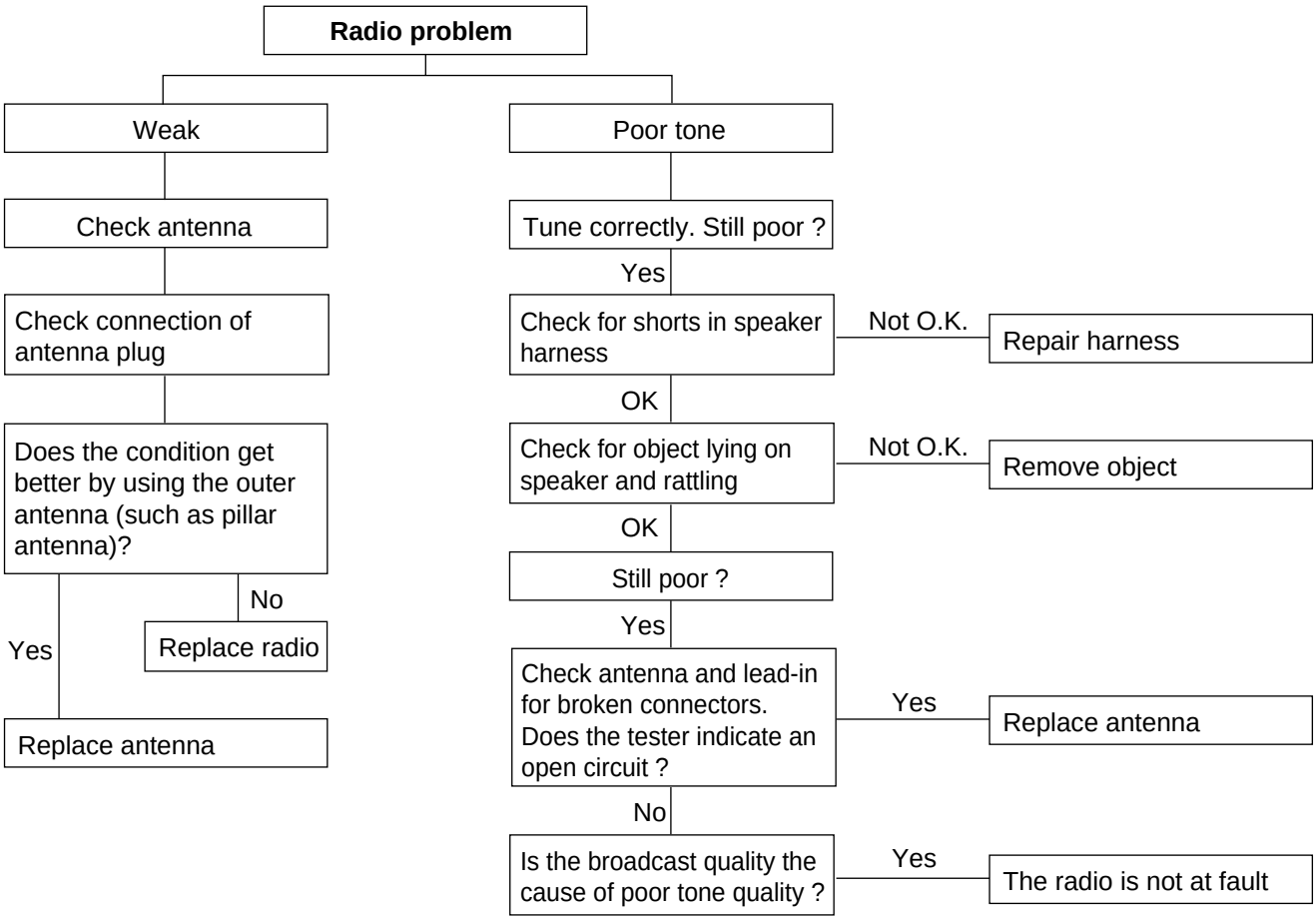

BTIF001D

CHART 3

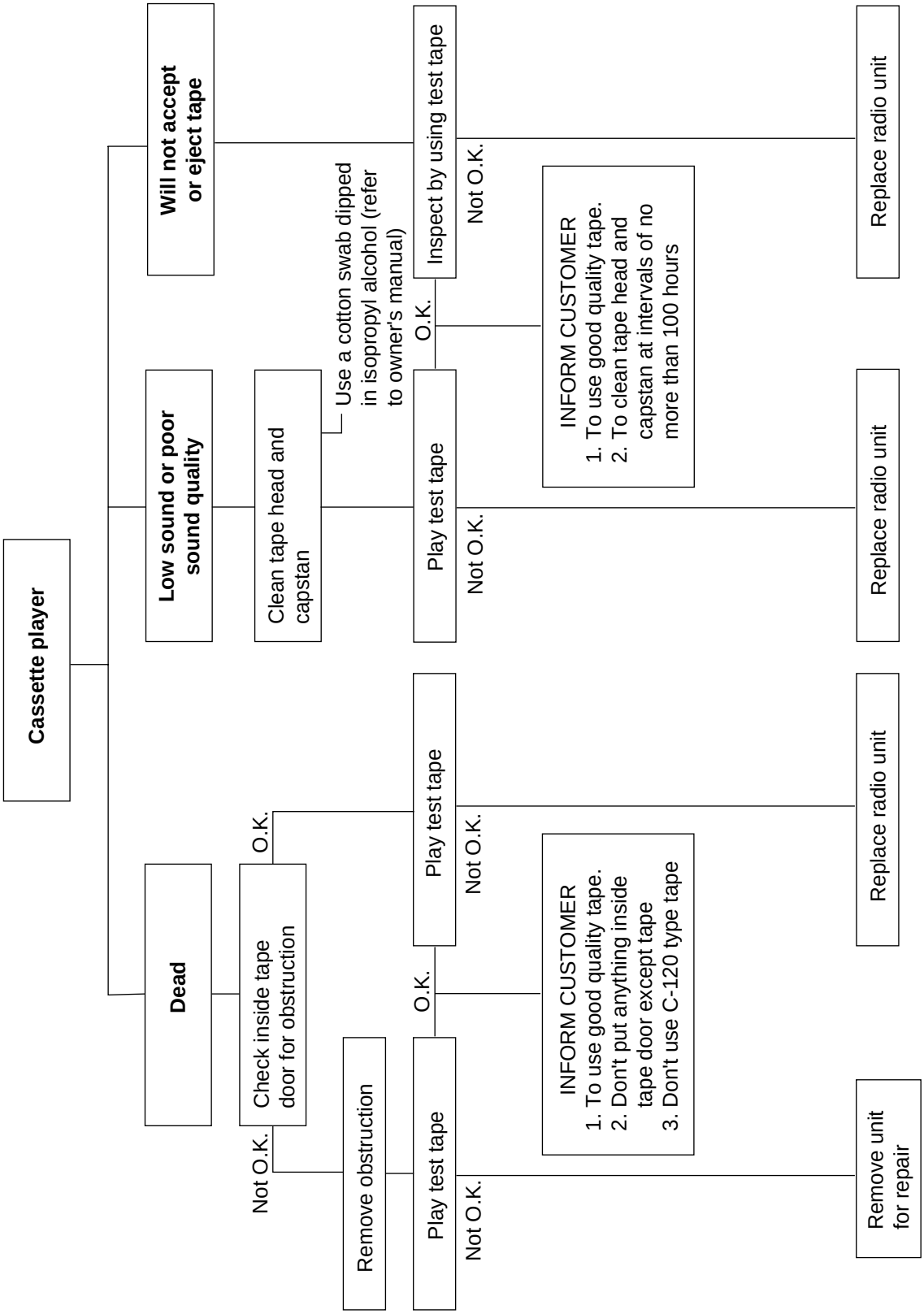

ETBF001E

CHART 4

1. RADIO

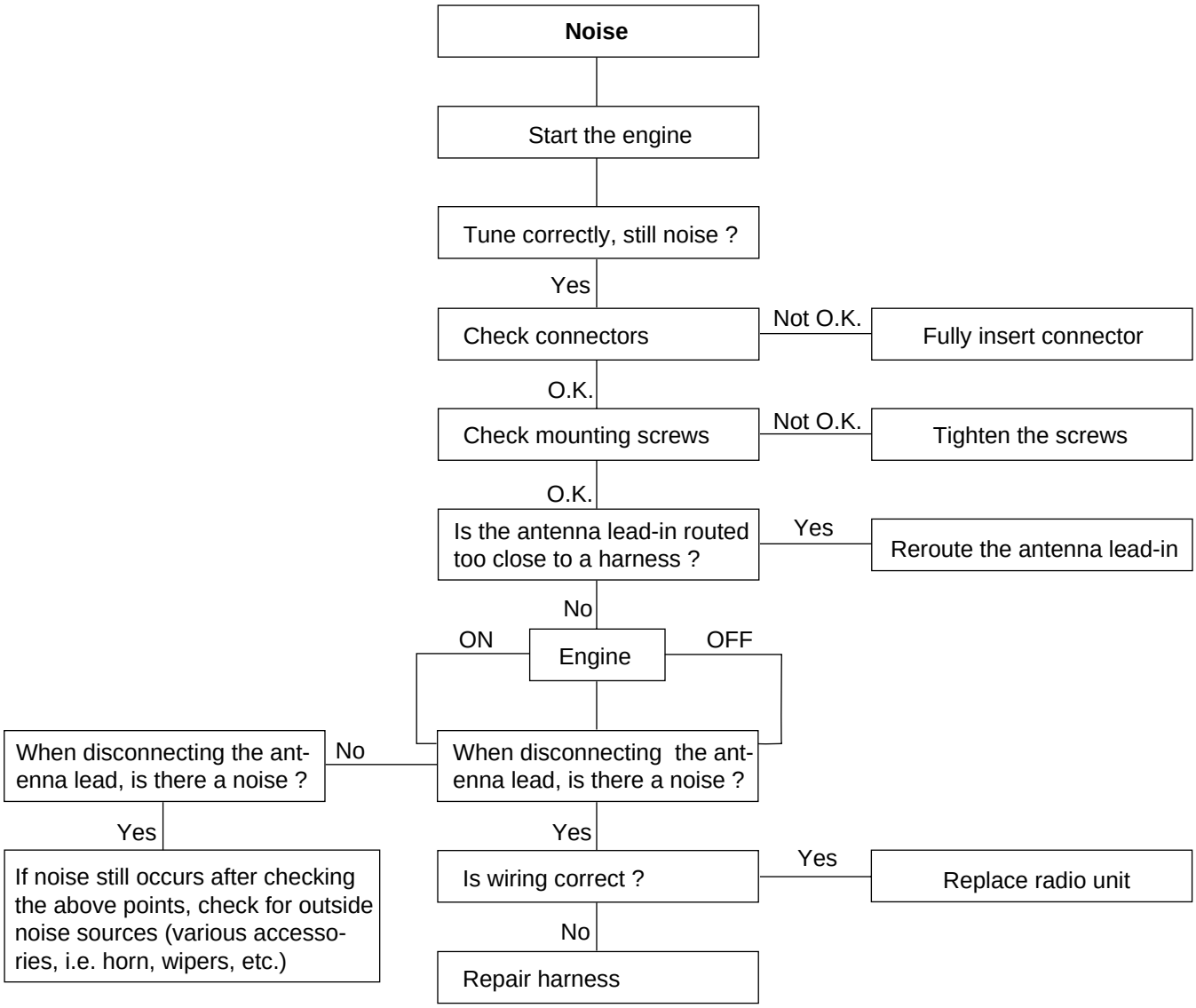

LTIF001F

2. TAPE

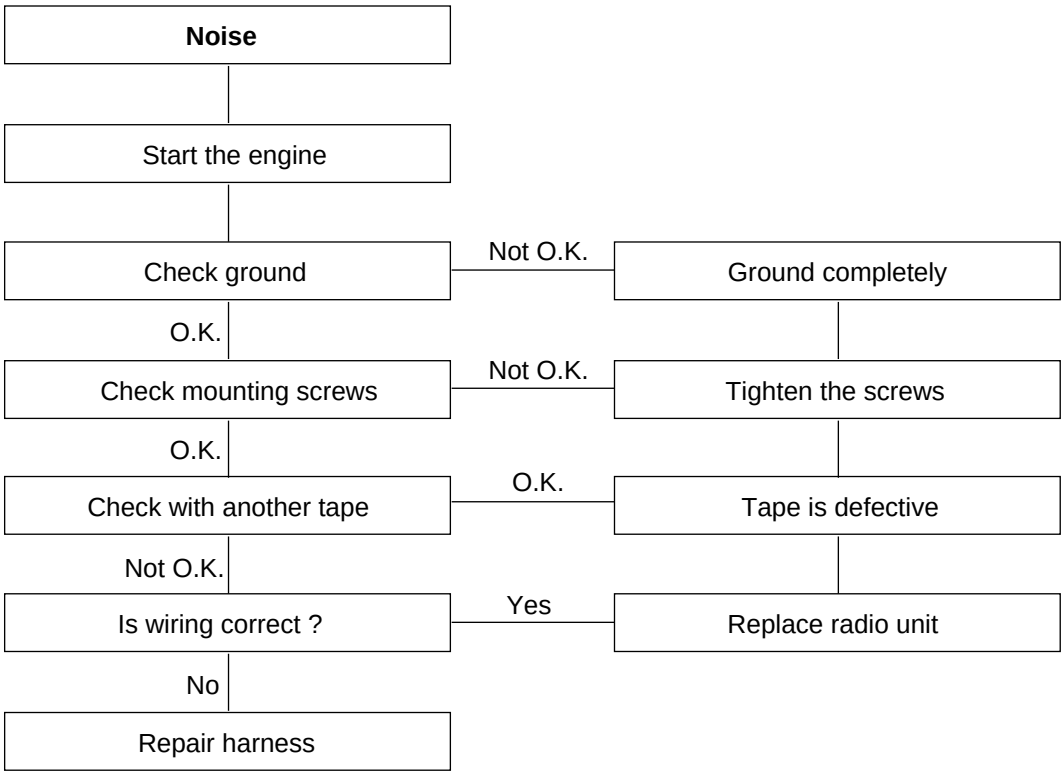

LTIF001G

CHART 5

1. CD WILL NOT BE ACCEPTED

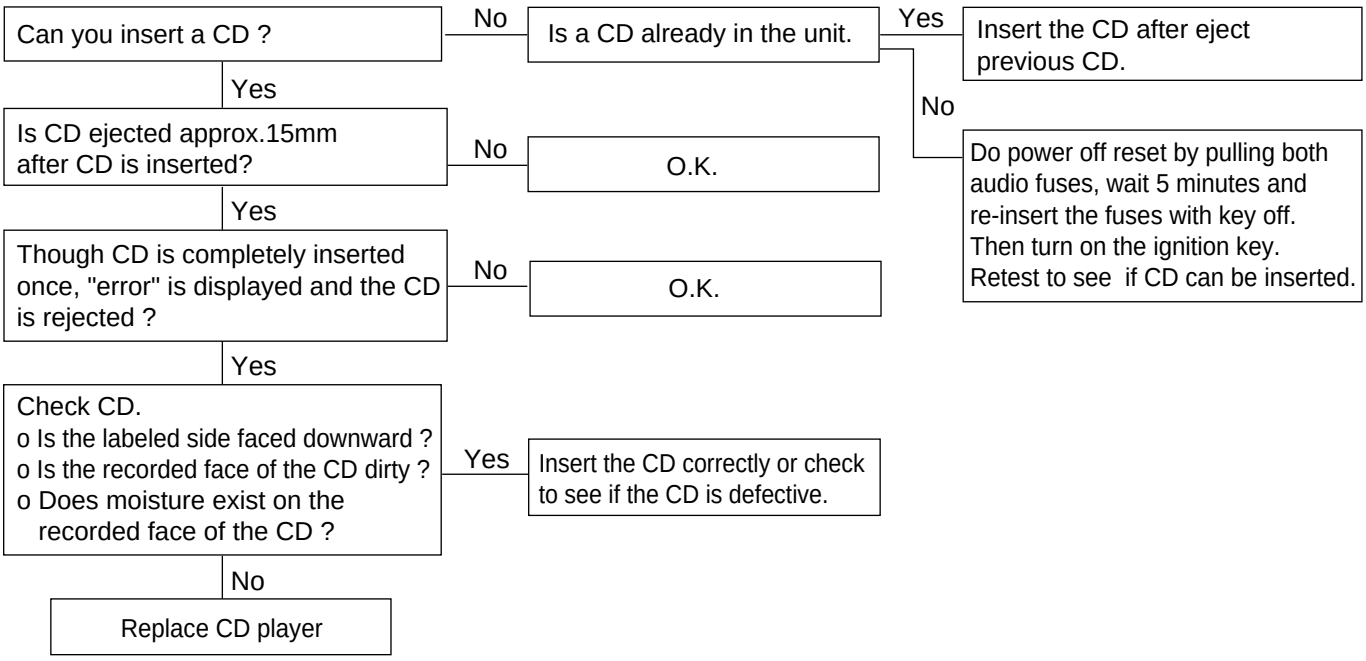

LTIF001H

2. NO SOUND

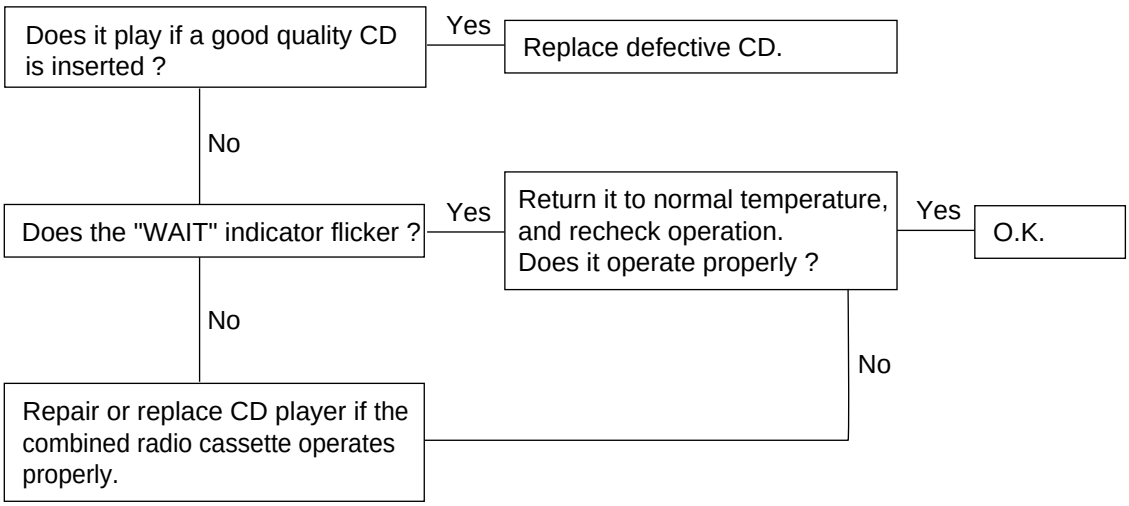

LTIF001I

3. CD SOUND SKIPS

1) Sound sometimes skips when parking.

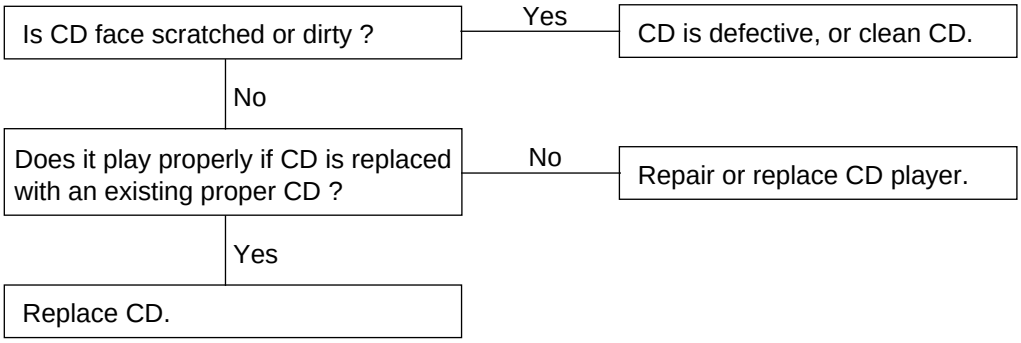

2) Sound sometimes skips when driving.
(Stop vehicle, and check it.)
(Check by using a CD which is free of scratches, dirt or other damage.)

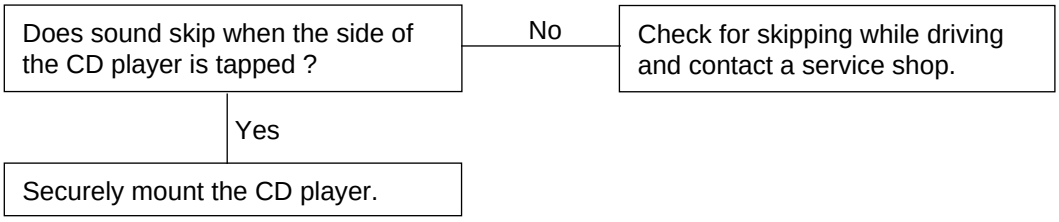

LTIF001J

4. SOUND QUALITY IS POOR

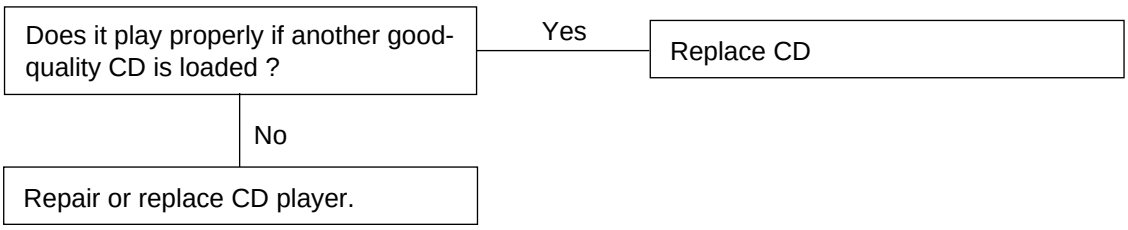

5. CD WILL NOT EJECT

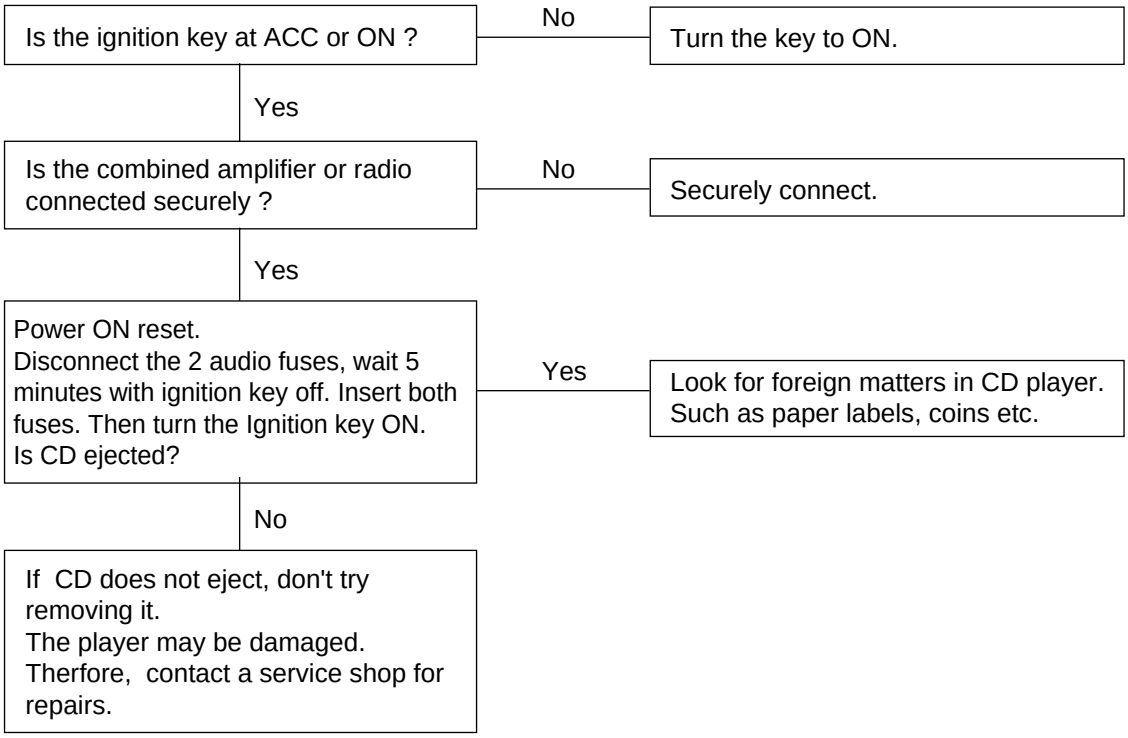

6. NO SOUND FROM ONE SPEAKER

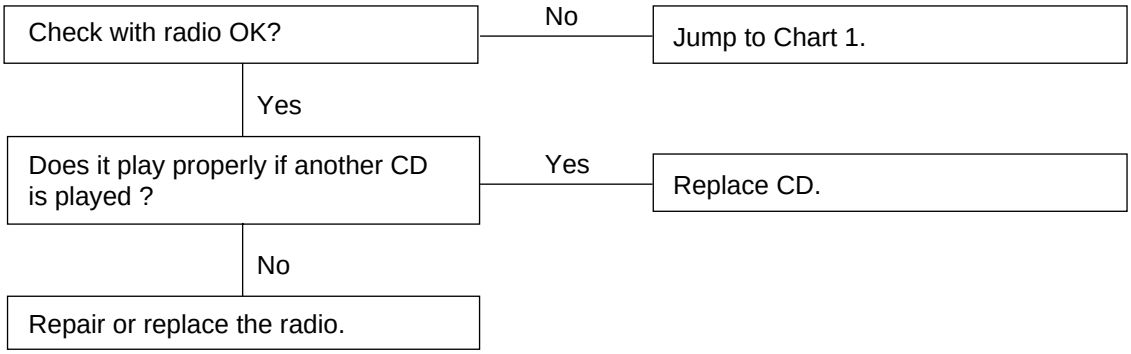

LTIF001K

CHART 6

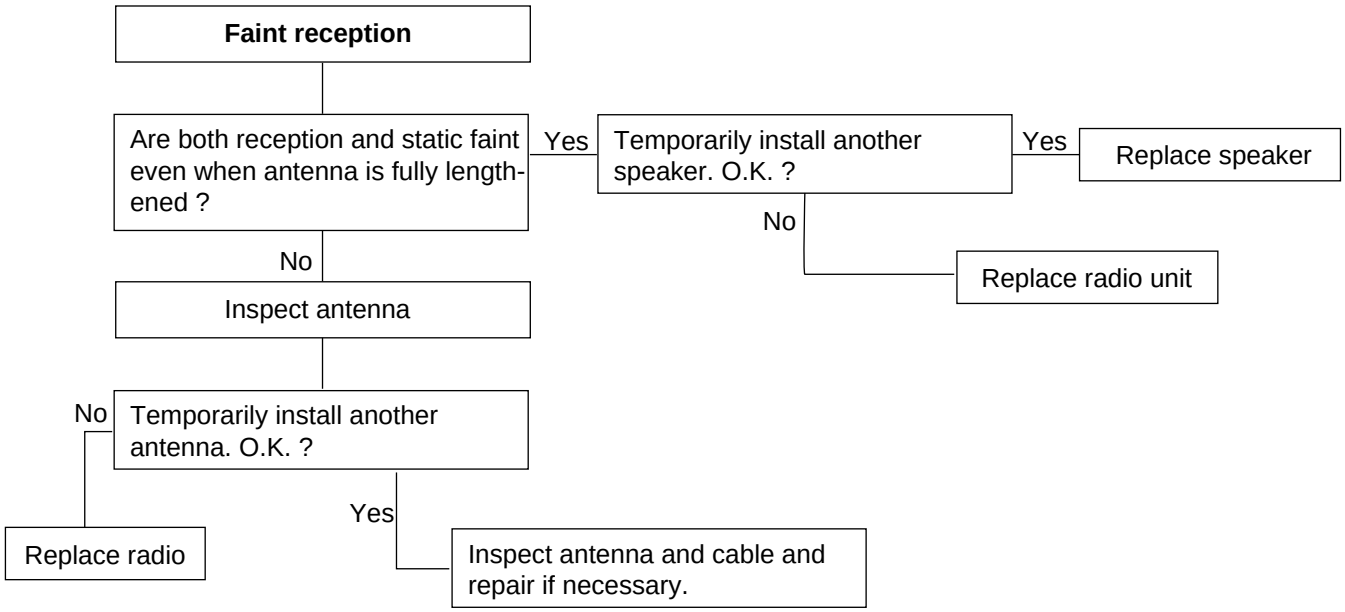

LTIF001L

CHART 7

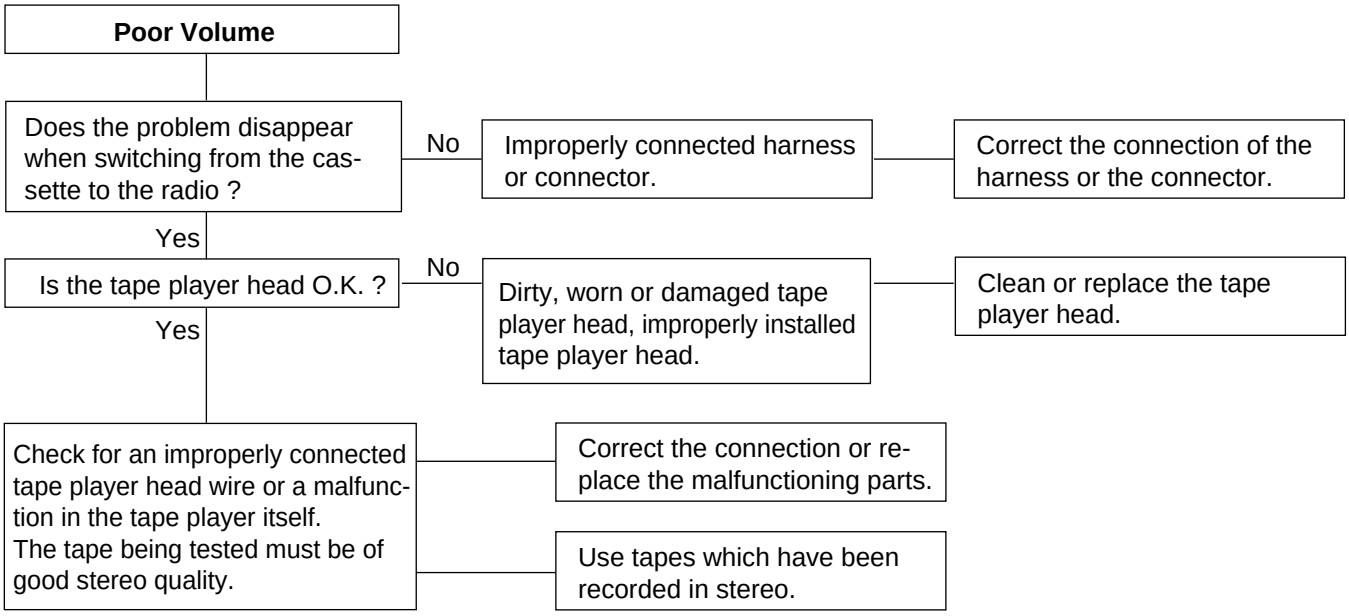

LTIF001M

CHART 8

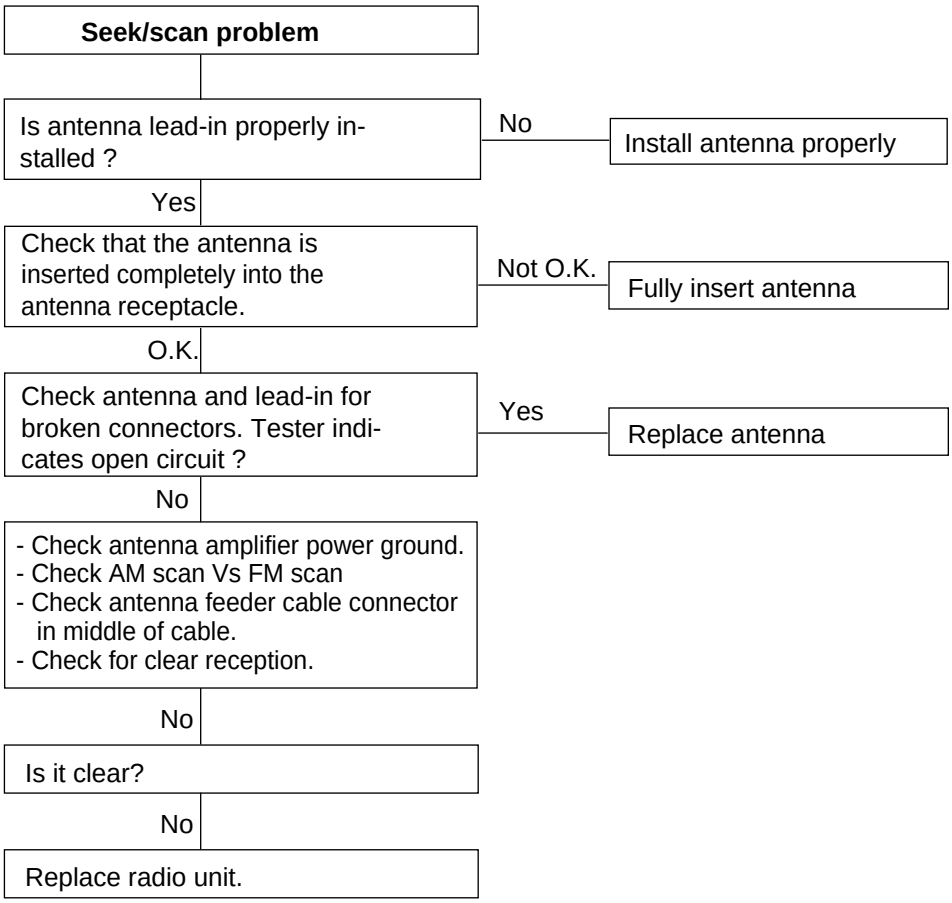

LTIF001N

CHART 9

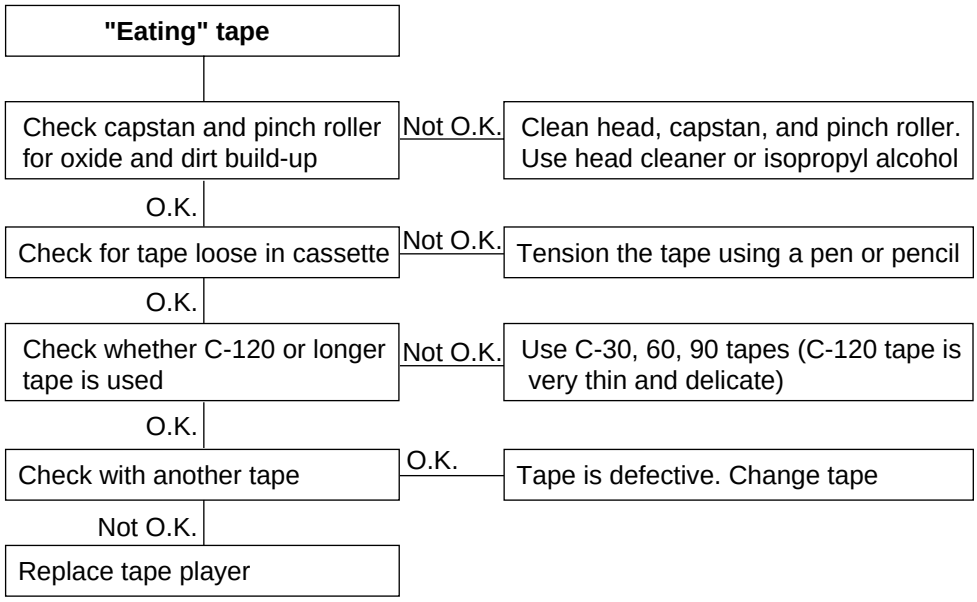

LTIF001O

AUDIO UNIT

COMPONENTS E35BCAF6

[AM/FM/CASSETTE/CD(M445)]

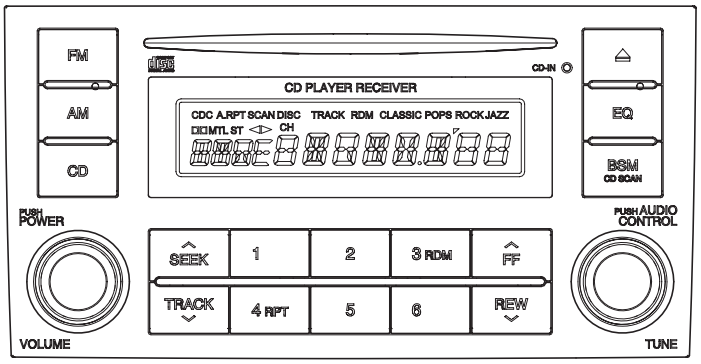

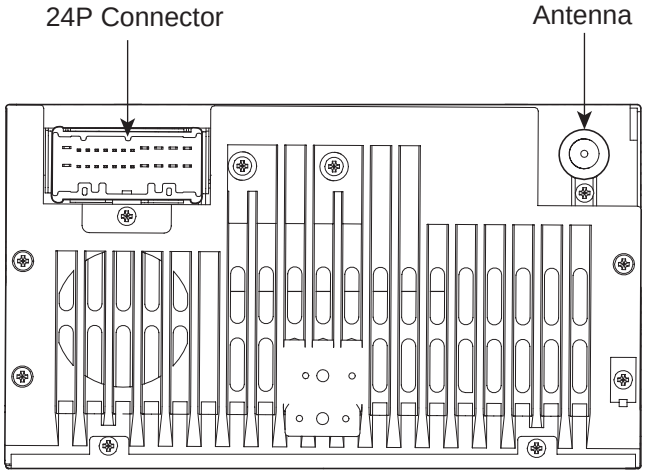

24P Connector	Pin	Description	Pin	Description
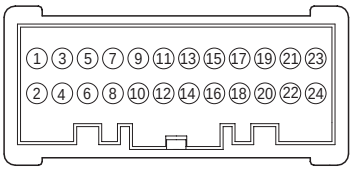	1	Ground	13	Remote control ground
	2	B+	14	Steering remote control
	3	Antenna B+	15	Illumination(-)
	4	ACC	16	Illumination(+)
	5	-	17	Rear left speaker(-)
	6	-	18	Rear left speaker(+)
	7	Tweeter in(Right)	19	Rear right speaker(-)
	8	Tweeter in(Left)	20	Rear right speaker(+)
	9	Ground	21	Front right speaker(-)
	10	Tweeter ground	22	Front right speaker(+)
	11	MUTE	23	Front left speaker(-)
	12	Rear arm remote control	24	Front left speaker(+)

[AM/FM/MP3/CD(M455)]

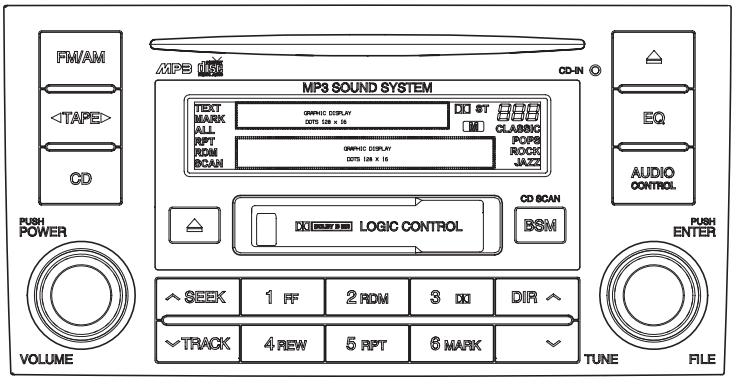

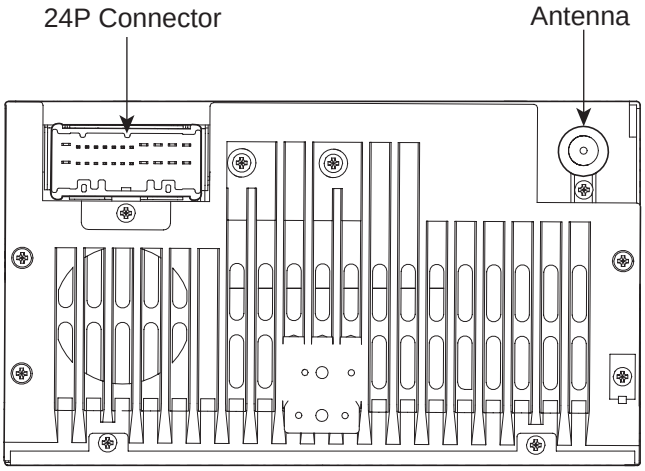

24P Connector	Pin	Description	Pin	Description
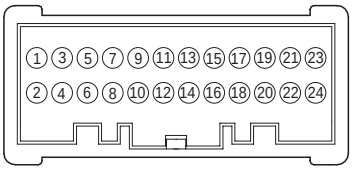	1	Ground	13	Remote control ground
	2	B+	14	Steering remote control
	3	Antenna B+	15	Illumination(-)
	4	ACC	16	Illumination(+)
	5	-	17	Rear left speaker(-)
	6	-	18	Rear left speaker(+)
	7	Tweeter in(Right)	19	Rear right speaker(-)
	8	Tweeter in(Left)	20	Rear right speaker(+)
	9	Ground	21	Front right speaker(-)
	10	Tweeter ground	22	Front right speaker(+)
	11	MUTE	23	Front left speaker(-)
	12	Rear arm remote control	24	Front left speaker(+)

SCMBE6003L

[AM/FM/CASSETTE/MP3/6CDC(M465)]

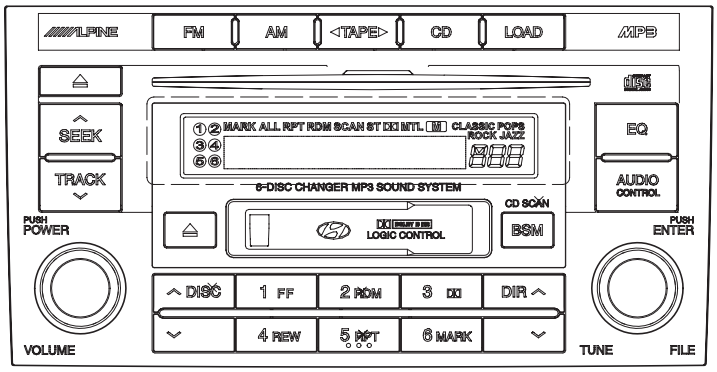

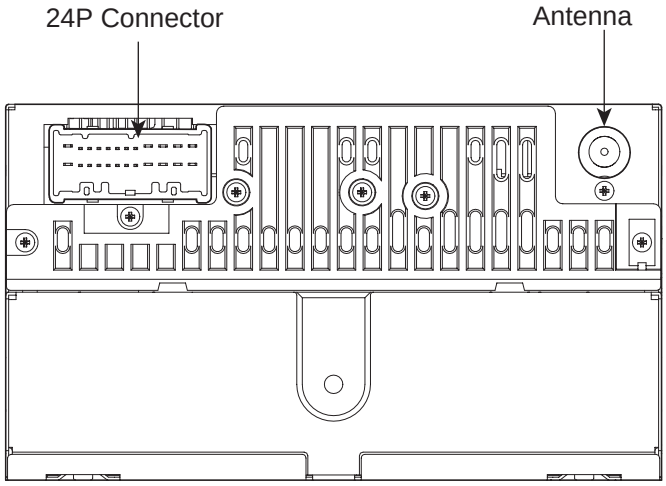

24P Connector	Pin	Description	Pin	Description
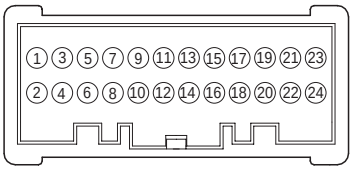	1	Ground	13	Remote control ground
	2	B+	14	Steering remote control
	3	Antenna B+	15	Illumination(-)
	4	ACC	16	Illumination(+)
	5	-	17	Rear left speaker(-)
	6	Remote control	18	Rear left speaker(+)
	7	Tweeter in(Right)	19	Rear right speaker(-)
	8	Tweeter in(Left)	20	Rear right speaker(+)
	9	Ground	21	Front right speaker(-)
	10	Tweeter ground	22	Front right speaker(+)
	11	MUTE	23	Front left speaker(-)
	12	Rear arm remote control	24	Front left speaker(+)

SCMBE6004L

[PREMIUM (D466)]

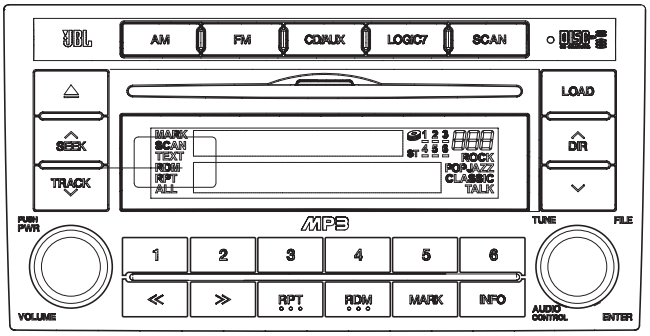

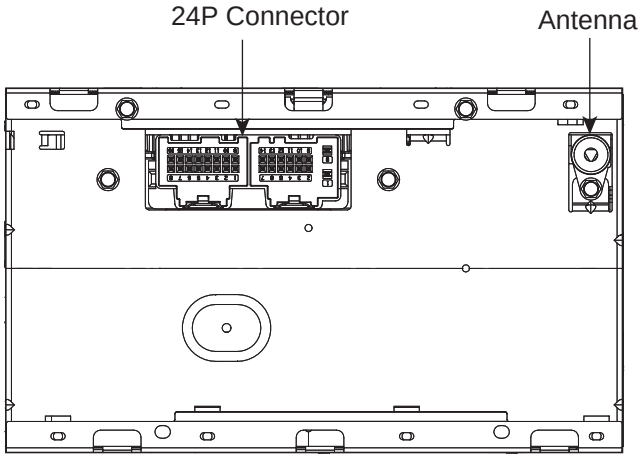

Connector	Connector A		Connector B	
	Pin	Description	Pin	Description
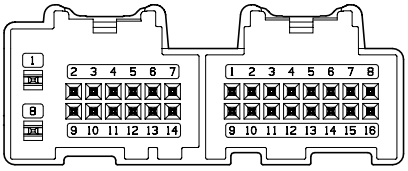 Connector A Connector B	1	B+	1	Tweeter (Left)
	2	-	2	Tweeter (Right)
	3	-	3	Tweeter ground
	4	Illumination(+)	4	EQ SEL
	5	Illumination(-)	5	Front right speaker(-)
	6	Remote control	6	Front right speaker(+)
	7	ACC	7	Rear left speaker(-)
	8	Ground	8	Rear left speaker(+)
	9	MUTE	9	-
	10	Surround ON/OFF	10	-
	11	SWC	11	-
	12	SWC output	12	-
	13	MSCAN high	13	Front left speaker(-)
	14	MSCAN low	14	Front left speaker(+)
			15	Rear right speaker(-)
			16	Rear right speaker(+)

SCMBE6005L

INSPECTION E813AFA7

TAPE HEAD AND CAPSTAN CLEANING

1. To obtain optimum performance, clean the head, and capstan as often as necessary, depending on frequency of use and tape cleanness.
2. To clean the tape head and capstan, use a cotton swab dipped in ordinary rubbing an alcohol. Wipe the head and capstan.

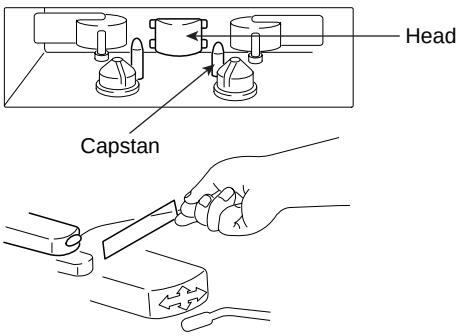

LTAC005A

REPLACEMENT EA2B9CB5

1. Disconnect the negative (-) battery terminal.
2. Remove the crash pad center speaker grill (A). (Refer to the Body group - Crash pad).

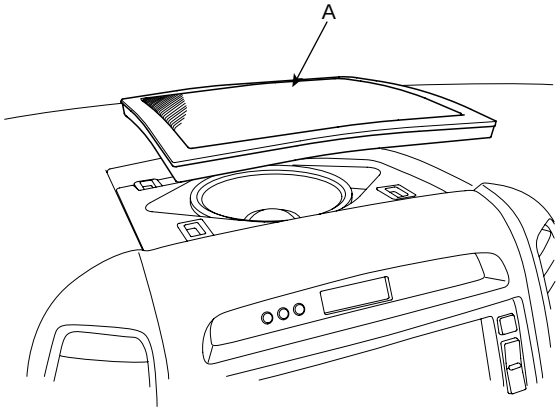

SCMBE6014D

3. Remove the crash pad center speaker (A) after loosening the screws. Avoid damaging retaining clips.

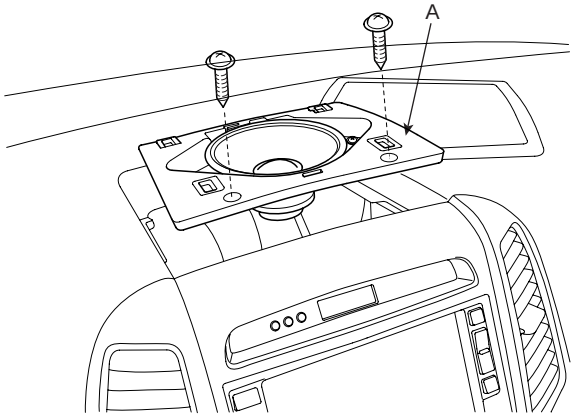

SCMBE6015D

4. Remove the center facia panel (A) after loosening the screws.
   (Refer to the Body group - Crash pad).

▷: Screw, 2

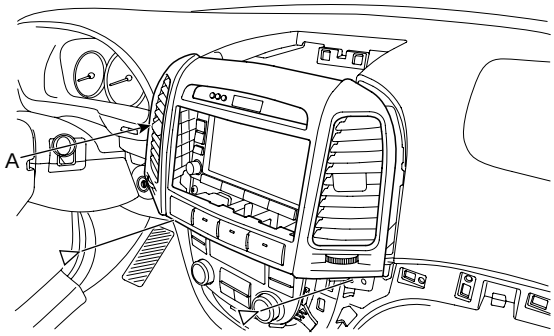

SCMBE6010L

5. Remove the connectors.

6. Remove the mounting bolts then remove the audio unit (A).

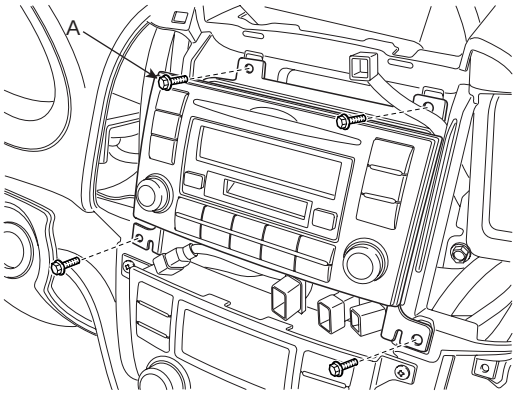

SCMBE6011D

7. Remove the audio unit after disconnecting the audio connectors and cable.

8. Installation is the reverse of removal.

SPEAKERS

INSPECTION EA07AC38

1. Check the speaker with an ohmmeter. If an ohmmeter indicates the correct impedance of the speaker when checking between the speaker (+) and speaker (-) of the same channel, the speaker is ok.

Specified impedance : 2~4 Ω

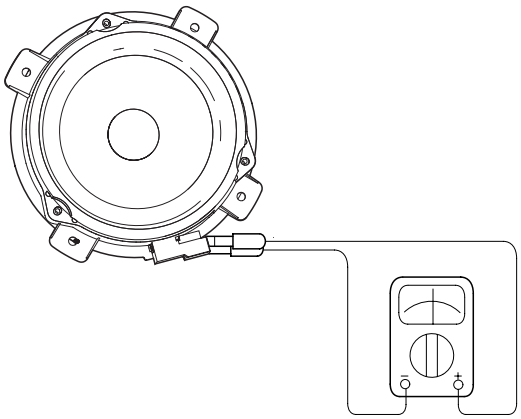

ATLG022E

REPLACEMENT EC2DE7E3

FRONT SPEAKER

1. Remove the front door trim.
   (Refer to the Body group - Front door).

2. Remove the front speaker (A) after removing 4 rivets.

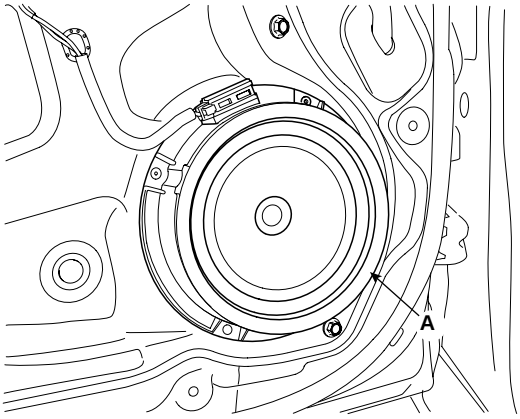

SCMBE6020D

3. Installation is the reverse of removal.

REAR SPEAKER

1. Remove the rear door trim.
   (Refer to the Body group - Rear door).

2. Remove the rear speaker (A) after removing 4 rivets.

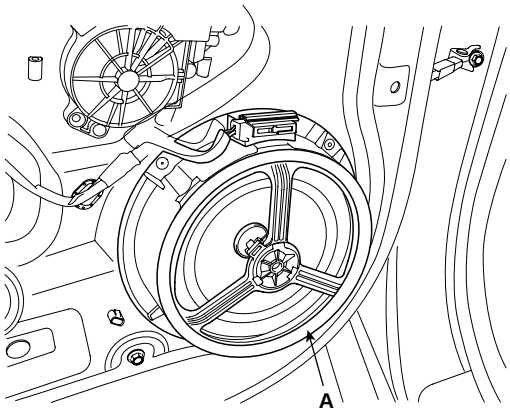

SCMBE6021D

3. Installation is the reverse of removal.

CRASH PAD SPEAKER

1. Remove the crash pad center speaker grill (A).

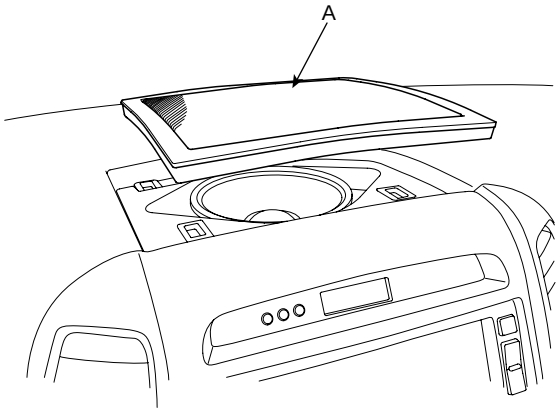

SCMBE6022D

2. Remove the crash pad center speaker (A) after loosening the 2 mounting screws.

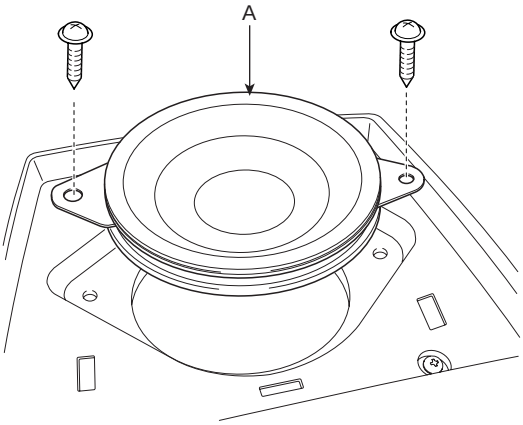

SCMBE6023D

3. Installation is the reverse of removal.

TAILGATE SPEAKER

1. Remove the tailgate trim.
   (Refer to the Body group - Tailgate).

2. Remove the tailgate speaker (A) after loosening 2 bolts.

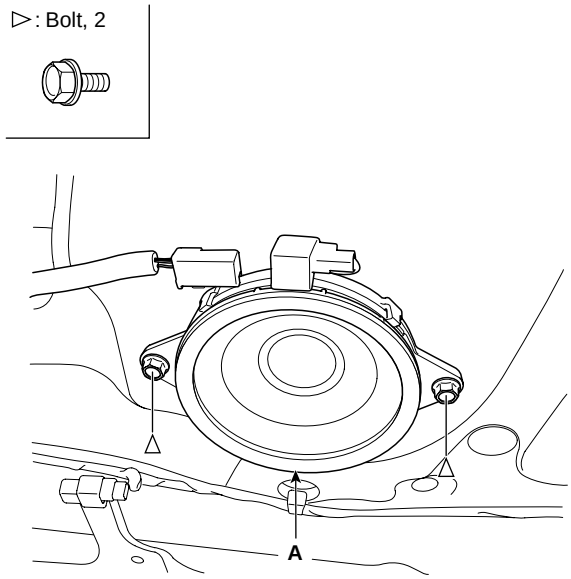

SCMBE6027L

6CD CHANGER

1. Remove the left luggage side trim.
   (Refer to the Body group - Internal trim)

2. Remove the 6CD changer (A) after removing 4 bolts and disconnecting the connector.

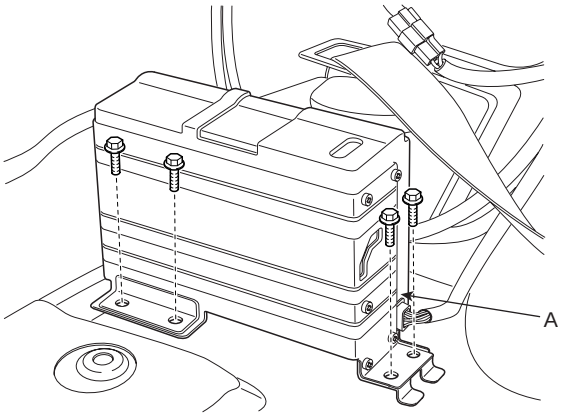

SCMBE6028D

3. Installation is the reverse of removal.

EXTERNAL AMPLIFIER

1. Remove the assistance seat after removing the 4 bolts and disconnecting the connector
(Refer to the Body group - Front seat).

2. Remove the external amplifier (A) under the assistance seat after removing the 3 bolts.

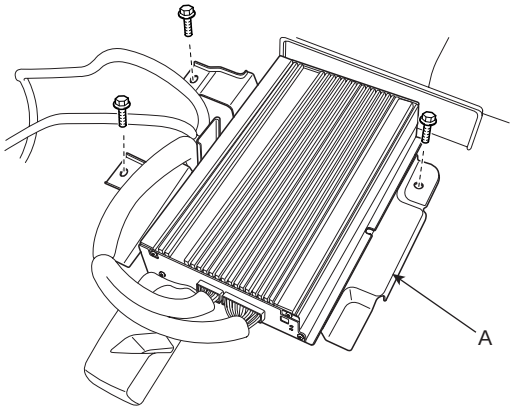

SCMBE6029D

3. Installation is the reverse of removal.

TWEETER SPEAKER

1. Remove the front door delta cover (A).
(Refer to the Body group - Front door).

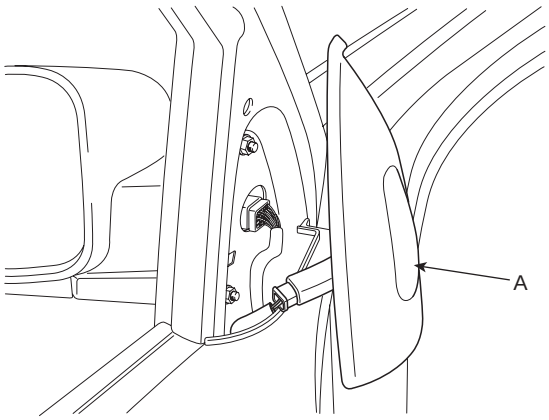

SCMBE6024D

2. Remove the tweeter speaker (A) after loosening 2 screws and disconnecting the connector.

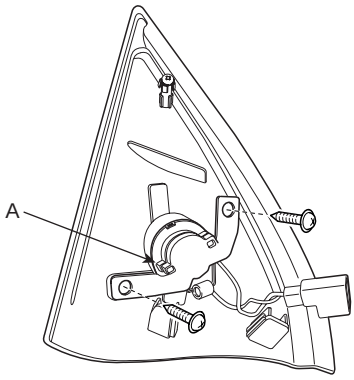

SCMBE6025D

3. Installation is the reverse of removal.

WOOFER SPEAKER

1. Remove the left luggage side trim.
(Refer to the Body group - Rear seats).

2. Remove the woofer speaker (A) after removing 4 bolts and disconnecting the connector.

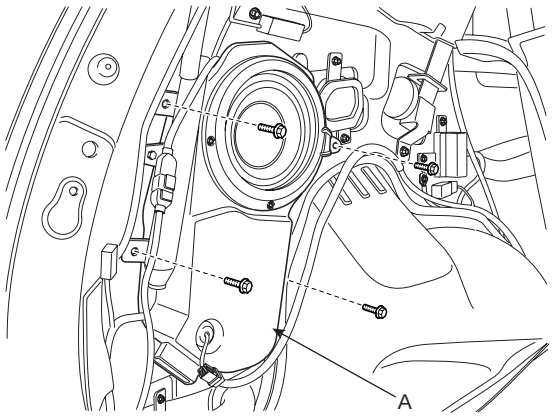

SCMBE6026D

3. Installation is the reverse of removal.

ANTENNA

INSPECTION E14AC1A5

ANTENNA CABLE

1. Remove the antenna jack from the audio unit and antenna.
2. Check for continuity between the center poles of antenna cable.

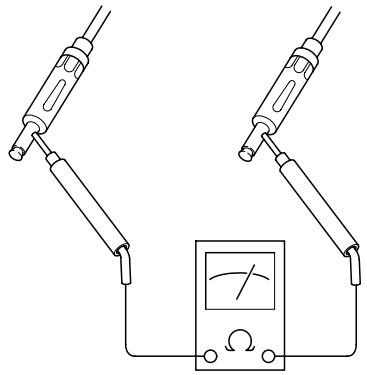

ATJF023C

3. Check for continuity between the outer poles of antenna cable. There should be continuity.

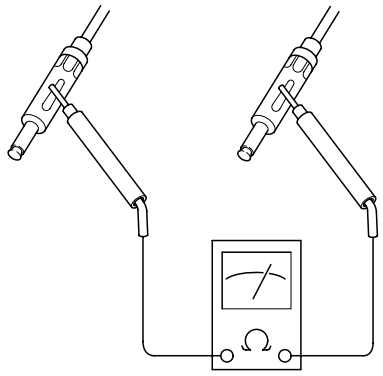

ATJF023D

4. If there is no continuity, replace the antenna cable.
5. Check for continuity between the center pole of antenna cable and terminal of glass antenna. There should be continuity.

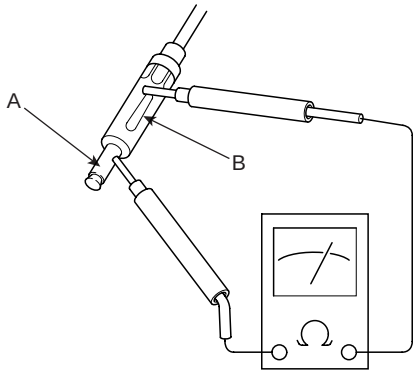

ATJF023F

6. If there is continuity, replace the antenna cable.

REPLACEMENT E8FE7EEC

1. Remove the rear roof trim.
   (Refer to the Body group - Roof trim).
2. Disconnect the 1P power connector (A) and antenna jack (B) from the roof antenna.
3. Remove the roof antenna after removing a nut.

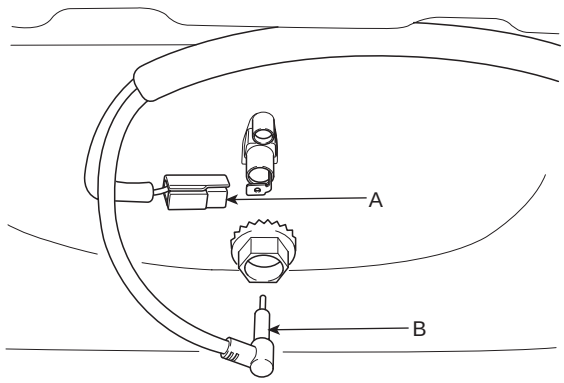

SCMBE6031D

4. Installation is the reverse of removal.

AUDIO REMOTE CONTROL

CIRCUIT DIAGRAM EB89A7CE

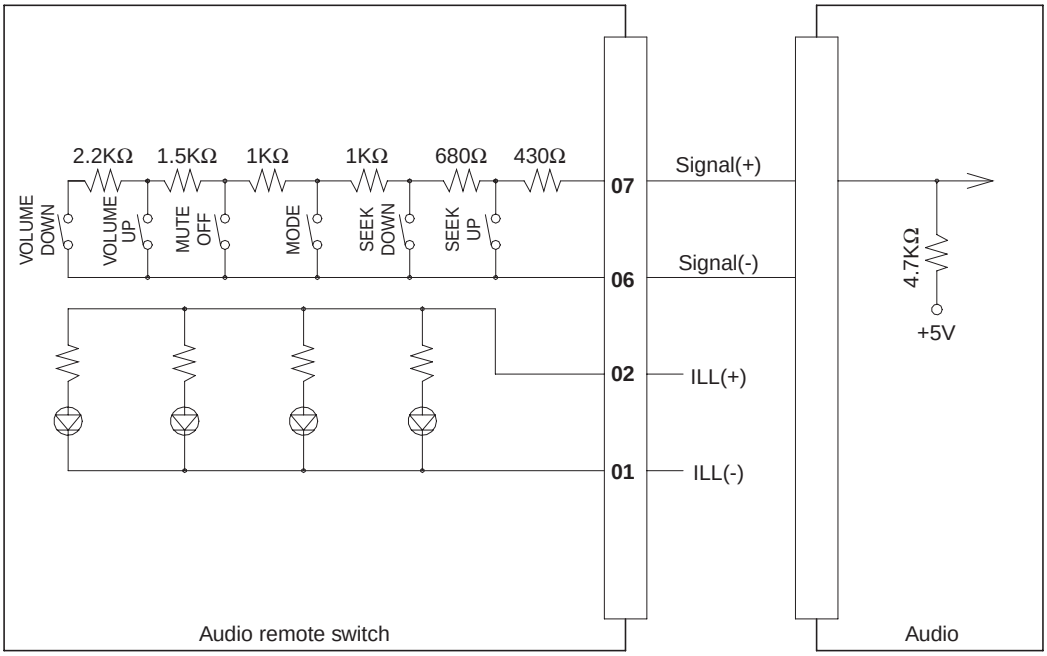

SCMBE6037L

INSPECTION EA0BC62A

1. Check for resistance between No.6 and No.7 terminals in each switch position.

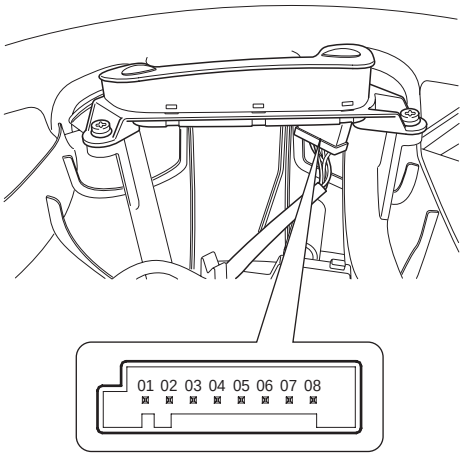

SCMBE6036D

Switch	Connector terminal	Resistance (±5%)
VOLUME DOWN	6 - 7	6.81 kΩ
VOLUME UP	6 - 7	4.61 kΩ
MODE	6 - 7	2.11 kΩ
SEEK DOWN	6 - 7	1.11 kΩ
SEEK UP	6 - 7	430 Ω
MUTE	6 - 7	3..11 kΩ

REPLACEMENT E2420AFD

1. Disconnect the negative (-) battery terminal.
2. Remove the driver airbag module.
   (Refer to the Airbag group).

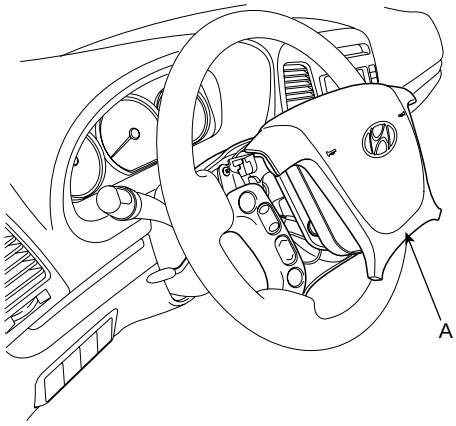

SCMBE6034D

3. Remove the audio remote control switch (B) after remove the steering wheel remote control switch connector (A) and 2 screws.

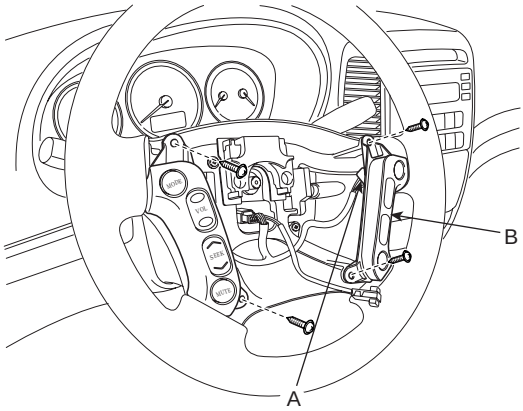

SCMBE6035D

4. Installation is the reverse of removal.

MULTI FUNCTION SWITCH

SPECIFICATIONS E0A2FFD2

Items		Specifications
Rated voltage		DC 12V
Operating temperature range		-30°C ~ +80°C (-22 ~ +176°F)
Rated load	Dimmer & passing switch	High : 1A (Relay load) Low : 1A (Relay load) Passing : 1A (Relay load)
	Lighting switch	Lighting : 1A (Relay load)
	Turn signal switch	6.6 ± 0.5A (Lamp load)
	Wiper & mist switch	Low, High : 4A (Motor load) Intermittent : 0.22 ± 0.05A (Relay load) Lock : Max. 23A (Motor load) Mist : 4A (Motor load)
	Washer switch	4A (Motor load)
	Variable intermittent volume switch	Max. 25mA
	Rear wiper & washer switch	Rear wiper : 200mA (Relay load) Rear washer : 4A (Motor load)

COMPONENT E42330BD

[LHD]

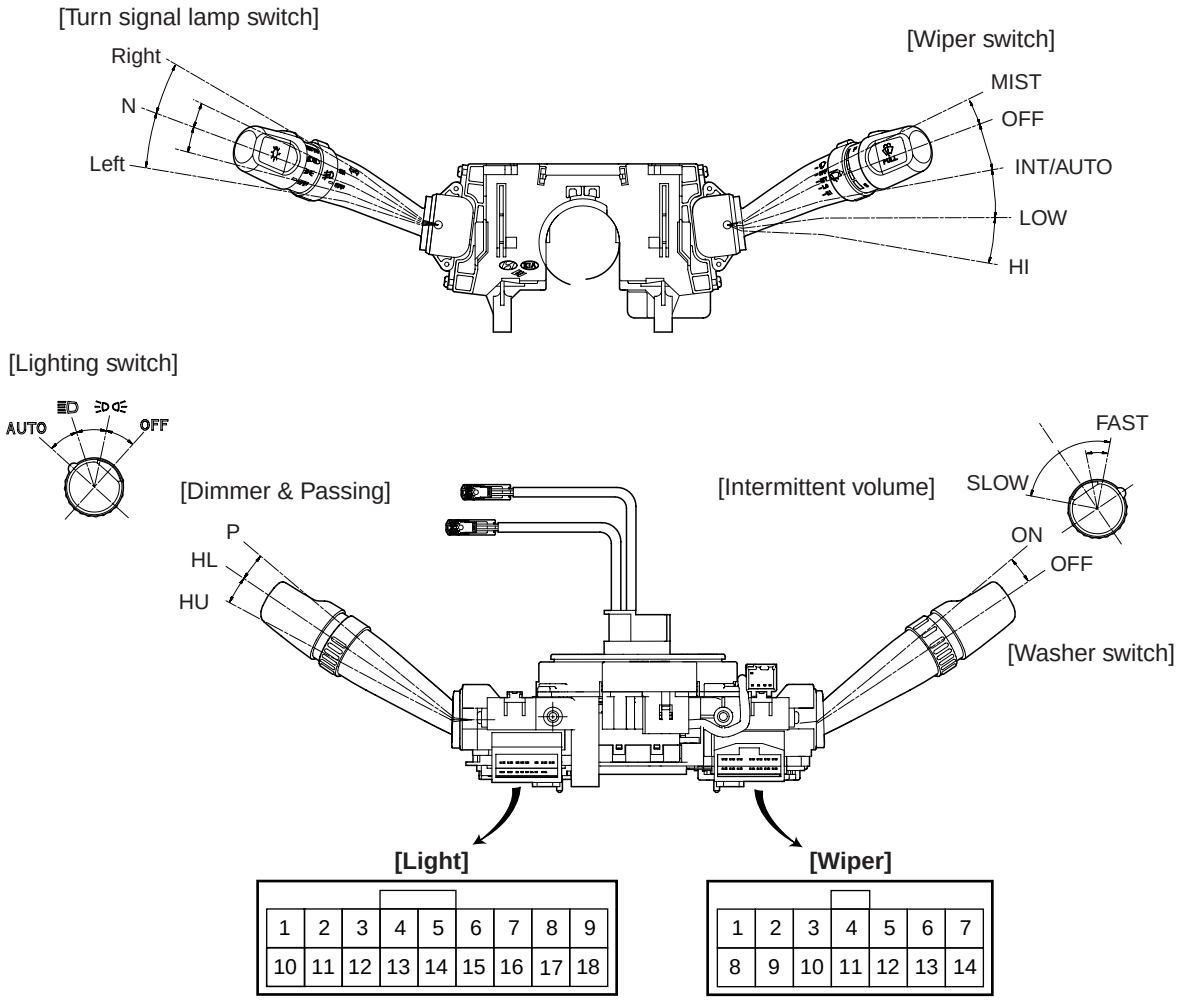

Circuit connection

Connector Name	Terminal No.	Description	Connector Name	Terminal No.	Description
Light	1	Head lamp passing	**Wiper**	1	Wiper high speed
	2	Head lamp high beam power		2	Wiper low speed
	7	Turn signal lamp (RH)		3	Wiper parking
	8	Flasher unit power		4	Mist switch
	9	Turn signal lamp (LH)		5	Wiper & washer power
	10	Head lamp low beam power		6	Intermittent wiper
	11	Dimmer & passing ground		7	Front washer switch
	12	-		8	-
	13	-		9	Rear washer & wiper switch
	14	Tail lamp switch		10	-
	15	Head lamp switch		11	Rear wiper
	16	Rear fog lamp/Auto light switch		12	Rear washer
	17	Lighting switch ground		13	Intermittent wiper volume
	18	-		14	Intermittent wiper ground

[RHD]

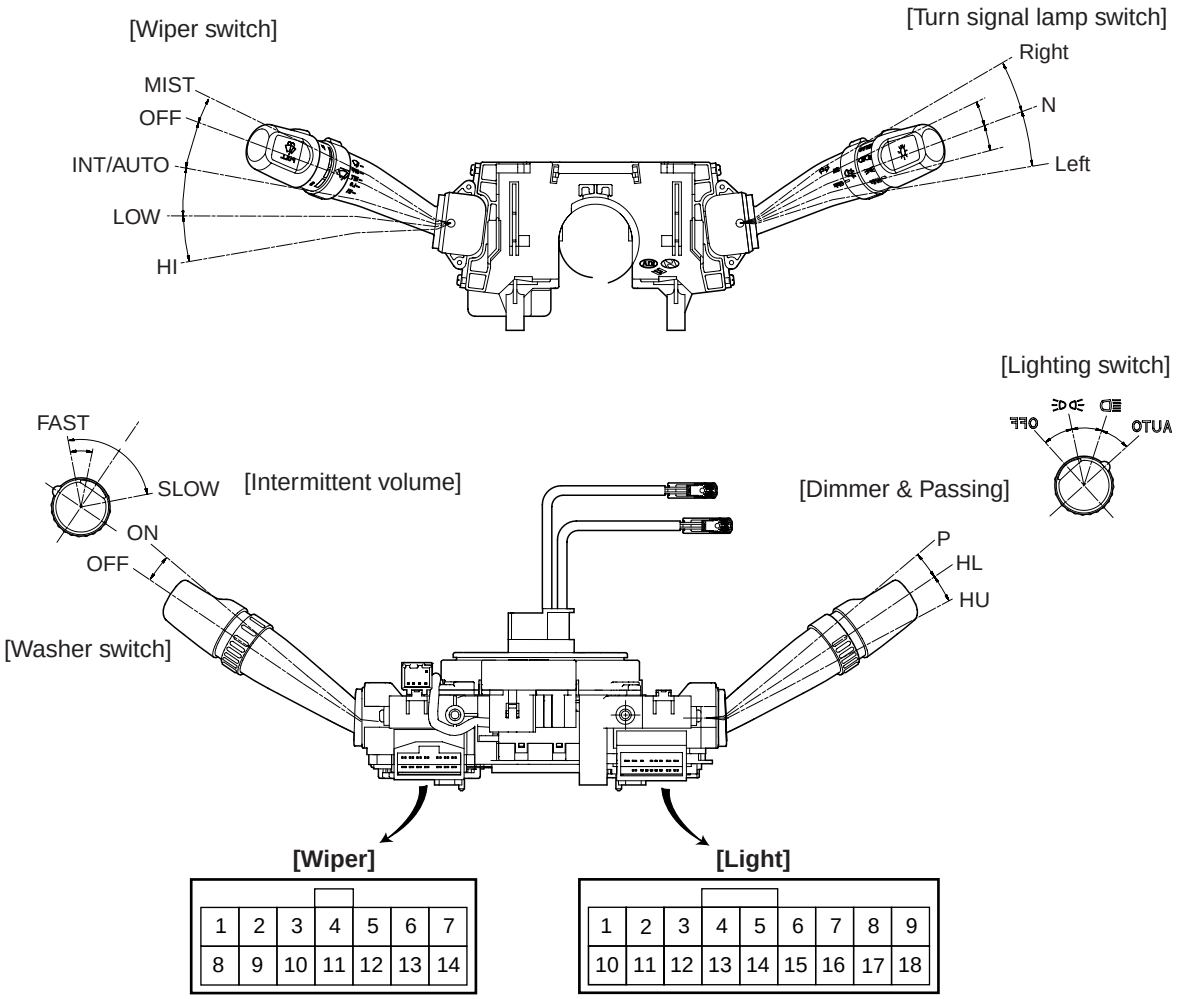

Circuit connection

Connector Name	Terminal No.	Description	Connector Name	Terminal No.	Description
Wiper	1	Front washer switch	**Light**	1	Turn signal lamp (RH)
	2	Intermittent wiper		2	Flasher unit power
	3	Wiper & washer power		3	Turn signal lamp (LH)
	4	Mist switch		8	Head lamp low beam power
	5	Wiper parking		9	Head lamp passing
	6	Wiper low speed		11	-
	7	Wiper high speed		12	-
	8	Intermittent wiper ground		13	Tail lamp switch
	9	Intermittent wiper volume		14	Head lamp switch
	10	Rear washer		15	Rear fog lamp/Auto light switch
	11	Rear wiper		16	Lighting switch ground
	12	-		17	Dimmer & passing ground
	13	Rear washer & wiper switch		18	Head lamp low beam power
	14	-		19	-

SCMBE6040R

INSPECTION E7E08FEB

LIGHTING SWITCH INSPECTION

1. With the multi function switch in each position, make sure that continuity exists between the terminals below.
   If continuity is not as specified, replace the multi-function switch

[LHD]

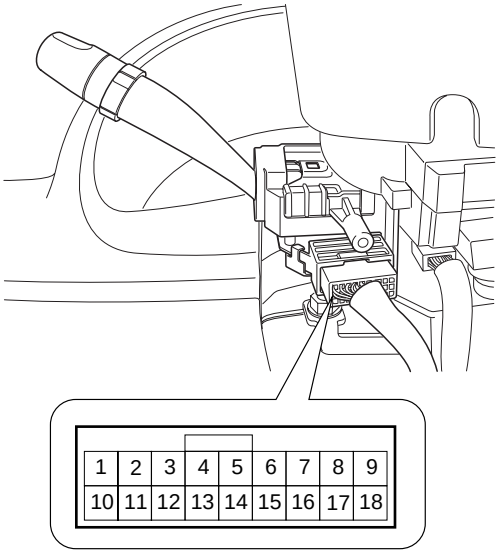

SCMBE6044D

[RHD]

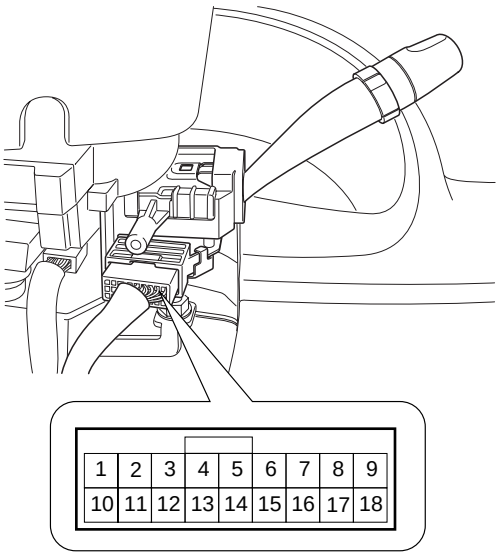

SCMBE6044R

LIGHTING SWITCH (AUTO LIGHT)

( ) : RHD

Position \ Terminal	14(13)	15(14)	16(15)	17(16)
OFF				
I	○			○
II	○	○		○
AUTO			○	○

SCMBE6045L

LIGHTING SWITCH

( ) : RHD

Position \ Terminal	14(13)	15(14)	16(15)	17(16)
OFF				
I	○			○
II	○	○	○	○

SCMBE6046L

DIMMER AND PASSING SWITCH

( ) : RHD

Position \ Terminal	1(9)	2(8)	10(18)	11(17)
HU		○		○
HL			○	○
P	○	○		○

HU : Head lamp high beam
HL : Head lamp low beam
P : Head lamp passing switch

SCMBE6047L

TURN SIGNAL SWITCH

( ) : RHD

Hazard switch \ Turn signal switch \ Terminal		7(1)	8(2)	9(3)
OFF	L		○	○
	N			
	R	○	○	

SCMBE6048L

WIPER AND WASHER SWITCH INSPECTION

1. With the multi function switch in each position, make sure that continuity exists between the terminals below.
   If continuity is not as specified, replace the multi-function switch.

[LHD]

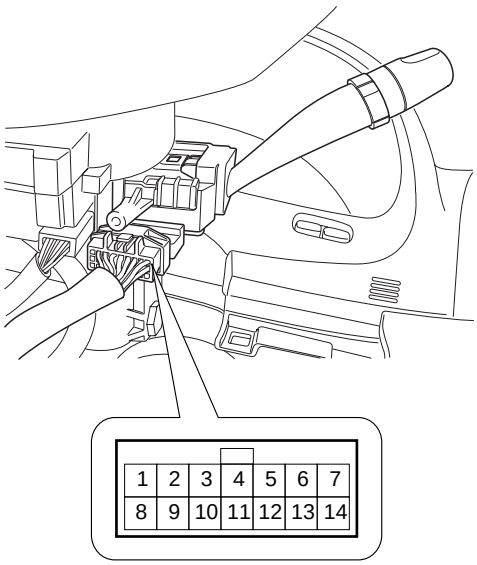

SCMBE6050D

[RHD]

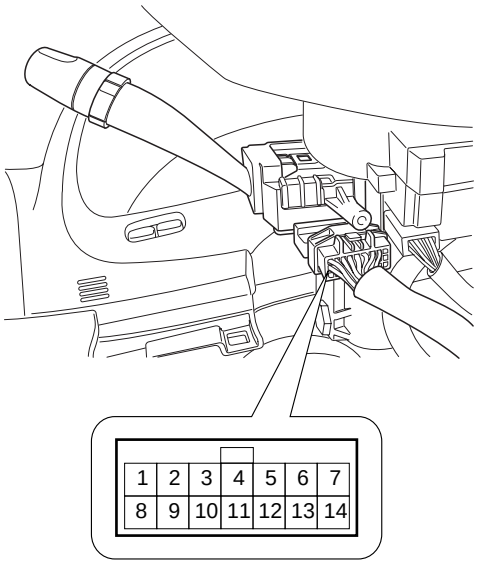

SCMBE6050R

WIPER SWITCH

[RAIN SENSOR] ( ) : RHD

Position \ Terminal	1 (7)	2 (6)	3 (5)	4 (4)	5 (3)	6 (2)	13 (9)	14 (8)
MIST				○	○			
OFF		○	○					
AUTO		○	○		○	○	○	○
LOW		○			○			
HI	○				○			

SCMBE6052L

[STANDARD] ( ) : RHD

Position \ Terminal	1 (7)	2 (6)	3 (5)	4 (4)	5 (3)	6 (2)	13 (9)	14 (8)
MIST				○	○			
OFF		○	○					
INT		○	○		○	○	○	○
LOW		○			○			
HI	○				○			

SCMBE6051L

WASHER SWITCH

( ) : RHD

Position \ Terminal	5(3)	7(1)
OFF		
ON	○	○

SCMBE6053L

REAR WIPER & WASHER SWITCH

( ) : RHD

Position \ Terminal	9(13)	11(11)	12(10)
Rear washer	○		⊖
OFF			
ON	○	⊖	
Rear washer	○		⊖

SCMBE6054L

REPLACEMENT E5E9CB1C

1. Disconnect the negative (-) battery terminal.
2. Remove the steering column upper and lower shrouds (A) after removing 3 screws.

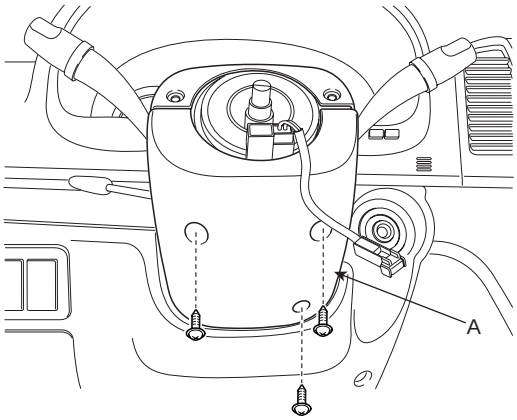

SCMBE6041D

3. Remove the light switch (A) by pushing the lock pin after disconnecting the connector.

[LHD]

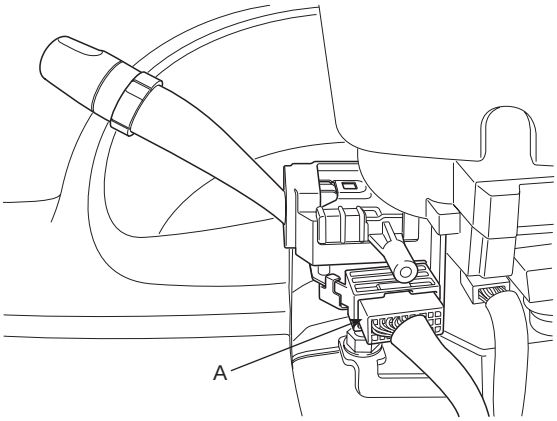

SCMBE6042D

[RHD]

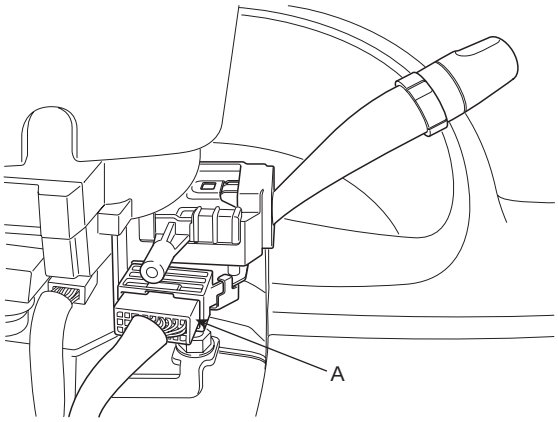

SCMBE6042R

4. Remove the wiper switch (A) by pushing the lock pin after disconnecting the connector.

[LHD]

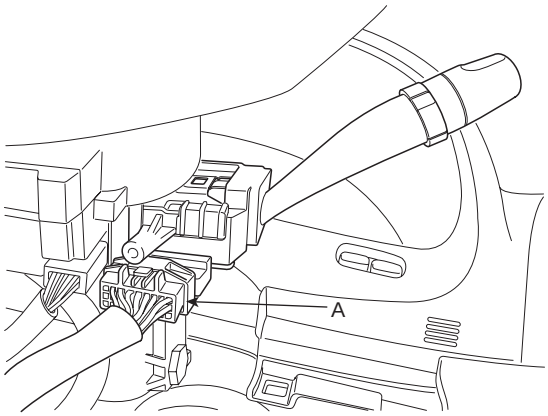

SCMBE6043D

[RHD]

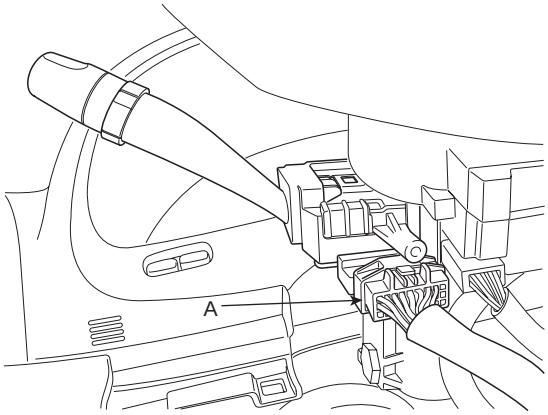

SCMBE6043R

5. Installation is the reverse of removal.

HORNS

COMPONENT LOCATION E15C8F93

The parts with asterisk(*) :
This illustration shows the LHD type.
RHD type is symmetrical.

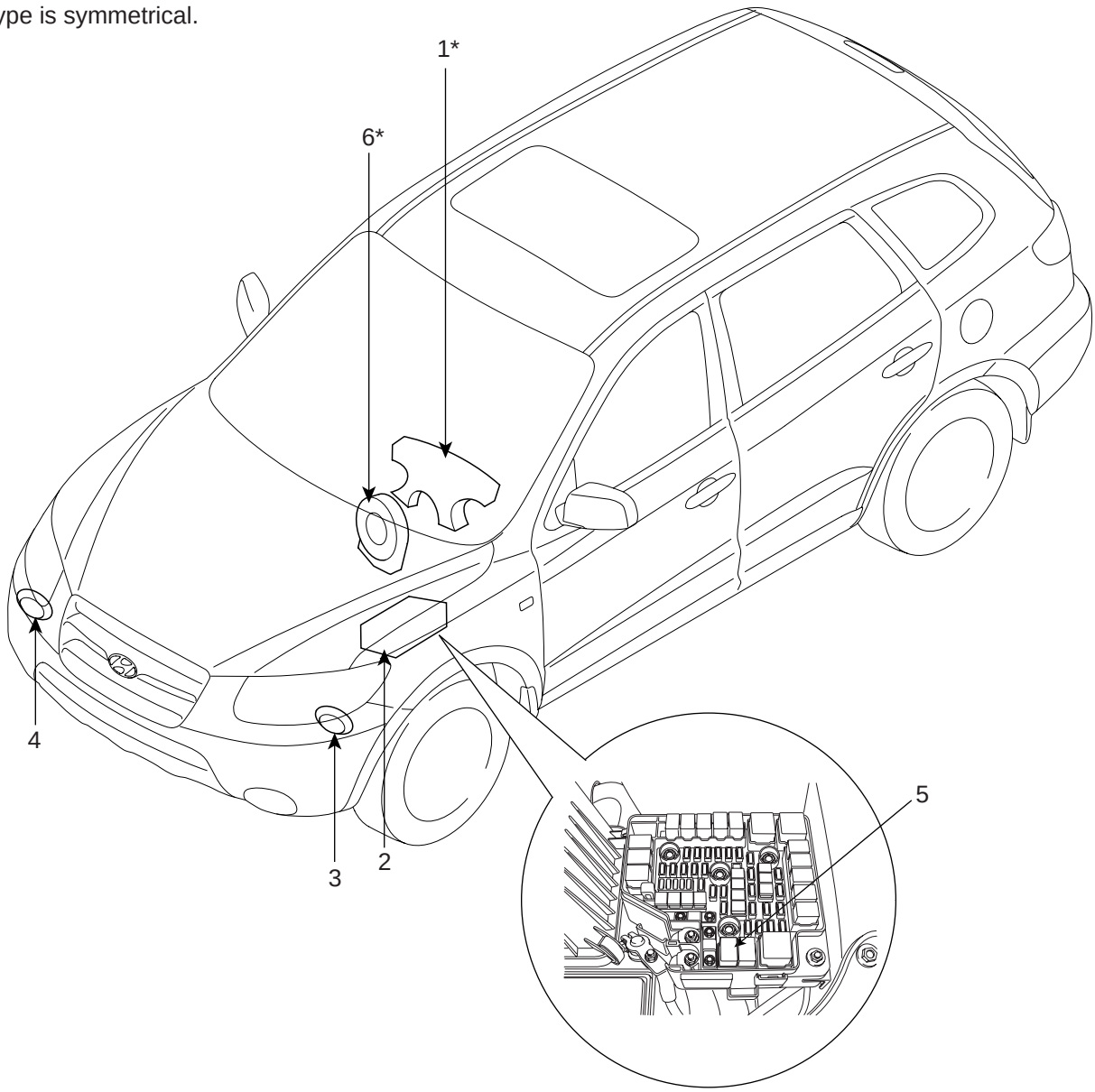

1. Horn switch
2. Relay box (Engine room compartment)
3. Horn (Low pitch)
4. Horn (High pitch)
5. Horn relay
6. Clock spring

SCMBE6060L

INSPECTION EC1AB8DD

Test the horn by connecting battery voltage to the 1 terminal and ground the 2 terminal.
The horn should make a sound. If the horn fails to make a sound, replace it.

HORN RELAY INSPECTION

1. Remove the horn relay (A) from the engine room relay box.
2. There should be continuity between the No.30 and No.87 terminals when power and ground are connected to the No.85 and No.86 terminals.
3. There should be no continuity between the No.30 and No.87 terminals when power is disconnected.

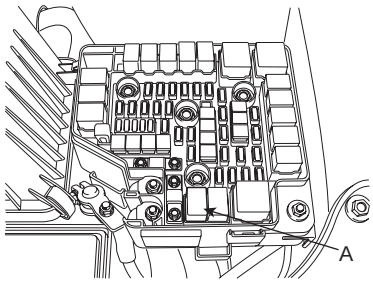

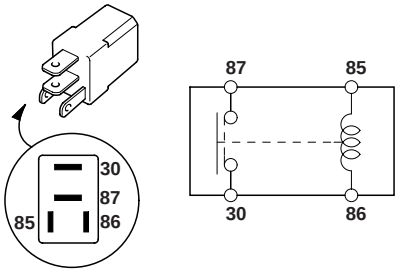

SCMBE6062D

Terminal / Power	30	87	85	86
Disconnected			○	○
Connected	○	○	⊖	⊕

SCMBE6063L

REPLACEMENT ECB03EF0

1. Remove the front bumper. (Refer to the Body group - front bumper).
2. Remove the bolt and disconnect the horn connector, then remove the high pitch horn (A) and low pitch horn (B).

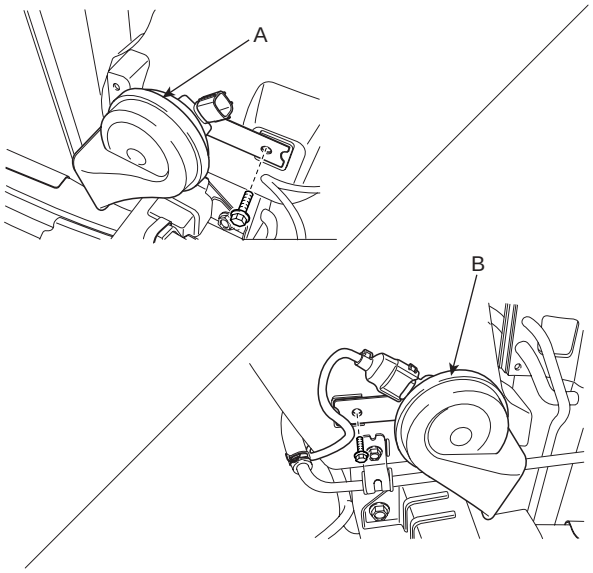

SCMBE6061D

3. Installation is the reverse of removal.

ADJUSTMENT E3F677F8

1. Operate the horn, and adjust the tone to a suitable level by turning the adjusting screw.

NOTE

After adjustment, apply a small amount of paint around the screw head to keep it from loosening.

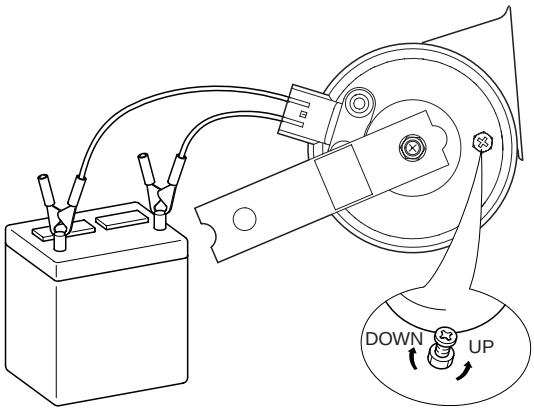

SCMBE6064D

KEYLESS ENTRY AND BURGLAR ALARM

COMPONENT LOCATION E168CF7A

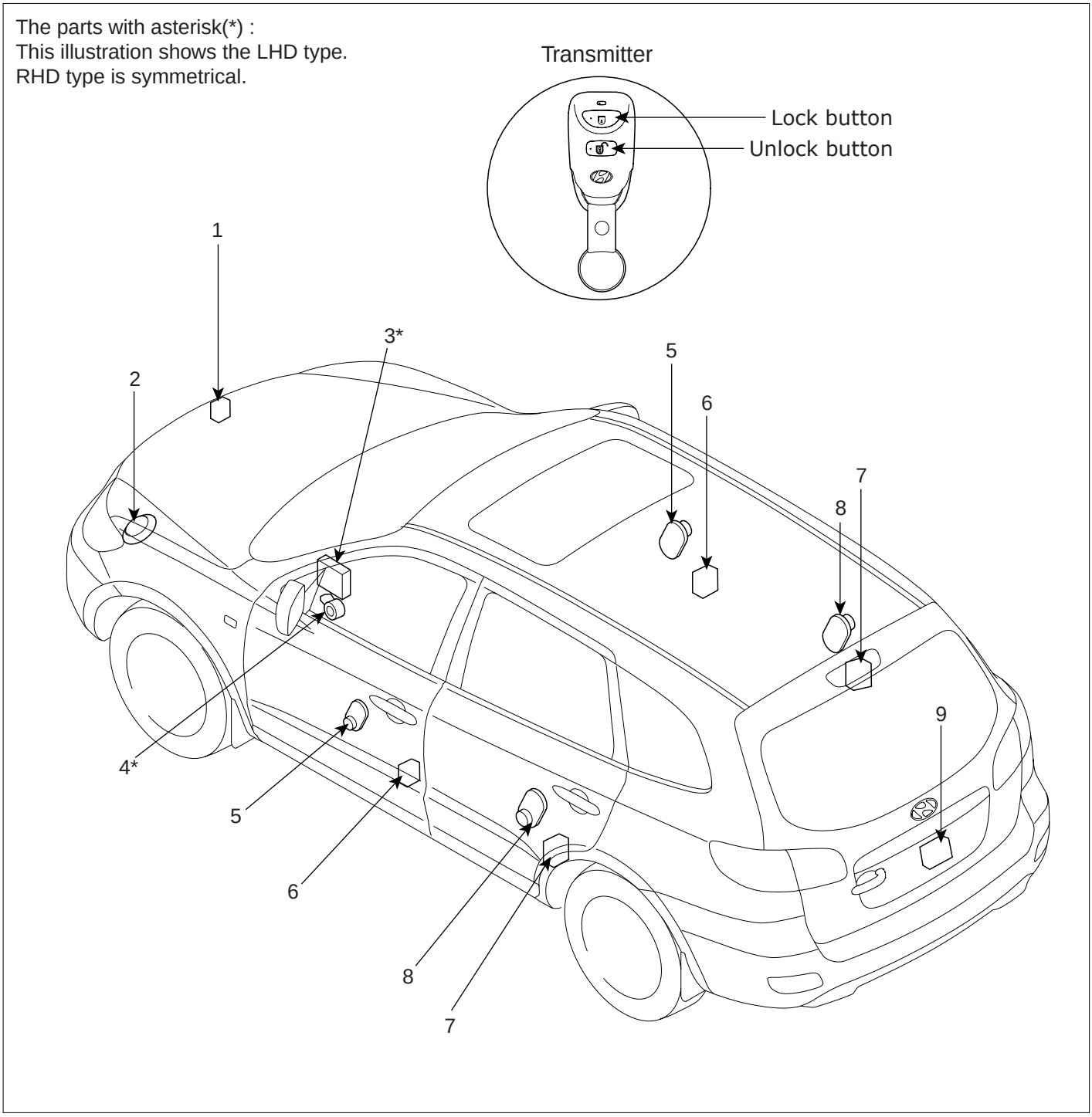

1. Hood switch
2. Burglar horn
3. Body control module
4. Key warning switch
5. Front door switch
6. Front door lock actuator & switch
7. Rear door lock actuator & switch
8. Rear door switch
9. Tailgate lock actuator & switch

SCMBE6120L

DESCRIPTION E5FCECF8

BURGLAR ALARM SYSTEM

The burglar alarm system is armed automatically after the doors, hood, and tailgate are closed and locked.

The system is set off when any of these things occur :

- A door is forced open.
- The tailgate is opened without using the key.
- The hood is opened.

When the system is set off, the alarm sounds and the hazard lamp flash for about 30 seconds or until the system is disarmed by unlocking the transmitter.

For the system to arm, the ignition switch must be off and the key removed. Then, the body control module must receive signals that the doors, hood, and tailgate are closed and locked. When everything is closed and locked, none of the control unit inputs are grounded.

The door switches, hood switch and tailgate switch are all close and lock the doors with the remote transmitter and then the system arms immediately.

If anything is opened after the system is armed, the body control module gets a ground signal from that switch, and the system is set off.

If one of the switches is misadjusted or there is a short in the system, the system will not arm. As long as the body control module continues to get a ground signal, it thinks the vehicle is not closed and locked and will not arm.

KEYLESS ENTRY SYSTEM

The burglar alarm system is integrated with the keyless entry system. The keyless entry system allows you to lock and unlock the vehicle with the remote transmitter. When you push the LOCK/UNLOCK button, all doors lock. When you push the LOCK/UNLOCK button again, all doors unlock.

The room lamp, if its switch is in the center position, will come on when you press the UNLOCK button. If you do not open a door, the light will go off in about 30 seconds, the doors will automatically relock, and the burglar alarm system will rearm. If you relock the doors with the remote transmitter within 30 seconds, the light will go off immediately.

You cannot lock or unlock the doors with the remote transmitter if the key is in the ignition switch.

The system will signal you when the doors lock and unlock by flashing the hazard lamp once when they lock, and twice when they unlock.

FUNCTION E3F8A938

ANTI-THEFT WARNING SYSTEM

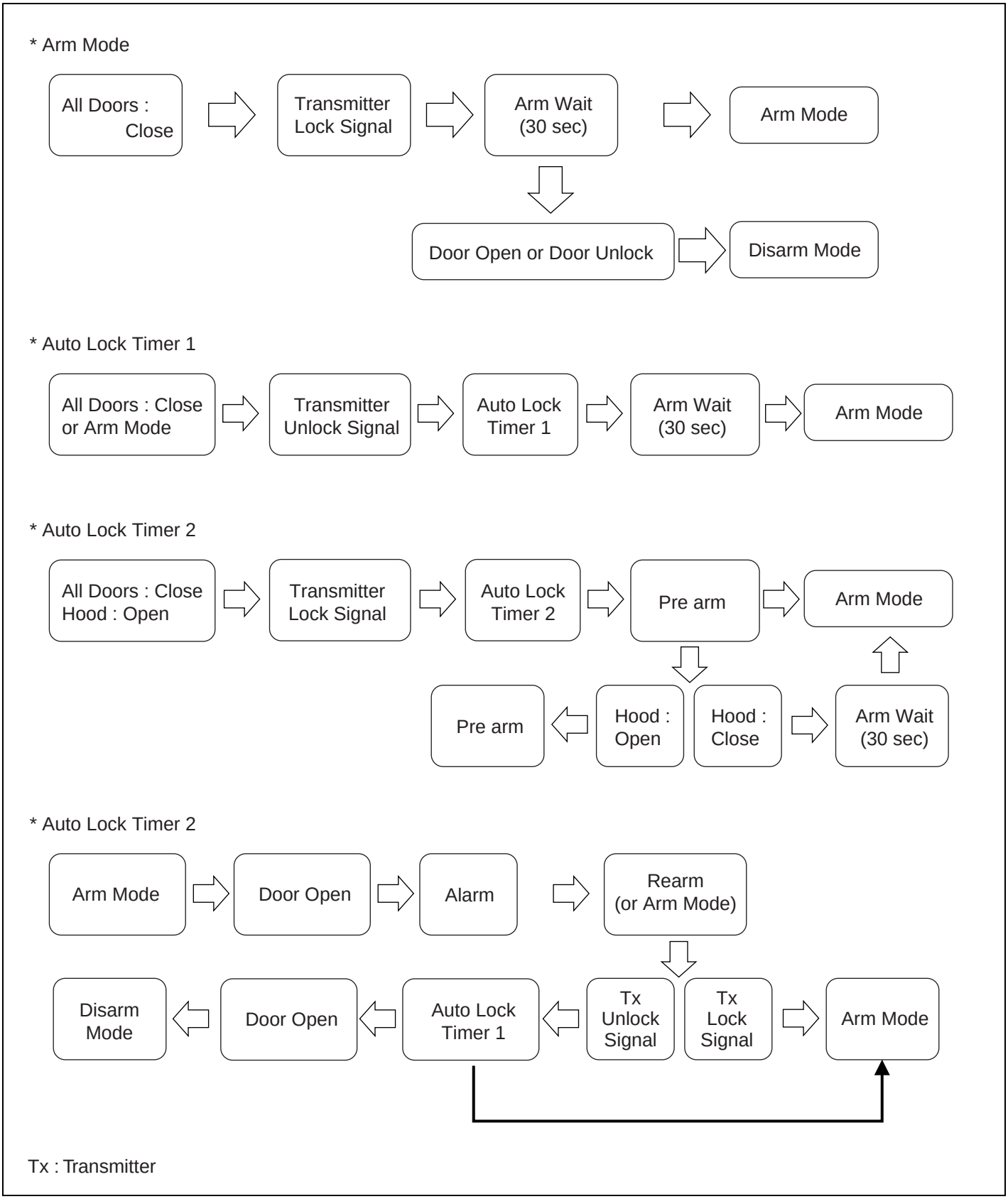

SCMBE6089L

1. SECURITY LED CONTROL

   1) If the KEY IN is ON or ACC is ON or IGN1 is ON or IGN2 is ON, the LED shall be OFF.

   2) When entered into the ARM WAIT mode in the IGN KEY OUT state, control not only the FULL ON but also the BLINKING in the mode other than the ARM WAIT.

   3) The BLINKING cycle is 2.3 seconds, and it is ON for 0.3 seconds and OFF for 2.0 seconds.

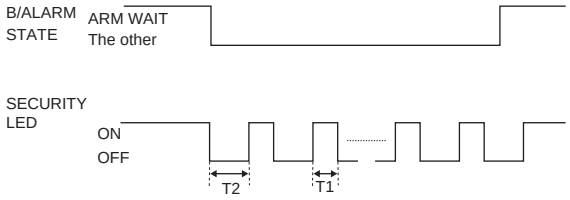

SCMBE6123L

T1 : 0.3s, T2 : 2s

2. DISARM

CONDITION 1

State	Description
Initial Condition	ALARM
Transition Condition	- When 4DOOR or T/GATE is OPEN and TX(Transmitter) UNLOCK is input - After 30 seconds in the KEY IN ON and IGN1 ON and IGN2 ON states - When all doors are unlocked (LOCK FAIL) within 5 seconds after the TX(Transmitter) LOCK input
Operating	- ENTRY INTO THE DISARM STATE - HORN, HAZARD, B/ALARM output shall be OFF - In the case of the TX UNLOCK input, the HAZARD LAMP signal is output with the cycle of the ON/OFF of 0.5 seconds two times.

CONDITION 2

State	Description
Initial Condition	In the DISARM state and any one of the IGN KEY OUT & 4DOOR and T/GATE are opened
Transition Condition	When entering TX UNLOCK
Operating	- Maintain in the DISARM state - The HAZARD LAMP signal is output with the ON/OFF cycle of 0.5 seconds two times.

CONDITION 3

State	Description
Initial Condition	ARM WAIT state
Transition Condition	- When any one of the 4DOOR, HOOD or T/GATE is opened. - When at least one or more doors are unlocked. - In case of KEY IN. - When the DRIVER KEY UNLOCK(T/GATE KEY UNLOCK) signal is input
Operating	- ENTRY INTO THE DISARM STATE

CONDITION 4

State	Description
Initial Condition	AUTOLOCK TIMER1 state
Transition Condition	- When any one of the 4DOOR, HOOD or T/GATE is opened. - In case of KEY IN. - LOCK FAIL after the LOCK attempt by the AUTO LOCK. - LOCK FAIL after the LOCK attempt by the TX LOCK. - LOCK FAIL after the LOCK attempt by the DRIVER KEY LOCK(T/GATE KEY LOCK).
Operating	- ENTRY INTO THE DISARM STATE

CONDITION 5

State	Description
Initial Condition	AUTOLOCK TIMER2 state
Transition Condition	- When any one of the 4DOOR, HOOD or T/GATE is opened. - In case of KEY IN. - LOCK FAIL after the LOCK attempt by the AUTO LOCK. - LOCK FAIL after the LOCK attempt by the TX LOCK. - LOCK FAIL after the LOCK attempt by the DRIVER KEY LOCK (In case of B_MECH_KEY=Enable)
Operating	- ENTRY INTO THE DISARM STATE

CONDITION 6

State	Description
Initial Condition	ARM state
Transition Condition	- IGN KEY ON - DRIVER KEY UNLOCK(T/GATE KEY UNLOCK) input.
Operating	- ENTRY INTO THE DISARM STATE

CONDITION 7

State	Description
Initial Condition	REARM state
Transition Condition	- After 30 seconds in the IGN KEY ON state. - LOCK FAIL after the LOCK attempt by the TX LOCK. - LOCK FAIL after the LOCK attempt by the DRIVER KEY LOCK. - When entering DRIVER KEY UNLOCK.
Operating	- ENTRY INTO THE DISARM STATE - B/ALARM RELAY OFF

CONDITION 8

State	Description
Initial Condition	REARM state
Transition Condition	- In case of TX UNLOCK INPUT in the state that any one of the 4DOOR or T/GATE is opened. - In case of KEY IN. - In case of the 4DOORor T/GATE or HOOD is closed and at least one door is unlocked.
Operating	- ENTRY INTO THE DISARM STATE - In the case of the TX UNLOCK INPUT, the HAZARD LAMP signal is output two times with the ON/OFF cycle of 0.5 seconds.

3. ARM

CONDITION 1

State	Description
Initial Condition	ARM state
Transition Condition	When entering TX LOCK
Operating	- Keep the ARM state - The HAZARD LAMP signal is output for 1s once.

CONDITION 2

State	Description
Initial Condition	ARM WAIT state
Transition Condition	After the ARM WAIT TIMER completion
Operating	- ENTRY INTO THE ARM state

4. ALARM

CONDITION 1

State	Description
Initial Condition	ARM state
Transition Condition	In case of 4DOOR, T/GATE or HOOD is opened.
Operating	- ENTRY INTO THE ALARM state - The B/ALARM RELAY outputs is ON, and then, inhibit the start. - Non-EC area: the Horn alarm shall be output three times with the cycle consisting of the ON for 27s(±2s) and the OFF for 10s(±1s). (At this time, the Hazard Lamp signal shall also be output as the Horn alarm.) - EC and The Middle EAST: the HORN alarm output shall be ON for 27s(±2s) once. (At this time, the Hazard Lamp signal output shall also be ON as the Horn alarm.)

CONDITION 2

State	Description
Initial Condition	REARM state
Transition Condition	In case of 4DOOR, T/GATE or HOOD is opened.
Operating	- ENTRY INTO THE ALARM state - Non-EC area: the Horn alarm shall be output three times with the cycle consisting of the ON for 27s(±2s) and the OFF for 10s(±1s). (At this time, the Hazard Lamp signal shall also be output as the Horn alarm.) - EC and The Middle EAST: the HORN alarm output shall be ON for 27s(±2s) once. (At this time, the Hazard Lamp signal output shall also be ON as the Horn alarm.)

■ Non-EC SPECIFICATION

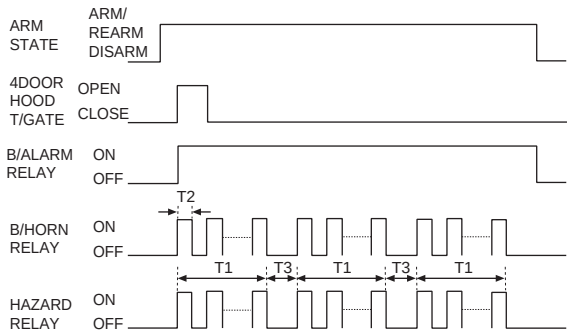

SCMBE6124L

T1 : 27 ± 2sec, T2 : 0.4 ~ 0.5 sec,
T3 : 10 ± 1sec.

■ EC SPECIFICATION

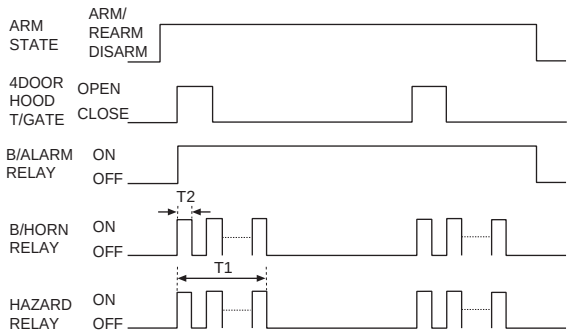

SCMBE6119L

T1 : 27 ± 2sec, T2 : 0.4 ~ 0.5 sec.

5. ARM WAIT

CONDITION 1

State	Description
Initial Condition	ARM WAIT state
Transition Condition	When entering TX LOCK
Operating	- Keep ARM WAIT state - The HAZARD LAMP signal shall be output for 1s once.

CONDITION 2

State	Description
Initial Condition	DISARM state & IGN KEY OUT & 4DOOR, T/GATE and HOOD CLOSE state
Transition Condition	- In case of LOCK SUCCESS after the LOCK attempt by the TX LOCK. - In case of LOCK SUCCESS after the LOCK attempt by the DRIVER KEY LOCK (T/GATE KEY LOCK) INPUT. - In case of 4DOOR, T/GATE, HOOD OPEN>CLOSE with all doors locked.
Operating	- Entry into the ARM WAIT state - The HAZARD LAMP signal shall be output for 1s once. - Start the ARMWAIT TIMER

CONDITION 3

State	Description
Initial Condition	ALARM state & IGN KEY OUT & 4DOOR, T/GATE and HOOD CLOSE state
Transition Condition	- In case of LOCK SUCCESS after the LOCK attempt by the TX LOCK. - In case of LOCK SUCCESS after the LOCK attempt by the DRIVER KEY LOCK (T/GATE KEY LOCK) INPUT.
Operating	- Entry into the ARM WAIT state - OFF the HORN, B/ALARM output. - The HAZARD LAMP signal shall be output for 1s once - Start the ARMWAIT TIMER

CONDITION 4

State	Description
Initial Condition	AUTOLOCK TIMER1 state
Transition Condition	- In case of LOCK SUCCESS after the LOCK attempt by the AUTOLOCK. - In case of LOCK SUCCESS after the LOCK attempt by the TX LOCK. - In case of LOCK SUCCESS after the LOCK attempt by the DRIVER KEY LOCK (T/GATE KEY LOCK) INPUT
Operating	- Entry into the ARM WAIT state - The HAZARD LAMP signal shall be output for 1s once. - Start the ARMWAIT TIMER

CONDITION 5

State	Description
Initial Condition	PREARM state
Transition Condition	- 4DOOR, T/GATE and HOOD are closed and all doors are locked.
Operating	- Entry into the ARM WAIT state - The HAZARD LAMP signal shall be output for 1s once. - Start the ARMWAIT TIMER

CONDITION 6

State	Description
Initial Condition	REARM state
Transition Condition	- LOCK SUCCESS after the LOCK attempt by the TX LOCK. - LOCK SUCCESS after the LOCK attempt by the DRIVER KEY LOCK (T/GATE KEY LOCK) INPUT.
Operating	- Entry into the ARM WAIT state - The HAZARD LAMP signal shall be output for 1s once. - B/ALARM RLY OFF - Start the ARMWAIT TIMER

6. REARM

CONDITION 1

State	Description
Initial Condition	ALARM state
Transition Condition	4DOOR, T/GATE and HOOD are closed and after the ALARM PATTERN completion
Operating	- Entry into the REARM state

7. AUTO-LOCK TIMER1

CONDITION 1

State	Description
Initial Condition	ARM state
Transition Condition	TX UNLOCK INPUT
Operating	- Entry into the AUTO-LOCK TIMER1 state - The HAZARD LAMP signal shall be output with the ON/OFF cycle of 0.5s two times. - START the AUTOLOCK TIMER1

CONDITION 2

State	Description
Initial Condition	REARM state
Transition Condition	- AUTO-LOCK TIMER1 state. - TX UNLOCK INPUT.
Operating	- keep the AUTO-LOCK TIMER1 state - CASE1: AUTOLOCK TIMER1 COMPLETION LOCK ATTEMPT. - CASE2: TX UNLOCK - The HAZARD LAMP signal shall be output with the ON/OFF cycle of 0.5s two times - RESTART THE AUTOLOCK TIMER1

CONDITION 3

State	Description
Initial Condition	ARM WAIT state
Transition Condition	TX UNLOCK INPUT
Operating	- Entry into the AUTO-LOCK TIMER1 state - The HAZARD LAMP signal shall be output with the ON/OFF cycle of 0.5s two times. - START THE AUTOLOCK TIMER

CONDITION 4

State	Description
Initial Condition	The DISARM state and 4DOOR, T/GATE and HOOD are closed and IGN KEY OUT
Transition Condition	TX UNLOCK INPUT
Operating	- Entry into the AUTO-LOCK TIMER1 STATE - The HAZARD LAMP signal shall be output with the ON/OFF cycle of 0.5s two times. - START THE AUTOLOCK TIMER1

CONDITION 5

State	Description
Initial Condition	ALARM state, and 4DOOR, T/GATE and HOOD CLOSE state
Transition Condition	TX UNLOCK INPUT
Operating	- Entry into the AUTO-LOCK TIMER1 STATE - B/ALARM RELAY OFF - The HAZARD LAMP signal shall be output with the ON/OFF cycle of 0.5s two times. - START THE AUTOLOCK TIMER1

CONDITION 6

State	Description
Initial Condition	REARM state
Transition Condition	TX UNLOCK INPUT
Operating	- Entry into the AUTO-LOCK TIMER1 STATE - B/ALARM RELAY OFF - The HAZARD LAMP signal shall be output with the ON/OFF cycle of 0.5s two times. - START THE AUTOLOCK TIMER1

8. AUTO-LOCK TIMER 2

CONDITION 1

State	Description
Initial Condition	AUTO-LOCK TIMER2 state
Transition Condition	- AUTOLOCK TIMER2 COMPLETION. - TX UNLOCK INPUT.
Operating	- keep the AUTO-LOCK TIMER2 state - CASE1: AUTOLOCK TIMER1 COMPLETION LOCK ATTEMPT. - CASE2: TX UNLOCK - The HAZARD LAMP signal shall be output with the ON/OFF cycle of 0.5s two times - RESTART THE AUTOLOCK TIMER1

CONDITION 2

State	Description
Initial Condition	REARM state
Transition Condition	DISARM state AND 4DOOR & T/GATE CLOSE & HOOD OPEN AND IGN KEY OUT
Operating	- Entry into the AUTO-LOCK TIMER2 STATE - The HAZARD LAMP signal shall be output with the ON/OFF cycle of 0.5s two times. - START THE AUTOLOCK TIMER2

CONDITION 3

State	Description
Initial Condition	ALARM STATE AND 4DOOR & T/GATE CLOSE & HOOD OPEN STATE
Transition Condition	TX UNLOCK INPUT
Operating	- Entry into the AUTO-LOCK TIMER2 STATE - OFF the HORN, B/ALARM OUTPUT - The HAZARD LAMP signal shall be output with the ON/OFF cycle of 0.5s two times. - START THE AUTOLOCK TIMER2

CONDITION 4

State	Description
Initial Condition	PREARM START AND 4DOOR & T/GATE CLOSE & HOOD OPEN STATE
Transition Condition	TX UNLOCK INPUT
Operating	- Entry into the AUTO-LOCK TIMER2 STATE - The HAZARD LAMP signal shall be output with the ON/OFF cycle of 0.5s two times. - START THE AUTOLOCK TIMER2

9. PREARM

CONDITION 1

State	Description
Initial Condition	AUTO-LOCK TIMER2 state
Transition Condition	- LOCK SUCCESS after the LOCK attempt by the AUTO LOCK. - LOCK SUCCESS after the LOCK attempt by the TX LOCK. - LOCK SUCCESS after the LOCK attempt by the DRIVER KEY LOCK (T/GATE KEY LOCK) INPUT.
Operating	- Entry into the PREARM state

CONDITION 2

State	Description
Initial Condition	DISARM state & IGN KEY OUT
Transition Condition	- LOCK SUCCESS after the LOCK ATTEMPT by the TX LOCK in the state that 4 DOOR or T/GATE or HOOD is opened. - LOCK SUCCESS after the LOCK ATTEMPT by the DRIVER KEY LOCK (T/GATE KEY LOCK) INPUT in the state that 4 DOOR or T/GATE or HOOD is opened. - The DOOR is turned to the CLOSE state from the OPEN state in the state that all doors are locked. But, the HOOD is opened.
Operating	- Entry into the PREARM state

CONDITION 3

State	Description
Initial Condition	ALARM state & IGN KEY OUT & 4DOOR or T/GATE or HOOD OPEN
Transition Condition	- LOCK SUCCESS after the LOCK attempt by the TX LOCK. - LOCK SUCCESS after the LOCK attempt by the DRIVER KEY LOCK (T/GATE KEY LOCK) INPUT.
Operating	- Entry into the PREARM state - OFF the HORN, HAZARD, B/ALARM OUTPUT

10. RESET

CONDITION 1

State	Description
Initial Condition	ALARM, REARM state
Transition Condition	Insert after the BATTERY is withdrawn
Operating	- The B/ALARM RELAY shall be ON and the HORN ALARM shall be output three times again (EC SPEC ONCE).

CONDITION 2

State	Description
Initial Condition	ARM state
Transition Condition	Insert after the BATTERY is withdrawn
Operating	- Keep the ARM state.

TROUBLESHOOTING EB6A7DD0

1. Alarm does not work. (Hazard lamps work)

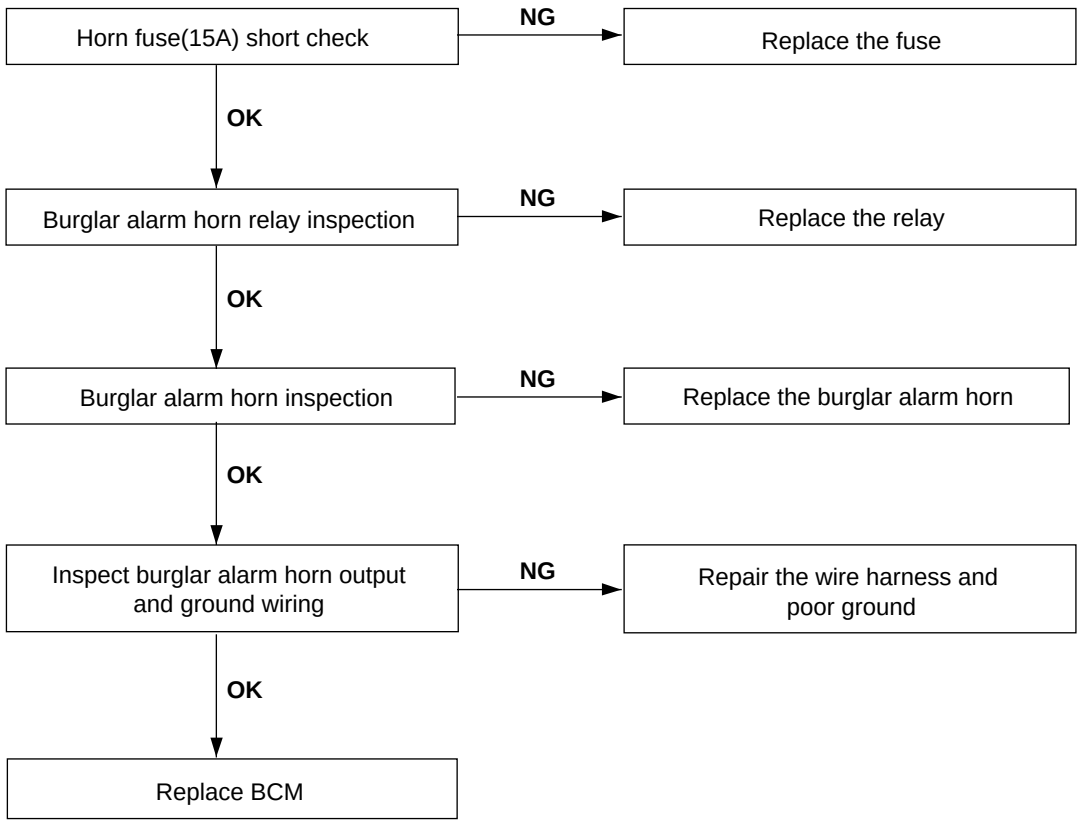

SCMBE6126L

2. When hood is opened in ARM mode, burglar horn does not work.

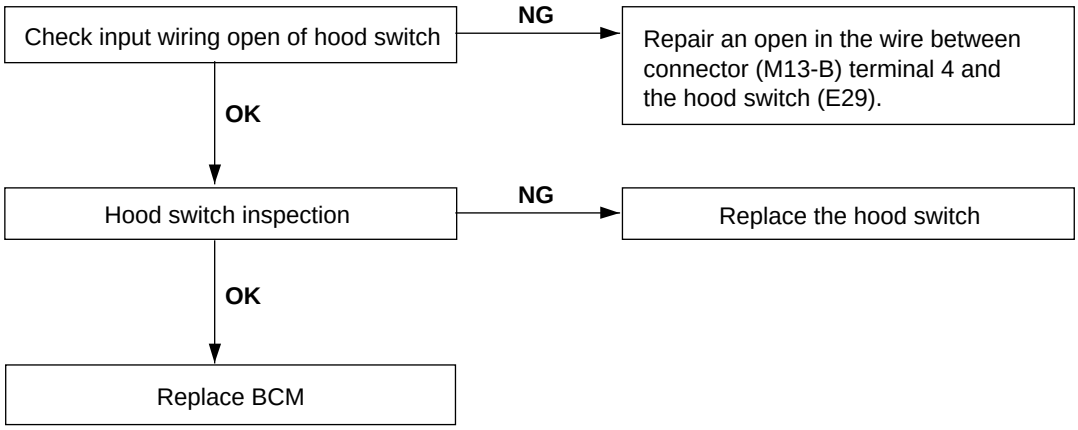

SCMBE6127L

3. When door is opened, burglar horn does not work. (If tailgate and hood is opened, alarm works)

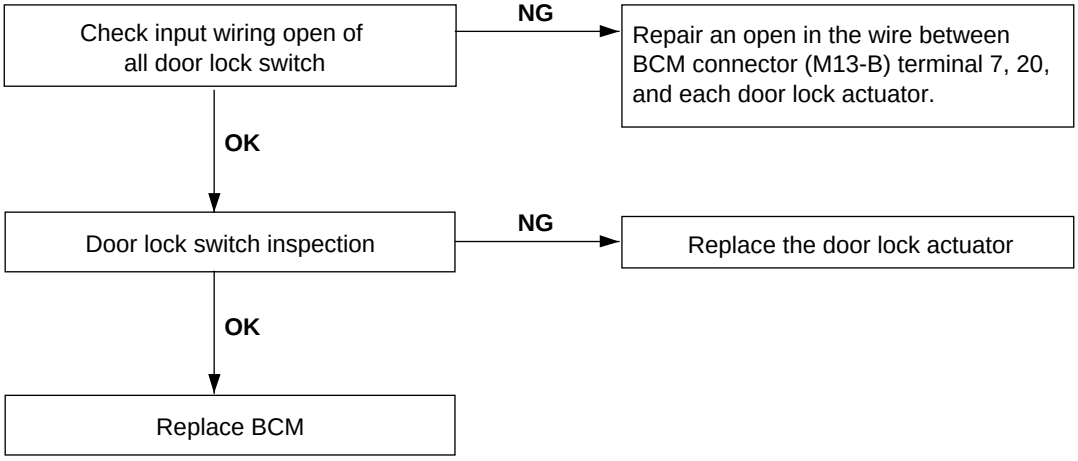

SCMBE6128L

4. When tailgate is opened in ARM mode, burglar horn does not work.

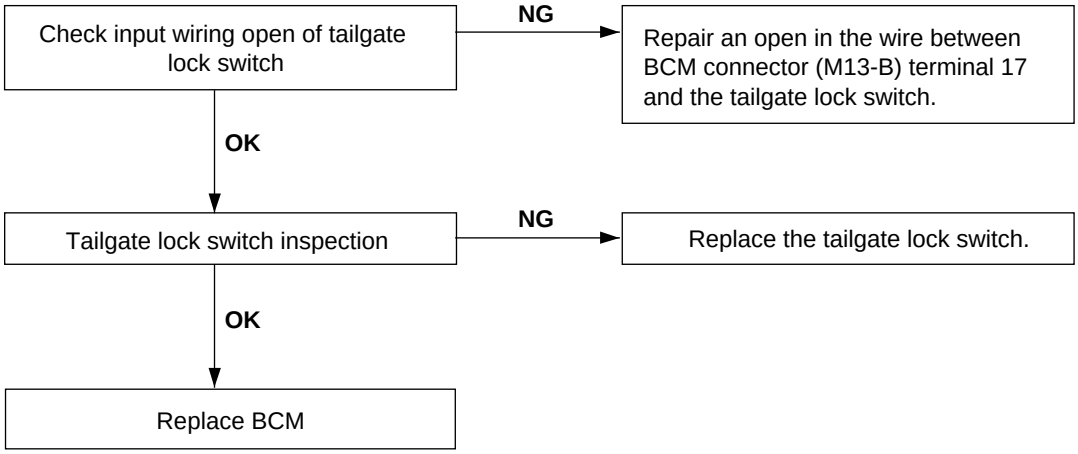

SCMBE6129L

5. When the vehicle is locked by the transmitter, central door lock function works but hazard lamp doesn't blink.

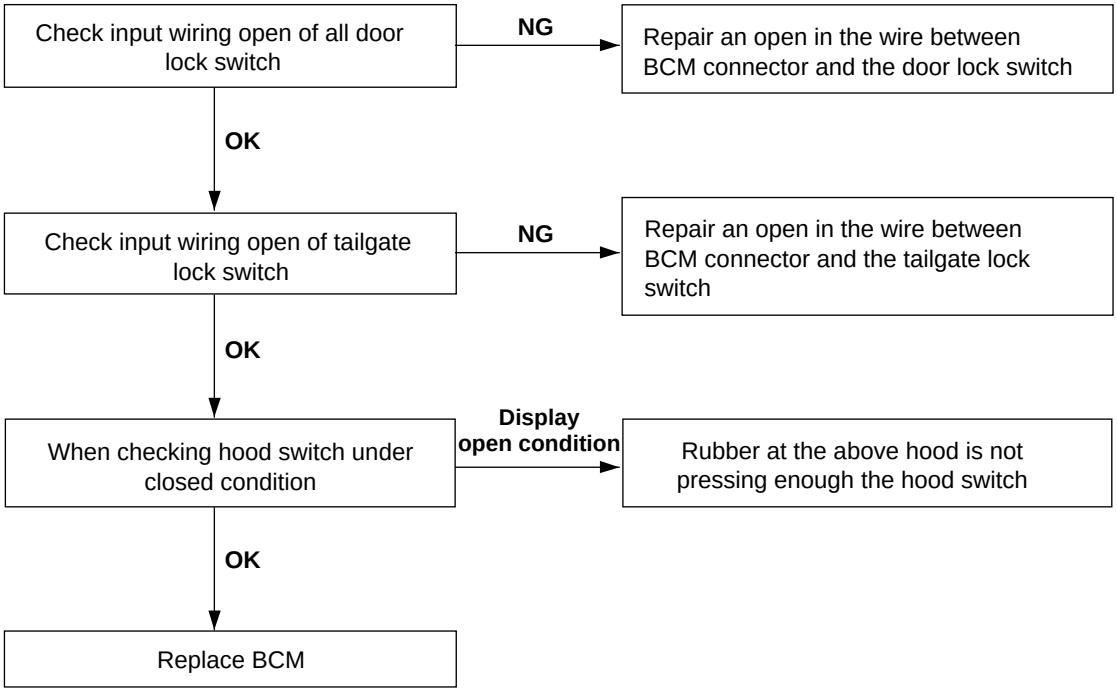

SCMBE6098L

6. Central door lock function works, but keyless entry system does not work.

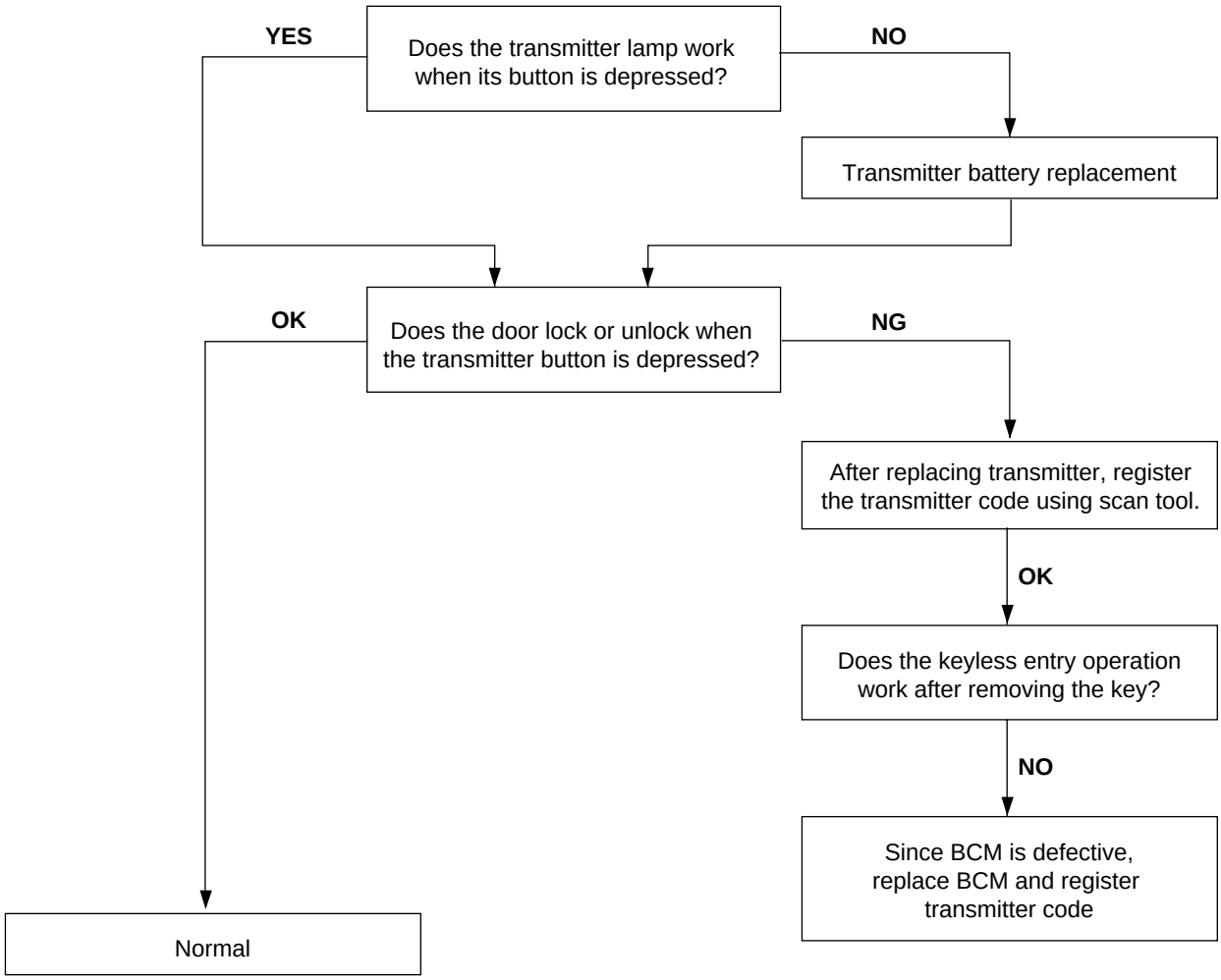

SCMBE6099L

INSPECTION EAD8ECED

FRONT DOOR LOCK ACTUATOR

1. Remove the front door trim.
   (Refer to the Body group - Front door)

2. Remove the front door module.
   (Refer to the Body group - Front door).

3. Disconnect the connectors from the actuator.

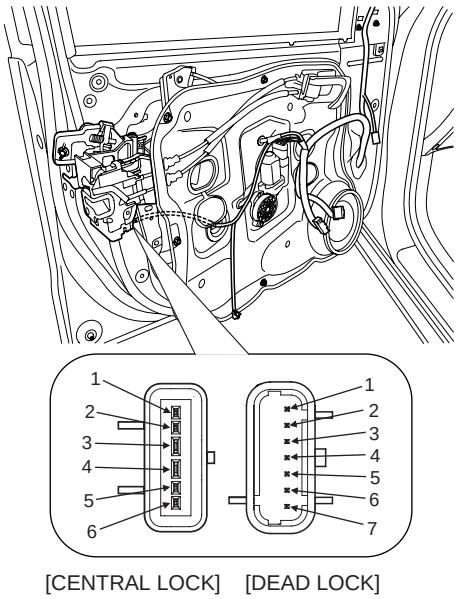

SCMBE6130L

4. Check actuator operation by connecting power and ground according to the table. To prevent damage to the actuator, apply battery voltage only momentarily.

[CENTRAL LOCK]

Position \ Terminal		4	3
Front left	Lock	⊕	⊖
	Unlock	⊖	⊕
Front right	Lock	⊖	⊕
	Unlock	⊕	⊖

SCMBE6131L

[DEAD LOCK]

Position \ Terminal			5	6	7
Central Lock	Front left	Lock	⊕	⊖	⊖
		Unlock	⊖	⊕	⊕
	Front right	Lock	⊖	⊕	⊕
		Unlock	⊕	⊖	⊖
Dead Lock	Front left	Lock	⊖	⊕	⊕
		Unlock	⊖	⊕	⊖
	Front right	Lock	⊕	⊖	⊖
		Unlock	⊕	⊖	⊕

SCMBE6144L

REAR DOOR LOCK ACTUATOR

1. Remove the rear door trim.
   (Refer to the Body group - Rear door)

2. Remove the rear door module.
   (Refer to the Body group - Rear door)

3. Disconnect the connectors from the actuator.

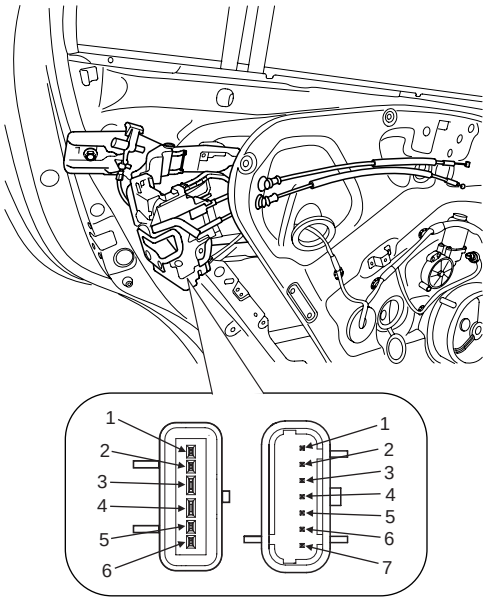

[CENTRAL LOCK] [DEAD LOCK]

SCMBE6132L

4. Check actuator operation by connecting power and ground according to the table. To prevent damage to the actuator, apply battery voltage only momentarily.

[CENTRAL LOCK]

Position \ Terminal		4	3
Rear left	Lock	⊕	⊖
	Unlock	⊖	⊕
Rear right	Lock	⊖	⊕
	Unlock	⊕	⊖

SCMBE6133L

[DEAD LOCK]

Position \ Terminal			5	6	7
Central Lock	Rear left	Lock	⊕	⊖	⊖
		Unlock	⊖	⊕	⊕
	Rear right	Lock	⊖	⊕	⊕
		Unlock	⊕	⊖	⊖
Dead Lock	Rear left	Lock	⊖	⊖	⊕
		Unlock	⊕	⊕	⊖
	Rear right	Lock	⊕	⊕	⊖
		Unlock	⊖	⊖	⊕

SCMBE6145L

TAILGATE LOCK ACTUATOR INSPECTION

1. Remove the tailgate trim. (Refer to the Body group - tailgate)
2. Disconnect the 4P connector from the actuator.

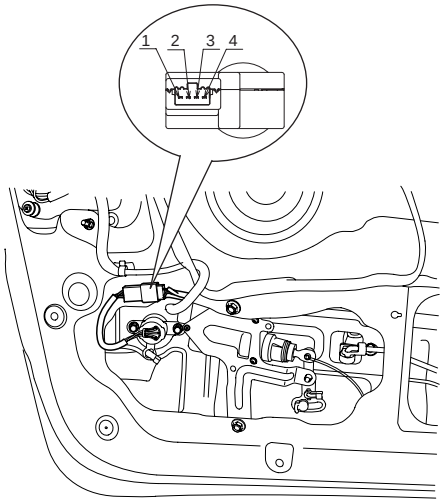

SCMBE6134D

3. Check actuator operation by connecting power and ground according to the table. To prevent damage to the actuator, apply battery voltage only momentarily.

Position \ Terminal	2	3
Lock	⊖	⊕
Unlock	⊕	⊖

SCMBE6135L

FRONT DOOR LOCK SWITCH

1. Remove the front door trim. (Refer to the Body group - Front door)
2. Remove the front door module. (Refer to the Body group - Front door).
3. Disconnect the connectors from the actuator.

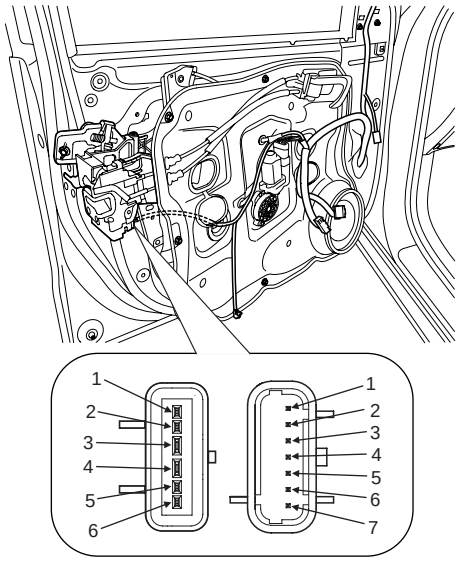

[CENTRAL LOCK] [DEAD LOCK]

SCMBE6130L

4. Check for continuity between the terminals in each switch position when inserting the key into the door according to the table.

[CENTRAL LOCK]

Position \ Terminal			2	5	1
Central Lock	Front left	Clockwise	○	○	
		Counter-clockwise		○	○
	Front right	Clockwise	○	○	
		Counter-clockwise		○	○

SCMBE6136L

[CENTRAL LOCK]

Position \ Terminal			1	5	2	6
Central Lock	Front left	Unlock		○		○
	Front right	Lock	○		○	

SCMBE6148L

[DEAD LOCK]

Position \ Terminal			3	2	4
Central Lock	Front left	Clockwise	○	○	
		Counter-clockwise		○	○
	Front right	Clockwise	○	○	
		Counter-clockwise		○	○

SCMBE6146L

[DEAD LOCK]

Position \ Terminal			3	1	7	5
Central Lock	Front left	Unlock	○	○		
	Front right	Lock			○	○

SCMBE6147L

REAR DOOR LOCK SWITCH

1. Remove the rear door trim.
   (Refer to the Body group - Rear door)

2. Remove the rear door module.
   (Refer to the Body group - Rear door)

3. Disconnect the connectors from the actuator.

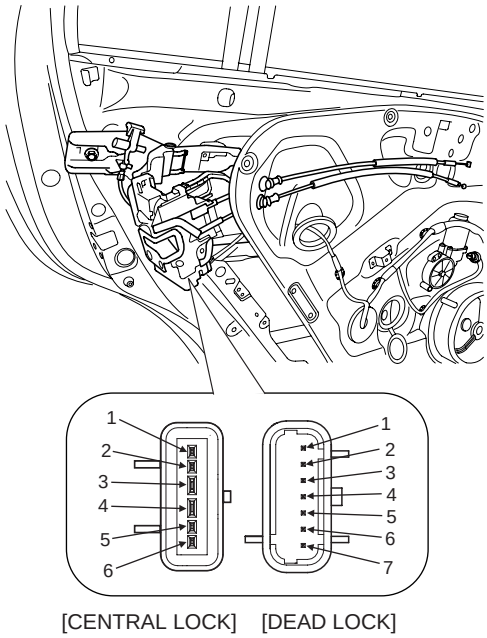

SCMBE6132L

4. Check for continuity between the terminals in each switch position according to the table.

[CENTRAL LOCK]

Position \ Terminal		1	5	2	6
Central Lock	Unlock		○		○
	Lock	○		○	

SCMBE6122L

[DEAD LOCK]

Position \ Terminal		3	1	7	5
Central Lock	Unlock	○	○		
	Lock			○	○

SCMBE6142L

TAILGATE SWITCH

1. Remove the tailgate trim. (Refer to the Body group - Tailgate)
2. Disconnect the 4P connector from the actuator.

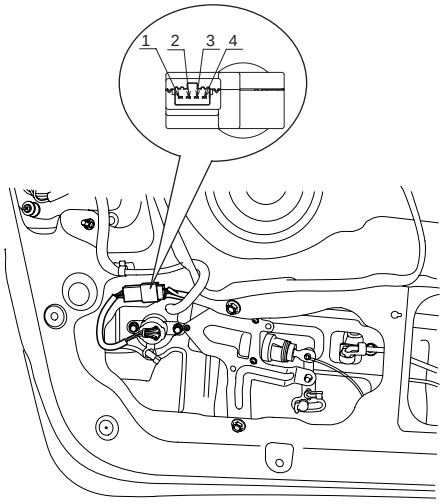

SCMBE6134D

3. Check for continuity between the terminals in each switch position according to the table.

Position \ Terminal	1	4
Lock	○	○
Unlock		

SCMBE6138L

DOOR SWITCH

Remove the door switch and check for continuity between the terminals.

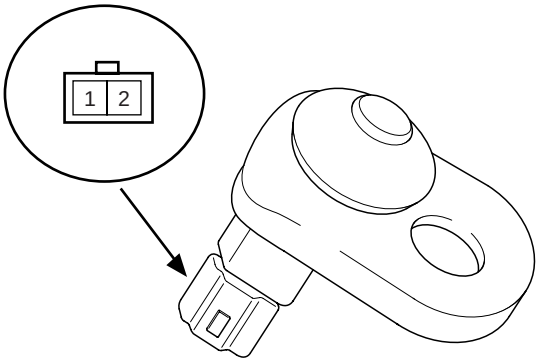

KTKD020A

Position \ Terminal	1	2	Body (Ground)
Free(Door open)	○	○	○
Push(Door close)			

ETQF180D

HOOD SWITCH

1. Remove the hood latch.
   (Refer to the Body group - Hood)

2. Disconnect the connector from the hood switch.

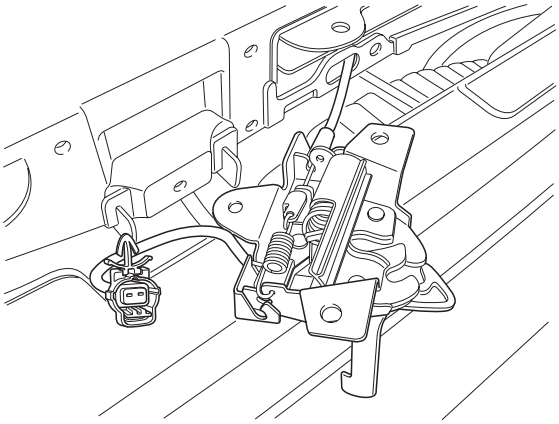

SCMBE6139D

3. Check for continuity between the terminals and ground according to the table.

Position \ Terminal	1	2
Hood open (Free)	○	○
Hood close (Push)		

ETBF180B

KEY WARNING SWITCH

1. Remove the crash pad lower panel. (Refer to Body group-Crash pad)

2. Disconnect the 6P connector from the key warning switch.

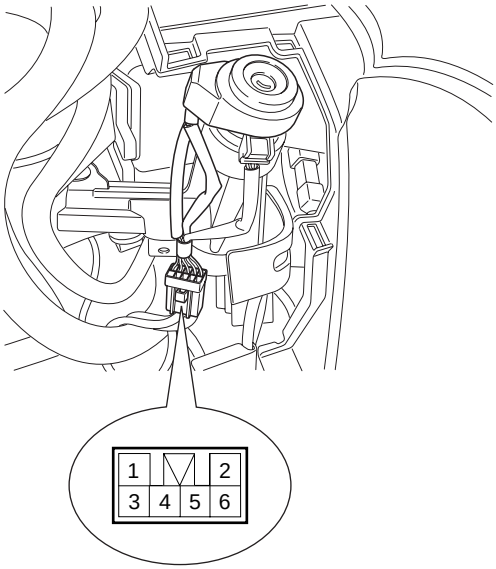

SCMBE6141D

3. Check for continuity between the terminals in each position according to the table.

Key position \ Terminal	5	6
Insert	○	○
Removal		

ETQF180F

BURGLAR HORN

1. Remove the burglar horn after removing 2 bolts and disconnect the 2P connector from the burglar horn.

2. Test the burglar horn by connecting battery power to the terminal 1 and ground the terminal 2.

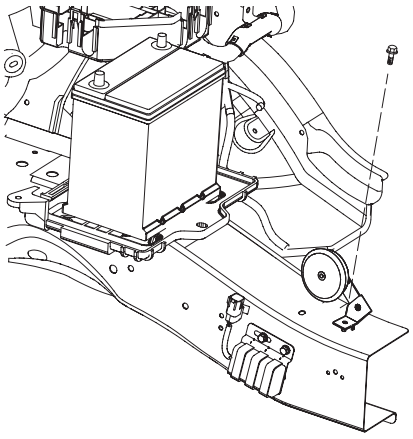

SCMBE6143D

3. The burglar horn should make a sound. If the burglar horn fails to make a sound replace it.

TRANSMITTER

SPECIFICATION EB5DFE4B

Items	Specifications
Keyless entry transmitter Power source	Lithium 3V battery (1EA)
Transmissible distance	10m or more
Life of battery	2 years or more (at 10 times per a day)
Button	Door lock Door unlock
Transmission frequency	433.92 MHz(GEN, EUR), 315 MHz (JAPAN, CHINA)

INSPECTION E55ACB71

1. Check that the red light flickers when the door lock or unlock button is pressed on the transmitter.
2. Remove the battery and check voltage if the red light doesn't flicker.

Standard voltage : 3V

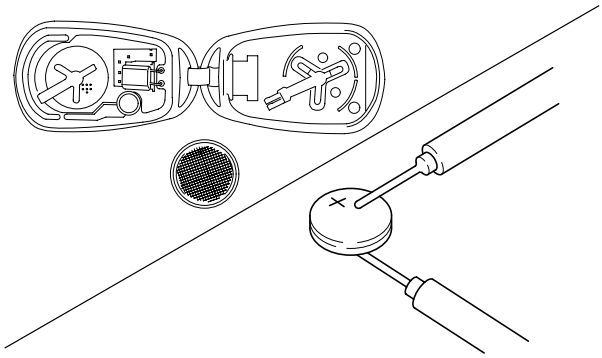

ATLG029A

3. Replace the transmitter battery with a new one, if voltage is below 3V then try to lock and unlock the doors with the transmitter by pressing the lock or unlock button five or six times.
4. If the doors lock and unlock, the transmitter is O.K, but if the doors don't lock and unlock, register the transmitter code, then try to lock and unlock the doors.
5. If the transmitter is failure, replace only the transmitter (A).

TRANSMITTER CODE REGISTRATION E059A767

1. Connect the DLC cable of scan tool to the data link connector (16 pins) in driver side crash pad lower panel, turn the power on scan tool.

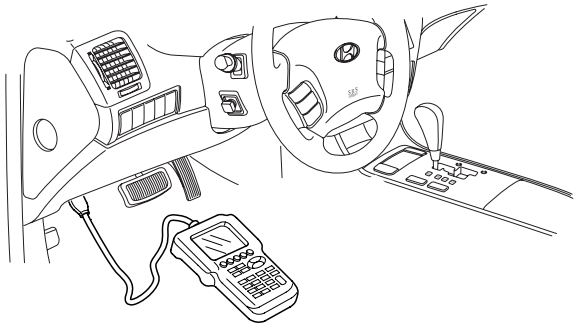

KTBF121T

2. Select the vehicle model and then do "CODE SAVING".

1. HYUNDAI VEHICLE DIAGNOSIS

MODEL : ALL

02. ENGINE
03. AUTOMATIC TRANSAXLE
04. ANTI-LOCK BRAKE SYSTEM
:
:
:
07. CODE SAVING

ETPD700I

3. After selecting "CODE SAVING" menu, push "ENTER" key, then the screen will be shown as below.

TRANSMITTER CODE SAVE

REMOVE THE IG. KEY FROM THE KEY CYLINDER. CONNECT THE DLC CABLE AND 16 PIN CONNECTOR OF THE VEHICLE.

PRESS [ENTER], IF YOU ARE READY!

ETRF065M

4. After removing the ignition key from key cylinder, push "ENTER" key to proceed to the next mode for code saving. Follow steps 1 to 4 and then code saving is completed.

TRANSMITTER CODE SAVE

1ST. TRANSMITTER SAVE
PRESS THE TRANSMITTER [LOCK] BUTTON OR [UNLOCK] BUTTON FOR 1 SECOND.

* NO. OF CODED KEY : 0 EA

ETRF065N

TRANSMITTER CODE SAVE

1ST. TRANSMITTER SAVE
PRESS THE TRANSMITTER [LOCK] BUTTON OR [UNLOCK] BUTTON FOR 1 SECOND.

1ST. TRANSMITTER SAVE SUCCESS!

IF YOU WANT TO SAVE THE 2ND KEY PRESS [YES], OR NOT PRESS [NO]

* NO. OF CODED KEY : 1 EA

ETRF065O

TRANSMITTER CODE SAVE

2ND. TRANSMITTER SAVE
PRESS THE TRANSMITTER [LOCK] BUTTON OR [UNLOCK] BUTTON FOR 1 SECOND.

* NO. OF CODED KEY : 1 EA

ETRF065P

TRANSMITTER CODE SAVE

2ND. TRANSMITTER SAVE
PRESS THE TRANSMITTER [LOCK] BUTTON OR [UNLOCK] BUTTON FOR 1 SECOND.

2ND. TRANSMITTER SAVE SUCCESS!

CODE SAVING IS COMPLETED!
IF YOU STOP, PRESS [ESC] KEY!!!

* NO. OF CODED KEY : 2 EA

ETRF065Q

ETACS (ELECTRONIC TIME AND ALARM CONTROL SYSTEM)

BODY CONTROL MODULE

DESCRIPTION E7BADD35

Body control module (A) receives various input switch signals controlling time and alarm functions for tail lamp, rear fog lamp, tail lamp auto cut, auto light, DRL, seat belt reminder warning, key operated warning, parking brake warning, over speed warning, ignition key hole illumination, room lamp control, power window delay time control, keyless entry control, burgular alarm control, dead lock, auto door lock/crash door unlock, key reminder & front/rear heated control.	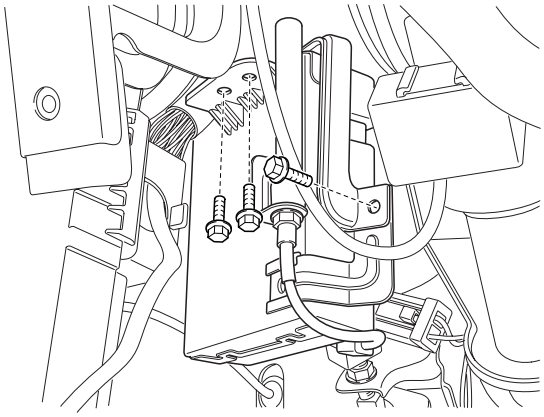 SCMBE6150D

BCM BLOCK DIAGRAM

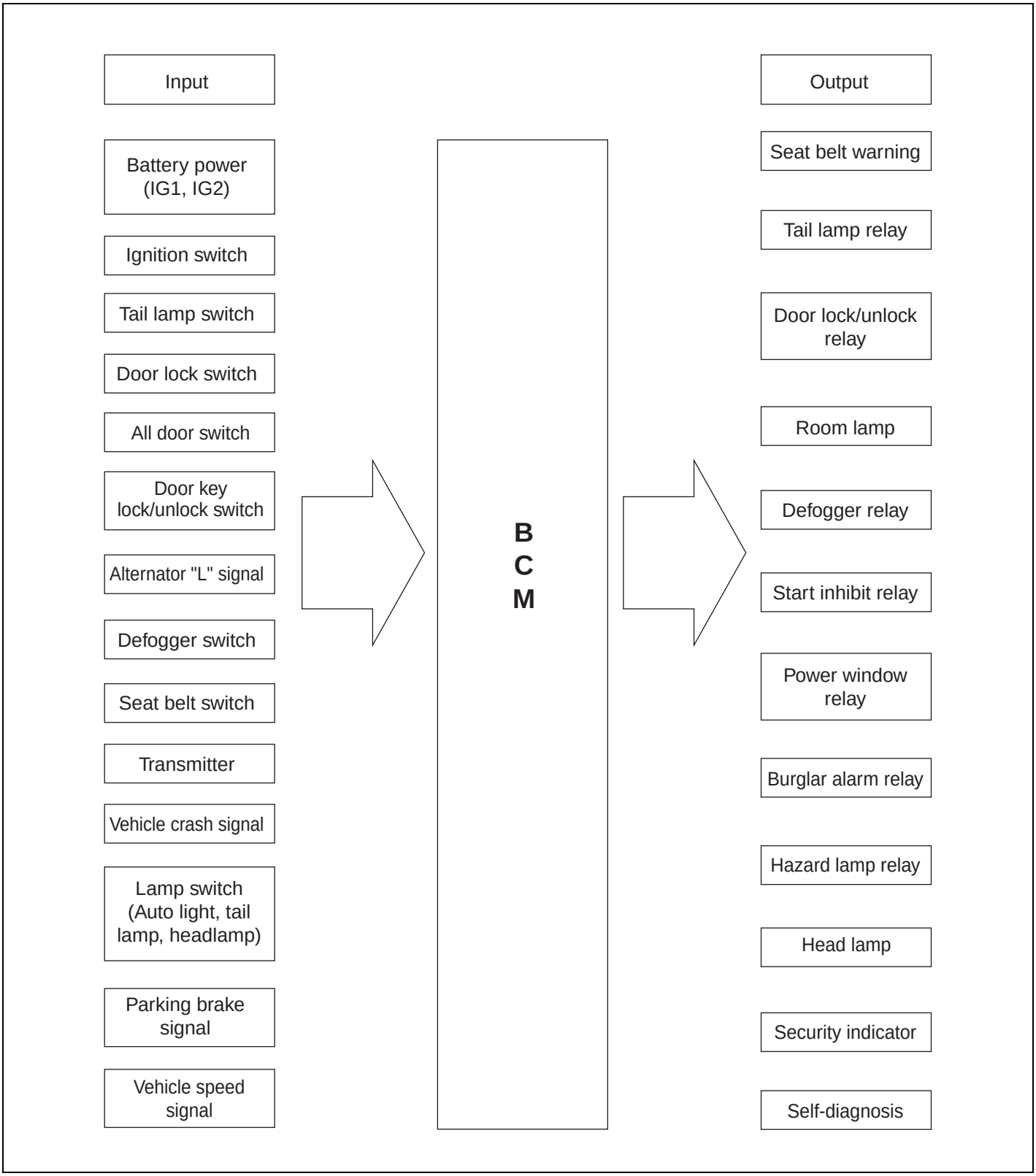

SCMBE6151L

OPERATION EAE305E9

1. WASHER INTERLOCKING WIPER

   1) If the Washer SW is ON in the IGN2 SW ON state, then the Wiper output shall be ON after T1, and if the Washer SW input is ON for 0.2~0.6 seconds, then the Wiper output shall be OFF after T3. However, WASHER SW input shall be disregarded during the Washer Wiper operating, but after operating the Washer Wiper, WASHER SW input shall be accepted first.

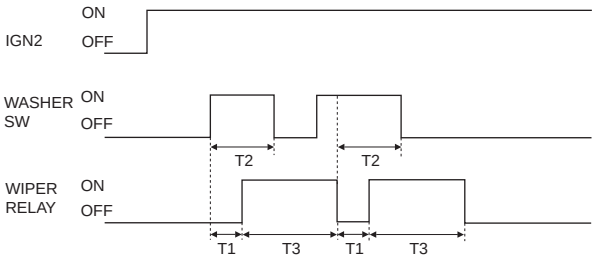

SCMBE6155L

   T1 : 0.3 ± 0.1s, T2 : 0.2~0.6s, T3 : 0.7 ± 0.1s
   In case of T2 is less than 0.2s, T3=0

   2) If the Washer SW is ON in the IGN2 SW ON state, then the Wiper output shall be ON after T1, and if the Washer SW is ON over 0.6 seconds, after the Washer SW is OFF and the Wiper output shall be ON for 2.5~3.8 seconds and then, the Wiper output shall be OFF. However, WASHER SW input shall be disregarded during the Washer Wiper operating, but after the Washer Wiper operating, WASHER SW input be accepted first.

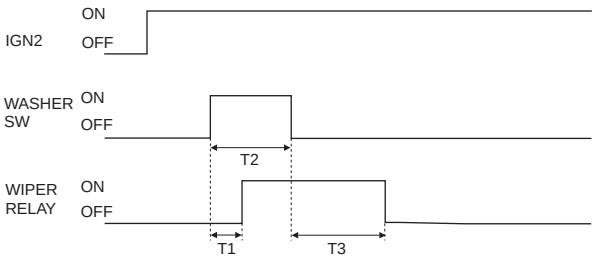

SCMBE6900L

   T1 : 0.3 ± 0.1s, T2 : more than 0.6s, T3 : 2.5~3.8s

   3) During INT Wiper operating, if the Washer SW is ON over 0.6 seconds, then the Washer Interlocking Wiper output shall be ON. If the Washer SW is ON for 0.2~0.6 seconds, then the Wiper output shall be ON once.

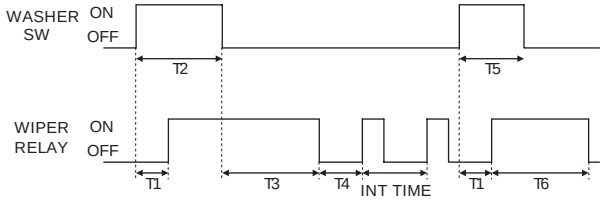

SCMBE6901L

   T1 : 0.3 ± 0.1s, T2 : more than 0.6s
   T3 : 2.5~3.8s ± 0.1s, T4 : INT TIME-0.7s,
   T5 : 0.2~0.6s, T6 : 0.7 ± 0.1s

2. VEHICLE SPEED (SENSITIVE TYPE) INT WIPER
   According to the vehicle speed, control intermittent time of the Intermittent Wiper.
   - IGN1 SW ON state
   - WIPER SW INT state
   - INPUT the vehicle speed, intermittent time set VOLUME value
     - Change the WIPER by calculating the intermittent time according to the vehicle speed.

   1) Input of Vehicle speed
      Calculate the vehicle speed by the number of Input PULSE for 1 second.

      1 [PULSE/sec] = (60[Km/h] × 60[sec]) / (637 × 4 PULSE) 1.41[Km/h]

   2) Output of Vehicle speed
      Count the number of the PULSE for 1 second, and compare with the former value, and then define the higher value of the vehicle speeds as the vehicle speed for intermittent time output.

      V = max (Vnew, Vold)
      But, Vnew: the present vehicle speed, Vold: the former vehicle speed

3) Output of Intermittent time ratio (vehicle speed: 0Km/h)
Calculate the INT time rate by inputting the INT Time set Volume value (input voltage)
The INT Time Rate is to indicate the position where the Volume is located from the Slow (100%) to the Fast (0%) of the Knob. Therefore the Volume shall be linearly calibrated about the input voltage.

4) Output of Standard Intermittent Time
Calculate the intermittent time of the intermittent time ratio 100% and 0% at the vehicle speed (V) computed above by linear correction and then, calculate the standard intermittent time by the proportional distribution of the intermittent time ratio computed in (3) item.
- If the variation of the standard intermittent time is less than 0.3 sec, should not renew the intermittent time.
- If the standard intermittent time is less than 0.2 sec, continually operate.
- When the INT Time Timer (passed time) is over 10 seconds, if the vehicle is speeded up (from 0 km/h to 7km/h and more), then the Wiper shall be operated.

3. TAIL LAMP AUTO CUT
After Key IN SW is On, if Tail SW is On, then Key IN SW shall be OFF; when the driver's door is opened, then the Tail Lamp shall be OFF automatically.
Also, in the state that the KEY IN SW is ON, after the driver's door is opened, if the KEY IN SW is OFF, then the Tail Lamp shall be OFF automatically.
After the Auto Cut, if the Tail SW is ON after OFF again, the Tail Lamp shall be ON, and the Auto Cut function shall be canceled.
After the Auto Cut, when KEY IN SW is ON again, TAIL LAMP shall be ON, and the Auto Cut function shall be canceled.
In the state of the AUTO CUT, if mounting or removing the BATTERY, then the AUTO CUT state shall be continued.

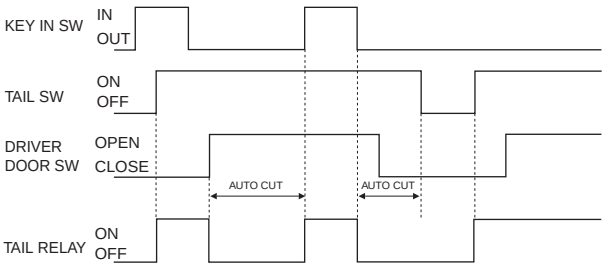

SCMBE6157L

4. HEAD LAMP LOW CONTROL
If HEAD LAMP LOW SW is On in the IGN1 On state, HEAD LAMP HIGH RELAY shall be ON so that HEAD LAMP HIGH can be controlled by HEAD LAMP RELAY and M/F SW.

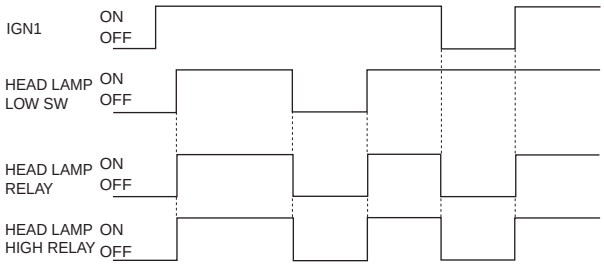

SCMBE6158L

5. AUTO LIGHT CONTROL

1) The AUTO LIGHT function shall not be applied in case of DRL OPTION of Europe spec(DRL OPTION LINE = GND).

2) It shall be able to operate only in case of B AUTO LIGHT is active, and comply with CALIBRAION PARAMETER TABLE of each spec.

3) In GN1 SW ON state, if the supply voltage of the AUTO LIGHT SENSOR is less than 4v or more than 6v, it is determined as the fault. In the fault state, in case of the AUTO LIGHT SW is ON, always HEAD LAMP RELAY shall be ON regardless of the Sensor value. FILTERING TIME for the fault and recovery with regard to the supply voltage is 300 msec respectively.

4) In the condition of LIGHT ON, when the AUTO LIGHT SENSOR value is entered into AUTO LIGHT control condition, then LIGHT shall be ON immediately.

5) If IGN1 SW is ON, and AUTO LIGHT SW is ON, and in LIGHT OFF state, and in case of AUTO LIGHT SENSOR value is the input value of the LIGHT ON, LIGHT shall be ON after 2.5 ± 0.2sec.

6) In LIGHT ON state, in case of the AUTO LIGHT SENSOR value is the input value of the LIGHT OFF, LIGHT shall be OFF after 2.5 ± 0.2sec.

7) If the SENSOR value is the input value of the TAIL LAMP ON, then TAIL LAMP RELAY shall be ON only, and if it is the input value of the HEAD LAMP ON, then HEAD LAMP HIGH RELAY shall be ON so that HEAD LAMP HIGH can be controlled by TAIL LAMP RELAY, HEAD LAMP RELAY, and multifunction (M/F) SW.

8) In the condition of LIGHT ON, when AUTO LIGHT SW is ON, HEAD LAMP RELAY shall be ON immediately, and when AUTO LIGHT SW is OFF, LIGHT shall be OFF immediately.
The LIGHT ON value of the AUTO LIGHT SENSOR shall be complied with the table below.

	TAIL LAMP	HEAD LAMP
ON	0.81 ± 0.05V	0.81 ± 0.05V
OFF	1.41 ± 0.05V	1.41 ± 0.05V

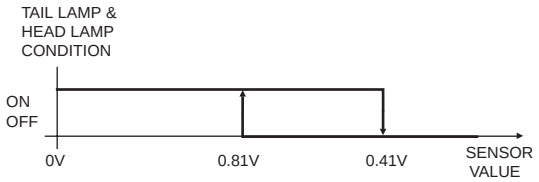

SCMBE6159L

9) The time chart according to filtering time and sensor for each applicable area shall be as follow.

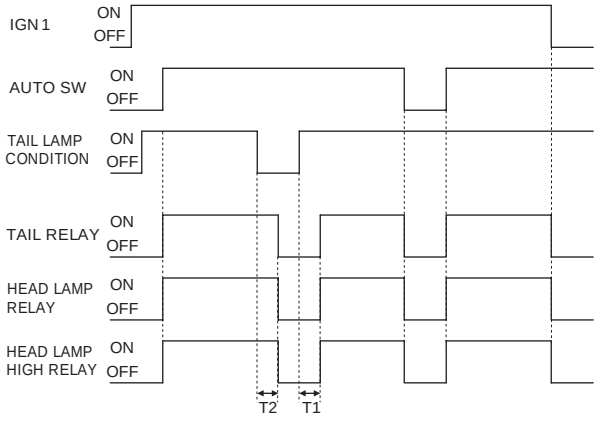

SCMBE6902L

T1 : 2.5±0.2s, T2 : 2.5±0.2s

6. DAYTIME RUNNING LIGHT
In the case of DRL EUROPE specification, by eliminating the SHUNT between the TAIL LAMP RELAY and the INTERIOR LAMP, the interior lamp is controlled by the DRL RALY.

If the IGN2 & ALT "L" are ON, the Tail Lamp RELAY and the Head Lamp LOW RELAY shall be ON ;
If TAIL LAMP LOW RELAY is ON by the TAIL SW, the DRL function shall be canceled.

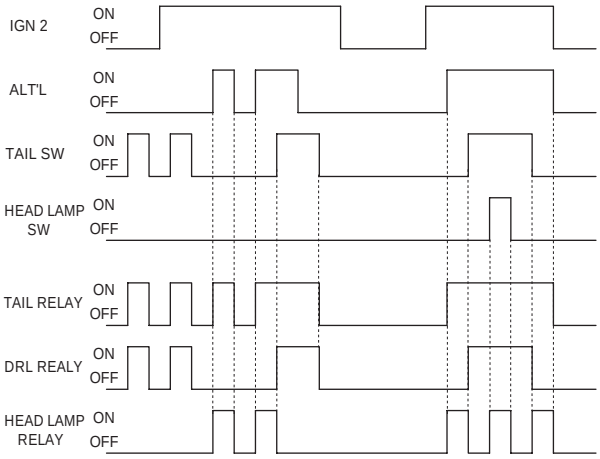

SCMBE6903L

7. REAR FOG LAMP

1) After the IGN1 is ON and the Tail Lamp SW is ON, in the state that the HEAD LAMP SW is ON, if the REAR FOG SW is pressed, the Rear Fog Lamp shall be ON.

2) In case of IGN1 ON and the TAIL LAMP and the HEADLAMP is pushing the REAR FOG SW by AUTO LIGHT function in state of ON, the REAR FOG LAMP shall be ON.

3) In case of IGN1 ON and the TAIL LAMP is ON by AUTO LIGHT function, and if FOG LAMP SW is pushing REAR FOG SW in state of ON, the REAR FOG LAMP shall be ON.

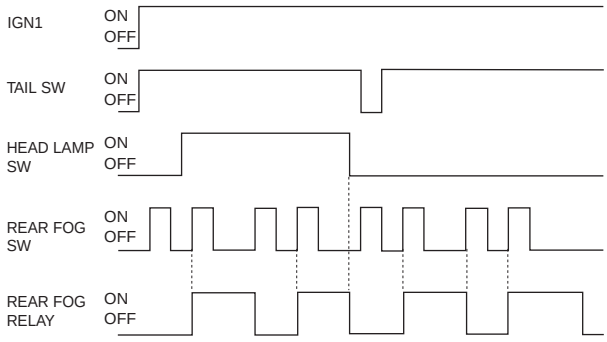

SCMBE6160L

8. BUZZER SOUND

1) BUZZER SOUND SPECIFICATION

	Frequency	Frequency DUTY	Cycle	Sound Pressure	Remark
SEAT BELT WARNING	800Hz	50%	1.0s	70±10Db	Damped Sound
KEY OPERATED	800Hz	50%	0.7s	70±10Db	Damped Sound
OVER SPEED WARNING / SEAT BELT REMINDER (EC)	800Hz	50%	1.0s	70±10Db	Continuous Sound
PARKING START WARINGI	800Hz	50%	1.0s	70±10Db	Continuous Sound

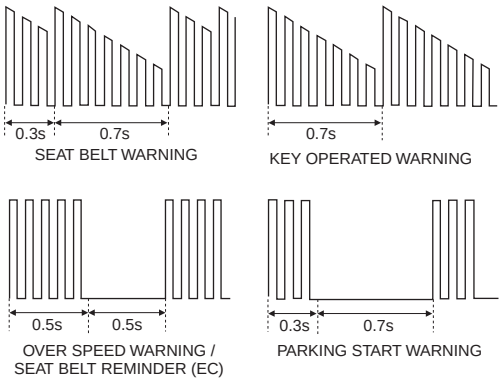

SCMBE6161L

2) The Priority Order: OVER SPEED WARNING > S/BELT WARNING > KEY OPERATED WARNING > PARKING START WARNING

3) If the output is OFF, maintain the output until the OFF cycle

4) Sound pressure measurement distance : 1.0 m

9. SEAT BELT WARNING TIMER

CONDITION 1

State	Description
Initial condition	IGN1 OFF
Transition condition	Driver side seat belt is belted and IGN1 is ON
Operating	- Start 6 seconds driver indicator blinking - The automaton state is changed to IGN1 ON DRIVER BELTED

CONDITION 2

State	Description
Initial condition	IGN1 OFF
Transition condition	Driver side seat belt is unbelted and IGN1 is ON
Operating	- Start 6 seconds driver indicator blinking - Start 6 seconds buzzer warning - The automaton state is changed to IGN1 ON DRIVER UNBELTED

CONDITION 3

State	Description
Initial condition	IGN1 ON DRIVER BELTED
Transition condition	IGN1 OFF
Operating	- Start 6 seconds driver indicator blinking - Start 6 seconds buzzer warning - The automaton state is changed to IGN1 OFF

CONDITION 4

State	Description
Initial condition	IGN1 ON DRIVER BELTED
Transition condition	Driver side seat belt is unbelted
Operating	- Start 6 seconds driver indicator blinking - Start 6 seconds buzzer warning - The automaton state is changed to IGN1 ON DRIVER UNBELTED

CONDITION 5

State	Description
Initial condition	IGN1 ON DRIVER BELTED
Transition condition	IGN1 OFF
Operating	- Start 6 seconds driver indicator blinking - Start 6 seconds buzzer warning - The automaton state is changed to IGN1 OFF

CONDITION 6

State	Description
Initial condition	IGN1 ON DRIVER BELTED
Transition condition	Driver side seat belt is belted
Operating	- Start 6 seconds buzzer warning - The automaton state is changed to IGN1 ON DRIVER BELTED

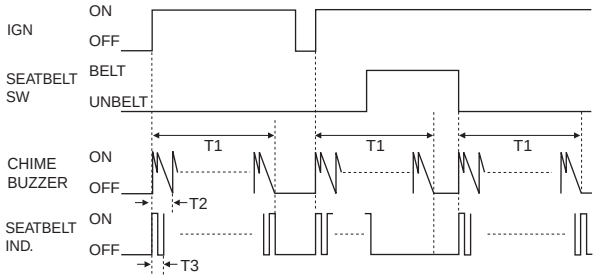

SCMBE6162L

T1 : 6 ± 1 sec, T2 : 1 ± 0.1 sec,
T3 : 0.6 ± 0.1 sec

10. SEAT BELT REMINDER

CONDITION 1

State	Description
Initial condition	IGN1 OFF
Transition condition	Driver side seat belt is belted and IGN1 is ON
Operating	- Start 6 seconds driver indicator ON - Start driver T1 timer IGN1 ON & DRIVER BELTED

CONDITION 2

State	Description
Initial condition	IGN1 OFF
Transition condition	Driver side seat belt is unbelted and IGN1 is ON and (T2＞55s or T2 not started)
Operating	- Start 6 seconds driver indicator ON - Start infinite driver indicator ON - The automaton state is changed to IGN1 ON DRIVER UNBELTED1

CONDITION 3

State	Description
Initial condition	IGN1 OFF
Transition condition	Driver side seat belt is unbelted and IGN1 is ON and T2＜=55s
Operating	- Start 6 seconds driver indicator blinking - Start infinite driver indicator blinking - Start driver T3 Timer(55s) - The automaton state is changed to IGN1 ON DRIVER UNBELTED2

CONDITION 4

State	Description
Initial condition	IGN1 ON DRIVER BELTED
Transition condition	IGN1 OFF
Operating	- Stop 6 seconds driver indicator blinking - Stop driver T1 Timer - Start driver T2 Timer - Stop 6 seconds driver indicator ON - The automaton state is changed to IGN1 OFF

CONDITION 5

State	Description
Initial condition	IGN1 ON DRIVER BELTED
Transition condition	Driver side seat belt belted＞unbelted and T1＞=9s and VS＜9kph
Operating	- Start infinite driver indicator blinking - Start driver T3 timer - Start 6s driver indicator blinking - Stop 6 seconds driver indicator ON - The automaton state is changed to IGN1 ON DRIVER UNBELTED2

CONDITION 6

State	Description
Initial condition	IGN1 ON DRIVER BELTED
Transition condition	Driver side seat belt belted＞unbelted and T1＞=9s and VS＞=9kph
Operating	- Start driver buzzer pattern (100sec ON) - Start infinite driver indicator blinking - Start 6s driver indicator blinking - The automaton state is changed to DRIVER PATTERN

CONDITION 7

State	Description
Initial condition	IGN1 ON DRIVER BELTED
Transition condition	Driver side seat belt belted＞unbelted and T1＞=9s and VS＞=9kph
Operating	- Start driver buzzer pattern (100sec ON) - Start infinite driver indicator blinking - Start 6s driver indicator blinking - The automaton state is changed to DRIVER PATTERN

CONDITION 8

State	Description
Initial condition	IGN1 ON DRIVER BELTED
Transition condition	Driver side seat belt unbelted＞belted
Operating	- (Re)Start T1 timer(9sec)

CONDITION 9

State	Description
Initial condition	IGN1 ON DRIVER UNBELTED1
Transition condition	IGN1 OFF
Operating	- Stop 6 seconds driver indicator ON - Stop infinite driver indicator ON - The automaton state is changed to IGN1 OFF

CONDITION 10

State	Description
Initial condition	IGN1 ON DRIVER UNBELTED1
Transition condition	Driver side seat belt belted
Operating	- Stop infinite driver indicator ON - Start driver T1 timer - The automaton state is changed to IGN1 ON DRIVER BELTED

CONDITION 11

State	Description
Initial condition	IGN1 ON DRIVER UNBELTED1
Transition condition	Driver side seat belt unbelted and VS＞9kph
Operating	- Stop infinite driver indicator ON - Start infinite driver indicator blinking - Start driver T3 timer - The automaton state is changed to IGN1 ON DRIVER UNBELTED2

CONDITION 12

State	Description
Initial condition	IGN1 ON DRIVER UNBELTED2
Transition condition	IGN1 OFF
Operating	- Stop 6 seconds driver indicator blinking - Stop infinite driver indicator blinking - Stop driver T3 timer - Start driver T2 timer - Stop infinite driver indicator ON - The automaton state is changed to IGN1 OFF

CONDITION 13

State	Description
Initial condition	IGN1 ON DRIVER UNBELTED2
Transition condition	Driver side seat belt belted
Operating	- Stop infinite driver indicator blinking - Stop driver T3 timer - Start driver T1 timer - Stop infinite driver indicator ON - The automaton state is changed to IGN1 ON DRIVER BELTED

CONDITION 14

State	Description
Initial condition	IGN1 ON DRIVER UNBELTED2
Transition condition	Driver T3 timer started and elapsed
Operating	- Start driver buzzer pattern (90sec ON) - The automaton state is changed to DRIVER PATTERN

CONDITION 15

State	Description
Initial condition	PATTERN
Transition condition	IGN1 OFF
Operating	- Stop infinite driver indicator blinking - Stop driver Buzzer Pattern - Start driver T2 timer - Stop 6s driver indicator blinking - The automaton state is changed to IGN1 OFF

CONDITION 16

State	Description
Initial condition	PATTERN
Transition condition	Driver side seat belt belted
Operating	- Stop driver Buzzer Pattern - Stop infinite driver indicator blinking - Start driver T1 timer - The automaton state is changed to IGN1 ON DRIVER BELTED

CONDITION 17

State	Description
Initial condition	PATTERN
Transition condition	Driver Buzzer Pattern finished(90s elapsed)
Operating	- Stop driver Buzzer Pattern - Stop infinite driver indicator blinking - Start driver T1 timer - The automaton state is changed to IGN1 ON DRIVER UNBELTED2

11. KEY OPERATED WARNING

1) In state of KEY IN SW is IN, if the DRIVER DOOR is opened, then the CHIME BUZZER output shall be continued with the cycle of 0.7 seconds.

2) If KEY IN SW is OUT or the driver's door is closed during the Chime Buzzer output, then the output shall be OFF.

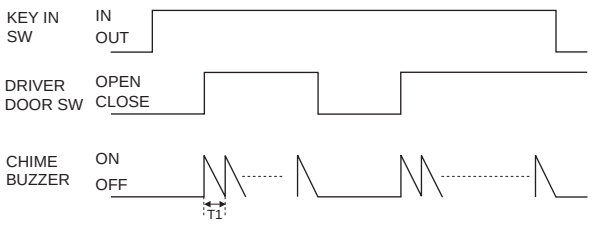

SCMBE6163L

T1 : 0.7 ± sec.

12. OVER SPEED WARNING
In the IGN 2 ON state, if the over speed SW of the cluster is On, the chime buzzer output shall be ON.
If the over speed SW is OFF, the chime buzzer output shall be OFF.

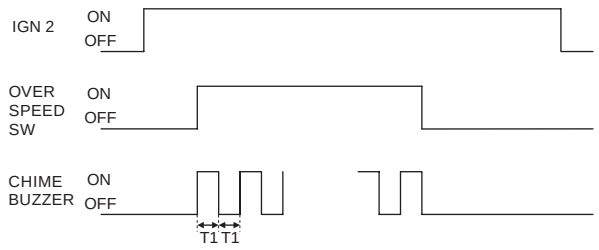

SCMBE6904L

T1 : 0.5 ± 0.1 sec.

13. PARKING START WARNING
In the state that the IGN1 is ON or the Parking Brake is pulled, if the speed of vehicle is maintained over 10 km/h for 2~3 seconds or more, then the Chime Buzzer output shall be continued with 1 second cycle of the ON/OFF (0.3/0.7 seconds). But, after the speed of vehicle is maintained over 10 km/h for 2~3 seconds or more, if the Parking Brake is pulled, output immediately.

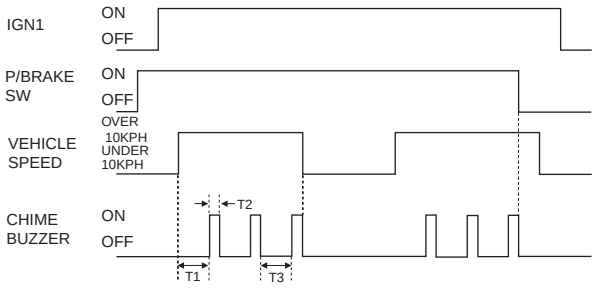

SCMBE6164L

T1 : 2.5±0.5 sec, T2 : 0.3±0.1 sec,
T3 : 0.7±0.1 sec.

14. IGN KEY HOLE ILLUMINATION

1) If the driver's door (or assist' s door) is opened in the state that the IGN1 SW is OFF, then the IGN Key Hole Illumination shall be ON.

2) In the (1) state, if the driver's door (or assist's door) is closed, then the IGN Key Hole Illumination shall be OFF after it is in the ON state for 30 seconds.

3) During the (1) and (2) operating, if the IGN1 SW is On, the IGN Key Hole Illumination shall be OFF immediately.

4) But, if it is in the ARM Mode, then the IGN Key Hole Illumination shall be OFF immediately.

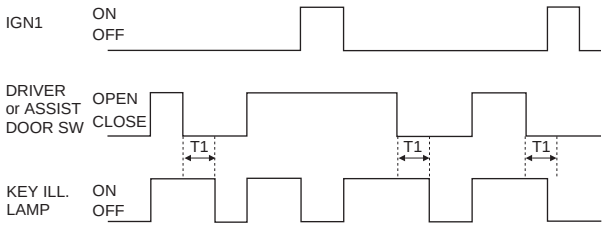

SCMBE6165L

T1 : 30 ± 1 sec.

15. DEFOGGER TIMER

1) If the Defogger SW is ON after the ALT "L" is ON in the state that the IGN1 SW is ON, then the Defogger output shall be ON for 20 minutes. (Operating in the state of the ENGINE RUNNING)

2) If the DEFOGGER SW is ON again while the DEFOGGER output is ON, then the DEFOGGER output shall be OFF.

3) If the ALT "L" is OFF or IGN1 is OFF while the DEFOGGER output is ON, then the DEFOGGER output shall be OFF.

4) If the ALT "L" > 10 volts, then it shall be in the Engine Running State (ALT "L" shall be ON); if the ALT "L" < 5 volts, then it shall be in the Engine Stop State (ALT "L" shall be OFF). Also, if the ALT "L" is more than 5 and less than 10 volts, then the former state shall be maintained.

5) If the defogger SW is pressed and the ALT "L" is ON, there shall be no the DEFOGGER RLY output.

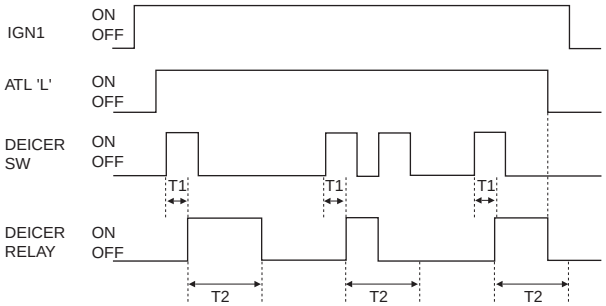

SCMBE6166L

T1 : 60 ± 20 msec, T2 : 20 ± 1 min.

16. DECAYED ROOM LAMP & KEYLESS UNLOCK TIMER

CONDITION 1

State	Description
Initial Condition	Room lamp OFF & IGN1 OFF & 4DOOR AND T/GATE CLOSE
Transition Condition	In the state that all doors are closed, the 4DOOR or T/GATE is opened over 0.1 seconds.
Operating	- Entry into the ROOM LAMP ON state for 20 min - ROOM LAMP ON for 20 ± 1 min

CONDITION 2

State	Description
Initial Condition	Room lamp OFF & IGN1 OFF & 4DOOR AND T/GATE CLOSE
Transition Condition	In case of UNLOCK by the TX
Operating	- Entry into the ROOM LAMP ON state for 30s - ROOM LAMP ON for 30 ± 3seconds

CONDITION 3

State	Description
Initial Condition	Room lamp OFF & IGN1 OFF & 4DOOR AND T/GATE CLOSE
Transition Condition	IGN1 ON and 4 DOOR or T/GATE OPEN over 0.1 seconds
Operating	- Entry into the ROOM LAMP ON state - ROOM LAMP ON

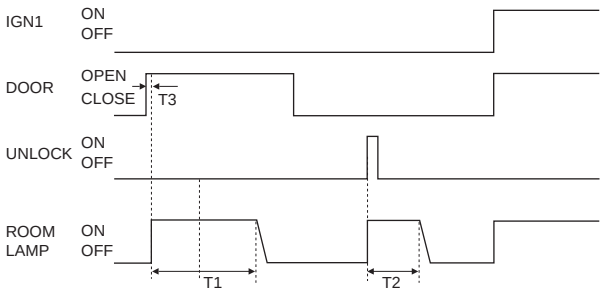

SCMBE6167L

T1 : 20 ± 1 min, T2 : 30 ± 3 sec,
T3 : 100 ms.

CONDITION 4

State	Description
Initial Condition	ROOM LAMP ON for 30s & IGN1 OFF
Transition Condition	In the state that all doors are closed, the 4DOOR or T/GATE is opened over 0.1 seconds.
Operating	- Entry into the ROOM LAMP ON state for 20 min - ROOM LAMP ON for 20 ± 1min.

CONDITION 5

State	Description
Initial Condition	ROOM LAMP ON for 30s & IGN1 OFF
Transition Condition	In case of UNLOCK by the TX.
Operating	- Maintain in the ROOM LAMP ON state for 30s - Extend the ROOM LAMP ON state for 30 seconds.

CONDITION 6

State	Description
Initial Condition	ROOM LAMP ON for 30s & IGN1 OFF
Transition Condition	IGN1 ON, or after 30 seconds, or when entered into the ARM state, or when all doors are locked.
Operating	- Entry into the ROOM LAMP DECAYING state - After the ROOM LAMP is decayed for 2 ± 0.2 seconds, it shall be OFF.

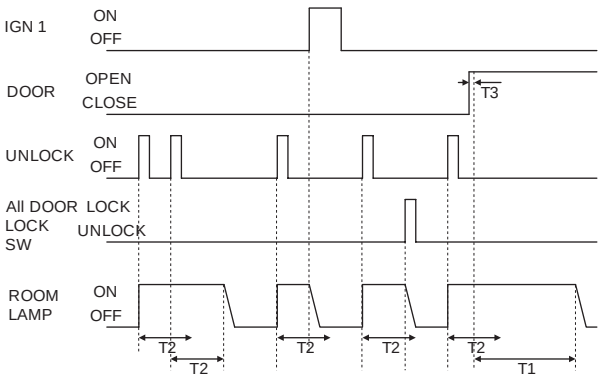

SCMBE6905L

T1 : 20 ± 1 min, T2 : 30 ± 3 sec,
T3 : 100 ms.

CONDITION 7

State	Description
Initial Condition	ROOM LAMP ON for 20min & IGN1 OFF
Transition Condition	IGN1 ON
Operating	- Entry into the ROOM LAMP ON state - ROOM LAMP ON.

CONDITION 8

State	Description
Initial Condition	ROOM LAMP ON for 20min & IGN1 OFF
Transition Condition	4DOOR AND T/GATE CLOSE
Operating	- Entry into the ROOM LAMP ON state for 30s. - ROOM LAMP ON for 30 ± 3 seconds.

CONDITION 9

State	Description
Initial Condition	ROOM LAMP ON for 20min & IGN1=OFF
Transition Condition	4DOOR AND T/GATE CLOSE & When All doors are locked, or After 20 minutes
Operating	- Entry into the ROOM LAMP DECAYING state - The ROOM LAMP is decayed for 2 ± 0.2 seconds and then, shall be OFF.

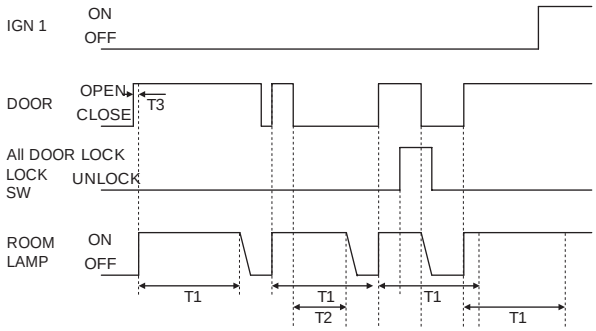

SCMBE6906L

T1 : 20 ± 1 min, T2 : 30 ± 3 sec,
T3 : 100 ms.

CONDITION 10

State	Description
Initial Condition	ROOM LAMP DECAYING & IGN1 OFF
Transition Condition	In the state that all doors are closed, 4DOOR or T/GATE OPEN over 0.1 seconds
Operating	- Entry into the ROOM LAMP ON state for 20min - ROOM LAMP ON for 20 ± 1minutes.

CONDITION 11

State	Description
Initial Condition	ROOM LAMP DECAYING & IGN1 OFF & 4DOOR AND T/GATE CLOSE
Transition Condition	In case of UNLOCK by the TX
Operating	- Entry into the ROOM LAMP ON state for 30s - ROOM LAMP ON for 30 ± 3 seconds.

CONDITION 12

State	Description
Initial Condition	ROOM LAMP DECAYING
Transition Condition	After completing the decaying
Operating	- Entry into the ROOM LAMP OFF state - ROOM LAMP OFF.

CONDITION 13

State	Description
Initial Condition	ROOM LAMP DECAYING
Transition Condition	IGN1 ON and OPEN 4 DOOR or T/GATE for 0.1 seconds
Operating	- Entry into the ROOM LAMP ON state - ROOM LAMP ON.

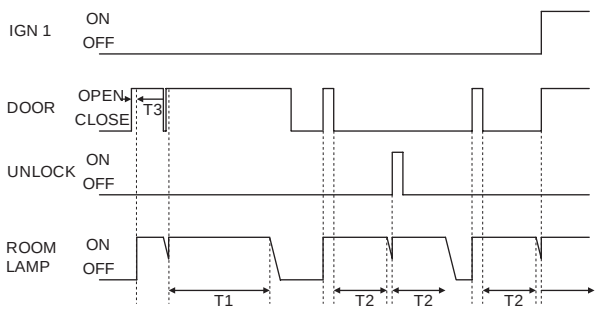

SCMBE6907L

T1 : 20 ± 1 min, T2 : 30 ± 3 sec,
T3 : 100 ms

CONDITION 14

State	Description
Initial Condition	ROOM LAMP ON & IGN1 ON & 4DOOR or T/GATE OPEN
Transition Condition	4DOOR AND T/GATE CLOSE
Operating	- Entry into the ROOM LAMP DECAYING state - The ROOM LAMP is decayed for 2 ± 0.2 seconds and then, shall be OFF.

CONDITION 15

State	Description
Initial Condition	ROOM LAMP ON & IGN1 ON & 4DOOR or T/GATE OPEN
Transition Condition	IGN1 OFF
Operating	- Entry into the ROOM LAMP ON state for 20min - ROOM LAMP ON for 20 ± 1minutes.

CONDITION 16

State	Description
Initial Condition	ROOM LAMP ON & IGN1 ON & 4DOOR or T/GATE OPEN
Transition Condition	4DOOR AND T/GATE CLOSE & IGN1 OFF
Operating	- Entry into the ROOM LAMP ON state for 30s - ROOM LAMP ON for 30 ± 3seconds.

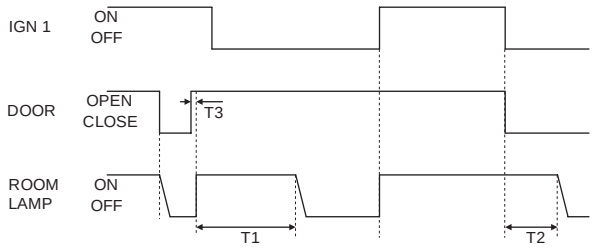

SCMBE6908L

T1 : 20 ± 1 min, T2 : 30 ± 3 sec,
T3 : 100ms

NOTE

1. *When the IGN1 is ON, there shall be no blinking of the ROOM LAMP.*
2. *The decaying of the ROOM LAMP should be more than 32 steps.*

17. POWER WINDOW TIMER

1) When the IGN2 SW is ON, then the Power Window Relay output shall be ON.

2) When the IGN2 SW is OFF, then the Power Window output shall be OFF after the output is maintained ON for 30 seconds.

3) Maintained ON for 30 seconds.

4) In the condition of the above (2), if the driver’s or assist’s door is opened, then the output shall be OFF immediately.

5) In the state that the driver’s or assist’s door is opened, if the IGN is OFF, then the Power Window output shall be OFF.

6) The SAFTEY POWER WINDOW ECU Output-port shall be controlled the same as the POWER WINDOW RELAY does.

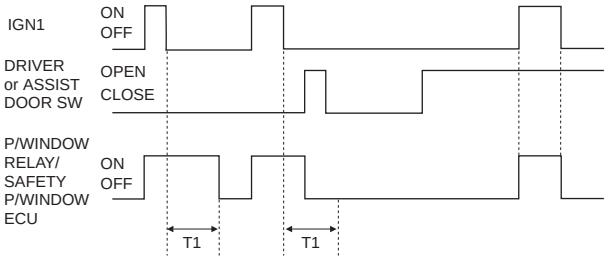

SCMBE6168L

T1 : 30 ± 3 sec.

18. DOOR LOCK/UNLOCK RELAY CONTROL

1) 2-TURN, DEAD LOCK NON-APPLICATION SPECIFICATION

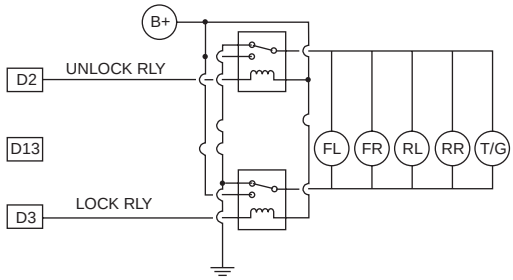

SCMBE6177L

CONDI-TION	UNLOCK RELAY	Dr UNLOCK / DEAD LOCK RELAY	LOCK RELAY
CENTRAL LOCK	OFF	NC	ON
CENTRAL UNLOCK	ON	NC	OFF

2) DEAD LOCK SPECIFICATION (EUROPE)

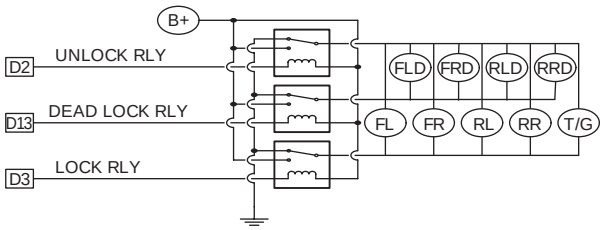

SCMBE6909L

CONDI-TION	UNLOCK RELAY	Dr UNLOCK / DEAD LOCK RELAY	LOCK RELAY
CENTRAL LOCK	OFF	OFF	ON
CENTRAL UNLOCK	ON	ON	OFF
DEAD LOCK	OFF	ON	OFF
DEAD UNLOCK	ON	OFF	ON

19. CENTRAL DOOR LOCK/UNLOCK

1) If the driver's door, the assist' door, T/GATE, the DOOR KEY LOCK SW are On, all DOOR Lock output shall be ON for T1.But, in case of KEY IN and IGN1 SW ON, output shall be inhibited.

2) If the driver's door, the assist' door, the DOOR KEY UNLOCK SW are On, all DOOR UNLOCK output shall be ON for T1.

3) When the TX (Transmitter) LOCK signal is received, all DOOR LOCK output shall be ON for T1.

4) When the TX UNLOCK signal is received, all DOOR UNLOCK output shall be ON for T1.

5) If the DR LOCK SW(P/WDW) is locked , all DOOR LOCK output shall be ON for T1.

6) If the DR UNLOCK SW(P/WDW) is unlocked, all DOOR UNLOCK output shall be ON for T1.But, in ARM state, the operation by POWER WINDOW UNLOCK Sw shall be inhibited.

7) The LOCK/UNLOCK by the SAFETY KNOB is non-interlocking. (Mechanical operation)

8) When connected to the BATTERY, there shall be no malfunction.(there shall be no malfunction in the KEY IN position)

9) Don't receive the input with less than 60msec(KEY LOCK/UNLOCK SW).

10) During output, if there are the output request, the current output shall be OFF immediately, and after 100ms delay, and then, perform the reverse direction output. But, if there are the output request during 100ms delay, perform the output for the last output request occurred.

11) In case of the Lock output and Unlock output condition are occurred at the same tine, perform the lock output and disregard the unlock output.

12) In case of all DOOR UNLOCK(UNLOCK) SW is LOCK(UNLOCK) state, the LOCK(UNLOCK) request does not output.

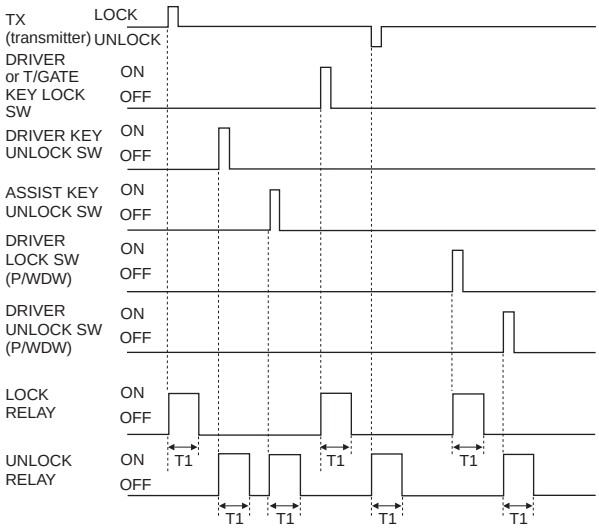

SCMBE6178L

T1 : 0.5 ± 0.1 sec.

20. IGN KEY REMINDER

1) If the Vehicle speed is over 3Km/h, then this function doesn't act on.

2) If KEY IN SW is IN and the driver's door is opened and the driver's DOOR UNLOCK SW is locked, then after 0.5 seconds, the unlock signal shall be output to all doors for 1s.

3) If KEY IN SW is IN and the assist's door is opened and the assist's DOOR UNLOCK SW is locked, then after 0.5 seconds and output DEAD UNLOCK for 0.5s. And then, the unlock signal shall be output to all doors for 1s.(only DEAD LOCK specification)

4) If it is in state of that KEY IN SW is IN and assist's DOOR is opened and assist's DOOR UNLOCK SW is locked, and after 0.5s, and then perform the ALL DOOR UNLOCK output for 1 second. (Except for DEAD LOCK spec)

5) If it is in state of that KEY IN SW is IN and assist's DOOR is opened and assist's DOOR UNLOCK SW is locked, and after 0.5s, and then output the DEAD UNLOCK for 0.5s, and then after 200msec, and then ALL DOOR UNLOCK signal output is ON for 1second. (only DEAD LOCK specification)

6) When (2), (3) items are met at the same time, after 0.5 seconds, the unlock signal shall be output to all doors for 1 second in conformity with (4) item.

7) When (3), (5) items are met at the same time, after 0.5 seconds and output DEAD UNLOCK for 0.5 seconds, and then after 200 msec, and then, all door unlock signal shall be output for 1 second in conformity with (5) item. (Only DEAD LOCK specification)

8) Although the unlock signal is output for 1 s by the (2), (3) items, if the lock state is maintained, the unlock signal shall be output at maximum three times (except for 1s output). (1s cycle: 0.5s ON/OFF, except for DEAD LOCK specification)

9) Even if the unlock is output for 1s by (3), (5) items, if the lock state is maintained, and after output the dead unlock for 0.5 seconds, and after 200msec, and then perform the ALL DOOR UNLOCK output maximum 3 times.(1s cycle : as 0.5s ON/OFF, DEAD LOCK specification)

10) After perform (8), (9) items, in case of LOCK state is maintained, and in case of DOOR CLOSE, and then attempt the ALL DOOR UNLOCK one time.

11) In the KEY IN SW IN state, if the driver's door is closed within 0.5 seconds as soon as the driver's DOOR UNLOCK SW is turned to the LOCK from the UNLOCK, the unlock signal shall be output to all doors for 1 s one time.

12) In the KEY IN SW IN state, if the driver's door is closed within 0.5 seconds as soon as the driver's DOOR UNLOCK SW is turned to the LOCK from the UNLOCK, and after output DEAD UNLOCK for 0.5 s and 20 msec, and then, the unlock signal output shall be ON to all doors for 1 s one time.

13) In the KEY IN SW IN state, if the assist's door is closed within 0.5 seconds as soon as the assist's DOOR UNLOCK SW is turned to the LOCK from the UNLOCK, the unlock signal shall be output to all doors for 1 s one time. (Except for DEAD LOCK SPEC)

14) In the KEY IN SW IN state, if the assist's door is closed within 0.5 seconds as soon as the assist's DOOR UNLOCK SW is turned to the LOCK from the UNLOCK and after output DEAD UNLOCK for 0.5 s and 20 msec, and then, the unlock signal output shall be ON to all doors for 1 s one time. (Only DEAD LOCK spec)

15) In the KEY IN SW IN state, if the driver's DOOR UNLOCK SW is turned to the LOCK from the UNLOCK within 0.5 seconds as soon as the driver's door is turned to the closed state from the opened state, then the Unlock signal shall be output to all doors for 1 second one time.(DEAD LOCK)

16) In the KEY IN SW IN state, if the driver' s DOOR UNLOCK SW is turned to the LOCK from the UNLOCK within 0.5 seconds as soon as the driver's door is turned to the closed state from the opened state, then the signal output of the ALL DOOR UNLOCK shall be ON for 1 second after outputting the DEAD UNLOCK for 0.5 seconds and 200msec. (only DEAD LOCK specification)

17) In the KEY IN SW IN state, if the assist's DOOR UNLOCK SW is turned to the LOCK from the UNLOCK within 0.5 seconds as soon as the assist' s door is turned to the closed state from the opened state, then the Unlock signal shall be output to all doors for 1 second one time. (Except for DEAD LOCK spec)

18) In the KEY IN SW IN state, if the assist’s DOOR UNLOCK SW is turned to the LOCK from the UNLOCK within 0.5 seconds as soon as the assist’s door is turned to the closed state from the opened state, then the signal output of the ALL DOOR UNLOCK shall be ON for 1 second after outputting the DEAD UNLOCK for 0.5 seconds and 200msec. (only DEAD LOCK specification)

19) In the KEY IN state, after the DRIVER DOOR or ASSIST DOOR are opened, if the doors are locked by the P/W LOCK SW, the unlock signal shall be output to all doors.

20) To determine whether the RETRY signal is output or not performs at the beginning time of the RETRY output. (After 1.5 seconds from the first UNLOCK output)

21) Even if the condition is not maintained for 0.5s after the UNLOCK condition is satisfied, the unlock signal shall be output. But, after the condition is satisfied as the result that the DOOR LOCK SW is turned to the LOCK from the UNLOCK, if the KEY IN SW is OFF at the passage time of 0.5s, the unlock signal shall not be output.

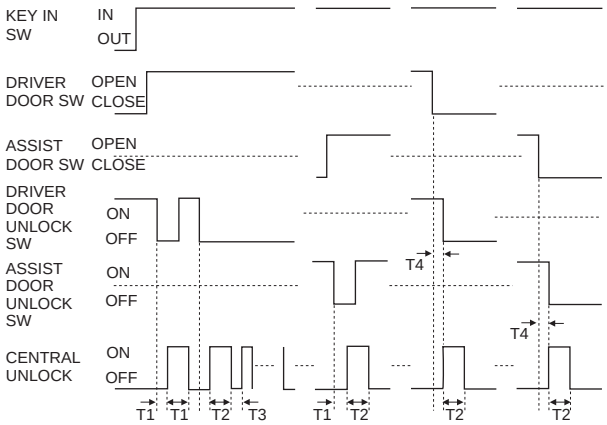

SCMBE6179L

T1, T3 : 0.5 ± 0.1 sec, T2 : 1 ± 0.1 sec,
T4 : 0.5 sec Max.

21. CRASH DOOR UNLOCK

1) In the IGN SW ON state, whenever the AIR BAG signal is received, the unlock signal shall be output always.

2) During the unlock output, even if the IGN SW is turned to the OFF from the ON, the unlock output is maintained for the remained time.

3) If the air bag signal is received first and then, the IGN SW is turned to the ON from the OFF, the unlock signal shall not be output.

4) After the UNLOCK output, if the DRIVER or ASSIST, REAR DOOR LOCK SW are turned to the LOCK from the UNLOCK, the unlock signal shall be output for T3.

5) The AUTO DOOR LOCK function is not performed in the CRASH UNLOCK condition.

6) The CENTRAL DOOR LOCK function is not performed during the CRASH UNLOCK output or after it. But, after the IGN is OFF, if the crash unlock function is reset, the CENTRAL DOOR LOCK function is normally performed.

7) The CRASH DOOR UNLOCK function is prior to the LOCK/UNLOCK control by the other functions.

8) The LOCK/UNLOCK requirement by the other functions is disregarded during the CRASH DOOR UNLOCK output or after it. But, if the IGN1 SW is OFF and IGN2 SW is OFF, the LOCK/UNLOCK control by the other functions shall be performed.

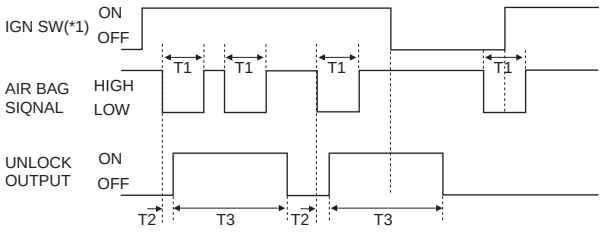

SCMBE6187L

T1 : 0.2 sec, T2 : 40 msec,
T3 : 5 ± 0.5 sec.
*1 ON : IGN1 ON or IGN2 ON
OFF : IGN1 OFF and IGN2 OFF

22. AUTO DOOR LOCK

1) The function of the AUTO DOOR LOCK shall be operated in case of the AUTO DOOR LOCK is active only.

2) In case of the vehicle speed set in the state of that IGN1 SW is ON than the standard is maintained for 2~3 seconds, perform the LOCK output. But, if the all DOOR is LOCK state, or all DOOR is FAIL, do not perform the LOCK output.

3) After the lock output of the (1) item, if any one of all doors is unlocked, the lock signal shall be output at maxim three times. (1s cycle) But, during the 3-output operating, if the door state is turned to the LOCK from the UNLOCK, disregard it.

4) After the 3-output operating, if a door is Unlocked, the door equivalent for the UNLOCK state shall be treated as FAIL.

5) After the door treated as Fail is turned to the LOCK from the UNLOCK, and then if the door is unlocked, the lock signal shall be output once.

6) After the LOCK output of (2) item, if the locked door is unlocked, the lock signal shall be output once.

7) But, after the LOCK output, even if the unlock state is maintained, the lock signal shall be output to the door (the unlock state) once.

8) When the IGN SW is OFF, the door treated as Fail performs the CLEAR function.

9) The AUTO DOOR LOCK function is not performed in the CRASH UNLOCK condition.

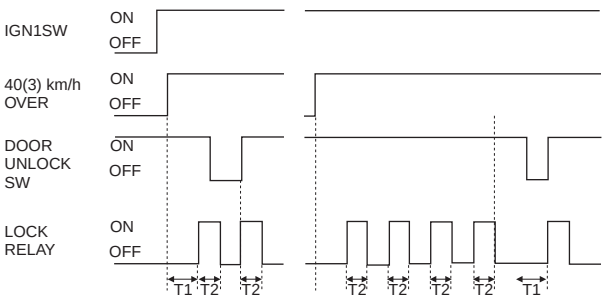

* 1 ON (UNLOCK): DRIVER or ASSIST or REAR DOOR UNLOCK SW = UNLOCK
OFF (LOCK): DRIVER and ASSIST and REAR DOOR UNLOCK SW = LOCK

SCMBE6188L

T1 : 2.5 ± 0.5 sec, T2 : 0.5 ± 0.1 sec.

23. DEAD LOCK (EUROPE OPTION)

1) In case of the execution condition of the ALL DOOR LOCK is met by KEY LOCK, TX(Transmitter) LOCK, AUTO LOCK TIMER1, AUTO LOCK TIMER2 in driver's seat/assist's seat, and then after outputting the all door lock for 0.5 seconds, and then after checking the state (after 200msec), and then, DEAD LOCK signal output shall be ON for 0.52 seconds.

2) In case of the execution condition of the ALL DOOR LOCK is met by central door LOCK SW of P/WDW SW, and then after outputting the ALL DOOR LOCK, and then do not perform the DEAD LOCK. (No Safety/KNOB)

3) In case of the execution condition of the ALL DOOR UNLOCK is met by KEY or TX in driver's seat/assist's seat, and then after outputting the DEAD UNLOCK for 0.5 seconds, and then 200msec, and then ALL DOOR UNLOCK signal output shall be ON for 0.5 seconds.

4) In case of the execution condition of the ALL DOOR UNLOCK is met by central door UNLOCK SW of P/WDW SW, perform ALL DOOR UNLOC only, and do not perform DEAD UNLOCK. But, in DEAD LOCK state, do not perform ALL DOOR UNLOCK by central door UNLOCK SW of P/WDW SW.

5) DEAD LOCK/UNLOCK shall be performed regardless of DR OPEN/CLOSE.

6) During the ALL DOOR LOCK/UNLOCK output by KEY or TX, and in case of the 'ALL DOOR LOCK/UNLOCK' command, end the current output immediately, and after 200msec, and then output it by a new input condition.

7) During DEAD LOCK output after ALL DOOR LOCK by KEY or TX, in case of entering 'ALL DOOR UNLOCK' command, end the current output immediately, and after 200msec, and then output it by a new input condition. Also, During ALL DOOR UNLOCK output after DEAD UNLCOCK by KEY or TX, in case of entering 'ALL DOOR LOCK' command, end the current output immediately, and after 200msec, and then output it by a new input condition.

8) In case of the LOCK/UNLOCK is performed at the same time, perform the LOCK function first.

9) In case of entering at the same time by KEY/TX/DR LOCK SW, the priority order shall be TX > KEY > DR LOCK SW.

10) In case of the same condition for (8), (9) items is occurred, (9) item shall be the first.

11) In case of DEAD LOCK is performed, if ACTUATOR UNLOCK SW is lock, and then output the DEAD LOCK without 200msec delay.

12) In case of DEAD UNLOCK is performed, if ACTUATOR UNLOCK SW is unlock, and then execute the DEAD UNLOCK, not CENTRAL UNLOCK.

13) In DEAL LOCK state, in case of KEY IN and IGN1 SW state is turned to ON from OFF, and then output the DEAD UNLOCK for 0.5 seconds.

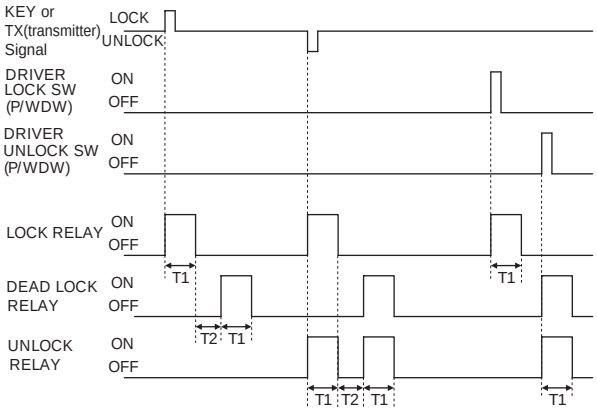

SCMBE6910L

T1 : 0.5 ± 0.1 sec, T2 : 0.2 ± 0.05 sec.

24. 3KM SIGNAL OUTPUT CONTROL
If the vehicle speed is maintained at more than 3km/h for 2~3 seconds in the IGN1 ON state, the signal of 3 KM Output-port shall be ON.

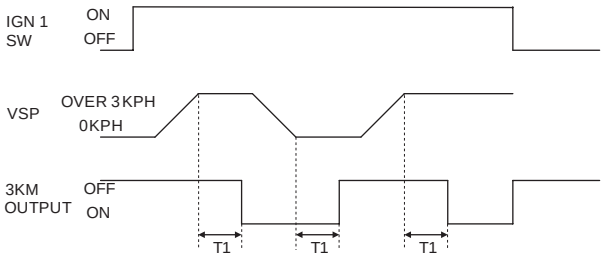

SCMBE6911L

T1 : 2.5 ± 0.5 sec.

CIRCUIT DIAGRAM E6C22B36

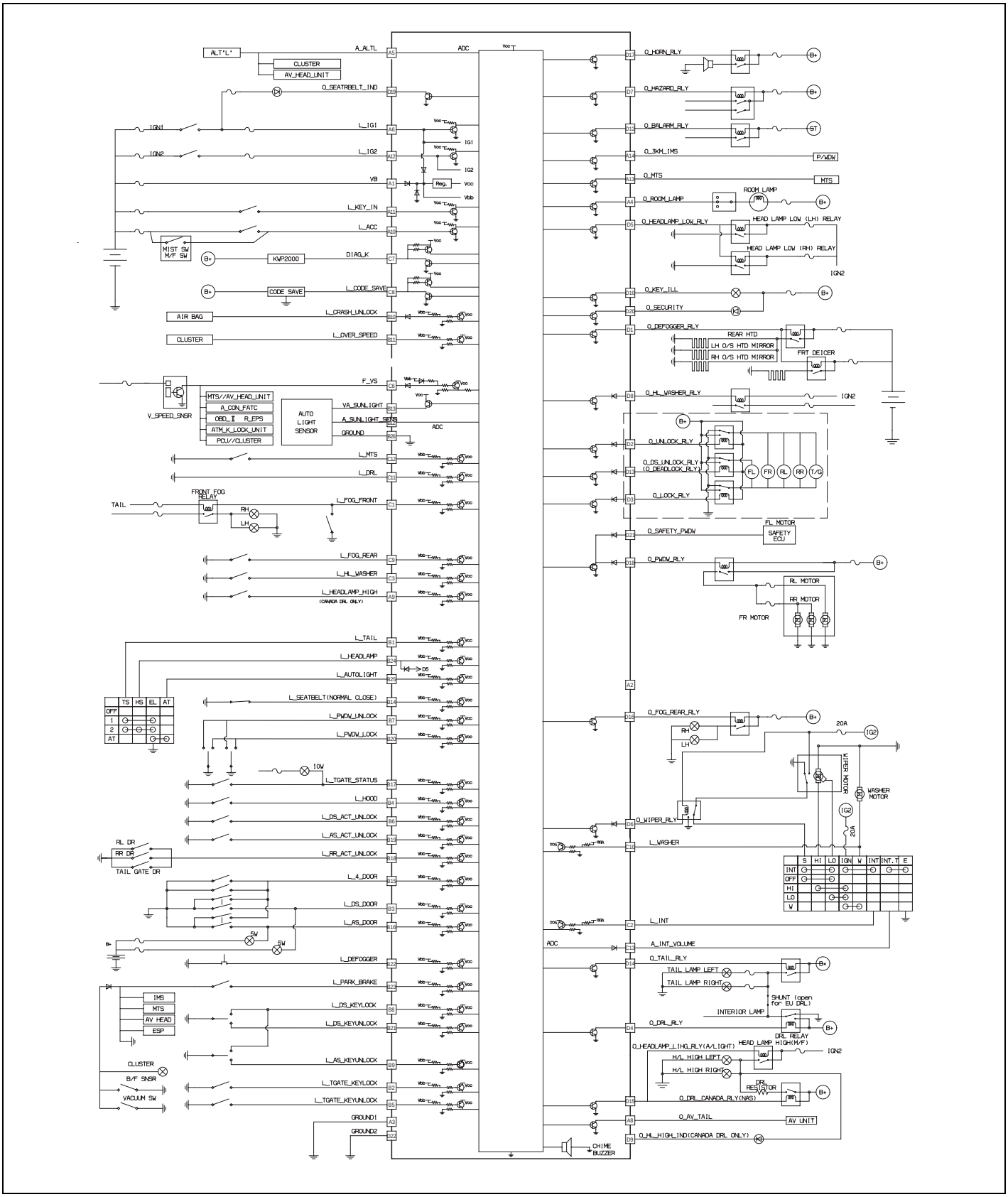

SCMBE6149D

INSPECTION E90F6A81

BCM CONNECTORS

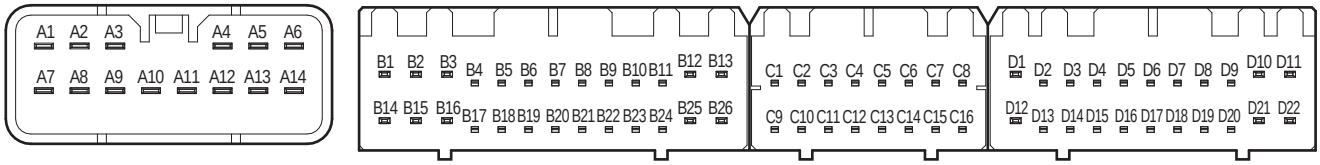

Connector A Connector B Connector C Connector D

SCMBE6152L

PIN NO	CONNECTOR A	CONNECTOR B	CONNECTOR C	CONNECTOR D
1	Battery voltage	Tail switch	Front fog lamp switch	Defogger switch
2	-	Tailgate key lock switch	INT switch	Unlock relay
3	Ground 1	Drive door switch	-	Lock relay
4	Room lamp	Hood switch	-	DRL relay
5	ALT "L"	Tailgate key unlock switch	-	Head lamp low relay
6	IGN1	Drive actuator unlock switch	Vehicle speed	Wiper relay
7	ARM buzzer	Power window unlock switch	K-line	Hazard relay
8	AV tail output	Drive key lock switch	Code save	-
9	Head lamp high switch	Assistant key unlock switch	Rear fog lamp switch	Head lamp high indicator
10	ACC(L_MIST)	Crash unlock	Washer switch	Key illumination lamp
11	Key IN switch	Overspeed input	DRL switch	-
12	IGN2	Sunlight sensor	-	Burglar alarm relay
13	-	Sunlight sensor power	INT volume	Driver unlock relay
14	3KM to IMS	Seat belt switch	-	Tail relay
15		4Door switch	-	Head lamp high relay
16		Assistant door switch	-	Rear fog lamp relay
17		Tailgate switch		Horn relay
18		Rear actuator unlock switch		Power window relay
19		Assistant actuator unlock switch		Seat belt indicator
20		Power window lock switch		Security indicator
21		Driver key unlock switch		Safety power window
22		Defogger switch		Ground 1
23		Parking brake switch		
24		Head lamp switch		

PIN NO	CONNECTOR A	CONNECTOR B	CONNECTOR C	CONNECTOR D
25		Auto light switch		
26		Sunlight switch		

BCM INPUT/OUTPUT SPECIFICATION

CONNECTOR A

PIN NO.	PIN NAME	Input acquisition threshold voltage (Operating Voltage 9V to 16V at normal temperature / Output type)	
A01	BATTERY VOLTAGE	9V ~ 16V	
A02	-	-	
A03	GROUND 1	GND	
A04	ROOM LAMP	Low side / FET	
A05	ALT "L"	Analog input	
A06	IGN1 SW	ON	6V above
		OFF	2V below
A07	ARM BUZZER	10V above	
A08	AV TAIL OUTPUT	1V below	
A09	HEAD LAMP HIGH SW	ON	6V above
		OFF	2V below
A10	ACC (L_MIST)	ON	6V above
		OFF	2V below
A11	KEY IN SW	ON	6V above
		OFF	2V below
A12	IGN2 SW	ON	6V above
		OFF	2V below
A13	-	-	
A14	3KM TO IMS	Low side / FET	

CONNECTOR B

PIN NO.	PIN NAME	Input acquisition threshold voltage (Operating Voltage 9V to 16V at normal temperature / Output type)	
B01	TAIL SW	ON	6V above
		OFF	2V below
B02	TAILGATE KEY LOCK SW	ON	6V above
		OFF	2V below
B03	DRIVER DOOR SW	ON	6V above
		OFF	2V below
B04	HOOD SW	ON	6V above
		OFF	2V below
B05	TAILGATE KEY UNLOCK SW	ON	6V above
		OFF	2V below
B06	DRIVER ACTUATOR UNLOCK SW	ON	6V above
		OFF	2V below
B07	POWER WINDOW UNLOCK SW	ON	6V above
		OFF	2V below
B08	DRIVER KEY LOCK SW	ON	6V above
		OFF	2V below
B09	ASSISTANT KEY UNLOCK SW	ON	6V above
		OFF	2V below
B10	CRASH UNLOCK	ON	6V above
		OFF	2V below
B11	OVERSPEED INPUT	ON	6V above
		OFF	2V below
B12	SUNLIGHT SENSOR	Analog input	
B13	SUNLIGHT SENSOR POWER	5V output, Analog input	
B14	SEAT BELT SW	ON	6V above
		OFF	2V below
B15	4DOOR SW	ON	6V above
		OFF	2V below
B16	ASSISTANT DOOR SW	ON	6V above
		OFF	2V below
B17	TAILGATE SW	ON	6V above
		OFF	2V below
B18	REAR ACTURATOR UNLOCK SW	ON	6V above
		OFF	2V below
B19	ASSISTANT ACTUATOR UNLOCK SW	ON	6V above
		OFF	2V below

PIN NO.	PIN NAME	Input acquisition threshold voltage (Operating Voltage 9V to 16V at normal temperature / Output type)	
B20	POWER WINDOW LOCK SW	ON	6V above
		OFF	2V below
B21	DRIVER KEY UNLOCK SW	ON	6V above
		OFF	2V below
B22	DEFOGGER SW	ON	6V above
		OFF	2V below
B23	PARK BRAKE SW	ON	6V above
		OFF	2V below
B24	HEAD LAMP SW	ON	6V above
		OFF	2V below
B25	AUTO LIGHT SW	ON	6V above
		OFF	2V below
B26	SUNLIGHT SENSOR GROUND	GND	

CONNECTOR C

PIN NO.	PIN NAME	Input acquisition threshold voltage (Operating Voltage 9V to 16V at normal temperature / Output type)	
C01	FRONT FOG SW	ON	6V above
		OFF	2V below
C02	INT SW	ON	6V above
		OFF	2V below
C03	-	-	
C04	-	-	
C05	-	-	
C06	VEHICLE SPEED	Frequency Input	
C07	DIAGNOSIS LINE	Communication Line	
C08	CODE SAVE	ON	6V above
		OFF	2V below
C09	REAR FOG SW	ON	6V above
		OFF	2V below
C10	WASHER SW	ON	6V above
		OFF	2V below
C11	DRL OPTION LINE	ON	6V above
		OFF	2V below
C12	-	-	
C13	INT VOLUME	Analog input	
C14	-	-	
C15	-	-	
C16	-	-	

CONNECTOR D

PIN NO.	PIN NAME	Input acquisition threshold voltage (Operating Voltage 9V to 16V at normal temperature / Output type)
D01	DEFOGGER RELAY	Low side / FET
D02	UNLOCK RELAY	Low side / FET
D03	LOCK RELAY	Low side / FET
D04	DRL RELAY	Low side / FET
D05	HEAD LAMP LOW RELAY	Low side / FET
D06	WIPER RELAY	Low side / FET
D07	HAZARD RELAY	Low side / FET
D08	-	-
D09	HEAD LAMP HIGH INDICATOR	Low side / TR
D10	KEY ILLUMINATION LAMP	High side / TR
D11	-	-
D12	BURGLAR ALARM RELAY	Low side / FET
D13	DRIVER UNLOCK RELAY	Low side / FET
D14	TAIL RELAY	Low side / FET
D15	DRL CANADA RELAY	Low side / FET
D16	REAR FOG RELAY	Low side / FET
D17	HORN RELAY	Low side / FET
D18	POWER WINDOW RELAY	Low side / FET
D19	SEATBELT INDICATOR	Low side / TR
D20	SECURITY INDICATOR	Low side / TR
D21	SAFETY POWER WINDOW	Low side / FET
D22	GROUND1	GND

BCM CURRENT DATA

The body control module can diagnose with the diagnosis tool more quickly.
The BCM communicates with the diagnosis tool and then reads the input/output value and drives the actuator.

INPUT/OUTPUT VALUE

SECTION	BCM DISPLAY	ABBREVIATION	UNIT	REMARKS
POWER	IGN1	IG1	OFF/ON	INPUT
	IGN2	IG2	OFF/ON	INPUT
	ALT L	ALT VOLT	OFF/ON	INPUT
	KEY IN SW	KEY IN	OUT/IN	INPUT
	STARTER INHIBIT RELAY(+RK)	INHIBIT	ENABLE/ STOP	OUTPUT
	POWER WINDOW RELAY	P/WDW RLY	OFF/ON	OUTPUT
	AUTO LIGHT POWER	LIGHT PWR	OFF/ON	
LAMP	TAIL LAMP SW	TAIL SW	OFF/ON	INPUT
	AUTO LIGHT SW(-DRL)	LIGHT SW	OFF/ON	INPUT
	HEAD LAMP SW	HEAD/L SW	OFF/ON	INPUT
	FRONT FOG SW	FF FOG SW	OFF/ON	INPUT
	H/LAMP HIGH SW	H/LAMP HI	OFF/ON	INPUT
	DRL OPTION LINE SW	DRL	NONE/DRL	INPUT
	TAIL LAMP RELAY	TAIL RLY	OFF/ON	OUTPUT
	HEAD LAMP RELAY	H/L RLY	OFF/ON	OUTPUT
	HAZARD LAMP RELAY(+RK)	HAZARD RL	OFF/ON	OUTPUT
	DRIVER SEAT BELT IND.	D S/BELT	OFF/ON	OUTPUT
	ROOM LAMP	ROOM LAMP	OFF/ON	OUTPUT
	IGN KEY HOLE ILL.	KEY ILL.	OFF/ON	OUTPUT
	SECURITY INDICATOR	S/IND.	OFF/ON	OUTPUT
	DRL RELAY	DRL RLY	OFF/ON	OUTPUT
	H/LAMP HIGH RLY	H/L RLY	OFF/ON	OUTPUT
	H/LAMP HIGH IND.	H/L IND.	OFF/ON	OUTPUT
ENTER ANCE	DRIVER DOOR OPEN SW	D/DOOR SW	CLOSED/ OPEN	INPUT
	ASSIST DOOR OPEN SW	A/DOOR SW	CLOSED/ OPEN	INPUT
	4 DOOR SWITCH	4DOOR SW	CLOSED/ OPEN	INPUT
	TAIL GATE SW	TAIL	CLOSED/ OPEN	INPUT
	HOOD SWITCH(+RK)	HOOD SW	CLOSED/ OPEN	INPUT

SECTION	BCM DISPLAY	ABBREVIATION	UNIT	REMARKS
LOCK / UNLOCK	DR.DOOR ACT.POSI.SW	D/DR ACT	UNLOCK/ LOCK	INPUT
	AS.DOOR ACT.POSI.SW	A/DR ACT	UNLOCK/ LOCK	INPUT
	RH,RR,T/GATE ACT POSI.SW	ACT SW	UNLOCK/ LOCK	INPUT
	DR.DOOR KEY LOCK SW	DR KEY SW	OFF/ON	INPUT
	DR.DOOR KEY UNLOCK SW	D/DR KEY	OFF/ON	INPUT
	AS.DOOR KEY UNLOCK SW	A/DR KEY	OFF/ON	INPUT
	T/GATE KEY UNLOCK SW	TRUNK SW	OFF/ON	INPUT
	CTRL DOOR LOCK SW	CTRL D/LO	OFF/ON	INPUT
	CTRL DOOR UNLOCK SW	CTRL D/UN	OFF/ON	INPUT
	CRASH UNLOCK SIGNAL	CRASH SIG	OFF/ON	INPUT
	DOOR LOCK RELAY	DR L/RLY	OFF/ON	OUTPUT
	DOOR UNLOCK RELAY	DR U/RLY	OFF/ON	OUTPUT
	T/GATE KEY LOCK SW	TRUNK SW	OFF/ON	OUTPUT
	DEAD LOCK RELAY		OFF/ON	OUTPUT
WIPER DEFFO GER	WASHER SWITCH	WASHER SW	OFF/ON	INPUT
	INT.WIPER SWITCH	INT SW	OFF/ON	INPUT
	REAR DEFOGGER SW	RR DEF SW	OFF/ON	INPUT
	H/LAMP WASHER SW	H/WASHER	OFF/ON	INPUT
	WIPER RELAY	WIPER RLY	OFF/ON	OUTPUT
	REAR DEFOGGER RELAY	RR DEF RLY	OFF/ON	OUTPUT
	H/LAMP WASHER RLY	H/L RLY	OFF/ON	OUTPUT
	MIST SW	MIST SW	OFF/ON	INPUT
WARNING	OVER SPEED INPUT	O/SPEED	OFF/ON	INPUT
	DRIVER SEAT BELT SW	D S/B SW	UNBUCKLED /BUCKLED	INPUT
	P/BRAKE SW	P/BRAKE	UNPARK/ PARK	INPUT
	BUGLAR HORN RELAY	BUR. RLY	OFF/ON	OUTPUT
	CHIME BELL	CHIM. BELL	OFF/ON	OUTPUT
ANALOG INPUT SIGNAL	INT. VOLUME(-RAIN)	INT. VOL	V	INPUT
	AUTO LIGHT SNSR	A/LIGHT	V	INPUT
	SPEED SIGNAL	VSS	Km/h	INPUT
ETC	SAFETY P/W ECU	P/W ECU	OFF/ON	INPUT

BCM ACTUATOR OPERATION

SCAN tool can operates all actuators controlled by BCM by force.

NO.	BCM DISPLAY
1	Tail lamp
2	Head lamp low
3	Head lamp high
4	Head lamp high indicator
5	Front fog lamp
6	Front fog lamp indicator
7	Rear fog lamp
8	Day Running light
9	Low speed wiping relay
10	High speed wiping relay
11	Defroster relay
12	Trunk release
13	B/A Horn
14	Room Lamp
15	Hazard Lamp + Flasher Buzzer Output
16	Left turn signal + Flasher Buzzer Output
17	Right turn signal + Flasher Buzzer Output
18	Buzzer
19	Key illumination
20	Seat Belt Indicator(Driver side and Assist side)
21	Head Lamp Washer
22	Start Inhibition output
23	External Buzzer output
24	Security Led output
25	Rear RH Power window Up
26	Rear RH Power Window Down
27	Rear LH Power window Up
28	Rear LH Power Window Down
29	Foot lamp output
30	AV TAIL output

BCM DIAGNOSIS WITH SCAN TOOL

1. It will be able to diagnose defects of BCM with scan tool quickly. Scan tool can operates actuator forcefully, input/output value monitoring and self diagnosis.

2. Select model and menu.

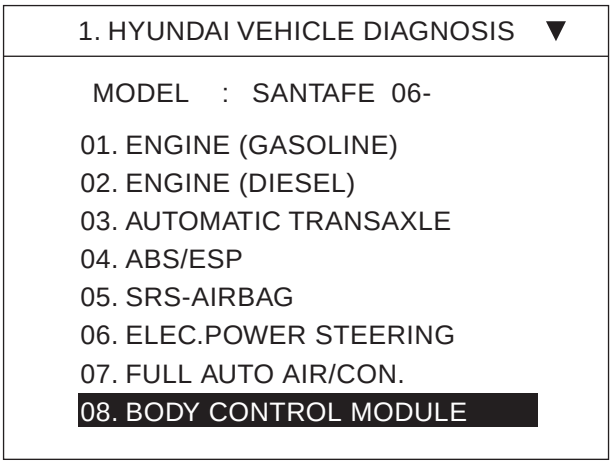

SCMBE6385L

3. Select "Current data", if you will check current data of BCM. It provides power supply status, multi function status, lamp status, door status, lock system status, wiper, auto light status and so on.

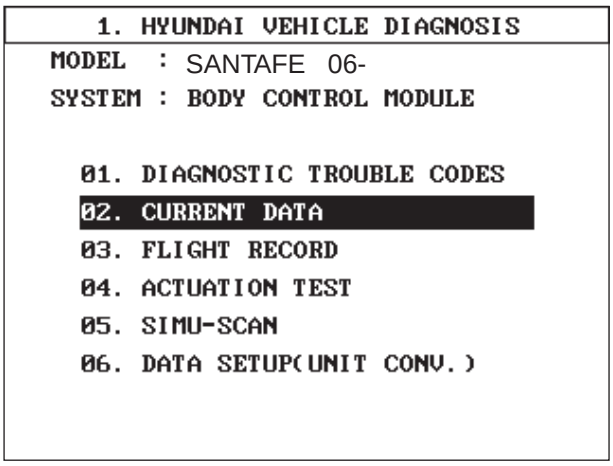

SCMBE6356L

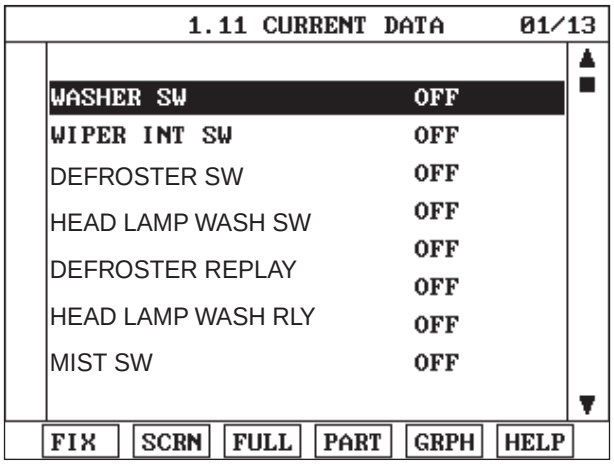

SCMBE6358L

4. If you will check BCM data operation forcefully, select "Actuation test".

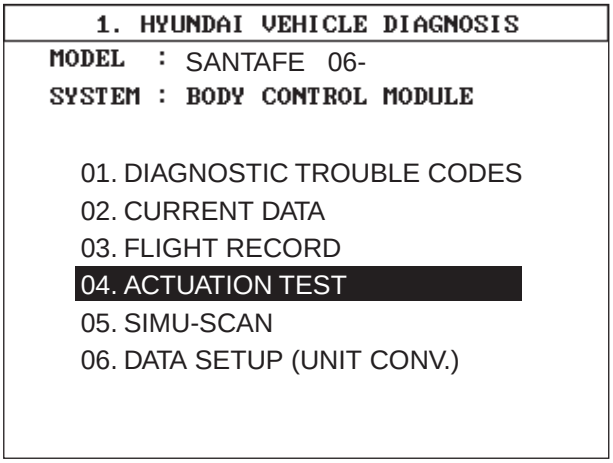

SCMBE6218L

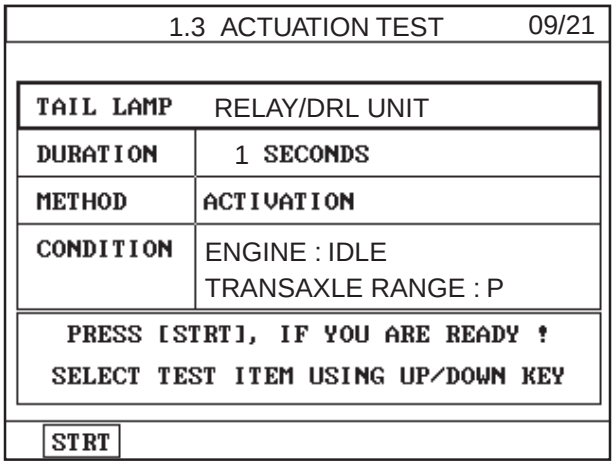

SCMBE6219L

5. You can turn ON/OFF as below option function with the user option program.

   1) LOCK / UNLOCK comfirming alarm: Alarm sound ON/OFF control when you LOCK/UN-LOCK doors with transmitter.

   2) Mechanical LOCKING system: Arm/Disarm ON/OFF when you lock the door with the mechanical key.

   3) AUTO DOOR LOCK/UNLOCK system ON/OFF.
      - Vehicle speed gearing AUTO DOOR LOCK (more than 20km/h)
      - AUTO DOOR LOCK non application
      - Shift lever gearing AUTO DOOR LOCK
      - Driver seat AUTO DOOR LOCK
      - AUTO DOOR UNLOCK non application
      - All doors UNLOCK in the case of driver door UNLOCK
      - All doors UNLOCK in the case of IGN key seperation.

   4) Riding & Getting off gearing
      - Seat installation state ON/OFF
      - Seat riding & getting off gearing ON/OFF
      - Column installation state ON/OFF
      - Column riding & getting off gearing ON/OFF

REPLACEMENT E59EEA1A

1. Disconnect the negative (-) battery terminal.

2. Remove the crash pad lower panel (A). Avoid damaging retaining clip. (Refer to the Body group - Crash pad)

[LHD]

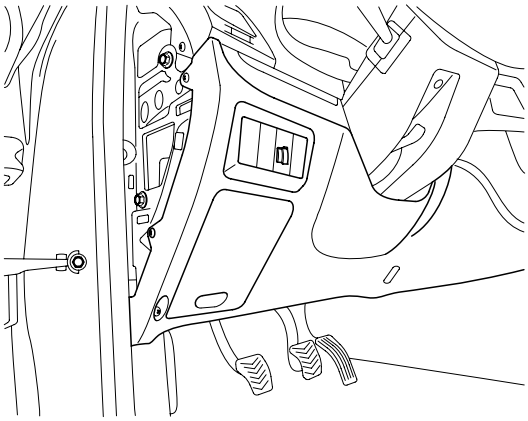

SCMBE6154L

[RHD]

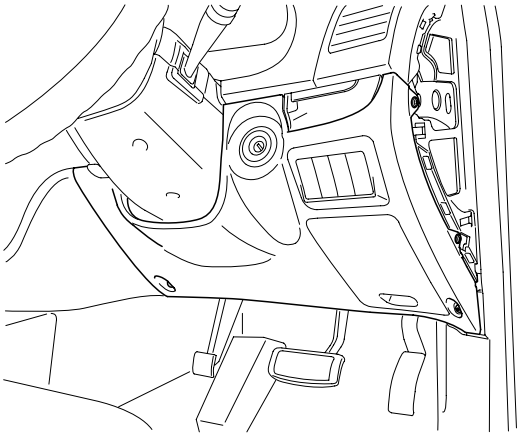

SCMBE6154R

3. Remove the body control module (A) and antenna cable after loosening 3 bolts and disconnecting connector.

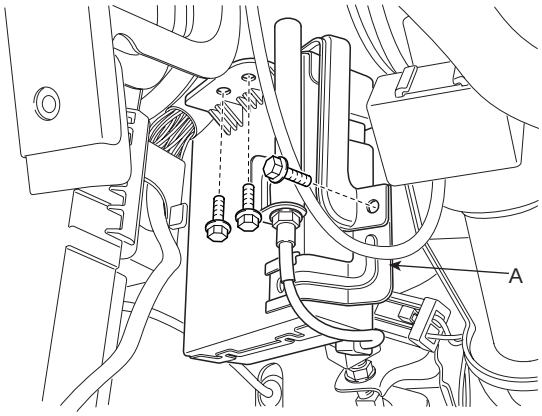

SCMBE6153D

4. Installation is the reverse of removal.

FUEL FILLER DOOR OPENER

COMPONENT LOCATION E6EB50CF

The parts with asterisk(*) :
This illustration shows the LHD type.
RHD type is symmetrical.

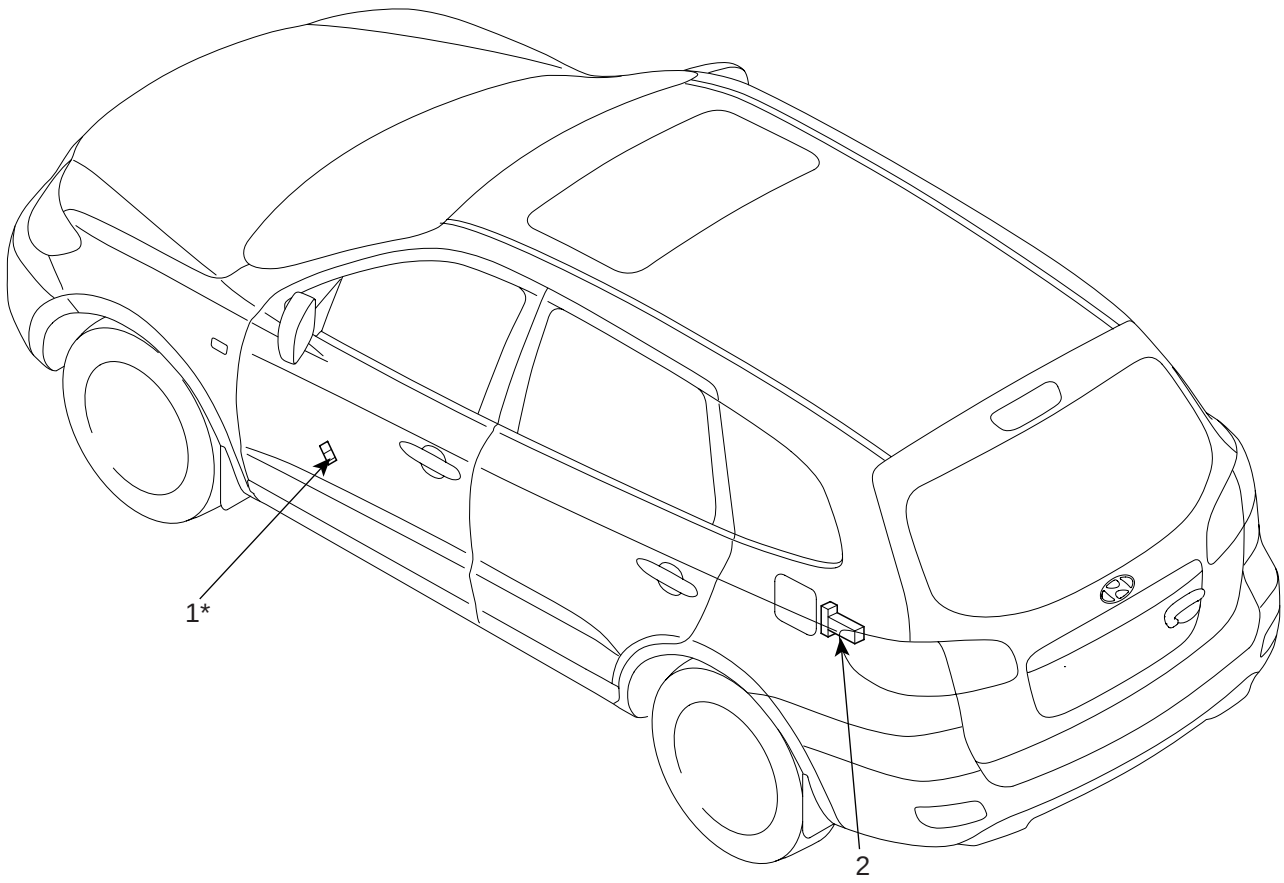

1. Fuel filler door open switch
2. Fuel filler door release actuator

SCMBE6180L

FUEL FILLER DOOR RELEASE ACTUATOR

INSPECTION E2F1D93F

1. Remove the rear seat. (Refer to the Body group - Rear seat).
2. Remove the luggage side trim. (Refer to the internal trim)
3. Open the fuel filter door and disconnect the wiring connector after loosening 2 nuts.
4. Check for continuity between terminal No. 1 and No. 2. If there is no continuity replace the fuel filler door release actuator (A).

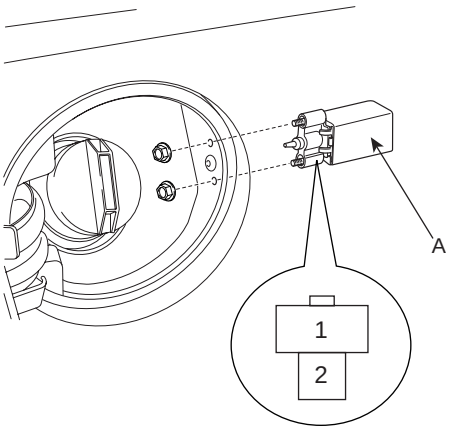

ATKF181A

FUEL FILLER DOOR OPEN SWITCH

INSPECTION EE6CC63B

1. Remove the front door trim panel. (Refer to the Body group - front door)
2. Disconnect the switch connector (4P) from wiring.
3. Check the switch for continuity between the No. 1 and No. 2 terminals.
4. If the continuity is not as specified, replace the switch.

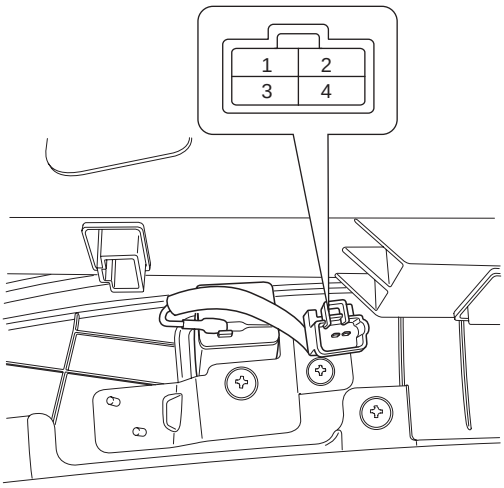

SCMBE6182D

FUSES AND RELAYS

COMPONENT LOCATION EB826186

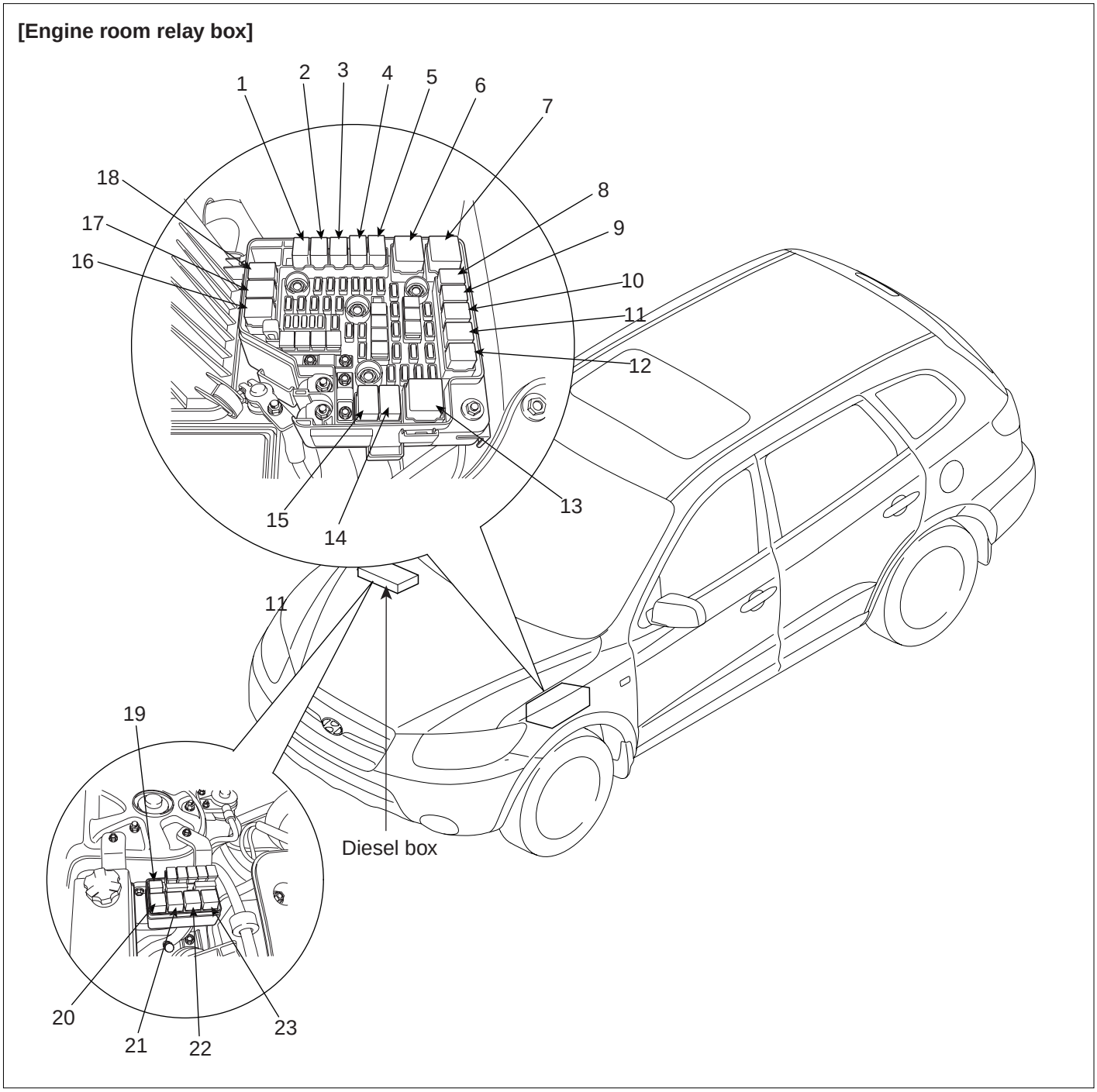

1. A/T control relay
2. Cooling pan relay
3. Front fog lamp relay
4. A/C relay
5. Head lamp relay (High)
6. Main relay
7. Start relay
8. Condenser pan 2 relay
9. Condenser pan 1 relay
10. Tail lamp relay
11. Head lamp relay (Low-left side)
12. Head lamp relay (Low-right side)
13. Rear defogger relay
14. Windshield relay
15. Horn relay
16. Wiper relay
17. Rain sensor relay
18. Fuel pump relay
19. Fuel filter heater relay
20. PTC heater relay #2
21. Glow relay
22. PTC heater relay #1
23. PTC heater relay #3

SCMBE6190L

[Passenger compartment relay]

The parts with asterisk(*) :
This illustration shows the LHD type.
RHD type is symmetrical.

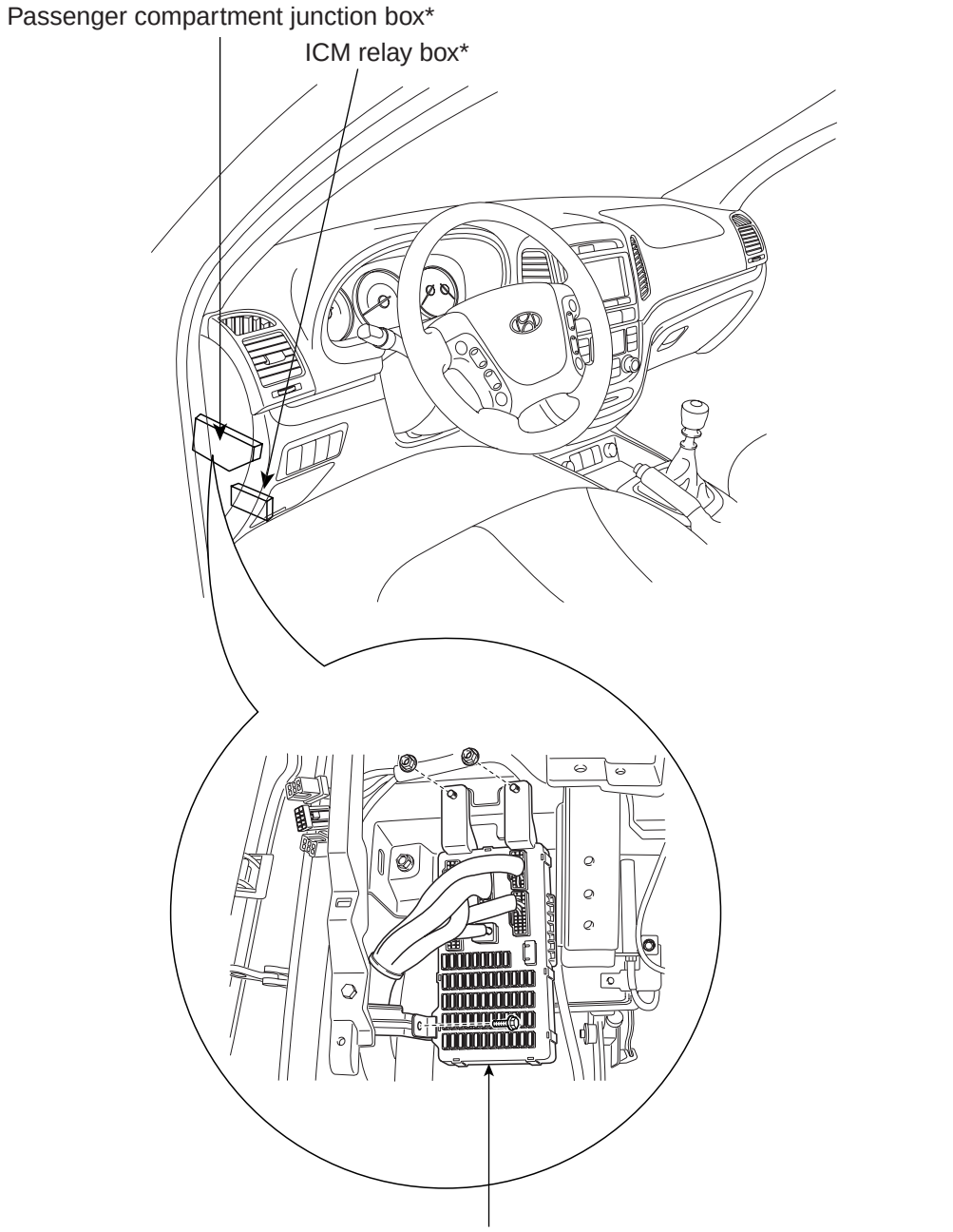

Door unlock relay, Door lock relay, Harzard relay, Buglar alarm horn relay,
Blow relay, Power window relay; Buglar alarm start relay (Built-in-junction box)

SCMBE6191L

RELAY BOX (ENGINE COMPARTMENT)

COMPONENT LOCATION E5BA7BEF

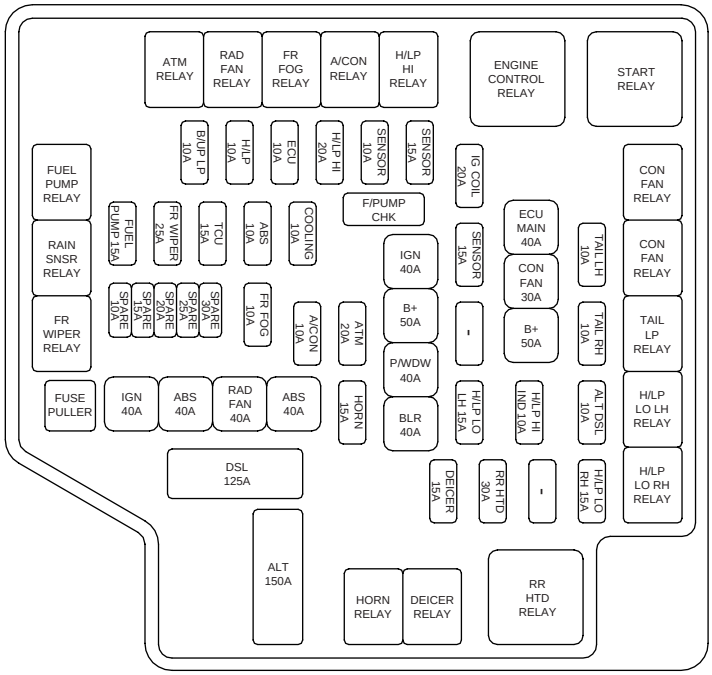

CIRCUIT

FUSE	(A)	Circuit Protected
DSL	125A	FUSIBLE LINK BOX
ALT	150A	GENERATOR
A/CON	10A	A/CON RELAY
RR HTD	30A	RR HTD RELAY
BLR	40A	I/P JUNCTION BOX
B+ #2	50A	I/P JUNCTION BOX
P/WDW	40A	I/P JUNCTION BOX
ABS #1	40A	ABS CONTROL MODULE, ESP CONTROL MODULE, MULTIPURPOSE CHECK CONNECTOR
ABS #2	40A	ABS CONTROL MODULE, ESP CONTROL MODULE, MULTIPURPOSE CHECK CONNECTOR
DEICER	15A	DEICER RELAY
ECU MAIN	40A	ENGINE CONTROL RELAY
HORN	15A	HORN RELAY
IG COIL	20A	IGNITION COIL #1~#6(GSL), CONDENSER(GSL), ECM(DSL)
SENSOR #3	15A	ECM(DSL), PURGE CONTROL SOLENOID VALVE(GSL), VARIABLE INTAKE MANIFOLD VALVE(GSL), PCM(GSL), OIL CONTROL VALVE(GSL)
RAD FAN	40A	RAD FAN RELAY
CON FAN	30A	CON FAN #1 RELAY, CON FAN #2 RELAY
SENSOR #2	15A	MASS AIR FLOW SENSOR(GSL), OXYGEN SENSOR #1~#4(GSL), EGR ACTUATOR(DSL), BOOST PRESSURE ACTUATOR(DSL), CAM SHAFT POSITION SENSOR(DSL), FUSIBLE LINK BOX(DSL), THROTTLE FLAP ACTUATOR(DSL), PCM(GSL)
SENSOR #1	10A	IMMOBILIZER MODULE, INJECTOR #1~#6(GSL), PCM(GSL) STOP LAMP SWITCH(DSL), A/CON RELAY, FUEL PUMP RELAY
FUEL PUMP	15A	FUEL PUMP RELAY
H/LP LO LH	15A	H/LP LO LH RELAY
H/LP LO RH	15A	H/LP LO RH RELAY

FUSE	(A)	Circuit Protected
H/LP	10A	I/P JUNCTION BOX
FR WIPER	25A	FR WIPER RELAY, RAIN SNSR RELAY, FRONT WIPER MOTOR, MULTIFUNCTION SWITCH
H/LP HI	20A	H/LP HI RELAY
H/LP HI IND	10A	HEAD LAMP, INSTRUMENT CLUSTER
IGN #1	40A	IGNITION SWITCH
IGN #2	40A	IGNITION SWITCH, START RELAY
B+ #1	50A	I/P JUNCTION BOX
ATM	20A	ATM RELAY(GSL), 4WD ECM, ATM CONTROL RELAY(DSL)
TCU	15A	PCM(GSL), TCM(DSL)
ALT DSL	10A	GENERATOR
ECU	10A	VEHICLE SPEED SENSOR, MASS AIR FLOW SENSOR(DSL), ECM(DSL), SEMI ACTIVE CONTROL MODULE(GSL), PCM(GSL)
COOLING	10A	CON FAN #1 RELAY, CON FAN #2 RELAY
B/UP UP	10A	INPUT SPEED SENSOR, OUTPUT SPEED SENSOR, TCM(DSL), TRANSAXLE RANGE SWITCH, BACK-UP LAMP SWITCH
ABS	10A	ABS CONTROL MODULE, ESP CONTROL MODULE, YAW RATE SENSOR, 4WD ECM, STOP LAMP SWITCH(GSL), FUSIBLE LINK BOX(DSL), FUEL FILTER WARNING SWITCH(DSL) CLUTCH SWITCH(GSL), MULTIPURPOSE CHECK CONNECTOR
TAIL LH	10A	REAR COMBINATION LAMP LH, POSITION LAMP LH
TAIL RH	10A	REAR COMBINATION LAMP RH, POSITION LAMP RH, GLOVE BOX LAMP, ICM RELAY BOX
FR FOG	10A	FR FOG RELAY
SPARE	10A	-
SPARE	15A	-
SPARE	20A	-
SPARE	25A	-
SPARE	30A	-

※USE THE DESIGNATED FUSE ONLY

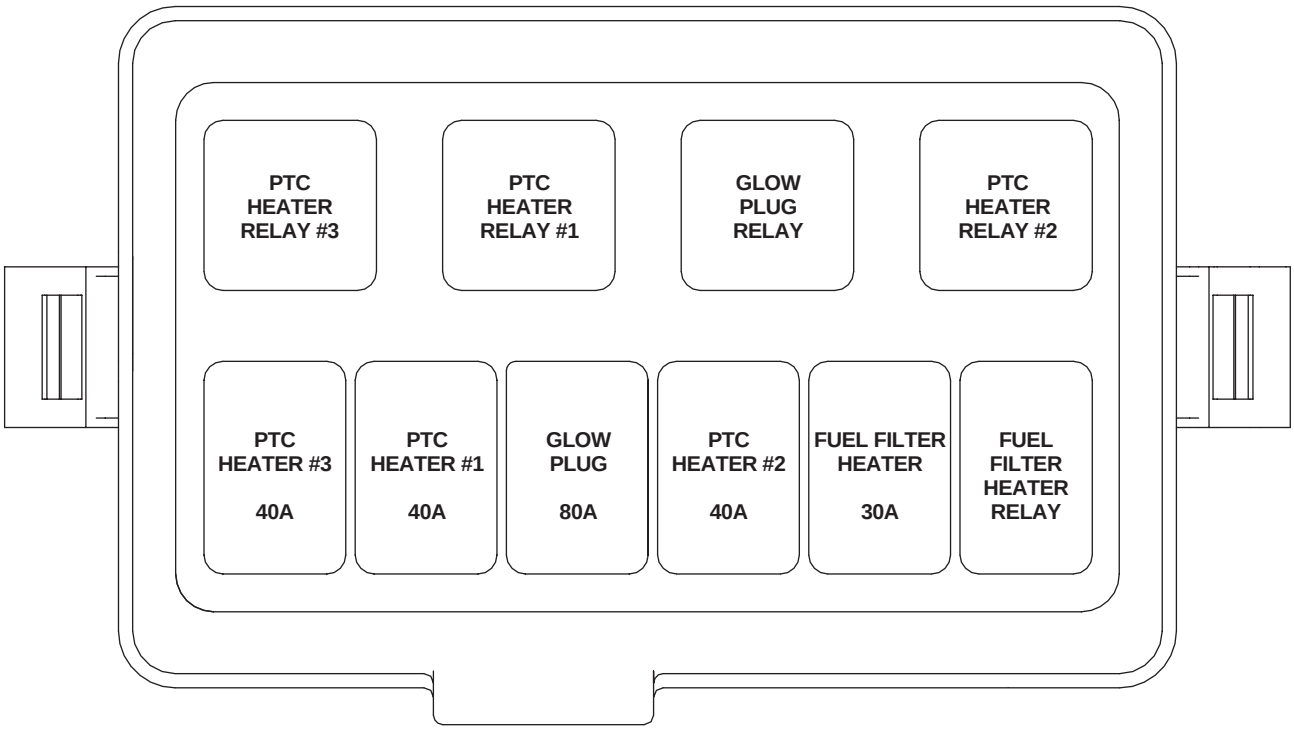

※ USE THE DESIGNATED FUSE ONLY

SCMBE6193L

INSPECTION EE70B5AD

POWER RELAY (TYPE A)

Check for continuity between the terminals.

1. There should be continuity between the No.30 and No.87 terminals when power and ground are connected to the No.85 and No.86 terminals.
2. There should be no continuity between the No.30 and No.87 terminals when power is disconnected.

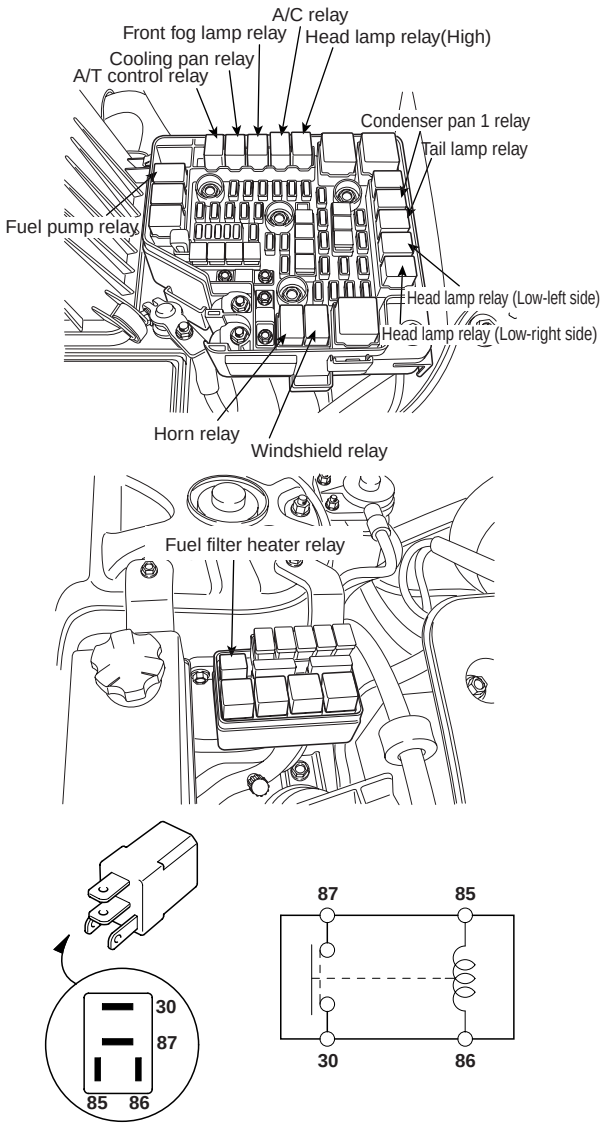

SCMBE6194L

Terminal / Power	30	87	85	86
Disconnected			○	○
Connected	○	○	⊖	⊕

SCMBE6195L

POWER RELAY (TYPE B)

Check for continuity between the terminals.

1. There should be continuity between the No.30 and No.87 terminals when power and ground are connected to the No.85 and No.86 terminals.
2. There should be continuity between the No.30 and No.87 terminals when power is disconnected.

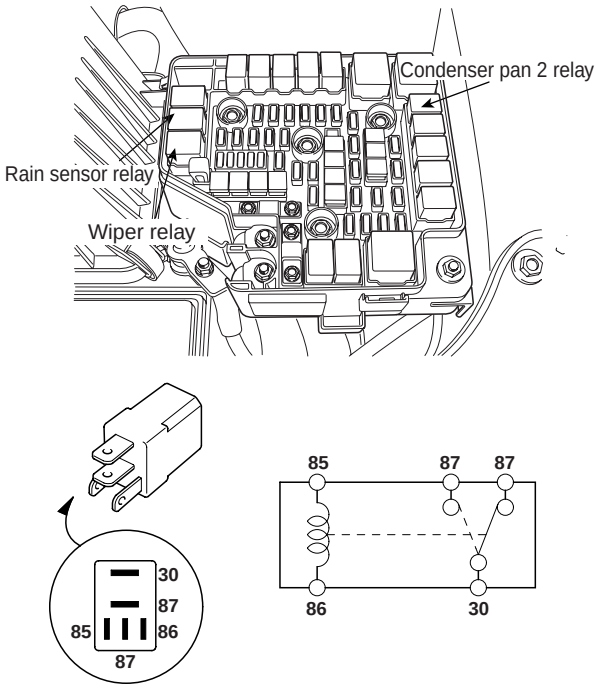

SCMBE6196L

Terminal / Power	85	86	30	87	87
Disconnected			○		○
Connected	⊖	⊕	○	○	

SCMBE6197L

POWER RELAY (TYPE C)

Check for continuity between the terminals.

1. There should be continuity between the No.30 and No.87 terminals when power and ground are connected to the No.85 and No.86 terminals.
2. There should be no continuity between the No.30 and No.87 terminals when power is disconnected.

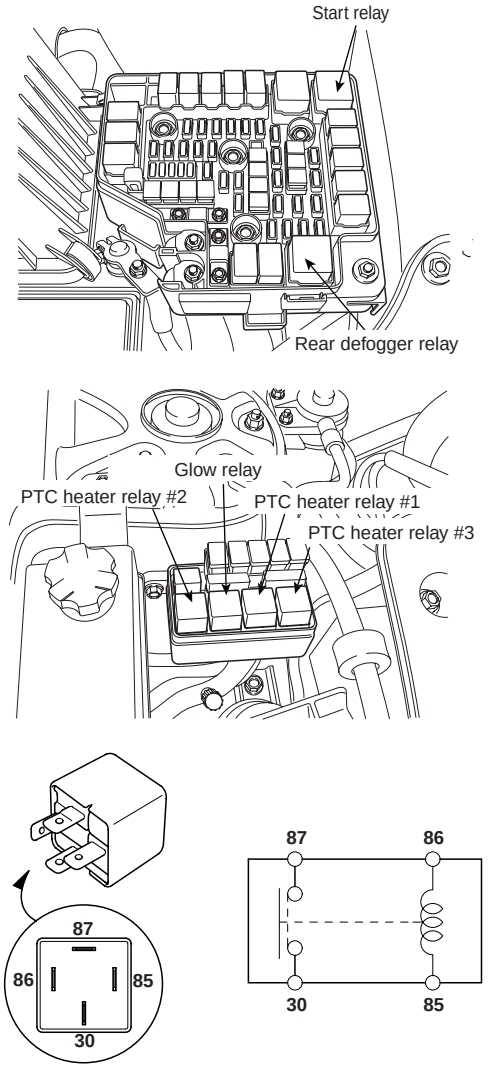

SCMBE6198L

Terminal / Power	86	85	87	30
Disconnected	○	○		
Connected	⊖	⊕	○	○

SCMBE6199L

POWER RELAY (TYPE D)

Check for continuity between the terminals.

1. There should be continuity between the No.30 and No.87 terminals when power and ground are connected to the No.85 and No.86 terminals.
2. There should be continuity between the No.30 and No.87 terminals when power is disconnected.

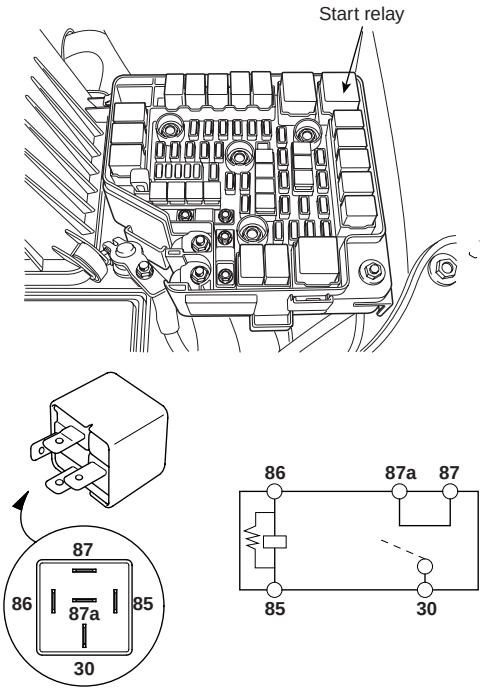

SCMBE6200L

Terminal / Power	86	85	87	87a	30
Disconnected	○	○			
Connected	⊖	⊕	○	○	○

SCMBE6201L

FUSE

1. Be sure there is no play in the fuse holders, and that the fuses are held securely.
2. Are the fuse capacities for each circuit correct?
3. Are there any blown fuses?
   If a fuse is to be replaced, be sure to use a new fuse of the same capacity. Always determine why the fuse blew first and completely eliminate the problem before installing a new fuse.

RELAY BOX (PASSENGER COMPARTMENT)

COMPONENT LOCATION EBFFF18D

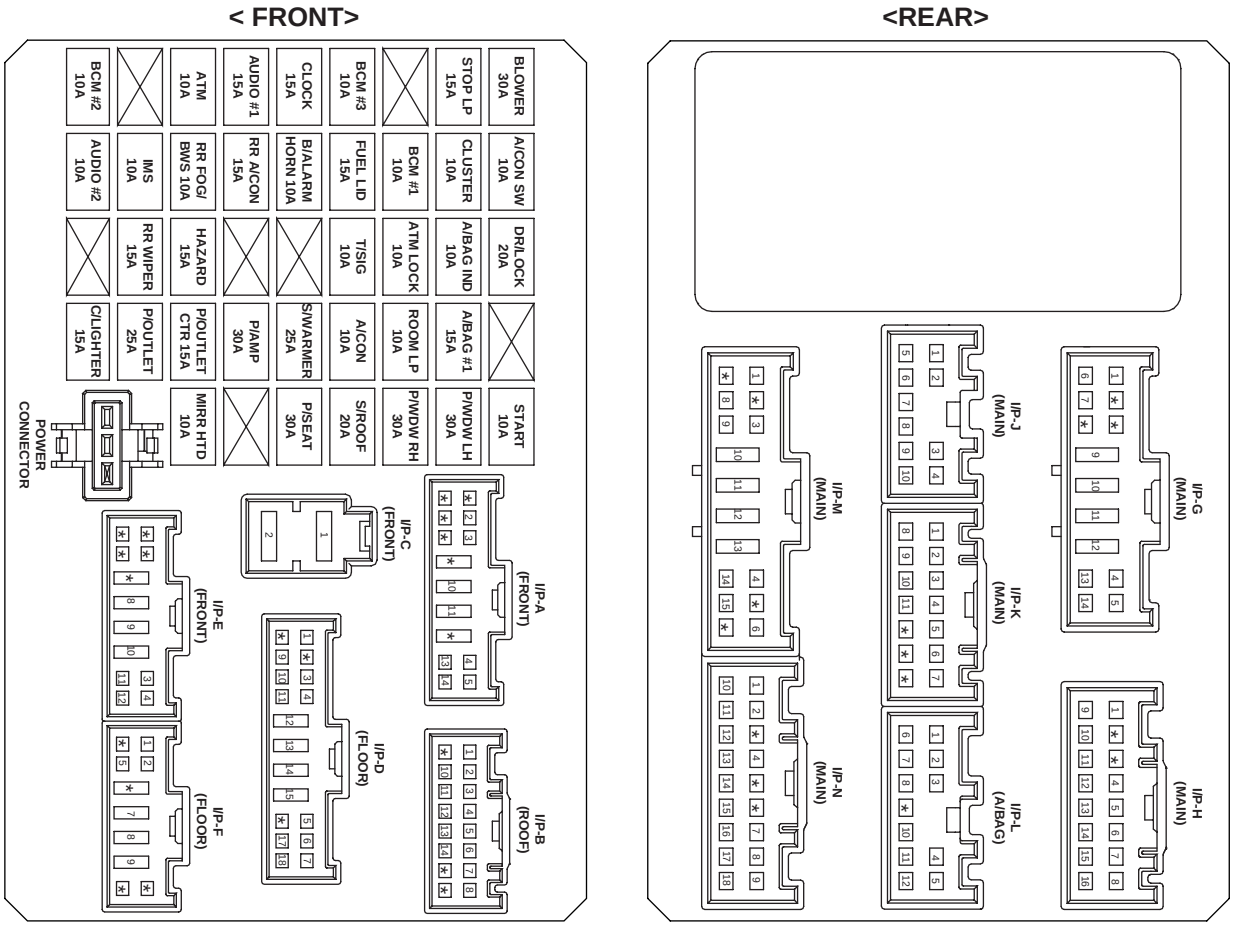

※USE THE DESIGNATED FUSE ONLY

SCMBE6210L

CIRCUIT

FUSE	(A)	Circuit Protected
C/LIGHTER	15A	CIGARETTE LIGHTER
P/OUTLET	25A	FRONT POWER OUTLET, REAR POWER OUTLET
P/OUTLET CTR	15A	CENTER POWER OUTLET
AUDIO #2	10A	POWER OUTSIDE MIRROR SWITCH, AUDIO, DIGITAL CLOCK, ATM KEY LOCK CONTROL MODULE
RR WIPER	15A	MULTIFUNCTION SWITCH, REAR WIPER CONTROL MODULE, REAR WIPER MOTOR
IMS	10A	RAIN SENSOR
BCM #2	10A	RHEOSTAT, BCM, INSTRUMENT CLUSTER
A/CON	10A	A/C CONTROL MODULE, INCAR & HUMIDITY SENSOR, HIGH BLOWER RELAY, REAR A/CON SWITCH, ICM RELAY BOX, AQS SENSOR, FUSIBLE LINK BOX (DSL), SUNROOF MOTOR, BLOWER RELAY, ELECTRO CHROMIC MIRROR
BLOWER	30A	BLOWER RELAY, BLOWER MOTOR, A/C CONTROL MODULE
A/CON SW	10A	A/C CONTROL MODULE
A/BAG #1	15A	SRS CONTROL MODULE
A/BAG IND	10A	PAB CUT OFF SWITCH, INSTRUMENT CLUSTER
T/SIG	10A	HAZARD SWITCH
ATM LOCK	10A	MULTIFUNCTION SWITCH, STEERING ANGLE SENSOR, ESP SWITCH, ATM KEY LOCK CONTROL MODULE, SEAT WARMER MODULE
BCM #1	10A	OIL LEVEL SENSOR MODULE, BCM
CLUSTER	10A	INSTRUMENT CLUSTER, PRE-EXCITATION RESISTOR, BCM, SEMI ACTIVE ENGINE MOUNTING CONTROL MODULE (GSL), GENERATOR
START	10A	BURGLAR ALARM RELAY
P/AMP	30A	DELPHI AMP, MOBIS AMP
S/WARMER	25A	SEAT WARMER CONTROL MODULE
P/SEAT	30A	POWER SEAT SWITCH
RR A/CON	15A	ICM RELAY BOX
RR FOG/BWS	10A	ICM RELAY BOX
S/ROOF	20A	SUNROOF MOTOR
B/ALARM HORN	10A	BURGLAR ALARM HORN RELAY
MIRR HTD	10A	REAR DEFOGGER SWITCH, POWER OUTSIDE MIRROR MOTOR
DR/LOCK	20A	DOOR LOCK (UN) RELAY, ICM RELAY BOX
STOP LP	15A	STOP LAMP SWITCH
FUEL LID	15A	FUEL LID SWITCH
ATM	10A	KEY SOLENOID, SEMI ACTIVE SOLENOID (GSL), SPORTS MODE SWITCH INSTRUMENT CLUSTER, LUGGAGE LAMP, MAP LAMP, REAR PERSONAL LAMP,
ROOM LP	10A	ROOM LAMP, FRONT DOOR LAMP, CARGO LAMP, VANITY LAMP SWITCH
BCM #3	10A	IGNITION KEY ILL. & DOOR WARNING SWITCH, BCM, SECURITY INDICATOR
CLOCK	15A	A/C CONTROL MODULE, DATA LINK CONNECTOR, DIGITAL CLOCK
AUDIO #1	15A	DELPHI AUDIO, MOBIS AUDIO
HAZARD	15A	HAZARD SWITCH, HAZARD RELAY
P/WDW LH	30A	POWER WINDOW MAIN SWITCH, REAR POWER WINDOW SWITCH LH
P/WDW RH	30A	POWER WINDOW MAIN SWITCH, REAR POWER WINDOW SWITCH RH

※ USE THE DESIGNATED FUSE ONLY

INSPECTION ED3ADA2E

FUSE

1. Be sure there is no play in the fuse holders, and that the fuses are held securely.

2. Are the fuse capacities for each circuit correct?

3. Are there any blown fuses?
   If a fuse is to be replaced, be sure to use a new fuse of the same capacity. Always determine why the fuse blew first and completely eliminate the problem before installing a new fuse.

ICM (INTEGRATED CIRCUIT MODULE) RELAY BOX

DESCRIPTION EDD82CCE

The ICM is united with many kinds of relays and installed below the body control module.
relay box (Assist compartment).

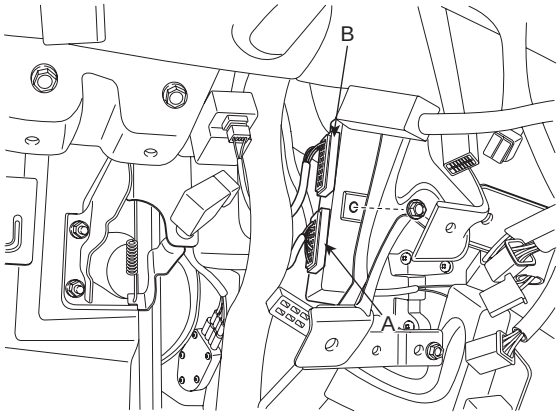

SCMBE6212D

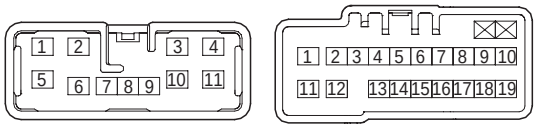

[A] [B]

SCMBE6213L

INSPECTION E04C6F4C

REAR AIRCONDITION

Check for continuity between the terminals.

1. There should be continuity between the No.2 and No.3 terminals when power and ground are connected to the No.1 and No.11 in the ICM-B.
2. There should be no continuity between the No.2 and No.3 terminals when power is disconnected.

ADJUST PEDAL

Check for continuity between the terminals.

1. There should be no continuity between the No.12 and No.13 terminals when power and ground are connected to the No.12 and No.15 in the ICM-B.
2. There should be continuity between the No.12 and No.13 terminals when power is disconnected.

DEAD LOCK

Check for continuity between the terminals.

1. There should be continuity between the No.9 and No.10 terminals when power and ground are connected to the No.18 and No.19 in the ICM-B.
2. There should be no continuity between the No.11 and No.10 terminals when power is disconnected.

DRL

Check for continuity between the terminals.

1. There should be continuity between the No.8 and No.9 terminals when power and ground are connected to the No.4 and No.11 terminals in the ICM-A.
2. There should be no continuity between the No.8 and No.9 terminals when power is disconnected.

REAR FOG LAMP

Check for continuity between the terminals.

1. There should be continuity between the No.6 and No.7 terminals when power and ground are connected to the No.3 and No.10 terminals in the ICM-A.
2. There should be no continuity between the No.6 and No.7 terminals when power is disconnected.

INDICATORS AND GAUGES

COMPONENT LOCATION E09EAE88

The parts with asterisk(*) :
This illustration shows the LHD type.
RHD type is symmetrical.

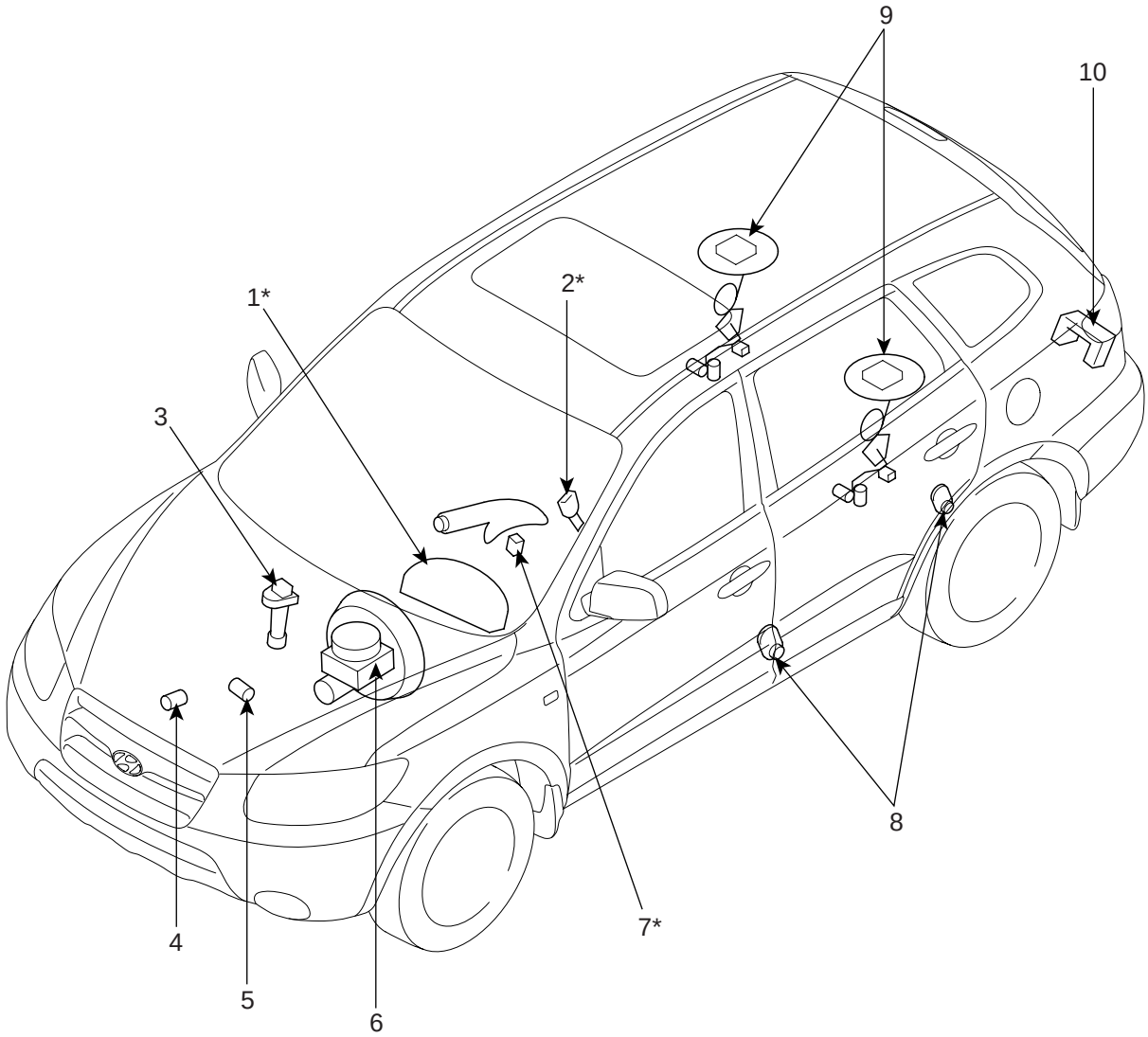

1. Cluster assembly
2. Seat belt switch
3. Vehicle speed sensor
4. Engine coolant temperature sender
5. Oil pressure switch
6. Brake fluid level warning switch
7. Parking brake switch
8. Door switch
9. Fuel gauge sender
10. Tailgate switch

SCMBE6220L

TROUBLESHOOTING E78F78F1

Symptom	Possible cause	Remedy
Speedometer does not operate	Cluster fuse (10A) blown	Check for short and replace fuse
	Speedometer faulty	Check speedometer
	Vehicle speed sensor faulty	Check vehicle speed sensor
	Wiring or ground faulty	Repair if necessary
Tachometer does not operate	Cluster fuse (10A) blown	Check for short and replace fuse
	Tachometer faulty	Check tachometer
	Wiring or ground faulty	Repair if necessary
Fuel gauge does not operate	Cluster fuse (10A) blown	Check for short and replace fuse
	Fuel gauge faulty	Check gauge
	Fuel sender faulty	Check fuel sender
	Wiring or ground faulty	Repair if necessary
Low fuel warning lamp does not light up	Cluster fuse (10A) blown	Check for short and replace fuse
	Bulb burned out	Replace bulb
	Fuel sender faulty	Check fuel sender
	Wiring or ground faulty	Repair if necessary
Water temperature gauge does not operate	Cluster fuse (10A) blown	Check for short and replace fuse
	Water temperature gauge faulty	Check gauge
	Water temperature sender faulty	Check sender
	Wiring or ground faulty	Repair if necessary
Oil pressure warning lamp does not light up	Cluster fuse (10A) blown	Check for short and replace fuse
	Bulb burned out	Replace bulb
	Oil pressure switch faulty	Check switch
	Wiring or ground faulty	Repair if necessary
Parking brake warning lamp does not light up	Cluster fuse (10A) blown	Check for short and replace fuse
	Bulb burned out	Replace bulb
	Brake fluid level warning switch faulty	Check switch
	Parking brake switch faulty	Check switch
	Wiring or ground faulty	Repair if necessary
Open door warning lamp and trunk lid warning lamp do not light up	Memory fuse (15A) blown	Check for short and replace fuse
	Bulb burned out	Replace bulb
	Door switch faulty	Check switch
	Wiring or ground faulty	Repair if necessary
Seat belt warning lamp does not light up	Cluster fuse (10A) blown	Check for short and replace fuse
	Bulb burned out	Replace bulb
	Seat belt switch faulty	Check switch
	Wiring or ground faulty	Repair if necessary

INSTRUMENT CLUSTER

COMPONENTS E5E2EEB4

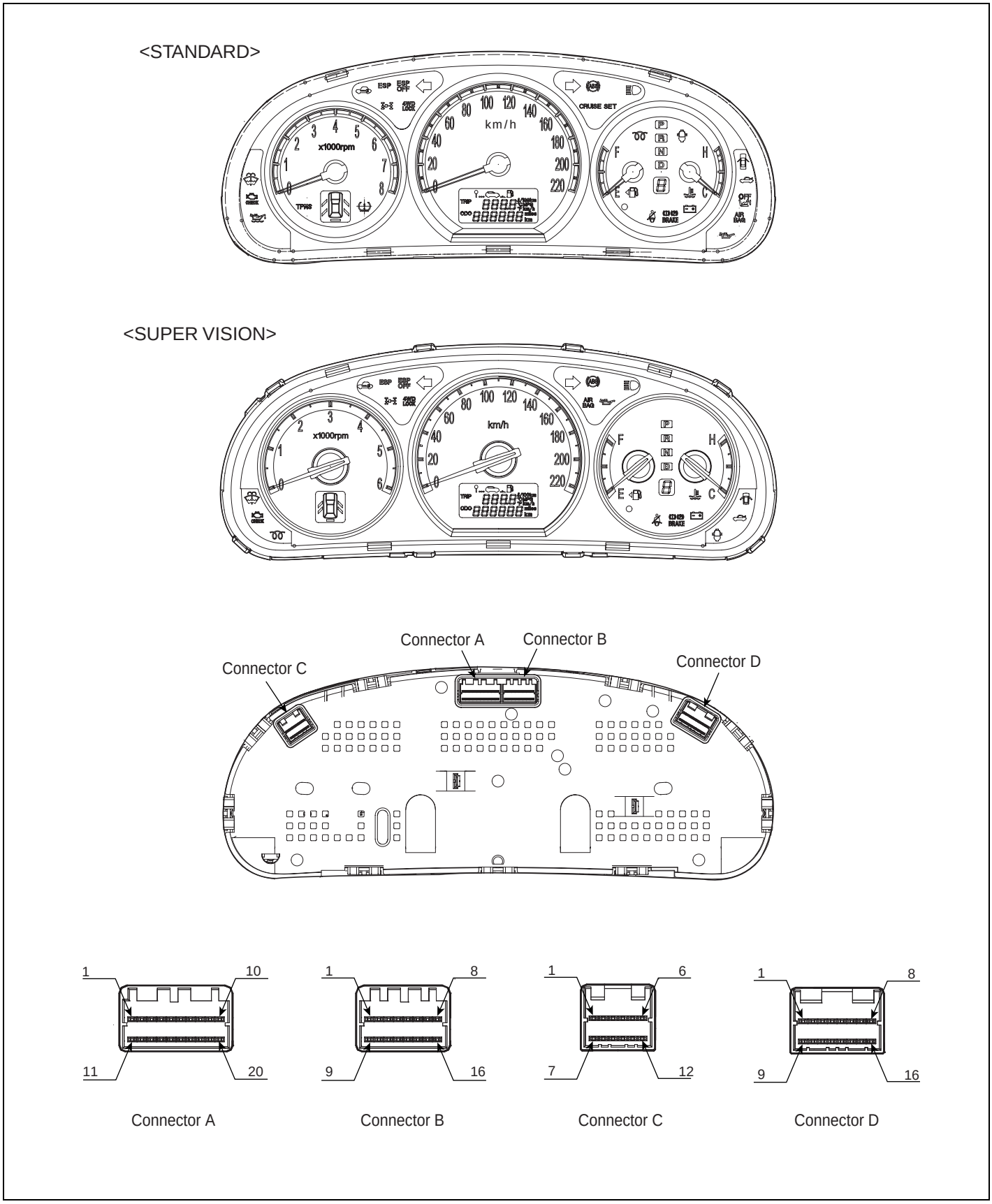

SCMBE6221L

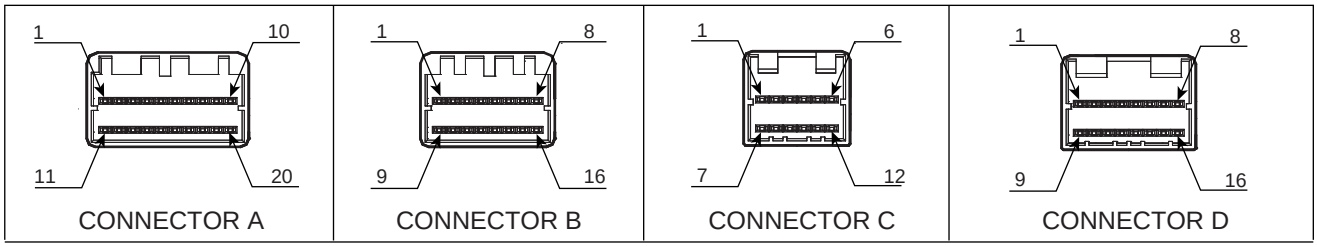

NO	CONNECTOR A	CONNECTOR B	CONNECTOR C	CONNECTOR D
1	Turn signal-right	Washer level	Door	P
2	ABS	Immobilizer	Trunk open	R
3	High beam(-)	ESP	PAB CUT OFF(-)	N
4	High beam(+)	ESP OFF	Air bag off(+)	D
5	-	Fuel GND(MICOM)	Air bag(-)	PWM signal(AT)
6	Fuel sender	Turn signal-left	EBD	-
7	Termperture sender	4WD LOCK	Battery charge	-
8	-	4WD	Brake	-
9	Oil level	Injection signal	seat belt	-
10	CHECK ENGINE	AMBIENT sensor	Oil pressure	-
11	Cruise	Trip computer mode sw	W/SEPERATOR	-
12	SET	Trip reset sw	Glow	Front left door
13	Power GND(-)	IGN2+		Front right door
14	-	GND(signal)		Rear left door
15	Illumination(+)	IGN+		Rear right door
16	Illumination(-)	Battery		-
17	High speed(BCM)			
18	Speed signal			
19	Tachometer signal			
20	-			

SCMBE6233L

INSPECTION E52DCCC6

SPEEDOMETER

1. Adjust the pressure of the tires to the specified level.
2. Drive the vehicle onto a speedometer tester. Use wheel chocks as appropriate.
3. Check if the speedometer indicator range is within the standard values.

CAUTION

Do not operate the clutch suddenly or increase/ decrease speed rapidly while testing.

NOTE

Tire wear and tire over or under inflation will increase the indication error.

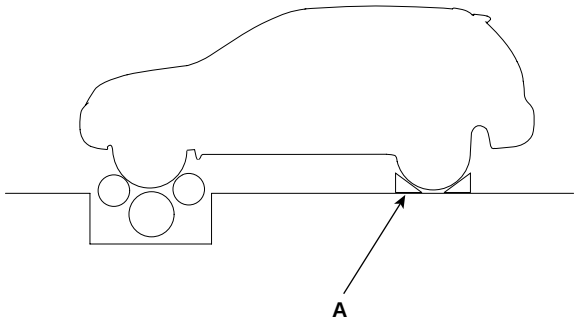

SCMBE6203L

[EXCEPT AUSTRALIA - KM/H]

Velocity (km/h)	20	40	60	80	100
Tolerance (km/h)	+4.6 +0.5	+5.1 +1.1	+6.6 +1.1	+7.1 +2.1	+7.6 +2.6
Velocity (km/h)	120	140	160	180	220
Tolerance (km/h)	+8.1 +3.1	+8.6 +3.6	+9.1 +4.1	+9.6 +4.6	+10.6 +5.5

[AUSTRALIA- KM/H]

Velocity (km/h)	20	40	60	80	100
Tolerance (km/h)	+2.9 -0.4	+2.9 -0.4	+4.0 -0.5	+4.4 -0.6	+4.3 -0.7
Velocity (km/h)	120	140	160	180	220
Tolerance (km/h)	+4.2 -0.8	+4.1 -0.9	+4.0 -1.0	+3.9 -1.1	+3.7 -1.3

[MPH]

Velocity (MPH)	10	20	40	60
Tolerance (MPH)	+2.6 +0.1	+2.9 +0.4	+3.7 +0.7	+4.0 +1.0
Velocity (MPH)	80	100	120	140
Tolerance (MPH)	+4.3 +1.3	+4.6 +1.6	+4.9 +1.9	+5.2 +2.2

VEHICLE SPEED SENSOR

1. Connect the positive (+) lead from battery to terminal 2 and negative (-) lead to terminal 1.
2. Connect the positive (+) lead from tester to terminal 3 and the negative (-) lead to terminal 1.
3. Rotate the shaft.
4. Check that there is voltage change from approx. 0V to 11V or more between terminals 3 and 1.
5. The voltage change should be 4 times for every revolution of the speed sensor shaft.
   If operation is not as specified, replace the sensor.

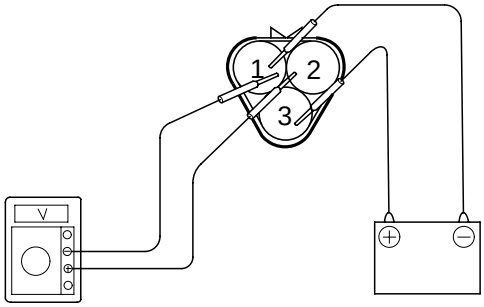

ETKD330A

TACHOMETER

1. Connect the scan tool to the diagnostic link connector or install a tachometer.

2. With the engine started, compare the readings of the tester with that of the tachometer. Replace the tachometer if the tolerance is exceeded.

CAUTION

a. Reversing the connections of the tachometer will damage the transistor and diodes inside.
b. When removing or installing the tachometer, be careful not to drop it or subject it to severe shock.

Revolution (rpm)	1,000	2,000	3,000	4,000	Re-mark
Tolerance (rpm)	±100	±125	±150	±150	Gaso-line
Tolerance (rpm)	±100	±125	±150	±150	Diesel
Revolution (rpm)	5,000	6,000	7,000	-	Re-mark
Tolerance (rpm)	±150	±180	±210	-	Gaso-line
Tolerance (rpm)	±150	±180	-	-	Diesel

FUEL GAUGE

1. Disconnect the fuel sender connector from the fuel sender.

2. Connect a 3.4 wattages, 12V test bulb to terminals 1 and 3 on the wire harness side connector.

3. Turn the ignition switch to the ON, and then check that the bulb lights up and the fuel gauge needle moves to full.

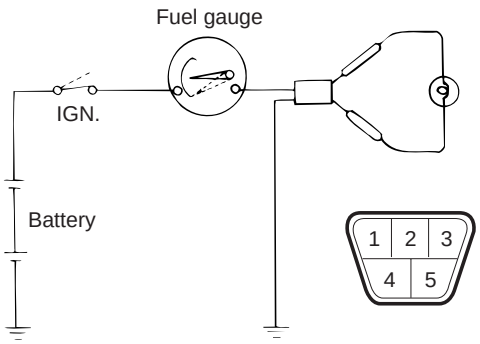

SCMBE6226L

FUEL GAUGE SENDER

1. Using an ohmmeter, measure the resistance between terminals 1 and 3 of sender connector (A) at each float level.

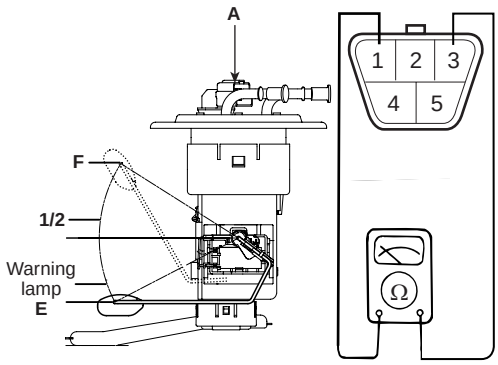

SCMBE6227L

2. Also check that the resistance changes smoothly when the float is moved from "E" to "F".

Position	Resistance(Ω)
E	104.8 ± 1Ω
Warning lamp	89.9 ± 1Ω
1/2	13.7 ± 1Ω
Sender (F)	4.2 ± 1Ω

3. If the height resistance is unsatisfied, replace the fuel sender as an assembly.

CAUTION

After completing this test, wipe the sender dry and reinstall it in the fuel tank.

FUEL GAUGE SERVO SENDER

1. Using an ohmmeter measure the resistance between terminals 1 and 2 of servo sender connector (A) at each flot level.

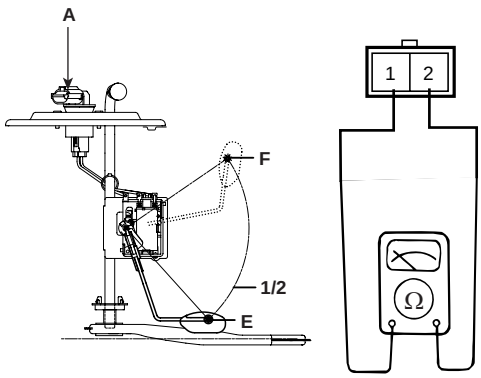

ATIE262C

2. Also check that the resistance changes smoothly when the flot is moved from "E" to "F".

Position	Resistance (Ω)
E	95.2 ± 1Ω
1/2	90.2 ± 1Ω
F	3.8 ± 1Ω

ENGINE COOLANT TEMPERATURE GAUGE

1. Disconnect the wiring connector (A) from the engine coolant temperature sender in the engine compartment.
2. Connect a 12V, 3.4 wattages test bulb between the harness side connector 2 terminal and ground.
3. Turn the ignition switch ON.
4. Verify that the test bulb flashes and that the indicator moves to HOT position.
   If operation is not as specified, replace the cluster (Engine coolant temperature gauge). Then recheck the system.

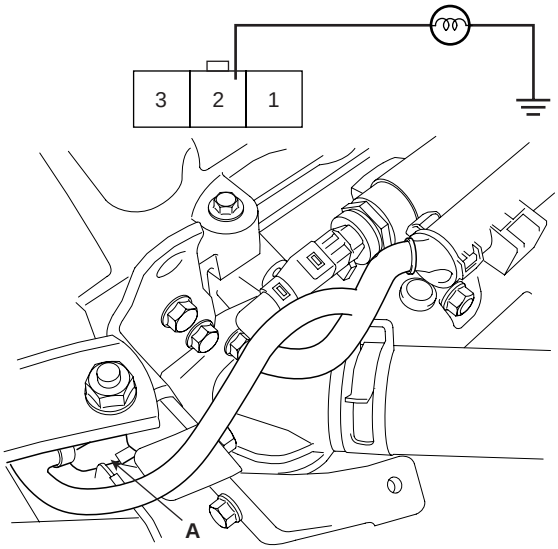

SCMBE6228D

ENGINE COOLANT TEMPERATURE SENDER

1. Using an ohmmeter, measure the resistance between the terminal 2 and ground.

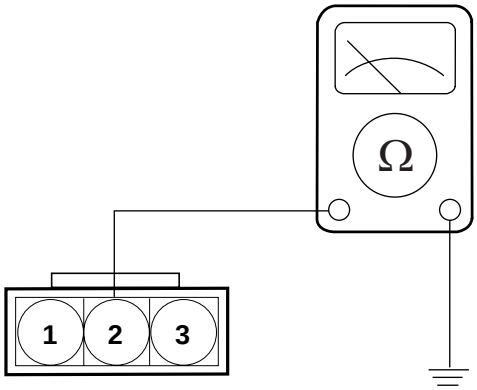

ETKE110I

2. If the resistance value is not as shown in the table, replace the temperature sender.

Temperature [°F(°C)]	140 (60)	185 (85)	230 (110)	257 (127.4)	E/G
Resistance (Ω)	128.5	53.8	23.0	16.1	Gasoline
	195 (49°C)	86.5 (71°C)	23.0	16.1	Diesel

OIL PRESSURE SWITCH

1. Check that there is continuity between the oil press switch terminal and ground with the engine off.
2. Check that there is no continuity between the terminal (A) and ground with the engine running.
3. If operation is not as specified, replace the switch.

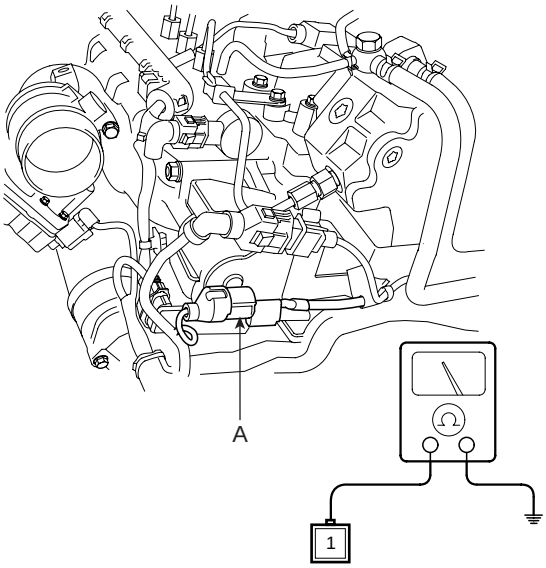

SCMBE6229D

OIL PRESSURE WARNING LAMP

1. Disconnect the connector (A) from the warning switch and ground the terminal on the wire harness side connector.
2. Turn the ignition switch ON. Check that the warning lamp lights up. If the warning lamp doesn't light, test the bulb or inspect the wire harness.

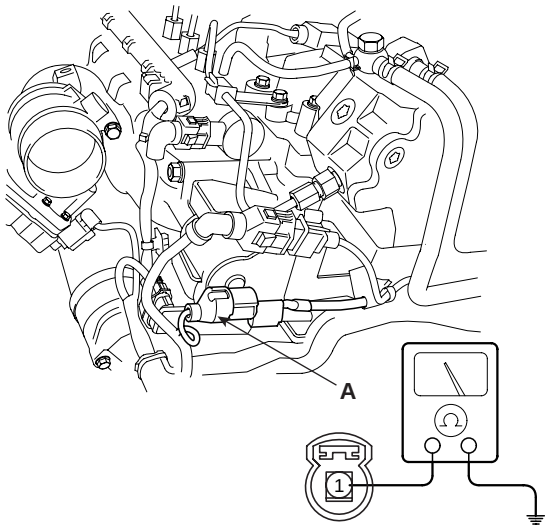

SCMBE6230D

BRAKE FLUID LEVEL WARNING SWITCH

1. Remove the connector (A) from the switch located at the brake fluid reservoir.
2. Verify that continuity exists between switch terminals 1 and 2 while pressing the switch (float) down with a rod.

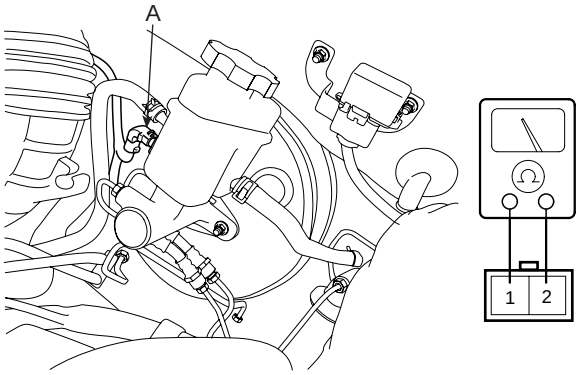

SCMBE6231D

BRAKE FLUID LEVEL WARNING LAMP

1. Ignition "ON".
2. Release the parking brake.
3. Remove the connector from the brake fluid level warning switch.
4. Ground the connector at the harness side.
5. Verify that the warning lamp lights.

PARKING BRAKE SWITCH

The parking brake switch is a push type. It is located at the side of the parking brake pedal.

1. Check that there is continuity between the terminal and switch body with the switch (A) ON.
2. Check that there is no continuity between the terminal and switch body with the switch OFF.
   If continuity is not as specified, replace the switch or inspect its ground connection.

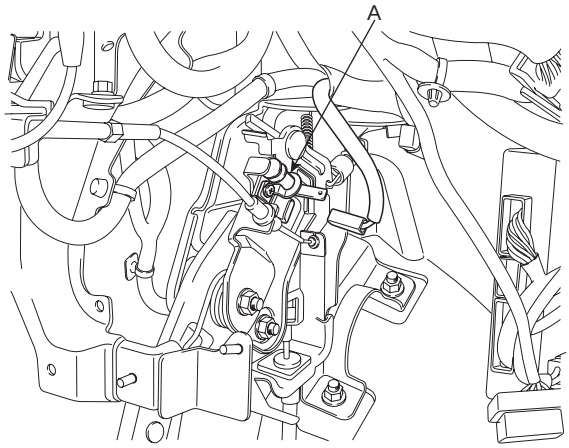

ATKF262D

DOOR SWITCH

Remove the door switch and check for continuity between the terminals.

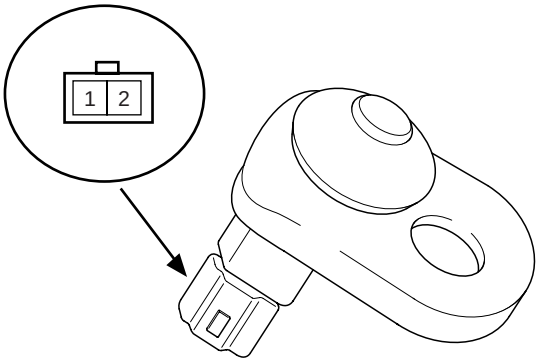

ATIE121Q

Position \ Terminal	1	2	Body (Ground)
Free(Door open)	○	○	○
Push(Door close)			

ETQF180D

SEAT BELT SWITCH

1. Remove the connector from the switch.
2. Check for continuity between terminals.

Seat belt condition	Continuity
Fastened	Non-conductive (∞Ω)
Not fastened	Conductive (Ω)

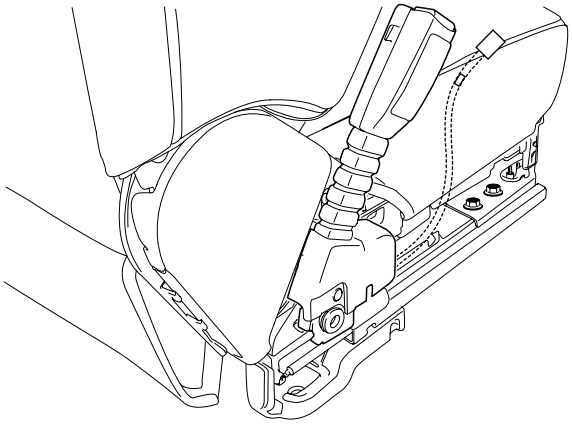

ETBF260G

SEAT BELT WARNING LAMP

With the ignition switch turned ON, verify that the lamp glows.

Seat belt condition	Warning lamp
Fastened	OFF
Not fastened	ON

TRIP SWITCH

1. Disconnect the negative (-) battery terminal.
2. Remove the trip switch (A) from the cluster facia panel (B).

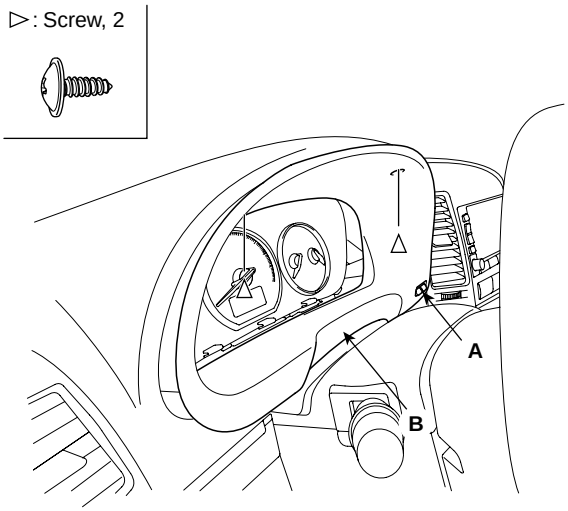

SCMBE6234L

3. Check for continuity between the terminals in each switch position according to the table.

Terminal / Position	2	3	4
MODE(PUSH)		○	○
RESET(PUSH)	○	○	

ETBF260I

REPLACEMENT E9AE5508

1. Disconnect the negative (-) battery terminal.
2. Remove the center facia panel (A) after and loosening 2 screws.

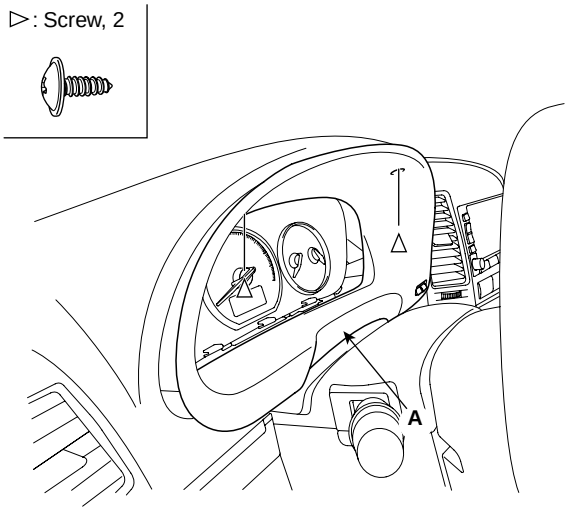

SCMBE6223L

3. Disconnect trip switch connector.
4. Pull out the cluster (A) from the housing after removing 4 screws.

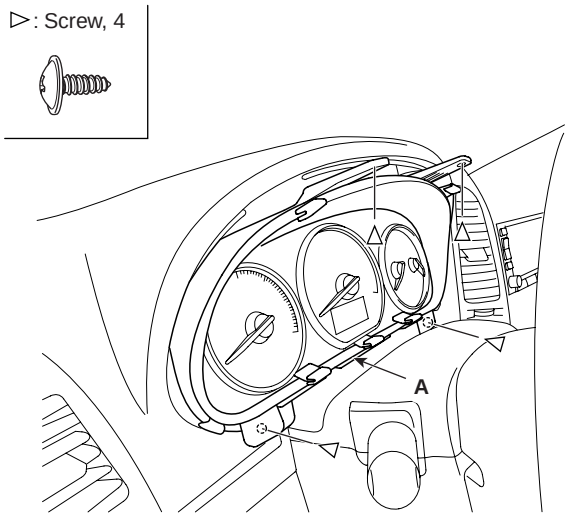

SCMBE6224L

5. Disconnect the cluster connecters (A) and then remove the cluster (B).

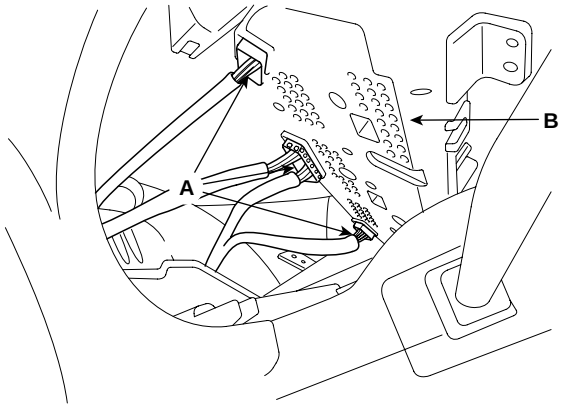

SCMBE6225D

6. Installation is the reverse of removal.

POWER DOOR LOCKS

COMPONENT LOCATION EFF8DAEC

The parts with asterisk(*) :
This illustration shows the LHD type.
RHD type is symmetrical.

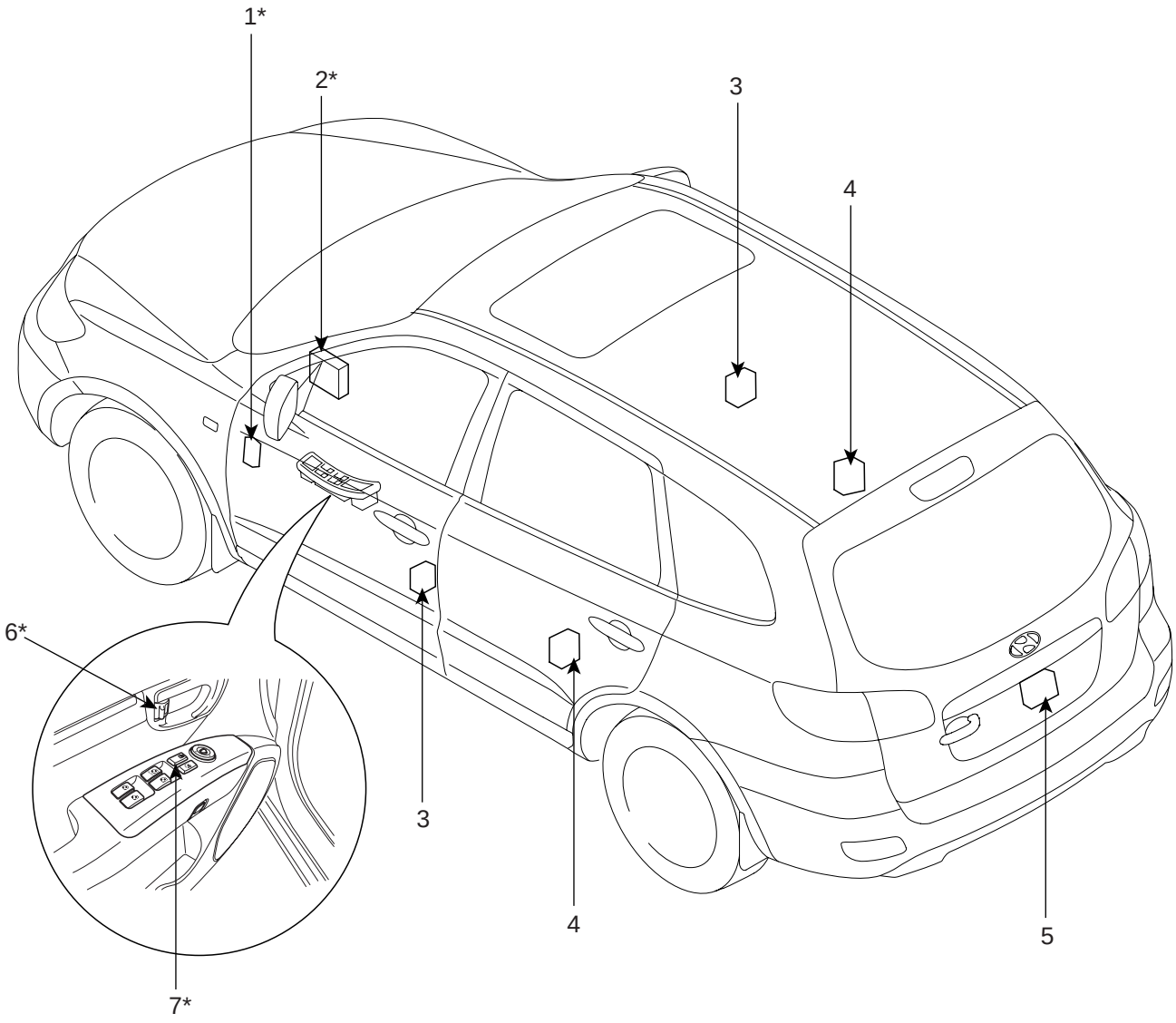

1. ICM relay box (Door lock/unlock relay)
2. Body control module (BCM)
3. Front door lock actuator & switch
4. Rear door lock actrator & switch
5. Tailgate & switch
6. Door lock knob
7. Door lock switch

SCMBE6240L

TROUBLESHOOTING E3BBBF42

1. Lock function works but unlock function does not work. → Since door unlock relay is malfunction, replace the door unlock relay.

2. Unlock function works but lock function does not work. → Since door lock relay is malfunction, replace the door lock relay.

3. When passenger side knob is controlled, all doors locks, but when driver side knob is controlled, all doors do not lock.

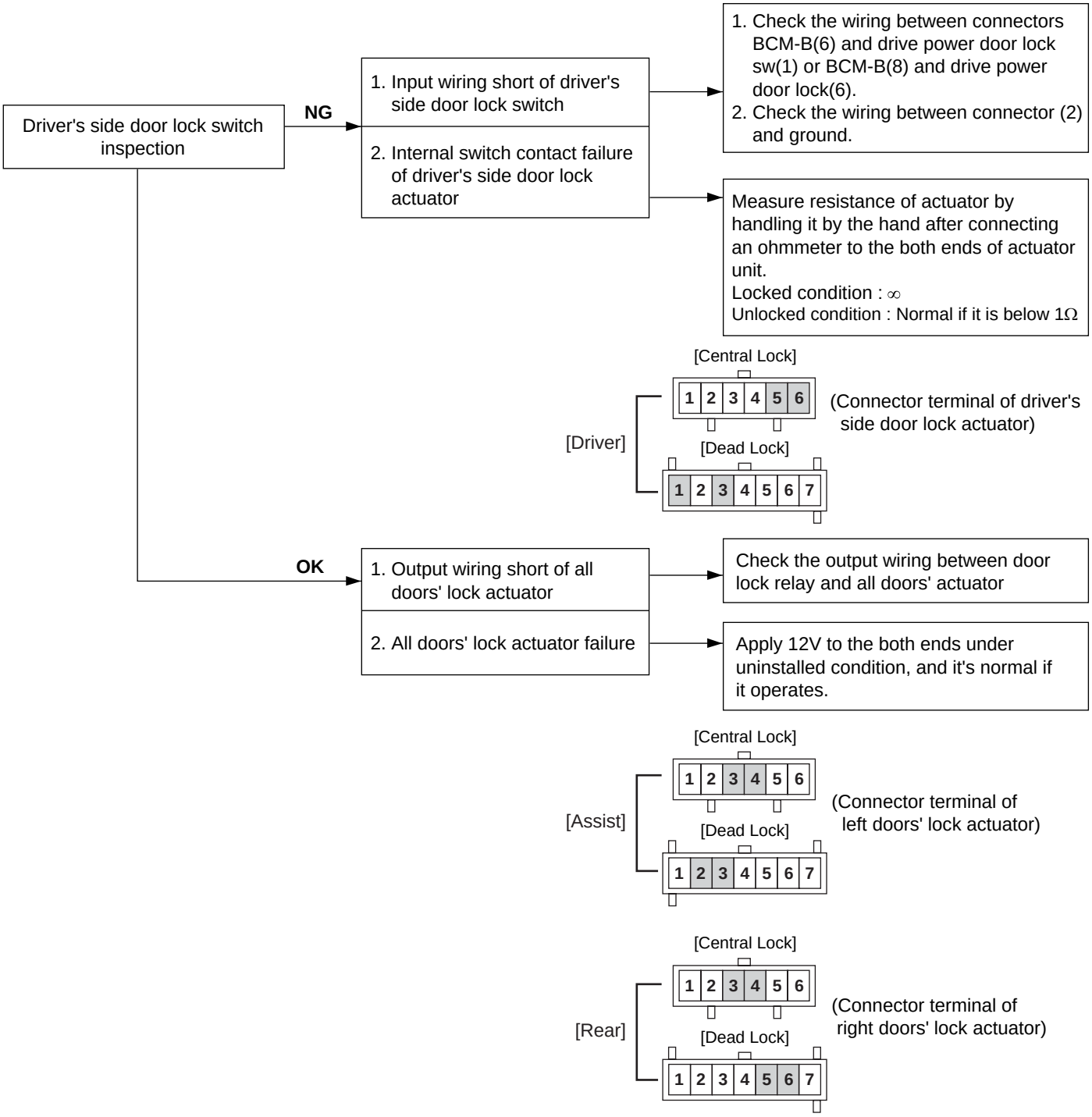

SCMBE6252L

4. When driver side knob is controlled. All doors lock. But when the passenger side knob is controlled, all doors do not lock.

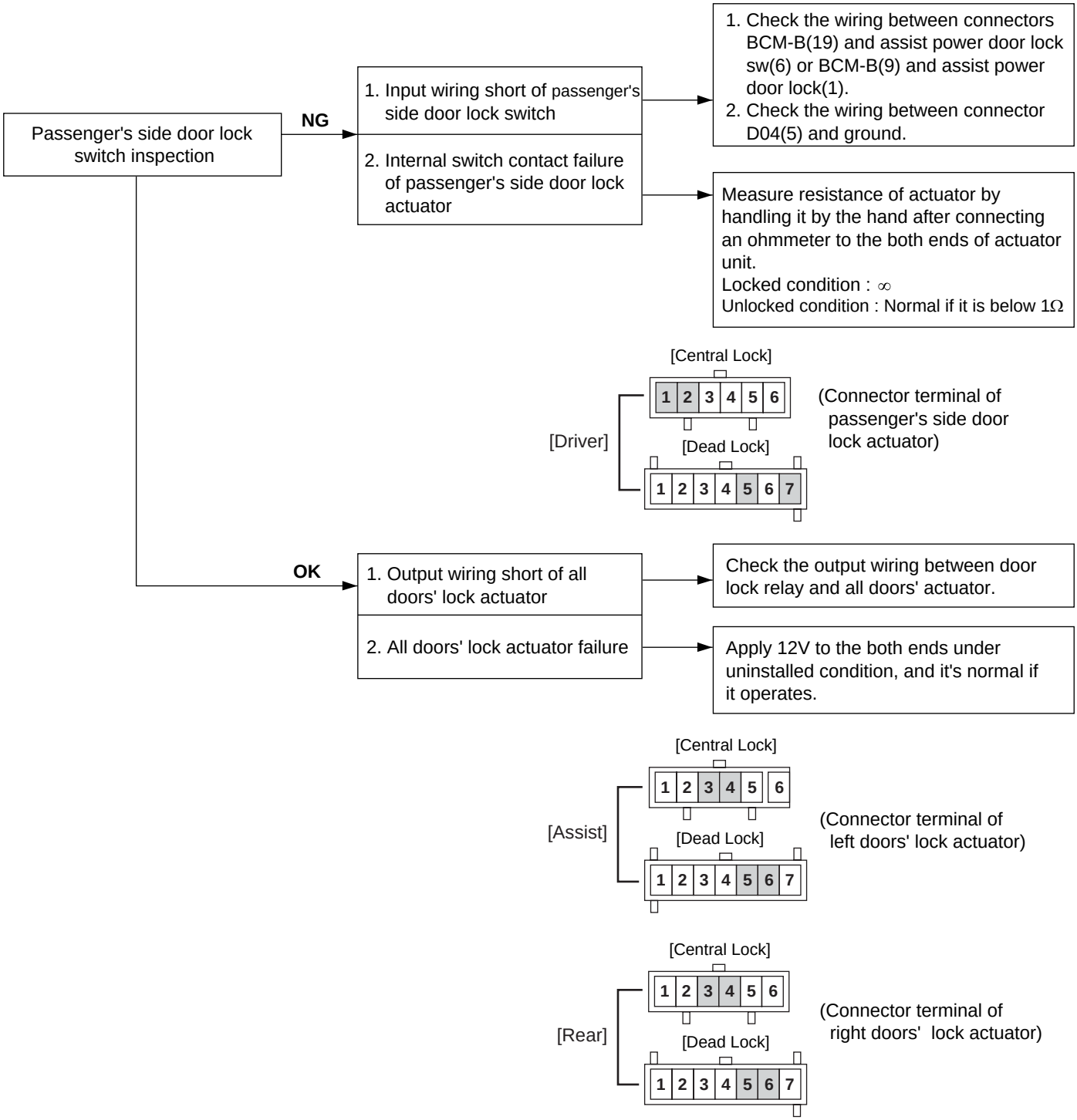

5. Both sides do not lock either.

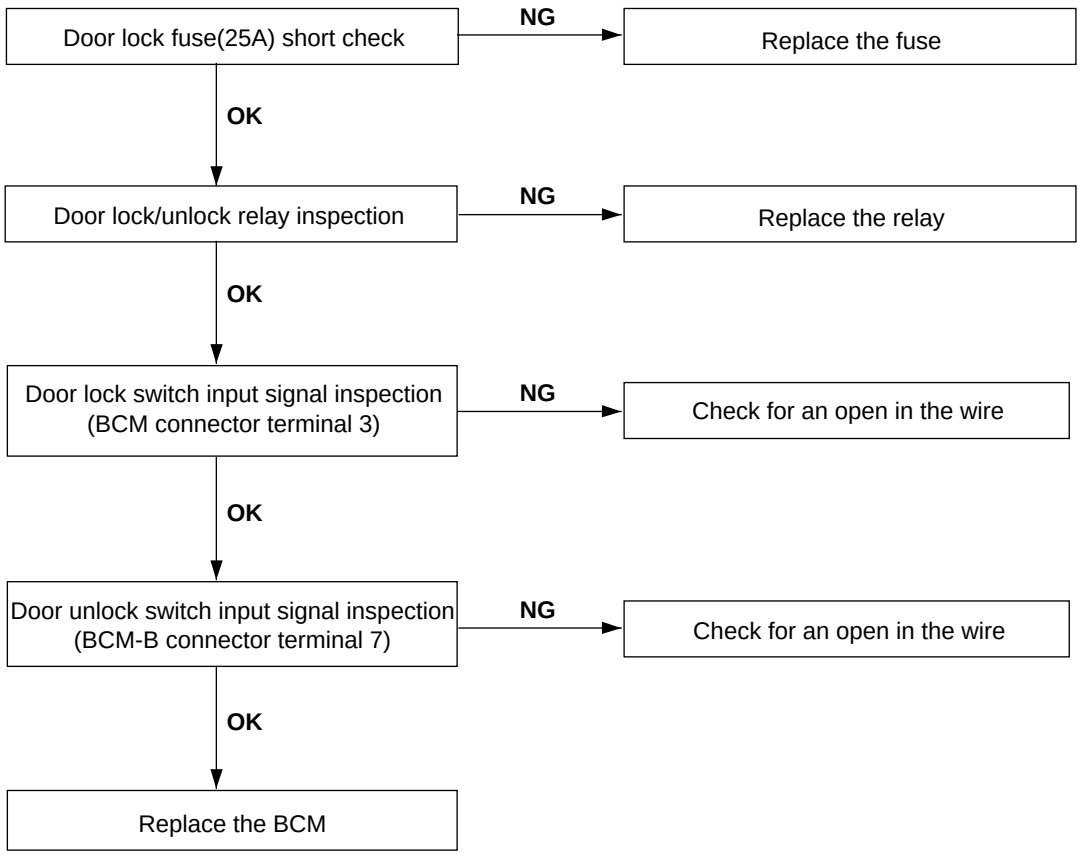

SCMBE6254L

POWER DOOR LOCK ACTUATORS

INSPECTION EEF47A4B

FRONT DOOR LOCK ACTUATOR

1. Remove the front door trim. (Refer to the Body group - Front door)
2. Remove the front door module. (Refer to the Body group - Front door).
3. Disconnect the connectors from the actuator.

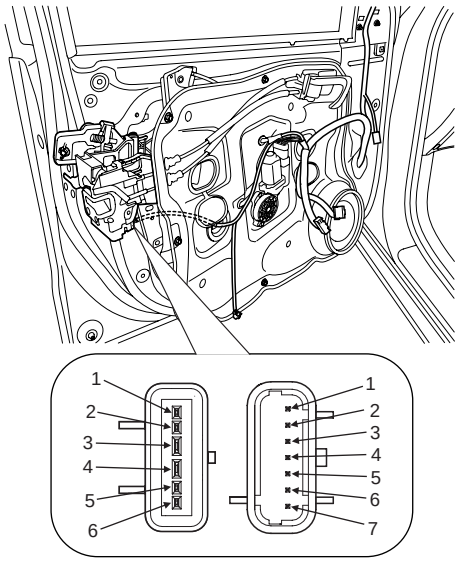

[CENTRAL LOCK] [DEAD LOCK]

SCMBE6130L

4. Check actuator operation by connecting power and ground according to the table. To prevent damage to the actuator, apply battery voltage only momentarily.

[CENTRAL LOCK]

Position \ Terminal		4	3
Front left	Lock	⊕	⊖
	Unlock	⊖	⊕
Front right	Lock	⊖	⊕
	Unlock	⊕	⊖

SCMBE6131L

[DEAD LOCK]

Position \ Terminal			5	6	7
Central Lock	Front left	Lock	⊕	⊖	⊖
		Unlock	⊖	⊕	⊕
	Front right	Lock	⊖	⊕	⊕
		Unlock	⊕	⊖	⊖
Dead Lock	Front left	Lock	⊖	⊕	⊕
		Unlock	⊖	⊕	⊖
	Front right	Lock	⊕	⊖	⊖
		Unlock	⊕	⊖	⊕

SCMBE6144L

REAR DOOR LOCK ACTUATOR

1. Remove the rear door trim panel. (Refer to the Body group - Rear door)
2. Remove the rear door module. (Refer to the Body group - Rear door)
3. Disconnect the connectors from the actuator.

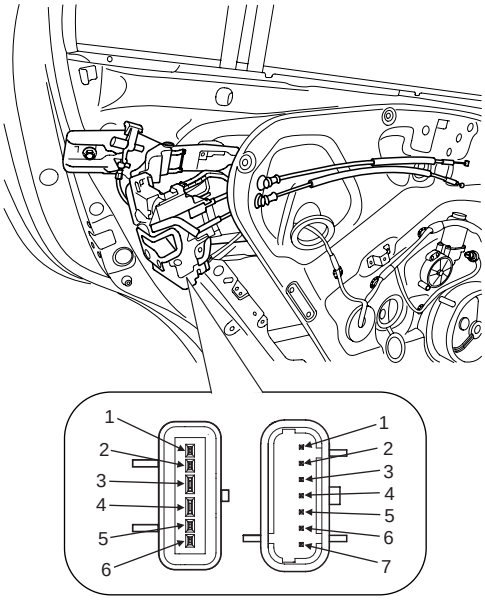

[CENTRAL LOCK] [DEAD LOCK]

SCMBE6132L

4. Check actuator operation by connecting power and ground according to the table. To prevent damage to the actuator, apply battery voltage only momentarily.

[CENTRAL LOCK]

Position \ Terminal		4	3
Rear left	Lock	⊕	⊖
	Unlock	⊖	⊕
Rear right	Lock	⊖	⊕
	Unlock	⊕	⊖

SCMBE6133L

[DEAD LOCK]

Position \ Terminal			5	6	7
Central Lock	Rear left	Lock	⊕	⊖	⊖
		Unlock	⊖	⊕	⊕
	Rear right	Lock	⊖	⊕	⊕
		Unlock	⊕	⊖	⊖
Dead Lock	Rear left	Lock	⊖	⊖	⊕
		Unlock	⊕	⊕	⊖
	Rear right	Lock	⊕	⊕	⊖
		Unlock	⊖	⊖	⊕

SCMBE6145L

TAILGATE LOCK ACTUATOR

1. Remove the tailgate trim. (Refer to the Body group - Tailgate)
2. Disconnect the 4P connector from the actuator.

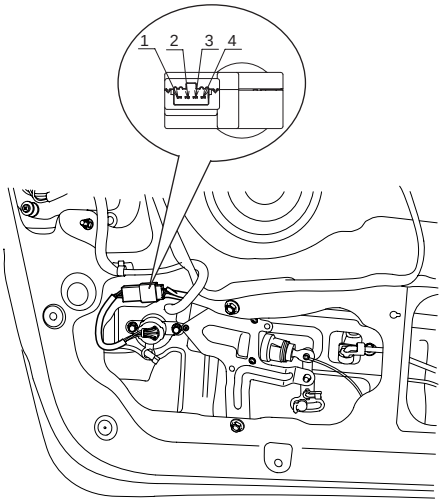

SCMBE6134D

3. Check actuator operation by connecting power and ground according to the table. To prevent damage to the actuator, apply battery voltage only momentarily.

Position \ Terminal	2	3
Lock	⊖	⊕
Unlock	⊕	⊖

SCMBE6135L

FRONT DOOR LOCK SWITCH

1. Remove the front door trim. (Refer to the Body group - Front door)
2. Remove the front door module. (Refer to the Body group - Front door).
3. Disconnect the connectors from the actuator.

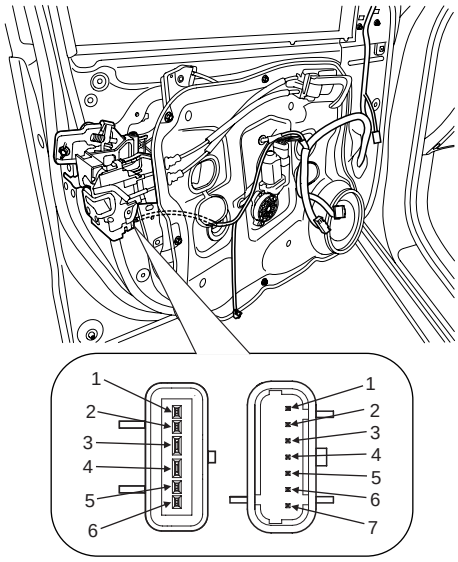

[CENTRAL LOCK] [DEAD LOCK]

SCMBE6130L

4. Check for continuity between the terminals in each switch position when inserting the key into the door according to the table.

[CENTRAL LOCK]

Position \ Terminal			2	5	1
Central Lock	Front left	Clockwise	○	○	
		Counter-clockwise		○	○
	Front right	Clockwise	○	○	
		Counter-clockwise		○	○

SCMBE6136L

[CENTRAL LOCK]

Position \ Terminal			1	5	2	6
Central Lock	Front left	Unlock		○		○
	Front right	Lock	○		○	

SCMBE6148L

[DEAD LOCK]

Position \ Terminal			3	2	4
Central Lock	Front left	Clockwise	○	○	
		Counter-clockwise		○	○
	Front right	Clockwise	○	○	
		Counter-clockwise		○	○

SCMBE6146L

[DEAD LOCK]

Position \ Terminal			3	1	7	5
Central Lock	Front left	Unlock	○	○		
	Front right	Lock			○	○

SCMBE6147L

REAR DOOR LOCK SWITCH

1. Remove the rear door trim panel. (Refer to the Body group - Rear door)
2. Remove the rear door module. (Refer to the Body group - Rear door)
3. Disconnect the connectors from the actuator.

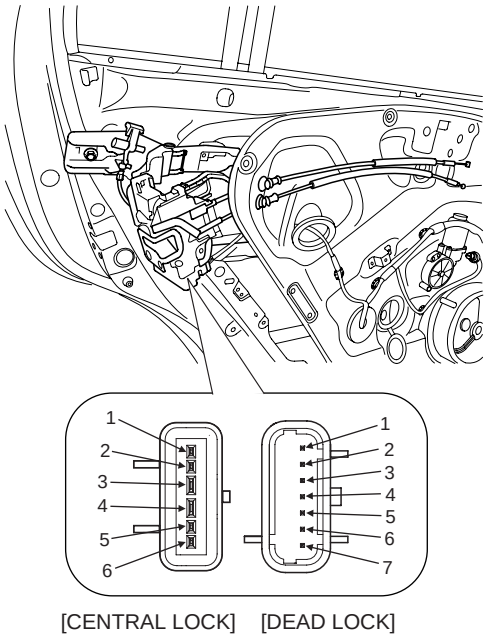

SCMBE6132L

4. Check for continuity between the terminals in each switch position according to the table.

[CENTRAL LOCK]

Position \ Terminal		1	5	2	6
Central Lock	Unlock		○		○
	Lock	○		○	

SCMBE6122L

[DEAD LOCK]

Position \ Terminal		3	1	7	5
Central Lock	Unlock	○	○		
	Lock			○	○

SCMBE6142L

TAILGATE LOCK SWITCH

1. Remove the tailgate trim. (Refer to the Body group - Tailgate)

2. Disconnect the 4P connector from the actuator.

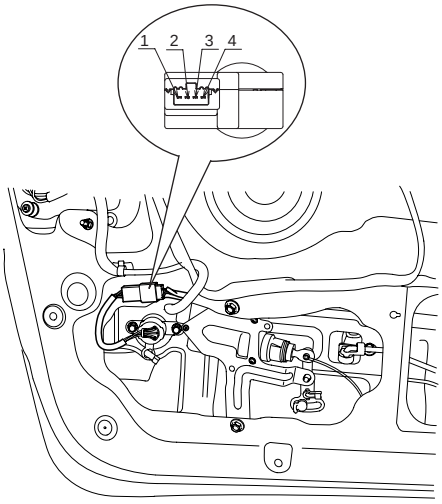

SCMBE6134D

3. Check for continuity between the terminals in each switch position according to the table.

Terminal / Position	1	4
Lock	○	○
Unlock		

SCMBE6138L

POWER DOOR LOCK RELAY

INSPECTION E7A48CBC

1. Disconnect the negative (-) battery terminal.
2. Remove the junction box.
3. Check for continuity between the terminals.

DOOR LOCK

1. There should be continuity between the No.5 in the I/P-J and No.18 terminals in the I/P-D when power and ground are connected to the No.2 terminal in the I/P-C and No.9 terminal in the I/P-J.
2. There should be no continuity between the No.5 terminal in the I/P-J and No.18 terminal in the I/P-D when power is disconnected.

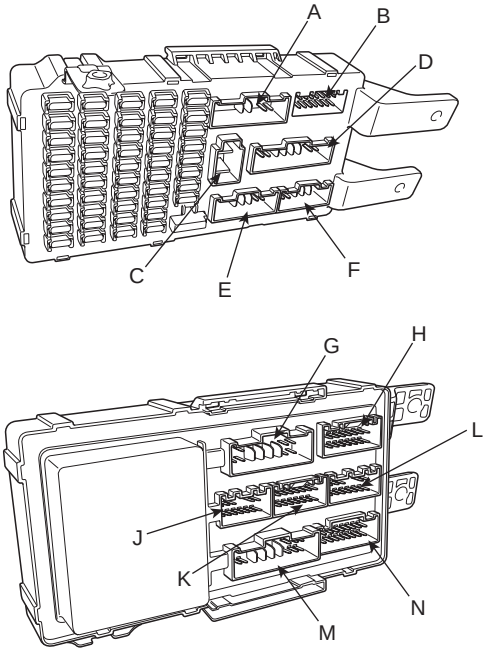

SCMBE6241D

Terminal / Power	I/P-D (18)	I/P-J (5)	I/P-C (2)	I/P-J (9)
Disconnected			○	○
Connected	○	○	⊖	⊕

SCMBE6242L

DOOR UNLOCK

1. There should be continuity between the No.5 terminal in the I/P-J and No.7 terminal in the I/P-K when power and ground are connected to the No.2 terminal in the I/P-C and No.1 terminal in the I/P-K.
2. There should be no continuity between the No.5 terminal in the I/P-J and No.7 terminal in the I/P-D when power is disconnected.

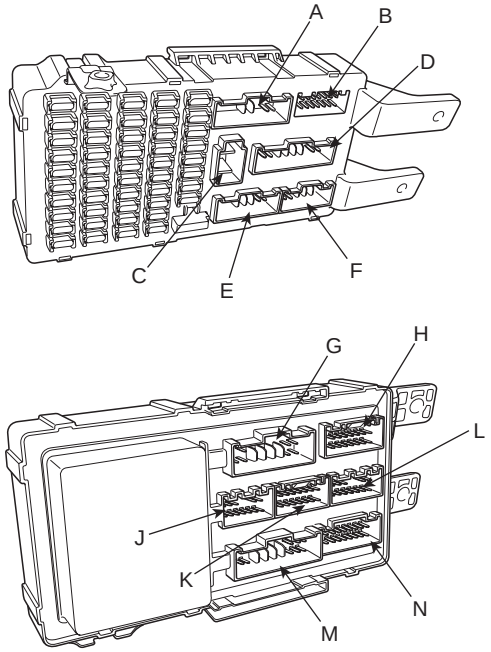

SCMBE6243D

Terminal / Power	I/P-D (7)	I/P-J (5)	I/P-C (2)	I/P-K (1)
Disconnected			○	○
Connected	○	○	⊖	⊕

SCMBE6244L

POWER DOOR LOCK SWITCH

INSPECTION ECAB726B

DRIVER DOOR LOCK SWITCH

1. Disconnect the negative (-) battery terminal.
2. Remove the front door trim and power window switch module. (Refer to the Body group - front door)

[LHD]

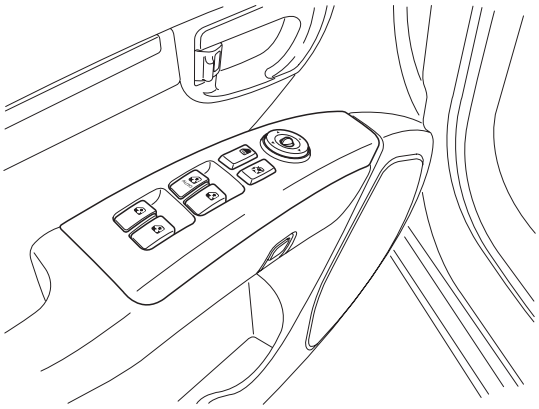

SCMBE6246L

[RHD]

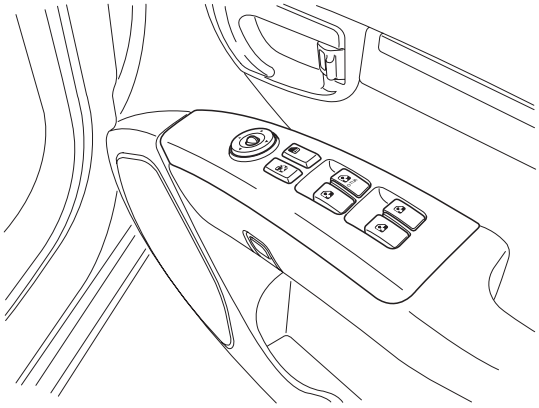

SCMBE6246R

3. Disconnect the connector from the switch.

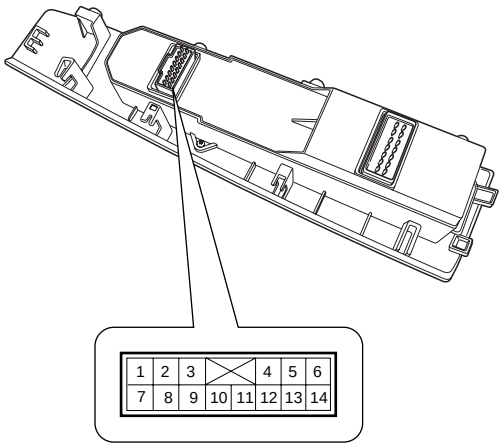

SCMBE6247L

4. Check for continuity between the terminals in each switch position according to the table.

( ) : RHD

Terminal / Position	4(4)	10(10)	11(11)
Lock		○	○
Unlock	○	○	

SCMBE6248L

ASSIST DOOR LOCK SWITCH

1. Disconnect the negative (-) battery terminal.
2. Remove the front door trim and power window switch module. (Refer to the Body group - front door)
3. Disconnect the connector from the switch.

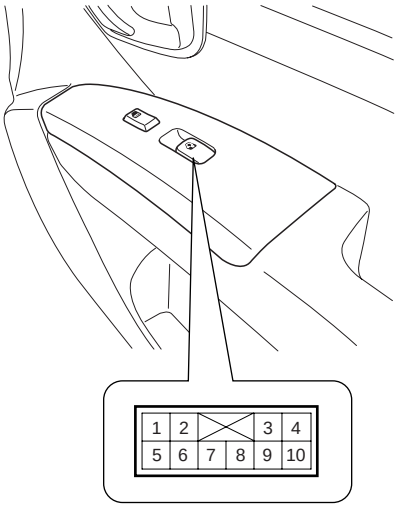

SCMBE6249L

4. Check for continuity between the terminals in each switch position according to the table.

Terminal / Position	3	4	7
Lock		○	○
Unlock	○		○

SCMBE6251L

POWER DOOR MIRRORS

COMPONENT LOCATION E5B25FCD

The parts with asterisk(*) :
This illustration shows the LHD type.
RHD type is symmetrical.

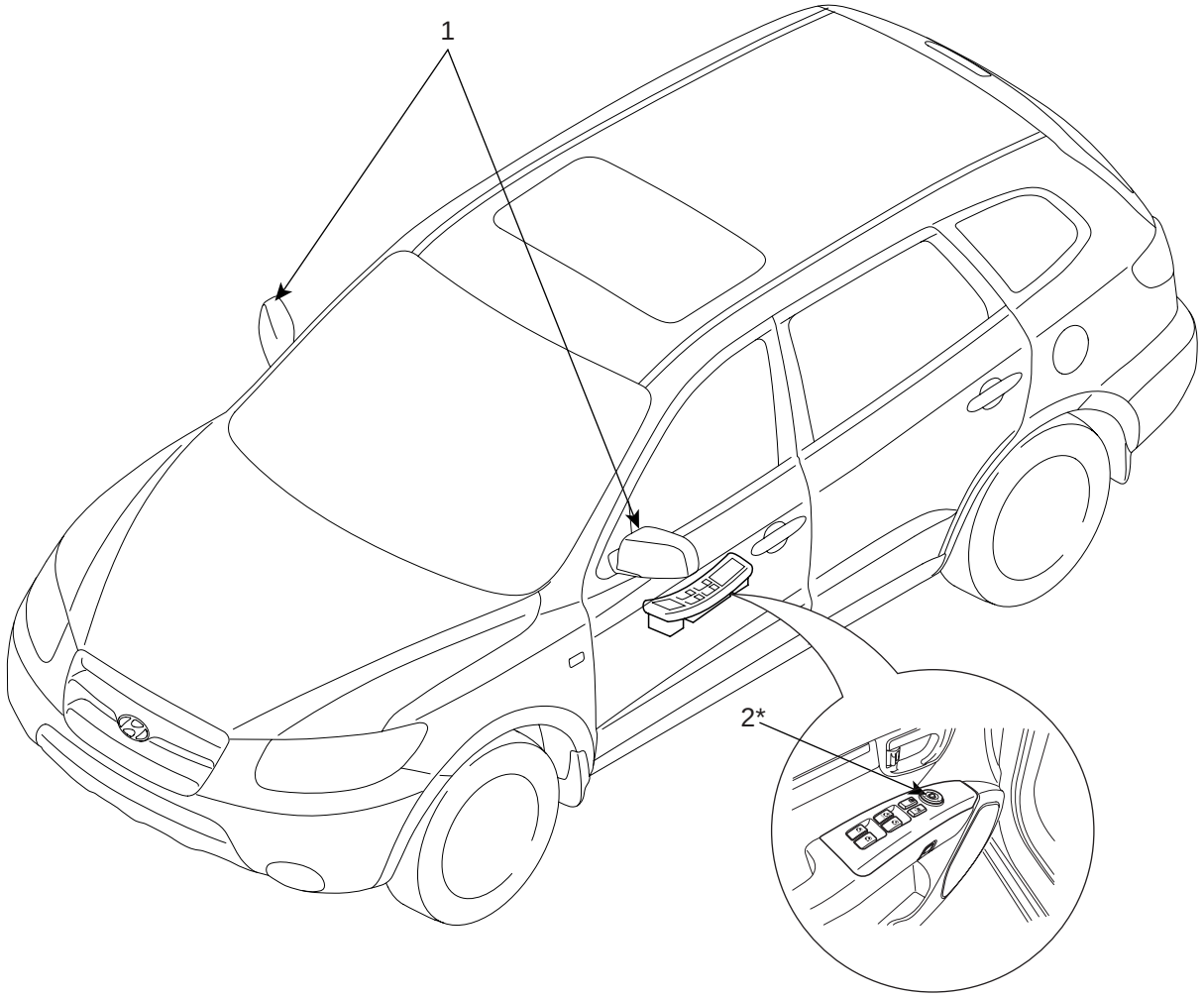

1. Power door mirror
2. Power door mirror switch

SCMBE6260L

POWER DOOR MIRROR SWITCH

COMPONENTS E98FAE26

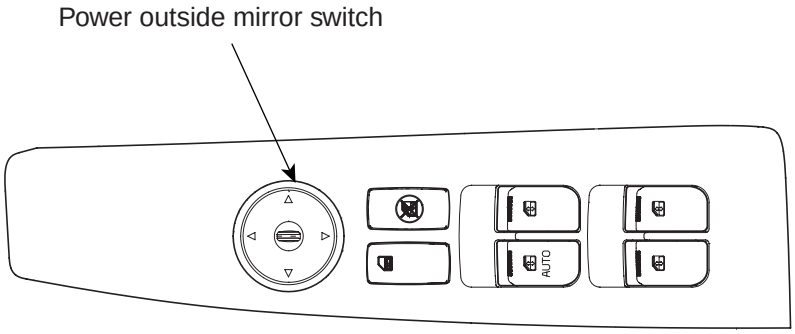

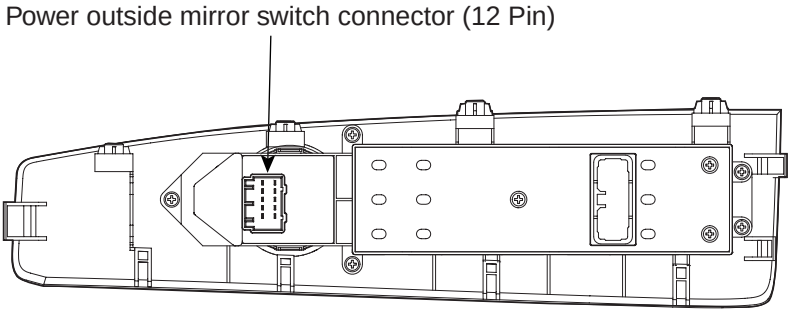

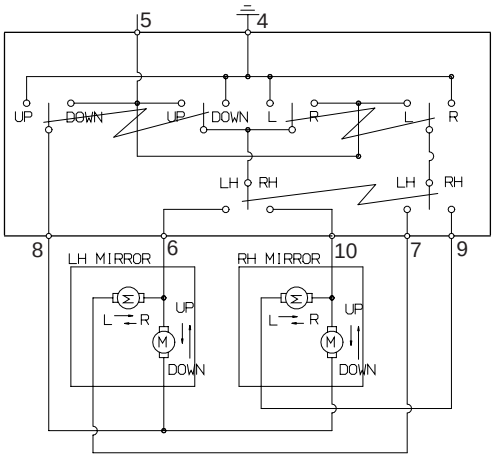

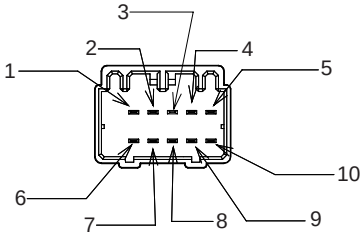

SCMBE6261L

INSPECTION E4439FF6

1. Disconnect the negative (-) battery terminal.

2. Remove the front door trim and power window switch module. (Refer to the Body group-front door)

[LHD]

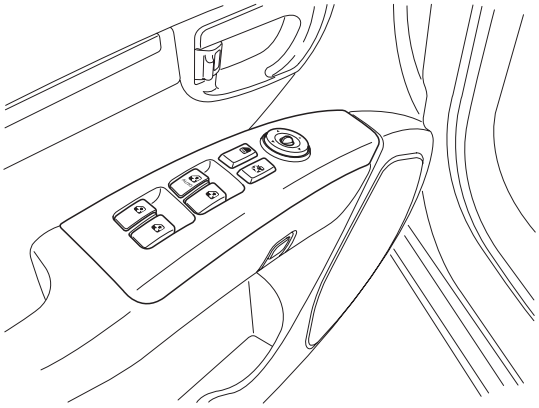

SCMBE6246L

[RHD]

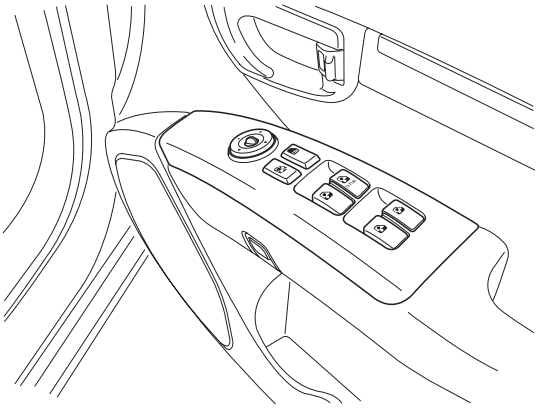

SCMBE6246R

3. Check for the continuity between terminals of power door lock switch according to the table.

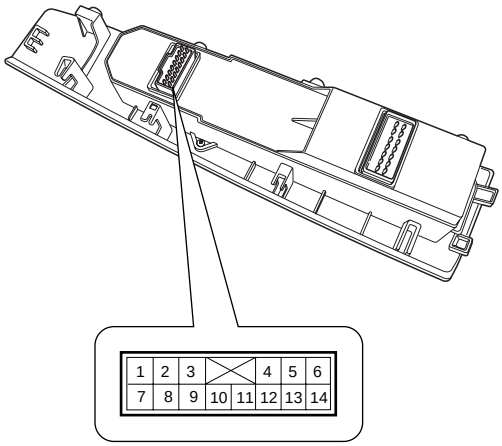

SCMBE6247L

( ) : RHD

Position \ Terminal	4(4)	10(10)	11(11)
Lock		○——	——○
Unlock	○——	——○	

SCMBE6248L

4. Check for continuity between the terminals in each switch position according to the table.

Item	Direction \ Terminal	5	4	6	7	8	9	10
Left	UP	○	○	——	○	○		
	DOWN	○	○	○	○	——		
	OFF		○	○	○	○		
	LEFT	○	○	○	——	○		
	RIGHT	○	○	——	○	——		
Right	UP	○	○	——	——	○	○	○
	DOWN	○	○	——	——	○	○	○
	OFF		○	——	——	○	○	○
	LEFT	○	——	——	——	——	○	
	RIGHT	○	○	——	——	○	——	○

SCMBE6256L

POWER DOOR MIRROR ACTUATOR

INSPECTION EAE14156

1. Remove the front door quadrant inner cover (A). Take care not to damage fixing clips. (Refer to the Body group - front door)

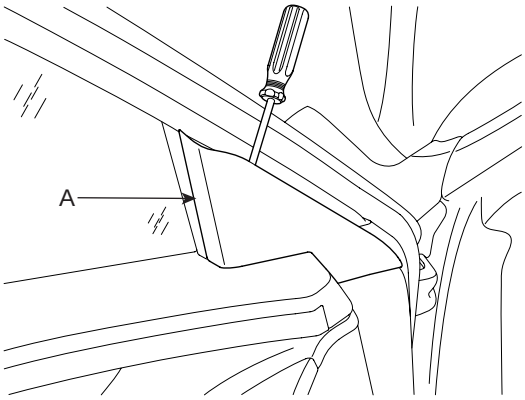

ETBF302F

2. Disconnect the power door mirror connector from the harness.

3. Apply battery voltage to each terminal as shown in the table and verify that the mirror operates properly.

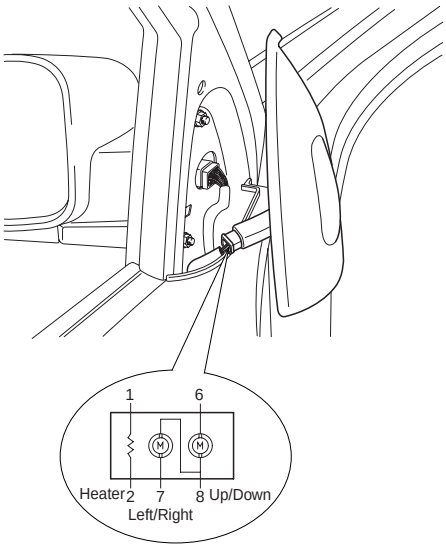

SCMBE6263L

Position \ Terminal	6	7	8
UP	⊖	⊕	⊕
DOWN	⊕	⊖	⊖
OFF	⊖	⊕	⊕
LEFT	⊖	⊕	⊖
RIGHT	⊕	⊖	⊕

SCMBE6264L

MIRROR HEATER

Position \ Terminal	1	2
Heater	○	○

SCMBE6265L

POWER WINDOWS

COMPONENT LOCATION EAA7E4EF

The parts with asterisk(*) :
This illustration shows the LHD type.
RHD type is symmetrical.

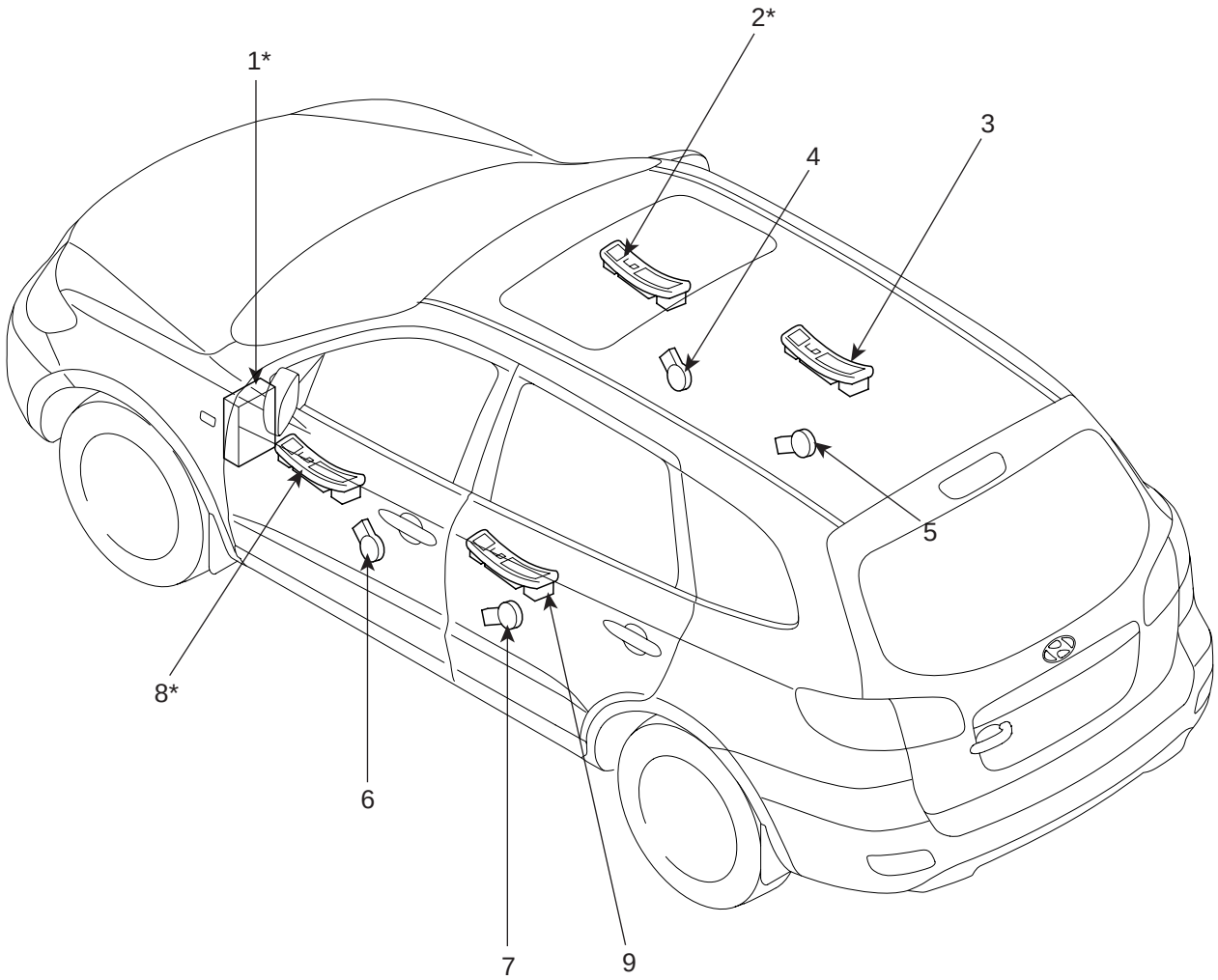

1. Instrument panel junction box (Power window relay)
2. Assist window switch
3. Rear window switch
4. Front window motor
5. Rear window motor
6. Front window motor
7. Rear window motor
8. Driver power window main switch
9. Rear window switch

SCMBE6270L

TROUBLESHOOTING E016BF36

1. No windows operate from the main switch on the driver's door.

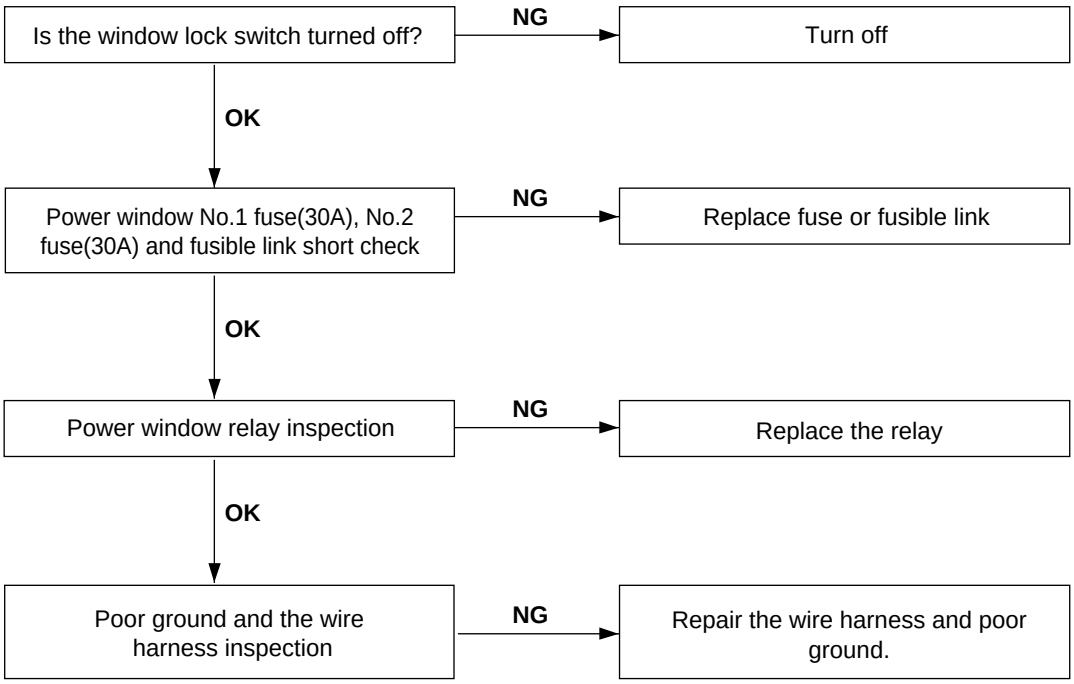

SCMBE6276L

2. Driver's side window does not operate.

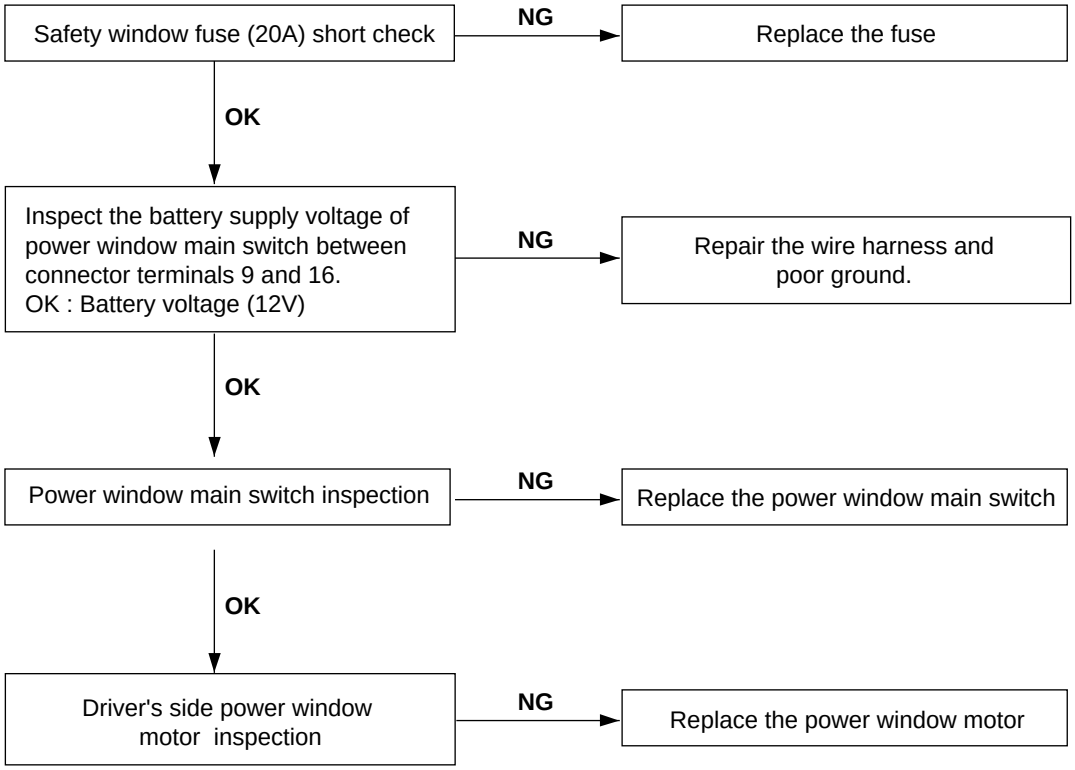

SCMBE6277L

3. Passenger’s side window does not operate.

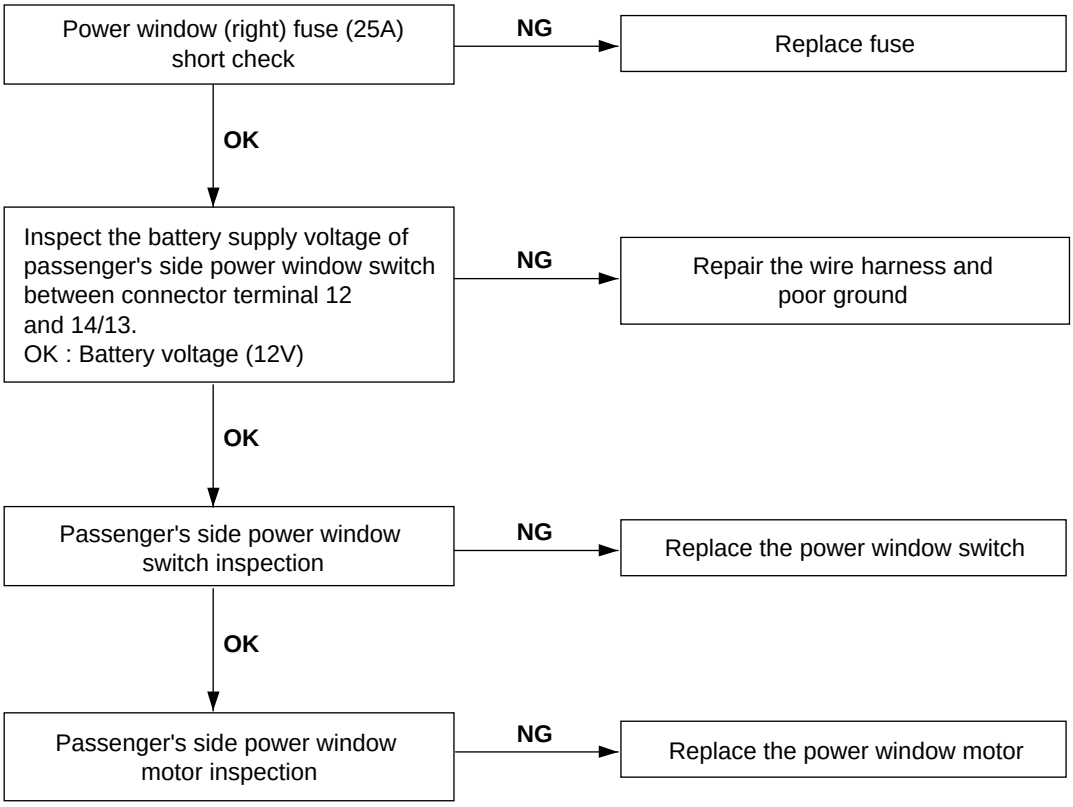

SCMBE6278L

POWER WINDOW MOTOR

INSPECTION E10408D5

FRONT POWER WINDOW MOTOR

1. Remove (-) negative battery terminal.
2. Remove the front door trim. (Refer to the Body group-front door)
3. Disconnect the connector (2P) from the motor.

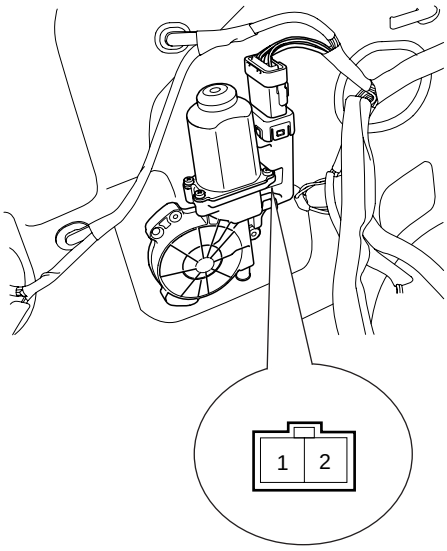

SCMBE6271L

4. Connect the motor terminals directly to battery voltage (12V) and check that the motor operates smoothly. Next, reverse the polarity and check that the motor operates smoothly in the reverse direction. If the operation is abnormal, replace the motor.

Position \ Terminal			1	2
Left	UP	Clockwise	⊖	⊕
	DOWN	Counter-clockwise	⊕	⊖
Right	DOWN	Clockwise	⊕	⊖
	UP	Counter-clockwise	⊖	⊕

SCMBE6272L

REAR POWER WINDOW MOTOR

1. Remove (-) negative battery terminal.
2. Remove the rear door trim. (Refer to the Body group-rear door)
3. Disconnect the 2P connector from the motor.

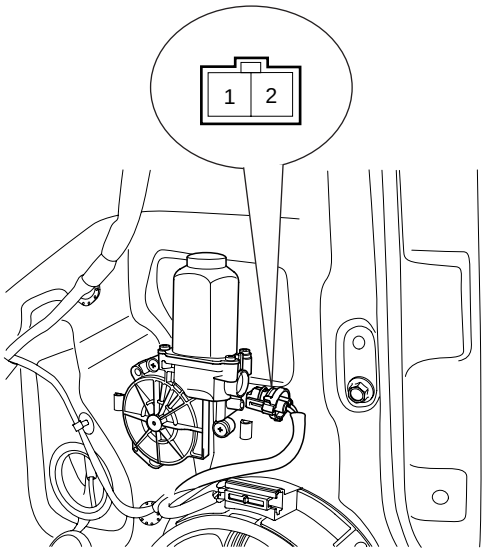

SCMBE6274D

4. Connect the motor terminals directly to battery voltage (12V) and check that the motor operates smoothly. Next, reverse the polarity and check that the motor operates smoothly in the reverse direction. If the operation is abnormal, replace the motor.

Position \ Terminal			1	2
Left	UP	Clockwise	⊖	⊕
	DOWN	Counter-clockwise	⊕	⊖
Right	DOWN	Clockwise	⊕	⊖
	UP	Counter-clockwise	⊖	⊕

SCMBE6272L

POWER WINDOW SWITCH

COMPONENTS ED0ABABA

POWER WINDOW MAIN SWITCH

[LHD]

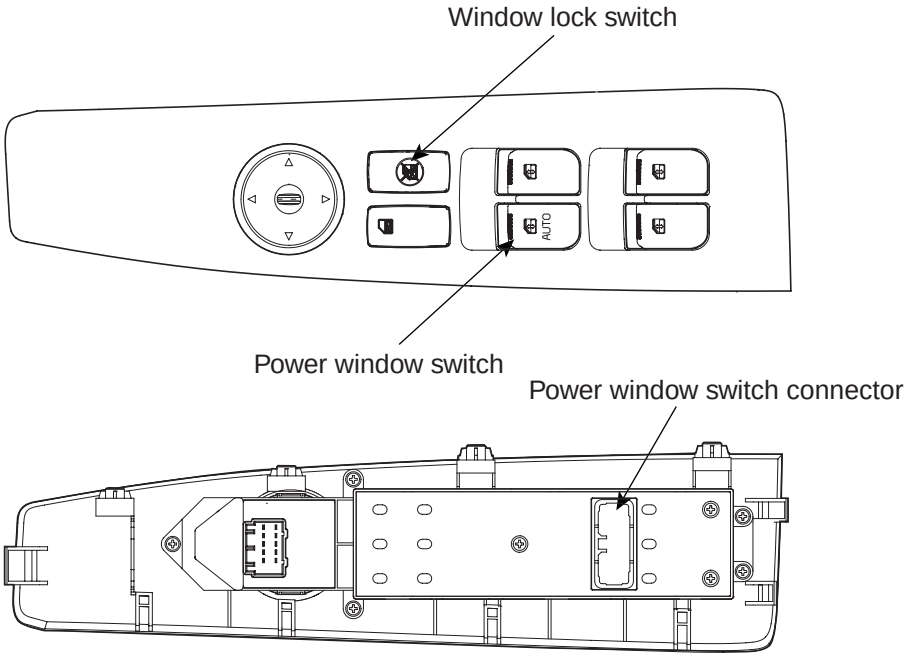

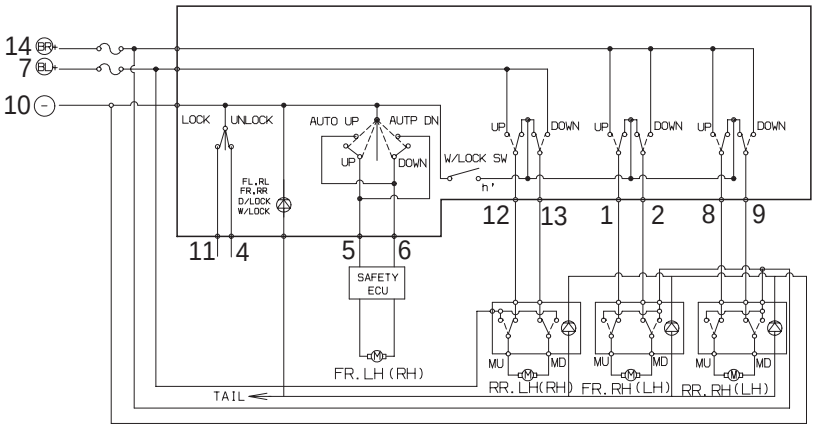

1	2	3			4	5	6
7	8	9	10	11	12	13	14

SCMBE6280L

[RHD]

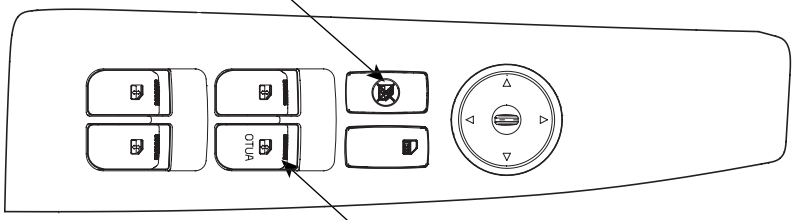

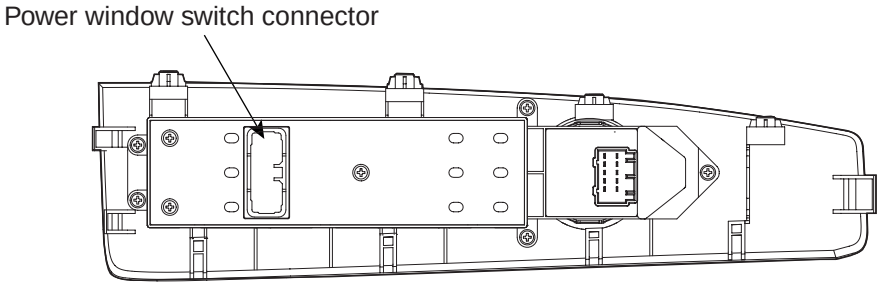

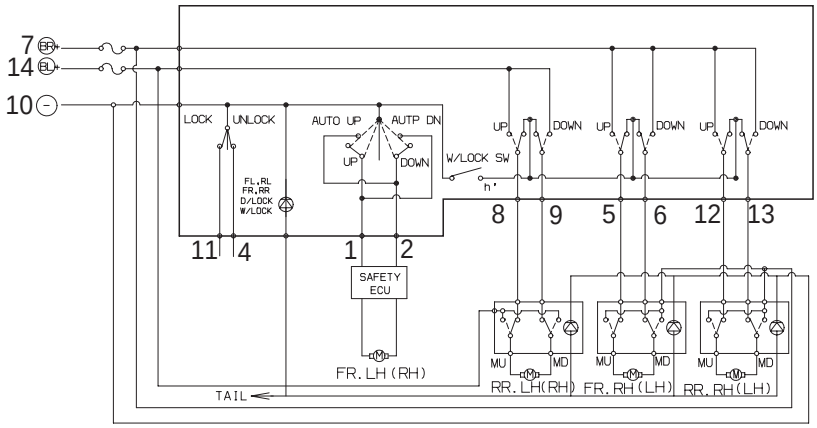

1	2	3			4	5	6
7	8	9	10	11	12	13	14

SCMBE6280R

ASSIST POWER WINDOW SWITCH

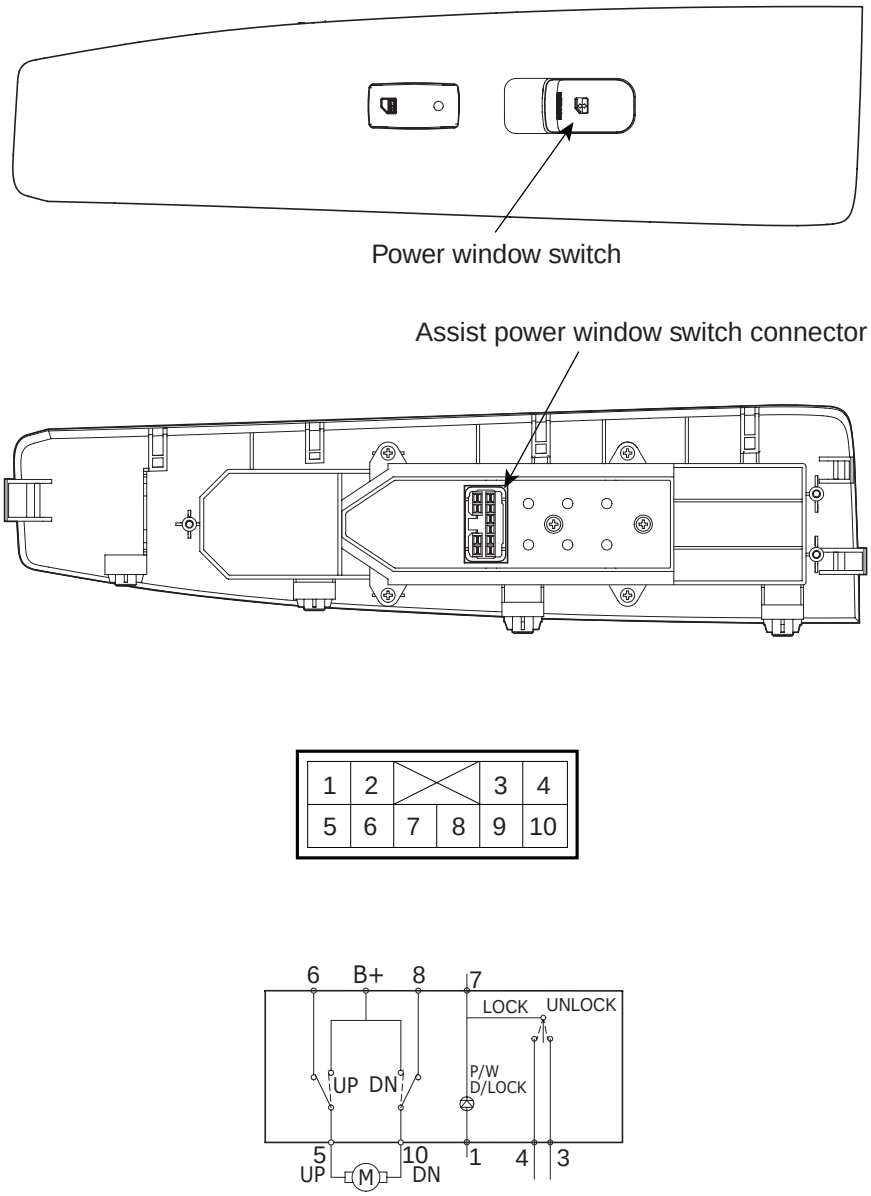

SCMBE6281L

REAR POWER WINDOW SWITCH

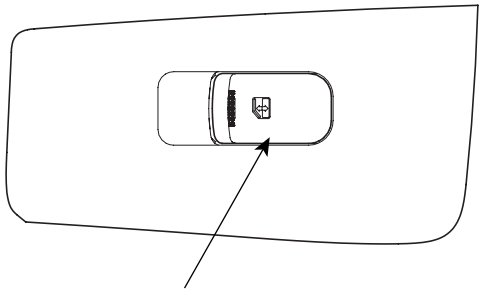

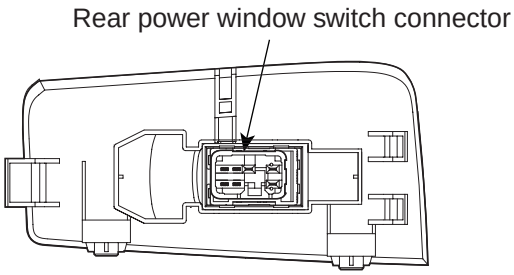

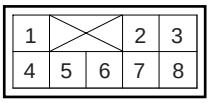

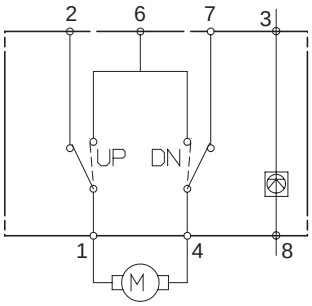

SCMBE6282L

INSPECTION E3DB1E58

POWER WINDOW MAIN SWITCH INSPECTION

1. Disconnect the negative (-) battery terminal.
2. Remove the front door trim. (Refer to the Body group - front door)
3. Disconnect the 14P connector from the switch.

[LHD]

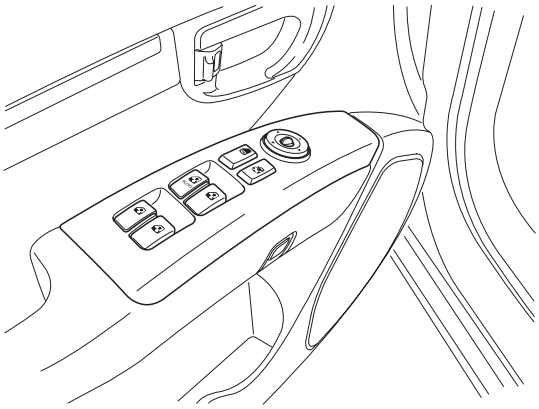

SCMBE6246L

[RHD]

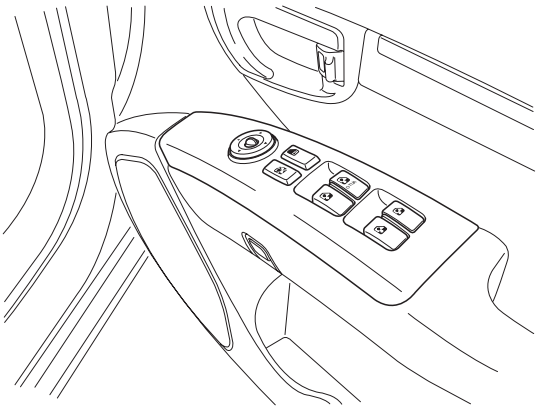

SCMBE6246R

4. Check for continuity between the terminals in each switch position according to the table. If the continuity condition is not normal, replace the switch.

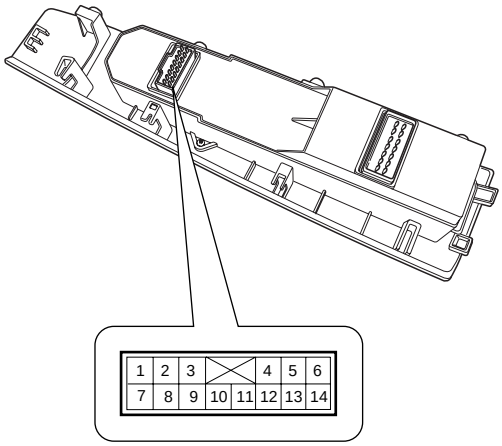

SCMBE6247L

[LHD]

Position \ Terminal	Front left				Front right			
	6	10	5	14	1	2	10	7
UP	○	○	○	○	○	○	○	○
OFF	○	○	○		○	○	○	
DOWN	○	○	○	○	○	○	○	○
Position \ Terminal	**Rear left**				**Rear right**			
	12	13	10	7	9	7	8	10
UP	○	○	○	○	○	○	○	○
OFF	○	○	○		○		○	○
DOWN	○	○	○	○	○	○	○	○

SCMBE6285L

[RHD]

Position \ Terminal	Front left				Front right			
	2	10	1	7	5	6	10	14
UP	○	○	○	○	○	○	○	○
OFF	○	○	○		○	○	○	
DOWN	○	○	○	○	○	○	○	○
Position \ Terminal	**Rear left**				**Rear right**			
	8	9	10	14	13	14	12	10
UP	○	○	○	○	○	○	○	○
OFF	○	○	○		○		○	○
DOWN	○	○	○	○	○	○	○	○

SCMBE6285R

POWER WINDOW LOCK SWITCH

( ) : RHD

Terminal / Position	12(8)	10(10)
NORMAL	○	○
LOCK		

SCMBE6284L

ASSIST POWER WINDOW SWITCH INSPECTION

1. Disconnect the negative (-) battery terminal.
2. Remove the front door trim. (Refer to the Body group - front door)
3. Disconnect the 10P connector from the switch.

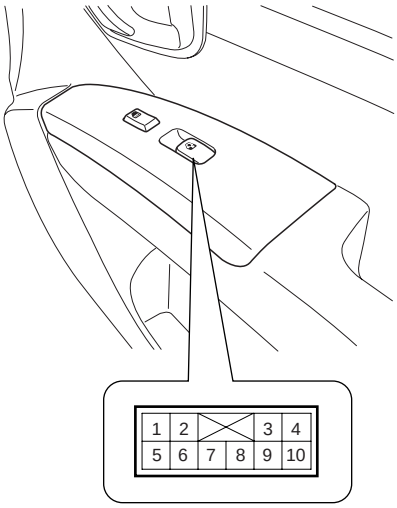

SCMBE6249L

4. Check for continuity between the terminals in each switch position according to the table. If the continuity condition is not normal, replace the switch.

Terminal / Position	8	10	6	9	5
UP	○	○		○	○
OFF	○	○	○		○
DOWN		○	○	○	○

SCMBE6288L

REAR POWER WINDOW SWITCH INSPECTION

1. Disconnect the negative (-) battery terminal.
2. Remove the rear door trim. (Refer to the Body group - rear door)
3. Disconnect the 8P connector from the switch.

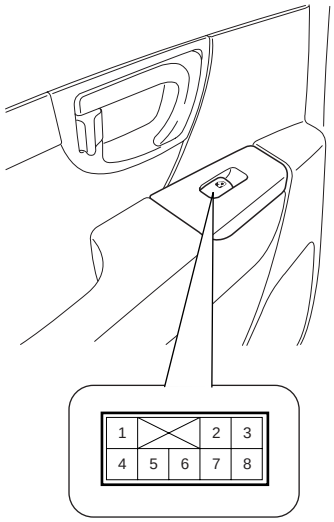

SCMBE6289L

4. Check for continuity between the terminals in each switch position according to the table. If the continuity condition is not normal, replace the switch.

Terminal / Position	6	7	2	1	4
UP	○	○		○	○
OFF		○	○	○	
DOWN	○		○	○	○

SCMBE6291L

POWER WINDOW RELAY

INSPECTION EBFFD3A3

1. Disconnect the negative (-) battery terminal.
2. Remove the junction box.
3. Check for continuity between the terminals.
4. There should be continuity between the No.6 in the I/P-F and No.14 terminal in the I/P-D when power and ground are connected to the No.10 terminal in the I/P-E and No.2 terminal in the I/P-J.
5. There should be no continuity between the No.6 terminal in the I/P-F and No.14 terminal in the I/P-D when power is disconnected.

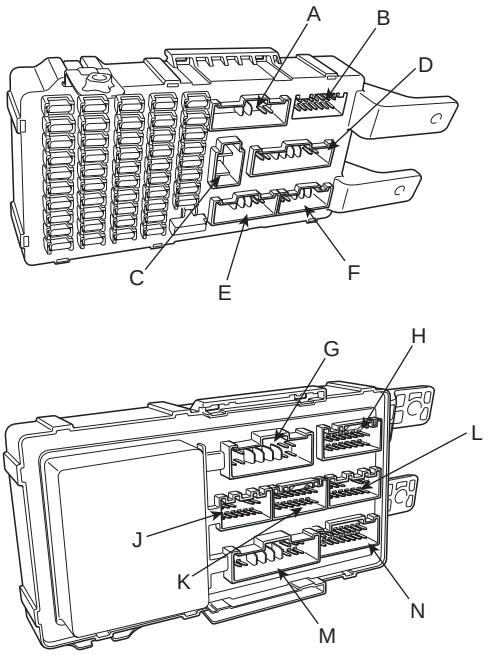

SCMBE6292D

Terminal / Position	I/P-D (14 or 15)	I/P-F (6)	I/P-J (2)	I/P-E (10)
Disconnected			○	○
Connected	○	○	⊖	⊕

SCMBE6293L

WINDSHIELD DEICER

COMPONENT LOCATION E58B0AF7

The parts with asterisk(*) :
This illustration shows the LHD type.
RHD type is symmetrical.

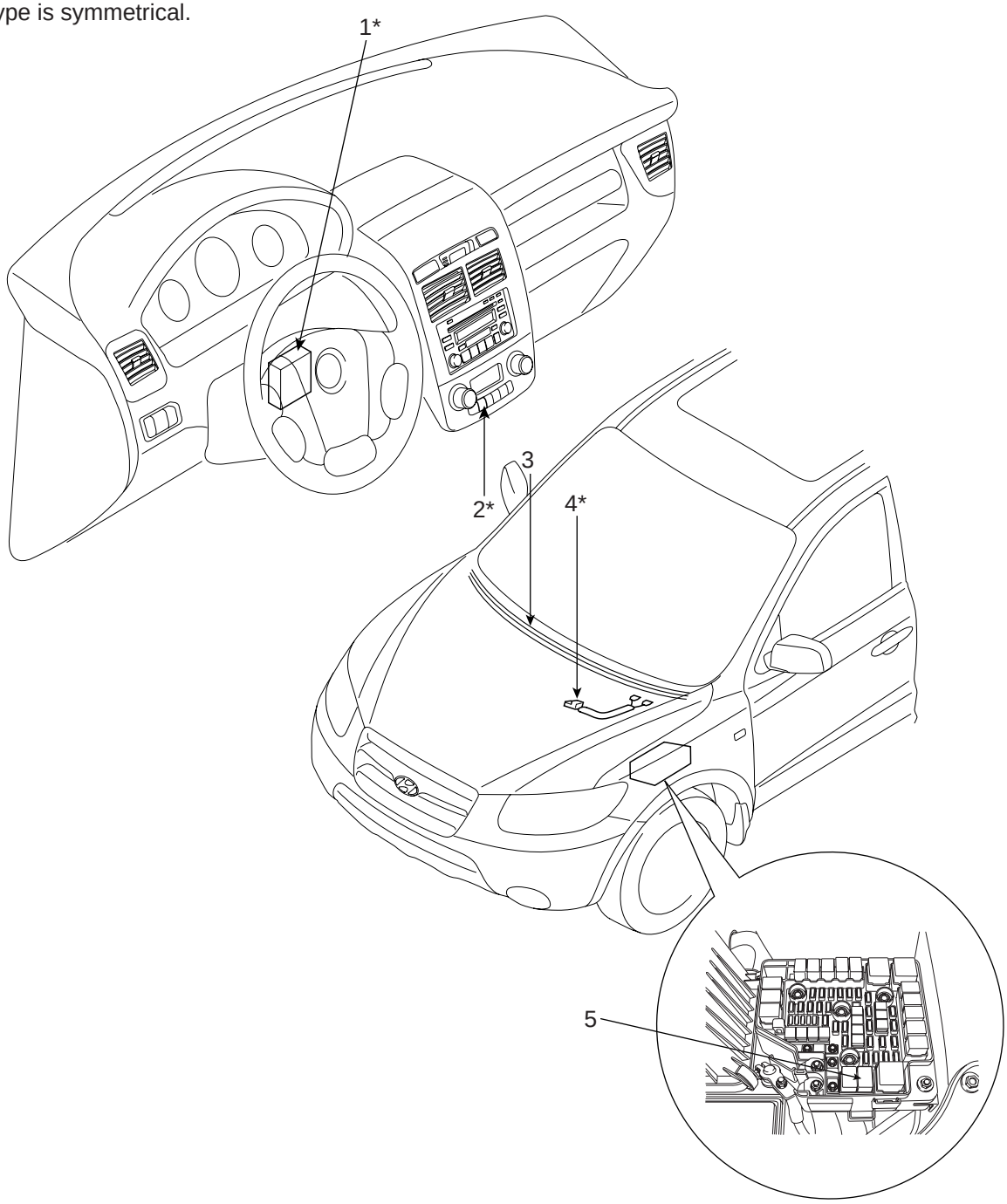

1. Body control module
2. Windshield deicer switch
3. Windshield deicer
4. Deicer connector
5. Windshield deicer relay

SCMBE6300L

DESCRIPTION EA1AF9C9

Windshield deicer system prevent windshield wiper from freezing in the winter season. It consists of deicer in the lower part of windshield, switch and relay. Body control module receives an input signal from the deicer switch, then controls relay. Operating condition is the same that of rear window defogger system.
Since the generator "L" is switched ON, if the deicer switch is ON, then deicer output is ON for 20 minutes.

WINDSHIELD DEICER

INSPECTION E516D0CB

1. Remove the cowl top cover.(Refer to the wiper)
2. Disconnect the windshield deicer connector (A) from the wiper motor linkage.

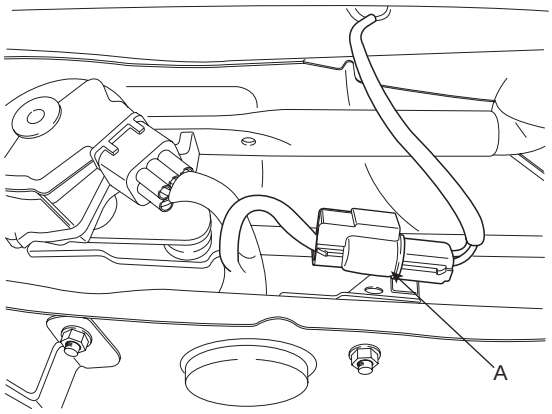

SCMBE6301D

3. Check for continuity between the terminals of deicer lines.

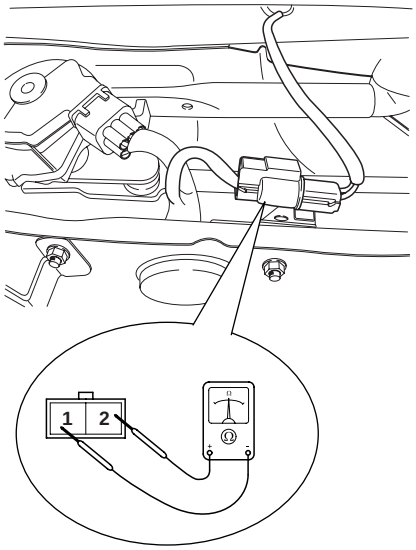

SCMBE6302D

4. Turn the ignition switch ON and the windshield deicer switch ON, then measure the voltage between the terminals of harness side deicer connector.

O K : approx. Battery voltage (12V)

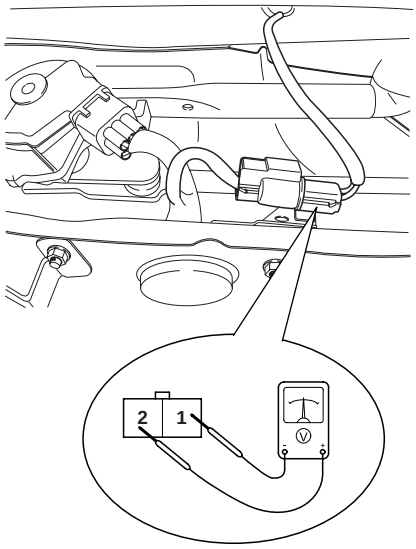

SCMBE6303D

WINDSHIELD DEICER SWITCH

INSPECTION EA198B67

1. Disconnect the negative (-) battery terminal.
2. Remove the crash pad center speaker grill (A).

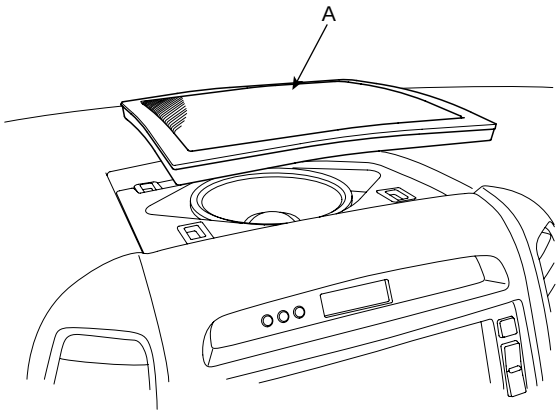

SCMBE6014D

3. Remove the crash pad center speaker (A) after loosening 2 screws.

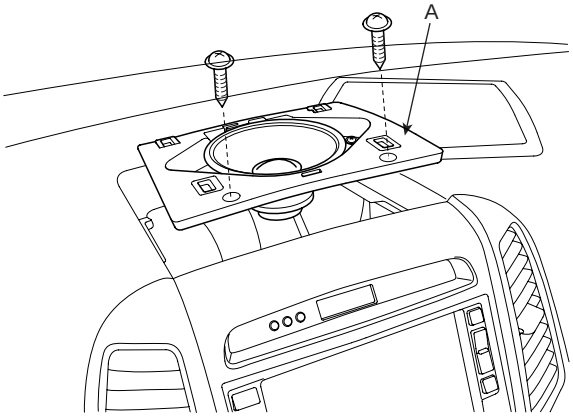

SCMBE6015D

4. Remove the center facia panel(A) after loosening 2 screws. Take care not to damage fixing clips. (Refer to the Body group - Crash pad)

▷: Screw, 2

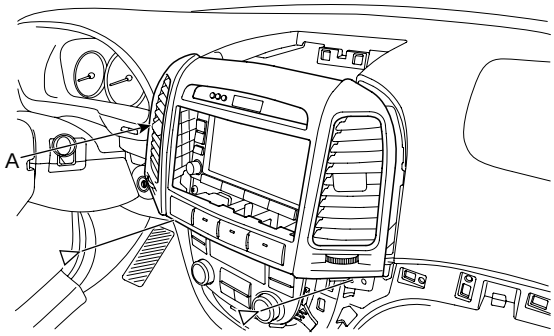

SCMBE6010L

5. Disconnect connectors.
6. Using an ohmmeter, inspect the continuity between the terminals after removing controller.

[LHD]

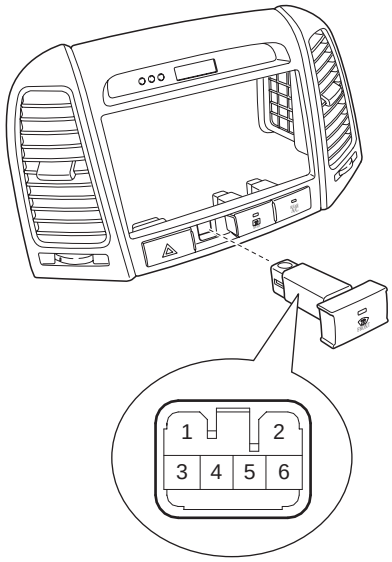

SCMBE6304D

[RHD]

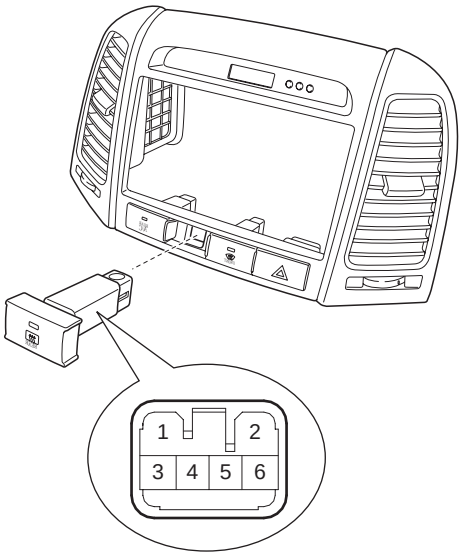

SCMBE6304R

Position / Terminal	ON(PUSH)	OFF(FREE)	Remark
1			
4			
3			IND+
2			ILL-
6			ILL+

SCMBE6305L

WINDSHIELD DEICER RELAY

INSPECTION EF0EF7EE

1. Disconnect the negative (-) battery terminal.
2. Remove the windshield deicer relay from the engine room relay box.
3. There should be continuity between the No.30 and No.87 terminal when power and ground are connected to the No.85 terminal and No.86 terminal.
4. There should be no continuity between the No.30 terminal and No.87 terminal when power is disconnected.

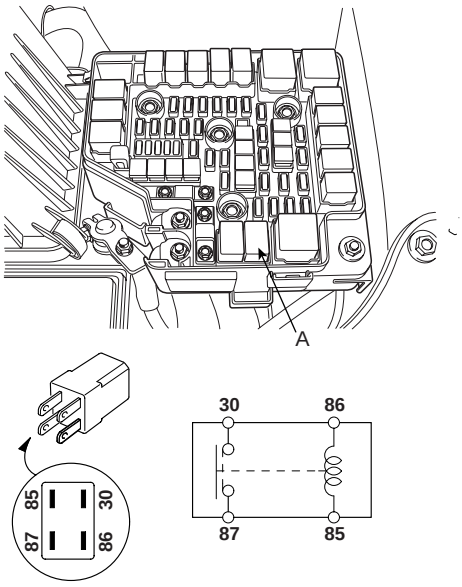

SCMBE6306D

Terminal / Power	85	86	30	87
Disconnected	○	○		
Connected	⊖	⊕	○	○

SCMBE6307L

REAR WINDOW DEFOGGER

COMPONENT LOCATION EED7B9CA

The parts with asterisk(*) :
This illustration shows the LHD type.
RHD type is symmetrical.

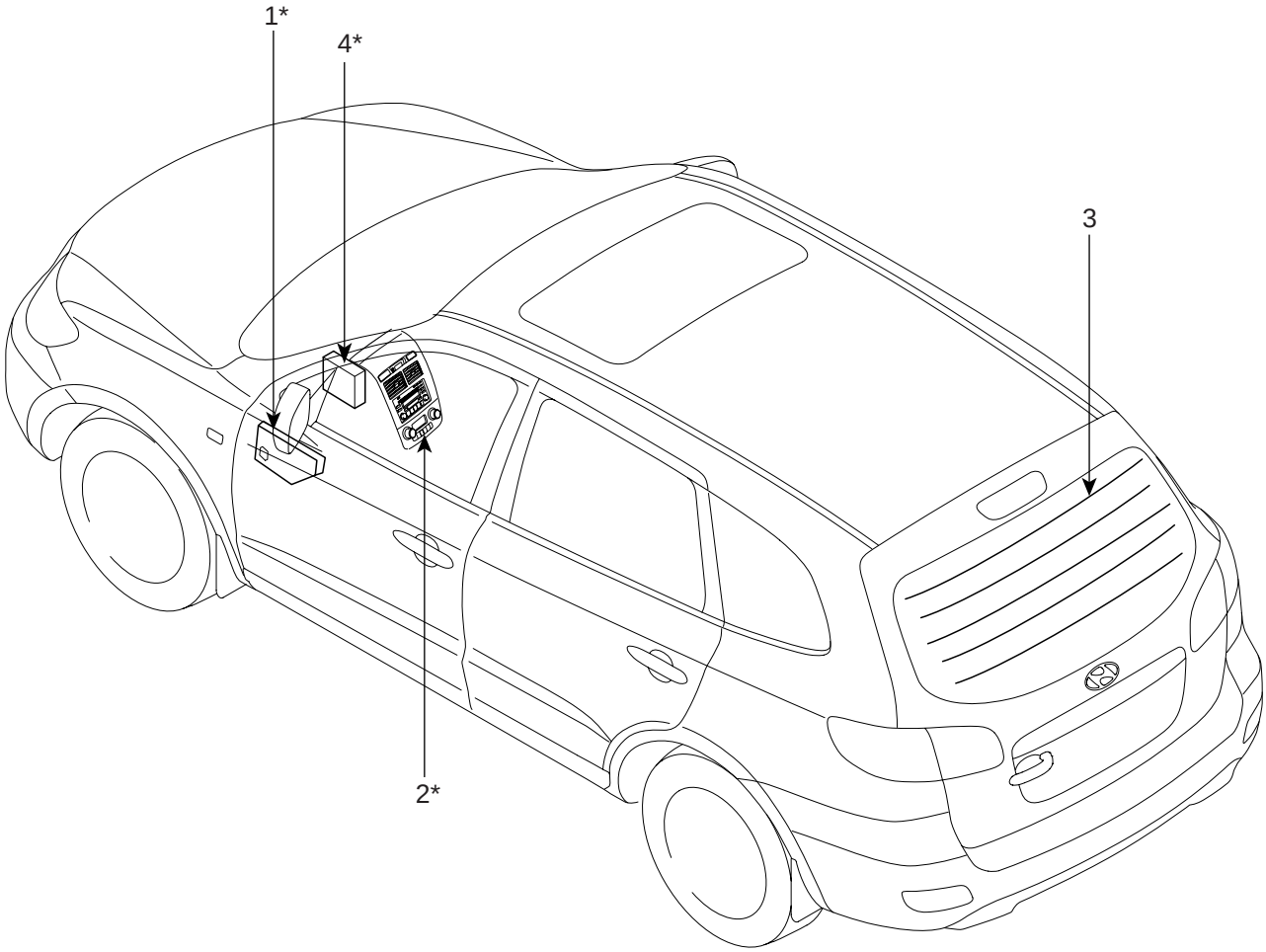

1. Junction box (Rear window defogger)
2. Rear window defogger switch
3. Rear window defogger
4. Body control module

SCMBE6310L

REAR WINDOW DEFOGGER PRINTED HEATER

INSPECTION EF6BBBEE

CAUTION

Wrap tin foil around the end of the voltmeter test lead to prevent damaging the heater line. Apply finger pressure on the tin foil, moving the tin foil along the grid line to check for open circuits.

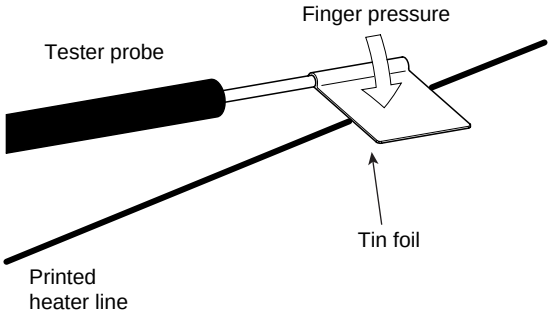

ETA9165A

1. Turn on the defogger switch and use a voltmeter to measure the voltage of each heater line at the glass center point. If a voltage of approximately 6V is indicated by the voltmeter, the heater line of the rear window is considered satisfactory.

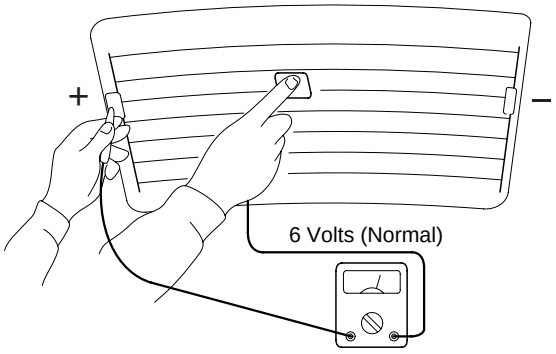

ETA9165B

2. If a heater line is burned out between the center point and (+) terminal, the voltmeter will indicate 12V.

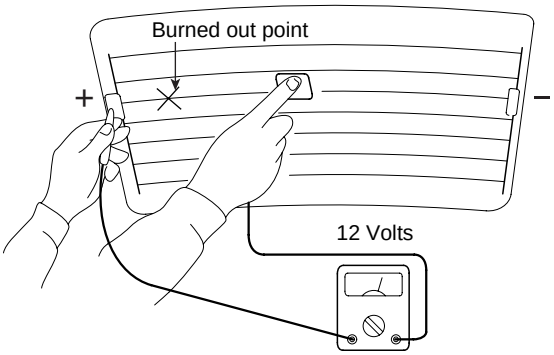

ETA9165C

3. If a heater line is burned out between the center point and (-) terminal, the voltmeter will indicate 0V.

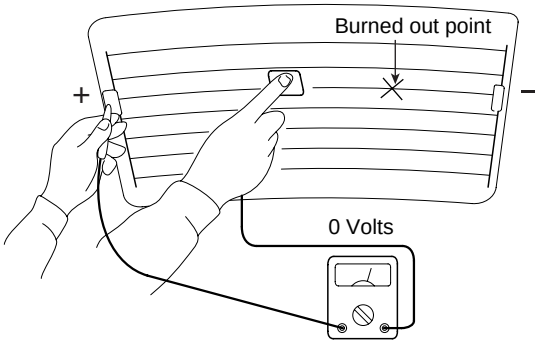

ETA9165D

4. To check for open circuits, slowly move the test lead in the direction that the open circuit seems to exist. Try to find a point where a voltage is generated or changes to 0V. The point where the voltage has changed is the open-circuit point.

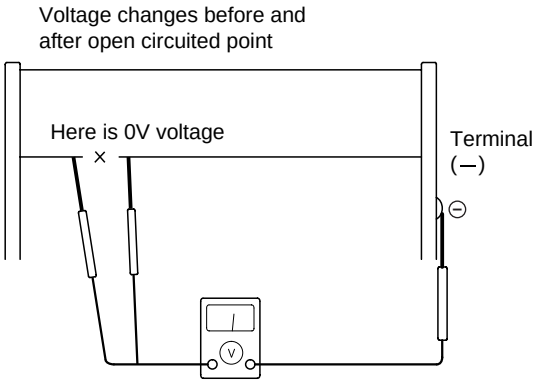

ETA9165E

5. Use an ohmmeter to measure the resistance of each heater line between a terminal and the center of a grid line, and between the same terminal and the center of one adjacent heater line. The section with a broken heater line will have a resistance twice as that in other sections. In the affected section, move the test lead to a position where the resistance sharply changes.

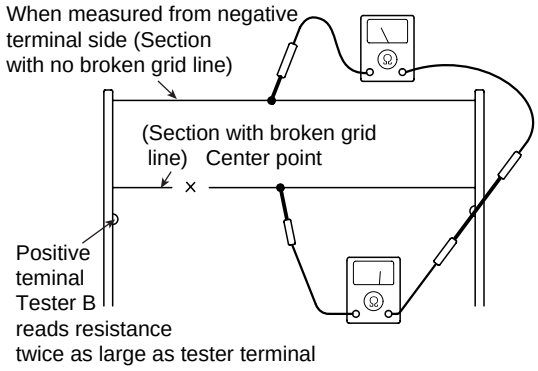

ETA9165F

REPAIR OF BROKEN HEATER LINE

Prepare the following items :

1. Conductive paint.
2. Paint thinner.
3. Masking tape.
4. Silicone remover.
5. Using a thin brush :
   Wipe the glass adjacent to the broken heater line, clean with silicone remover and attach the masking tape as shown. Shake the conductive paint container well, and apply three coats with a brush at intervals of about 15 minutes apart. Remove the tape and allow sufficient time for drying before applying power. For a better finish, scrape away excess deposits with a knife after the paint has completely dried. (Allow 24 hours).

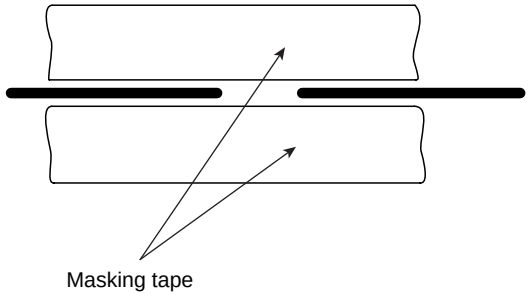

ETA9165G

REAR WINDOW DEFOGGER SWITCH

INSPECTION E2FDCAC7

1. Disconnect the negative (-) battery terminal.
2. Remove the crash pad center speaker grill (A).

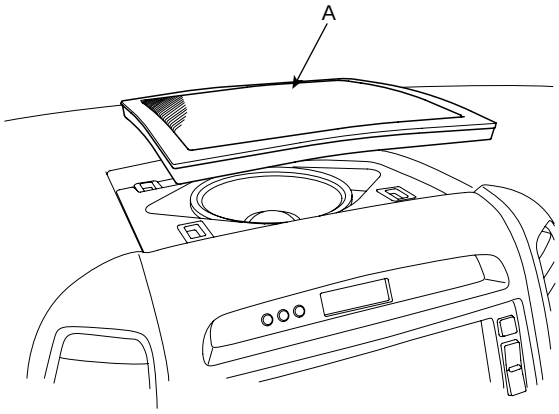

SCMBE6014D

3. Remove the crash pad center speaker (A) after loosening 2 screws.

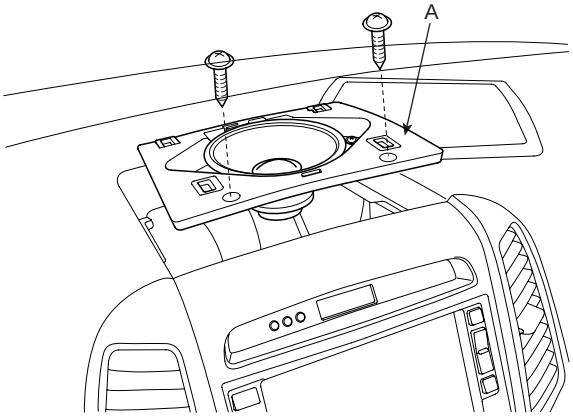

SCMBE6015D

4. Remove the center facia panel(A) after loosening 2 screws. Take care not to damage fixing clips. (Refer to the Body group - Crash pad)

▷: Screw, 2

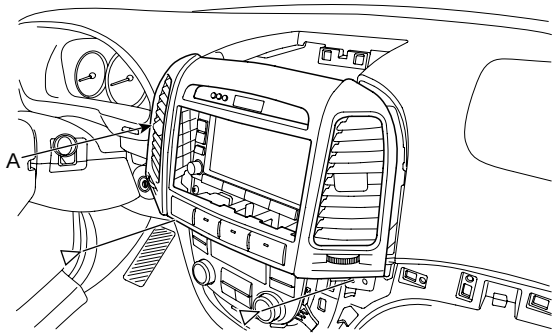

SCMBE6010L

5. Disconnect connectors.
6. Using an ohmmeter, inspect the continuity between the terminals after removing controller.

[LHD]

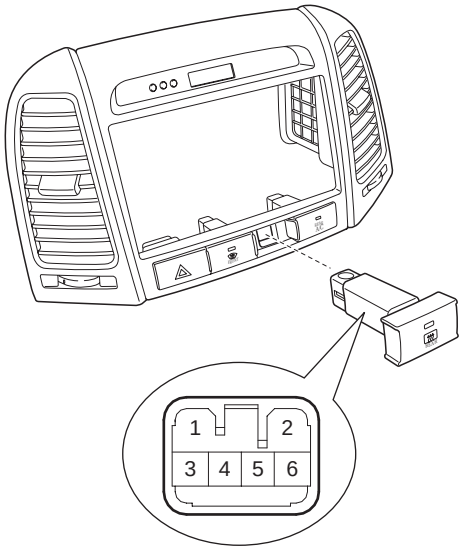

SCMBE6311D

[RHD]

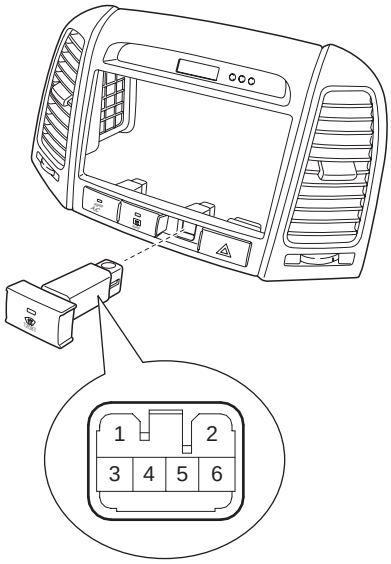

SCMBE6311R

Position / Terminal	ON(PUSH)	OFF(FREE)	Remark
1			
4			
3			IND+
2			ILL-
6			ILL+

SCMBE6305L

REAR WINDOW DEFOGGER RELAY

INSPECTION EBA31AE2

1. Disconnect the negative (-) battery terminal.
2. Remove the crash pad lower panel. (Refer to the Body group- Crash pad)
3. Remove the junction box.
4. There should be continuity between the No.6 of I/P-F and No.14 terminal of I/P-F when power and ground are connected to the No.10 terminal of I/P-E and No.2 terminal of I/P-J.
5. There should be no continuity between the No.6 terminal of I/P-F and No.14 terminal of I/P-D when power is disconnected.

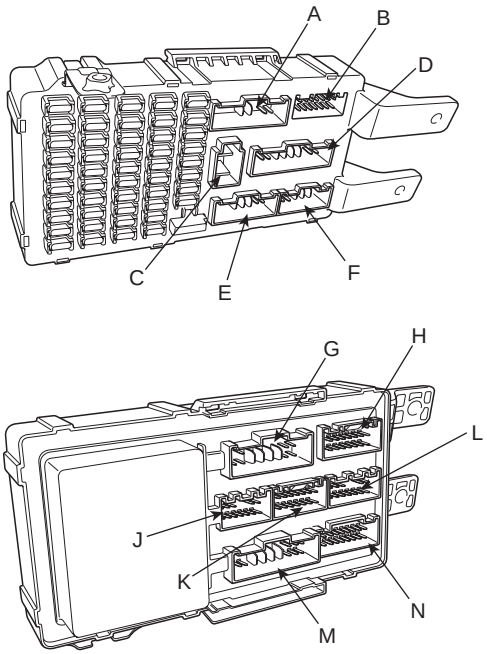

SCMBE6292D

Terminal / Position	I/P-D (14 or 15)	I/P-F (6)	I/P-J (2)	I/P-E (10)
Disconnected			○	○
Connected	○	○	⊖	⊕

SCMBE6293L

REAR WINDOW DEFOGGER TIMER

INSPECTION E39E3E4B

1. If the Defogger SW is ON after the ALT "L" is ON in the state that the IGN1 SW is ON, then the Defogger output shall be ON for 20 minutes. (Operating in the state of the ENGINE RUNNING)

2. If the DEFOGGER SW is ON again while the DEFOGGER output is ON, then the DEFOGGER output shall be OFF.

3. If the ALT "L" is OFF or IGN1 is OFF while the DEFOGGER output is ON, then the DEFOGGER output shall be OFF.

4. If the ALT "L" > 10 volts, then it shall be in the Engine Running State (ALT "L" shall be ON); if the ALT "L" < 5 volts, then it shall be in the Engine Stop State (ALT "L" shall be OFF). Also, if the ALT "L" is more than 5 and less than 10 volts, then the former state shall be maintained.

5. If the defogger SW is pressed and the ALT "L" is ON, there shall be no the DEFOGGER relay output.

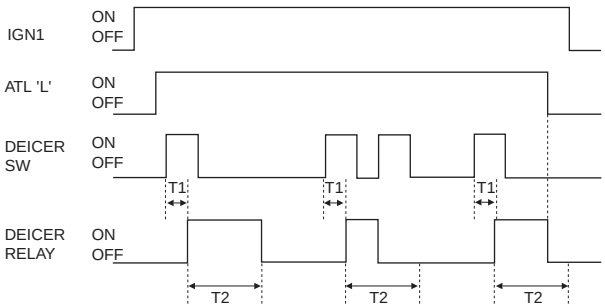

SCMBE6166L

T1 : 60 ± 20 msec, T2 : 20 ± 1 min.

WINDSHIELD WIPER／WASHER

COMPONENT LOCATION E2A93BAD

The parts with asterisk(*) :
This illustration shows the LHD type.
RHD type is symmetrical.

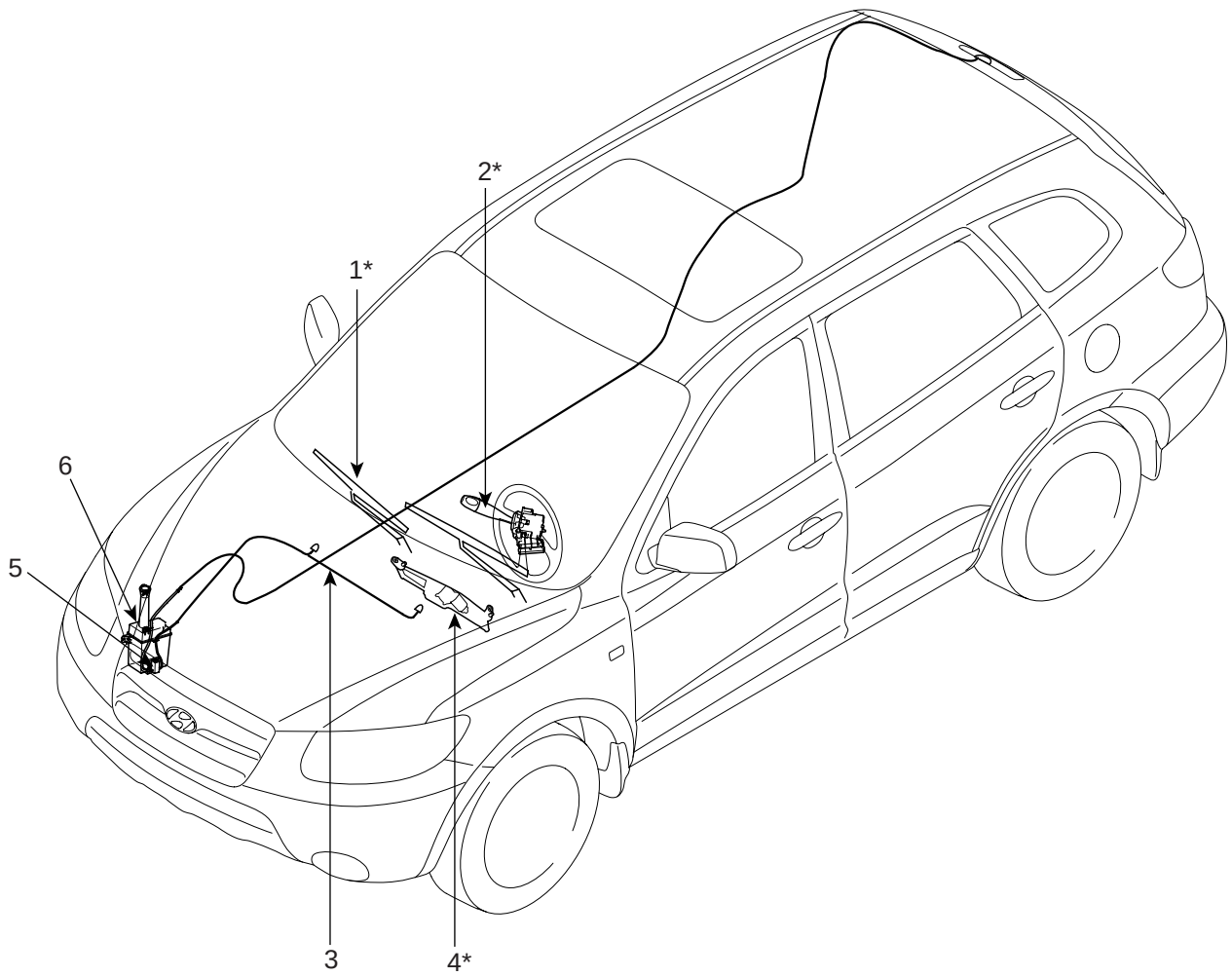

1. Windshield wiper arm & blade
2. Wiper & washer switch
3. Windshield washer hose
4. Windshield wiper motor & linkage
5. Washer motor
6. Washer reservoir

SCMBE6320L

TROUBLESHOOTING E70074B4

1. Wiper low and wiper high do not work.

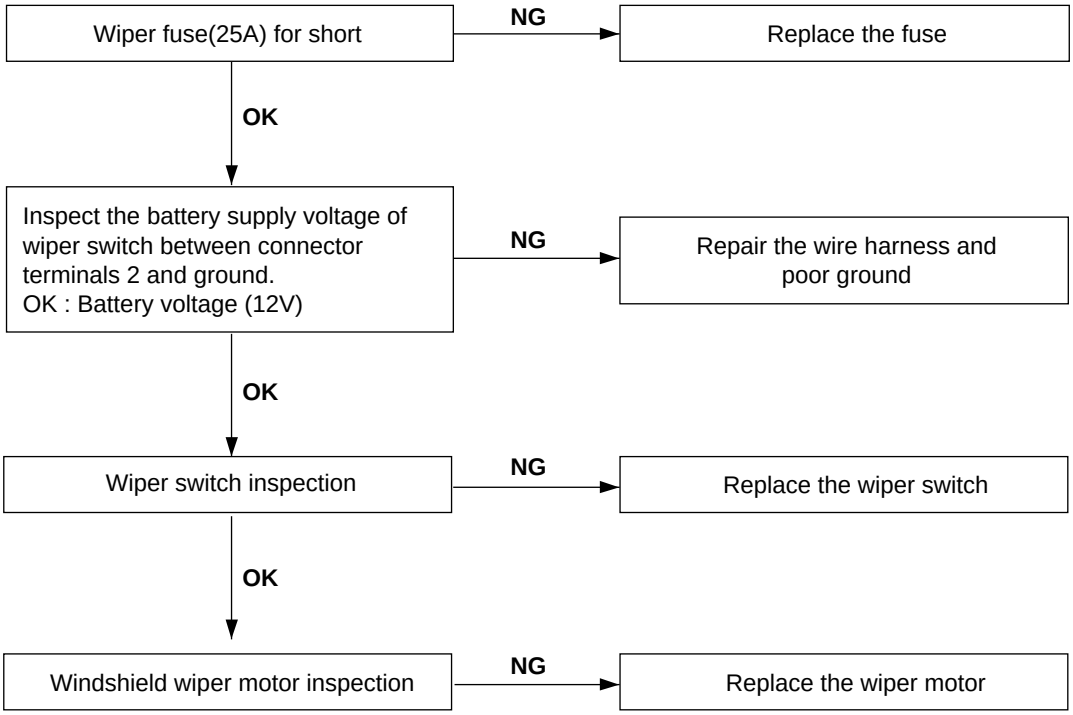

SCMBE6333L

2. When washer switch is on, wiper does not work.

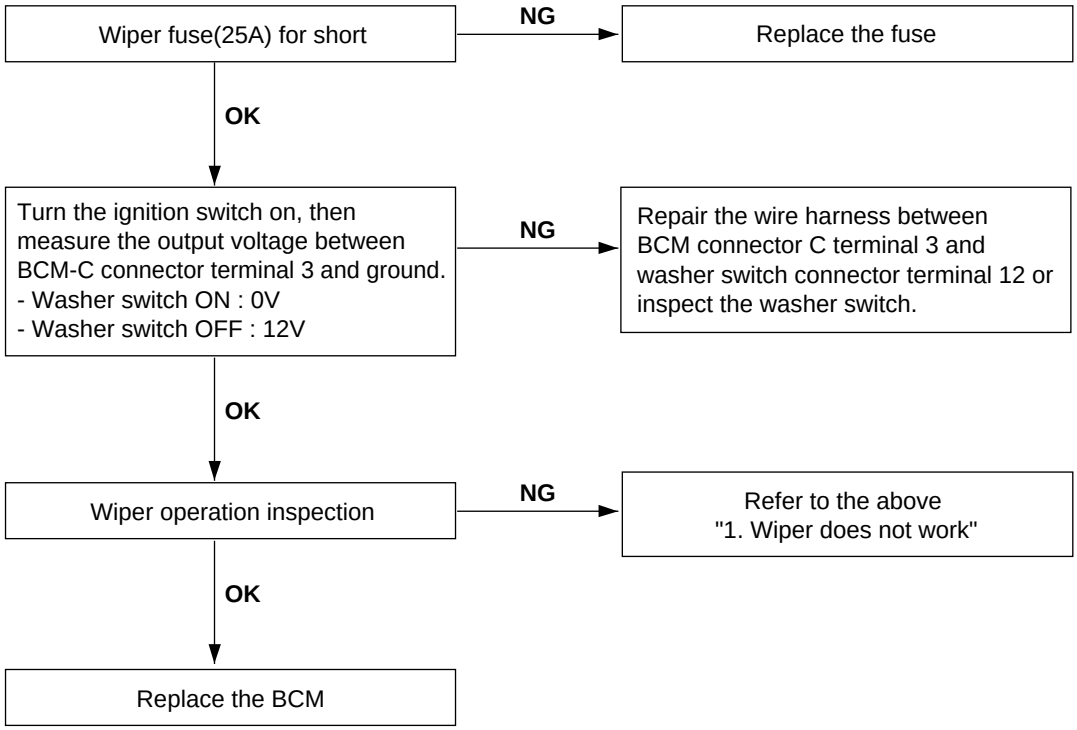

SCMBE6334L

WINDSHIELD WIPER／WASHER SWITCH

REPLACEMENT E64A45F0

1. Disconnect the negative (-) battery terminal.

2. Remove the steering column upper and lower shrouds (A) after removing 3 screws.

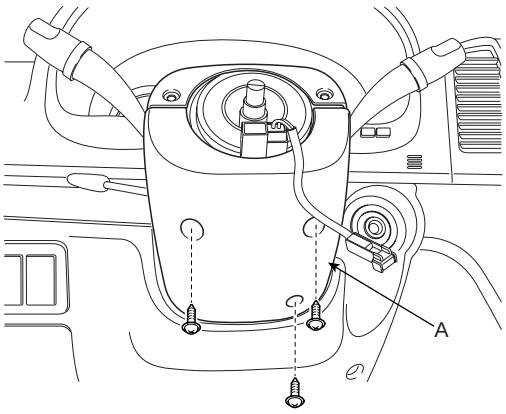

SCMBE6321D

3. Remove the wiper switch (A) after disconnecting the connector and loosening 2 screws.

[LHD]

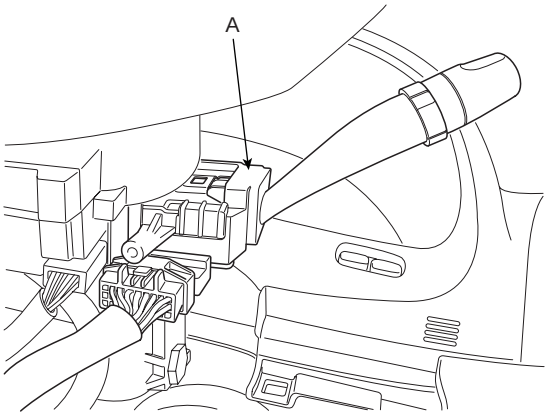

SCMBE6322D

[RHD]

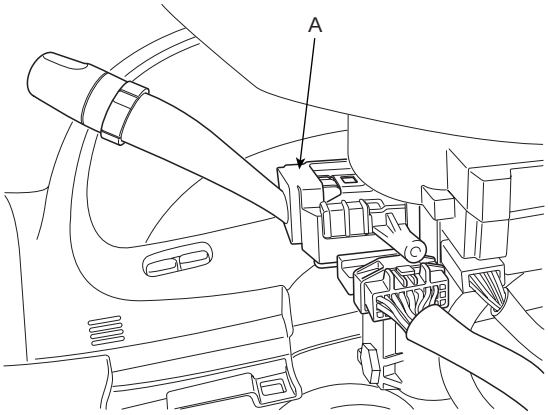

SCMBE6322R

4. Installation is the reverse of removal.

INSPECTION E7A21203

1. Check for continuity between the terminals while operating the wiper and washer switch. If it is not normal condition, replace wiper and wiper switch.

[LHD]

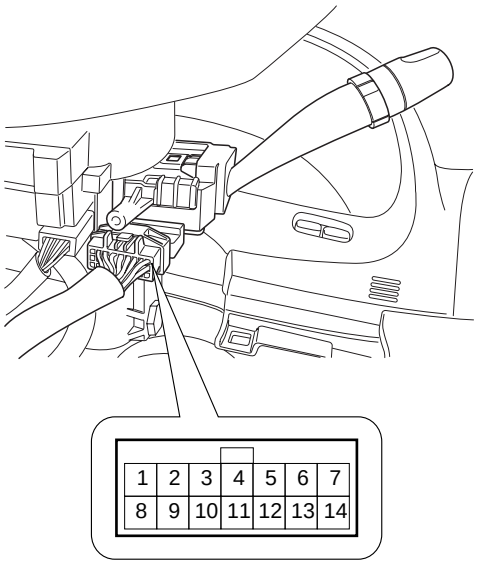

SCMBE6050D

[RHD]

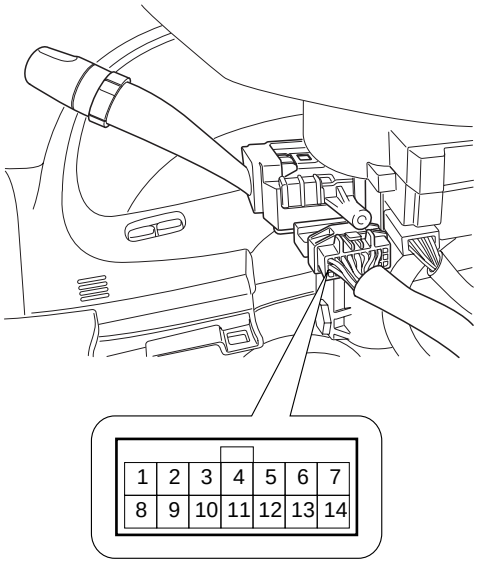

SCMBE6050R

WIPER SWITCH

[STANDARD] ( ) : RHD

Position \ Terminal	1 (7)	2 (6)	3 (5)	4 (4)	5 (3)	6 (2)	13 (9)	14 (8)
MIST				○	○			
OFF		○	○					
INT		○	○		○	○	○	○
LOW		○			○			
HI	○				○			

SCMBE6051L

[RAIN SENSOR] ( ) : RHD

Position \ Terminal	1 (7)	2 (6)	3 (5)	4 (4)	5 (3)	6 (2)	13 (9)	14 (8)
MIST				○	○			
OFF		○	○					
AUTO		○	○		○	○	○	○
LOW		○			○			
HI	○				○			

SCMBE6052L

WASHER SWITCH

( ) : RHD

Position \ Terminal	5(3)	7(1)
OFF		
ON	○	○

SCMBE6053L

INSPECTION E8B9F4EC

1. Multifunction switch operates head lamps and wiper by communicating with BCM through LIN communication.

2. Check BCM input/output value of each position of multifunction switch when you inspect the module whether faulty or not.

3. Select model and BCM menu.

```
1. HYUNDAI VEHICLE DIAGNOSIS ▼

 MODEL   :  SANTAFE  06-

 01. ENGINE (GASOLINE)
 02. ENGINE (DIESEL)
 03. AUTOMATIC TRANSAXLE
 04. ABS/ESP
 05. SRS-AIRBAG
 06. ELEC.POWER STEERING
 07. FULL AUTO AIR/CON.
 08. BODY CONTROL MODULE
```

SCMBE6385L

```
1. HYUNDAI VEHICLE DIAGNOSIS ▼

MODEL   : SANTAFE  06-
SYSTEM  : BODY CONTROL MODULE

 01. GENERAL
 02. NAS
```

SCMBE6355L

4. Select "Current data" and wiper.

```
1. HYUNDAI VEHICLE DIAGNOSIS
MODEL  : SANTAFE  06-
SYSTEM : BODY CONTROL MODULE

 01. DIAGNOSTIC TROUBLE CODES
 02. CURRENT DATA
 03. FLIGHT RECORD
 04. ACTUATION TEST
 05. SIMU-SCAN
 06. DATA SETUP(UNIT CONV.)
```

SCMBE6356L

5. Check input/output value of washer & wiper switch.

```
1.11 CURRENT DATA        01/13

WASHER SW                OFF
WIPER INT SW             OFF
DEFROSTER SW             OFF
HEAD LAMP WASH SW        OFF
DEFROSTER REPLAY         OFF
HEAD LAMP WASH RLY       OFF
MIST SW                  OFF

FIX  SCRN  FULL  PART  GRPH  HELP
```

SCMBE6358L

FRONT WIPER MOTOR

COMPONENT LOCATION EDBF6DB7

This illustration shows the LHD type.
RHD type is symmetrical.

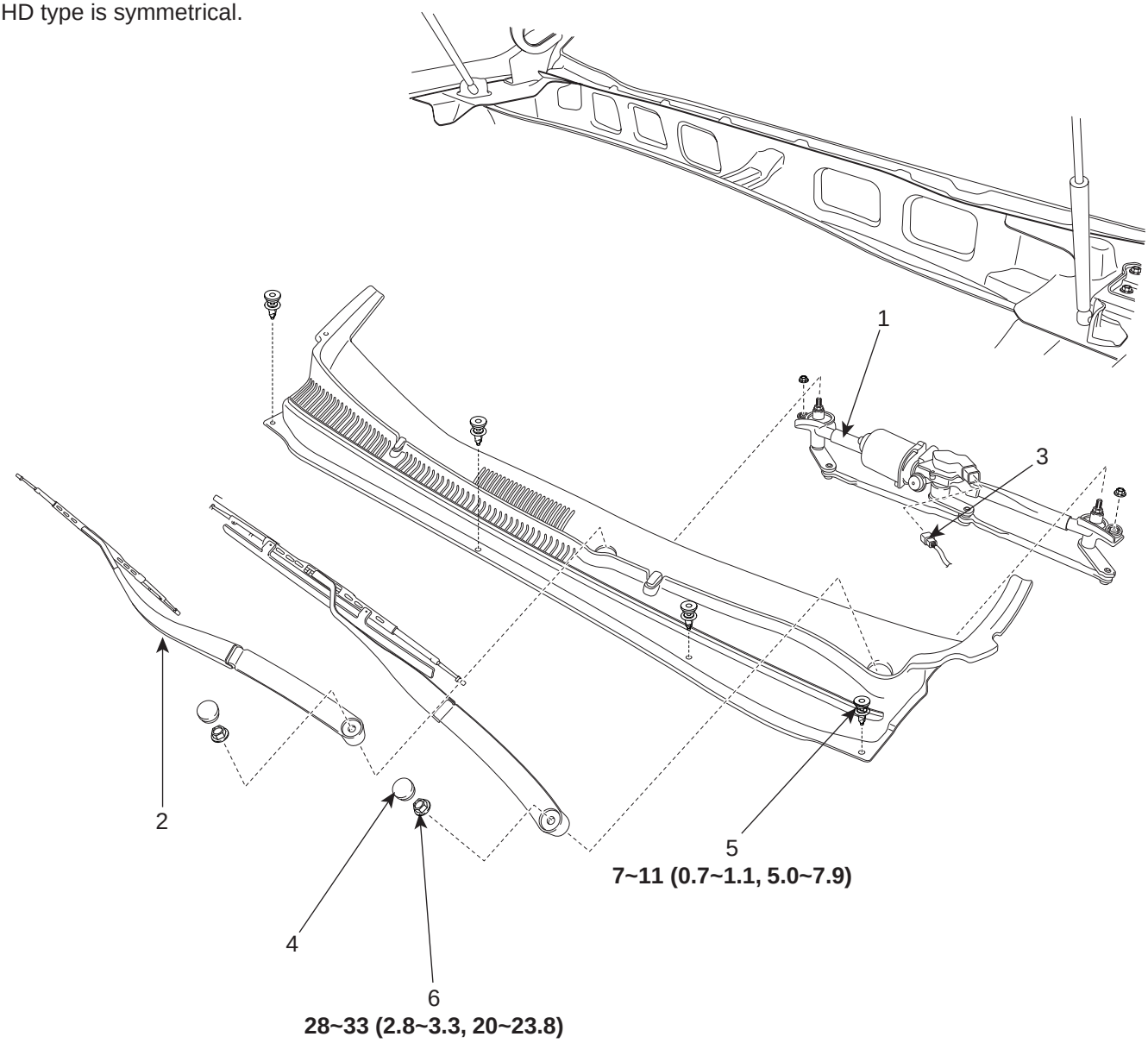

TORQUE : Nm (kgf·m, lbf.ft)

1. Wiper motor & linkage assembly
2. Wiper arm & blade
3. Wiper motor connector
4. Cap
5. Rivet
6. Nut

SCMBE6340L

INSPECTION EF6CA691

SPEED OPERATION CHECK

1. Remove the connector from the wiper motor.
2. Attach the positive (+) lead from the battery to terminal 6 and the negative (-) lead to terminal 5.
3. Check that the motor operates at low speed.
4. Connect the positive (+) lead from the battery to terminal 4 and the negative (-) lead to terminal 5.
5. Check that the motor operates at high speed.

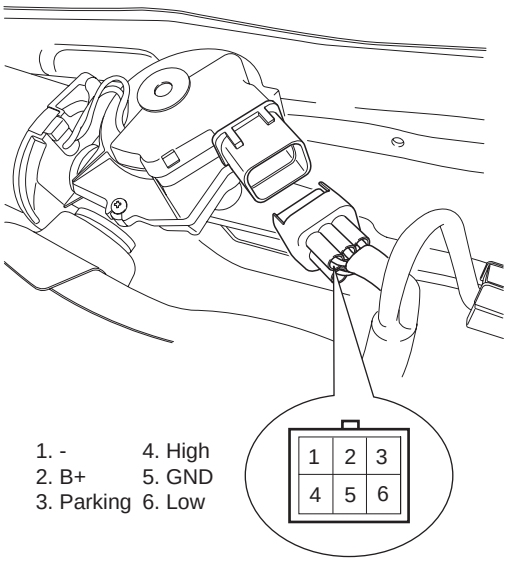

SCMBE6343L

AUTOMATIC STOP OPERATION CHECK

1. Operate the motor at low speed using the stalk control.
2. Stop the motor operation anywhere except at the off position by disconnecting terminal 6.
3. Connect terminals 3 and 6.
4. Connect the positive (+) lead from the battery to terminal 2 and the negative (-) lead to terminal 5.
5. Check that the motor stops running at the off position.

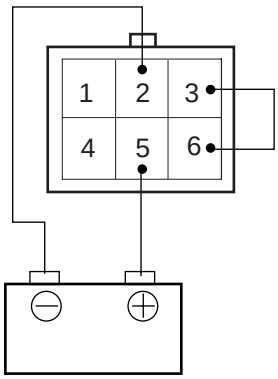

SCMBE6344D

REPLACEMENT EAC38CCF

1. Remove the windshield wiper arm and blade after removing a nut (A).

TORQUE: 28~32 Nm (2.8~3.2 kgf.m, 20~23.1 lbf.ft)

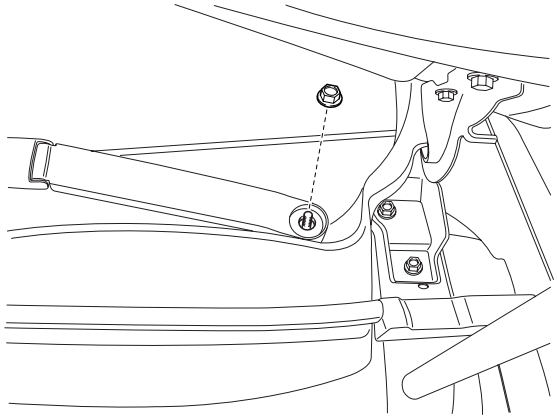

SCMBE6341D

2. Remove the weather strip and the cowl top cover (A) after removing 4 rivets.

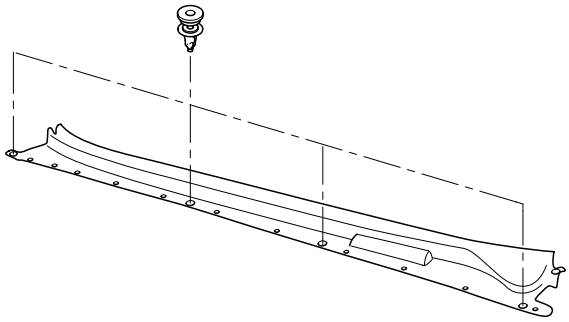

ATIE362C

3. Remove the windshield wiper motor and linkage assembly after removing 2 bolts. Disconnect the wiper motor connector and windshield deicer connector from the wiper motor & linkage assembly.

TORQUE: 7-11Nm (0.7-1.1, kgf.m, 5.0-7.9 lbf.ft)

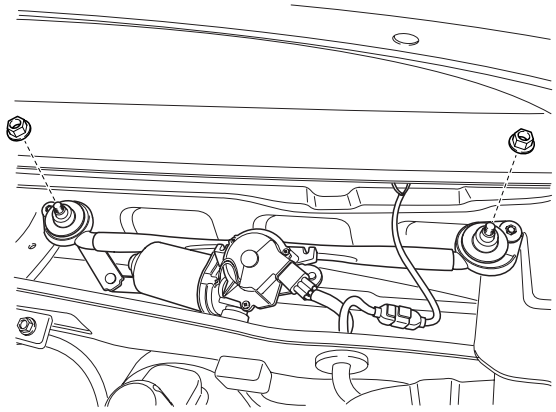

SCMBE6342D

4. Installation is the reverse of removal.

INSPECTION EBFE4E3A

1. Install the wiper arm and blade to the specified position.

Specified position	A	B
Distance [in (mm)]	1.18 ± 0.2 (30 ± 5)	1.18 ± 0.2 (30 ± 5)

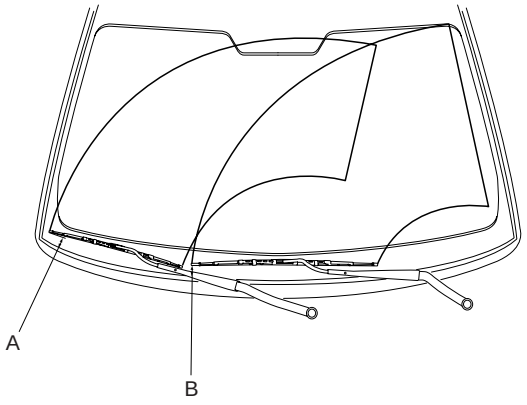

ATGE362C

2. Set the washer nozzle on the specified spray position.

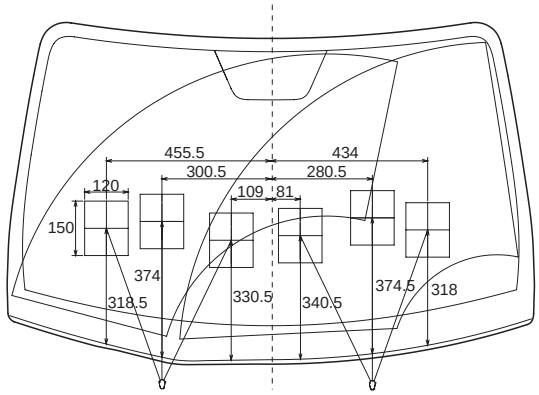

Unit : mm

SCMBE6345L

FRONT WASHER MOTOR

INSPECTION E40BA24E

1. With the washer motor connected to the reservoir tank, fill the reservoir tank with water.
2. Connect positive (+) battery cables to terminal 1 and negative (-) battery cables to terminal 2 respectively.
3. Check that the motor operates normally and the washer motor runs and water sprays from the front nozzles.
4. If they are abnormal, replace the washer motor.

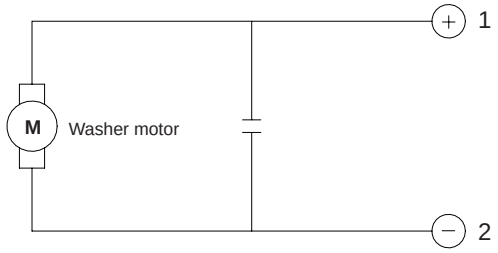

[Windshield washer motor]

SCMBE6346L

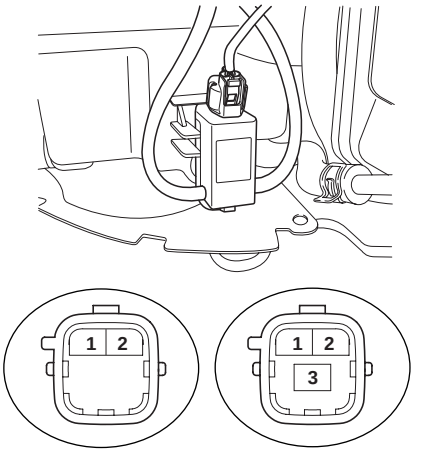

[Front washer]
1. Windshield washer (+)
2. Ground

[Front & Rear washer]
1. Windshield washer (+)
2. Ground
3. Rear washer (+)

SCMBE6348L

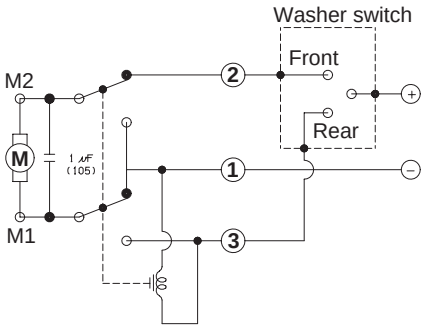

<Windshield & Rear washer motor>

SCMBE6349L

WASHER FLUID LEVEL SENSOR SWITCH

1. Disconnect the negative(-) battery terminal.
2. Drain the washer fluid less than 650 cc.
3. Check for continuity between the No. 1 and No.2 terminal in each float position.
   There should be continuity when the float is down.
   There should be no continity when the folat is up.
4. If the continuity is not as specified, replace the washer fluid level switch

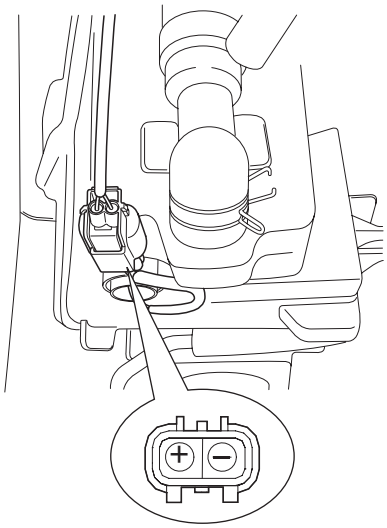

SCMBE6352D

Terminal / Position	1	2
Over 650cc		
Under 650cc	○———	———○

(Tolerance : -50cc ~ +100cc)

SCMBE6353L

REPLACEMENT EF02B9DF

1. Disconnect the negative (-) battery terminal.
2. Remove the front bumper cover. (Refer to Body group - Front bumper)
3. Remove the washer hose (A) and the washer motor connector (B).

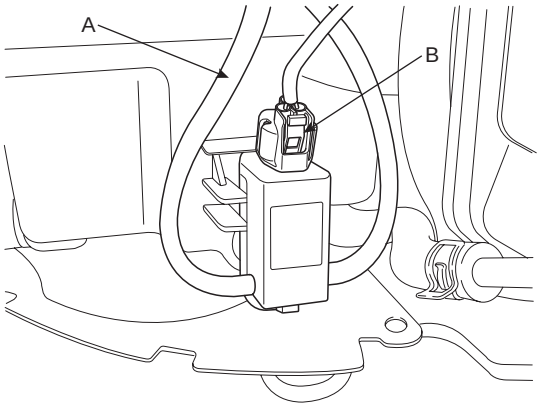

SCMBE6335D

4. Disconnect the washer fluid level sensor switch connector (A).

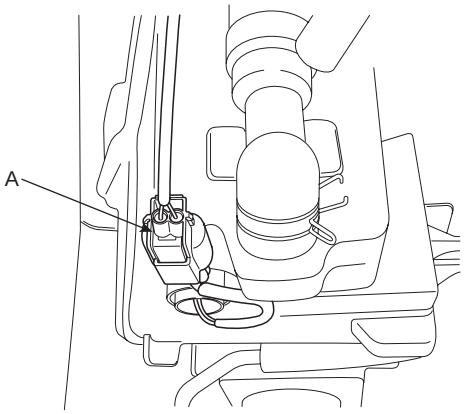

SCMBE6346D

5. Remove the washer reservoir after removing 3 bolts.

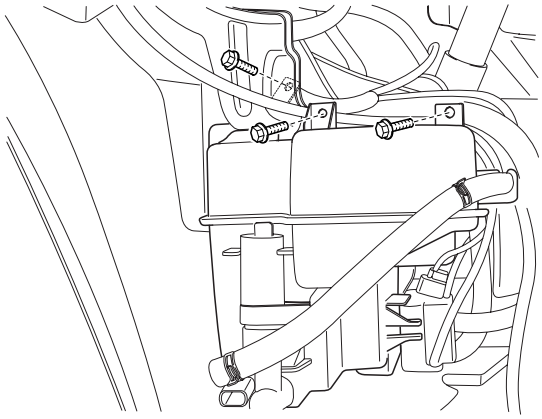

SCMBE6347D

6. Installation is the reverse of removal.

RAIN SENSOR

CIRCUIT DIAGRAM E27A55E1

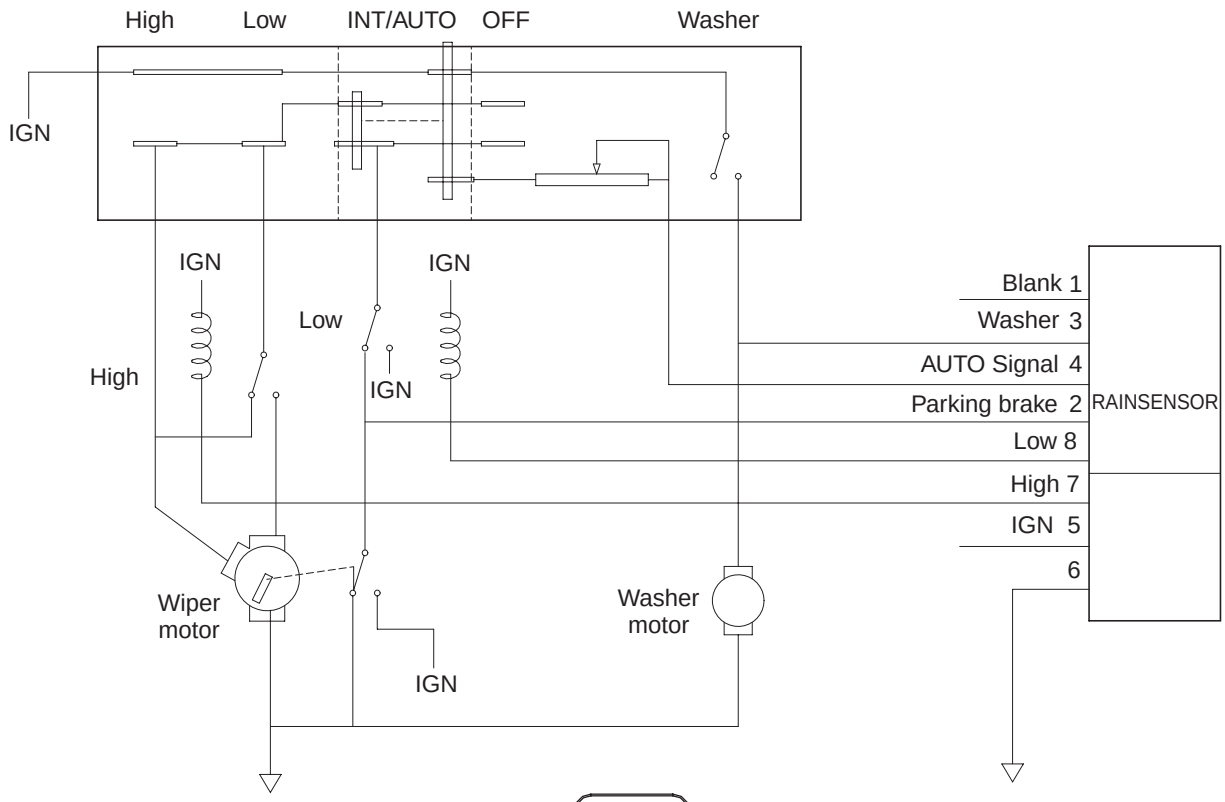

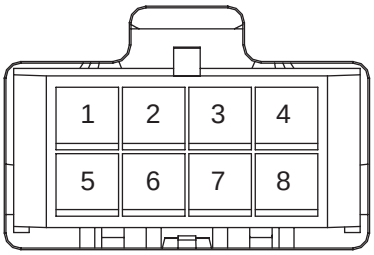

Position \ Terminal	2	8	7	4	3	6
Washer					○	○
Low		○				○
High			○			○
OFF	○	○				
AUTO/INT	○	○		○		○

SCMBE6337L

DESCRIPTION E65E5882

The Rain sensing windshield wiper system is a wiper system that, in addition to providing normal wiper functions off, mist, manual low speed, manual high speed, and wash, provides automatic control of automatic intermittent automatic low, and automatic high speeds.
When the ignition key is in the ON position, the rain sensor (A) will be activated.

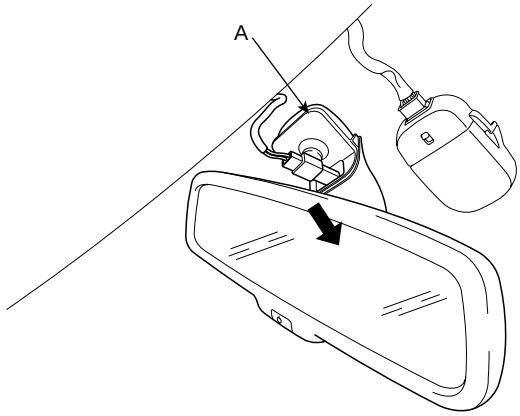

SCMBE6354D

OPERATING MODES - RAINSENSING WINDSHIELD WIPER SYSTEM E72BA1AD

MULTIFUNCTION SWITCH POSITION	RAINSENSOR OPERATING MODE	SENSOR ACTION
MIST	MIST	Mist is controlled by the column switch. The sensor has no affect on this function
OFF	OFF	If not already parked, wiper motor runs in low speed until blades are in the depressed park position.
AUTOMATIC Automatic mode has 5 SENSITIVITY settings. This is further defined in par 84.	AUTOMATIC	AUTOMATIC Automatic INT/speed control. The sensitvity to raindrop accumulation on the windshield is set by the MULTIFUNCTION SWITCH sensitivity adjustment.
LOW SPEED	MANUAL	Wiper motor runs continuously in low speed, for example 45 wipes/minute. The sensor has no affect on this function
HI SPEED	MANUAL	Wiper motor runs continuously in high speed, for example 60 wipes/minute. The sensor has no affect on this function
WASH - DEMAND WASHER SW ≥ 0.6 SEC	WASH	If washer sw on after 0.6 sec then wipes during 2.5 to 3.8 sec. The rain sensor enables the wipers and controls the after wipes.
WASH - DEMAND WASHER SW < 0.6 SEC	WASH	If washer sw on less than 0.2 to 0.6 sec then once wipes

OFF MODE

With the wipe switch in the OFF position and the ignition switch in the ON positions, the Rainsensor is considered to be in "OFF" mode. In this mode, the sensor commands the wiper to be off.

The Rainsensor monitors the state of the windshield during OFF mode so that knowledge of the state of the windshield is present when the MULTIFUNCTION SWITCH is moved to any SENSITIVITY setting. This optimizes the performance of the sensor when moving from the OFF condition to an AUTOMATIC mode. The algorithm assumes the nominal sensitivity setting when in the OFF mode.

AUTOMATIC MODE

When the MULTIFUNCTION SWITCH is moved to AUTO position and the ignition switch is in the RUN or ACCESSORY positions, the Rainsensor is considered to be in "AUTOMATIC" mode. Once a single "Instant wipe" as described in par 8.8 has occurred, the wipers remain at "Innerwiper/park" untill the Rainsensor determines that the dwell time at that position is appropriate for the amount of precipitation on the windshield, considering the driver input from the switch SENSITIVITY setting. After the dwell time the Rainsensor provides input to the wiper motor to activate the wipers to clear the preciptation from the windshield.

AUTOMATIC INT

For all AUTOMATIC INT operations the Rainsensor commands the wipers to operate in LOW SPEED for one wipe, followed by a variable dwell period in the inner wipe position.

AUTOMATIC LOW

AUTOMATIC LOW SPEED operation is utilized when the amount of precipitation imping on the windshield exceeds the AUTOMATIC INT TO AUTOMATIC LOW threshold. This threshold includes sufficient hysterisis to prevent cycling between AUTOMATIC INT and AUTOMATIC LOW SPEED operation with a steady amount of precipitation accumulation on the windshield.

AUTOMATIC HIGH

AUTOMATIC HIGH SPEED operation is utilized when the amount of precipitation imping on the windshield exceeds the AUTOMATIC LOW to AUTOMATIC HIGH threshold. This threshold includes sufficient hysterisis to prevent cycling between AUTOMATIC LOW to AUTOMATIC HIGH operation with a steady amount of precipitation accumulation on the windshield.

WASH MODE

The Rainsensor monitors the MULTIFUNCTION SWITCH to determine if the wash function is selected. Rainsensor enables the wiper motor to run in low speed during the wash mode and performs follow up wipes during 2.5 to 3.8 sec.

MANUAL MODE

The Rainsensor determines when a manual mode such as manual low, Mist, Off or manual high is selected. The column switch performs these modes and the rain sensor has no affect.

INSPECTION EF3F0CB0

RAIN SENSING WIPER

1. In IGN2 ON state, if auto switch input (LIN communication) is ON then both wiper low relay and wiper high relay outputs are controlled by the rain sensor input signal.

2. If the wiper switch has been left in automatic mode with the vehicle ignition OFF, and then the vehicle ignition switch is turned on, a single wipe will be performed.

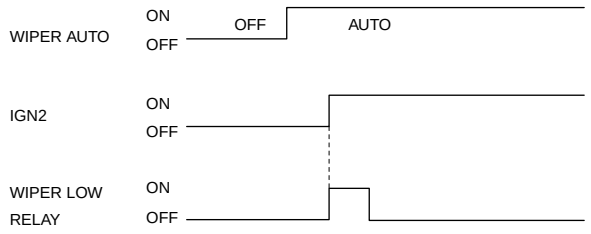

ETBF145E

3. A single wipe will be performed whenever rain has been detected (Rain Detected signal from Rain sensor) and the wiper switch is moved to the AUTO position. But a single wipe will not be performed when the wiper switch is moved to the AUTO position and OFF signal is being received from Rain sensor. But if the wiper switch is moved to AUTO position for the first time since vehicle ignition switch is turned on then a single wipe will be performed regardless of Rain Detected or OFF signal.

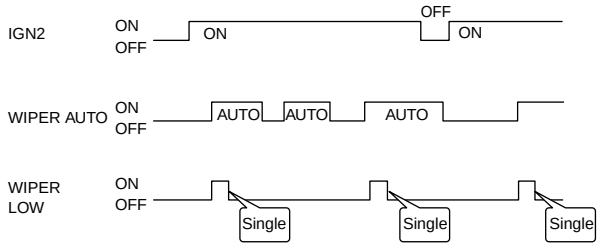

ETBF145F

4. The drive may adjust the rain sensor performance by adjusting the sensitivity input. When in automatic mode, the BCM will perform a single wipe each time the sensitivity is adjusted upward to a more sensitive setting (downward more then one step). This single wipe will only be performed if Rain Detected signal is being received from the Rain sensor. If the sensitivity adjustment is adjusted upward more than one sensitivity, the BCM will only perform a single wipe unless the time between Increases is more than 2 seconds.

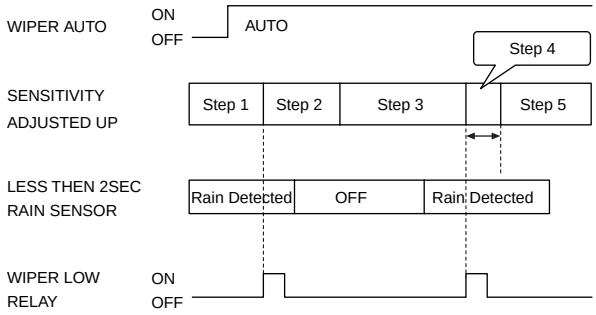

ETBF145G

5. Fault strategy for the rain sensor
Rain Sensor Fault 1 - Internal Fault Detected
This failure is detected when the wiper is in automatic mode and the input faulty rain sensor from the rain sensor has a duty cycle corresponding to Fault 1. The confirmation delay for the failure is of 1 sec.
When this failure is detected, the wiper outputs are OFF and the wiper will also do a wipe in slow speed on the transition from sensitivity 3 to sensitivity 2 (Step 2 to 3) in order to signal the presence of this fault. If another sensitivity is set, the wiper won’t make any additional wipe.

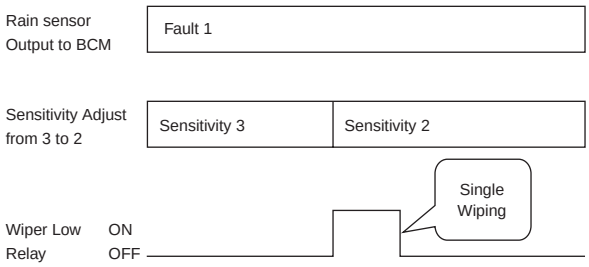

ETBF145H

Rain Sensor Fault 2 - Glass Attachment Fault Detected
This failure is detected when the wiper is in automatic mode and the input faulty rain sensor from the rain sensor has a duty cycle corresponding to Fault 2. The confirmation delay for the failure is of 1 s.
When this failure is detected, the wiper outputs are OFF and the wiper will also do a wipe on the transition from sensitivity 4 to sensitivity 3 (Step 1 to 2) in order to signal the presence of this fault. If another sensitivity is set, the wiper won’t make any additional wipe.

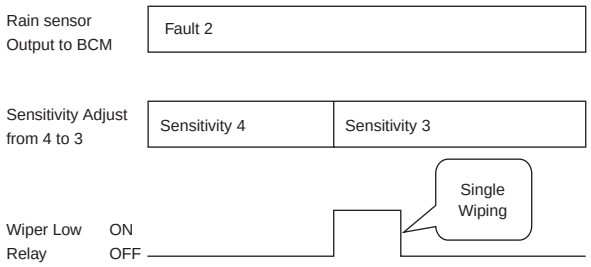

ETBF145I

Rain Sensor Fault 3 - No Input Signal Present
This failure is detected when the wiper is in automatic mode and the input faulty rain sensor from the rain sensor has a duty cycle corresponding to Fault 3 or in case the duty cycle of the input faulty rain sensor is 0% or 100%. The confirmation delay for the failure is of 1 s.
When this failure is detected, the wiper outputs are OFF.

REMOVAL EB4E2F2B

CAUTION

The dust or foreign substance on the rain sensor have a bad effect upon the rain sensor capability,so protect the sensor surface with protection cover until installing the rain sensor to bracket for accurate funtion.
The coupling pad on the rain sensor surface has adherive strength, so the coupling pad could stick to the windshield by environment condition during the using time.
If separate it by force, it could be damaged. So make sure to separate the rain sensor from the windshield carefully.

1. Remove the rain sensor cover first. Be careful not to damage the cover latch by applying excessive force. To remove the latch, pull aside the latch using the cover hole (B) with the little (-) screwdriver (A).

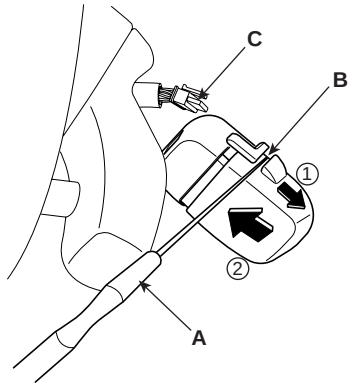

KTBF365B

2. Remove the wiring harness connector (C) from sensor.

3. Rain sensor module is attached to the front windshield by glue replacing the front windshield, remove the rain sensor module from the existing front windshield and install on the new front windshield.

INSTALLATION EFF683D8

NOTE

- *In case of the windshield with reflection layer which reflects the infrared rays in sensing field, should install the rain sensor into the field removed the reflection layer.*
- *Install the rain sensor after some time and be care not to be settled the dust after installation.*

1. Install the rainsensor bracket to the windshield glass using the tape.

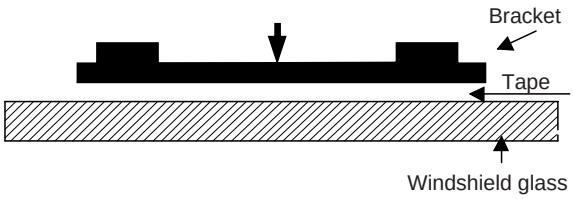

ETZE015I

CAUTION

It is very important that the coupling pad pushes the windshield completely to stick to each other without bubbles.

2. Connect the rainsensor connector, and then install the sensor cover.

REAR WIPER／WASHER

COMPONENT LOCATION E91C4A25

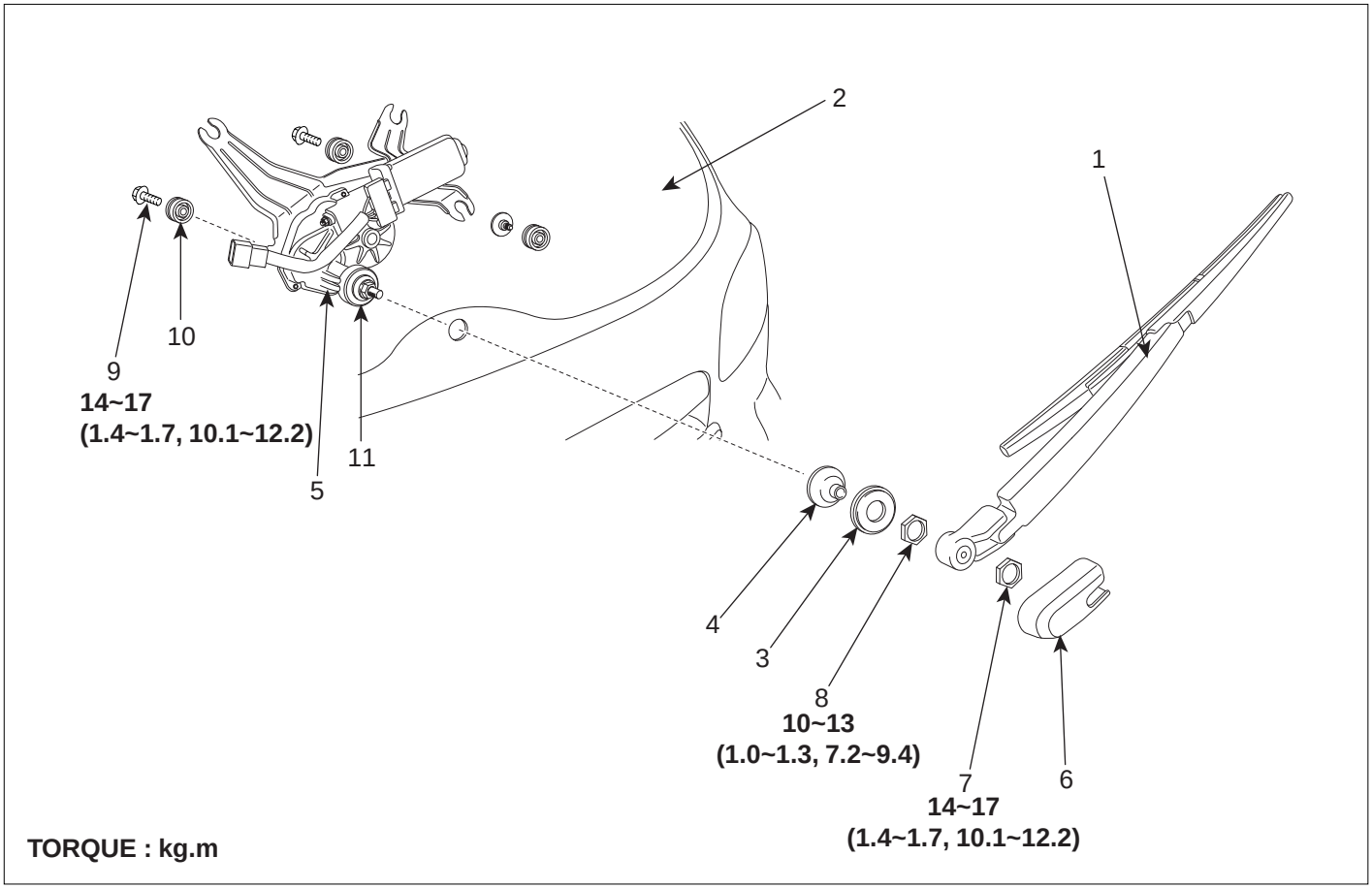

1. Rear wiper arm & blade
2. Tailgate glass
3. Grommet
4. Outside cover
5. Rear wiper motor assembly
6. Head cap
7. Nut
8. Nut
9. Bolt
10. Bush
11. Grommet

SCMBE6360L

REAR WIPER MOTOR

INSPECTION EE5AEB15

REAR WIPER AND NOZZEL

1. Install the rear wiper arm and blade to the specified position.

Specified position	A
Distance	0.059 ± 0.2 in (15 ± 5 mm)

※ Specified position : The first deicer line from bottom of the rear window.

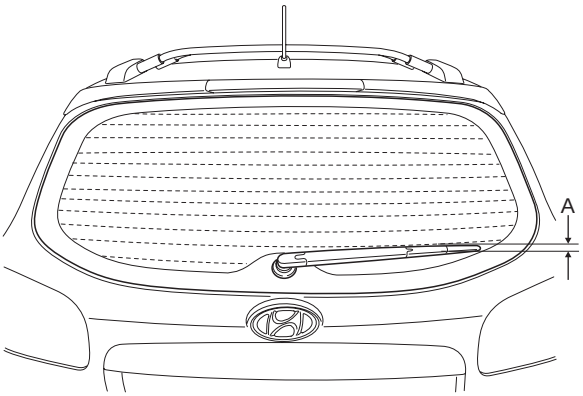

SCMBE6365D

2. Set the rear washer nozzle on the specified spray position.

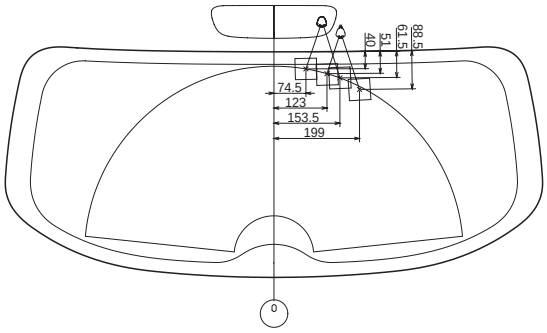

Unit : mm

SCMBE6366L

REAR WIPER MOTOR

1. Remove the 4P connector from the rear wiper motor.
2. Connect battery positive (+) and negative (-) cables to terminals 3 and 4 respectively.
3. Check that the motor operates normally. Replace the motor if it operates abnormally.

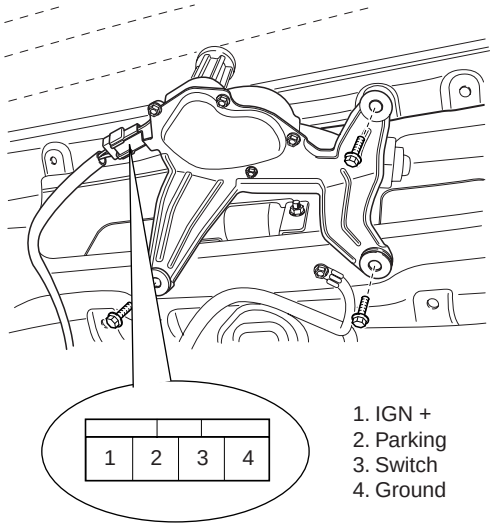

SCMBE6364L

AUTOMATIC STOP OPERATION CHECK

1. Operate the motor at low speed using the stalk control.
2. Stop the motor operation anywhere except at the off position by disconnecting terminal 3.
3. Connect terminals 2 and 3.
4. Connect the positive (+) lead from the battery to terminal 1 and the negative (-) lead to terminal 4.
5. Check that the motor stops running at the off position.

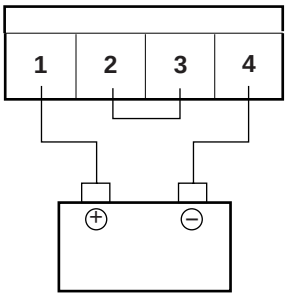

ATGE381F

REPLACEMENT E9F0AEC8

1. Detach the wiper cap (A), then remove the rear wiper arm (C) after removing a nut (B).

Tightening torque Nut(B) : 14~17 Nm (1.4~1.7 kgf.m, 10.1~12.3 lbf.ft)

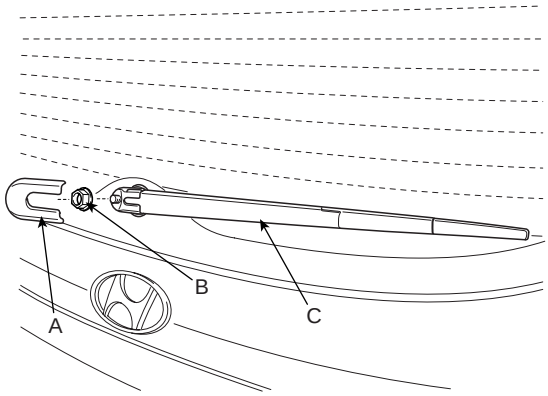

SCMBE6361D

2. Remove the rear wiper cap & pad (B) after removing a nut (A).

Tightening torque Nut (A) : 10~13 Nm (1.0~1.3 kgf.m, 7.2~9.4 lbf.ft)

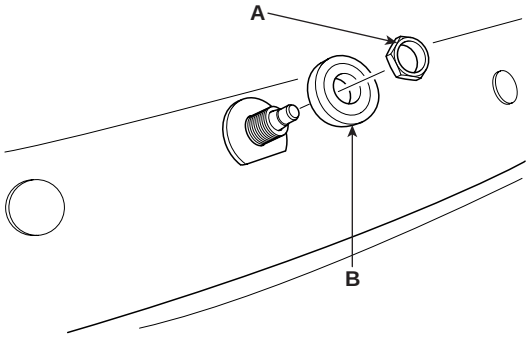

SCMBE6362D

3. Open the tailgate glass then remove the tailgate trim.

4. Disconnect the rear wiper motor connector then remove the rear wiper motor (B) after removing 3 bolts.

Tightening torque Nut : 14~17 Nm (1.4~1.7 kgf.m, 10.1~12.3 lbf.ft)

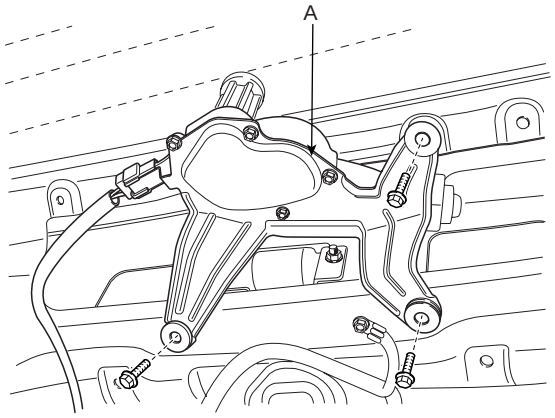

SCMBE6363D

5. Installation is the reverse of removal.

REAR WASHER SWITCH

INSPECTION E5C9EED0

1. With the rear wiper & washer switch in each position, make sure that continuity exists between the terminals below. If continuity is not as specified, replace the multifunction switch.

[LHD]

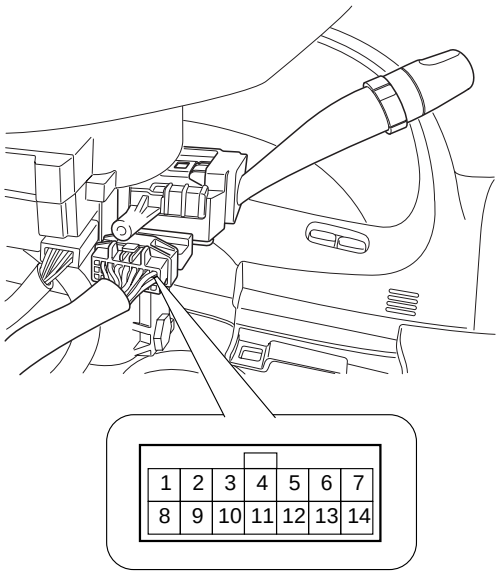

SCMBE6367D

[RHD]

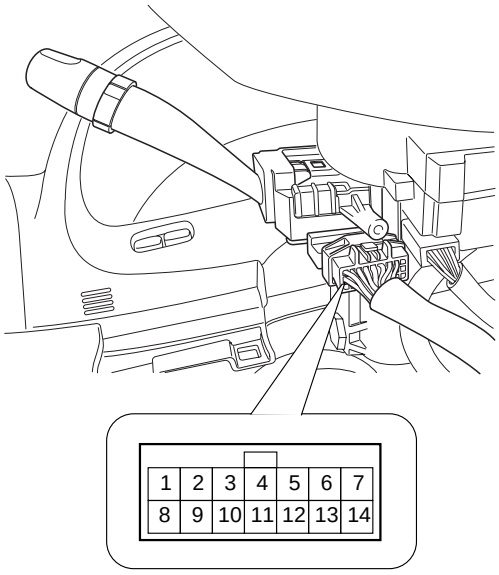

SCMBE6367R

REAR WIPER & WASHER SWITCH

( ) : RHD

Position \ Terminal	9(13)	11(11)	12(10)
Rear washer	○	—	⊖
OFF			
ON	○	⊖	
Rear washer	○	—	⊖

SCMBE6054L

REAR WASHER MOTOR

INSPECTION EA10033D

1. With the washer motor connected to the reservoir tank, fill the reservoir tank with water.
2. Remove the front bumper cover. (Refer to the Body group- Front bumper)
3. Connect positive (+) and negative (-) battery cables to terminals 3 and 1 respectively to see that the washer motor runs and water is pumped.
4. Check that the motor operates normally.
   Replace the motor if it operates abnormally.

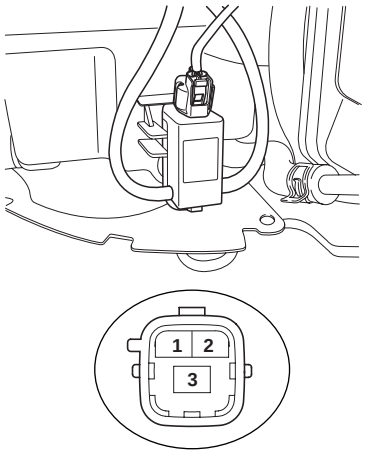

[Front & Rear washer]

1. Windshield washer (+)
2. Ground
3. Rear washer (+)

SCMBE6368L

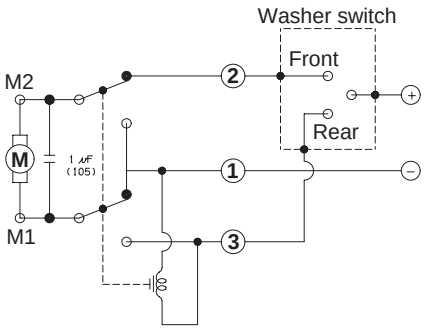

<Windshield & Rear washer motor>

SCMBE6369L

ELECTRO CHROMIC INSIDE REAR VIEW MIRROR

DESCRIPTION E1A4FF0E

The ECM (Electro Chromic inside rear view Mirror) is for dimming the reflecting light from a vehicle behind at night, in order the user not to be dazzled by the light. The front looking sensor detects brightness of the surroundings, while the rearward looking sensor the strength of the reflecting light so that adjusts the reflexibility of the mirror in the range of 10~70%. But, when the reverse gear is engaged, it stops functioning.

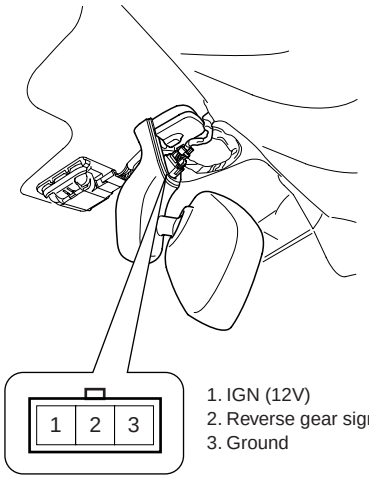

SCMBE6370L

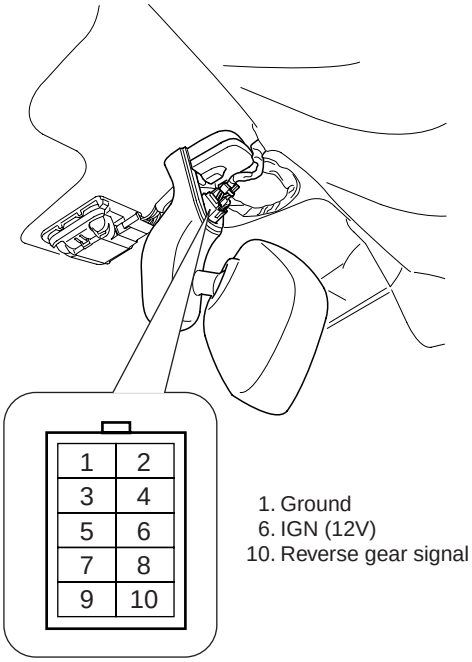

ETQE280J

1. The front looking sensor sees if the brightness of the surroundings is low enough for the mirror to operate its function.
2. The rearward looking sensor detects glaring of the reflecting light from a vehicle behind.
3. The ECM is darkened to the level as determined by the rearward looking sensor. When the glaring is no longer detected, the mirror stops functioning.

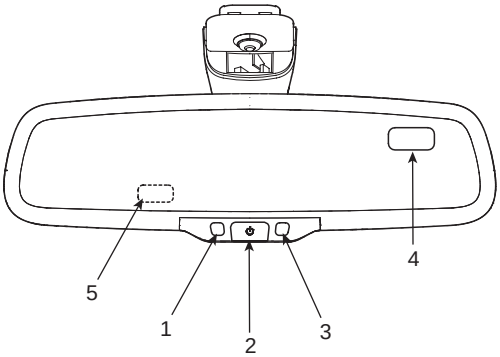

1. Status Indicator LED
2. Buttom
3. Rear indicator
4. Rear light sensor
5. Front light sensor

SCMBE6371L

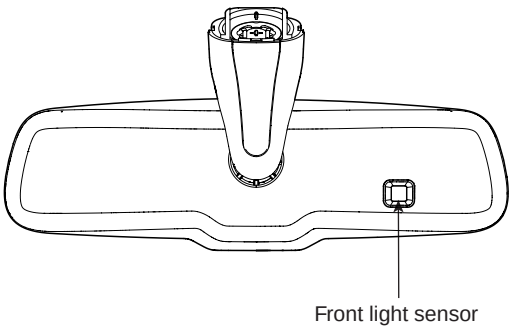

ETBF410C

AUTOMATIC-DIMMING FUNCTION EF840FF2

To protect your vision during nighttime driving, your mirror will automatically dim upon detecting glare from the vehicles traveling behind you. The auto-dimming function can be controlled by the Dimming ON/OFF Button :

1. Pressing and holding the Feature Control button for more than 3 but less than 6 seconds turns the auto-dimming function OFF which is indicated by the green Status Indicator LED turning off.

2. Pressing and holding the Feature Control button again for more than 3 but less than 6 seconds turns the auto-dimming function ON which is indicated by the green Status Indicator LED turning on.

NOTE

The mirror defaults to the "ON" position each time the vehicle is started.

INSPECTION EEF84EDF

Check it by the procedure below to see if the function of the ECM is normal.

1. Turn the ignition key to the "ON" position.

2. Cover the front looking sensor to stop functioning.

3. Head a light to the rearward looking sensor.

4. The ECM should be darkened as soon as the rearward looking sensor detects the light.

NOTE

If this test is performed in daytime, the ECM may be darkened as soon as the front looking sensor is covered.

5. When the reverse gear is engaged, the ECM should not be darkened.
   When heading lights to both the front looking and rearward looking sensors, the ECM should not be darkened.

REPLACEMENT EF3DC08D

1. Push the inside rear view mirror base down to remove the inside rear view mirror assembly (A) after removing the mirror wire cover.

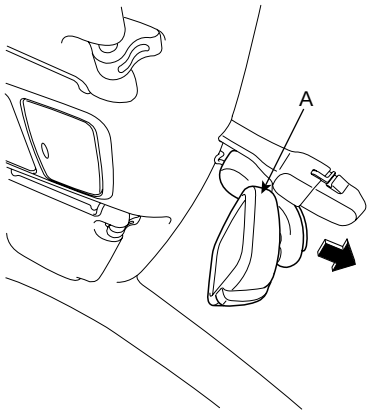

SCMBE6373D

NOTE

Mirror it adheres closely in the mirror base (A) and it separates while removing the mirror (B).
Make sure the spring mounting bracket (C) of the mirror not to be damaged.

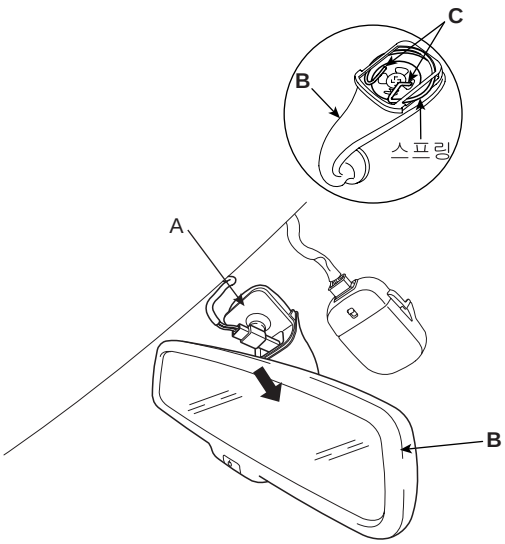

SCMBE6375D

2. Installation is the reverse of removal.

COMPASS MIRROR

DESCRIPTION EDD9985F

The compass feature is designed to be integrated into an electro chromic interior rearview mirror.

The mirror assembly shall display a compass heading. The compass mirror then take the sensor information to determine static field strengths and rotating field information to determine an accurate compass heading.

SPECIFICATION

Item	Standard value
Rate voltage	DC 12V
Operating voltage range	DC9 ~ 16V
Operating temperature range	-30 ~ +65°C
Direction display	8
Renewal time	2 sec.

SWITCH POINT ACCURACY

The compass module shall, while compensating for the vehicle magnetic fields, until the Earth's varying magnetic fields to determine direction.

[SWITCH POINTS]

Switch point	Heading ± 10°
N - NE	22.5
NE - E	67.5
E - SE	112.5
SE - S	157.5
S - SW	202.5
SW - W	247.5
W - NW	292.5
NW - N	337.5

NOTE

There should be hysteresis at each switch point. Switch points between the 8 cardinal directions, these switch points are ± 10°

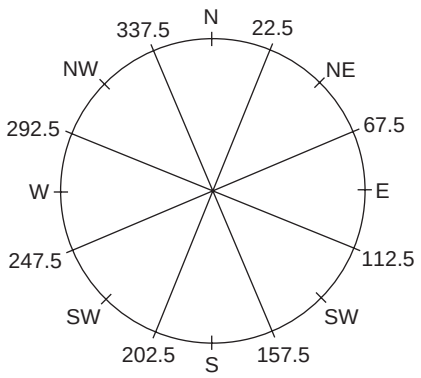

ETQF241F

COMPASS DISPLAY INTERVAL

Compass display should be updated at every two seconds.

FUNCTION EE94334D

The compass can be turned ON and OFF and will remember the last state when the ignition is cycled. To turn the display feature ON/OFF :

1. Press and release the feature control button (A) to turn the display feature OFF.
2. Press and release the feature control button (A) again to turn the display back ON.
   Additional options can be set with press and hold sequences of the feature control button (A) and are detailed below.

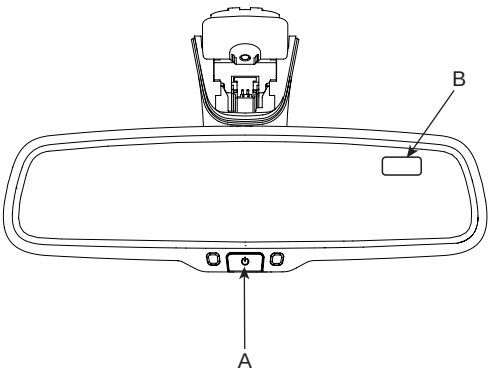

ETQF241C

There is a difference between magnetic north and true north. The compass in the mirror can compensate for this difference when it knows the magnetic zone in which it is operating. This is set either by the dealer or by the user.

ADJUSTMENT EE10EDCF

CALIBRATION PROCEDURE

If the display read "C", calibrate the compass.

1. Driving the vehicle in a circle at less than 8km/h 3 times or until the compass heading appears.
2. Driving in a circle in right-handed direction and opposite direction are possible, and if the calibration is completed, the compass heading will appear.
3. Keep driving in a circle until a commpass heading appears.

TO ADJUST THE ZONE SETTING :

1. Determine the desired zone number based upon your current location on the zone maps.
2. Press and hold the Feature Control button for more than 6 but less than 9 seconds, the current zone number will appear on the display (B).
3. Pressing and holding the feature control button (A) again will cause the numbers to increment (Note: they will repeat ⋯13, 14, 15, 1, 2,..). Releasing the button when the desired zone number appears on the display will set the new zone.
4. Within about 5 seconds the compass will start displaying a compass heading again.

TO RE-CALIBRATE THE COMPASS :

There are some conditions that can cause changes to the vehicle magnets. Items such as installing a ski rack or a antenna or even some body repair work on the vehicle can cause changes to the vehicle’s magnetic field. In these situations, the compass will need to be re-calibrated to quickly correct for these changes.

1. Press and hold the feature control button (A) for more than 9 seconds. When the compass memory is cleared, a "C" will appear in the display (B).
2. To calibrate the compass, drive the vehicle is 2 complete circles at less than 8 KPH (5 MPH).

ZONE MAP

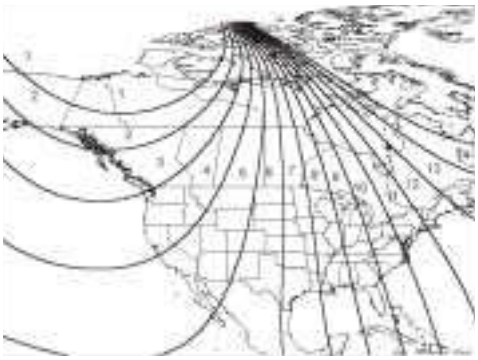

NORTH AMERICA

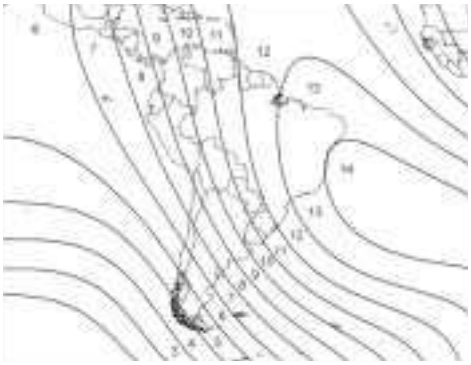

SOUTH AMERICA

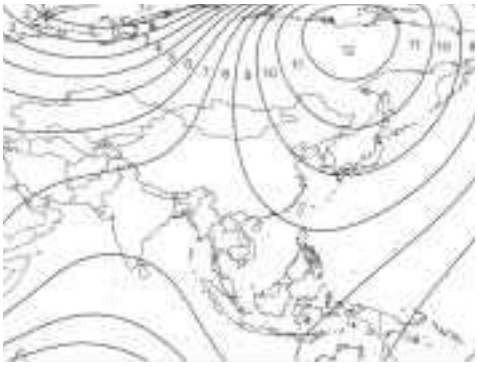

ASIA

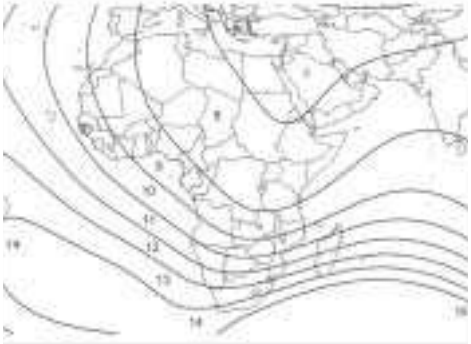

AFRICA

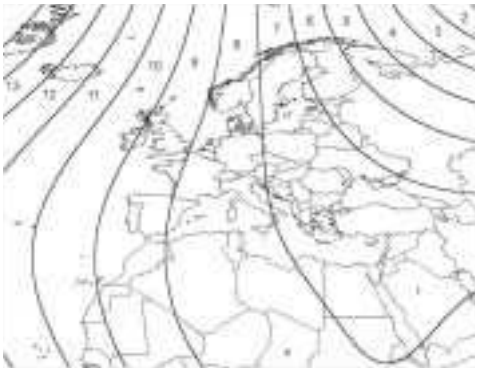

EUROPE

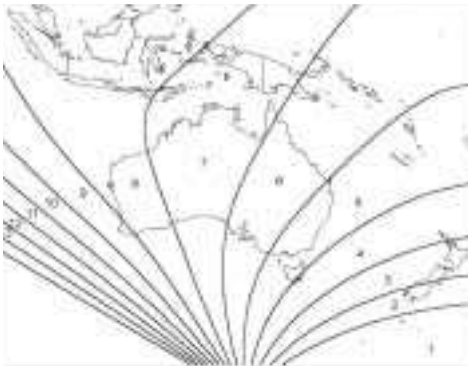

AUSTRALIA

ETQF241D

POWER SEAT

COMPONENT LOCATION EC5CFA07

This illustration shows the LHD type.
RHD type is symmetrical.

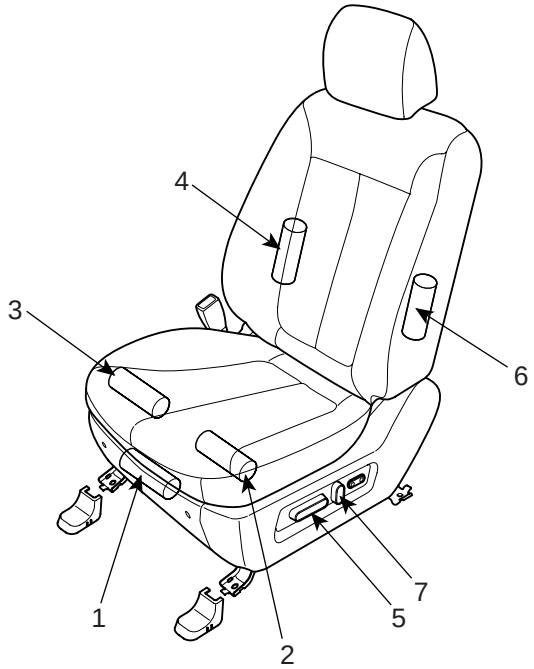

1. Slide motor
2. Front height motor
3. Rear height motor
4. Reclining motor
5. Power seat switch
6. Lumbar support motor
7. Reclining switch

SCMBE6390L

POWER SEAT MOTOR

INSPECTION E6BDAD4F

SLIDE MOTOR LIMIT SWITCH

1. Disconnect the limit switch (A) and operate the limit switch.
2. Check for continuity between the terminals.
3. Make sure that the seat operation is normal in the reverse after the maximum operation.
4. If there is an abnormality, replace the limit switch.

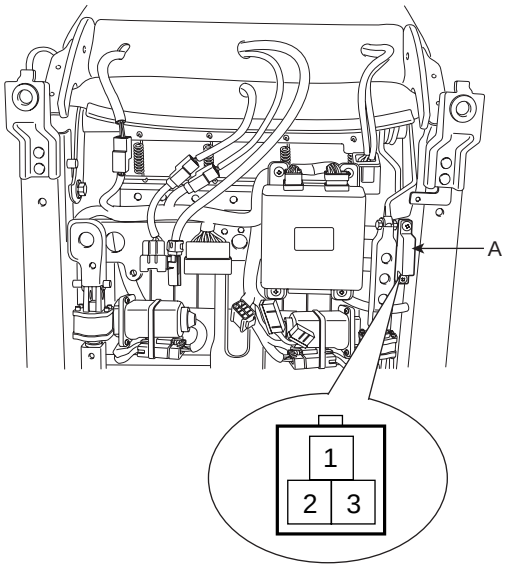

SCMBE6391D

Terminal NO. / Position	1	2	3
Frontward	○	———	○
Backward	○	———	○

ETRF421B

RECLINING MOTOR LIMIT SWITCH

1. Disconnect the limit switch and operate the limit switch.
2. Check for continuity between the terminals.
3. Make sure that the seat operation is normal in the reverse after the maximum operation.
4. If there is an abnormality, replace the limit switch.

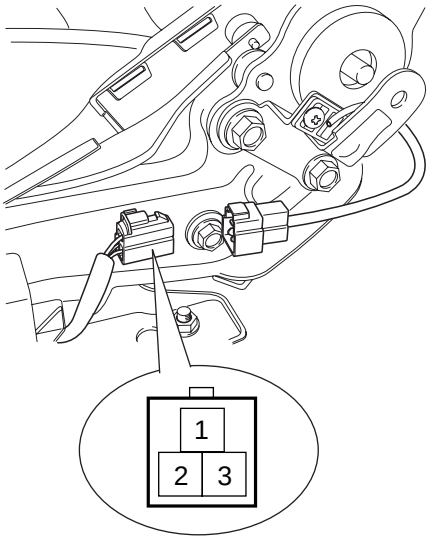

SCMBE6393D

Terminal NO. / Position	1	2	3
Frontward	○	———	○
Backward	○	———	○

ETRF421B

POWER SEAT MOTOR

1. Disconnect the connectors for each motor.

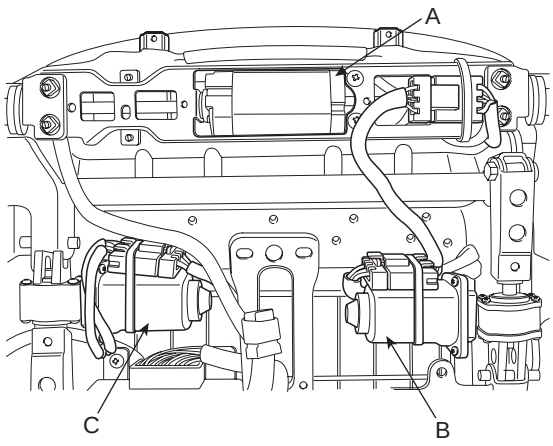

SCMBE6395D

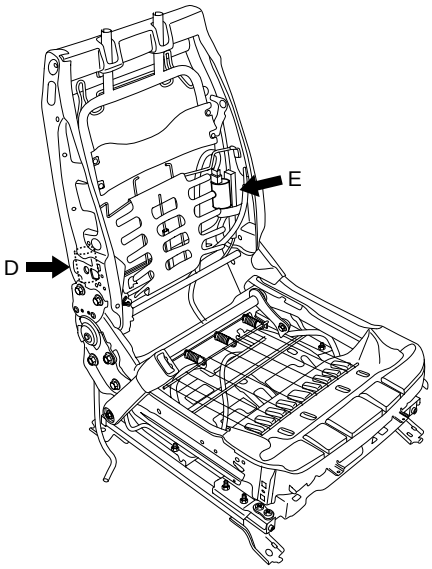

SCMBE6396D

2. With the battery connected directly to the motor terminals, check if the motors run smoothly.

3. Reverse the connections and check that the motor turns in reverse.

4. If there is an abnormality, replace the motors.

Position \ Terminal		1	2
Slide motor A	Frontward	⊕	⊖
	Backward	⊖	⊕
Front height motor B	UP	⊖	⊕
	DOWN	⊕	⊖
Rear height motor C	UP	⊕	⊖
	DOWN	⊖	⊕
Reclining motor D	Forward	⊖	⊕
	Rearward	⊕	⊖
Lumbar support E	Forward	⊕	⊖
	Rearward	⊖	⊕

SCMBE6398L

POWER SEAT SWITCH

INSPECTION E6FC0DFE

1. With the power seat switch in each position, make sure that continuity exists between the terminals below. If continuity is not as specified, replace the power seat switch.

[LHD]

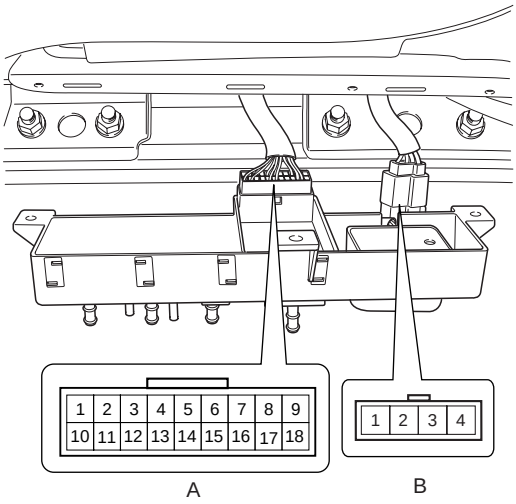

SCMBE6400D

[RHD]

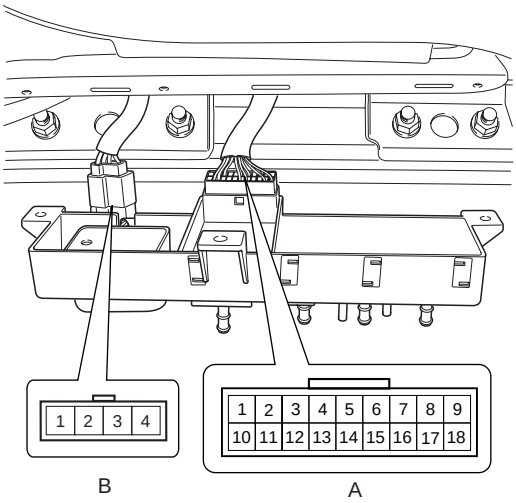

SCMBE6400R

Power seat switch connector A

( ) : RHD

	Height switch					Seat switch					Height switch (Backward)						Reclining switch				
	Left		Right		Frontward	Left			Right		Left		Right		Frontward			Left		Right	
	UP	DOWN	UP	DOWN	Height	SEAT	F	R	F	R	UP	DOWN	UP	DOWN	HEI LH	HEI RH	REC	Height	R	F	R
17(11)	○	○	○	○			○	○	○	○	○	○	○	○				○	○	○	○
11(17)						○	○	○	○	○											
10(18)						○	○	○	○	○											
6(4)						○		○	○												
5(5)						○	○			○											
8(2)																	○	○	○	○	○
18(10)																	○	○	○	○	○
15(13)																	○	○			○
16(12)																	○		○	○	
2(8)	○	○	○	○	○																
4(6)	○	○	○	○	○																
1(9)	○			○	○																
3(7)		○	○		○																
13(15)											○	○	○	○	○	○					
14(14)											○	○	○	○	○	○					
12(16)											○		○		○	○					
7(3)												○		○	○	○					

Driver lumbar connector B ( ) : RHD

	L/SUPT SW		
	RR	N	FR
1(4)	○		○
2(3)		○ ○	
3(2)		○	○
4(1)	○	○	

SCMBE6401L

SEAT WARMER

COMPONENT LOCATION E4F9F24F

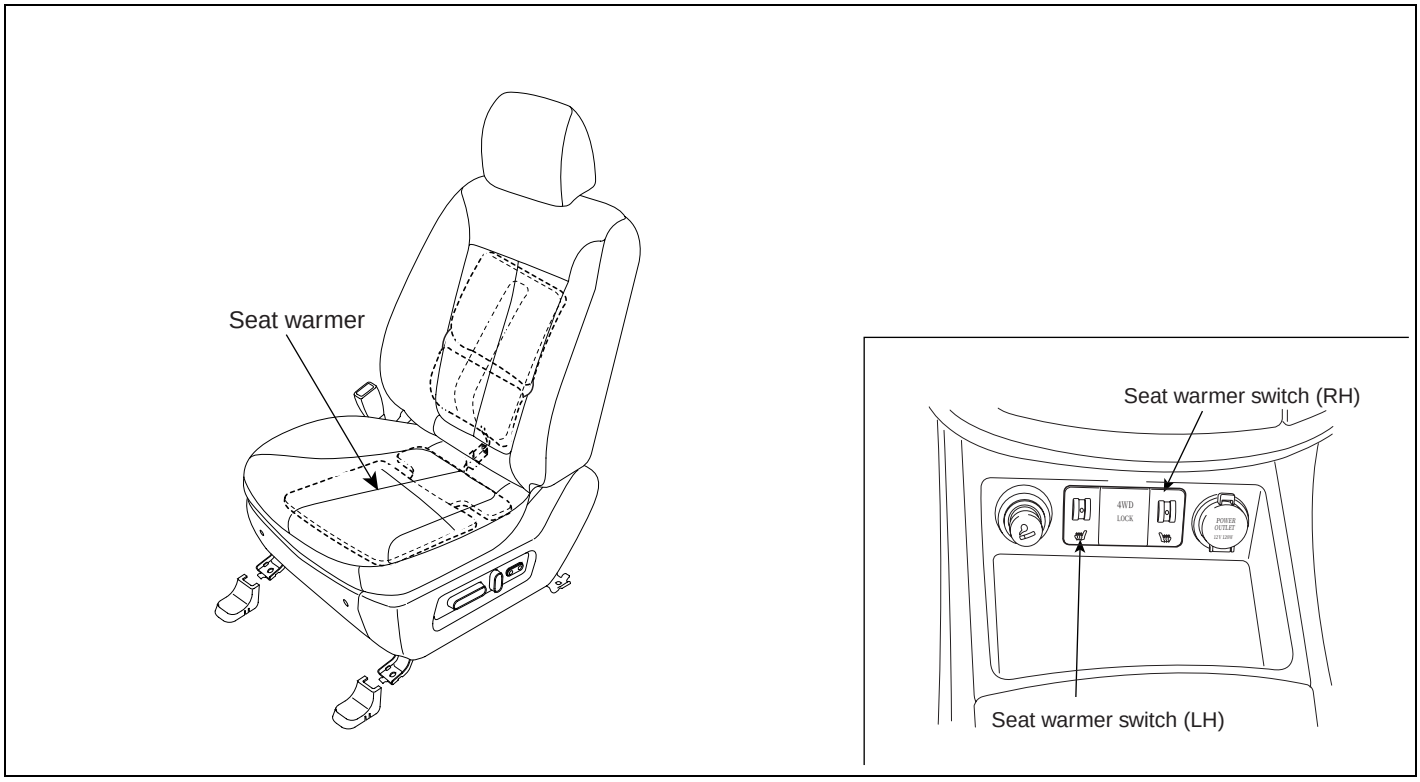

SCMBE6380L

CIRCUIT DIAGRAM E40A63EF

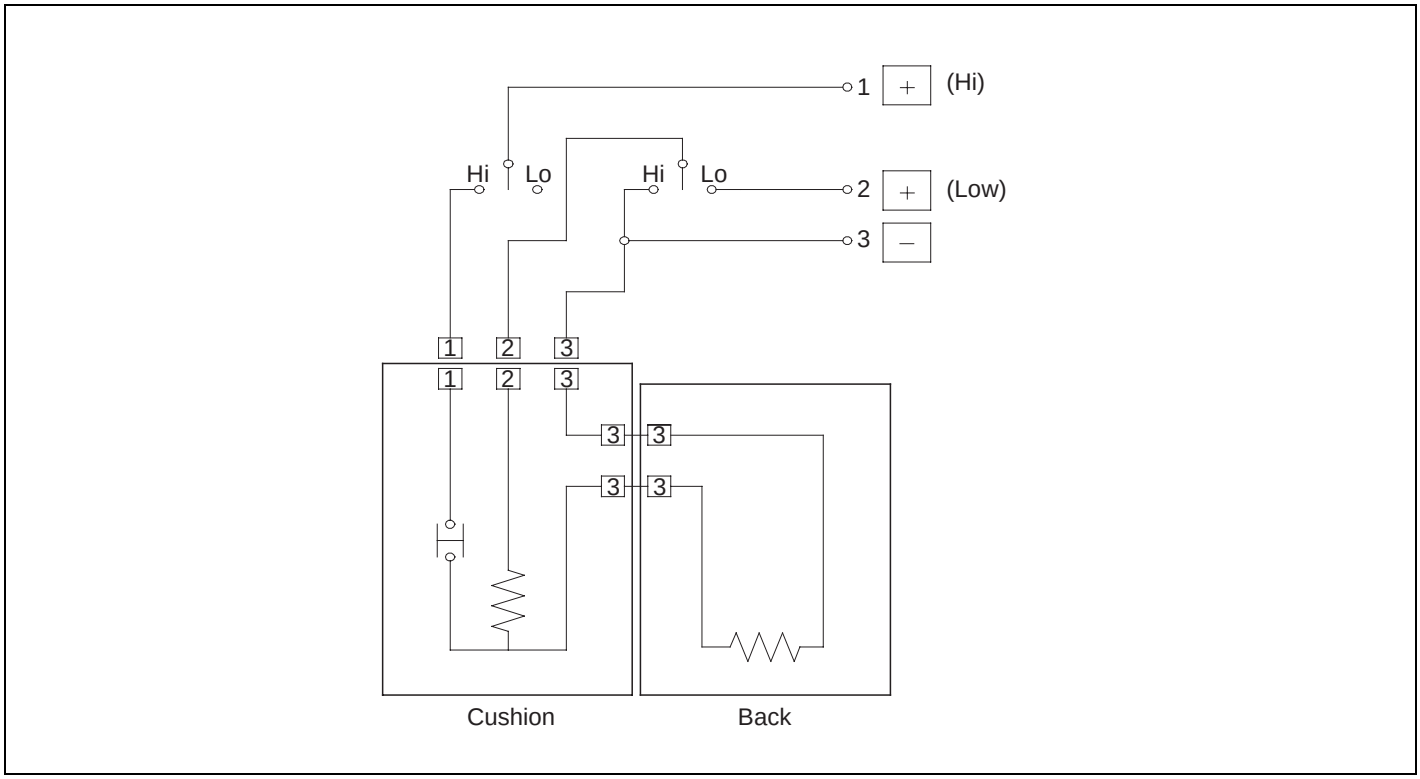

SCMBE6381L

SEAT WARMER SWITCH

INSPECTION EE2C00FE

FRONT SEAT WARMER SWITCH

1. Disconnect the negative (-) battery terminal.
2. Remove the seat warmer switch (A) with scraper.

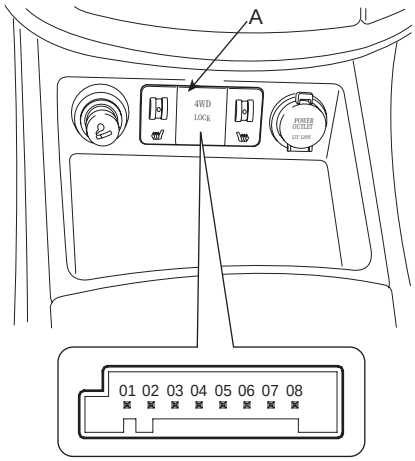

SCMBE6382D

3. Check that continuity exists between the terminals.

Terminal / Position	2	6	3	4	1
ON				IND.	
OFF		Illumina-tion			

ETRF441B

SEAT WARMER

INSPECTION EBA3D9F7

1. Check for continuity and measure the resistance between No.1 and NO.3 terminals.

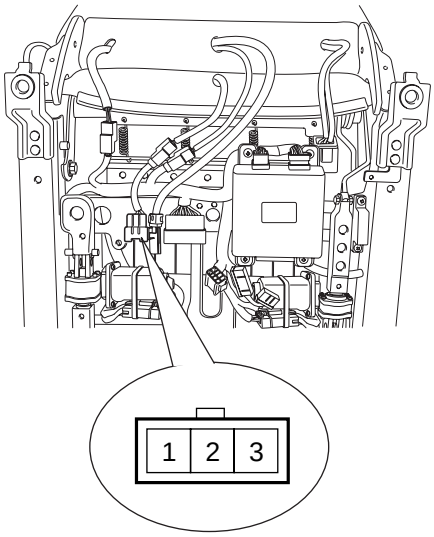

SCMBE6383D

Standard value
Cushion : 4.73Ω ± 10%, Back : 34.97Ω ± 10%

2. Operate the seat warmer after connecting the 3P connector, and then check the thermostat by measuring the temperature of seat surface.

3. Check for continuity between the terminals after disconnecting the connector.

Standard value
HI : 42 ± 2°C (Cushion), 52 ± 2°C (Back)

Terminal / Position	1	2	3
HIGH	⊕	⊖	⊖
LOW		⊕	⊖

SCMBE6384L

SUNROOF

COMPONENT LOCATION EFAD0C7C

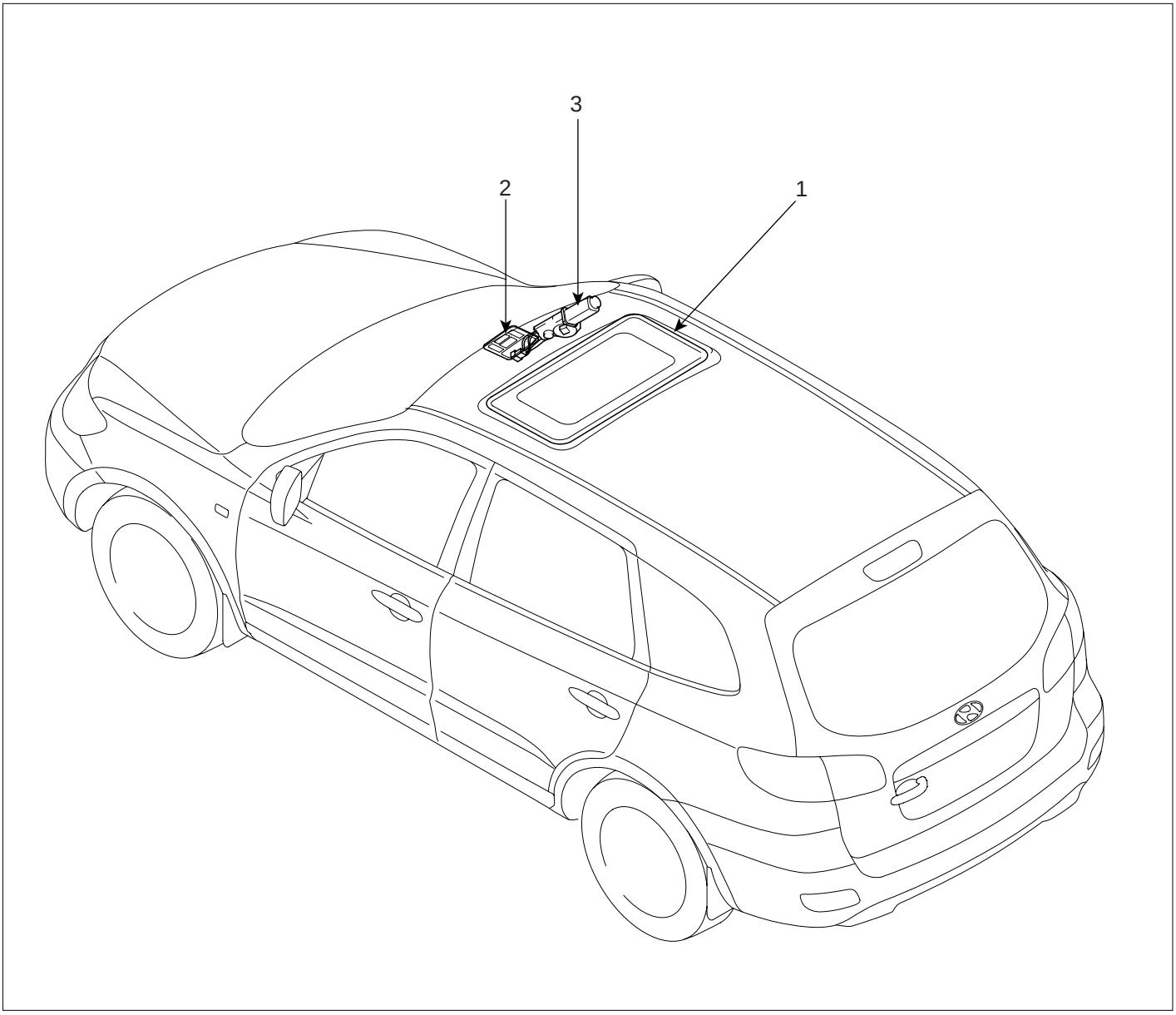

1. Sunroof
2. Sunroof switch
3. Sunroof motor & controller

SCMBE6420L

CIRCUIT DIAGRAM E3BAFCEA

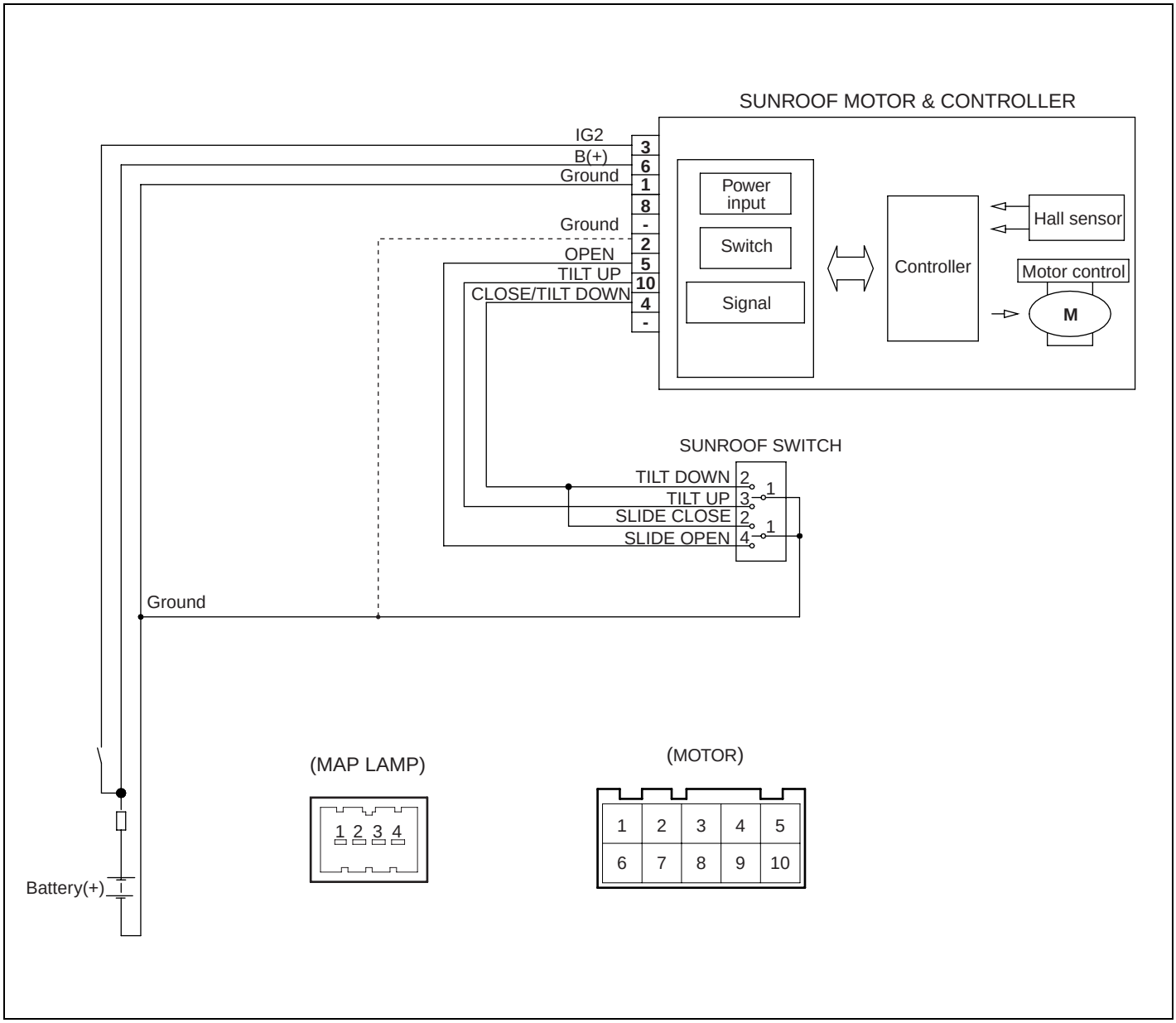

SCMBE6421L

SUNROOF SWITCH

INSPECTION E3FE5982

1. Disconnect the negative (-) battery terminal.

2. Open the sunglass case cover from the overhead console then remove the 2 screws holding the overhead console. Disconnect the switch connector (4P) and Map lamp connector (2P), and then remove the overhead console lamp.

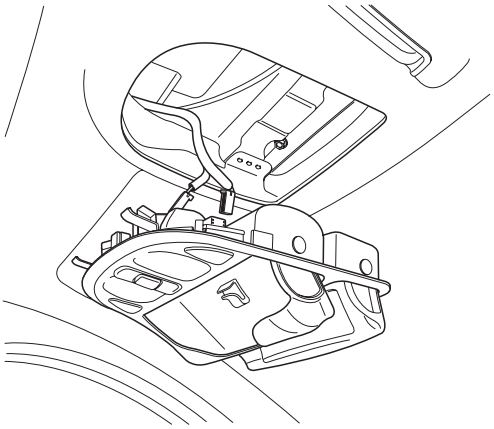

SCMBE6422D

3. Check for continuity between the terminals. If the continuity is not as specified, replace the sunroof switch.

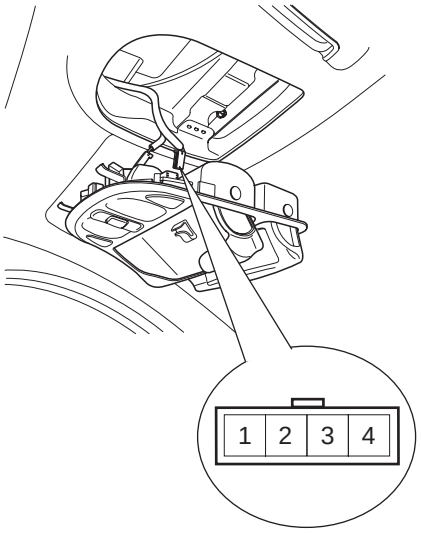

[Switch side connector]

SCMBE6423L

Position \ Terminal	1	2	3	4
SLIDE OPEN	○			○
CLOSE/DOWN	○	○		
TILT UP	○		○	

SCMBE6424L

SUNROOF MOTOR

REPLACEMENT E7FAABC1

1. Disconnect the negative (-) battery terminal.

2. Remove the overhead console then remove the sun roof motor mounting screws (3EA). And then remove the sunroof motor after disconnecting the connector (10 Pin).

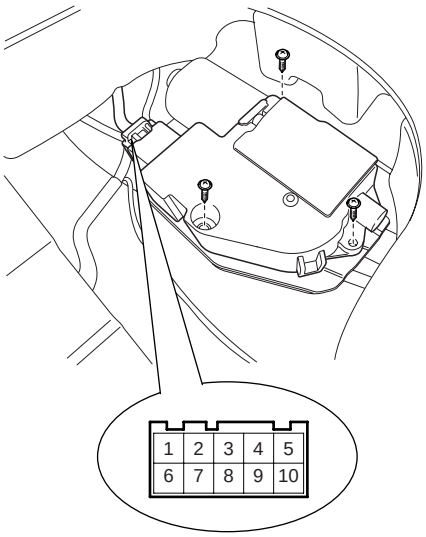

SCMBE6425D

3. Ground the terminals as below table, and check that the sunroof unit operates as below table.

Position \ Terminal	3	4	5	10
TILT UP	⊕			⊖
SLIDE CLOSE/DOWN	⊕	⊖		
SLIDE OPEN	⊕		⊖	

ETQF965A

4. Make these input tests at the connector
   if any test indicates a problem, find and correct the cause, then recheck the system.
   If all the input tests prove OK, the sunroof motor must be faulty; replace it.

Terminal	Test condition	Test : Desired result
3	IG2 ON	Check for voltage to ground : There should be battery voltage
1	Under all conditions	Check for continuity to ground : There should be continuity.
6	Under all conditions	Check for voltage to ground : There should be battery voltage.

RESETTING THE SUNROOF

Whenever the vehicle battery is disconnected or discharged, or you use the emergency handle to operate the sunroof, you have to reset your sunroof system as follows :

1. Turn the ignition key to the ON position.

2. According to the position of the sunroof, do as follows.

   1) In case that the sunroof has closed completely or been tilted :
      Press the TILT button until the sunroof has tilted upward completely.

   2) In case that the sunroof has slide-opened :
      Press and hold the CLOSE button for more than 5 seconds until the sunroof has closed completely.
      Press and hold the CLOSE button for more than 5 seconds after the sunroof has closed completely.
      Press the TILT button until the sunroof has tilted upward completely.

3. Release the TILT button.

4. Press and hold the TILT button once again until the sunroof has returned to the original position of TILT after it is raised a little higher than the maximum TILT position.
   When this is complete, the sunroof system is reset.

LIGHTING SYSTEM

SPECIFICATION E46B93B3

Items	Bulb Wattage (W)
Head lamp (High)	55
Head lamp (Low)	35
Front turn signal lamp	21
Front position lamp	6
Front fog lamp	27
Rear stop/tail lamp (Outside)	8/27
Back up lamp	16
Rear turn signal lamp	21
Rear fog lamp - Europe	21
License plate lamp	5
Side repeater	5
Room lamp	10
Overhead console lamp	10
High mounted stop lamp	5
Glove box lamp	5
Rear map lamp	10

COMPONENT LOCATION EE6A464F

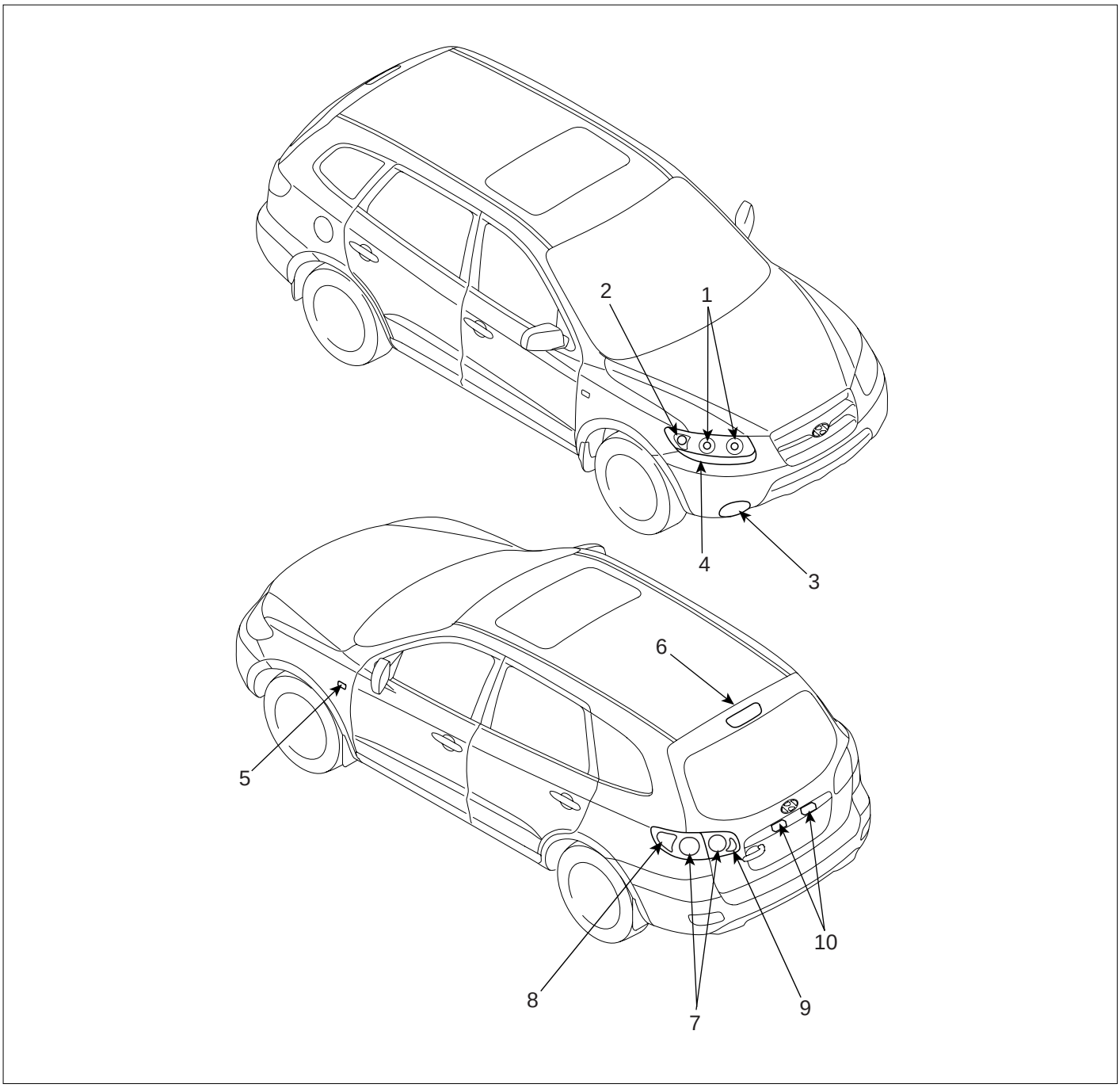

1. Head lamp (High/Low)
2. Front turn signal lamp
3. Front fog lamp
4. Position lamp
5. Side repeater
6. High mounting stop lamp
7. Tail/stop lamp
8. Rear turn signal lamp
9. Back up lamp
10. License plate lamp

SCMBE6430L

TROUBLESHOOTING E4993738

Symptom	Possible cause	Remedy
One lamp does not light (all exterior)	Bulb burned out	Replace bulb
	Socket, wiring or ground faulty	Repair if necessary
Head lamps do not light	Bulb burned out	Replace bulb
	Ignition fuse (LOW:15A, HIGH:15A) blown	Check for short and replace fuse
	Head lamp fuse (15A) blown	Check for short and replace fuse
	Head lamp relay faulty	Check relay
	Lighting switch faulty	Check switch
	Wiring or ground faulty	Repair if necessary
Tail lamps and license plate lamps do not light	Bulb burned out	Replace bulb
	Tail lamp fuse (20A) blown	Check for short and replace fuse
	Tail lamp relay faulty	Check relay
	Lighting switch faulty	Check switch
	Wiring or ground faulty	Repair if necessary
Stop lamps do not light	Bulb burned out	Replace bulb
	Stop lamp fuse (15A) blown	Check for short and replace fuse
	Stop lamp switch faulty	Adjust or replace switch
	Wiring or ground faulty	Repair if necessary
Stop lamps do not turn off	Stop lamp switch faulty	Repair or replace switch
Instrument lamps do not light (Tail lamps light)	Rheostat faulty	Check rheostat
	Wiring or ground faulty	Repair if necessary
Turn signal lamp does not flash on one side	Bulb burned out	Replace bulb
	Turn signal switch faulty	Check switch
	Wiring or ground faulty	Repair if necessary
Turn signal lamps do not light	Bulb burned out	Replace bulb
	Turn signal lamp fuse (10A) blown	Check for short and replace fuse
	Flasher unit faulty	Check flasher unit
	Turn signal switch faulty	Check switch
	Wiring or ground faulty	Repair if necessary
Hazard warning lamps do not light	Bulb burned out	Replace bulb
	Hazard warning lamp fuse (15A) blown	Check for short and replace fuse
	Flasher unit faulty	Check flasher unit
	Hazard switch faulty	Check switch
	Wiring or ground faulty	Repair if necessary
Flasher rate too slow or too fast	Lamps' wattages are smaller or larger than specified	Replace lamps
	Flasher unit faulty	Check flasher unit

Symptom	Possible cause	Remedy
Back up lamps do not light	Bulb burned out	Replace bulb
	Back up lamp fuse (10A) blown	Check for short and replace fuse
	Back up lamp switch (M/T) faulty	Check switch
	Transaxle range switch (A/T) faulty	Check switch
	Wiring or ground faulty	Repair if necessary
Room lamp does not light	Bulb burned out	Replace bulb
	Room lamp fuse (15A) blown	Check for short and replace fuse
	Room lamp switch faulty	Check switch
	Wiring or ground faulty	Repair if necessary
Front fog lamps do not light	Bulb burned out	Replace bulb
	Front fog lamp fuse (15A) blown	Check for short and replace fuse
	Front fog lamp relay faulty	Check relay
	Front fog lamp switch faulty	Check switch
	Wiring or ground faulty	Repair if necessary
Rear fog lamps do not light	Bulb burned out	Replace bulb
	Rear fog lamp fuse (10A) blown	Check for short and replace fuse
	Rear fog lamp fuse (15A) blown	Check for short and replace fuse
	Rear fog lamp switch faulty	Check switch
	Rear fog lamp relay faulty	Check relay
	Wiring or ground faulty	Repair if necessary
Map lamp does not light	Bulb burned out	Replace bulb
	Room lamp fuse (10A) blown	Check for short and replace fuse
	Map lamp switch faulty	Check switch
	Wiring or ground faulty	Repair if necessary
Trunk room lamp does not light	Bulb burned out	Replace bulb
	Room lamp fuse (10A) blown	Check for short and replace fuse
	Trunk room lamp switch faulty	Check switch
	Wiring or ground faulty	Repair if necessary

HEAD LAMPS

INSPECTION E76F89A5

HEAD LAMP RELAY INSPECTION

1. Pull out the head lamp relay (Low) (A) and head lamp relay (High) (B) from the engine compartment relay box.

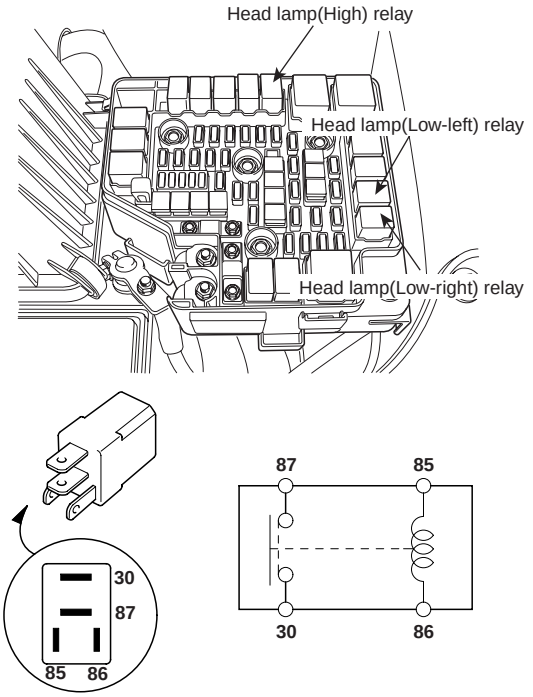

SCMBE6434L

2. Check for continuity between terminals. There should be continuity between the No.87 and No.30 terminals when power and ground are connected to the No.86 and No.85 terminals.

3. There should be no continuity between the No.87 and No.30 terminals when power is disconnected.

Terminal / Power	30	87	85	86
Disconnected			○	○
Connected	○	○	⊖	⊕

SCMBE6195L

REPLACEMENT E4FFBE43

1. Disconnect the negative (-) battery terminal.

2. Loosen the mounting bolts (2EA) and a nut of head lamp. Remove the head lamp assembly after disconnecting the lamp connectors.

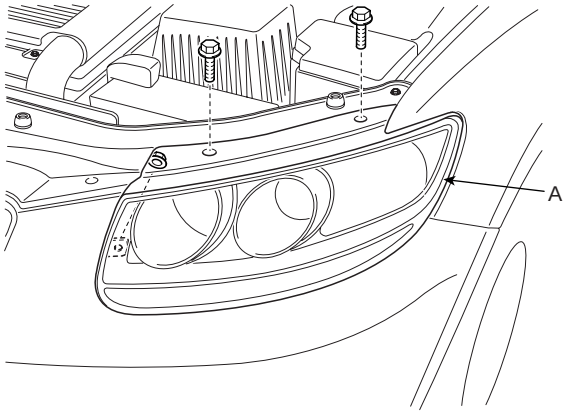

SCMBE6431D

NOTE

Take care that retaining clip (A) is not to be damaged.

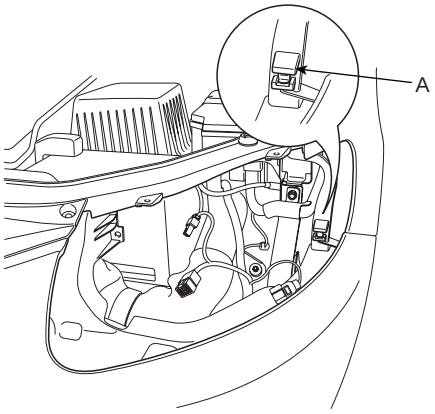

SCMBE6433D

3. Remove the head lamp bulb.

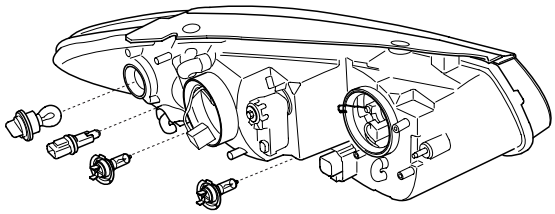

SCMBE6435L

4. Installation is the reverse of removal.

ADJUSTMENT EFD0DACA

HEAD LAMP AIMING INSTRUCTIONS

The head lamps should be aimed with the proper beam-setting equipment, and in accordance with the equipment manufacturer's instructions.

NOTE

If there are any regulations pertinent to the aiming of head lamps in the area where the vehicle is to be used, adjust so as to meet those requirements.

Alternately turn the adjusting gear to adjust the head lamp aiming. If beam-setting equipment is not available, proceed as follows :

1. Inflate the tires to the specified pressure and remove any loads from the vehicle except the driver, spare tire, and tools.
2. The vehicle should be placed on a flat floor.
3. Draw vertical lines (Vertical lines passing through respective head lamp centers) and a horizontal line (Horizontal line passing through center of head lamps) on the screen.
4. With the head lamp and battery in normal condition, aim the head lamps so the brightest portion falls on the horizontal and vertical lines.
   Make vertical and horizontal adjustments to the lower beam using the adjusting wheel.

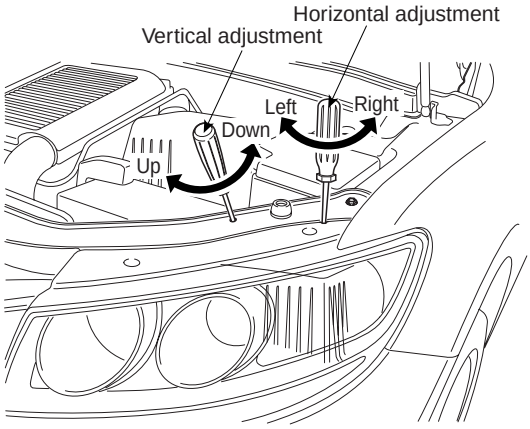

SCMBE6440L

FRONT FOG LAMP AIMING

The front fog lamps should be aimed as the same manner of the head lamps aiming.
With the front fog lamps and battery normal condition, aim the front fog lamps by turning the adjusting gear (A).

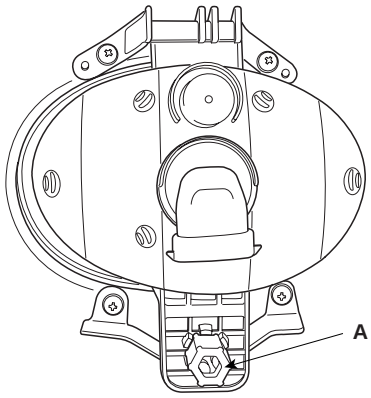

SCMBE6442D

HEAD LAMP AND FOG LAMP AIMING POINT

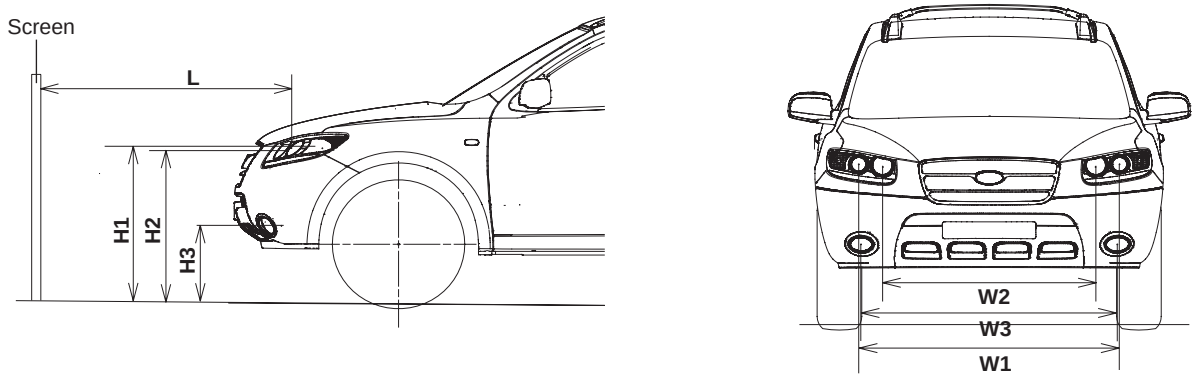

H1 : Height between the head lamp bulb center and ground (Low beam)
H2 : Height between the head lamp bulb center and ground (High beam)
H3 : Height between the fog lamp bulb center and ground
W1 : Distance between the two head lamp bulbs centers (Low beam)
W2 : Distance between the two head lamp bulbs centers (High beam)
W3 : Distance between the two fog lamp bulbs centers
L : Distance between the head lamp bulb center and screen

SCMBE6443L

Unit : in (mm)

Vehicle condition	H1	H2	H3	W1	W2	W3	L
Without driver	35(889)	34.4(875)	17.5(445)	55.2(1,402)	45.0(1,144)	54.2(1,378)	118(3,000)
With driver	34.7(883)	34.2(869)	17.2(439)				

SCMBE6444L

1. Turn the low beam on without the driver aboard.
   The cut-off line should be projected in the allowable range (shaded region).
   In case of equipping with the manual leveling device, set the leveling device switch on the "O" position.

In case of equipping with the auto leveling device, set the initialization by using the diagnostic tool before aiming.

[LHD]

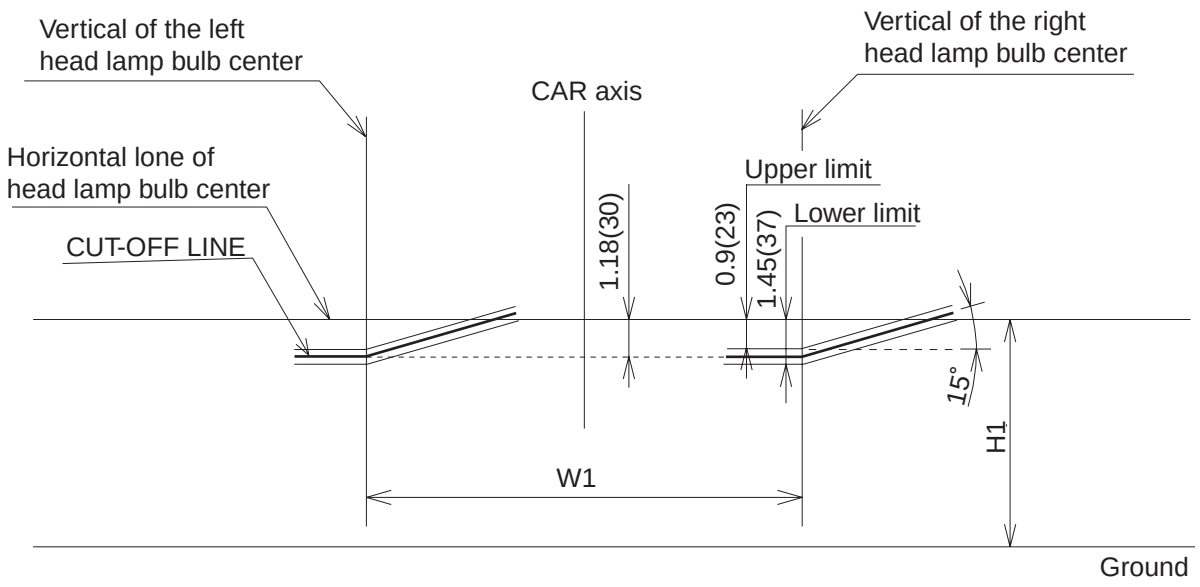

Unit : in.(mm)

SCMBE6445L

[RHD]

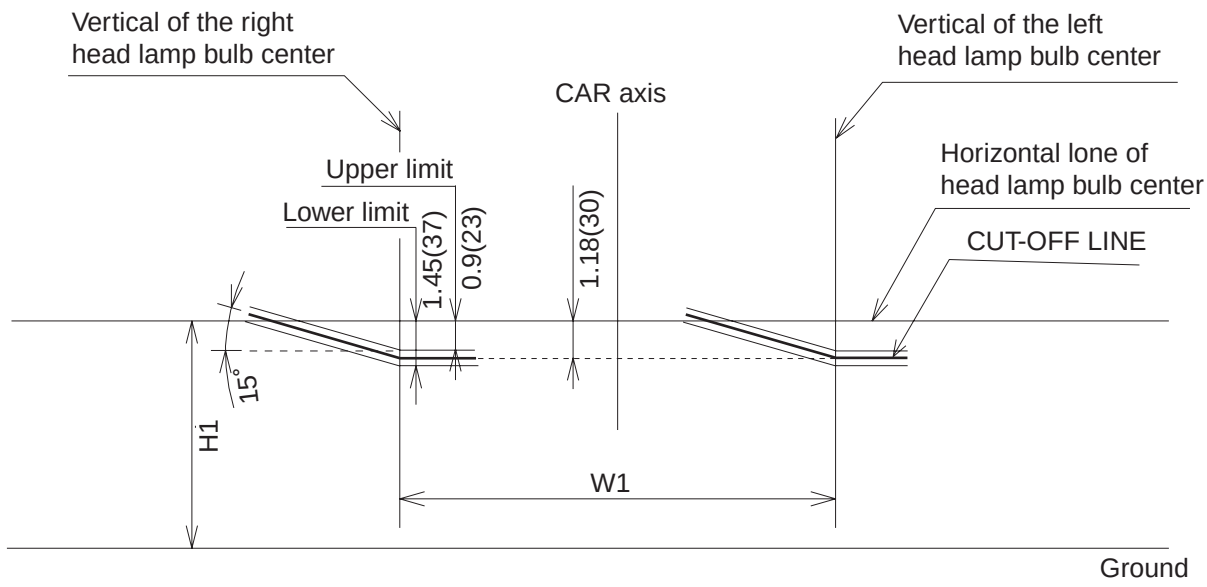

Unit : in.(mm)

SCMBE6459L

2. Turn the high beam on without the driver aboard.
   The cut-off line should be projected in the allowable range (shaded region).

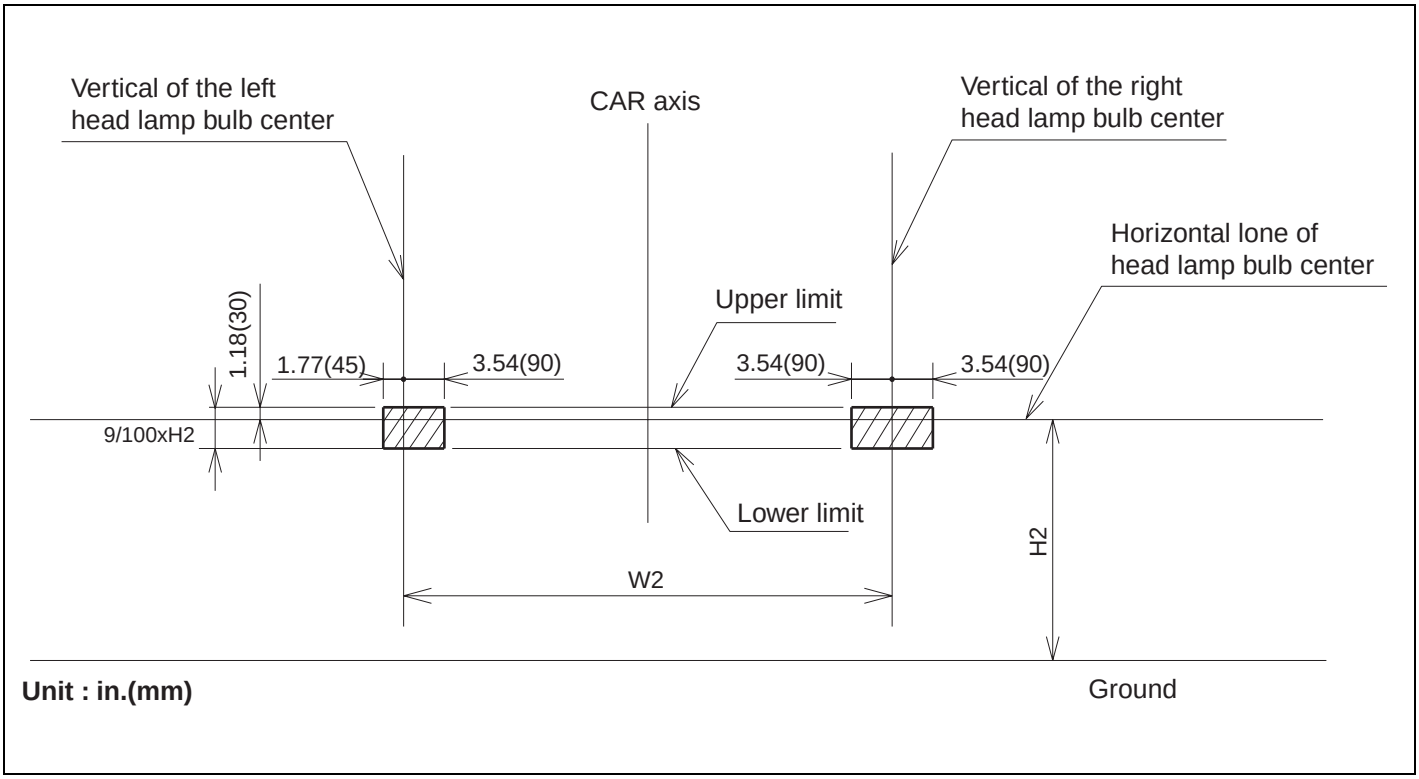

SCMBE6446L

3. Turn the front fog lamp on without the driver aboard.
   The cut-off line should be projected in the allowable range (shaded region)

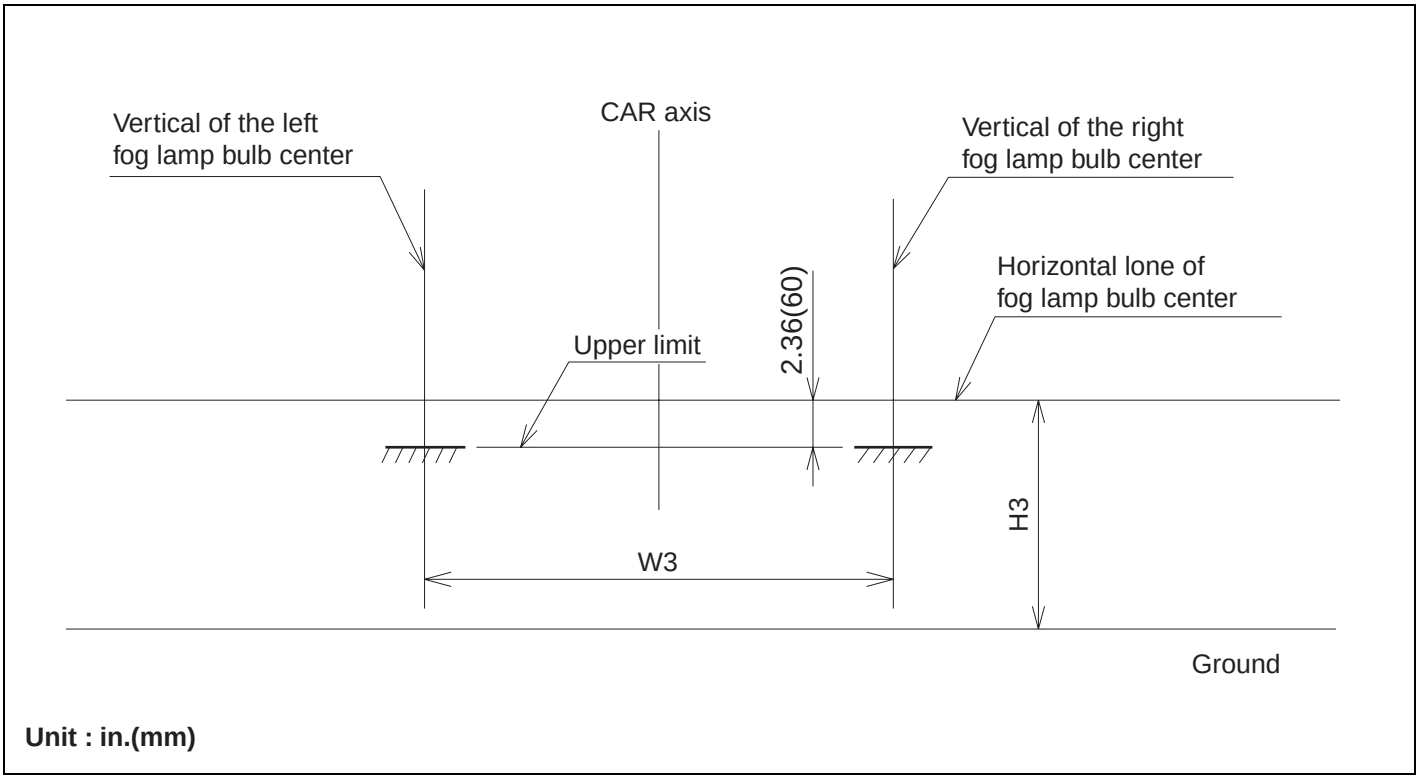

SCMBE6447L

TURN SIGNAL LAMP

REPLACEMENT EEF3E5C7

1. Disconnect the negative (-) battery terminal.
2. Loose the screws (3EA) holding the rear combination lamp then disconnect the 4P connector then remove the outside rear combination lamp.

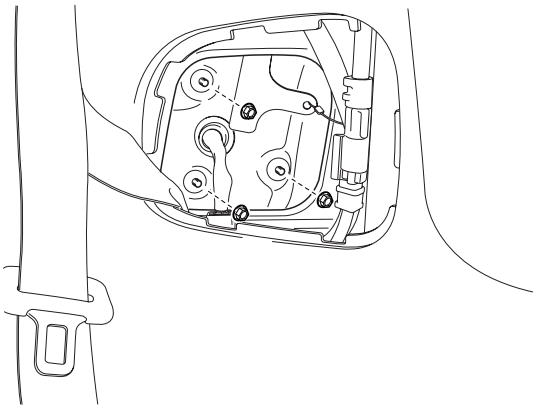

SCMBE6448D

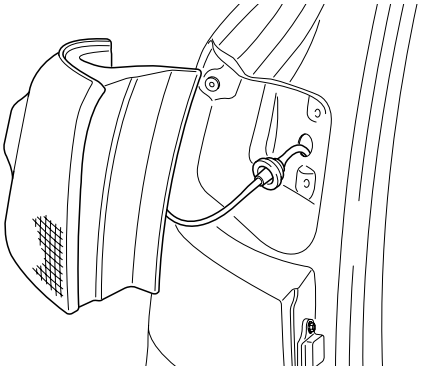

SCMBE6449D

3. Replace the bulbs (2EA) after disconnecting the rear combination lamp assembly..

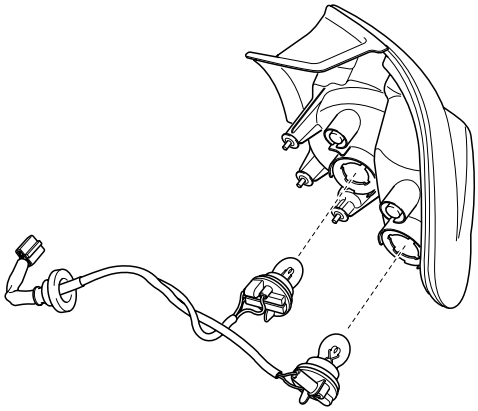

SCMBE6450D

4. Disconnect the lamp cover on tailgate. Remove the lamp assembly after loosening the connector (4pin), Cap nuts (2EA) and nuts (2EA).
5. Remove the tailgate combination lamp assembly and the replace the bulbs.

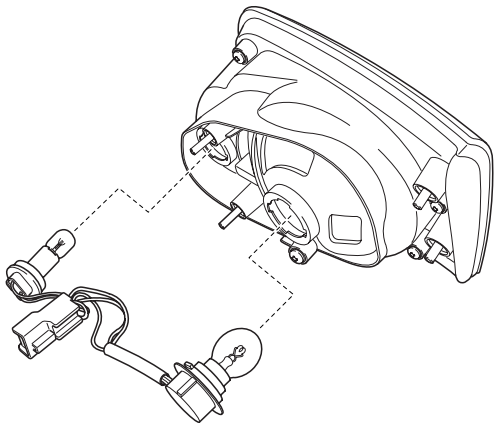

SCMBE6451D

6. Installation is the reverse of removal.

ROOM LAMP

INSPECTION EA676E05

1. Remove the room lamp assembly then check for continuity between terminals.

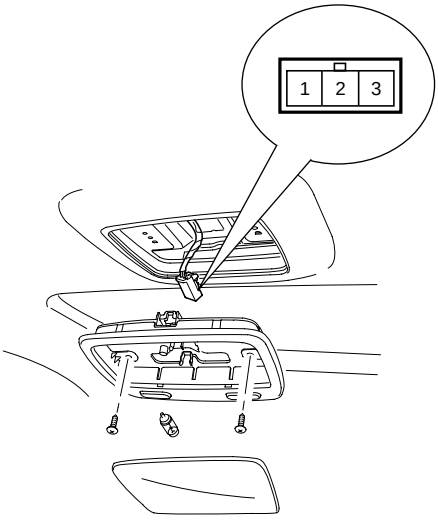

SCMBE6453L

Position \ Terminal	1	2	3
ON		○—◎—○	
DOOR	○—◎—○		
OFF			

SCMBE6454L

REPLACEMENT E342AAEF

1. Disconnect the negative (-) battery terminal.
2. Detach the lamp lens (A) from the room lamp with a flat-tip screwdriver then replace the bulb.
3. Loosen the fixing screw (2EA) and disconnect the 3P connector. And then remove the room lamp assembly.

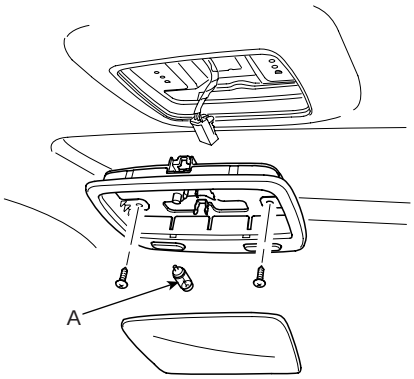

SCMBE6452D

4. Installation is the reverse of removal.

OVERHEAD CONSOLE LAMP

INSPECTION E0EDDEFD

Remove the overhead console lamp assembly then check for continuity between terminals. If the continuity is not as specified, replace the map lamp switch.

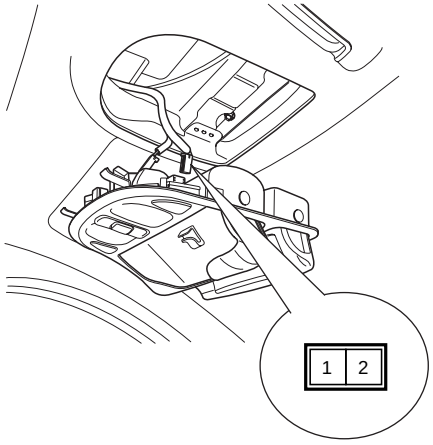

SCMBE6457D

Sort / Position / Terminal	Map lamp switch			
	LH		RH	
	ON	OFF	ON	OFF
1	○		○	
2	○		○	

ETKE007M

REPLACEMENT E0EB8DD4

1. Disconnect the negative (-) battery terminal.
2. Replace the bulb after removing the lens.
3. Remove the 2 screws, sunroof switch connectors (4Pin / 2Pin). And then remove the overhead consol (A), lamp (B).

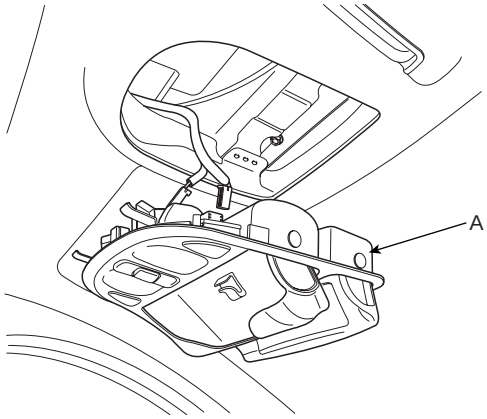

SCMBE6455D

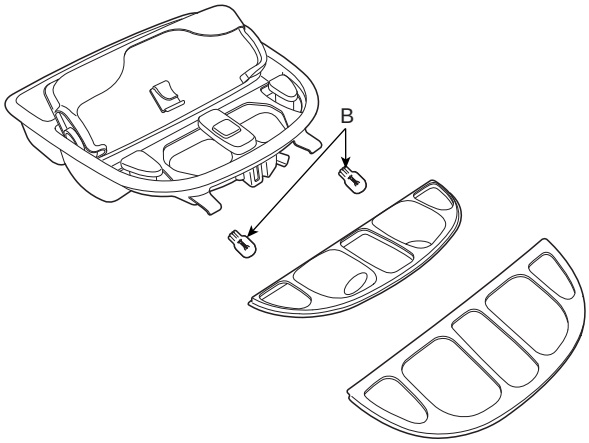

SCMBE6456D

4. Installation is the reverse of removal.

TURN ／ HAZARD LAMPS

INSPECTION EBC7E7BC

HAZARD LAMP SWITCH

1. Disconnect the negative (-) battery terminal.
2. Remove the crash pad center speaker grill (A).

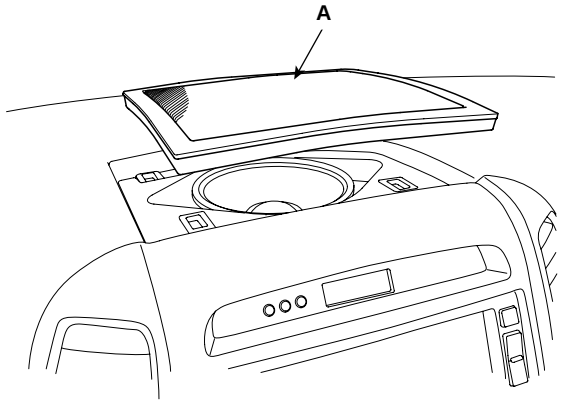

SCMBE6460D

3. Remove the center speaker (A) after loosening the screws (2EA).

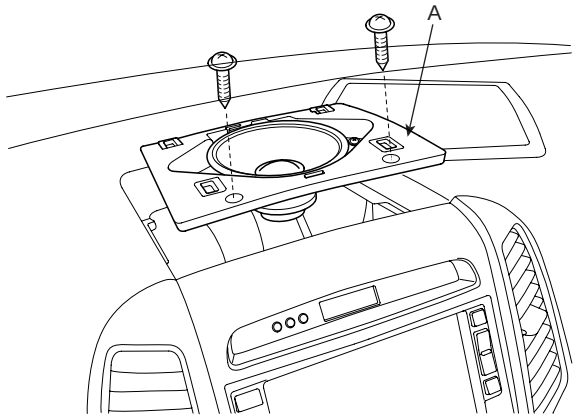

SCMBE6015D

4. Remove the center facia panel after loosning the screw (2EA).
   (Refer to the Body group - Crash pad)

▷: Screw, 2

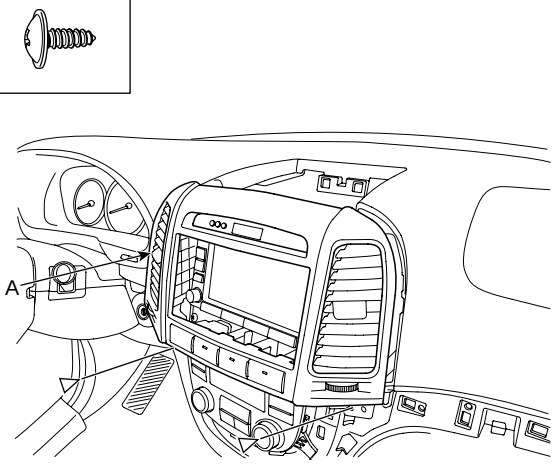

SCMBE6010L

5. Disconnect the conectors.
6. Operate the switch and check for continuity between terminals with an ohmmeter.

[LHD]

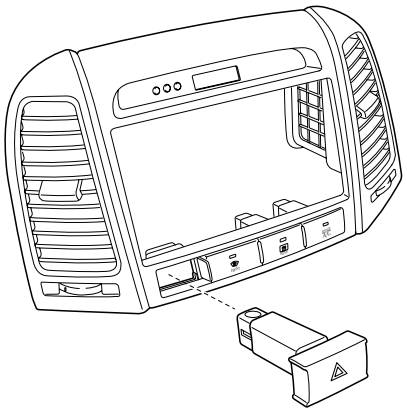

SCMBE6467D

[RHD]

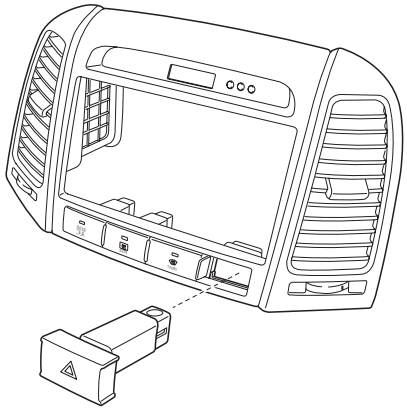

SCMBE6467R

Terminal / Position	2	3	6	9	10	5	7	8
OFF	○	○				○	———	○
ON	Illumination		○	○	○		○	○

SCMBE6461L

HAZARD LAMP RELAY

1. Disconnect the negative (-) battery terminal.
2. Disconnect the passenger compartment.
3. Check for continuity between terminals. There should be continuity between the No.2 of I/P-C and No.3 or No.4 of I/P-E terminals when power and ground are connected to the No.2 of I/P-C and No.6 of I/P-G terminals.
4. There should be no continuity between the No.2 of I/P-C and No.3 or No.4 of I/P-E terminals when power is disconnected to the No.2 of I/P-C and No.6 of I/P-G terminals.

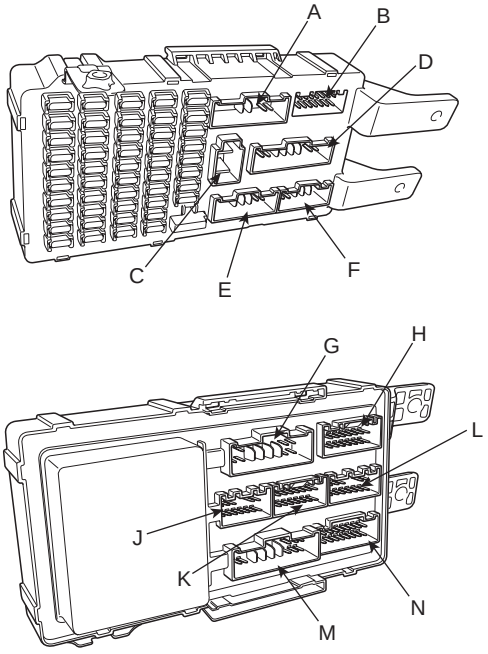

SCMBE6462D

Terminal / Position	I/P-C (2)	I/P-E (3 or 4)	I/P-G (6)	I/P-C (2)
Power off			○	——— ○
Power on	○	——— ○	⊖	——— ⊕

SCMBE6463L

RHEOSTAT

INSPECTION E4E671BB

1. Disconnect the negative (-) battery terminal.

2. Remove the lower crash pad switch assembly (A) by using the scraper and then disconnect the connectors.

[LHD]

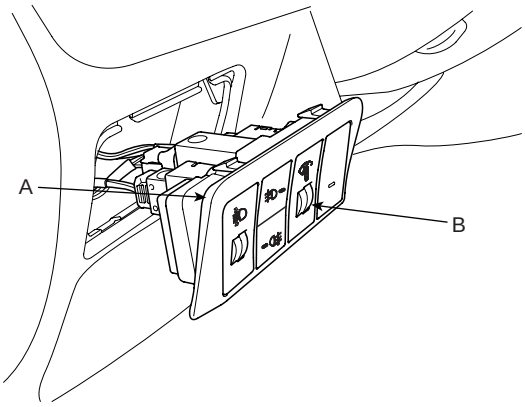

SCMBE6458L

[RHD]

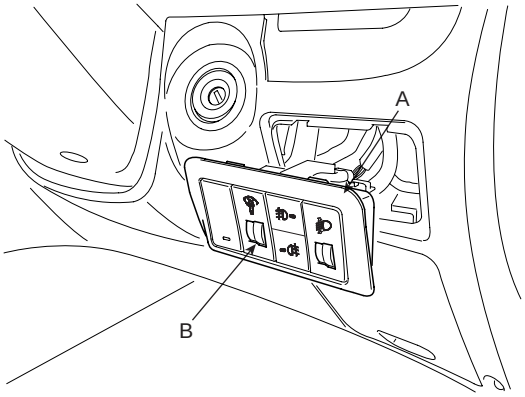

SCMBE6458R

3. Remove the rheostat (B) from lower crash pad switch assembly.

4. Check for intensity of new rheostat switch. If the light intensity of the lamps changes smoothly without any flickering when the rheostat is turned, it can be assumed that the rheostat is normal.

FRONT FOG LAMPS

INSPECTION E738DE84

FRONT FOG LAMP RELAY

1. Pull out the front fog lamp (A) relay from the engine compartment relay box.
2. Check for continuity between terminals. There should be continuity between the No.87 and No.30 terminals when power and ground are connected to the No.85 and No.86 terminals.
3. There should be no continuity between the No.87 and No.30 terminals when power is disconnected.

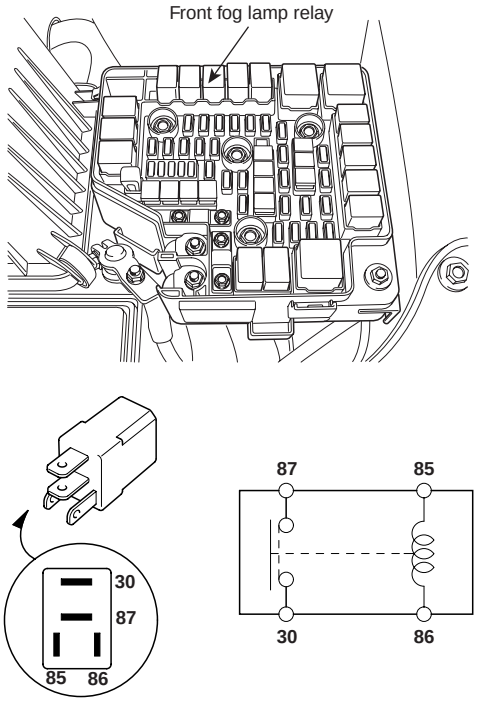

SCMBE6464L

Terminal / Power	30	87	85	86
Disconnected			○	○
Connected	○	○	⊖	⊕

LTGE221B

REPLACEMENT E5D0F606

1. Disconnect the negative (-) battery terminal.
2. Remove the front side cover screw.
3. Remove the front fog lamp assembly (A) after loosening screws (4EA).

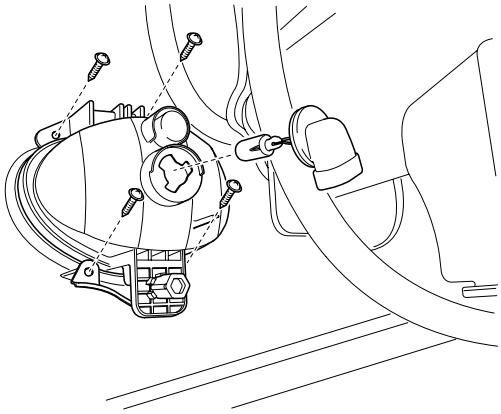

SCMBE6441D

4. Installation is the reverse of removal.

REAR FOG LAMPS

INSPECTION E7D4CDB2

REAR FOG LAMP SWITCH

1. Disconnect the negative (-) battery terminal.
2. Remove the lower crash pad switch (A) from the side crash pad cover by using the scraper and then disconnect the connectors.
3. Remove the rear fog lamp (B) switch from lower crash pad switch.

[LHD]

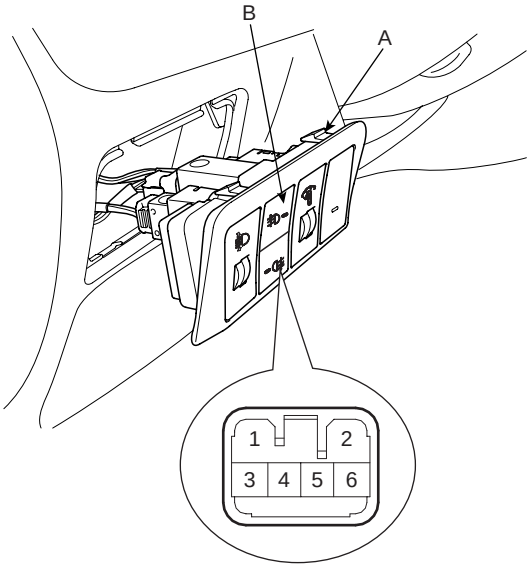

SCMBE6427L

[RHD]

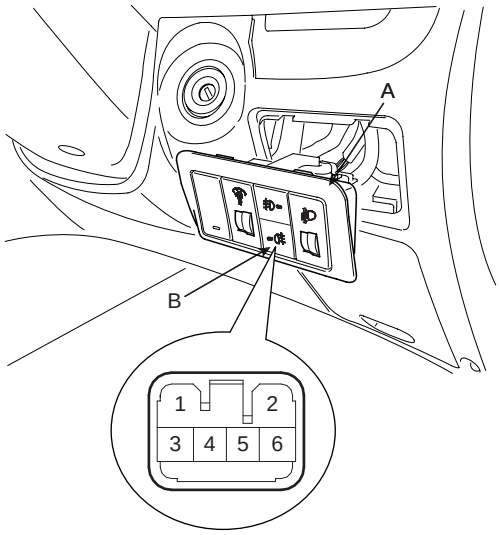

SCMBE6427R

4. Check for continuity between the terminals in each switch position according to the table.

Position \ Terminal	2	5	1	4	3
ON		Illumination		IND.	
OFF					

SCMBE6469L

LICENSE LAMPS

REPLACEMENT E83B391E

1. Disconnect the negative (-) battery terminal.
2. Remove the license lamp lens (A) from the panel after loosening a screw (2EA).

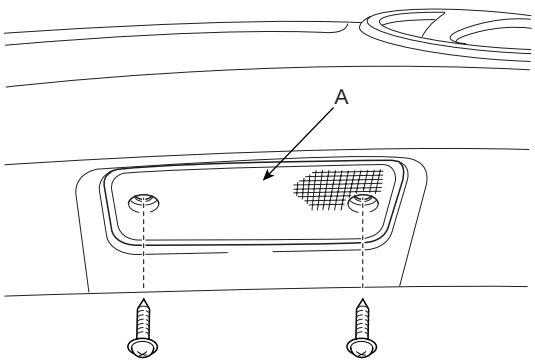

SCMBE6465D

3. Replace the bulb (A).

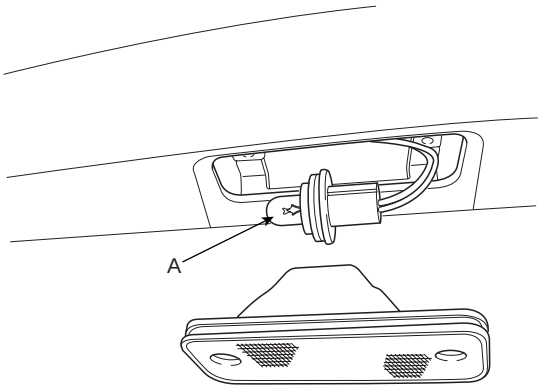

SCMBE6466D

4. Installation is the reverse of removal.

STOP LAMPS

REPLACEMENT E79FFC53

HIGH MOUNTED STOP LAMP

1. Disconnect the negative (-) battery terminal.
2. Remove the tailgate (Refer to the Body group - Tailgate).
3. Remove the high mounted stop lamp assembly after removing 2 nuts, then remove the spoiler.

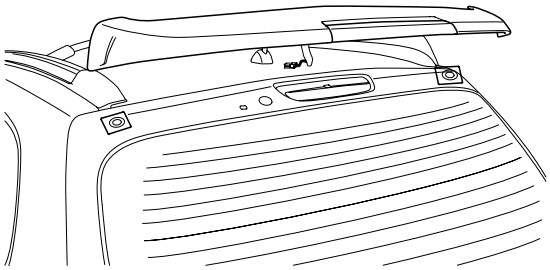

SCMBE6477D

4. Remove the spoiler lamp cover (A) and loosening the screw (4EA). And then remove the high mounted stop lamp.

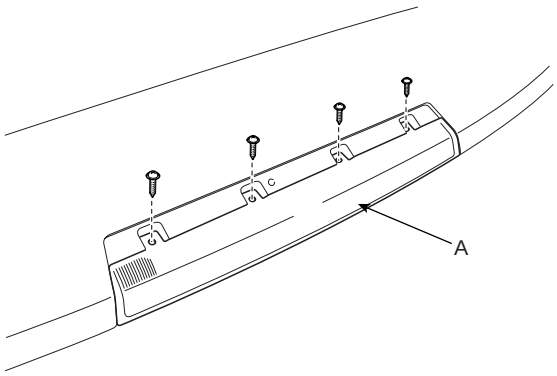

SCMBE6478D

5. Installation is the reverse of removal.

REAR ROOM LAMP

INSPECTION E4FBF49C

1. Remove the trunk room lamp assembly then check for continuity between terminals.

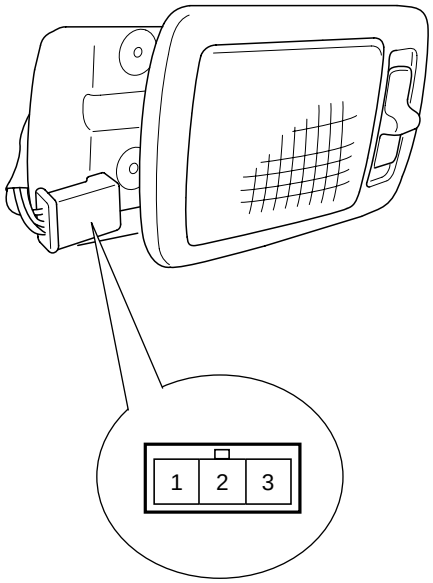

KTKD087A

Terminal / Position	1	2	3
ON		○—⊖—○	
DOOR	○—⊖—○		
OFF			

ETQF088A

REPLACEMENT E48BEEC9

1. Disconnect the negative (-) battery terminal.
2. Remove the trunk room lamp lens with a flat-tip screwdriver and replace the bult.
3. Remove the trunk room lamp assembly after removing 2 screws, then disconnect the 3P connector.

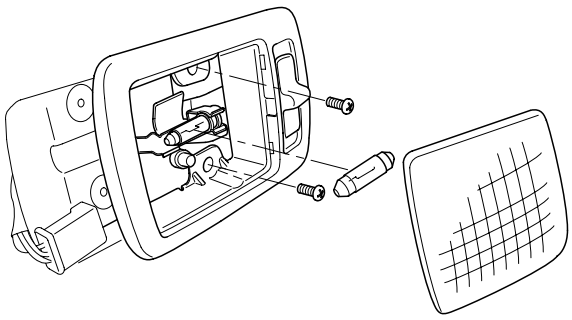

KTKD008A

4. Installation is the reverse of removal.

AUTO LIGHTING CONTROL SYSTEM

SPECIFICATIONS E968DD1C

Item		Specifications
Rated voltage		5V
Load		Max. 1mA
Detection illuminations	Tail lamp	ON : 24 ± 5.2 (Lux), 1.77 ± 0.08 (V) OFF : 48 ± 10.5 (Lux), 3.47 ± 0.1 (V)
	Head lamp	ON : 6 ± 1.4 (Lux), 0.63 ± 0.06 (V) OFF : 12 ± 2.7 (Lux), 1.02 ± 0.06 (V)

DESCRIPTION E4047CBE

The auto light control system operates by using the auto light switch.
If you set the multi-function switch to "AUTO" position, the tail lamp and head lamp will be turned automatically on or off according to external illumination.

COMPONENT LOCATION EFCEC781

The parts with asterisk(*) :
This illustration shows the LHD type.
RHD type is symmetrical.

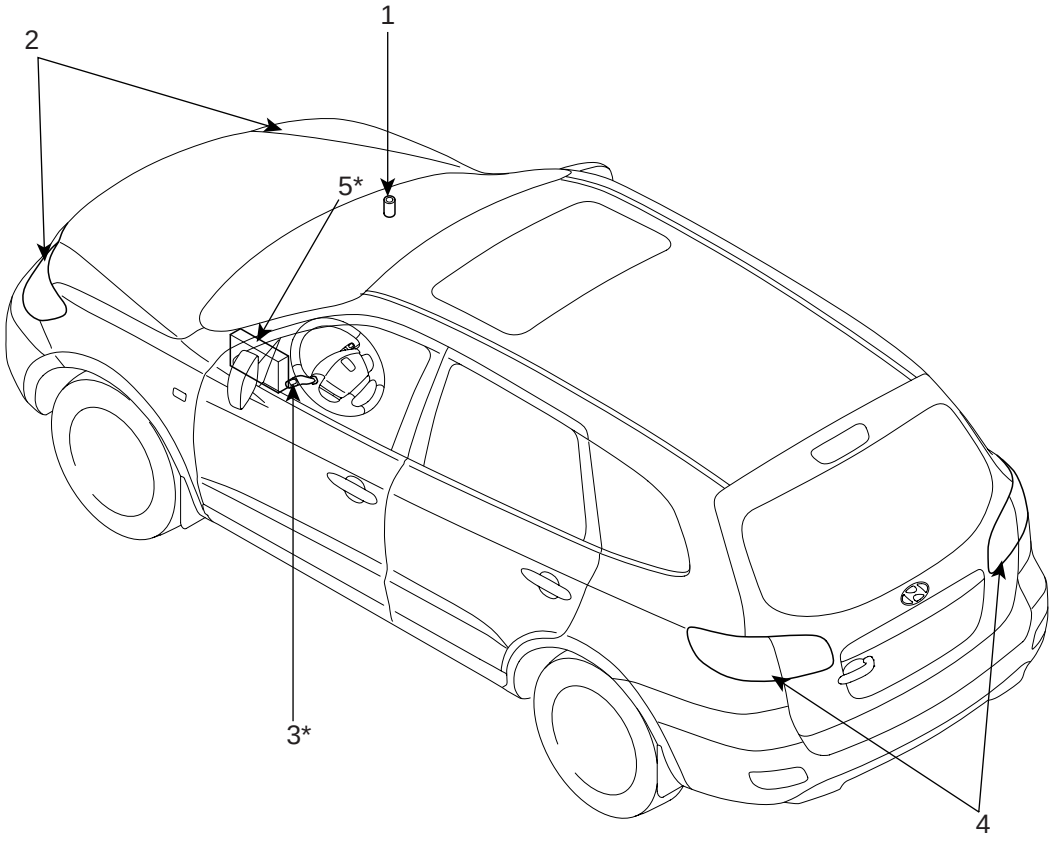

1. Auto light sensor unit
2. Head lamps
3. Lighting switch (Auto)
4. Tail lamps
5. Body control module

SCMBE6514L

CIRCUIT DIAGRAM ED5E07FD

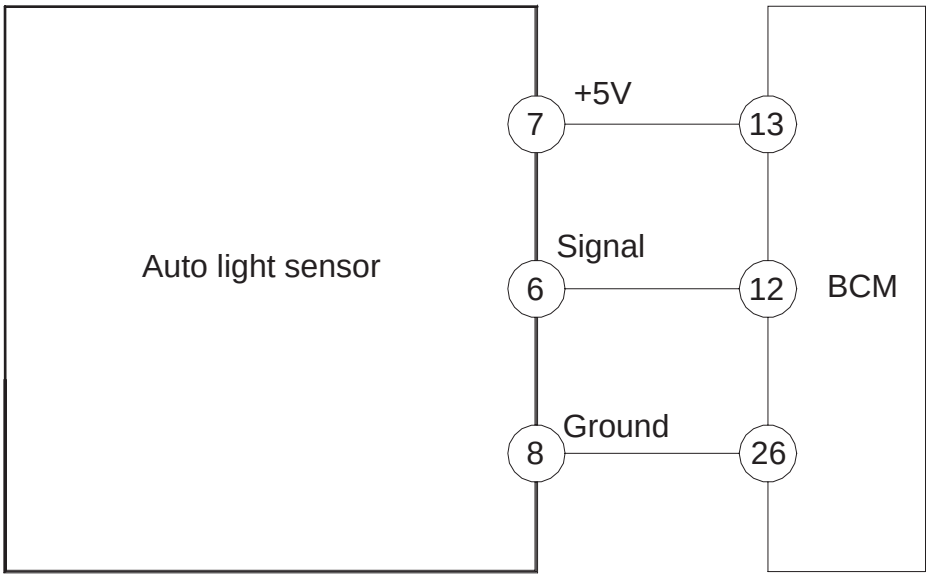

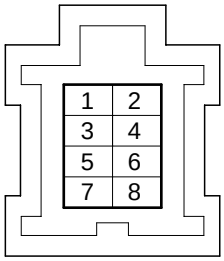

[Autolight unit connector]

6. Sensor signal
7. Vcc (+5V)
8. Sensor ground

SCMBE6515L

AUTO LIGHT SWITCH

INSPECTION E0BF4EBE

1. Operate the auto light switch, then check for continuity between terminals of 18P multi - function switch connector.

( ) : RHD

Position \ Terminal	14(13)	15(14)	16(15)	17(16)
OFF				
I	○	—	—	○
II	○	○	—	○
AUTO			○	○

SCMBE6513L

[LHD]

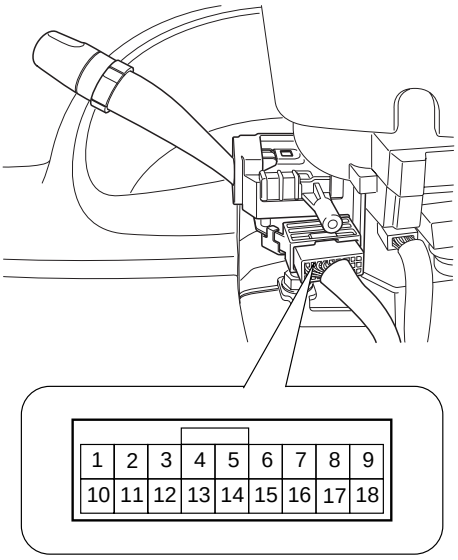

SCMBE6512D

[RHD]

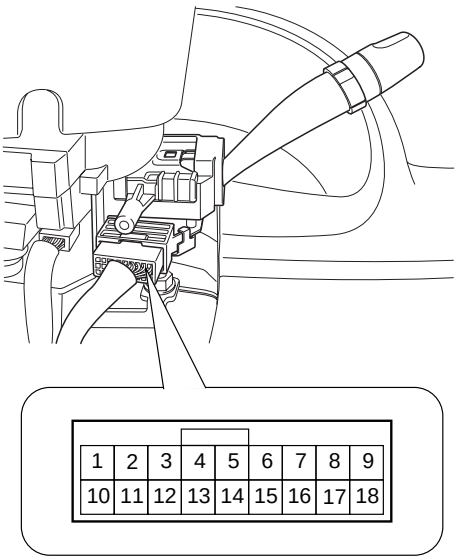

SCMBE6512R

AUTO LIGHT SENSOR

INSPECTION E0BEF93A

While operating the auto light switch, check if the operations are normal as shown in the timing chart.

1. Auto light sensor value is always read at IGN ON.
2. Light is turned ON after 2.5sec±0.2sec when auto light sensor value is same as light ON input value.
3. Light is turned OFF after 2.5sec±0.2sec when sensor value is same as light OFF input value.
4. Tail lamp and head lamp are turned ON when sensor value is same as tail lamp ON input value.
5. Light ON value of sensor is based on the below table.
6. Head lamp signal is output when head lamp switch is ON. After head lamp is turned OFF, head lamp signal output is immediately stopped if head lamp OFF luminance condition is met at auto light switch ON.

	TAIL LAMP, AV LAMP	HEAD LAMP (low beam)
ON	1.77V ± 0.08V	0.63V ± 0.06V
OFF	3.47V ± 0.10V	1.02V ± 0.06V

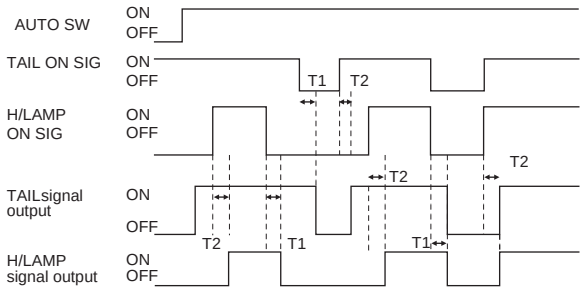

ETRF141X

T1 : 2.5 ± 0.2 sec
T2 : 2.5 ± 0.2 sec.

REPLACEMENT EF6FDFE7

1. Disconnect the negative (-) battery terminal.
2. Remove the Photo & auto light sensor (B) using screw (-) driver.

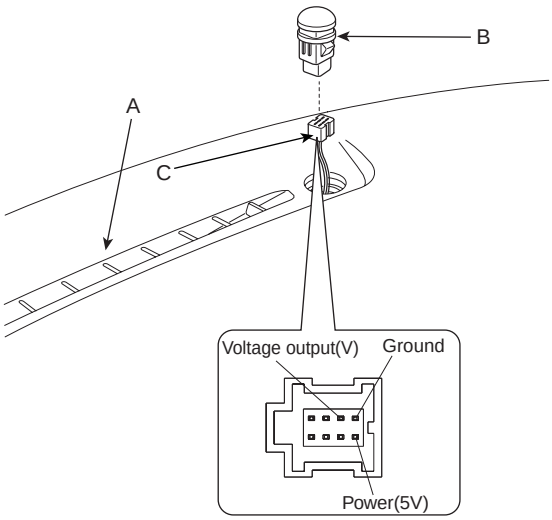

SCMBE6510L

3. Remove the auto light connector (C).
4. Installation is the reverse of removal.

DAYTIME RUNNING LIGHTS

DRL CONTROL MODULE

INSPECTION E251DBDE

1. The daytime running unit (A) is integrated in the BCM.

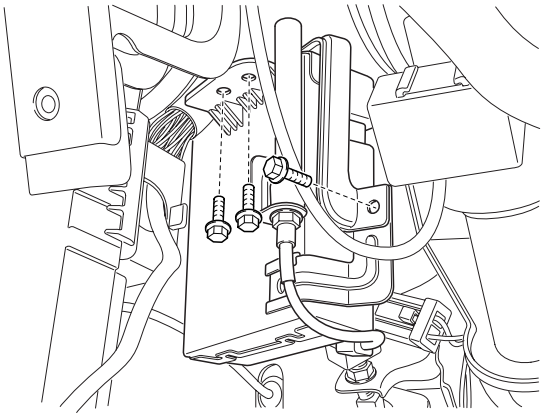

SCMBE6150D

2. Check that the light operate according to the following timing chart.

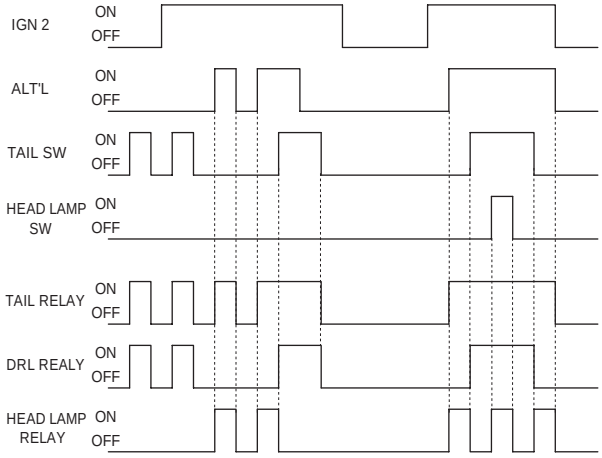

SCMBE6903L

3. If the daytime running light is not operated well, Inspect the connector and terminals to be sure they are all making good contact.
   If the terminals are bent, loose or corroded, repair them as necessary, and recheck the system.
   If the terminals look OK, go to step 4.

4. Make these input tests at the connector by using ETM.
   If any test indicates a problem, find and correct the cause, then recheck the system.
   If all the input tests prove OK, the BCM (Body control module) must be faulty; replace it.

HEAD LAMP LEVELING DEVICE

COMPONENT LOCATION E4FA4AB6

The parts with asterisk (*) :
This illustration shows the LHD type.
RHD type is symmetrical.

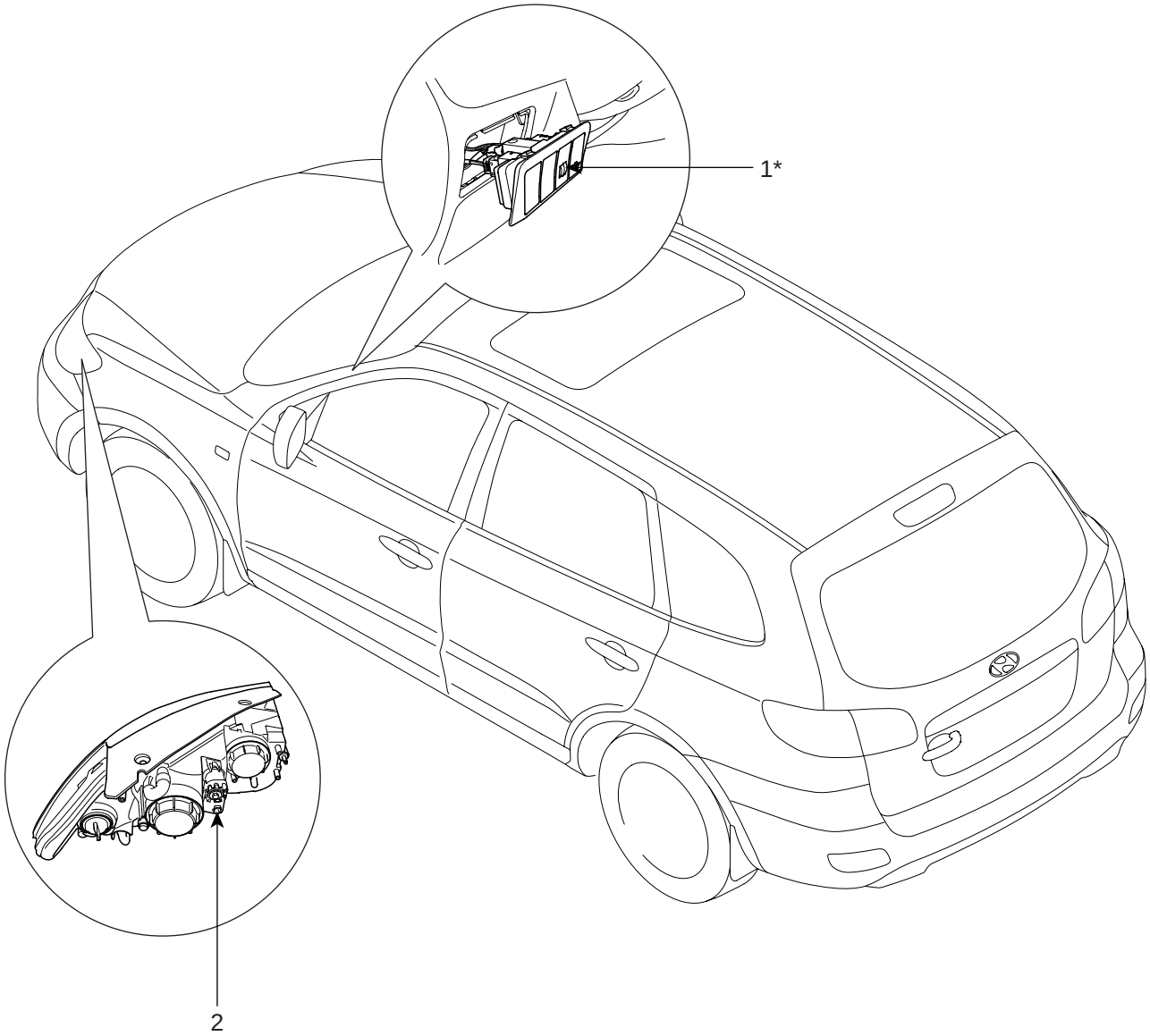

1. Headlamp leveling switch
2. Headlamp leveling actuator

SCMBE6490L

CIRCUIT DIAGRAM E17EB8B0

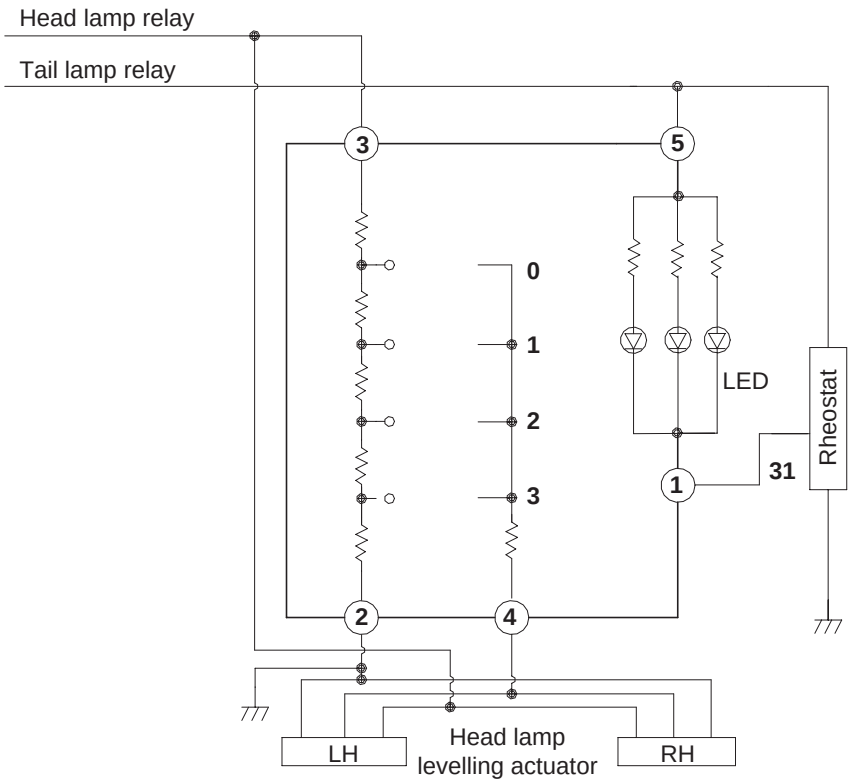

PIN CONNECTION

PIN NO	Description
1	Rheostat
2	Ground
3	IGN
4	Actuator (+)
5	Illumination(+)

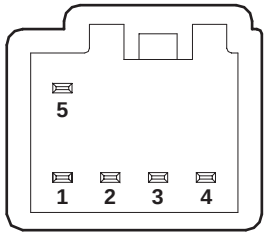

SCMBE6429L

HEAD LAMP LEVELING ACTUATOR

REPLACEMENT E14C459B

1. Disconnect the negative (-) battery terminal.
2. Remove the head lamp assembly (Refer to the head lamp).
3. Remove the head lamp leveling actuator (A) by loosening the adjusting bolt (B) after rotating it to an arrow direction.

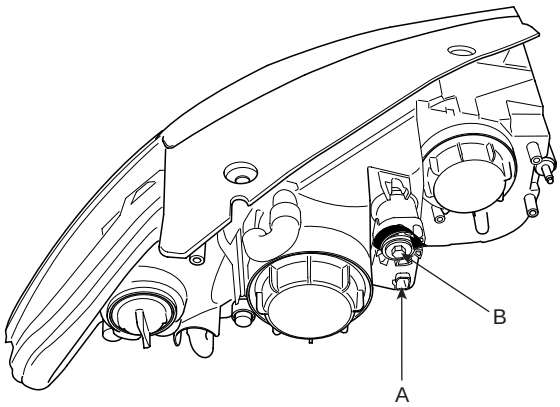

SCMBE6494L

4. Installation is the reverse of removal procedure.

HEAD LAMP LEVELING SWITCH

INSPECTION EE9680DD

1. Disconnect the negative (-) battery terminal.
2. Remove the lower crash pad switch (A) from the side crash pad cover by using the scraper and then disconnect the connectors.

[LHD]

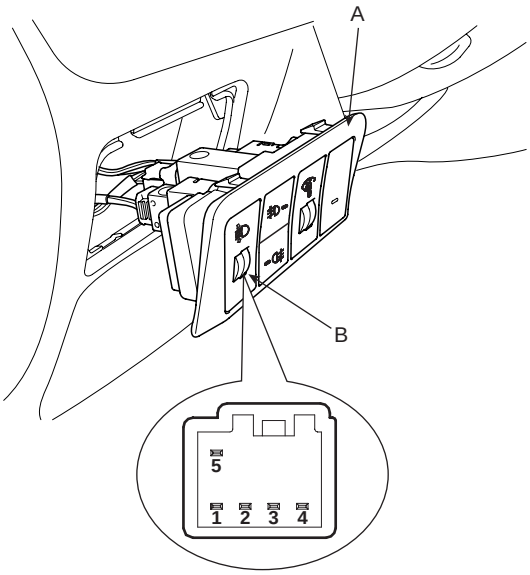

SCMBE6428L

[RHD]

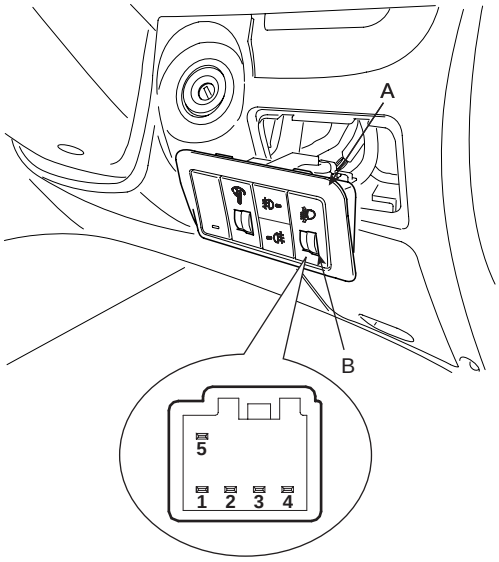

SCMBE6428R

3. Remove the head lamp leveling switch (B) from the lower crash pad switch.
4. Connect the battery voltage between terminals 5 and 4.
5. Measure the voltage between terminals 1 and 4 (V) at each position.

Position No.	Rotation	Voltage (V) (±5%)
0	0°	6.6
1	20°	7.7
2	40°	9.67
3	60°	12.06

6. If the voltage is not as specified, replace the head lamp leveling switch.

IMMOBILIZER CONTROL SYSTEM

DESCRIPTION EB551D42

The immobilizer system will disable the vehicle unless the proper ignition key is used, in addition to the currently available anti-theft systems such as car alarms, the immobilizer system aims to drastically reduce the rate of auto theft.

1. SMARTRA type immobilizer
   - The SMARTRA system consists of a transponder located in the ignition key, an antenna coil, a SMARTRA unit, an indicator light and the PCM(ECM).
   - The SMARTRA communicates to the PCM(ECM) (Engine Control Module) via a dedicated communications line. Since the vehicle engine management system is able to control engine mobilization, it is the most suitable unit to control the SMARTRA.
   - When the key is inserted in the ignition and turned to the ON position, the antenna coil sends power to the transponder in the ignition key. The transponder then sends a coded signal back through the SMARTRA unit to the PCM(ECM).
   - If the proper key has been used, the PCM(ECM) will energize the fuel supply system. The immobilizer indicator light in the cluster will simultaneously come on for more than five seconds, indicating that the SMARTRA unit has recognized the code sent by the transponder.
   - If the wrong key has been used and the code was not received or recognized by the PCM(ECM) the indicator light will continue blinking for about five seconds until the ignition switch is turned OFF.
   - If it is necessary to rewrite the PCM(ECM) to learn a new key, the dealer needs the customer's vehicle, all its keys and the Hi-scan (pro) equipped with an immobilizer program card. Any key that is not learned during rewriting will no longer start the engine.
   - The immobilizer system can store up to four key codes.
   - If the customer has lost his key, and cannot start the engine, contact HMC motor service station.

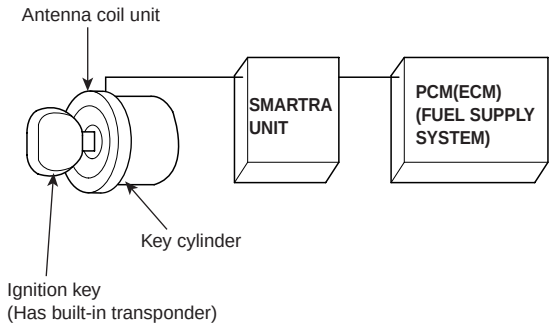

ETBF740B

COMPONENTS OPERATIONS EA703DCB

PCM (POWER TRAIN CONTROL MODULE)

1. The PCM(ECM) carries out a check of the ignition key using a special encryption algorithm, which is programmed into the transponder as well as the PCM(ECM) simultaneously. Only if the results are equal, the engine can be started. The data of all transponders, which are valid for the vehicle, are stored in the PCM(ECM).

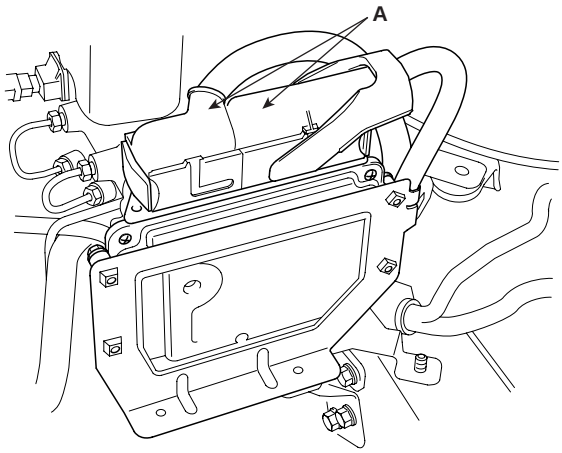

SCMBE6544D

SMARTRA UNIT (B)

The SMARTRA carries out communication with the built-in transponder in the ignition key. This wireless communication runs on RF (Radio frequency of 125 kHz). The SMARTRA is mounted behind of the crush pad under panel close to the antenna coil for RF transmission and receiving.
The RF signal from the transponder, received by the antenna coil, is converted into messages for serial communication by the SMARTRA device. And, the received messages from the PCM(ECM) are converted into an RF signal, which is transmitted to the transponder by the antenna.
The SMARTRA does not carry out the validity check of the transponder or the calculation of encryption algorithm. This device is only an advanced interface, which converts the RF data flow of the transponder into serial communication to the PCM(ECM) and vice versa.

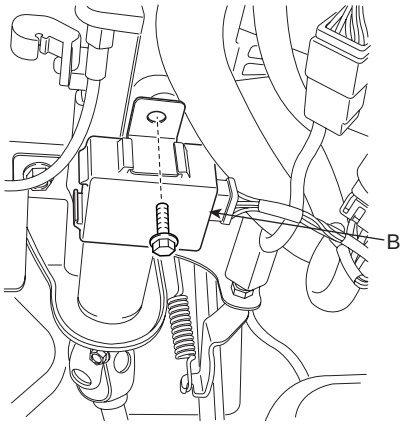

SCMBE6542L

TRANSPONDER (BUILT-IN KEYS)

The transponder has an advanced encryption algorithm. During the key teaching procedure, the transponder will be programmed with vehicle specific data. The vehicle specific data are written into the transponder memory. The write procedure is once only; therefore, the contents of the transponder can never be modified or changed.

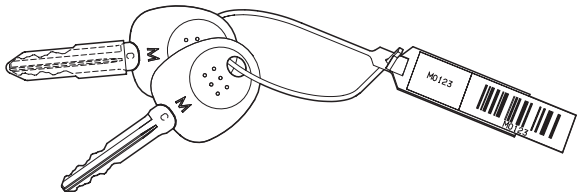

SCMBE6540D

ANTENNA COIL

The antenna coil (A) has the following functions.
- The antenna coil supplies energy to the transponder.
- The antenna coil receives signal from the transponder.
- The antenna coil sends transponder signal to the SMARTRA.
  It is located directly in front of the steering handle lock.

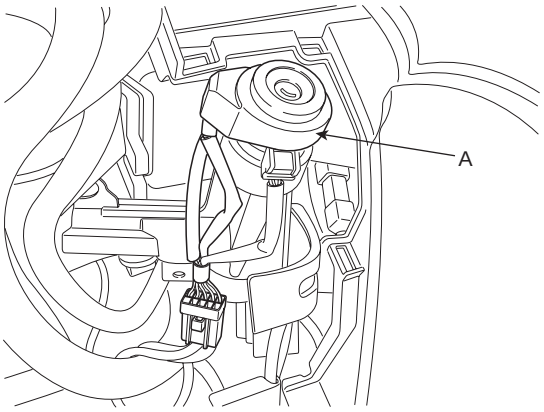

SCMBE6541D

TEACHING PROCEDURES EEDEFC04

1. Key Teaching Procedure
   Key teaching must be done after replacing a defective PCM(ECM) or when providing additional keys to the vehicle owner.

   The procedure starts with an PCM(ECM) request for vehicle specific data (PIN code: 6digits) from the tester. The "virgin" PCM(ECM) stores the vehicle specific data and the key teaching can be started. The "learnt" PCM(ECM) compares the vehicle specific data from the tester with the stored data. If the data are correct, the teaching can proceed.

   If incorrect vehicle specific data have been sent to the PCM(ECM) three times, the PCM(ECM) will reject the request of key teaching for one hour. This time cannot be reduced by disconnecting the battery or any other manipulation. After reconnecting the battery, the timer starts again for one hour.

   The key teaching is done by ignition on with the key and additional tester commands. The PCM(ECM) stores the relevant data in the EEPROM and in the transponder. Then the PCM(ECM) runs the authentication required for confirmation of the teaching process. The successful programming is then confirmed by a message to the tester.

   If the key is already known to the PCM(ECM) from a previous teaching, the authentication will be accepted and the EEPROM data are updated. There is no changed transponder content (this is impossible for a learnt transponder).

   The attempt to repeatedly teach a key, which has been taught already during the same teaching cycle, is recognized by the PCM(ECM). This rejects the key and a message is sent to the tester.

   The PCM(ECM) rejects invalid keys, which are presented for teaching. A message is sent to the tester. The key can be invalid due to faults in the transponder or other reasons, which result from unsuccessful programming of data. If the PCM(ECM) detects different authenticators of a transponder and an PCM(ECM), the key is considered to be invalid.

   The maximum number of taught keys is 4

   If an error occurs during the Immobilizer Service Menu, the PCM(ECM) status remains unchanged and a specific fault code is stored.

   If the PCM(ECM) status and the key status do not match for teaching of keys, the tester procedure will be stopped and a specific fault code will be stored at PCM(ECM).

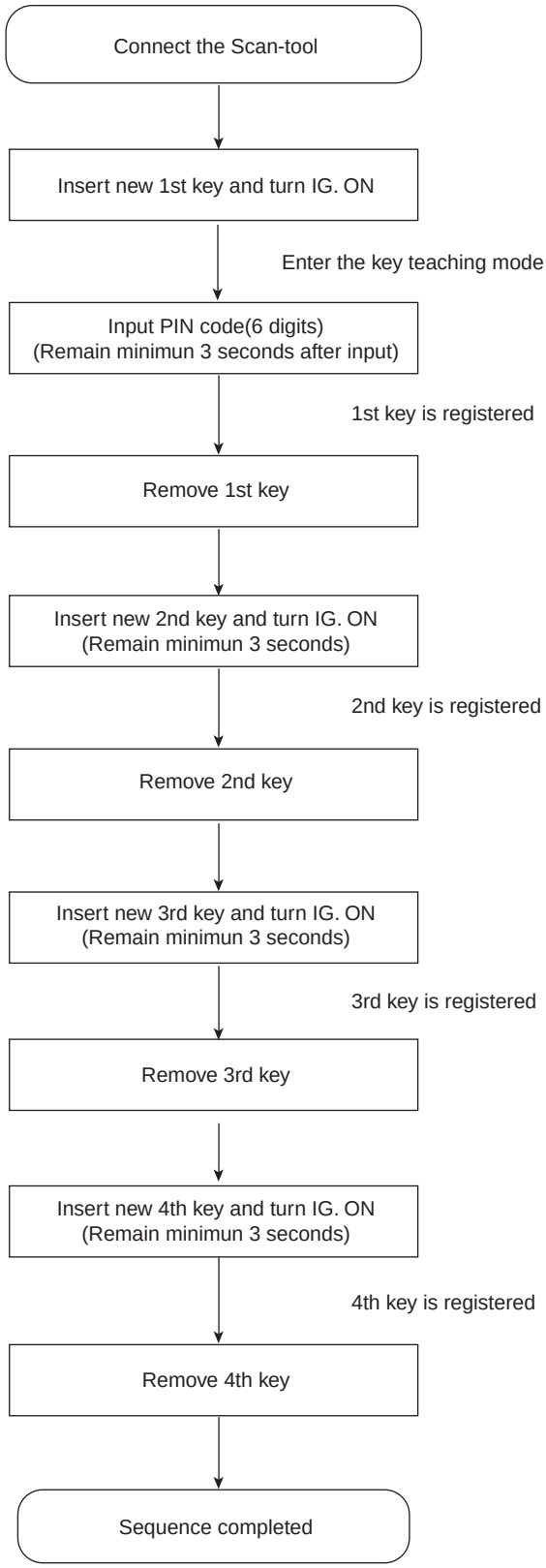

ETBF740M

1) PCM(ECM) learnt status.

```
1. HYUNDAI VEHICLE DIAGNOSIS ▼

MODEL : SANTAFE

  01. ENGINE
  02. AUTOMATIC TRANSAXLE
  03. ANTI-LOCK BRAKE SYSTEM
  04. SRS-AIRBAG
  05. ELEC. CONTROL SUSPENSION
  06. IMMOBILIZER
  07. ELEC. POWER STEERING
  08. FULL AUTO AIR/CON.
```

SCMBE6551L

```
1.  HYUNDAI VEHICLE DIAGNOSIS

MODEL : SANTAFE
SYSTEM : IMMOBILIZER

  01. CURRENT DATA
  02. PASSWORD TEACHING/CHANGING
  03. TEACHING
  04. NEUTRAL MODE
  05. LIMP HOME MODE
```

SCMBE6552L

```
1.3 TEACHING

MODEL   :  GRANDEUR
SYSTEM :  IMMOBILIZER
STATUS  :  LEARNT

INPUT PIN OF SIX
FIGURE AND PRESS [ENTER] KEY

CODE : 234567
```

SCMBE6553L

```
1.3 TEACHING

MODEL   :  SANTAFE
SYSTEM :  IMMOBILIZER
STATUS  :  LEARNT

1st KEY TEACHING
ARE YOU SURE ? [Y/N]

CODE : 234567
```

SCMBE6554L

```
1.3 TEACHING

MODEL   :  SANTAFE
SYSTEM :  IMMOBILIZER
STATUS  :  LEARNT

1st KEY TEACHING
COMPLETED

CODE : 234567
```

SCMBE6555L

```
1.3 TEACHING

MODEL   :  SANTAFE
SYSTEM :  IMMOBILIZER
STATUS  :  LEARNT

2st KEY TEACHING
ARE YOU SURE ? [Y/N]

CODE : 234567
```

SCMBE6556L

```
1.3 TEACHING

MODEL  : SANTAFE
SYSTEM : IMMOBILIZER
STATUS : LEARNT

2st KEY TEACHING
COMPLETED

CODE : 234567
```

SCMBE6557L

2) PCM(ECM) virgin status.
After replacing new "PCM(ECM)" scantool displays that PCM(ECM) is virgin status in Key Teaching mode.
"VIRGIN" status means that PCM(ECM) has not matched any PIN code before.

```
1.3 TEACHING

MODEL  : SANTAFE
SYSTEM : IMMOBILIZER
STATUS : VIRGIN

INPUT PIN OF SIX
FIGURE AND PRESS [ENTER] KEY

CODE : 234567
```

SCMBE6558L

```
1.3 TEACHING

MODEL  : SANTAFE
SYSTEM : IMMOBILIZER
STATUS : VIRGIN

1st KEY TEACHING
ARE YOU SURE ? [Y/N]

CODE : 234567
```

SCMBE6559L

```
1.3 TEACHING

MODEL  : SANTAFE
SYSTEM : IMMOBILIZER
STATUS : VIRGIN

1st KEY TEACHING
COMPLETED

CODE : 234567
```

SCMBE6560L

```
1.3 TEACHING

MODEL  : SANTAFE
SYSTEM : IMMOBILIZER
STATUS : VIRGIN

2st KEY TEACHING
ARE YOU SURE ? [Y/N]

CODE : 234567
```

SCMBE6561L

```
1.3 TEACHING

MODEL  : SANTAFE
SYSTEM : IMMOBILIZER
STATUS : VIRGIN

2st KEY TEACHING
COMPLETED

CODE : 234567
```

SCMBE6562L

2. User Password Teaching Procedure
The user password for limp home is taught at the service station. The owner of the vehicle can select a number with four digits.

User password teaching is only accepted by a "learnt" PCM(ECM). Before first teaching of user password to an PCM(ECM), the status of the password is "virgin" No limp home function is possible.

The teaching is started by ignition on, with a valid key and sending the user password by tester. After successful teaching, the status of the user password changes from "virgin" to "learnt"

The learnt user password can also be changed. This can be done if the user password status is "learnt" and the tester sends authorization of access, either the old user password or the vehicle specific data. After correct authorization, the PCM(ECM) requests the new user password. The status remains "learnt" and the new user password will be valid for the next limp home mode.

If incorrect user passwords or wrong vehicle specific data have been sent to the PCM(ECM) three times, the PCM(ECM) will reject the request to change the password for one hour. This time cannot be reduced by disconnecting the battery or any other actions. After reconnecting the battery, the timer starts again for one hour.

1) User password teaching

```
1. HYUNDAI VEHICLE DIAGNOSIS

MODEL : SANTAFE
SYSTEM : IMMOBILIZER

  01. CURRENT DATA
  02. PASSWORD TEACHING/CHANGING
  03. TEACHING
  04. NEUTRAL MODE
  05. LIMP HOME MODE
```

SCMBE6563L

```
1.2 PASSWORD TEACHING/CHANGING

MODEL  : SANTAFE
SYSTEM : IMMOBILIZER
STATUS : VIRGIN

INPUT NEW PASSWORD OF FOUR
FIGURES AND PRESS [ENTER] KEY

NEW PASSWORD :
```

SCMBE6564L

```
1.2 PASSWORD TEACHING/CHANGING

MODEL  : SANTAFE
SYSTEM : IMMOBILIZER
STATUS : VIRGIN

INPUT NEW PASSWORD OF FOUR
FIGURES AND PRESS [ENTER] KEY

NEW PASSWORD : 2345
```

SCMBE6565L

```
1.2 PASSWORD TEACHING/CHANGING

MODEL  : SANTAFE
SYSTEM : IMMOBILIZER
STATUS : VIRGIN

ARE YOU SURE ? [Y/N]

NEW PASSWORD : 2345
```

SCMBE6566L

1.2 PASSWORD TEACHING/CHANGING

MODEL : SANTAFE
SYSTEM : IMMOBILIZER
STATUS : VIRGIN

COMPLETED
PRESS [ESC] TO EXIT

NEW PASSWORD : 2345

SCMBE6567L

※ In case of putting wrong password, retry from first step after 10 seconds.

2) User password changing

1. HYUNDAI VEHICLE DIAGNOSIS

MODEL : SANTAFE
SYSTEM : IMMOBILIZER

01. CURRENT DATA
02. PASSWORD TEACHING/CHANGING
03. TEACHING
04. NEUTRAL MODE
05. LIMP HOME MODE

SCMBE6563L

1.2 PASSWORD TEACHING/CHANGING

MODEL : SANTAFE
SYSTEM : IMMOBILIZER
STATUS : LEARNT

INPUT OLD PASSWORD OF FOUR
FIGURES AND PRESS [ENTER] KEY

OLD PASSWORD :

SCMBE6568L

1.2 PASSWORD TEACHING/CHANGING

MODEL : SANTAFE
SYSTEM : IMMOBILIZER
STATUS : LEARNT

INPUT OLD PASSWORD OF FOUR
FIGURES AND PRESS [ENTER] KEY

OLD PASSWORD : 2345

SCMBE6569L

1.2 PASSWORD TEACHING/CHANGING

MODEL : SANTAFE
SYSTEM : IMMOBILIZER
STATUS : LEARNT

INPUT NEW PASSWORD OF FOUR
FIGURES AND PRESS [ENTER] KEY

NEW PASSWORD : 1234

SCMBE6570L

1.2 PASSWORD TEACHING/CHANGING

MODEL : SANTAFE
SYSTEM : IMMOBILIZER
STATUS : LEARNT

ARE YOU SURE ? [Y/N]

NEW PASSWORD : 1234

SCMBE6571L

1.2 PASSWORD TEACHING/CHANGING

MODEL : SANTAFE
SYSTEM : IMMOBILIZER
STATUS : LEARNT

COMPLETED
PRESS [ESC] TO EXIT

NEW PASSWORD : 1234

SCMBE6572L

REPLACEMENT EE2BB323

PROBLEMS AND REPLACEMENT PARTS:

Problem	Part set	Scan tool required?
All keys have been lost	Blank key (4)	YES
Antenna coil unit does not work	Antenna coil unit	NO
ECM does not work	PCM(ECM)	YES
Ignition switch does not work	Ignition switch with Antenna coil unit	YES
Unidentified vehicle specific data occurs	Key, PCM(ECM)	YES
SMARTRA unit does not work	SMARTRA unit	NO

REPLACEMENT OF ECM AND SMARTRA

In case of a defective ECM, the unit has to be replaced with a "virgin" or "neutral" ECM. All keys have to be taught to the new ECM. Keys, which are not taught to the ECM, are invalid for the new ECM (Refer to key teaching procedure). The vehicle specific data have to be left unchanged due to the unique programming of transponder.
In case of a defective SMARTRA, there is no special procedure required. A new SMARTRA device simply replaces the old one. There are no transponder-related data stored in this device.

1. Things to remember before a replacement (PCM(ECM))

When installing PCM(ECM) of car "A" on car "B"
※ All non-virgin PCM(ECM)`s need to be neutralized before installing on the other vehicles.

↓

Neutralize the PCM(ECM) of car "A"

↓

Installing the PCM(ECM) of car "A" on car "B"

↓

Register the keys with the PIN code of car "B"

↓

Register additional keys (Maximum of keys)
※ All phases of key registration should be completed in under 10 seconds

↓

Registration completed

ETBF746A

2. Things to remember before a replacement (Keys & Additional registration)

Replace keys & additional registration
※ You must know the PIN code before executing this procedure

↓

Turn the key to the IG ON position

↓

Initialize the PCM(ECM) (Under the Neutral Mode)

↓

Insert the key you want to register and turn it to the IG ON position

↓

Register the key (Under the Teaching Mode)

↓

Register additional keys (Maximum of 4 keys)
※ All phases of key registration should be completed in under 10 seconds

↓

Registration completed

ETBF746B

NOTE

1. *When there is only one key registered and you wish to register another key, you need to re-register the key which was already registered.*
2. *When the key #1 is registered and master key #2 is not registered, Put the key #1 in the IG/ON or the start position and remove it. The engine can be started with the unregistered key #2.*
   (Note that key #2 must be used within 10 seconds of removing key #1)

3. *When the key #1 is registered and key #2 is not registered, put the unregistered master key #2 in the IG/ON or the start position.*
   The engine cannot be started even with the registered key #1.
4. *When you inspect the immobilizer system, refer to the above paragraphs 1, 2 and 3.*
   Always remember the 10 seconds zone.
5. *If the pin code & password are entered incorrectly on three consecutive inputs, the system will be locked for one hour.*
6. *Be cautious not to overlap the transponder areas.*
7. *Problems can occur at key registration or vehicle starting if the transponders should overlap.*

NEUTRALISING OF ECM

The PCM(ECM) can be set to the "neutral" status by a tester.

A valid ignition key is inserted and after ignition on is recorded, the PCM(ECM) requests the vehicle specific data from the tester. The communication messages are described at "Neutral Mode" After successfully receiving the data, the PCM(ECM) is neutralized.

The ECM remains locked. Neither the limp home mode nor the "twice ignition on" function, is accepted by the PCM(ECM).

The teaching of keys follows the procedure described for the virgin PCM(ECM). The vehicle specific data have to be unchanged due to the unique programming of the transponder. If data should be changed, new keys with a virgin transponder are requested.

This function is for neutralizing the PCM(ECM) and Key. Ex) when lost key, Neutralize the PCM(ECM) then teach keys.
(Refer to the Things to do when Key & PIN Code the PCM(ECM) can be set to the "neutral" status by a scanner. A valid ignition key is inserted and after ignition on is recorded, the PCM(ECM) requests the vehicle specific data from the scanner. The communication messages are described at" Neutral Mode". After successfully receiving the data, the PCM(ECM) is neutralized.
The PCM(ECM) remains locked. Neither the limp home mode nor the "twice ignition on" function is accepted by PCM(ECM).
The teaching of keys follows the procedure described for virgin PCM(ECM). The vehicle specific data have to be unchanged due to the unique programming of transponder. If data should be changed, new keys with virgin transponder are requested.

NOTE

- *Neutralizing setting condition*
  - *In case of PCM(ECM) status "Learnt" regardless of user password "Virgin or Learnt"*
  - *Input correct PIN code by scanner.*
  - *Neutralizing meaning .*
    : PIN code (6) & user password (4) deletion.
    : Locking of ECM (except key teaching permission)

1. HYUNDAI VEHICLE DIAGNOSIS

MODEL : SANTAFE
SYSTEM : IMMOBILIZER

01. CURRENT DATA
02. PASSWORD TEACHING/CHANGING
03. TEACHING
04. NEUTRAL MODE
05. LIMP HOME MODE

SCMBE6573L

1.4 NEUTRAL MODE

MODEL : SANTAFE
SYSTEM : IMMOBILIZER
STATUS : LEARNT

INPUT PIN OF SIX
FIGURE AND PRESS [ENTER] KEY

CODE : 234567

SCMBE6574L

1.4 NEUTRAL MODE

MODEL : SANTAFE
SYSTEM : IMMOBILIZER
STATUS : NEUTRAL

COMPLETED
PRESS [ESC] TO EXIT

SCMBE6575L

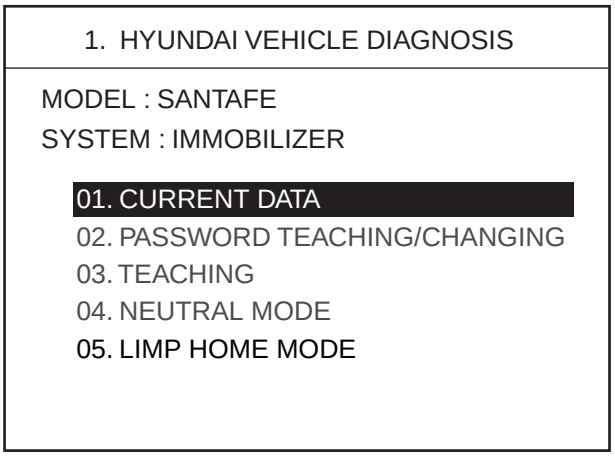

SCMBE6576L

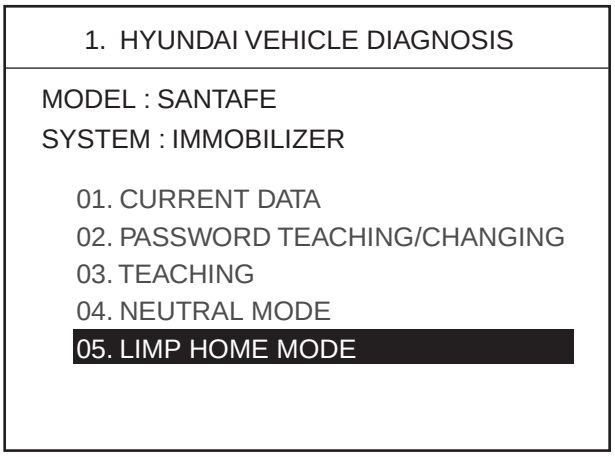

SCMBE6585L

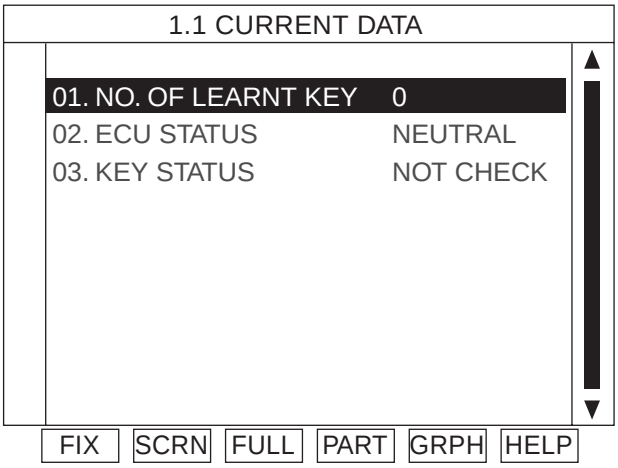

SCMBE6577L

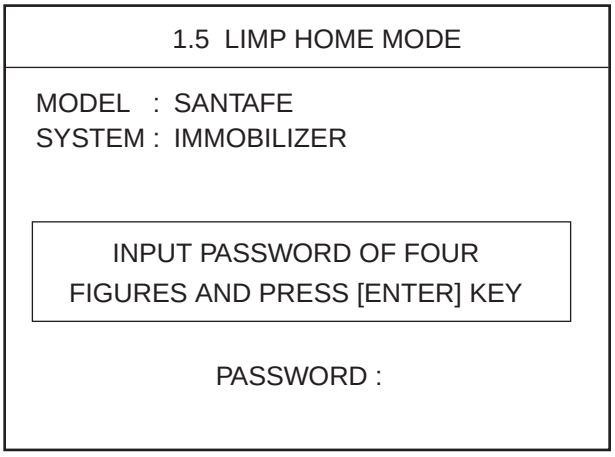

SCMBE6586L

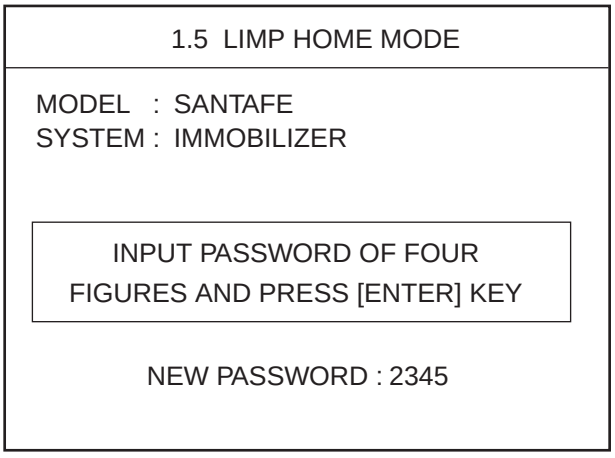

SCMBE6587L

LIMP HOME FUNCTION E6DD2F66

1. LIMP HOME BY TESTER
   If the PCM(ECM) detects the fault of the SMARTRA or transponder, the PCM(ECM) will allow limp home function of the immobilizer. Limp home is only possible if the user password (4 digits) has been given to the PCM(ECM) before. This password can be selected by the vehicle owner and is programmed at the service station.
   The user password can be sent to the PCM(ECM) via the special tester menu.
   Only if the PCM(ECM) is in status "learnt" and the user password status is "learnt" and the user password is correct, the PCM(ECM) will be unlocked for a period of time (30 sec.). The engine can only be started during this time. After the time has elapsed, engine start is not possible.
   If the wrong user password is sent, the PCM(ECM) will reject the request of limp home for one hour. Disconnecting the battery or any other action cannot reduce this time. After connecting the battery to the PCM(ECM), the timer starts again for one hour.

1.5 LIMP HOME MODE

MODEL : SANTAFE
SYSTEM : IMMOBILIZER

COMPLETED
PRESS [ESC] TO EXIT

SCMBE6588L

2. LIMP HOME BY IGNITION KEY

The limp home can be activated also by the ignition key. The user password can be input to the PCM(ECM) by a special sequence of ignition on/off. Only if the PCM(ECM) is in status "learnt" and the user password status is "learnt" and the user password is correct, the PCM(ECM) will be unlocked for a period of time (30 sec.). The engine can be started during this time. After the time has elapsed, engine start is not possible. After a new password has been input, the timer (30 sec.) will start again.
After ignition off, the PCM(ECM) is locked if the timer has elapsed 8 seconds. For the next start, the input of the user password is requested again.

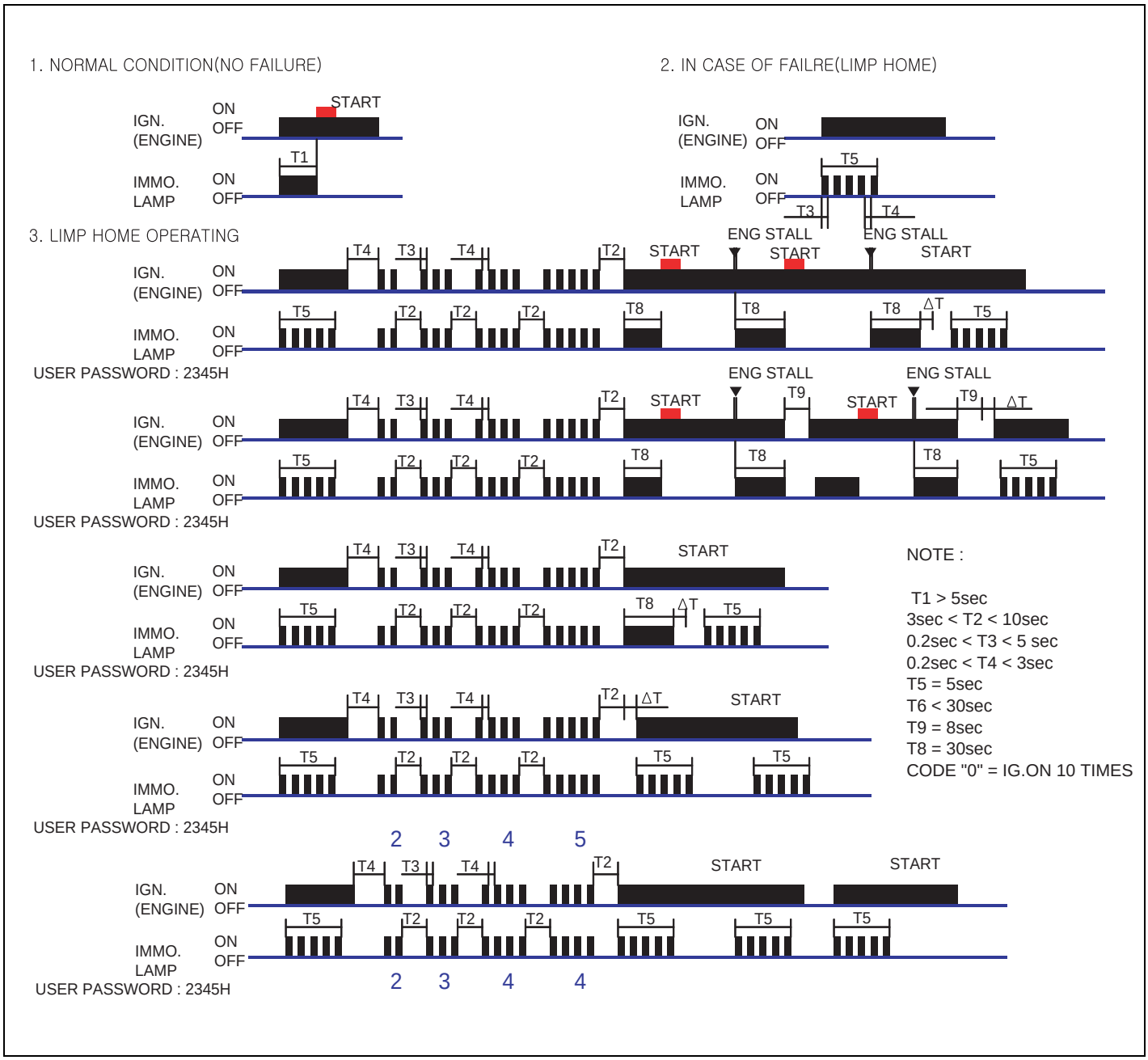

LTIF740N

DIAGNOSIS OF IMMOBILIZER FAULTS EBD7CB72

- Communication between the ECM and the SMARTRA.
- Function of the SMARTRA and the transponder.
- Data (stored in the ECM related to the immobilizer function.

The following table shows the assignment of immobilizer related faults to each type:

Immobilizer Related Faults	Fault types	Diagnostic codes
PCM(ECM) fault	1. Non-Immobilizer-EMS connected to an Immobilizer	P1610
Transponder key fault	1. Transponder not in password mode 2. Transponder transport data has been changed.	P1674 (Transponder status error)
Transponder key fault	1. Transponder programming error	P1675 (Transponder programming error)
SMARTRA fault	1. Invalid message from SMARTRA to PCM(ECM)	P1676 (SMARTRA message error)
SMARTRA fault	1. No response from SMARTRA 2. Antenna coil error 3. Communication line error (Open/Short etc.) 4. Invalid message from SMARTRA to PCM(ECM)	P1690 (SMARTRA no response)
Antenna coil fault	1. Antenna coil open/short circuit	P1691 (Antenna coil error)
Immobilizer indicator lamp fault	1. Immobilizer indicator lamp error (Cluster)	P1692 (Immobilizer lamp error)
Transponder key fault	1. Corrupted data from transponder 2. More than one transponder in the magnetic field (Antenna coil) 3. No transponder (Key without transponder) in the magnetic field (Antenna coil)	P1693 (Transponder no response error/invalid response)
PCM(ECM) fault	1. Request from PCM(ECM) is invalid (Protocol layer violation- Invalid request, check sum error etc.)	P1694 (PCM(ECM) message error)
PCM(ECM) internal permanent memory (EEPROM) fault	1. PCM(ECM) internal permanent memory (EEPROM) fault 2. Invalid write operation to permanent memory (EEPROM)	P1695 (PCM(ECM) memory error)
Invalid key fault	1. Virgin transponder at PCM(ECM) status "Learnt"Learnt (Invalid) Transponder at PCM(ECM) status "Learnt"(Authentication fail)	P1696 (Authentication fail)
Hi-Scan fault	1. Hi-Scan message error	P1697
Locked by timer	1. Exceeding the maximum limit of Twice IGN ON (⊇ 32 times)	P1699 (Twice IG ON over trial)

IMMOBILIZER (SMARTRA) DTC LIST

No.	Fault code	Monitor strategy description	Gasoline (µ-engine)	Diesel (D-engine)	Page
1	P1610	Non-Immobilizer-EMS connected to an immobilizer	-	O	BE - 246
2	P1674	Transponder status error	O	O	BE - 249
3	P1675	Transponder programming error	O	O	BE - 252
4	P1676	SMARTRA message error	O	O	BE - 255
5	P1690	SMARTRA no response	O	O	BE - 258
6	P1691	Antenna coil error	O	O	BE - 264
7	P1692	Immobilizer lamp error	O	O	BE - 267
8	P1693	Transponder no response error / Invalid response	O	O	BE - 272
9	P1694	EMS message error	O	O	BE - 274
10	P1695	EMS memory error	O	O	BE - 277
11	P1696	Authentication fail	O	O	BE - 280
12	P1697	HI-SCAN message error	O	-	BE - 282
13	P1699	Twice overtrial	O	O	BE - 284

DTC P1610 NON-IMMOBILIZER-EMS CONNECTED TO AN IMMOBILIZER

COMPONENT LOCATION ED81FEC6

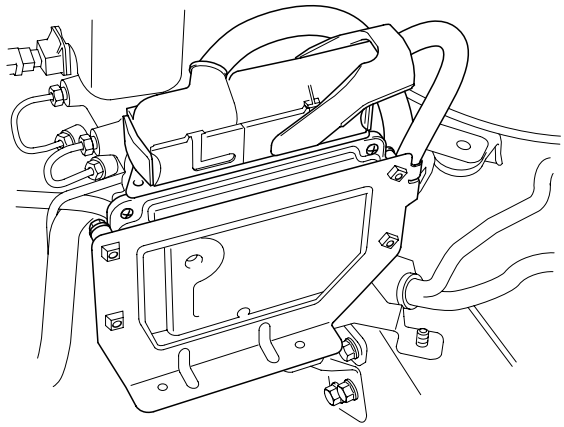

SCMBE6740D

GENERAL DESCRIPTION EF0ACABD

Immobilizer is device that prevents car from being thieved by reproduced key. Major components of immobilizer are ECM(Engine Control Module) and SMARTRA. Besides them, Immobilizer has transponder and coil antenna in it. If driver inserts key into key hole, SMARTRA gets tansponder signal by wireless communications via coil antenna and delivers it to ECM through K-line communication line. then ECM deciphers code in it. If inserted key has invalid transponder with incorrect code or doesn't have transponder in it, ECM judges that inserted key is reproduced key and prohibits engine starting.

DTC DESCRIPTION EAB57BBB

The ECM sets DTC P1610 if Non Immobilizer EMS is installed on vehicle equipped with Immobilizer.

DTC DETECTING CONDITION E5163E76

Item	Detecting Condition	Possible Cause
DTC Strategy		• Invalid ECM
Enable Conditions	• IG ON	
Threshold value		
Detecting time		
FAIL SAFE		

SCHEMATIC DIAGRAM E6C04908

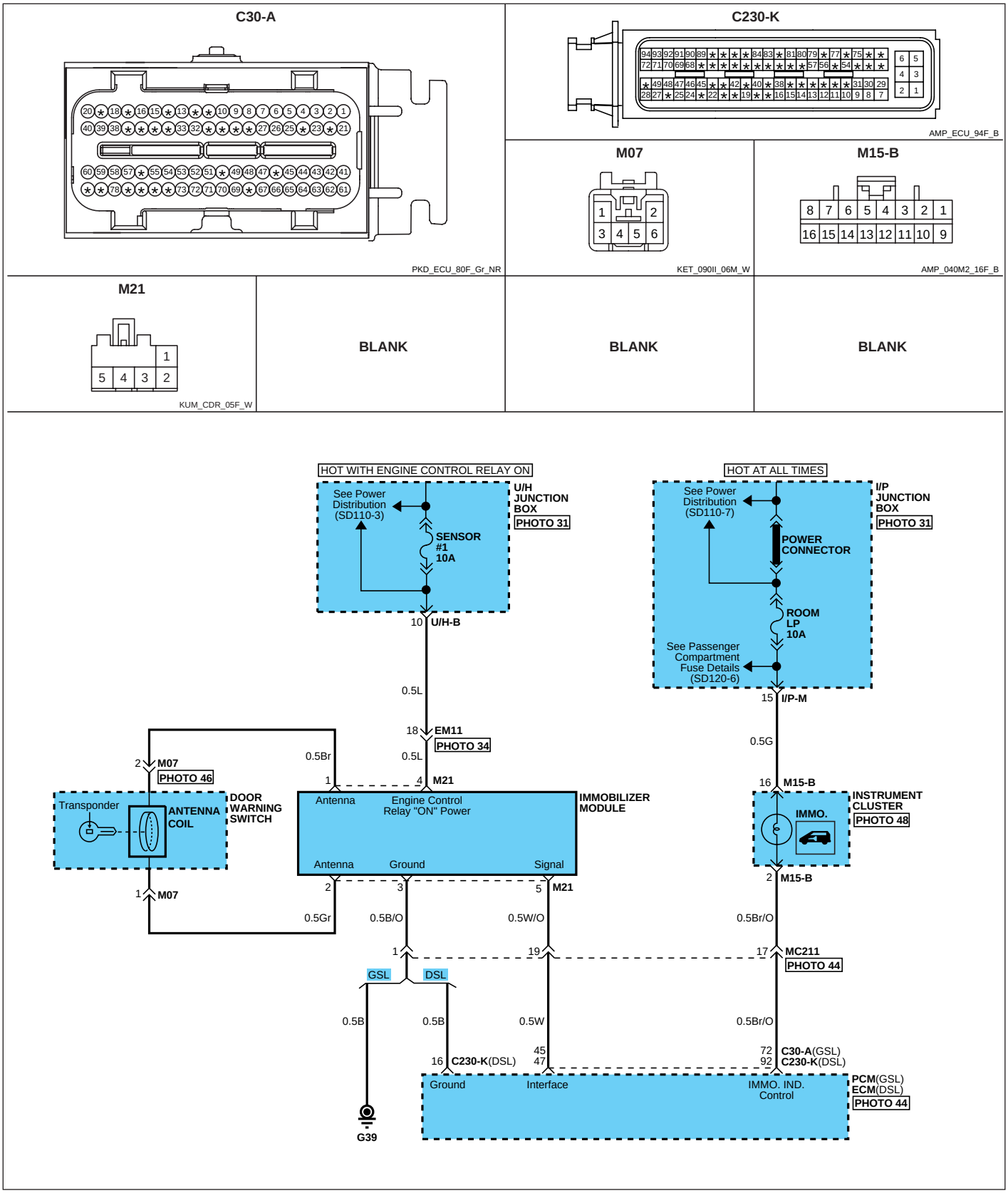

SCMBE6745L

MONITOR DTC STATUS E7FEF4DA

1. Connect scantool to Data Link Connector(DLC).
2. Ignition "ON" & engine "OFF".
3. Selet "Diagnostic Trouble Codes(DTCs)"mode and monitor "DTC Status" parameter
4. Is the DTC B1610 present?

YES

Substitute with a known-good ECM with immobilizer and check for proper operation.If the problem is corrected, replace ECU and then go to "Verification of Vehicle Repair" procedure.

NO

Fault is intermittent caused by poor contact in SMARTRA's and/or ECM's connector or was repaired and ECM memory was not cleared. Thoroughly check connectors for looseness, poor connection, bending, corrosion, contamination, deterioration, or damage. Repair or replace as necessary and then go to "Verification of Vehicle Repair" procedure.

VERIFICATION OF VEHICLE REPAIR E103EAA9

After a repair, it is essential to verify that the fault has been corrected.

1. Connect scantool and selet "Diagnostic Trouble Codes(DTCs)" mode and then clear DTC.
2. Operate the vehicle and monitor the DTC on the scantool.
3. Are any DTCs present?

YES

Go to the applicable troubleshooting procedure.

NO

System is performing to specification at this time.

DTC P1674 TRANSPONDER STATUS ERROR

COMPONENT LOCATION E16E69B2

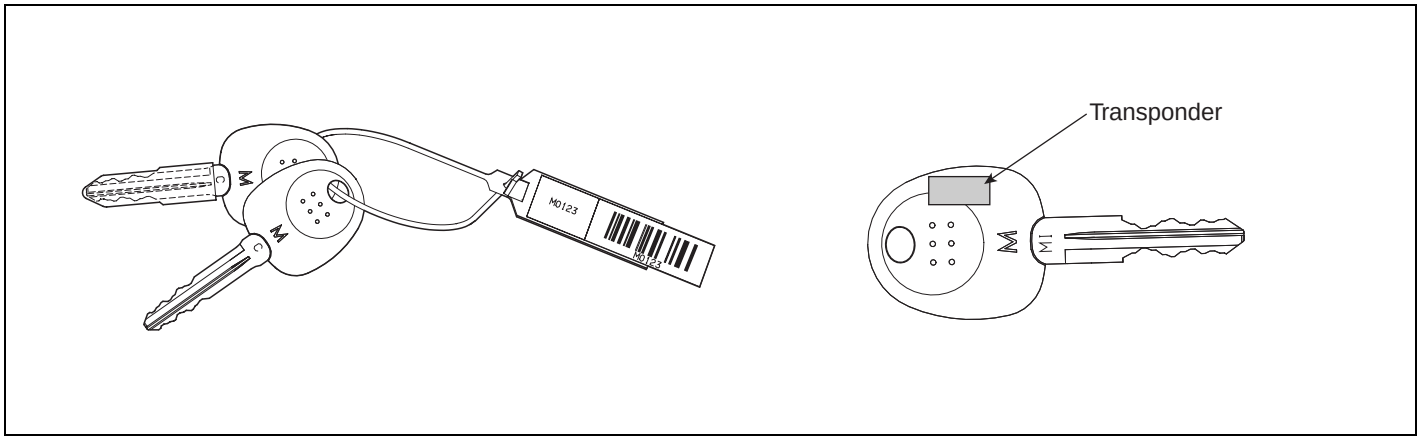

SCMBE6750L

GENERAL DESCRIPTION E41DDC6B

During the key teaching procedure the transponder will be programmed with vehicle specific data. The vehicle specific data are written into the transponder memory. The write procedure is unique; therefore the content of transponder can never be modified or changed. The data are a string of 9 bytes defined by vehicle manufacturer.
The transponder memory is split into two strings called authenticator and key password After this programming the transponder memory is locked and the data(PIN code) cannot be read or changed respectively. The transponder status changes from "virgin" to "learnt". Additionally every transponder includes a unique IDE (Identifier number) of 32 bit.
Unique means that the IDE of all transponder is different from each other. The IDE is programmed by the transponder manufacturer and is a read-only value. The authenticator and the key password are not transferred from ECM to transponder or vice versa. Only the results from the encryption algorithm are transferred. It is almost impossible to calculate the vehicle specific data from the encryption result.
For teaching of keys and special purposes the ECM is connected to the tester device.

When IG is ON, the coil supplies energy to the transponder which in turn accumulates energy in the condenser.
Once the energy supply from the coil has stopped, using the stored energy in the condenser, the transponder transmits the ID CODE (stored within the ASIC).

DTC DESCRIPTION E4CEBDC2

The ECM sets DTC P1674 if transponder key that can't be register(TP not in the password mode or whose transport data has been changed) is inserted for registration procedure.

DTC DETECTING CONDITION ED14DFB8

Item	Detecting Condition	Possible Cause
DTC Strategy		• Invalid transponder. ※ Key not in 'VIRGIN' Status or with invalid ID code
Enable Conditions	• IG ON (On Registering TP Procedure)	
Threshold value		
Detecting time		
FAIL SAFE		

SCHEMATIC DIAGRAM ECFBA039

Refer to DTC P1610.

MONITOR DTC STATUS EF4076FD

1. Connect scantool to Data Link Connector(DLC).
2. Ignition "ON" & engine "OFF".
3. Selet "Diagnostic Trouble Codes(DTCs)"mode and monitor "DTC Status" parameter
4. Is the DTC B1674 present?

YES

Go to "Inspection & Repair" procedure.

NO

Fault is intermittent caused by poor contact in SMARTRA's and/or ECM's connector or was repaired and ECM memory was not cleared. Thoroughly check connectors for looseness, poor connection, bending, corrosion, contamination, deterioration, or damage. Repair or replace as necessary and then go to "Verification of Vehicle Repair" procedure.

COMPONENT INSPECTION EBEBD049

1. Check transponder status

   1) IGN "ON" & Engine "OFF" with key intended to register.

   2) Monitor the "KEY STATUS" Parameter on the Scantool.

Specification : 'VIRGIN' or 'LEARNT'

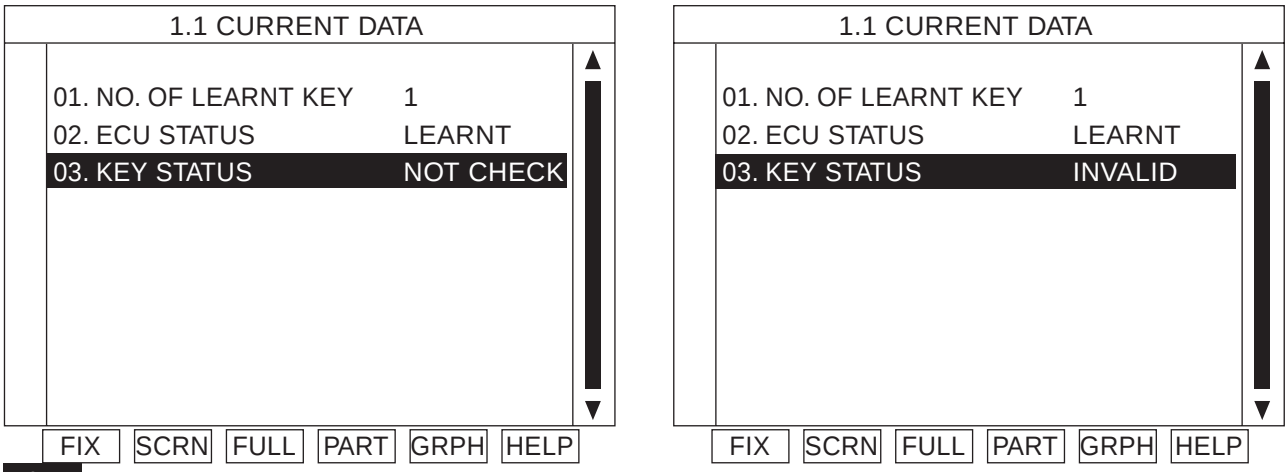

Fig 1

Fig 1) The current data in abnormal state

SCMBE6751L

   3) Is the measured voltage within specifications?

   YES

   Check connectors for looseness, poor connection, bending, corrosion, contamination, deterioration, or damage. Repair or replace as necessary and then go to "Verification of Vehicle Repair" procedure.

   NO

   Substitute with a known-good transponder and check for proper operation.
   If the problem is corrected, replace transponder and then go to "Verification of Vehicle Repair" procedure.

VERIFICATION OF VEHICLE REPAIR EEC1748B

Refer to DTC P1610.

DTC P1675 TRANSPONDER PROGRAMMING ERROR

COMPONENT LOCATION E0EFE3BC

Refer to DTC P1674.

GENERAL DESCRIPTION EC6C260F

Refer to DTC P1674.

DTC DESCRIPTION EE5B821B

The ECM sets DTC P1675 if characteristic data of transponder doesn't coincide with that of ECM owing to transponder programming error.

DTC DETECTING CONDITION EF9A9CD1

Item	Detecting Condition	Possible Cause
DTC Strategy		• Invalid transponder. ※ Invalid characteristic data ※ No transponder or more than two transponder is detected by coil antenna.
Enable Conditions	• IG ON	
Threshold value		
Detecting time		
FAIL SAFE		

SCHEMATIC DIAGRAM E5A3794F

Refer to DTC P1610.

MONITOR DTC STATUS E9EAAB24

1. Connect scantool to Data Link Connector(DLC).
2. Ignition "ON" & engine "OFF".
3. Selet "Diagnostic Trouble Codes(DTCs)"mode and monitor "DTC Status" parameter
4. Is the DTC B1675 present?

YES

Go to "Inspection & Repair" procedure.

NO

Fault is intermittent caused by poor contact in SMARTRA's and/or ECM's connector or was repaired and ECM memory was not cleared. Thoroughly check connectors for looseness, poor connection, bending, corrosion, contamination, deterioration, or damage. Repair or replace as necessary and then go to "Verification of Vehicle Repair" procedure.

COMPONENT INSPECTION EDEB8AA9

1. Check transponder and ECU status

   1) IGN "ON" & Engine "OFF" with key intended to register.

   2) Monitor the "KEY STATUS" and "ECU STATUS' Parameter on the Scantool.

Specification : 'LEARNT'

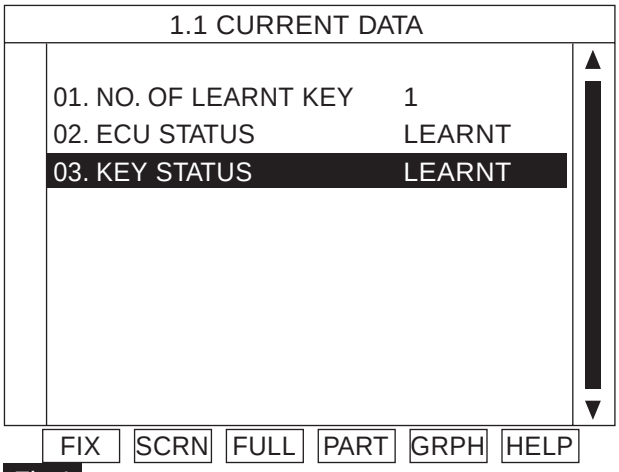

Fig 1

Fig 1) The current data in abnormal state

SCMBE6752L

   3) Is the measured voltage within specifications?

YES

Check connectors for looseness, poor connection, bending, corrosion, contamination, deterioration, or damage. Repair or replace as necessary and then go to "Verification of Vehicle Repair" procedure.

NO

Go to "Check transponder" procedure.

2. Check transponder

   1) IGN "ON" & Engine "OFF".

   2) Neutralize ECM and Register transponder key by scantool.

   NOTE

   Pin code is requied to Neutralize ECM and to Register transponder key.

   3) Are Neutralizing and Registering completed normally?

   YES

   Check connectors for looseness, poor connection, bending, corrosion, contamination, deterioration, or damage. Repair or replace as necessary and then go to "Verification of Vehicle Repair" procedure.

   NO

   Substitute with a known-good transponder and check for proper operation.
   If the problem is corrected, replace transponder and then go to "Verification of Vehicle Repair" procedure.

VERIFICATION OF VEHICLE REPAIR E43CAE2D

Refer to DTC P1610.

DTC P1676 SMARTRA MESSAGE ERROR

COMPONENT LOCATION EF6EAFEA

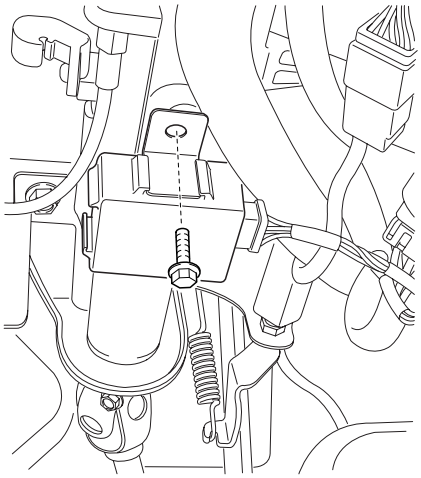

SCMBE6751D

GENERAL DESCRIPTION E53AFD8A

The SMARTRA carries out communication with the built-in transponder of the ignition key. This wireless communication runs on RF (Radio frequency of 125 kHz). The SMARTRA is mounted at the ignition lock close to the antenna coil for RF transmission and receiving. The RF signal from the transponder received by the antenna coil is converted into messages for serial communication by the SMARTRA device. And the received messages from the ECM are converted into an RF signal, which is transmitted to the transponder by the antenna. The SMARTRA does not carry out the validity check of transponder or the calculation of encryption algorithm. This device is only an advanced interface, which converts the RF data flow of the transponder into serial communication to ECM and vice versa.

* SMARTRA : SMARt TRansponder Antenna

DTC DESCRIPTION E50570B3

The ECM sets DTC P1676 if there's any fault in message from SMARTRA to ECU.

DTC DETECTING CONDITION E15FB4DC

Item	Detecting Condition	Possible Cause
DTC Strategy		• Faulty SMARTRA.
Enable Conditions	• IG ON	
Threshold value		
Detecting time		
FAIL SAFE		

SCHEMATIC DIAGRAM EECC953B

Refer to DTC P1610.

MONITOR DTC STATUS ED91CC1F

1. Connect scantool to Data Link Connector(DLC).
2. Ignition "ON" & engine "OFF".
3. Selet "Diagnostic Trouble Codes(DTCs)"mode and monitor "DTC Status" parameter
4. Is the DTC B1676 present?

YES

Go to "Inspection & Repair" procedure.

NO

Fault is intermittent caused by poor contact in SMARTRA's and/or ECM's connector or was repaired and ECM memory was not cleared. Thoroughly check connectors for looseness, poor connection, bending, corrosion, contamination, deterioration, or damage. Repair or replace as necessary and then go to "Verification of Vehicle Repair" procedure.

COMPONENT INSPECTION E1B0DDCA

1. Check transponder and ECU status
   1) IGN "ON" & Engine "OFF" with key intended to register.
   2) Monitor the "KEY STATUS" and "ECU STATUS' Parameter on the Scantool.

Specification : 'LEARNT'

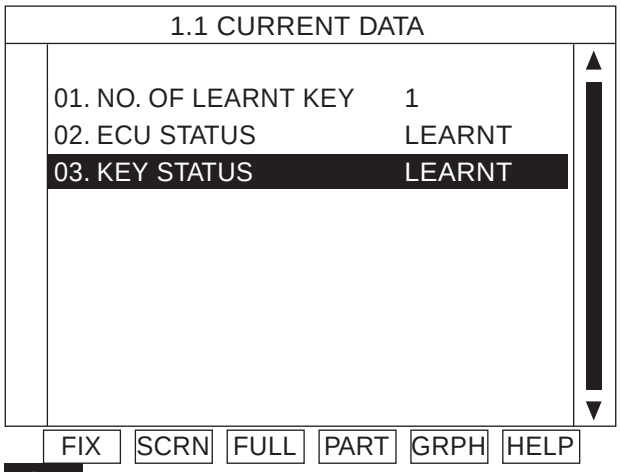

Fig 1

Fig 1) The current data in abnormal state

SCMBE6752L

3) Are "KEY STATUS" and "ECU STATUS' Parameter within specifications?

YES

Check connectors for looseness, poor connection, bending, corrosion, contamination, deterioration, or damage. Repair or replace as necessary and then go to "Verification of Vehicle Repair" procedure.

NO

Go to "Check SMARTRA" procedure.

2. Check SMARTRA

1) IGN "ON" & Engine "OFF".

2) Neutralize ECM and Register transponder key by scantool.

NOTE

Pin code is requied to Neutralize ECM and to Register transponder key.

3) Are Neutralizing and Registering completed normally?

YES

Check connectors for looseness, poor connection, bending, corrosion, contamination, deterioration, or damage. Repair or replace as necessary and then go to "Verification of Vehicle Repair" procedure.

NO

Substitute with a known-good SMARTRA and check for proper operation.
If the problem is corrected, replace SMARTRA and then go to "Verification of Vehicle Repair" procedure.

VERIFICATION OF VEHICLE REPAIR EBECB467

Refer to DTC P1610.

DTC P1690 SMARTRA NO RESPONSE

COMPONENT LOCATION EEACF1AF

Refer to DTC P1676.

GENERAL DESCRIPTION EDCA78B8

Refer to DTC P1676.

DTC DESCRIPTION E4711F56

The ECM sets DTC P1690 if there's No Response from SMARTRA.

DTC DETECTING CONDITION E7DB0663

Item	Detecting Condition	Possible Cause
DTC Strategy		• Open Circuit in signal harness • Short Circuit in signal harness • Faulty SMARTRA
Enable Conditions	• IG ON	
Threshold value		
Detecting time		
FAIL SAFE		

SCHEMATIC DIAGRAM E0B1A7CE

Refer to DTC P1610.

MONITOR DTC STATUS E3782FEB

1. Connect scantool to Data Link Connector(DLC).
2. Ignition "ON" & engine "OFF".
3. Monitor the "KEY STATUS" and "ECU STATUS' Parameter on the Scantool.

Specification : 'LEARNT'

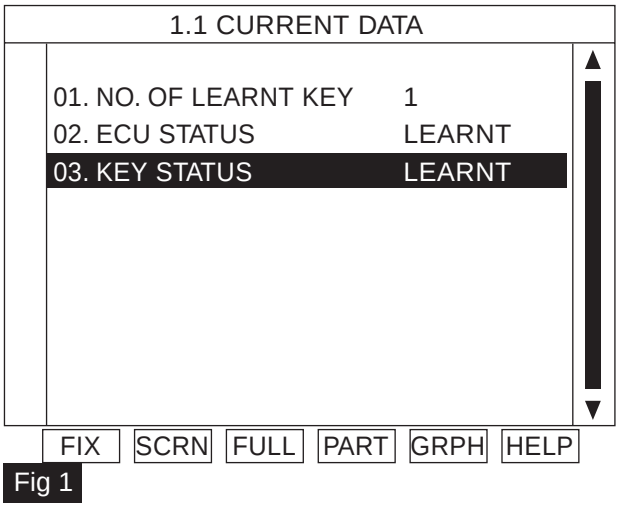

Fig 1) The current data in abnormal state

SCMBE6752L

4. Are "KEY STATUS" and "ECU STATUS' Parameter within specifications?

YES

Check connectors for looseness, poor connection, bending, corrosion, contamination, deterioration, or damage. Repair or replace as necessary and then go to "Verification of Vehicle Repair" procedure.

NO

Go to "Inspection & Repair" procedure.

TERMINAL AND CONNECTOR INSPECTION E8C1BDAD

1. Many malfunctions in the electrical system are caused by poor harness and terminals.
   Faults can also be caused by interference from other electrical systems, and mechanical or chemical damage.

2. Thoroughly check connectors for looseness, poor connection, bending, corrosion, contamination, deterioration, or damage.

3. Has a problem been found?

YES

Repair as necessary and go to "Verification Vehicle Repair" procedure.

NO

Go to "W/Harness Inspection" procedure .

POWER SUPPLY CIRCUIT INSPECTION E22B148E

1. Check for open in harness

   1) Ignition "OFF"

   2) Disconnect SMARTRA.

   3) Ignition "ON" & Engine "OFF"

   4) Measure voltage value between terminal "4" of SMARTRA and chassis ground.

Specification : 9~16V

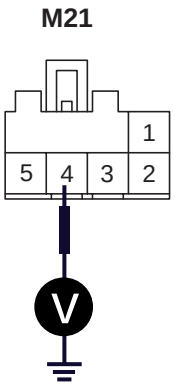

1. Coil antenna
2. Coil antenna
3. Ground
4. **Power**
5. Signal

SCMBE6753L

   5) Is the measured voltage within specifications?

   YES

   Go to "Signal circuit Inspection" procedure

   NO

   Check for open or short in harness. Repair as necessary and go to "Verification of Vehicle Repair" procedure.

SIGNAL CIRCUIT INSPECTION E7935D7A

1. Check for open in harness

   1) Ignition "OFF"

   2) Disconnect SMARTRA.

   3) Measure resistance between terminal "5" of SMARTRA and terminal C30-A-45(Gasoline) or C230-K-47(Diesel)

Specification : 1 Ω or less

[Gasoline]

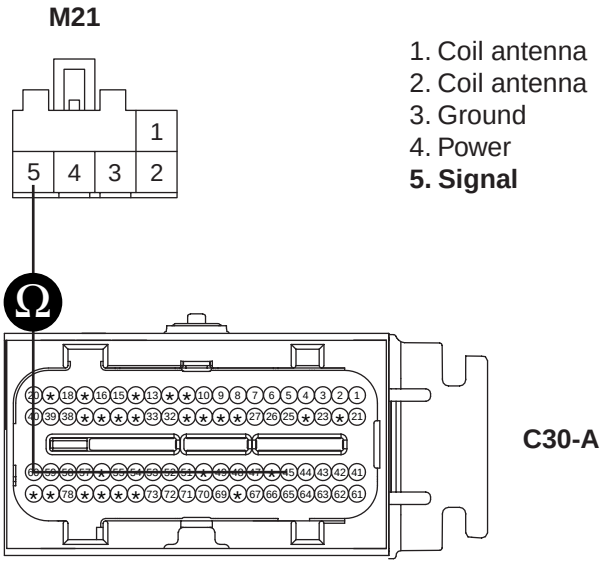

SCMBE6754L

[Diesel]

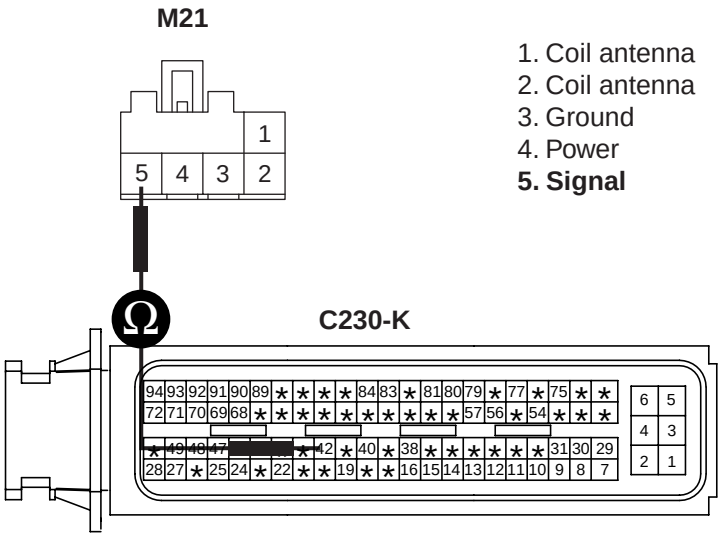

SCMBE6755L

4) Is the measured resistance within specifications?

YES

Go to "Check for short in harness" procedure.

NO

Check for open in harness. Repair as necessary and go to "Verification of Vehicle Repair" procedure.

2. Check for short in harness

1) Ignition "OFF"

2) Disconnect SMARTRA.

3) Ignition "ON" & Engine "OFF"

4) Measure voltage value between terminal "5" of SMARTRA and chassis ground.

Specification :Approx. 5.48V

M21

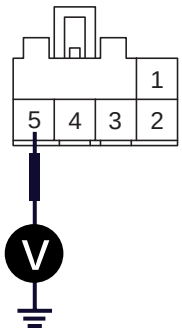

1. Coil antenna
2. Coil antenna
3. Ground
4. Power
5. Signal

SCMBE6756L

5) Is the measured voltage within specifications?

YES

Go to "Signal circuit Inspection" procedure

NO

Check for short in harness. Repair as necessary and go to "Verification of Vehicle Repair" procedure.

GROUND CIRCUIT INSPECTION ECBB382A

1. Check for open in ground harness

   1) Ignition "OFF"

   2) Disconnect SMARTRA.

   3) Measure resistance between terminal "3" of SMARTRA and chassis ground.

Specification : 1 Ω or less

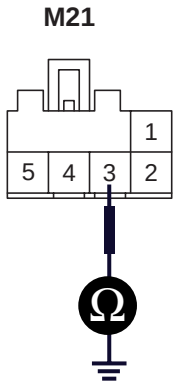

1. Coil antenna
2. Coil antenna
3. **Ground**
4. Power
5. Signal

SCMBE6757L

   4) Is the measured resistance within specifications?

   YES

   Check connectors for looseness, poor connection, bending, corrosion, contamination, deterioration, or damage. Repair or replace as necessary and then go to "Verification of Vehicle Repair" procedure.

   NO

   Check for open in harness. Repair as necessary and go to "Verification of Vehicle Repair" procedure.

VERIFICATION OF VEHICLE REPAIR ED2C8346

Refer to DTC P1610.

DTC P1691 ANTENNA COIL ERROR

COMPONENT LOCATION EBEC2385

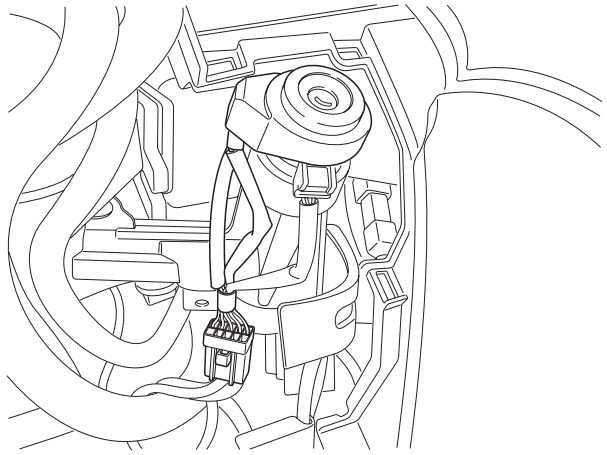

SCMBE6752D

GENERAL DESCRIPTION E0D9D74B

This wireless communication runs on RF (Radio frequency of 125 kHz). The SMARTRA is mounted at the ignition lock close to the antenna coil for RF transmission and receiving. The RF signal from the transponder received by the antenna coil is converted into messages for serial communication by the SMARTRA device. And the received messages from the EMS are converted into an RF signal, which is transmitted, to the transponder by the antenna.

DTC DESCRIPTION E58B7CDE

The ECM sets DTC P1691 if there's any fault in immobilizer antenna coil.

DTC DETECTING CONDITION EDA9BF49

Item	Detecting Condition	Possible Cause
DTC Strategy		• Open Circuit in antenna coil • Short Circuit in antenna coil • Faulty antenna coil
Enable Conditions	• IG ON (On Registering TP Procedure)	
Threshold value		
Detecting time		
FAIL SAFE		

SCHEMATIC DIAGRAM ECB64C26

Refer to DTC P1610.

MONITOR DTC STATUS EF7F0BA8

1. Connect scantool to Data Link Connector(DLC).
2. Ignition "ON" & engine "OFF".
3. Monitor the "KEY STATUS" and "ECU STATUS' Parameter on the Scantool.

Specification : 'LEARNT'

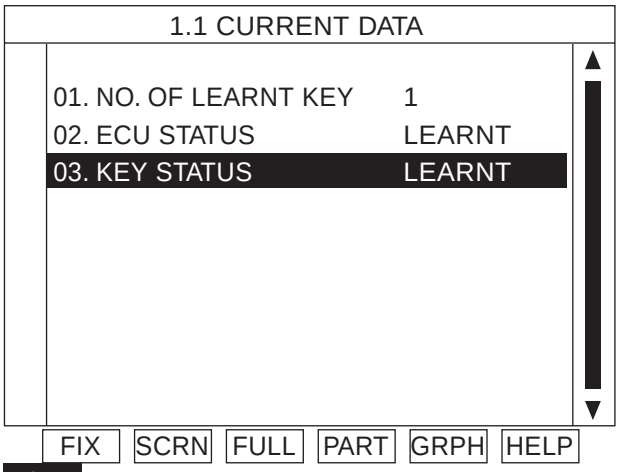

Fig 1

Fig 1) The current data in abnormal state

SCMBE6752L

4. Are "KEY STATUS" and "ECU STATUS' Parameter within specifications?

YES

Check connectors for looseness, poor connection, bending, corrosion, contamination, deterioration, or damage. Repair or replace as necessary and then go to "Verification of Vehicle Repair" procedure.

NO

Go to "Inspection & Repair" procedure.

COMPONENT INSPECTION EA4EFBB4

1. Check coil antenna
   1) Ignition "OFF"
   2) Disconnect SMARTRA.

3) Measure resistance between terminal "1" and "2" of SMARTRA.

Specification : Approx 8.5 Ω

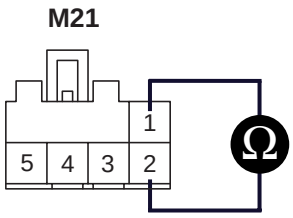

1. Coil antenna
2. Coil antenna
3. Ground
4. Power
5. Signal

SCMBE6758L

4) Is the measured resistance within specifications?

YES

Go to "Check SMARTRA" procedure.

NO

Check for open or short in antenna coil. Repair as necessary and go to "Verification of Vehicle Repair" procedure.

2. Check SMARTRA

1) IGN "ON" & Engine "OFF"

2) Neutralize ECM and Register transponder key by scantool.

NOTE

Pin code is requied to Neutralize ECM and to Register transponder key

3) Are Neutralizing and Registering completed normally?

YES

Check connectors for looseness, poor connection, bending, corrosion, contamination, deterioration, or damage. Repair or replace as necessary and then go to "Verification of Vehicle Repair" procedure.

NO

Substitute with a known-good SMARTRA and check for proper operation.
If the problem is corrected, replace SMARTRA and then go to "Verification of Vehicle Repair" procedure.

VERIFICATION OF VEHICLE REPAIR ED99DEFE

Refer to DTC P1610.

DTC P1692 IMMOBILIZER LAMP ERROR

COMPONENT LOCATION E7FCA69D

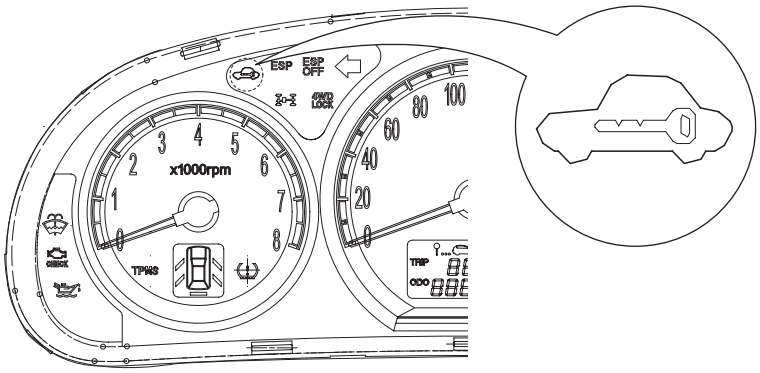

SCMBE6753D

GENERAL DESCRIPTION EC85AA6F

When driver inserts key and IGN "ON", Immobilizer informs status of system and result of Authentication by blinking of immobilizer lamp on instrument cluster. through Authentication procedure immobilizer lamp keep lighting up till engine starts. In normal status. Immobilizer lamp lights up for 30sec Right after ignition "ON". If there's any fault in immobilizer system or in Authentication, lamp blinks 5 times after ignition "ON".

DTC DESCRIPTION ECAAA0D9

The ECM sets DTC P1692 if there's short circuit in immobilizer lamp circuit.

DTC DETECTING CONDITION E9ED3A55

Item	Detecting Condition	Possible Cause
DTC Strategy		• Short Circuit in immobilizer lamp circuit. • Open/Short in control harness • Faulty ECM
Enable Conditions	• IG ON (On Registering TP Procedure)	
Threshold value		
Detecting time		
FAIL SAFE		

SCHEMATIC DIAGRAM ED209A72

Refer to DTC P1610.

MONITOR DTC STATUS E3AF39B2

1. Connect scantool to Data Link Connector(DLC).
2. Ignition "ON" & engine "OFF".
3. Selet "Diagnostic Trouble Codes(DTCs)"mode and monitor "DTC Status" parameter
4. Is the DTC B1692 present?

YES

Go to "Inspection & Repair" procedure

NO

Fault is intermittent caused by poor contact in SMARTRA's and/or ECM's connector or was repaired and ECM memory was not cleared. Thoroughly check connectors for looseness, poor connection, bending, corrosion, contamination, deterioration, or damage. Repair or replace as necessary and then go to "Verification of Vehicle Repair" procedure.

TERMINAL AND CONNECTOR INSPECTION E5C9AE07

1. Many malfunctions in the electrical system are caused by poor harness and terminals.
   Faults can also be caused by interference from other electrical systems, and mechanical or chemical damage.
2. Thoroughly check connectors for looseness, poor connection, bending, corrosion, contamination, deterioration, or damage.
3. Has a problem been found?

YES

Repair as necessary and go to "Verification Vehicle Repair" procedure

NO

Go to "W/Harness Inspection" procedure

CONTROL CIRCUIT INSPECTION E3C85BF4

1. Check for open in harness

   1) Ignition "OFF"

   2) Disconnect SMARTRA.

   3) Ignition "ON" & Engine "OFF"

   4) Measure voltage value between terminal C30-A-72(Gasoline) or C230-K-92 (Diesel) and chassis ground.

Specification : Approx. 11V

[Gasoline]

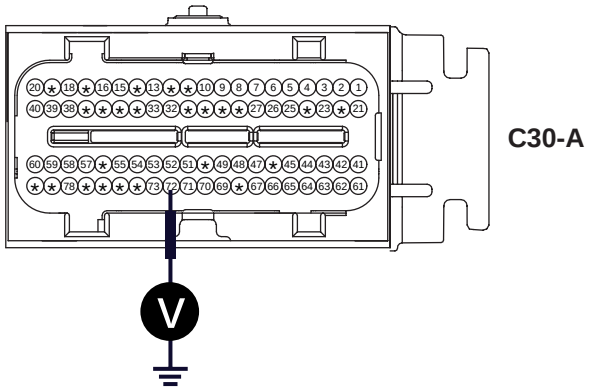

SCMBE6760L

[Diesel]

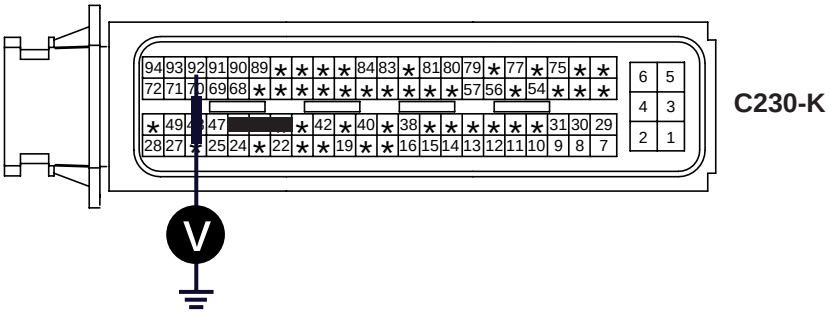

SCMBE6761L

   5) Is the measured voltage within specifications?

   YES

   Go to "Component Inspection" procedure

   NO

   Check for open or short in harness. Repair as necessary and go to "Verification of Vehicle Repair" procedure.

VISUAL / PHYSICAL INSPECTION EEAF1EB8

1. Check immobilizer lamp circuit.

   1) Ignition "ON" & Engine "OFF"

   2) Check if immobilizer lamp operates properly.

   NOTE

   Right after ignition "ON", Immobilizer lamp lights up for 30sec.
   If lamp blinks 5 times after ignition "ON", there's any fault in immobilizer system.

   3) Is immobilizer lamp operates properly?

   YES

   Check connectors for looseness, poor connection, bending, corrosion, contamination, deterioration, or damage. Repair or replace as necessary and then go to "Verification of Vehicle Repair" procedure.

   NO

   Go to "Component Inspection" procedure

COMPONENT INSPECTION E7BFBE87

1. Check immobilizer lamp.

   1) Ignition "OFF"

   2) Disconnect ECM.

   3) Ground terminal "B2" of immobilizer lamp.

   4) Ignition "ON" and Monitor operation of immobilizer lamp.

Specification : Immobilizer lamp "ON"

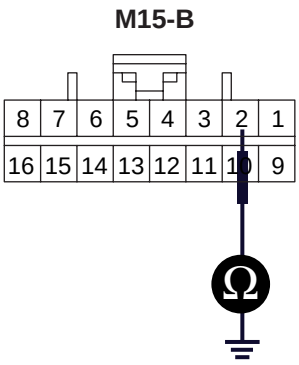

SCMBE6762L

5) Is the Immobilizer lamp "ON"?

YES

Substitute with a known-good ECM and check for proper operation.
If the problem is corrected, replace ECM and then go to "Verification of Vehicle Repair" procedure.

NOTE

ECM substitued for old one must be in "Virgin" or "Neutral" status and Pin code is requied to Neutralize ECM and to Register transponder key

NO

Check connectors for looseness, poor connection, bending, corrosion, contamination, deterioration, or damage.
Repair or replace as necessary and then go to "Verification of Vehicle Repair" procedure.

VERIFICATION OF VEHICLE REPAIR ED89A5A6

Refer to DTC P1610.

DTC P1693 TRANSPONDER NO RESPONSE ERROR / INVALID RESPONSE

COMPONENT LOCATION E6B0B3ED

Refer to DTC P1674.

GENERAL DESCRIPTION EACC3444

Refer to DTC P1674.

DTC DESCRIPTION ED9200AA

The ECM sets DTC P1693 if there's abnormal response from transponder.

DTC DETECTING CONDITION EA03F4ED

Item	Detecting Condition	Possible Cause
DTC Strategy		• Corrupted data from Transponder • More than one TP in the magnetic field • No TP(Key without TP) in the magnetic field
Enable Conditions	• IG ON	
Threshold value		
Detecting time		
FAIL SAFE		

SCHEMATIC DIAGRAM E8525FE3

Refer to DTC P1610.

COMPONENT INSPECTION EA082EB6

1. Check transponder and ECU status

   1) IGN "ON" & Engine "OFF"

   2) Monitor the "KEY STATUS" and "ECU STATUS' Parameter on the Scantool.

Specification : 'LEARNT'

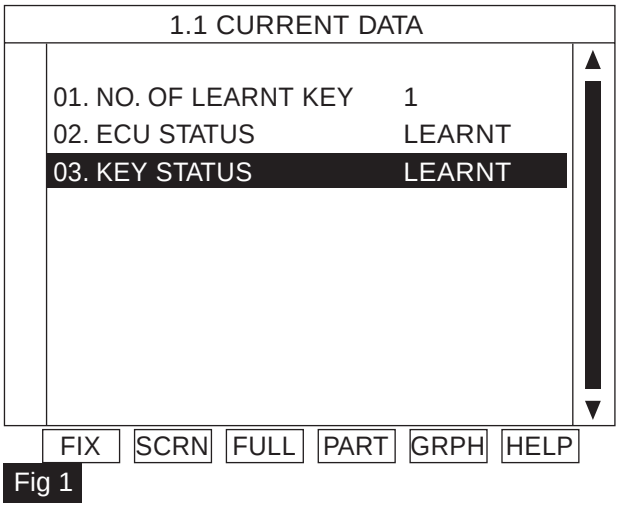

Fig 1) The current data in abnormal state

SCMBE6752L

3) Are "KEY STATUS" and "ECU STATUS' Parameter within specifications?

YES

Check connectors for looseness, poor connection, bending, corrosion, contamination, deterioration, or damage. Repair or replace as necessary and then go to "Verification of Vehicle Repair" procedure.

NO

Go to "Check transponder" procedure.

2. Check transponder

1) IGN "ON" & Engine "OFF"

2) Neutralize ECM and Register transponder key by scantool.

NOTE

Pin code is requied to Neutralize ECM and to Register transponder key

3) Are Neutralizing and Registering completed normally?

YES

Check connectors for looseness, poor connection, bending, corrosion, contamination, deterioration, or damage. Repair or replace as necessary and then go to "Verification of Vehicle Repair" procedure.

NO

Substitute with a known-good transponder and check for proper operation.
If the problem is corrected, replace transponder and then go to "Verification of Vehicle Repair" procedure.

VERIFICATION OF VEHICLE REPAIR EBB1DD15

Refer to DTC P1610.

DTC P1694 EMS MESSAGE ERROR

COMPONENT LOCATION E7BFF80B

Refer to DTC P1610.

GENERAL DESCRIPTION EBA74F6C

The ECM and the SMARTRA communicate by dedicated line. During this communication of ECM and SMARTRA the K line of ECM cannot be used for communication. The ECM controls the communication either to SMARTRA or to other devices(e.g. scanner) on K line by switching of a multiplexer and specific communication procedures. The multiplexer is a part of ECM H/W.

DTC DESCRIPTION E3EB4038

The ECM sets DTC P1694 if Request from EMS is invalid.

DTC DETECTING CONDITION E3C9689B

Item	Detecting Condition	Possible Cause
DTC Strategy		• Faulty EMS ※ Protocol layer violation - Invalid request - Check sum error
Enable Conditions	• IG ON	
Threshold value		
Detecting time		
FAIL SAFE		

SCHEMATIC DIAGRAM E5FDAEE2

Refer to DTC P1610.

COMPONENT INSPECTION EC87BCB0

1. Check transponder and ECU status

   1) IGN "ON" & Engine "OFF"

   2) Monitor the "KEY STATUS" and "ECU STATUS' Parameter on the Scantool.

Specification : 'LEARNT'

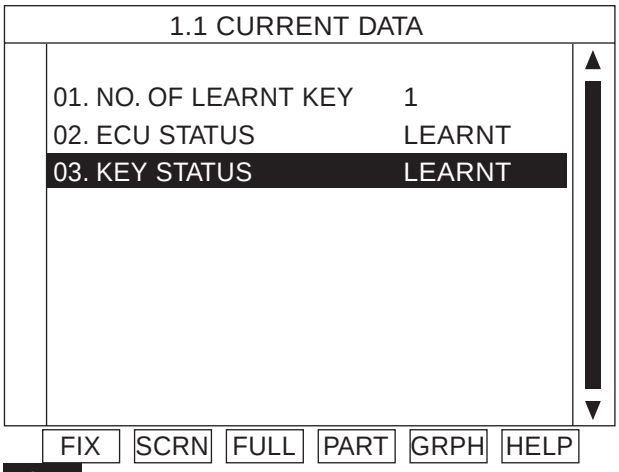

Fig 1

Fig 1) The current data in abnormal state

SCMBE6752L

   3) Are "KEY STATUS" and "ECU STATUS' Parameter within specifications?

YES

Check connectors for looseness, poor connection, bending, corrosion, contamination, deterioration, or damage. Repair or replace as necessary and then go to "Verification of Vehicle Repair" procedure.

NO

Go to "Check transponder" procedure

2. Check ECM

   1) IGN "ON" & Engine "OFF"

   2) Neutralize ECM and Register transponder key by scantool.

   NOTE

   Pin code is requied to Neutralize ECM and to Register transponder key

   3) Are Neutralizing and Registering completed normally?

   YES

   Check connectors for looseness, poor connection, bending, corrosion, contamination, deterioration, or damage. Repair or replace as necessary and then go to "Verification of Vehicle Repair" procedure.

   NO

   Substitute with a known-good ECM and check for proper operation.
   If the problem is corrected, replace ECM and then go to "Verification of Vehicle Repair" procedure.

   NOTE

   ECM substitued for old one must be in "Virgin" or "Neutral" status and Pin code is requied to Neutralize ECM and to Register transponder key

VERIFICATION OF VEHICLE REPAIR E0E43ABF

Refer to DTC P1610.

DTC P1695 EMS MEMORY ERROR

COMPONENT LOCATION E786EAFF

Refer to DTC P1610.

GENERAL DESCRIPTION EDFD08C5

The relevant data for the immobilizer function are stored at permanent memory (EEPROM or Flash etc.).
The immobilizer data are stored by three independent entries.
The data from EEPROM are evaluated by ?2 of 3 decision“ . That means all three entries are read and the content is compared before authentication process.
If the contents of all entries are equal, the authentication will run without additional measures.
If only the contents of two entries are equal, the authentication will run and fault code "EEPROM defective" is stored at ECM.
If the contents of all three entries are different from each other, no authentication will be possible and the fault code "EEPROM defective" will be stored. The limp home function cannot be activated. The ECM shall be replaced if the EEPROM related fault occurs again after new teaching of all keys.

DTC DESCRIPTION EE7F16B5

The ECM sets DTC P1694 if there’s any fault in EMS internal permanent memory(EEPROM or Flash etc.

DTC DETECTING CONDITION EC4D1C22

Item	Detecting Condition	Possible Cause
DTC Strategy		• Faulty EMS
Enable Conditions	• IG ON	
Threshold value		
Detecting time		
FAIL SAFE		

SCHEMATIC DIAGRAM EAA3850E

Refer to DTC P1610.

COMPONENT INSPECTION E6FAC11A

1. Check transponder and ECU status

   1) IGN "ON" & Engine "OFF"

   2) Monitor the "KEY STATUS" and "ECU STATUS' Parameter on the Scantool.

Specification : 'LEARNT'

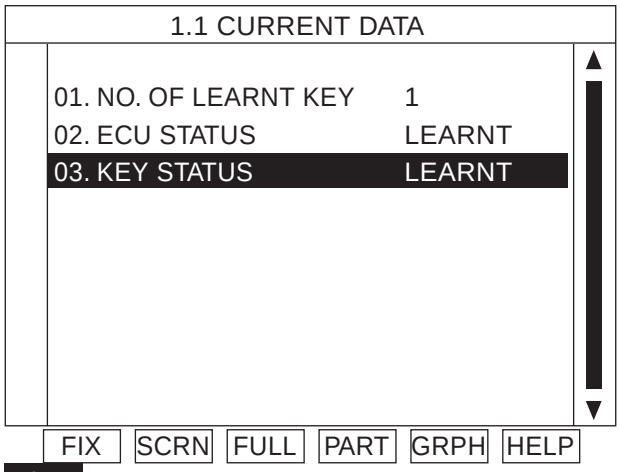

Fig 1

Fig 1) The current data in abnormal state

SCMBE6752L

   3) Are "KEY STATUS" and "ECU STATUS' Parameter within specifications?

YES

Check connectors for looseness, poor connection, bending, corrosion, contamination, deterioration, or damage. Repair or replace as necessary and then go to "Verification of Vehicle Repair" procedure.

NO

Go to "Check transponder" procedure

2. Check ECM

   1) IGN "ON" & Engine "OFF"

   2) Neutralize ECM and Register transponder key by scantool.

   NOTE

   Pin code is requied to Neutralize ECM and to Register transponder key

   3) Are Neutralizing and Registering completed normally?

   YES

   Check connectors for looseness, poor connection, bending, corrosion, contamination, deterioration, or damage. Repair or replace as necessary and then go to "Verification of Vehicle Repair" procedure.

   NO

   Substitute with a known-good ECM and check for proper operation.
   If the problem is corrected, replace ECM and then go to "Verification of Vehicle Repair" procedure.

   NOTE

   ECM substitued for old one must be in "Virgin" or "Neutral" status and Pin code is requied to Neutralize ECM and to Register transponder key

VERIFICATION OF VEHICLE REPAIR EB801803

Refer to DTC P1610.

DTC P1696 AUTHENTICATION FAIL

COMPONENT LOCATION E5AAB3B2

Refer to DTC P1674.

GENERAL DESCRIPTION EBF9D3EB

Refer to DTC P1674.

DTC DESCRIPTION E3D110D8

The ECM sets DTC P1696 if invaild key is inserted into key hole for Authentication.

DTC DETECTING CONDITION EFEFC47A

Item	Detecting Condition	Possible Cause
DTC Strategy		• Virgin TP at EMS status "Learnt" • Learnt(Invalid) TP at EMS status "Learnt"
Enable Conditions	• IG ON	
Threshold value		
Detecting time		
FAIL SAFE		

SCHEMATIC DIAGRAM E481B11B

Refer to DTC P1610.

COMPONENT INSPECTION EC6B8B88

1. Check transponder and ECU status

   1) IGN "ON" & Engine "OFF"

   2) Monitor the "KEY STATUS" and "ECU STATUS' Parameter on the Scantool.

Specification : 'LEARNT'

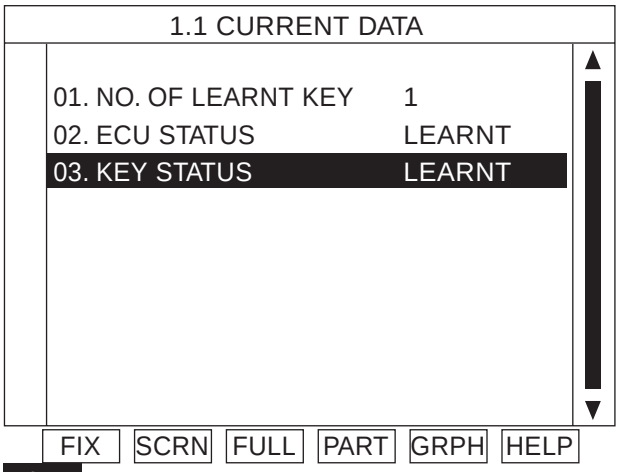

Fig 1

Fig 1) The current data in abnormal state

SCMBE6752L

   3) Are "KEY STATUS" and "ECU STATUS' Parameter within specifications?

YES

Check connectors for looseness, poor connection, bending, corrosion, contamination, deterioration, or damage. Repair or replace as necessary and then go to "Verification of Vehicle Repair" procedure.

NO

Register as necessary and then go to "Verification of Vehicle Repair" procedure.
CASE 1. KEY STATUS "VIRGIN" : Register transponder key now inserted
CASE 2. KEY STATUS "INVAILD" : Register all transponder key

VERIFICATION OF VEHICLE REPAIR EF67FFDF

Refer to DTC P1610.

DTC P1697 HI-SCAN MESSAGE ERROR

COMPONENT LOCATION EFA93E09

Refer to DTC P1610.

GENERAL DESCRIPTION E1C8E714

In immobilizer system, scantool is mainly used for diagnosis. besides this, registration of key and neutralization of ECM is executed by scantool. For ECM communicate with other components such as SMARTRA and scantool by changing type of communication through just one line, K-line communication between scantool and ECM is unavalible while communication between ECM and SMARTRA is in progress.

DTC DESCRIPTION EEDB9E3B

The ECM sets DTC P1696 if Request from Tester is Invalid.

DTC DETECTING CONDITION EE00D6EF

Item	Detecting Condition	Possible Cause
DTC Strategy		• Invalid request - Protocol layer violation - Check sum error
Enable Conditions	• IG ON	
Threshold value		
Detecting time		
FAIL SAFE		

SCHEMATIC DIAGRAM EC2CF610

Refer to DTC P1610.

MONITOR DTC STATUS EB601B51

1. Connect scantool to Data Link Connector(DLC).
2. Ignition "ON" & engine "OFF".
3. Selet "Diagnostic Trouble Codes(DTCs)"mode and monitor "DTC Status" parameter
4. Is the DTC B1697 present?

YES

Go to "Inspection & Repair" procedure.

NO

Fault is intermittent caused by poor contact in SMARTRA's and/or ECM's connector or was repaired and ECM memory was not cleared. Thoroughly check connectors for looseness, poor connection, bending, corrosion, contamination, deterioration, or damage. Repair or replace as necessary and then go to "Verification of Vehicle Repair" procedure.

COMPONENT INSPECTION E4CF2279

1. Check communication between ECM and scantool

   1) IGN "ON" & Engine "OFF"

   2) Connect scantool to Data Link Connector(DLC).

   3) Erase the DTC and Monitor Parameter of immobilizer on the Scantool.
      Try one more time from "select car model " even if "Communication error" is present on the scantool.

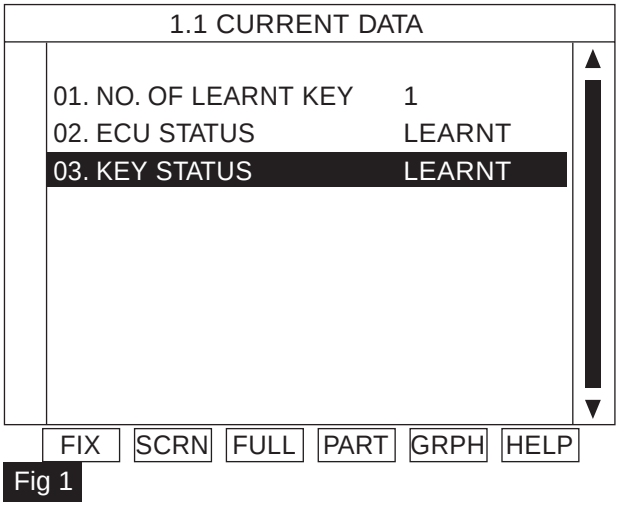

Fig 1) The current data in abnormal state

SCMBE6752L

   4) Is the communication between ECM and scantool normal?

      YES

      If ECM is in "Locked by Timer" status. Keep "KEY ON" status for 1 hours to withdraw "Locked by Timer" status. Then repair or replace as necessary and go to "Verification of Vehicle Repair" procedure.

      NO

      Substitute with a known-good scantool and check for proper operation.
      If the problem is corrected, Go to "Verification of Vehicle Repair" procedure.

VERIFICATION OF VEHICLE REPAIR E6CAE6B3

Refer to DTC P1610.

DTC P1699 TWICE OVERTRIAL

COMPONENT LOCATION E3ABB893

Refer to DTC P1610.

GENERAL DESCRIPTION ECE32C87

This is a special function for engine start by vehicle manufacturer. The engine can be started for moving from the production line to an area where the key teaching is proceeded.

DTC DESCRIPTION EF64F1A9

The ECM sets DTC P1697 if the maximum limit of Twice IGN is Exceeded.

DTC DETECTING CONDITION EBD5D472

Item	Detecting Condition	Possible Cause
DTC Strategy		• Twice IGN ≥ 32 times
Enable Conditions	• IG ON	
Threshold value		
Detecting time		
FAIL SAFE		

SCHEMATIC DIAGRAM EF63DA9A

Refer to DTC P1610.

MONITOR DTC STATUS E5D8B0F5

1. Connect scantool to Data Link Connector(DLC).
2. Ignition "ON" & engine "OFF".
3. Selet "Diagnostic Trouble Codes(DTCs)"mode and monitor "DTC Status" parameter
4. Is the DTC B1699 present?

YES

Go to "Inspection & Repair" procedure.

NO

Fault is intermittent caused by poor contact in SMARTRA's and/or ECM's connector or was repaired and ECM memory was not cleared. Thoroughly check connectors for looseness, poor connection, bending, corrosion, contamination, deterioration, or damage. Repair or replace as necessary and then go to "Verification of Vehicle Repair" procedure.

COMPONENT INSPECTION EFD3336B

1. Check transponder and ECU status

   1) IGN "ON" & Engine "OFF"

   2) Connect scantool to Data Link Connector(DLC).

   3) Erase the DTC and Monitor the "ECU STATUS' Parameter on the Scantool.

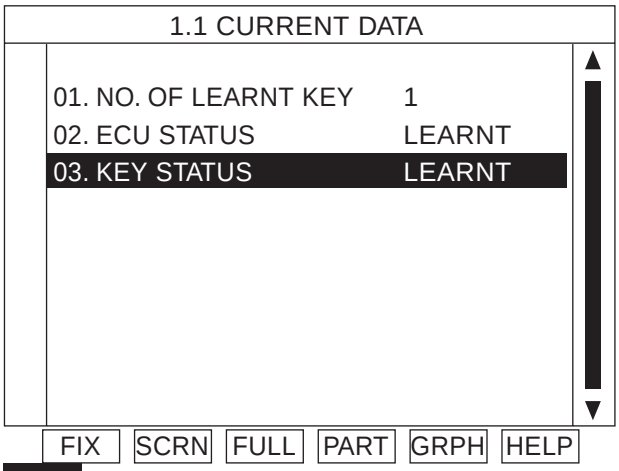

Fig 1

Fig 1) The current data in abnormal state

SCMBE6752L

   4) Is "ECU STATUS' Parameter "Locked"?

   YES

   Keep "KEY ON" status for 1 hours to withdraw "Locked by Timer" status. Then register transponder and go to "Verification of Vehicle Repair" procedure.

   NO

   Check connectors for looseness, poor connection, bending, corrosion, contamination, deterioration, or damage. Repair or replace as necessary and then go to "Verification of Vehicle Repair" procedure.

VERIFICATION OF VEHICLE REPAIR EC28D3B9

Refer to DTC P1610.

IMMOBILIZER CONTROL UNIT

REPLACEMENT E2DD9004

1. Disconnect the negative (-) battery terminal.
2. Remove the driver crash pad lower panel(A) after removing side cover. (Refer to the Body group - "Crash pad").

[LHD]

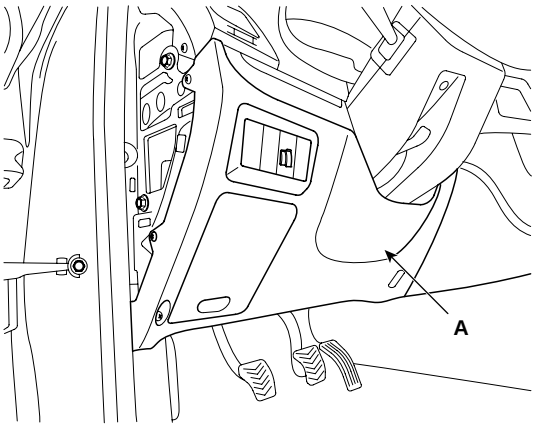

SCMBE6580D

[RHD]

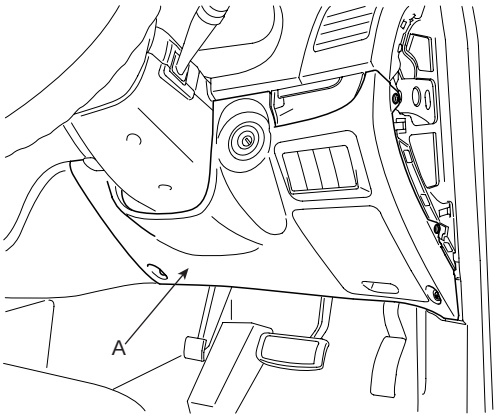

SCMBE6580R

3. Disconnect the 5P connector of the SMARTRA unit and then remove the SMARTRA unit (A) after loosening a nut.

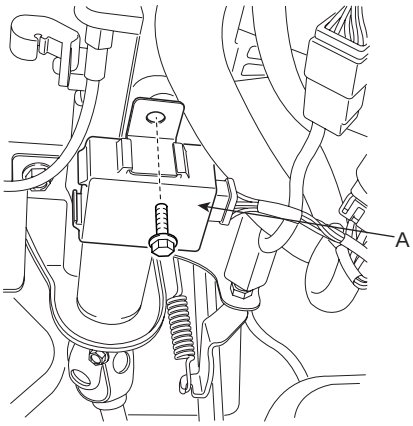

SCMBE6581D

4. Installation is the reverse of removal procedure.

COIL ANTENNA

REPLACEMENT E0B66B6D

1. Disconnect the negative (-) battery terminal.
2. Remove the driver crash pad lower panel (A). (Refer to the Body group - "Crash pad").

[LHD]

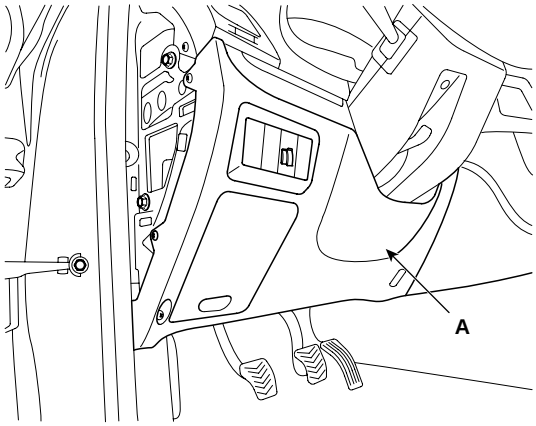

SCMBE6590D

[RHD]

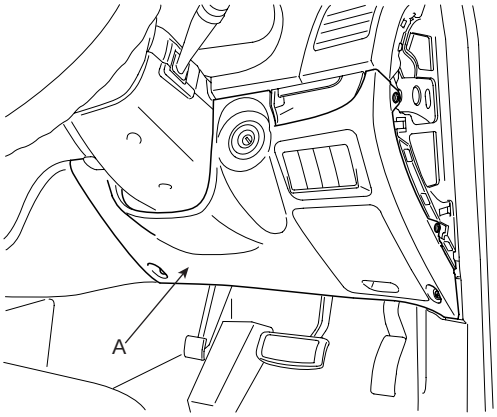

SCMBE6590R

3. Disconnect the 6P connector of the coil antenna and then remove the coil antenna (A) after loosening the screw.

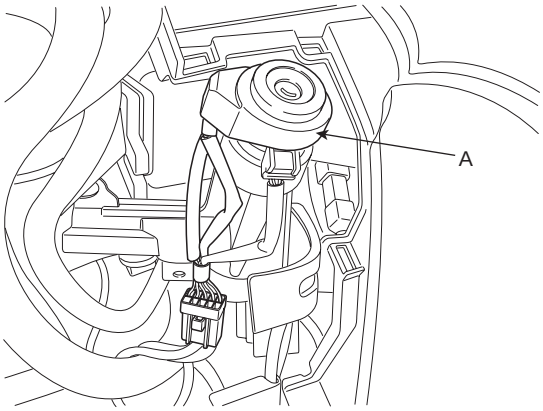

SCMBE6591D

4. Installation is the reverse of removal procedure.

IGNITION SYSTEM

REPLACEMENT EE8BA5DF

1. Disconnect the negative (-) battery terminal.
2. Remove the crash pad lower panel (Refer to the Body group - crash pad).
3. Remove the ignition switch (A) after loosening the screw with IG ON and disconnecting the 6P connector.

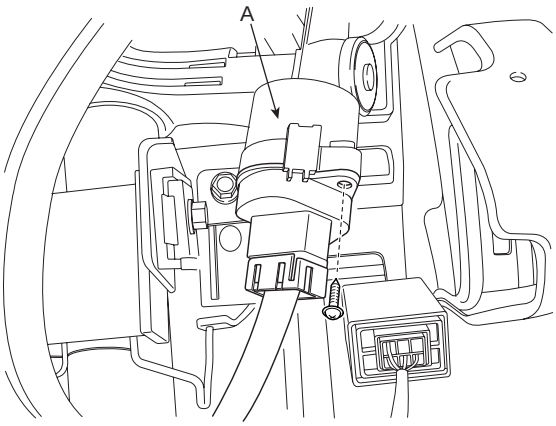

ATLG781A

4. Remove the steering column cover (Refer to the ST group).
5. Remove the door warning switch and key illumination lamp (A) after disconnecting the 6P connector.

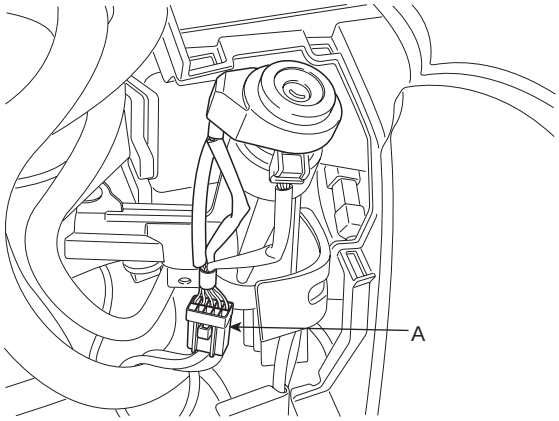

SCMBE6531D

6. If it is necessary to remove the key lock cylinder (A), Remove the key lock cylinder (A) after pushing lock pin (B) with key ACC.

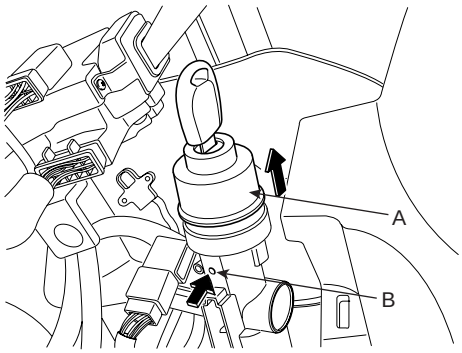

ATIE781C

7. Installation is the reverse of removal procedure.

INSPECTION EF31DB95

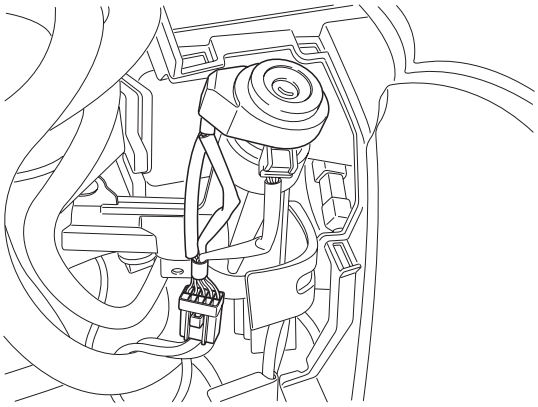

SCMBE6532D

1. Disconnect the ignition switch connector and key warning switch connector from under the steering column.
2. Check for continuity between the terminals.
3. If continuity is not specified, replace the switch.

POSITION \ TERMINAL	KEY	IGNITION SWITCH 2	4	6	5	3	1	STEERING TRAVEL	TRAVEL	KEY WARNING SWITCH 5	6	KEY HOLE ILLUMINATION 3	4
LOCK	REMOVAL							LOCK					
	INSERT							LOCK	UNLOCK				
ACC	INSERT	○—○						UNLOCK					
ON	INSERT	○—○—○			○—○			UNLOCK		○—○			
START	INSERT	○—	—	—○	○—	—○	—○	UNLOCK					

LTIF781E