Drive Belt Tensioner Removal

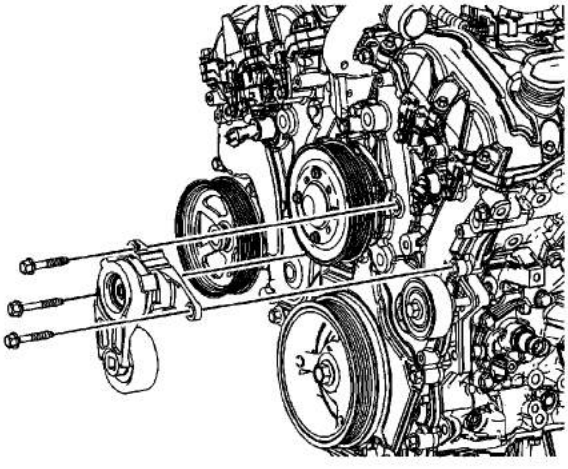

1. Remove the drive belt tensioner bracket bolts.
2. Remove the drive belt tensioner assembly.

cardiagn.com

Oil Level Indicator and Tube Removal

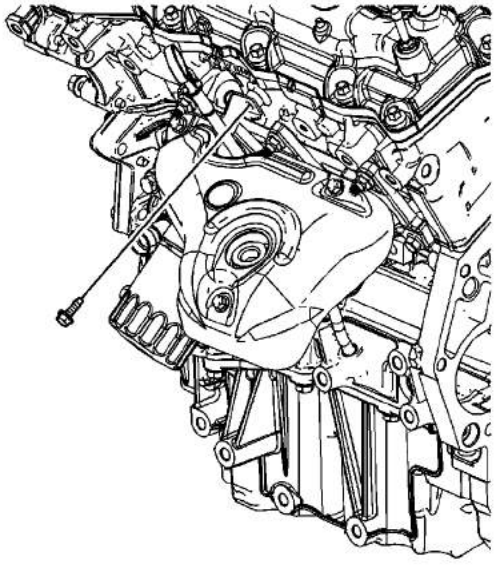

1. Remove the oil level indicator tube bracket bolt.

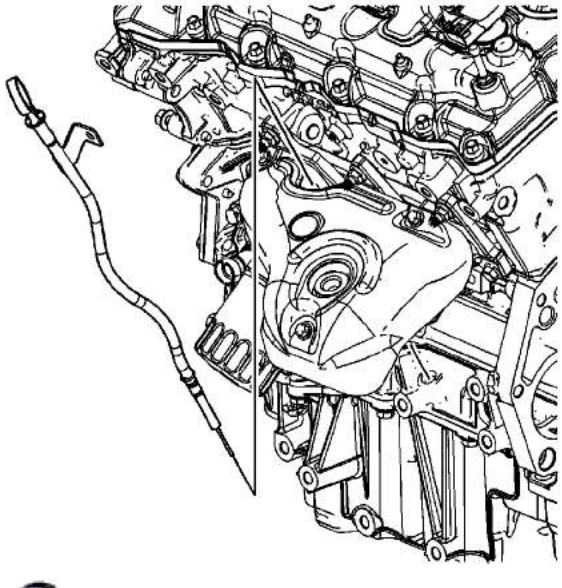

2. Remove the oil level indicator and tube by sliding the tube out from the lower crankcase hole.

cardiagn.com

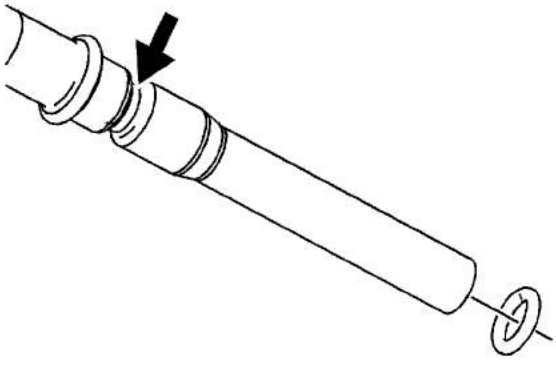

3. Remove and discard the O-ring from the oil level indicator tube.

cardiagn.com

Exhaust Manifold Removal - Left Side

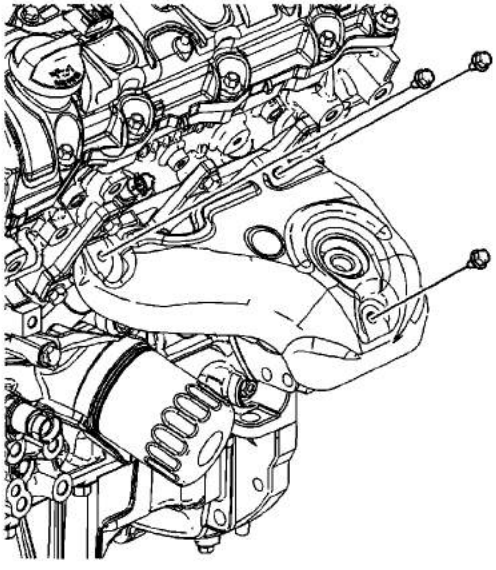

1. Remove the left exhaust manifold heat shield bolts.

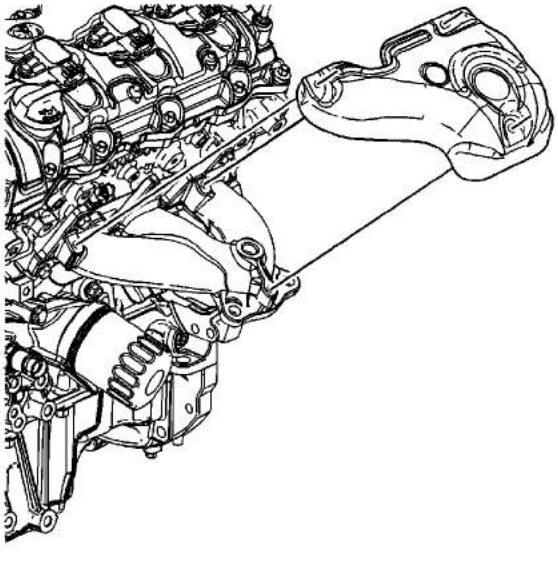

2. Remove the left exhaust manifold heat shield.

cardiagn.com

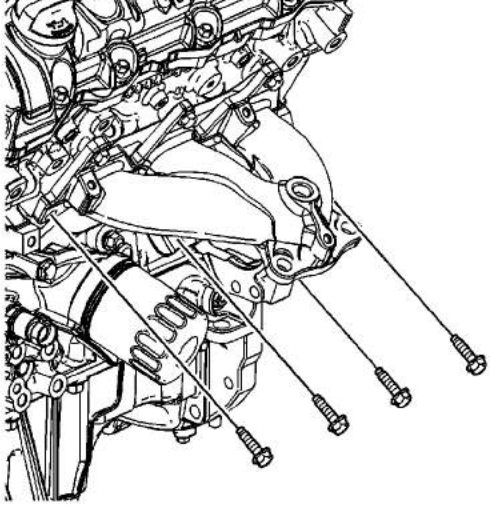

3. Remove the left exhaust manifold lower bolts from the left cylinder head.

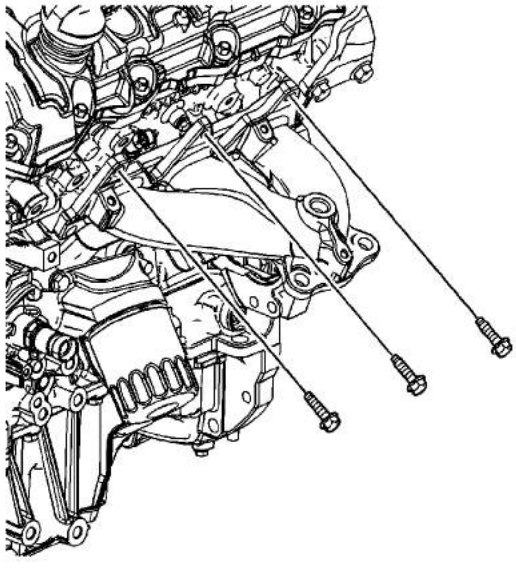

4. Remove the left exhaust manifold upper bolts from the left cylinder head.

cardiagn.com

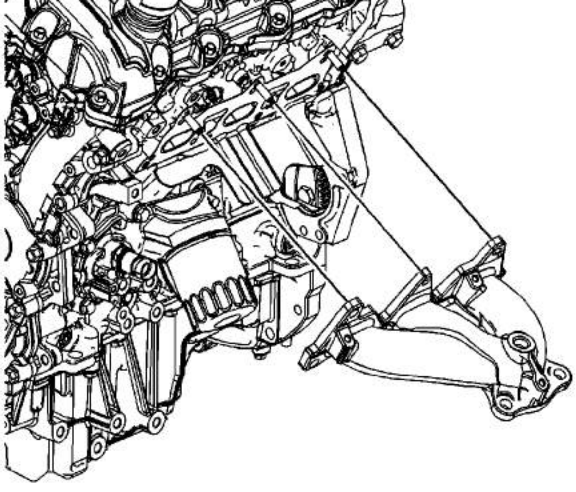

5. Remove the left exhaust manifold.

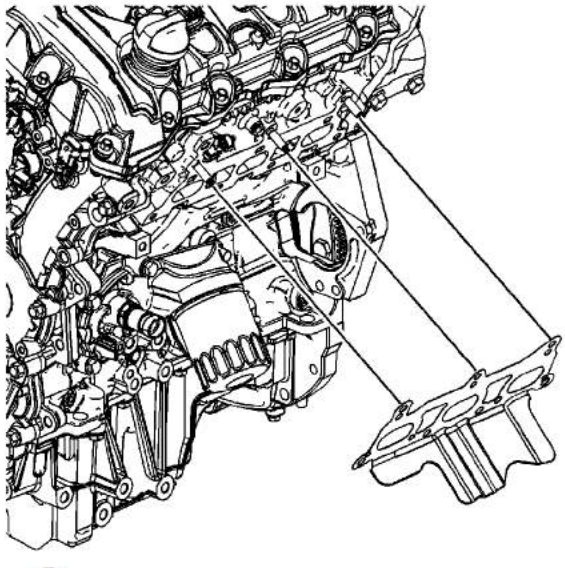

6. Remove and discard the left exhaust manifold gasket.

cardiagn.com

Oil Filter Adapter Removal (LCS)

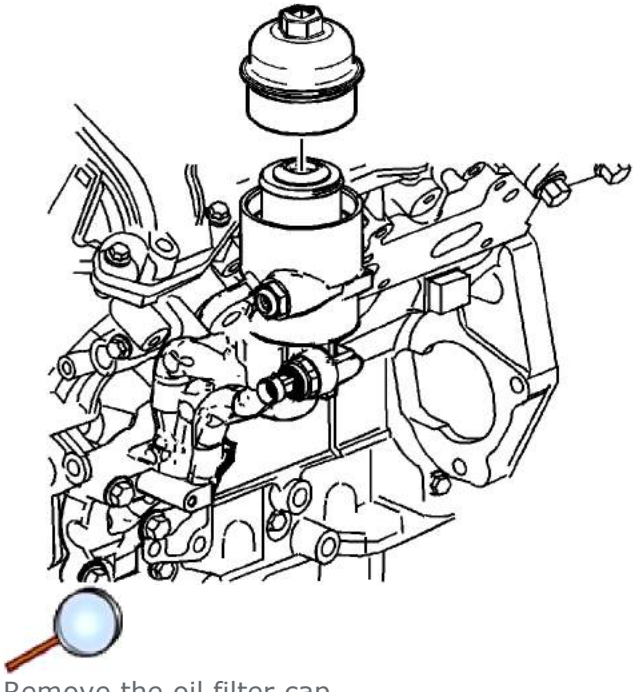

1. Remove the oil filter cap.

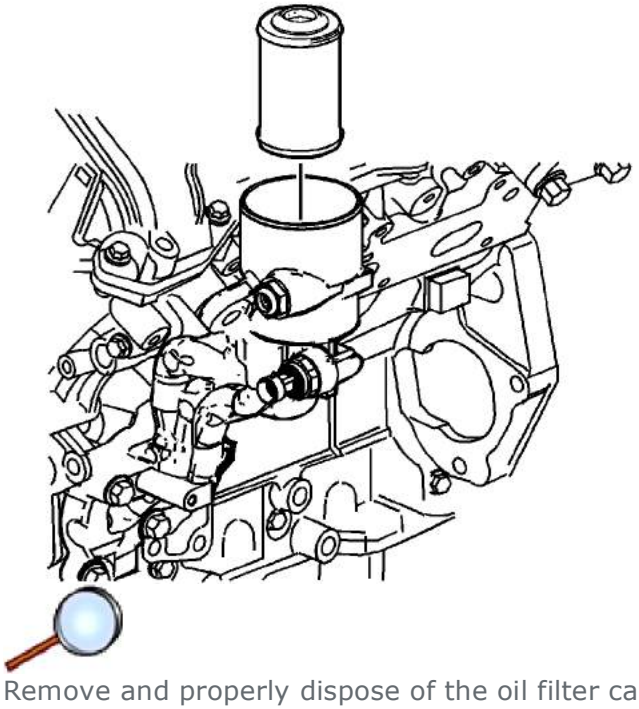

2. Remove and properly dispose of the oil filter cartridge.
3. Re-install the oil filter cap.

cardiagn.com

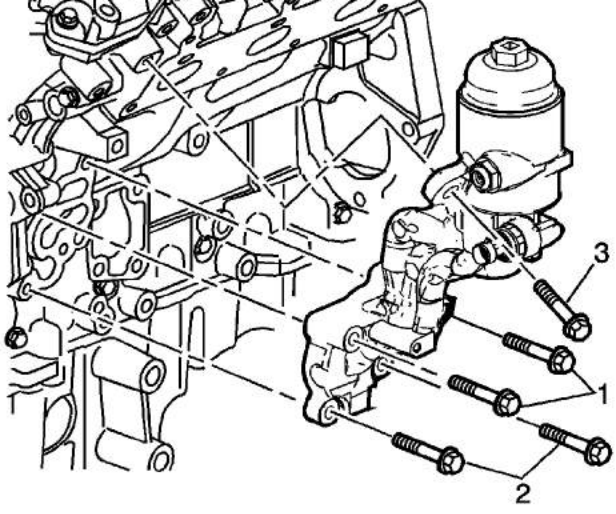

4. Remove the oil filter adapter bolts (1-3) from the engine block.
5. Remove the oil filter adapter.

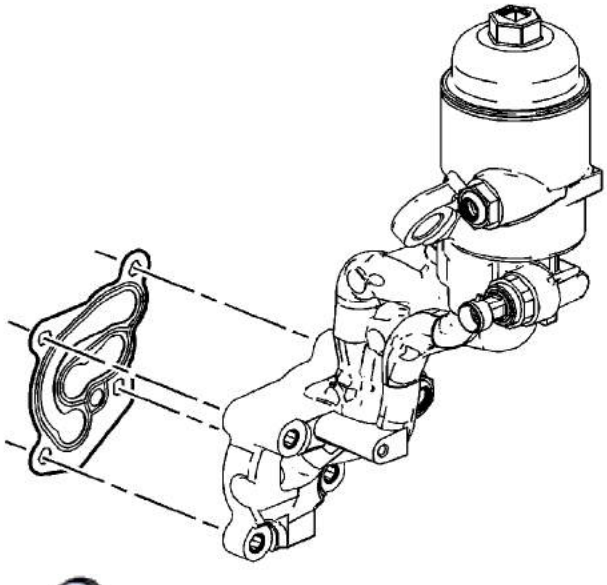

6. Remove and discard the oil filter adapter gasket.

cardiagn.com

Oil Filter Adapter Removal (LY7)

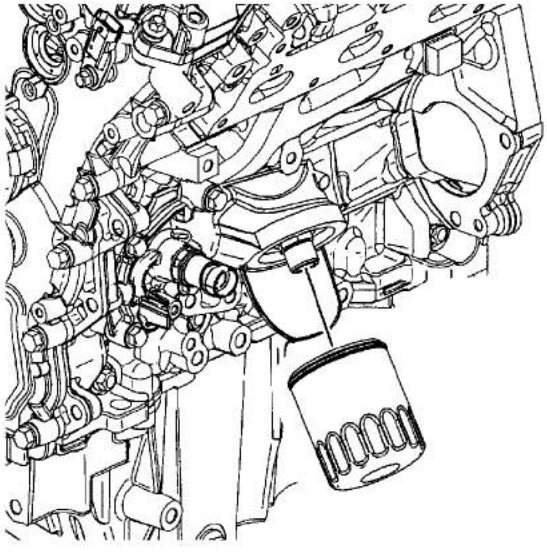

1. Remove and properly dispose of the oil filter.

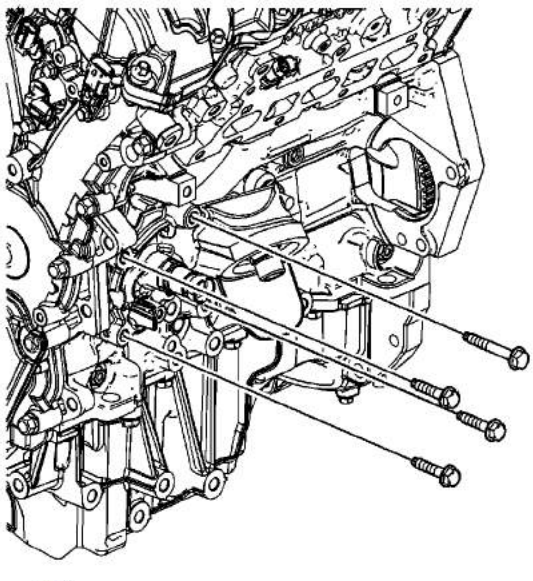

2. Remove the oil filter adapter bolts from the engine block.

cardiagn.com

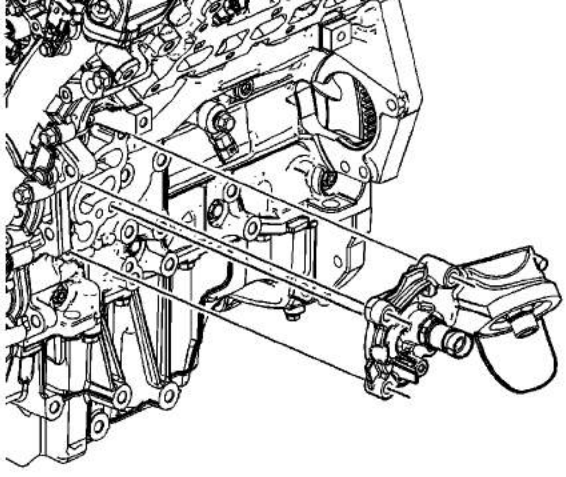

3. Remove the oil filter adapter.

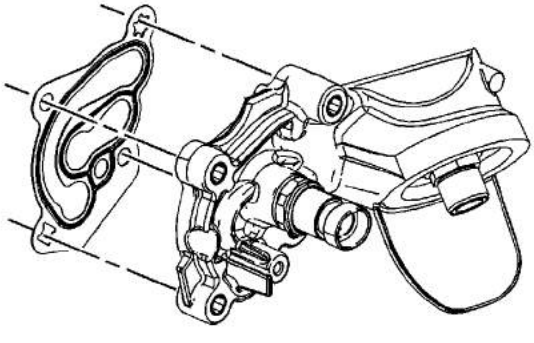

4. Remove and discard the oil filter adapter gasket.

cardiagn.com

Exhaust Manifold Removal - Right Side

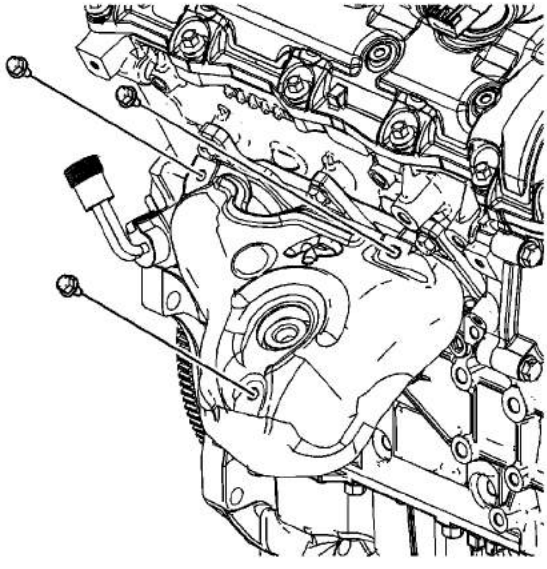

1. Remove the right exhaust manifold heat shield bolts.

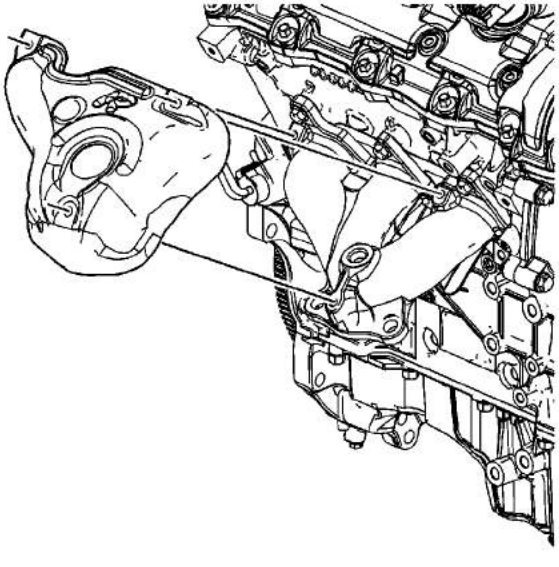

2. Remove the right exhaust manifold heat shield.

cardiagn.com

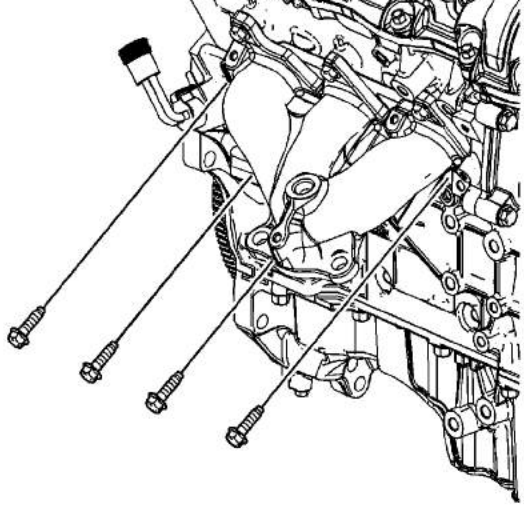

3. Remove the right exhaust manifold lower bolts from the right cylinder head.

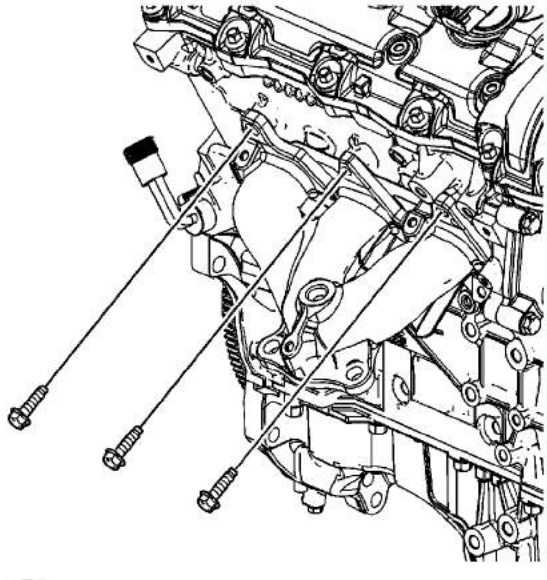

4. Remove the right exhaust manifold upper bolts from the right cylinder head.

cardiagn.com

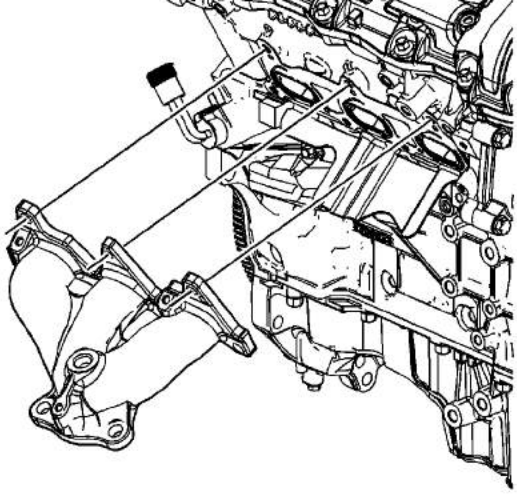

5. Remove the right exhaust manifold.

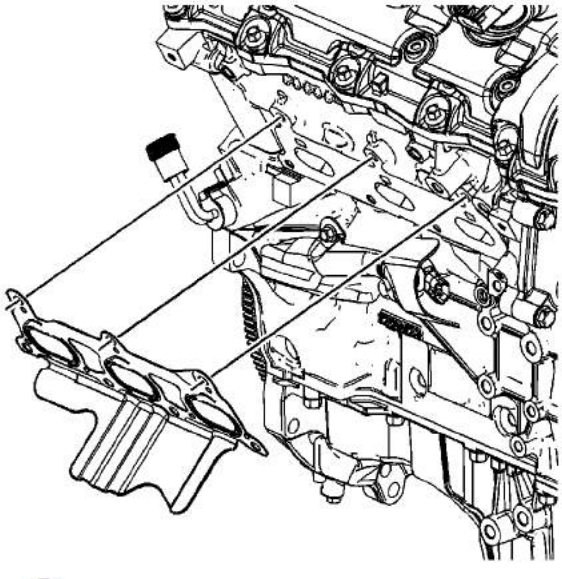

6. Remove and discard the right exhaust manifold gasket.

cardiagn.com

Intake Manifold Removal (LCS)

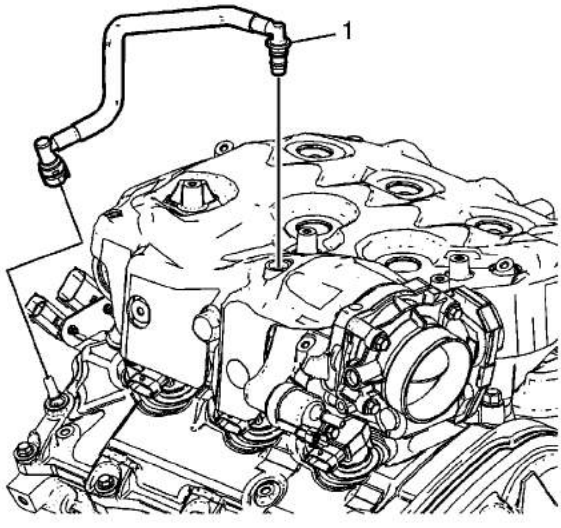

1. Disconnect and remove the positive crankcase ventilation (PCV) tube (1) from the intake manifold and right camshaft cover.

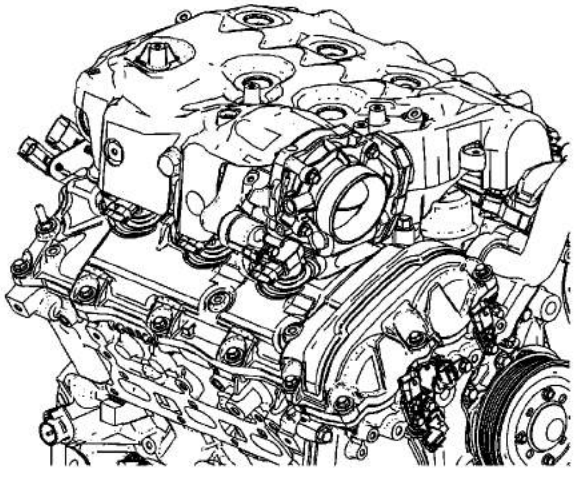

2. Remove the evaporative (EVAP) hose from the intake manifold and EVAP solenoid.

cardiagn.com

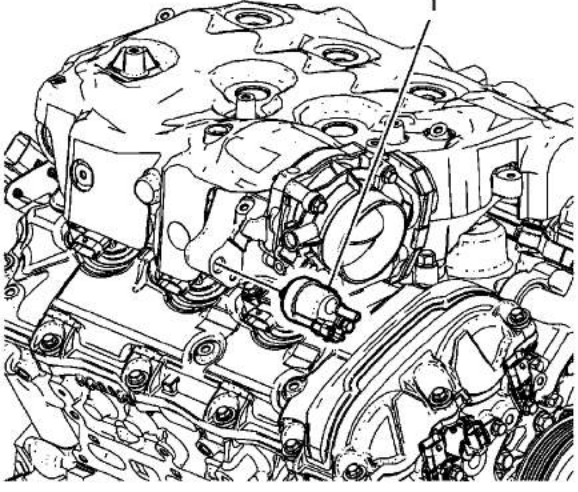

3. Loosen the EVAP solenoid bolt.
4. Remove the EVAP solenoid (1).

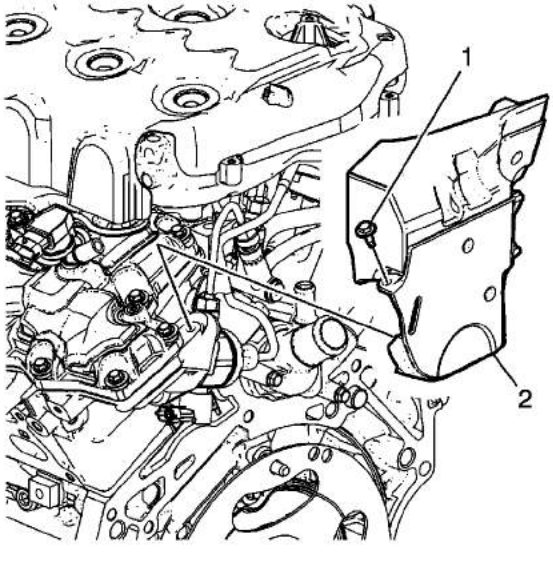

5. Remove the fuel pump cover bolt (1).
6. Remove the fuel pump cover (2).

cardiagn.com

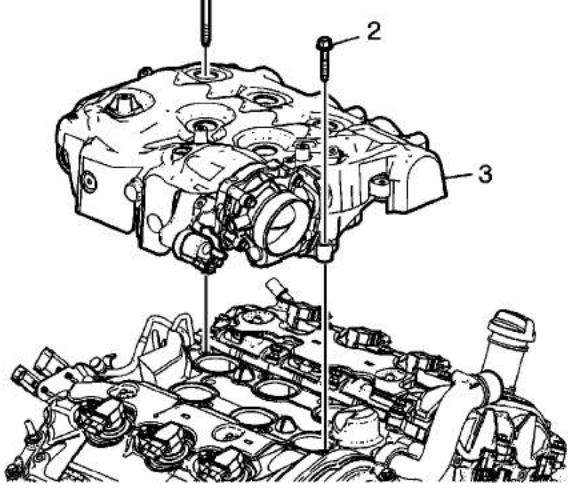

7. Remove the intake manifold bolts (1, 2).
8. Remove the intake manifold assembly (3).

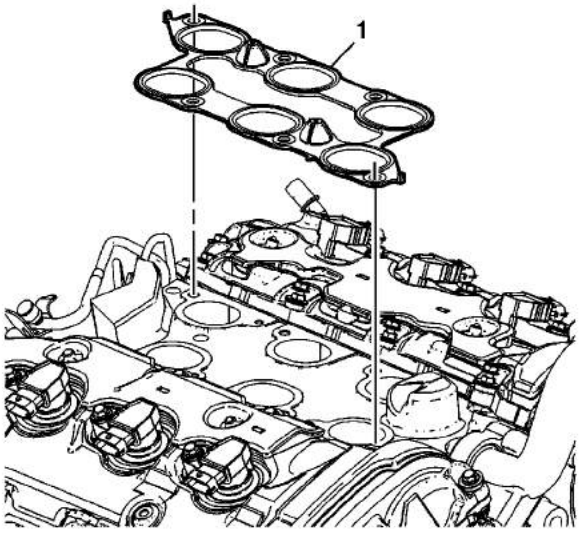

9. Remove and discard the intake manifold gasket (1).

cardiagn.com

Intake Manifold Removal (LY7)

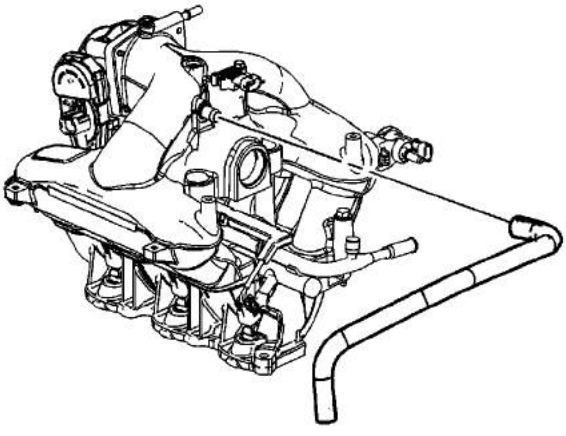

1. Disconnect and remove the brake booster hose from the upper intake manifold.

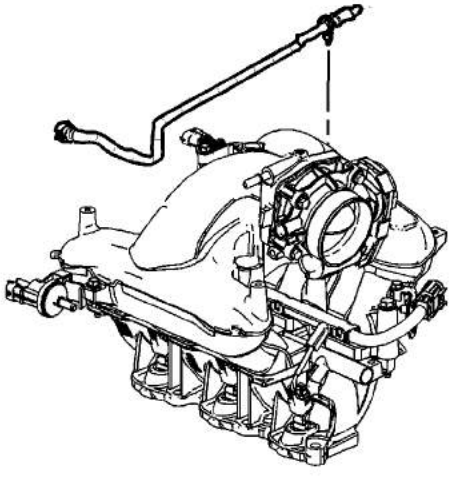

2. Disconnect and remove the vehicle-to-solenoid evaporative emission (EVAP) hose from the EVAP solenoid.

cardiagn.com

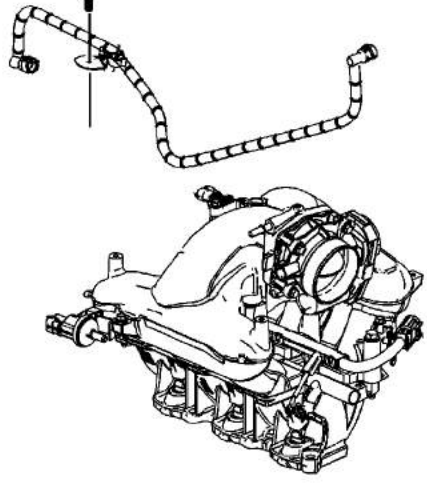

3. Remove the intake manifold-to-solenoid EVAP hose bracket bolt from the intake manifold.
4. Disconnect and remove the intake manifold-to-solenoid EVAP hose from the intake manifold and from the EVAP solenoid.

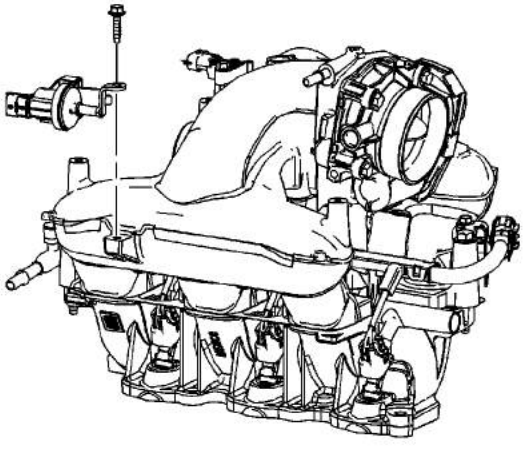

5. Remove the EVAP solenoid bolt.
6. Remove the EVAP solenoid.

cardiagn.com

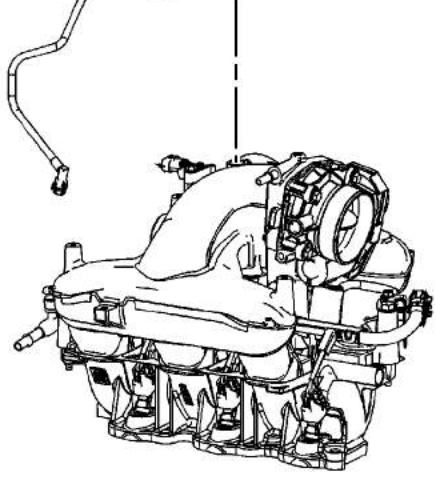

7. Disconnect and remove the dirty air positive crankcase ventilation (PCV) hose from the intake manifold and the right camshaft cover fitting.

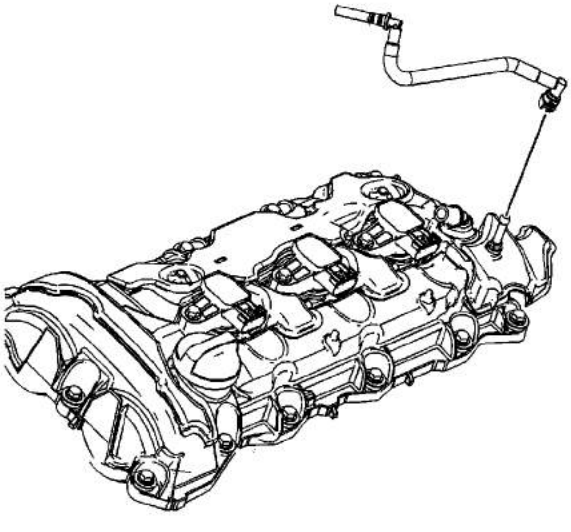

8. Disconnect and remove the fresh air PCV hose from the left camshaft cover fitting.

cardiagn.com

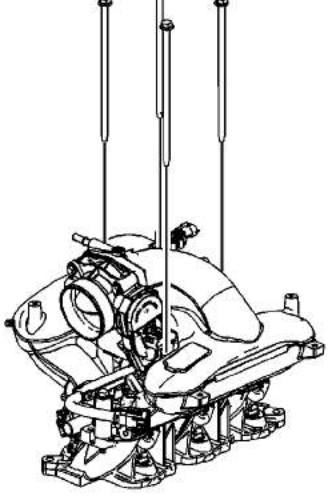

9. Remove the intake manifold bolts.
10. Remove the intake manifold assembly.

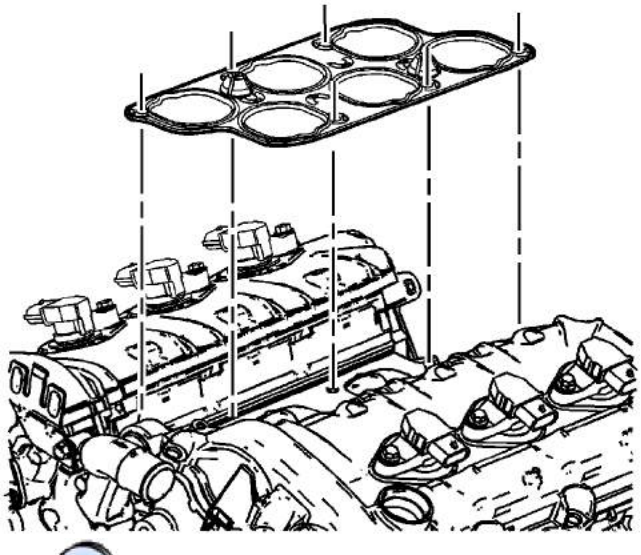

11. Remove the lower intake manifold gasket.

cardiagn.com

Water Outlet Removal

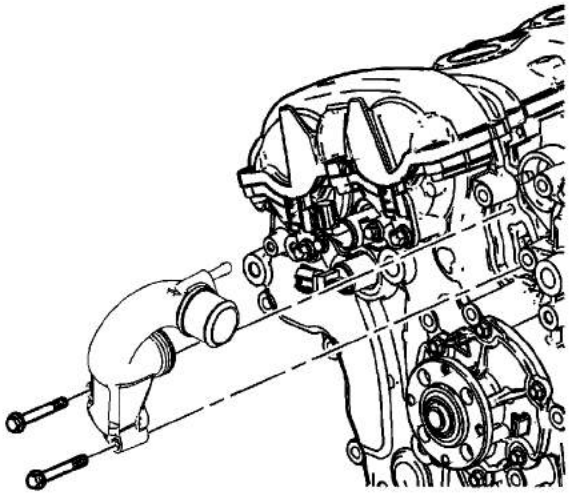

1. Remove the water outlet bolts.
2. Remove the water outlet.

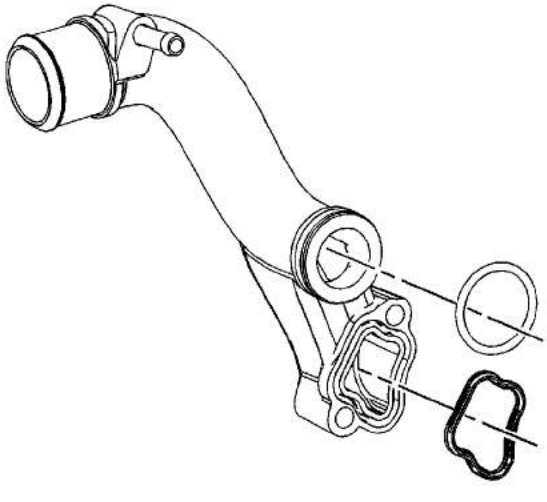

3. Remove and discard the water outlet gasket and O-ring.

cardiagn.com

Engine Coolant Thermostat Housing Removal (LCS)

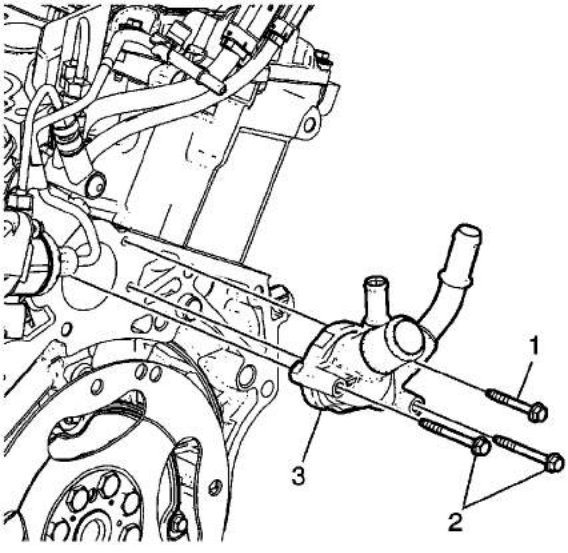

1. Remove the thermostat housing bolts (1, 2).
2. Remove the thermostat housing (3).

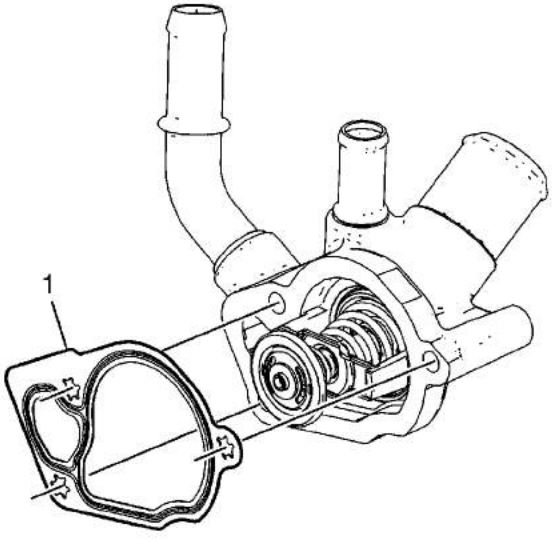

3. Remove and discard the thermostat housing gasket (1).

cardiagn.com

Engine Coolant Thermostat Housing Removal (LY7)

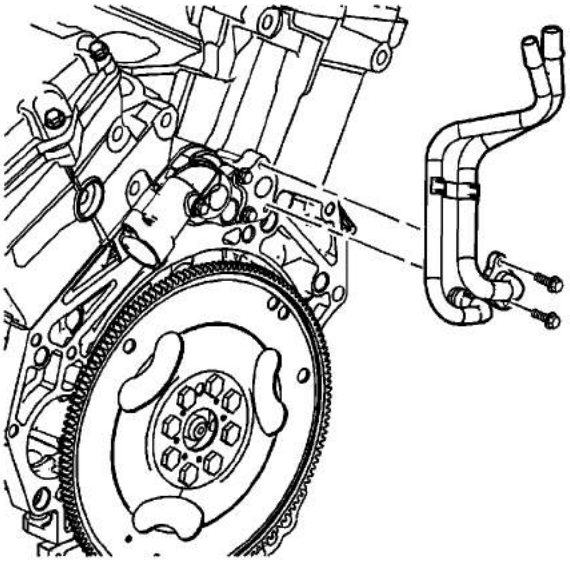

1. Remove the heater inlet/outlet pipe assembly bolts.
2. Remove the heater inlet/outlet pipe assembly.

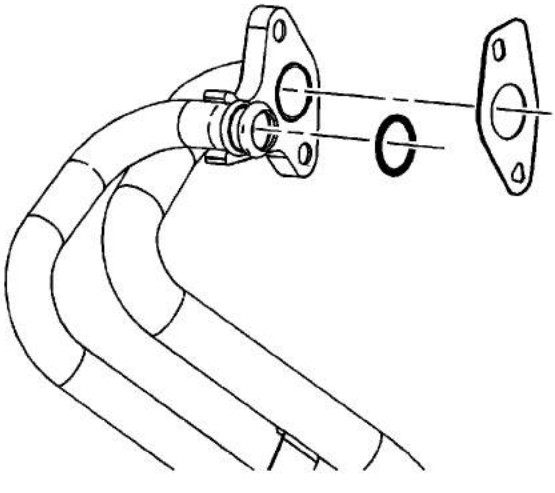

3. Remove and discard the heater inlet/outlet pipe gasket and O-ring.

cardiagn.com

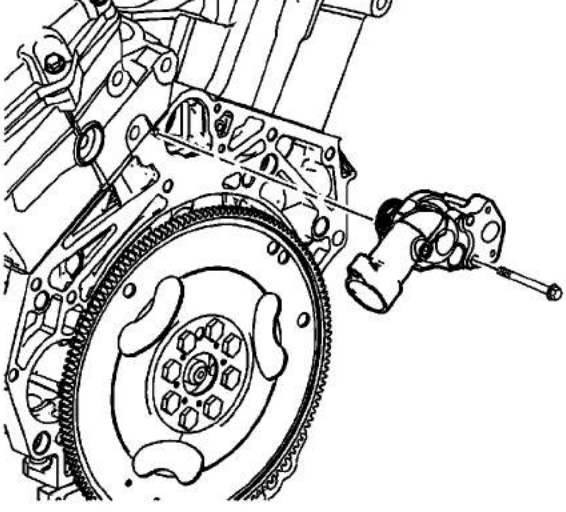

4. Remove the thermostat housing bolts.
5. Remove the thermostat housing.

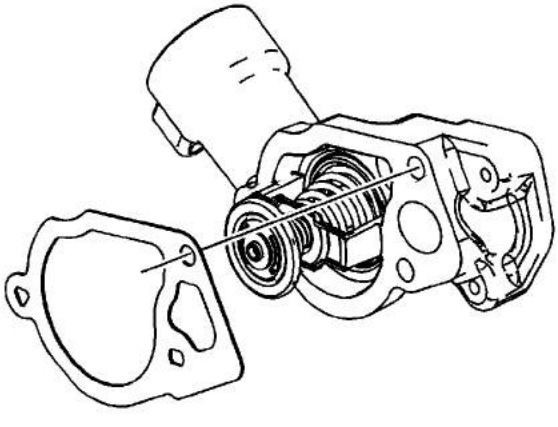

6. Remove and discard the thermostat housing gasket.

cardiagn.com

Crankshaft Balancer Removal

Tools Required

- EN 46106 Flywheel Holding Tool
- J 38416-2 Crankshaft Button
- J 41816 Crankshaft Balancer Remover

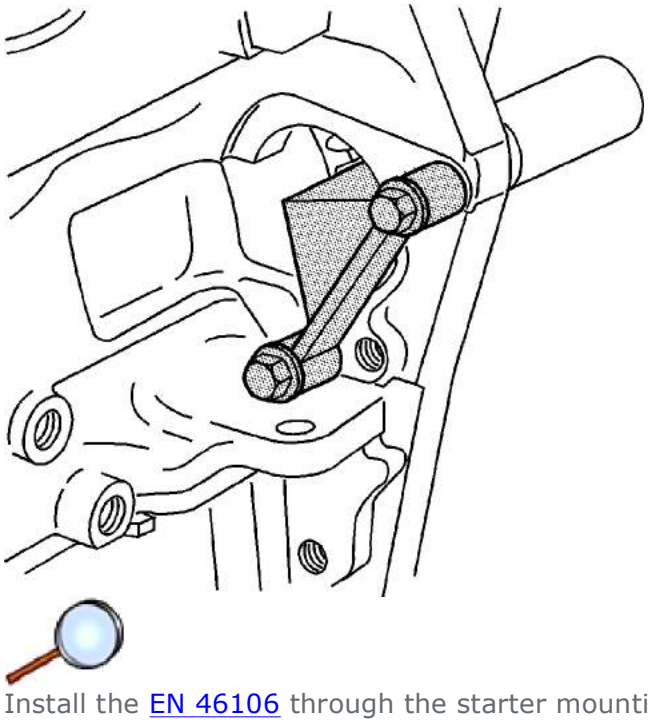

1. Install the EN 46106 through the starter mounting hole.

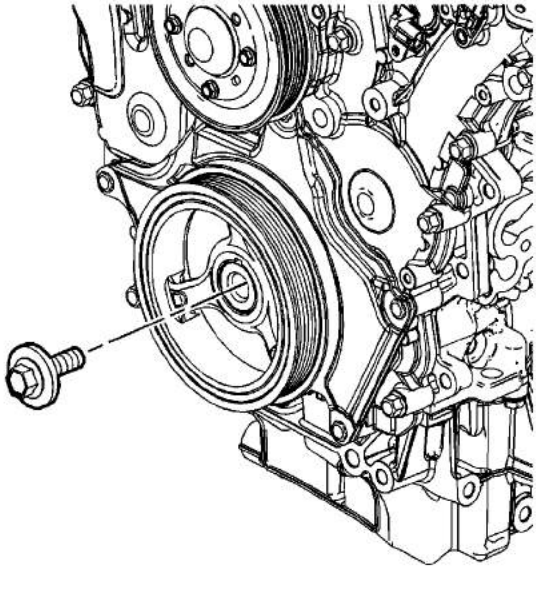

cardiagn.com

2. Remove the crankshaft balancer bolt.

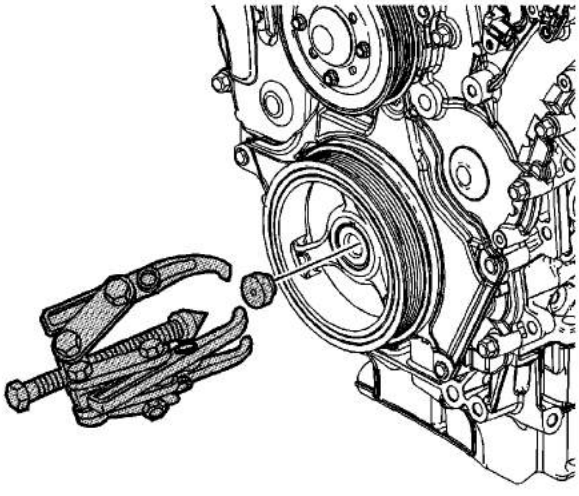

3. Install the J 38416-2 in the nose of the crankshaft.
4. Install the J 41816 in order to remove the crankshaft balancer.
5. Tighten the center bolt of the J 41816 in order to pull the crankshaft balancer off of the crankshaft.
6. Remove the J 41816 from the crankshaft balancer.

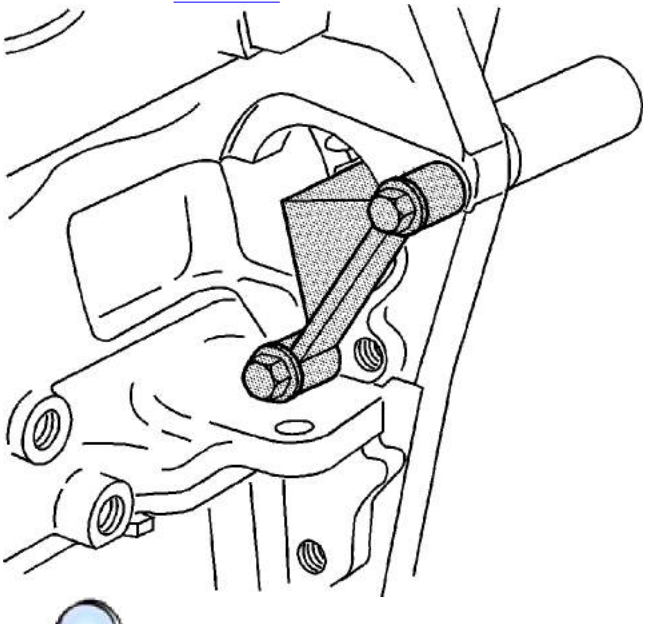

7. Remove the EN 46106 .

cardiagn.com

Engine Flywheel Removal (LCS)

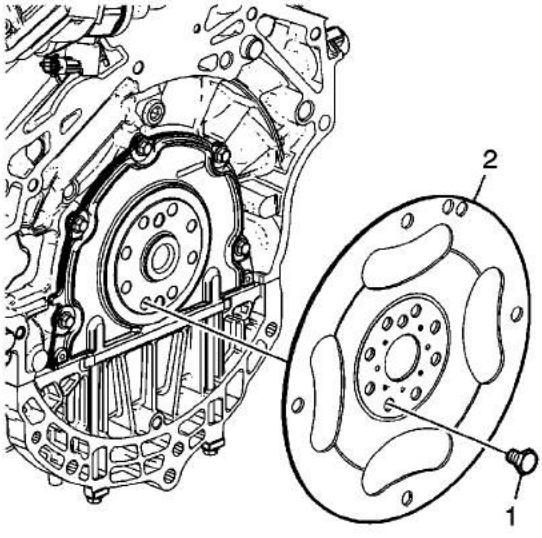

1. Remove the engine flywheel bolts (1) and discard.
2. Remove the engine flywheel (2).

cardiagn.com

Engine Flywheel Removal (LY7)

Tools Required

EN 46106 Flywheel Holding Tool

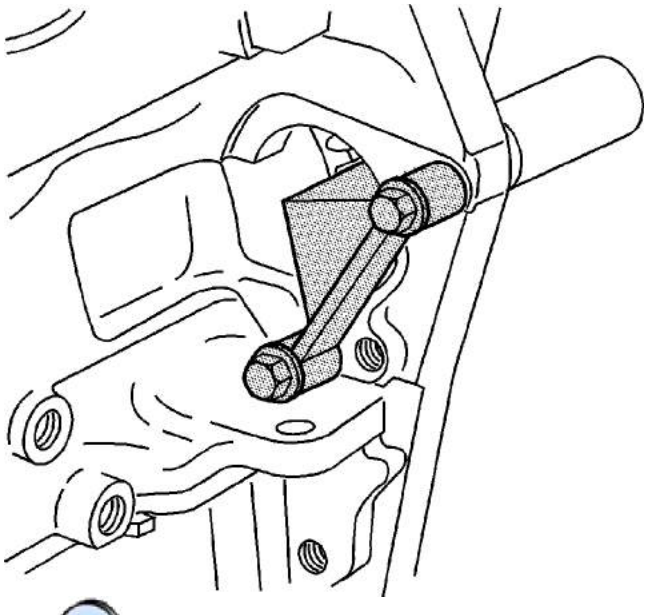

1. Install the EN 46106 through the starter mounting hole.

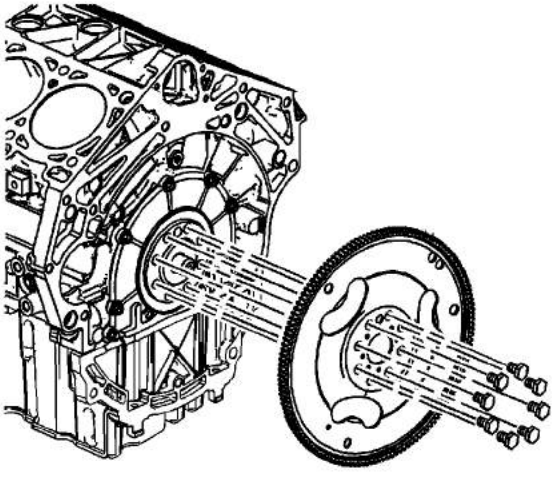

2. Remove the engine flywheel bolts and discard.
3. Remove the engine flywheel from the crankshaft.

cardiagn.com

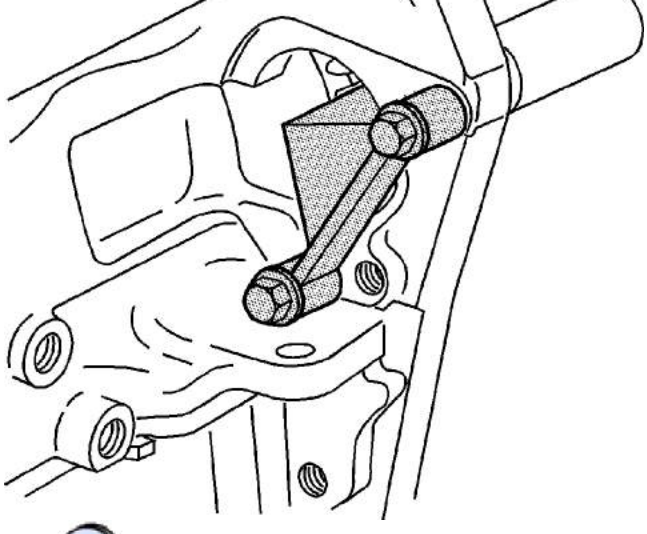

4. Remove the EN 46106 .

cardiagn.com

Camshaft Cover Removal - Left Side (LCS)

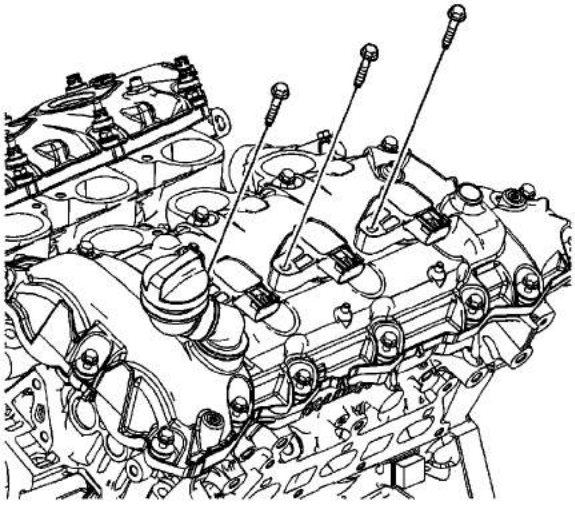

1. Remove the ignition coil bolts.

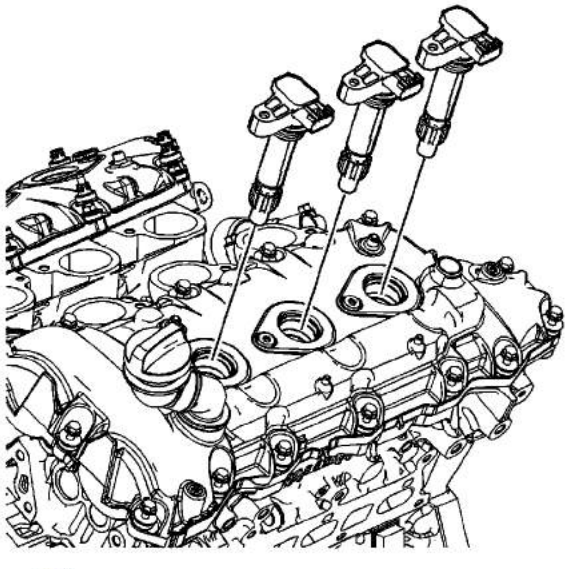

2. Remove the ignition coils.

cardiagn.com

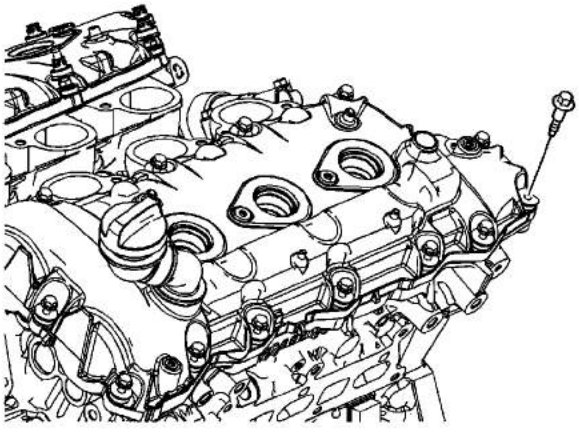

3. Remove the left camshaft cover bolts.
4. Remove and discard the camshaft cover grommets and camshaft cover bolts if they are serviced with the grommet.

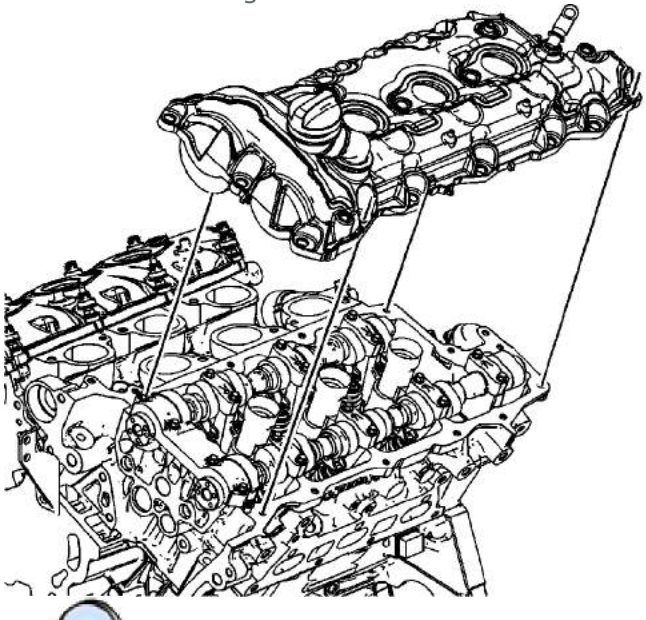

5. Remove the left camshaft cover from the left cylinder head.

cardiagn.com

Camshaft Cover Removal - Left Side (LY7)

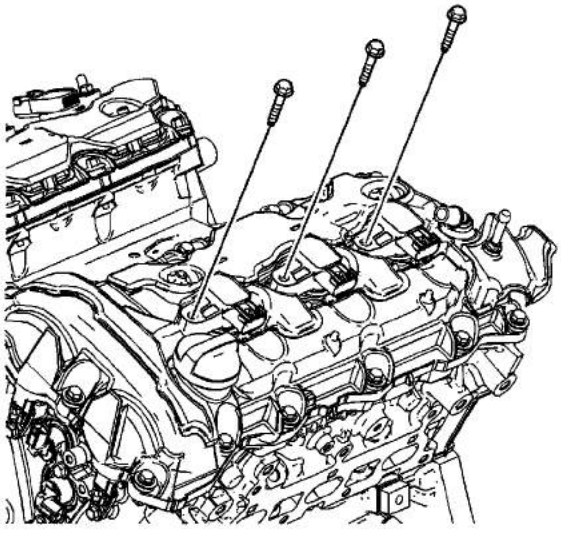

1. Remove the ignition coil bolts.

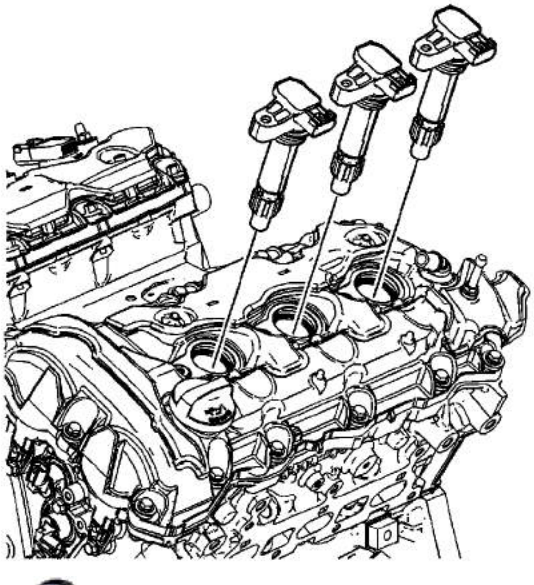

2. Remove the ignition coils.

cardiagn.com

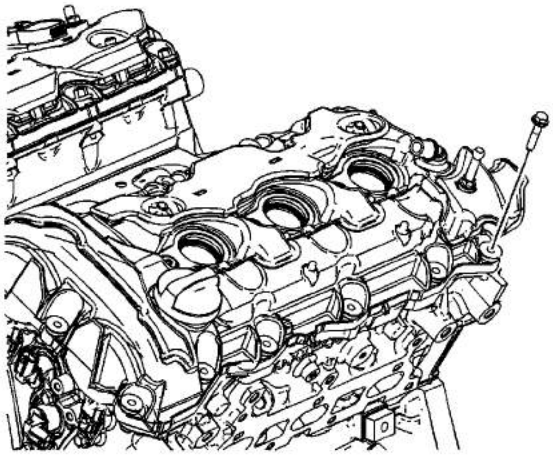

3. Remove the left camshaft cover bolts.
4. Remove and discard the camshaft cover grommets and camshaft cover bolts if they are serviced with the grommet.

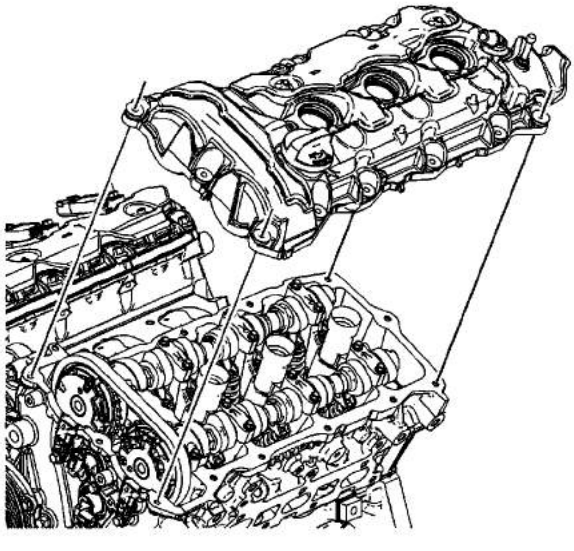

5. Remove the left camshaft cover from the left cylinder head.

cardiagn.com

Camshaft Cover Removal - Right Side

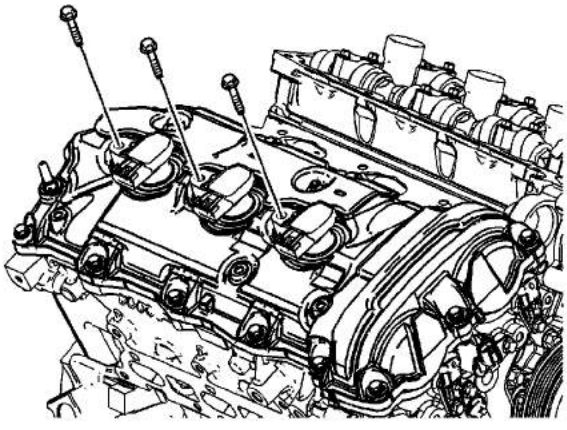

1. Remove the ignition coil bolts.

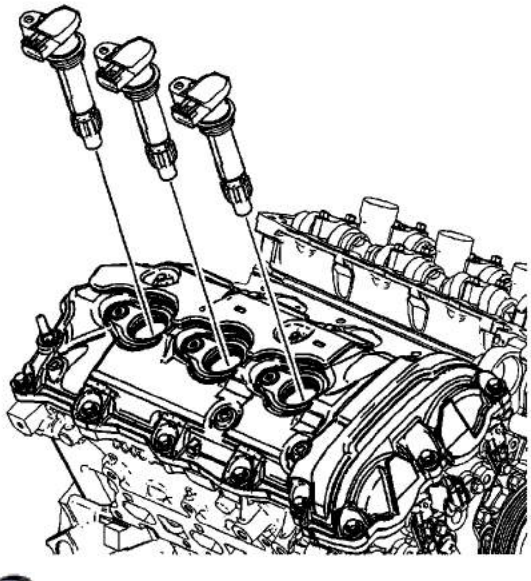

2. Remove the ignition coils.

cardiagn.com

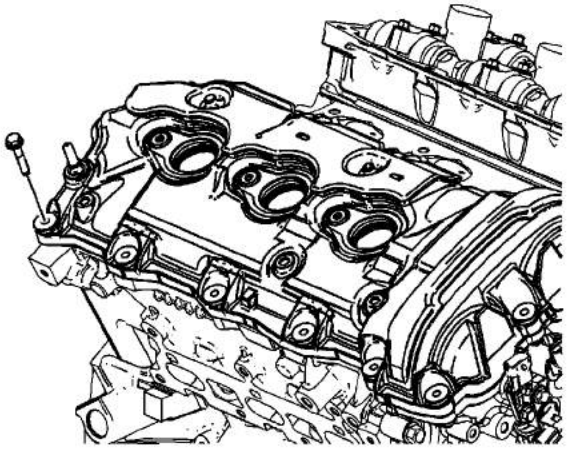

3. Remove the right camshaft cover bolts.
4. Remove and discard the camshaft cover grommets and camshaft cover bolts if they are serviced with the grommet.

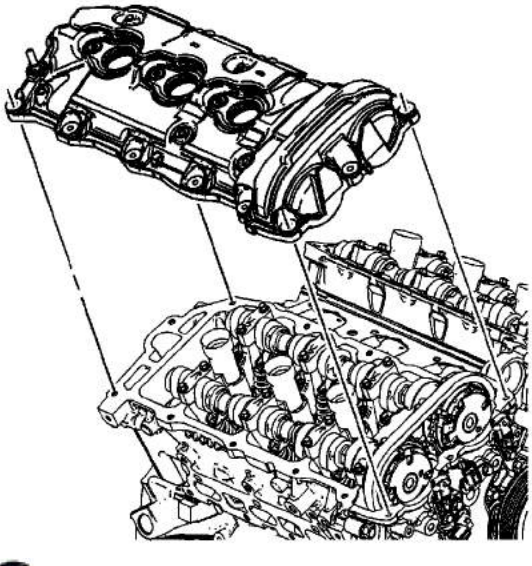

5. Remove the right camshaft cover from the right cylinder head.

cardiagn.com

Water Pump Removal

Tools Required

EN 46104 Water Pump Pulley Holding Tool

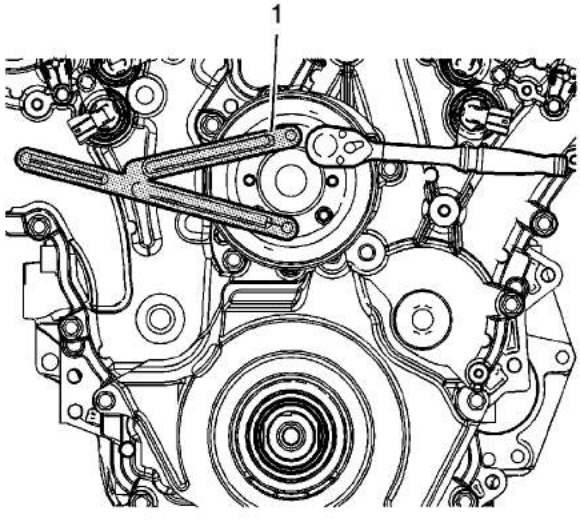

1. Install the EN 46104 onto the water pump pulley.

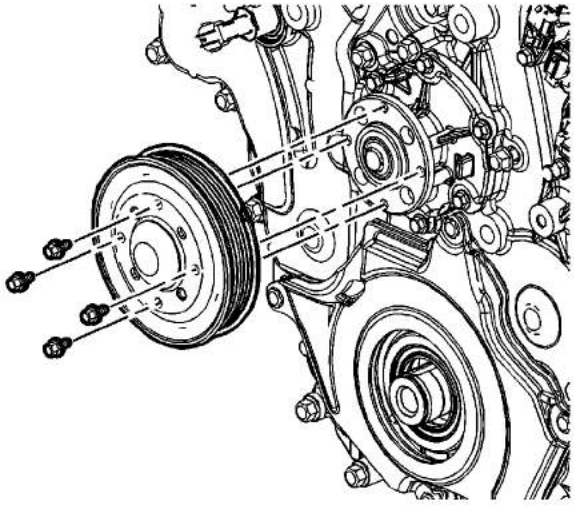

2. Remove the water pump pulley bolts.
3. Remove the water pump pulley.

cardiagn.com

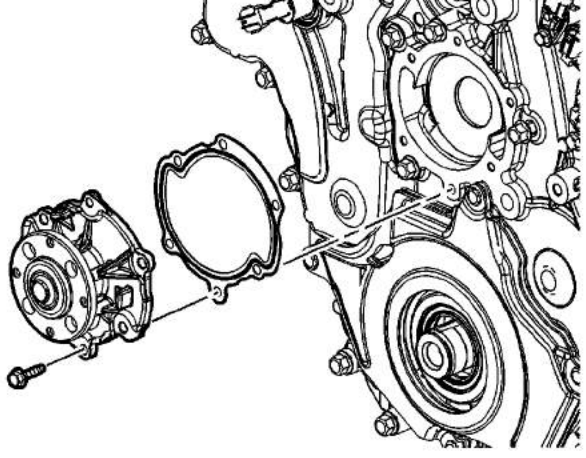

4. Remove the water pump bolts.
5. Remove the water pump from the front cover.
6. Remove the water pump gasket.

cardiagn.com

Engine Front Cover Removal

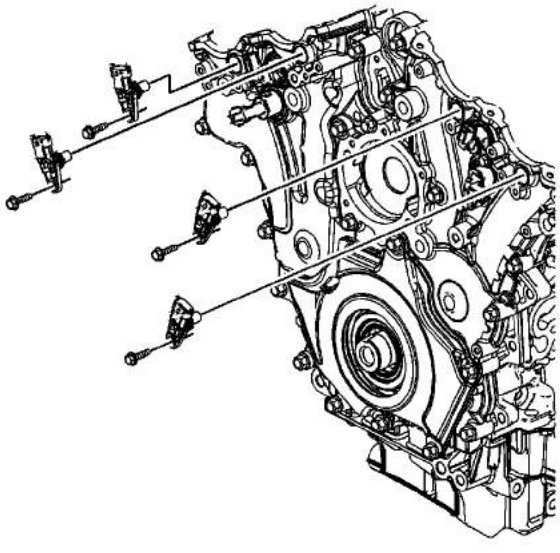

1. Remove the camshaft position sensor bolts.
2. Remove the camshaft position sensors.

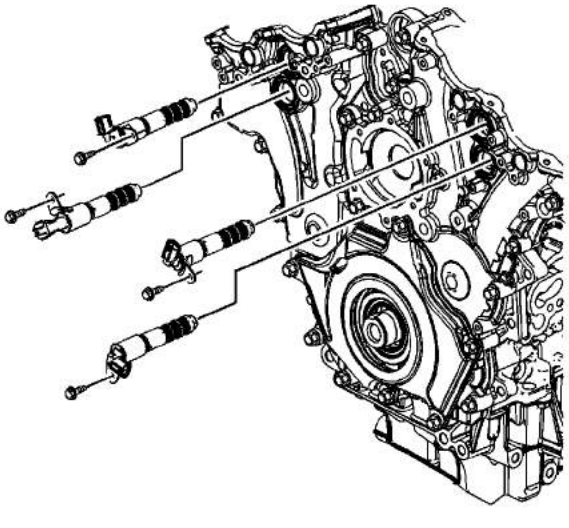

3. Remove the camshaft position actuator valve bolts.

Caution: The camshaft position actuator valves must be removed from the front cover prior to front cover removal or damage to the valves may occur.

cardiagn.com

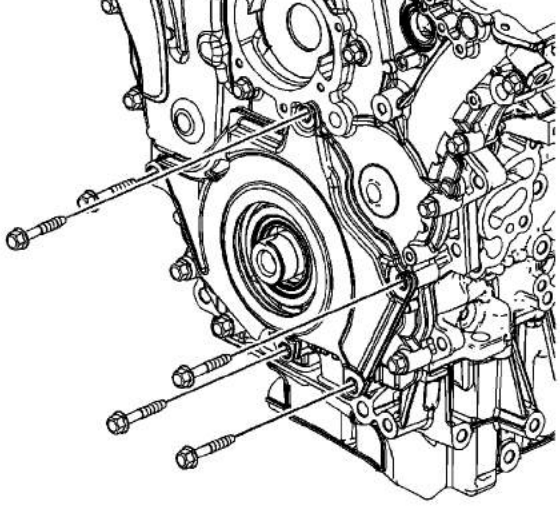

5. Remove the engine front cover bolts that hold the engine front cover deadener into position.

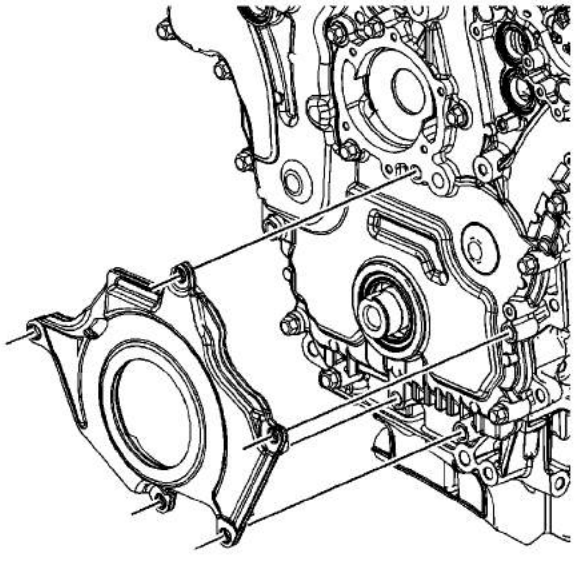

6. Remove the engine front cover deadener.

cardiagn.com

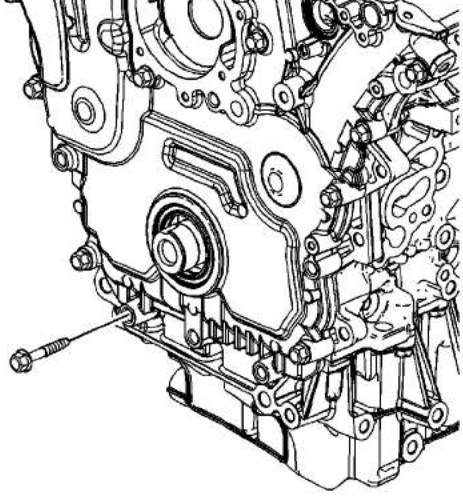

7. Remove the remaining engine front cover bolts.

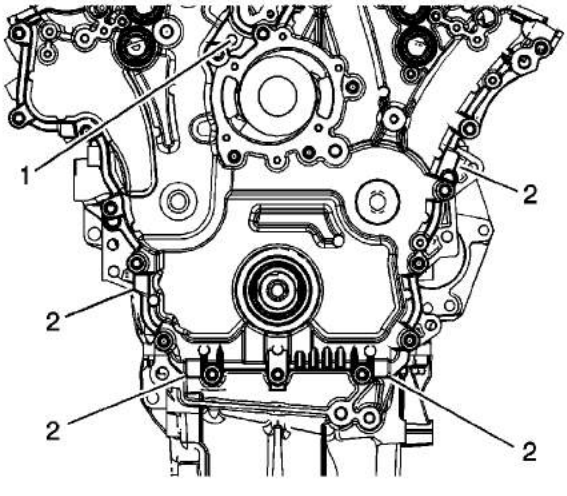

Caution: Do not pry between the engine front cover and the camshaft position sensors or the camshaft position actuators in order to separate the RTV. Use the pry points and a bolt in the jackscrew hole in order to remove the engine front cover. Damage to the camshaft position sensors or the camshaft position actuators may occur if the camshaft position sensors or the camshaft position actuators are used to pry against in order to remove the engine front cover.

8. Loosely install a 10 x 1.5 mm bolt in the jackscrew hole (1).
9. Using the pry points (2) located at the edge of the front cover and the jackscrew, separate the room temperature vulcanizing (RTV) sealant.

cardiagn.com

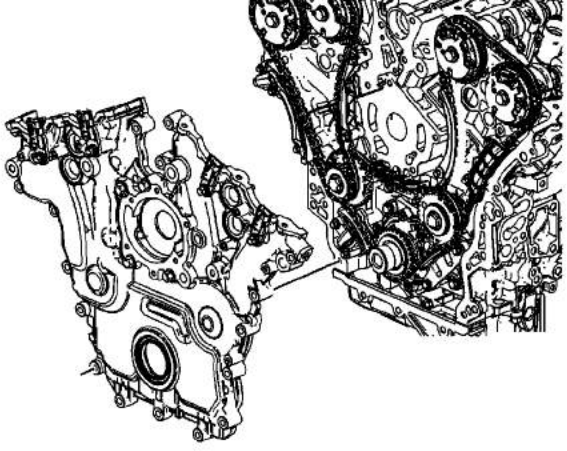

10. Remove the engine front cover.

cardiagn.com

Secondary Camshaft Drive Chain Tensioner Removal - Right Side

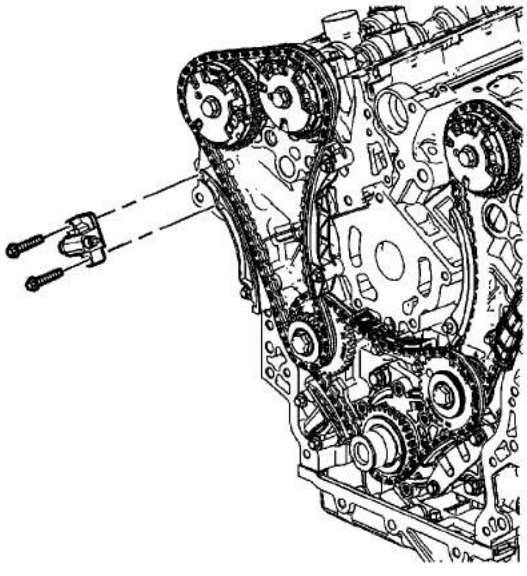

1. Remove the right secondary camshaft drive chain tensioner bolts.
2. Remove the right secondary camshaft drive chain tensioner.

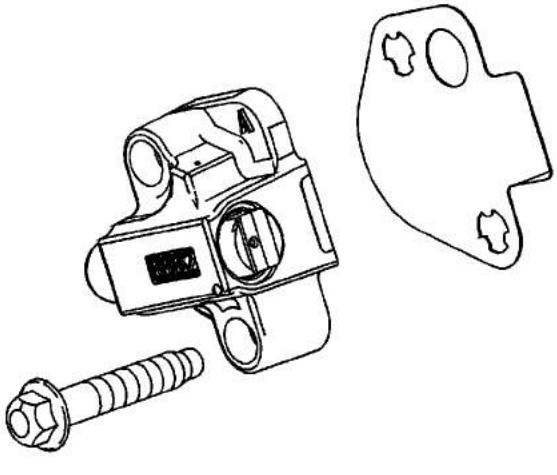

3. Remove and discard the right secondary camshaft drive chain tensioner gasket.
4. Inspect the right secondary camshaft drive chain tensioner mounting surface on the right cylinder head for burrs or any defects that would degrade the sealing of the NEW right secondary camshaft drive chain tensioner gasket.

cardiagn.com

Secondary Camshaft Drive Chain Shoe Removal - Right Side

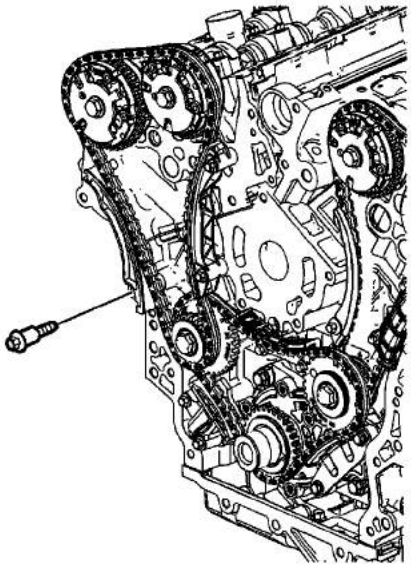

1. Remove the right secondary camshaft drive chain shoe bolt.

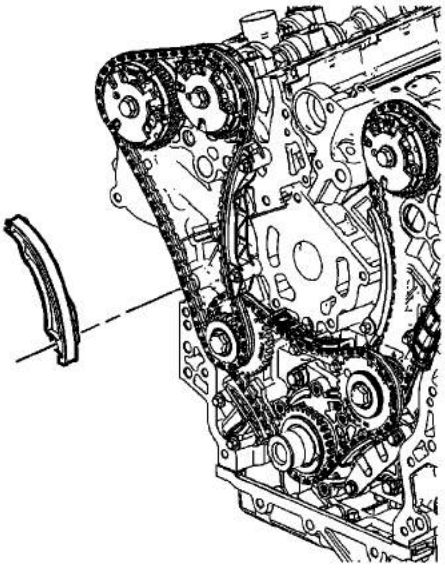

2. Remove the right secondary camshaft drive chain shoe.

cardiagn.com

Secondary Camshaft Drive Chain Guide Removal - Right Side

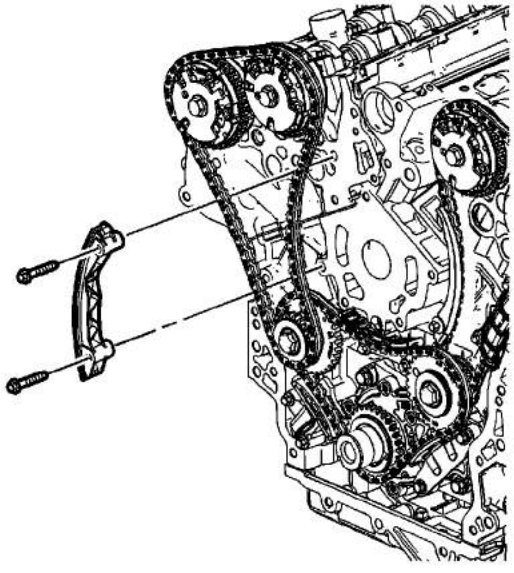

1. Remove the right secondary camshaft drive chain guide bolts.
2. Remove the right secondary camshaft drive chain guide.

cardiagn.com

Secondary Camshaft Drive Chain Removal - Right Side

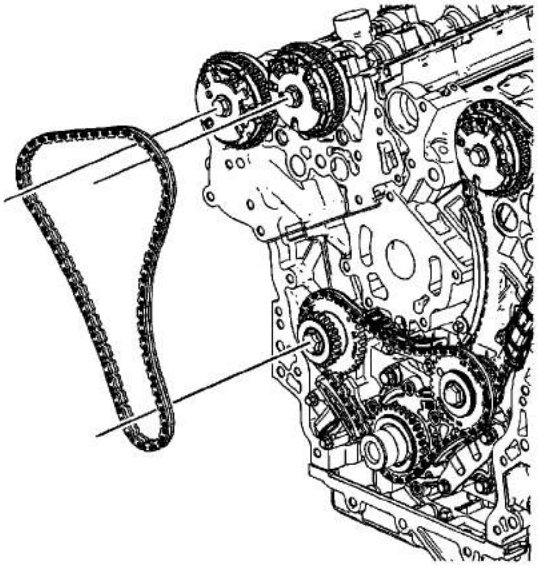

Remove the right secondary camshaft drive chain from the right camshaft position actuators and the right camshaft intermediate drive chain idler sprocket.

cardiagn.com

Primary Camshaft Intermediate Drive Chain Tensioner Removal

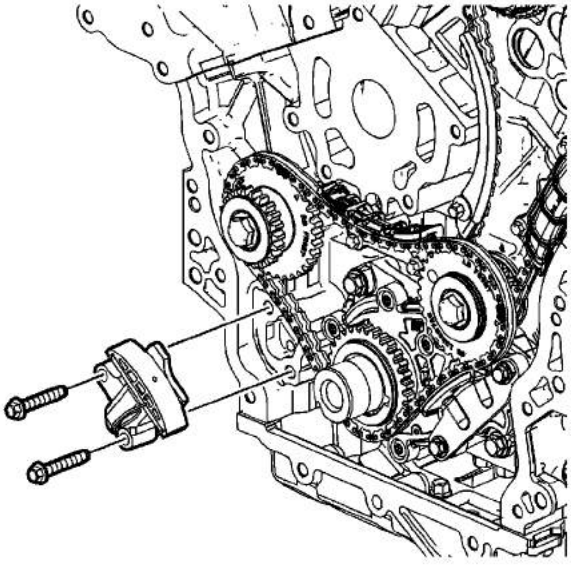

1. Remove the primary camshaft drive chain tensioner bolts.
2. Remove the primary camshaft drive chain tensioner.

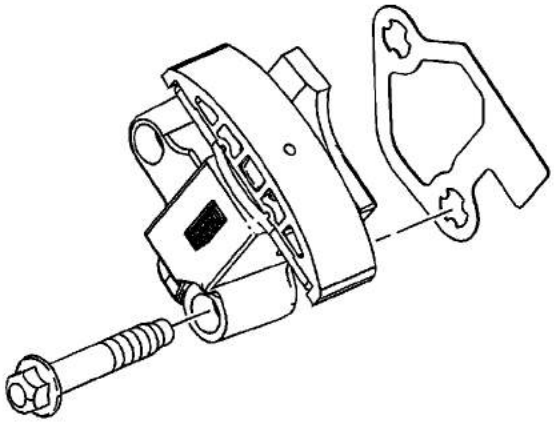

3. Remove and discard the primary camshaft drive chain tensioner gasket.
4. Inspect the primary camshaft drive chain tensioner mounting surface on the engine block for burrs or any defects that would degrade the sealing of the NEW primary camshaft drive chain tensioner gasket.

cardiagn.com

Primary Timing Chain Guide Removal - Upper

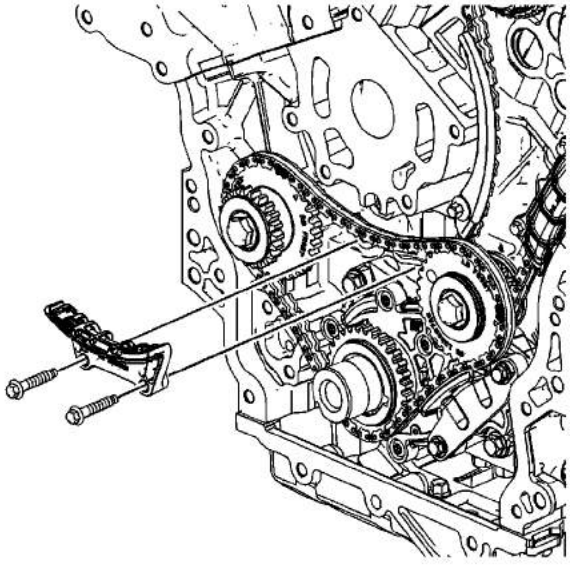

1. Remove the primary camshaft drive chain upper guide bolts.
2. Remove the primary camshaft drive chain upper guides.

cardiagn.com

Primary Timing Chain Guide Removal - Lower

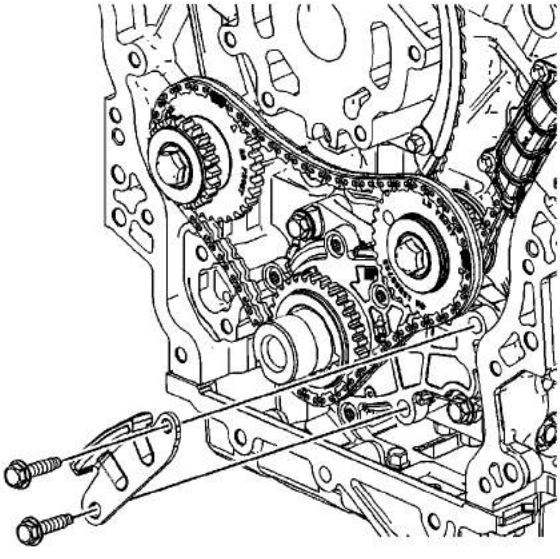

1. Remove the primary camshaft drive chain lower guide bolts.
2. Remove the primary camshaft drive chain lower guide.

cardiagn.com

Primary Camshaft Intermediate Drive Chain Removal

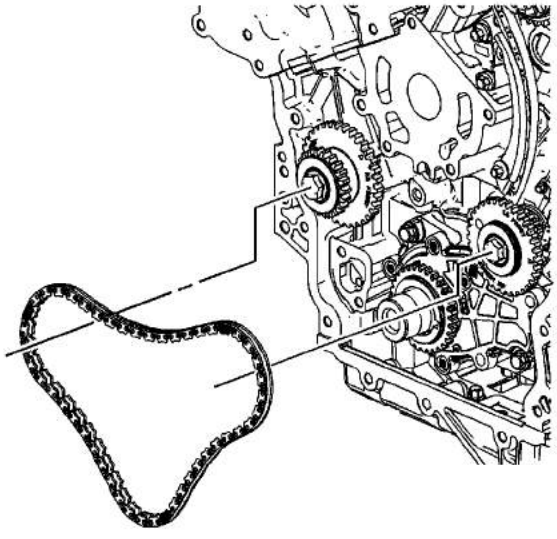

Remove the primary camshaft drive chain.

cardiagn.com

Camshaft Intermediate Drive Chain Idler Removal - Right Side

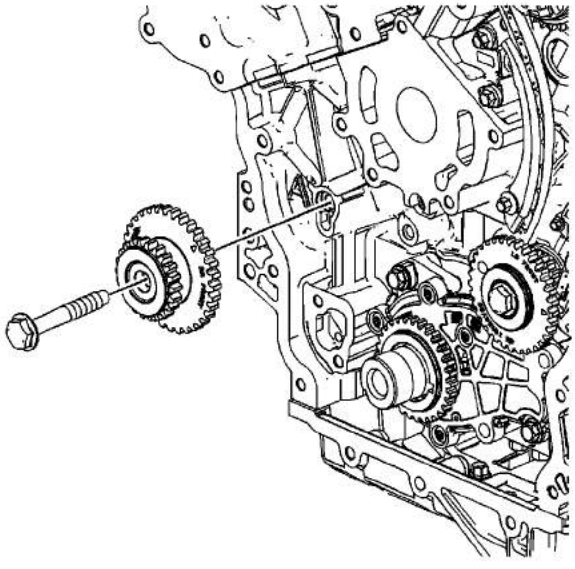

1. Remove the right camshaft intermediate drive chain idler bolt.
2. Remove the right camshaft intermediate drive chain idler.

cardiagn.com

Secondary Camshaft Drive Chain Tensioner Removal - Left Side

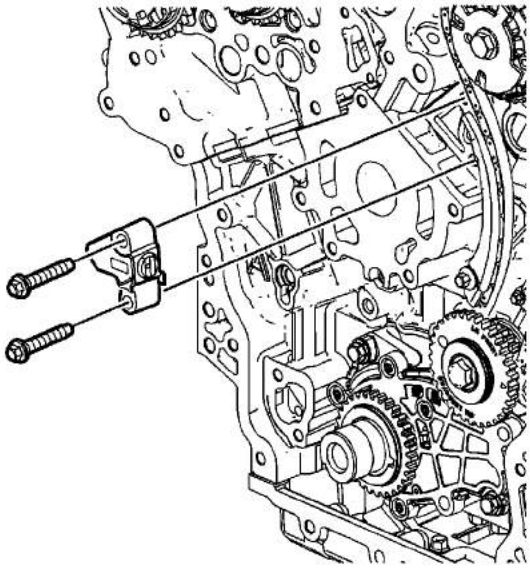

1. Remove the left secondary camshaft drive chain tensioner bolts.
2. Remove the left secondary camshaft drive chain tensioner.

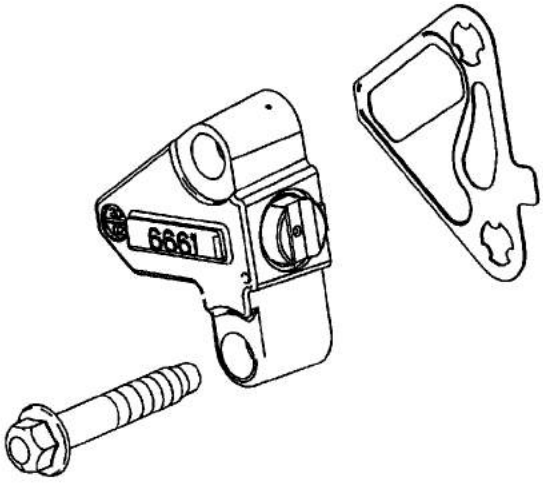

3. Remove and discard the left secondary camshaft drive chain tensioner gasket.
4. Inspect the left secondary camshaft drive chain tensioner mounting surface on the left cylinder head for burrs or any defects that would degrade the sealing of the NEW left secondary camshaft drive chain tensioner gasket.

cardiagn.com

Secondary Camshaft Drive Chain Shoe Removal - Left Side

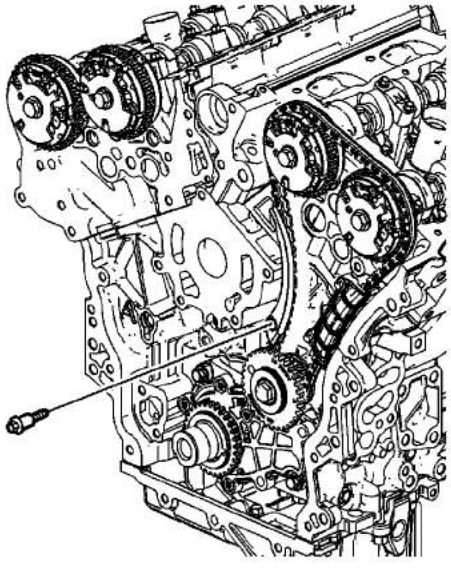

1. Remove the left secondary camshaft drive chain shoe bolt.

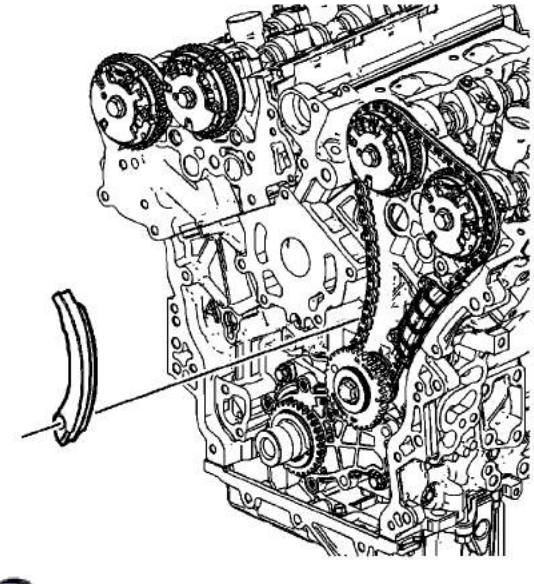

2. Remove the left secondary camshaft drive chain shoe.

cardiagn.com

Secondary Camshaft Drive Chain Guide Removal - Left Side

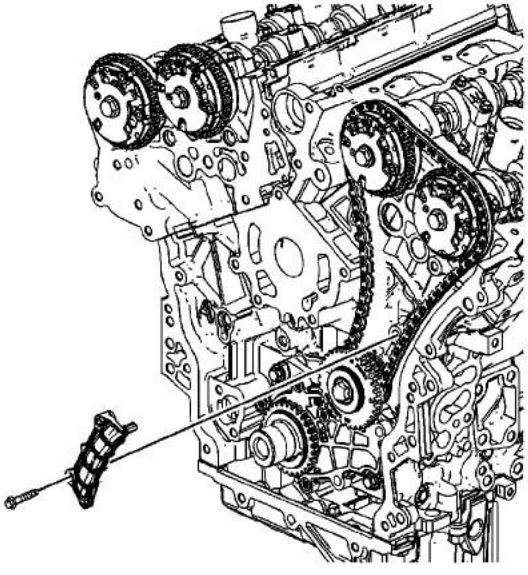

1. Remove the left secondary camshaft drive chain guide bolts.
2. Remove the left secondary camshaft drive chain guide.

cardiagn.com

Secondary Camshaft Drive Chain Removal - Left Side

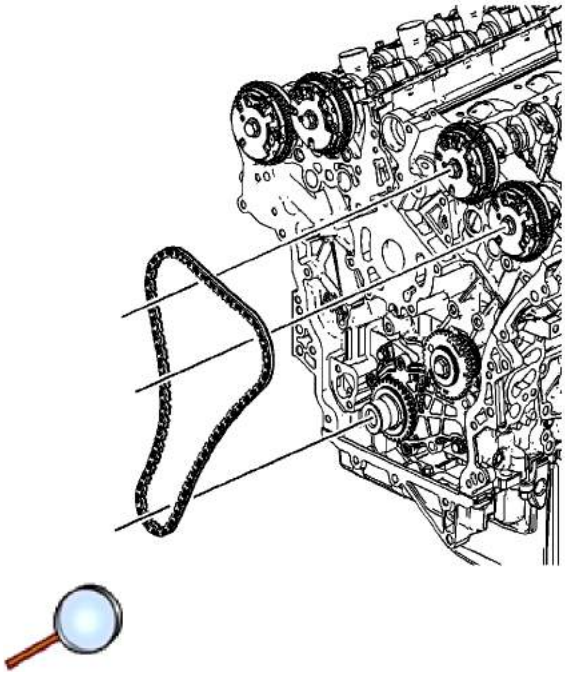

Remove the left secondary camshaft drive chain from the left camshaft position actuators and the left camshaft intermediate drive chain idler sprocket.

cardiagn.com

Camshaft Intermediate Drive Chain Idler Removal - Left Side

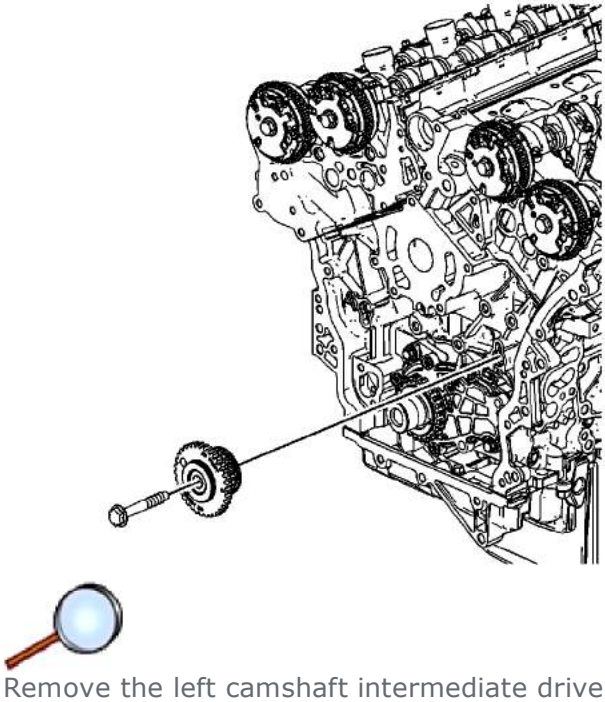

1. Remove the left camshaft intermediate drive chain idler bolt.
2. Remove the left camshaft intermediate drive chain idler.

cardiagn.com

Crankshaft Sprocket Removal

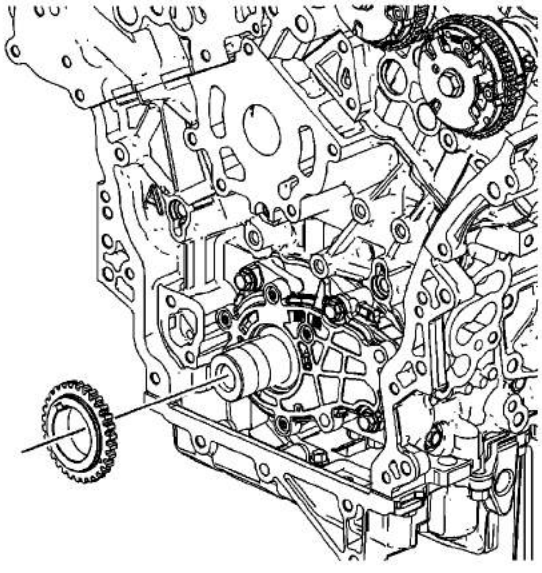

Remove the crankshaft sprocket from the nose of the crankshaft.

cardiagn.com

©

Camshaft Position Actuator Removal - Left Side Exhaust

Caution: Refer to Torque Reaction Against Timing Drive Chain Caution in the Preface section.

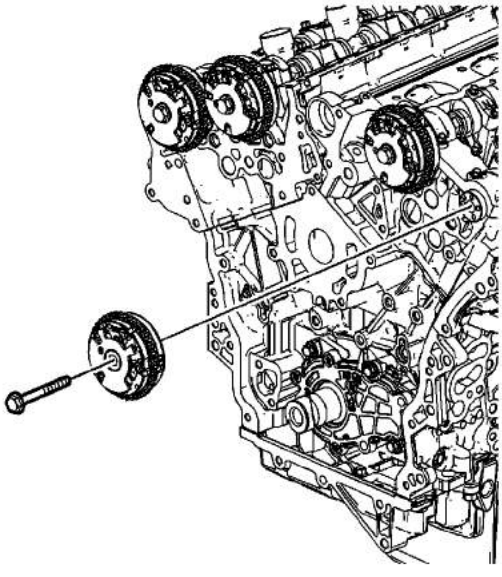

1. Use an open wrench on the hex cast into the camshaft in order to prevent engine rotation when loosening the camshaft position actuator bolt.
2. Remove the left exhaust camshaft position actuator bolt.
3. Remove the left exhaust camshaft position actuator.

cardiagn.com

Camshaft Position Actuator Removal - Left Side Intake

Caution: Refer to Torque Reaction Against Timing Drive Chain Caution in the Preface section.

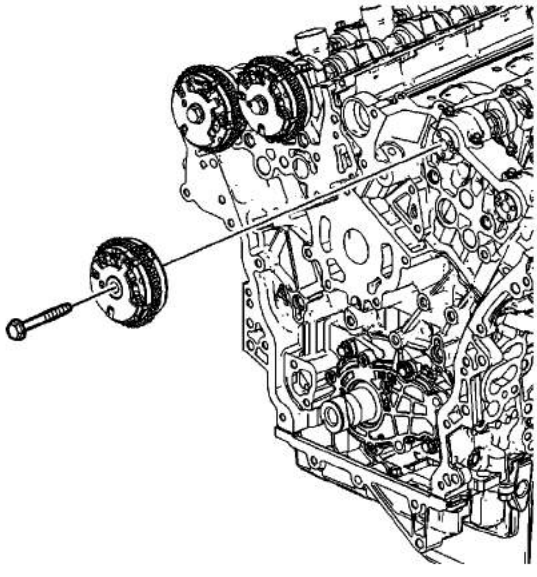

1. Use an open wrench on the hex cast into the camshaft in order to prevent engine rotation when loosening the camshaft position actuator bolt.
2. Remove the left intake camshaft position actuator bolt.
3. Remove the left intake camshaft position actuator.

cardiagn.com

Camshaft Position Actuator Removal - Right Side Exhaust

Caution: Refer to Torque Reaction Against Timing Drive Chain Caution in the Preface section.

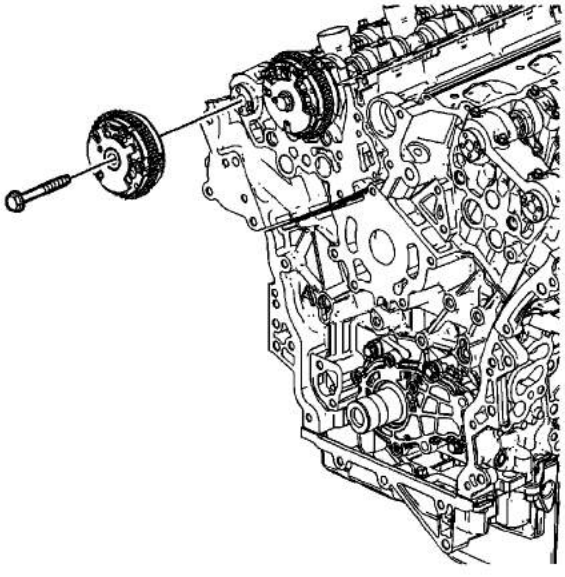

1. Use an open wrench on the hex cast into the camshaft in order to prevent engine rotation when loosening the camshaft position actuator bolt.
2. Remove the right exhaust camshaft position actuator bolt.
3. Remove the right exhaust camshaft position actuator.

cardiagn.com

Camshaft Position Actuator Removal - Right Side Intake

Caution: Refer to Torque Reaction Against Timing Drive Chain Caution in the Preface section.

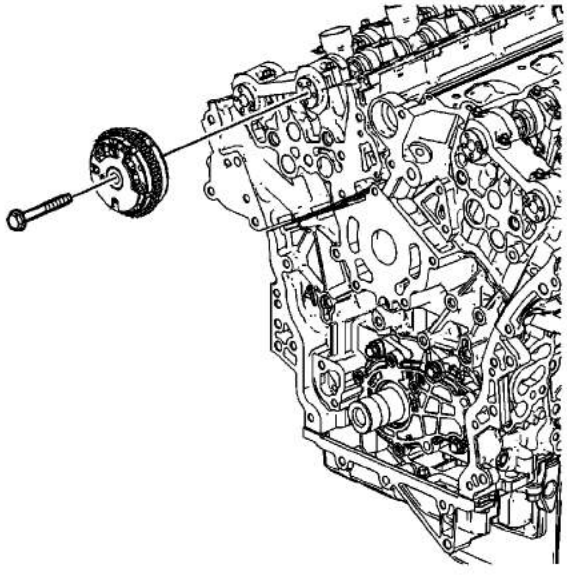

1. Use an open wrench on the hex cast into the camshaft in order to prevent engine rotation when loosening the camshaft position actuator bolt.
2. Remove the right intake camshaft position actuator bolt.
3. Remove the right intake camshaft position actuator.

cardiagn.com

Camshaft Removal - Left Side (LCS)

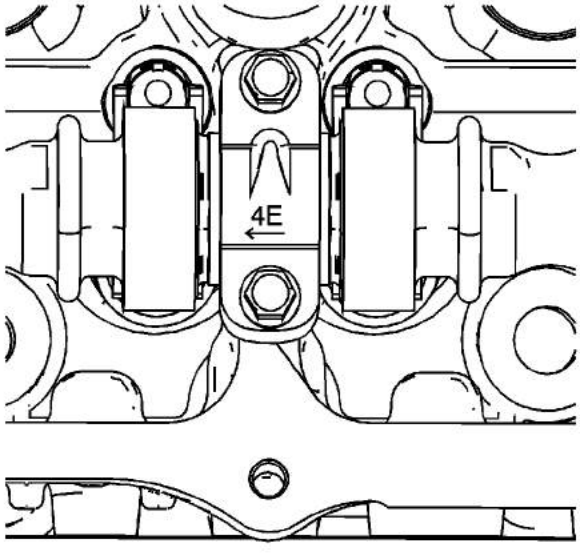

1. Observe the markings on the bearing caps. Each bearing cap is marked in order to identify its location. The markings have the following meanings:
   - The raised feature must always be oriented toward the center of the cylinder head.
   - The I indicates the intake camshaft.
   - The E indicates the exhaust camshaft.
   - The number indicates the journal position from the front of the engine.

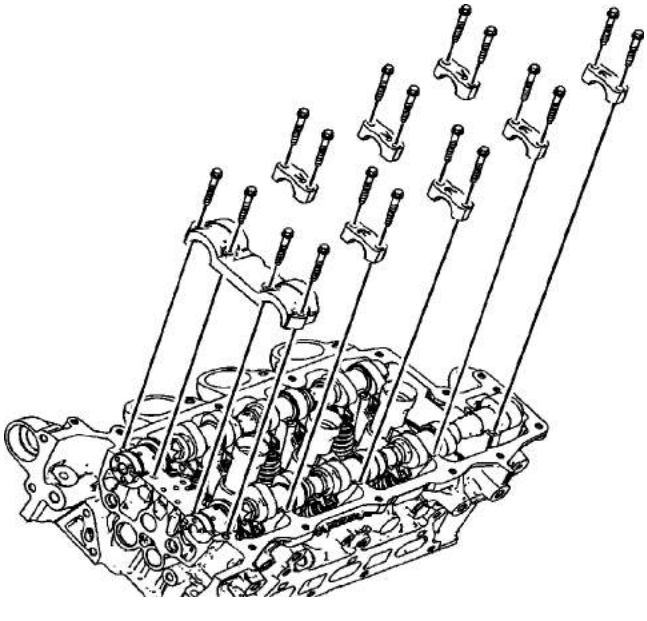

cardiagn.com

2. Remove the camshaft bearing cap bolts.
3. Remove the camshaft bearing caps.

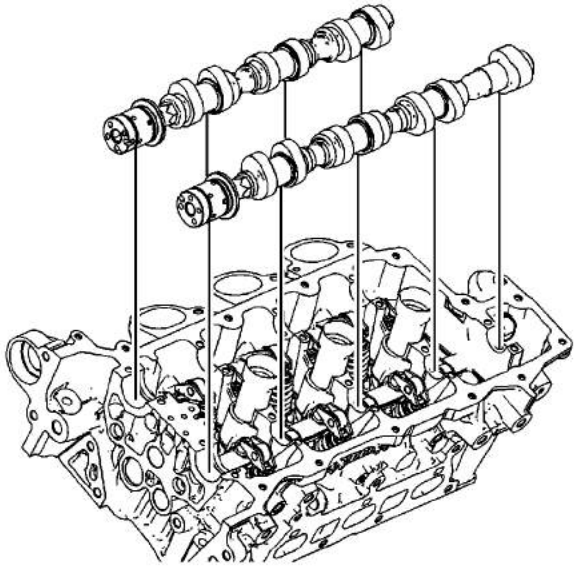

Important: Mark the camshafts upon removal to ensure installation is in the correct position.

4. Remove the camshafts.
5. Replace the camshaft bearing caps and bolts.

cardiagn.com

Camshaft Removal - Left Side (LY7 / LP1)

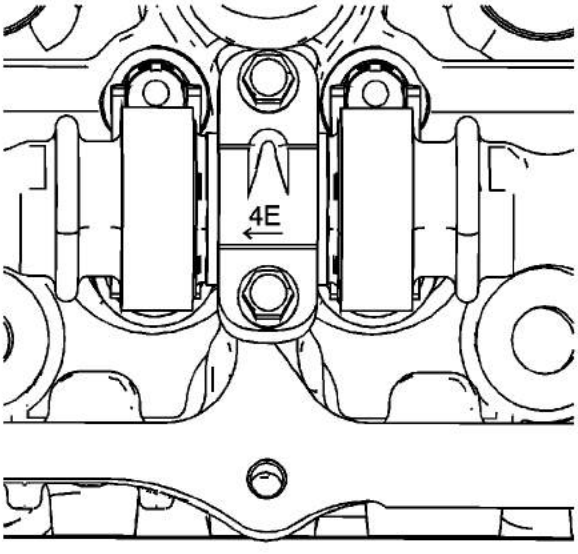

1. Observe the markings on the bearing caps. Each bearing cap is marked in order to identify its location. The markings have the following meanings:
   - The raised feature must always be oriented toward the center of the cylinder head.
   - The I indicates the intake camshaft.
   - The E indicates the exhaust camshaft.
   - The number indicates the journal position from the front of the engine.

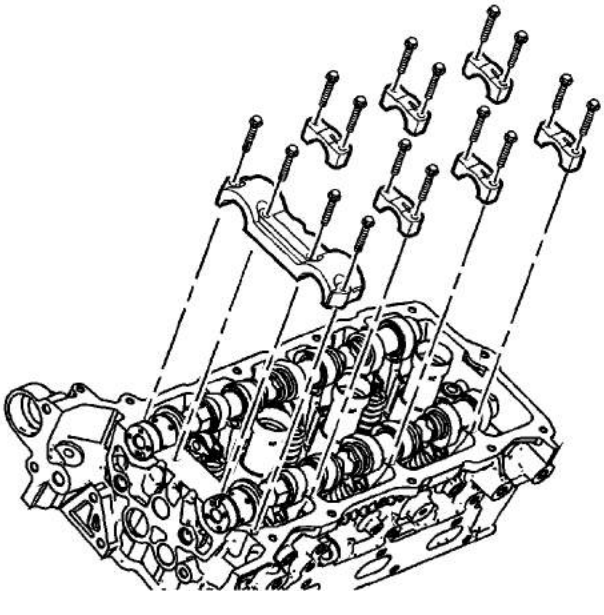

cardiagn.com

2. Remove the camshaft bearing cap bolts.
3. Remove the camshaft bearing caps.

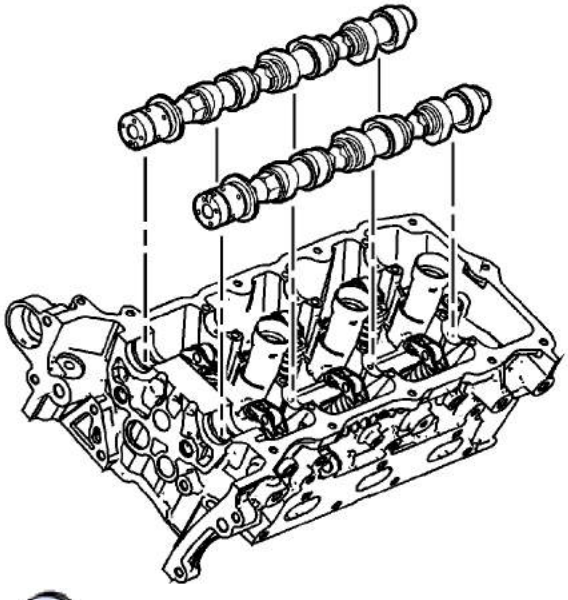

Important: Mark the camshafts upon removal to ensure installation is in the correct position.

4. Remove the camshafts.
5. Replace the camshaft bearing caps and bolts.

cardiagn.com

Valve Rocker Arm Removal - Left Side

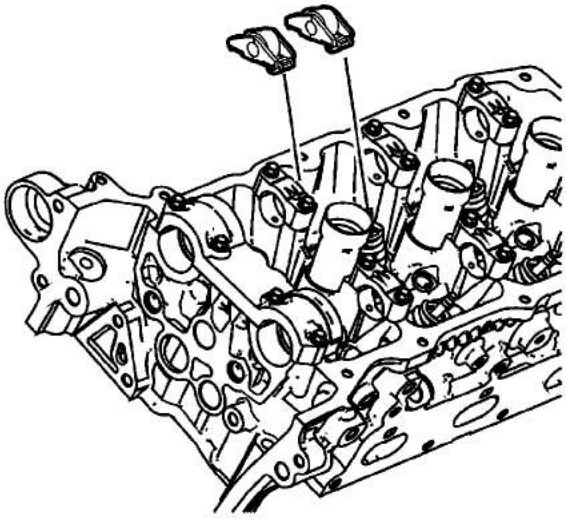

Remove the valve rocker arms from the cylinder head. If the rocker arms are to be reused, keep in order so they can be reinstalled in the same position.

cardiagn.com

Valve Lifter Removal - Left Side

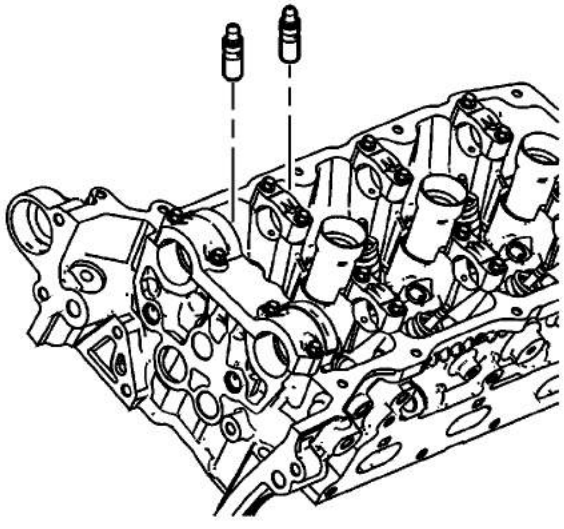

Important:

- Do not stroke/cycle the stationary hydraulic lash adjuster plunger without oil in the lower pressure chamber.
- Do not allow the stationary hydraulic lash adjuster to tip over, plunger down, after the oil fill.

Remove the valve lifters (SHLAs) from the cylinder head. If the lifters are to be reused, keep in order so they can be reinstalled in the same position.

cardiagn.com

Fuel Feed Pipe Removal

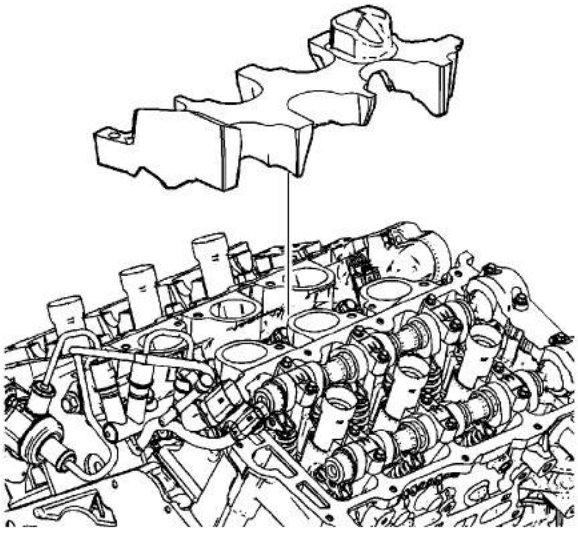

1. Remove the fuel rail noise shield.

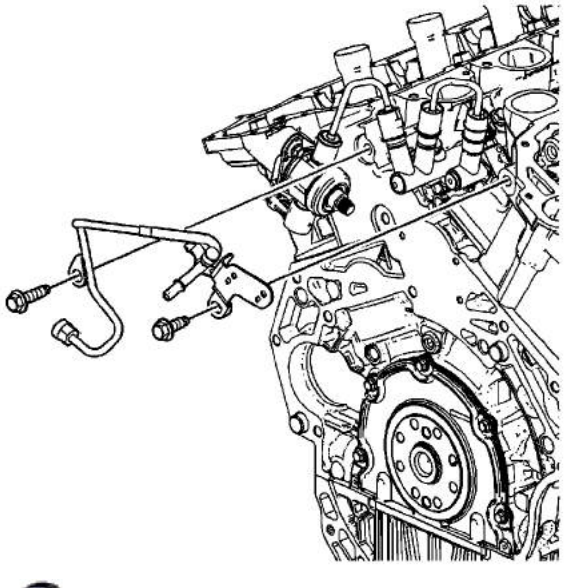

2. Remove the fuel rail wiring connectors from the fuel feed pipe bracket.
3. Remove the fuel feed pipe bolts.
4. Remove the fuel feed pipe.

cardiagn.com

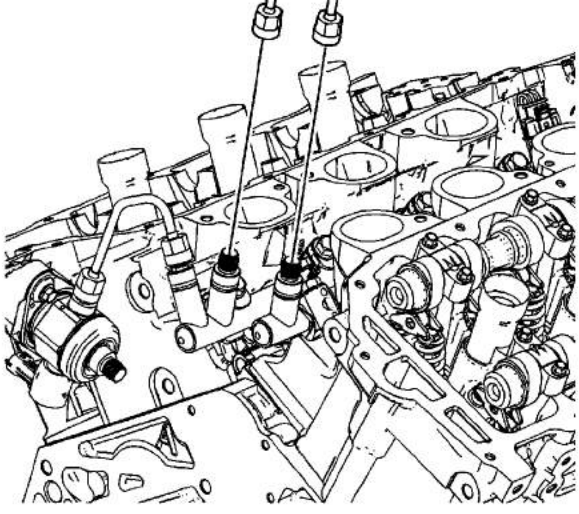

5. Remove the LH to RH fuel rail crossover pipe.

cardiagn.com

Cylinder Head Removal - Left Side (LCS)

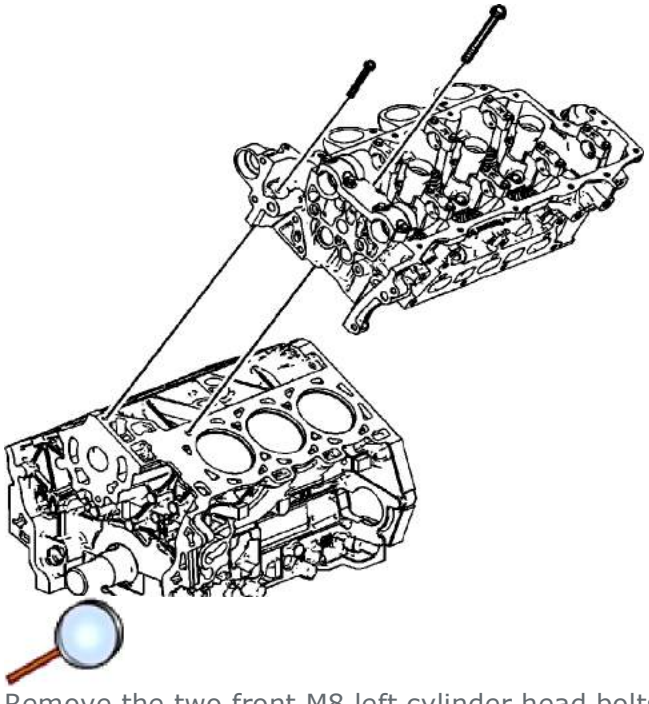

1. Remove the two front M8 left cylinder head bolts.
2. Remove the left cylinder head bolts.
3. Remove the left cylinder head.

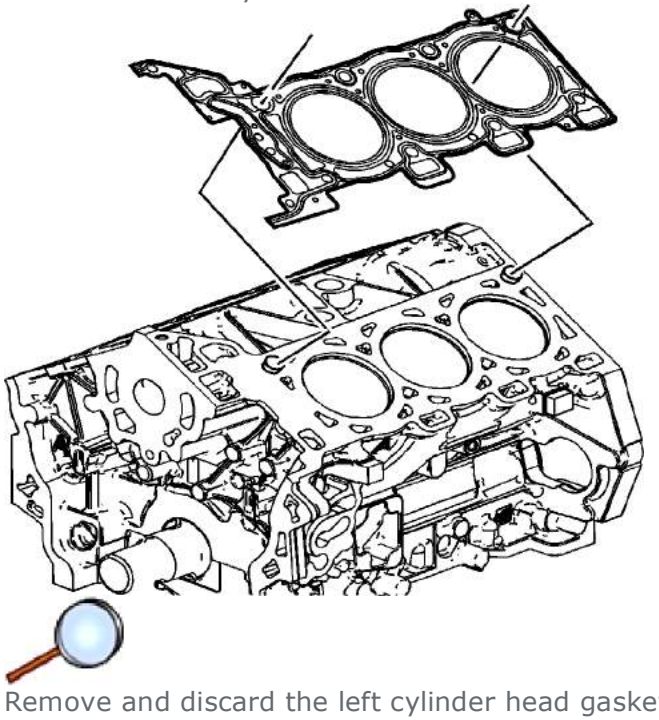

4. Remove and discard the left cylinder head gasket.

cardiagn.com

Cylinder Head Removal - Left Side (LY7)

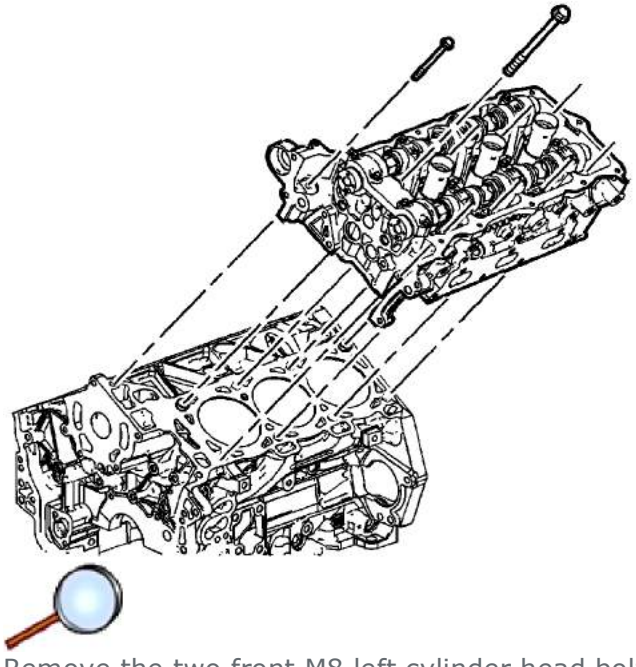

1. Remove the two front M8 left cylinder head bolts.
2. Remove the left cylinder head bolts.
3. Remove the left cylinder head.

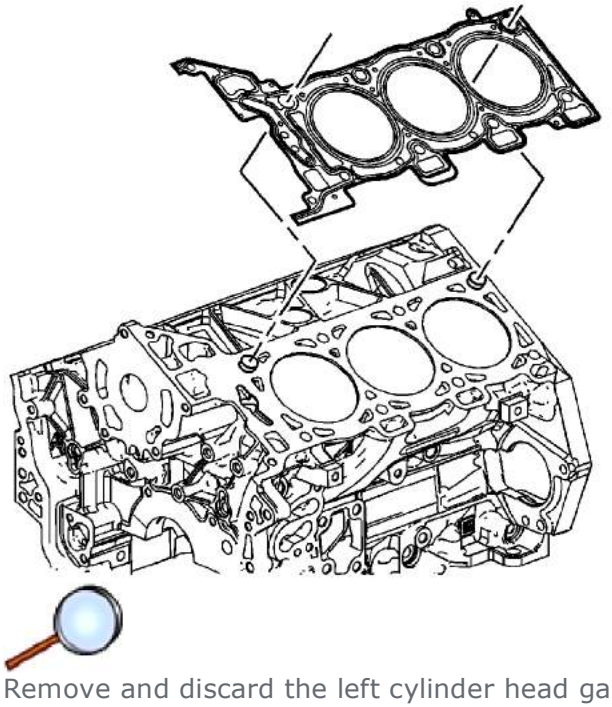

4. Remove and discard the left cylinder head gasket.

cardiagn.com

Camshaft Removal - Right Side

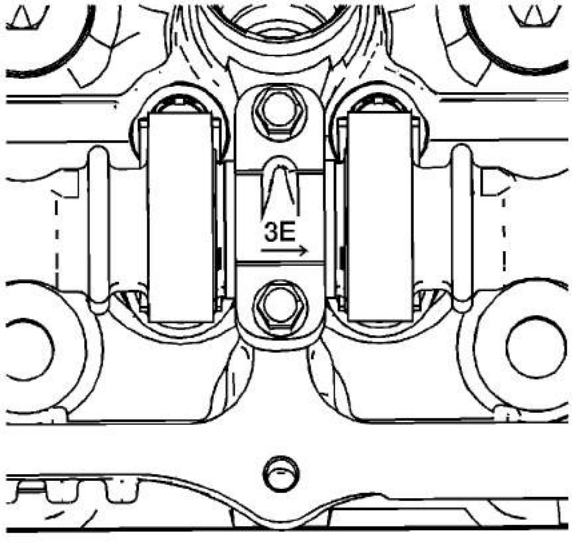

1. Observe the markings on the bearing caps. Each bearing cap is marked in order to identify its location. The markings have the following meanings:
   - The raised feature must always be oriented toward the center of the cylinder head.
   - The I indicates the intake camshaft.
   - The E indicates the exhaust camshaft.
   - The number indicates the journal position from the front of the engine.

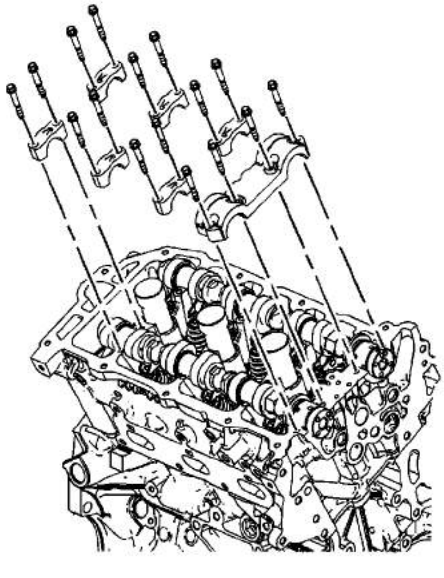

©

cardiagn.com

2. Remove the camshaft bearing cap bolts.
3. Remove the camshaft bearing caps.

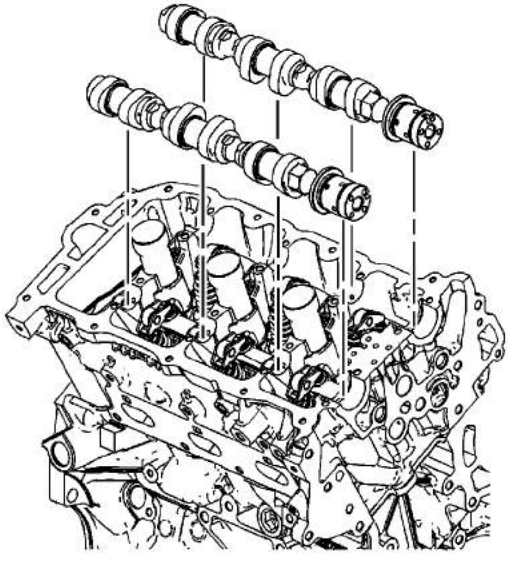

Important: Mark the camshafts upon removal to ensure installation is in the correct position.

4. Remove the camshafts.
5. Replace the camshaft bearing caps and bolts.

cardiagn.com

Valve Rocker Arm Removal - Right Side

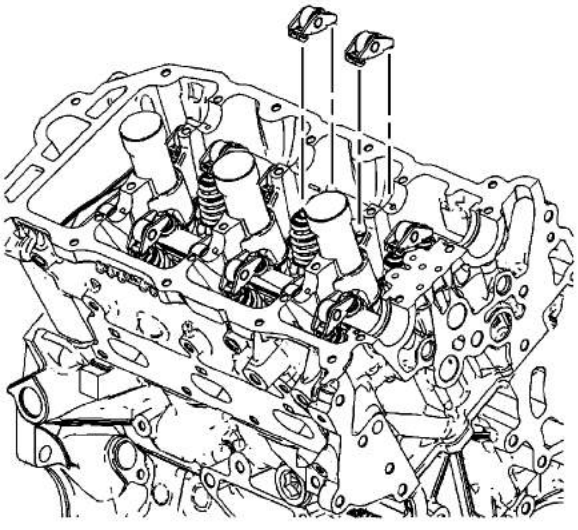

Remove the valve rocker arms from the cylinder head. If the rocker arms are to be reused, keep in order so they can be reinstalled in the same position.

cardiagn.com

Valve Lifter Removal - Right Side

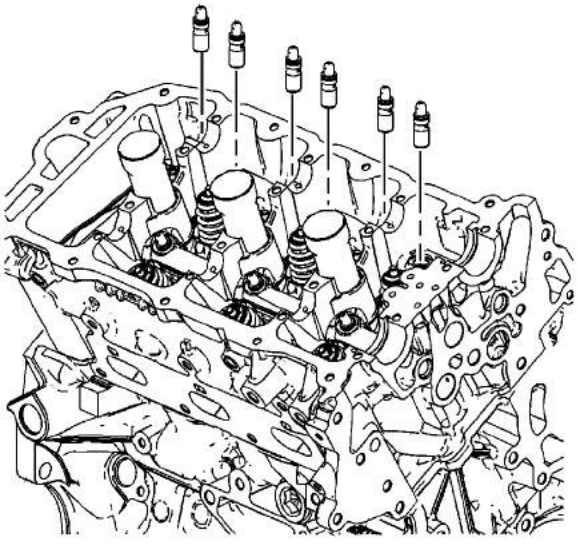

Important:

- Do not stroke/cycle the stationary hydraulic lash adjuster plunger without oil in the lower pressure chamber.
- Do not allow the stationary hydraulic lash adjuster to tip over, plunger down, after the oil fill.

Remove the valve lifters (SHLAs) from the cylinder head. If the lifters are to be reused, keep in order so they can be reinstalled in the same position.

cardiagn.com

Cylinder Head Removal - Right Side

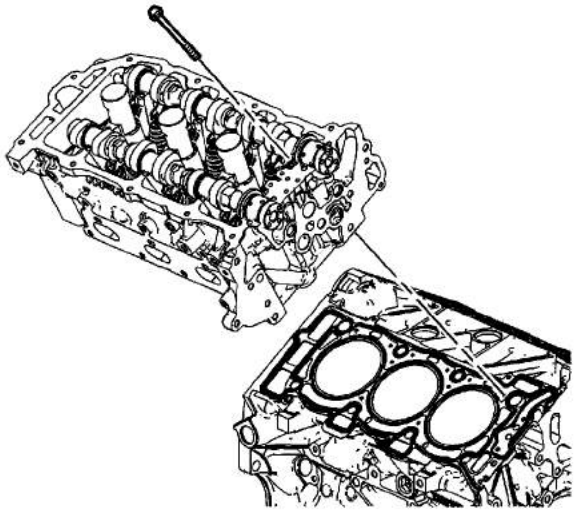

1. Remove the right cylinder head bolts.
2. Remove the right cylinder head.

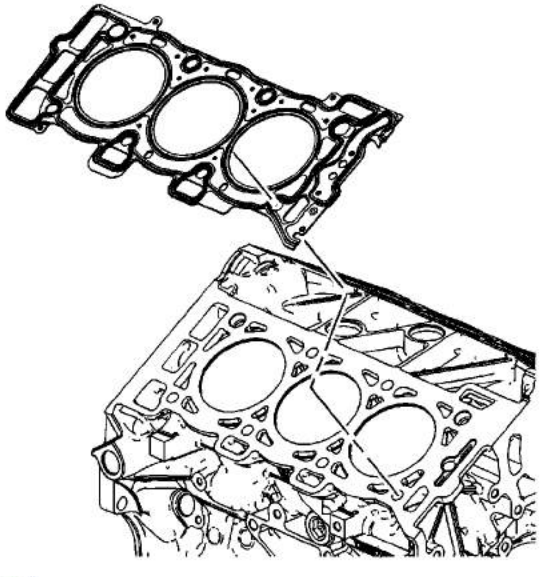

3. Remove and discard the right cylinder head gasket.

cardiagn.com

Oil Pan Removal

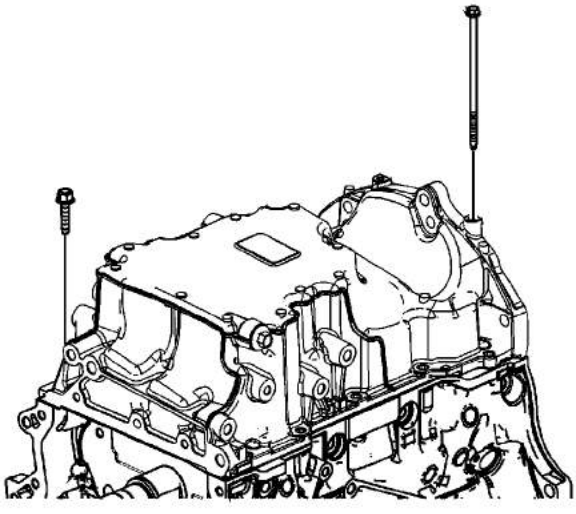

1. Remove the oil pan bolts.

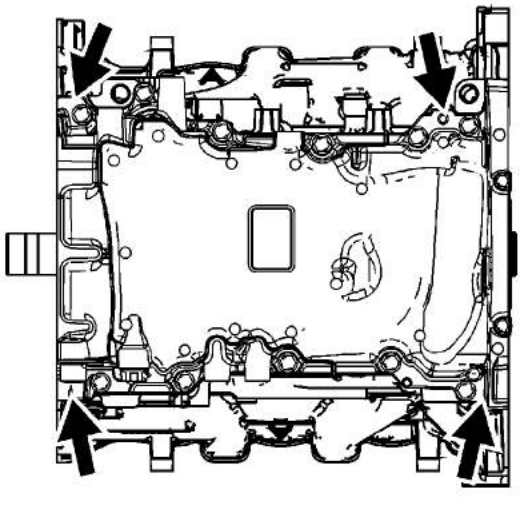

2. Using the pry points located at the edge of the oil pan separate the RTV sealant.

cardiagn.com

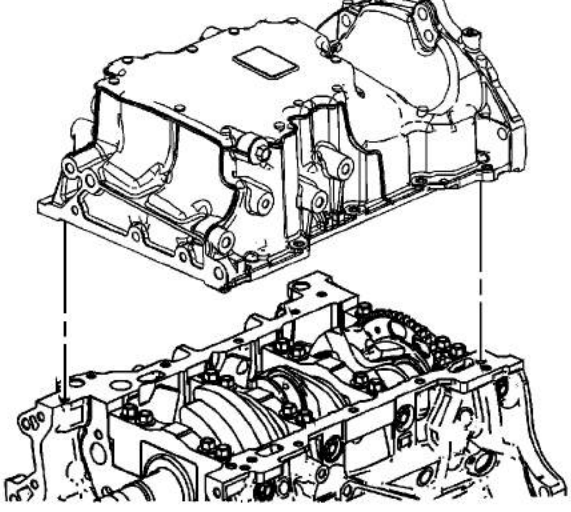

3. Remove the oil pan from the block.

cardiagn.com

Oil Pump Removal

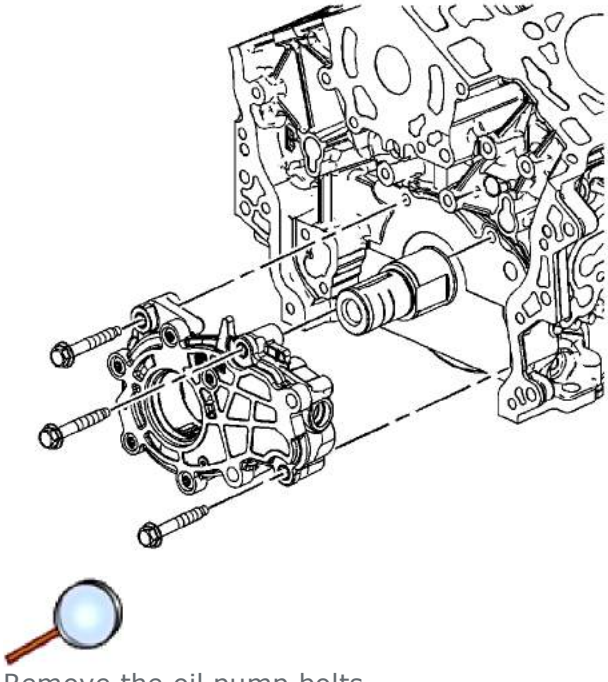

1. Remove the oil pump bolts.
2. Remove the oil pump.

cardiagn.com

Crankshaft Rear Oil Seal and Housing Removal

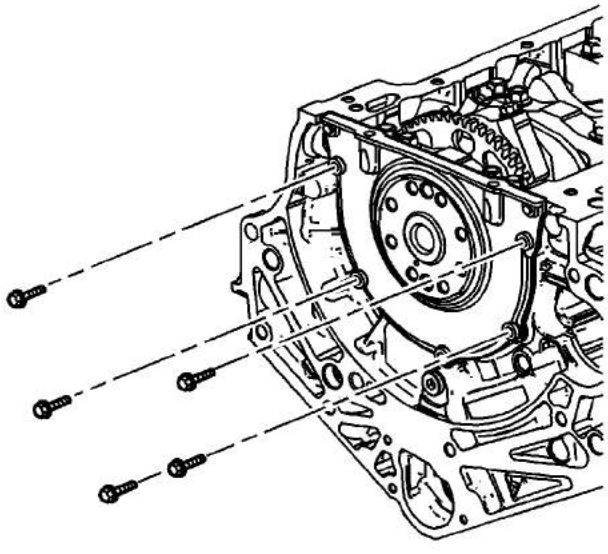

1. Remove the crankshaft rear oil seal housing bolts.

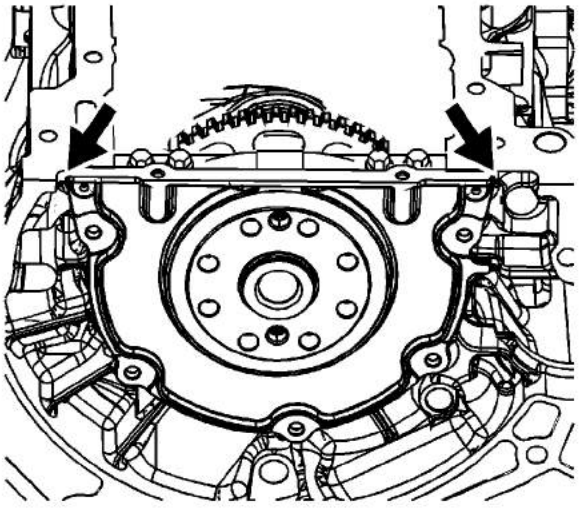

2. Use the pry points located at the edge of the crankshaft rear oil seal housing to separate the RTV sealant.

cardiagn.com

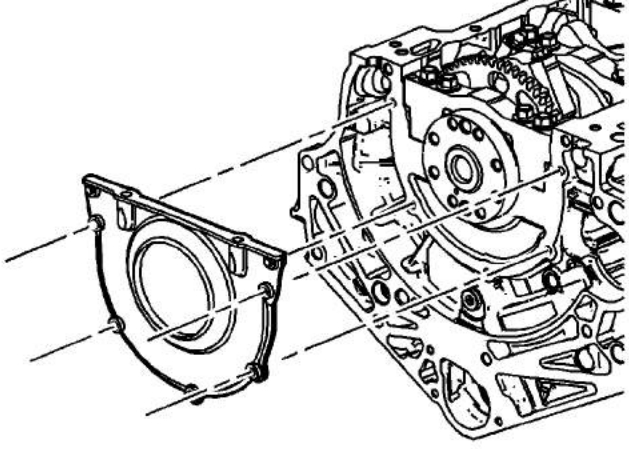

3. Remove and discard the crankshaft rear oil seal housing.

cardiagn.com

Piston, Connecting Rod, and Bearing Removal

Special Tools

EN-46121 Connecting Rod Guide Pin Set

Note:

- An arrow/dot showing proper piston orientation is located on the top of the piston.
- If the connecting rod bearings have been used in a running engine, you must replace them with NEW connecting rod bearings for reassembly.

1. Before removing the connecting rods, check the connecting rod side clearance using the following procedure:
   1.1. Tap the connecting rod to one end of the crankshaft journal with a dead-blow or wooden hammer.
   1.2. Using feeler gages, measure the clearance between the crankshaft counterweight and the connecting rod.
   1.3. The connecting rod side clearance should not exceed specifications. Refer to Engine Mechanical Specifications.
   1.4. If the end play exceeds the specified limits, measure the width of the crankpin end of the connecting rod. Refer to Piston, Connecting Rod, and Bearing Cleaning and Inspection.
   1.5. If the connecting rod width is significantly smaller than specified and severe wear is present on the side of the connecting rod, replace the connecting rod.
   1.6. If the connecting rod width is within specification and excessive scoring is present on the crankshaft journals, replace the crankshaft.
2. Using a marker, number each piston face. Draw an arrow along the centerline of the piston pointing toward the front of the engine.

   Caution: Do not use a stamp, punch or any other method that may distort or stress the connecting rod or connecting rod cap. Extensive engine damage may result from a connecting rod that is distorted or stressed.

3. Mark the cylinder number on the connecting rod and the connecting rod cap with a scribe, paint stick or permanent marker.

cardiagn.com

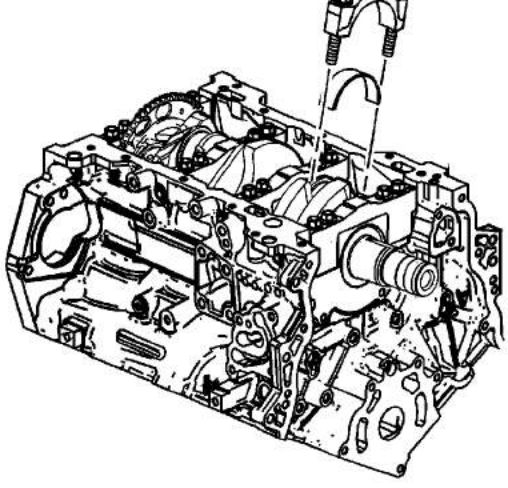

Caution: Powdered metal connecting rods have rod bolts which yield when torqued. If the rod bolts are loosened or removed the rod bolts must be replaced. Rod bolts that are not replaced will not torque to the correct clamp load and can lead to serious engine damage.

4. Remove the connecting rod bolts.

   Note: The connecting rod caps must remain with the original connecting rod.

5. Remove the connecting rod cap.

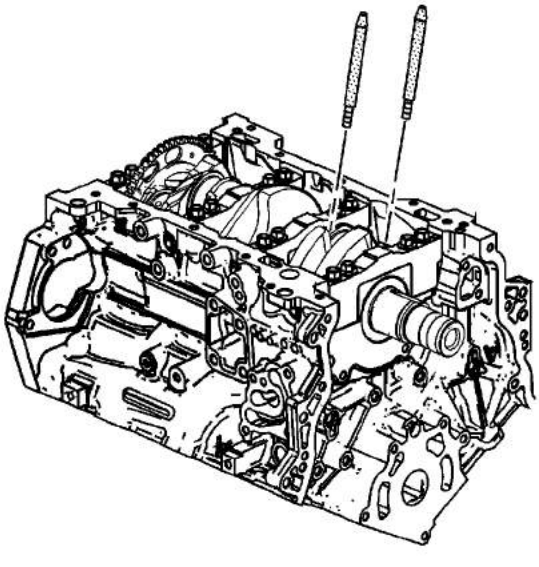

6. Install the *EN-46121* pin set into the connecting rod bolt holes.

cardiagn.com

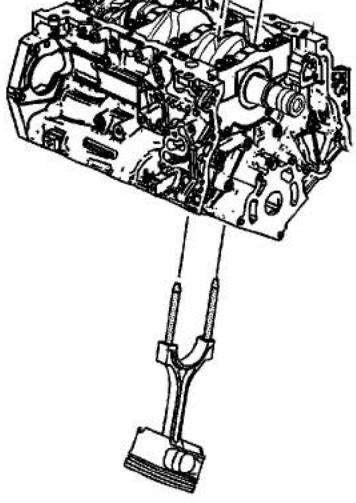

7. Using the *EN-46121* pin set , push the connecting rod and piston assembly through the top of the cylinder. DO NOT scratch the crankshaft journal or cylinder wall and DO NOT damage the oil jets when removing the connecting rod and piston assembly.

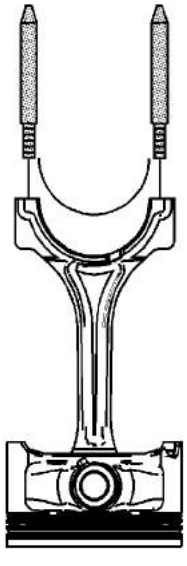

8. Remove the *EN-46121* pin set from the connecting rod bolt holes.
9. Remove the upper connecting rod bearing from the connecting rod.

cardiagn.com

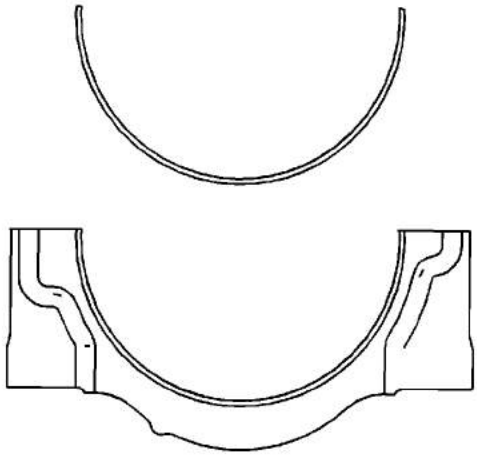

10. Remove the lower connecting rod bearing from the connecting rod cap.

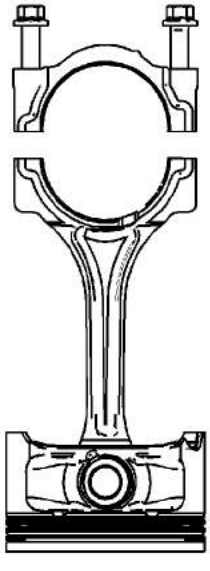

11. Reattach the connecting rod cap to the connecting rod to prevent damage to their mating surfaces. The cap and rod are a matched set and must be kept together.

cardiagn.com

Crankshaft and Bearing Removal

Tools Required

- J 6125-1B Slide Hammer Adapter
- J 41818 Crankshaft Bearing Cap Remover

Crankshaft End Play Measurement

1. Place a dial indicator at the crankshaft nose.
2. Gently force the crankshaft to the extreme front and rear positions with a pry tool while monitoring the movement of the dial indicator.
3. The crankshaft end play should not exceed specifications. Refer to Engine Mechanical Specifications .
4. If the specifications are exceeded inspect the thrust bearing thrust OD and the crankshaft thrust wall for wear and/or excessive runout. Refer to Engine Mechanical Specifications .
5. Replace the thrust bearing or crankshaft as necessary.

Crankshaft Removal

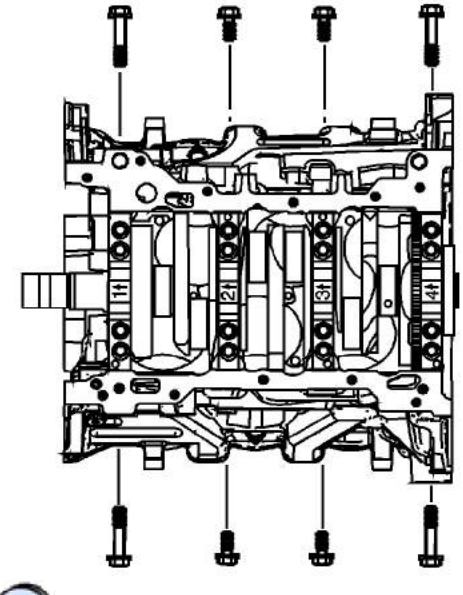

1. Remove the crankshaft bearing cap side bolts.
2. Remove the crankshaft bearing cap outer bolts.
3. Remove the crankshaft bearing cap inner bolts.

cardiagn.com

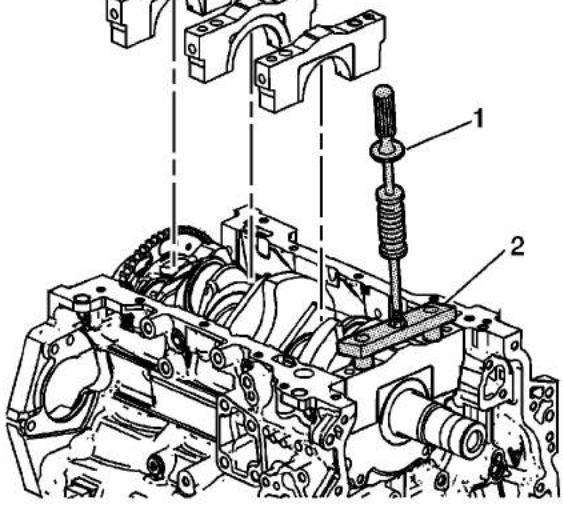

4. Remove the crankshaft bearing caps using the J 6125-1B (1) and J 41818 (2).

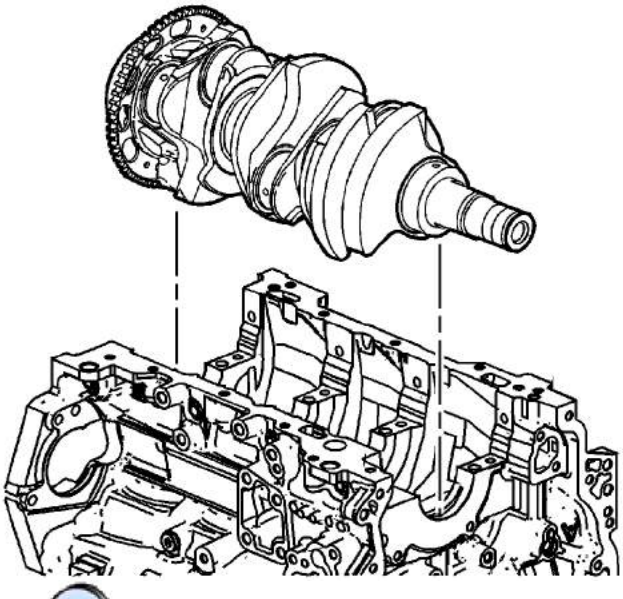

5. Using two hands, lift the crankshaft straight up from the engine block.
6. Place the crankshaft in a secure place.

cardiagn.com

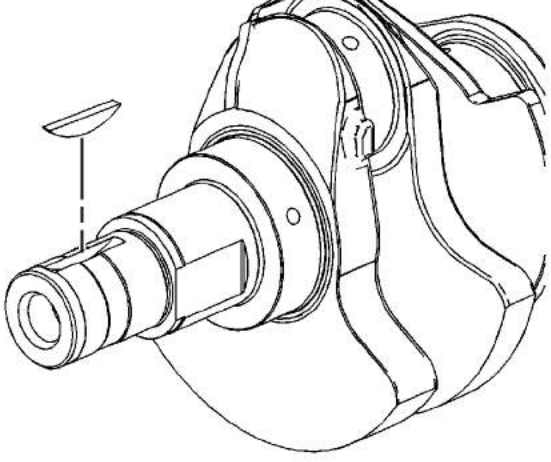

7. Remove the crankshaft key from the nose of the crankshaft, if damaged.

Crankshaft Bearing Removal

1. Prepare a piece of cardboard or equivalent, numbered 1-4 for bearing identification. Main bearing journals are numbered from the front of the engine.

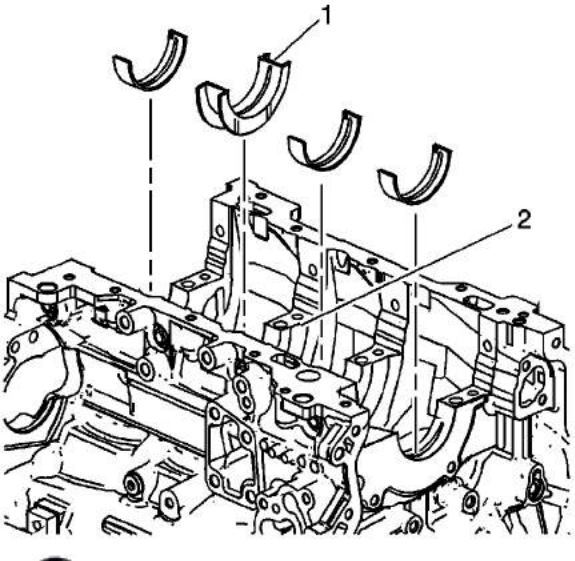

2. Remove the crankshaft upper bearing halves from the cylinder block. Note the position of the thrust bearing (1) at the number 3 journal (2).
3. Place the crankshaft upper bearing halves on the cardboard in the correct positions. Note that the number 3 bearing is the thrust bearing.

cardiagn.com

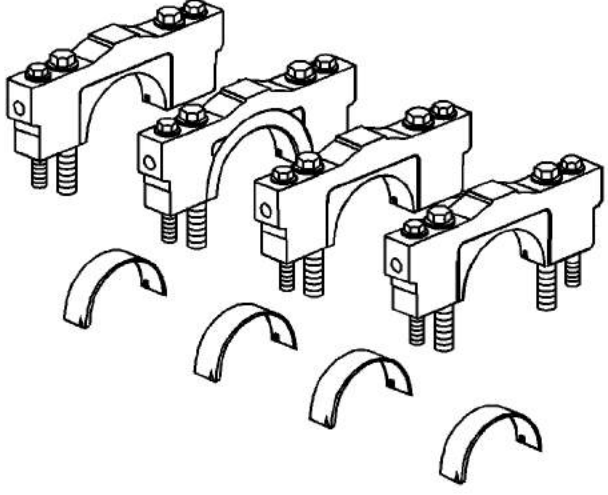

4. Remove the crankshaft lower bearing halves from the crankshaft bearing caps.
5. Place the crankshaft lower bearing halves in the correct positions on the cardboard.

cardiagn.com

Engine Block Disassemble

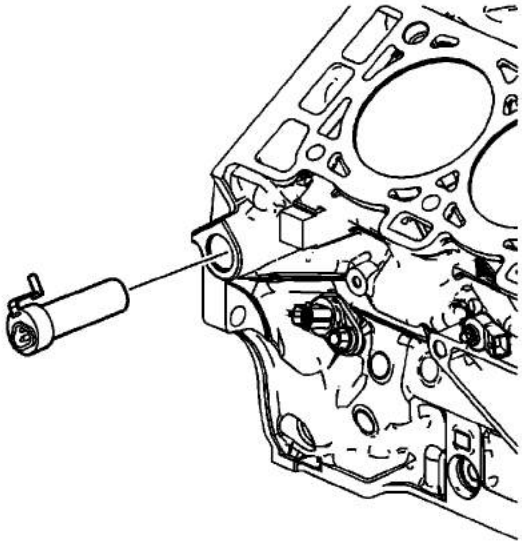

1. Remove the block heater cartridge, if equipped.

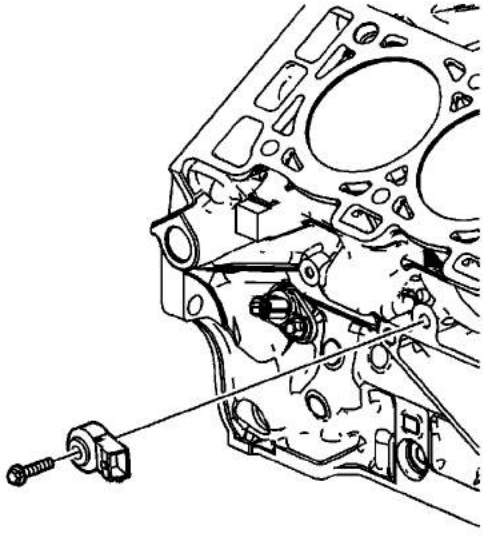

2. Remove the right knock sensor bolt.
3. Remove the right knock sensor.

cardiagn.com

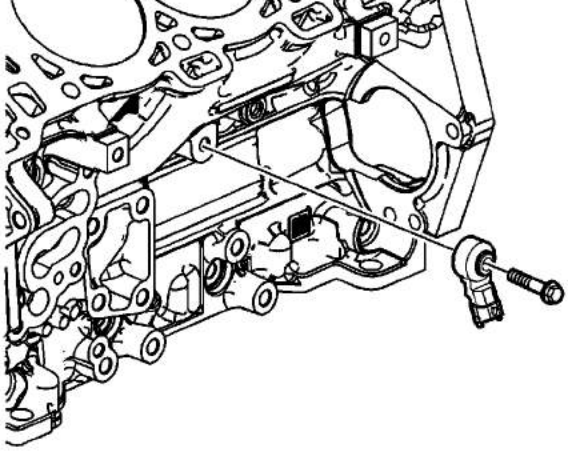

4. Remove the left knock sensor bolt.
5. Remove the left knock sensor.

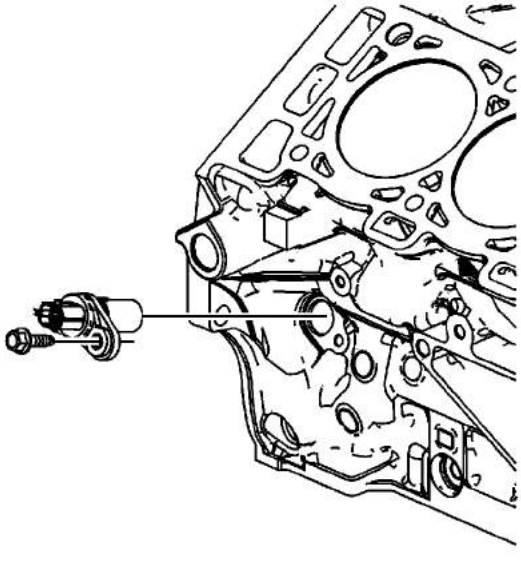

6. Remove the crankshaft position sensor bolt.
7. Remove the crankshaft position sensor.

cardiagn.com

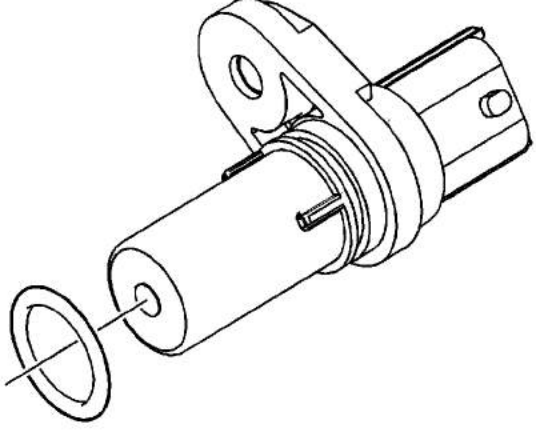

8. Remove the crankshaft position sensor O-ring, if damaged.

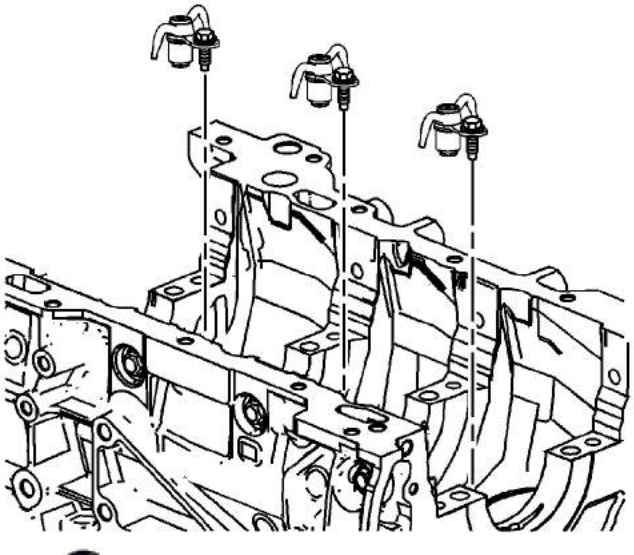

9. Remove oil jet bolts.
10. Remove oil jets.

cardiagn.com

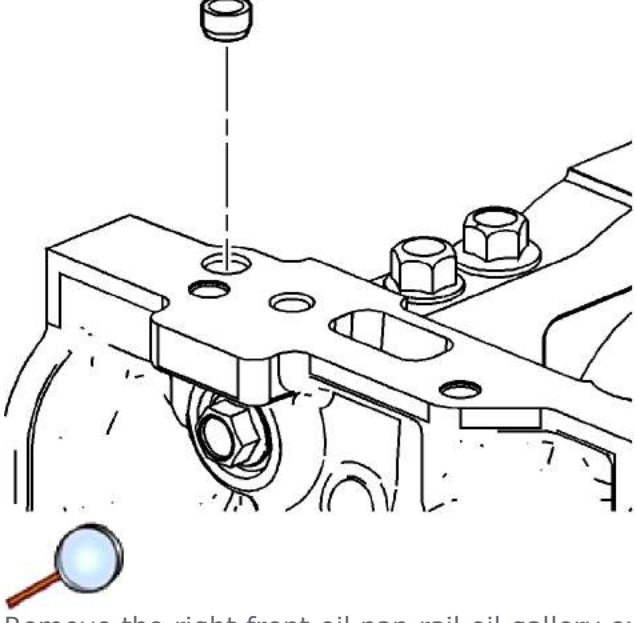

11. Remove the right front oil pan rail oil gallery expansion plug.

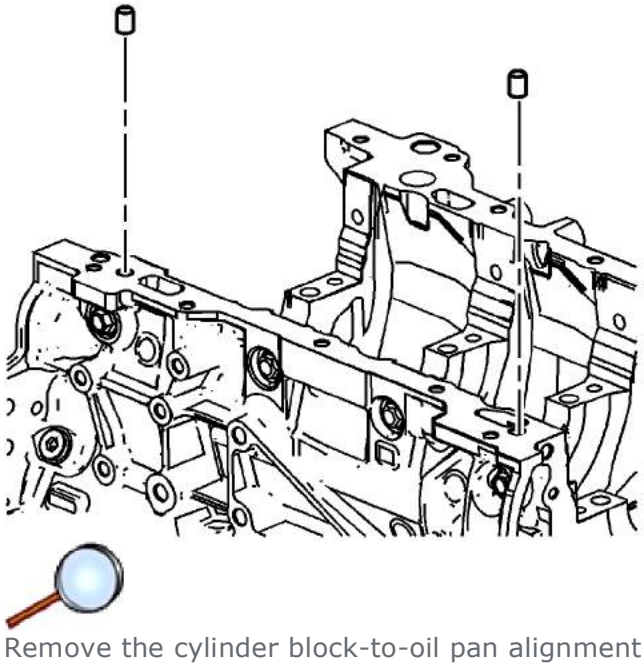

12. Remove the cylinder block-to-oil pan alignment dowels.

cardiagn.com

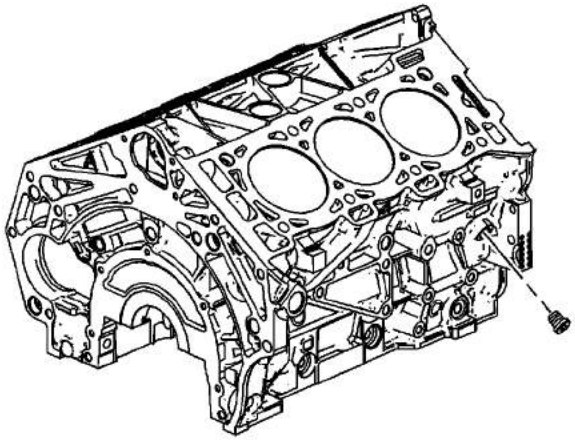

13. Remove the M14 right side oil gallery threaded plug.

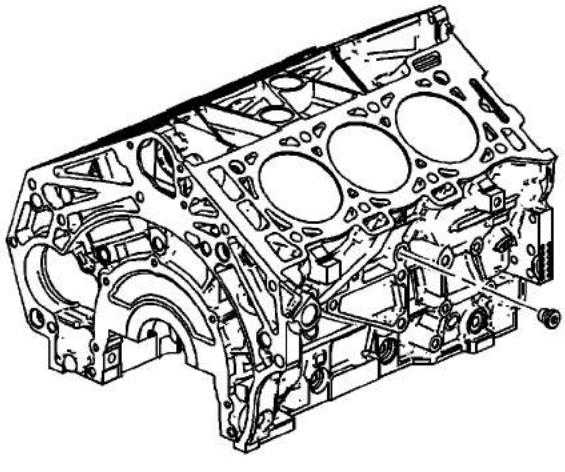

14. Remove the M14 right side coolant drain threaded plug.

cardiagn.com

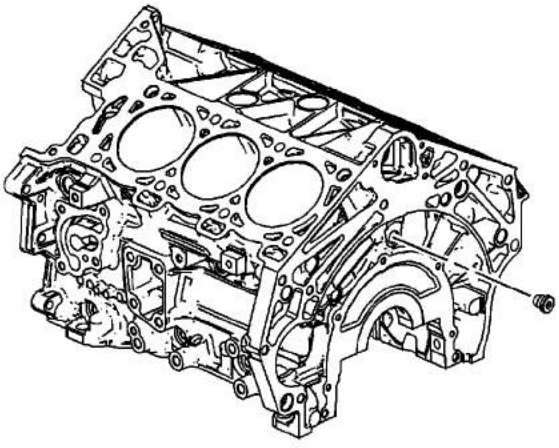

15. Remove the M14 rear oil gallery threaded plug.

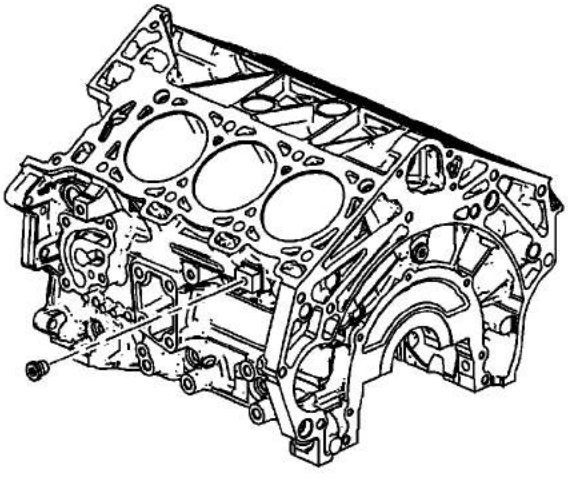

16. Remove the M14 left side coolant drain threaded plug.

cardiagn.com

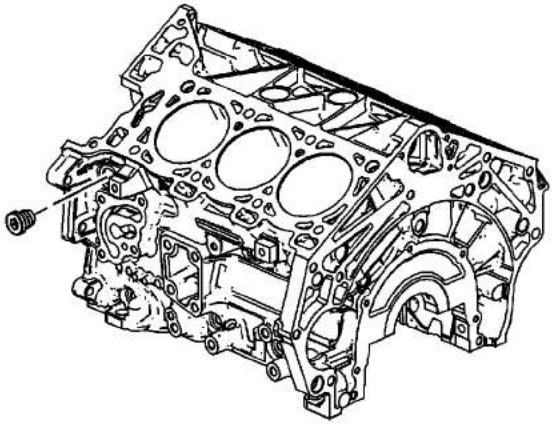

17. Remove the M20 left side oil gallery threaded plug.

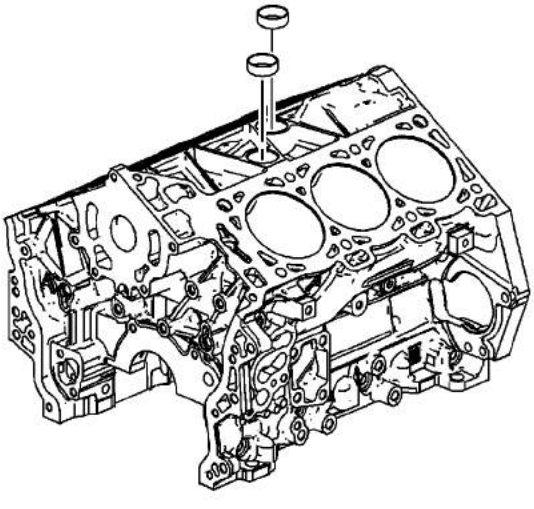

18. Remove the coolant expansion plugs.

cardiagn.com

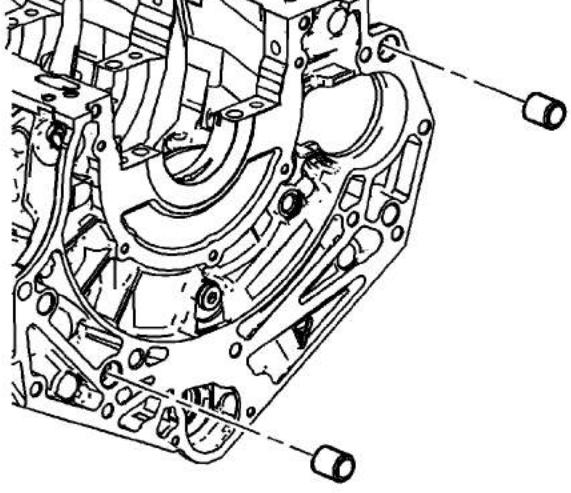

19. Remove the cylinder block-to-transmission alignment dowels.

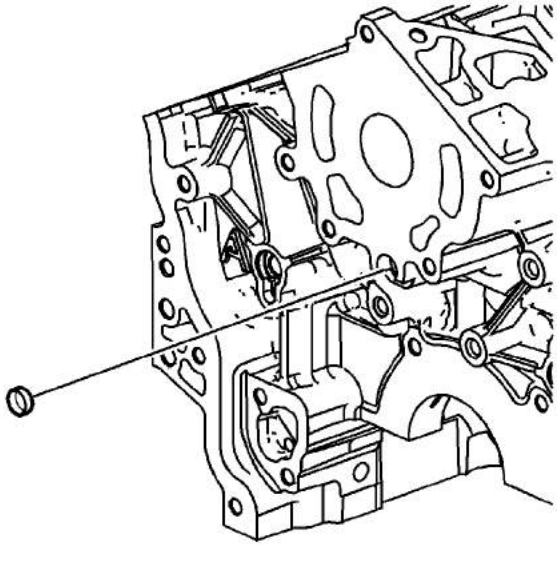

20. Remove the front oil gallery expansion plug.

cardiagn.com

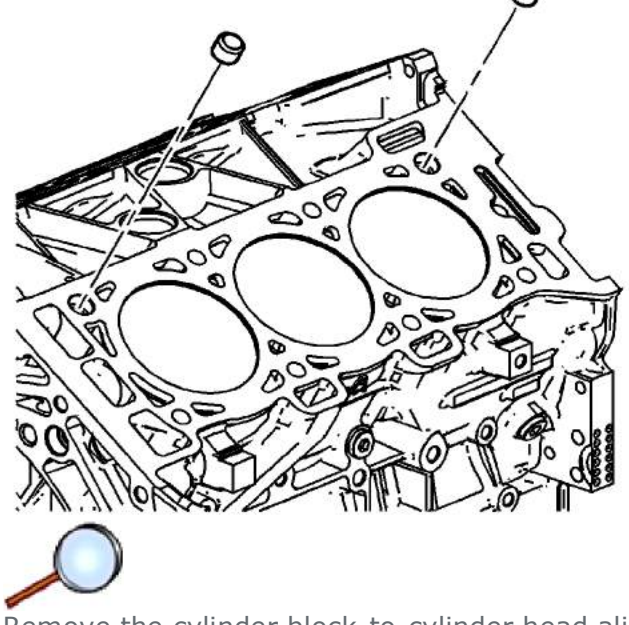

21. Remove the cylinder block-to-cylinder head alignment dowels.

cardiagn.com

Engine Block Cleaning and Inspection

Special Tools

- *J 8087* Cylinder Bore Gage
- *J 28410* Gasket Remover

For equivalent regional tools, refer to Special Tools.

Cleaning Procedure

1. Remove any old thread sealant, gasket material or sealant using *J 28410* remover .
2. Clean all the following areas with solvent:
   - Sealing surfaces
   - Cooling passages
   - Oil passages
   - Bearing journals
3. Clean all threaded and through holes with solvent.

   Warning: Refer to Safety Glasses Warning in the Preface section.

4. Dry the engine block with compressed air.

Visual Inspection

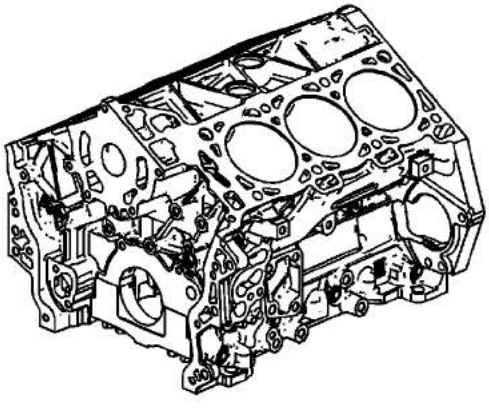

cardiagn.com

cylinder block assembly must be replaced.
2. Inspect the primary camshaft drive chain tensioner mounting surface on the engine block for burrs or any defects that would degrade the sealing of the NEW primary camshaft drive chain tensioner gasket.
3. Inspect all sealing and mating surfaces for damage, repair or replace the cylinder block assembly if necessary.
4. Inspect all threaded and through holes for damage or excessive debris.
5. Inspect all bolts for damage, if damaged replace with NEW bolts only.
6. Inspect the cylinder walls for cracks or damage. The cylinder sleeves are not serviced separately, if the cylinders are damaged the cylinder block assembly must be replaced.
7. Inspect the engine block for cracks. Do not repair any cracks. If cracks are found, the cylinder block assembly must be replaced.
8. Repair any damaged threaded holes. Refer to Thread Repair Specifications and Thread Repair.

Measuring Cylinder Bore Diameter

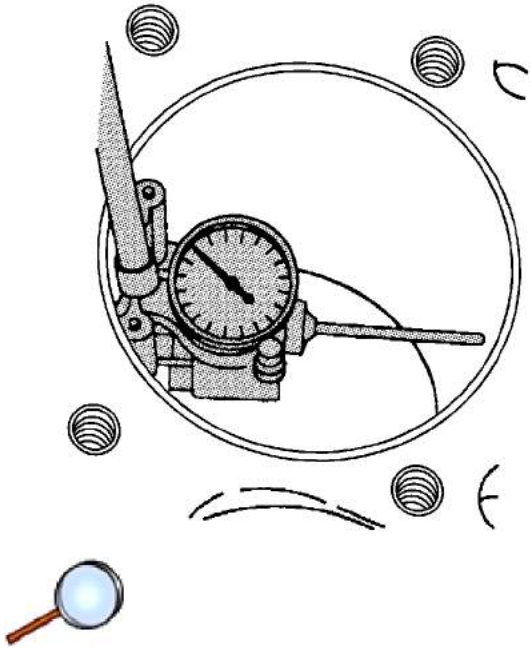

Measure the cylinder bore diameter 37 mm (1.457 in) from the deck face using the *J 8087* gage .

Compare your results with the Engine Mechanical Specifications. If the cylinder diameter exceeds the specifications, the cylinder block may be oversized to 0.25 mm (0.010 in). There is only one size of oversized pistons and rings available for service.

Measuring Cylinder Bore Taper

1. Measure the cylinder bore along the thrust surfaces, perpendicular to the crankshaft centerline, at 10 mm (0.397 in) below the deck surface and record your measurement.
2. Measure the cylinder bore along the thrust surfaces, perpendicular to the crankshaft

cardiagn.com

4. Compare your results with the Engine Mechanical Specifications. If the cylinders exceed the specifications, the cylinder block may be oversized to 0.25 mm (0.010 in). There is only one size of oversized pistons and rings available for service.

Measuring Cylinder Bore Out-of-Round

1. Measure both the thrust and non-thrust cylinder diameter at 10 mm (0.397 in) below the deck. Record your measurements.
2. Calculate the difference between the 2 measurements. The result will indicate out-of-round at the upper end of the cylinder.
3. Measure both the thrust and non-thrust cylinder diameter at 100 mm (3.976 in) below the deck surface. Record your measurements.
4. Calculate the difference between the 2 measurements. The result will indicate out-of-round at the lower end of the cylinder.
5. Compare your results with the Engine Mechanical Specifications. If the cylinders exceed these specifications, the cylinder block may be oversized to 0.25 mm (0.010 in). There is only one size of oversized pistons and rings available for service.

Deck Flatness Inspection

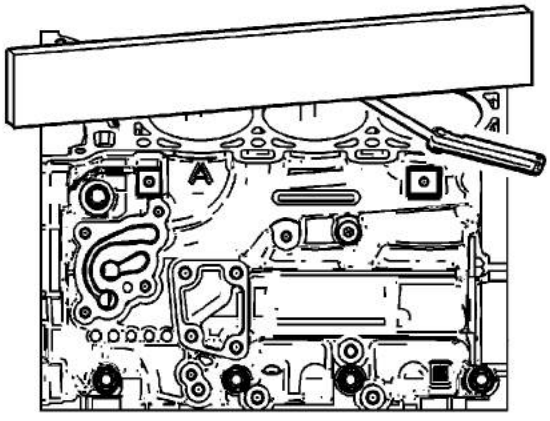

1. Ensure the engine block decks are clean and free of gasket material.
2. Inspect the surface for any imperfections or scratches that could inhibit proper cylinder head gasket sealing.
3. Place a straight-edge diagonally across the cylinder block deck face surface.
4. Measure the clearance between the straight-edge and the cylinder block deck face using a feeler gage at 4 points along the straight-edge.
5. If the warpage is less than 0.05 mm (0.002 in), the cylinder block deck surface does not require resurfacing.
6. If the warpage is between 0.05-0.20 mm (0.002-0.008 in) or any imperfections or scratches that could inhibit proper cylinder head gasket sealing are present, the cylinder block deck

cardiagn.com

8. If the cylinder block deck surface requires more than 0.25 mm (0.010 in) material removal the block must be replaced.

cardiagn.com

Crankshaft and Bearing Cleaning and Inspection

Cleaning Procedure

1. Clean the following components in solvent:
   - Crankshaft bearings
   - Connecting rod bearings
   - Crankshaft journals
   - Crankpin journals
   - Crankshaft oil passages
   - Crankshaft threaded holes

   Warning: Refer to Safety Glasses Warning in the Preface section.

2. Dry the following components with compressed air:
   - Crankshaft bearings
   - Connecting rod bearings
   - Crankshaft journals
   - Crankpin journals
   - Crankshaft oil passages
   - Crankshaft threaded holes

Visual Inspection

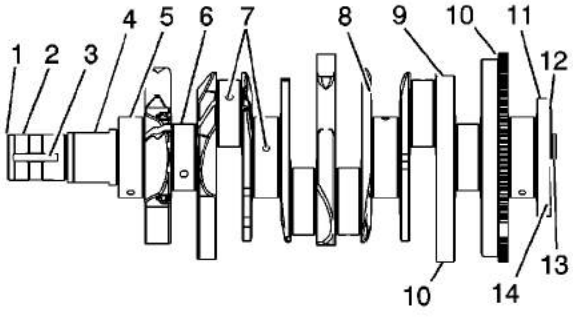

cardiagn.com

- Inspect the crankshaft balancer mounting area (2) for damage.
- Inspect the crankshaft keyway (3) for damage.
- Inspect the oil pump drive flats (4) for damage.
- Inspect the crankshaft main journals (5) for damage.
- Inspect the crankshaft connecting rod journals (6) for damage.
- Inspect the crankshaft oil passages (7) for obstructions.
- Inspect the crankshaft main bearing thrust wall surfaces (8) for damage.
- Inspect the crankshaft counterweights (9) for damage.
- Inspect the crankshaft reluctor ring teeth (10) for damage.
- Inspect the crankshaft rear main oil seal surface (11) for damage.
- Inspect the crankshaft engine flywheel mounting surface (12) for damage.
- Inspect the crankshaft pilot hole (13) for damage.
- Inspect the crankshaft engine flywheel bolt holes (14) for thread damage.

2. Repair or replace the crankshaft as necessary.

Crankshaft Bearing Inspection

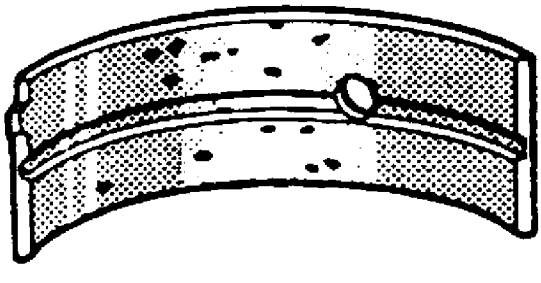

Note:

- All connecting rod and main journal bearings that have been used in a running engine must be replaced. Never re-use the crankshaft or connecting rod bearings.
- The following bearing wear conditions should be used to diagnose engine operating conditions or root cause of a condition.

1. Inspect for fatigue indicated by craters or pockets. Flattened sections on the bearing halves

cardiagn.com

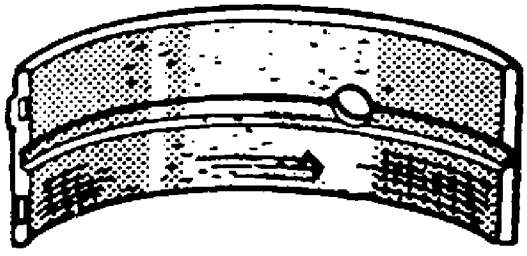

2. Inspect for excessive scoring or discoloration on both front and back of the bearing halves.
3. Inspect the main bearings for dirt embedded into the bearing material.

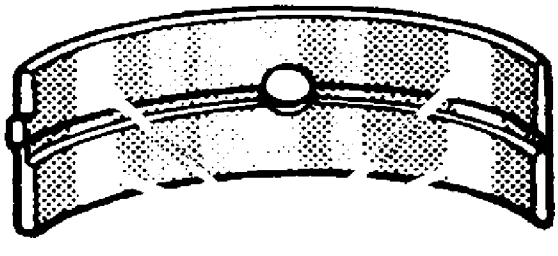

4. Inspect for improper seating indicated by bright, polished sections.

Crankshaft Measurement

Special Tools

J 7872 Magnetic Base Dial Indicator

For equivalent regional tools, refer to Special Tools.

cardiagn.com

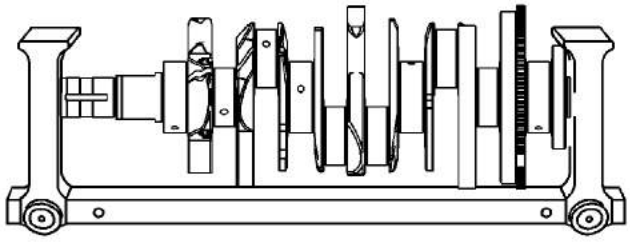

1. Using a suitable fixture, support the crankshaft.

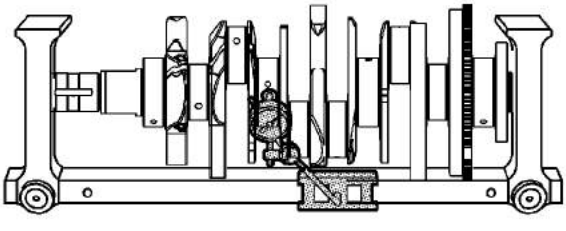

2. Install the *J 7872* indicator .
3. Measure the crankshaft runout using the J 7872 . Refer to Engine Mechanical Specifications.

cardiagn.com

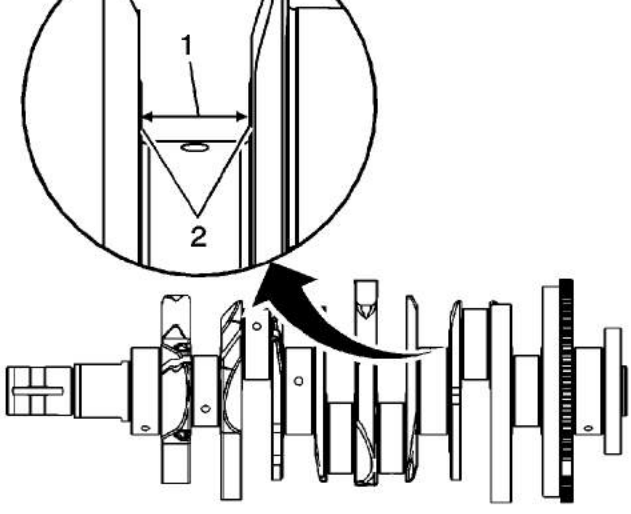

4. Measure the crankshaft thrust wall width (1) for wear using an inside micrometer. Refer to Engine Mechanical Specifications.
5. Measure the crankshaft thrust wall surface (2) for runout using the *J 7872* indicator . Refer to Engine Mechanical Specifications.
6. If the crankshaft journals are damaged or worn beyond specifications, the crankshaft may be ground 0.25 mm (0.010 in). There is only 1 size of oversized main bearings available for service.

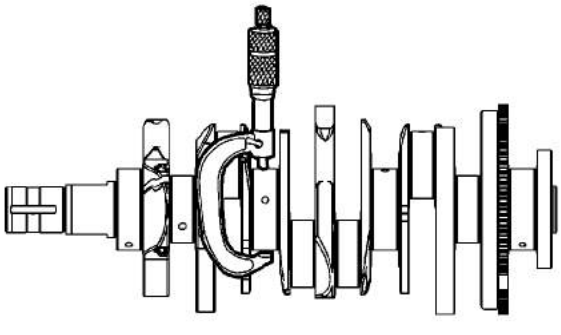

7. Inspect the crankshaft main journals for undersize, using an outside micrometer.

cardiagn.com

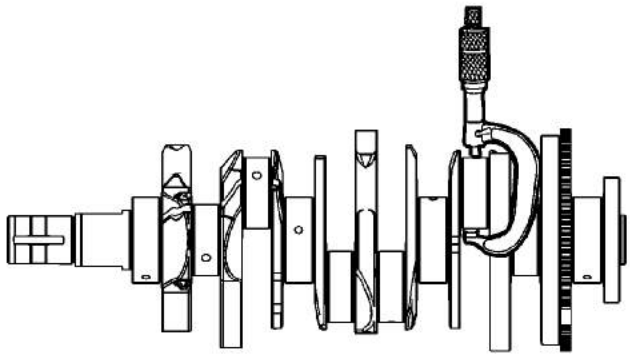

8. Inspect the crankpins for undersize using an outside micrometer.
9. Compare your measurements with those listed in the Engine Mechanical Specifications. If the crankpin journals are worn beyond the specifications, the crankshaft may be ground 0.25 mm (0.010 in). There is only 1 size of oversized connecting rod bearings available for service.

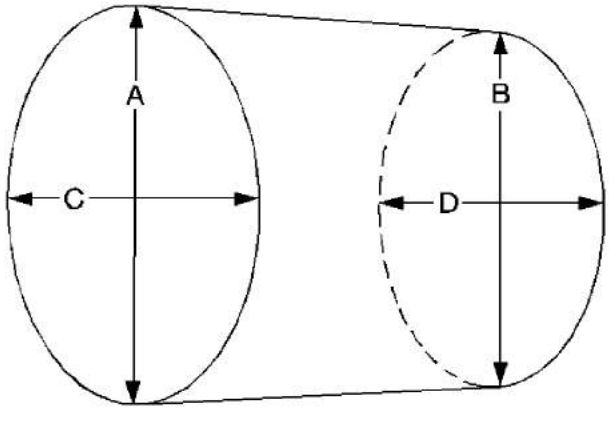

10. Measure the main bearing and crankpin journals for out-of-round using the following procedure:
    10.1. Using an outside micrometer, measure the journal at the extreme front and rear locations on the journal. Call these points A and B.
    10.2. Measure the journal in 2 new locations exactly 90 degrees from the first points. Call these points C and D.
    10.3. Subtract A from C and B from D. The differences will indicate journal out-of-round.

cardiagn.com

10.3. If the journals are worn beyond the specifications, the crankshaft may be ground 0.25 mm (0.010 in). There is only 1 size of oversized crankshaft and connecting rod bearings available for service.

11. Measure the main bearing and crankpin journals for taper using the following procedure:
    - 11.1. Using an outside micrometer, measure the journal at the extreme front (A) and rear (B) of the journal parallel to the crankshaft centerline.
    - 11.2. Subtract the smallest from the largest measurement. The result will be the journal taper.
    - 11.3. If the main bearing journal taper exceeds 0.004 mm (0.00016 in), replace the crankshaft.
    - 11.4. If the journals are worn beyond the specifications, the crankshaft may be ground 0.25 mm (0.010 in). There is only 1 size of oversized crankshaft and connecting rod bearings available for service.

cardiagn.com

Crankshaft Balancer Cleaning and Inspection

Cleaning Procedure

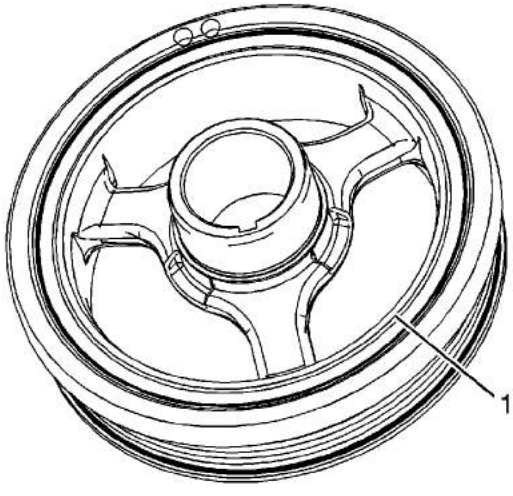

1. Clean the crankshaft balancer in solvent that is compatible with the rubber (1).

   Warning: Refer to Safety Glasses Warning in the Preface section.

2. Dry the crankshaft balancer with compressed air.

Inspection Procedure

cardiagn.com

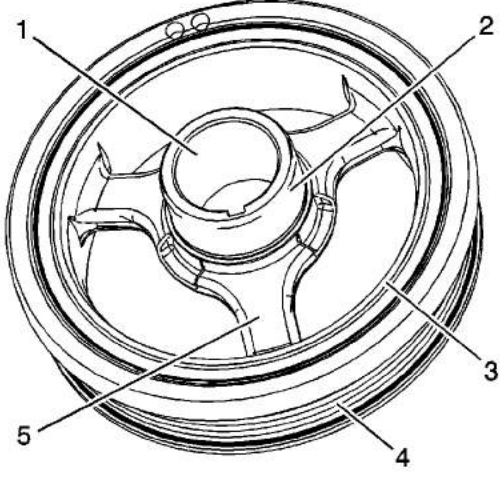

1. Inspect the crankshaft balancer for the following:
   - Worn or damaged hub-to-crankshaft surface (1)
   - Worn, grooved or damaged hub seal surface (2)

     A crankshaft balancer hub seal surface with excessive scoring, grooves, rust or other damage must be replaced.
   - Worn, chunking or deteriorated rubber between the hub and pulley (3)
   - Damaged drive belt ribs (4)
   - Damaged webs (5)
2. Repair or replace the crankshaft balancer as necessary.

cardiagn.com

Engine Flywheel Cleaning and Inspection

Cleaning Procedure

Note: In order to maintain the proper component balance, contact surface taper and heat transfer, manual transmission flywheels are NOT to be machined.

1. Clean the engine flywheel in solvent.

   Warning: Refer to Safety Glasses Warning in the Preface section.

2. Dry the engine flywheel with compressed air.

Inspection Procedure

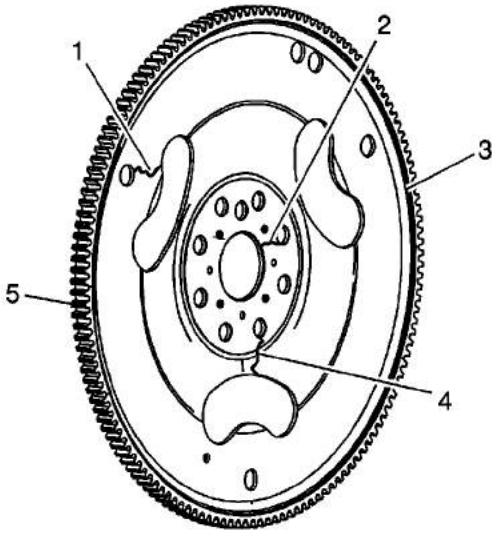

1. Inspect the engine flywheel for the following conditions:
   - Stress cracks around the engine flywheel-to-torque converter mounting bolt hole locations (1) and/or engine flywheel-to-crankshaft (2, 4)

     Note: Do not attempt to repair the welded areas that retain the ring gear to the engine flywheel plate. Install a new engine flywheel.

   - Cracks at welded areas that retain the ring gear onto the engine flywheel (3)
   - Damaged or missing ring gear teeth (5)
2. Replace the engine flywheel as necessary.

cardiagn.com

Piston and Connecting Rod Disassemble

Special Tools

EN-46745 Piston Pin Clip Remover/Installer

For equivalent regional tools, refer to Special Tools.

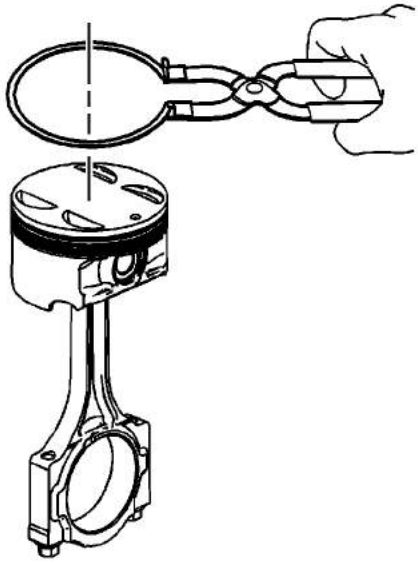

Caution: You must use a piston ring expander to remove and install the piston rings. Only expand the rings far enough to fit over the piston lands. If the rings are overexpanded, the top ring will shatter and the others will distort.

1. Remove the piston rings using a piston ring expander. Place each ring in a clean shop towel for storage.

cardiagn.com

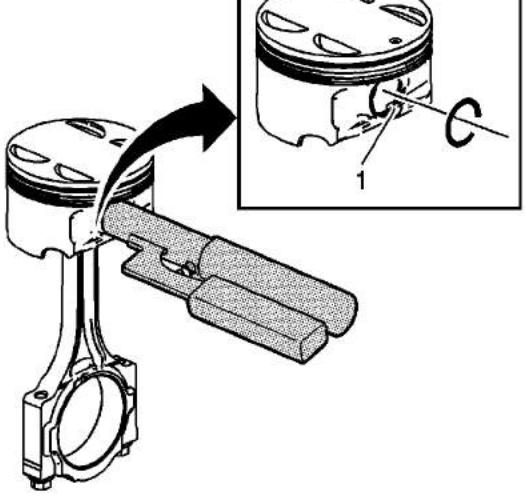

Note:

- The connecting rod is non-directional and may be assembled/reassembled to the piston in either direction.
- DO NOT reuse the piston pin retainers.

2. Using the *EN-46745* remover/installer , remove the piston pin retainers by using the removal access notch (1) in the side of the piston. Discard the piston pin retainers.

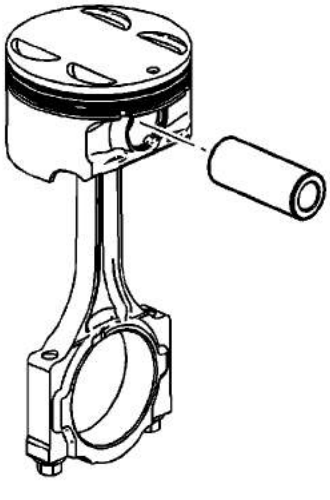

3. Slide the piston pin out of the piston. The piston will disconnect from the connecting rod.

cardiagn.com

Piston, Connecting Rod, and Bearing Cleaning and Inspection

Cleaning Procedure

Note: DO NOT wire brush any part of the piston.

1. Clean the piston skirts and the pins with a cleaning solvent.
2. Clean the piston ring grooves with a groove cleaner. Ensure that the oil ring holes and slots are clean.

   Warning: Refer to Safety Glasses Warning in the Preface section.

3. Dry the piston with compressed air.

Piston Inspection Procedure

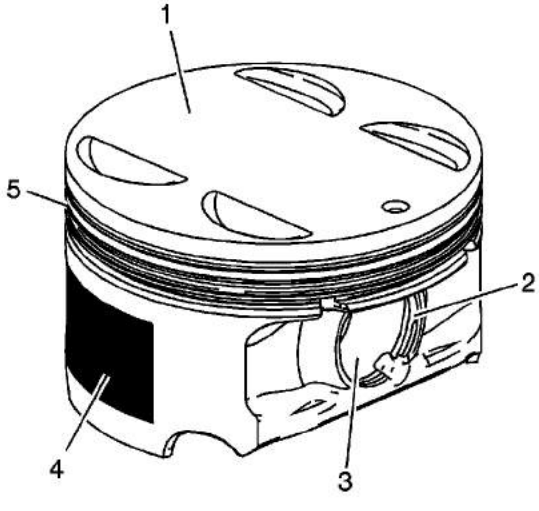

1. Inspect the pistons for the following conditions:
   - Cracked ring lands, skirts or pin bosses
   - Ring grooves for nicks, burrs that may cause binding (5)
   - Warped or worn ring lands (5)
   - Piston pin retainer grooves for burrs (2)
   - Eroded areas at the top of the piston (1)
   - Scuffed or damaged skirt coating (4)
   - Worn piston pin bores or worn piston pins (3)

cardiagn.com

Piston Measurement Procedure

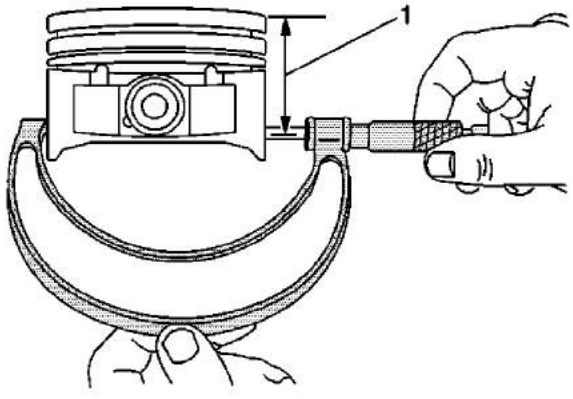

1. Measure piston width using the following procedure:
   1.1. Using an outside micrometer, measure the width of the piston at 30 mm (1.181 in) below the crown, top (1), at the thrust surfaces of the piston, perpendicular to the piston pin centerline.
   1.2. Compare the measurement of the piston to its original cylinder by subtracting the piston width from the cylinder diameter.
   1.3. Check your measurements with the Engine Mechanical Specifications.
   1.4. If the clearance obtained through measurement is greater than the provided specifications and the cylinder bores are within specification, replace the piston.

cardiagn.com

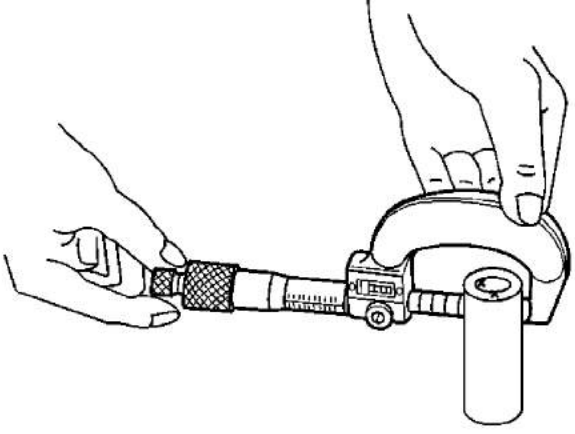

2. Measure the piston pin bore to piston pin clearances using the following procedure:
   2.1. Piston pin bores and pins must be free of varnish or scuffing.
   2.2. Use an outside micrometer to measure the piston pin in the piston contact areas.

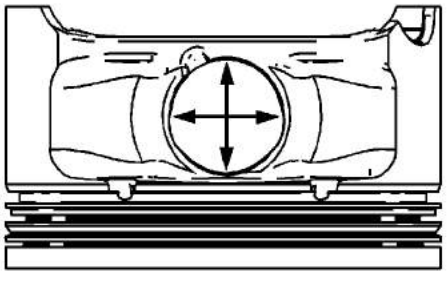

3. Using an inside micrometer, measure the piston pin bore. Compare your result with the piston pin diameter and piston pin to piston pin bore clearance listed in the Engine Mechanical Specifications.
4. If the clearance is excessive, determine which piece is out of specification and replace as necessary.
5. You must replace the piston if any of its dimensions are out of specification.
6. If the new piston does not meet clearance specifications, the cylinder block may need to be oversized to 0.25 mm (0.010 in). There is only one size of oversized pistons and rings available for service.

cardiagn.com

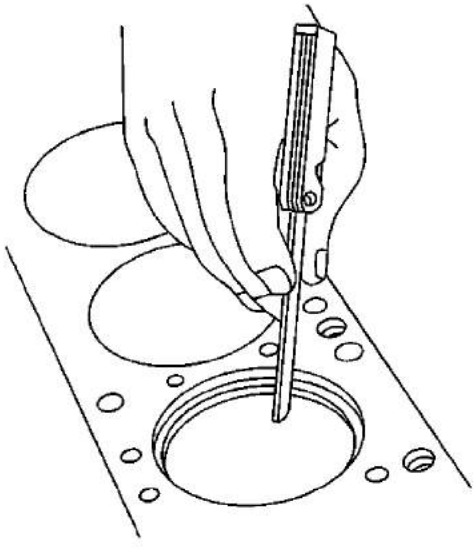

1. Measure the piston ring end gap using the following procedure:
   1.1. Place the piston ring in the area of the bore where the piston ring will travel approximately 25 mm (1 in) down from the deck surface. Ensure that the ring is square with the cylinder bore by positioning the ring with the piston head.
   1.2. Measure the end gap of the piston ring with feeler gages. Refer to Engine Mechanical Specifications.
   1.3. If the clearance exceeds the provided specifications, the piston rings must be replaced.
   1.4. Repeat the procedure for all the piston rings.

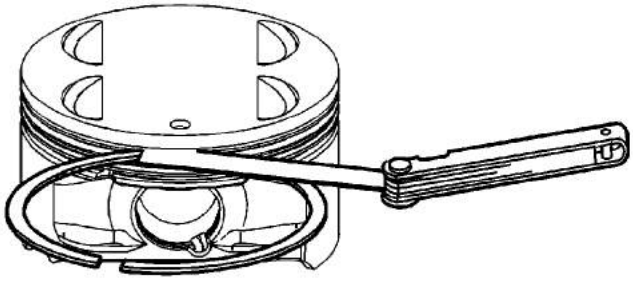

cardiagn.com

2. Measure the piston ring side clearance using the following procedure:
   2.1. Roll the piston ring entirely around the piston ring groove. If any binding is caused by the ring groove, dress the groove with a fine file. If any binding is caused by a distorted piston ring, replace the ring.
   2.2. With the piston ring on the piston, use feeler gages to check clearance at multiple locations.
   2.3. Compare the measurements with piston ring side clearance listed in the Engine Mechanical Specifications.
   2.4. If the clearance is greater than specifications, replace the piston rings.

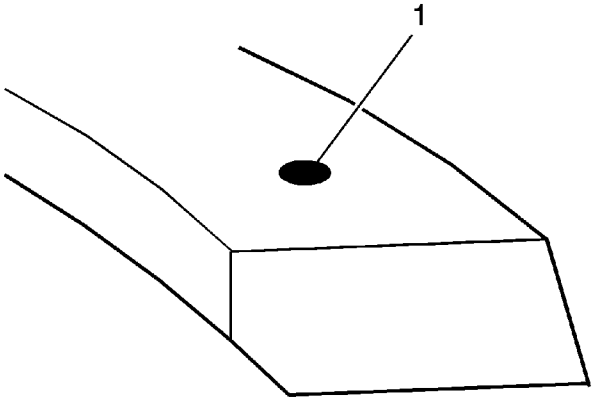

3. There is a locating dimple (1) on the compression rings near the end for identification. Install the compression rings with the dimple facing up.
4. If the new ring does not reduce the clearance to the proper specification, install a new piston.
5. If the new piston does not meet clearance specifications, the cylinder block may need to be oversized to 0.25 mm (0.010 in). There is only one size of oversized pistons and rings available for service.

Connecting Rod Cleaning Procedure

1. Clean the connecting rods in solvent.

   Warning: Refer to Safety Glasses Warning in the Preface section.

2. Dry the connecting rod using compressed air.
3. Remove the connecting rod cap and clean the threads.
4. Remove the connecting rod bearing and discard. Never reuse a connecting rod bearing used in a running engine.

cardiagn.com

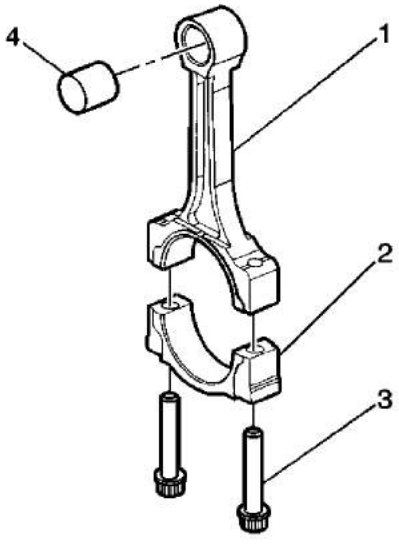

1. Inspect the piston pin bushing (4) for scoring or damage.
2. Inspect the connecting rod beam (1) for twisting or bending.
3. Inspect the rod cap (2) for any nicks or damage caused by possible interference.
4. Inspect for scratches or abrasion on the rod bearing seating surface.

   Note: DO NOT scrape the rod or rod cap.

5. If the connecting rod bores contain minor scratches or abrasions, clean the bores in a circular direction with a light emery paper.

Connecting Rod Measurement Procedure

Piston Pin End

cardiagn.com

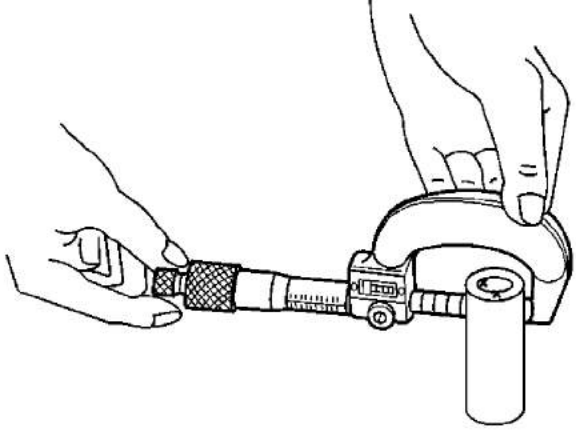

Note: Measurements of all components should be taken with the components at normal room temperature.

1. Using an outside micrometer, take 2 measurements of the piston pin in the area of the connecting rod contact.

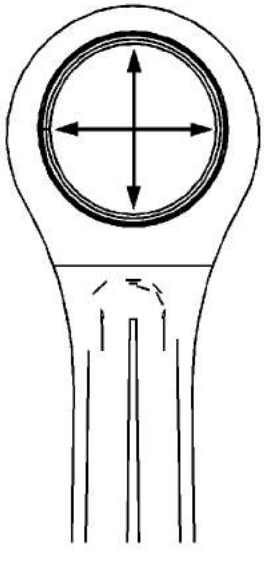

2. Using an inside micrometer, measure the connecting rod piston pin bore.
3. Subtract the piston pin diameter from the piston pin bore.
4. Compare the clearance measurements with the Engine Mechanical Specifications.
5. If the clearance is excessive, replace the piston pin. If a new pin does not resolve the clearance problem, replace the connecting rod.

Connecting Rod Crankshaft Bearing End

cardiagn.com

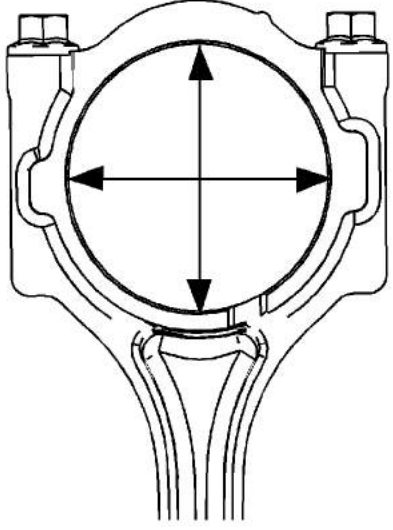

Note: Measurements of all components should be taken with the components at normal room temperature.

1. Using an inside micrometer, measure the connecting rod crankshaft bearing bore.
2. Compare the bore measurements with the Engine Mechanical Specifications.
3. Replace the connecting rod if the bore is out of specifications. DO NOT recondition the connecting rod.

cardiagn.com

Piston and Connecting Rod Assemble

Special Tools

- *EN 46121* Connecting Rod Guide Pin Set
- *EN-46745* Piston Pin Clip Remover/Installer

For equivalent regional tools, refer to Special Tools

Piston and Piston Pin Installation Procedure

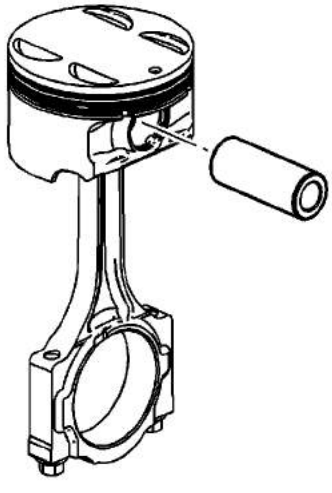

Note: The piston is directional and must be installed in the engine block in the proper direction. The dot on the top of the piston must face the front of the engine.

1. Lubricate the piston pin bores in the piston and the connecting rod with GM prelube lubricant GM P/N 1052367 (Canadian P/N 992869) or equivalent.
2. Assemble the piston and piston pin to the connecting rod. Properly orient the piston when reusing a marked connecting rod.
3. Align the piston pin bore with the connecting rod pin bore.
4. Slide the piston pin into the piston and the connecting rod.

cardiagn.com

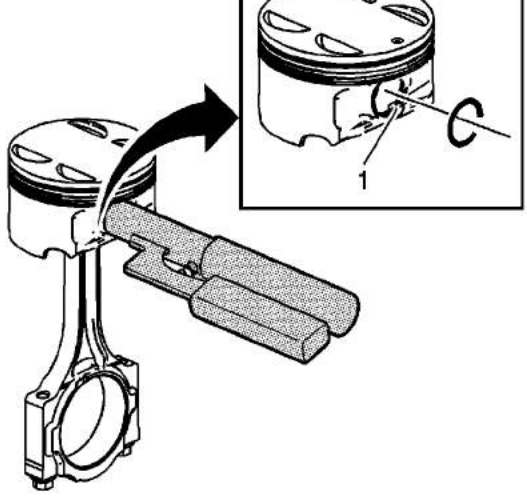

Note: New piston pin retainers must be used. Never reuse the piston pin retainers.

5. Install NEW piston pin retainers using the *EN-46745* remover/installer . Align the *EN-46745* remover/installer to the notch (1) in the piston.
6. Ensure that the piston pin retainers are fully seated in their grooves.
7. Repeat these procedures for the remaining pistons.

Piston Ring Installation Procedure

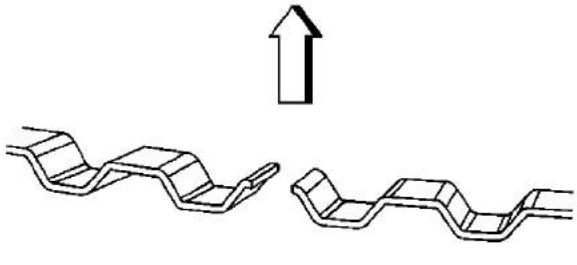

1. Properly orient the oil control ring expander as shown before installation. The ends of the

cardiagn.com

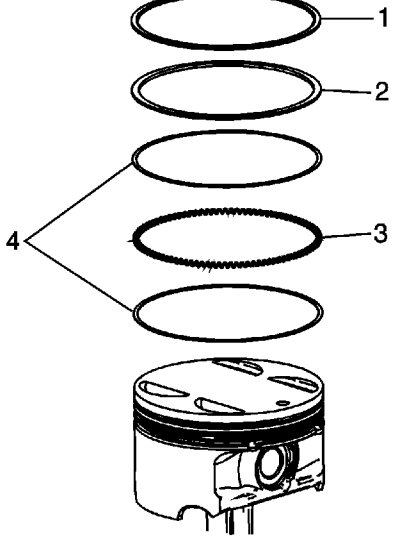

2. Using a piston ring expander, install the oil control ring assembly using the following procedure:
   2.1. Install the expander ring (3).
   2.2. Install the 2 oil scraper rings (4). Expand the rings only enough to clear the piston diameter. Overexpanding the piston rings will distort or crack the rings.

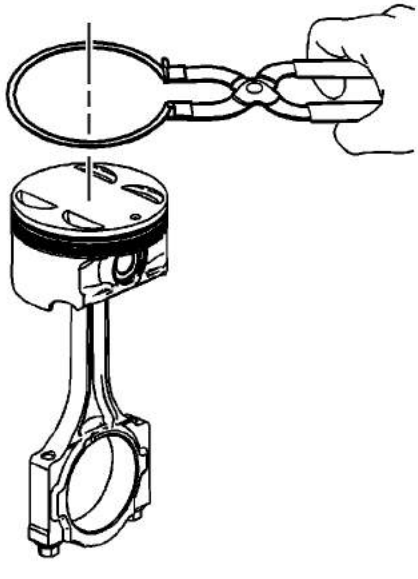

3. Install the second and top piston rings using the ring expander. Ensure that you do not overexpand the rings.

cardiagn.com

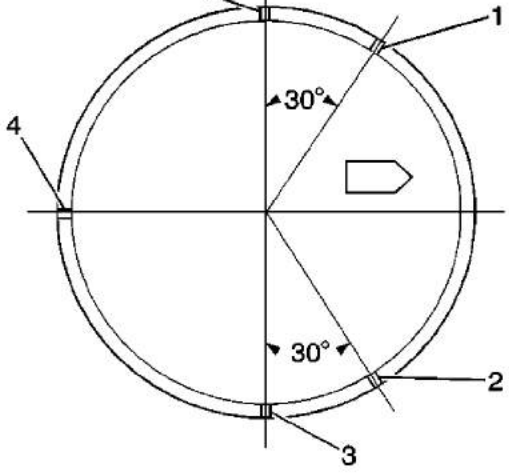

4. Once the rings are installed, set the ring gaps for the oil control, second and top ring as follows. Use the piston location arrow for reference.
   4.1. Lower oil control ring - position 1
   4.2. Upper oil control ring - position 2
   4.3. Top Ring - position 3
   4.4. Oil control ring expander - position 4
   4.5. Second ring - position 5

Connecting Rod Bearing Installation Procedure

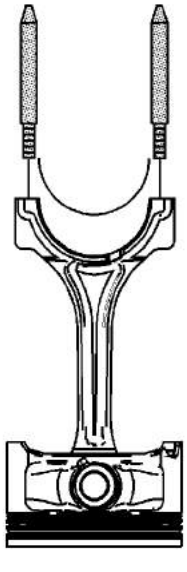

cardiagn.com

1. Clean the connecting rod and the connecting rod cap bearing bore with a lint-free cloth.
2. Clean all the oil from behind the connecting rod bearing halves.
3. Install new upper connecting rod bearings into position. Roll the bearing into position so that the lock tang engages the alignment slot. The bearing must fit flush in the connecting rod.
4. Install the *EN 46121* set into the connecting rod bolt holes.

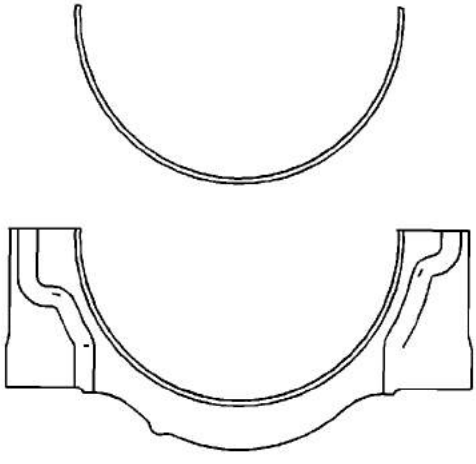

5. Install new lower connecting rod bearings into position in the connecting rod cap. Roll the bearing into position so that the lock tang engages the alignment slot. The bearings must fit flush with the connecting rod cap.

cardiagn.com

Cylinder Head Disassemble (LCS)

Special Tools

- *EN 46116* Valve Stem Seal Remover/Installer
- *EN 46117* Valve Stem Key Remover/Installer
- *EN 46119* Off-Vehicle Valve Spring Compressor Adapter
- *EN-46122* Camshaft Position Actuator Check-Ball Valve Remover/Installer
- *J 8062* Valve Spring Compressor - Head Off
- *J 2619-01* Slide Hammer
- *J-37281-A* Injector Remover

  For equivalent regional tools, refer to Special Tools.

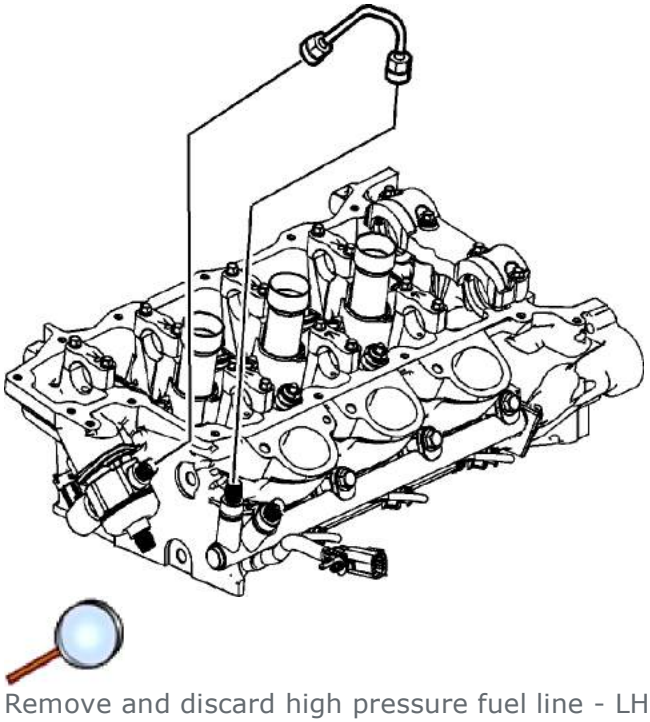

1. Remove and discard high pressure fuel line - LH Cylinder Head

cardiagn.com

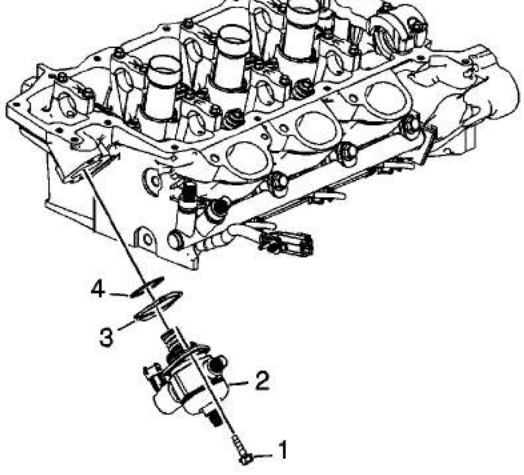

2. Remove and discard high pressure fuel pump bolts (1) - LH Cylinder Head
3. Remove the high pressure fuel pump (2) - LH Cylinder Head
4. Remove and discard the high pressure fuel pump gasket (3) - LH Cylinder Head
5. Remove and discard the high pressure fuel pump O-ring (4) - LH Cylinder Head

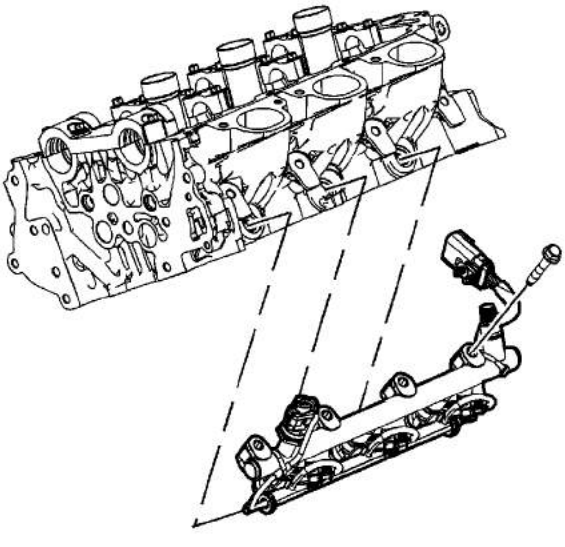

6. Remove the fuel rail bolts.
7. Remove the fuel rail and injectors.

cardiagn.com

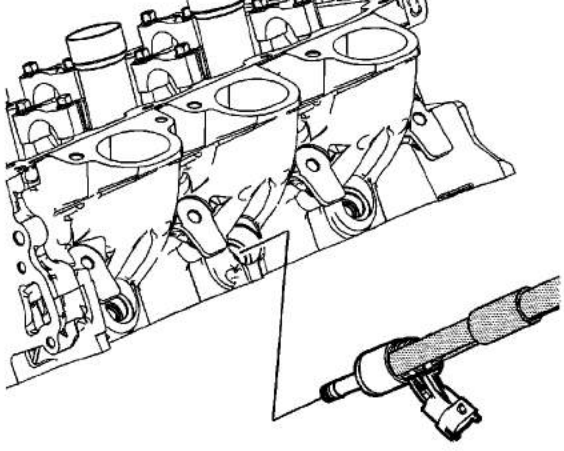

8. The injectors may stay in the cylinder head. Remove the fuel injector hold-down clamp before removing the injector.
9. Use the *J-37281-A* remover and the *J 2619-01* hammer to remove the injector.

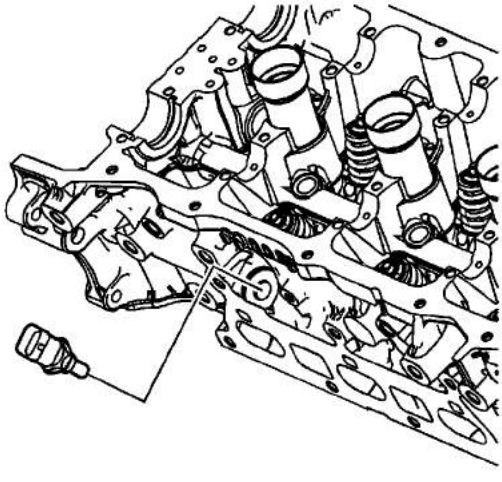

10. Remove the engine coolant temperature (ECT) sensor - LH Cylinder Head

cardiagn.com

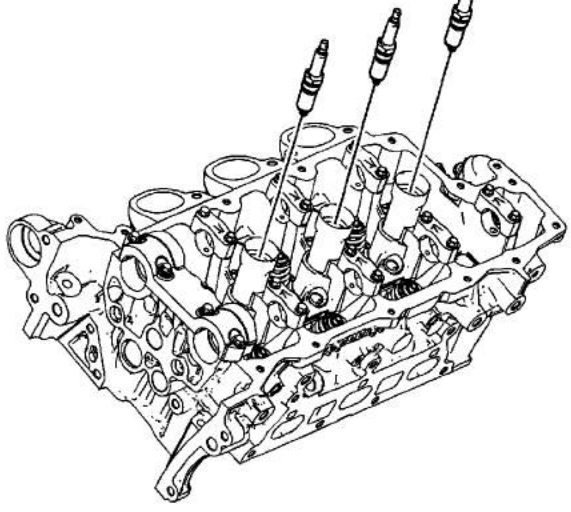

11. Remove the spark plugs.

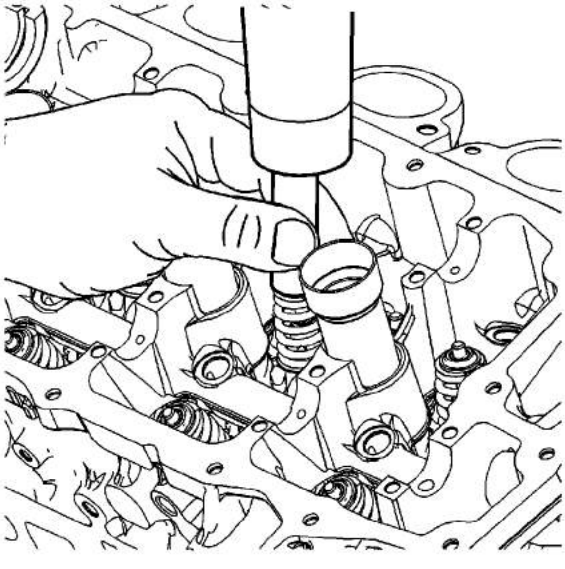

Note: Ensure valve heads will not contact anything during the following step in order to avoid bending or damage.

12. Using an appropriately sized deep socket and a plastic hammer, lightly tap on the valve spring retainer to loosen the valve keepers.

cardiagn.com

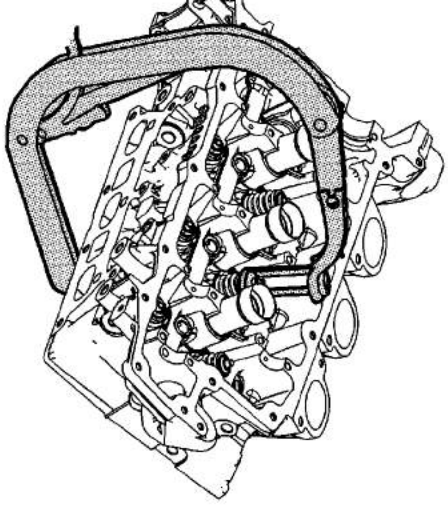

Warning: Compressed valve springs have high tension against the valve spring compressor. Valve springs that are not properly compressed by or released from the valve spring compressor can be ejected from the valve spring compressor with intense force. Use care when compressing or releasing the valve spring with the valve spring compressor and when removing or installing the valve stem keys. Failing to use care may cause personal injury.

Caution: Do not compress the valve springs less than 24.0 mm (0.943 in). Contact between the valve spring retainer and the valve stem oil seal can cause potential valve stem oil seal damage.

13. Compress the valve spring using the *J 8062* compressor and the *EN 46119* adapter .

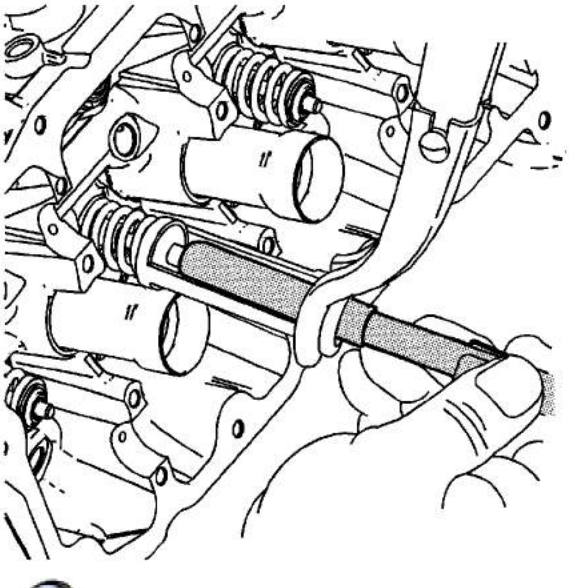

14. Use the magnet of the *EN 46117* remover/installer in order to remove the valve keepers.

cardiagn.com

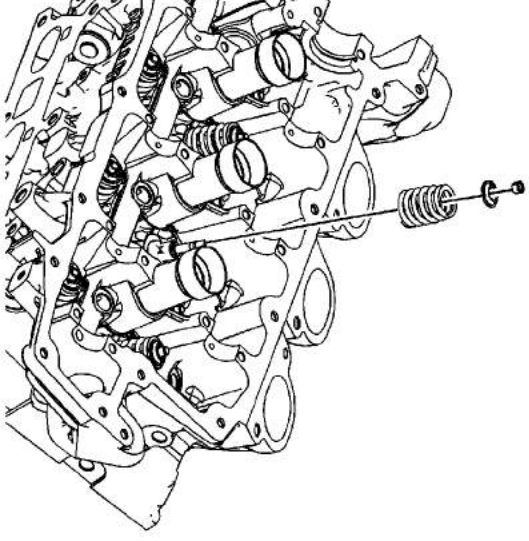

16. Remove the valve spring retainer.
17. Remove the valve spring.

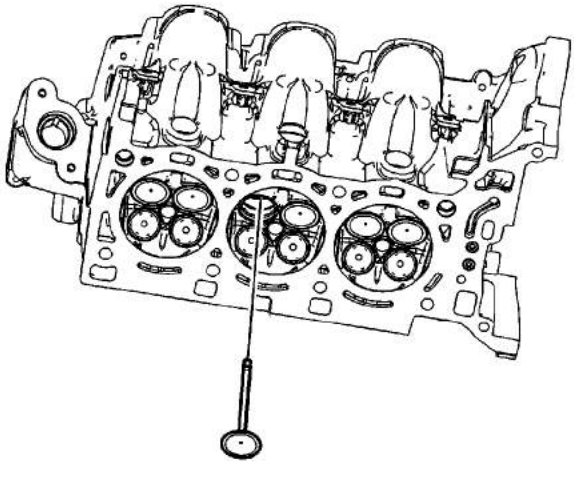

18. Remove the valve.

cardiagn.com

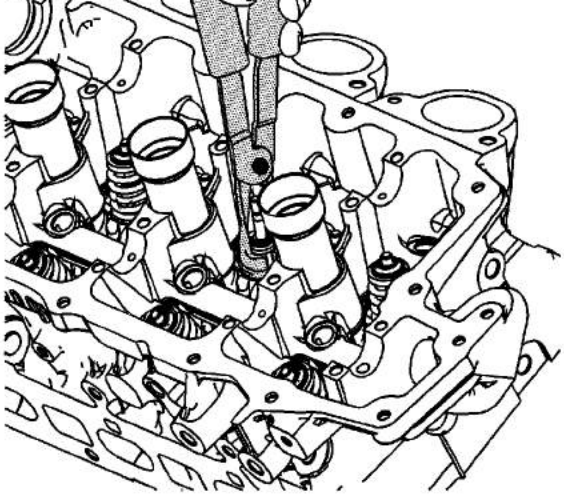

Note: NEVER reuse a valve stem oil seal.

19. Remove the valve stem oil seal using the *EN 46116* remover/installer and discard.
20. Repeat these procedures for the remaining valves.

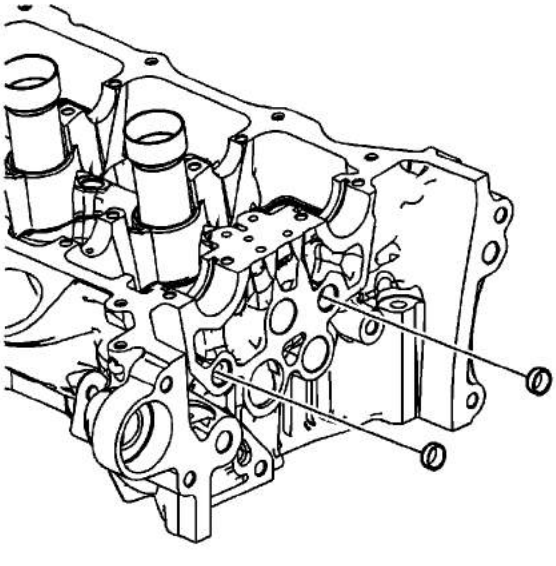

21. Remove the cylinder head oil gallery expansion plugs.

cardiagn.com

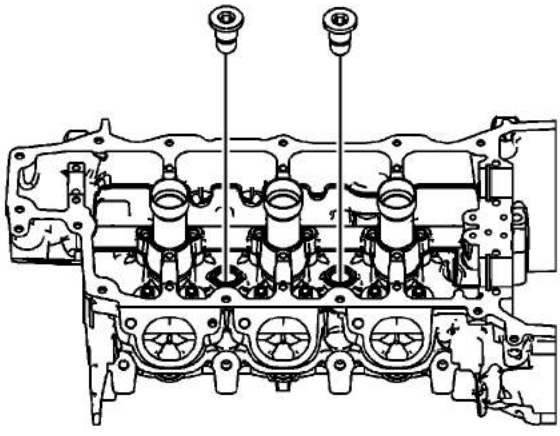

22. Remove the cylinder head coolant threaded plugs.

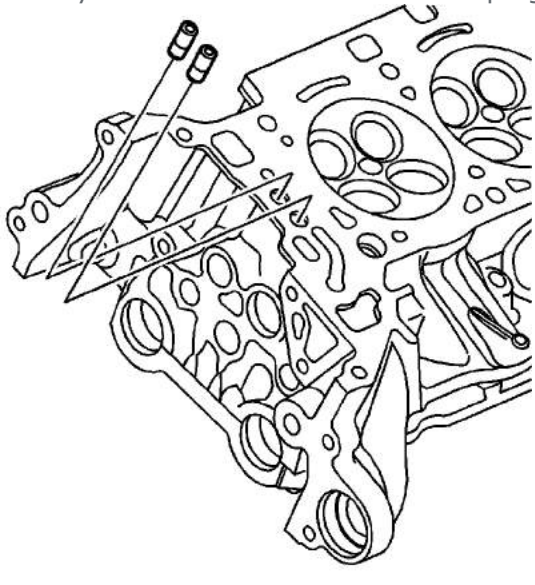

23. Inspect the camshaft position actuator oil feed check valves. Damaged, restricted or clogged check valves must be replaced.

cardiagn.com

24. Place cylinder head on firm surface with check valves (1) facing up. Protect all cylinder head components and machined surfaces.
25. Using drill bit EN-46122-3, drill out top portion of check valve to expose internal check ball.

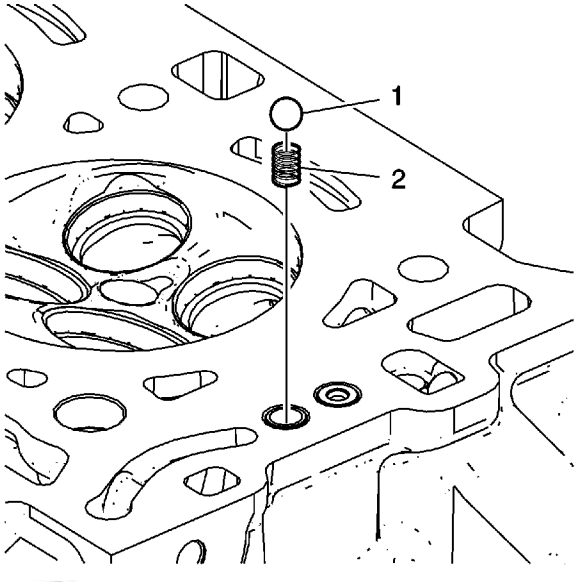

26. Remove check ball (1) and check ball spring (2) from inside of check valve.

cardiagn.com

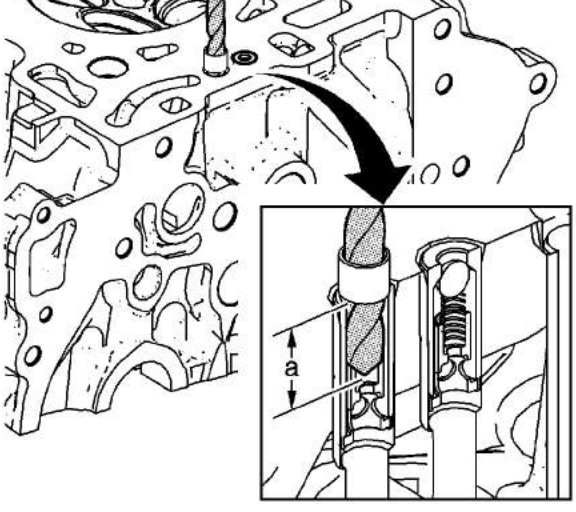

27. Continue drilling remainder of check valve sleeve to a depth of approximately 19 mm (0.75 in) (a) by placing tape on drill bit as a depth gauge. It is not necessary or desirable to drill completely through the bottom of the check valve.

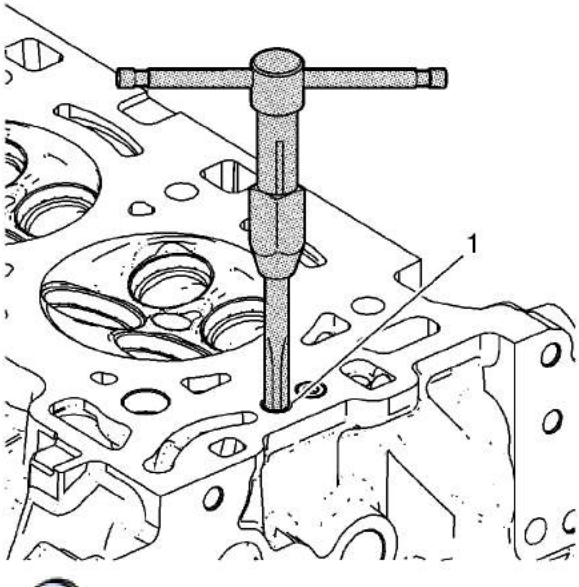

28. Lubricate tap EN-46122-4 with lubricant included in *EN-46122* remover/installer . Tap drilled out portion of check valve (1) remaining in cylinder head. Tap to full depth possible until tap bottoms out in head.

cardiagn.com

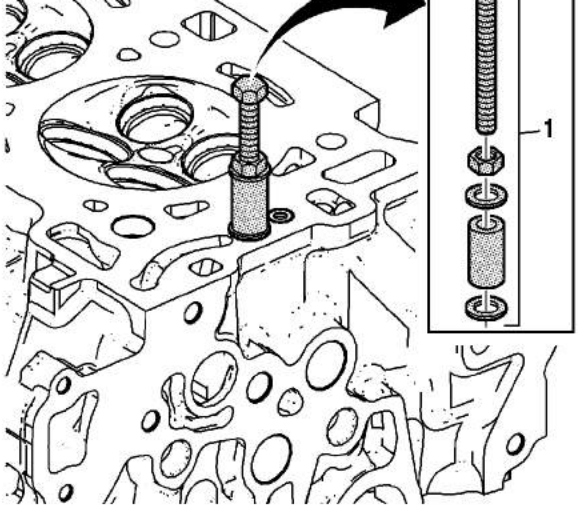

29. Assemble bolt, nut, washers, and collar EN-46122-2 (1) as shown. Position collar with slightly-larger inside diameter DOWN toward the cylinder head.
30. Screw bolt by hand fully down into threaded check valve sleeve, then lightly tighten nut against washer.

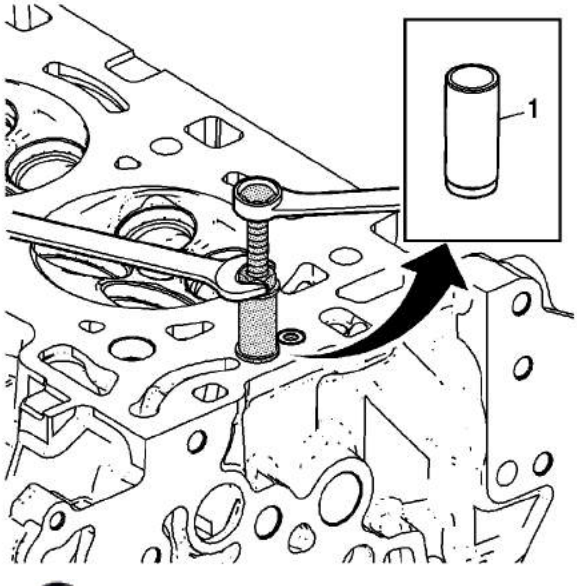

31. Hold bolt with one wrench, and use another to tighten the nut until the check valve sleeve (1) is removed from the cylinder head.
32. Clean check valve bore and related passages thoroughly to remove any drilling chips or other debris.

cardiagn.com

Cylinder Head Disassemble (LY7)

Special Tools

- *EN-46116* Valve Stem Seal Remover/Installer
- *EN-46117* Valve Stem Key Remover/Installer
- *EN-46119* Off-Vehicle Valve Spring Compressor Adapter
- *EN-46122* Camshaft Position Actuator Check-Ball Valve Remover/Installer
- *J-8062* Valve Spring Compressor - Head Off

  For equivalent regional tools, refer to Special Tools.

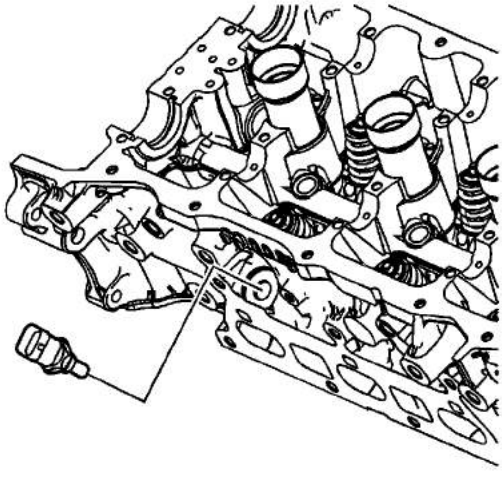

1. Remove the engine coolant temperature (ECT) sensor.

cardiagn.com

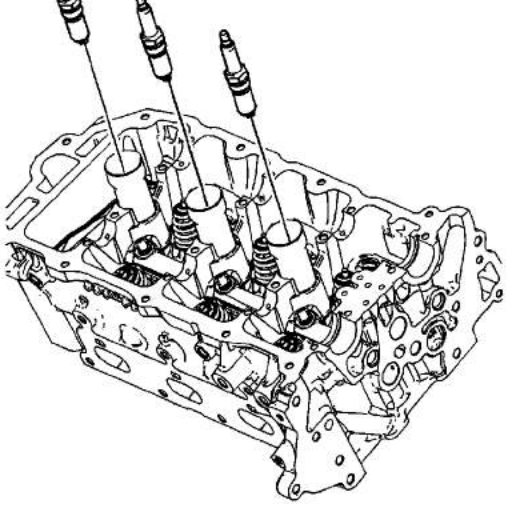

2. Remove the spark plugs.

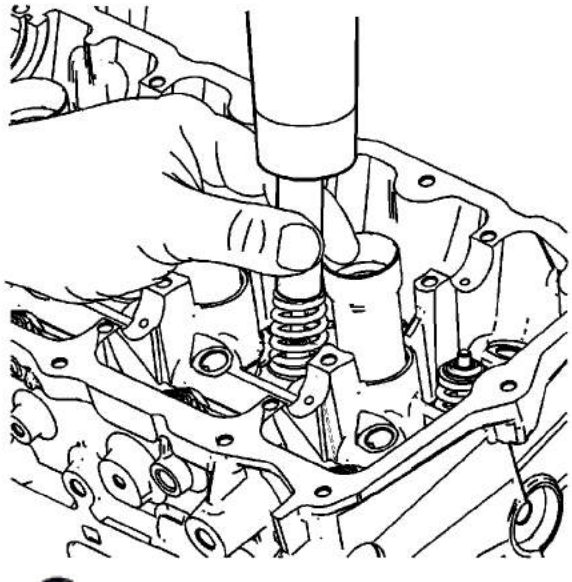

Note: Ensure valve heads will not contact anything during the following step in order to avoid bending or damage.

3. Using an appropriately sized deep socket and a plastic hammer, lightly tap on the valve spring retainer to loosen the valve keepers.

cardiagn.com

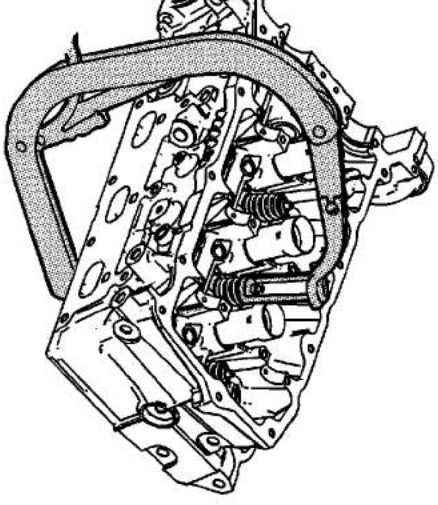

Warning: Compressed valve springs have high tension against the valve spring compressor. Valve springs that are not properly compressed by or released from the valve spring compressor can be ejected from the valve spring compressor with intense force. Use care when compressing or releasing the valve spring with the valve spring compressor and when removing or installing the valve stem keys. Failing to use care may cause personal injury.

Caution: Do not compress the valve springs less than 24.0 mm (0.943 in). Contact between the valve spring retainer and the valve stem oil seal can cause potential valve stem oil seal damage.

4. Compress the valve spring using the *J-8062* compressor - head off and the *EN-46119* adapter .

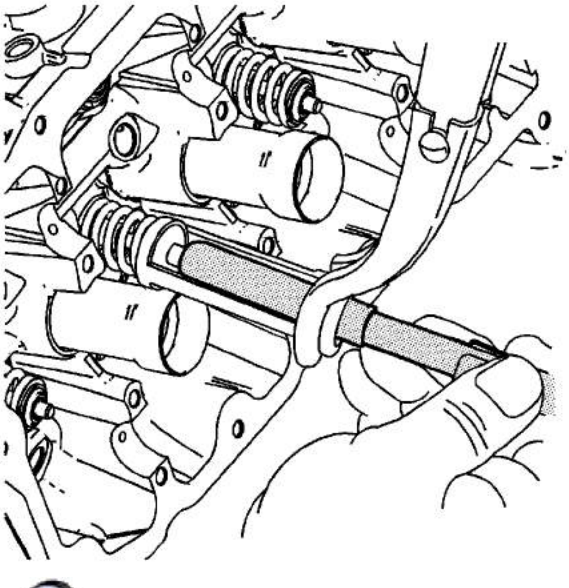

cardiagn.com

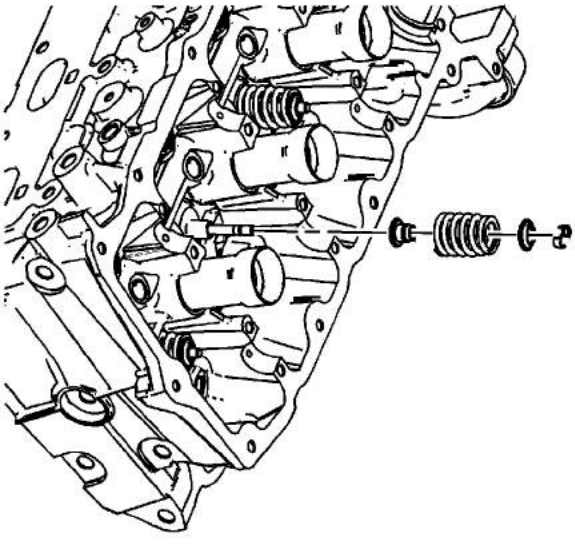

7. Remove the valve spring retainer.
8. Remove the valve spring.

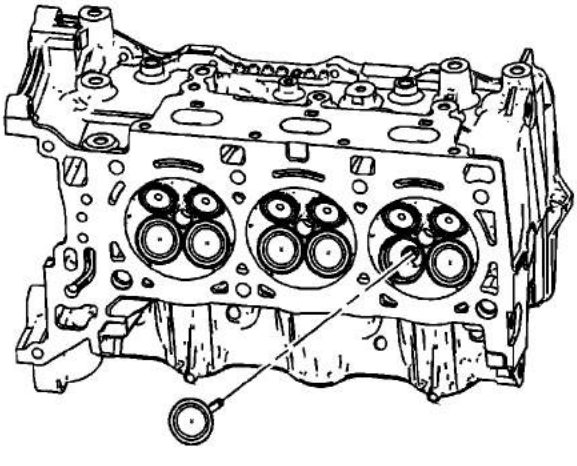

9. Remove the valve.

cardiagn.com

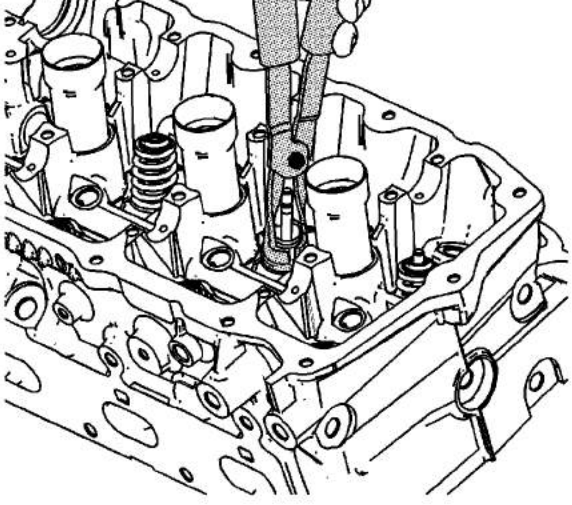

Note: NEVER reuse a valve stem oil seal.

10. Remove the valve stem oil seal using the *EN-46116* seal remover/installer and discard.
11. Repeat these procedures for the remaining valves.

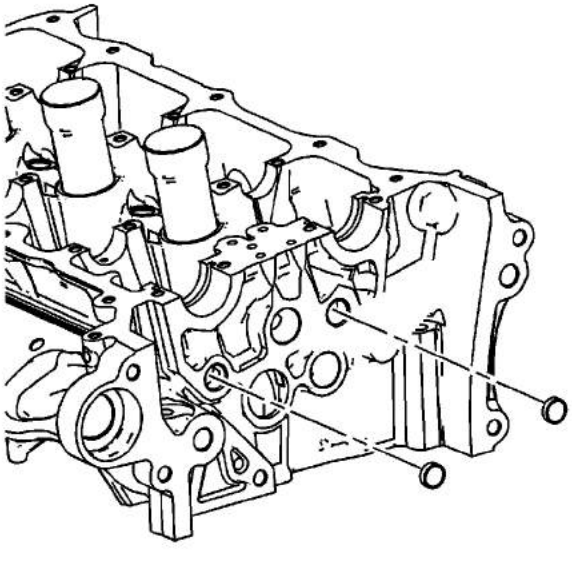

12. Remove the cylinder head oil gallery expansion plugs.

cardiagn.com

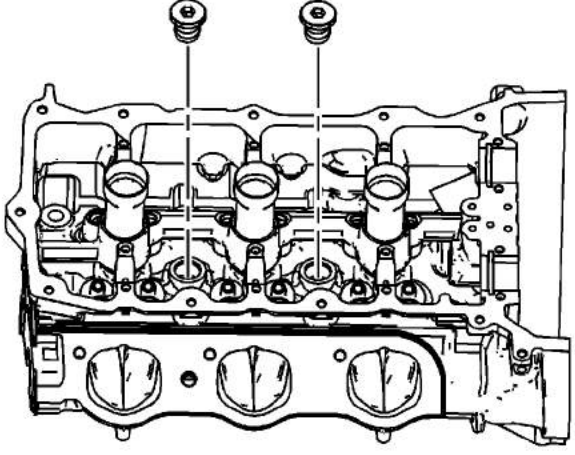

13. Remove the cylinder head coolant threaded plugs.

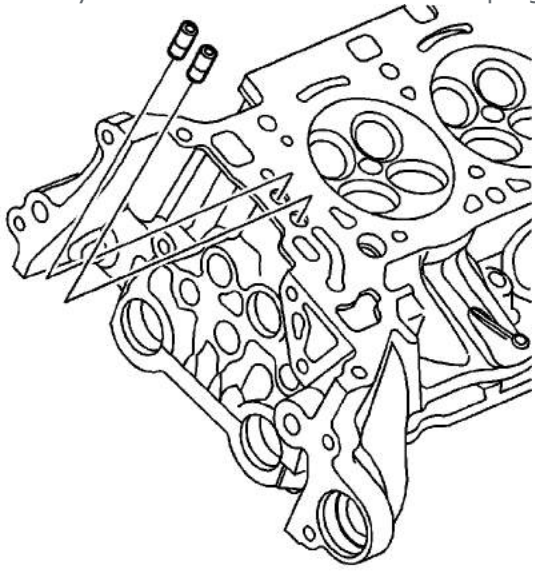

14. Inspect the camshaft position actuator oil feed check valves. Damaged, restricted or clogged check valves must be replaced.

cardiagn.com

15. Place cylinder head on firm surface with check valves (1) facing up. Protect all cylinder head components and machined surfaces.
16. Using drill bit EN-46122-3, drill out top portion of check valve to expose internal check ball.

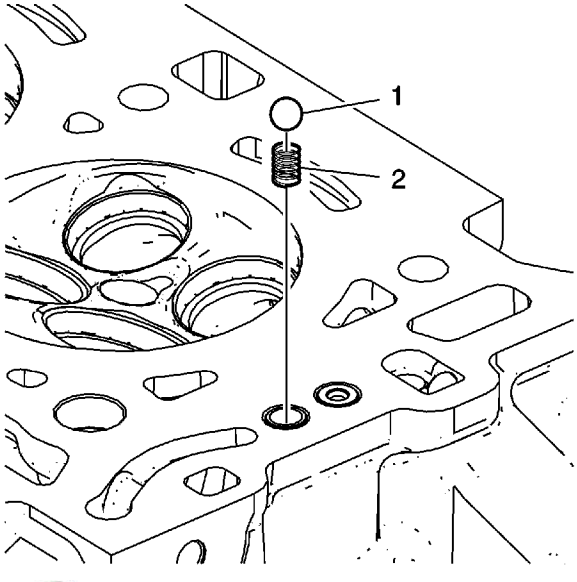

17. Remove check ball (1) and check ball spring (2) from inside of check valve.

cardiagn.com

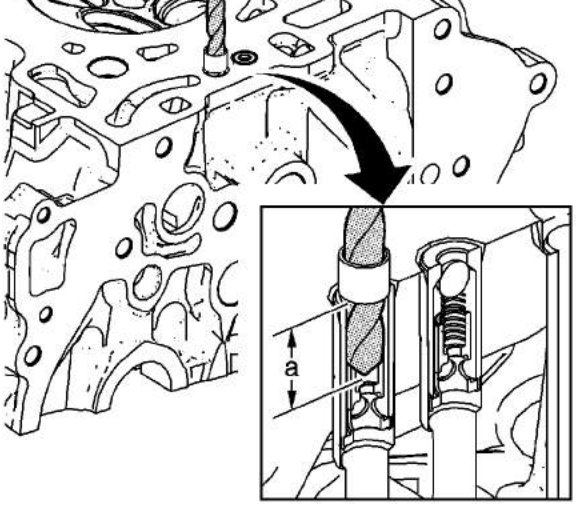

18. Continue drilling remainder of check valve sleeve to a depth of approximately 19 mm (0.75 in) (a) by placing tape on drill bit as a depth gauge. It is not necessary or desirable to drill completely through the bottom of the check valve.

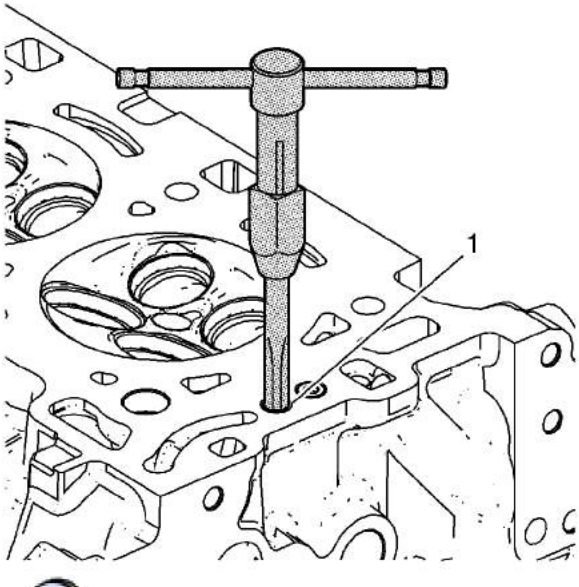

19. Lubricate tap EN-46122-4 with lubricant included in *EN-46122* remover/installer . Tap drilled out portion of check valve (1) remaining in cylinder head. Tap to full depth possible until tap bottoms out in head.

cardiagn.com

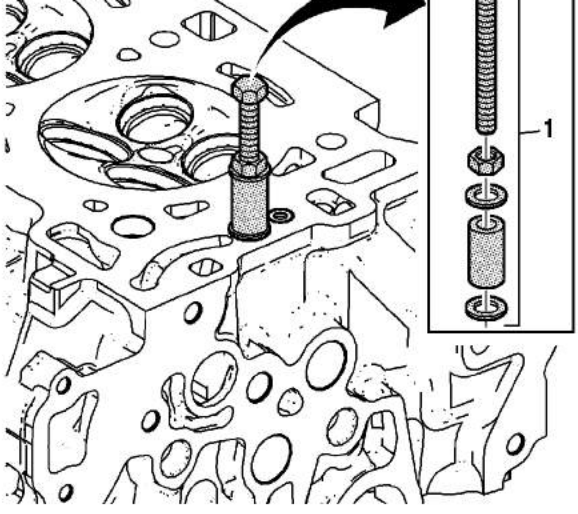

20. Assemble bolt, nut, washers, and collar EN-46122-2 (1) as shown. Position collar with slightly-larger inside diameter DOWN toward the cylinder head.
21. Screw bolt by hand fully down into threaded check valve sleeve, then lightly tighten nut against washer.

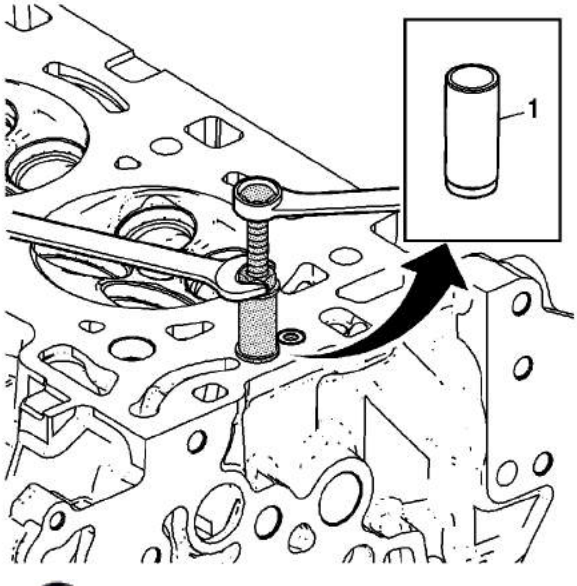

22. Hold bolt with one wrench, and use another to tighten the nut until the check valve sleeve (1) is removed from the cylinder head.
23. Clean check valve bore and related passages thoroughly to remove any drilling chips or other debris.

cardiagn.com

Cylinder Head Cleaning and Inspection

Special Tools

- *EN-47909* Injector Bore and Sleeve Cleaning Kit
- *J 8001* Dial Indicator Set
- *J 8358* Carbon Removal Brush
- *J 28410* Gasket Remover
- *J 42096* Valve Guide Reamer

  For equivalent regional tools, refer to Special Tools.

Cleaning Procedure

1. Remove any old thread sealant, gasket material or sealant using *J 28410* remover .
2. Clean all cylinder head surfaces with non-corrosive solvent.

   Warning: Refer to Safety Glasses Warning in the Preface section.

3. Blow out all the oil galleries using compressed air.
4. Remove any carbon deposits from the combustion chambers using the *J 8358* brush .
5. Clean any debris or build-up from the lifter pockets.

Visual Inspection

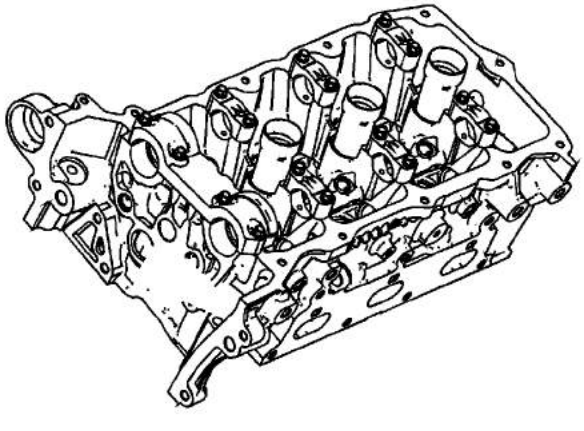

1. Inspect the cylinder head camshaft bearing surfaces for the following conditions:

cardiagn.com

- Discoloration from overheating
- Deformation from excessive wear
- If the camshaft bearing journals appear to be scored or damaged, you must replace the cylinder head. DO NOT machine the camshaft bearing journals.

2. If any of the above conditions exist on the camshaft bearing surfaces, replace the cylinder head.
3. Inspect the cylinder head for the following:
   - Cracks, damage or pitting in the combustion chambers
   - Debris in the oil galleries -- Continue to clean the galleries until all debris is removed.
   - Coolant leaks or damage to the deck face sealing surface -- If coolant leaks are present, measure the surface warpage as described under Cylinder Head Measurement - Deck Flatness Inspection.
   - Burrs or any defects that would degrade the sealing of the NEW secondary camshaft drive chain tensioner gasket
   - Damage to any gasket surfaces
   - Damage to any threaded bolt holes
   - Burnt or eroded areas in the combustion chamber
   - Cracks in the exhaust ports and combustion chambers
   - External cracks in the water passages
   - Restrictions in the intake or exhaust passages
   - Restrictions in the cooling system passages
   - Rusted, damaged or leaking core plugs
4. If the cylinder head is cracked or damaged, it must be replaced. No welding or patching of the cylinder head is recommended.

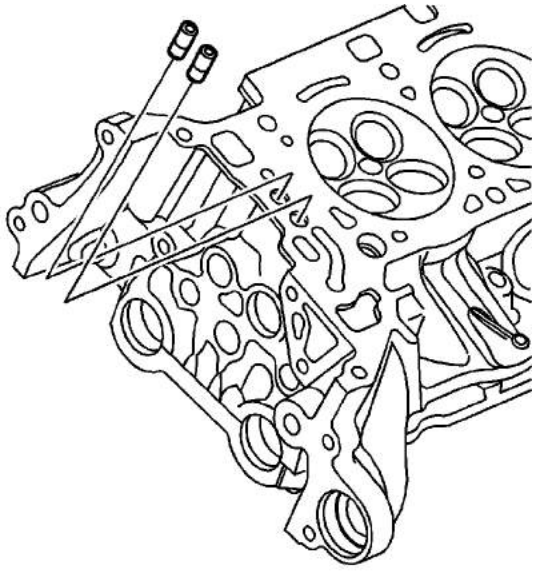

5. Inspect the camshaft position actuator oil feed check valves. Damaged, restricted or clogged check valves must be replaced. Refer to Cylinder Head Disassemble.

cardiagn.com

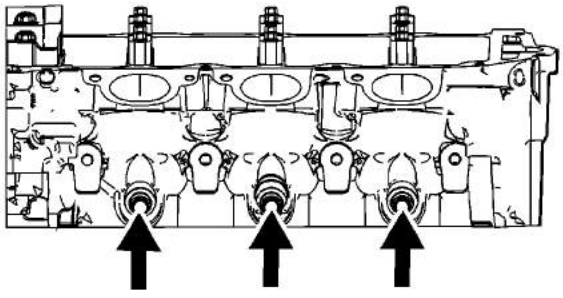

6. Inspect the fuel rail injector bores and clean with *EN-47909* kit , if required.

Cylinder Head Measurement

Camshaft Journal Clearance

1. Install the camshaft bearing cap in the cylinder head without the camshaft.

   Caution: Refer to Fastener Caution in the Preface section.

2. Install the camshaft cap bolts and tighten to **10 N·m (89 lb in)**.
3. Measure the camshaft bearings using an inside micrometer.
4. Subtract the camshaft journal diameter from the camshaft bearing diameter. This will provide the running clearance. If the running clearance exceeds specifications and the camshaft journals are within specification, replace the cylinder head.

Camshaft Journal Alignment

1. Ensure the camshafts are serviceable.
2. Inspect the cylinder head camshaft bearing surfaces for any imperfections or scratches that could inhibit proper camshaft clearances. Repair minor imperfections or scratches.
3. Install the camshafts in the cylinder head.
4. Install the camshaft bearing caps.
5. Install the camshaft cap bolts and tighten to **10 N·m (89 lb in)**.
6. Ensure the camshafts spin freely in the cylinder head. If the camshaft does not run freely, replace the cylinder head.

Deck Flatness Inspection

cardiagn.com

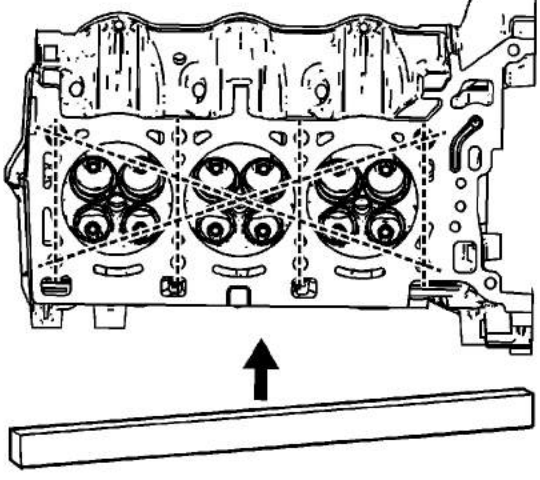

1. Ensure the cylinder head decks are clean and free of gasket material.
2. Inspect the surface for any imperfections or scratches that could inhibit proper cylinder head gasket sealing.
3. Place a straight-edge diagonally across the cylinder head deck face surface.
4. Measure the clearance between the straight-edge and the cylinder head deck face using a feeler gage at 4 points along the straight-edge.
5. If the warpage is less than 0.05 mm (0.002 in), the cylinder head deck surface does not require resurfacing.
6. If the warpage is between 0.05-0.20 mm (0.002-0.008 in) or any imperfections or scratches that could inhibit proper cylinder head gasket sealing are present, the cylinder head deck surface requires resurfacing.
7. If resurfacing is required the maximum amount that can be removed is 0.25 mm (0.010 in).
8. If the cylinder head deck surface requires more than 0.25 mm (0.010 in) material removal the head must be replaced.

Valve Guide Measurement

cardiagn.com

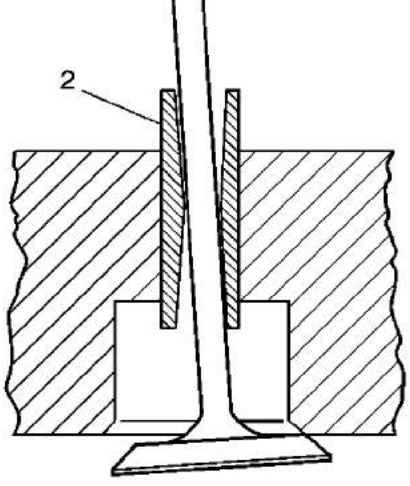

1. Measure the valve stem (1)-to-guide (2) clearance. Excessive valve stem-to-guide clearance may cause an excessive oil consumption and may also cause a valve to break. Insufficient clearance will result in noisy and sticky functioning of the valve and will disturb the engine assembly smoothness.
2. Clamp the *J 8001* set to the cylinder head at the camshaft cover rail.
3. Locate the dial indicator so that the movement of the valve stem from side to side, crossways to the cylinder head, will cause a direct movement of the indicator stem. The dial indicator stem must contact the side of the valve stem just above the valve guide.
4. Drop the valve head about 0.064 mm (0.0025 in) off the valve seat.
5. Use light pressure when moving the valve stem from side to side in order to obtain a clearance reading. Refer to Engine Mechanical Specifications for proper clearance.
   - If the clearance for the valve is greater than specifications and a new standard diameter valve stem will not bring the clearance within specifications, the valve guide may be oversized by 0.075 mm (0.003 in) using the *J 42096* reamer . There is 1 size of oversized valve stem available for service.
   - Valve guide wear at the bottom 10 mm (0.390 in) of the valve guide is not significant to normal operation.
   - If oversizing the guide does not bring the clearance within specifications, replace the cylinder head.

cardiagn.com

Valve Spring Inspection and Measurement

Special Tools

J22738-B Valve Spring Tester

For equivalent regional tools, refer to Special Tools.

Inspection Procedure

1. Clean the valve springs in solvent.

   Warning: Refer to Safety Glasses Warning in the Preface section.

2. Dry the valve springs with compressed air.
3. Inspect the valve springs for broken coils or coil ends.

Measurement Procedure

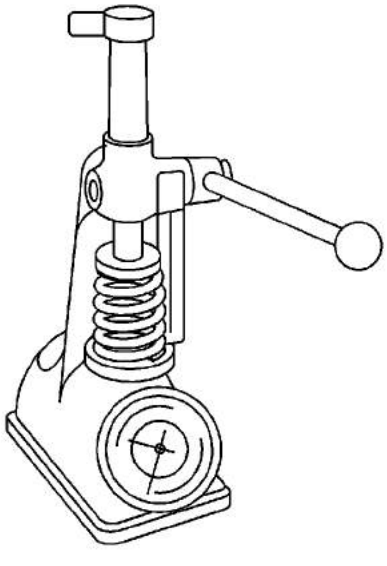

1. Measure the valve spring tension using the *J22738-B* tester . Refer to Engine Mechanical Specifications.
2. If low valve spring load is found, replace the valve springs. DO NOT use shims to increase spring load. The use of shims can cause the valve spring to bottom out before the camshaft lobe is at peak lift.

cardiagn.com

Valve and Seat Grinding

Valve Cleaning Procedure

1. Use soft bristle wire brush to clean any carbon build-up from the valve head. DO NOT use a wire brush on any part of the valve stem. The valve stem is chrome plated to provide enhanced wear characteristics. Wire brushing the stem could remove the chrome plating.
2. Thoroughly clean the valve with solvent and wipe dry.

Valve Visual Inspection Procedure

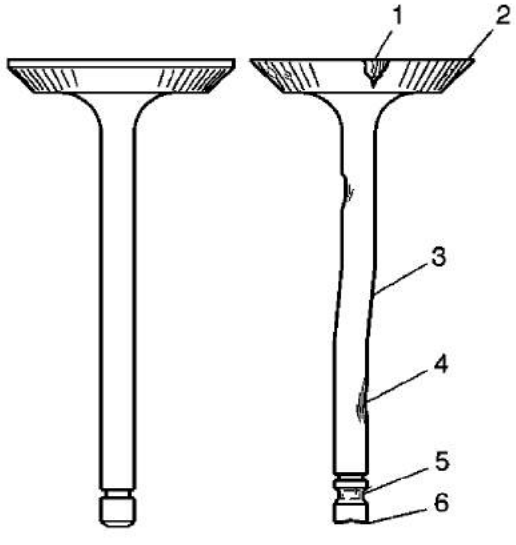

1. Inspect the valve for damage from the head to tip for the following conditions:
   - Pitting in the valve seat area (1)
   - Lack of valve margin (2)
   - Bending in the valve stem (3)
   - Pitting or excessive wear in the stem (4)
   - Worn valve key grooves (5)
   - Worn valve tip (6)
2. Replace the valve if any of these conditions exist.

Valve Measurement and Reconditioning Overview

Note:

- Proper valve service is critical to engine performance. Therefore, all detailed measurement procedures must be followed to identify components that are out of specification.

cardiagn.com

Valve Seat Width Measurement Procedure

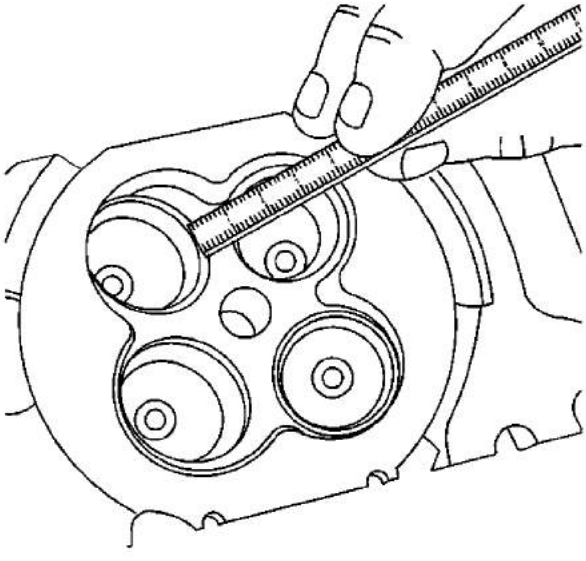

1. Measure the valve seat width in the cylinder head using a proper scale.

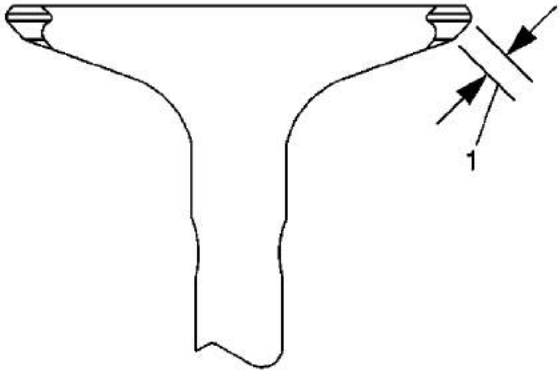

2. Measure the seat width on the valve face (1) using a proper scale.

   Note: The seat contact area must be at least 0.5 mm (0.020 in) from the outer diameter (margin) of the valve. If the contact area is too close to the margins, the seat must be reconditioned to move the contact area away from the margin.

cardiagn.com

4. If the seat widths are acceptable, check the valve seat roundness using the Valve Seat Roundness Measurement Procedure.
5. If the seat width is not acceptable, you must grind the valve seat using the Valve and Seat Reconditioning Procedure to bring the width back into specification. Proper valve seat width is critical to providing the correct amount of valve heat dissipation.

Valve Seat Roundness Measurement Procedure

1. Measure the valve seat roundness using a dial indicator attached to a tapered pilot installed in the guide. The pilot should have a slight bind when installed in the guide.

   Caution: The correct size pilot must be used. Do not use adjustable diameter pilots. Adjustable pilots may damage the valve guides.

2. Compare your measurements with the specifications listed in Engine Mechanical Specifications.
3. If the valve seat exceeds the roundness specification, you must grind the valve and valve seat using the Valve and Seat Reconditioning Procedure.
4. If new valves are being used, the valve seat roundness must be within 0.05 mm (0.002 in).

Valve Margin Measurement Procedure

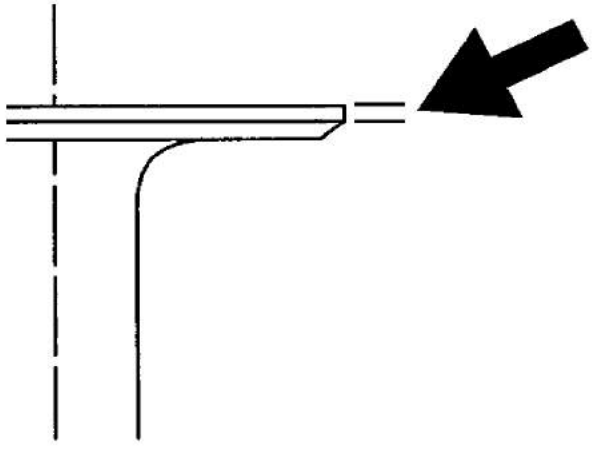

1. Measure the valve margin using an appropriate scale.
2. Reference the specifications in this section for minimum valve margin and compare them to your measurements.
3. If the valve margins are beyond specification, replace the valves.
4. If the valve margins are within specification and do not require refacing, test the valve for seat concentricity using the Valve-to-Seat Concentricity Measurement Procedure.

cardiagn.com

Note:

- Checking the valve-to-seat concentricity determines whether the valve and seat are sealing properly.
- You must measure the valve face and the valve seat to ensure proper valve sealing.

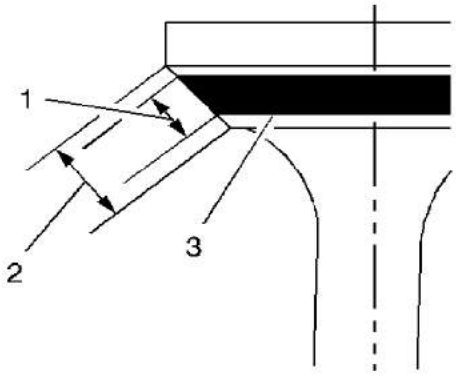

1. Coat the valve face lightly with blue dye (3).
2. Install the valve in the cylinder head.
3. Turn the valve against the seat with enough pressure to wear off the dye.
4. Remove the valve from the cylinder head.
5. Inspect the valve face.
   - If the valve face is concentric, providing a proper seal, with the valve stem, a continuous mark will be made around the entire face (1).

     Note: The wear mark MUST be at least 0.5 mm (0.020 in) from the outer diameter, the margin, of the valve. If the wear mark is too close to the margin, the seat must be reconditioned to move the contact area away from the margin.

   - If the face is not concentric with the stem, the mark will NOT be continuous around the valve face. The valve should be refaced or replaced and the seat must be reconditioned using the Valve and Seat Reconditioning Procedure.

Valve and Seat Reconditioning Procedure

cardiagn.com

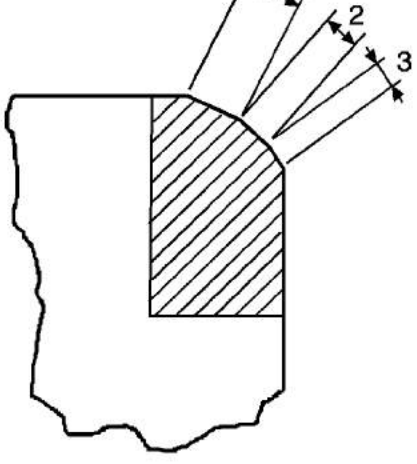

Note:

- If the valve seat width, roundness or concentricity is beyond specifications, you must grind the seats in order to ensure proper heat dissipation and prevent the build up of carbon on the seats.
- It is necessary to reface the valve if seat reconditioning is required unless a new valve is used.

1. Grind the valve seats (2) to the proper angle specification listed in Engine Mechanical Specifications.
2. Using the proper angle specification listed in Engine Mechanical Specifications , grind, relieve, the valve seats (1) to correctly position the valve seating surface (2) to the valve.
3. Using the proper angle specification listed in Engine Mechanical Specifications , grind, undercut, the valve seats (3) to narrow the valve seat widths to the specifications listed in Engine Mechanical Specifications.
4. If the original valve is being used, grind the valve to the specifications listed in Engine Mechanical Specifications. Measure the valve margin again after grinding using the Valve Margin Measurement Procedure. Replace the valve if the margin is out of specification. New valves do not require grinding.
5. When grinding the valves and seats, grind off as little material as possible. Cutting valve seat results in lowering the valve spring pressure.
6. Install the valve in the cylinder head.
   - If you are using refaced valves, lap the valves into the seats with a fine grinding compound. The refacing and reseating operations should leave the refinished surfaces smooth and true so that minimal lapping is required. Excessive lapping will groove the valve face and prevent a good seat when hot.

     Note: Be sure to clean any remaining lapping compound from the valve and seat with solvent and compressed air prior to final assembly.

   - If you are using new valves, do not lap the valves under any condition.
7. After obtaining the proper valve seat width in the cylinder head, you must re-measure the

cardiagn.com

Concentricity Measurement Procedure.

Valve Stem Height Measurement Procedure

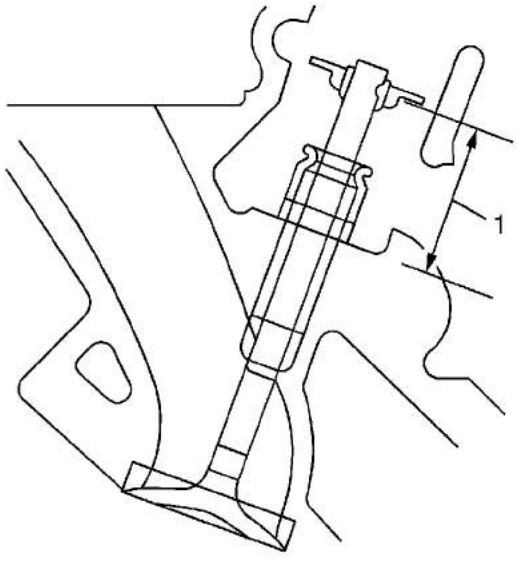

Note: To determine the valve stem height measurement, measure from the valve spring seat to the valve spring retainer.

1. Install the valve into the valve guide.
2. Ensure the valve is seated to the cylinder head valve seat.
3. Install the valve stem oil seal.
4. Install the valve spring retainer and valve stem locks.
5. Measure the distance (1) between the cylinder head to the bottom of the valve spring retainer. Refer to Engine Mechanical Specifications.
6. If the maximum height specification is exceeded, a new valve should be installed and the valve stem height re-measured.

   Caution: DO NOT grind the valve stem tip. The tip of the valve is hardened and grinding the tip will eliminate the hardened surface causing premature wear and possible engine damage.

   Caution: DO NOT use shims in order to adjust valve stem height. The use of shims will cause the valve spring to bottom out before the camshaft lobe is at peak lift and engine damage could result.

7. If the valve stem height still exceeds the maximum height specification, the cylinder head must be replaced.

cardiagn.com

Fuel Rail and Injectors Cleaning and Inspection (LCS)

Special Tools

- *EN-47909* Injector Bore and Sleeve Cleaning Kit
- *EN-48266* Injector Seal Installer and Sizer

  For equivalent regional tools, refer to Special Tools

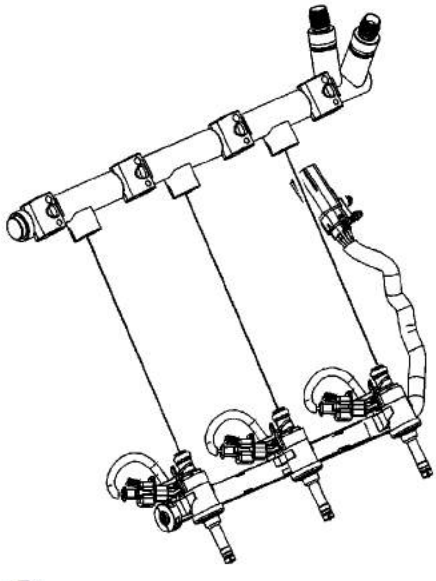

1. Remove the injectors from the fuel rail.

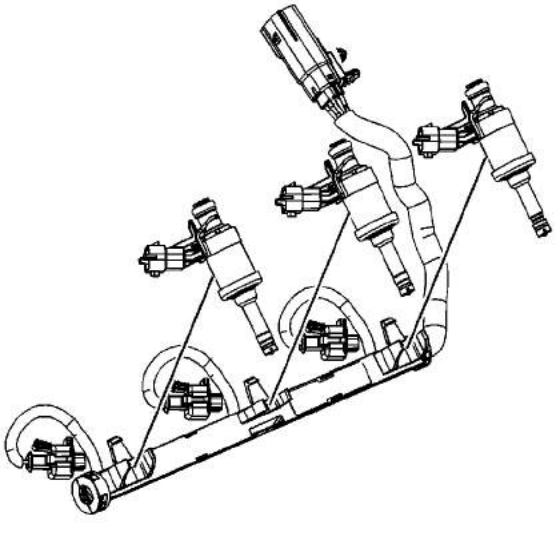

cardiagn.com

2. Remove the wiring harness from the fuel injectors.

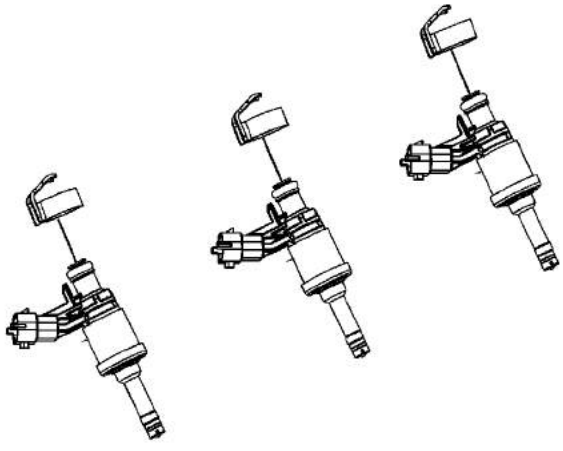

3. Remove and discard the fuel injector hold-down clamp.

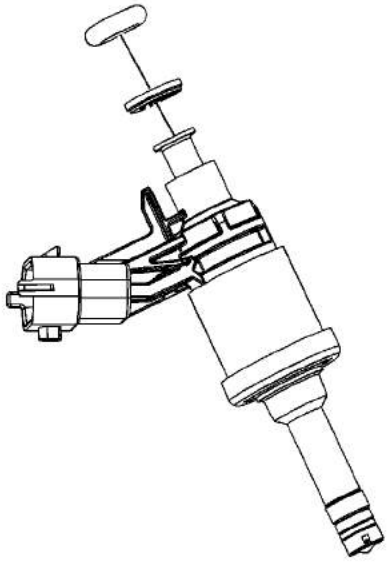

4. Remove and discard the fuel injector O-ring and plastic spacer.

cardiagn.com

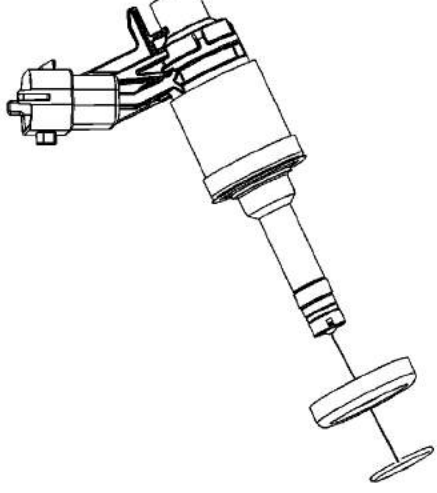

5. Remove and discard the isolator cup and retainer.

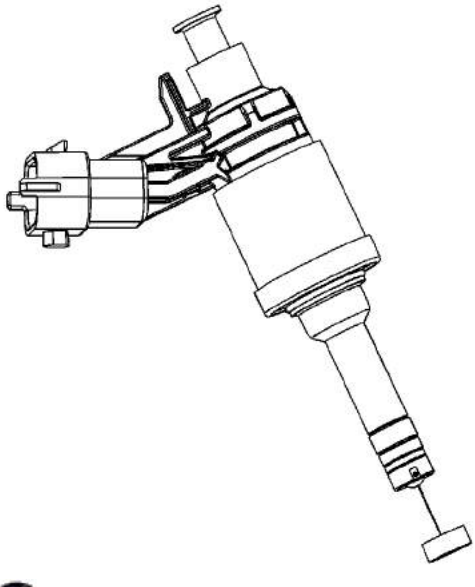

6. Remove and discard the fuel injector seal.

cardiagn.com

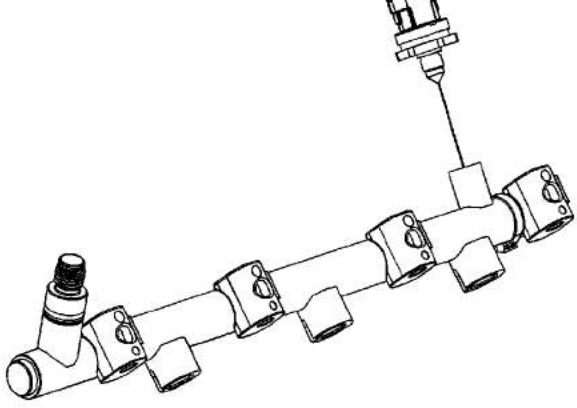

Note: Applying force to the plastic housing of the sensor will destroy the sensor. To tighten or loosen, only apply force to the attached hexagon.

7. Remove and discard the fuel pressure sensor.

   Note: Do not soak or submerge the fuel rail or injectors in solvent.

8. Clean the exterior of the fuel rail and injectors with solvent.

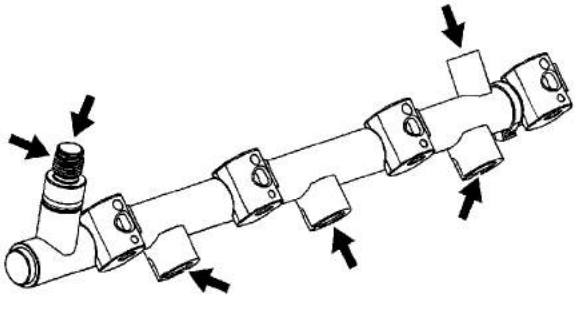

9. Inspect the fuel rail and components for the following conditions:
   - Damage, debris or restrictions to the fuel rail
   - Damage, debris or restrictions to the fuel ports in the fuel rail

cardiagn.com

- Damage to the threads on the fuel rail feed fitting
- Damage to the threads in the fuel pressure sensor bore

Note: Applying force to the plastic housing of the sensor will destroy the sensor. To tighten or loosen, only apply force to the attached hexagon.

10. Install the fuel pressure sensor.

Note: Ensure that the fuel rail threads have been cleaned of any excess fuel, or the NEW fuel injection fuel rail fuel pressure sensor will NOT seal properly.

- Lubricate the threads and the sealing cone in the fuel rail with silicon free engine oil GM P/N 12345610 (Canadian P/N 993193) or equivalent.
- Lubricate the threads and the sealing cone on the NEW fuel injection fuel rail fuel pressure sensor with silicon free engine oil GM P/N 12345610 (Canadian P/N 993193) or equivalent.
- Install the NEW fuel injection fuel rail fuel pressure sensor hand tight.
- Remove the NEW fuel injection fuel rail fuel pressure sensor, re-lubricate following steps 1 and 2 above.

Caution: Refer to Fastener Caution in the Preface section.

- Install the NEW fuel injection fuel rail fuel pressure sensor and tighten to **33 N·m (25 lb ft)**.

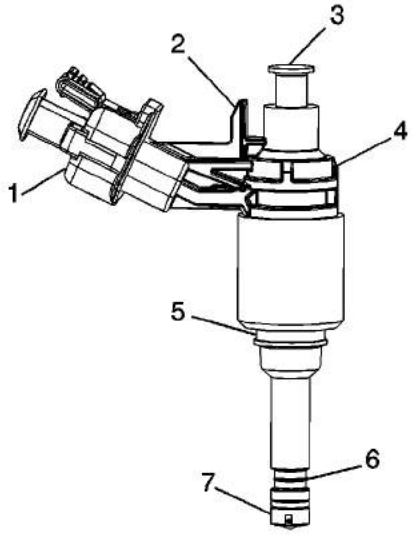

11. Inspect the fuel injectors for the following conditions:
    - Damage to the fuel injector connector (1)

cardiagn.com

- Damage the plastic fuel injector body (4)
- Damage to the isolator cup retainer groove (5)
- Damage to the teflon seal (6)
- Damage to the fuel injector tip (7)

12. Replace the fuel rail or injector if any damage is found. Do not attempt to repair a fuel rail or injector.

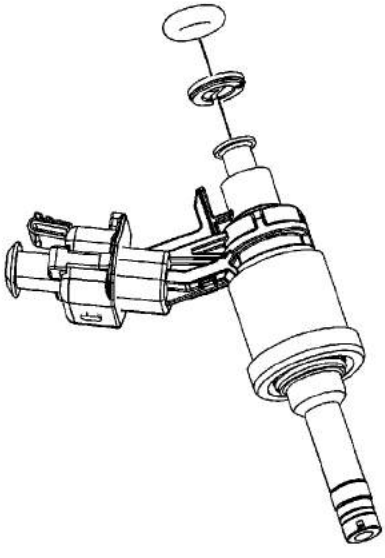

13. Lubricate the NEW O-ring with 5W30 engine oil.

Note: The plastic spacer has a top and a bottom. The top, O-ring sealing area, is wider.

14. Install the NEW plastic spacer and O-ring on the injector.

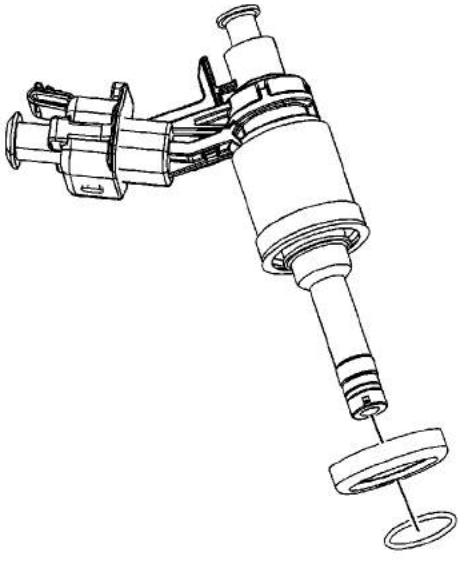

cardiagn.com

15. Install the isolator cup and retainer.

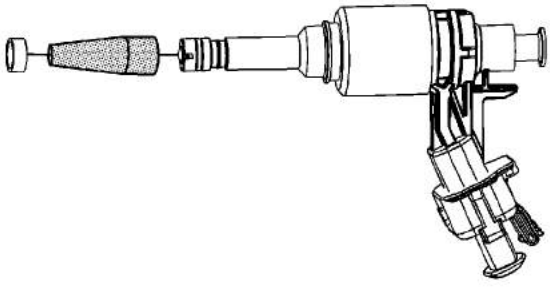

Note:

Do not use any type of lubricant when installing the NEW seal.

16. Install a NEW seal on the injector using the EN-48266-1. The seal must be installed/slid into the recessed area of the fuel injector.

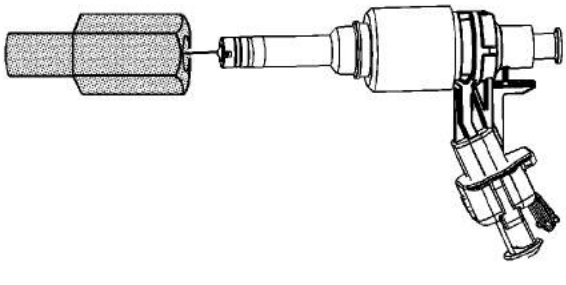

17. Compress the seal with your fingers before resizing the seal using the EN-48266-2.

cardiagn.com

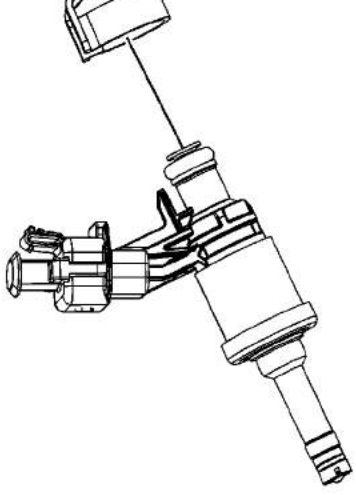

18. Install a NEW fuel injector hold-down clamp.

cardiagn.com

Cylinder Head Assemble (LCS)

Special Tools

- *EN 46116* Valve Stem Seal Remover/Installer
- *EN 46117* Valve Stem Key Remover/Installer
- *EN 46119* Off-Vehicle Valve Spring Compressor Adapter
- *EN-46122* Camshaft Position Actuator Check-Ball Valve Remover/Installer
- *J 8062* Valve Spring Compressor - Head Off

  For equivalent regional tools, refer to Special Tools.

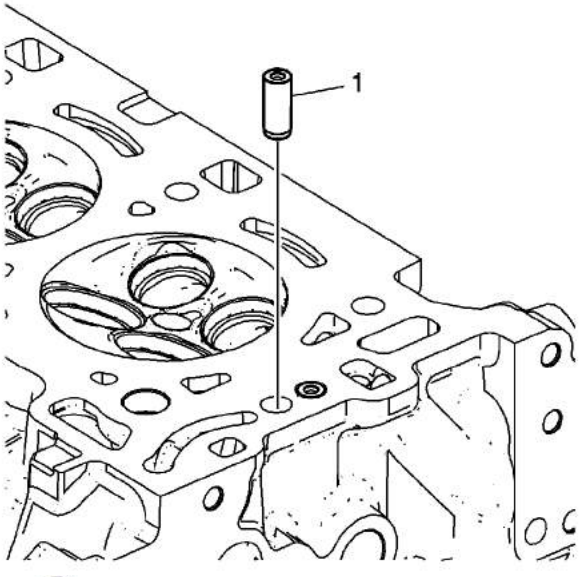

1. Use lubricant included with *EN-46122* remover/installer to lubricate outside of new check valve (1).
2. With the check ball end of the check valve facing UP, away from the head, insert the NEW check valve into the check valve bore in the cylinder head.

cardiagn.com

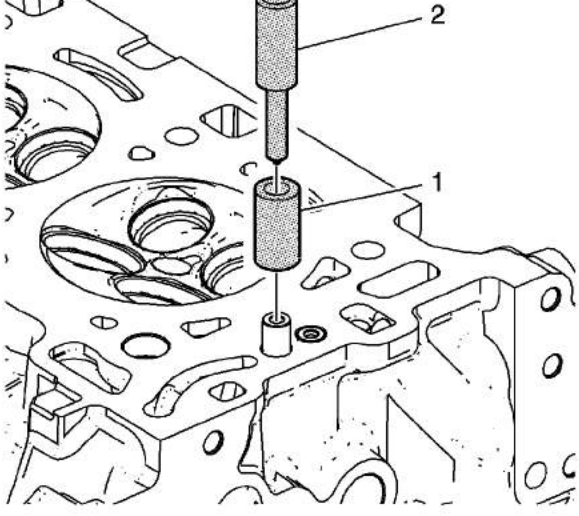

3. Place collar EN-46122-2 (1) over the new check valve with the slightly-larger inside diameter of the collar DOWN toward the cylinder head.
4. Using the driver EN-46122-1 (2), lightly tap the new check valve into place until the driver stops against the top of the collar.

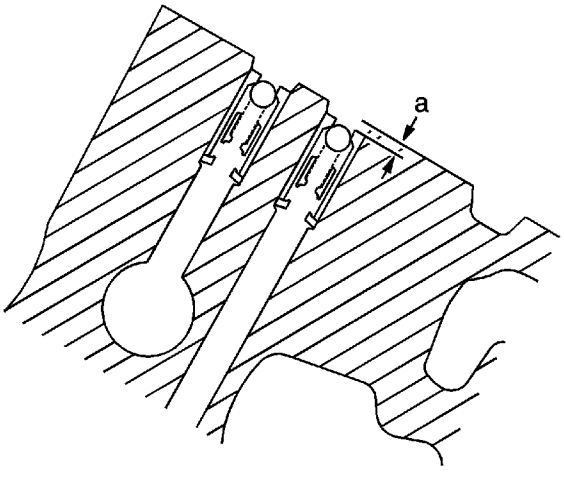

5. Inspect the camshaft position actuator oil feed check valves in order to ensure they are properly installed in the cylinder head. The camshaft position actuator oil feed check valve should be flush to 2 mm (0.0787 in) below the cylinder head deck surface (a).

Caution: Refer to Fastener Caution in the Preface section.

cardiagn.com

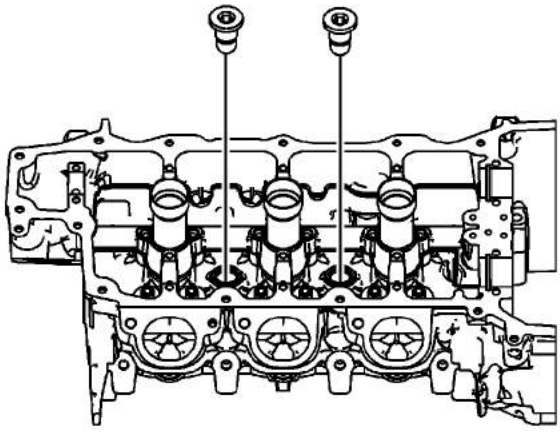

6. Install the cylinder head coolant threaded plugs and tighten to **31 N·m (23 lb ft)**.

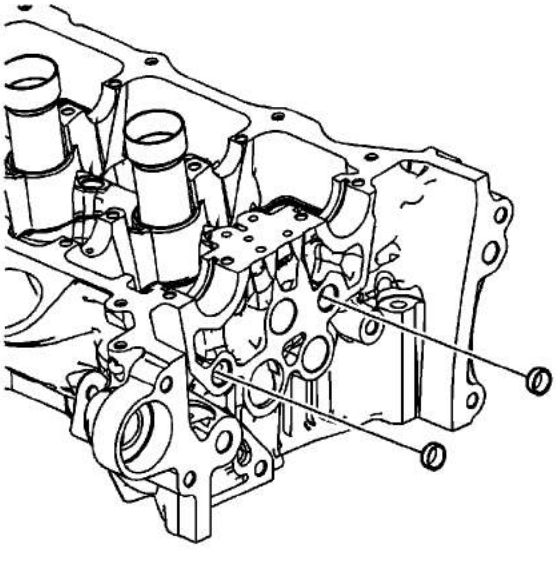

7. Install the NEW cylinder head oil gallery expansion plugs.

cardiagn.com

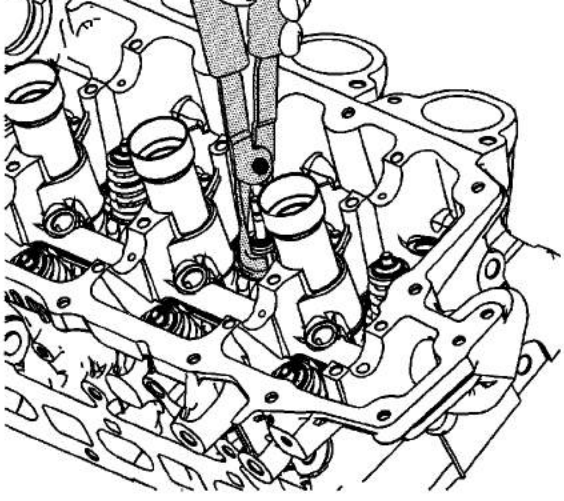

8. Place the valve stem oil seals onto the guides.

   Note: NEVER reuse a valve stem oil seal. Always use new seals when assembling the cylinder head.

9. Mount a new valve stem oil seal using the *EN 46116* remover/installer .

   Note: Force should only be applied to the valve spring contact area of the new valve stem oil seal during installation.

10. Push and twist the valve stem oil seal into position on the valve guide until the seal positively locks on the guide using the *EN 46116* remover/installer .
11. Lubricate the valve stem and valve guide ID with clean engine oil GM P/N 12345501 (Canadian P/N 992704) or equivalent.

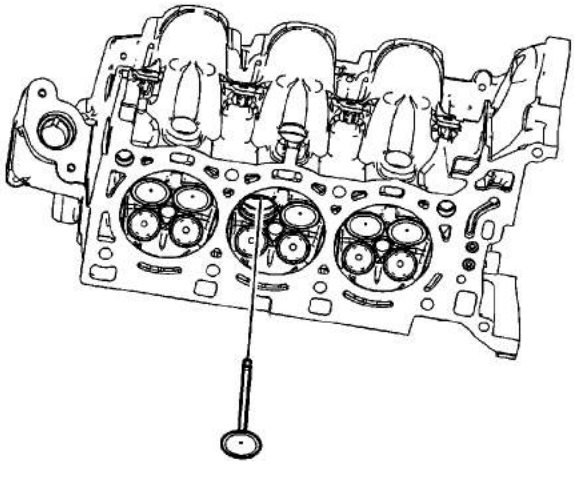

cardiagn.com

Note: The valve stem oil seal must not come loose from the valve guide when the valve is installed.

12. Insert the valve into the valve guide until it bottoms on the valve seat.

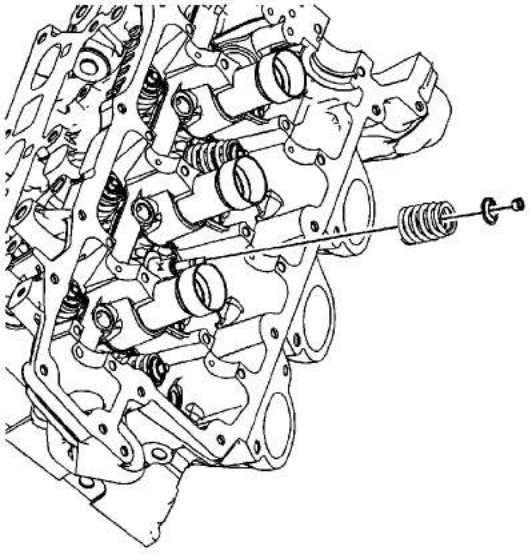

13. Position the valve spring on the spring seat.
14. Place the valve spring retainer onto the valve spring.

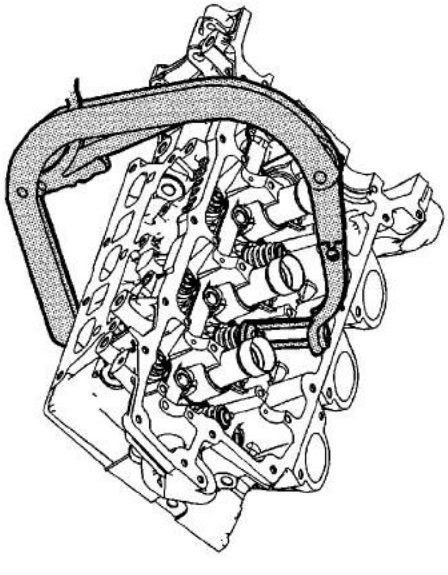

Warning: Compressed valve springs have high tension against the valve spring compressor. Valve springs that are not properly compressed by or released from the valve spring

cardiagn.com

removing or installing the valve stem keys. Failing to use care may cause personal injury.

Caution: Do not compress the valve springs less than 24.0 mm (0.943 in). Contact between the valve spring retainer and the valve stem oil seal can cause potential valve stem oil seal damage.

15. Compress the valve spring using the *J 8062* compressor and the *EN 46119* adapter .

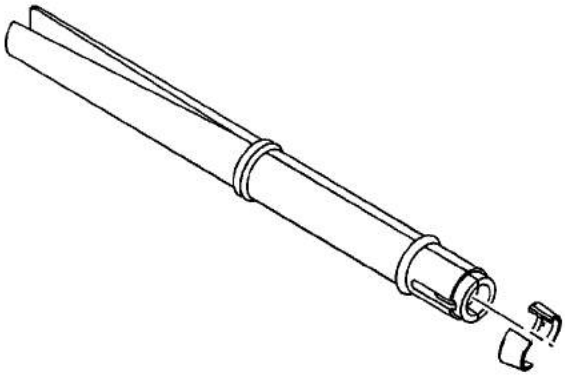

Note: Ensure proper directional placement of valve keepers in the *EN 46117* remover/installer . The valve keepers must be installed with the tapered end towards the valve stem seal.

16. With the spring compressed, install the valve keepers into the *EN 46117* remover/installer .

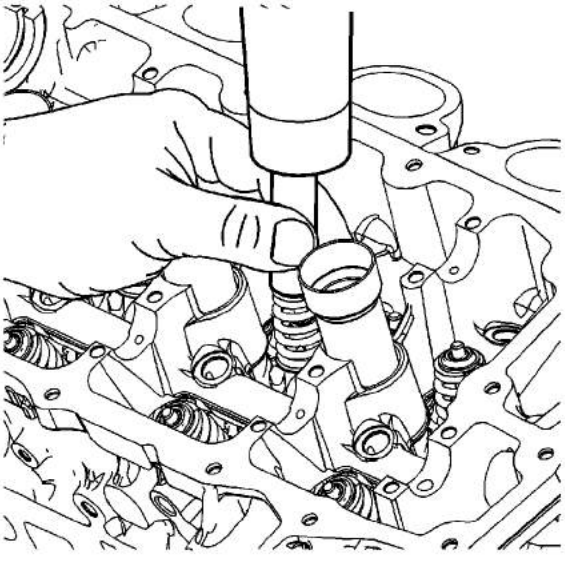

cardiagn.com

17. Place the keepers into position by pushing the tool downward and releasing tension on the *EN 46119* adapter and the *J 8062* compressor .
18. Verify that the valve keepers are installed by placing a rag over the valve tip and tapping with a dead-blow hammer.

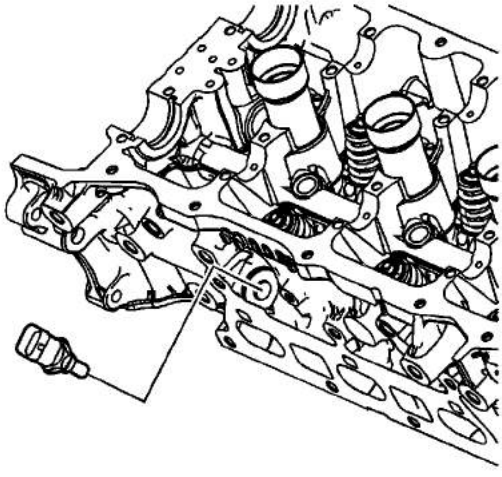

19. Install the engine coolant temperature (ECT) sensor. - LH Cylinder Head and tighten the ECT sensor to **30 N·m (22 lb ft)**.
20. Install the fuel rail with injectors into the cylinder head evenly.
21. Hand tighten the two outer fuel rail bolts to seat the injector in the injector bores.
22. Start and hand tighten the remaining fuel rail bolts.
    22.1. Tighten the fuel rail bolts in sequence to **22 N·m (16 lb ft)**.
    22.2. Tighten the fuel rail bolts in sequence a second time to **22 N·m (16 lb ft)**.

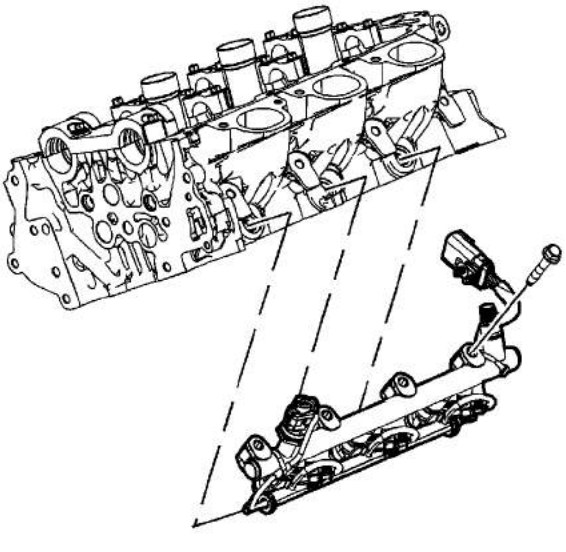

cardiagn.com

23. Lubricate the high pressure fuel pump cylinder head bore with 5W30 engine oil.

Note: Ensure that the high pressure fuel pump roller lifter is oriented properly, the camshaft is at base circle and the number 1 piston is at top dead center (TDC) on the exhaust stroke. The distance from the mounting flange surface to the camshaft at base circle should be 52 mm (2.05 in).

24. Lubricate the high pressure fuel pump roller lifter with 5W30 engine oil and install into the cylinder head bore.

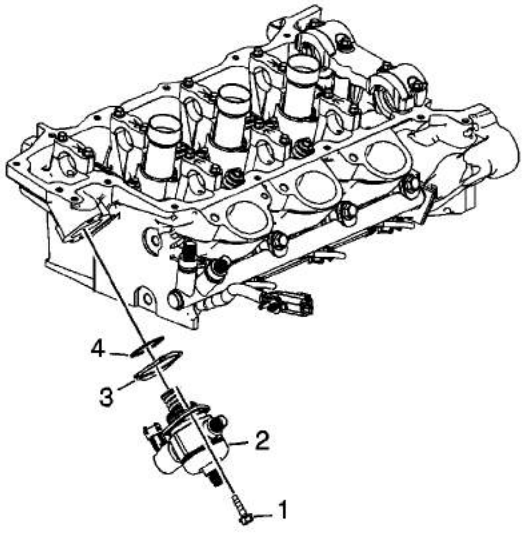

25. Install a NEW high pressure fuel pressure fuel pump gasket.
26. Install a NEW high pressure fuel pump O-ring.

Note: Ensure the plastic bolt retainers are installed in the high pressure fuel pump mounting holes before installing.

27. Install the high pressure fuel pump.

Caution: Alternately hand-tighten the fuel pump bolts one turn at a time until the pump is fully seated. Trying to draw down the pump without even side-to-side tightening may result in pump plunger damage.

28. Start and hand-tighten the high pressure fuel pump bolts evenly and tighten the high pressure fuel pump bolts evenly to **15 N·m (11 lb ft)**.

cardiagn.com

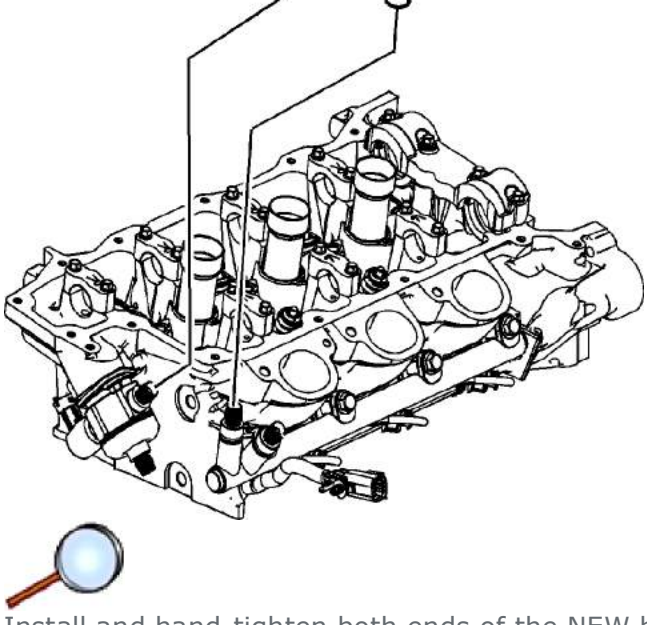

29. Install and hand-tighten both ends of the NEW high pressure fuel line and tighten the high pressure fuel line fitting nuts to **30 N·m (22 lb ft)**.

cardiagn.com

Cylinder Head Assemble (LY7)

Special Tools

- *EN-46116* Valve Stem Seal Remover/Installer
- *EN-46117* Valve Stem Key Remover/Installer
- *EN-46119* Off-Vehicle Valve Spring Compressor Adapter
- *EN-46122* Camshaft Position Actuator Check-Ball Valve Remover/Installer
- *J 8062* Valve Spring Compressor - Head Off

  For equivalent regional tools, refer to Special Tools.

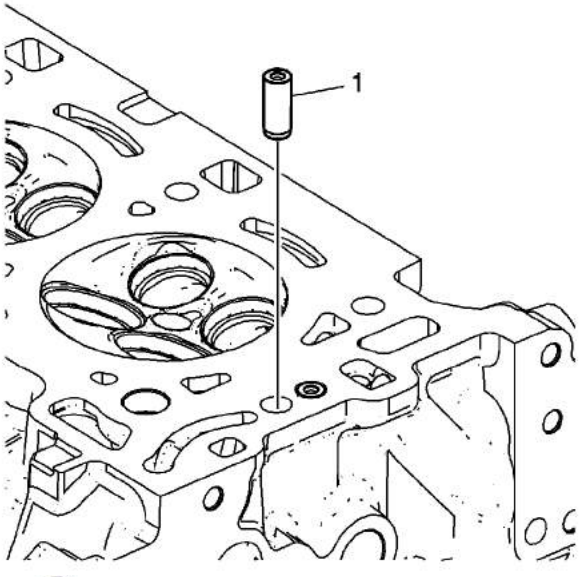

1. Use lubricant included with *EN-46122* remover/installer to lubricate outside of new check valve (1).
2. With the check ball end of the check valve facing UP, away from the head, insert the NEW check valve into the check valve bore in the cylinder head.

cardiagn.com

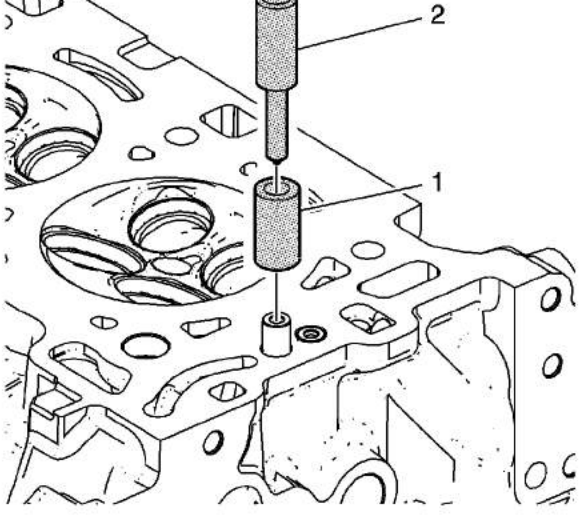

3. Place collar EN-46122-2 (1) over the new check valve with the slightly-larger inside diameter of the collar DOWN toward the cylinder head.
4. Using the driver EN-46122-1 (2), lightly tap the new check valve into place until the driver stops against the top of the collar.

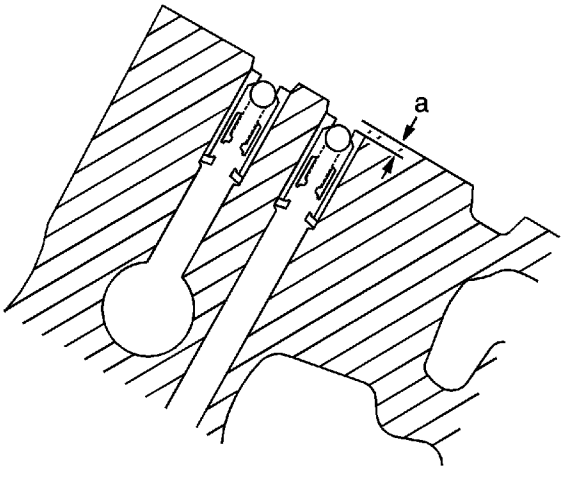

5. Inspect the camshaft position actuator oil feed check valves in order to ensure they are properly installed in the cylinder head. The camshaft position actuator oil feed check valve should be flush to 2 mm (0.0787 in) below the cylinder head deck surface (a).

Caution: Refer to Fastener Caution in the Preface section.

cardiagn.com

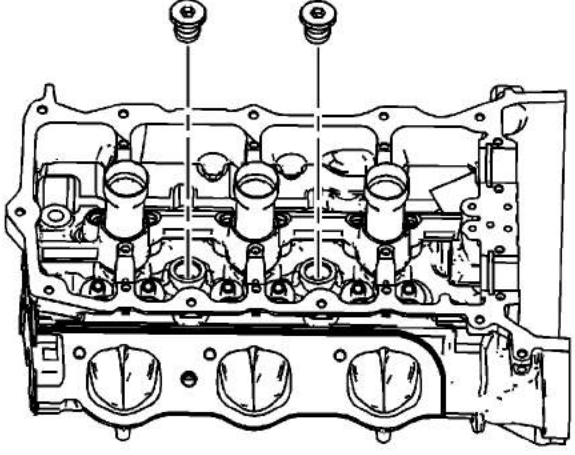

6. Install the cylinder head coolant threaded plugs and tighten to **31 N·m (23 lb ft)**.

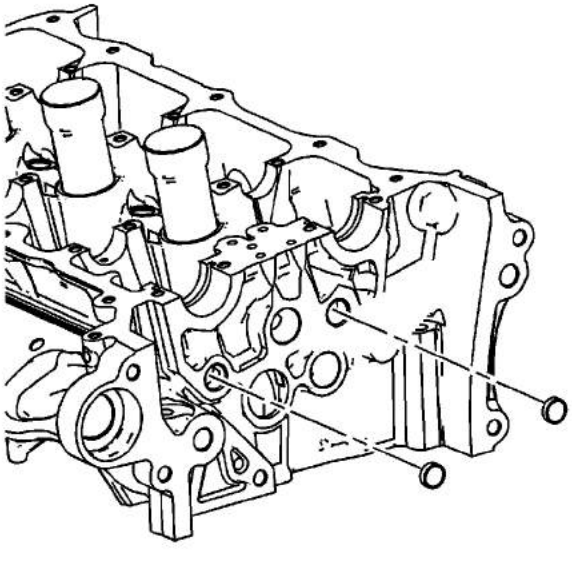

7. Install the NEW cylinder head oil gallery expansion plugs.

cardiagn.com

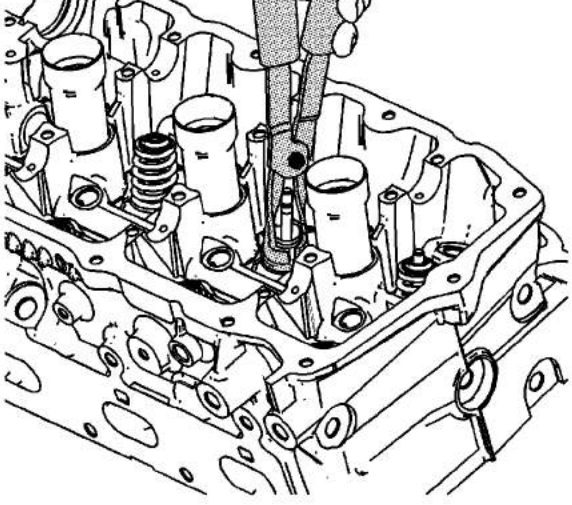

8. Place the valve stem oil seals onto the guides.

   Note: NEVER reuse a valve stem oil seal. Always use new seals when assembling the cylinder head.

9. Mount a new valve stem oil seal using the *EN-46116* seal remover/installer .

   Note: Force should only be applied to the valve spring contact area of the new valve stem oil seal during installation.

10. Push and twist the valve stem oil seal into position on the valve guide until the seal positively locks on the guide using the *EN-46116* seal remover/installer .
11. Lubricate the valve stem and valve guide ID with clean engine oil GM P/N 12345501 (Canadian P/N 992704) or equivalent.

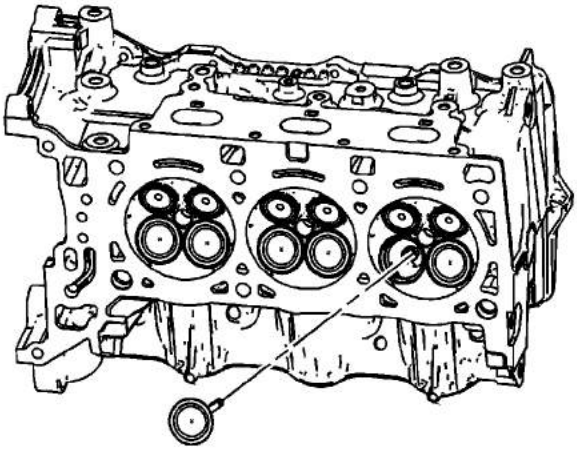

cardiagn.com

Note: The valve stem oil seal must not come loose from the valve guide when the valve is installed.

12. Insert the valve into the valve guide until it bottoms on the valve seat.

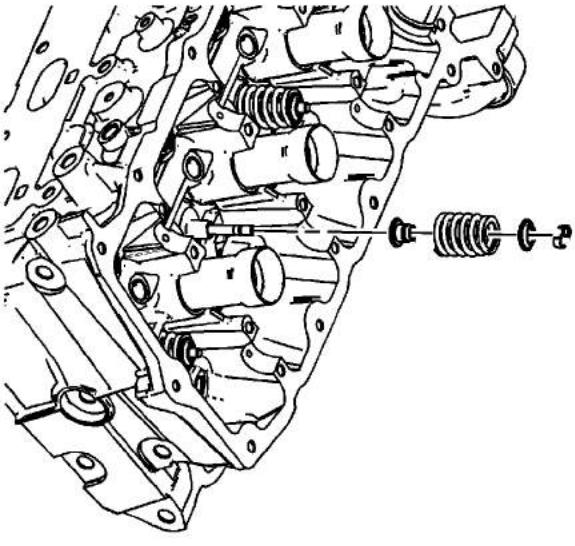

13. Position the valve spring on the spring seat.
14. Place the valve spring retainer onto the valve spring.

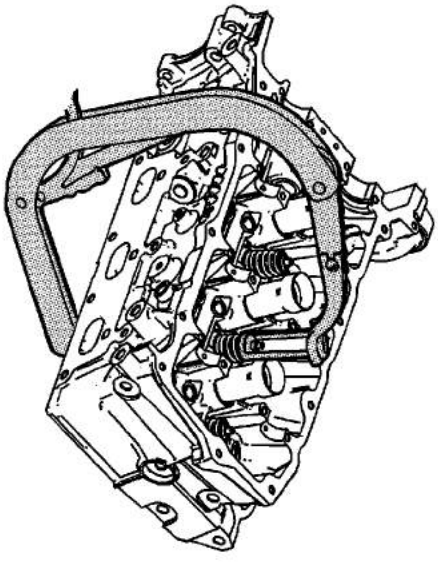

Warning: Compressed valve springs have high tension against the valve spring compressor. Valve springs that are not properly compressed by or released from the valve spring

cardiagn.com

removing or installing the valve stem keys. Failing to use care may cause personal injury.

Caution: Do not compress the valve springs less than 24.0 mm (0.943 in). Contact between the valve spring retainer and the valve stem oil seal can cause potential valve stem oil seal damage.

15. Compress the valve spring using the *J 8062* compressor - head off and the *EN-46119* adapter .

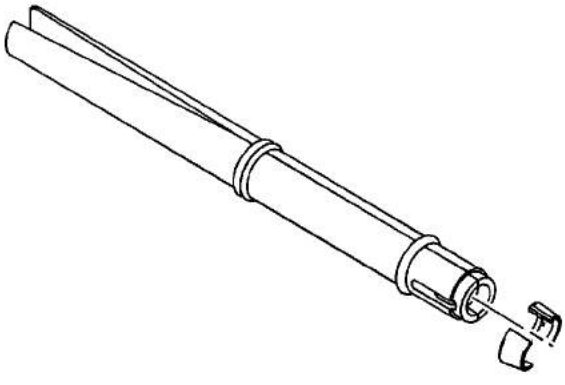

Note: Ensure proper directional placement of valve keepers in the *EN-46117* key remover/installer . The valve keepers must be installed with the tapered end towards the valve stem seal.

16. With the spring compressed, install the valve keepers into the *J 8062* compressor - head off .

cardiagn.com

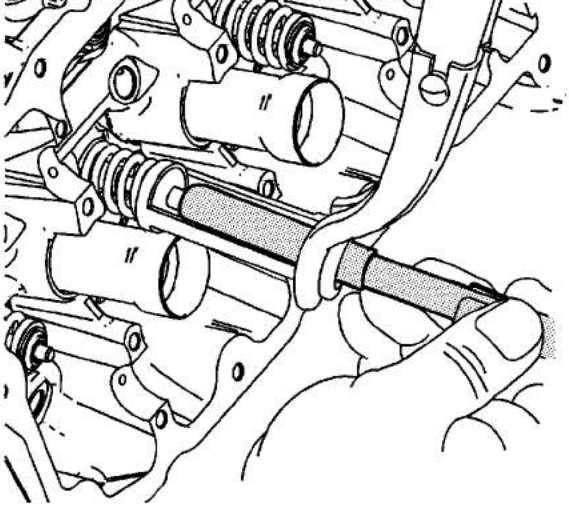

17. Place the keepers into position by pushing the tool downward and releasing tension on the *EN-46119* adapter and the *J 8062* compressor - head off .
18. Verify that the valve keepers are installed by placing a rag over the valve tip and tapping with a dead-blow hammer. The valve keepers and the spring should remain in place.

cardiagn.com

Camshaft Cleaning and Inspection

Special Tools

J 7872 Magnetic Base Dial Indicator

For equivalent regional tools, refer to Special Tools.

Cleaning Procedure

1. Clean the camshaft in solvent.

   Warning: Refer to Safety Glasses Warning in the Preface section.

2. Dry the camshaft with compressed air.

Visual Inspection

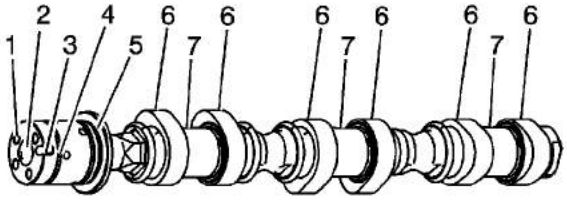

1. Inspect the camshaft oil feed holes (1) to the camshaft position actuator for dirt, debris or blockage.
2. Inspect the threaded hole (2) for damage.
3. Inspect the camshaft position actuator locating notch (3) for damage or wear.
4. Inspect the camshaft sealing grooves (4) for damage.
5. Inspect the camshaft thrust surface (5) for damage.
6. Inspect the camshaft lobes (6) and journals (7) for the following conditions:
   - Excessive scoring or pitting
   - Discoloration from overheating

cardiagn.com

Camshaft Measurement

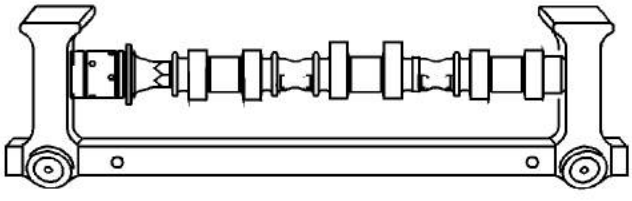

1. With the camshaft in a suitable fixture, measure the camshaft for wear.

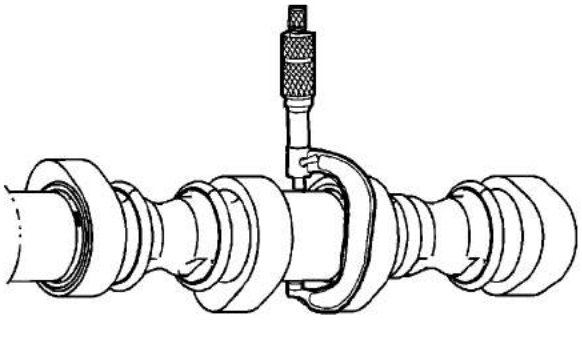

2. Measure the camshaft journals for diameter and out-of-round using an outside micrometer. Refer to Engine Mechanical Specifications.
   - If the diameter is smaller than specifications, replace the camshaft.
   - If the out-of-round exceeds specifications, replace the camshaft.

cardiagn.com

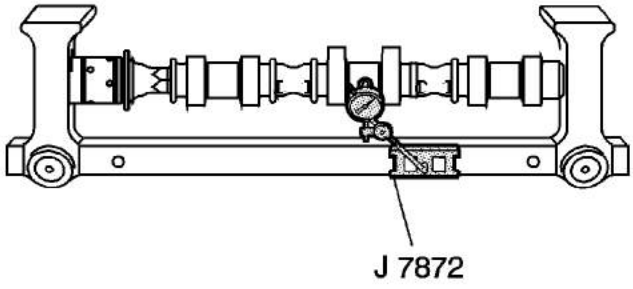

3. Measure the camshaft runout using the *J 7872* indicator . Refer to Engine Mechanical Specifications.

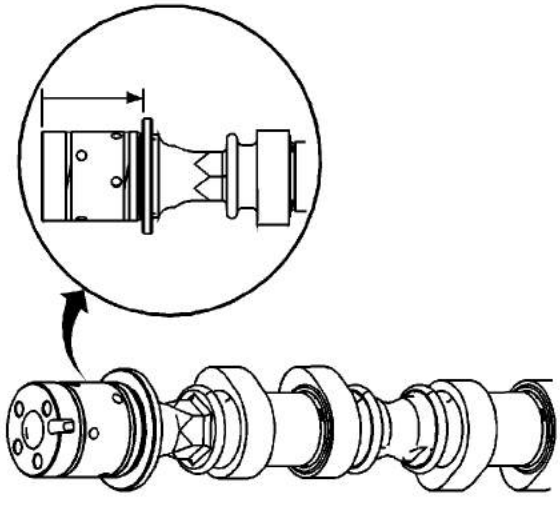

4. Measure the camshaft thrust width for wear using a depth micrometer. Refer to Engine Mechanical Specifications.

cardiagn.com

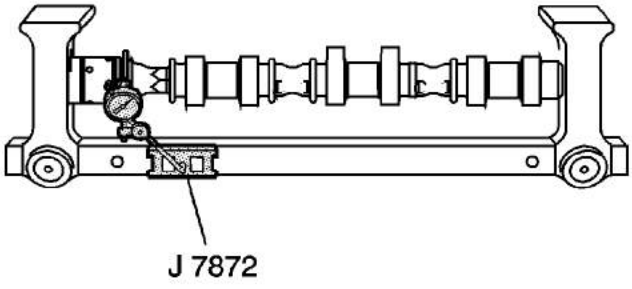

5. Measure the camshaft thrust wall surface for runout using *J 7872* indicator . Refer to Engine Mechanical Specifications.
6. If the camshaft is damaged or worn beyond specifications, replace the camshaft. No machining of the camshaft is allowed.

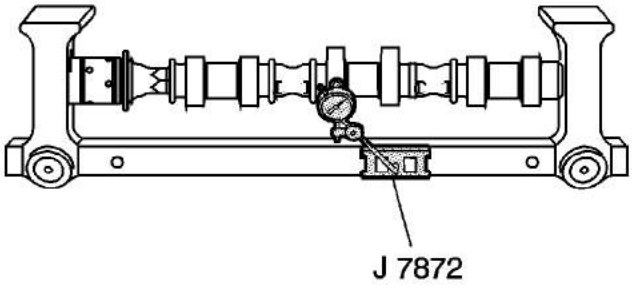

7. Measure the camshaft lobes for wear using the *J 7872* indicator .

cardiagn.com

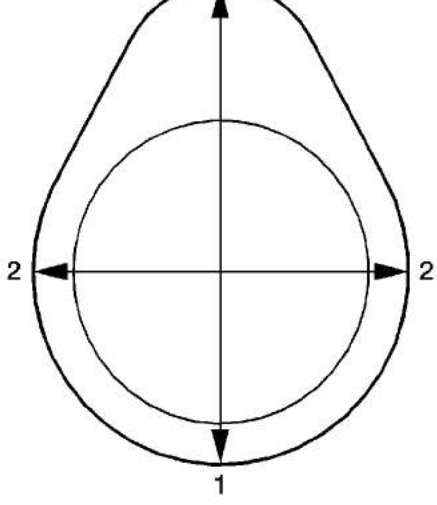

8. Place the *J 7872* indicator with the indicator tip on the base circle (1) of the camshaft lobe.
   8.1. Place the *J 7872* indicator at zero.
   8.2. Rotate the camshaft until the indicator tip is at the highest point (3) on the lobe. This reading is the lift of the camshaft lobe. Refer to Engine Mechanical Specifications.
   8.3. If the indicated measurement is significantly lower than these specifications, replace the camshaft or engine performance will be reduced.

cardiagn.com

Valve Lifters Cleaning and Inspection

Caution: Refer to Valve Lifter Priming Caution in the Preface section.

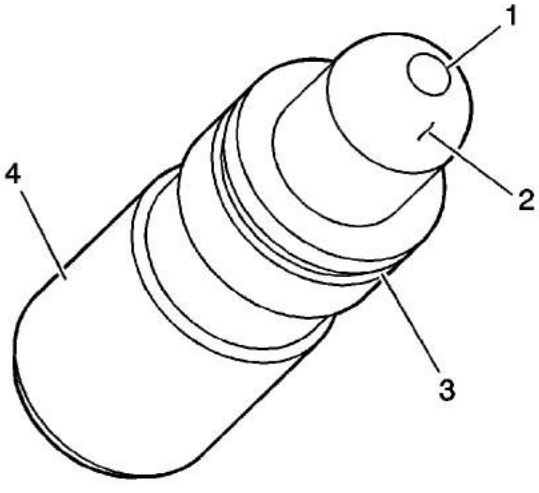

1. Inspect the stationary hydraulic lash adjuster (SHLA) in the following areas:
   - A plugged oil passage (1)
   - A scored or worn camshaft follower pivot area (2)
   - A damaged or broken retainer (3), some applications
   - A severely scuffed or worn SHLA body (4)
2. Replace the SHLA or SHLAs as necessary.

cardiagn.com

Valve Rocker Arm Cleaning and Inspection

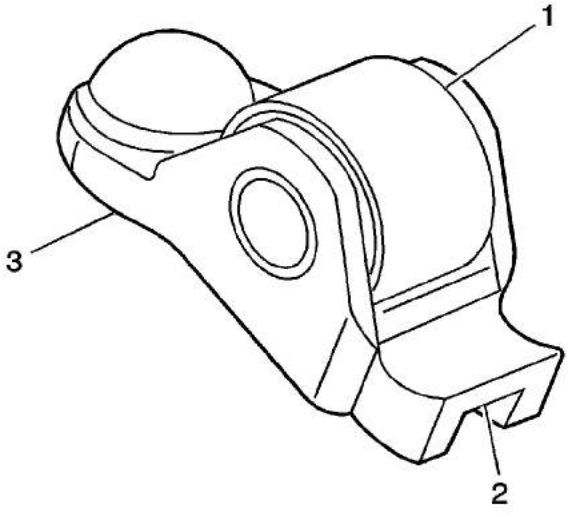

1. Inspect the camshaft follower roller (1) for the following:
   - Flat spots
   - Excessive scoring and pitting
   - Ensure the roller spins freely
2. Inspect the camshaft follower valve tip area (2).
3. Inspect the camshaft follower stationary hydraulic lash adjuster (SHLA) pivot area (3).
4. Replace the camshaft follower or followers as necessary.

cardiagn.com

Camshaft Timing Drive Components Cleaning and Inspection

Cleaning Procedure

1. Clean all the following components with solvent:
   - Crankshaft sprocket
   - Primary timing drive chain
   - Primary timing drive chain shoe
   - Primary timing drive chain guides
   - Primary timing drive chain tensioner
   - Secondary timing drive chains
   - Secondary timing drive chain shoes
   - Secondary timing drive chain guides
   - Secondary timing drive chain tensioners
   - Timing component fastening bolts
2. Clean each camshaft position actuator's exterior with solvent.

   Warning: Refer to Safety Glasses Warning in the Preface section.

3. Dry the timing components with compressed air.

Visual Inspection

Camshaft Position Actuators

cardiagn.com

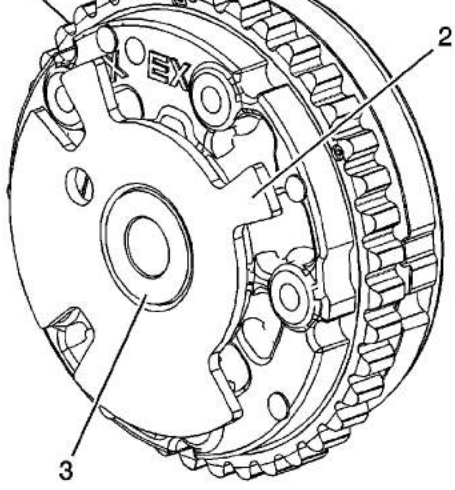

1. Inspect the front of the exhaust camshaft position actuators for the following:
   - Sprocket damage (1)
   - Reluctor/sensor wheel damage (2)
   - Camshaft position actuator bolt seating/sealing inner hub flange damage (3)

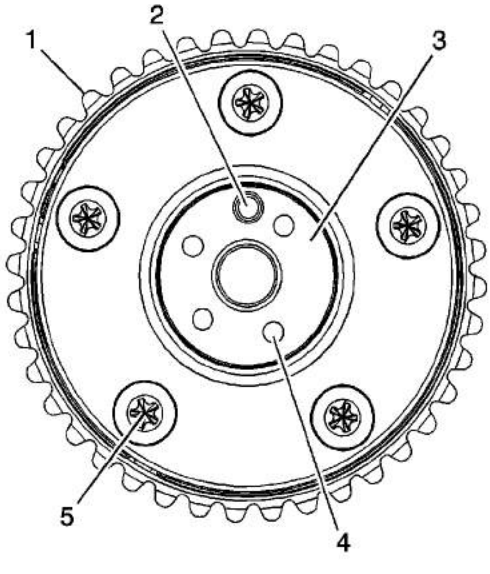

2. Inspect the back of the exhaust camshaft position actuators for the following:
   - Sprocket damage (1)
   - Camshaft locating pin damage (2)
   - Camshaft seating/sealing inner hub flange damage (3)
   - Blockage to the oil passages (4)
   - Loose or missing housing bolts (5)

cardiagn.com

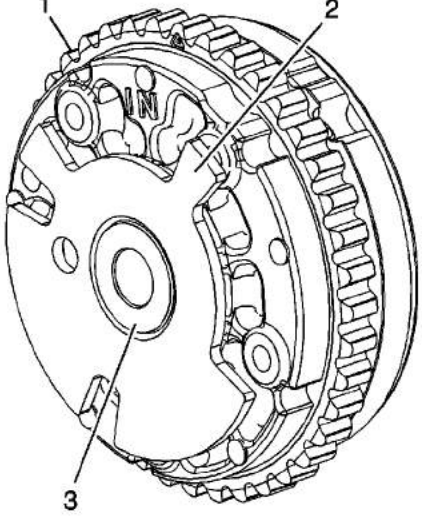

3. Inspect the front of the left intake camshaft position actuators for the following:
   - Sprocket damage (1)
   - Reluctor/sensor wheel damage (2)
   - Camshaft position actuator oil control valve bolt seating/sealing inner hub flange damage (3)

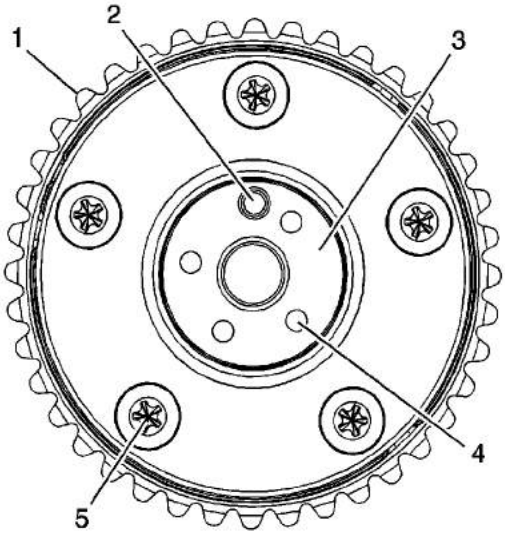

4. Inspect the back of the left intake camshaft position actuators for the following:
   - Sprocket damage (1)
   - Camshaft locating pin damage (2)
   - Camshaft seating/sealing inner hub flange damage (3)

cardiagn.com

- Loose or missing housing bolts (3)

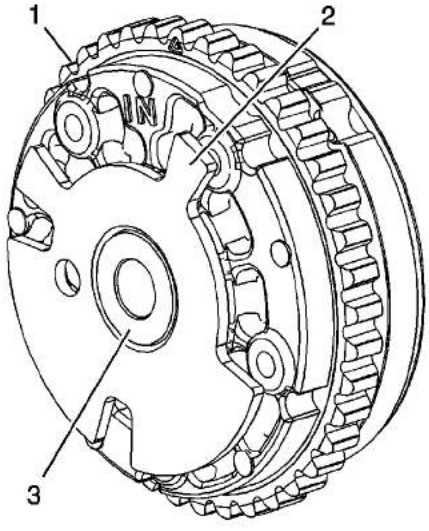

5. Inspect the front of the right intake camshaft position actuators for the following:
   - Sprocket damage (1)
   - Reluctor/sensor wheel damage (2)
   - Camshaft position actuator oil control valve bolt seating/sealing inner hub flange damage (3)

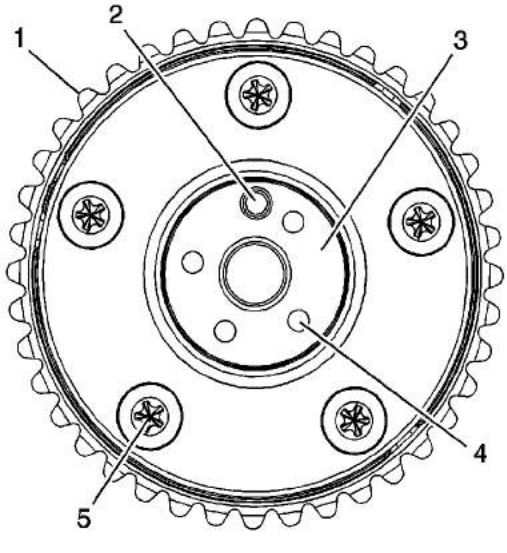

6. Inspect the back of the right intake camshaft position actuators for the following:
   - Sprocket damage (1)

cardiagn.com

- Camshaft seating/sealing inner hub flange damage (3)
- Blockage to the oil passages (4)
- Loose or missing housing bolts (5)

7. Replace a damaged camshaft position actuator.

Camshaft Position Actuator Oil Control Valves

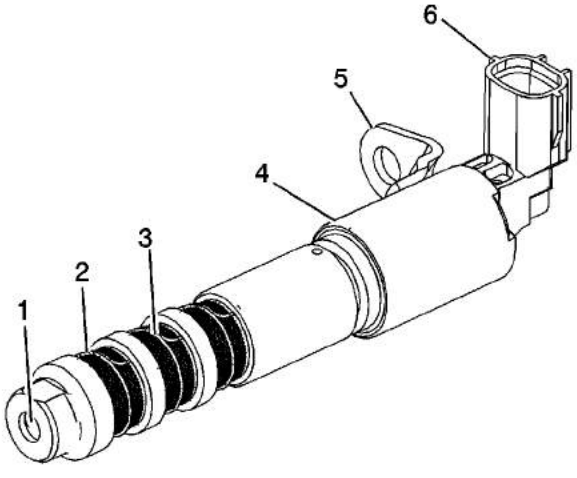

1. Inspect the camshaft position actuator oil control valves for the following:
   - Blockage to the oil passage (1)
   - Missing or damaged oil screen clip (2)
   - Blockage or damage to the oil screen (3)
   - Damage to the sealing surface for the camshaft position actuator oil control valve solenoid oil seal (4)
   - Damage to the bracket (5)
   - Damage to the wiring harness connection and/or terminals (6)
2. Replace a damaged camshaft position actuator oil control valve.

Left Intermediate Sprocket with Primary and Secondary Inverted Tooth (IT) Chain

cardiagn.com

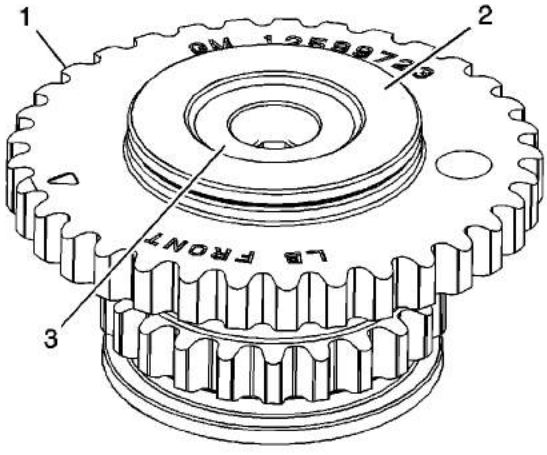

1. Inspect the front of the left intermediate sprocket for the following:
   - Damage to the primary camshaft drive chain sprocket (1)
   - Damage to the hub bearing (2)--Ensure the hub bearing spins freely. If the hub bearing wobbles, is noisy, or feels rough when rotated, replace the intermediate sprocket.
   - Damage to the bolt flange seating/sealing surface (3)

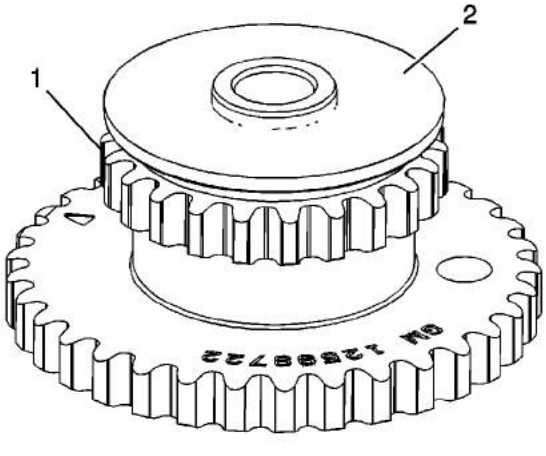

2. Inspect the back of the left intermediate sprocket for the following:
   - Damage to the left secondary camshaft drive chain sprocket (1)
   - Damage to the bearing hub-to-engine block sealing surface (2)
3. Replace a damaged left intermediate sprocket.

cardiagn.com

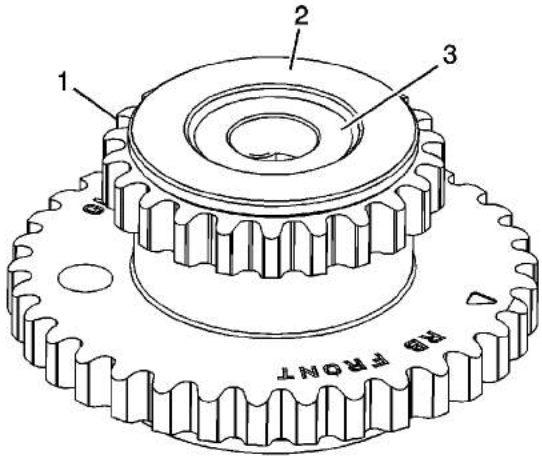

1. Inspect the front of the right intermediate sprocket for the following:
   - Damage to the right secondary camshaft drive chain sprocket (1)
   - Damage to the hub bearing (2)--Ensure the hub bearing spins freely. If the hub bearing wobbles, is noisy, or feels rough when rotated, replace the intermediate sprocket.
   - Damage to the bolt flange seating/sealing surface (3)

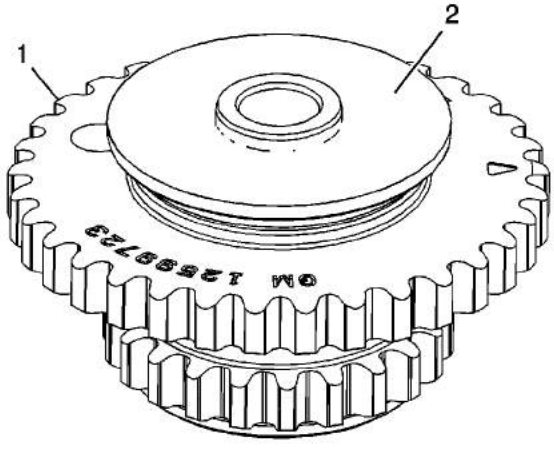

2. Inspect the back of the right intermediate sprocket for the following:

cardiagn.com

- Damage to the bearing hub to engine block sealing surface (2)

3. Replace a damaged right intermediate sprocket.

Crankshaft Sprocket with Second Version Primary Inverted Tooth (IT) Chain

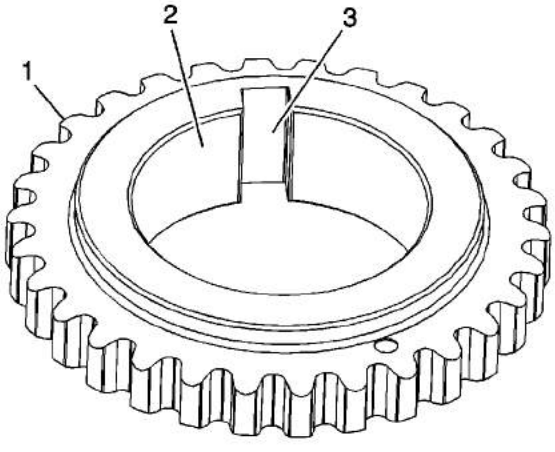

1. Inspect the crankshaft sprocket for the following:
   - Sprocket damage (1)
   - Bore damage (2)
   - Keyway damage (3)
2. Replace a damaged crankshaft sprocket.

Secondary Timing Chains with Inverted Tooth (IT) Chain

cardiagn.com

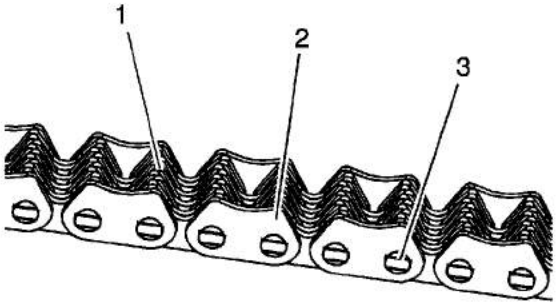

1. Inspect the secondary timing chain for the following:
   - Binding or worn links (1)
   - Loose links (2)
   - Loose pins (3)
2. Replace a damaged secondary timing chain.

Primary Timing Chain with Inverted Tooth (IT) Chain

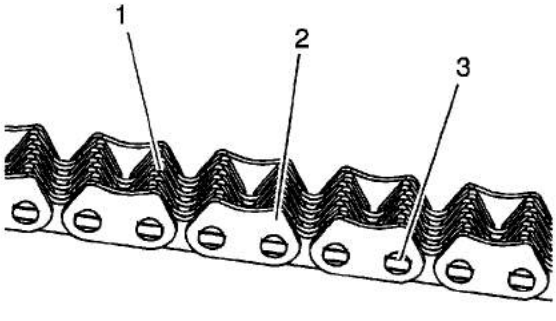

1. Inspect the primary timing chain for the following:
   - Binding or worn links (1)

cardiagn.com

- Loose pins (3)

2. Replace a damaged primary timing chain.

Primary Timing Chain Upper Guide

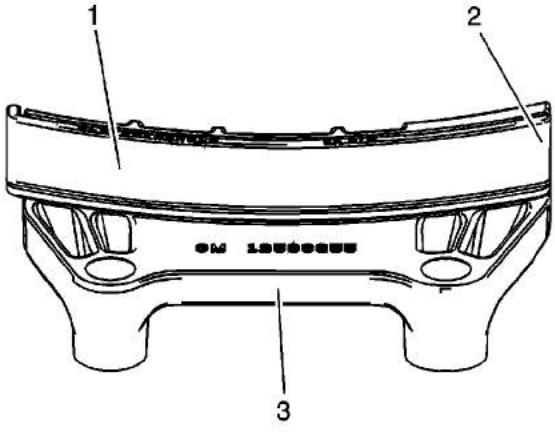

1. Inspect the primary timing chain upper guide for the following:
   - Worn guide surface (1)
   - Cracked or broken guide surface (2)
   - Cracked or damaged guide base (3)
2. Replace a damaged primary timing chain upper guide.

Primary Timing Chain Lower Guide

cardiagn.com

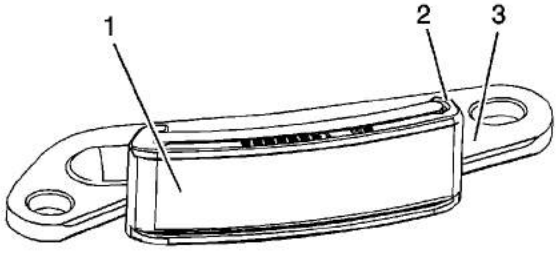

1. Inspect the primary timing chain lower guide for the following:
   - Worn guide surface (1)
   - Cracked or broken guide surface (2)
   - Cracked or damaged guide base (3)
2. Replace a damaged primary timing chain lower guide.

Left Secondary Timing Chain Guide

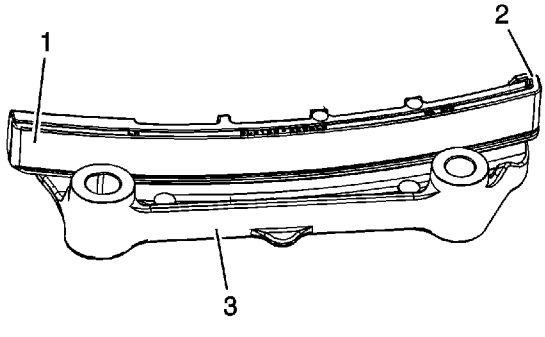

1. Inspect the left secondary timing chain guides for the following:
   - Worn guide surface (1)

cardiagn.com

- Cracked or damaged guide base (3)

2. Replace a damaged left secondary timing chain guide.

Right Secondary Timing Chain Guide

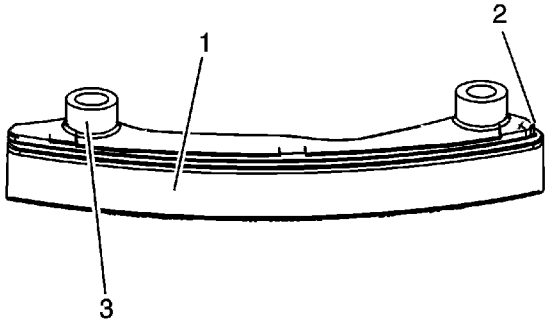

1. Inspect the right secondary timing chain guides for the following:
   - Worn guide surface (1)
   - Cracked or broken guide surface (2)
   - Cracked or damaged guide base (3)
2. Replace a damaged right secondary timing chain guide.

Left Secondary Timing Chain Shoe

cardiagn.com

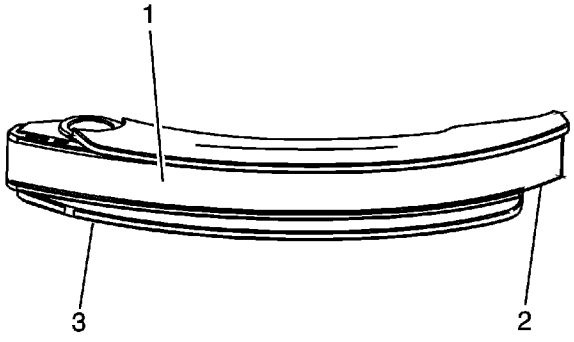

1. Inspect the front of the left secondary timing chain shoe for the following:
   - Worn shoe surface (1)
   - Cracked or broken shoe surface (2)
   - Cracked or damaged shoe (3)

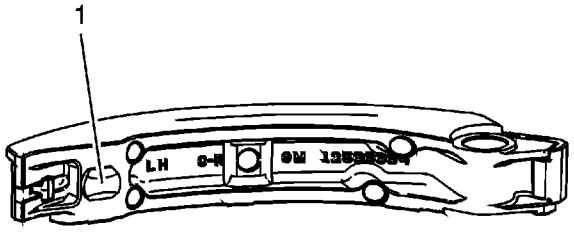

2. Inspect the back of the left secondary timing chain shoe for a damaged, worn, or missing left secondary timing chain tensioner contact pad (1).
3. Replace a damaged left secondary timing chain shoe.

Right Secondary Timing Chain Shoe

cardiagn.com

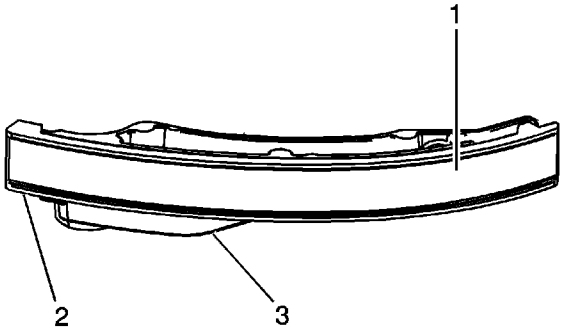

1. Inspect the front of the right secondary timing chain shoe for the following:
   - Worn shoe surface (1)
   - Cracked or broken shoe surface (2)
   - Cracked or damaged shoe (3)

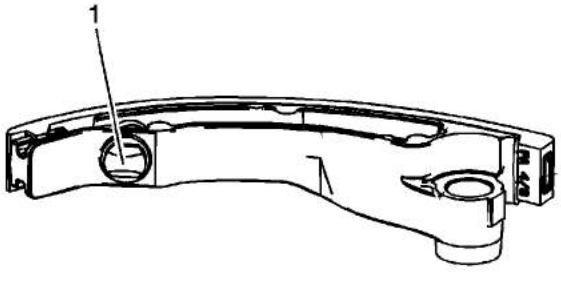

2. Inspect the back of the right secondary timing chain shoe for a damaged, worn, or missing right secondary timing chain tensioner contact pad (1).
3. Replace a damaged right secondary timing chain shoe.

Primary Timing Chain Tensioner

cardiagn.com

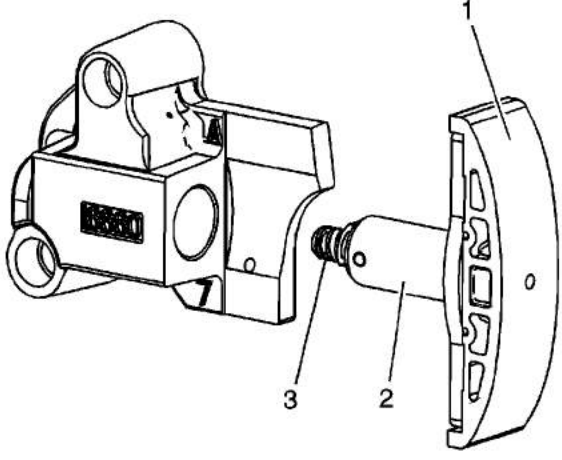

1. Inspect the primary timing chain tensioner for worn primary timing chain tensioner shoe surface (1).
2. Inspect the primary timing chain tensioner for locked or binding timing chain tensioner. Reset the plunger (3) and ensure the plunger moves freely (2) in and out of the body of the tensioner. Refer to Primary Camshaft Intermediate Drive Chain Tensioner Installation.
3. Replace a damaged primary timing chain tensioner.

Left Secondary Timing Chain Tensioner

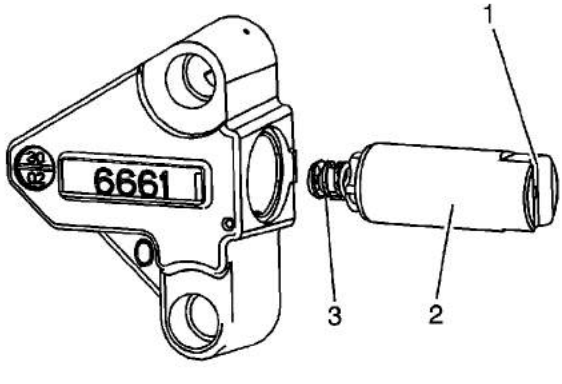

1. Inspect the left secondary timing chain tensioner for damaged plunger-to-shoe contact surface (1).
2. Inspect the left secondary timing chain tensioner for locked or binding timing chain tensioner.

cardiagn.com

3. Replace a damaged left secondary timing chain tensioner.

Right Secondary Timing Chain Tensioner

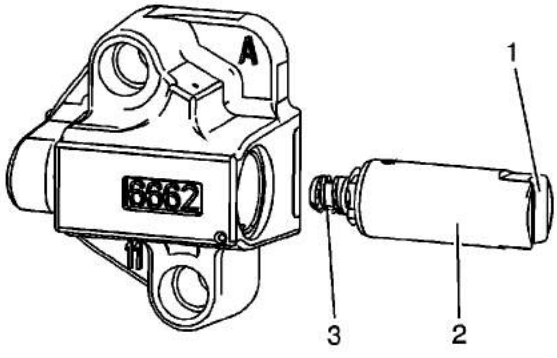

1. Inspect the right secondary timing chain tensioner for damaged plunger-to-shoe contact surface (1).
2. Inspect the right secondary timing chain tensioner for locked or binding timing chain tensioner. Reset the plunger (3) and ensure the plunger moves freely (2) in and out of the body of the tensioner. Refer to Secondary Camshaft Drive Chain Tensioner Installation - Right Side.
3. Replace a damaged right secondary timing chain tensioner.

cardiagn.com

Oil Pump Disassemble

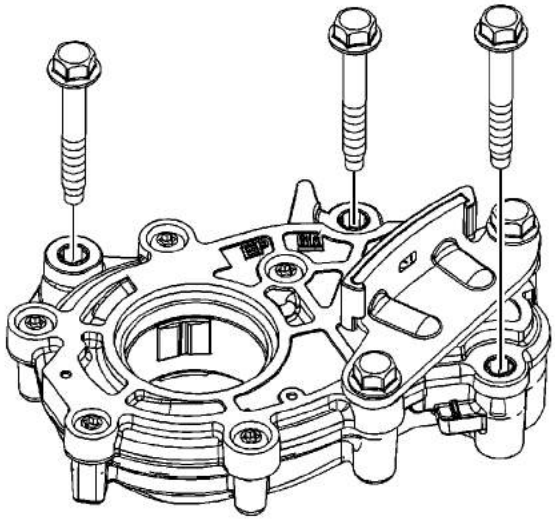

Important: There are no serviceable components within the oil pump. Disassemble the pump only to diagnose an oiling concern. A disassembled oil pump must not be reused. A disassembled oil pump must be replaced.

1. Remove the oil pump mounting bolts.

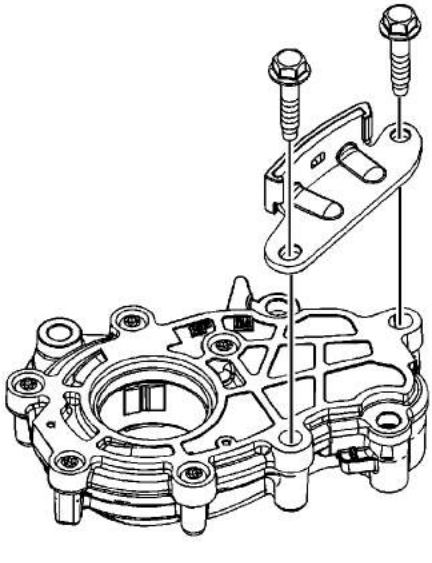

2. Remove the primary camshaft drive chain lower guide bolts.

cardiagn.com

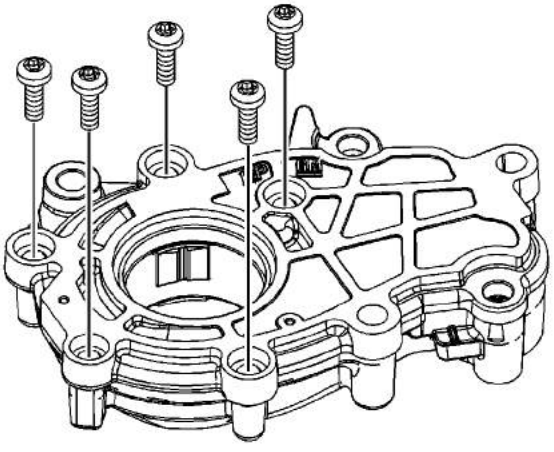

4. Remove the bolts holding the oil pump cover to the oil pump housing.

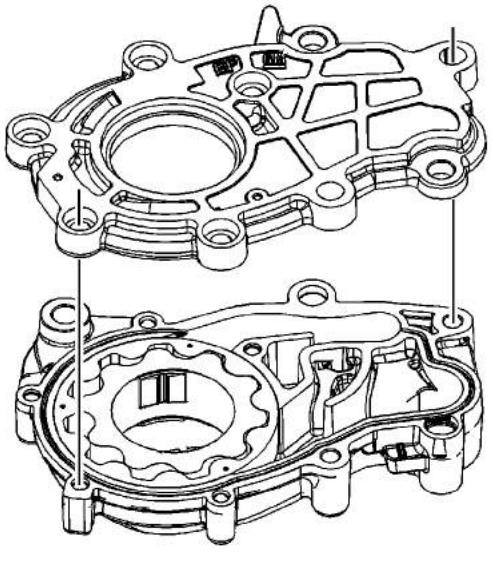

5. Remove the oil pump cover from the oil pump housing.

cardiagn.com

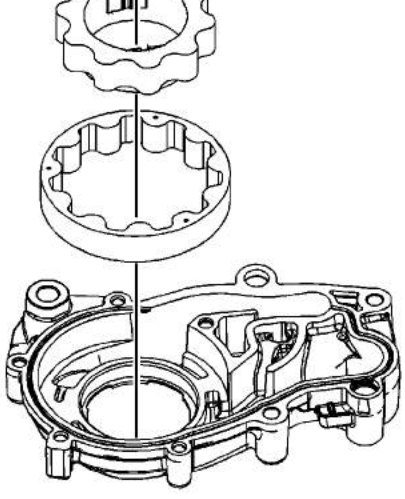

6. Remove the inner oil pump drive gear.
7. Remove the outer oil pump driven gear.

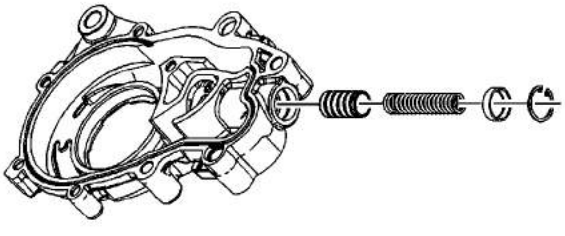

8. Remove the clip, holding the cap, for the oil relief valve components.
9. Remove the cap, spring, and plunger from the oil pump housing.

cardiagn.com

Oil Pump Cleaning and Inspection

Cleaning Procedure

1. Clean the oil pump components with non-corrosive solvent.

   Warning: Refer to Safety Glasses Warning in the Preface section.

2. Dry the oil pump components with compressed air.

Inspection Procedure

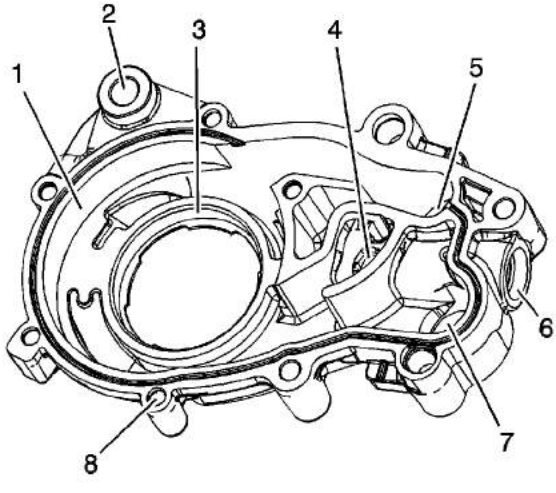

Note: There are no serviceable components within the oil pump. Disassemble the pump only to diagnose an oiling concern. A disassembled oil pump must not be reused. A disassembled oil pump must be replaced.

1. Inspect the oil pump housing for the following:
   - Damage, scoring, or debris on the housing surface for the driven gear (1)
   - Damage to the oil pump mounting bosses (2)
   - Damage, scoring, or debris on the housing surface for the drive gear (3)
   - Damage, scoring, or debris in the oil pump relief valve port (4)
   - Damage, scoring, or debris in the oil pump intake port (5)
   - Damage, scoring, or debris in the oil pump relief valve bore (6)
   - Damage, scoring, or debris in the oil pump output port (7)

cardiagn.com

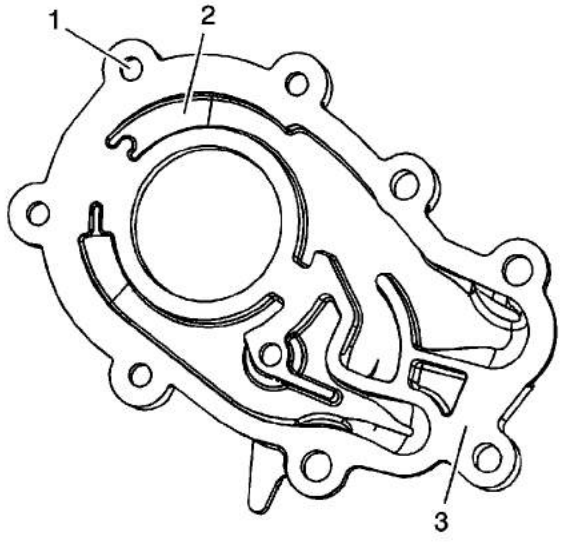

2. Inspect the oil pump cover for the following conditions:
   - Damage to the oil pump cover mounting bosses (1)
   - Damage, scoring, or debris in the oil pump cover oil passages (2)
   - Damage to the sealing surface between the oil pump cover and the oil pump housing (3)

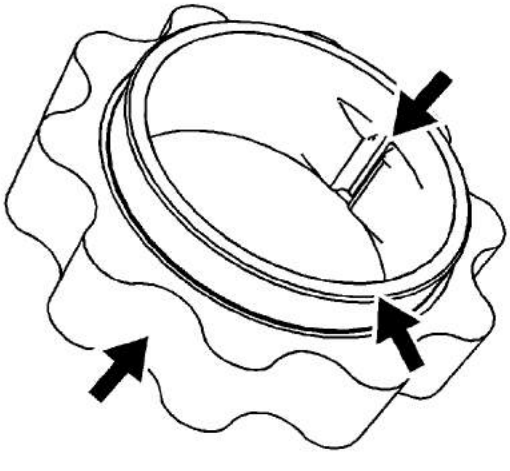

3. Inspect the inner drive gear for damage. If inner diameter damage is found, ensure the crankshaft is also inspected.

cardiagn.com

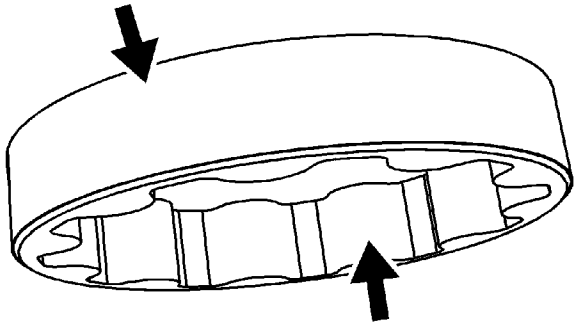

4. Inspect the outer driven gear for damage.

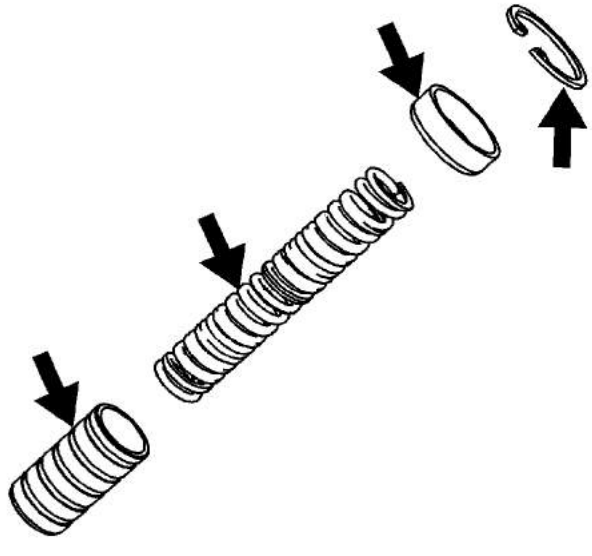

5. Inspect the oil pump relief valve components for debris or damage.

cardiagn.com

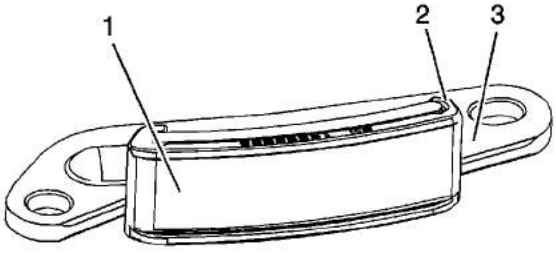

6. Inspect the primary camshaft drive chain lower guide for damage (1-3).
7. If debris or damage is present within the oil pump, further inspection of all of the engine components is necessary.

cardiagn.com

Oil Filter Adapter Disassemble

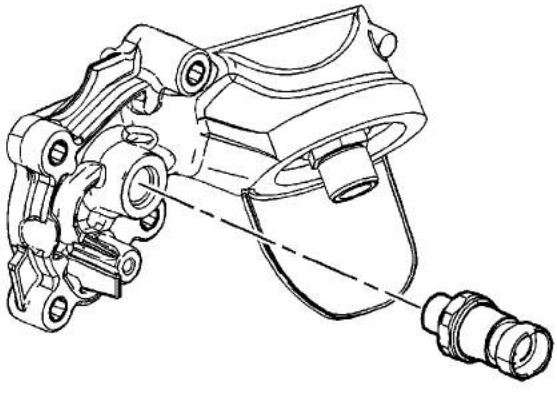

1. Remove the oil pressure sender.

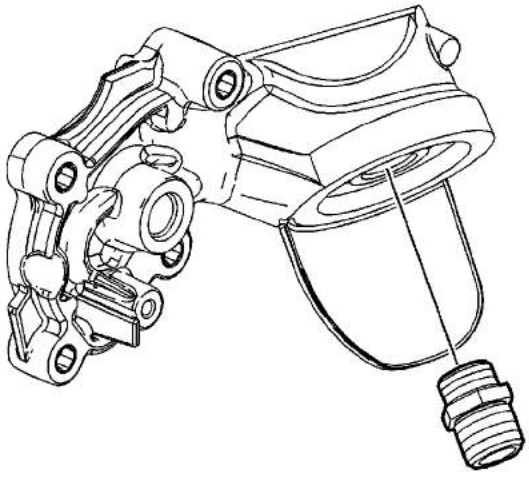

2. Remove the oil filter fitting.

cardiagn.com

Oil Filter Adapter Cleaning and Inspection

Cleaning Procedure

1. Clean the oil filter adapter components with non-corrosive solvent.

   Warning: Refer to Safety Glasses Warning in the Preface section.

2. Dry the oil filter adapter components with compressed air.

Inspection Procedure

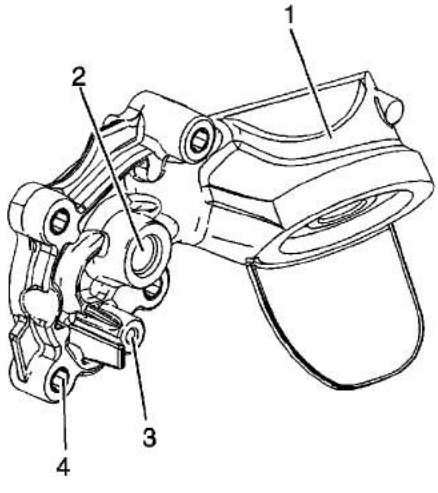

Note: The internal parts of the oil filter adapter housing are not serviced separately. If wear or damage is noted, replace the entire oil filter adapter assembly.

1. Inspect the oil filter adapter housing for cracks, casting imperfections or damage (1).
2. Inspect the threads for the oil pressure sender (2) or the bracket (3) for damage.
3. Inspect the mounting holes (4) for damage.

cardiagn.com

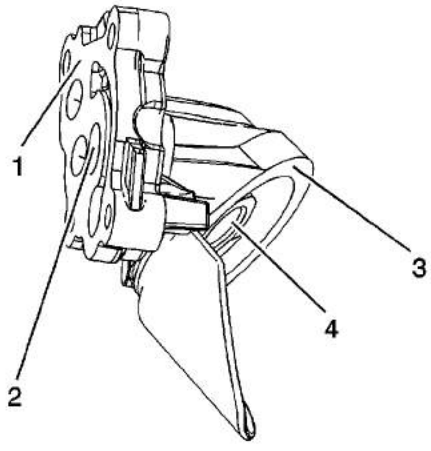

4. Inspect the oil filter adapter housing gasket sealing surface (1) for damage.
5. Inspect the oil filter adapter housing passages (2) for damage or blockage.
6. Inspect the oil filter sealing surface (3) for damage.
7. Inspect the threads for the oil filter fitting (4) for damage.
8. Inspect the oil filter bypass valve (5) for damage or blockage.
9. Repair or replace the oil filter adapter housing as necessary.

cardiagn.com

Oil Filter Adapter Assemble

Caution: Refer to Fastener Caution in the Preface section.

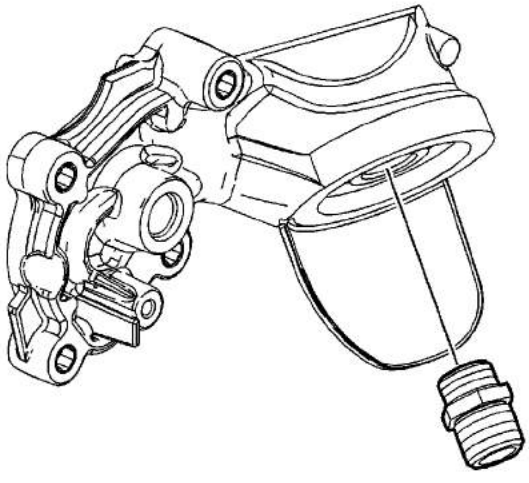

1. Install the oil filter fitting and tighen to **50 N·m (37 lb ft)**.

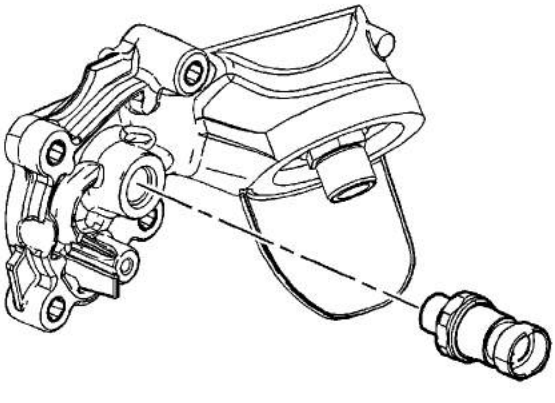

2. Install the oil pressure sender and tighten to **20 N·m (15 lb ft)**.

cardiagn.com

Oil Pan Disassemble

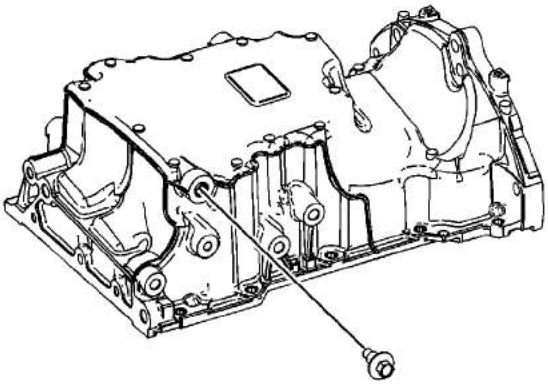

1. Remove the oil pan drain plug.

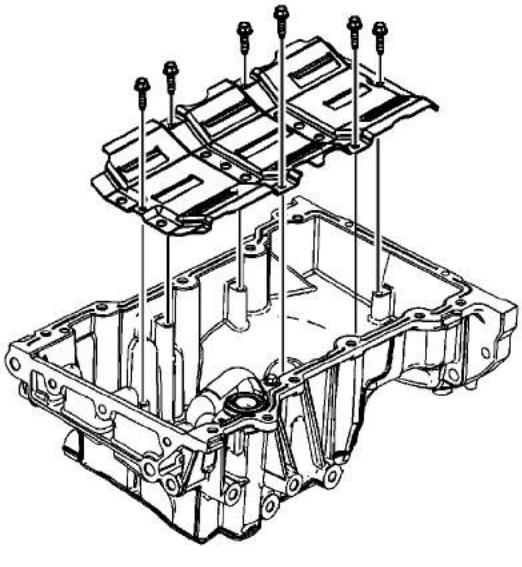

2. Remove the oil pan scraper bolts.
3. Remove the oil pan scraper.

cardiagn.com

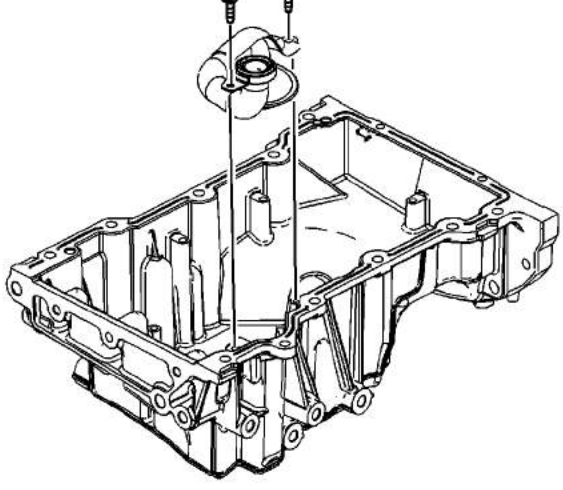

4. Remove the oil suction pipe bolts.
5. Remove the oil suction pipe.

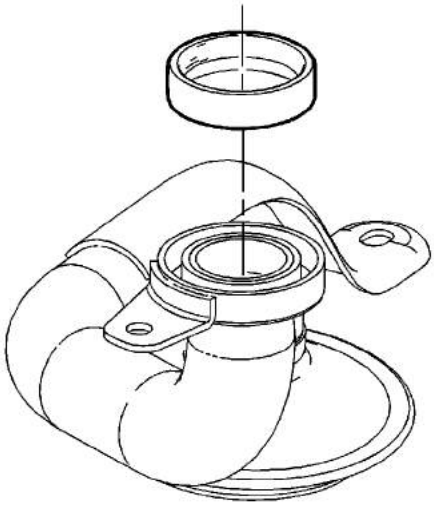

6. Remove the oil suction tube seal from the oil suction tube. Discard the oil suction tube seal.

cardiagn.com

Oil Pan Cleaning and Inspection

Special Tools

J 28410 Gasket Remover

Cleaning Procedure

1. Remove any old thread sealant, gasket material or sealant using *J 28410* remover .
2. Clean the oil pan and oil pan components in solvent.
3. Clean out debris from the bolt holes.

   Warning: Refer to Safety Glasses Warning in the Preface section.

4. Dry the oil pan and oil pan components with compressed air.

Inspection Procedure

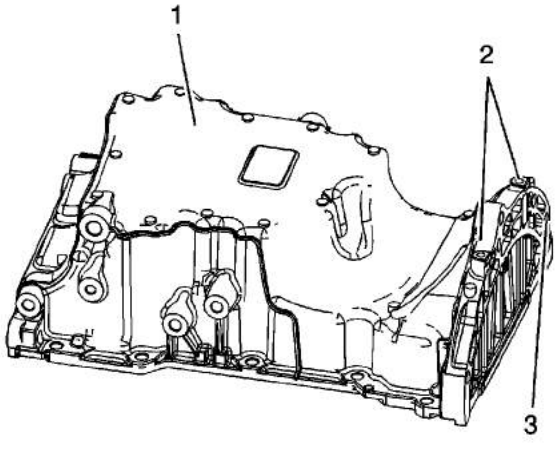

1. Inspect the exterior of the oil pan for the following conditions:
   - Dents, cracks or damage to the exterior (1)
   - Damage to the oil pan mounting holes (2)
   - Damage to the transmission mounting bolt hole threads (3)

cardiagn.com

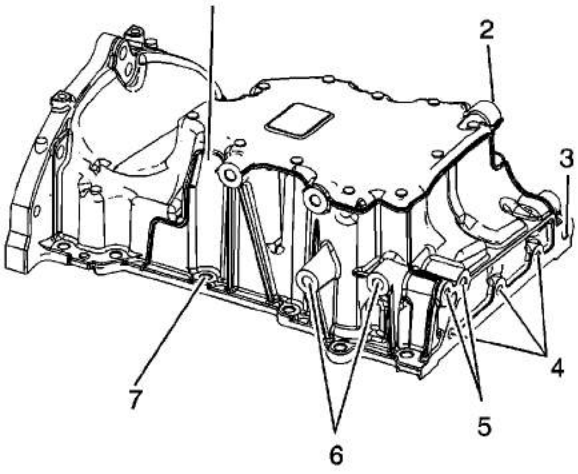

2. Inspect the exterior of the oil pan for the following conditions:
   - Dents, cracks or damage to the exterior (1)
   - Damage to the drain plug hole threads (2)
   - Damage to the transmission brace bolt hole threads (3)
   - Damage to the engine mount brace bolt hole threads (4)
   - Damage to the engine front cover bolt hole threads (5)
   - Damage to the A/C compressor mounting bolt hole threads (6)
   - Damage to the oil pan mounting holes (7)

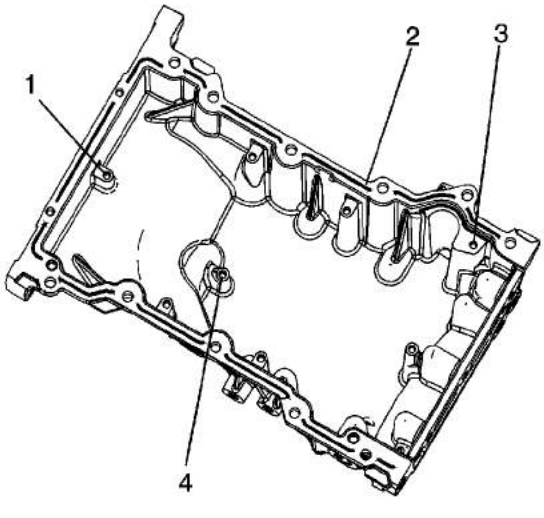

3. Inspect the interior of the oil pan for the following conditions:
   - Damage to the oil pan baffle scraper bolt hole threads (1)

cardiagn.com

- Damage to the oil suction tube mounting upper bracket bolt hole threads (3)
- Damage to the oil suction tube mounting lower bracket bolt hole threads (4)

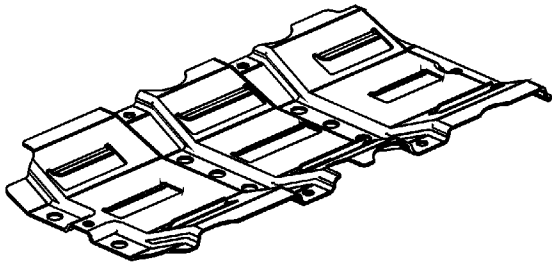

4. Inspect the oil pan baffle scraper for damage.
5. Repair or replace the oil pan and/or oil pan components as necessary.

cardiagn.com

Oil Pump Suction Pipe and Screen Cleaning and Inspection

Cleaning Procedure

1. Clean the oil pump pipe and screen with solvent.

   Warning: Refer to Safety Glasses Warning in the Preface section.

2. Dry the oil pump pipe and screen with compressed air.

Inspection Procedure

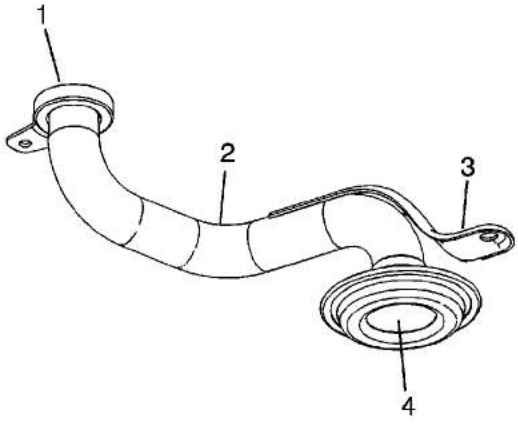

1. Inspect the mounting surface (1) for possible leakage paths.
2. Inspect the oil pump pipe tube (2) for cracks, imperfections and/or damage.
3. Inspect the oil pump pipe support bracket (3) for cracks or damage.
4. Inspect the oil pump screen (4) for blockage, foreign material, tears, cracks and/or damage.

cardiagn.com

Oil Pan Assemble

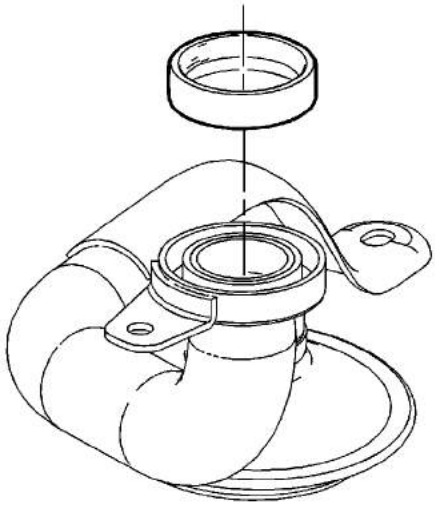

1. Install a NEW oil suction tube seal onto the oil suction tube. DO NOT reuse the old oil suction tube seal.

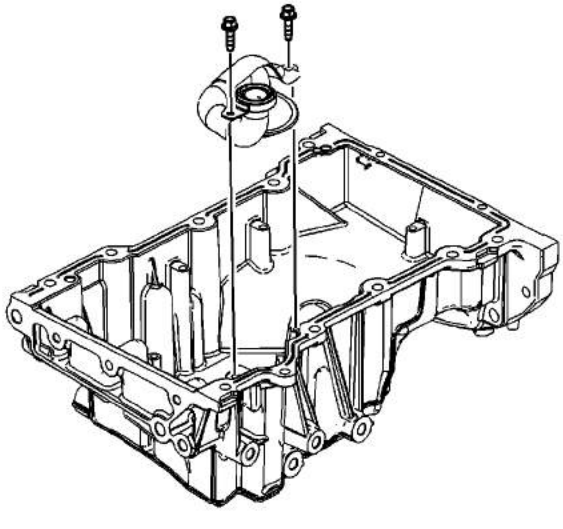

2. Install the oil suction pipe.

   Caution: Refer to Fastener Caution in the Preface section.

3. Install the oil suction pipe bolts and tighten to **10 N·m (89 lb in)**.

cardiagn.com

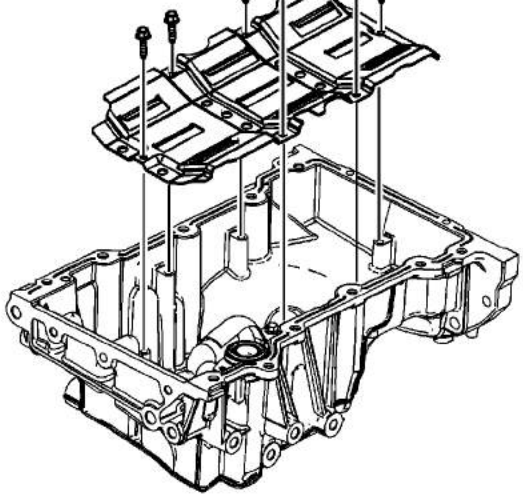

4. Install the oil pan scraper.
5. Install the oil pan scraper bolts and tighten to **10 N·m (89 lb in)**.

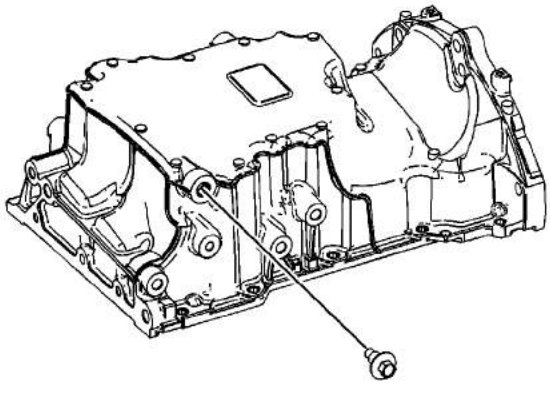

6. Install the oil pan drain plug and NEW O-ring seal and tighten to **20 N·m (15 lb ft)**.

cardiagn.com

Engine Front Cover Disassemble

Tools Required

J 45000 Seal Remover

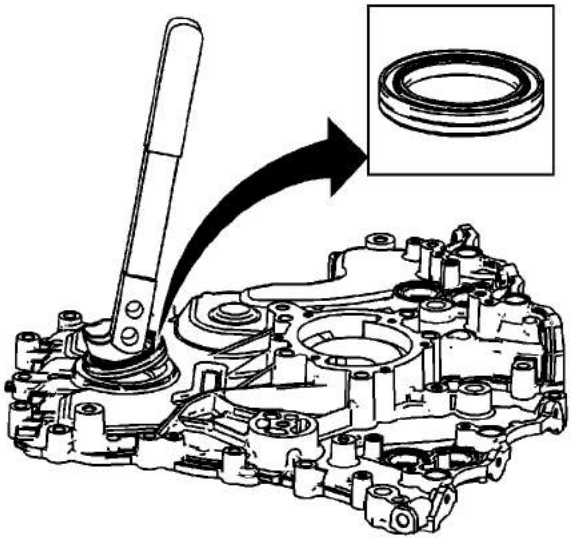

1. Remove the crankshaft front oil seal from the engine front cover using the J 45000 .

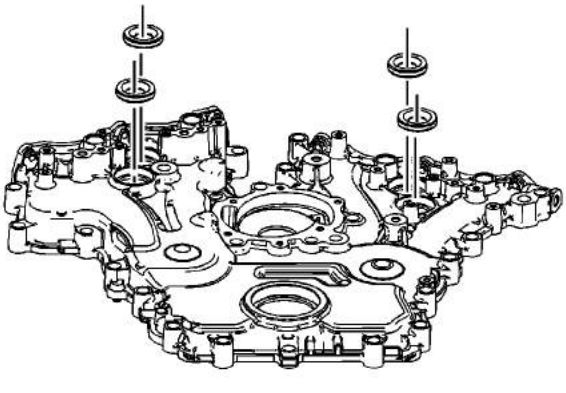

2. Remove the camshaft position actuator valve oil seals from the engine front cover.

cardiagn.com

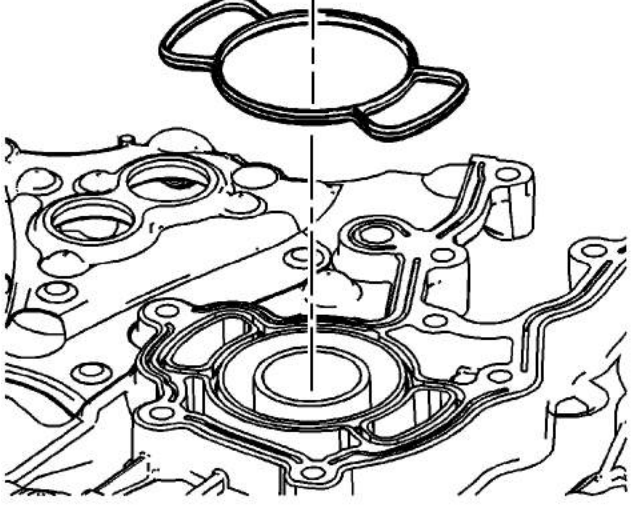

3. Remove the water pump seal from the engine front cover.
4. Discard the water pump seal.

cardiagn.com

Engine Front Cover Cleaning and Inspection

Special Tools

J-28410 Gasket Remover

For equivalent regional tools, refer to Special Tools.

Cleaning Procedure

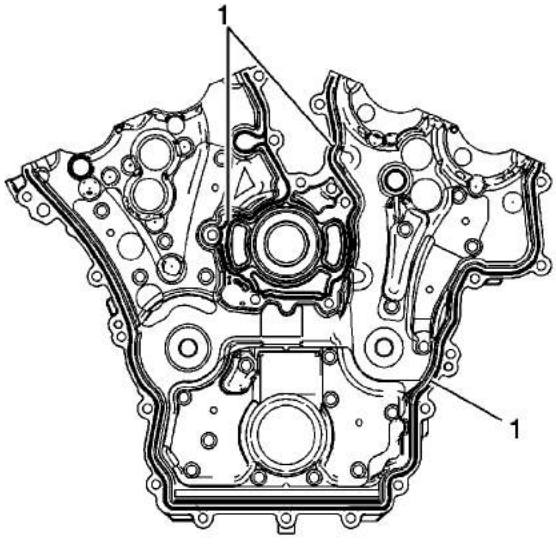

1. Remove any RTV sealant (1) from the engine front cover using *J-28410* remover .
2. Clean out debris from the bolt holes.
3. Clean the engine front cover in solvent.

   Warning: Refer to Safety Glasses Warning in the Preface section.

4. Dry the engine front cover with compressed air.

Inspection Procedure

cardiagn.com

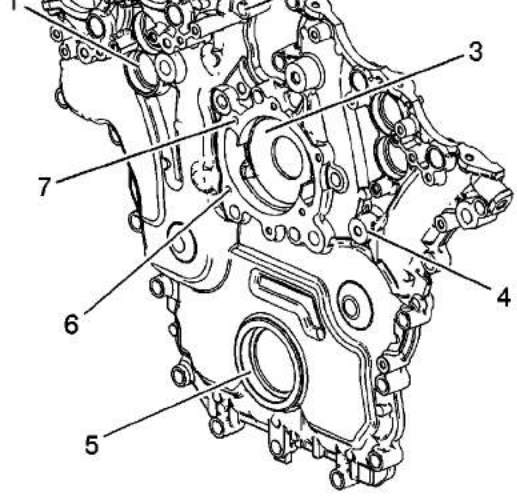

1. Inspect the exterior of the engine front cover for the following conditions:
   - Damage to the camshaft position actuator valve oil seal bores (1)
   - Damage to the engine front cover bolt holes (2)
   - Damage and/or corrosion to the engine coolant passage (3)
   - Dents or damage to the exterior (4)
   - Damage to the crankshaft front oil seal bore (5)
   - Gouges or damage to the water pump sealing surfaces (6)
   - Damage to the water pump bolt hole threads (7)

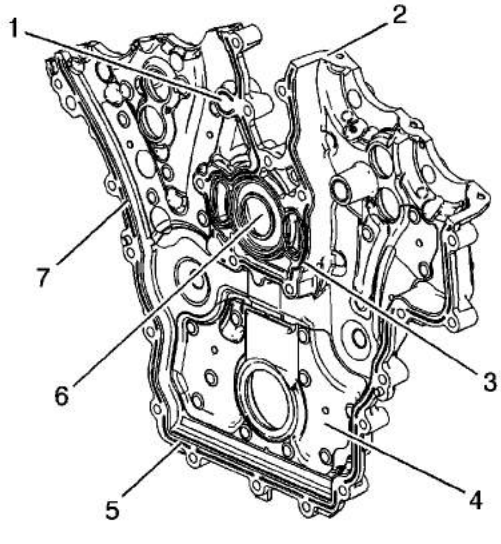

2. Inspect the interior of the engine front cover for the following conditions:
   - Damage to the engine front cover bolt holes (1)

cardiagn.com

- Gouges or damage to the water pump seal area (3)
- Loose or damaged deadener plates (4)
- Damage and/or corrosion to the engine coolant passage (6)
- Damage to the crankshaft front oil seal bore
- Gouges or damage to the O-ring sealing areas

3. Repair or replace the engine front cover as necessary.

cardiagn.com

Engine Front Cover Assemble

Special Tools

- EN-46103 Camshaft Actuator Valve Seal Remover/Installer
- J 29184 Output Shaft Seal Installer

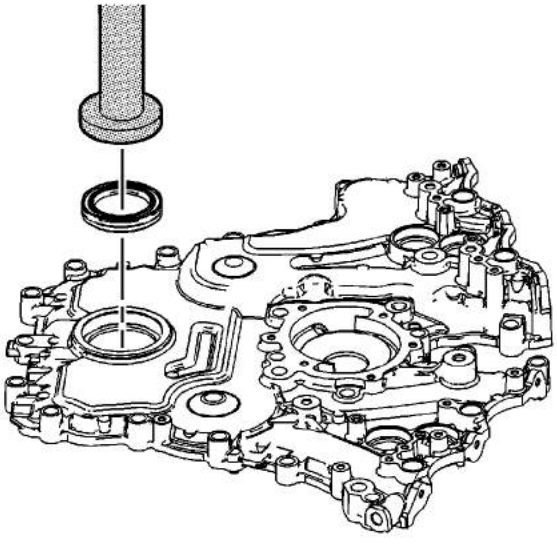

Important: Do not lubricate the crankshaft front oil seal or crankshaft balancer sealing surfaces. The crankshaft balancer is installed into a dry seal.

1. Install the NEW crankshaft front oil seal into the engine front cover using the J 29184 .

cardiagn.com

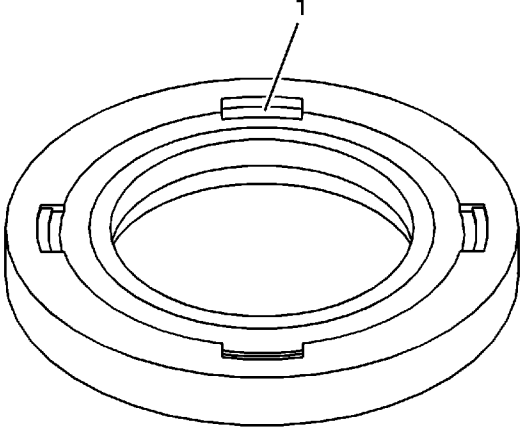

2. Place the seal into position with the notches (1) in the seal down. The notches (1) will face inboard when properly installed.

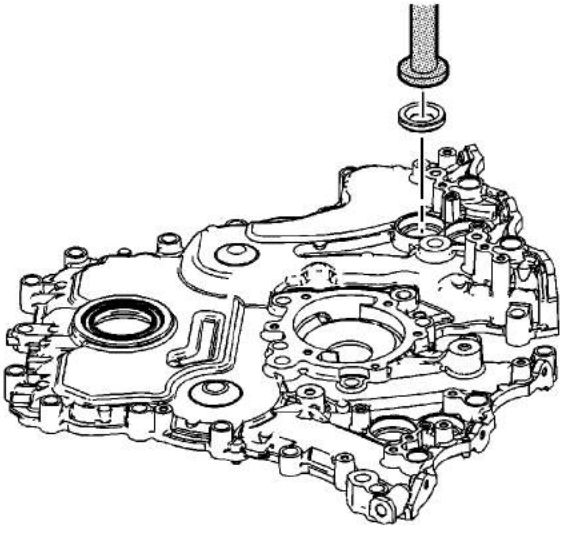

3. Install the NEW camshaft position actuator valve oil seals into the engine front cover using the EN-46103 .

cardiagn.com

Camshaft Cover Disassemble

Left Camshaft Cover

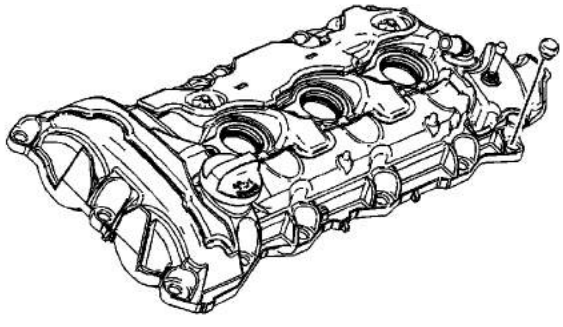

1. Remove and discard the left camshaft cover bolt insulators.

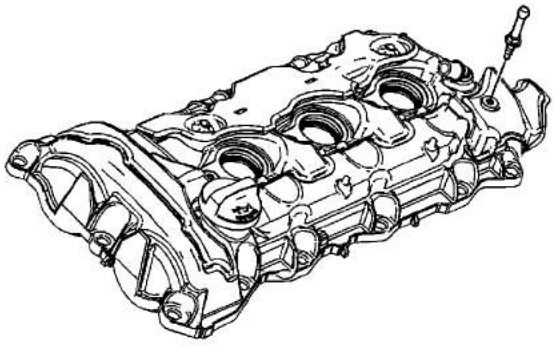

2. Remove the fuel injector sight shield ballstud.

cardiagn.com

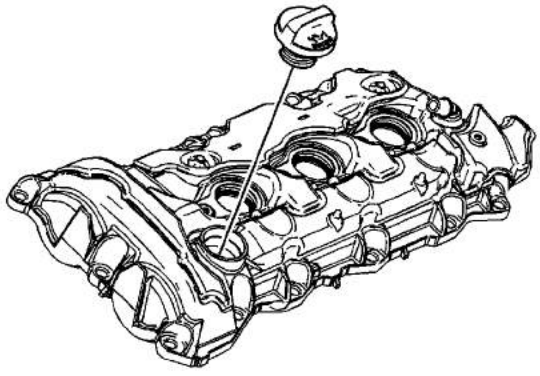

3. Remove the oil fill cap.

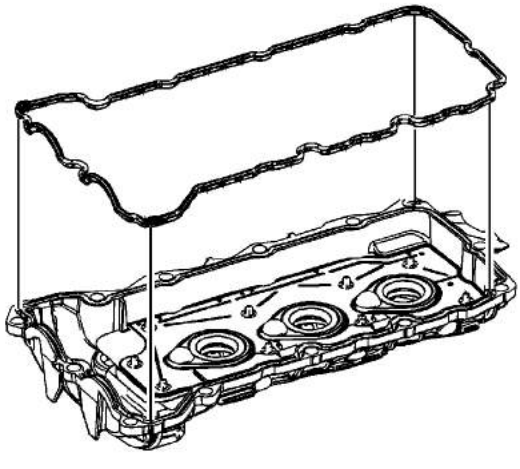

Important: Do not reuse the camshaft cover gasket and spark plug shield tube seals.

4. Remove and discard the left camshaft cover gasket.

cardiagn.com

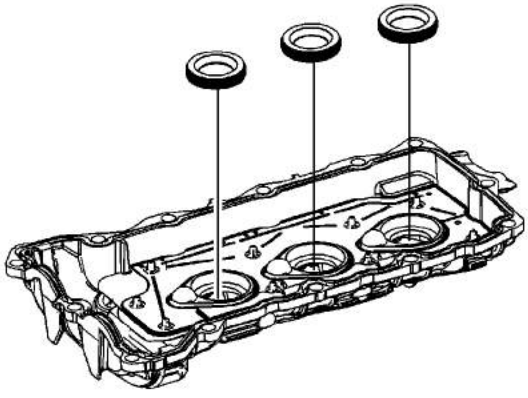

5. Remove and discard the left spark plug shield tube seals.

Right Camshaft Cover

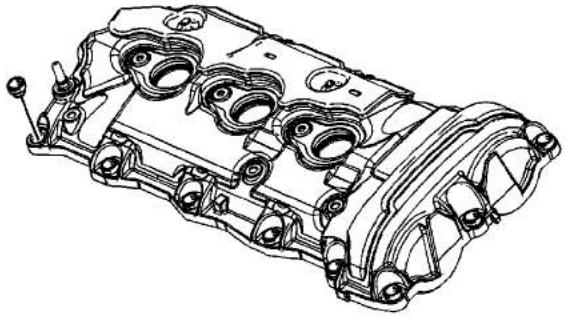

1. Remove and discard the right camshaft cover bolt insulators.

cardiagn.com

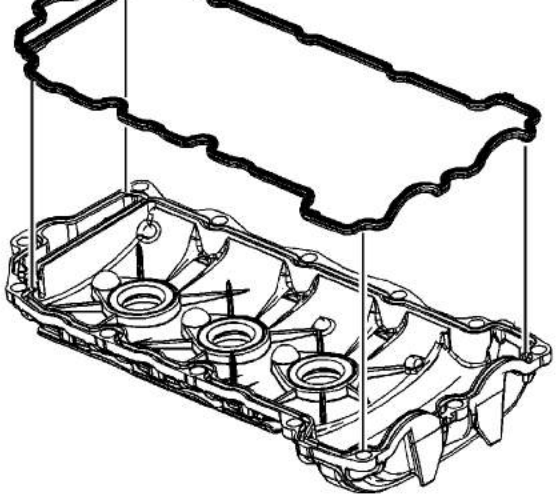

Important: Do not reuse the camshaft cover gasket and spark plug shield tube seals.

2. Remove and discard the right camshaft cover gasket.

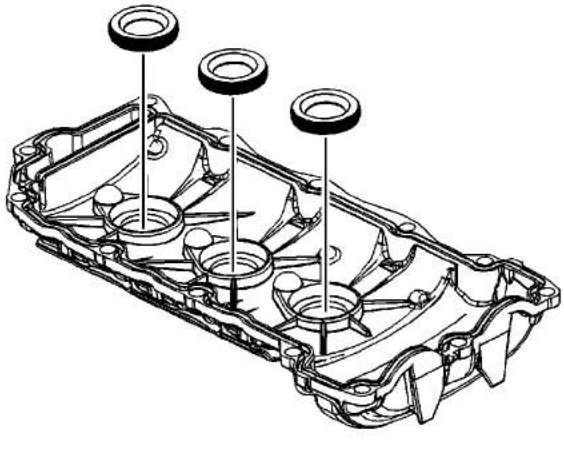

3. Remove and discard the right spark plug shield tube seals.

cardiagn.com

Camshaft Cover Cleaning and Inspection

Cleaning Procedure

1. Clean the camshaft covers in solvent.

   Warning: Refer to Safety Glasses Warning in the Preface section.

2. Dry the camshaft covers with compressed air.

Inspection Procedure

1. Inspect each camshaft cover for the dents or damage to the exterior. A dented or damaged camshaft cover may:
   - Leak engine oil
   - Effect crankcase ventilation
   - Interfere with the camshafts
   - Interfere with the ignition coil sealing
   - Allow water or condensation to enter the engine

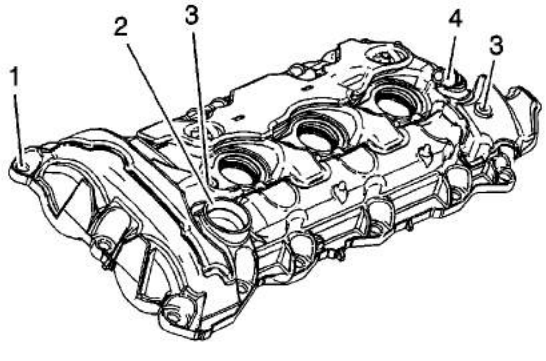

2. Inspect the exterior of the left camshaft cover for the following conditions:
   - Damage to the camshaft cover bolt holes (1)
   - Damage to the oil fill hole (2)
   - Damage to the mounting holes (3) for the ignition coil assembly and fuel injector sight shield ballstud.
   - Damage to the positive crankcase ventilation (PCV) hose connector (4) -- A damaged PCV

cardiagn.com

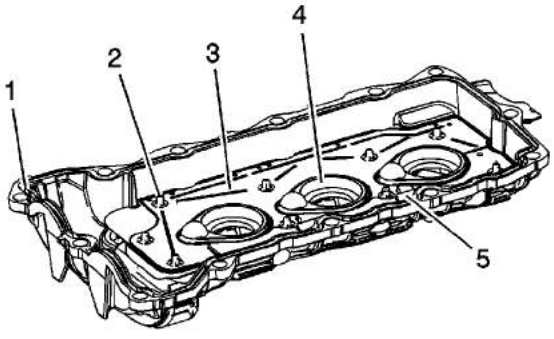

3. Inspect the interior of the left camshaft cover for the following conditions:
   - Gouges or damage to the camshaft cover sealing groove (1)
   - Damaged, loose or missing baffle fasteners (2)
   - Damaged, loose or missing baffle (3)
   - Gouges or damage to the spark plug shield seal bore (4)
   - Restrictions to the ventilation system (5)

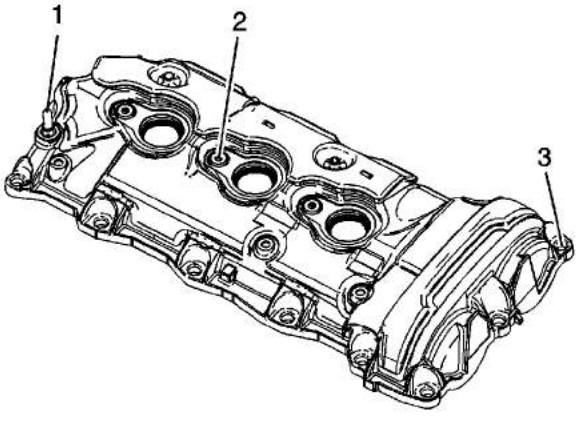

4. Inspect the exterior of the right camshaft cover for the following conditions:
   - Damage to the PCV orifice (1) -- A damaged PCV orifice can be replaced. Refer to PCV

cardiagn.com

- Damage to the mounting holes (2) for the ignition coil assembly
- Damage to the camshaft cover bolt holes (3)

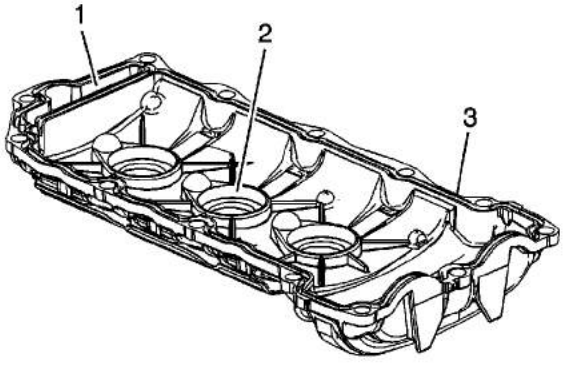

5. Inspect the interior of the right camshaft cover for the following conditions:
   - Restrictions to the ventilation system (1)
   - Gouges or damage to the spark plug shield seal bore (2)
   - Gouges or damage to the camshaft cover sealing groove (3)
6. Repair or replace the camshaft cover or covers as necessary.

PCV Orifice Replacement

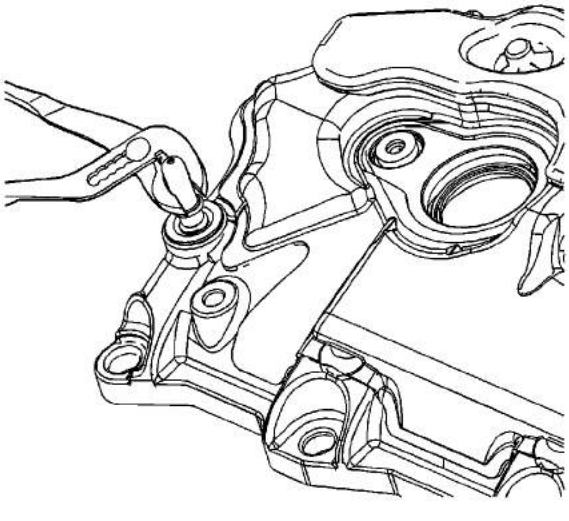

cardiagn.com

Note: If the PCV orifice is damaged or plugged and cannot be cleaned out, the PCV orifice can be replaced.

1. Remove the old PCV orifice by griping the neck of the orifice with pliers and twisting and pulling out of the right camshaft cover.

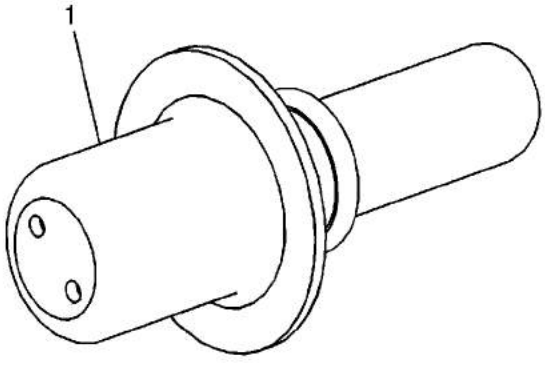

2. Apply sealant GM P/N 12378521 (Canadian P/N 88901148) or equivalent to the NEW PCV orifice (1).

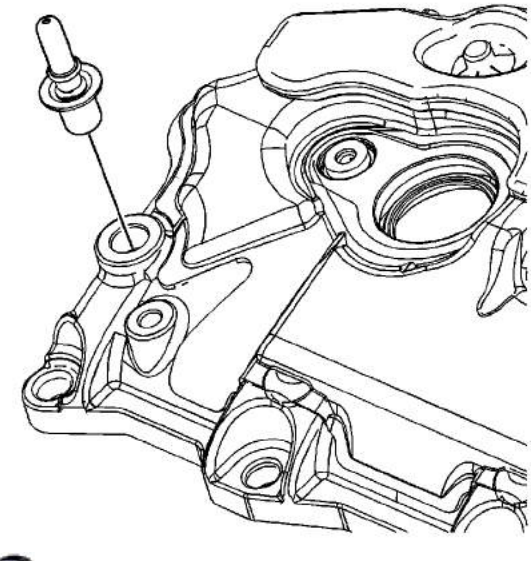

3. Install the NEW PCV orifice into the right camshaft cover. After insertion, twist the PCV orifice in order to eliminate any vertical leak paths in the sealant.

cardiagn.com

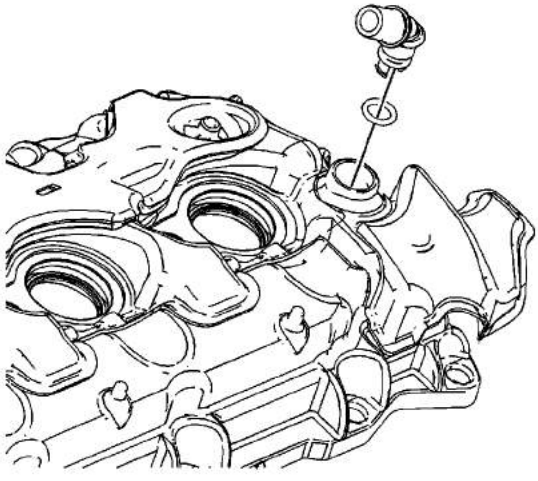

Note: If the PCV fitting is damaged or plugged and cannot be cleaned out, the PCV fitting can be replaced.

1. Remove the old PCV fitting.
2. Install the new PCV fitting with a NEW O-ring.

cardiagn.com

Camshaft Cover Assemble

Special Tools

- *J 5590* Bearing and Seal Driver
- *J-25254-A* Oil Seal Installer

  For equivalent regional tools, refer to Special Tools.

Left Camshaft Cover

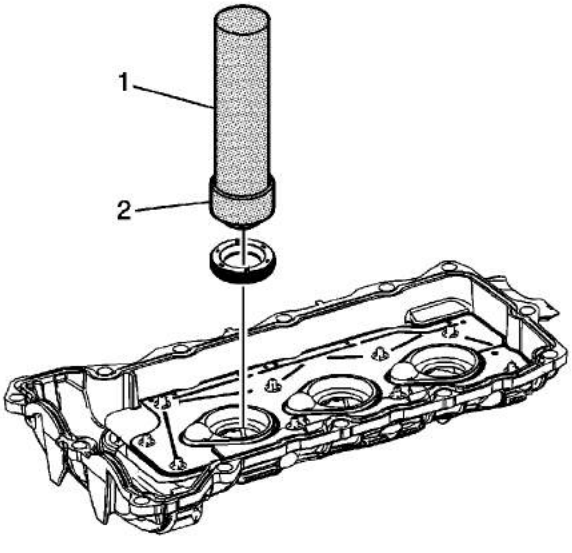

1. Install the NEW left spark plug shield tube seals using the *J 5590* driver (1) and *J-25254-A* installer (2).

cardiagn.com

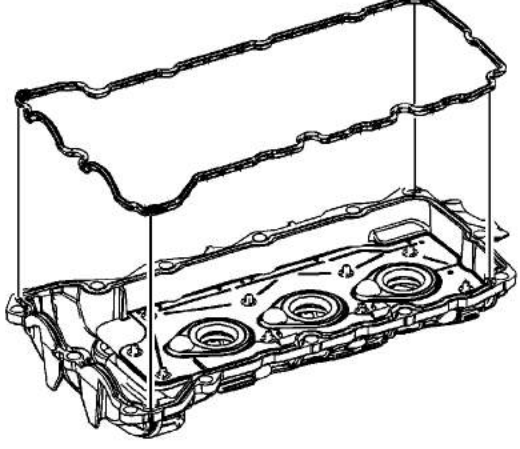

2. Install the NEW left camshaft cover gasket.

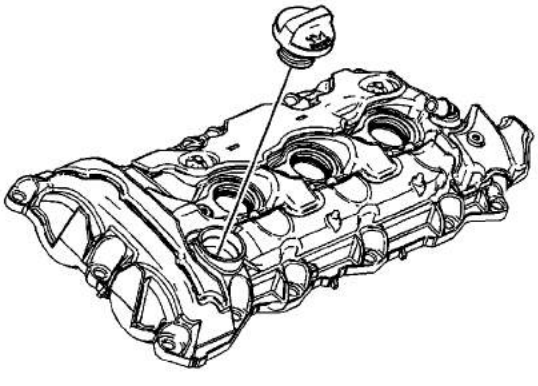

3. Install the oil fill cap.

Caution: Refer to Fastener Caution in the Preface section.

cardiagn.com

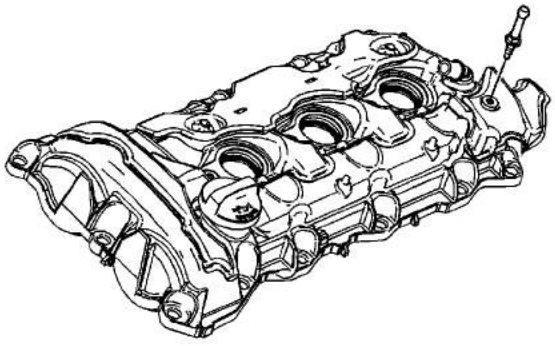

4. Install the fuel injector sight shield cover ballstud and tighten to **10 N·m (89 lb in)**.

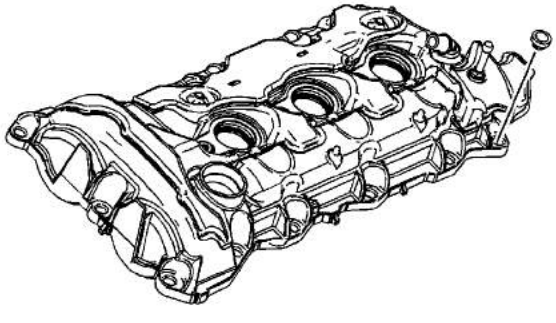

Note: The camshaft cover bolt insulator must be installed into the camshaft cover bolt hole before installing the camshaft cover bolt.

5. Install the NEW left camshaft cover bolt insulators.

Right Camshaft Cover

cardiagn.com

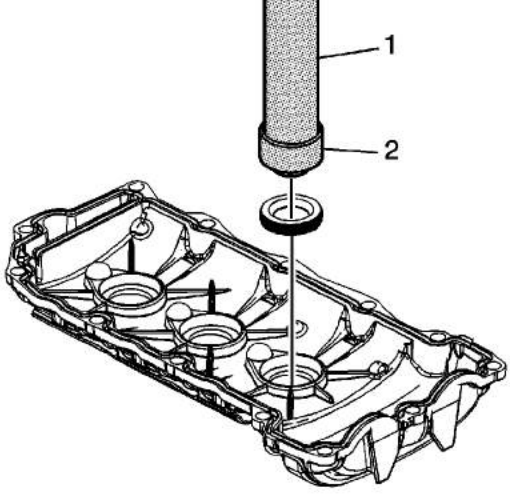

1. Install the NEW right spark plug shield tube coil seals using the *J 5590* driver (1) and *J-25254-A* installer (2).

2. Install the NEW right camshaft cover gasket.

cardiagn.com

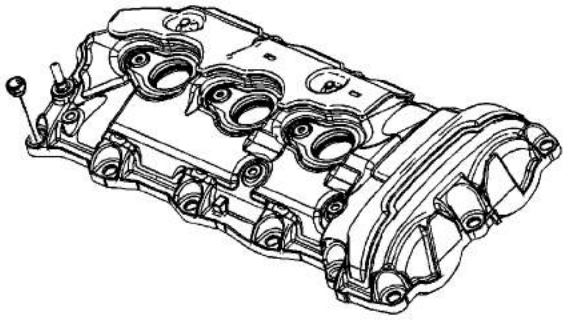

Note: The camshaft cover bolt insulator must be installed into the camshaft cover bolt hole before installing the camshaft cover bolt.

3. Install the NEW right camshaft cover bolt insulators.

cardiagn.com

Intake Manifold Disassemble (LCS)

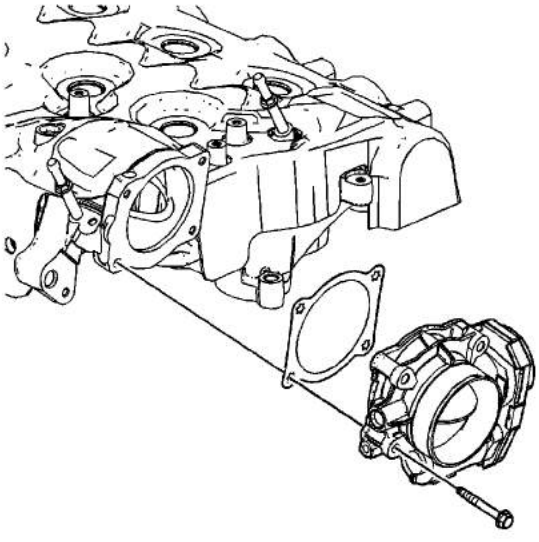

1. Remove the throttle body bolts.
2. Remove the throttle body.
3. Remove and discard the throttle body gasket.

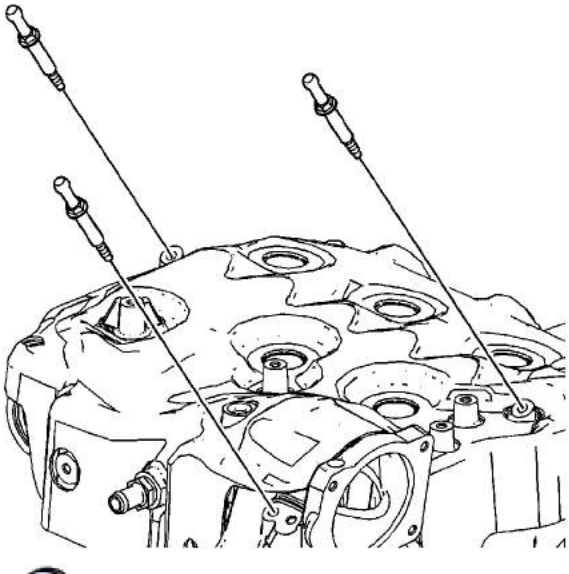

4. Remove the sight shield ball studs.

cardiagn.com

Upper to Lower Intake Manifold Disassemble Procedure

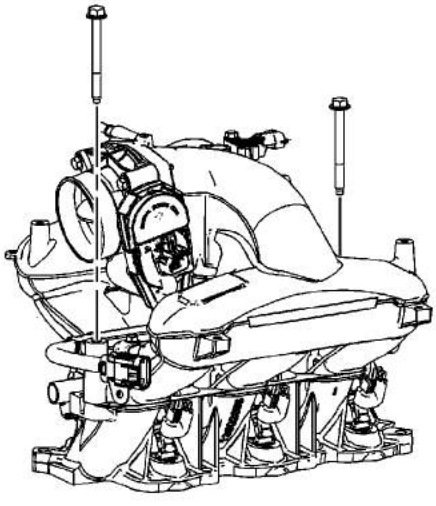

Important: Do not reuse the upper-to-lower intake manifold gasket and the intake manifold-to-cylinder head sealing gaskets.

1. Remove the upper-to-lower intake manifold bolts.

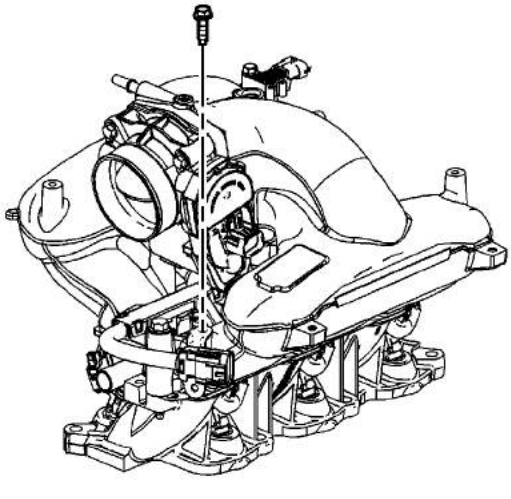

cardiagn.com

2. Remove the fuel injector wiring harness bracket bolt from the upper intake manifold.

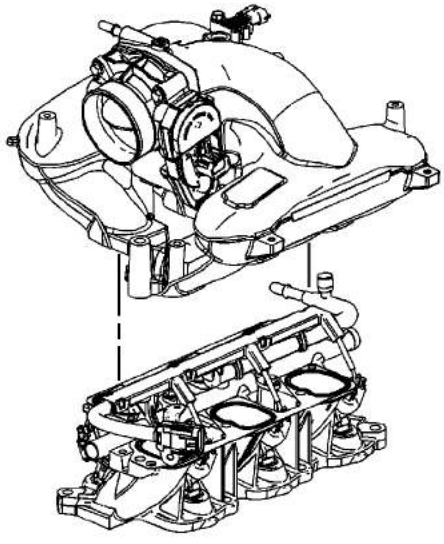

3. Remove the upper intake manifold from the lower intake manifold.

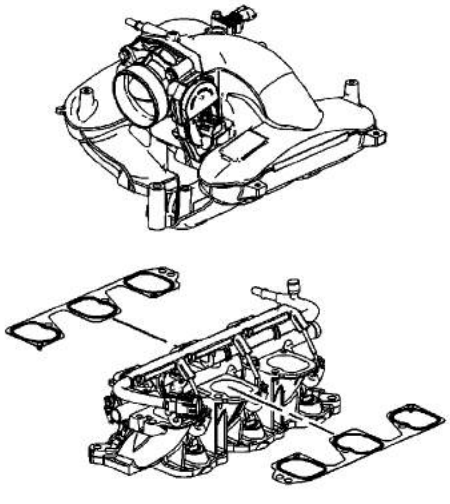

4. Remove and discard the upper-to-lower intake manifold gaskets.

Upper Intake Manifold Disassemble Procedure

cardiagn.com

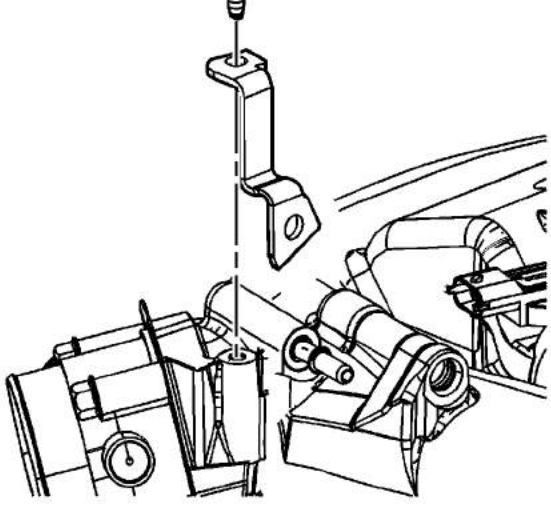

1. Remove the fuel rail support bracket bolt.
2. Remove the fuel rail support bracket.

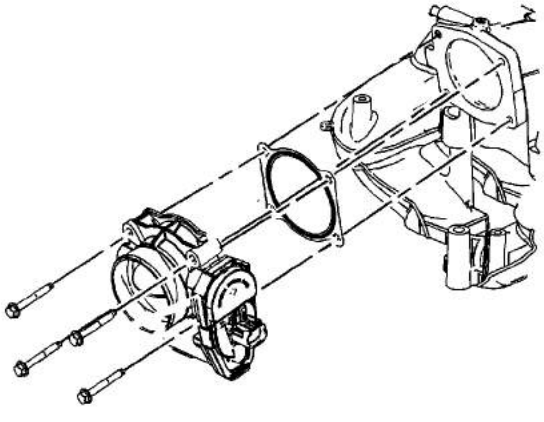

3. Remove the throttle body bolts.
4. Remove the throttle body.
5. Remove and discard the throttle body gasket.

cardiagn.com

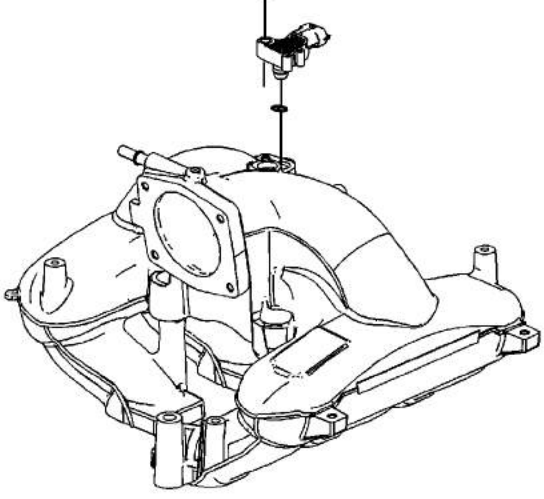

6. Remove the barometric pressure (BARO) sensor bolt.
7. Remove the BARO sensor.

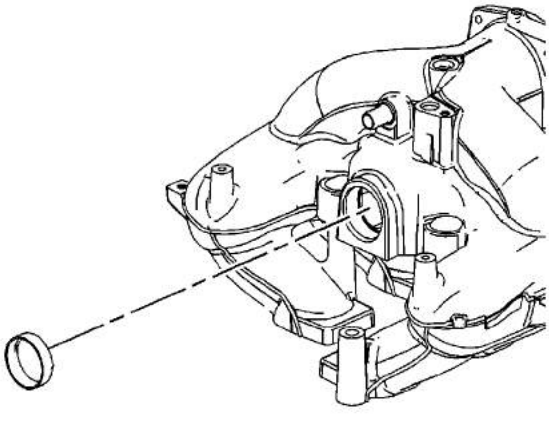

8. Remove the intake manifold opening cover bolts.
9. Remove the intake manifold opening cover.

Lower Intake Manifold Disassemble Procedure

cardiagn.com

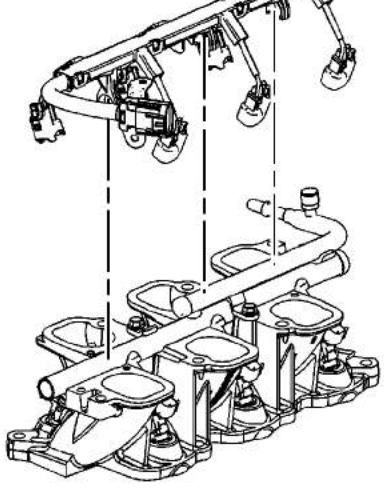

1. Remove the fuel injector wiring harness.

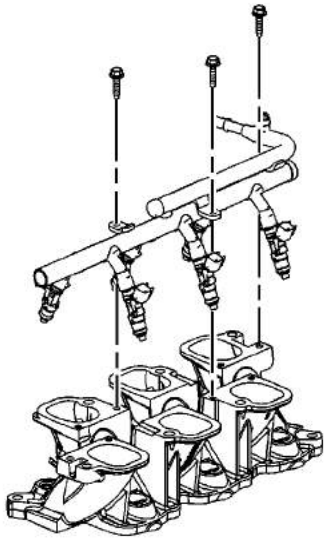

2. Remove the fuel injector rail bolts.
3. Remove the fuel injector rail.

cardiagn.com

Lower Intake Manifold Assemble Procedure

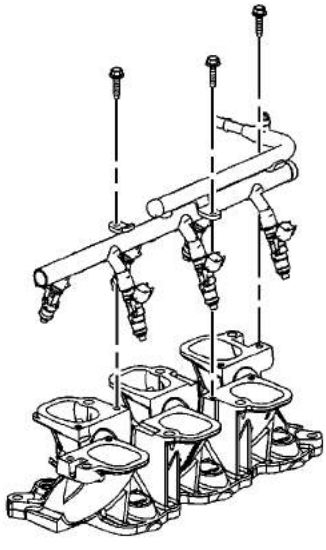

1. Install the fuel injector rail.

   Caution: Refer to Fastener Caution in the Preface section.

2. Install the fuel injector rail bolts and tighten to **10 N·m (89 lb in)**.

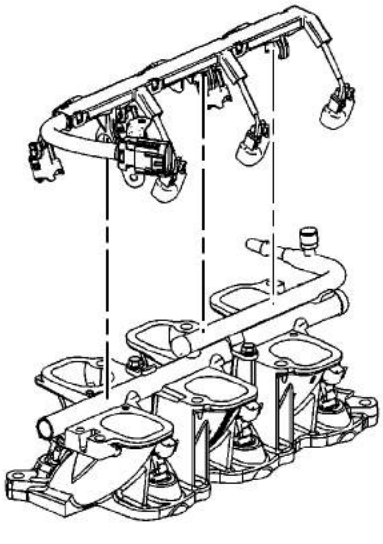

cardiagn.com

3. Install the fuel injector wiring harness connector.

Upper Intake Manifold Assemble Procedure

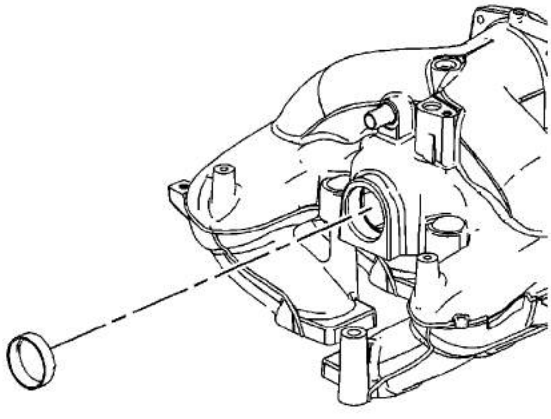

1. Install the intake manifold opening cover.
2. Install the intake manifold opening cover bolts and tighten to **10 N·m (89 lb in)**.

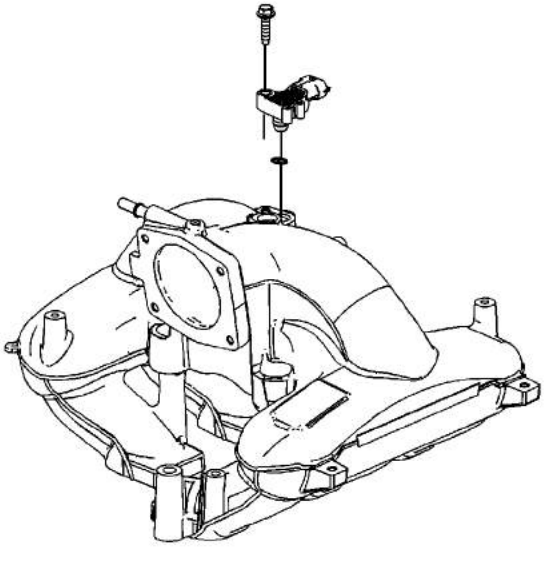

3. Install the barometric pressure (BARO) sensor.
4. Install the BARO sensor bolt and tighten to **10 N·m (89 lb in)**.

cardiagn.com

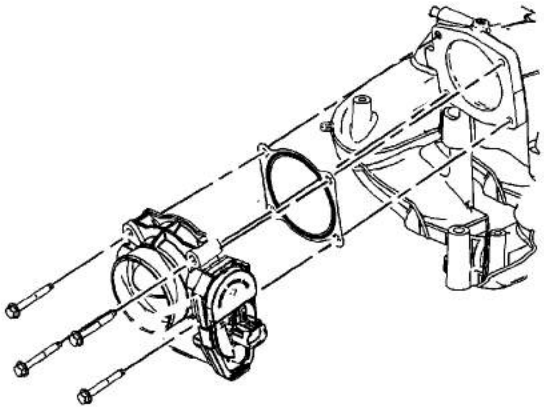

5. Install the NEW throttle body gasket.
6. Install the throttle body.
7. Install the throttle body bolts and tighten to **10 N·m (89 lb in)**.

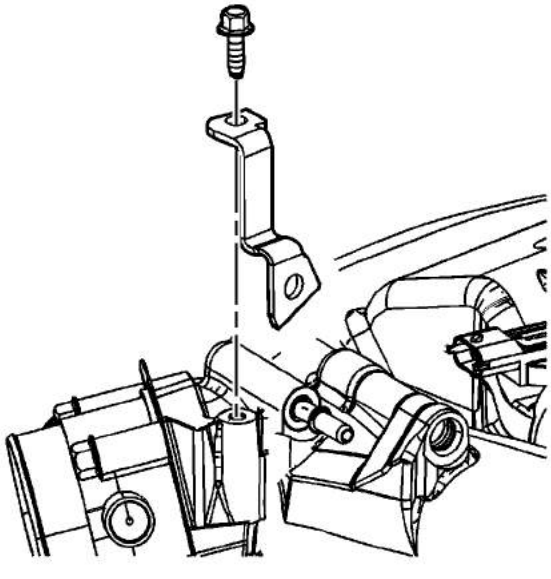

8. Install the fuel rail support bracket.
9. Install the fuel rail support bracket bolt and tighten to **10 N·m (89 lb in)**.

Upper to Lower Intake Manifold Assemble Procedure

cardiagn.com

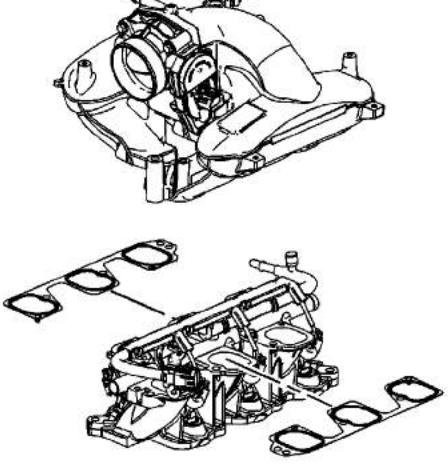

Note: Do not reuse the upper-to-lower intake manifold gasket and the intake manifold-to-cylinder head sealing gaskets.

1. Install the NEW upper-to-lower intake manifold gaskets.

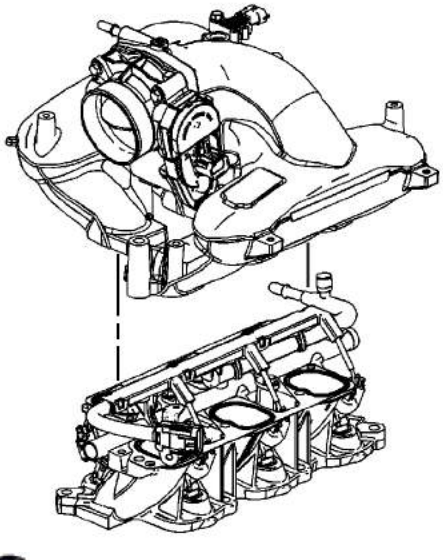

2. Install the upper intake manifold to the lower intake manifold.

cardiagn.com

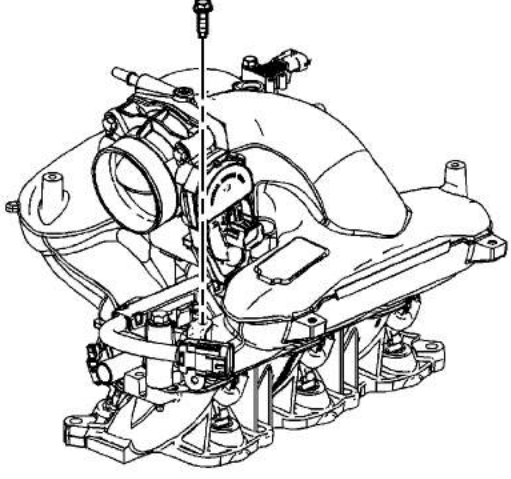

3. Install the fuel injector wiring harness bracket bolts to the upper intake manifold and tighten to **10 N·m (89 lb in)**.

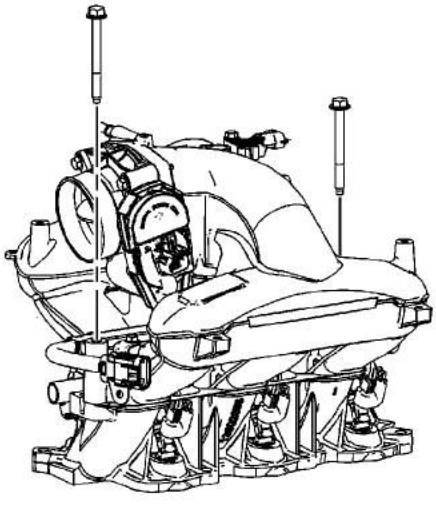

4. Install the upper-to-lower intake manifold bolts and tighten to **23 N·m (17 lb ft)**.

cardiagn.com

Intake Manifold Cleaning and Inspection (LY7)

Upper Intake Manifold Cleaning Procedure

1. Remove any remaining gasket and/or gasket material from the following:
   - Throttle body
   - Intake manifold
2. Clean the following intake manifold areas in solvent.
   - Intake manifold gasket sealing areas
   - Intake manifold passages
   - Brake booster hose passage
   - Evaporative emission (EVAP) solenoid passage
   - Positive crankcase ventilation (PCV) vacuum hose passages
   - Barometric pressure (BARO) sensor passage

   Warning: Refer to Safety Glasses Warning in the Preface section.

3. Dry the upper intake manifold and throttle body with compressed air.

Inspection Procedure

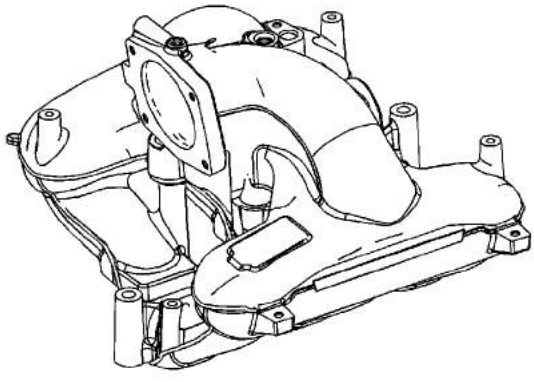

1. Inspect the upper intake manifold for the following conditions:
   - Damage, debris or restrictions to the BARO sensor mounting port
   - Damage, debris or restrictions to the brake vacuum booster hose port

© 2010 General Motors Corporation. All rights reserved.

cardiagn.com

- Damage, debris or restrictions to the PCV system hose ports

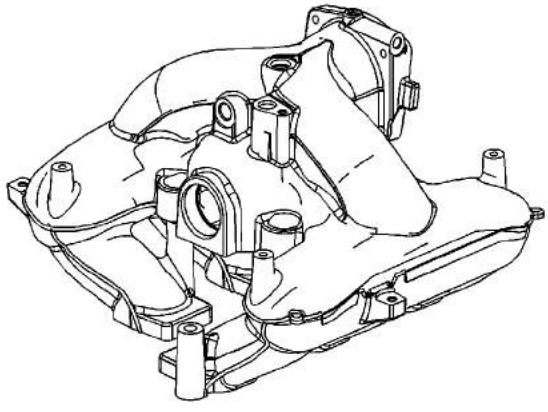

2. Inspect the upper intake manifold for the following conditions:
   - Damage to the intake manifold bolt bosses
   - Damage to the EVAP purge solenoid mounting boss
   - Damage, debris or restrictions to the EVAP purge solenoid port
   - Damage, debris or restrictions in the vacuum passage

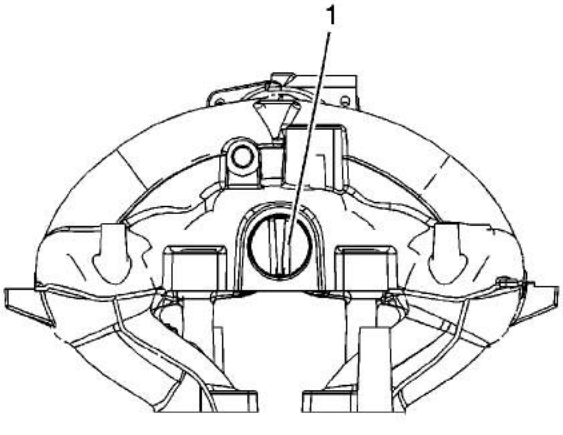

3. Inspect the upper intake manifold for the following conditions:
   - Damage, debris or restrictions to the intake manifold opening cover port (1)

cardiagn.com

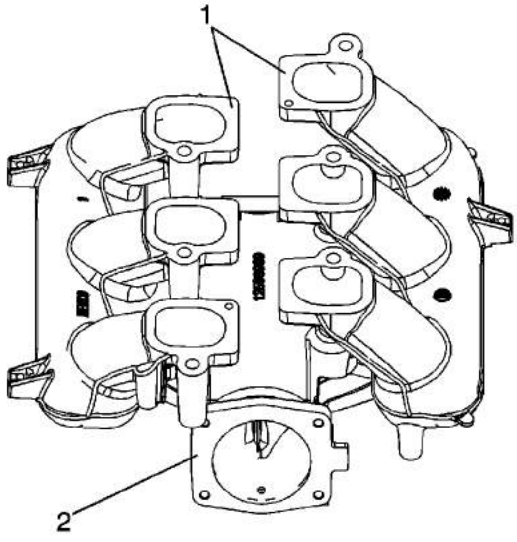

4. Inspect the upper intake manifold for the following conditions:
   - Gouges or damage to the upper intake manifold sealing surfaces (1)
   - Damage to the gasket sealing surface (2) for the throttle body

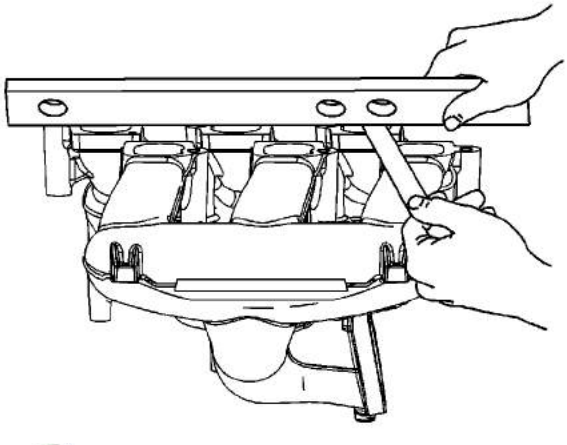

5. Inspect the upper intake manifold sealing surface for warpage.
   5.1. Locate a straight edge across the upper-to-lower intake manifold sealing surface.
   5.2. Insert a feeler gage between the upper intake manifold and the straight edge. An upper intake manifold with warpage in excess of 0.05 mm (0.020 in) must be replaced.
6. Repair or replace the upper intake manifold as necessary.

cardiagn.com

1. Remove any remaining gasket and/or gasket material from the following:
   - Upper-to-lower intake manifold sealing surface
   - Cylinder head-to-lower intake manifold sealing surface
2. Clean the following intake manifold areas in solvent.
   - Intake manifold gasket sealing surfaces
   - Intake manifold passages

   Warning: Refer to Safety Glasses Warning in the Preface section.

3. Dry the intake manifold with compressed air.

Inspection Procedure

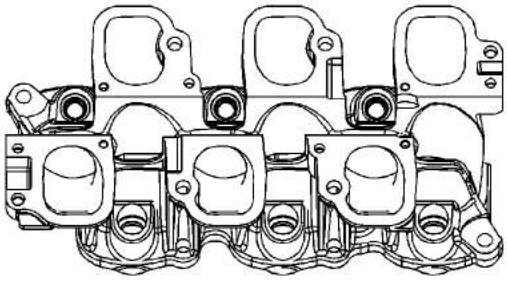

1. Inspect the lower intake manifold for the following conditions:
   - Damage, debris or restrictions to the lower intake manifold ports
   - Damage to the fuel rail mounting bolt holes
   - Damage to the fuel rail

cardiagn.com

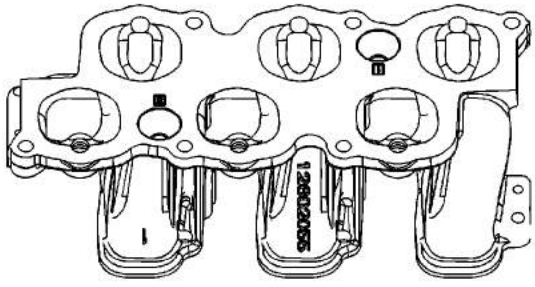

2. Inspect the lower intake manifold for the following conditions:
   - Gouges or damage to the intake manifold sealing surfaces
   - Damage to the lower intake manifold bolt bosses
   - Damage to the fuel injector ports

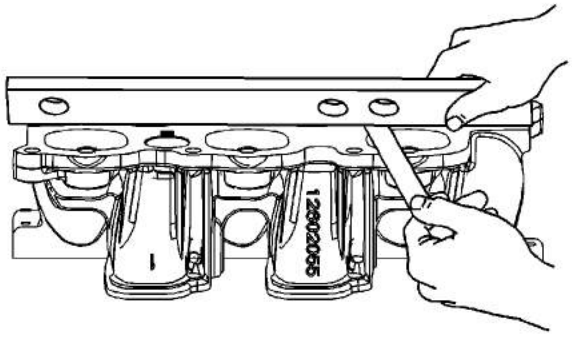

3. Inspect the lower intake manifold sealing surfaces for warpage.
   3.1. Locate a straight edge across the lower intake manifold sealing surfaces.
   3.2. Insert a feeler gage between the lower intake manifold and the straight edge. A lower intake manifold with warpage in excess of 0.5 mm (0.020 in) must be replaced.
4. Repair or replace the lower intake manifold as necessary.

cardiagn.com

Intake Manifold Assemble (LCS)

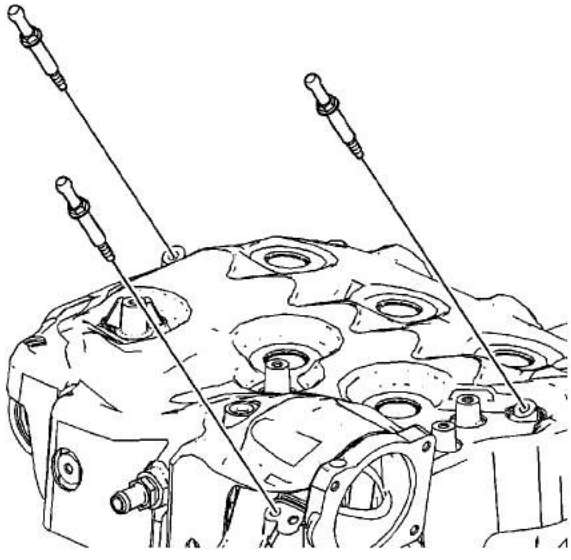

1. Install the sight shield ball studs.

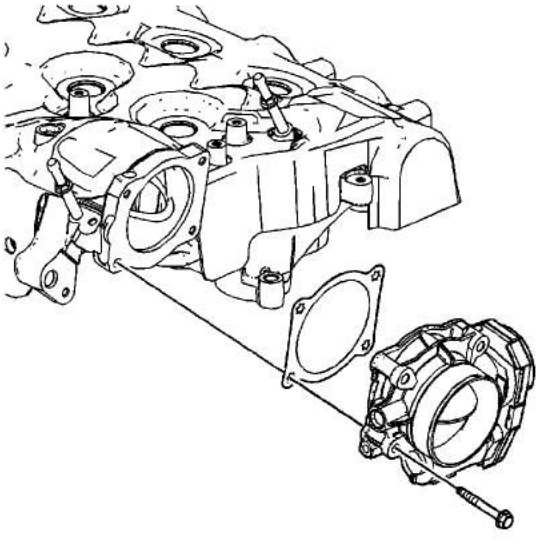

2. Install the NEW throttle body gasket.
3. Install the throttle body.

Caution: Refer to Fastener Caution in the Preface section.

4. Install the throttle body bolts and tighten to **10 N·m (89 lb in)**.

cardiagn.com

Lower Intake Manifold Assemble Procedure

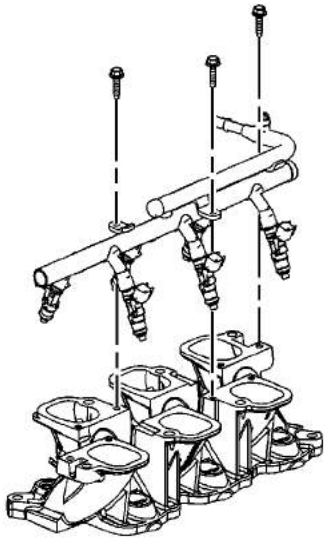

1. Install the fuel injector rail.

   Caution: Refer to Fastener Caution in the Preface section.

2. Install the fuel injector rail bolts and tighten to **10 N·m (89 lb in)**.

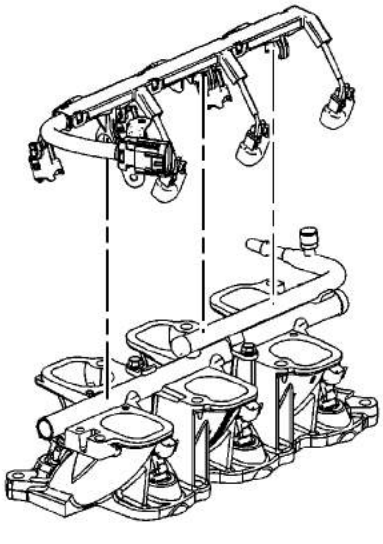

cardiagn.com

3. Install the fuel injector wiring harness connector.

Upper Intake Manifold Assemble Procedure

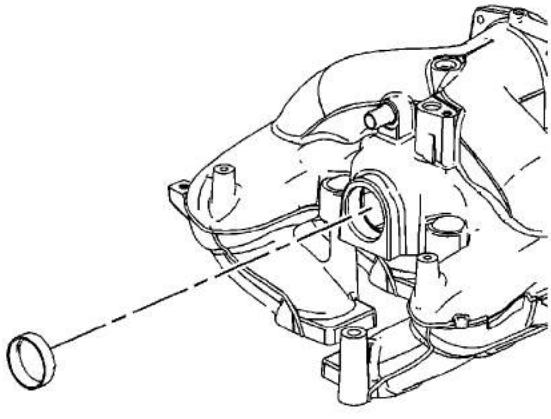

1. Install the intake manifold opening cover.
2. Install the intake manifold opening cover bolts and tighten to **10 N·m (89 lb in)**.

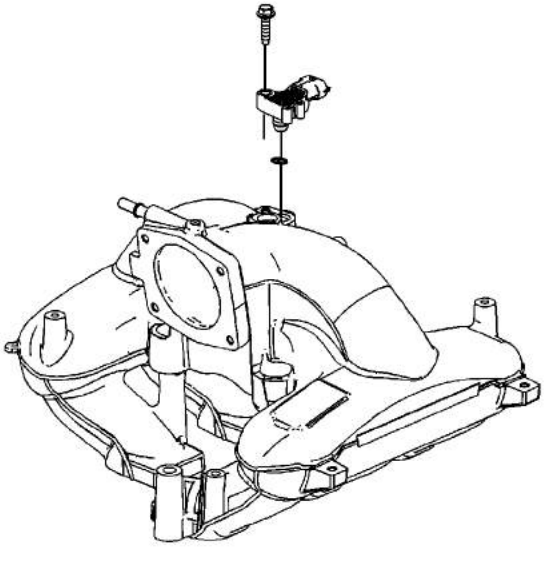

3. Install the barometric pressure (BARO) sensor.
4. Install the BARO sensor bolt and tighten to **10 N·m (89 lb in)**.

cardiagn.com

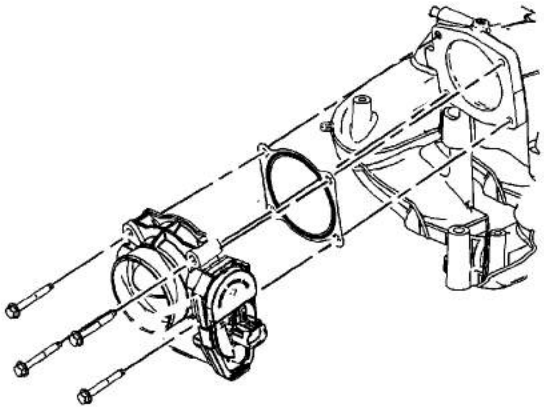

5. Install the NEW throttle body gasket.
6. Install the throttle body.
7. Install the throttle body bolts and tighten to **10 N·m (89 lb in)**.

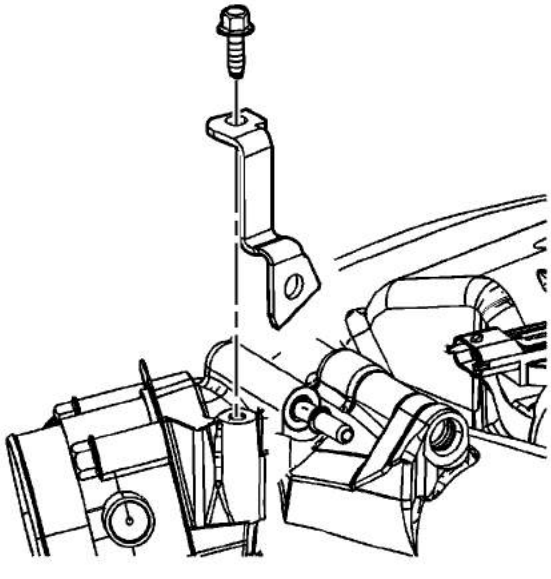

8. Install the fuel rail support bracket.
9. Install the fuel rail support bracket bolt and tighten to **10 N·m (89 lb in)**.

Upper to Lower Intake Manifold Assemble Procedure

cardiagn.com

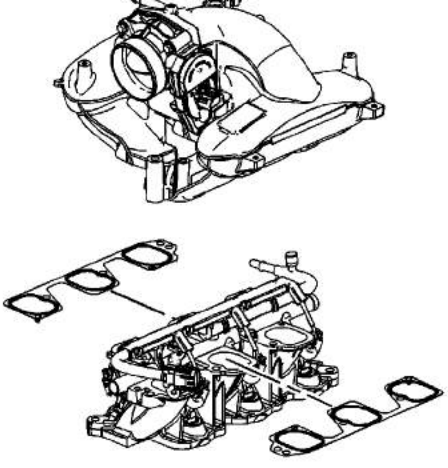

Note: Do not reuse the upper-to-lower intake manifold gasket and the intake manifold-to-cylinder head sealing gaskets.

1. Install the NEW upper-to-lower intake manifold gaskets.

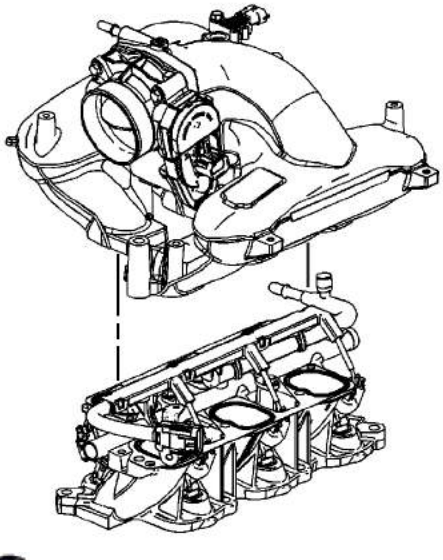

2. Install the upper intake manifold to the lower intake manifold.

cardiagn.com

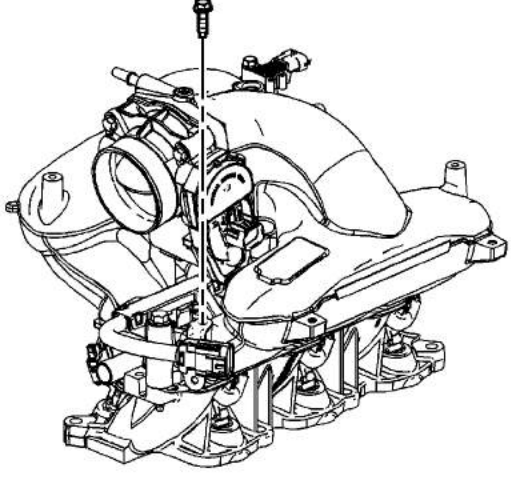

3. Install the fuel injector wiring harness bracket bolts to the upper intake manifold and tighten the fuel injector wiring harness bracket bolts to **10 N·m (89 lb in)**.

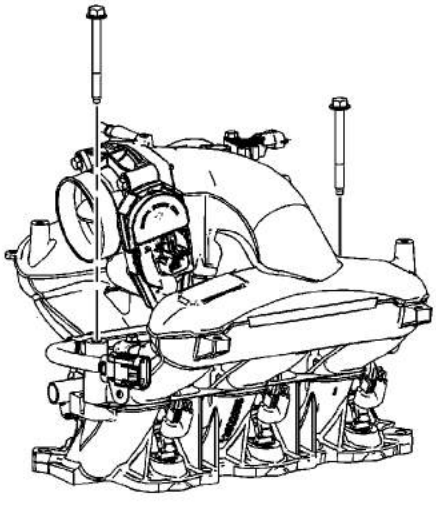

4. Install the upper-to-lower intake manifold bolts and tighten to **23 N·m (17 lb ft)**.

cardiagn.com

Exhaust Manifold Cleaning and Inspection - Left Side

Cleaning Procedure

1. Clean the exhaust manifold in solvent.

   Warning: Refer to Safety Glasses Warning in the Preface section.

2. Dry the exhaust manifold with compressed air.

Inspection Procedure

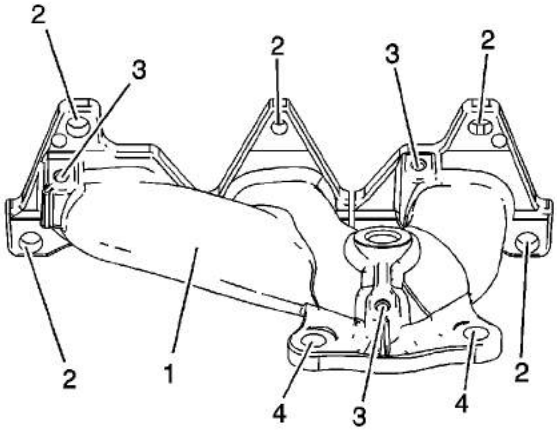

1. Inspect the left exhaust manifold for the following:
   - Damage or excessive corrosion to the exhaust manifold exterior (1)
   - Damage to the exhaust manifold mounting holes (2)
   - Damage to the threaded holes (3) for the heat shield
   - Damage to the exhaust manifold flange bolt holes (4)

cardiagn.com

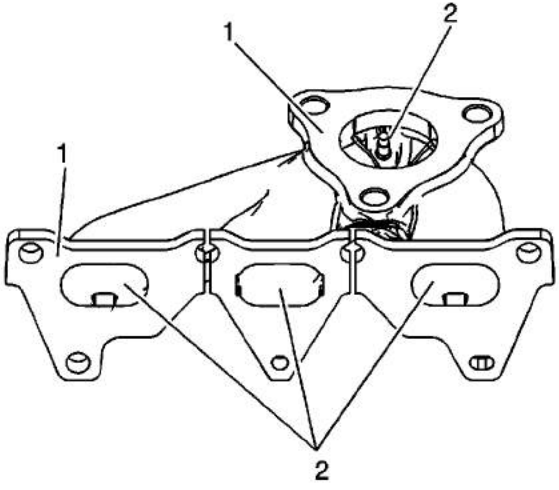

2. Inspect the left exhaust manifold for the following:
   - Damage to the gasket sealing surfaces (1)
   - Damage or restrictions within the exhaust passages (2)
3. Repair or replace the left exhaust manifold and/or components as necessary.

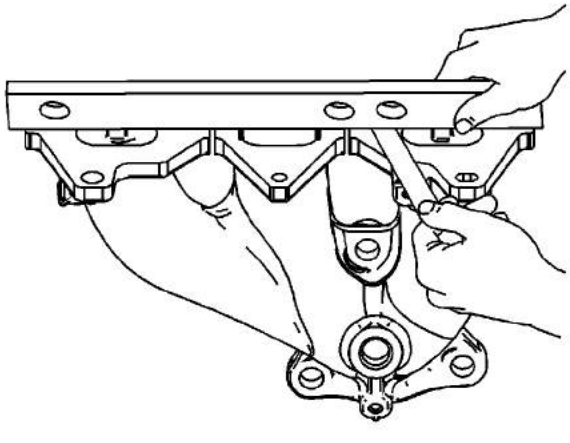

4. Measure the alignment or surface flatness of the exhaust manifold flanges, using a straight edge and a feeler gage. Exhaust manifold surface flatness must not exceed 0.254 mm (0.010 in).
5. If the surface flatness is not within specifications, the exhaust manifold is warped and must be replaced.

cardiagn.com

Exhaust Manifold Cleaning and Inspection - Right Side

Cleaning Procedure

1. Clean the exhaust manifold in solvent.

   Warning: Refer to Safety Glasses Warning in the Preface section.

2. Dry the exhaust manifold with compressed air.

Inspection Procedure

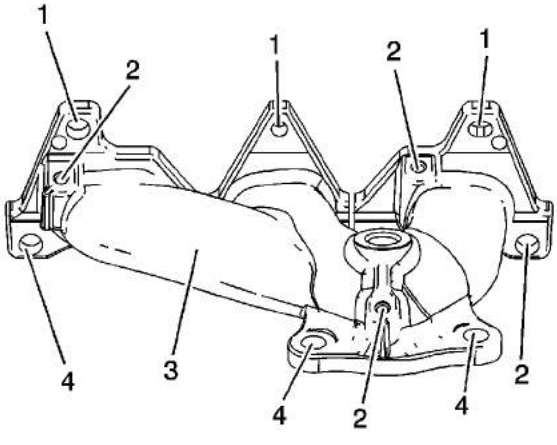

1. Inspect the right exhaust manifold for the following:
   - Damage to the exhaust manifold mounting holes (1)
   - Damage to the threaded holes (2) for the heat shield
   - Damage or excessive corrosion to the exhaust manifold exterior (3)
   - Damage to the exhaust manifold flange bolt holes (4)

cardiagn.com

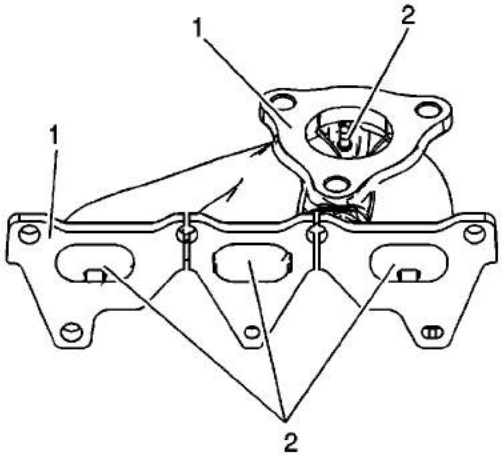

2. Inspect the right exhaust manifold for the following:
   - Damage to the gasket sealing surfaces (1)
   - Damage or restrictions within the exhaust passages (2)
3. Repair or replace the right exhaust manifold and/or components as necessary.

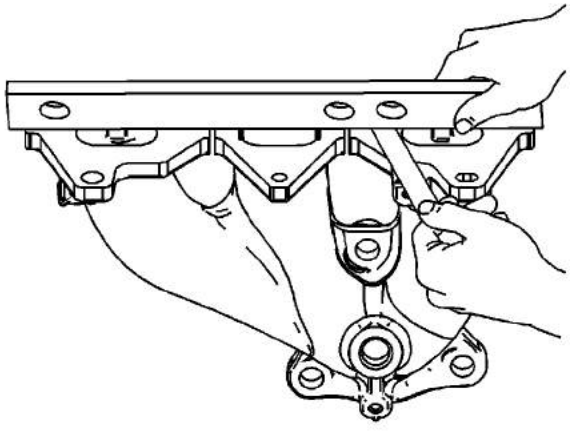

4. Measure the alignment or surface flatness of the exhaust manifold flanges, using a straight edge and a feeler gage. Exhaust manifold surface flatness must not exceed 0.254 mm (0.010 in).
5. If the surface flatness is not within specifications, the exhaust manifold is warped and must be replaced.

cardiagn.com

Water Pump Cleaning and Inspection

Cleaning Procedure

Caution: Do not immerse the water pump in solvent. The solvent may enter the water pump's permanently lubricated bearings and cause premature bearing failure.

1. Remove the old gasket material from the water pump sealing surfaces.
2. Clean all excess dirt and debris from the water pump housing.

Inspection Procedure

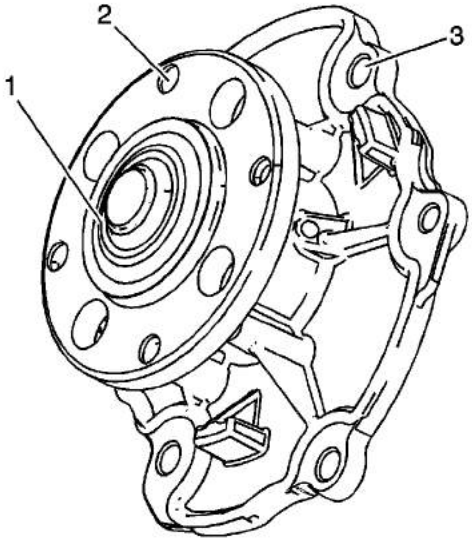

1. Rotate the water pump hub (1). The water pump hub and impeller should turn straight and smoothly. If the hub wobbles, is noisy, or feels rough when rotated, replace the water pump.
2. Inspect the exterior of the water pump for the following:
   - Damage to the water pump hub bolt threads (2) for the water pump pulley
   - Damage to the water pump bolt holes (3)

cardiagn.com

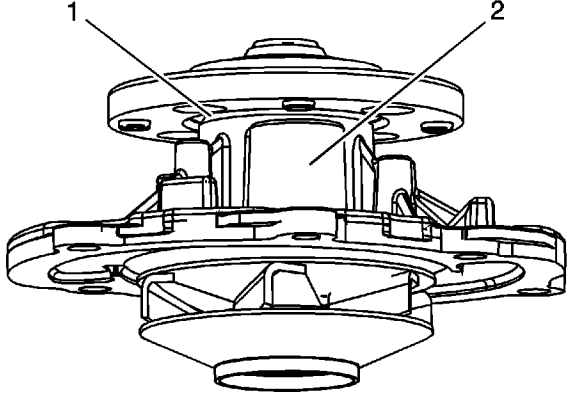

3. Examine the water pump shaft (1) and the weep hole reservoir (2) in the water pump body for signs of leakage. If coolant leakage is evident, replace the water pump.

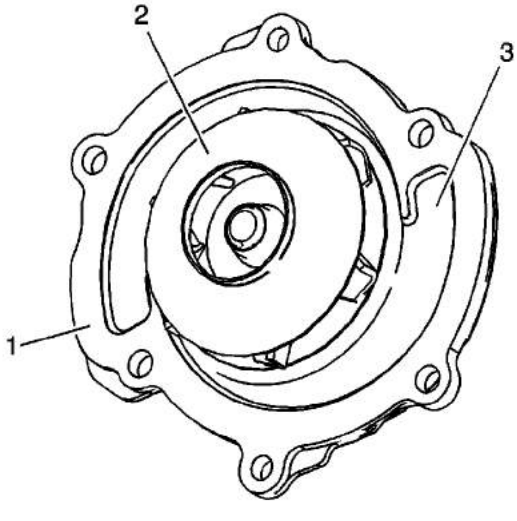

4. Inspect the interior of the water pump for the following:
   - Damage to the water pump gasket sealing surface (1)
   - Damage, corrosion or restrictions to the water pump impeller (2)
   - Damage, corrosion or restrictions to the coolant passages (3)
5. Repair or replace the water pump as necessary.

cardiagn.com

Thread Repair

Special Tools

- *J 42385-700* High Feature Thread Repair Kit
- *J 42385-2000* Thread Insert Kit
- *J 43965* Thread Repair Extension Kit

  For equivalent regional tools, refer to Special Tools.

The thread repair process involves a solid, thin walled, self-locking, carbon steel, bushing type insert. During the insert installation process, the installation driver tool cold-rolls the bottom internal threads and expands the bottom external threads of the insert into the base material. This action mechanically locks the insert into place.

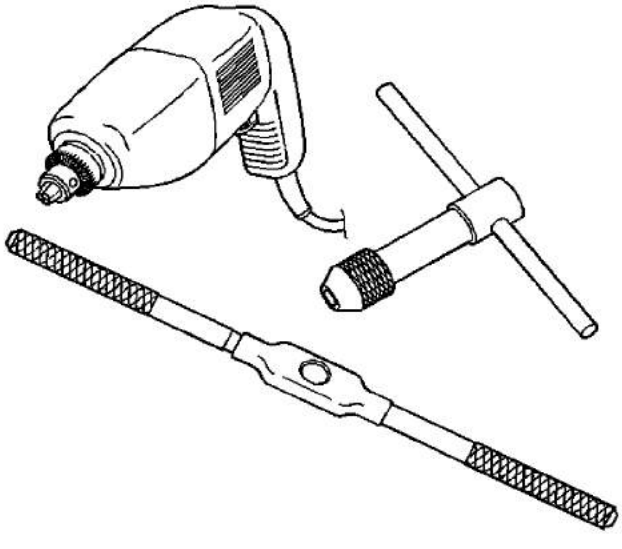

The drill bit and counter bore tool from the tool kit *J 42385-700* kit and *J 42385-2000* kit is designed for use with either a suitable tap wrench or drill motor. Limited access and larger hole repair may process better using a tap wrench. An extension from kit J 43965 may also be necessary to drive the thread repair tooling dependent on access to the hole being repaired. Use only a tap wrench when tapping the hole and during installation of the insert.

cardiagn.com

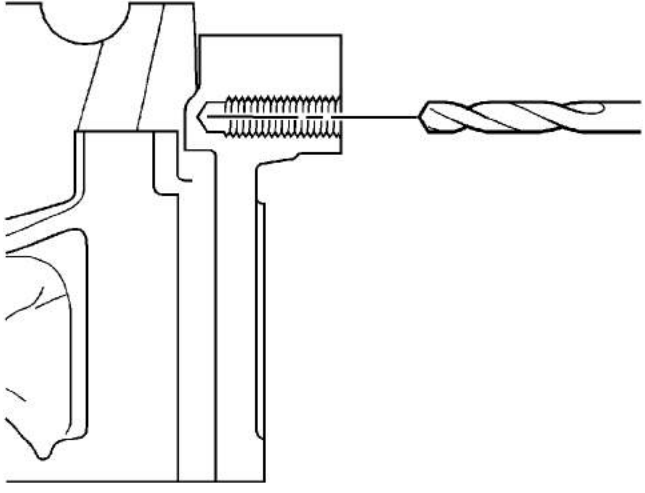

It is critical that the drilling, counterboring and tapping of the hole to be repaired follows the same centerline as the original hole.

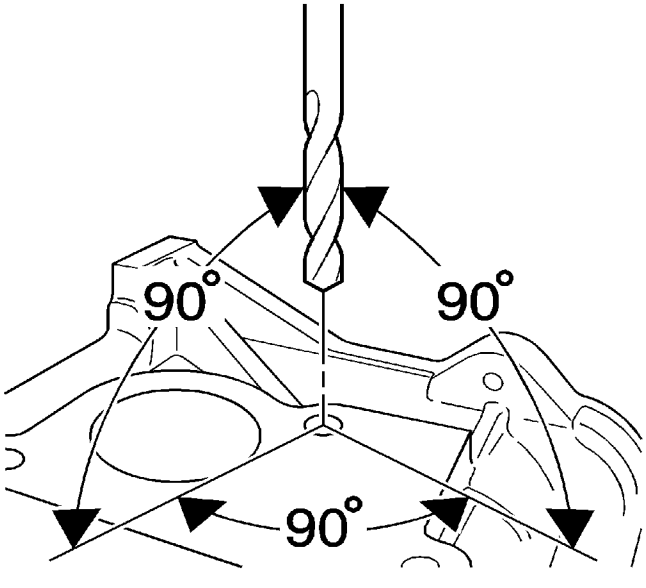

During the drilling and tapping of the hole being repaired ensure the tooling is consistently machining perpendicular to the surface of the base material.

cardiagn.com

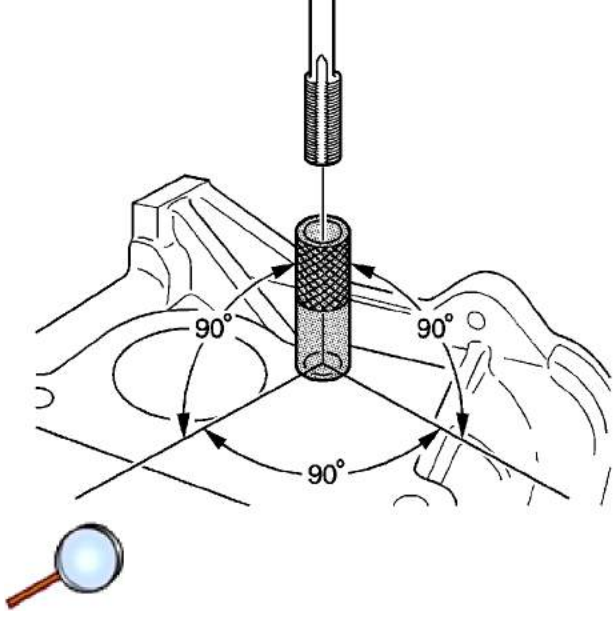

If the threaded hole being repaired has a base surface perpendicular to the hole centerline, tapping guides are available to aid in tapping the hole.

Tap Size	Tap Guide	Tape Size	Tape Guide	Tap Size	Tape Guide
--	J 42385-	--	J 42385-	--	J 42385-
6 x 1.0	729	10 x 1.5	731	14 x 1.5	736
8 x 1.25	730	12 x 1.5	732	20 x 1.5	737

Standard Thread Repair - Flush Hole

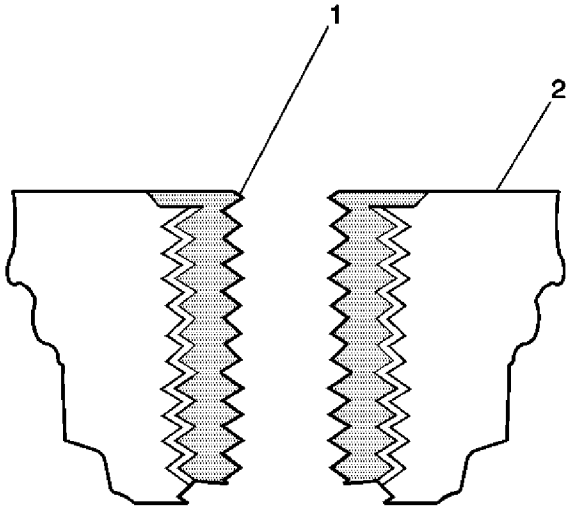

cardiagn.com

Warning: Refer to Safety Glasses Warning in the Preface section.

Note: The use of a cutting type fluid GM P/N 1052864, (Canadian P/N 992881), WD 40® or equivalent is recommended when performing the drilling, counterboring and tapping procedures.

When installed to the proper depth, the flange (1) of the insert will be seated against the counterbore of the drilled/tapped hole and just below the surface (2) of the base material.

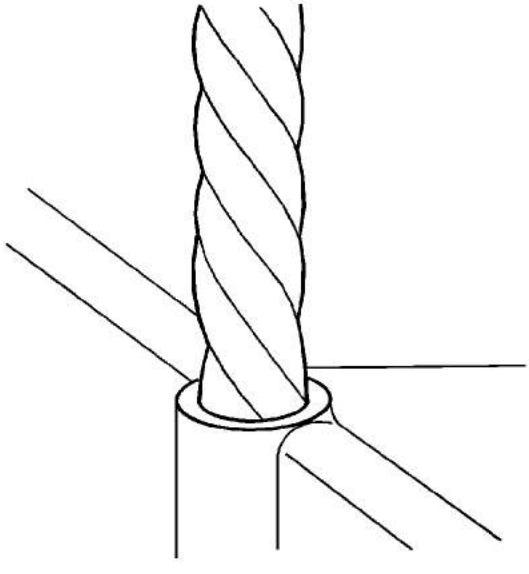

Note:

- During the drilling process, it is necessary to repeatedly remove the drill and clean chips from the hole and the flutes of the drill.
- Do NOT drill any further than the original hole depth.

1. Drill out the threads of the damaged hole.

   Specifications

   - M6 inserts require a minimum drill depth of 15 mm (0.59 in).
   - M8 inserts require a minimum drill depth of 20 mm (0.79 in).
   - M10 inserts require a minimum drill depth of 23.5 mm (0.93 in).

cardiagn.com

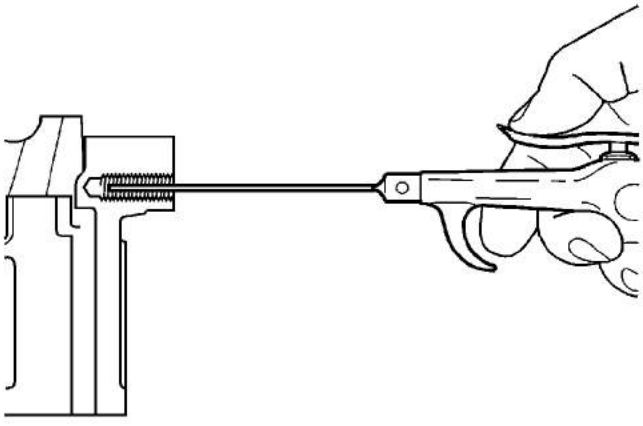

Note: All chips must be removed from the drilled hole prior to tapping.

2. Using compressed air, clean out any chips.

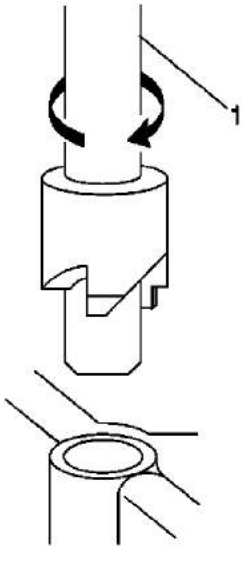

Note: A properly counterbored hole will show a slight burnishing on the surface of the base material for 360 degrees around the drilled hole.

3. Counterbore the drilled hole to the full depth permitted by the tool (1).

cardiagn.com

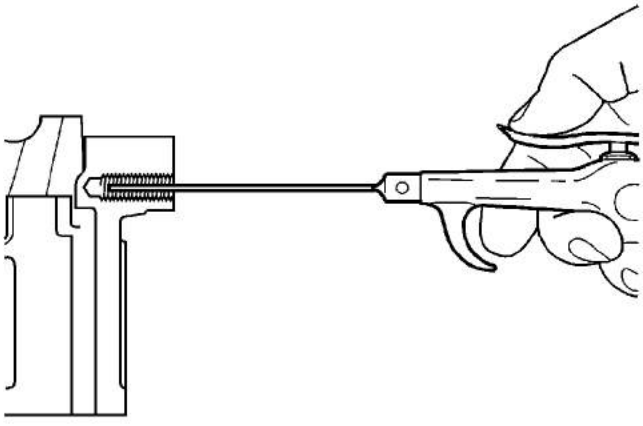

Note: All chips must be removed from the drilled hole prior to tapping.

4. Using compressed air, clean out any chips.

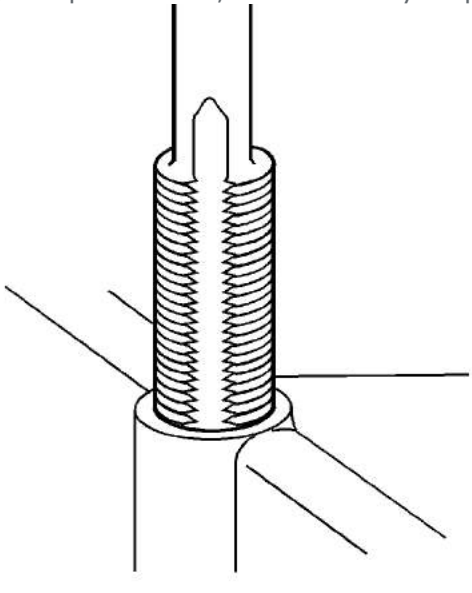

Note:

- During the tapping process, it is necessary to repeatedly remove the tap and clean chips from the hole and the flutes of the tap.
- Ensure the tap has created full threads at least to the depth equal to the insert length.

5. Using a suitable tapping wrench, tap the threads of the drilled hole by hand only.

cardiagn.com

- M8 inserts require a minimum tap depth of 20 mm (0.79 in).
- M10 inserts require a minimum tap depth of 23.5 mm (0.93 in).

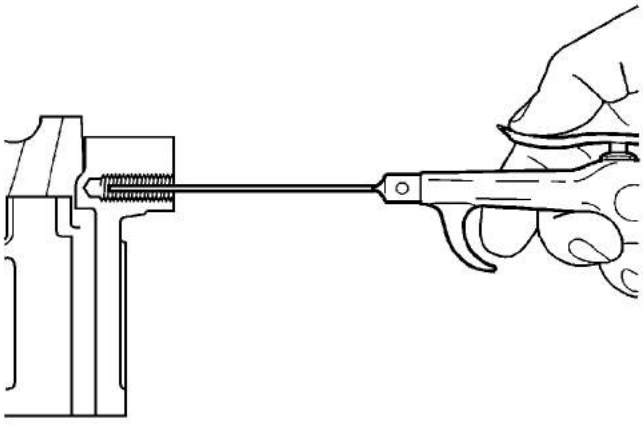

Note: All chips must be removed from the tapped hole prior to insert installation.

6. Using compressed air, clean out any chips.

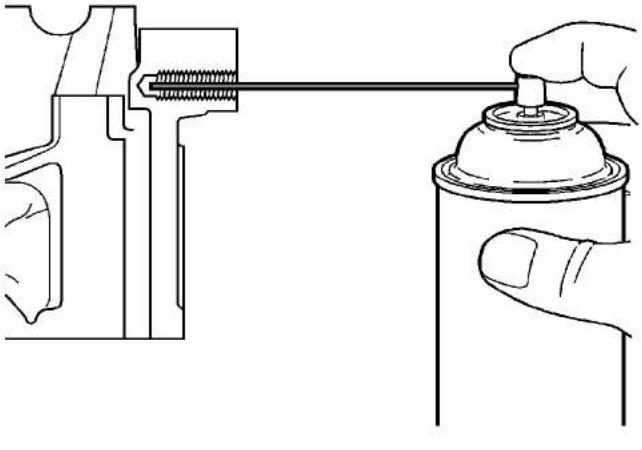

7. Spray cleaner GM P/N 12346139, GM P/N 12377981 (Canadian P/N 10953463) or equivalent into the tapped hole.

cardiagn.com

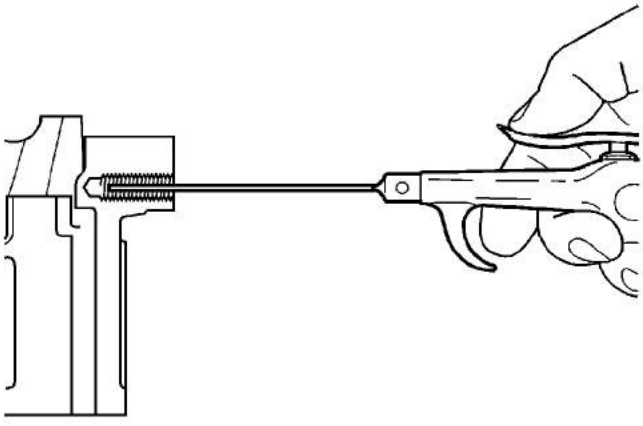

Note: All chips must be removed from the tapped hole prior to insert installation.

8. Using compressed air, clean out any chips.

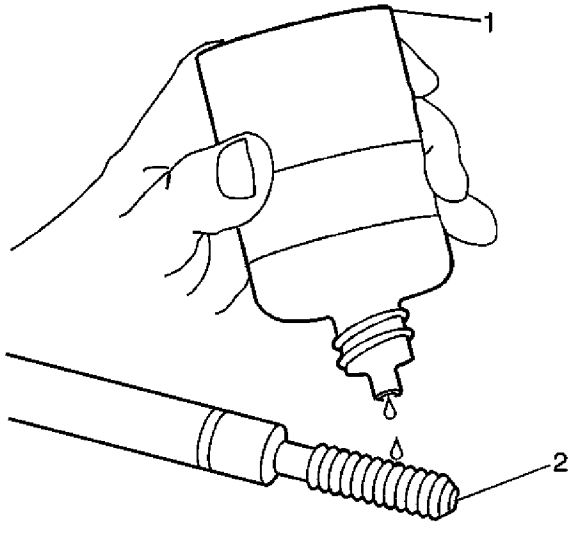

Note: Do not allow oil or other foreign material to contact the outside diameter (OD) of the insert.

9. Lubricate the threads of the driver installation tool (2) with the J 42385-110 (1).

cardiagn.com

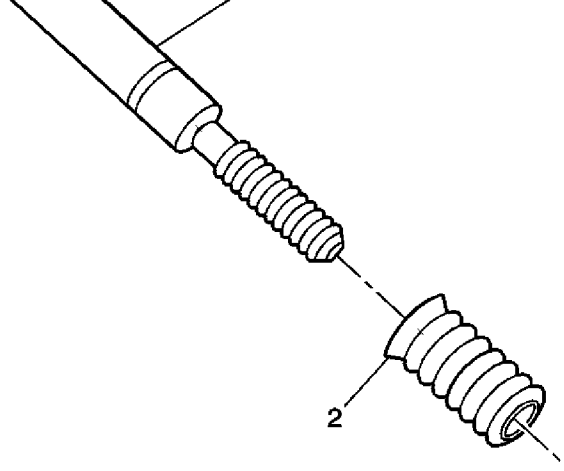

10. Install the insert (2) onto the driver installation tool (1).

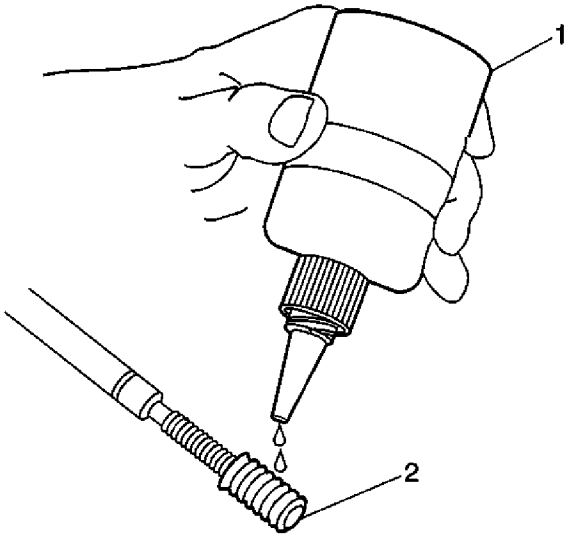

11. Apply threadlock sealant GM P/N 12345493, (Canadian P/N 10953488), J 42385-109, LOCTITE 277® or equivalent (1) to the insert OD threads (2).

cardiagn.com

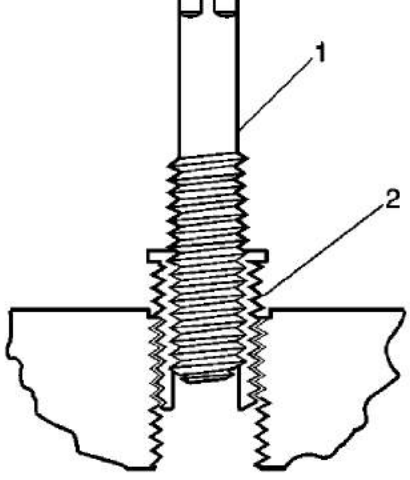

12. Install the insert (2) into the tapped hole by hand only.

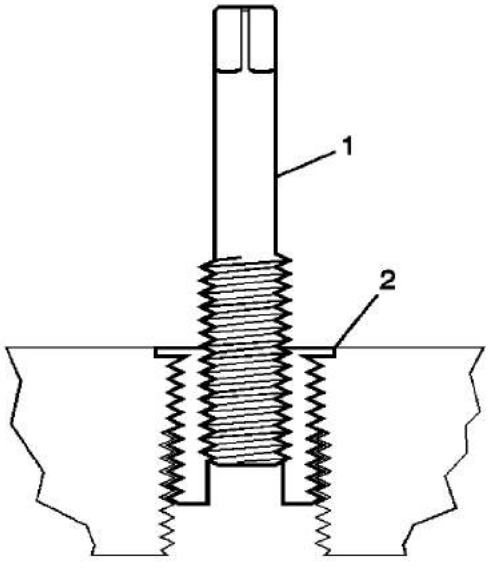

Note: If the insert will not thread down until the flange contacts the counterbored surface, remove the insert immediately with a screw extracting tool and inspect the tapped hole for any remaining chips and/or improper tapping.

13. Install the insert until the flange (2) of the insert contacts the counterbored surface.

cardiagn.com

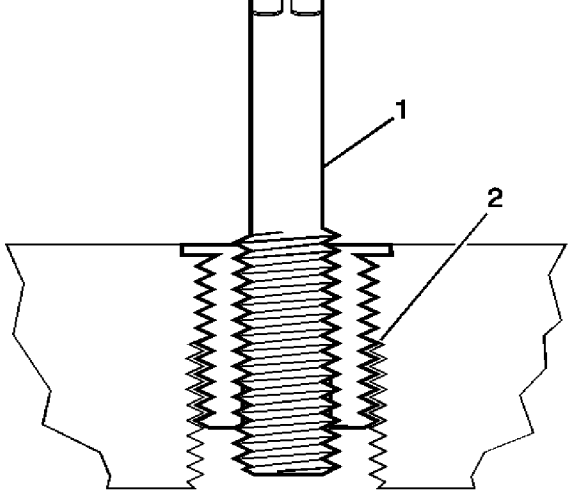

Note: The driver installation tool will tighten up before screwing completely through the insert. This is acceptable. The threads at the bottom of the insert are being formed and the insert is mechanically locking the insert into the base material threads.

14. Continue to rotate the driver installation tool (1) through the insert (2).

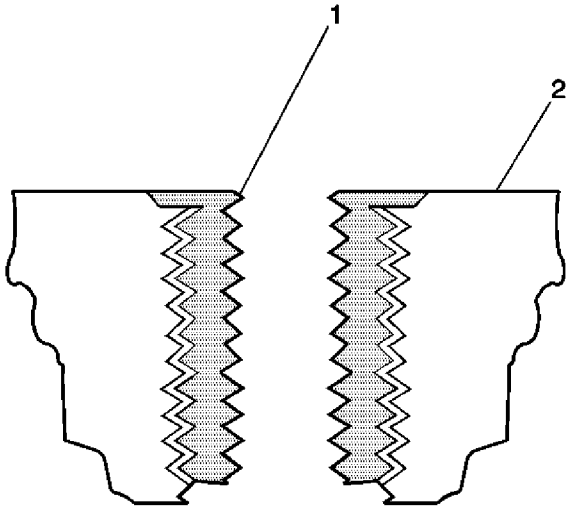

15. Inspect the insert for proper installation into the tapped hole. A properly installed insert (1) will be either flush or slightly below flush with the surface of the base material (2).

cardiagn.com

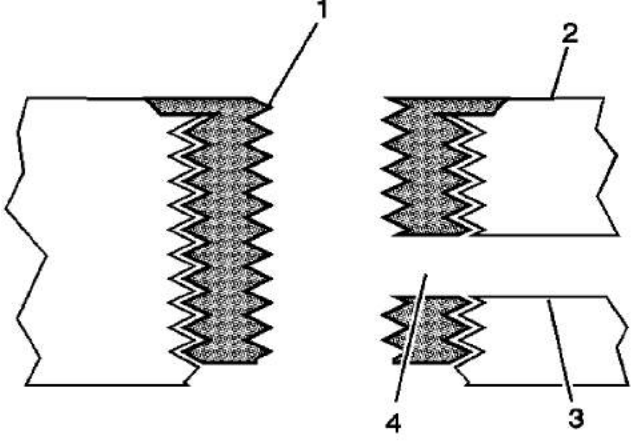

16. Any installed insert that restricts or blocks an oil or engine coolant passage (3) will need to have the oil or engine coolant passage drilled out (4) to the original size of the oil or engine coolant passage. After drilling the restriction or blockage, clean out any chips and thread the installation driver tool through the insert again to remove any burrs caused by the drilling of the oil or engine coolant passage.

Recessed Thread Repair

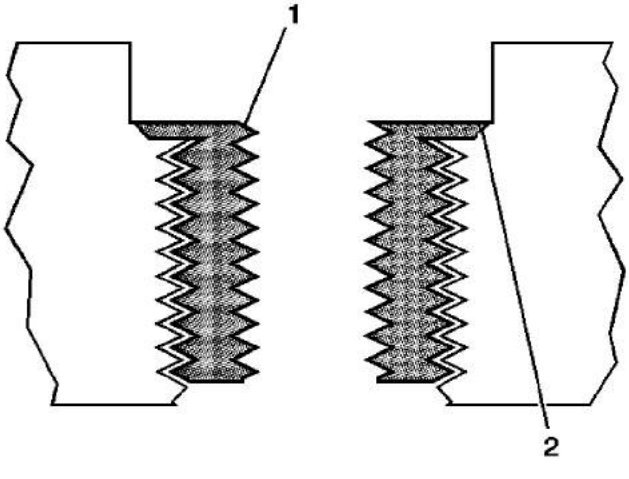

Warning: Refer to Safety Glasses Warning in the Preface section.

cardiagn.com

equivalent is recommended when performing the drilling, counterboring and tapping procedures.

- Do NOT remove the original stop collar from a counterbore drill.

When installed to the proper depth, the flange of the insert (1) will be seated against the counterbore (2) of the drilled/tapped hole.

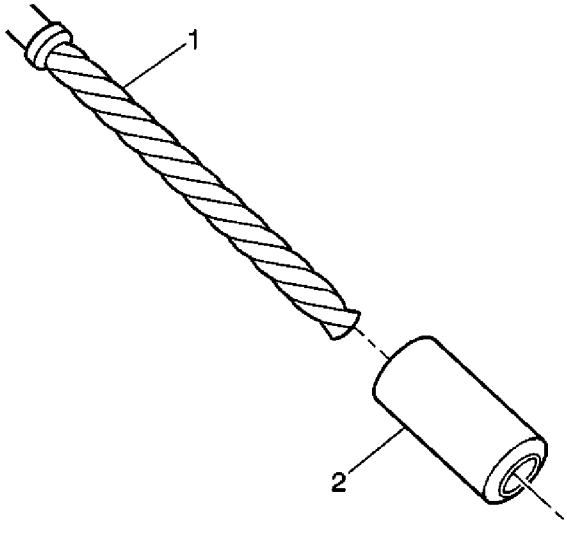

1. Install a stop collar (2) on the counterbore drill (1), if required.

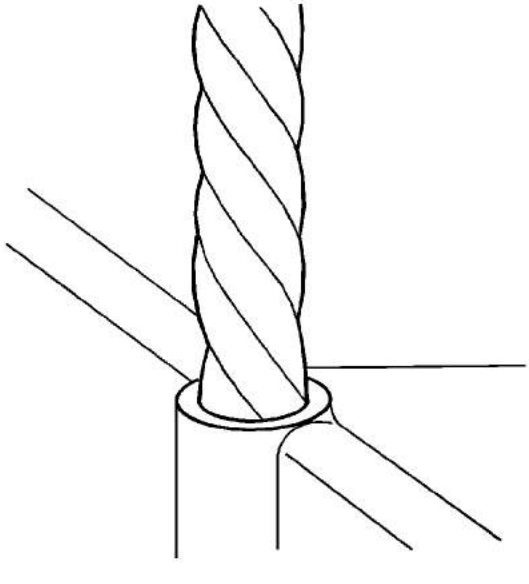

cardiagn.com

from the hole and the flutes of the drill.

- Drill the hole until the stop collar contacts the surface of the base material.

2. Drill out the threads of the damaged hole.

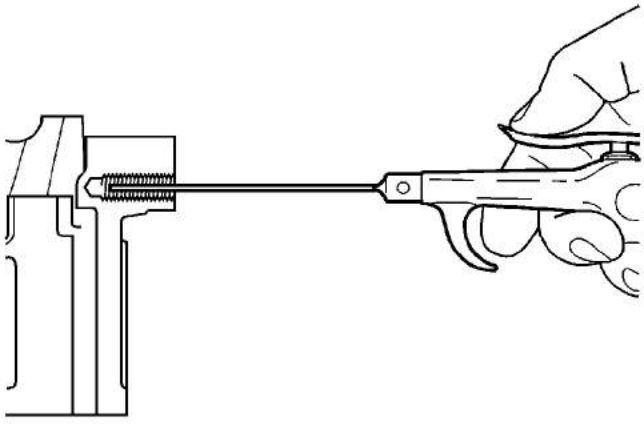

Note: All chips must be removed from the drilled hole prior to tapping.

3. Using compressed air, clean out any chips.

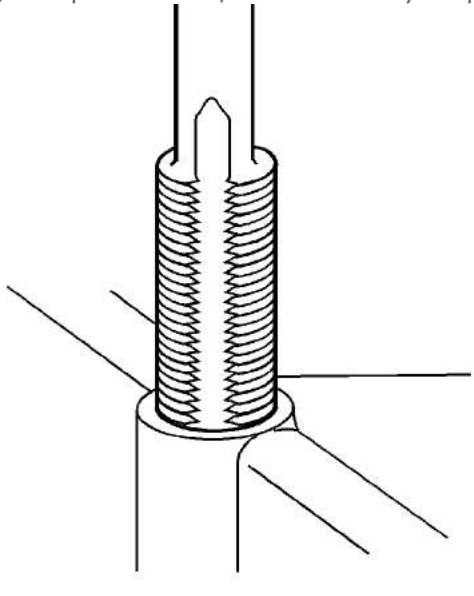

Note:

cardiagn.com

- Ensure the tap has created full threads at least to the depth equal to the insert length.

4. Using a suitable tapping wrench, tap the threads of the drilled hole by hand only.

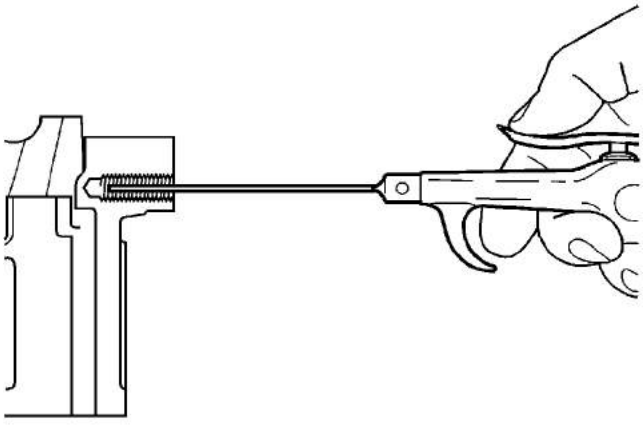

Note: All chips must be removed from the tapped hole prior to insert installation.

5. Using compressed air, clean out any chips.

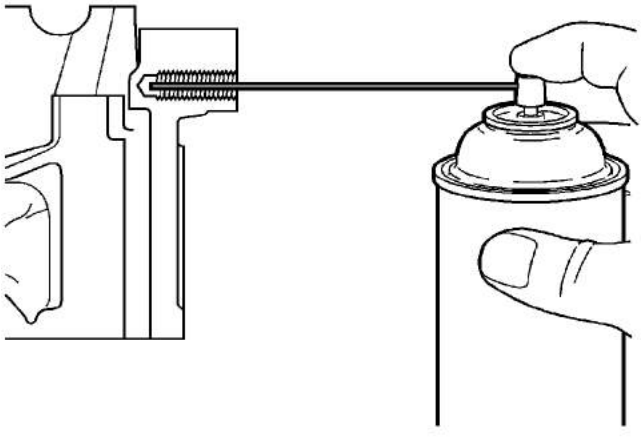

6. Spray cleaner GM P/N 12346139, GM P/N 12377981 (Canadian P/N 10953463) or equivalent into the tapped hole.

cardiagn.com

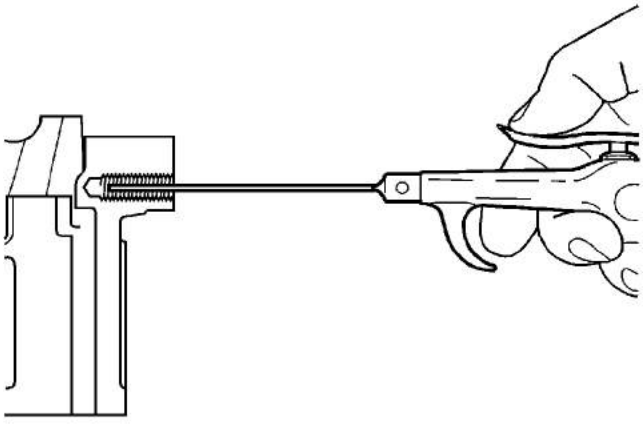

Note: All chips must be removed from the tapped hole prior to insert installation.

7. Using compressed air, clean out any chips.

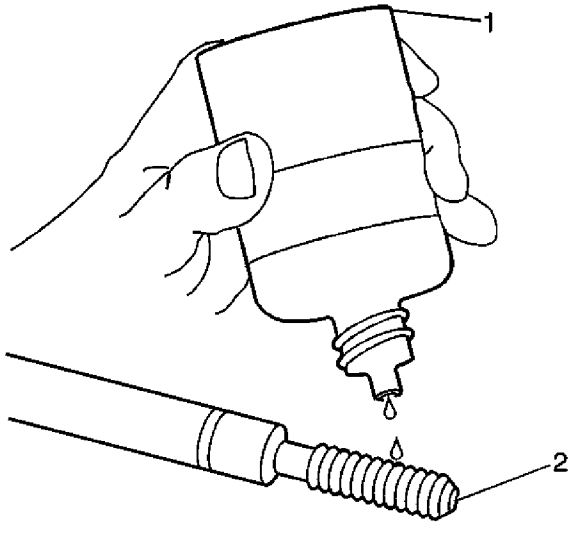

Note: Do not allow oil or other foreign material to contact the outside diameter (OD) of the insert.

8. Lubricate the threads of the driver installation tool (2) with the J 42385-110 (1).

cardiagn.com

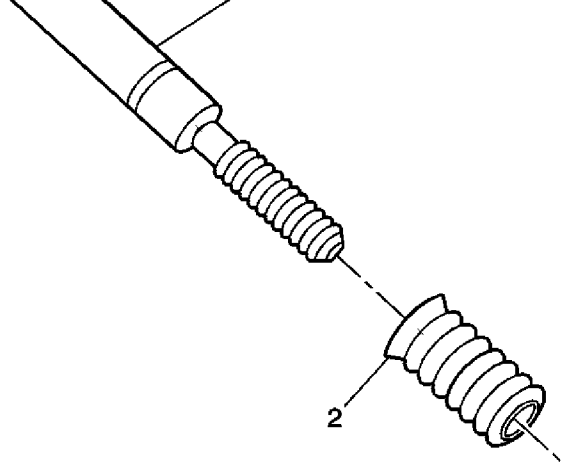

9. Install the insert (2) onto the driver installation tool (1).

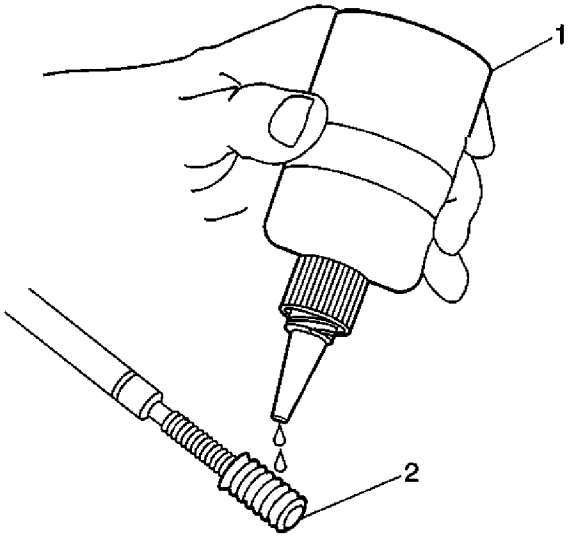

10. Apply threadlock sealant GM P/N 12345493, (Canadian P/N 10953488), J 42385-109, LOCTITE 277® or equivalent (1) to the insert OD threads (2).

cardiagn.com

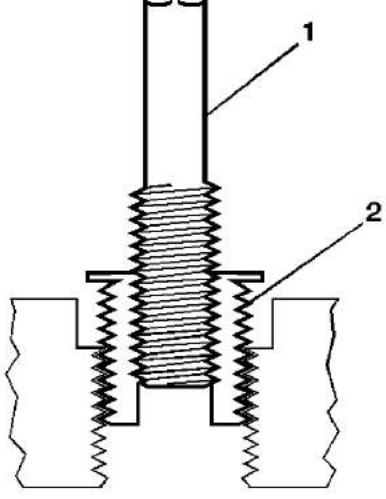

11. Install the insert (2) into the tapped hole by hand only.

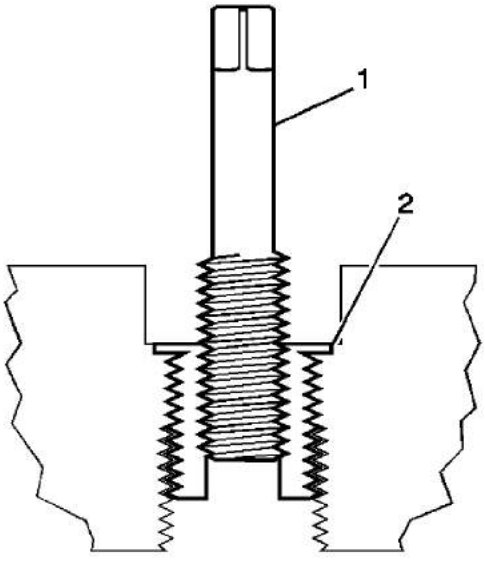

Note: If the insert will not thread down until the flange contacts the counterbored surface remove the insert immediately with a screw extracting tool and inspect the tapped hole for any remaining chips and/or improper tapping.

12. Install the insert until the flange (2) of the insert contacts the counterbored surface.

cardiagn.com

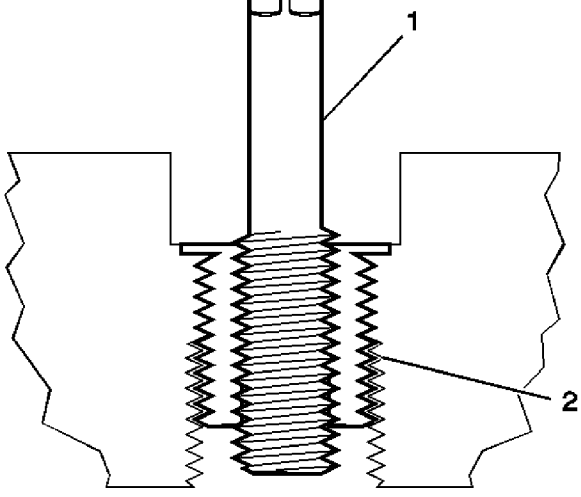

Note: The driver installation tool will tighten up before screwing completely through the insert. This is acceptable. The threads at the bottom of the insert are being formed and the insert is mechanically locking the insert into the base material threads.

13. Continue to rotate the driver installation tool (1) through the insert (2).

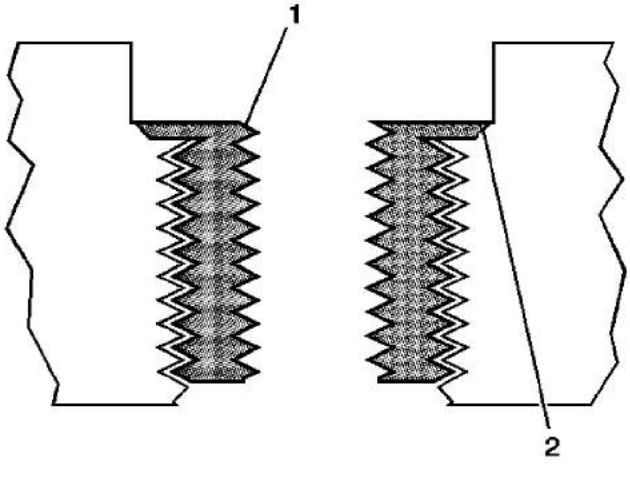

14. Inspect the insert (1) for proper installation (2) into the tapped hole.

cardiagn.com

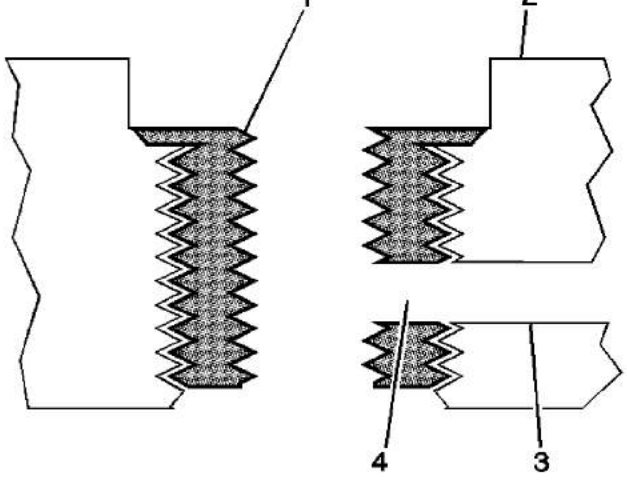

15. Any installed insert that restricts or blocks an oil or engine coolant passage (3) will need to have the oil or engine coolant passage drilled out (4) to the original size of the oil or engine coolant passage. After drilling the restriction or blockage, clean out any chips and thread the installation driver tool through the insert again to remove any burrs caused by the drilling of the oil or engine coolant passage.

Tapered Pipe Thread Repair

The thread repair insert for tapered pipe threads is coated with a clear silver zinc coating.

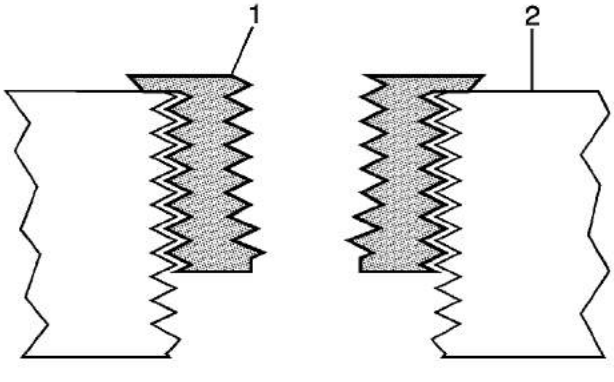

cardiagn.com

Note: The use of a cutting type fluid GM P/N 1052864, (Canadian P/N 992881), WD 40® or equivalent is recommended when performing the drilling, counterboring and tapping procedures.

When installed to the proper depth, the flange (1) of the insert will be seated against surface (2) of the base material of the drilled/tapped hole.

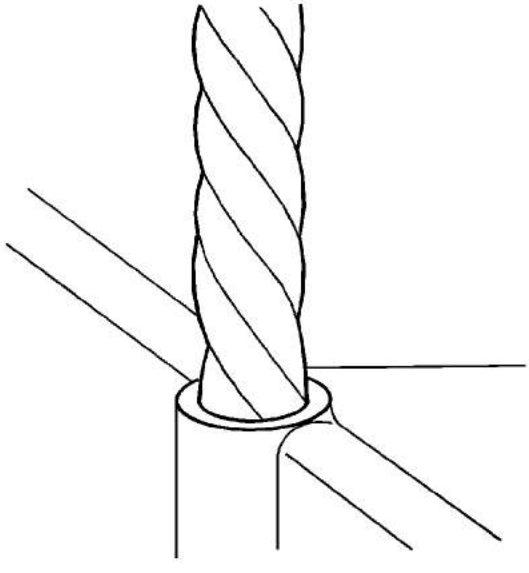

Note:

- During the drilling process, it is necessary to repeatedly remove the drill and clean chips from the hole and the flutes of the drill.
- Drill the hole until the stop collar contacts the surface of the base material.

1. Drill out the threads of the damaged hole.

cardiagn.com

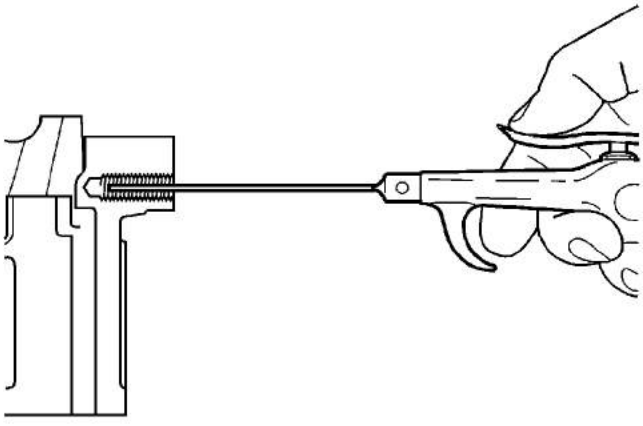

Note: All chips must be removed from the drilled hole prior to tapping.

2. Using compressed air, clean out any chips.

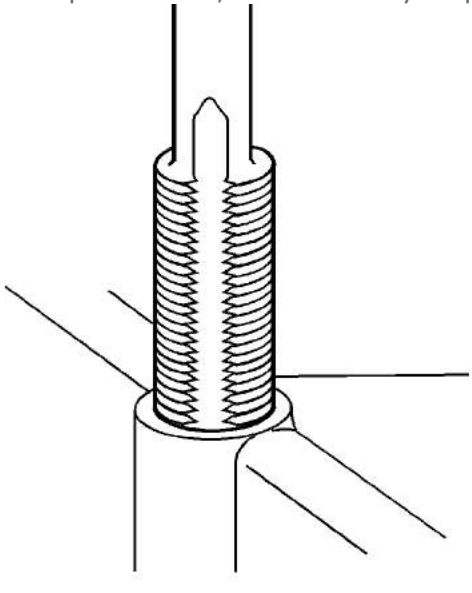

Note:

- During the tapping process, it is necessary to repeatedly remove the tap and clean chips from the hole and the flutes of the tap.
- Ensure the tap has created full threads at least to the depth equal to the insert length.

3. Using a suitable tapping wrench, tap the threads of the drilled hole by hand only.

cardiagn.com

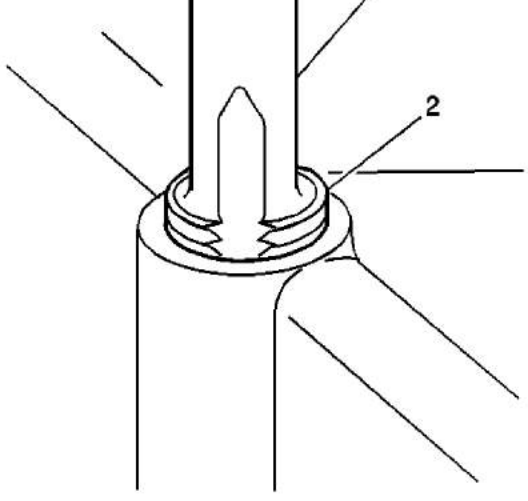

4. Tap the drilled hole until the threads at the top of the tap (2) are down to the surface of the base material.

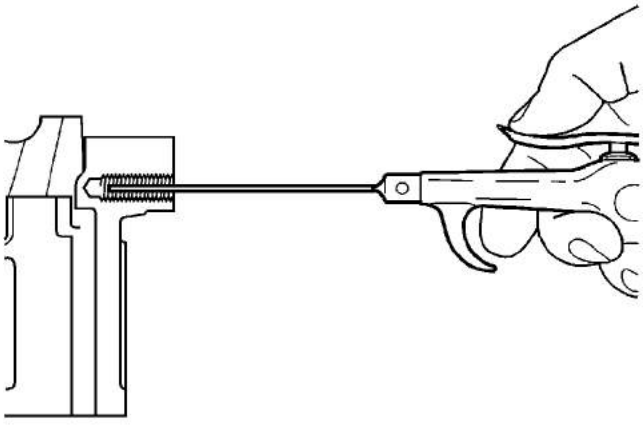

Note: All chips must be removed from the tapped hole prior to insert installation.

5. Using compressed air, clean out any chips.

cardiagn.com

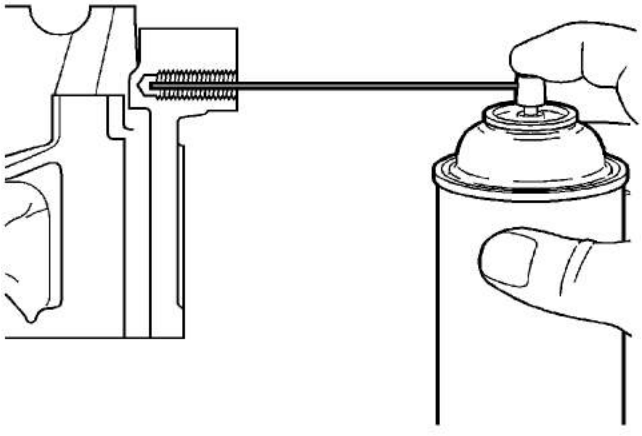

6. Spray cleaner GM P/N 12346139, GM P/N 12377981 (Canadian P/N 10953463) or equivalent into the tapped hole.

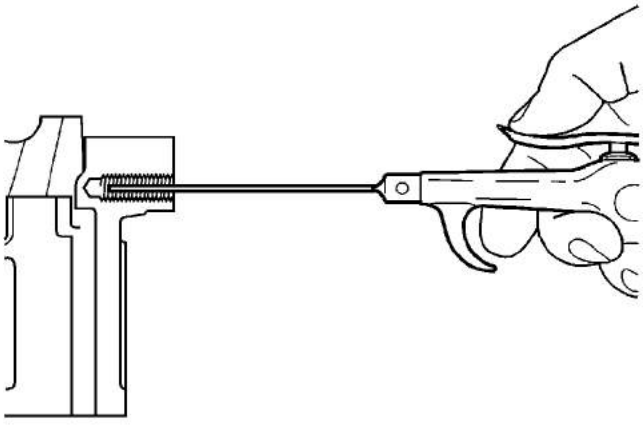

Note: All chips must be removed from the tapped hole prior to insert installation.

7. Using compressed air, clean out any chips.

cardiagn.com

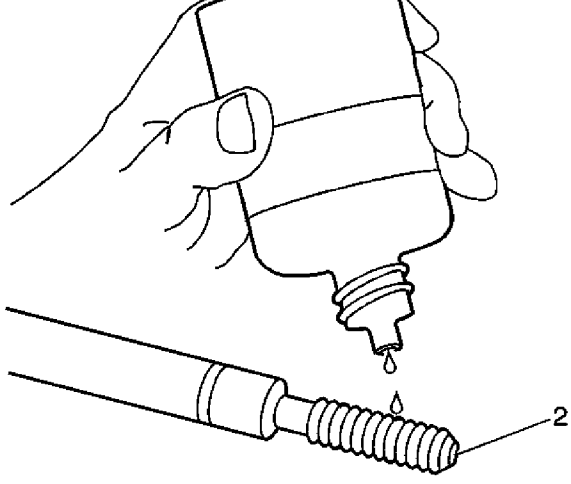

Note: Do not allow oil or other foreign material to contact the outside diameter (OD) of the insert.

8. Lubricate the threads of the driver installation tool (2) with the J 42385-110 (1).

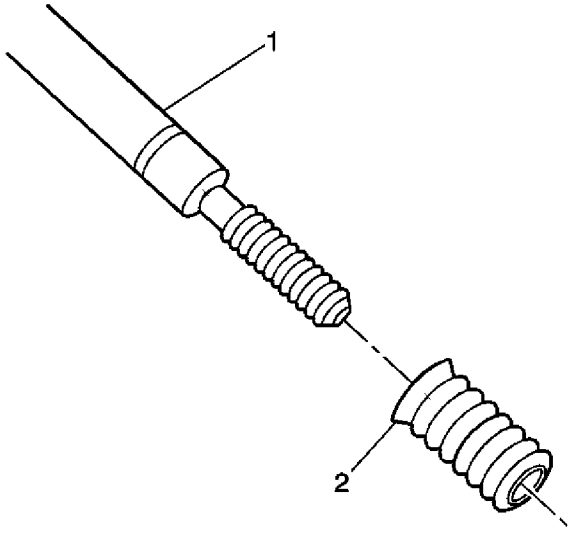

9. Install the insert (2) onto the driver installation tool (1).

cardiagn.com

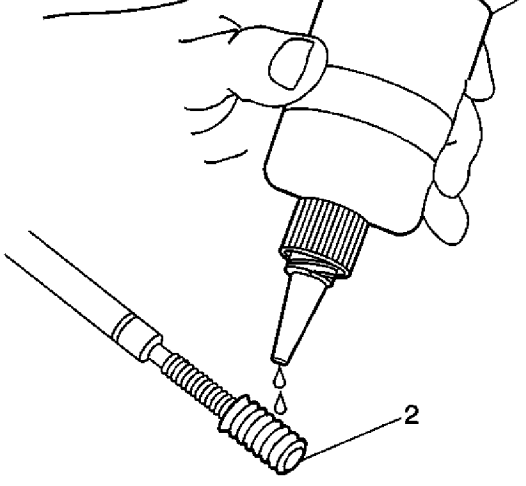

10. Apply threadlock sealant GM P/N 12345493, (Canadian P/N 10953488), J 42385-109, LOCTITE 277® or equivalent (1) to the insert OD threads (2).

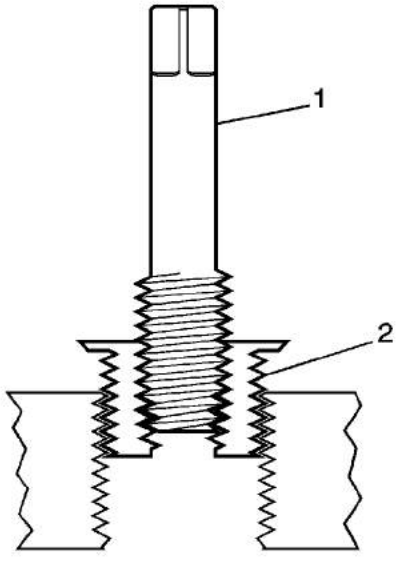

11. Install the insert (2) into the tapped hole by hand only.

cardiagn.com

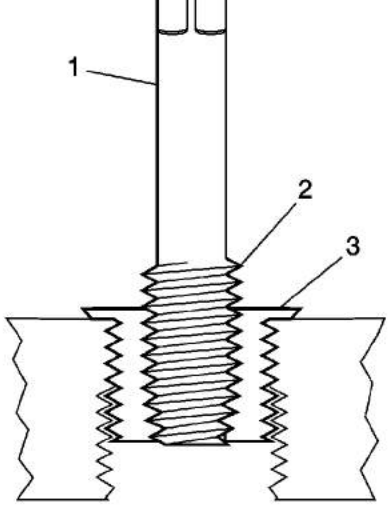

Note: If the insert will not thread down until the flange contacts the surface of the base material remove the insert immediately with a screw extracting tool and inspect the tapped hole for any remaining chips and/or improper tapping.

12. Install the insert until the flange (2) of the insert contacts the surface of the base material.

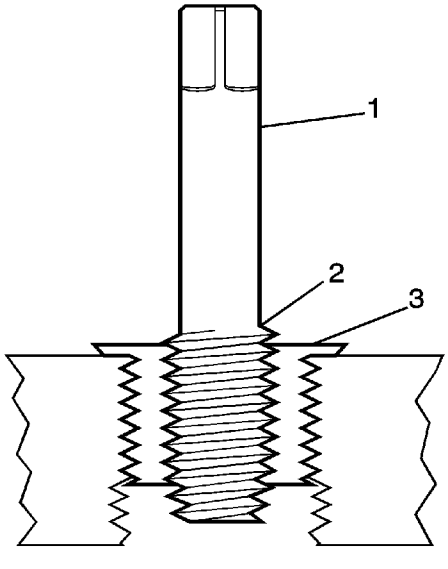

Note: The driver installation tool will tighten up before screwing completely through the insert. This is acceptable. The threads at the bottom of the insert are being formed and the insert is mechanically locking the insert into the base material threads.

13. Continue to rotate the driver installation tool (1) until the top of the threaded section (2) is level with the top of the insert (3).

cardiagn.com

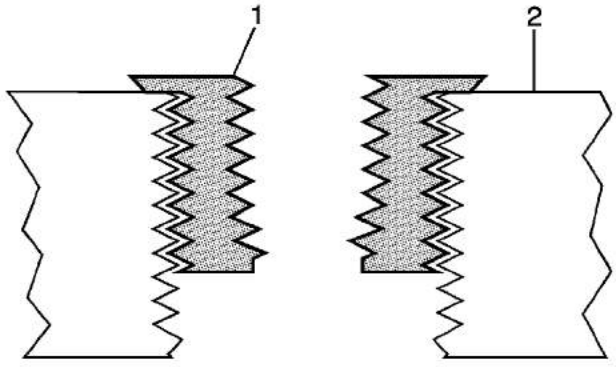

14. Inspect the insert (1) for proper installation (2) into the tapped hole.

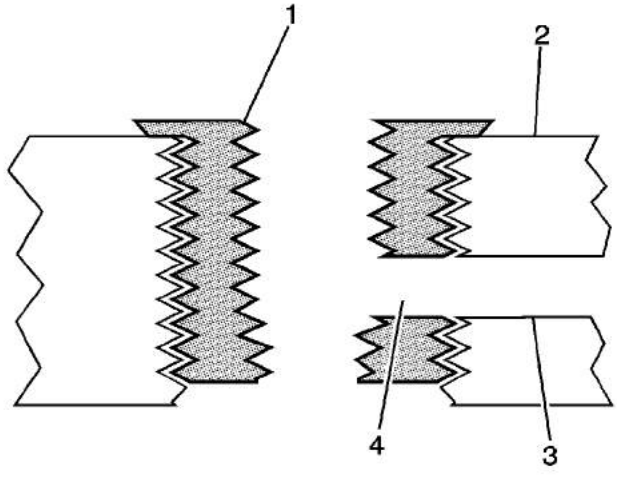

15. Any installed insert that restricts or blocks an oil or engine coolant passage (3) will need to have the oil or engine coolant passage drilled out (4) to the original size of the oil or engine coolant passage. After drilling the restriction or blockage, clean out any chips and thread the installation driver tool through the insert again to remove any burrs caused by the drilling of the oil or engine coolant passage.

Cylinder Head Bolt Hole Thread Repair

Special Tools

- *J 42385-700* High Feature Thread Repair Kit

cardiagn.com

For equivalent regional tools, refer to Special Tools.

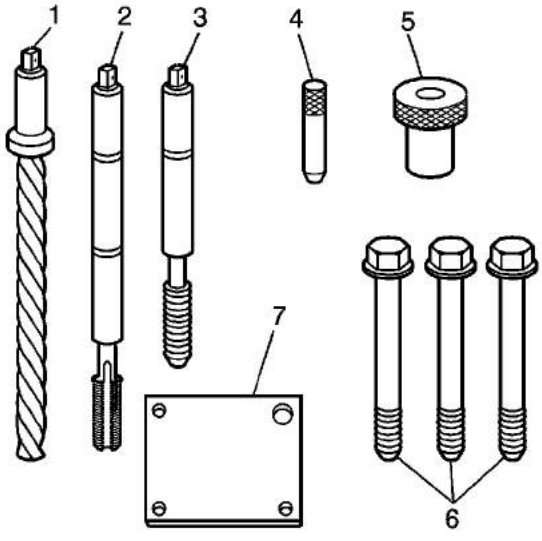

The cylinder head bolt hole thread repair tooling are in the kits *J 42385-2000* kit and *J 42385-700* kit . The cylinder head bolt hole thread repair components consist of the following:

- J 42385-723 Drill (1)
- J 42385-724 Tap (2)
- J 42385-725 Installation driver (3)
- J 42385-303 Alignment pin (4)
- J 42385-302 Bushing (5)
- J 42385-733 Bolts (6)
- J 42385-401 Fixture plate (7)

Warning: Refer to Safety Glasses Warning in the Preface section.

Note:

- Remove the fixture plate prior to installing the insert with the installer tool.
- The use of a cutting type fluid GM P/N 1052864 (Canadian P/N 992881) WD 40®; or equivalent is recommended when performing the drilling, counterboring and tapping procedures.

When installed to the proper depth, the flange of the insert will be seated against the counterbore of the drilled/tapped hole.

cardiagn.com

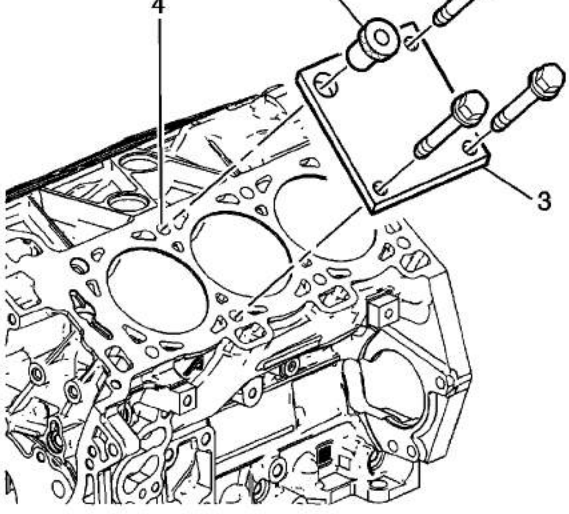

1. Position the fixture plate (3) with the bushing (1) installed over the cylinder head bolt hole to be repaired (4).
2. Loosely install the fixture plate bolts (2) into the remaining cylinder head bolt holes.

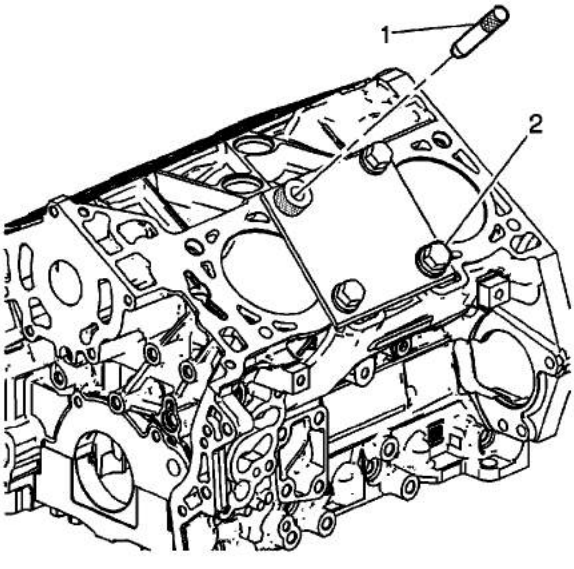

3. Position the alignment pin (1) through the bushing and into the cylinder head bolt hole.
4. With the alignment pin in the desired cylinder head bolt hole, tighten the fixture retaining bolts (2).
5. Remove the alignment pin (1) from the cylinder head bolt hole.

cardiagn.com

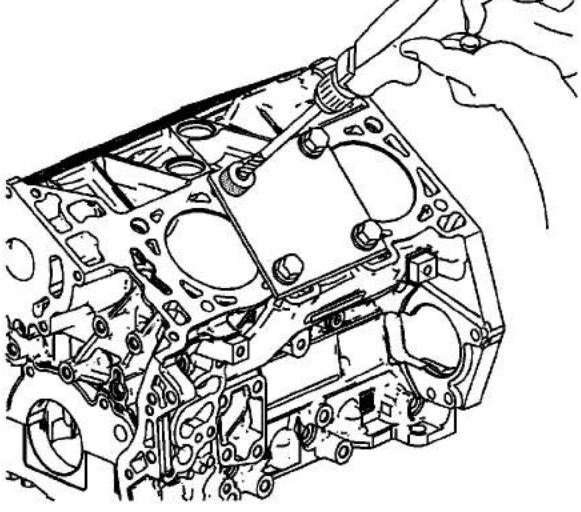

Note:

- During the drilling process, it is necessary to repeatedly remove the drill and clean chips from the hole and the flutes of the drill.
- Drill the hole until the stop collar contacts the top of the drill bushing.

6. Drill out the threads of the damaged hole.

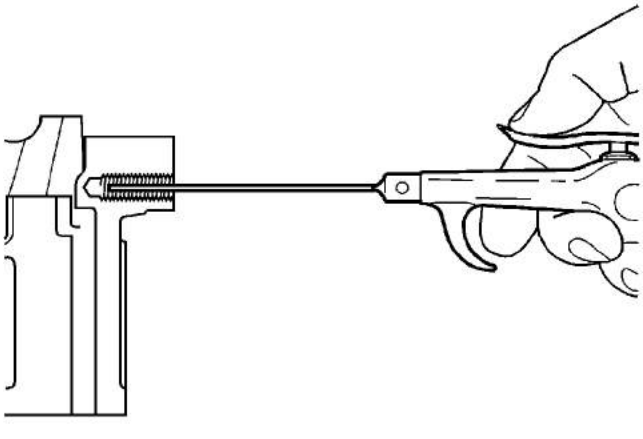

Note: All chips must be removed from the drilled hole prior to tapping.

7. Using compressed air, clean out any chips.

cardiagn.com

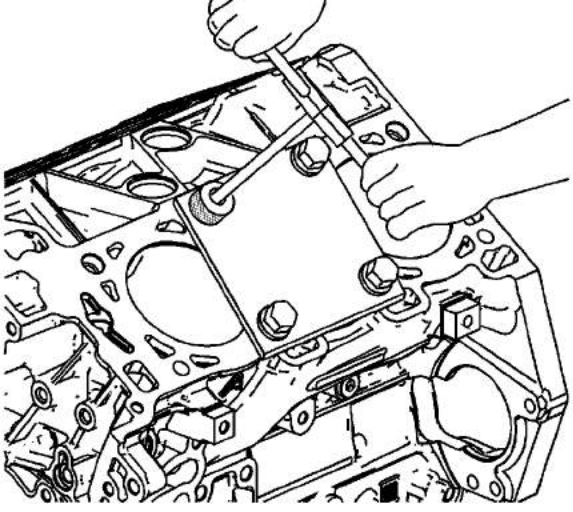

Note:

- During the tapping process, it is necessary to repeatedly remove the tap and clean chips from the hole and the flutes of the tap.
- Ensure the tap has created full threads at least to the depth equal to the insert length.

8. Using a suitable tapping wrench, tap the threads of the drilled hole by hand only.

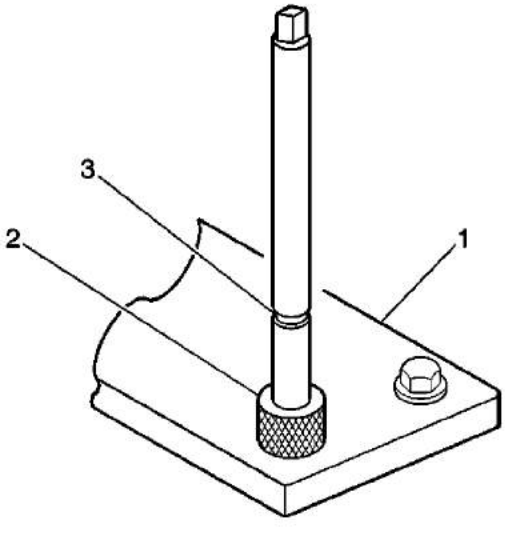

9. In order to tap the new threads for the insert to the proper depth, rotate the tap into the cylinder head bolt hole until the mark (3) on the tap aligns with the top of the drill bushing (2).

cardiagn.com

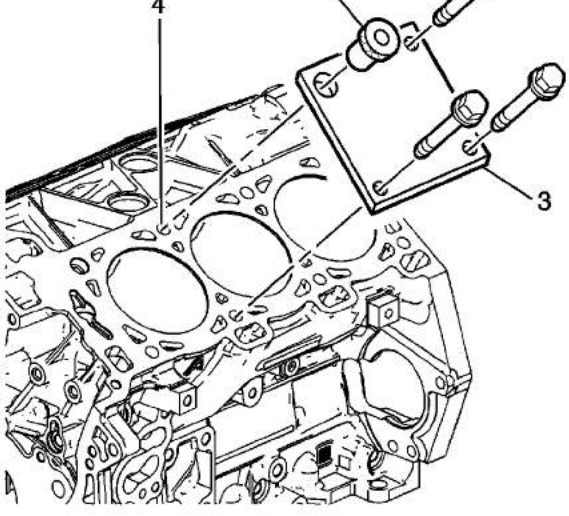

Note: Remove the fixture plate prior to installing the insert with the installer tool.

10. Remove the fixture plate bolts (2).
11. Remove the fixture plate (3) and bushing (1).

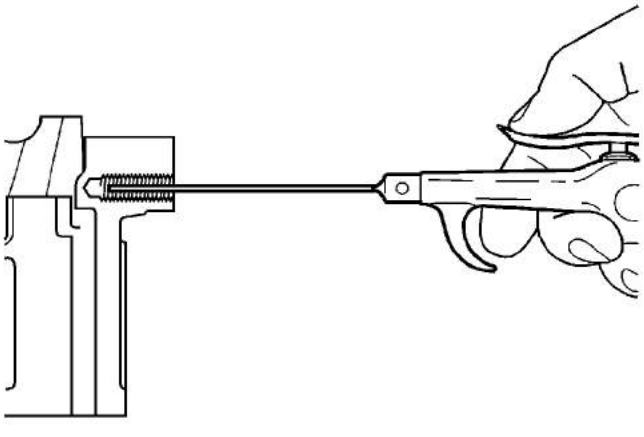

Note: All chips must be removed from the tapped hole prior to insert installation.

12. Using compressed air, clean out any chips.

cardiagn.com

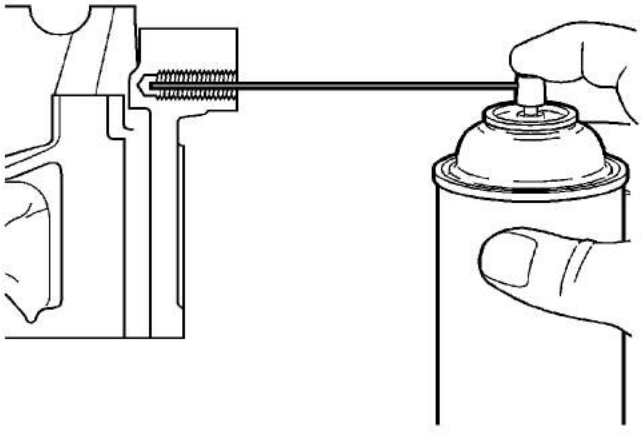

13. Spray cleaner GM P/N 12346139, GM P/N 12377981 (Canadian P/N 10953463) or equivalent into the tapped hole.

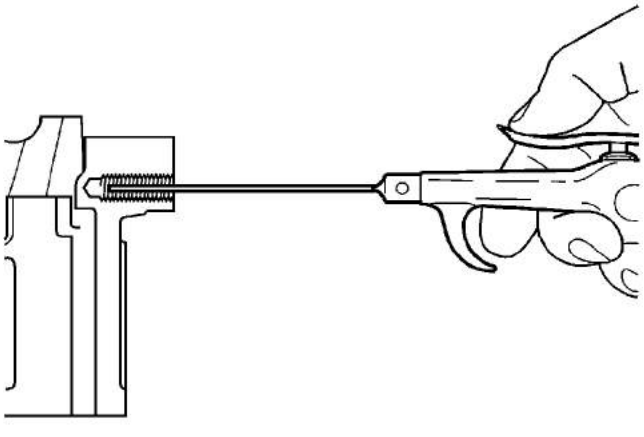

Note: All chips must be removed from the tapped hole prior to insert installation.

14. Using compressed air, clean out any chips.

cardiagn.com

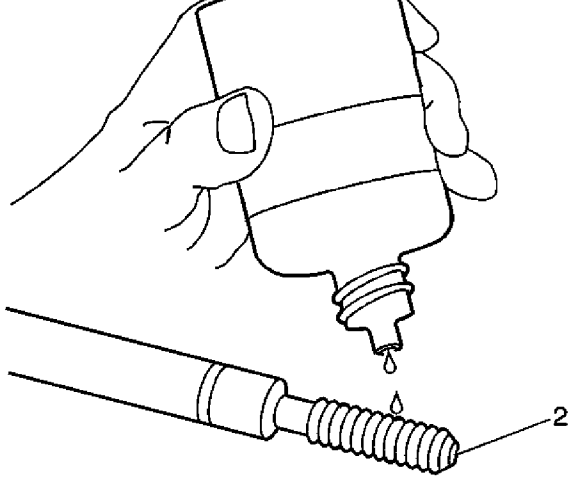

Note: Do not allow oil or other foreign material to contact the outside diameter (OD) of the insert.

15. Lubricate the threads of the driver installation tool (2) with the J 42385-110 (1).

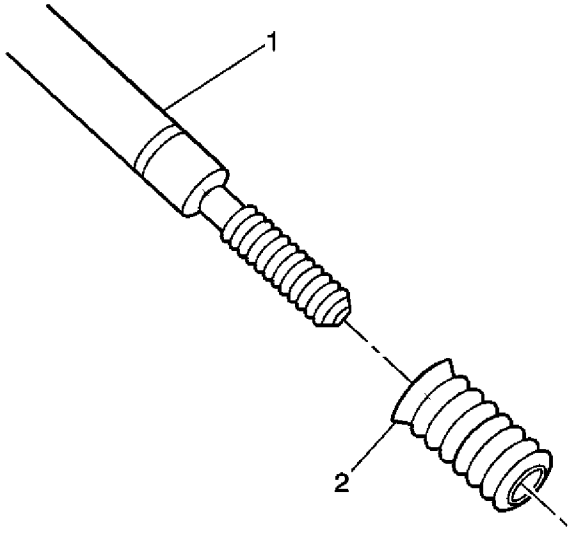

16. Install the insert (2) onto the driver installation tool (1).

cardiagn.com

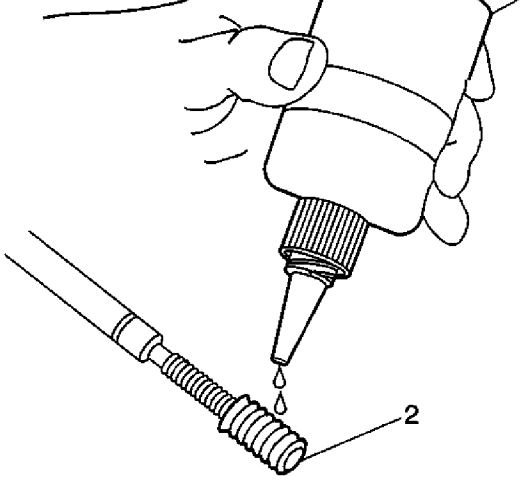

17. Apply threadlock sealant GM P/N 12345493, (Canadian P/N 10953488), J 42385-109, LOCTITE 277®; or equivalent (1) to the insert OD threads (2).

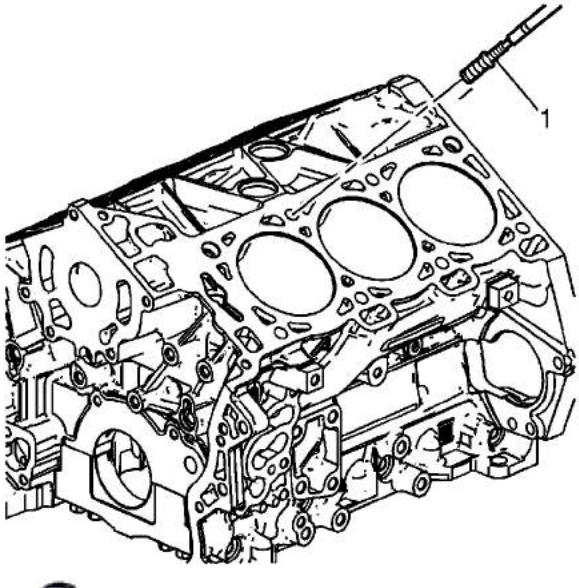

18. Install the insert and installation driver (1) into the tapped hole by hand only.
19. Start the insert into the threaded hole.

Note: If the insert will not thread down until the flange contacts the counterbored surface remove the insert immediately with a screw extracting tool and inspect the tapped hole for any remaining chips and/or improper tapping.

20. Install the insert until the flange of the insert contacts the counterbored surface.

Note: The driver installation tool will tighten up before screwing completely through the insert. This is acceptable. The threads at the bottom of the insert are being formed and the

cardiagn.com

21. Continue to rotate the driver installation tool through the insert.

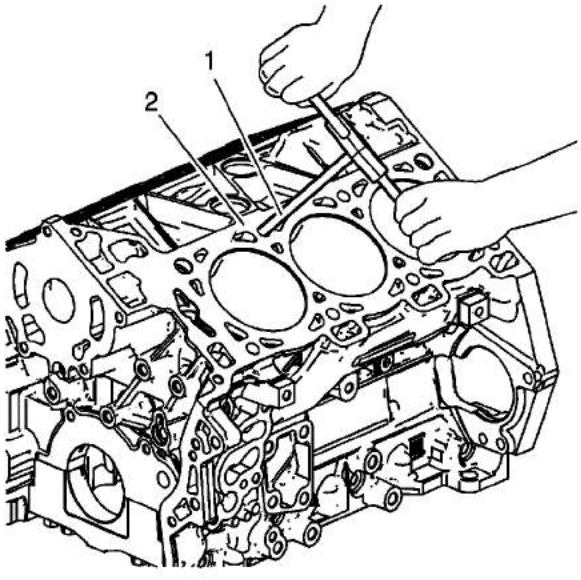

22. In order to completely form the new threads in the insert, rotate the driver installation tool through the insert until the mark (1) on the driver installation tool aligns with the surface of the engine block deck (2).
23. Inspect the insert for proper installation into the tapped hole.

Crankshaft Main Bolt Hole Thread Repair

Special Tools

- *J 42385-700* High Feature Thread Repair Kit
- *J 42385-2000* Thread Insert Kit

For equivalent regional tools, refer to Special Tools.

cardiagn.com

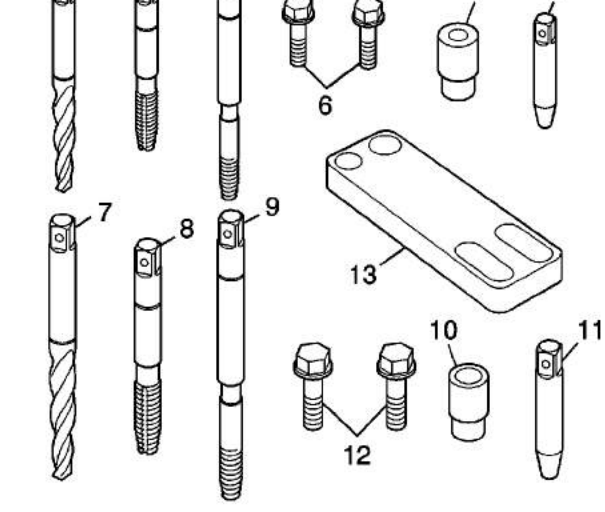

Note:

- In order to repair some crankshaft main bolt holes it will be necessary to mount the fixture plate upside down.
- Do NOT remove the fixture plate prior to installing the insert with the installation driver. The fixture plate remains in position throughout the thread repair process.

The crankshaft main bearing bolt hole thread repair tooling are in the kits *J 42385-2000* kit and *J 42385-700* kit . The crankshaft main bearing bolt hole thread repair components consist of the following:

- J 42385-702 Drill (1) for outboard holes
- J 42385-703 Tap (2) for outboard holes
- J 42385-704 Installation driver (3) for outboard holes
- J 42385-726 Bushing (4) for outboard holes
- J 42385-727 Alignment pin (5) for outboard holes
- J 42385-728 Bolts (6) for outboard holes
- J 42385-720 Drill (7) for inboard holes
- J 42385-721 Tap (8) for inboard holes
- J 42385-722 Installation driver (9) for inboard holes
- J 42385-713 Bushing (10)
- J 42385-308 Alignment pin (11)
- J 42385-734 Bolts (12)
- J 42385-712 Fixture plate (13)

Outboard Bolt Holes

Warning: Refer to Safety Glasses Warning in the Preface section.

cardiagn.com

insert.

- The use of a cutting type fluid GM P/N 1052864, (Canadian P/N 992881), WD 40® or equivalent is recommended when performing the drilling, counterboring and tapping procedures.

When installed to the proper depth, the flange of the insert will be seated against the counterbore of the drilled/tapped hole.

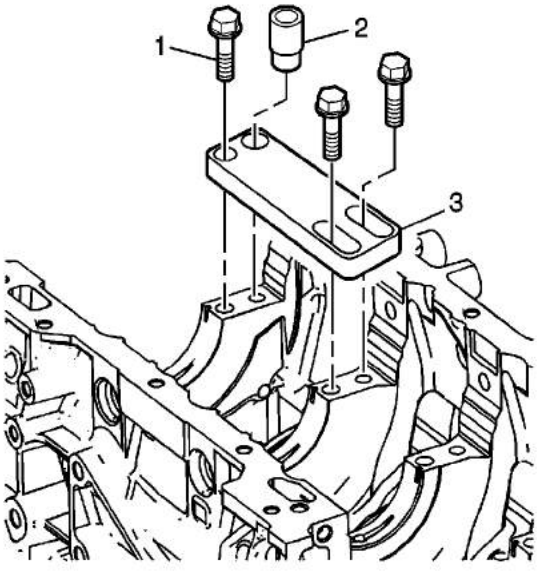

1. Position the fixture plate (3) with the bushing (2) installed over the crankshaft main cap bolt hole to be repaired.
2. Loosely install the fixture plate bolts (1) into the remaining crankshaft main cap bolt holes.

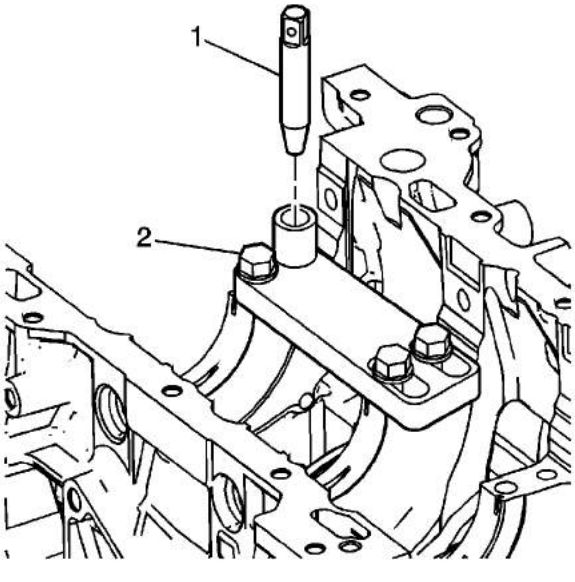

cardiagn.com

3. Position the alignment pin (1) through the bushing and into the crankshaft main cap bolt hole.
4. With the alignment pin in the desired crankshaft main cap bolt hole, tighten the fixture retaining bolts (2).
5. Remove the alignment pin (1) from the crankshaft main cap bolt hole.

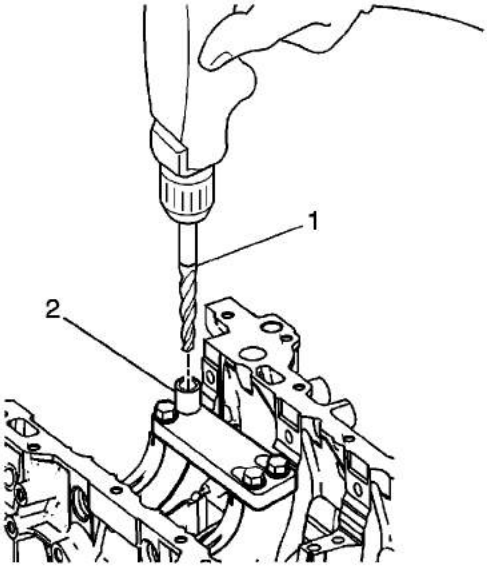

Note:

- During the drilling process, it is necessary to repeatedly remove the drill and clean chips from the hole and the flutes of the drill.
- Drill the crankshaft main bolt hole until the mark (1) on the drill aligns with the top of the drill bushing (2).

6. Drill out the threads of the damaged hole.

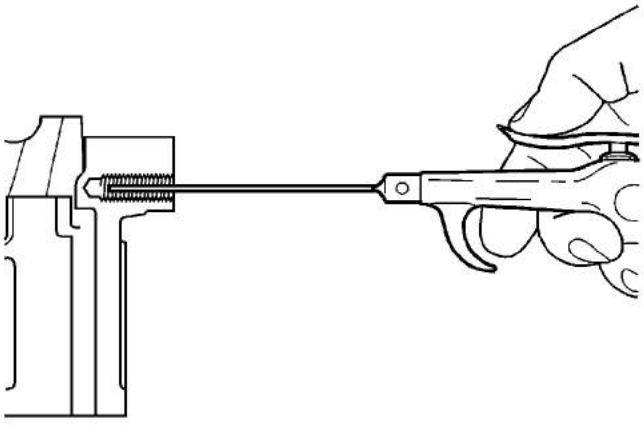

cardiagn.com

Note: All chips must be removed from the drilled hole prior to tapping.

7. Using compressed air, clean out any chips.

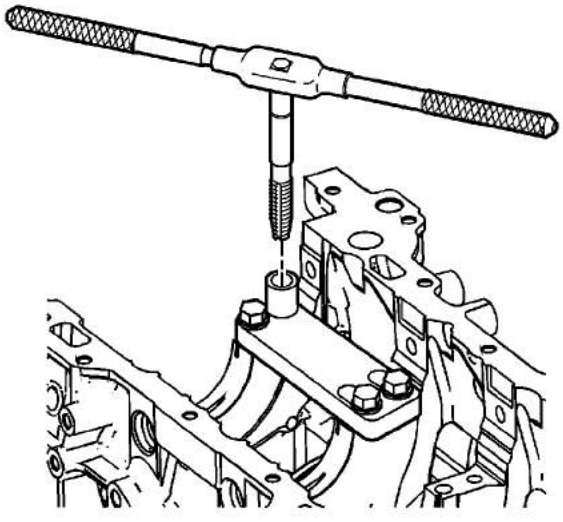

Note:

- Do not remove the fixture plate, ensure the fixture plate is installed during the machining and installation processes of the insert.
- During the tapping process, it is necessary to repeatedly remove the tap and clean chips from the hole and the flutes of the tap.
- Ensure the tap has created full threads at least to the depth equal to the insert length.

8. Using a suitable tapping wrench, tap the threads of the drilled hole by hand only.

cardiagn.com

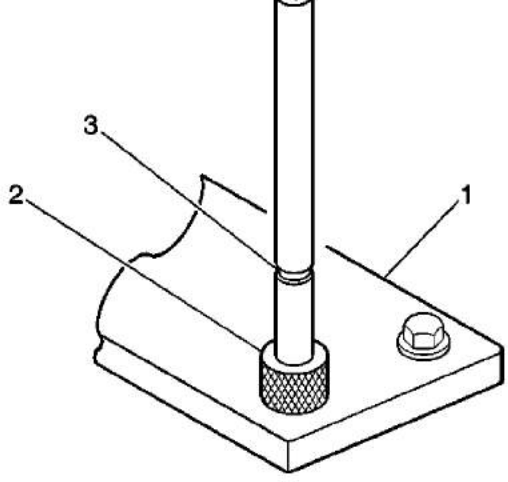

9. In order to tap the new threads for the insert to the proper depth, rotate the tap into the crankshaft main cap bolt hole until the mark (3) on the tap aligns with the top of the drill bushing (2).

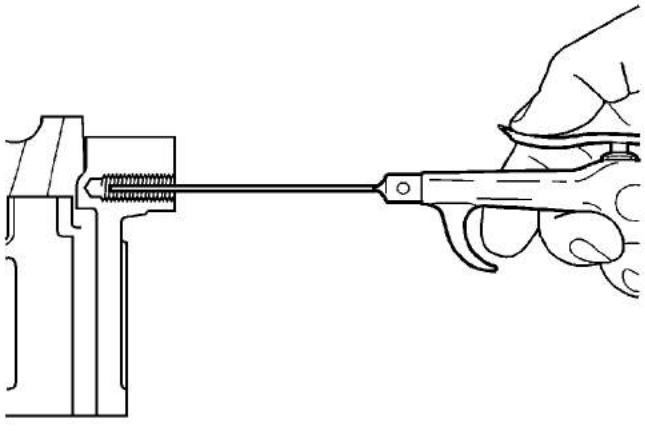

Note: All chips must be removed from the tapped hole prior to insert installation.

10. Using compressed air, clean out any chips.

cardiagn.com

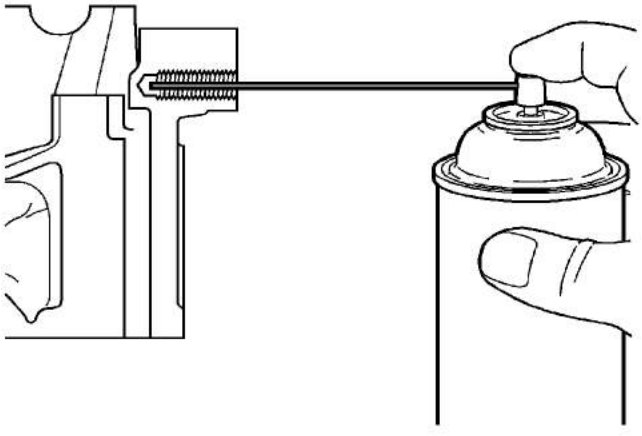

11. Spray cleaner GM P/N 12346139, GM P/N 12377981 (Canadian P/N 10953463) or equivalent into the tapped hole.

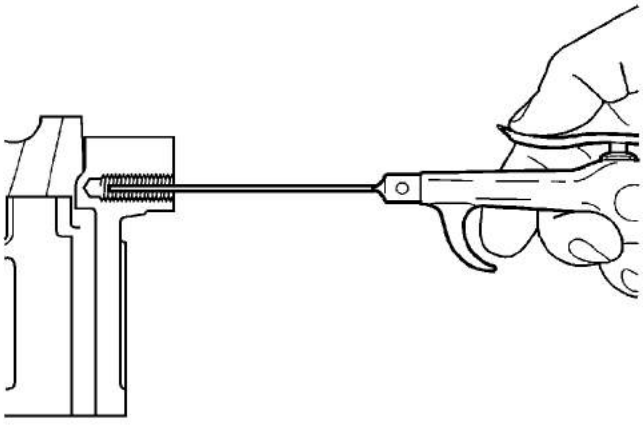

Note: All chips must be removed from the tapped hole prior to insert installation.

12. Using compressed air, clean out any chips.

cardiagn.com

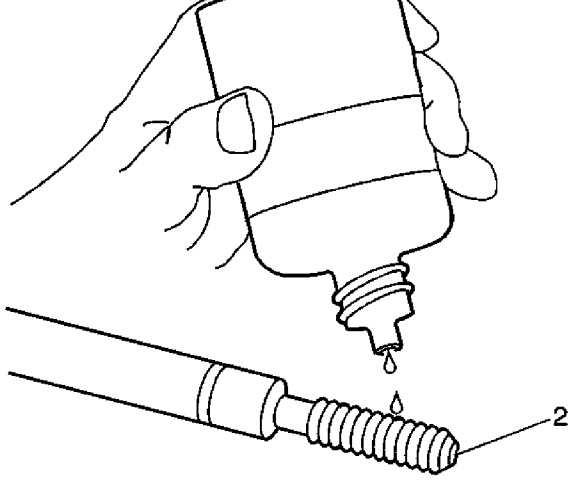

Note:

- Do not remove the fixture plate, ensure the fixture plate is installed during the installation process of the insert.
- Do not allow oil or other foreign material to contact the outside diameter (OD) of the insert.

13. Lubricate the threads of the driver installation tool (2) with the J 42385-110 (1).

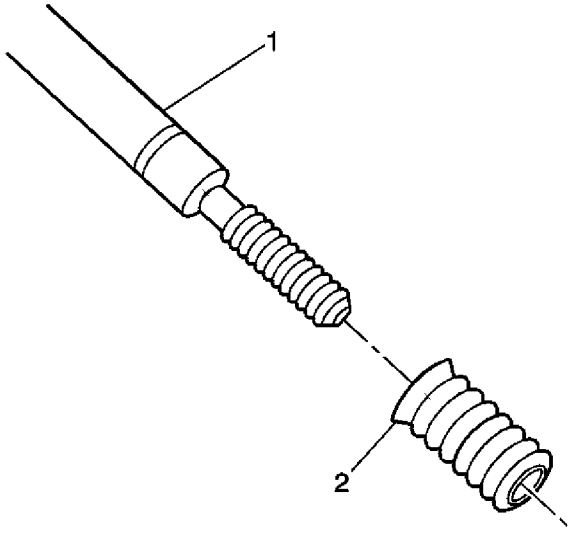

14. Install the insert (2) onto the driver installation tool (1).

cardiagn.com

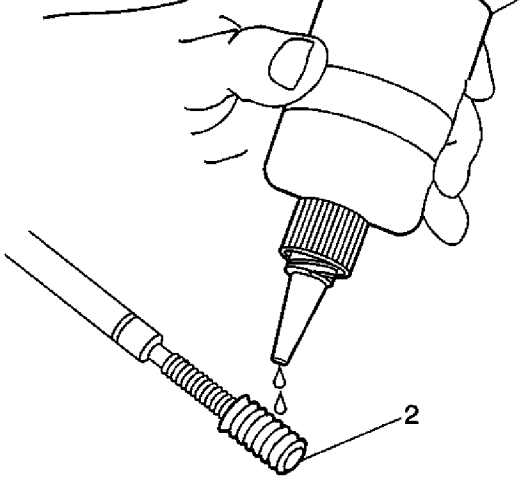

15. Apply threadlock sealant GM P/N 12345493, (Canadian P/N 10953488), J 42385-109, LOCTITE 277®, or equivalent (1) to the insert OD threads (2).

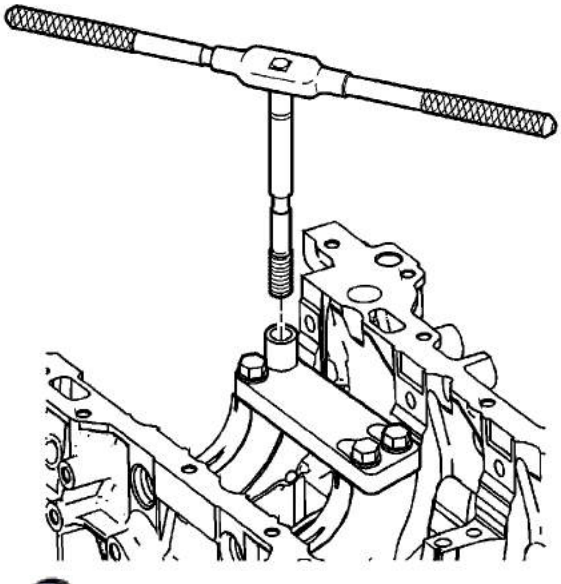

16. Install the insert and installation driver into the tapped hole by hand only.
17. Start the insert into the threaded hole.

Note: If the insert will not thread down until the flange contacts the counterbored surface remove the insert immediately with a screw extracting tool and inspect the tapped hole for any remaining chips and/or improper tapping.

18. Install the insert until the flange of the insert contacts the counterbored surface.

Note: The driver installation tool will tighten up before screwing completely through the insert. This is acceptable. The threads at the bottom of the insert are being formed and the

cardiagn.com

19. Continue to rotate the driver installation tool through the insert.

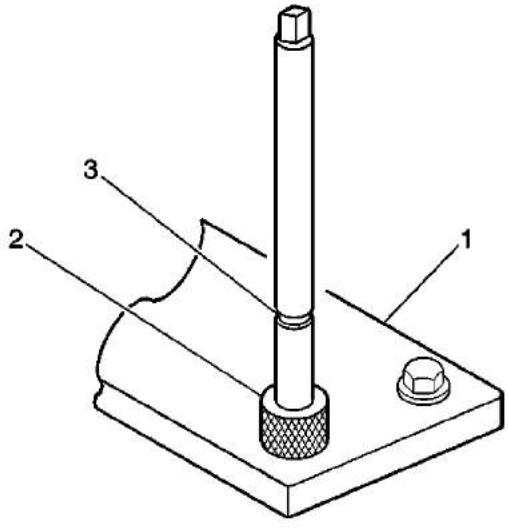

20. Rotate the driver installation tool until the mark (3) on the driver installation tool aligns with the top of the drill bushing (2).
21. Inspect the insert for proper installation into the tapped hole.

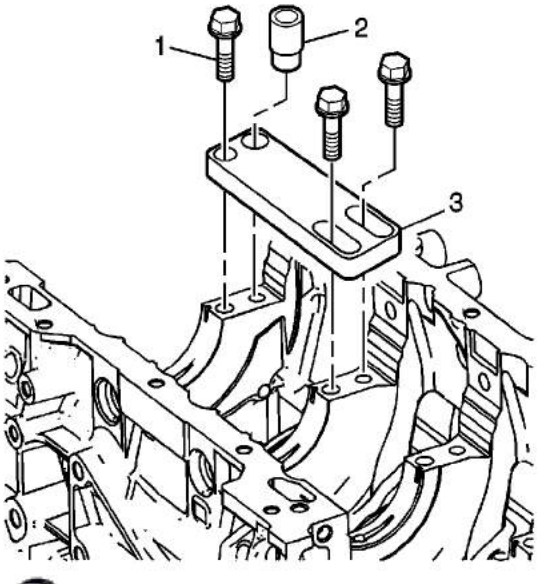

22. Remove the fixture plate bolts (1).
23. Remove the fixture plate (3) and bushing (2).

Inboard Bolt Holes

Warning: Refer to Safety Glasses Warning in the Preface section.

cardiagn.com

the insert.

- The use of a cutting type fluid GM P/N 1052864, (Canadian P/N 992881), WD 40® or equivalent is recommended when performing the drilling, counterboring and tapping procedures.

  When installed to the proper depth, the flange of the insert will be seated against the counterbore of the drilled/tapped hole.

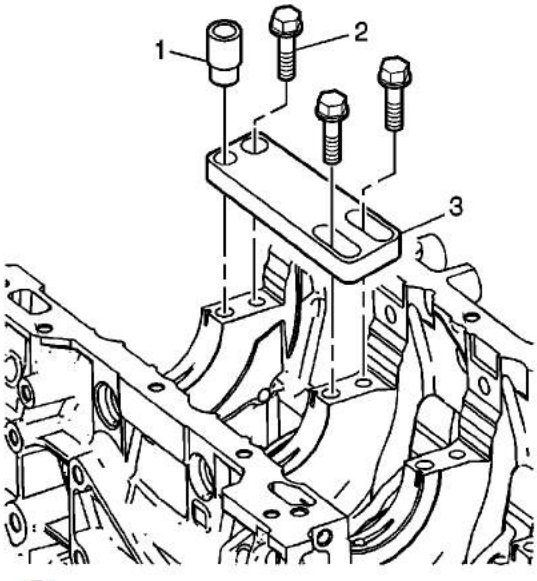

1. Position the fixture plate (3) with the bushing (1) installed over the crankshaft main cap bolt hole to be repaired.
2. Loosely install the fixture plate bolts (2) into the remaining crankshaft main cap bolt holes.

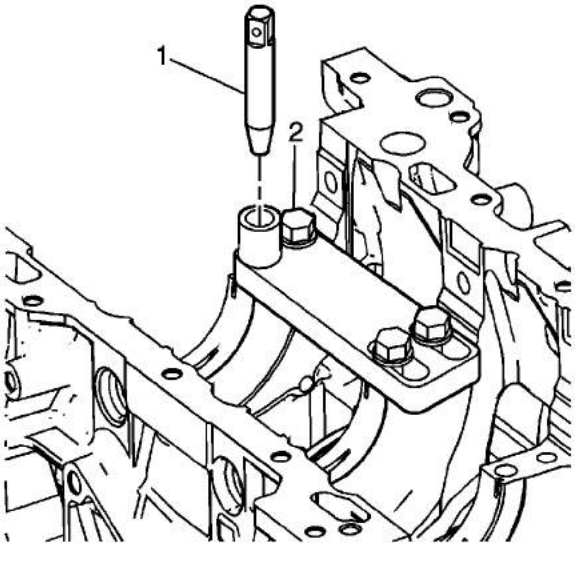

cardiagn.com

3. Position the alignment pin (1) through the bushing and into the crankshaft main cap bolt hole.
4. With the alignment pin in the desired crankshaft main cap bolt hole, tighten the fixture retaining bolts (2).
5. Remove the alignment pin (1) from the crankshaft main cap bolt hole.

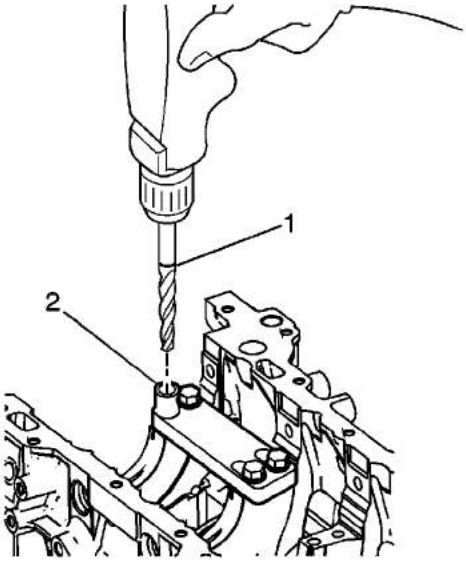

Note:

- During the drilling process, it is necessary to repeatedly remove the drill and clean chips from the hole and the flutes of the drill.
- Drill the crankshaft main bolt hole until the mark (1) on the drill aligns with the top of the drill bushing (2).

6. Drill out the threads of the damaged hole.

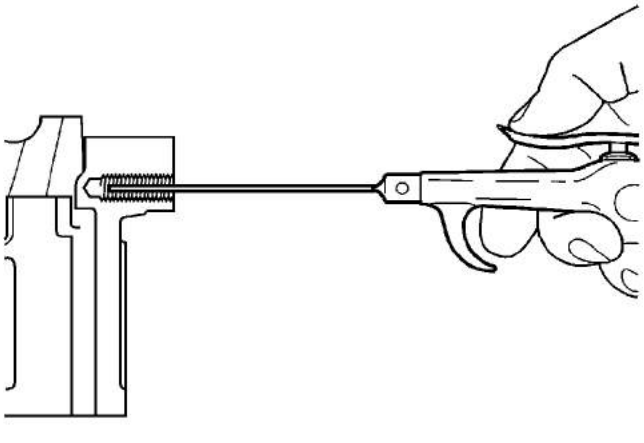

cardiagn.com

Note: All chips must be removed from the drilled hole prior to tapping.

7. Using compressed air, clean out any chips.

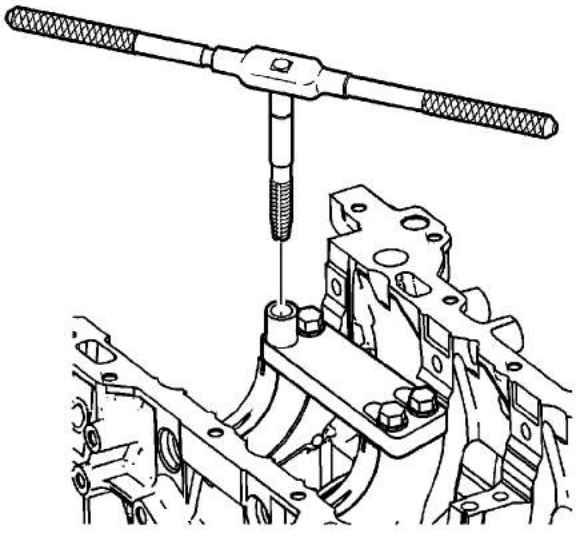

Note:

- Do not remove the fixture plate, ensure the fixture plate is installed during the machining and installation processes of the insert.
- During the tapping process, it is necessary to repeatedly remove the tap and clean chips from the hole and the flutes of the tap.
- Ensure the tap has created full threads at least to the depth equal to the insert length.

8. Using a suitable tapping wrench, tap the threads of the drilled hole by hand only.

cardiagn.com

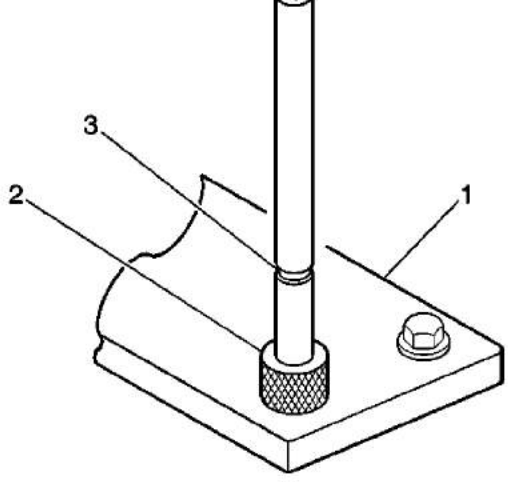

9. In order to tap the new threads for the insert to the proper depth, rotate the tap into the crankshaft main cap bolt hole until the mark (3) on the tap aligns with the top of the drill bushing (2).

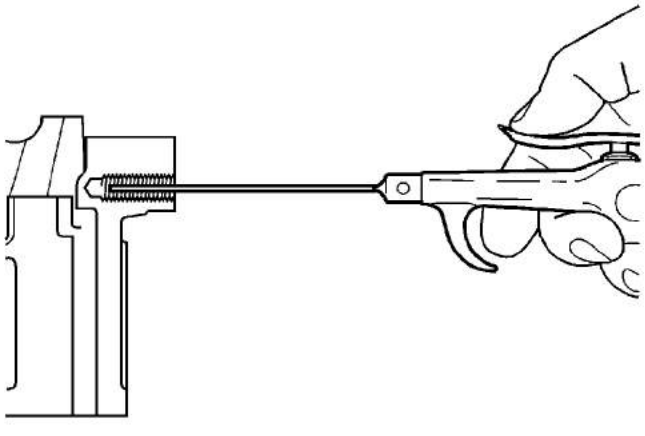

Note: All chips must be removed from the tapped hole prior to insert installation.

10. Using compressed air, clean out any chips.

cardiagn.com

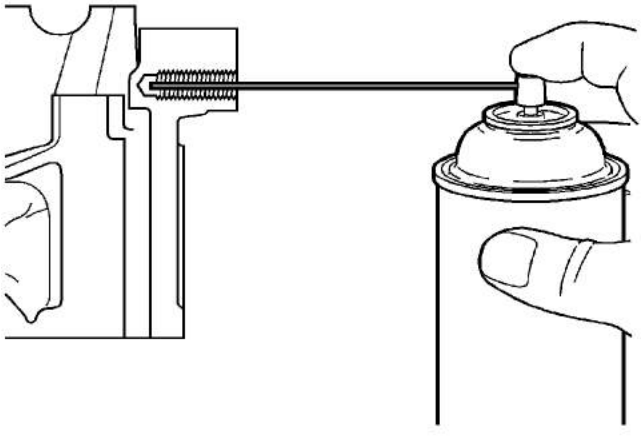

11. Spray cleaner GM P/N 12346139, GM P/N 12377981 (Canadian P/N 10953463) or equivalent into the tapped hole.

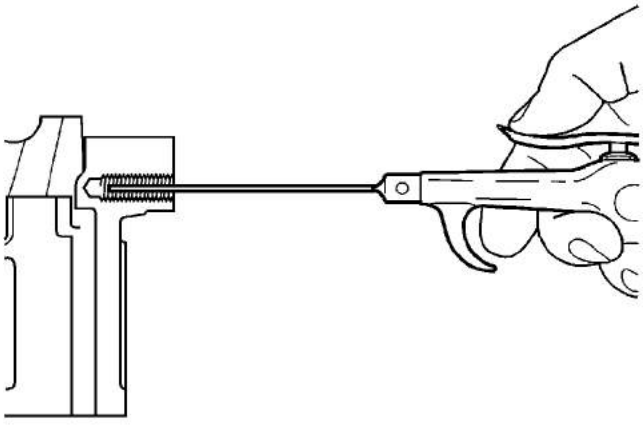

Note: All chips must be removed from the tapped hole prior to insert installation.

12. Using compressed air, clean out any chips.

cardiagn.com

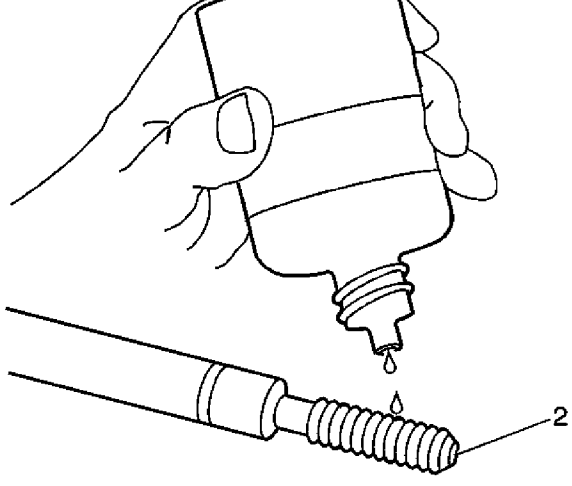

Note:

- Do not remove the fixture plate, ensure the fixture plate is installed during the installation process of the insert.
- Do not allow oil or other foreign material to contact the outside diameter (OD) of the insert.

13. Lubricate the threads of the driver installation tool (2) with the J 42385-110 (1).

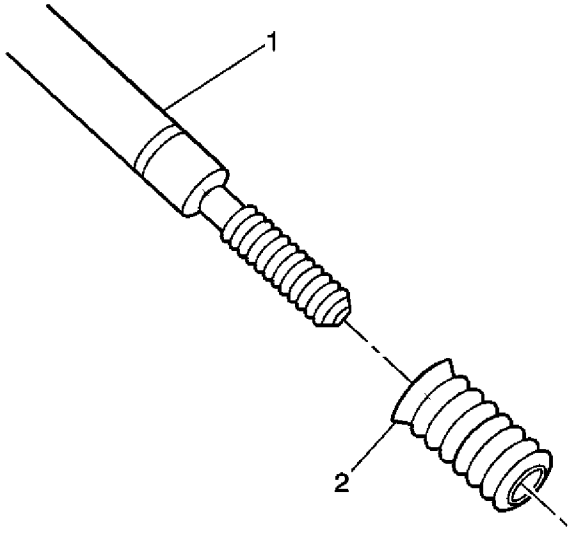

14. Install the insert (2) onto the driver installation tool (1).

cardiagn.com

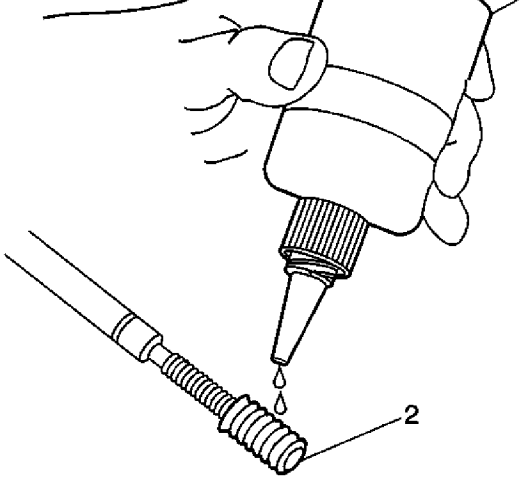

15. Apply threadlock sealant GM P/N 12345493, (Canadian P/N 10953488), J 42385-109, LOCTITE 277®, or equivalent (1) to the insert OD threads (2).

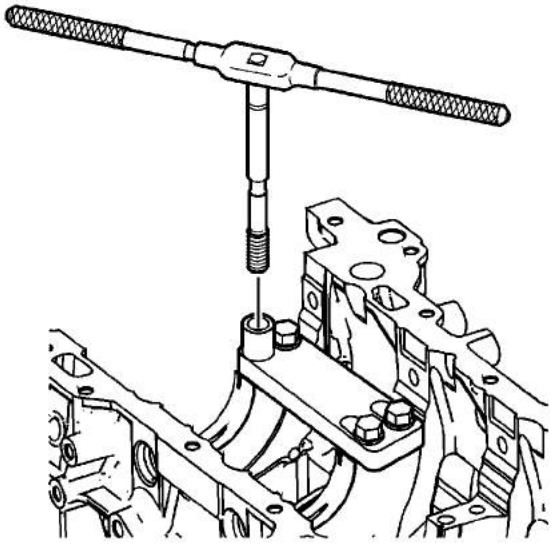

16. Install the insert and installation driver into the tapped hole by hand only.
17. Start the insert into the threaded hole.

Note: If the insert will not thread down until the flange contacts the counterbored surface remove the insert immediately with a screw extracting tool and inspect the tapped hole for any remaining chips and/or improper tapping.

18. Install the insert until the flange of the insert contacts the counterbored surface.

Note: The driver installation tool will tighten up before screwing completely through the insert. This is acceptable. The threads at the bottom of the insert are being formed and the

cardiagn.com

19. Continue to rotate the driver installation tool through the insert.

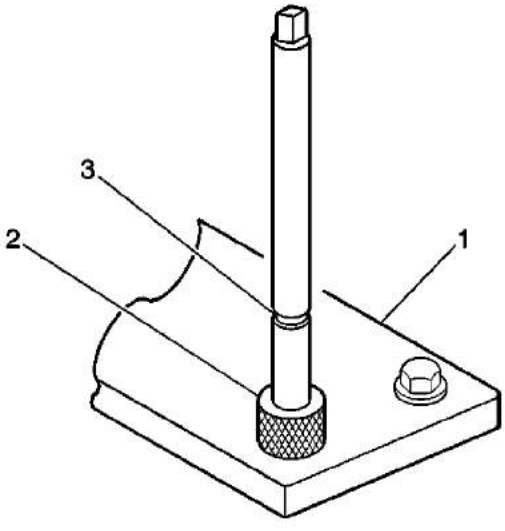

20. Rotate the driver installation tool until the mark (3) on the driver installation tool aligns with the top of the drill bushing (2).
21. Inspect the insert for proper installation into the tapped hole.

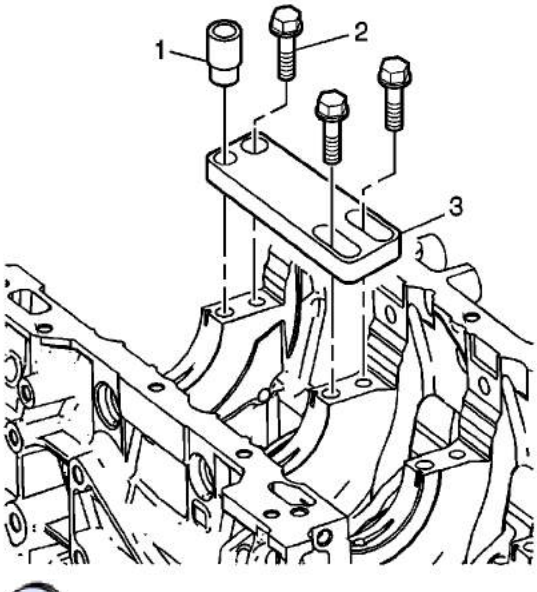

22. Remove the fixture plate bolts (2).
23. Remove the fixture plate (3) and bushing (1).

cardiagn.com

Service Prior to Assembly

- Dirt will cause premature wear of the rebuilt engine. Clean all the components.
- Use the proper tools to measure the components when checking for excessive wear. Components not within the manufacturer's specification must be repaired or replaced.
- When the components are reinstalled into an engine, return the components to their original location, position, and direction.
- During assembly, lubricate all the moving parts with clean engine oil (unless otherwise specified). This will provide initial lubrication when the engine is first started.

cardiagn.com

Engine Block Assemble

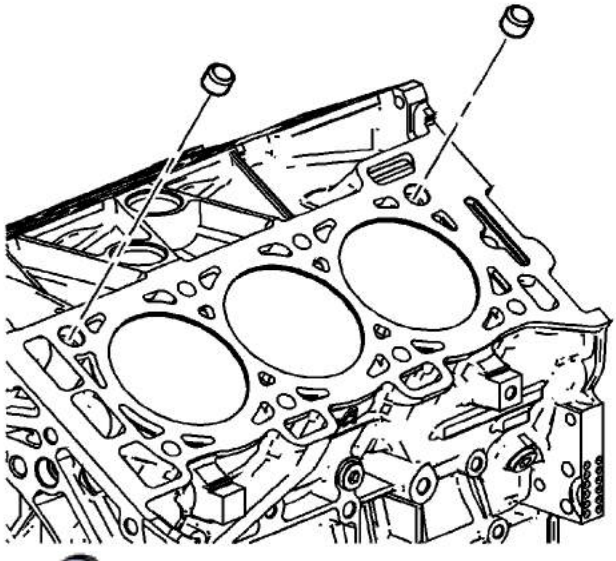

1. Install the cylinder block-to-cylinder head alignment dowels.

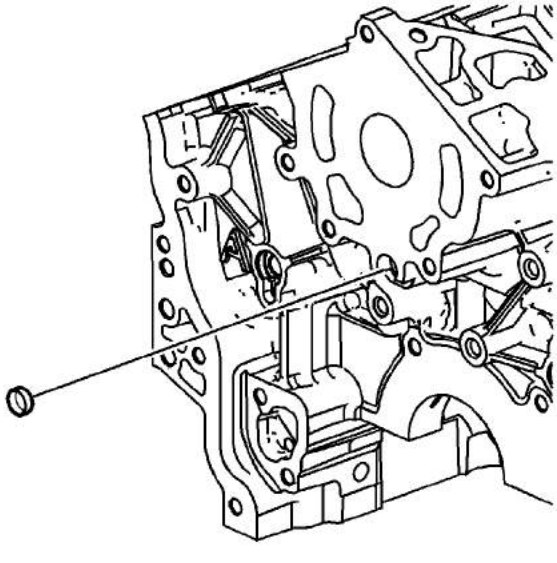

2. Install the NEW front oil gallery expansion plug.
3. Ensure the NEW front oil gallery expansion plug is installed to the proper depth.

cardiagn.com

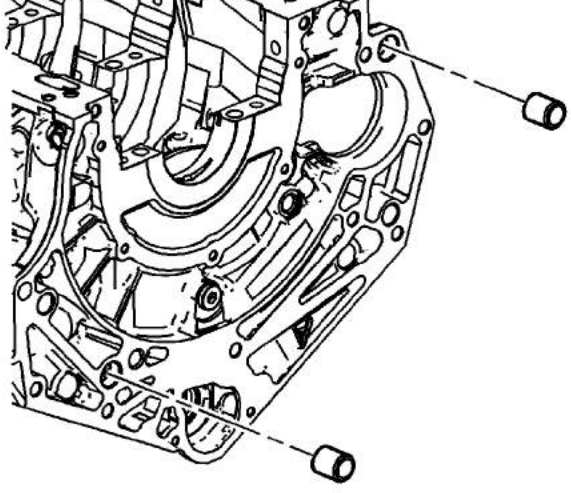

4. Install the cylinder block-to-transmission alignment dowels.

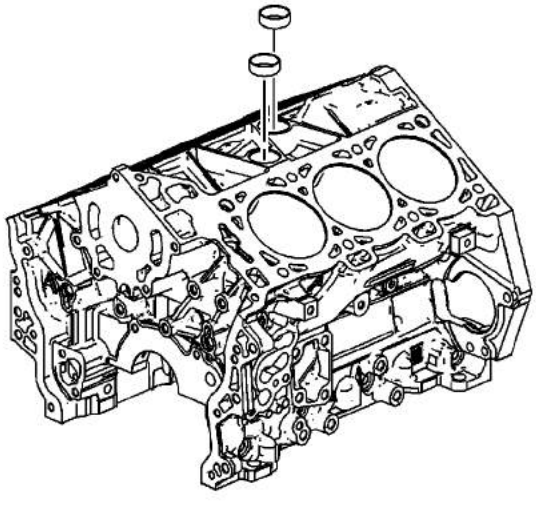

5. Apply the RTV sealant, GM P/N 12378521 (Canadian P/N 88901148) or equivalent on the NEW coolant expansion plugs.
6. Install the NEW coolant expansion plugs.
7. Ensure the NEW coolant expansion plugs are installed to the proper depth.

cardiagn.com

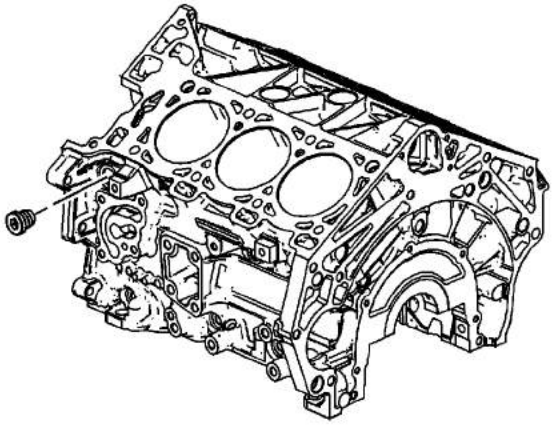

8. Apply thread sealant GM P/N 12346004 (Canadian P/N 10953480) or equivalent on the threads of the M20 left side oil gallery threaded plug.

   Caution: Refer to Fastener Caution in the Preface section.

9. Install the M20 left side oil gallery threaded plug and tighten to **31 N·m (23 lb ft)**.

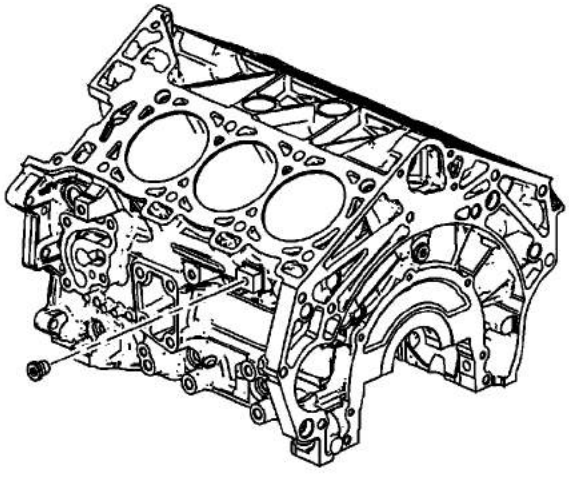

10. Apply thread sealant GM P/N 12346004 (Canadian P/N 10953480) or equivalent on the threads of the M14 left side coolant drain threaded plug.
11. Install the M14 left side coolant drain threaded plug and tighten to **31 N·m (23 lb ft)**.

cardiagn.com

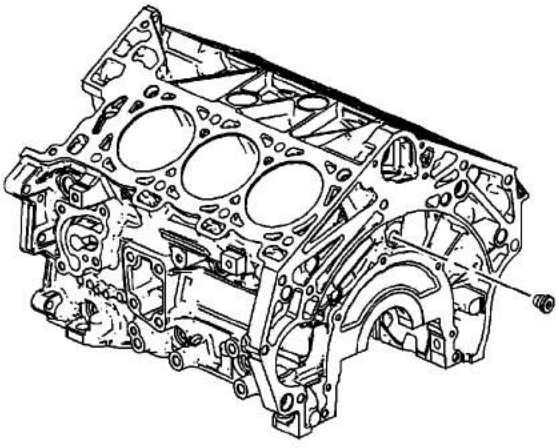

12. Apply thread sealant GM P/N 12346004 (Canadian P/N 10953480) or equivalent on the threads of the M14 rear oil gallery threaded plug.
13. Install the M14 rear oil gallery threaded plug and tighten to **31 N·m (23 lb ft)**.

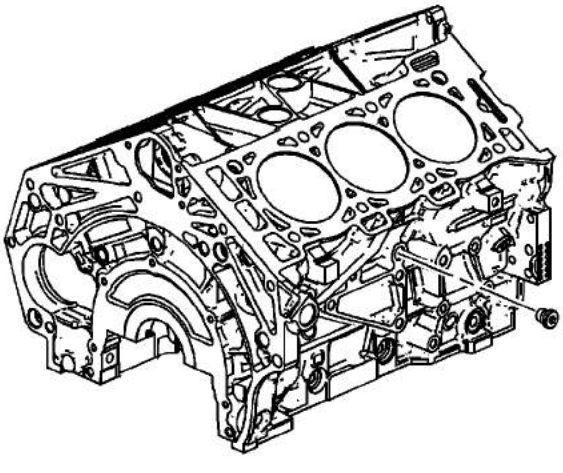

14. Apply thread sealant GM P/N 12346004 (Canadian P/N 10953480) or equivalent on the threads of the M14 right side coolant drain threaded plug.
15. Install the M14 right side coolant drain threaded plug and tighten to **31 N·m (23 lb ft)**.

cardiagn.com

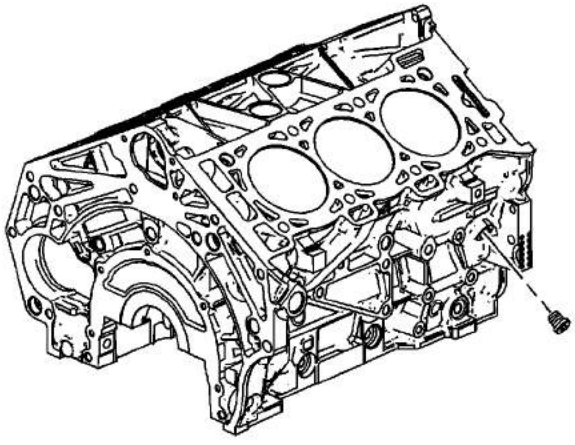

16. Apply thread sealant GM P/N 12346004 (Canadian P/N 10953480) or equivalent on the threads of the M14 right side oil gallery threaded plug.
17. Install the M14 right side oil gallery threaded plug and tighten to **31 N·m (23 lb ft)**.

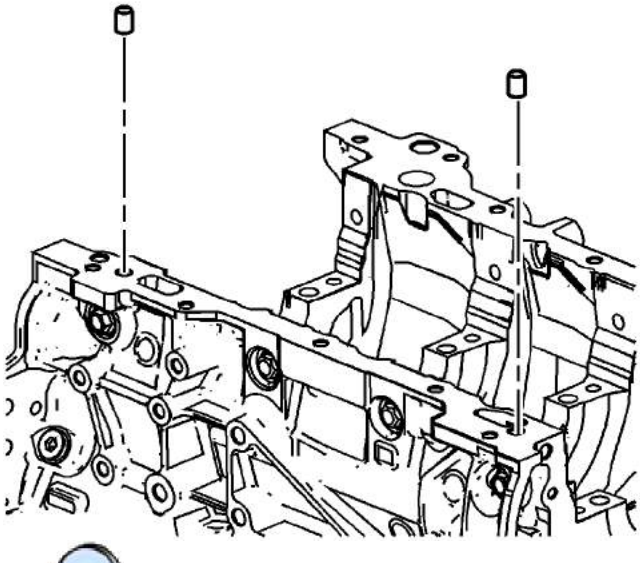

18. Install the cylinder block-to-oil pan alignment dowels.

cardiagn.com

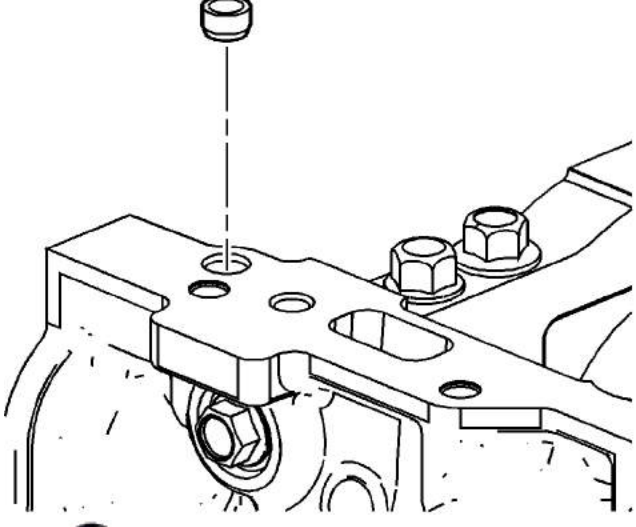

19. Install the NEW right front oil pan rail oil gallery expansion plug.
20. Ensure the NEW right front oil pan rail oil gallery expansion plug is installed to the proper depth.

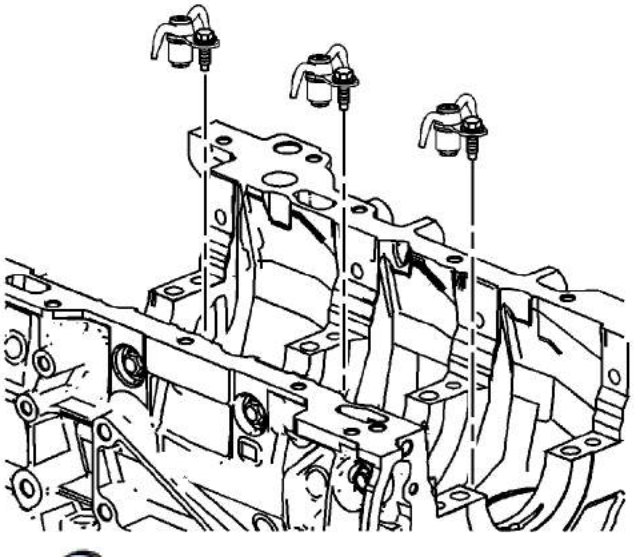

21. Install the oil jets.
22. Install the oil jet bolts and tighten to **10 N·m (89 lb in)**.

cardiagn.com

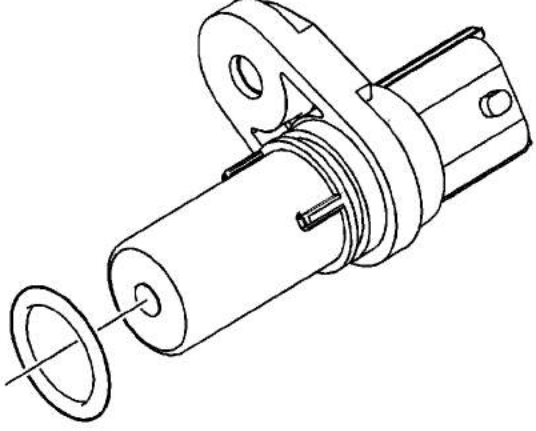

23. Install the NEW crankshaft position sensor O-ring, if damaged.

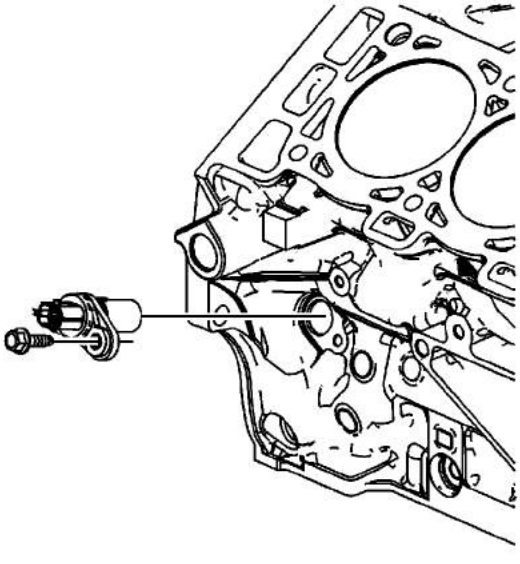

24. Install the crankshaft position sensor.
25. Install the crankshaft position sensor bolt and tighten to **10 N·m (89 lb in)**.

cardiagn.com

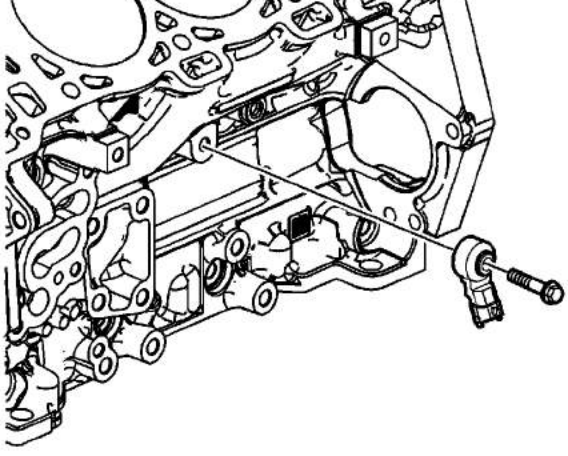

26. Install the left knock sensor to the cylinder block, as shown.
27. Install the left knock sensor bolt and tighten to **23 N·m (17 lb ft)**.
28. Ensure proper sensor orientation.

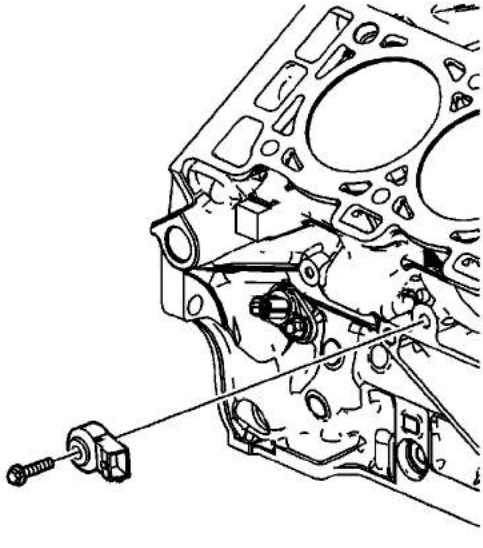

29. Install the right knock sensor to the cylinder block, as shown.
30. Install the right knock sensor bolt and tighten to **23 N·m (17 lb ft)**.
31. Ensure proper sensor orientation.

cardiagn.com

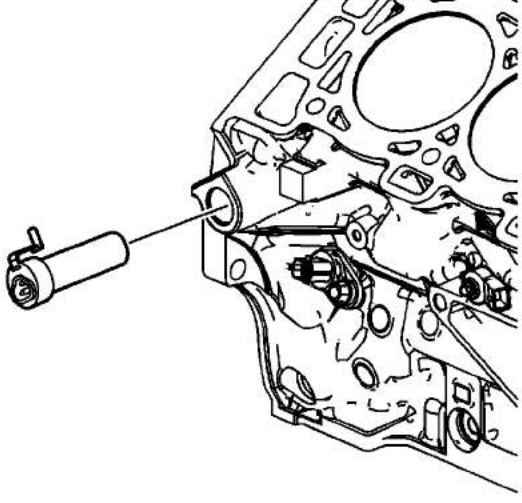

32. Install the block heater cartridge, if equipped.

cardiagn.com

Crankshaft Bearing Installation Procedure

Note: If the crankshaft bearings have been used in a running engine, you must replace them with NEW crankshaft bearings for reassembly.

1. Clean the crankcase crank bore with a lint-free cloth.
2. Clean all the oil from the backside of new bearing halves.

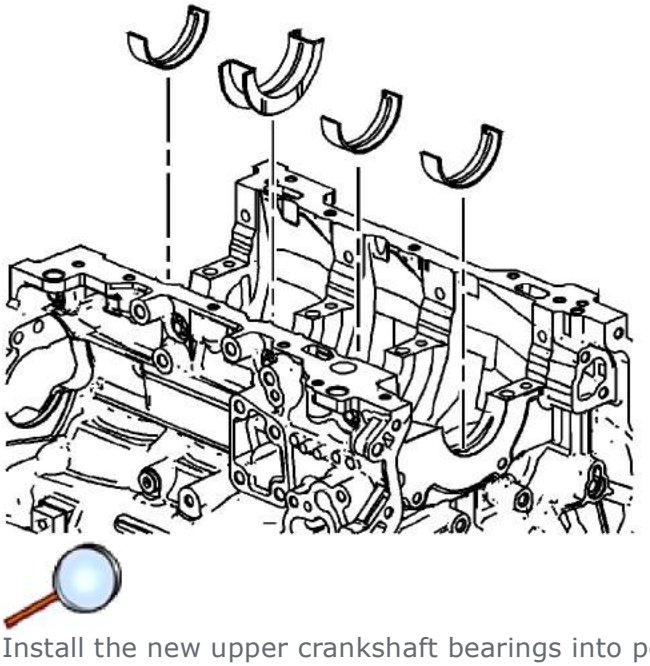

3. Install the new upper crankshaft bearings into position. The thrust bearing belongs in the number 3 journal. Ensure that the upper bearing insert contains the oil transfer hole and groove. Roll the bearing into position so that the lock tang engages the crank slot. The bearing must fit flush with the upper crankcase.

cardiagn.com

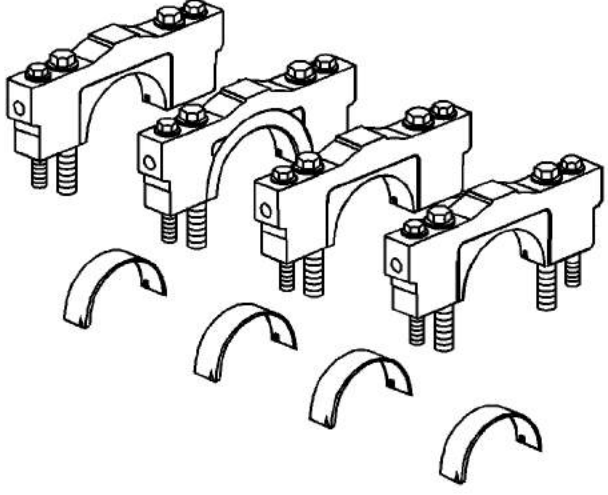

4. Install the new lower crankshaft bearings into position in the main bearing caps. The lower crankshaft bearings are identified by NO grooves or holes. The bearings must fit flush with the crankshaft bearing caps.

Crankshaft Installation Procedure

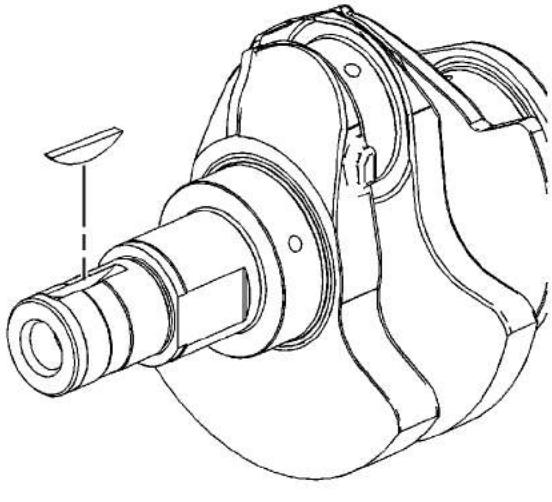

1. If removed, install the crankshaft key. Lightly tap the key in place with a small soft face, bronze/plastic, hammer until it bottoms in the keyway.

cardiagn.com

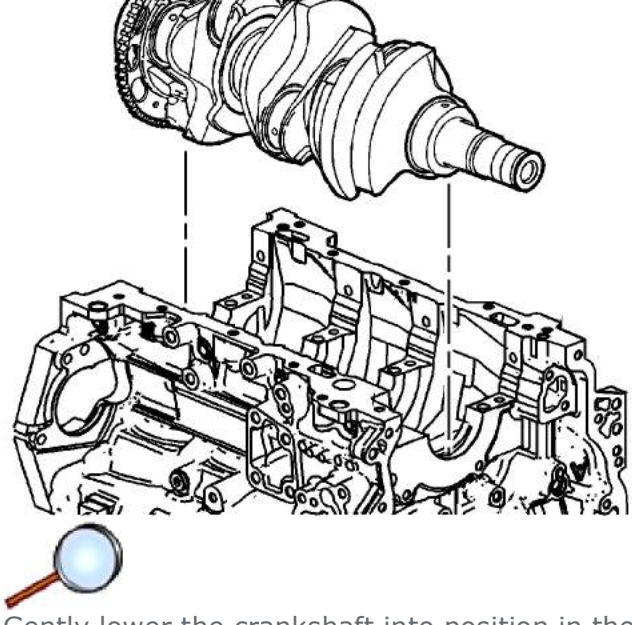

2. Gently lower the crankshaft into position in the cylinder block.

Crankshaft Bearing Clearance Measurement Procedure

Special Tools

- *J 6125-B* Slide Hammer Adapter J 6125-1B
- *J 41818* Crankshaft Bearing Cap Remover J 41818
- *J 45059* Angle Meter J 45059

  For equivalent regional tools, refer to Special Tools.

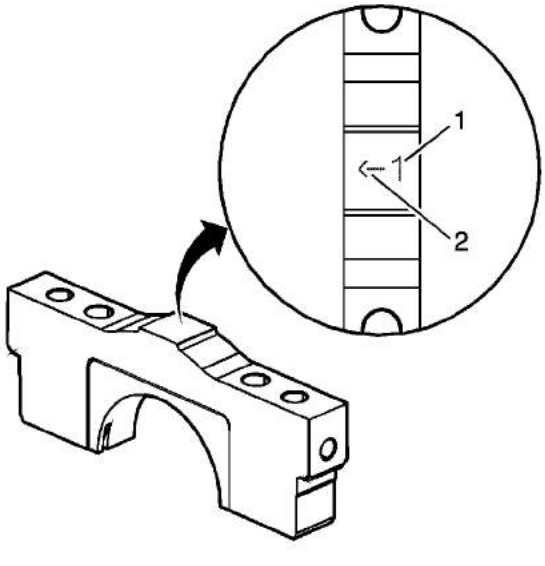

cardiagn.com

1. Place a length of fresh, room temperature plastic gaging material all the way across all the crankshaft bearing journals.
2. Identify the proper order of the main bearing caps. The main bearing caps are numbered 1 (1) through 4, with the front main bearing cap marked with the number 1. The arrow (2) is to be oriented to the front of the engine.

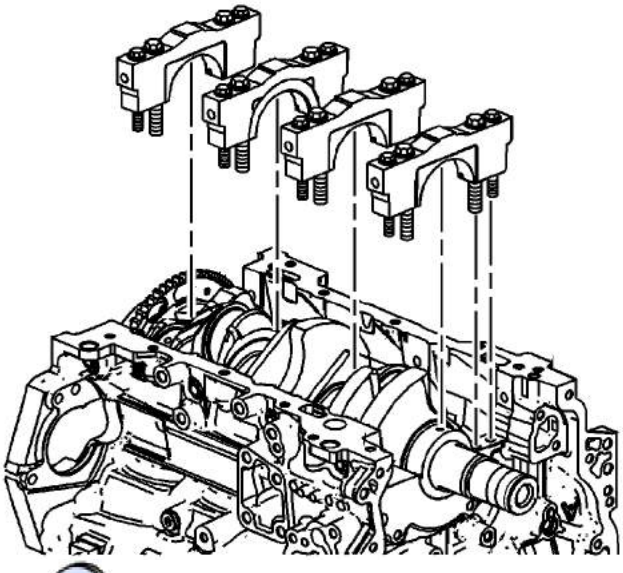

3. Install the crankshaft main bearing caps.
4. Loosely install the original inner main cap bolts.
5. Loosely install the original outer main cap bolts.

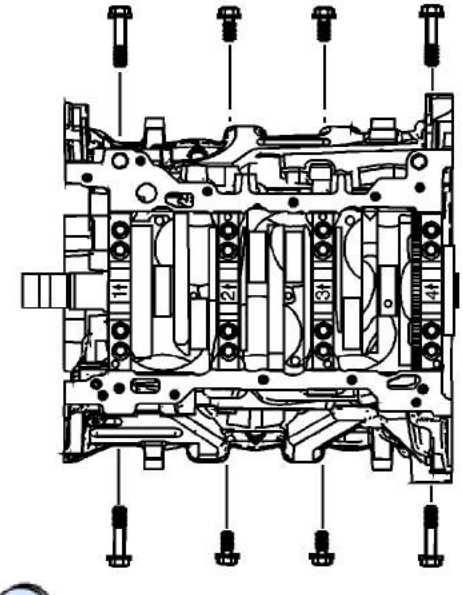

6. Loosely install the original short/inner side main cap bolts.
7. Loosely install the original long/outer side main cap bolts.

cardiagn.com

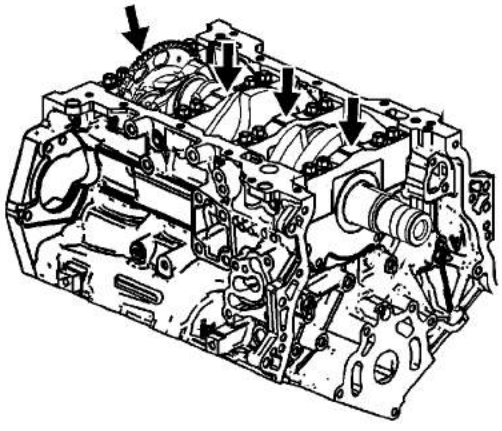

8. Tap the crankshaft main bearing caps with a soft-faced hammer.
9. Tighten the main caps bolts using the *J 45059* meter in the following sequence:

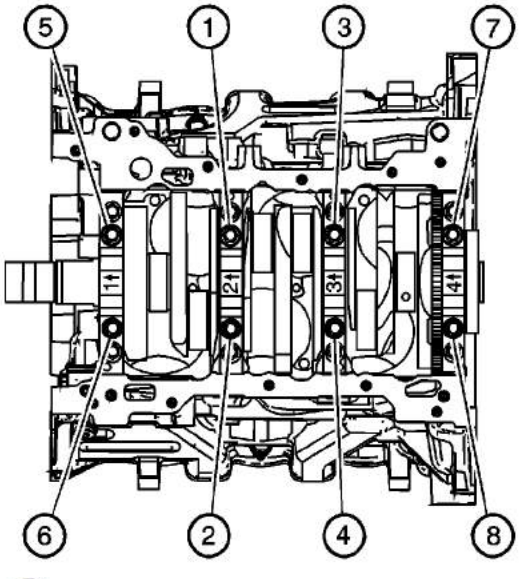

Caution: Refer to Fastener Caution in the Preface section.

10. Tighten the inboard bolts (1-8) to **20 N·m (15 lb ft) plus 80 degrees**.

cardiagn.com

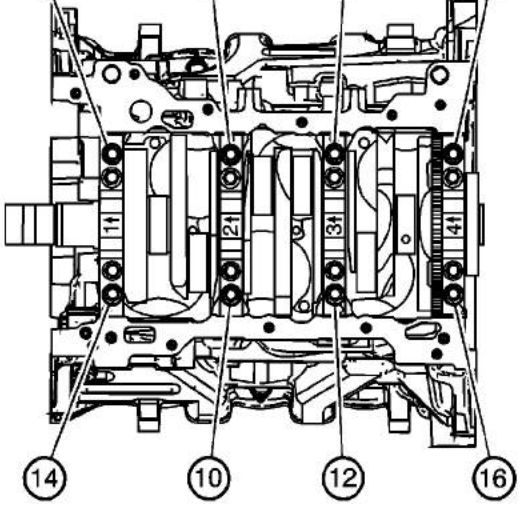

11. Tighten the outboard bolts (9-16) to **15 N·m (11 lb ft) plus 110 degrees**.

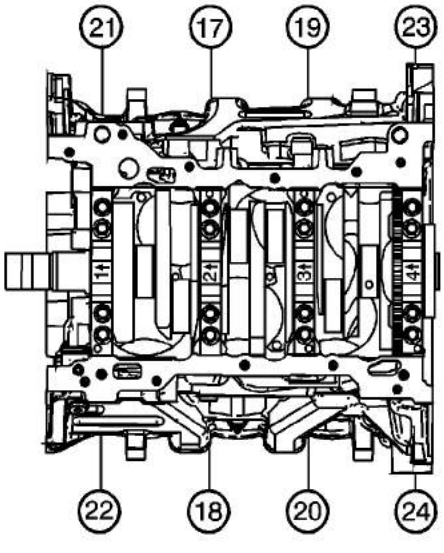

12. Tighten the short/inner bolts (17-20) to **30 N·m (22 lb ft) plus 60 degrees**.
13. Tighten the long/outer bolts (21-24) to **30 N·m (22 lb ft) plus 60 degrees**.

Note: Do not rotate the crankshaft.

14. After reaching final torque, allow the assembly to sit for 2 minutes.

cardiagn.com

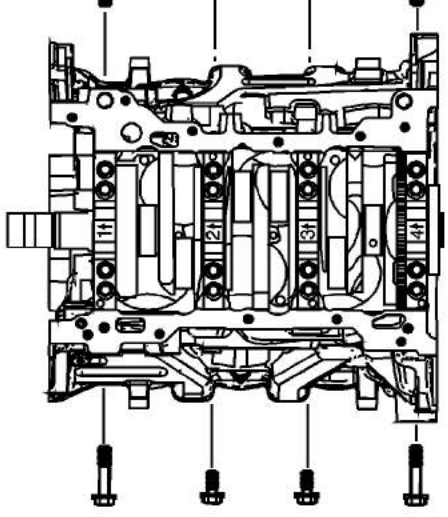

15. Remove the crankshaft bearing cap side bolts.

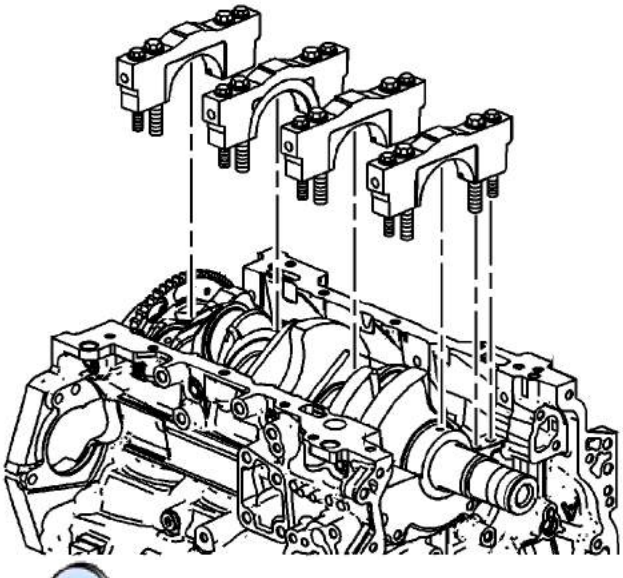

16. Remove the crankshaft bearing cap outer bolts.
17. Remove the crankshaft bearing cap inner bolts.
18. Remove the crankshaft bearing caps using the *J 6125-B* adapter and *J 41818* remover .

cardiagn.com

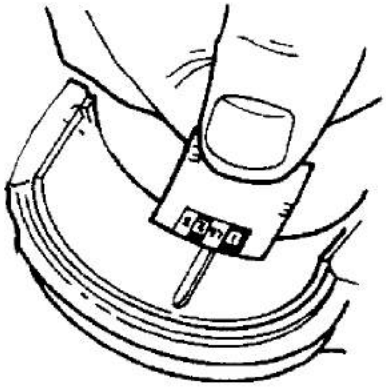

19. Determine the crankshaft bearing clearance by comparing the width of the flattened plastic gaging material at its widest point with the graduation on the gaging material container.

    Note: The crankshaft bearings CAN be reused after checking the clearance if the bearings have never been used in a running engine.

20. Compare your measurements with the Engine Mechanical Specifications. If the new bearings do not provide the proper crankshaft to bearing clearance, inspect the following:
    - 20.1. Re-measure the crankshaft journals for the correct specified size and ensure the proper new bearings are being installed. If the crankshaft journals are incorrectly sized, replace or regrind the crankshaft. Crankshaft machining is permitted and undersized bearings are available.
    - 20.2. Re-measure the engine block crankshaft bearing bore diameter to ensure proper size. The engine block crankshaft bearing bore is not machinable and the block must be replaced if out of specification.
21. Clean the plastic gaging material from the crankshaft bearing journals with a soft, lint-free cloth.

cardiagn.com

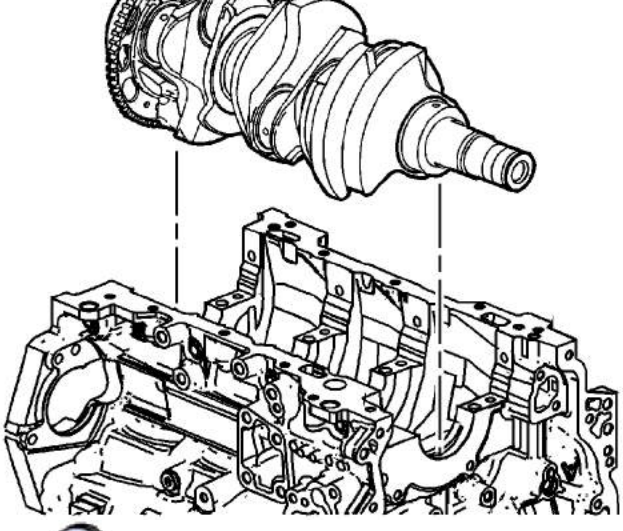

22. Lift the crankshaft out of the cylinder block.

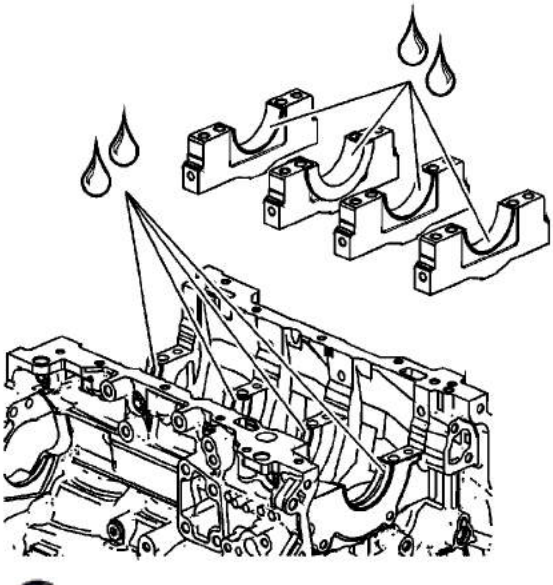

23. Apply a liberal amount of crankshaft prelube GM P/N 1052367 (Canadian P/N 992869) or clean engine oil GM P/N 12345501 (Canadian P/N 992704) to the upper and lower bearing surfaces.

cardiagn.com

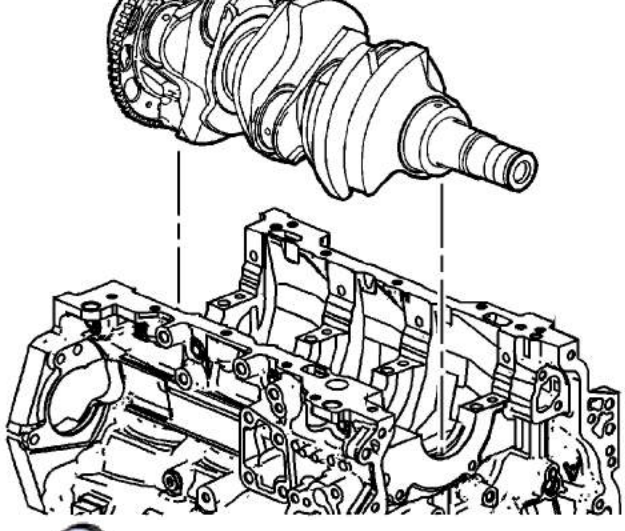

24. Gently lower the crankshaft into position in the cylinder block.

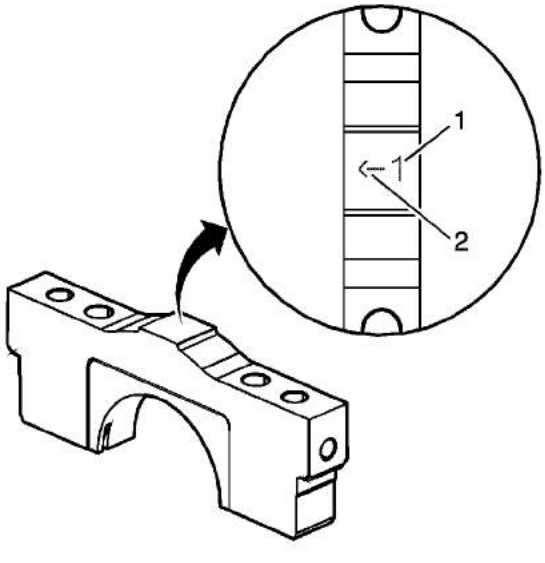

25. Identify the proper order of the main bearing caps. The main bearing caps are numbered 1 (1) through 4, with the front main bearing cap marked with the number 1. The arrow (2) is to be oriented to the front of the engine.

cardiagn.com

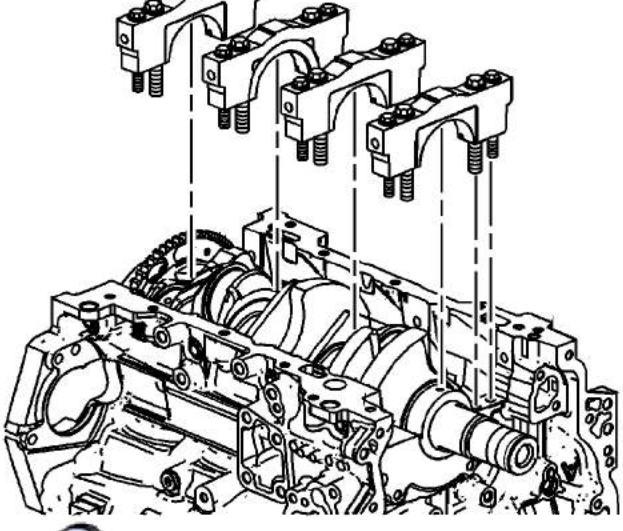

26. Install the crankshaft main bearing caps.
27. Loosely install the original inner main cap bolts.
28. Loosely install the NEW outer main cap bolts.

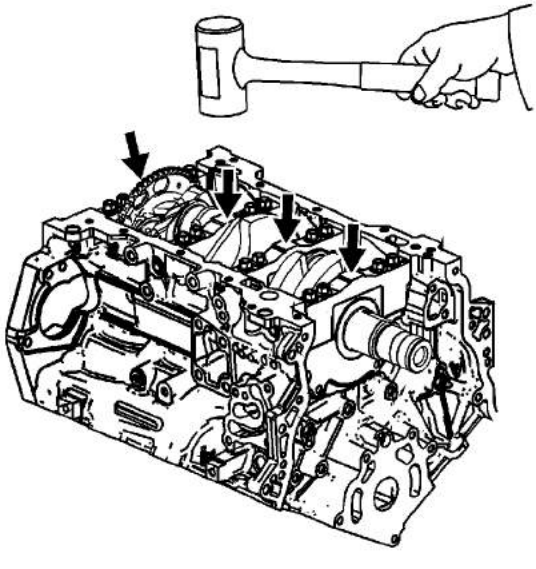

29. Tap the crankshaft main bearing caps with a soft-faced hammer.

cardiagn.com

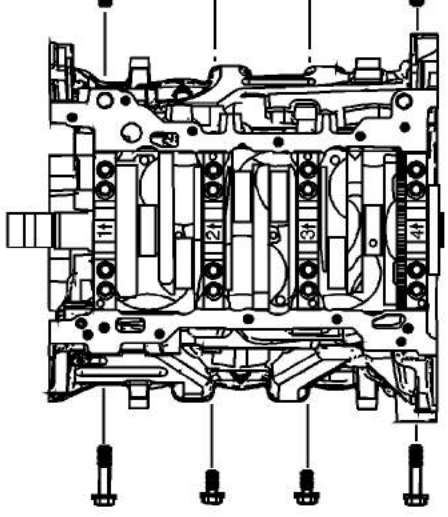

Note: The side main cap bolts originally have a sealant on the flange of the bolt head. NEW bolts must be used. If NEW bolts are not used, oil can leak from the crankcase past the bolts.

30. Loosely install the NEW short/inner side main cap bolts.
31. Loosely install the NEW long/outer side main cap bolts.
32. Tighten the main cap bolts using the *J 45059* meter in the following sequence:

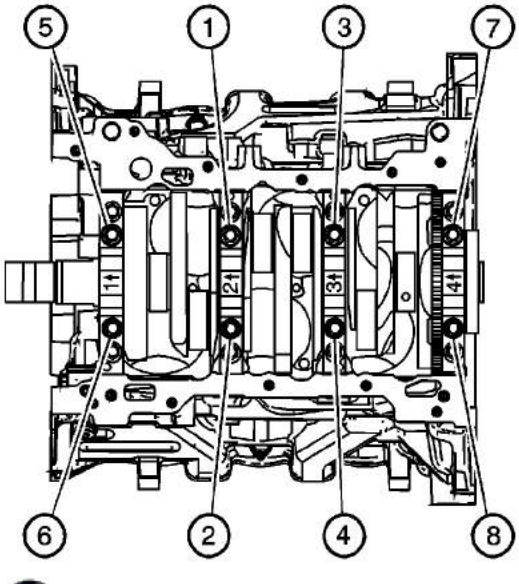

33. Tighten the inboard bolts (1-8) to **20 N·m (15 lb ft) plus 80 degrees**.

cardiagn.com

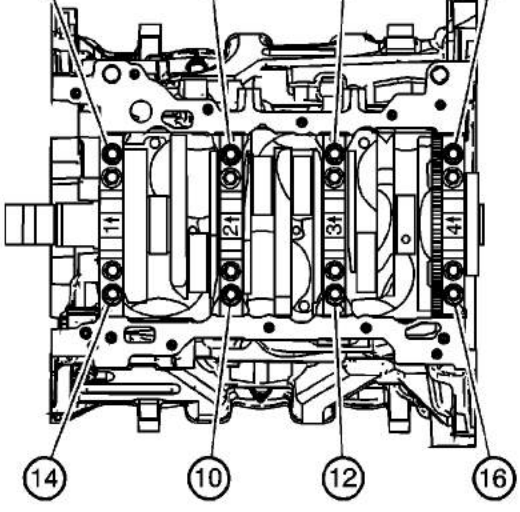

34. Tighten the outboard bolts (9-16) to **15 N·m (11 lb ft) plus 110 degrees**.

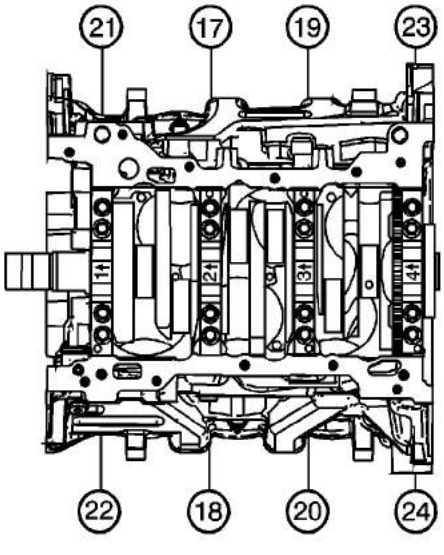

35. Tighten the short/inner bolts (17-20) to **30 N·m (22 lb ft) plus 60 degrees**.
36. Tighten the long/outer bolts (21-24) to **30 N·m (22 lb ft) plus 60 degrees**.
37. Ensure that the crankshaft turns without binding or noise.

cardiagn.com

Piston, Connecting Rod, and Bearing Installation

Special Tools

- *EN 46121* Connecting Rod Guide Pin Set
- *EN-48589* Crankshaft Rotation Socket
- *J 8037* Ring Compressor
- *J 43690* Rod Bearing Clearance Checking Tool
- *J 43690-100* Rod Bearing Clearance Checking Tool - Adapter Kit
- *J 45059* Angle Meter

  For equivalent regional tools, refer to Special Tools.

Piston and Connecting Rod Assembly Procedure

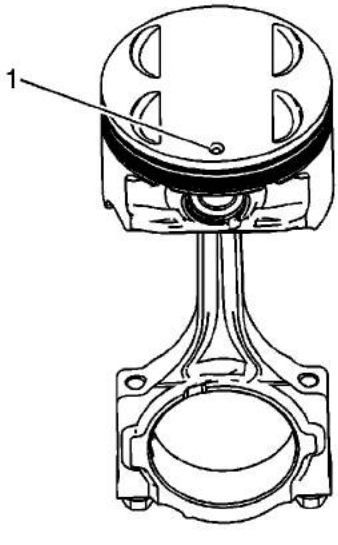

1. Liberally lubricate the cylinder walls, piston rings and piston skirts with engine oil.

   Note: The piston is directional and must be installed in the engine block in the proper direction. The dot on the top of the piston must face the front of the engine.

2. Select the correctly numbered piston/connecting rod assembly for the cylinder. A dot (1) showing proper piston orientation is located on the top of the piston.

cardiagn.com

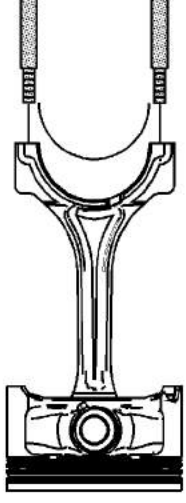

Note: If the connecting rod bearings have been used in a running engine, you must replace them with NEW connecting rod bearings for reassembly.

3. Install the connecting rod bearing into the connecting rod.
4. Install the *EN 46121* set into the connecting rod bolt holes.
5. Compress the piston rings using the *J 8037* compressor or equivalent.

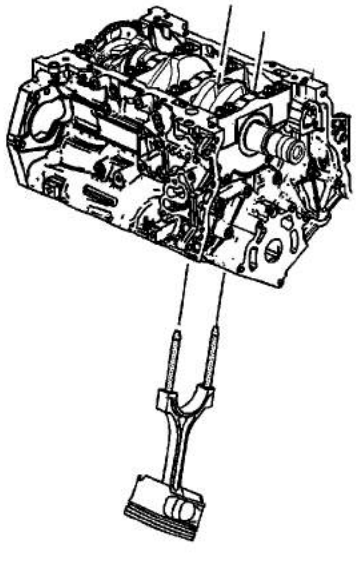

Note: Extreme care must be used when installing the piston and connecting rod in order to be sure the rod does not scrape or nick the cylinder bore, the oil jets, or the crankshaft surfaces.

6. Using both hands, slowly guide the piston and connecting rod assembly into the cylinder from

cardiagn.com

7. When the *J 8037* compressor contacts the deck surface, gently tap the piston into the cylinder using the handle end of a dead-blow hammer. Guide the connecting rod onto the crankshaft bearing journal using the *EN 46121* set while gently tapping the piston into the cylinder with a soft-blow hammer.

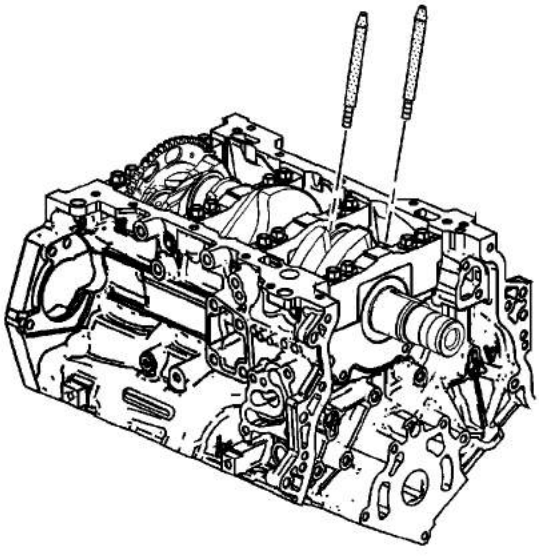

8. Remove the *EN 46121* set from the connecting rod bolt holes.

Connecting Rod Bearing Clearance Measurement Procedure - Using Plastic Gaging

Note: Connecting rod bearings that have been run in an engine should NEVER be reused.

Before final assembly it is important to check the clearance of the new connecting rod bearings.

1. Place a length of fresh, room temperature plastic gaging material all the way across the connecting rod bearing journal.
2. Install the connecting rod bearing into the connecting rod cap.

   Note: The connecting rod is non-directional therefore the connecting rod bearing lock tangs can face inboard or outboard.

3. Install the connecting rod end cap on its original connecting rod and ensure the bearing lock tangs are aligned on the same side of the rod.

   Caution: Refer to Fastener Caution in the Preface section.

cardiagn.com

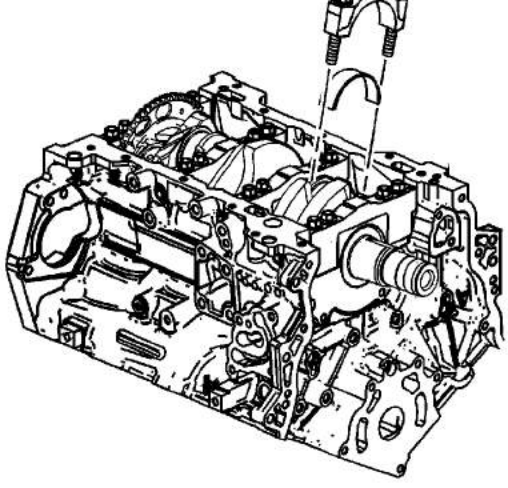

Caution: Do not lubricate the NEW connecting rod bolts. The NEW bolts have a pre-applied graphite lubricant. Applying lubricant to the connecting rod bolts will effect the clamp load when the connecting rod bolts are torqued. Improper clamp load can lead to component failure and extensive engine damage.

Note: Reuse the old connecting rod bolts ONLY for measuring the connecting rod bearing clearance.

4. Install the connecting rod bolts into the connecting rod cap and tighten to **30 N·m (22 lb ft)**.
5. Loosen the connecting rod bolts until the torque reading is zero.
6. Re-tighten the connecting rod bolts.
   6.1. First Pass

   Tighten the connecting rod bolts to **25 N·m (18 lb ft)**.

   6.2. Final Pass

   Tighten the connecting rod bolts an additional **110 degrees** using the *J 45059* meter .

7. Allow the assembly to sit for at least 2 minutes.
8. Remove the connecting rod cap bolts.
9. Remove the connecting rod cap.

cardiagn.com

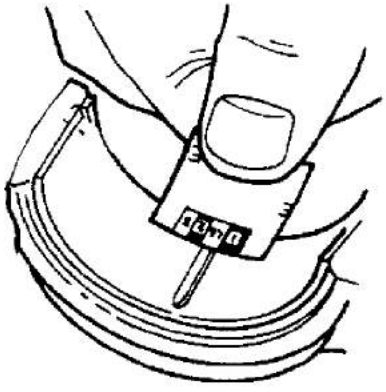

10. Determine the connecting rod bearing clearance by comparing the width of the flattened plastic gaging material at its widest point with the graduation on the gaging material container.
11. Compare your measurements with the engine mechanical specifications. If the new bearings do not provide the proper crankshaft to connecting rod bearing clearance, inspect the following:
    - 11.1. Re-measure the crankshaft connecting rod journals for the correct specified size and ensure the proper new bearings are being installed. If the crankshaft connecting rod journals are incorrectly sized, replace or regrind the crankshaft. Crankshaft machining is permitted and undersized bearings are available.
    - 11.2. Re-measure the connecting rod bearing bore diameter to ensure proper size. The connecting rod is not machinable and the connecting rod must be replaced if out of specification.
12. Clean the plastic gaging material from the connecting rod bearing journals using a soft lint-free cloth.

Connecting Rod Bearing Clearance Measurement Procedure - Using J 43690 and J 43690-100

The *J 43690* Rod Bearing Clearance Checking Tool and the *J 43690-100* Rod Bearing Clearance Checking Tool - Adapter Kit have been developed as a more accurate method to measure connecting rod bearing clearances. The instructions below provide an overview of tool set-up and usage. For more detailed information, refer to the tool instruction sheets as supplied by the tool manufacturer.

cardiagn.com

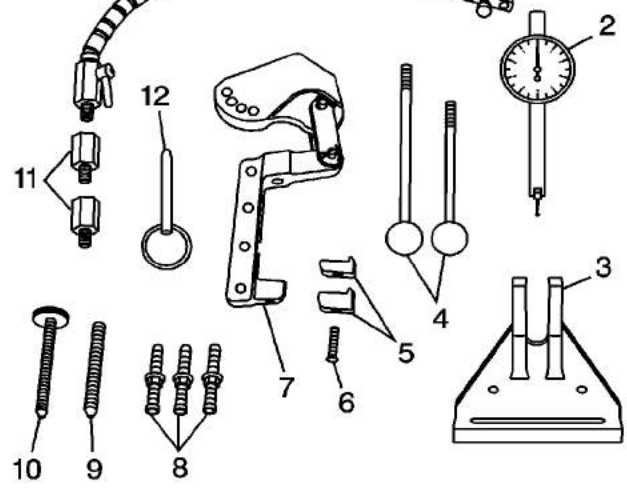

J 43690 Rod Bearing Clearance Checking Tool

- J 43690-20 Swivel Base (1)
- J 43690-19 Dial Indicator (2)
- J 43690-2 Base (3)
- J 43690-5, -6 Handle (4)
- J 43690-10, -11 Foot (5)
- 280307 Screw (6)
- J 43690-1 Pivot Arm Assembly (7)
- J 43690-3, -7, -8 Screws (8)
- 280319 Screw (9)
- 280311 Screw (10)
- J 43690-17, -18 Adapter (11)
- 280310 Pin (12)

cardiagn.com

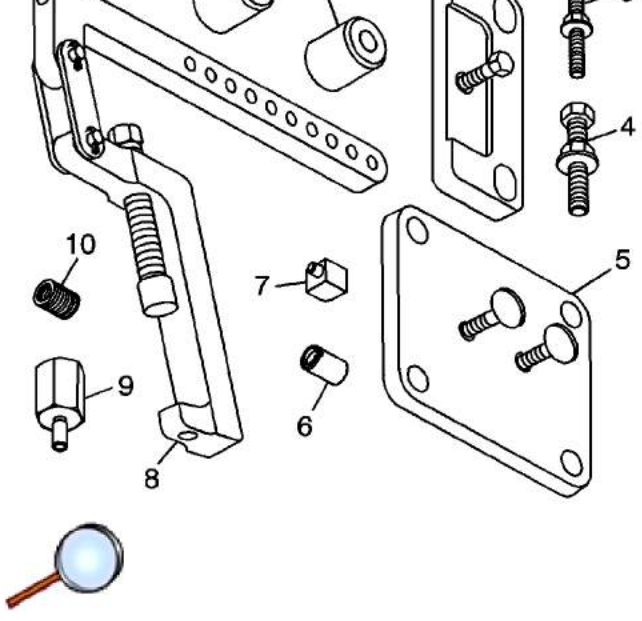

J 43690-100 Rod Bearing Clearance Checking Tool - Adapter Kit

- J 43690-104 Spacer (1)
- J 43690-105 Retainer Plate (2)
- 505478 Bolt (3)
- 511341 Bolt (4)
- J 43690-106 Retainer Plate (5)
- J 43690-107 Cap (6)
- J 43690-102 Foot (7)
- J 43690-101 Pivot Arm Assembly (8)
- J 43690-103 Adapter (9)
- 505439 Adapter (10)

cardiagn.com

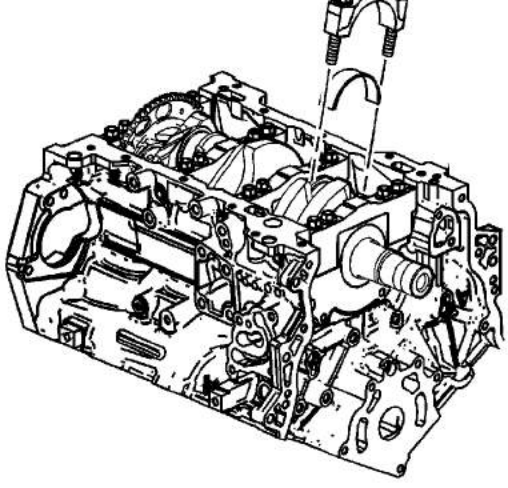

Note: Connecting rod bearings that have been run in an engine should NEVER be reused.

Before final assembly it is important to check the clearance of the new connecting rod bearings.

1. Install the connecting rod bearing into the connecting rod cap.

   Note: The connecting rod is non-directional therefore the connecting rod bearing lock tangs can face inboard or outboard.

2. Install the connecting rod end cap on its original connecting rod and ensure the bearing lock tangs are aligned on the same side of the rod.

   Caution: Refer to Fastener Caution in the Preface section.

   Caution: Do not lubricate the NEW connecting rod bolts. The NEW bolts have a pre-applied graphite lubricant. Applying lubricant to the connecting rod bolts will effect the clamp load when the connecting rod bolts are torqued. Improper clamp load can lead to component failure and extensive engine damage.

   Note: Reuse the old connecting rod bolts ONLY for measuring the connecting rod bearing clearance.

3. Install the connecting rod bolts into the connecting rod cap and tighten to **30 N·m (22 lb ft)**.
4. Loosen the connecting rod bolts until the torque reading is zero.
5. Re-tighten the connecting rod bolts.
   5.1. First Pass

   Tighten the connecting rod bolts to **25 N·m (18 lb ft)**.

cardiagn.com

Tighten the connecting rod bolts an additional **110 degrees** using the *J 45059* meter .

6. Rotate the crankshaft until the crankshaft journal and the connecting rod to be measured is in the 12 o'clock position.

   Note: The crankshaft must be secure with no movement or rotation in order to obtain an accurate reading.

7. Remove the crankshaft main bolts required to install the retainer plate J 43690-105.

   Note: Do not allow the J 43690-105 retainer plate screw to contact the reluctor ring.

8. Install the J 43690-105 and crankshaft main bolts.
9. Loosen the connecting rod bolts until the torque reading is zero.
10. Re-tighten the connecting rod bolts.
    10.1. First Pass

    Tighten the connecting rod bolts to **25 N·m (18 lb ft)**.

    10.2. Final Pass

    Tighten the connecting rod bolts an additional **110 degrees** using the *J 45059* meter .

11. During and after installation, ensure each piston is positioned properly in the correct cylinder. The locating arrow on the top of each piston must be pointing toward the front of the engine.
12. Repeat these procedures for the remaining piston/connecting rod assemblies using the *EN-48589* socket in order to rotate the crankshaft.

Connecting Rod Final Assembly Procedure

1. Guide the connecting rod away from the crankshaft connecting rod journal in order to lubricate the crankshaft connecting rod bearing journal.
2. Apply a liberal amount of crankshaft prelube GM P/N 1052367 (Canadian P/N 992869) or clean engine oil GM P/N 12345501 (Canadian P/N 992704) to the crankshaft connecting rod bearing journal.
3. Guide the connecting rod to the crankshaft connecting rod journal.
4. Install the connecting rod end cap on its original connecting rod and ensure the bearing lock tangs are aligned on the same side of the rod.

cardiagn.com

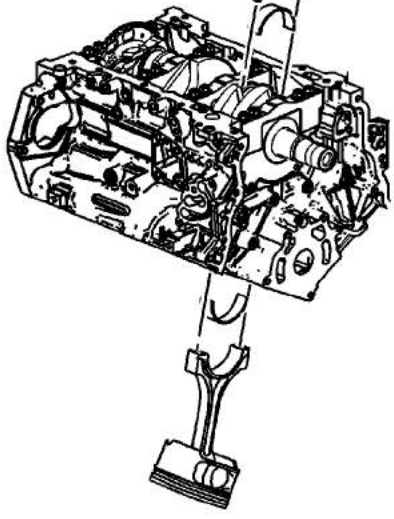

Caution: Do not lubricate the NEW connecting rod bolts. The NEW bolts have a pre-applied graphite lubricant. Applying lubricant to the connecting rod bolts will effect the clamp load when the connecting rod bolts are torqued. Improper clamp load can lead to component failure and extensive engine damage.

Note: DO NOT reuse the old connecting rod bolts.

5. Install the NEW connecting rod bolts into the connecting rod cap and tighten to **30 N·m (22 lb ft)**.
6. Loosen the connecting rod bolts until the torque reading is zero.
7. Re-tighten the connecting rod bolts.
   7.1. First Pass

   Tighten the connecting rod bolts to **25 N·m (18 lb ft)**.

   7.2. Final Pass

   Tighten the connecting rod bolts an additional **110 degrees** using the *J 45059* meter .

8. During and after installation, ensure each piston is positioned properly in the correct cylinder. The locating arrow on the top of each piston (1) must be pointing toward the front of the engine.
9. Repeat these procedures for the remaining piston/connecting rod assemblies using the *EN-48589* socket in order to rotate the crankshaft.

cardiagn.com

Crankshaft Rear Oil Seal and Housing Installation

Special Tools

- *EN-46109* Guide Pin Set
- *EN-47839* Crankshaft Rear Oil Seal Installation Tool
- *J-42183* Handle

For equivalent regional tools, refer to Special Tools.

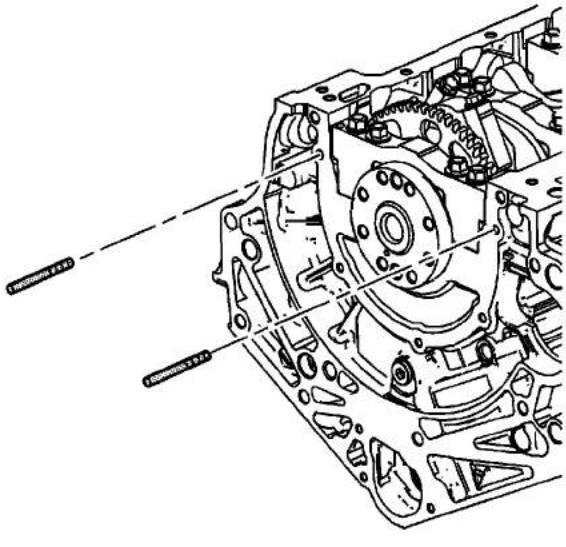

1. Install the 6 mm (0.236 in) guides from the *EN-46109* pin set into the 2 crankshaft rear oil seal housing corner bolt holes of the engine block.

cardiagn.com

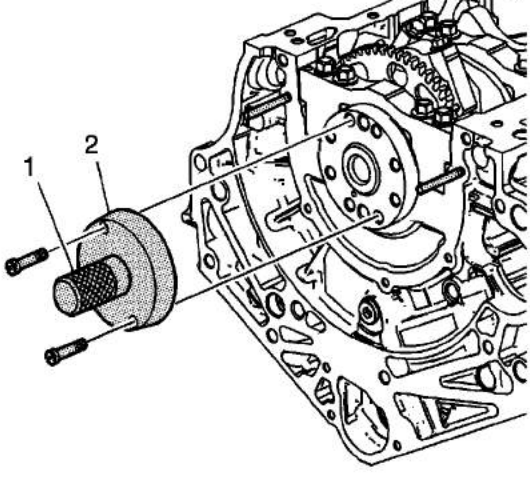

2. Install the *EN-47839* tool with the *J-42183* handle (1, 2) onto the rear of the crankshaft flange.

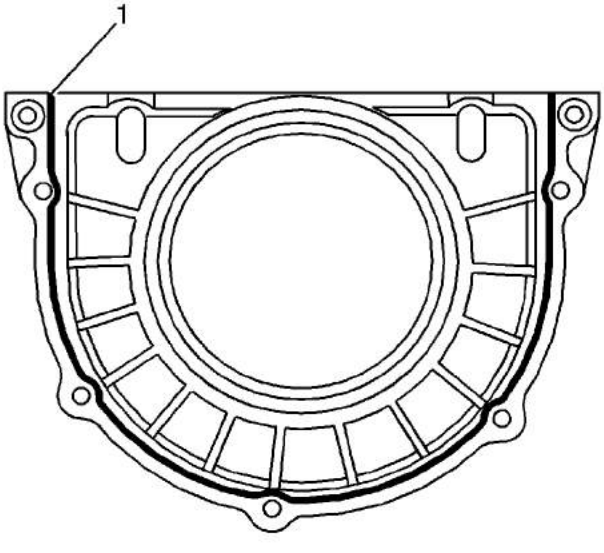

3. Place a 3 mm (0.118 in) bead of RTV sealant, GM P/N 12378521 (Canadian P/N 88901148) or equivalent, to the NEW crankshaft rear oil seal housing as shown (1).

cardiagn.com

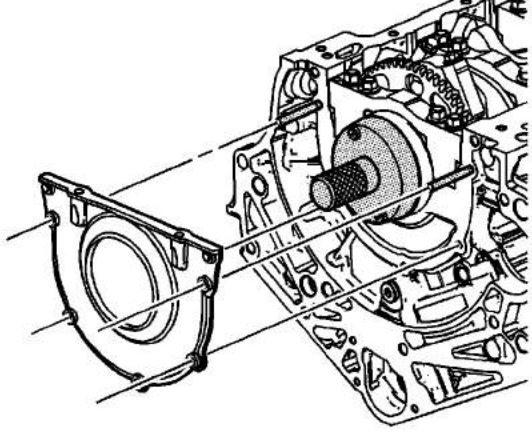

Note: DO NOT allow any engine oil on the area where the crankshaft rear oil seal housing is to be installed.

4. Install the crankshaft rear oil seal housing to the engine block.

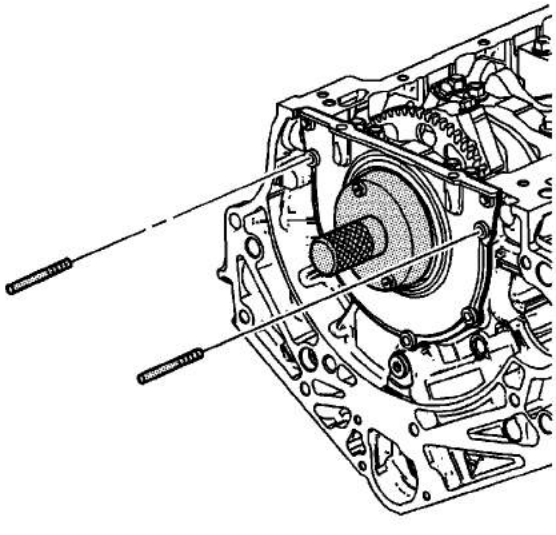

5. Remove the *EN-46109* pin set 6 mm (0.236 in) guides from the engine block.

cardiagn.com

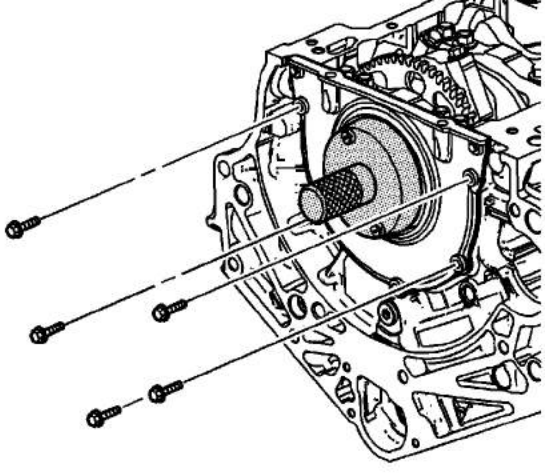

6. Install the crankshaft rear oil seal housing bolts.

   Caution: Refer to Fastener Caution in the Preface section.

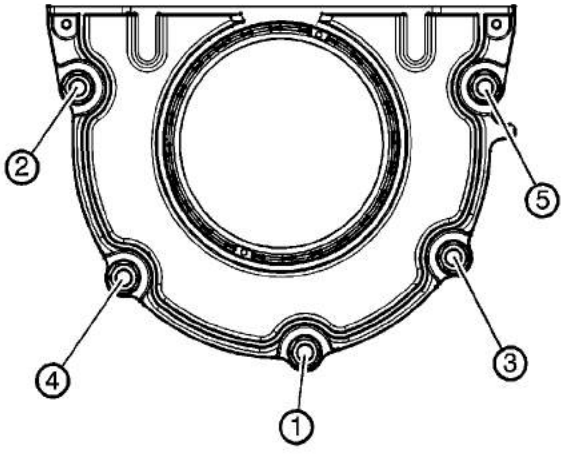

7. Tighten the crankshaft rear oil seal housing bolts in sequence and tighten to **10 N·m (89 lb in)**.

cardiagn.com

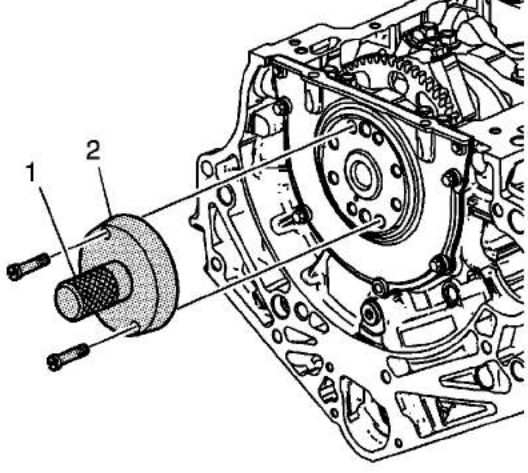

8. Remove the *EN-47839* tool and *J-42183* handle (1, 2) from the crankshaft flange.

cardiagn.com

Oil Pump Installation

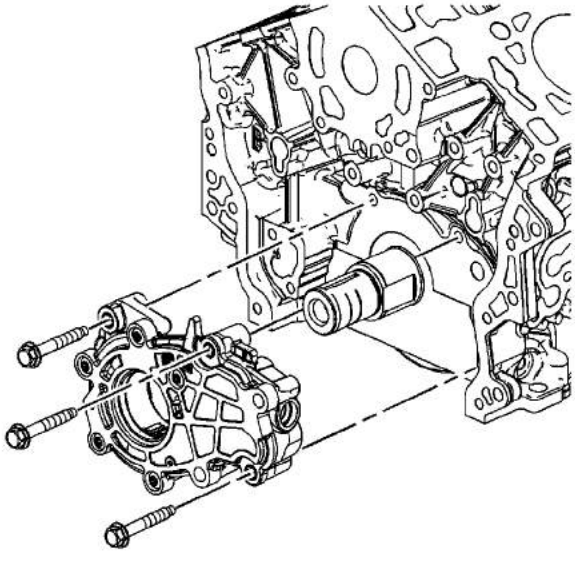

1. Align the oil pump drive gear with the crankshaft flats and install the oil pump to the engine block.
2. Align the pump body with the mounting holes in the cylinder block.

   Caution: Refer to Fastener Caution in the Preface section.

3. Install the oil pump bolts. Tighten the oil pump bolts to **23 N·m (17 lb ft)**.

cardiagn.com

Oil Pan Installation

Special Tools

J 46109 Guide Pin Set EN 46109

For equivalent regional tools, refer to Special Tools.

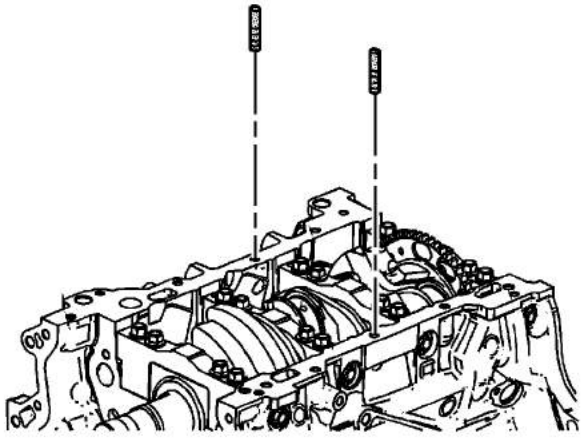

1. Install the 8 mm (0.315 in) guides from the *J 46109* set into the center oil pan rail bolt hole on each side of the engine block.

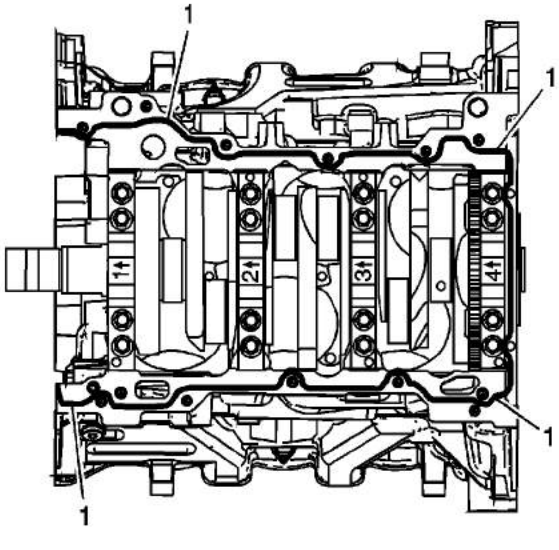

cardiagn.com

2. Place a 3 mm (0.118 in) bead (1) of RTV sealant, GM P/N 12378521 (Canadian P/N 88901148) or equivalent, on the block pan rail and the crankshaft rear oil seal housing.

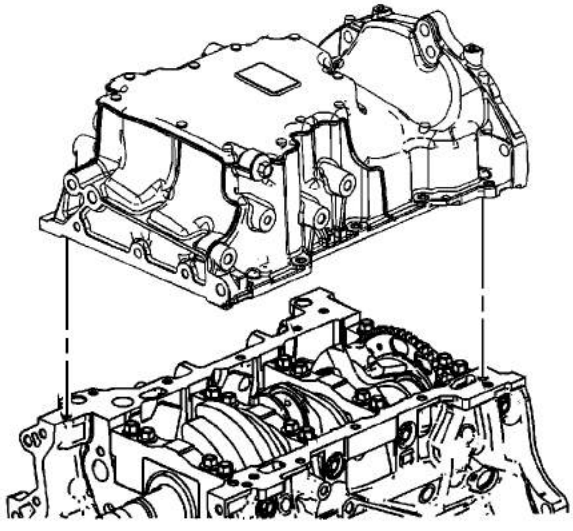

3. Position the oil pan onto the block.
4. Remove the *J 46109* set 8 mm (0.315 in) guides from the engine block.

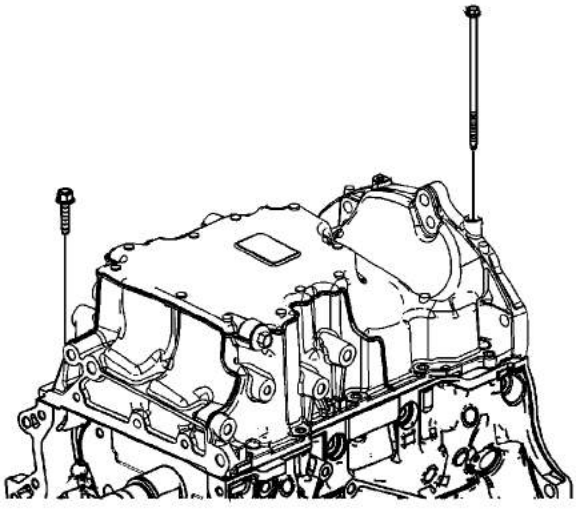

5. Loosely install the oil pan bolts.

Caution: Refer to Fastener Caution in the Preface section.

cardiagn.com

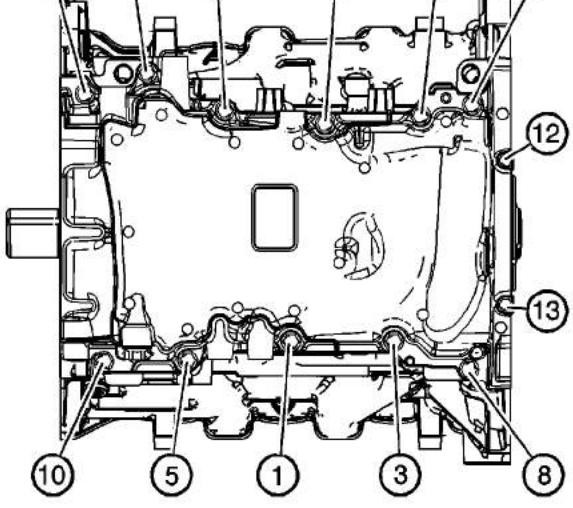

6. Tighten the oil pan bolts in sequence shown.
   6.1. Tighten the 8 mm bolts (1-11) to **23 N·m (17 lb ft)**.
   6.2. Tighten the 6 mm bolts (12, 13) to **10 N·m (89 lb in)**.

cardiagn.com

Cylinder Head Installation - Right Side

Special Tools

J 45059 Angle Meter

For equivalent regional tools, refer to Special Tools.

1. Ensure the cylinder head locating pins are securely mounted in the cylinder block deck face.

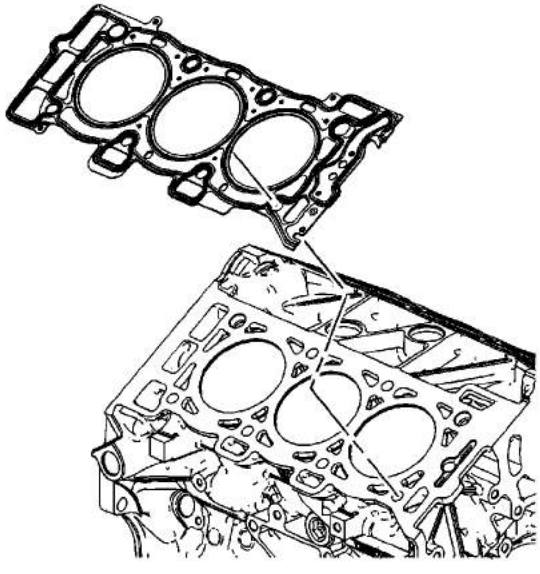

2. Install a NEW right cylinder head gasket using the deck face locating pins for retention.

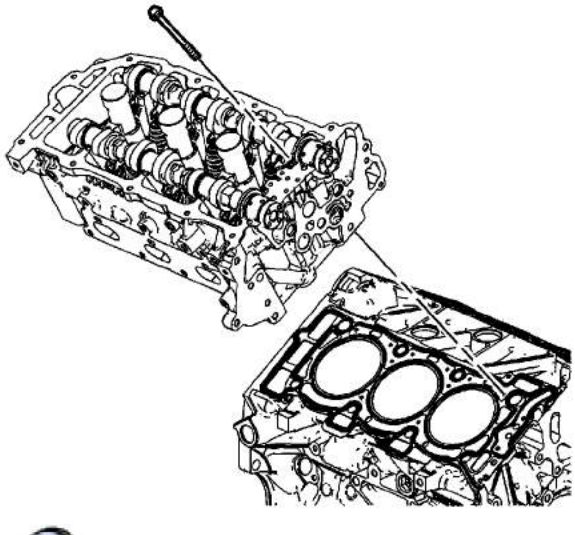

cardiagn.com

Caution: Refer to Fastener Caution in the Preface section.

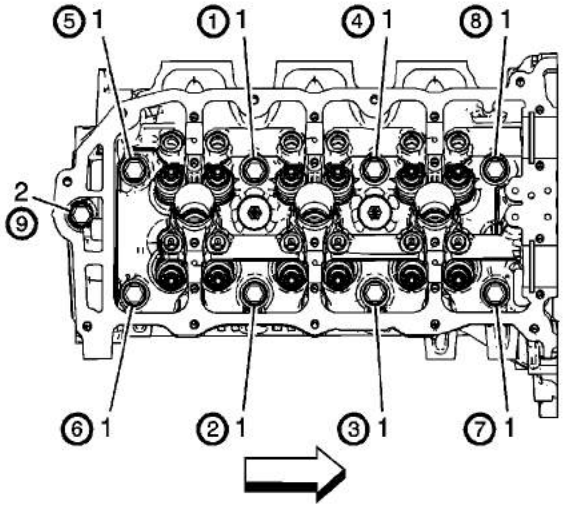

Note:

- DO NOT allow oil on the cylinder head bolt bosses.
- DO NOT reuse the old cylinder head bolts.

5. Install the NEW M11 cylinder head bolts (1).
   5.1. Tighten the M11 cylinder head bolts a first pass in sequence to **30 N·m (22 lb ft)**.
   5.2. Tighten the M11 cylinder head bolts a second pass in sequence an additional **150 degrees** using the *J 45059* angle meter .
6. Install the NEW M8 cylinder head bolt (2).
   6.1. Tighten the M8 cylinder head bolt a first pass to **15 N·m (11 lb ft)**.
   6.2. Tighten the M8 cylinder head bolt a second pass an additional **75 degrees** using the *J 45059* angle meter .

cardiagn.com

Valve Lifter Installation - Right Side

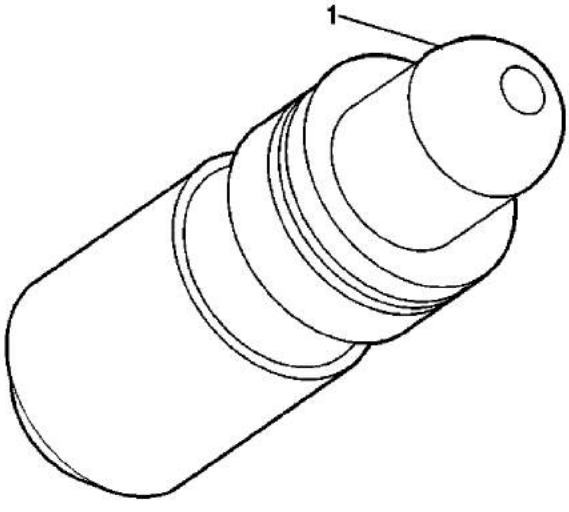

Important: Do not stroke/cycle the stationary hydraulic lash adjuster plunger without oil in the lower pressure chamber.

Important: Do not allow the stationary hydraulic lash adjuster to tip over, plunger down, after the oil fill.

1. Fill the stationary hydraulic lash adjuster (SHLA) with clean engine oil GM P/N 12378006 or equivalent. Take precautions to prevent scratching the pivot sphere area (1) of the SHLA.
2. Lubricate the SHLA bores in the cylinder head with clean engine oil GM P/N 12378006 or equivalent.

cardiagn.com

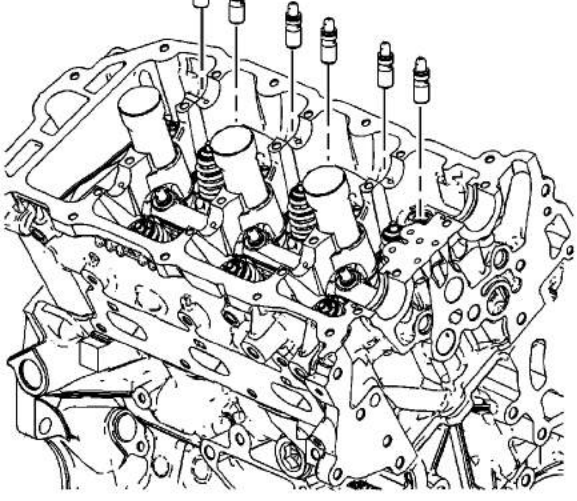

3. Install the SHLAs in the cylinder head.
4. Apply a liberal amount of lubricant GM P/N 12345501 (Canadian P/N 992704) or equivalent to the SHLA pivot spheres.

cardiagn.com

Valve Rocker Arm Installation - Right Side

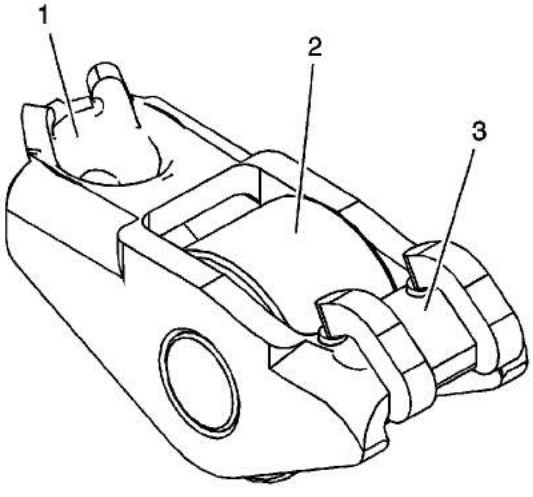

1. Apply a liberal amount of lubricant GM P/N 12345501 (Canadian P/N 992704) or equivalent to the pivot pocket (1), roller (2) and valve slot (3) areas of the camshaft followers.

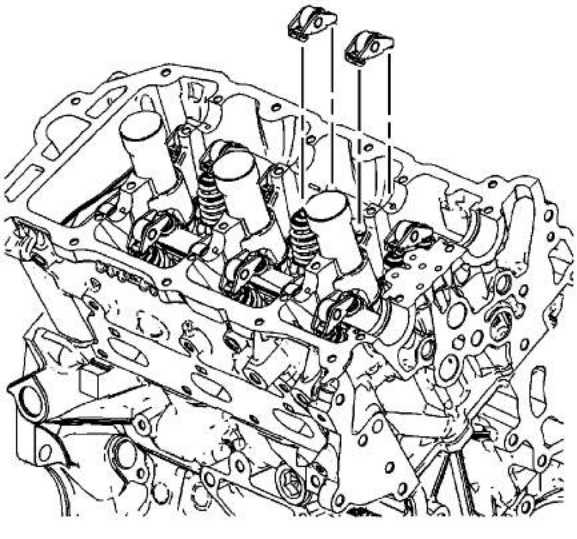

Important: The follower must be positioned squarely on the valve tip so that the full width of the roller will completely contact the camshaft lobe. If the followers are being reused you must put them back in their original location.

cardiagn.com

3. The rounded head end of the follower goes on the SHLA while the flat end goes on the valve tip.
4. Clean the camshaft journals and carriers with a clean, lint-free cloth.

cardiagn.com

Camshaft Installation - Right Side

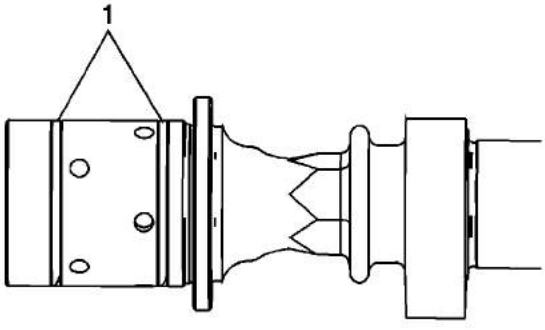

1. Ensure that the camshaft sealing rings (1) are in place in the camshaft grooves. Camshaft sealing rings must be in place below the surface of the camshaft journal in order to avoid being pinched between the cylinder head and the camshaft caps.

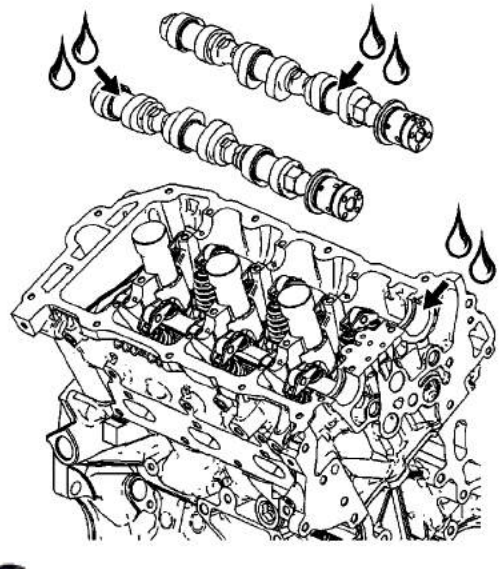

2. Apply a liberal amount of lubricant GM P/N 12345501 (Canadian P/N 992704) or equivalent to the camshaft journals and the right cylinder head camshaft carriers.

cardiagn.com

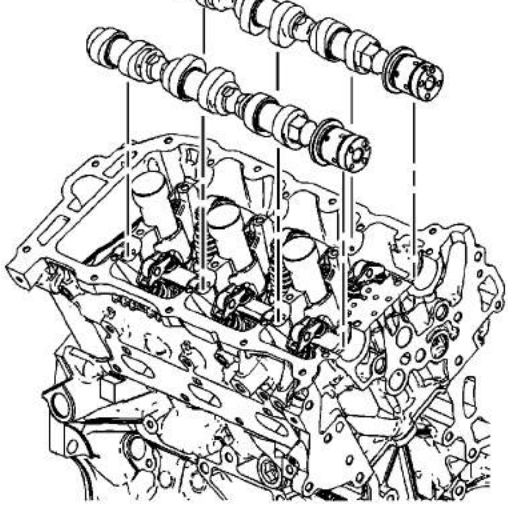

3. Place the right intake and right exhaust camshafts in position in the right cylinder head.

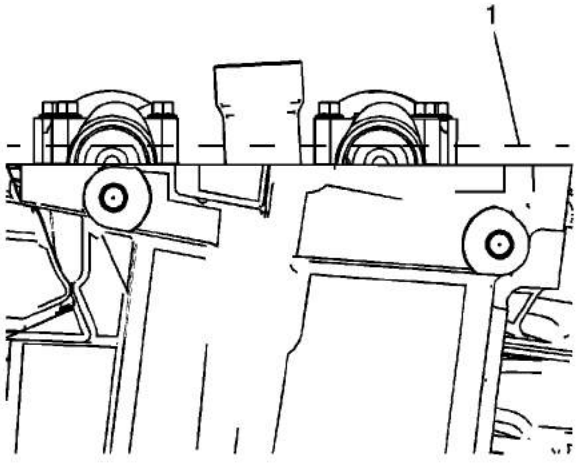

4. Position the camshaft lobes in a neutral position with the flats on the back of the camshafts up and parallel (1) with the right cylinder head camshaft cover rail.

cardiagn.com

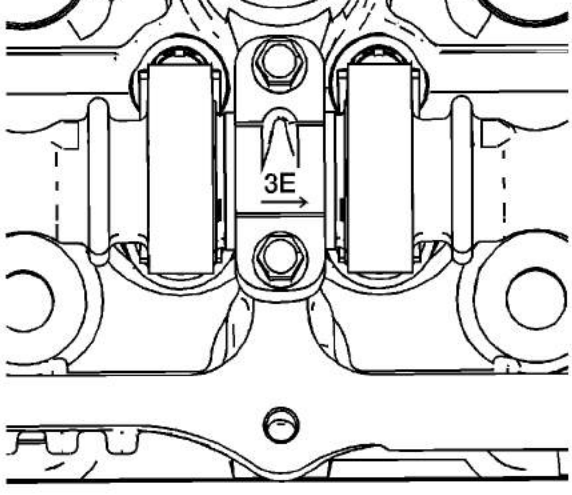

5. Observe the markings on the right cylinder head camshaft bearing caps. Each bearing cap is marked in order to identify its location. The markings have the following meanings:
   - The raised feature must always be oriented toward the center of the cylinder head.
   - The I indicates the intake camshaft.
   - The E indicates the exhaust camshaft.
   - The number 1, 3, 5 indicates the cylinder position from the front of the engine.
6. Apply a liberal amount of lubricant GM P/N 12345501 (Canadian P/N 992704) or equivalent to the camshaft bearing caps.

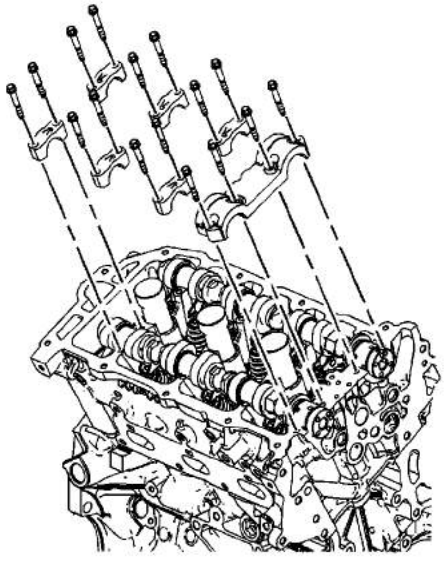

7. Install the camshaft bearing thrust caps in the first journal of the right cylinder head.
8. Install the remaining bearing caps with their orientation mark toward the center of the cylinder head.
9. Hand start all the camshaft bearing cap bolts.

cardiagn.com

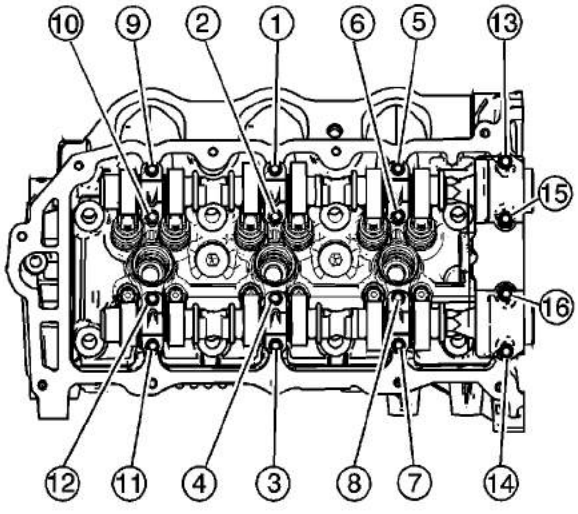

10. Tighten the camshaft bearing cap bolts in sequence to **10 N·m (89 lb in)**.
11. Loosen the center intake camshaft bearing cap bolts (1, 2) and the center exhaust camshaft bearing cap bolts (3, 4).
12. Retighten the center camshaft bearing cap bolts (1, 2, 3, 4) to **10 N·m (89 lb in)**.

cardiagn.com

Cylinder Head Installation - Left Side (LCS)

Special Tools

J 45059 Angle Meter

For equivalent regional tools, refer to Special Tools

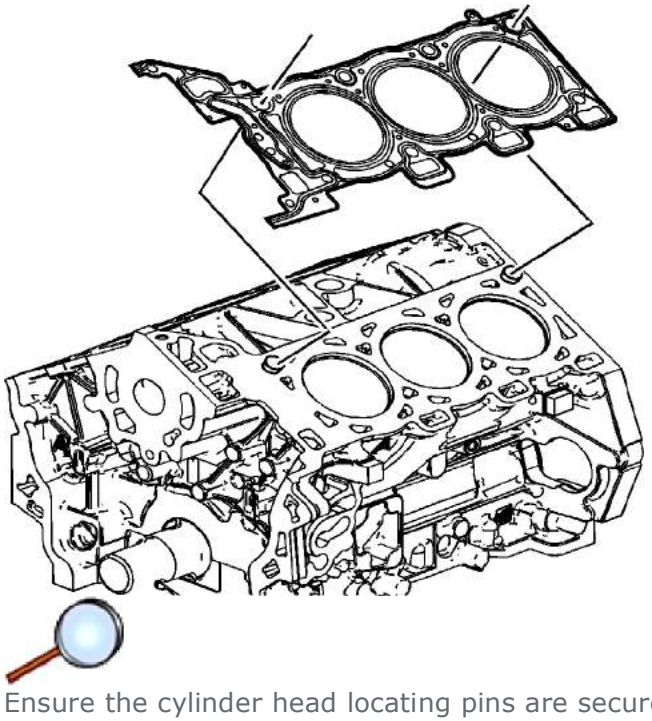

1. Ensure the cylinder head locating pins are securely mounted in the cylinder block deck face.
2. Install a NEW left cylinder head gasket using the deck face locating pins for retention.

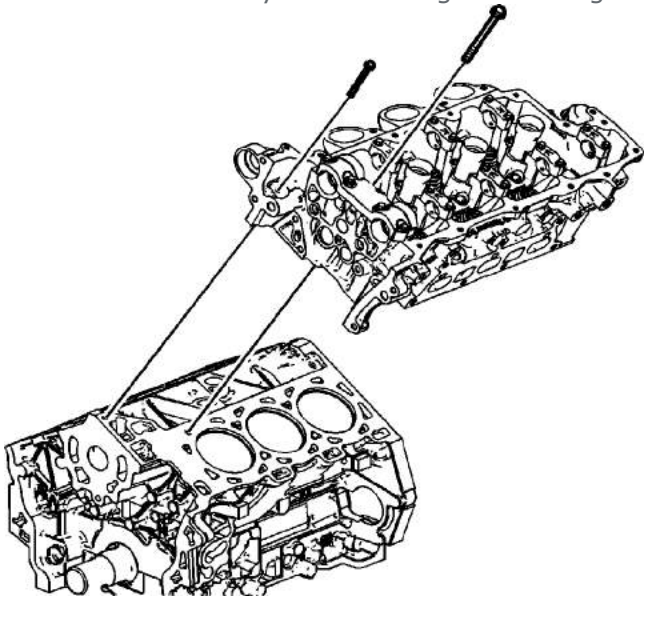

cardiagn.com

3. Align the left cylinder head with the deck face locating pins.
4. Place the left cylinder head in position on the deck face.

Caution: Refer to Fastener Caution in the Preface section.

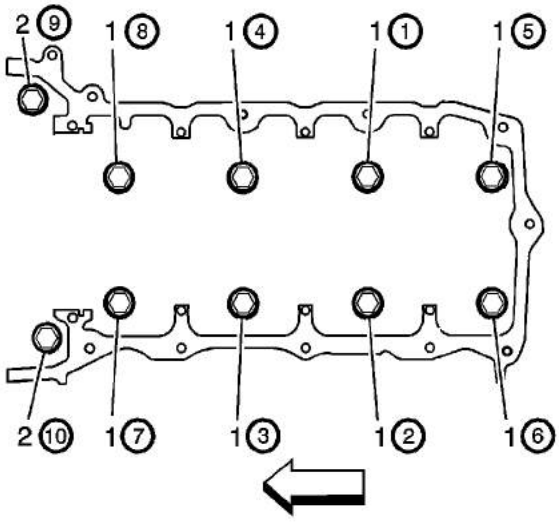

Note: DO NOT allow oil on the cylinder head bolt bosses.

Note: DO NOT reuse the old cylinder head bolts.

5. Install the NEW M11 cylinder head bolts (1).
   5.1. Tighten the M11 cylinder head bolts a first pass in sequence to **30 N·m (22 lb ft)**.
   5.2. Tighten the M11 cylinder head bolts a second pass in sequence an additional **150 degrees** using the *J 45059* meter .
6. Install the 2 NEW front M8 left cylinder head bolts (2).
   6.1. Tighten the M8 cylinder head bolts a first pass to **15 N·m (11 lb ft)**.
   6.2. Tighten the M8 cylinder head bolts a second pass in sequence an additional **75 degrees** using the *J 45059* meter .

cardiagn.com

Cylinder Head Installation - Left Side (LY7)

Special Tools

J 45059 Angle Meter

For equivalent regional tools, refer to Special Tools

1. Ensure the cylinder head locating pins are securely mounted in the cylinder block deck face.

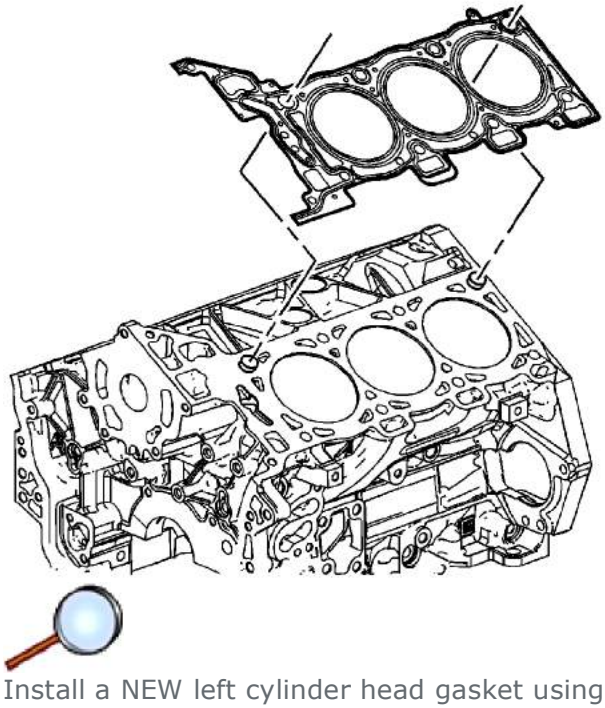

2. Install a NEW left cylinder head gasket using the deck face locating pins for retention.

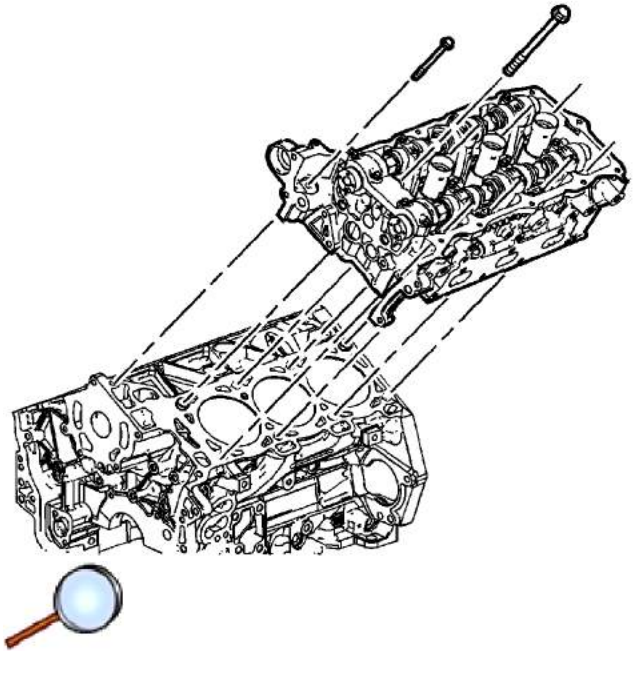

cardiagn.com

Caution: Refer to Fastener Caution in the Preface section.

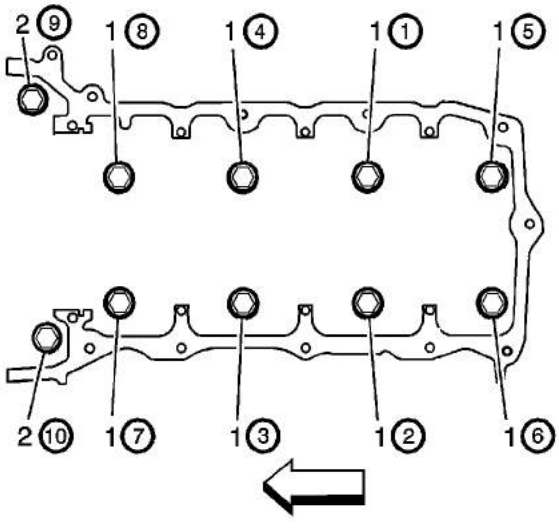

Note: DO NOT allow oil on the cylinder head bolt bosses.

Note: DO NOT reuse the old cylinder head bolts.

5. Install the NEW M11 cylinder head bolts (1).
   5.1. Tighten the M11 cylinder head bolts a first pass in sequence to **30 N·m (22 lb ft)**.
   5.2. Tighten the M11 cylinder head bolts a second pass in sequence an additional **150 degrees** using the *J 45059* meter .
6. Install the 2 NEW front M8 left cylinder head bolts (2).
   6.1. Tighten the M8 cylinder head bolts a first pass to **15 N·m (11 lb ft)**.
   6.2. Tighten the M8 cylinder head bolts a second pass in sequence an additional **75 degrees** using the *J 45059* meter .

cardiagn.com

Fuel Feed Pipe Installation

Caution: Refer to Fastener Caution in the Preface section.

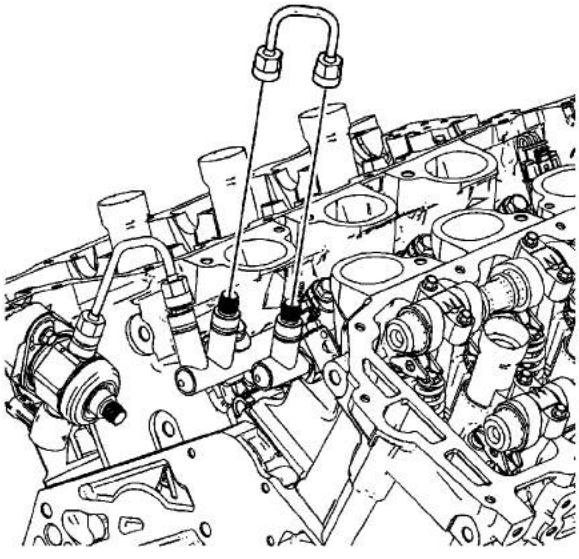

1. Install the LH to RH fuel rail crossover pipe and tighten the fittings to **30 N·m (22 lb ft)**.

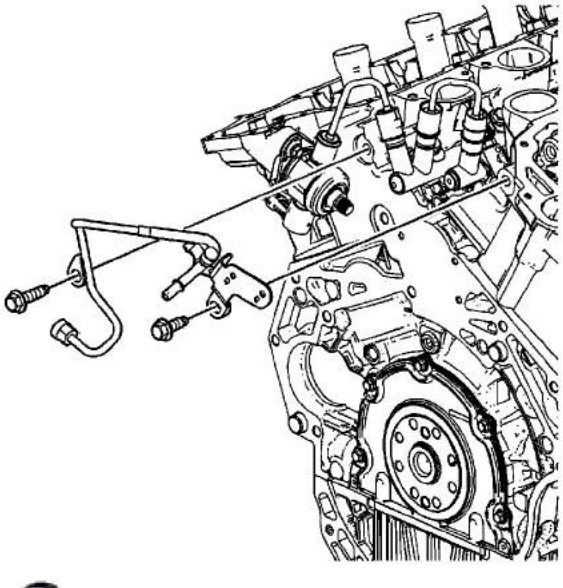

2. Install the fuel feed pipe.
3. Install the fuel feed pipe bolts and tighten to **10 N·m (89 lb in)**.
4. Install the fuel rail wiring connectors to the fuel feed pipe bracket.

cardiagn.com

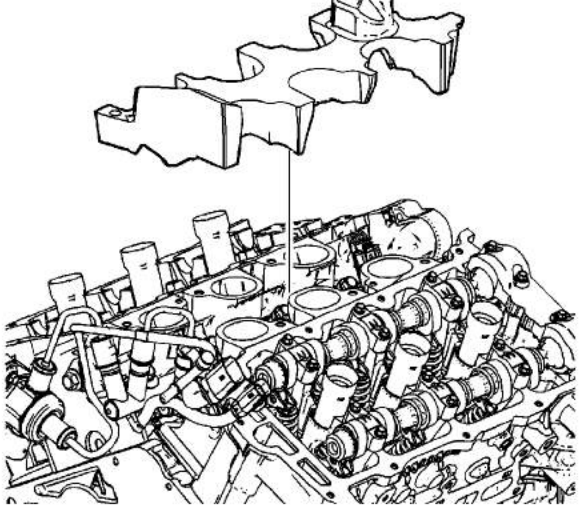

5. Install the fuel rail noise shield.

cardiagn.com

Valve Lifter Installation - Left Side

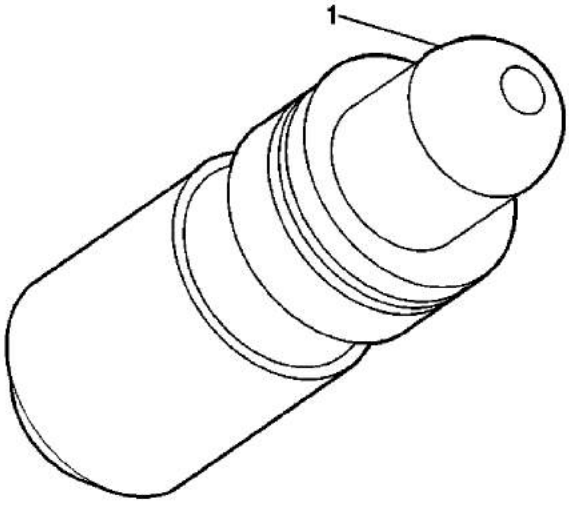

Important: Do not stroke/cycle the stationary hydraulic lash adjuster plunger without oil in the lower pressure chamber.

Important: Do not allow the stationary hydraulic lash adjuster to tip over, plunger down, after the oil fill.

1. Fill the stationary hydraulic lash adjuster (SHLA) with clean engine oil GM P/N 12378006 or equivalent. Take precautions to prevent scratching the pivot sphere area (1) of the SHLA.
2. Lubricate the SHLA bores in the cylinder head with clean engine oil GM P/N 12378006 or equivalent.

cardiagn.com

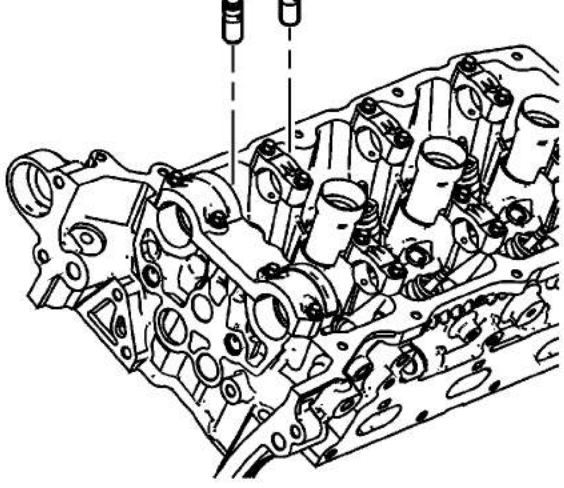

3. Install the SHLAs in the cylinder head.
4. Apply a liberal amount of lubricant GM P/N 12345501 (Canadian P/N 992704) or equivalent to the SHLA pivot spheres.

cardiagn.com

Valve Rocker Arm Installation - Left Side

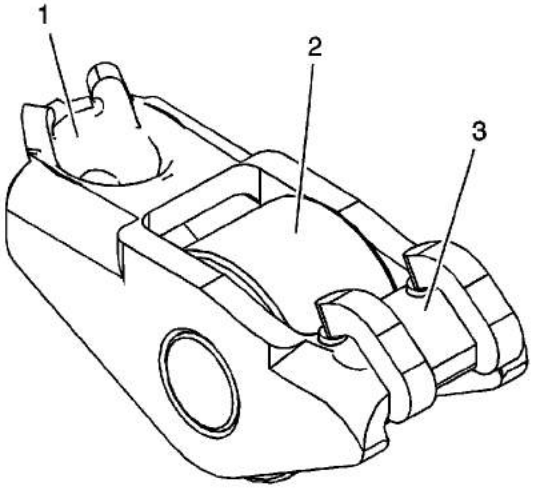

1. Apply a liberal amount of lubricant GM P/N 12345501 (Canadian P/N 992704) or equivalent to the pivot pocket (1), roller (2) and valve slot (3) areas of the camshaft followers.

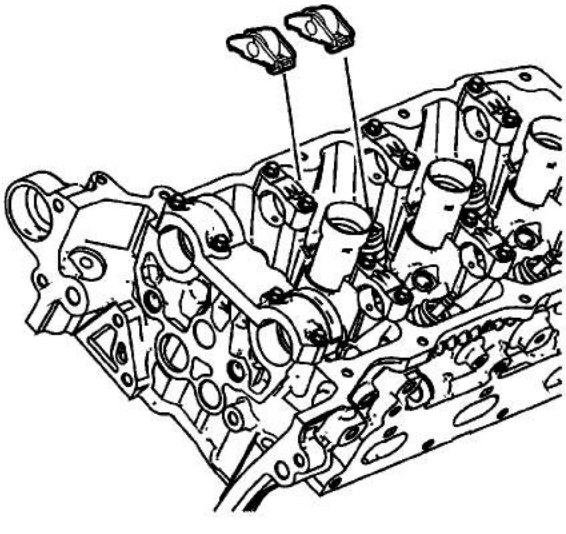

Important: The follower must be positioned squarely on the valve tip so that the full width of the roller will completely contact the camshaft lobe. If the followers are being reused you must put them back in their original location.

cardiagn.com

3. The rounded head end of the follower goes on the SHLA while the flat end goes on the valve tip.
4. Clean the camshaft journals and carriers with a clean, lint-free cloth.

cardiagn.com

Camshaft Installation - Left Side (LCS)

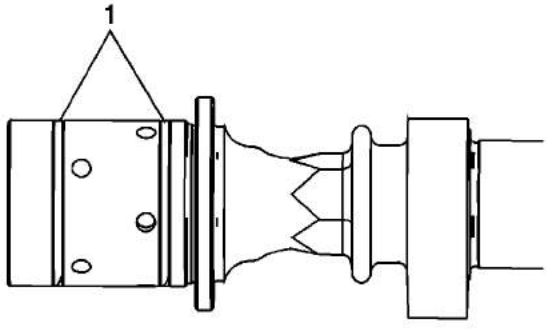

1. Ensure that the camshaft sealing rings (1) are in place in the camshaft grooves. Camshaft sealing rings must be in place below the surface of the camshaft journal in order to avoid being pinched between the cylinder head and the camshaft caps.

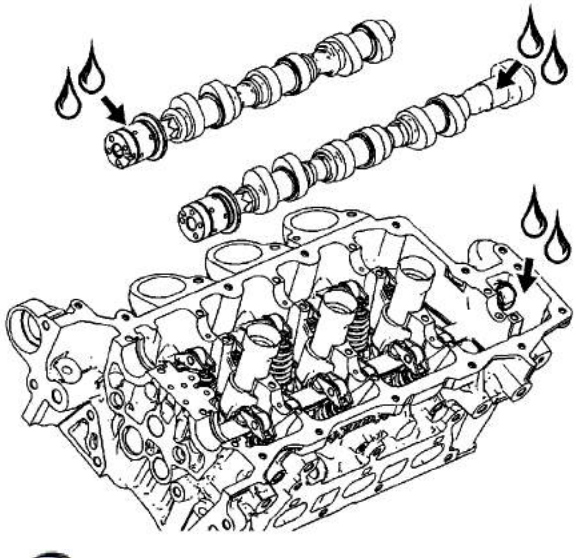

2. Apply a liberal amount of lubricant GM P/N 12345501 (Canadian P/N 992704) or equivalent to the camshaft journals and the left cylinder head camshaft carriers.

cardiagn.com

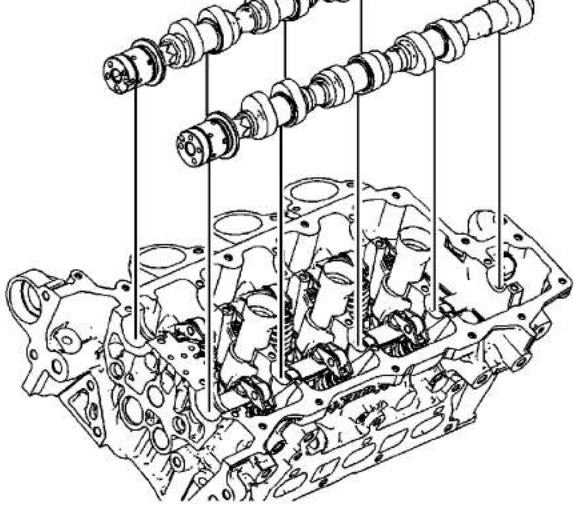

3. Place the left intake and left exhaust camshafts in position in the left cylinder head.

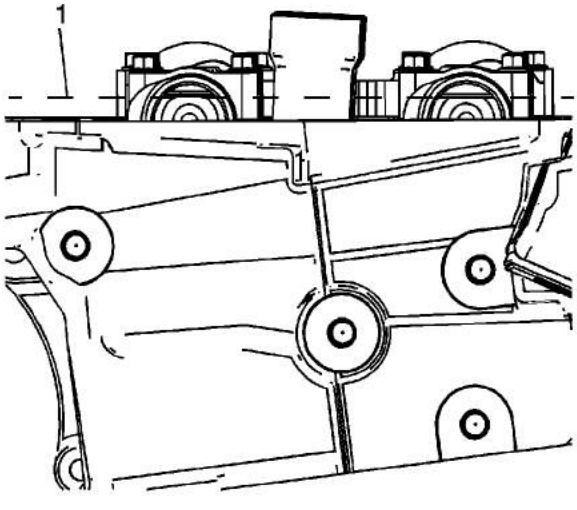

4. Position the camshaft lobes in a neutral position with the flats on the back of the camshafts up and parallel (1) with the left cylinder head camshaft cover rail.

cardiagn.com

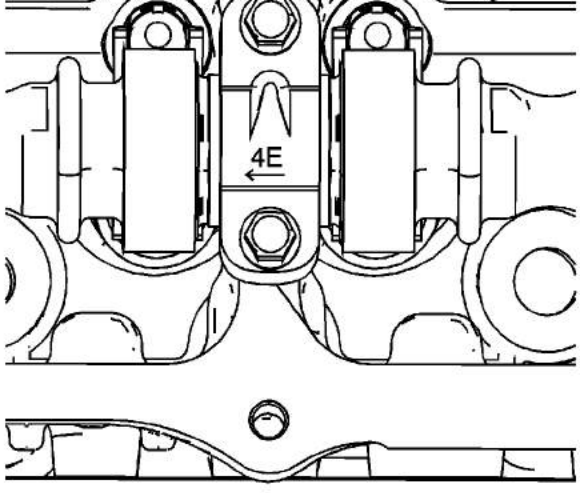

5. Observe the markings on the left cylinder head camshaft bearing caps. Each bearing cap is marked in order to identify its location. The markings have the following meanings:
   - The raised feature must always be oriented toward the center of the cylinder head.
   - The I indicates the intake camshaft.
   - The E indicates the exhaust camshaft.
   - The number 2, 4, 6 indicates the cylinder position from the front of the engine.
6. Apply a liberal amount of lubricant GM P/N 12345501 (Canadian P/N 992704) or equivalent to the camshaft bearing caps.

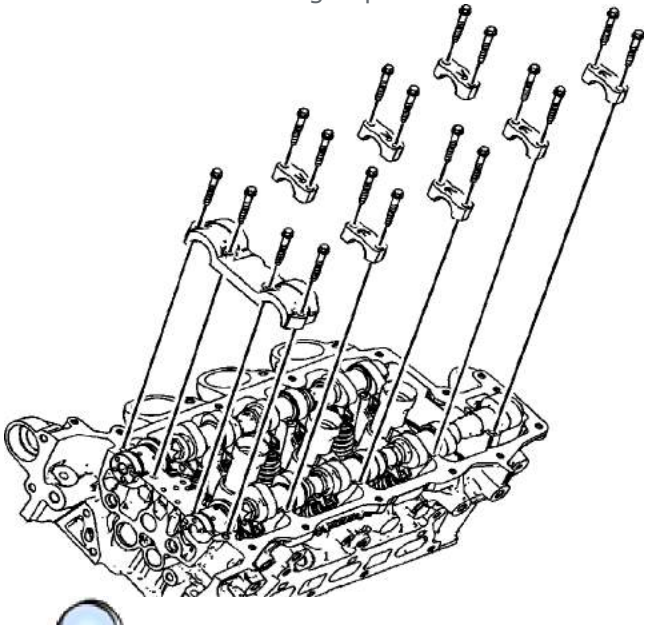

7. Install the camshaft bearing thrust cap in the first journal of the left cylinder head.
8. Install the remaining bearing caps with their orientation mark toward the center of the cylinder head.
9. Hand start all the camshaft bearing cap bolts.

cardiagn.com

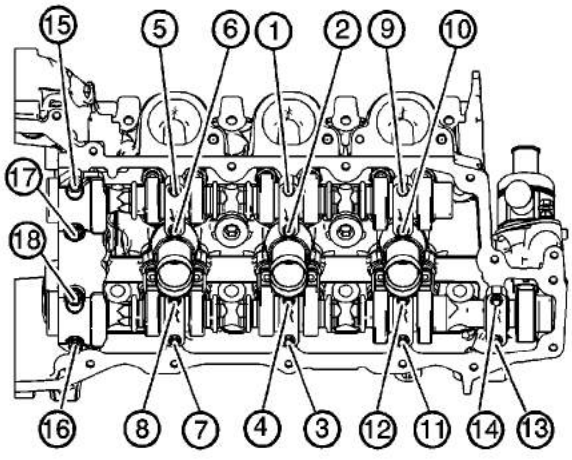

10. Tighten the camshaft bearing cap bolts in the sequence shown to **10 N·m (89 lb in)**.
11. Loosen the center intake camshaft bearing cap bolts 1, 2 and the center exhaust camshaft bearing cap bolts 3, 4.
12. Retighten the center camshaft bearing cap bolts 1, 2, 3, 4 to **10 N·m (89 lb in)**.

cardiagn.com

Camshaft Installation - Left Side (LY7)

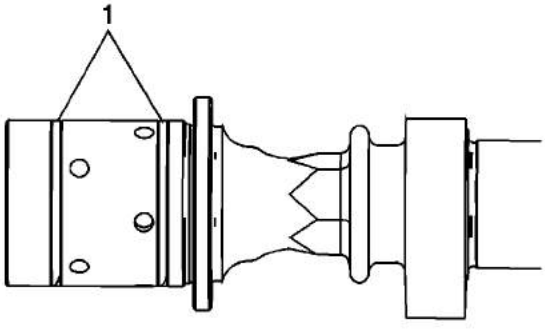

1. Ensure that the camshaft sealing rings (1) are in place in the camshaft grooves. Camshaft sealing rings must be in place below the surface of the camshaft journal in order to avoid being pinched between the cylinder head and the camshaft caps.

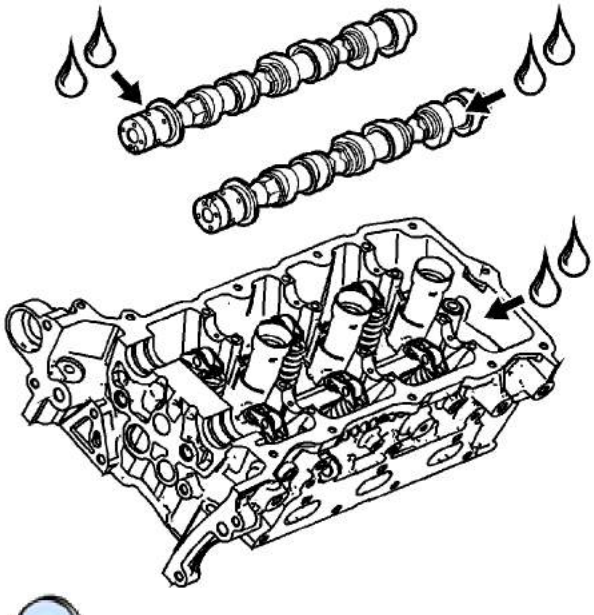

2. Apply a liberal amount of lubricant GM P/N 12345501 (Canadian P/N 992704) or equivalent to the camshaft journals and the left cylinder head camshaft carriers.

cardiagn.com

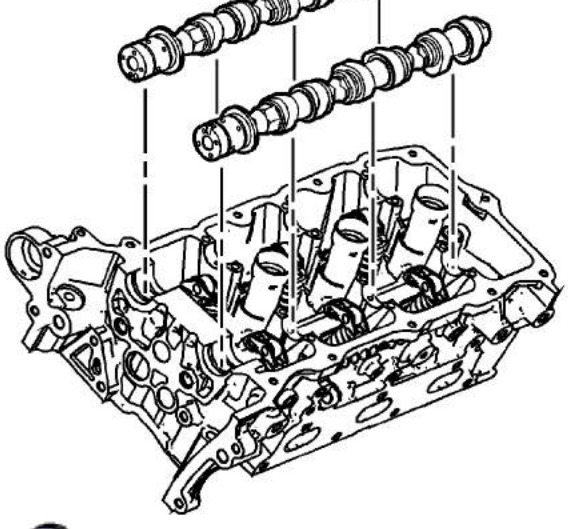

3. Place the left intake and left exhaust camshafts in position in the left cylinder head.

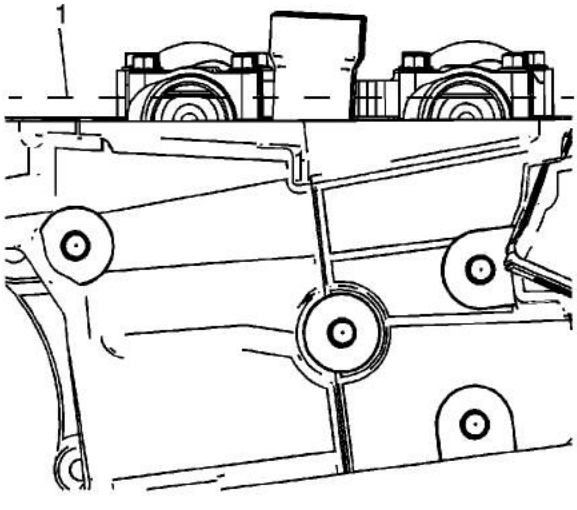

4. Position the camshaft lobes in a neutral position with the flats on the back of the camshafts up and parallel (1) with the left cylinder head camshaft cover rail.

cardiagn.com

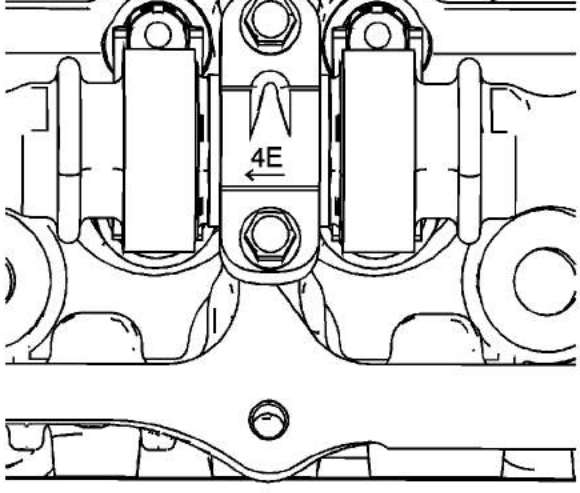

5. Observe the markings on the left cylinder head camshaft bearing caps. Each bearing cap is marked in order to identify its location. The markings have the following meanings:
   - The raised feature must always be oriented toward the center of the cylinder head.
   - The I indicates the intake camshaft.
   - The E indicates the exhaust camshaft.
   - The number 2, 4, 6 indicates the cylinder position from the front of the engine.
6. Apply a liberal amount of lubricant GM P/N 12345501 (Canadian P/N 992704) or equivalent to the camshaft bearing caps.

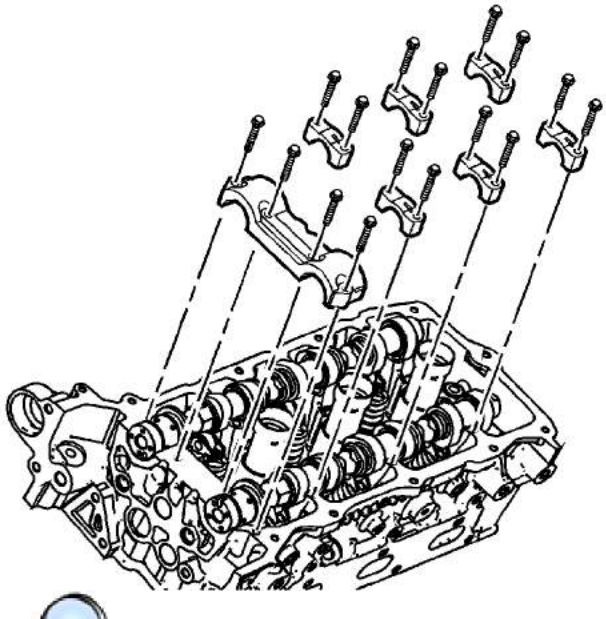

7. Install the camshaft bearing thrust cap in the first journal of the left cylinder head.
8. Install the remaining bearing caps with their orientation mark toward the center of the cylinder head.
9. Hand start all the camshaft bearing cap bolts.

cardiagn.com

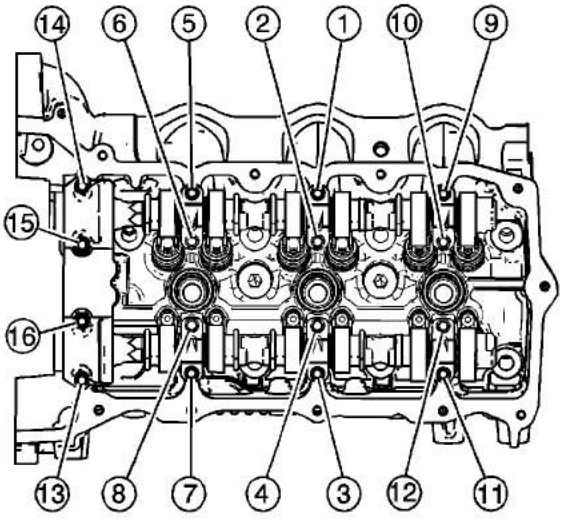

10. Tighten the camshaft bearing cap bolts in the sequence shown and tighten to **10 N·m (89 lb in)**.
11. Loosen the center intake camshaft bearing cap bolts 1, 2 and the center exhaust camshaft bearing cap bolts 3, 4.
12. Retighten the center camshaft bearing cap bolts 1, 2, 3, 4 to **10 N·m (89 lb in)**.

cardiagn.com

Camshaft Position Actuator Installation - Right Side Intake

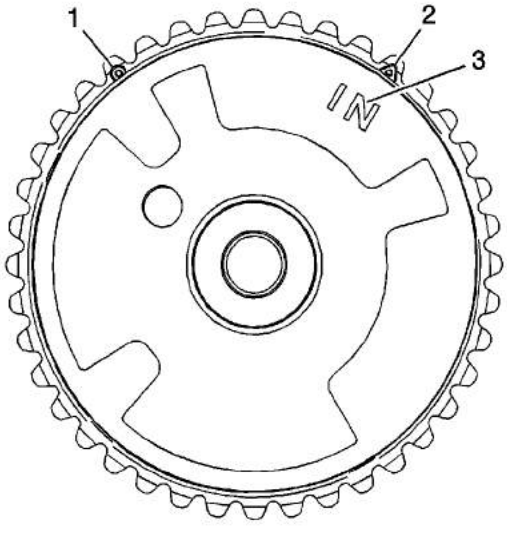

1. Ensure the proper camshaft position actuator is installed. Observe the body of the camshaft position actuator for the "IN" marking (3). The marking is for an intake camshaft position actuator.

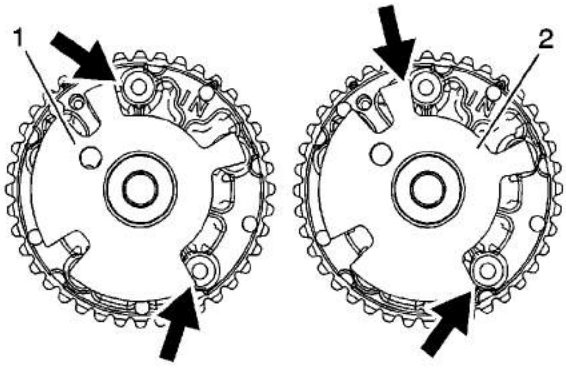

Caution: Ensure the proper camshaft position actuator is installed in the correct position. Failure to install the proper camshaft position actuator can effect engine performance and set

© 2010 General Motors Corporation. All rights reserved.

cardiagn.com

2. Ensure the proper camshaft position actuator is being installed. The reluctor wheel on the right intake camshaft position actuator (1) is indexed in a different position compared to the left intake camshaft position actuator (2).

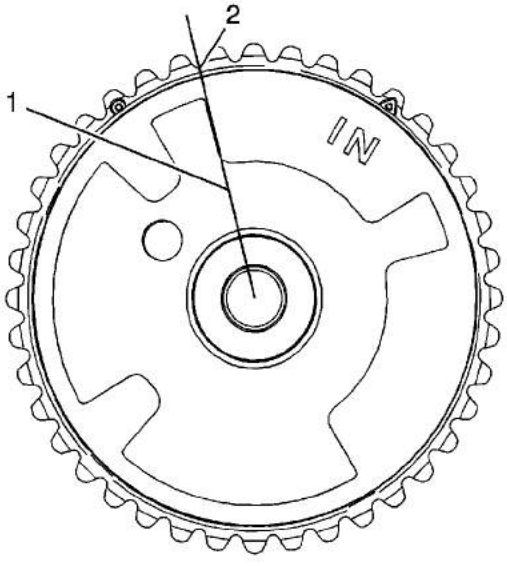

3. On the right intake camshaft actuator the edge of the reluctor wheel (1) lines up with the valley (2) of the sprocket tooth.

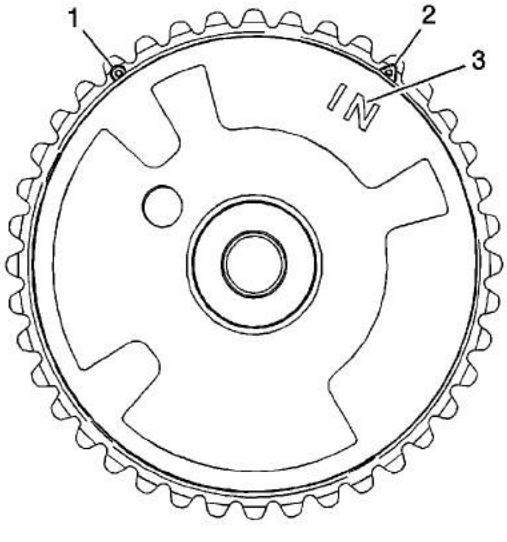

4. Ensure the proper timing mark is used. Observe the outer ring of the camshaft position actuator for the triangle marking (2). The triangle marking is for alignment to the highlighted timing chain link on the right side of the engine.

Caution: Refer to Torque Reaction Against Timing Drive Chain Caution in the Preface section.

cardiagn.com

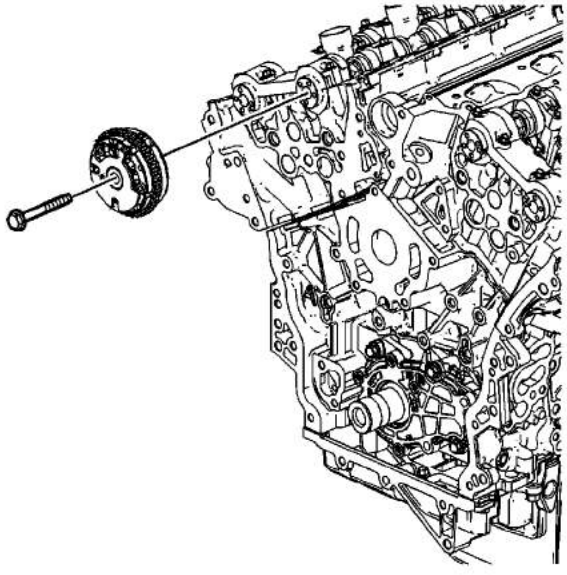

6. Install the right intake camshaft position actuator.

   Caution: Refer to Fastener Caution in the Preface section.

7. Install the camshaft position actuator bolt and tighten to **58 N·m (43 lb ft)**.

cardiagn.com

Camshaft Position Actuator Installation - Right Side Exhaust

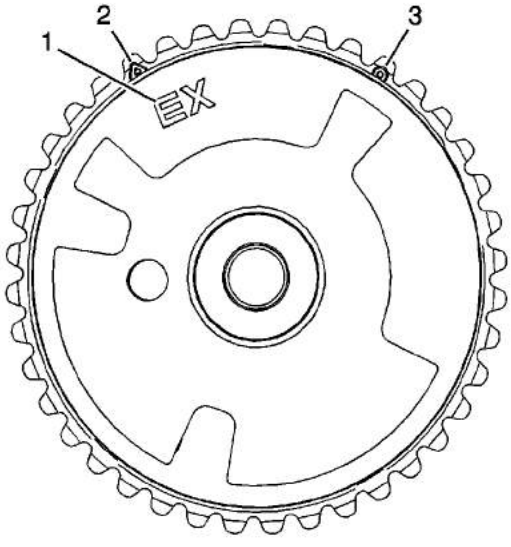

1. Ensure the proper camshaft position actuator is installed. Observe the body of the camshaft position actuator for the "EX" marking (1). The marking is for an exhaust camshaft position actuator.
2. Ensure the proper timing mark is used. Observe the outer ring of the camshaft position actuator for the triangle marking (2). The marking is for alignment to the highlighted timing chain link on the right side of the engine.

   Caution: Refer to Torque Reaction Against Timing Drive Chain Caution in the Preface section.

3. Use an open wrench on the hex cast into the camshaft in order to prevent camshaft rotation when tightening the camshaft position actuator bolt.

cardiagn.com

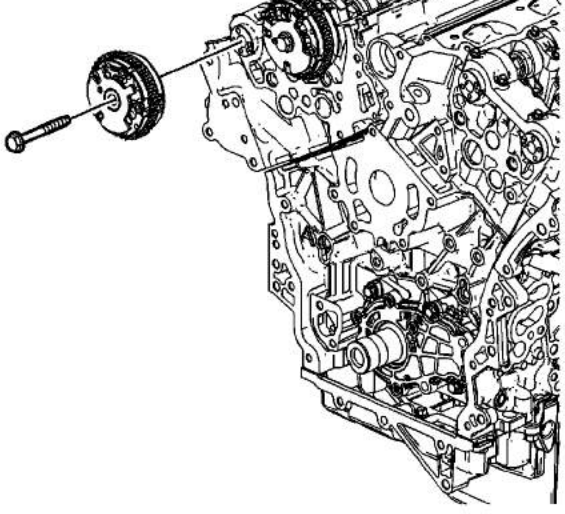

4. Install the right exhaust camshaft position actuator.

   Caution: Refer to Fastener Caution in the Preface section.

5. Install the camshaft position actuator bolt and tighten to **58 N·m (43 lb ft)**.

cardiagn.com

Camshaft Position Actuator Installation - Left Side Intake

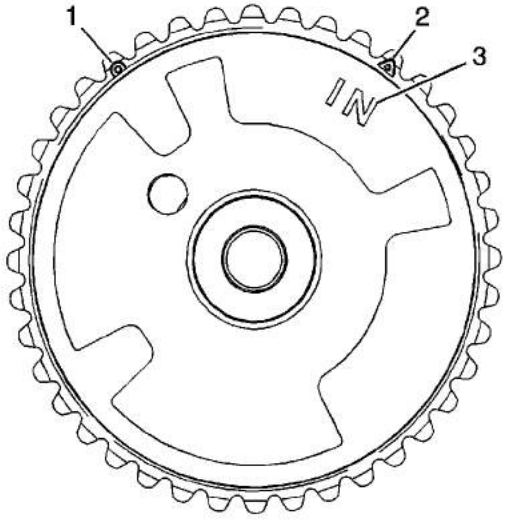

1. Ensure the proper camshaft position actuator is installed. Observe the body of the camshaft position actuator for the "IN" marking (3). The marking is for an intake camshaft position actuator.

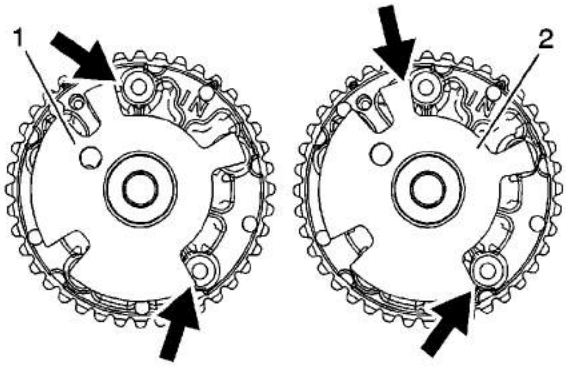

Caution: Ensure the proper camshaft position actuator is installed in the correct position. Failure to install the proper camshaft position actuator can effect engine performance and set

© 2010 General Motors Corporation. All rights reserved.

cardiagn.com

2. Ensure the proper camshaft position actuator is being installed. The reluctor wheel on the right intake camshaft position actuator (1) is indexed in a different position compared to the left intake camshaft position actuator (2).

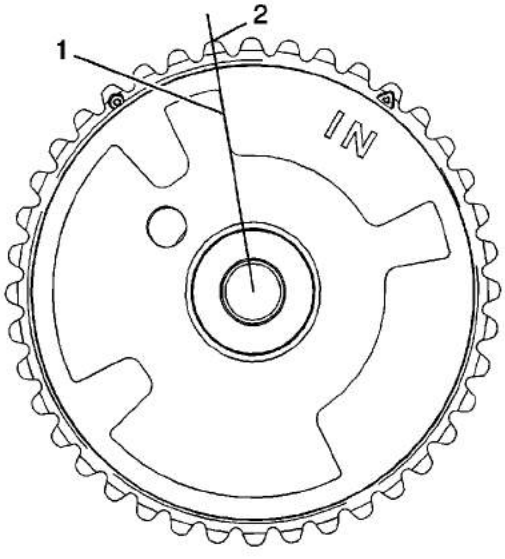

3. On the left intake camshaft actuator the edge of the reluctor wheel (1) lines up with the peak (2) of the sprocket tooth.

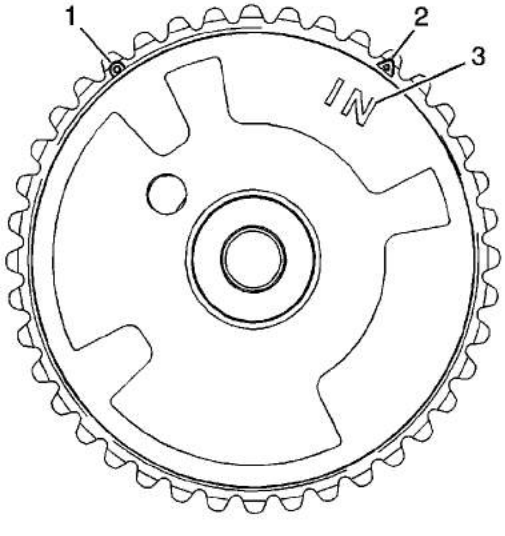

4. Ensure the proper timing mark is used. Observe the outer ring of the camshaft position actuator for the circle marking (1). The circle marking is for alignment to the highlighted timing chain link on the left side of the engine.

Caution: Refer to Torque Reaction Against Timing Drive Chain Caution in the Preface section.

cardiagn.com

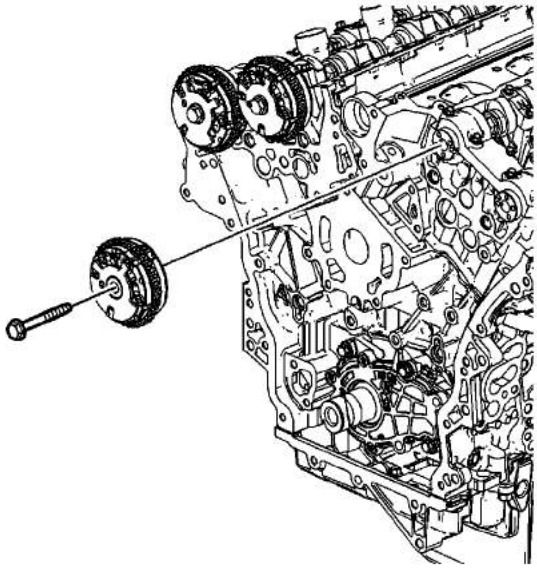

6. Install the left intake camshaft position actuator.

   Caution: Refer to Fastener Caution in the Preface section.

7. Install the camshaft position actuator bolt and tighten to **58 N·m (43 lb ft)**.

cardiagn.com

Crankshaft Sprocket Installation

Special Tools

EN-48589 Crankshaft Rotation Socket EN-48589

For equivalent regional tools, refer to Special Tools.

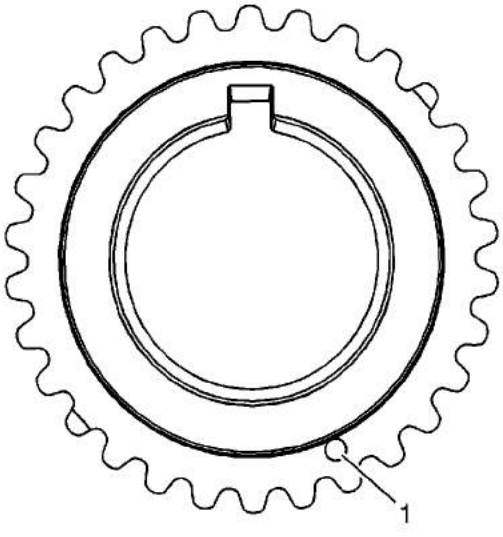

1. Ensure the crankshaft sprocket is installed with the timing mark (1) visible.

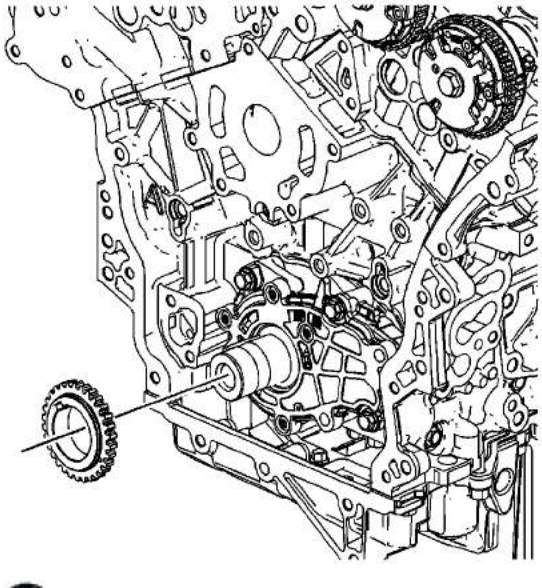

cardiagn.com

4. Slide the crankshaft sprocket on the crankshaft nose until the crankshaft sprocket contacts the step in the crankshaft.

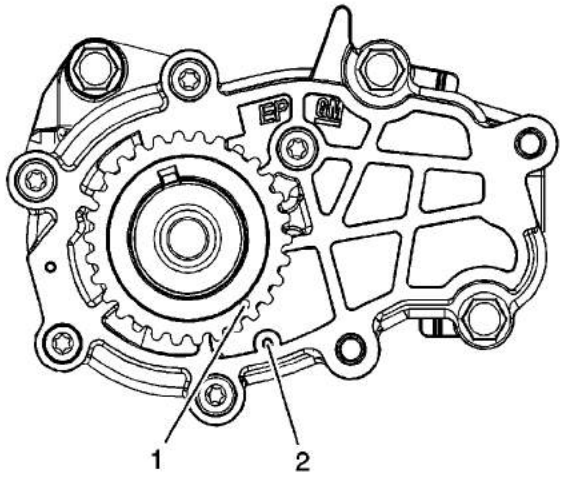

5. Ensure the crankshaft is in the stage one timing position with the crankshaft sprocket timing mark (1) aligned to the stage one timing mark on the oil pump cover (2) using the *EN-48589* socket . Refer to Camshaft Timing Drive Chain Alignment Diagram.

cardiagn.com

Camshaft Intermediate Drive Chain Idler Installation - Left Side

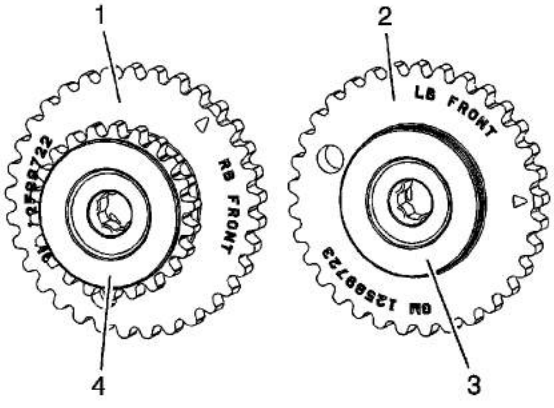

1. Ensure that the left camshaft intermediate drive chain idler (2) is being installed. The recessed hub (3) and the larger sprocket of the left camshaft intermediate drive chain idler is installed outward. The raised hub and the smaller sprocket of the left camshaft intermediate drive chain idler is installed towards the block.

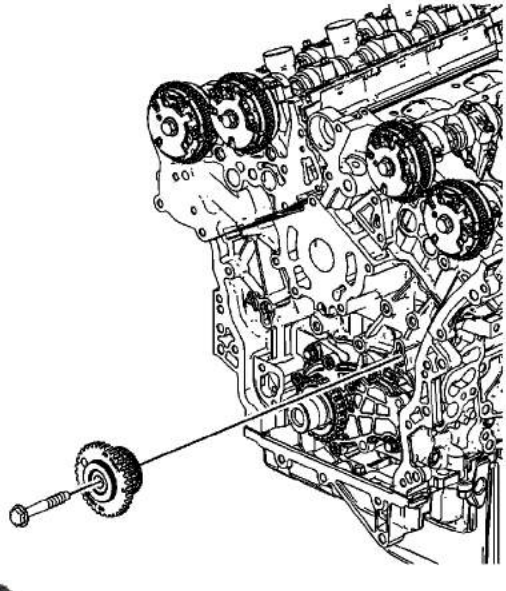

2. Place the left camshaft intermediate drive chain idler to the cylinder block.

cardiagn.com

3. Install the camshaft intermediate drive chain idler bolt and tighten to **58 N·m (43 lb ft)**.

cardiagn.com

Secondary Camshaft Drive Chain Installation - Left Side (LY7 or LP1)

Special Tools

- EN-48383 Camshaft Retaining Tools
- EN-48589 Crankshaft Rotation Socket

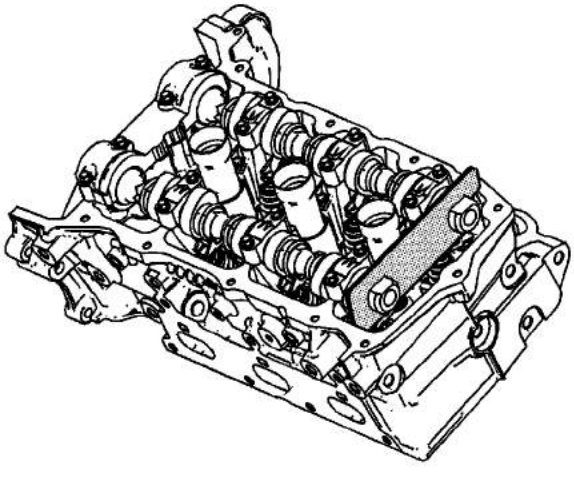

Important: There should be no need to rotate the camshaft more than 10 degrees. Using the hex cast into the camshaft rotate the camshaft in order to install the EN-48383 .

1. Install the EN 48383-1 onto the rear of the left camshafts.

   Important: All camshafts must be locked in place before installation of any camshaft drive chains.

2. Ensure that the EN 48383-1 is fully seated onto the camshafts.

cardiagn.com

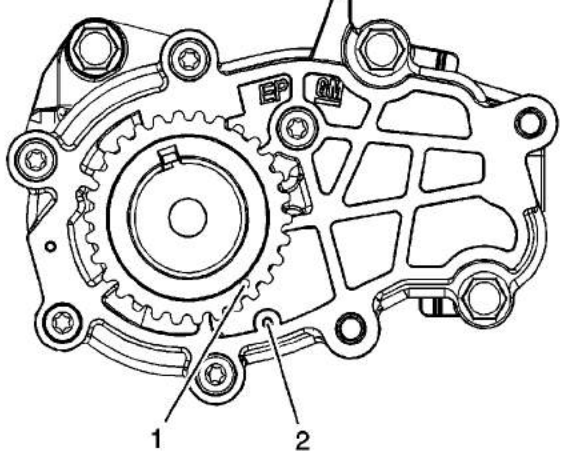

3. Ensure the crankshaft is in the stage one timing position with the crankshaft sprocket timing mark (1) aligned to the stage one timing mark on the oil pump cover (2) using the EN-48589 . Refer to Camshaft Timing Drive Chain Alignment Diagram.

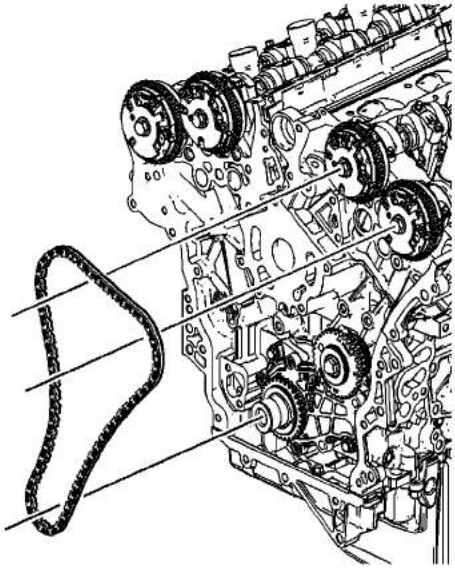

4. Install the left secondary camshaft drive chain.

cardiagn.com

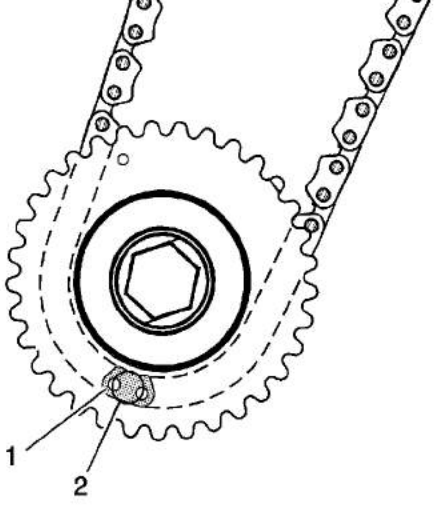

5. Place the left secondary camshaft drive chain around the inner sprocket of the left camshaft intermediate drive chain idler with the timing camshaft drive chain link (1) aligned to the alignment access hole (2) made in the left camshaft intermediate drive chain idler outer sprocket.

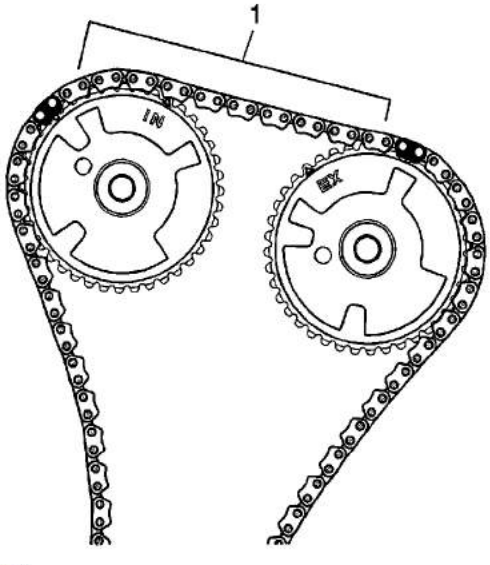

6. Wrap the secondary camshaft drive chain around both left actuator drive sprockets.
7. Ensure there are 10 links (1) between the timing camshaft drive chain links for the camshaft position actuator sprockets.

cardiagn.com

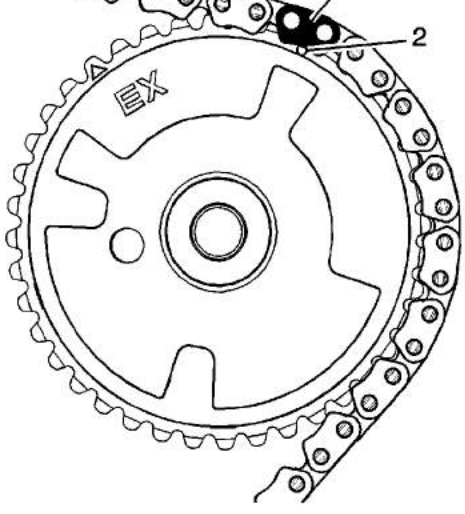

8. Align the left exhaust camshaft position actuator sprocket alignment circle mark (2) with the timing camshaft drive chain link (1).

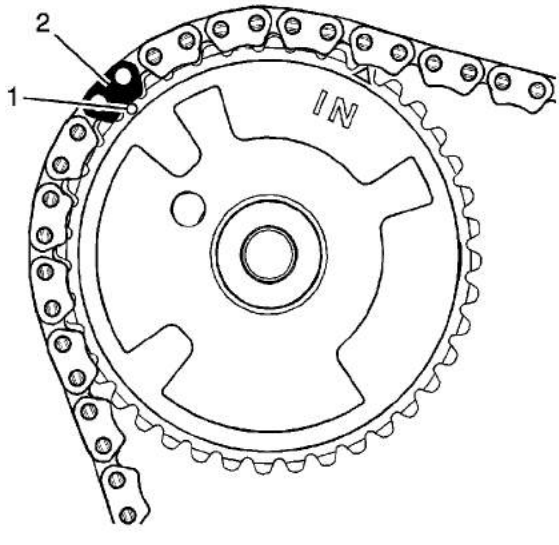

9. Align the left intake camshaft position actuator sprocket alignment circle mark (1) with the timing camshaft drive chain link (2).

cardiagn.com

Secondary Camshaft Drive Chain Installation - Left Side (LLT or LCS)

Special Tools

- EN-48383 Camshaft Retaining Tools
- EN-48589 Crankshaft Rotation Socket

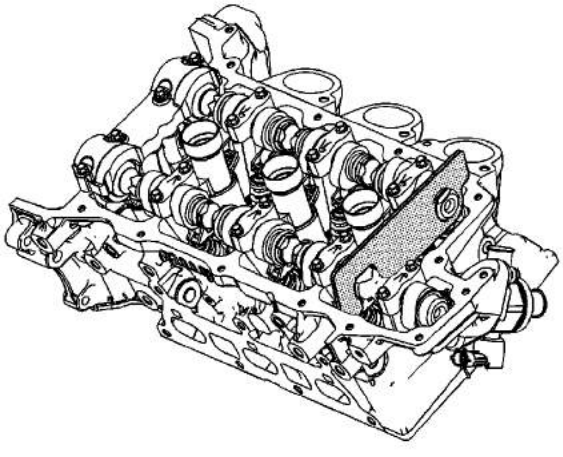

Important: There should be no need to rotate the camshaft more than 10 degrees. Using the hex cast into the camshaft rotate the camshaft in order to install the EN-48383 .

1. Install the EN 48383-1 onto the rear of the left camshafts.

   Important: All camshafts must be locked in place before installation of any camshaft drive chains.

2. Ensure that the EN 48383-1 is fully seated onto the camshafts.

cardiagn.com

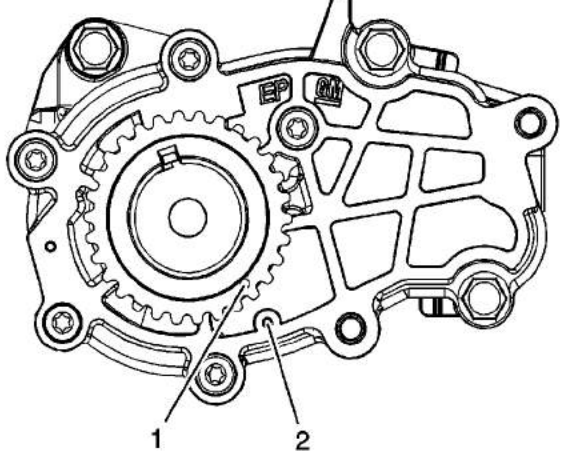

3. Ensure the crankshaft is in the stage one timing position with the crankshaft sprocket timing mark (1) aligned to the stage one timing mark on the oil pump cover (2) using the EN-48589 . Refer to Camshaft Timing Drive Chain Alignment Diagram.

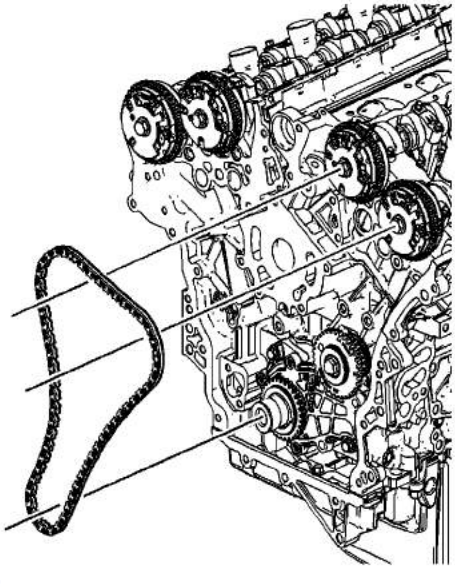

4. Install the left secondary camshaft drive chain.

cardiagn.com

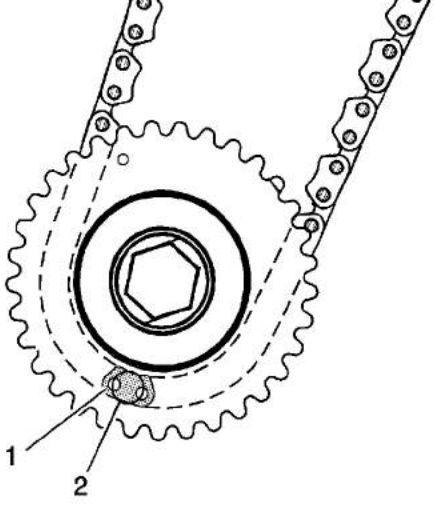

5. Place the left secondary camshaft drive chain around the inner sprocket of the left camshaft intermediate drive chain idler with the timing camshaft drive chain link (1) aligned to the alignment access hole (2) made in the left camshaft intermediate drive chain idler outer sprocket.

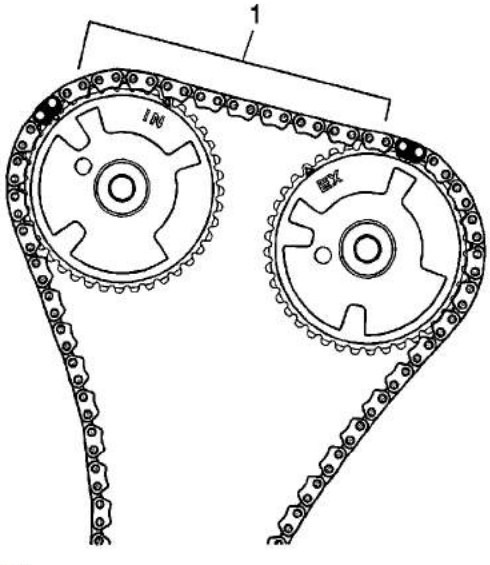

6. Wrap the secondary camshaft drive chain around both left actuator drive sprockets.
7. Ensure there are 10 links (1) between the timing camshaft drive chain links for the camshaft position actuator sprockets.

cardiagn.com

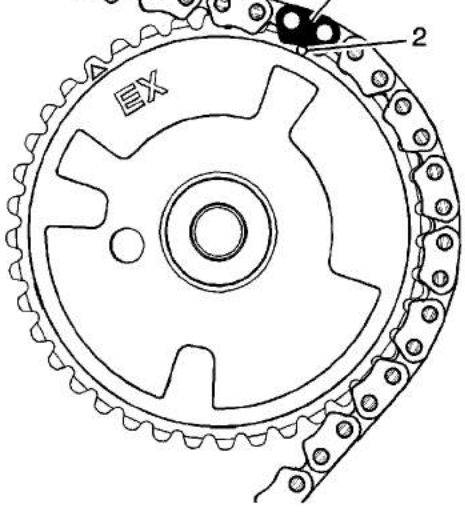

8. Align the left exhaust camshaft position actuator sprocket alignment circle mark (2) with the timing camshaft drive chain link (1).

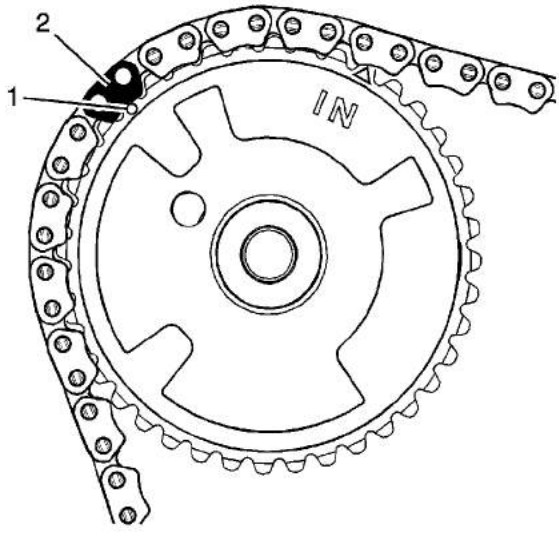

9. Align the left intake camshaft position actuator sprocket alignment circle mark (1) with the timing camshaft drive chain link (2).

cardiagn.com

Secondary Camshaft Drive Chain Guide Installation - Left Side

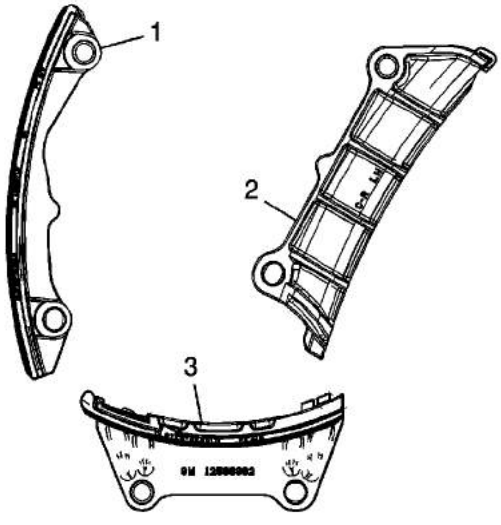

1. Ensure that the left secondary camshaft drive chain guide (2) is being installed.

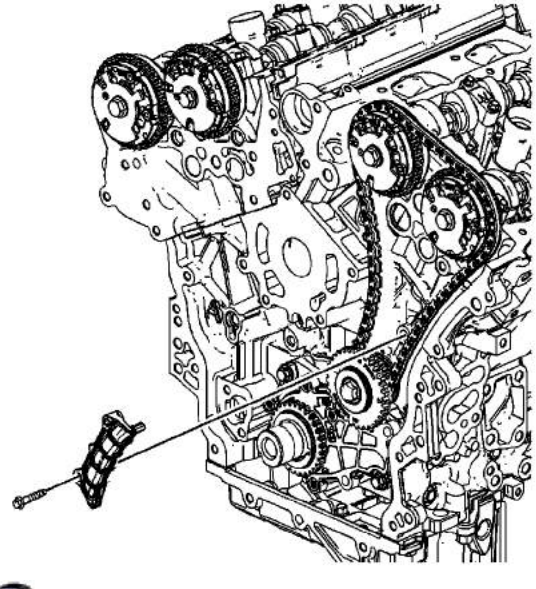

2. Position the left secondary camshaft drive chain guide.

   Caution: Refer to Fastener Caution in the Preface section.

3. Install the secondary camshaft drive chain guide bolts and tighten to **23 N·m (17 lb ft)**.

© 2010 General Motors Corporation. All rights reserved.

cardiagn.com

Secondary Camshaft Drive Chain Shoe Installation - Left Side

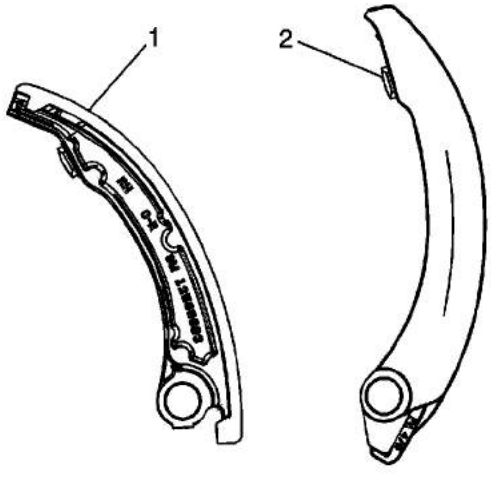

1. Ensure that the left secondary camshaft drive chain shoe (2) is being installed.

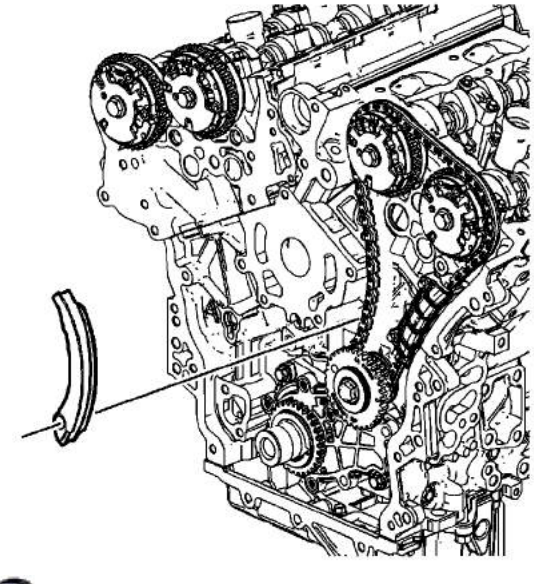

2. Position the left secondary camshaft drive chain shoe.

   Caution: Refer to Fastener Caution in the Preface section.

cardiagn.com

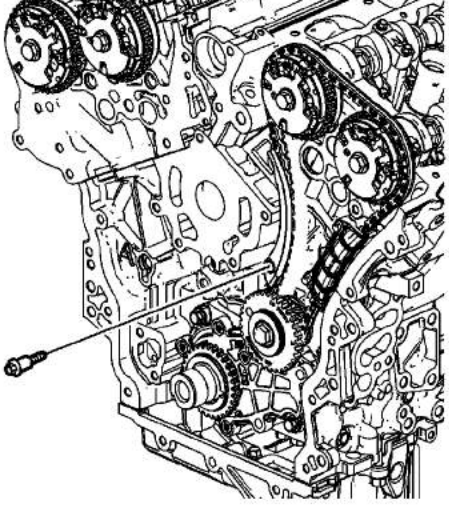

3. Install the secondary camshaft drive chain shoe bolt and tighten to **23 N·m (17 lb ft)**.

cardiagn.com

Secondary Camshaft Drive Chain Tensioner Installation - Left Side

Special Tools

- *EN-46112* Tensioner Retraction Pins
- *J-45027* Tensioner Tool

For equivalent regional tools, refer to Special Tools.

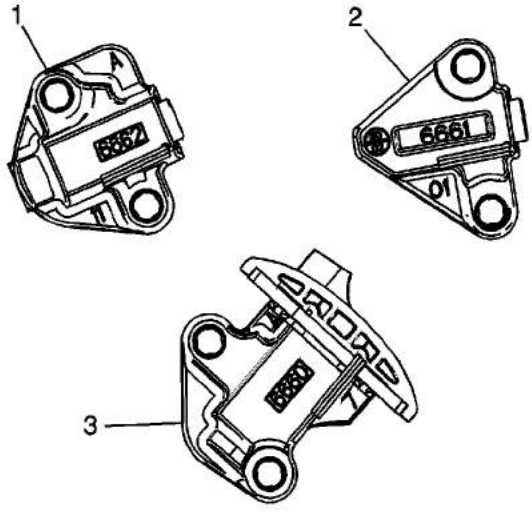

1. Ensure that the left secondary camshaft drive chain tensioner (2) is being installed.

cardiagn.com

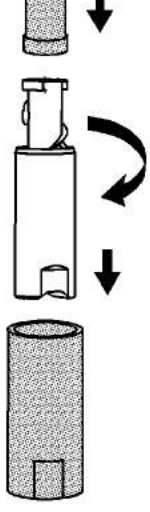

2. Using the *J-45027* tool , reset the left secondary camshaft drive chain tensioner plunger.

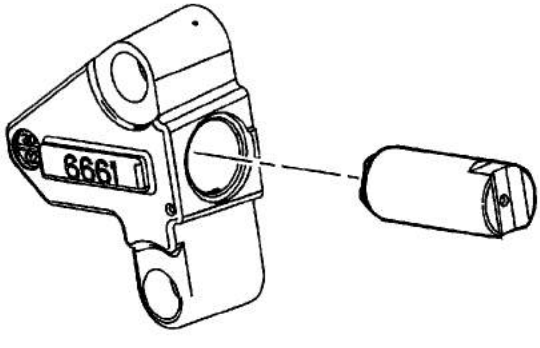

3. Install the plunger into the left secondary camshaft drive chain tensioner body.

cardiagn.com

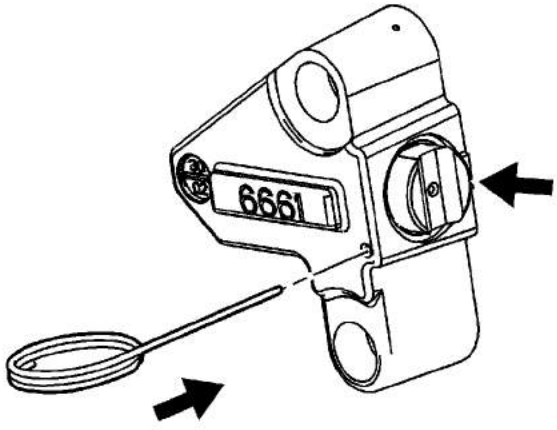

4. Compress the plunger into the body and lock the left secondary camshaft drive chain tensioner by inserting the *EN-46112* pins into the access hole in the side of the left secondary camshaft drive chain tensioner body.
5. Slowly release pressure on the left secondary camshaft drive chain tensioner. The left secondary camshaft drive chain tensioner should remain compressed.

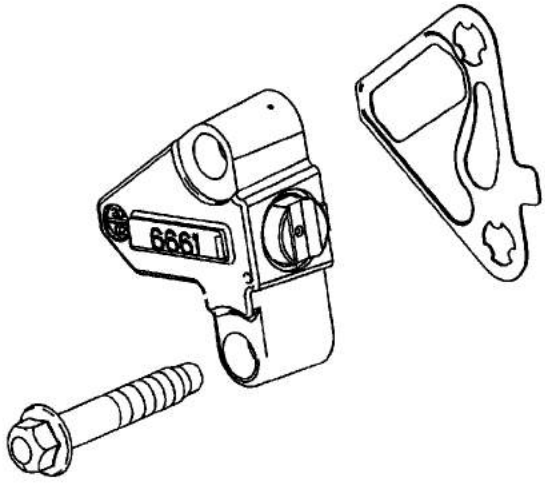

6. Install a NEW left secondary camshaft drive chain tensioner gasket to the left secondary camshaft drive chain tensioner.
7. Install the left secondary camshaft drive chain tensioner bolts through the left secondary camshaft drive chain tensioner and gasket.
8. Ensure the left secondary camshaft drive chain tensioner mounting surface on the left cylinder head does not have any burrs or defects that would degrade the sealing of the NEW left secondary camshaft drive chain tensioner gasket.

cardiagn.com

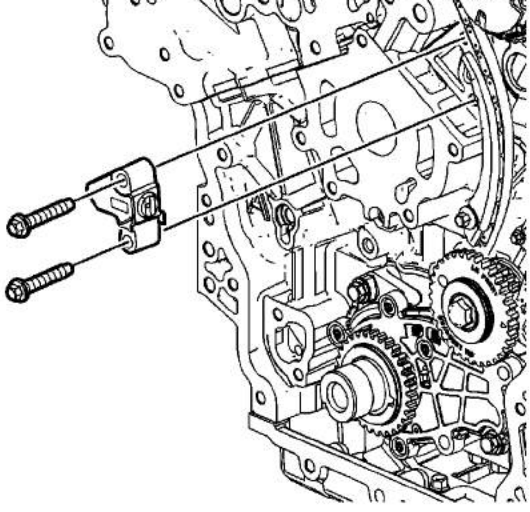

9. Place the left secondary camshaft drive chain tensioner into position and loosely install the bolts to the block.

   Caution: Refer to Fastener Caution in the Preface section.

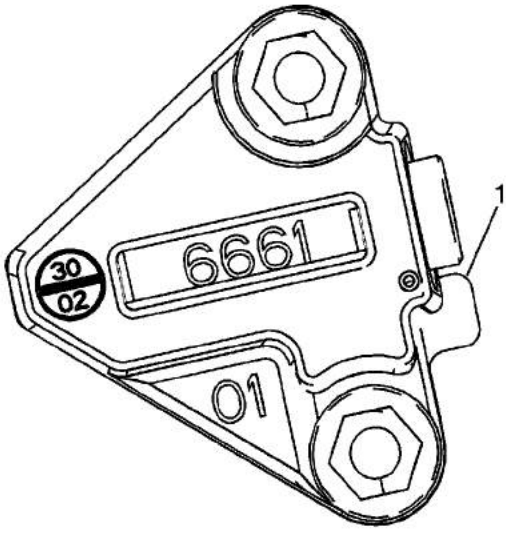

10. Verify the proper placement of the left secondary camshaft drive chain tensioner gasket tab (1).
    10.1. First Pass

    Tighten the left secondary camshaft drive chain tensioner bolts to **5 N·m (44 lb in)**.

cardiagn.com

Tighten the left secondary camshaft drive chain tensioner bolts to **23 N·m (17 lb ft)**.

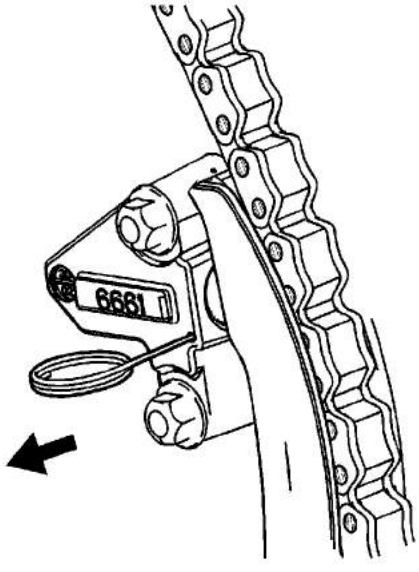

11. Release the left secondary camshaft drive chain tensioner by pulling out the *EN-46112* pins and unlocking the tensioner plunger.

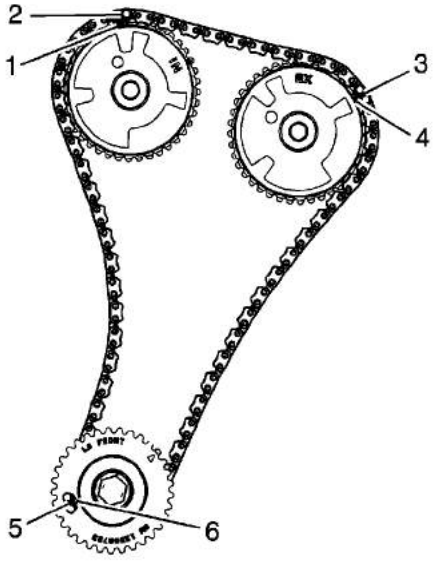

12. Verify the left secondary camshaft drive chain timing mark alignments (1-6). Also refer to [Camshaft Timing Drive Chain Alignment Diagram](#) - Stage One.

cardiagn.com

Camshaft Intermediate Drive Chain Idler Installation - Right Side

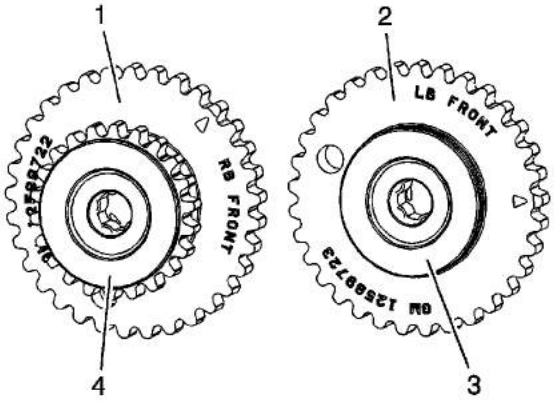

1. Ensure that the right camshaft intermediate drive chain idler (1) is being installed. The recessed hub (4) and the smaller sprocket of the right camshaft intermediate drive chain idler is installed outward. The raised hub and the larger sprocket of the right camshaft intermediate drive chain idler is installed towards the block.

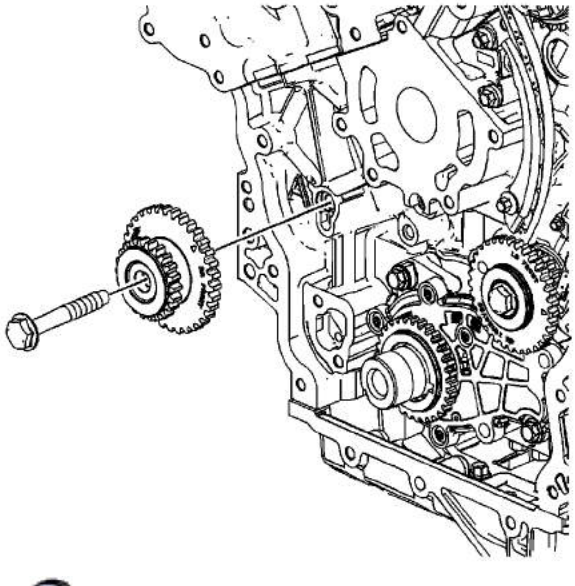

2. Install the right camshaft intermediate drive chain idler.

cardiagn.com

3. Install the camshaft intermediate drive chain idler bolt and tighten to **58 N·m (43 lb ft)**.

cardiagn.com

Primary Camshaft Intermediate Drive Chain Installation

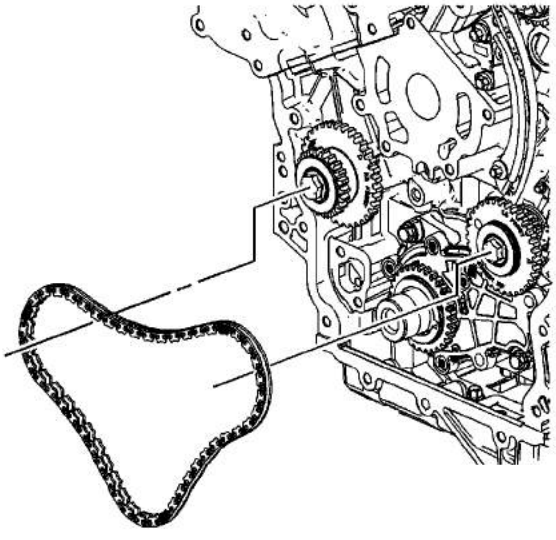

Note: Ensure that the crankshaft is in the stage one timing drive assembly position.

1. Install the primary camshaft drive chain.

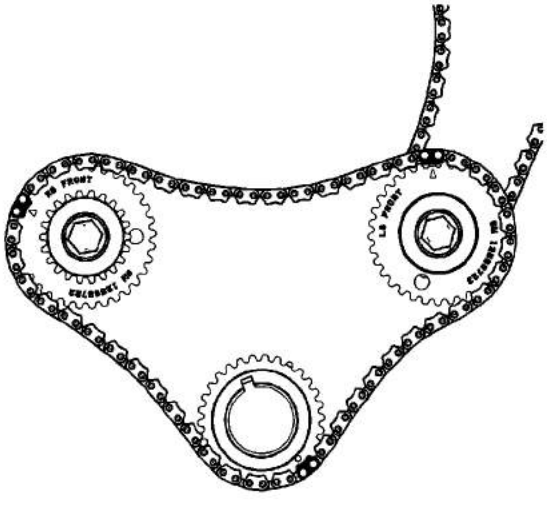

2. Wrap the primary camshaft drive chain around the large sprockets of each camshaft intermediate drive chain idler and the crankshaft sprocket.

© 2010 General Motors Corporation. All rights reserved.

cardiagn.com

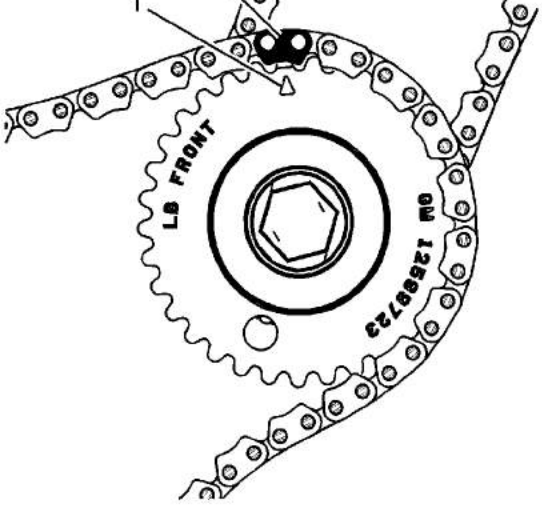

3. The left camshaft intermediate drive chain idler timing mark (1) will align with a timing camshaft drive chain link (2).

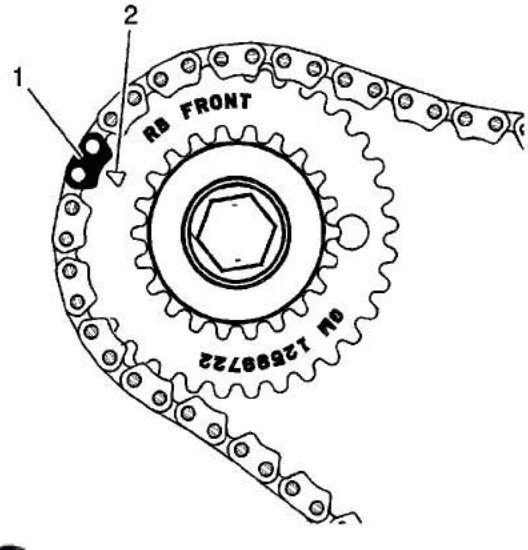

4. The right camshaft intermediate drive chain idler timing mark (2) will align with a timing camshaft drive chain link (1).

cardiagn.com

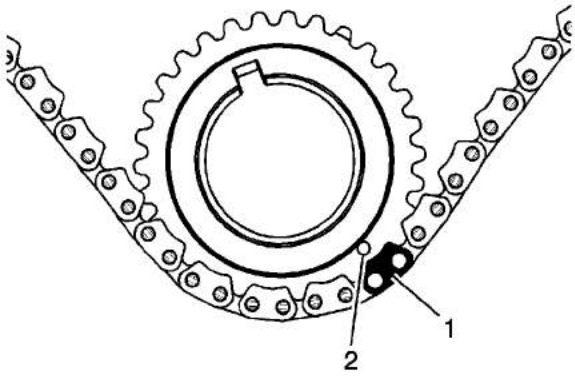

5. The crankshaft sprocket timing mark (2) will align with a timing camshaft drive chain link (1).

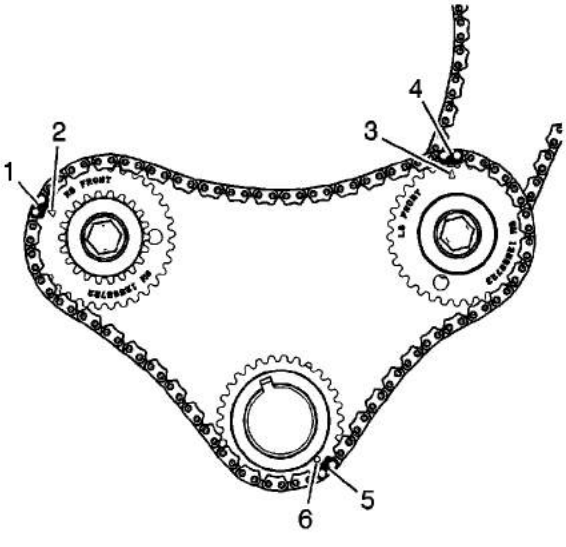

6. Ensure all the timing marks (2, 3, 6) are properly aligned with the timing camshaft drive chain links (1, 4, 5).

cardiagn.com

Primary Timing Chain Guide Installation - Lower

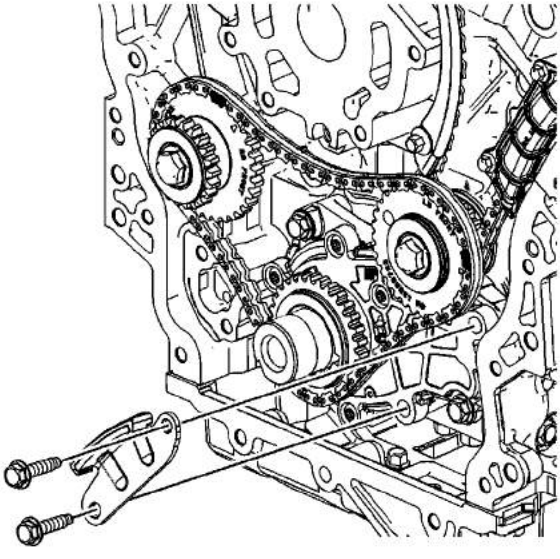

1. Position the primary camshaft drive chain lower guide to the oil pump.

   Caution: Refer to Fastener Caution in the Preface section.

2. Install the primary camshaft drive chain lower guide bolts and tighten to **23 N·m (17 lb ft)**.

cardiagn.com

Primary Timing Chain Guide Installation - Upper

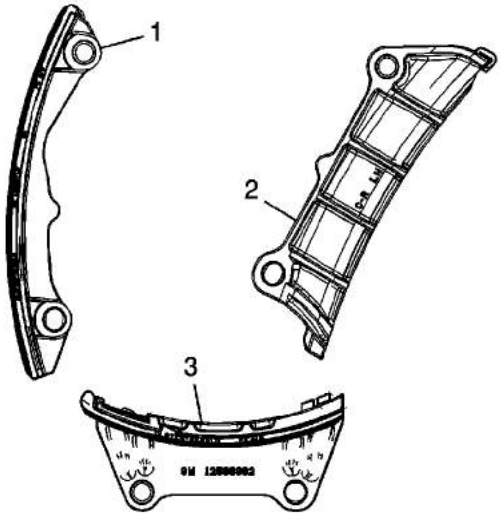

1. Ensure the upper primary camshaft drive chain guide (3) is being installed.

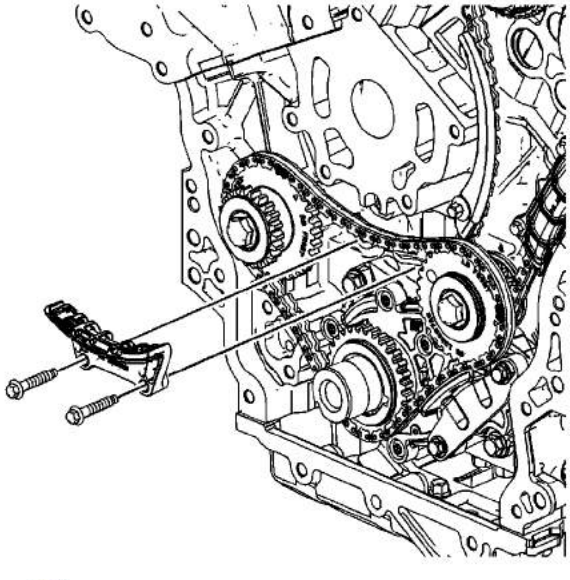

2. Install the upper primary camshaft drive chain guides.

   Caution: Refer to Fastener Caution in the Preface section.

3. Install the upper primary camshaft drive chain guide bolts and tighten to **23 N·m (17 lb ft)**.

cardiagn.com

Primary Camshaft Intermediate Drive Chain Tensioner Installation

Special Tools

- *EN-46105* Camshaft Locking Tool
- *EN-46112* Tensioner Retraction Pins
- *EN-48383* Camshaft Retaining Tools
- *EN-48589* Crankshaft Rotation Socket
- *J-45027* Tensioner Tool

For equivalent regional tools, refer to Special Tools.

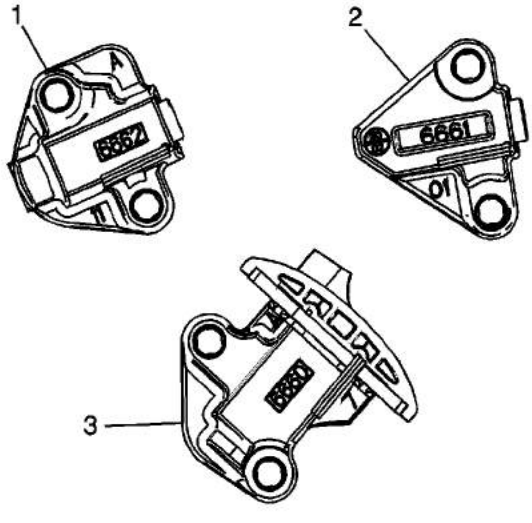

1. Ensure that the primary camshaft drive chain tensioner (3) is being installed.

cardiagn.com

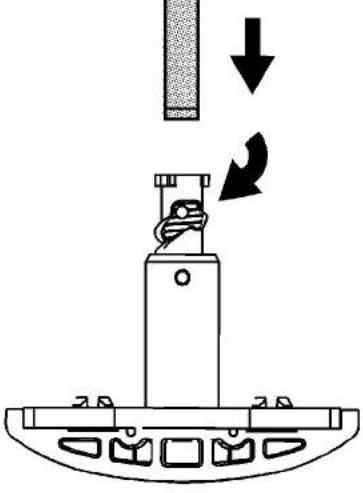

2. Using the *J-45027* tool , reset the primary camshaft drive chain tensioner plunger.

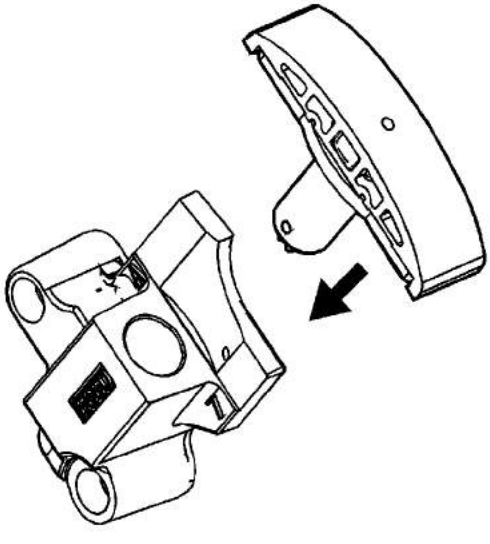

3. Install the plunger into the primary camshaft drive chain tensioner body.

cardiagn.com

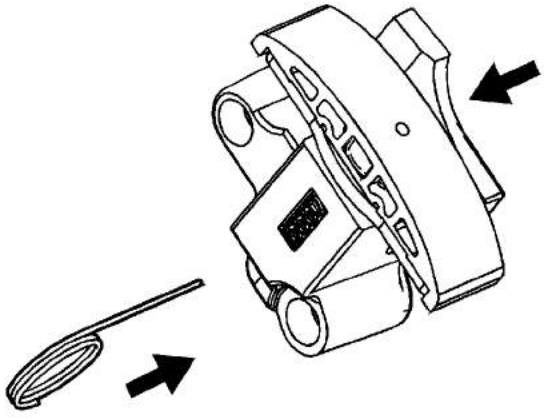

4. Compress the plunger into the body and lock the primary camshaft drive chain tensioner by inserting the *EN-46112* pins into the access hole in the side of the primary camshaft drive chain tensioner body.
5. Slowly release pressure on the primary camshaft drive chain tensioner. The primary camshaft drive chain tensioner should remain compressed.

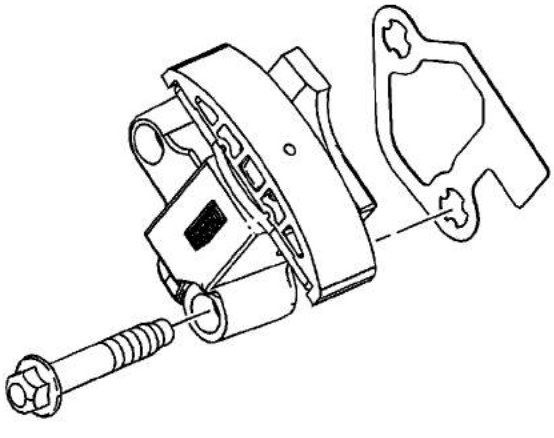

6. Install a NEW primary camshaft drive chain tensioner gasket to the primary camshaft drive chain tensioner.
7. Install the primary camshaft drive chain tensioner bolts through the primary camshaft drive chain tensioner and gasket.
8. Ensure the primary camshaft drive chain tensioner mounting surface on the engine block does not have any burrs or defects that would degrade the sealing of the NEW primary camshaft drive chain tensioner gasket.

cardiagn.com

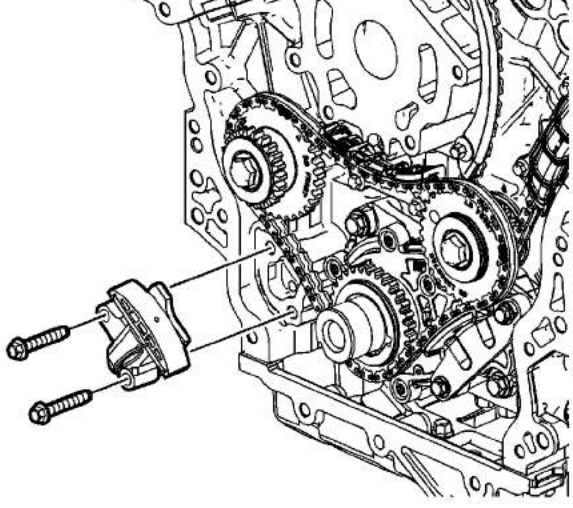

9. Place the primary camshaft drive chain tensioner into position and loosely install the bolts to the block.

   Caution: Refer to Fastener Caution in the Preface section.

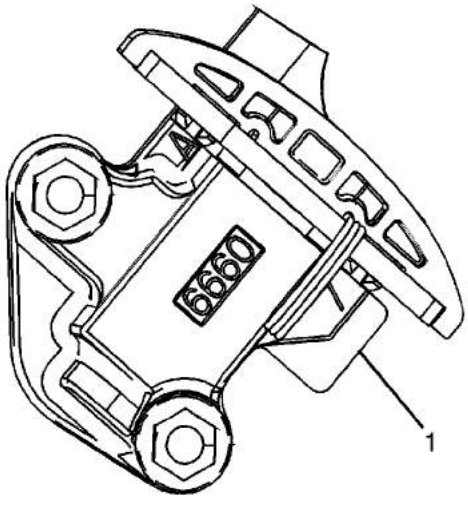

10. Verify the proper placement of the primary camshaft drive chain tensioner gasket tab (1).
    10.1. First Pass

    Tighten the primary camshaft drive chain tensioner bolts to **5 N·m (44 lb in)**.

    10.2. Final Pass

cardiagn.com

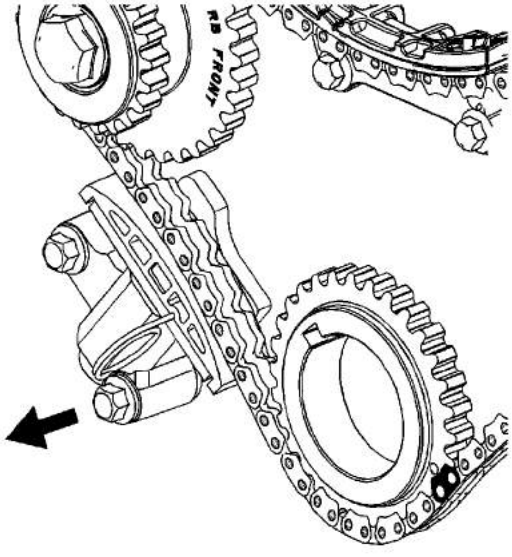

11. Release the primary camshaft drive chain tensioner by pulling out the *EN-46112* pins and unlocking the tensioner plunger.

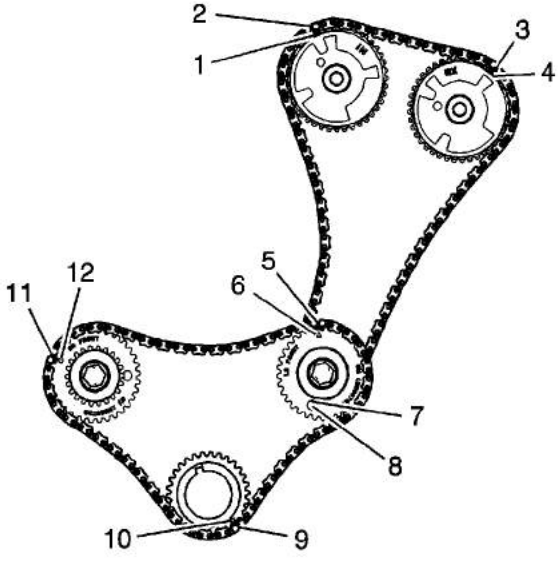

12. Verify the primary and left secondary camshaft drive chain timing mark alignments (1-12). Also refer to [Camshaft Timing Drive Chain Alignment Diagram](#) - Stage One.

cardiagn.com

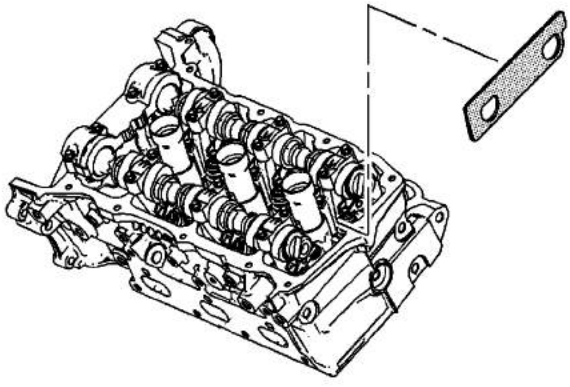

13. Remove the EN 46105-1 from the rear of the left camshafts.

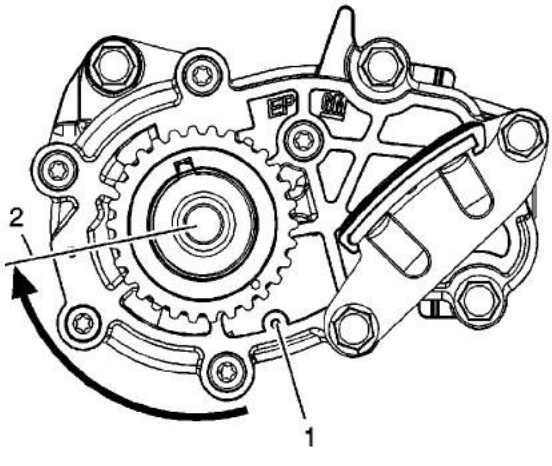

14. Using the *EN-48589* socket , rotate the crankshaft and crankshaft sprocket from the stage 1 alignment position (1) to the stage 2 alignment position (2), 115 crankshaft degrees, in order to install the right secondary camshaft drive chain components.

cardiagn.com

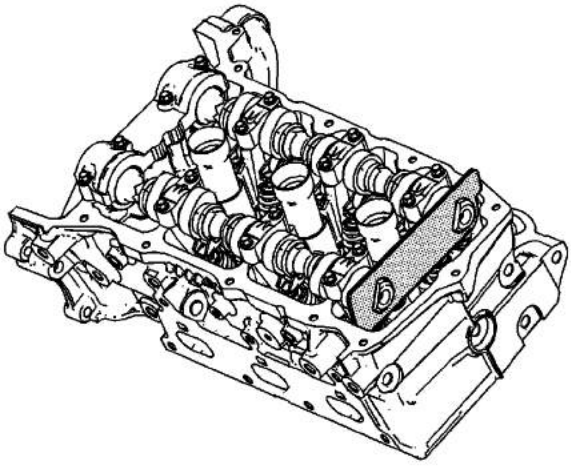

15. Install the EN 46105-2 onto the rear of the left camshafts.

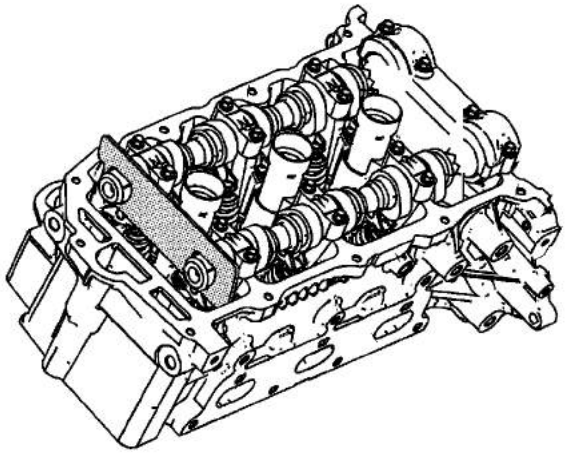

16. Install the EN 48383-3 onto the rear of the right camshafts.

cardiagn.com

Secondary Camshaft Drive Chain Installation - Right Side

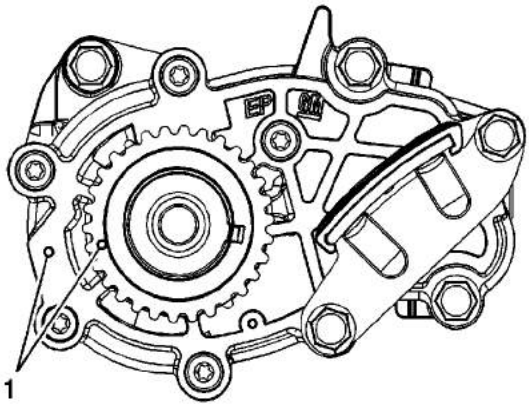

1. Ensure that the crankshaft is in the stage 2 timing drive assembly position (1).

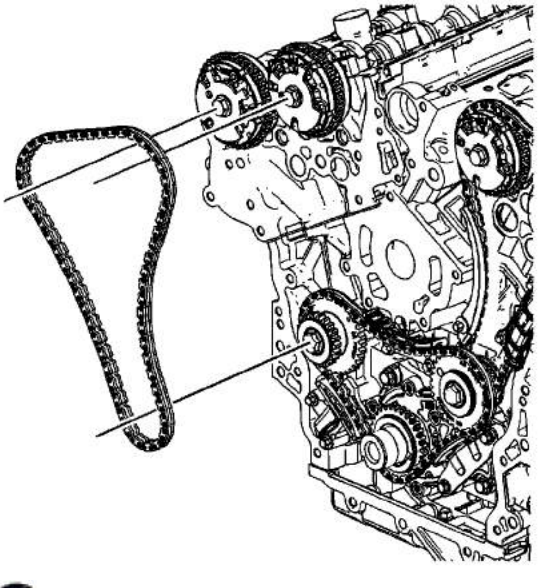

2. Install the right secondary camshaft drive chain.

cardiagn.com

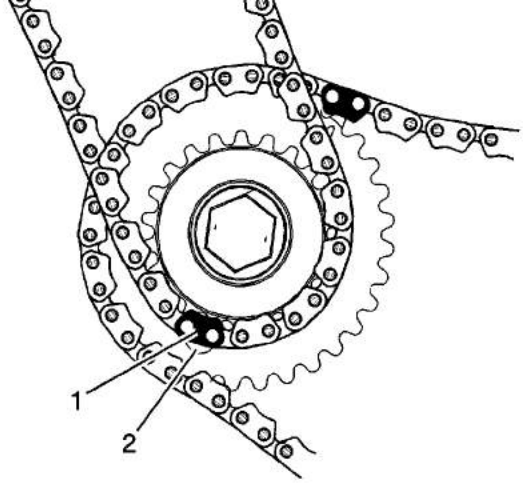

3. Place the secondary camshaft drive chain around the right camshaft intermediate drive chain idler outer sprocket, aligning the timing camshaft drive chain link (1) with the alignment access hole (2) made in the right camshaft intermediate drive chain idler inner sprocket.

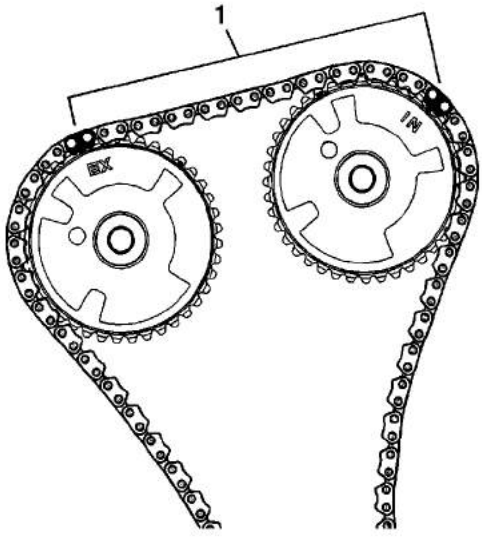

4. Wrap the secondary camshaft drive chain around both right actuator drive sprockets.
5. Ensure there are 10 links (1) between the timing camshaft drive chain links for the camshaft position actuator sprockets.

cardiagn.com

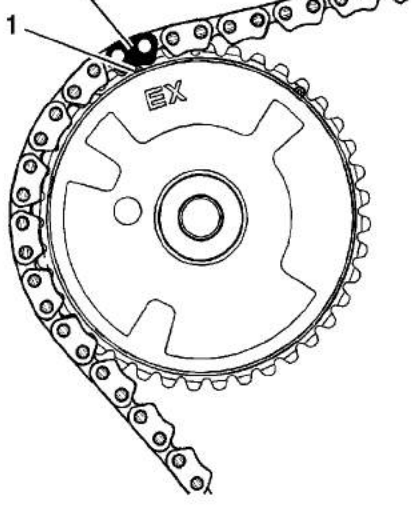

6. Align the right exhaust camshaft position actuator sprocket alignment triangle mark (1) with the timing camshaft drive chain link (2).

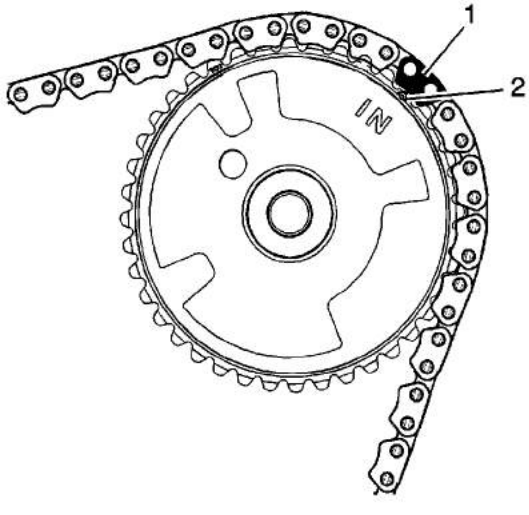

7. Align the right intake camshaft position actuator sprocket alignment triangle mark (2) with the timing camshaft drive chain link (1).

cardiagn.com

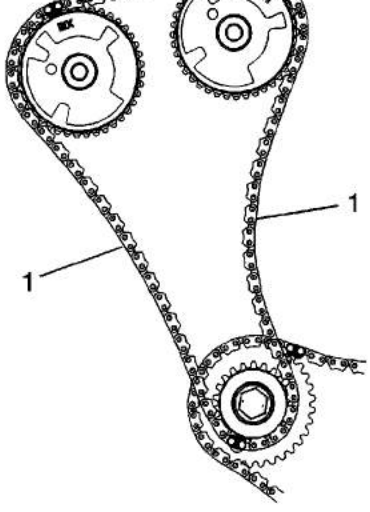

8. There will be 22 links (1) between the right camshaft intermediate drive chain idler timing camshaft drive chain link and each right camshaft position actuator sprocket timing camshaft drive chain link.

cardiagn.com

Secondary Camshaft Drive Chain Guide Installation - Right Side

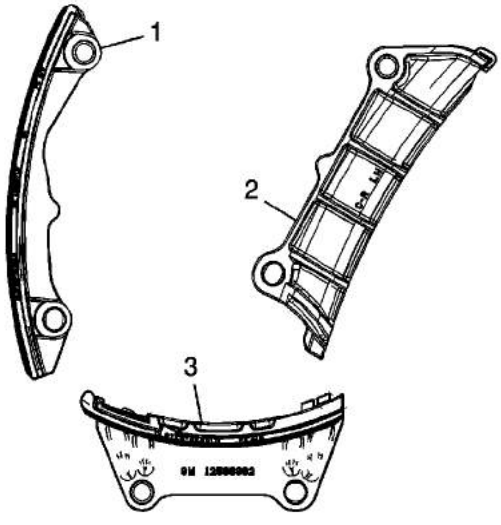

1. Ensure that the right secondary camshaft drive chain guide (1) is being installed.

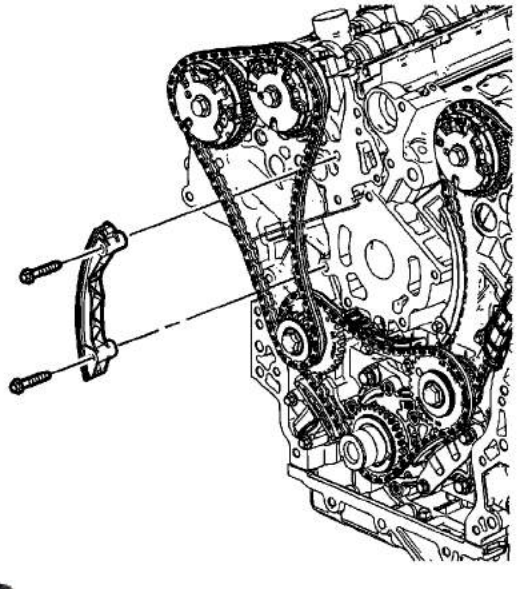

2. Position the right secondary camshaft drive chain guide.

   Caution: Refer to Fastener Caution in the Preface section.

3. Install the secondary camshaft drive chain guide bolts and tighten to **23 N·m (17 lb ft)**.

© 2010 General Motors Corporation. All rights reserved.

cardiagn.com

Secondary Camshaft Drive Chain Shoe Installation - Right Side

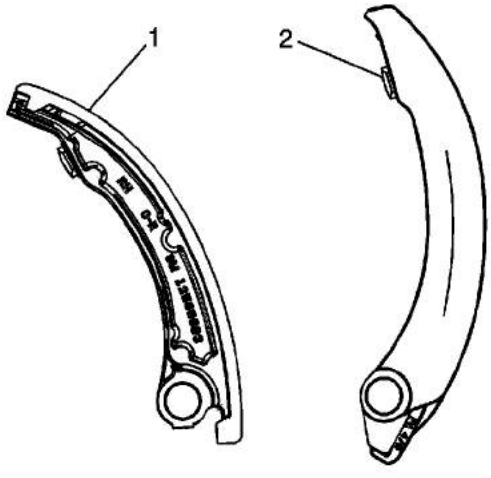

1. Ensure that the right secondary camshaft drive chain shoe (1) is being installed.

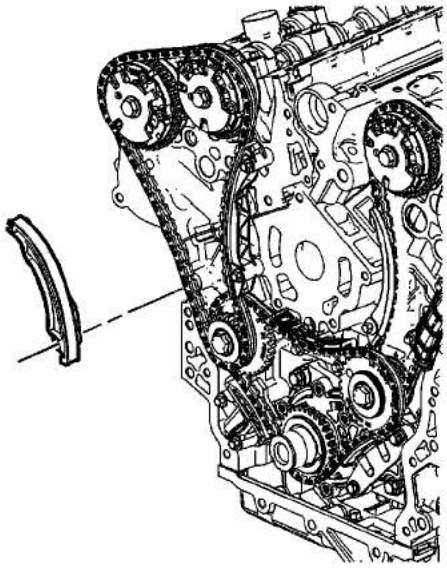

2. Position the right secondary camshaft drive chain shoe.

   Caution: Refer to Fastener Caution in the Preface section.

cardiagn.com

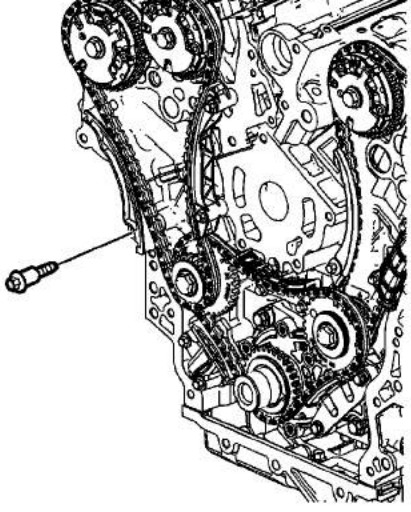

3. Install the secondary camshaft drive chain shoe bolt and tighten to **23 N·m (17 lb ft)**.

cardiagn.com

Secondary Camshaft Drive Chain Tensioner Installation - Right Side

Special Tools

- *EN-46112* Tensioner Retraction Pins
- *J-45027* Tensioner Tool

For equivalent regional tools, refer to Special Tools.

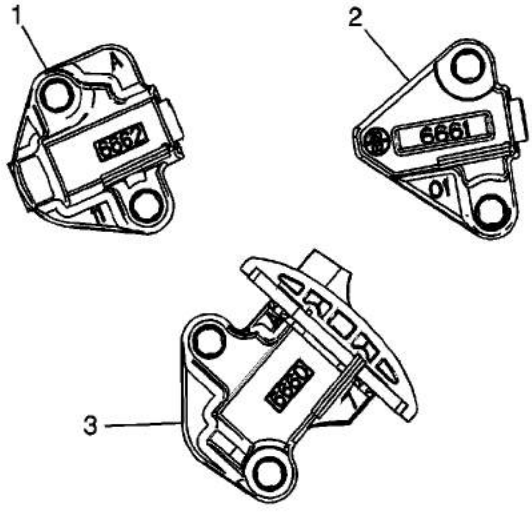

1. Ensure that the right secondary camshaft drive chain tensioner (1) is being installed.

cardiagn.com

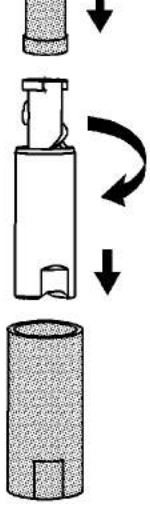

2. Using the *J-45027* tool , reset the right secondary camshaft drive chain tensioner plunger.

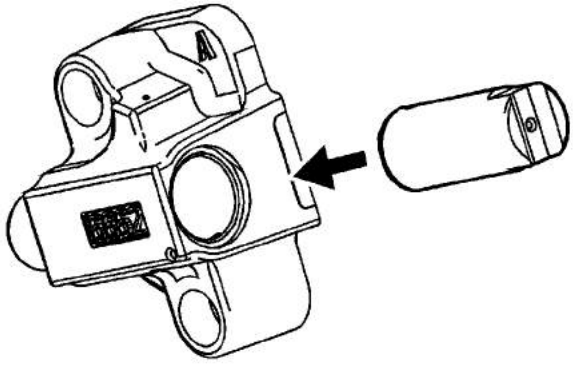

3. Install the plunger into the right secondary camshaft drive chain tensioner body.

cardiagn.com

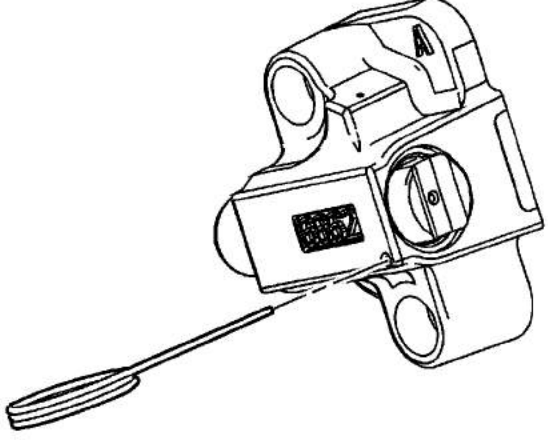

4. Compress the plunger into the body and lock the right secondary camshaft drive chain tensioner by inserting the *EN-46112* pins into the access hole in the side of the right secondary camshaft drive chain tensioner body.
5. Slowly release pressure on the right secondary camshaft drive chain tensioner. The right secondary camshaft drive chain tensioner should remain compressed.

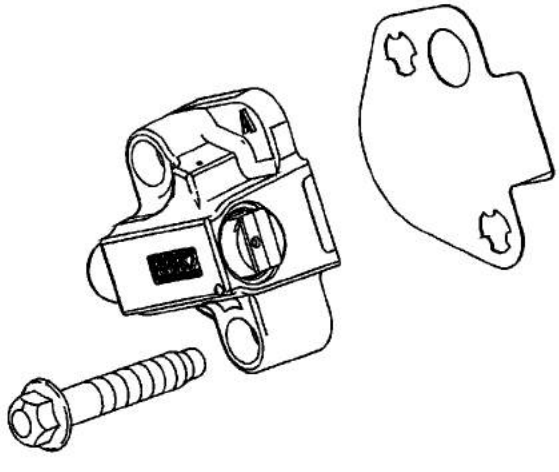

6. Install a NEW right secondary camshaft drive chain tensioner gasket to the right secondary camshaft drive chain tensioner.
7. Install the right secondary camshaft drive chain tensioner bolts through the right secondary camshaft drive chain tensioner and gasket.
8. Ensure the right secondary camshaft drive chain tensioner mounting surface on the right cylinder head does not have any burrs or defects that would degrade the sealing of the NEW right secondary camshaft drive chain tensioner gasket.

cardiagn.com

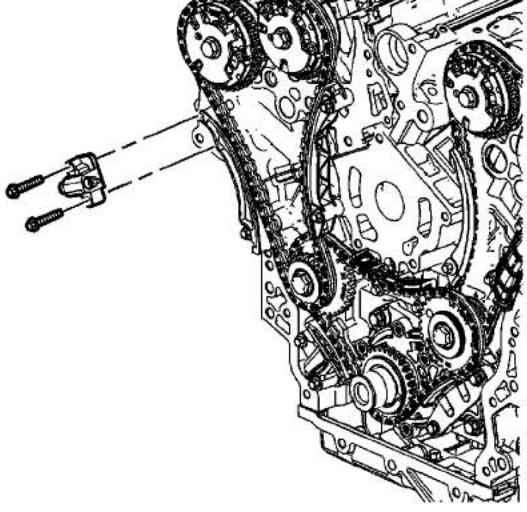

9. Place the right secondary camshaft drive chain tensioner into position and loosely install the bolts to the block.

   Caution: Refer to Fastener Caution in the Preface section.

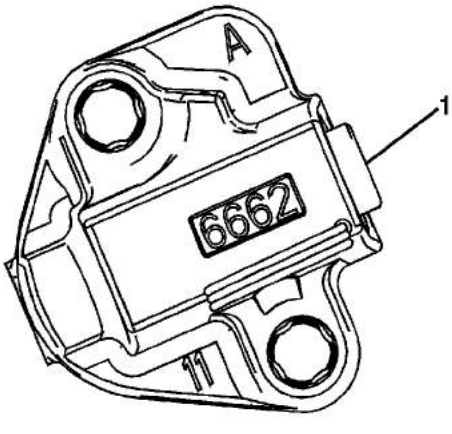

10. Verify the proper placement of the right secondary camshaft drive chain tensioner gasket tab (1).
    10.1. First Pass

    Tighten the right secondary camshaft drive chain tensioner bolts to **5 N·m (44 lb in)**.

cardiagn.com

Tighten the right secondary camshaft drive chain tensioner bolts to **23 N·m (17 lb ft)**.

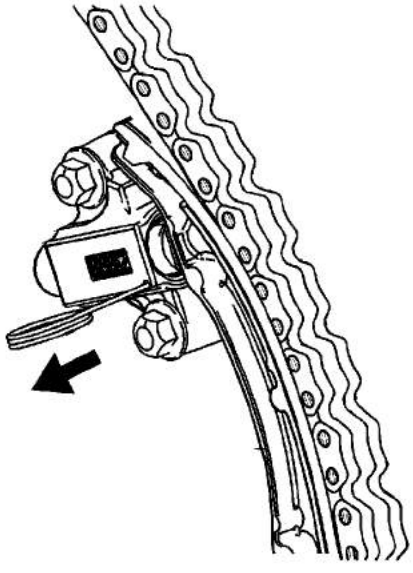

11. Release the right camshaft drive chain tensioner by pulling out the *EN-46112* pins and unlocking the tensioner plunger.

    Caution: Ensure that all timing chain tensioners are completely released. A timing chain tensioner that is not properly released can lead to serious engine damage.

12. Verify all primary and secondary camshaft drive chain timing mark alignments (1-18). Also refer to Camshaft Timing Drive Chain Alignment Diagram - Stage Two.

cardiagn.com

Engine Front Cover Installation

Special Tools

EN-46109 Guide Pins

For equivalent regional tools, refer to Special Tools.

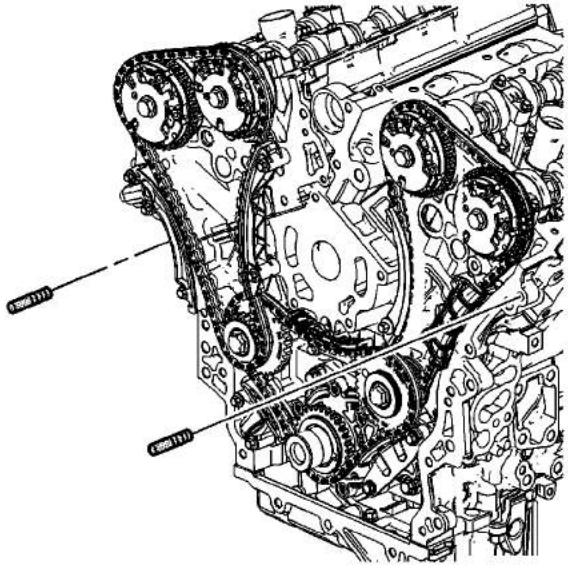

1. Install the 8 mm (0.315 in) guide from the *EN-46109* pins into the cylinder block positions as shown.

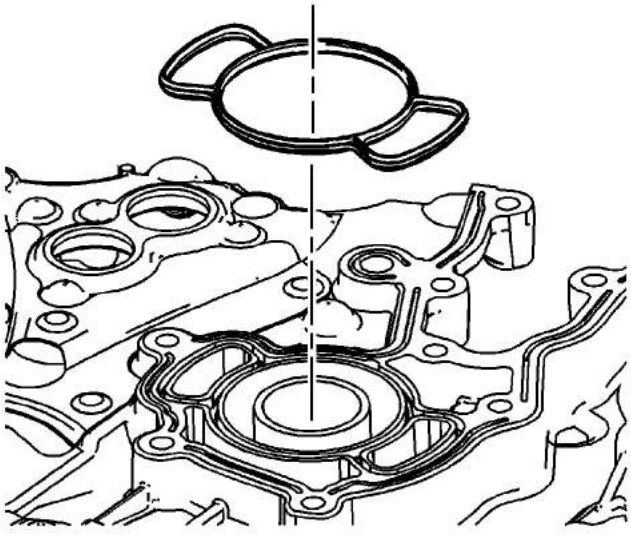

cardiagn.com

2. Install the NEW engine front cover to cylinder block seal.

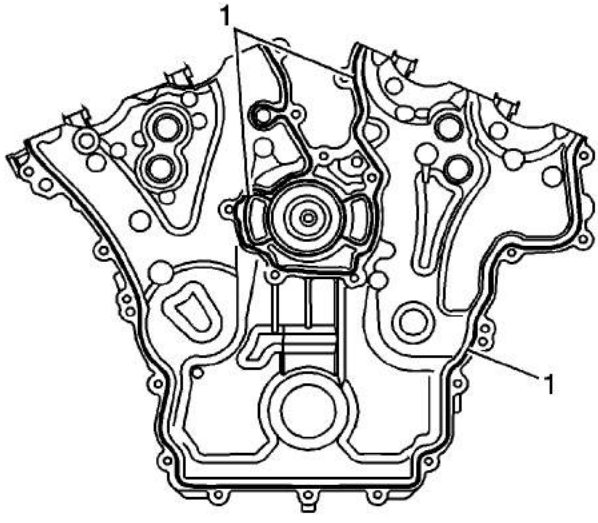

3. Place a 3 mm (0.118 in) bead of RTV sealant, GM P/N 12378521 (Canadian P/N 88901148) or equivalent, on the engine front cover as shown (1).

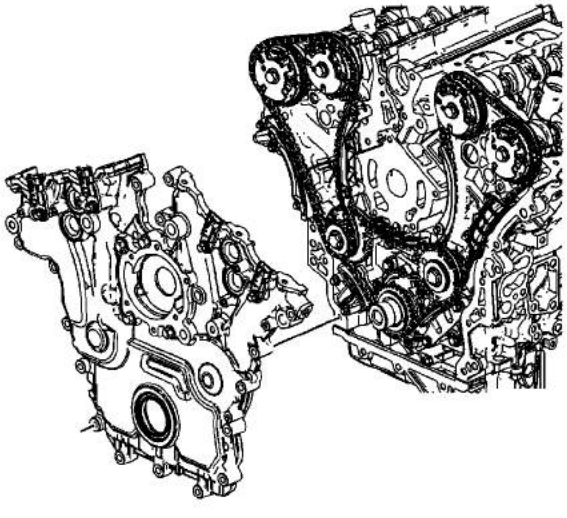

4. Place the engine front cover onto the *EN-46109* pins and slide into position.
5. Remove the *EN-46109* pins from the cylinder block.

cardiagn.com

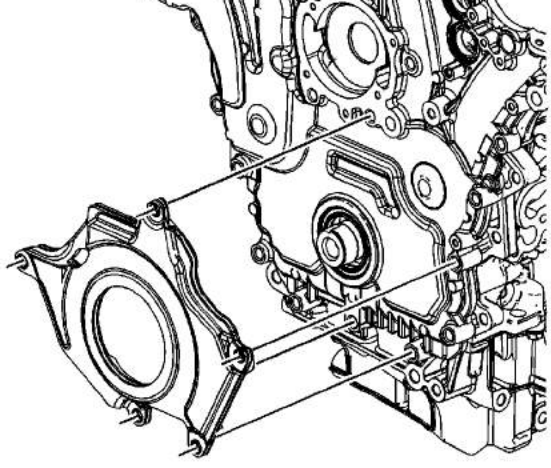

6. Install the engine front cover deadener.

   Caution: Refer to Fastener Caution in the Preface section.

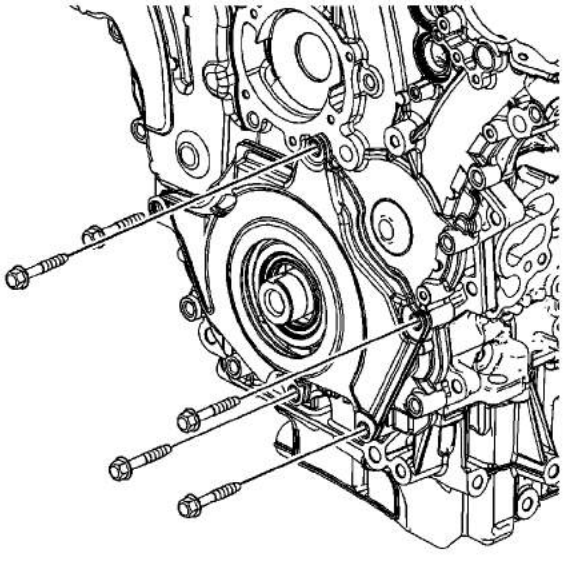

7. Loosely install the engine front cover bolts to hold the engine front cover deadener into position.

cardiagn.com

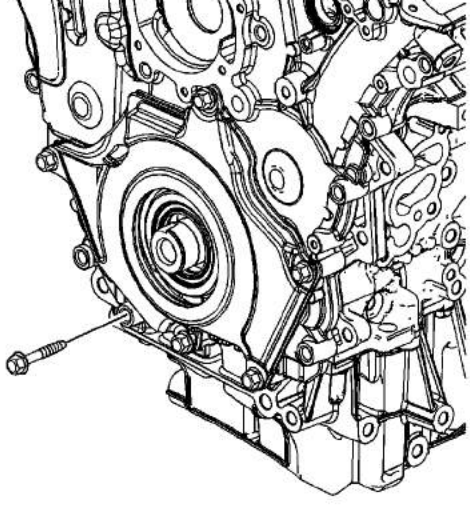

8. Loosely install the remaining engine front cover bolts.

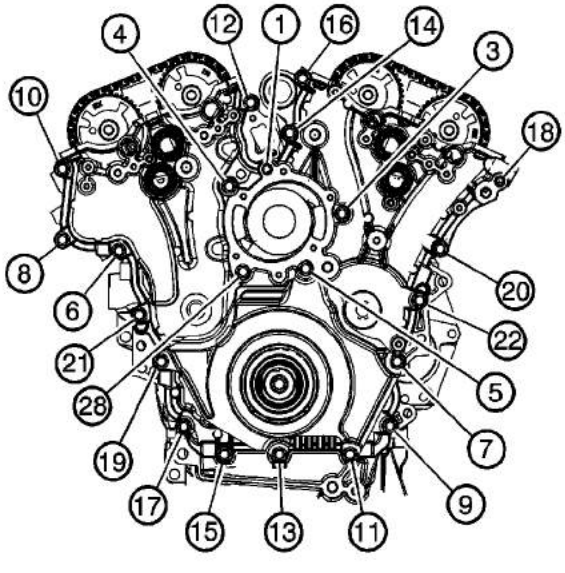

9. Tighten the engine front cover bolts in the sequence shown (1-22) to **20 N·m (14 lb ft)**.

   Tighten the engine front cover bolts a second pass in sequence an additional 60 degrees.

cardiagn.com

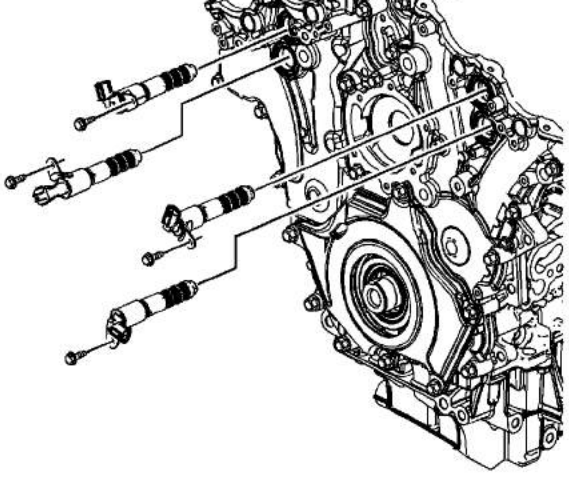

10. Place the camshaft position actuator valves in position on the front cover.
11. Install the camshaft position actuator valve bolts and tighten to **10 N·m (89 lb in)**.

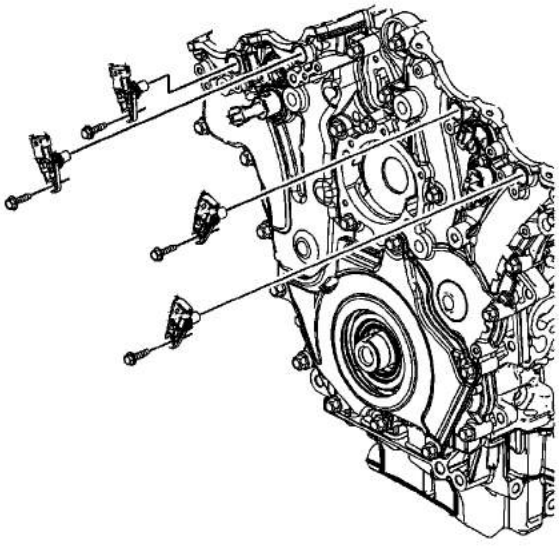

12. Install NEW O-rings on the camshaft position sensor.
13. Place the camshaft position sensors in position on the front cover.
14. Install the camshaft position sensor bolts and tighten to **10 N·m (89 lb in)**.

cardiagn.com

Water Pump Installation

Special Tools

J 46104 Water Pump Pulley Holding Tool EN 46104

For equivalent regional tools, refer to Special Tools.

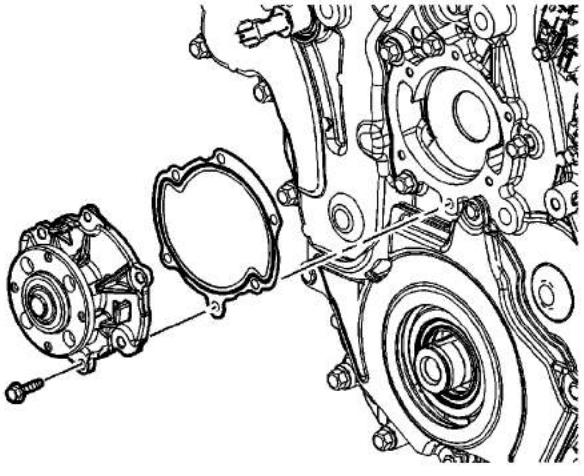

1. Ensure that the engine front cover and water pump are clear of old gasket material.
2. Place a new water pump gasket on the water pump.
3. Place the water pump in position on the front cover.

   Caution: Refer to Fastener Caution in the Preface section.

4. Install the water pump bolts and tighten to **10 N·m (89 lb in)**.

cardiagn.com

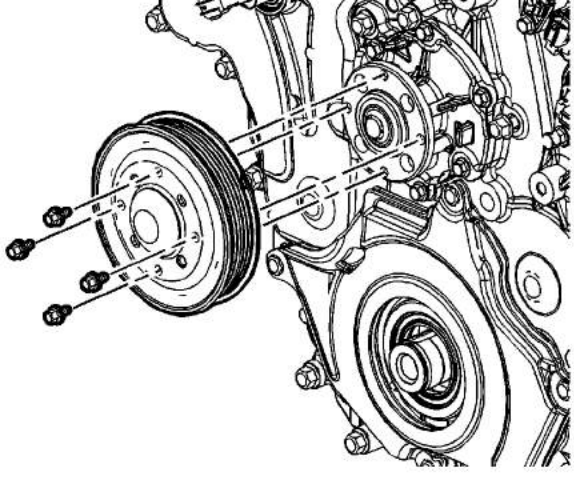

5. Install the water pump pulley.
6. Loosely install the water pump pulley bolts.

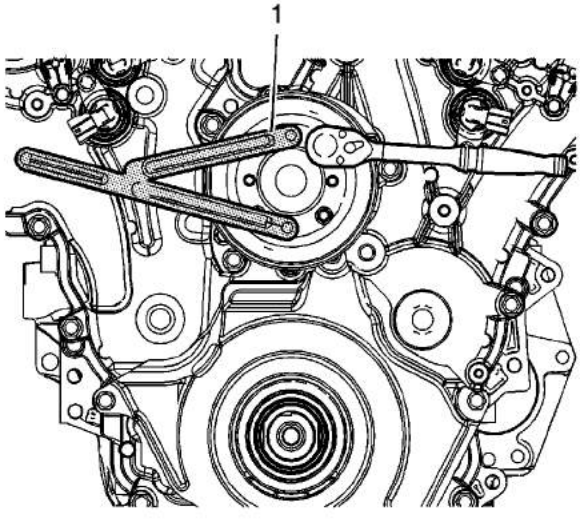

7. Install the *J 46104* tool onto the water pump pulley and tighten the water pump pulley bolts to **10 N·m (89 lb in)**.

cardiagn.com

Camshaft Cover Installation - Left Side (LCS)

Special Tools

- *EN 46101* Spark Plug Tube Seal Guide
- *EN-48383* Camshaft Retaining Tools

  For equivalent regional tools, refer to Special Tools

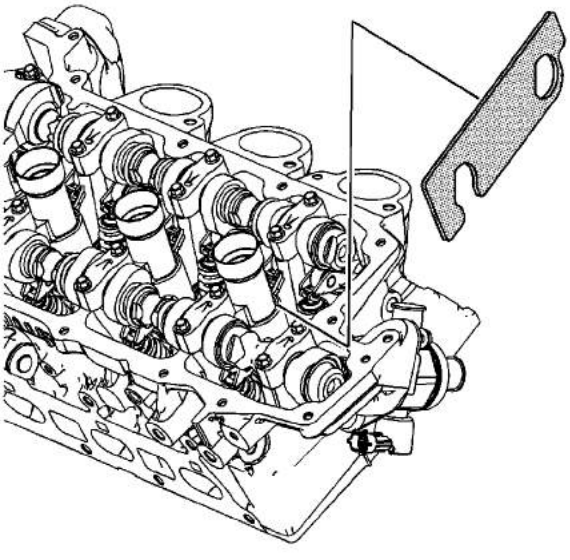

1. Remove the EN 48383-2 from the rear of the left camshafts.

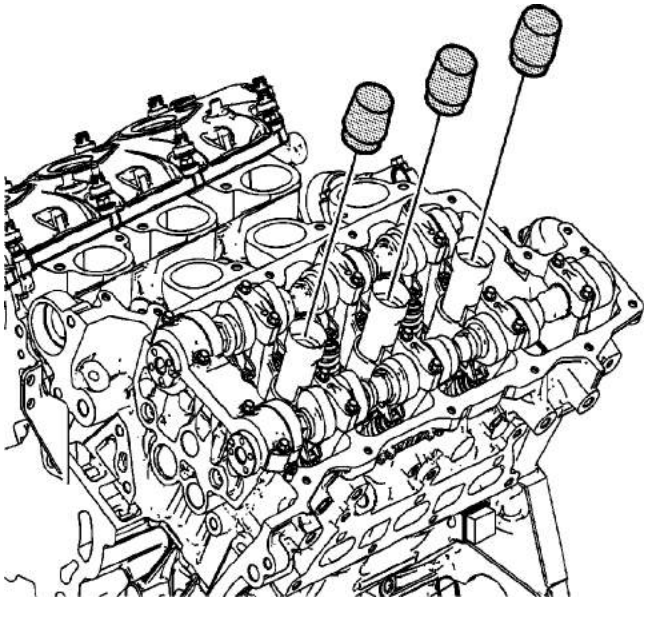

cardiagn.com

2. Install the *EN 46101* guide onto the spark plug tubes of the left cylinder head.

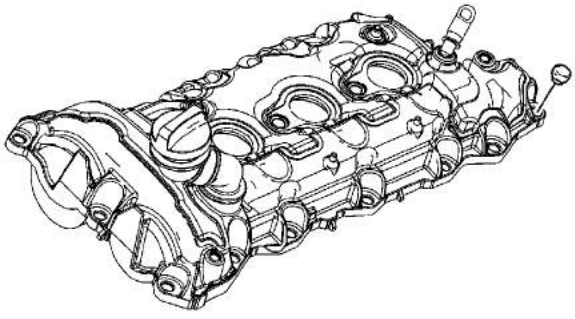

3. Install the NEW camshaft cover bolt grommets prior to installing the camshaft cover bolts.
4. Wipe the camshaft cover sealing surface on the left cylinder head with a clean, lint-free cloth.

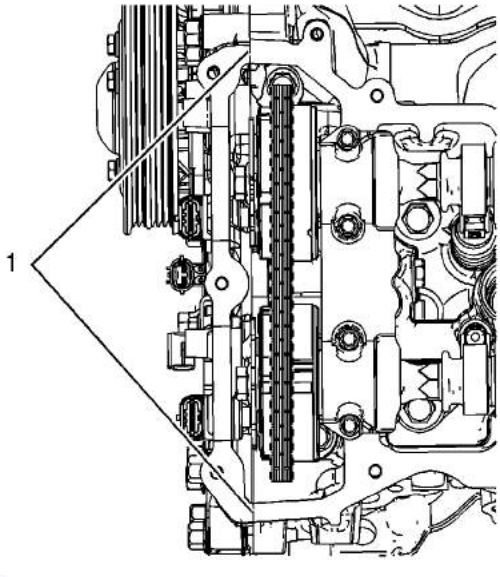

5. Place a bead 8 mm (0.3150 in) in diameter by 4 mm (0.1575 in) in height of RTV sealant, GM P/N 12378521 (Canadian P/N 88901148) or equivalent, on the engine front cover split lines (1).

cardiagn.com

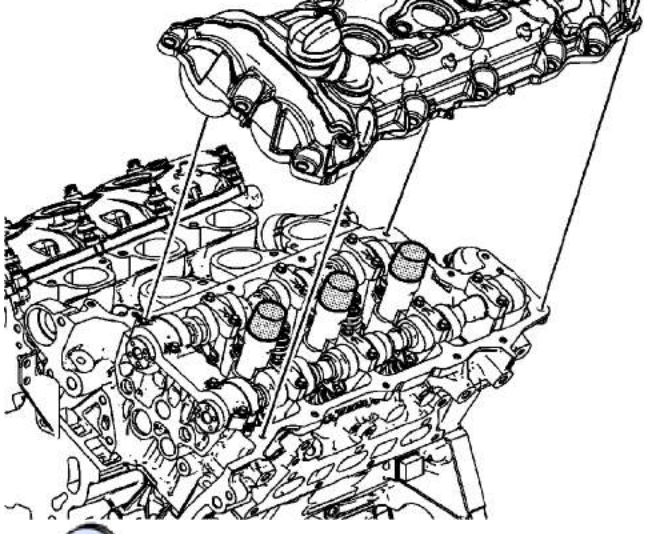

6. Place the left camshaft cover into position onto the left cylinder head.

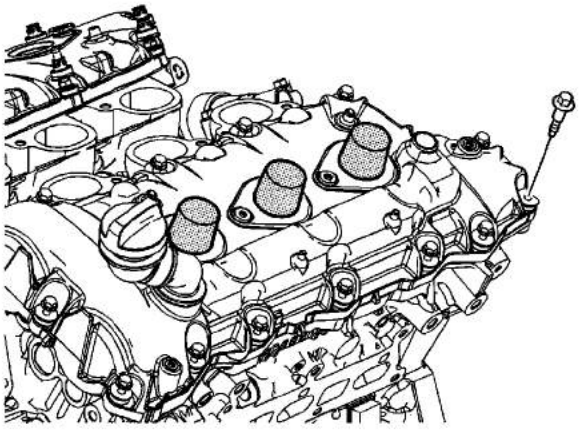

7. Loosely install the left camshaft cover bolts.

Caution: Refer to Fastener Caution in the Preface section.

cardiagn.com

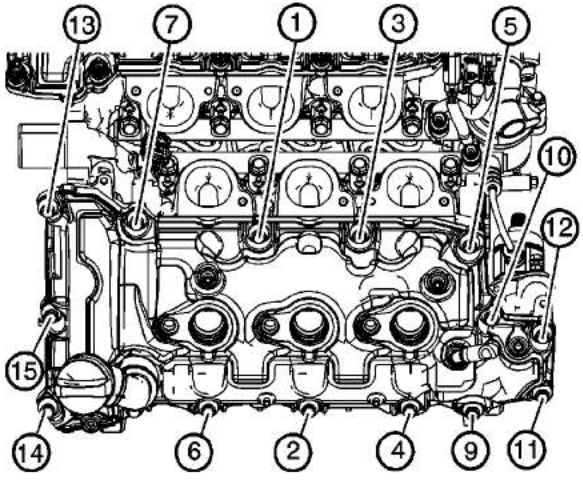

8. Tighten the left camshaft cover bolts in the sequence shown.
   8.1. Tighten the left camshaft cover bolts in the sequence to **10 N·m (89 lb in)**.
   8.2. Tighten the left camshaft cover bolts a second pass in the sequence to **10 N·m (89 lb in)**.

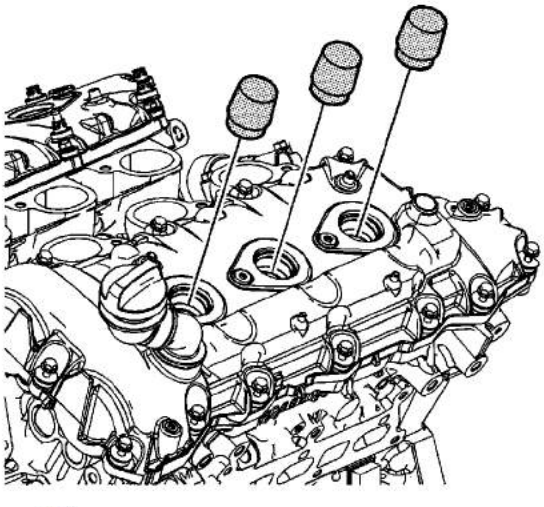

9. Remove the *EN 46101* guide from the spark plug tubes of the left cylinder head.

cardiagn.com

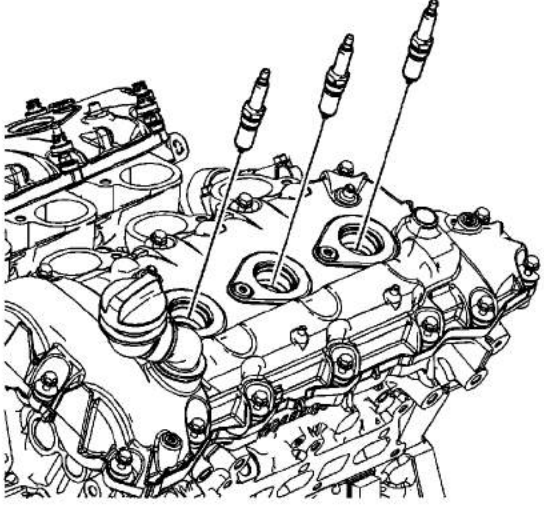

10. Install the NEW spark plugs into the left cylinder head and tighten to **20 N·m (15 lb ft)**.

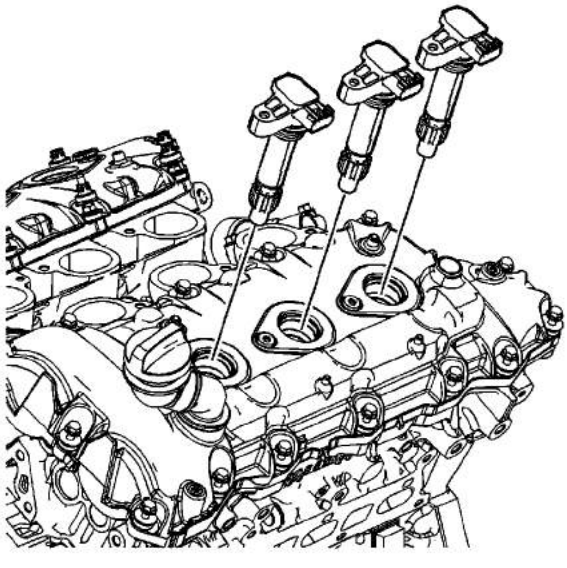

11. Install the ignition coils.

cardiagn.com

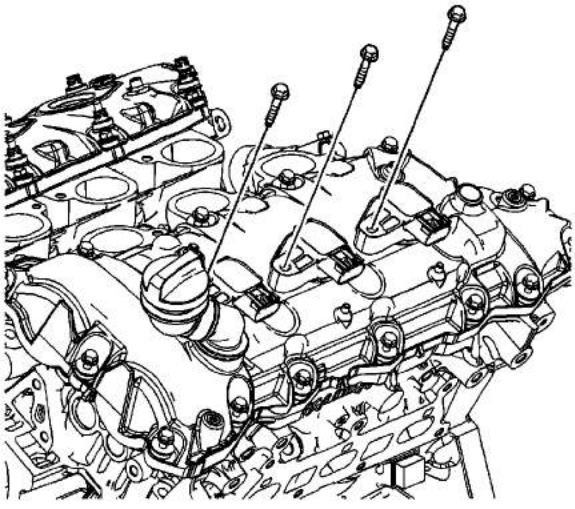

12. Install the ignition coil bolts and tighten to **10 N·m (89 lb in)**.

cardiagn.com

Camshaft Cover Installation - Left Side (LY7)

Special Tools

EN 46101 Spark Plug Tube Seal Guide

For equivalent regional tools, refer to Special Tools

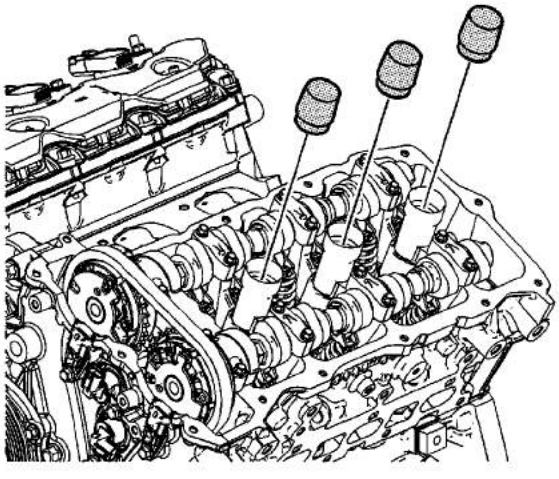

1. Install the *EN 46101* guide onto the spark plug tubes of the left cylinder head.

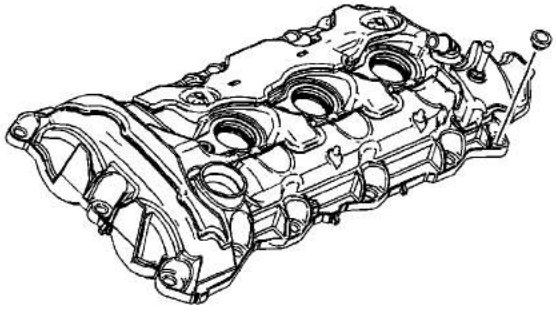

cardiagn.com

2. Install the NEW camshaft cover bolt grommets prior to installing the camshaft cover bolts.
3. Wipe the camshaft cover sealing surface on the left cylinder head with a clean, lint-free cloth.

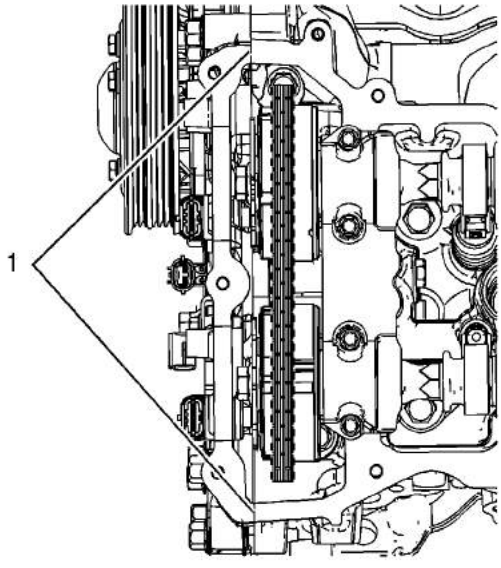

4. Place a bead 8 mm (0.3150 in) in diameter by 4 mm (0.1575 in) in height of RTV sealant, GM P/N 12378521 (Canadian P/N 88901148) or equivalent, on the engine front cover split lines (1).

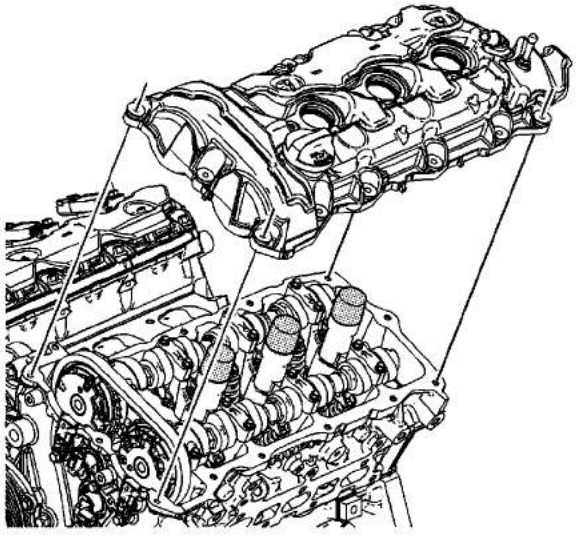

5. Place the left camshaft cover into position onto the left cylinder head.

cardiagn.com

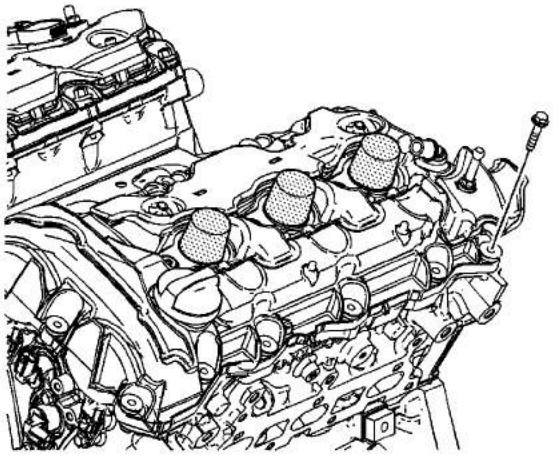

6. Loosely install the left camshaft cover bolts.

   Caution: Refer to Fastener Caution in the Preface section.

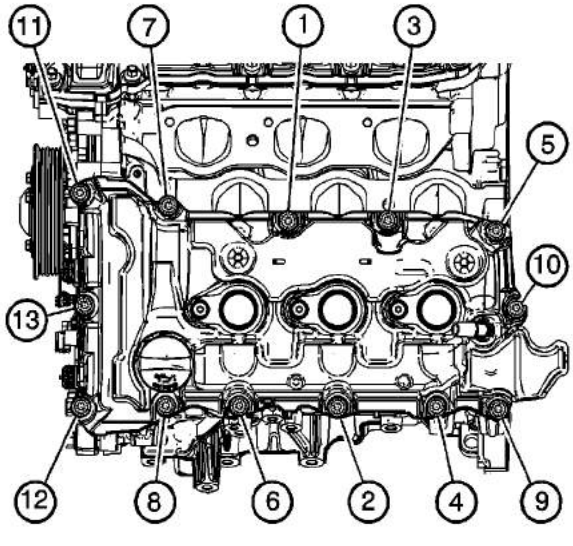

7. Tighten the left camshaft cover bolts in the sequence shown to **10 N·m (89 lb in)**.

cardiagn.com

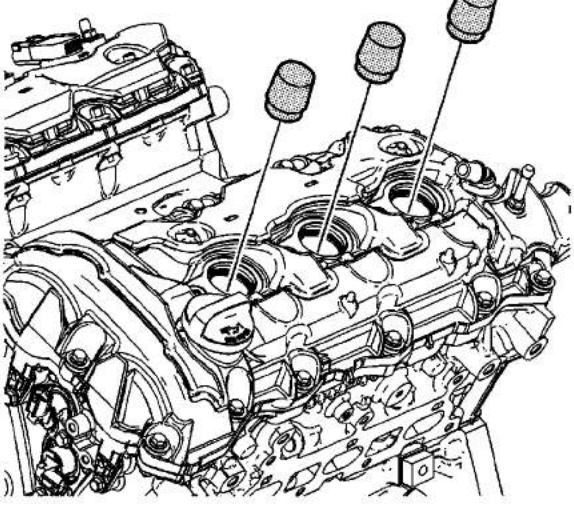

8. Remove the *EN 46101* guide from the spark plug tubes of the left cylinder head.

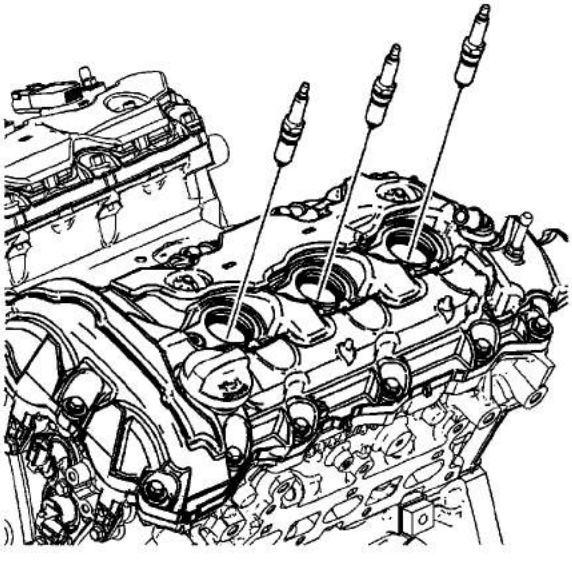

9. Install the NEW spark plugs into the left cylinder head and tighten to **20 N·m (15 lb ft)**.

cardiagn.com

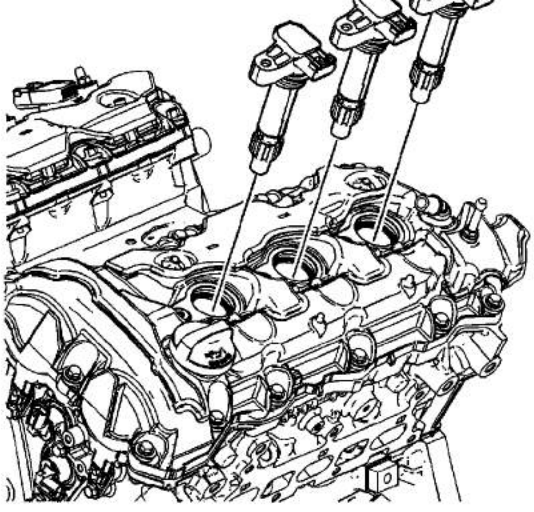

10. Install the ignition coils.

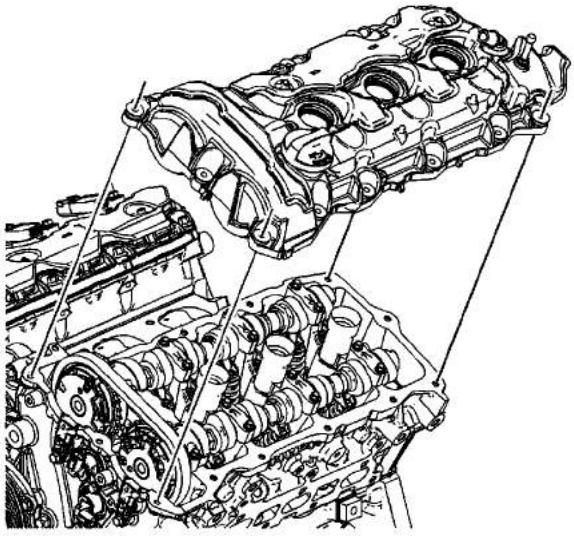

11. Install the ignition coil bolts and tighten to **10 N·m (89 lb in)**.

cardiagn.com

Camshaft Cover Installation - Right Side

Special Tools

EN 46101 Spark Plug Tube Seal Guide EN 46101

For equivalent regional tools, refer to Special Tools.

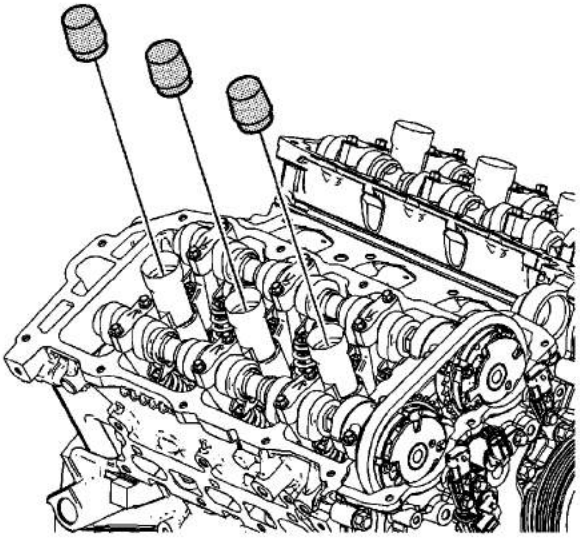

1. Install the *EN 46101* guide onto the spark plug tubes of the right cylinder head.

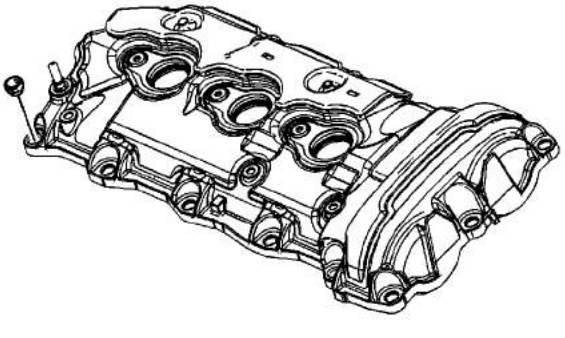

cardiagn.com

2. Install the NEW camshaft cover bolt grommets prior to installing the camshaft cover bolts.
3. Wipe the camshaft cover sealing surface on the right cylinder head with a clean, lint-free cloth.

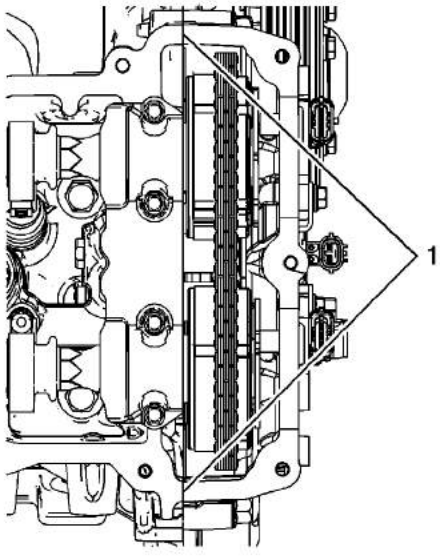

4. Place a bead 8 mm (0.3150 in) in diameter by 4 mm (0.1575 in) in height of RTV sealant, GM P/N 12378521 (Canadian P/N 88901148) or equivalent, on the engine front cover split lines (1).

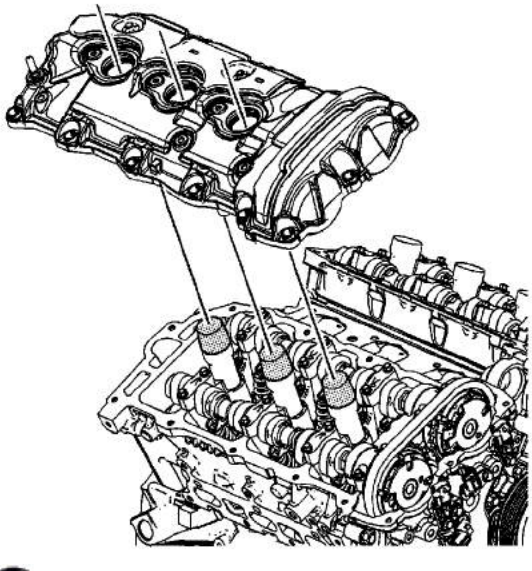

5. Place the right camshaft cover into position onto the right cylinder head.

cardiagn.com

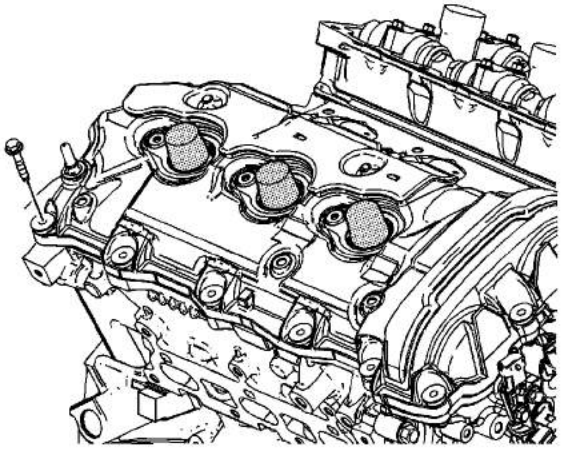

6. Loosely install the right camshaft cover bolts.

   Caution: Refer to Fastener Caution in the Preface section.

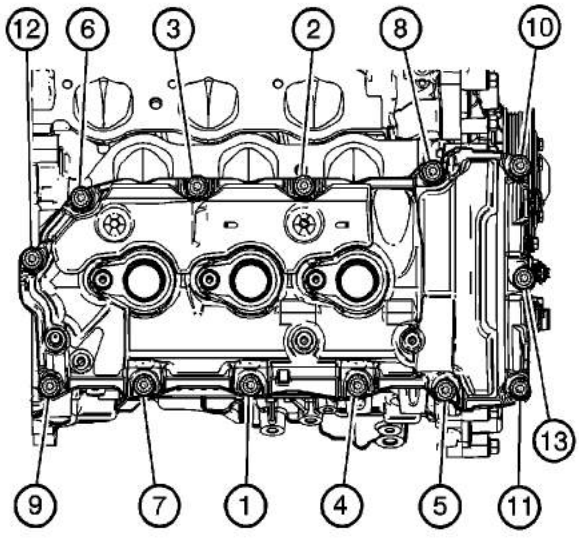

7. Tighten the right camshaft cover bolts in the sequence shown and tighten to **10 N·m (89 lb in)**.

cardiagn.com

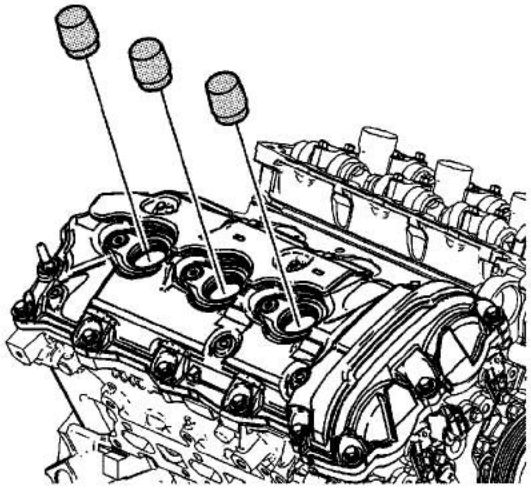

8. Remove the *EN 46101* guide from the spark plug tubes of the right cylinder head.

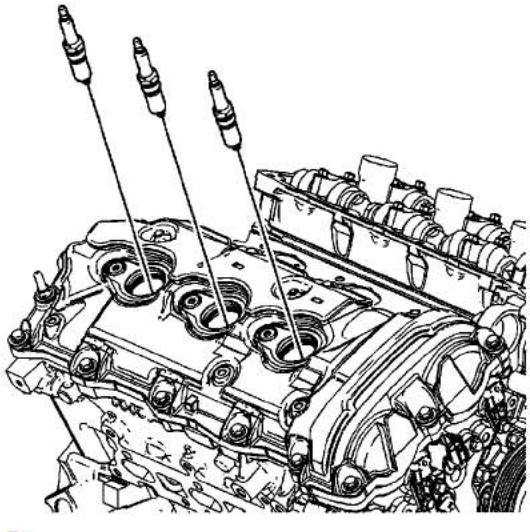

9. Install the NEW spark plugs into the right cylinder head and tighten to **20 N·m (15 lb ft)**.

cardiagn.com

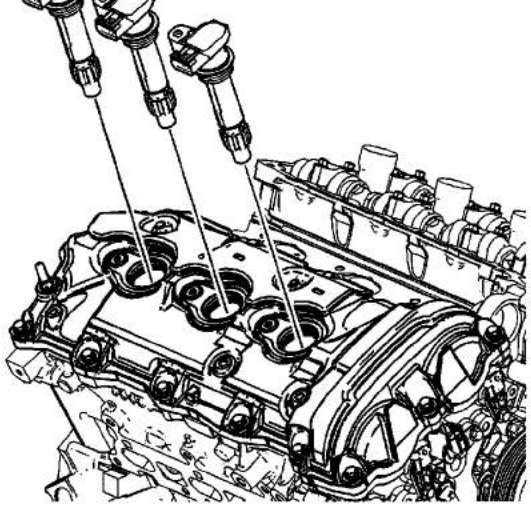

10. Install the ignition coils.

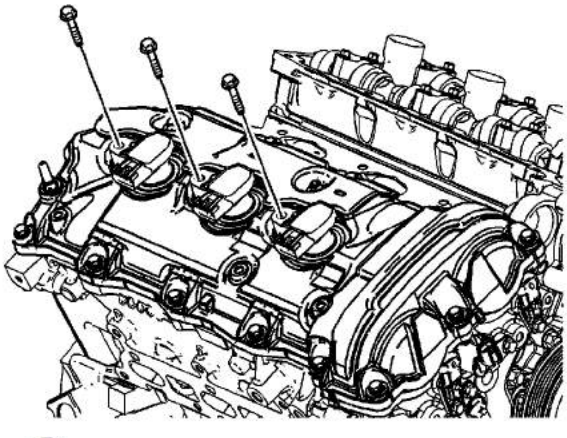

11. Install the ignition coil bolts and tighten to **10 N·m (89 lb in)**.

cardiagn.com

Intake Manifold Installation (LCS)

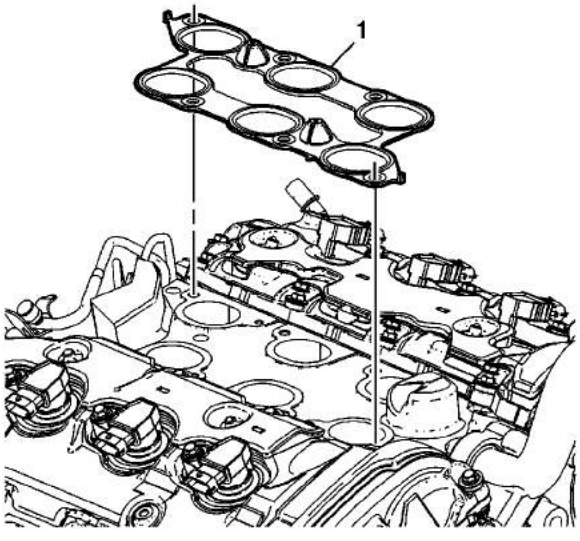

1. Install the NEW intake manifold gasket (1).

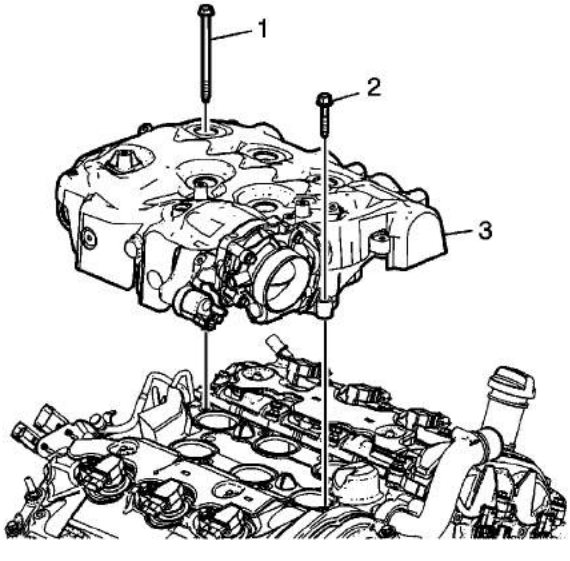

2. Install the intake manifold assembly (3).
3. Install the intake manifold bolts (1, 2).

Caution: Refer to Fastener Caution in the Preface section.

cardiagn.com

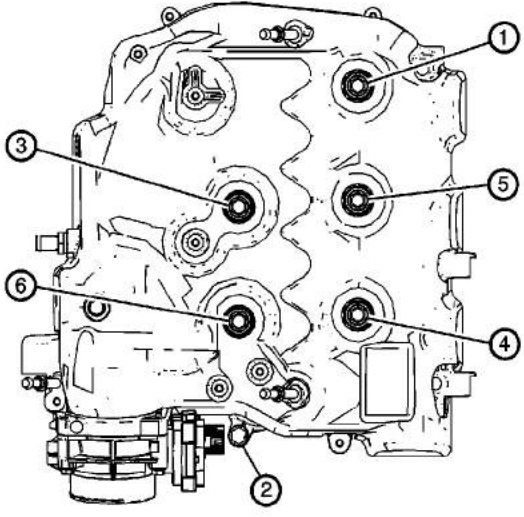

4. Tighten the intake manifold bolts in the sequence shown.
5. Tighten the intake manifold bolts in sequence to **23 N·m (17 lb ft)**.
6. Tighten the intake manifold bolts a second pass in sequence to **23 N·m (17 lb ft)**.

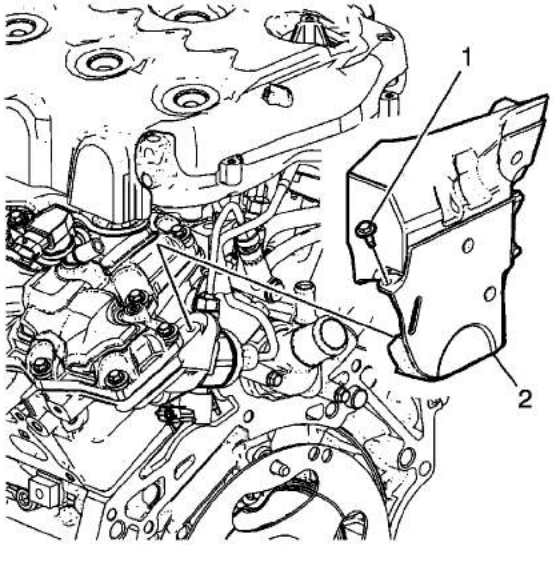

7. Install the fuel pump cover (2).
8. Install the fuel pump cover bolt (1) and tighten to **10 N·m (89 lb in)**.

cardiagn.com

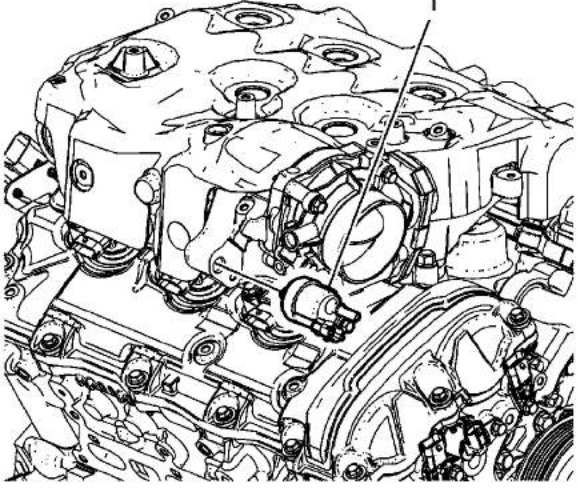

9. Install the evaporative (EVAP) solenoid (1).
10. Tighten the EVAP solenoid bolt to **10 N·m (89 lb in)**.

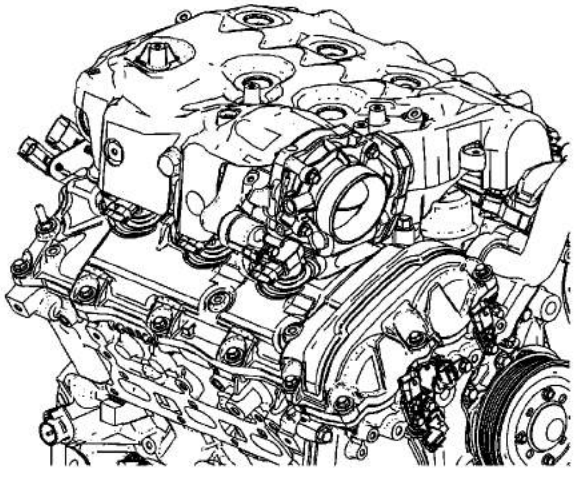

11. Connect the EVAP hose to the upper intake manifold and EVAP solenoid.

cardiagn.com

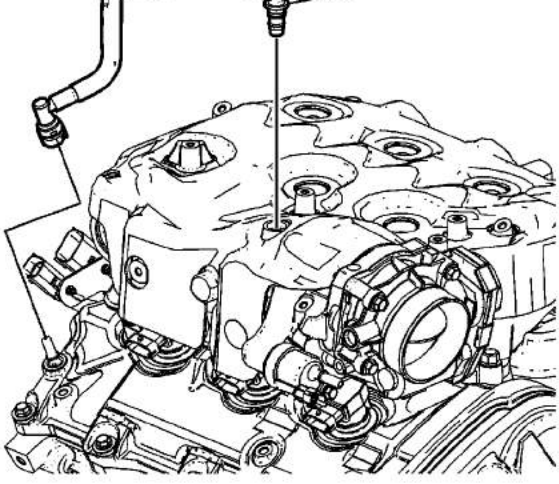

12. Connect the positive crankcase ventilation (PCV) tube assembly (1) to the upper intake manifold and the right camshaft cover.

cardiagn.com

Intake Manifold Installation (LY7)

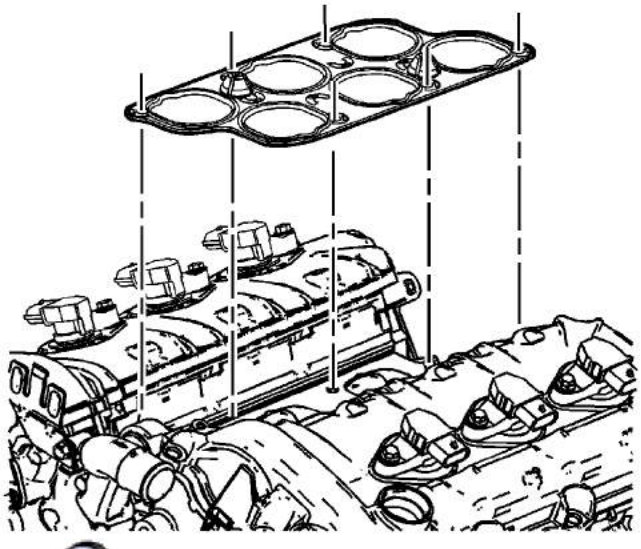

1. Install the lower intake manifold gasket.

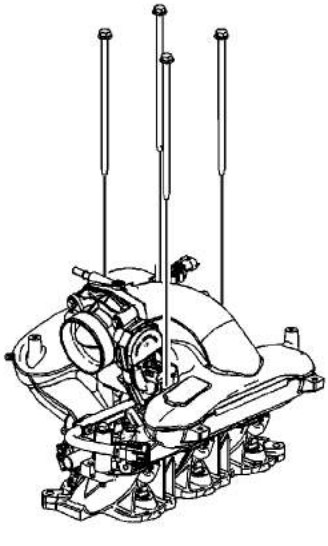

2. Install the intake manifold assembly.

   Caution: Refer to Fastener Caution in the Preface section.

3. Install the intake manifold bolts and tighten to **23 N·m (17 lb ft)**.

cardiagn.com

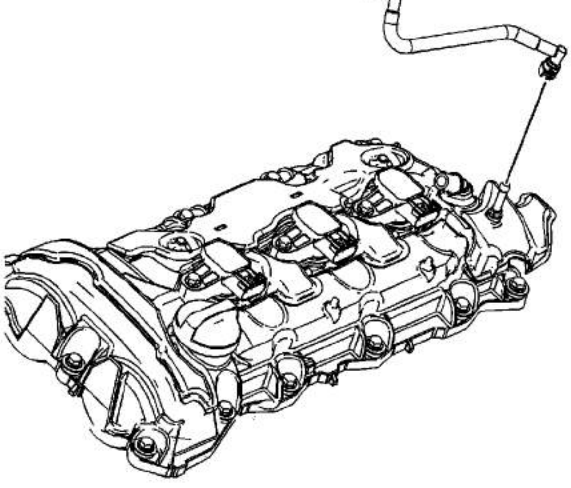

4. Connect the fresh air positive crankcase ventilation (PCV) hose to the left camshaft cover fitting.

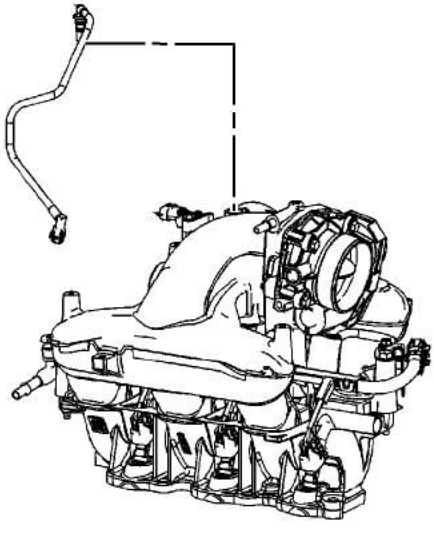

5. Connect the dirty air PCV hose to the intake manifold and the right camshaft cover fitting.

cardiagn.com

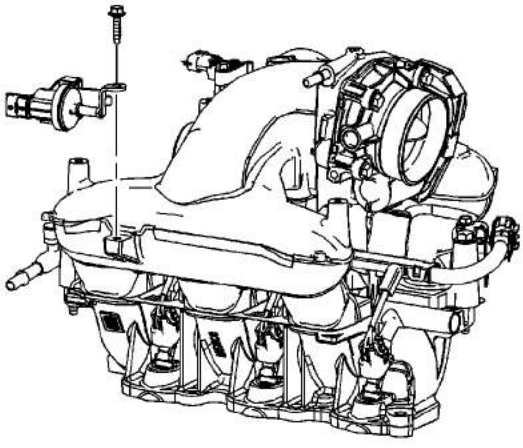

6. Install the evaporative (EVAP) solenoid.
7. Install the EVAP solenoid bolt and tighten to **10 N·m (89 lb in)**.

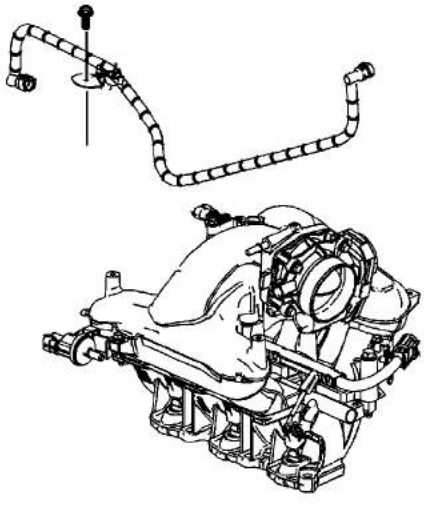

8. Connect and remove the intake manifold-to-solenoid EVAP hose to the intake manifold and to the EVAP solenoid.
9. Install the intake manifold-to-solenoid EVAP hose bracket bolt to the intake manifold and tighten to **10 N·m (89 lb in)**.

cardiagn.com

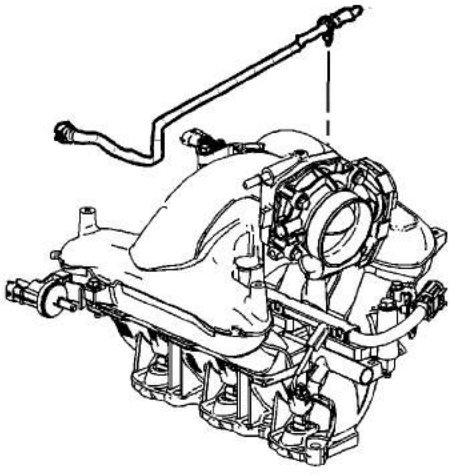

10. Connect the vehicle-to-solenoid EVAP hose to the EVAP solenoid.
11. Install the hose clip to the intake manifold.

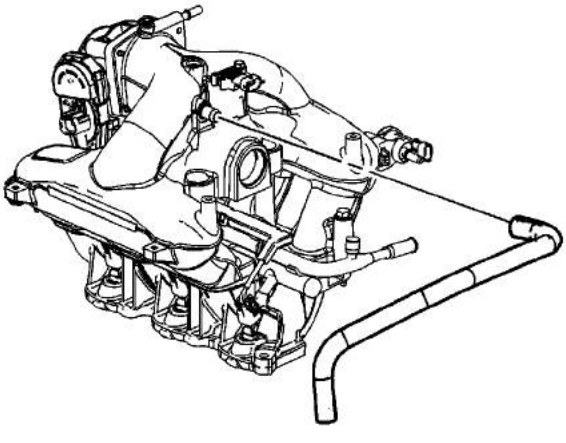

12. Connect the brake booster hose to the upper intake manifold.

cardiagn.com

Engine Flywheel Installation (LCS)

Special Tools

J 45059 Angle Meter

For equivalent regional tools, refer to Special Tools.

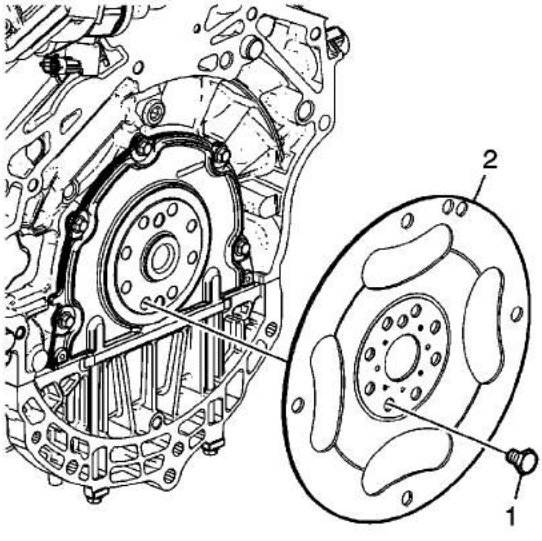

1. Install the engine flywheel (2).

   Caution: Refer to Fastener Caution in the Preface section.

2. Install the NEW engine flywheel bolts (1) and:
   2.1. Tighten the NEW engine flywheel bolts to **30 N·m (22 lb ft)**.
   2.2. Tighten the NEW engine flywheel bolts an additional **45 degrees** using the *J 45059* meter .

cardiagn.com

Engine Flywheel Installation (LY7)

Special Tools

- *EN 46106* Engine Flywheel Holding Tool
- *J 45059* Angle Meter

  For equivalent regional tools, refer to Special Tools

1. Place the engine flywheel in position on the crankshaft.
2. Install 2 NEW bolts in location at the top and bottom of the engine flywheel bolt pattern allowing the engine flywheel to hang in position.

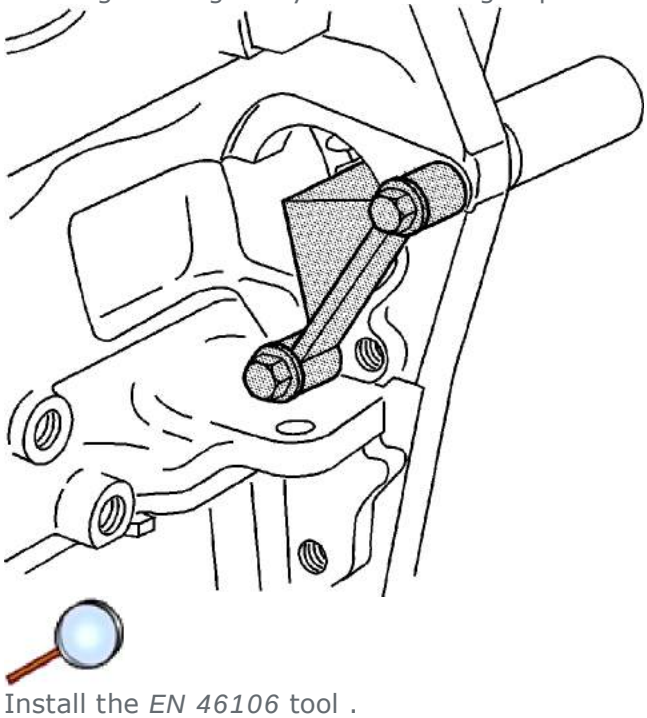

3. Install the *EN 46106* tool .

   Caution: Refer to Fastener Caution in the Preface section.

cardiagn.com

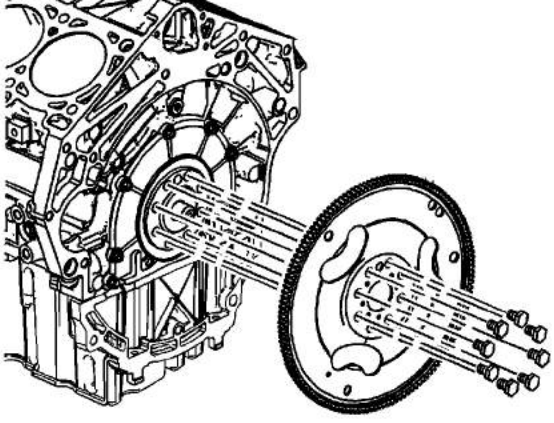

4. Install the remaining NEW engine flywheel bolts.
   4.1. Tighten the NEW engine flywheel bolts to **30 N·m (22 lb ft)**.
   4.2. Tighten the NEW engine flywheel bolts an additional **45 degrees** using the *J 45059* meter .

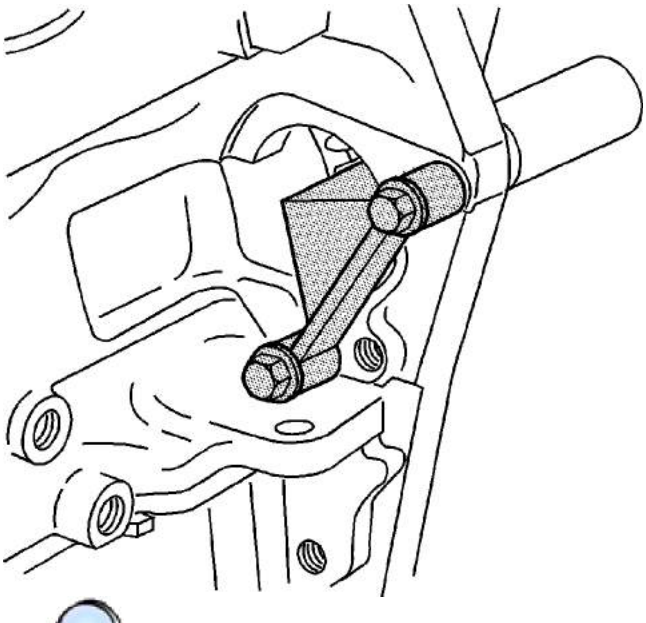

5. Remove the *EN 46106* tool .

cardiagn.com

Crankshaft Balancer Installation

Special Tools

- *EN-46106* Engine Flywheel Holding Tool
- *J-41998-B* Crankshaft Balancer Installer
- *J-45059* Angle Meter

  For equivalent regional tools, refer to Special Tools.

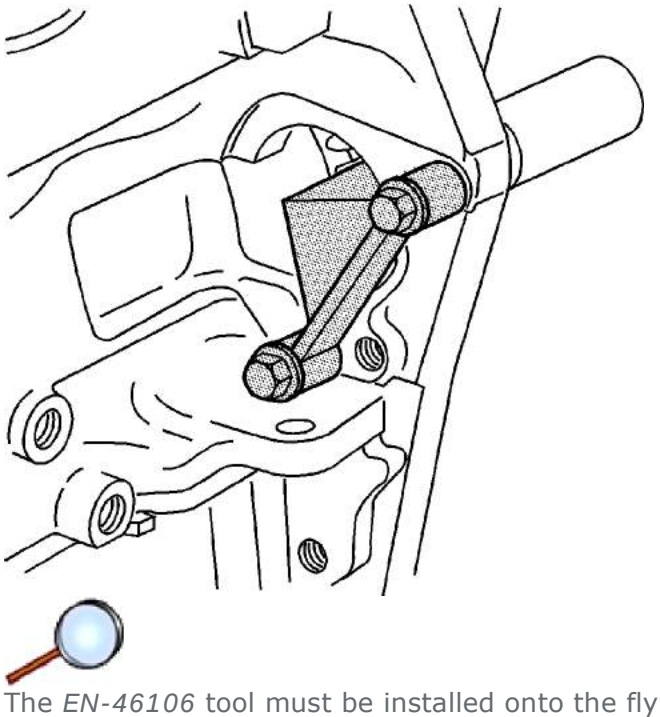

1. The *EN-46106* tool must be installed onto the flywheel.
2. Use the *J-41998-B* installer , nut, bearing and washer to install the crankshaft balancer.

cardiagn.com

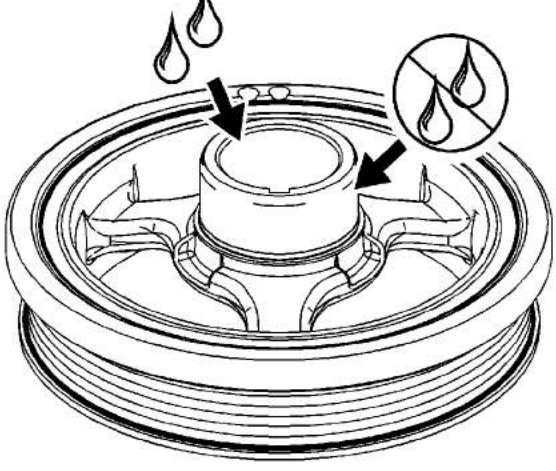

Note: Do not lubricate the crankshaft front oil seal or crankshaft balancer sealing surfaces. The crankshaft balancer is installed into a dry seal.

3. Apply lubricant to the inside of the crankshaft balancer hub bore.

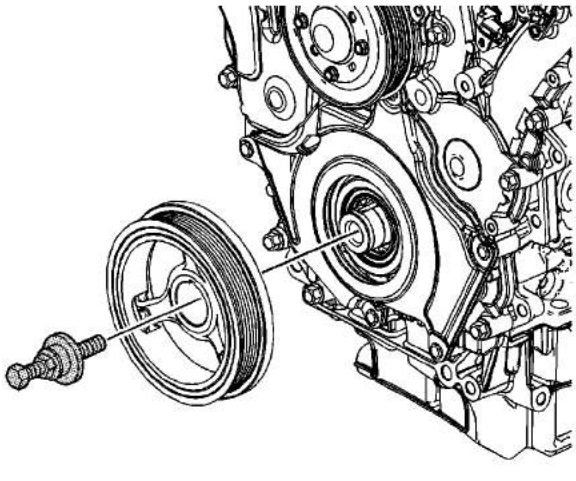

4. Place the crankshaft balancer in position on the crankshaft.
5. Thread the *J-41998-B* installer in the crankshaft. Ensure you engage at least 10 threads of the *J-41998-B* installer before pressing the crankshaft balancer in place.
6. Push the crankshaft balancer into position by tightening the nut on the *J-41998-B* installer until the large washer bottoms out on the crankshaft end.
7. Remove the *J-41998-B* installer .

cardiagn.com

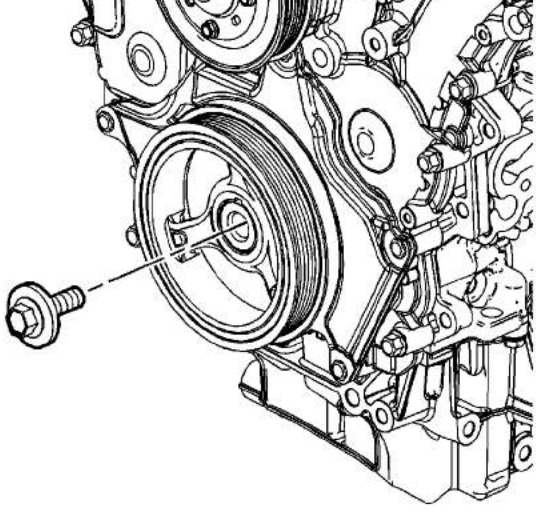

8. Install the crankshaft balancer bolt.

   Caution: Refer to Fastener Caution in the Preface section.

9. Tighten the crankshaft balancer bolt to **100 N·m (74 lb ft)** and an additional 150 degrees using the *J-45059* meter .

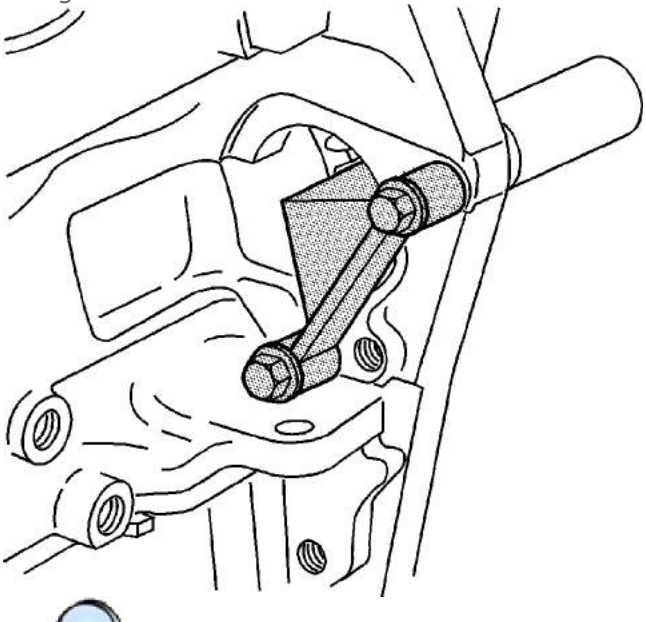

10. Remove the *EN-46106* tool .

cardiagn.com

Oil Filter Adapter Installation (LCS)

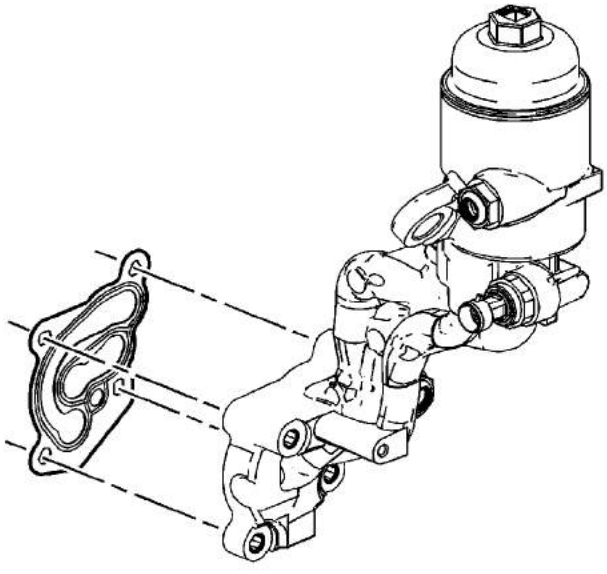

1. Position a NEW oil filter adapter gasket onto the oil filter adapter.

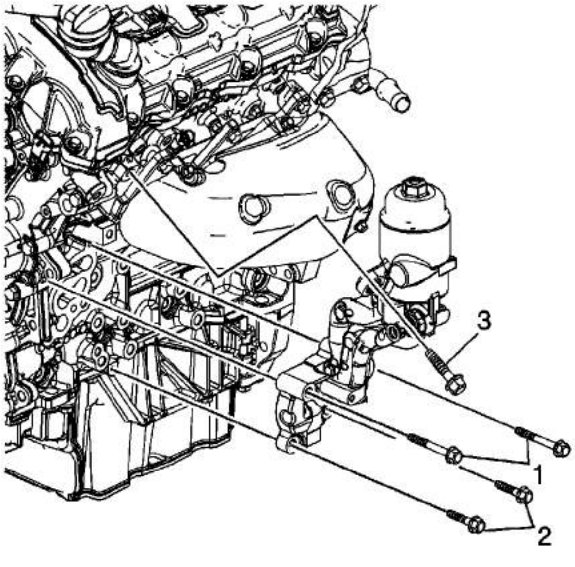

2. Install the oil filter adapter bolts (1, 2) into the oil filter adapter.
3. Loosely tighten the oil filter adapter bolts (1, 2).
4. Install and loosely tighten the oil filter adapter bolt (3) into the oil filter adapter.

Caution: Refer to Fastener Caution in the Preface section.

cardiagn.com

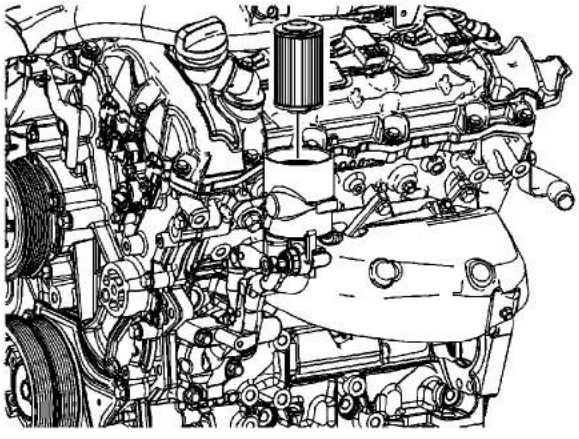

6. Install a NEW oil filter cartridge.

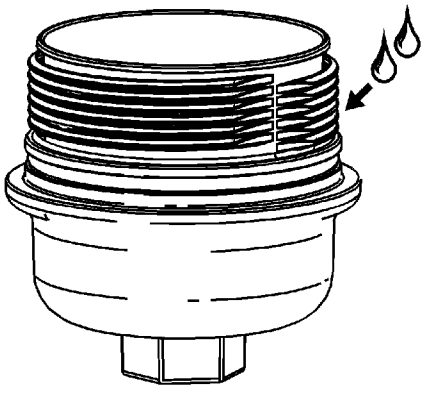

Caution: Lubrication must be applied to the threads of the oil filter cap prior to installation. Failure to lubricate the oil filter cap threads can hinder later removal and cause possible oil filter cap damage.

7. Lubricate the oil filter cap threads with clean engine oil.

cardiagn.com

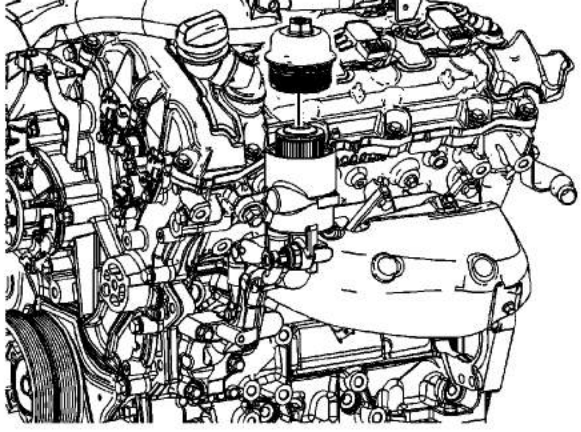

Caution: Proper oil filter cap tightening is mandatory. Failure to tighten the oil filter cap to the proper specification can hinder later removal and cause possible oil filter cap damage.

8. Install the oil filter cap and tighten to **25 N·m (18 lb ft)**.

cardiagn.com

Oil Filter Adapter Installation (LY7)

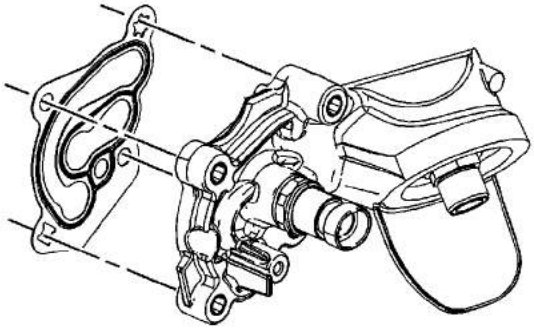

1. Position a NEW oil filter adapter gasket onto the oil filter adapter.

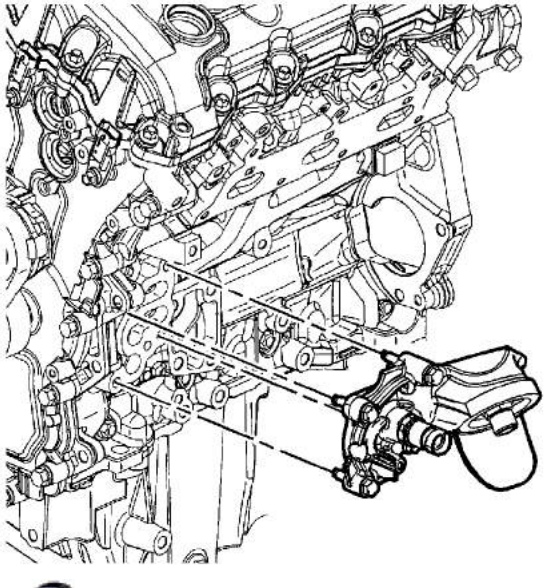

2. Install the oil filter adapter bolts into the oil filter adapter.
3. Install the oil filter adapter.

   Caution: Refer to Fastener Caution in the Preface section.

4. Tighten the oil filter adapter bolts into the engine block and tighten to **23 N·m (17 lb ft)**.

cardiagn.com

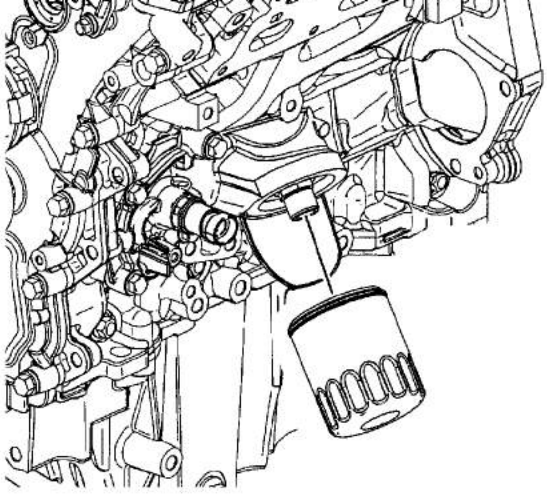

5. Install a NEW oil filter.

cardiagn.com

Exhaust Manifold Installation - Left Side

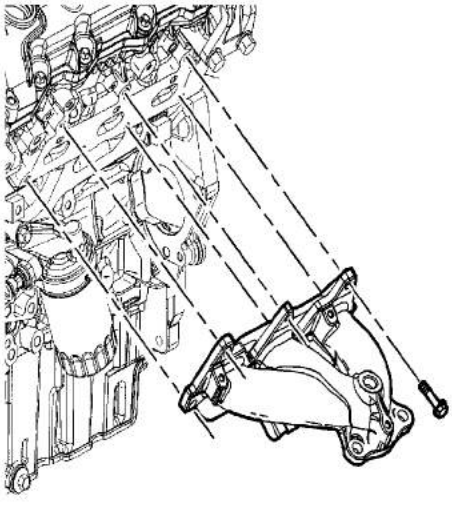

1. Position a NEW exhaust manifold gasket onto the left exhaust manifold.
2. Install the exhaust manifold bolts into the left exhaust manifold.
3. Place the left exhaust manifold, exhaust manifold gasket and bolts as an assembly in position on the left cylinder head.

   Caution: Refer to Fastener Caution in the Preface section.

4. Install the exhaust manifold bolts into the left cylinder head and tighten to **25 N·m (18 lb ft)**.

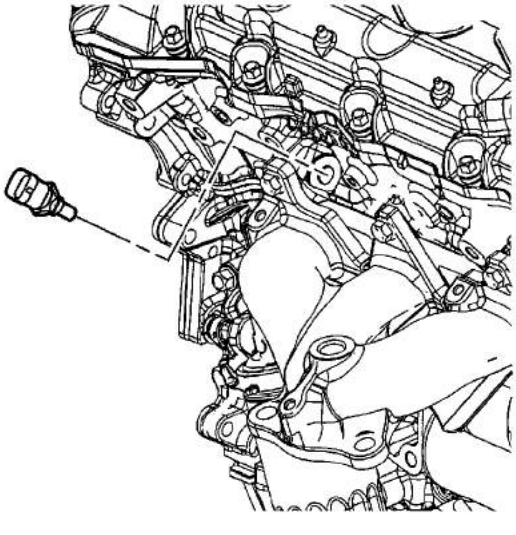

cardiagn.com

5. Install the engine coolant temperature (ECT) sensor and tighten to **30 N·m (22 lb ft)**.

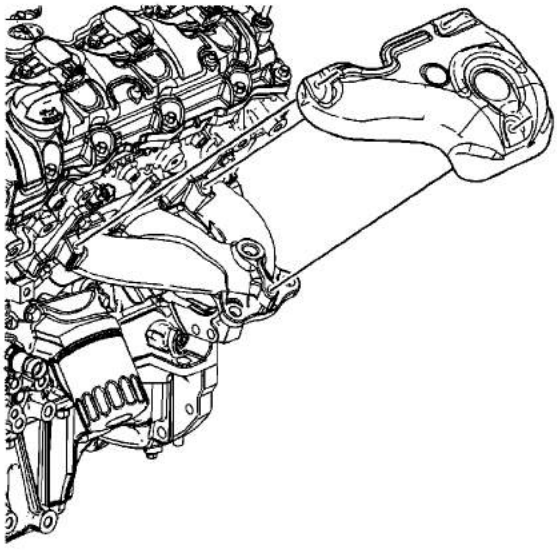

6. Place the left exhaust manifold heat shield in position.

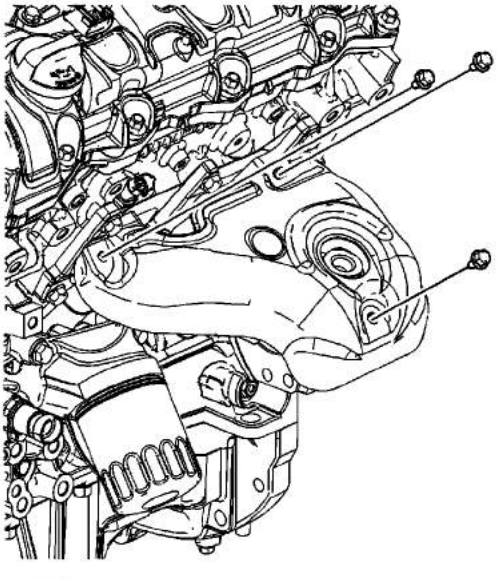

7. Install the left exhaust manifold heat shield bolts and tighten to **10 N·m (89 lb in)**.

cardiagn.com

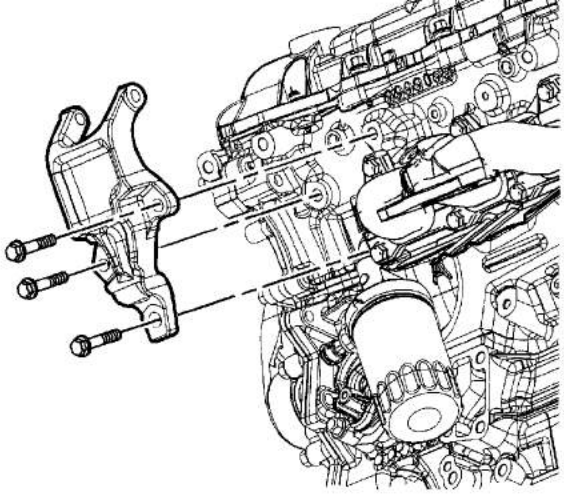

8. Install the left torque strut bracket.
9. Install the left torque strut bracket bolts and tighten to **50 N·m (37 lb ft)**.

cardiagn.com

Oil Level Indicator and Tube Installation

1. Install a NEW O-ring on the oil level indicator tube.

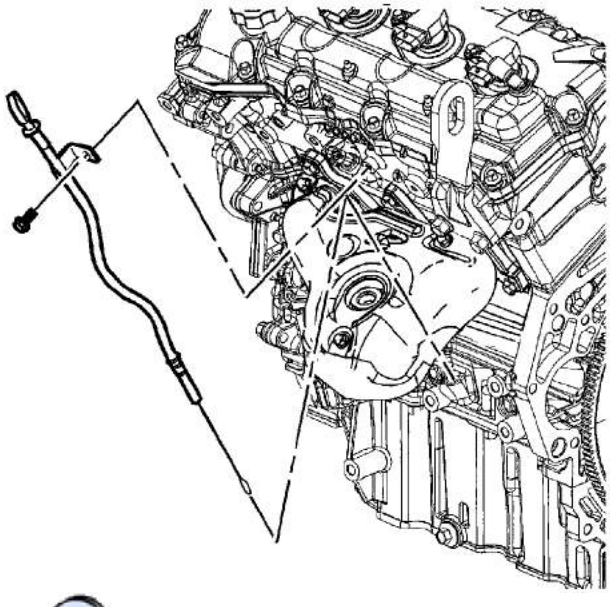

2. Install the oil level indicator and tube by sliding the tube down through the lower crankcase hole.

   Caution: Refer to Fastener Caution in the Preface section.

3. Install the oil level indicator tube bracket bolt and tighten to **10 N·m (89 lb in)**.

cardiagn.com

Exhaust Manifold Installation - Right Side

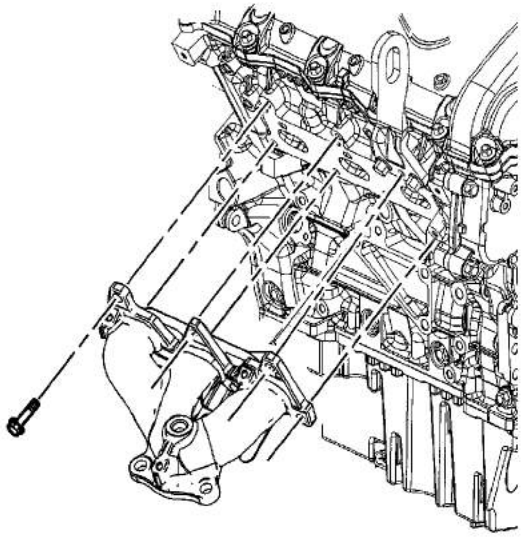

1. Position a NEW exhaust manifold gasket onto the right exhaust manifold.
2. Install the exhaust manifold bolts into the right exhaust manifold.
3. Place the right exhaust manifold, exhaust manifold gasket and bolts as an assembly in position on the right cylinder head.

   Caution: Refer to Fastener Caution in the Preface section.

4. Install the exhaust manifold bolts into the right cylinder head and tighten to **25 N·m (18 lb ft)**.

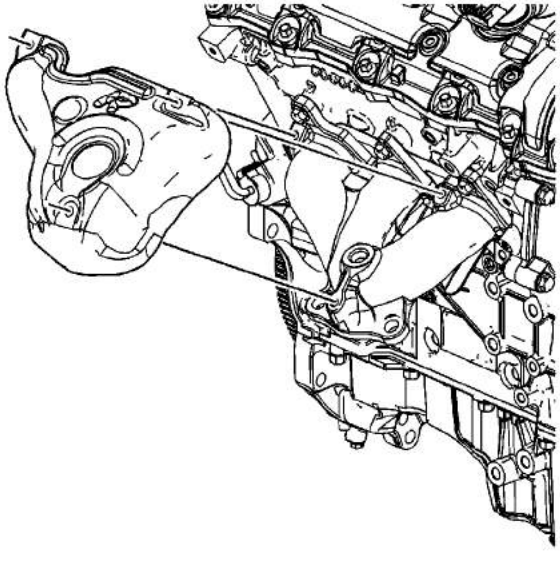

cardiagn.com

5. Place the right exhaust manifold heat shield in position.

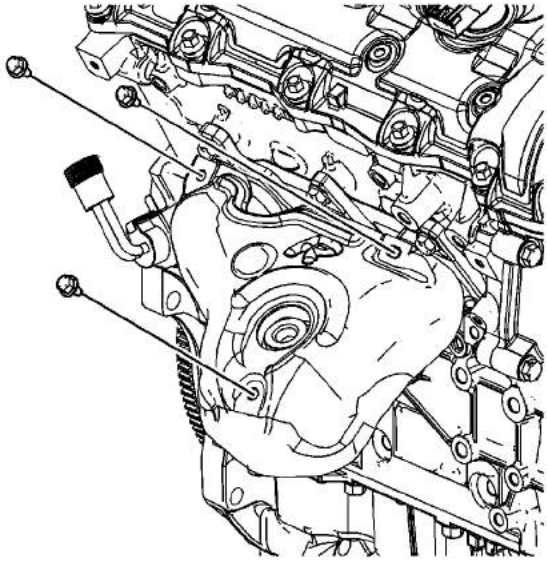

6. Install the right exhaust manifold heat shield bolts and tighten to **10 N·m (89 lb in)**.

cardiagn.com

Engine Coolant Thermostat Housing Installation (LCS)

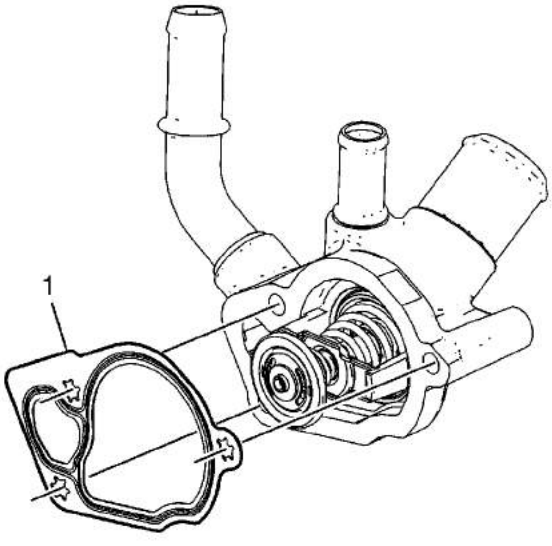

1. Install a NEW gasket (1) onto the thermostat housing.

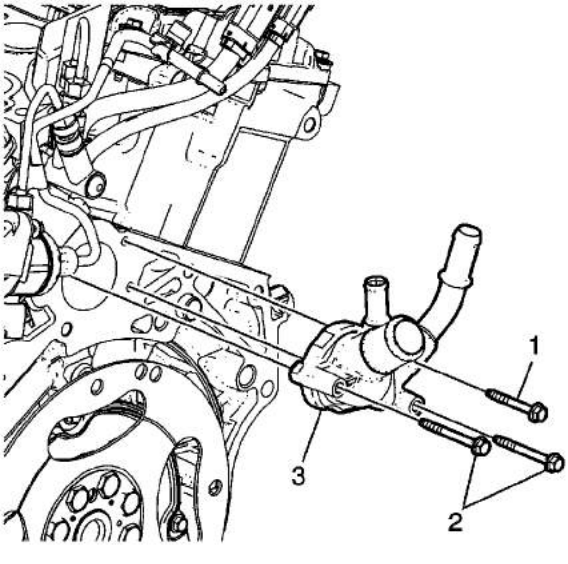

2. Install the thermostat housing (3).

   Caution: Refer to Fastener Caution in the Preface section.

3. Install the thermostat housing bolts (1, 2). Ensure to install the short bolt (1) and the long bolts (2) in the proper position and tighten the thermostat housing bolts to **10 N·m**

cardiagn.com

cardiagn.com

Engine Coolant Thermostat Housing Installation (LY7)

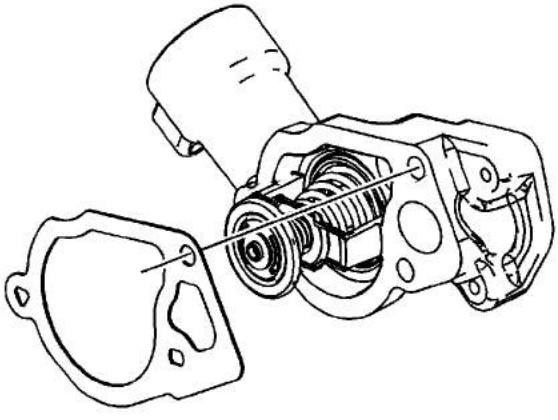

1. Install a NEW gasket onto the thermostat housing.

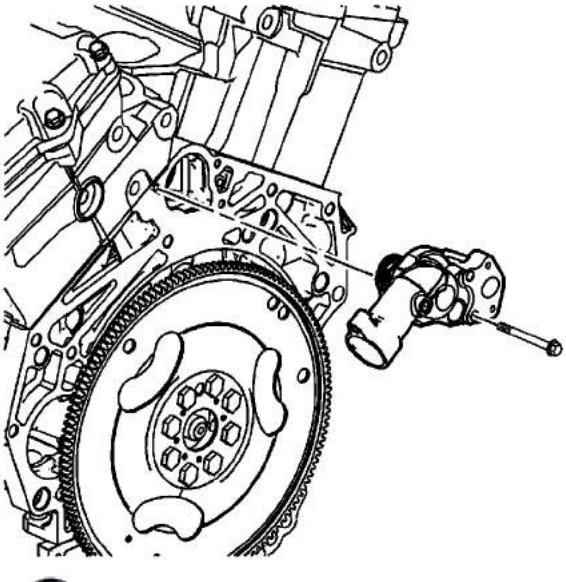

2. Install the thermostat housing.

   Caution: Refer to Fastener Caution in the Preface section.

3. Install the thermostat housing bolts and tighten to **10 N·m (89 lb in)**.

cardiagn.com

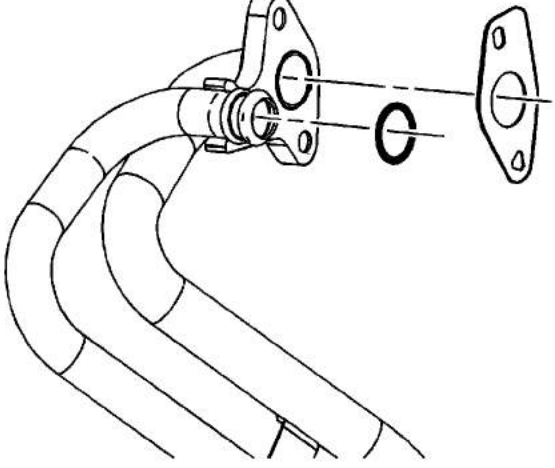

4. Install a NEW gasket and O-ring onto the heater inlet/outlet pipe assembly.

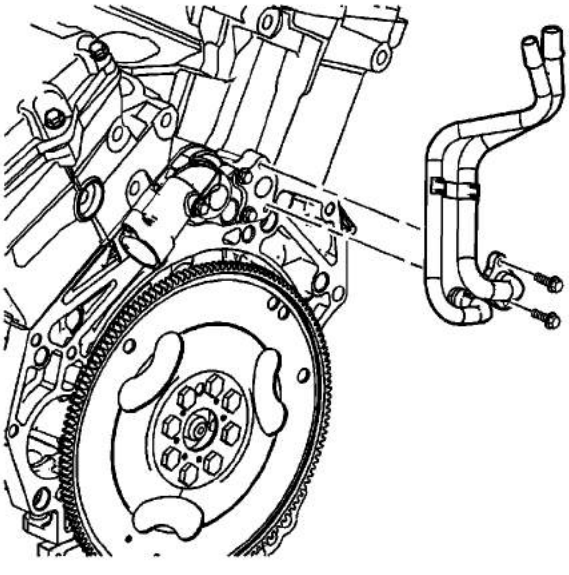

5. Install the heater inlet/outlet pipe assembly.
6. Install the heater inlet/outlet pipe assembly bolts and tighten to **10 N·m (89 lb in)**.

cardiagn.com

Water Outlet Installation

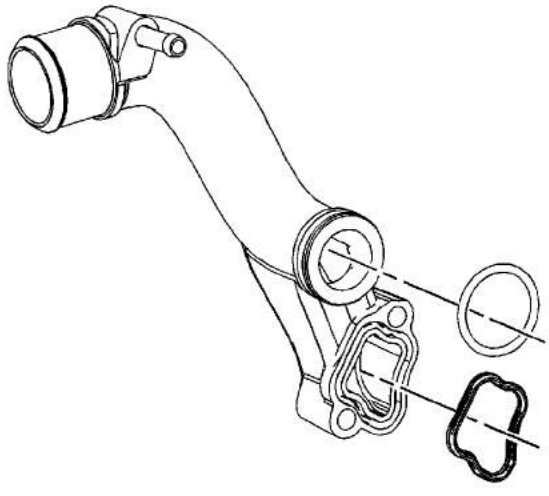

1. Install a NEW gasket and O-ring onto the water outlet.

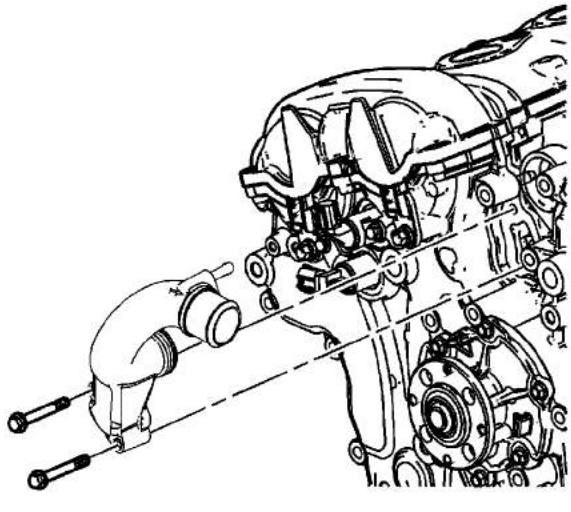

2. Install the water outlet.

   Caution: Refer to Fastener Caution in the Preface section.

3. Install the water outlet bolts and tighten to **10 N·m (89 lb in)**.

cardiagn.com

Drive Belt Tensioner Installation

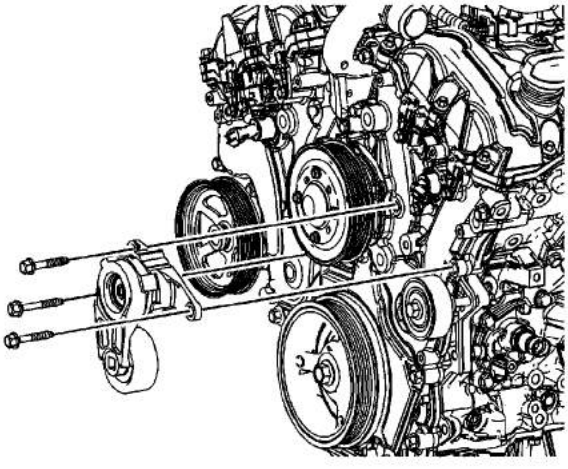

1. Place the left drive belt tensioner assembly in position to the engine front cover.

   Caution: Refer to Fastener Caution in the Preface section.

2. Install the left drive belt tensioner bracket bolts and tighten to **23 N·m (17 lb ft)**.

cardiagn.com

Engine Prelubing

Special Tools

- *J 42907* Oil Pressure Tester
- *J 45299* Engine Preluber

  For equivalent regional tools, refer to Special Tools.

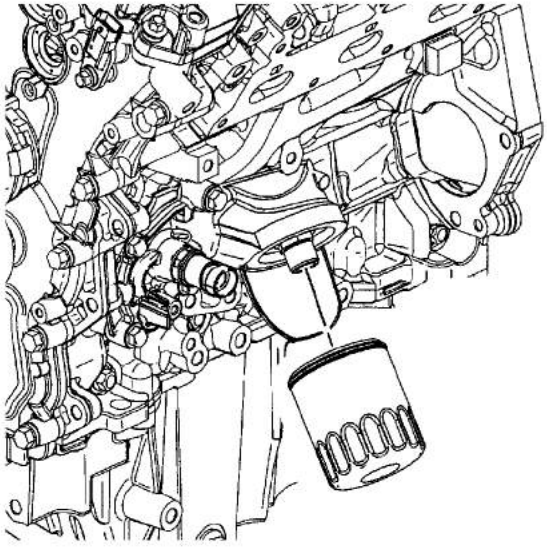

1. Remove the engine oil filter.

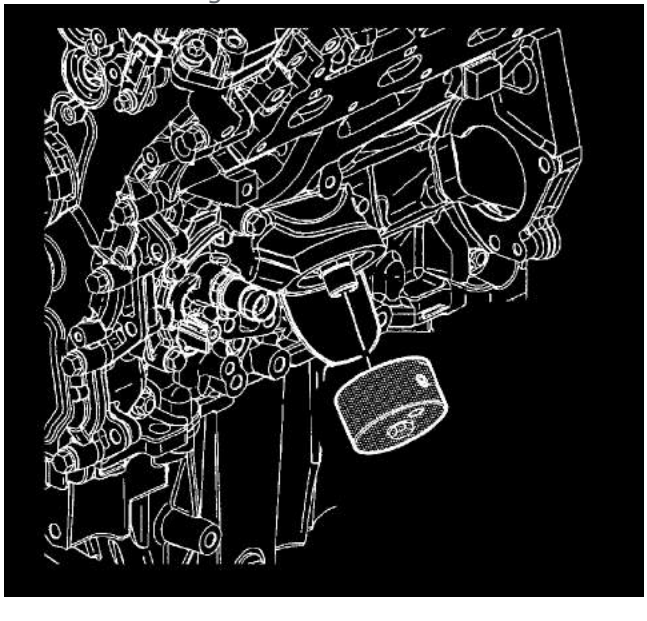

© 2010 General Motors Corporation. All rights reserved.

cardiagn.com

2. Install the *J 42907* tester onto the oil filter adapter.

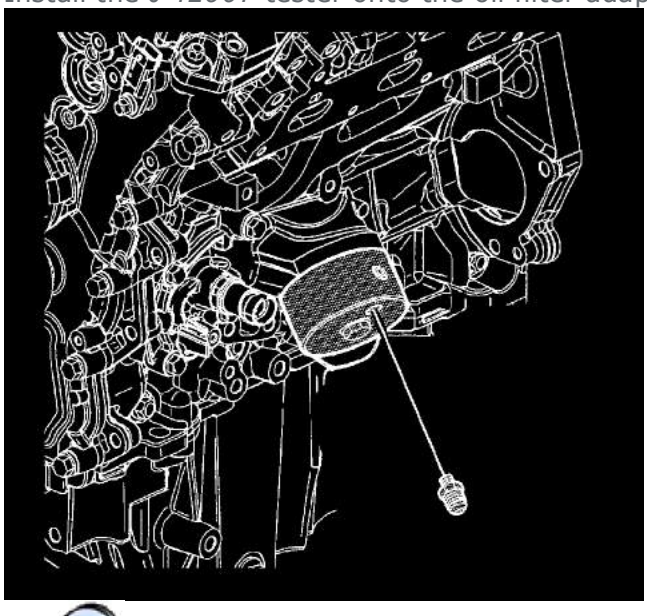

3. Install the 1/8 NPT fitting from the *J 45299* preluber into the port on the *J 42907* tester .

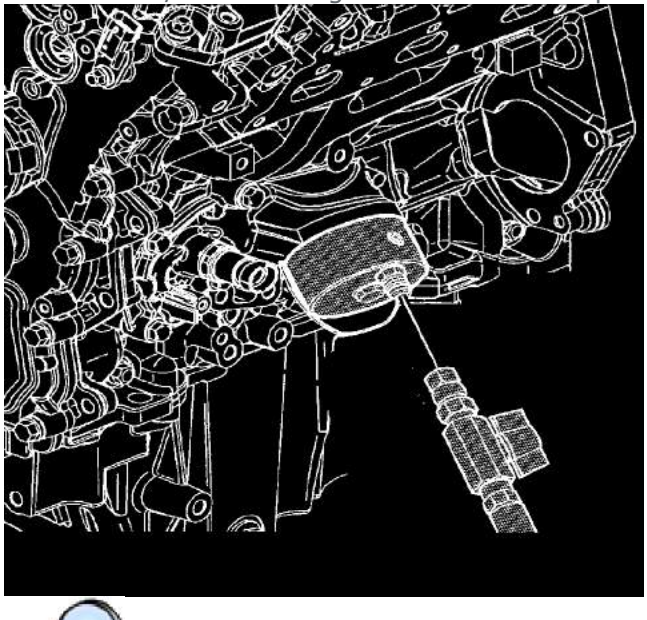

4. Install the *J 45299* preluber flexible hose to the fitting.

cardiagn.com

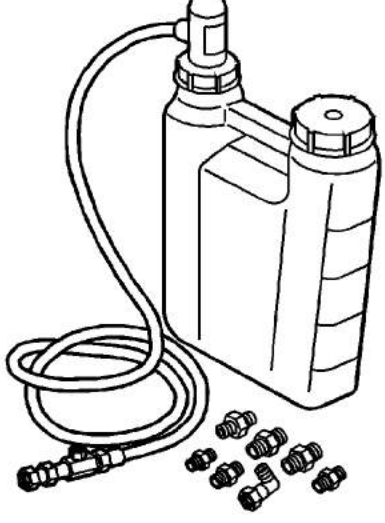

5. Open the valve of the J 45299 .

Note: A constant and continuous flow of clean engine oil is required in order to properly prime the engine. Use the approved engine oil as specified in the owner's manual.

6. Pump the handle of the *J 45299* preluber in order to flow a minimum of 1-1.9 liters (1-2 quarts) of fresh clean engine oil. Observe the flow of engine oil through the flexible hose and into the engine assembly.
7. Close the valve of the *J 45299* preluber .

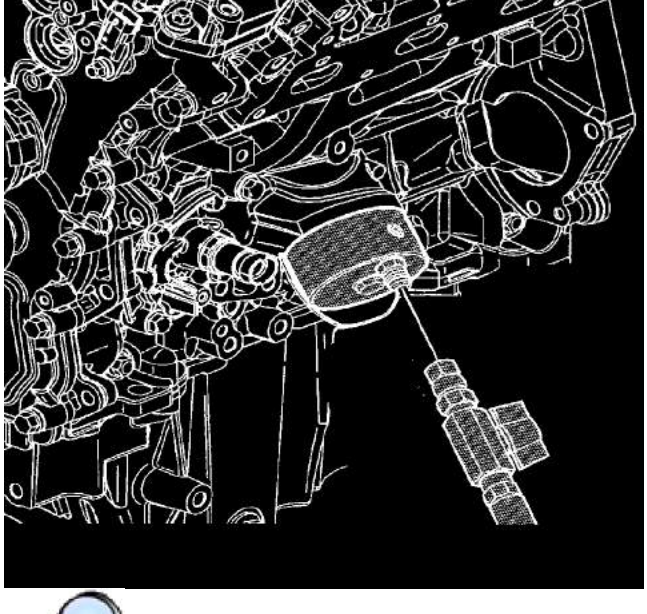

8. Remove the *J 45299* preluber flexible hose.

cardiagn.com

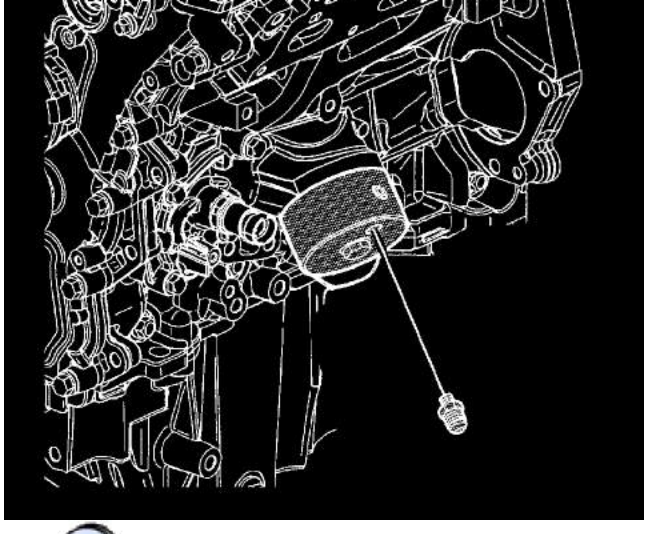

9. Remove the fitting from the *J 42907* tester .

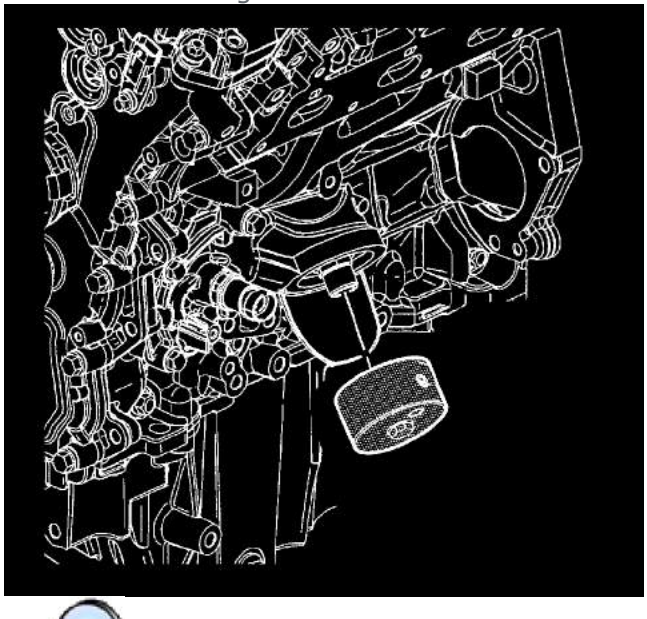

10. Remove the *J 42907* tester from the oil filter adapter.
11. Ensure the NEW oil filter is filled with clean fresh engine oil.

Caution: Refer to Fastener Caution in the Preface section.

cardiagn.com

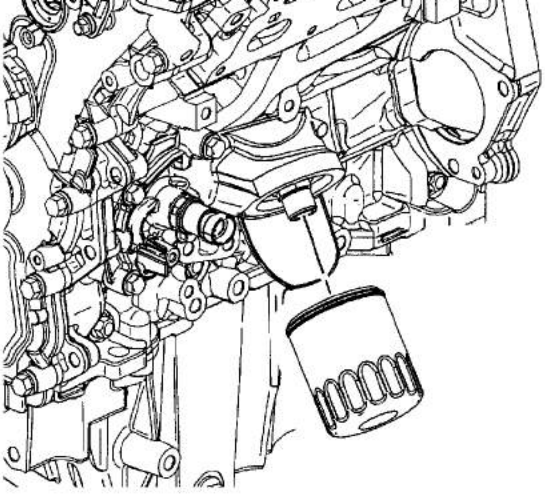

12. Install the NEW oil filter and tighten to **32 N·m (24 lb ft)**.

cardiagn.com