240

Service.

AUDI A2 Technology

Design and Function

Self-study program 240

For internal use only

Exciting technology in a new lightweight design

The Audi A2 is paving the way for advanced mobility in the 21st century
and
at the same time is the first volume-produced car to have an aluminium body.

With its future-oriented lightweight design, it represents a new dimension in dynamism and economy.

SSP240_025

SSP240_026

A car for the modern world,

innovative, compact, roomy, lightweight, safe and environmentally compatible.

Contents

Page

In a nutshell 4

Body 6

Engine and gearbox 14

Running gear
Front axle 18
Rear axle 19
Power steering 20
Components and fitting locations 21
System overview 22
Design and function 23
ESP control system 30
ESP control system components 31
Diagnosis warning lights and buttons 36

Electrical system
Vehicle's electrical system 38
CAN BUS system 40
Comfort system 44
Central control unit for comfort system J393 45
Door control units 46
Anti-theft alarm with interior monitor 50
Diagnosis 51
Functional diagram of comfort system 52

Heater/AC
Design and function 54
Compressor 59
Additional heater 64
System overview 68
Functional diagram 70

Service/maintenance
Technical data 72
Repair concept of the Audi A2 76
Special tools / workshop equipment 76

The self-study programme will provide you with information on design and functions.

It is not intended as a workshop manual!

For maintenance and repairs please refer to the current technical literature.

New

Attention! Note

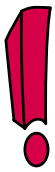

In a nutshell

Body

Anyone who thinks only steel can be stable obviously hasn't yet heard about aluminium.

Thanks to the Audi Space Frame (ASF)®, the A2's aluminium body is more than 40 % lighter than the conventional steel design. Its unladen weight is just 895 kg, around 150 kg lighter than other vehicles its size.

Drive system

The high-torque 1.4l 55 kW TDI three-cylinder power unit with pump-nozzle injection uses just 4.2 litres of diesel per 100 kilometres, accelerates from 0 to 100 km/h in 12.1 seconds and has a top speed of 173 km/h.

The 1.4 litre four-cylinder petrol engine, also with a power output of 55 kW, allows the Audi A2 achieve similar performance levels and produces a satisfactory average fuel consumption of 6.1 l; the engine is classified as low emissions to EU4 standard.

With its 1.2 l three-cylinder TDI engine, Audi will be the first manufacturer in the world to offer a four-door 3-litre car; the launch is scheduled for a later date.

The Audi's outstanding drag coefficient of 0.28 is the best in its class.

SSP240_027

Safety

The Audi Space Frame, made from high-strength aluminium profile sections, surrounds the occupants like a safety cage, thus providing them with a high level of passive safety.

Driver, passenger and side airbags are standard. The SIDEGUARD system is optional.

Running gear

In the Audi A2, Audi has combined the latest electronic components, such as the standard ABS, EBPD and ESP, with the tried and tested technology of McPherson strut front suspension and a torsion beam rear axle.

Thanks to the new electrohydraulic power steering system, optimum steering effort support is provided.

Maintenance

Longlife service has been achieved for the above-mentioned engines right from market launch.

The Audi Space Frame in the Audi A2

comprises

- 183aluminium panels
- 22extruded profile sections
- 20cast nodes

The front longitudinal members comprise aluminium tubes that can absorb a high level of deformation energy and can be renewed without any welding work being required.

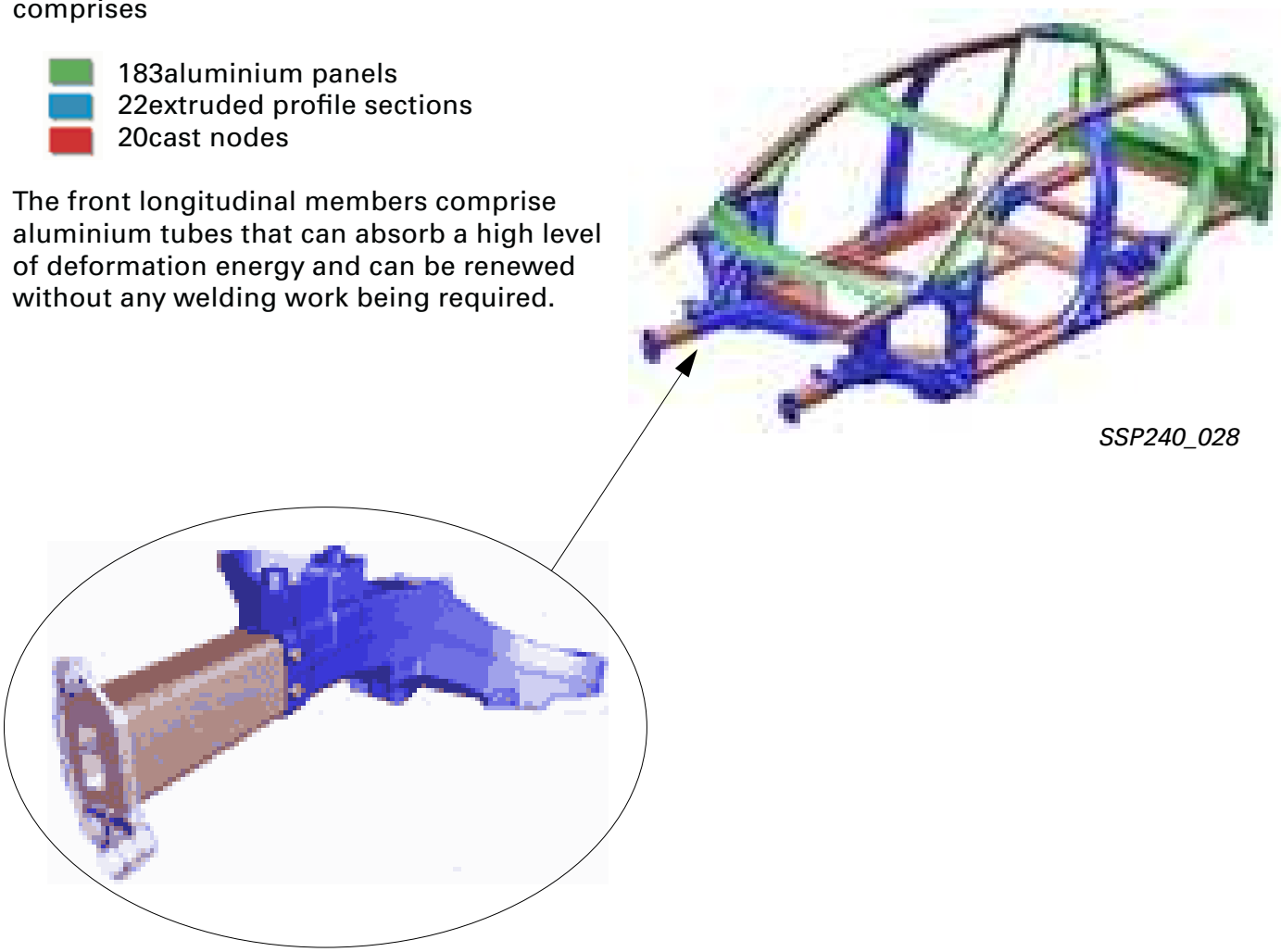

SSP240_028

The Open Sky roof (optional)

has a 58 % larger opening than a normal sliding roof and has a 166% larger transparent area.

Detailed information can be found in SSP 239.

SSP240_029

Contact corrosion

When different metals that are far apart in the electrochemical potential series come into contact, contact corrosion will occur.

Contact corrosion can occur if non-Audi approved connecting elements, such as bolts, nuts, washers, rivets, plugs, sockets, adhesives etc, are used.

For this reason, the manufacturer only uses connecting elements that have a special surface coating, as well as non-conducting rubber and plastic parts and adhesives.

Therefore only use original Audi A2 parts

Only Audi approved accessories must be used.

Damage resulting from contact corrosion is not part of the warranty.

For further information on aluminium technology, please see SSPs no. 160 and 239.

Electrochemical potential series (extract)

Lead
Tin
Iron
Chromium
Zinc
Aluminium

SSP240_044

This is the first time in vehicle design that a one-piece aluminium side-wall frame has been used.

To remove the upper B-pillar inner trim on vehicles fitted with SIDEGUARD, the outer B-pillar decorative panel must be unbolted first. Behind the upper rubber grommet is a bolt that must be removed from the outside before the inner trim can be unclipped.

The Space Floor concept

Comprises two floors in the driver and front passenger area; the gap between the two floors accommodates components such as the engine control unit, the control unit for the central locking and the auxiliary relay carrier.

This means that the footwell in the rear is lowered (space floor). The rear passengers can bend their legs as normal and assume an ergonomically optimum seating position.

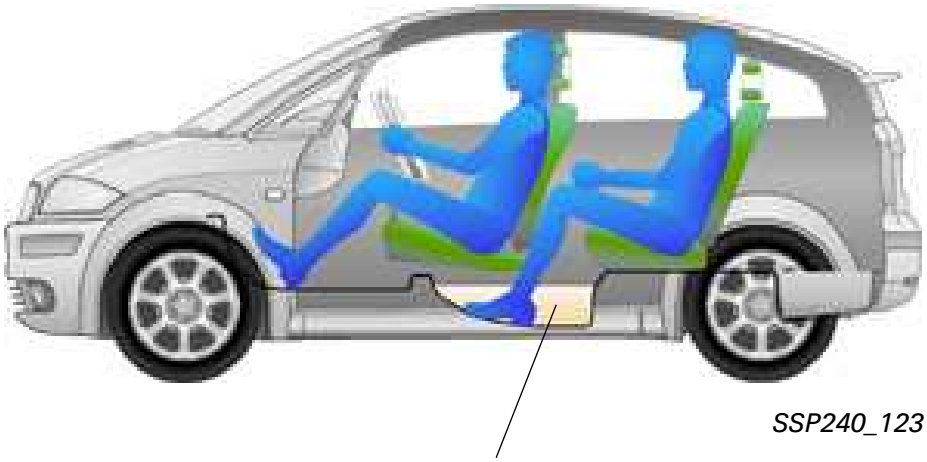

SSP240_123

Front flap

The service module enables oil and washer water to be checked and topped up easily and conveniently.

Releasing the quick-release locks behind the service flap enables the bonnet to be raised as well as removed completely.

SSP240_031

SSP240_124

Tailgate

The lock cylinder in the tailgate has been discontinued. The tailgate is opened via radio remote control (optional) or manually by using the soft-touch button.

If the electrical system fails, the tailgate can be opened by using the emergency release cable on the tailgate trim.

The actuating handle is set into the tailgate lid.

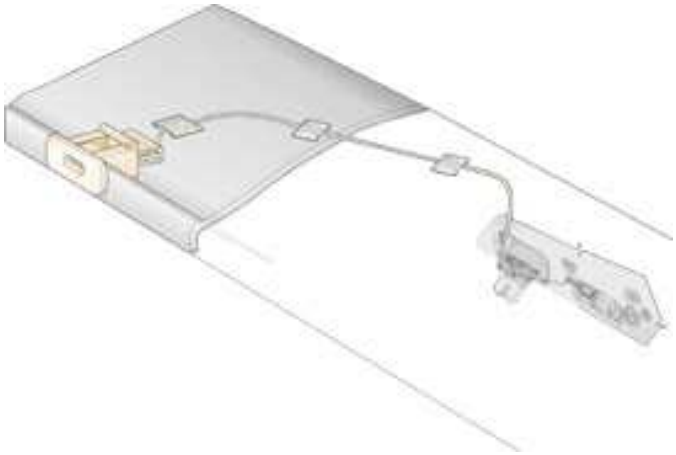

SSP240_032

Vehicle identification

For clear identification of a vehicle, various representations and locations are used.

In addition to the familiar identification locations in the engine compartment, spare wheel well and the sticker in the service document, the Audi A2 also has both modified and new locations.

Type plate in the passenger footwell.

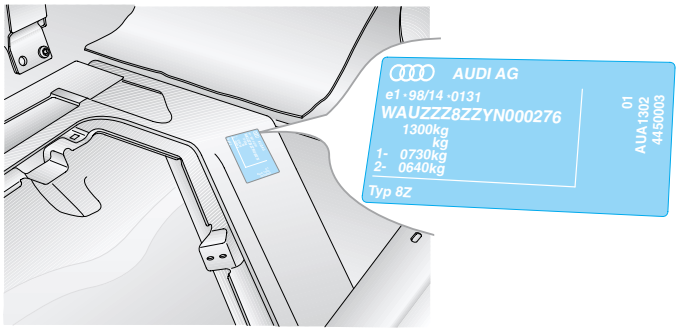

SSP240_128

One new location for the chassis number is the centre tunnel in the rear...

SSP240_022

... there is also a chromium/nickel plate under false floor on the driver's side.
This plate is bonded and the combination of materials used makes it corrosion resistant.

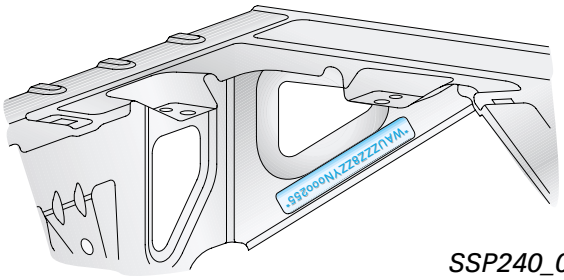

SSP240_084

Doors

The Audi A2's doors are in two sections.

The subframe and door side impact protection have been made into one component. In addition, a protective side bolster protects the pelvis region.

The door lock cylinder is held in position with a two-legged clip and a bolt. By turning the bolt clockwise, the clip moves back and the lock cylinder can be removed. In order to remove the door handle, the subframe must first be removed.

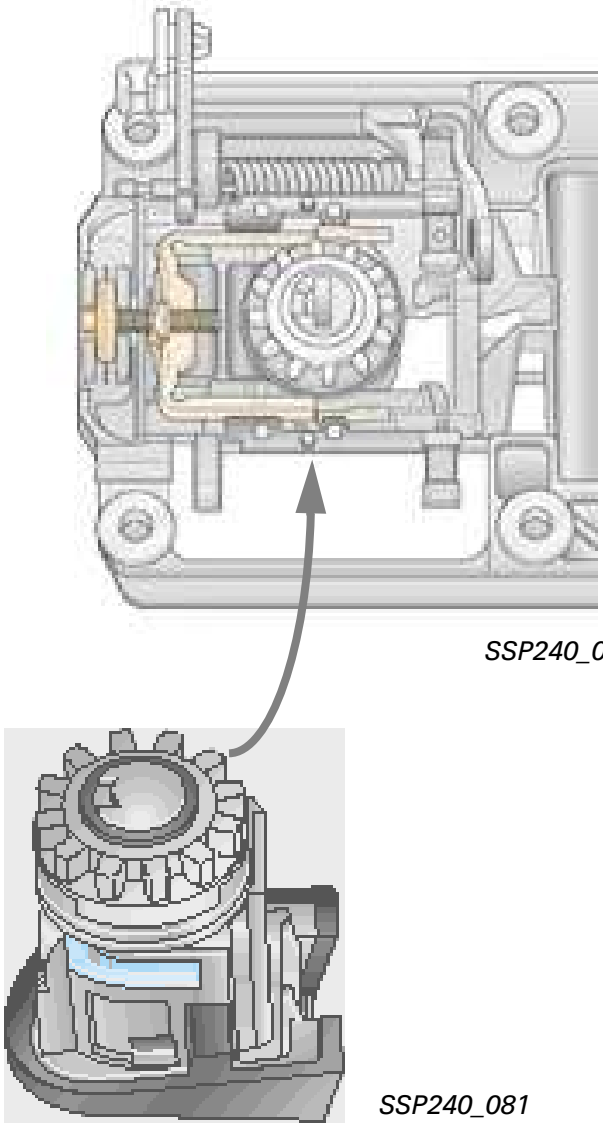

SSP240_034

SSP240_081

If an Audi A2 without radio remote control is ordered, the passenger door also has a lock cylinder.

Two-stage window lifter switches for front and rear

Functions:

1 automatic full closing
2 manual full closing
3 manual full opening
4 automatic full opening

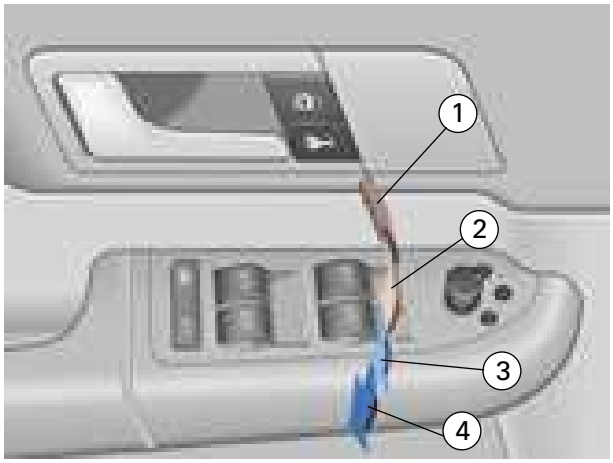

SSP240_035

Fuel filler flap

The fuel filler flap is only operated electrically and is opened from a switch in the B-pillar on the driver's side.

If the electrical system should fail, the emergency release is activated by pushing down the control element for the tank cap.

SSP240_036

Luggage compartment recess

The luggage compartment recess houses:

the battery
the Tyre Mobility System
the vehicle tools
the navigation computer (optional)
a foam component

The foam component must remain in place, otherwise the battery may be damaged in the event of a crash.

SSP240_037

Isofix

On the Audi A2, the Isofix fittings for the rear seats are part of the standard equipment.

SSP240_038

Isofix fittings are, for the first time, available as optional equipment together with an airbag key switch for deactivating the front passenger airbag.

SSP240_039

The outer rear seats are equipped with a 3-point safety belt.
Belt force limitation is achieved by means of a pre-defined tearing seam in the belt.
This limits the strain level placed on the occupants in the rear seats.

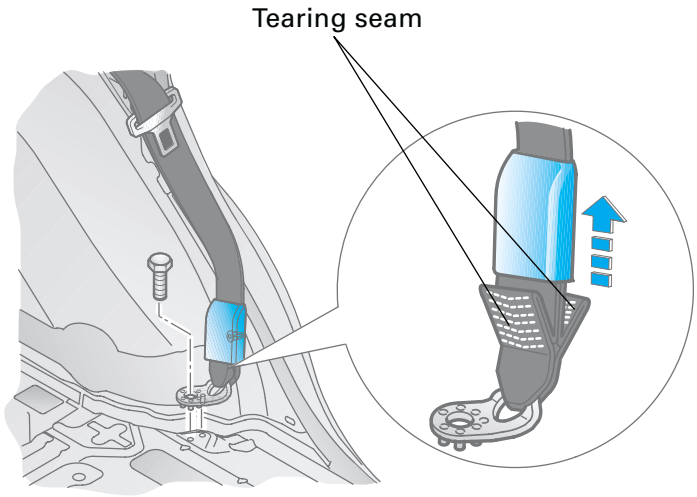

SSP239_106

Notes

Engine

1.4 l - TDI (55 kW) AMF

SSP240_045

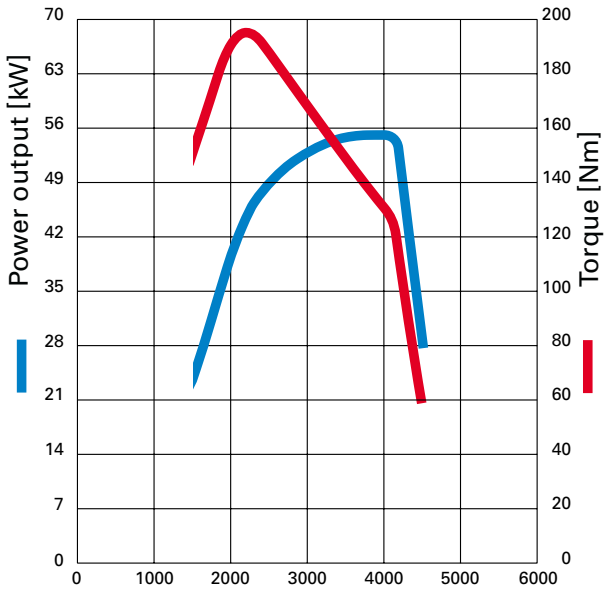

SSP240_046

Technical data

Engine code:	AMF
Design:	Turbocharged three-cylinder in-line engine
Capacity:	1422 cm^3
Power output:	55 kW (75 PS) at 4000 rpm
Torque:	195 Nm at 2200 rpm
Bore:	79.5 mm
Stroke:	95.5 mm
Compression:	19.5 : 1
Weight:	130 kg
Firing order:	1 - 2 - 3
Mixture induction:	Direct injection with pump-nozzle unit
Turbocharger:	Garrett GT 12 turbocharger with wastegate
Exhaust emissions control:	Oxidising catalytic converter and exhaust gas recirculation
Exhaust emissions standard:	EU 3
Fuel:	Diesel, cetane rating at least 49 CN, RME

Please refer to SSP 223 for the design and function of the 1.4 l TDI pump-nozzle engine.

The engine code and engine number are located on the front engine/gearbox flange.

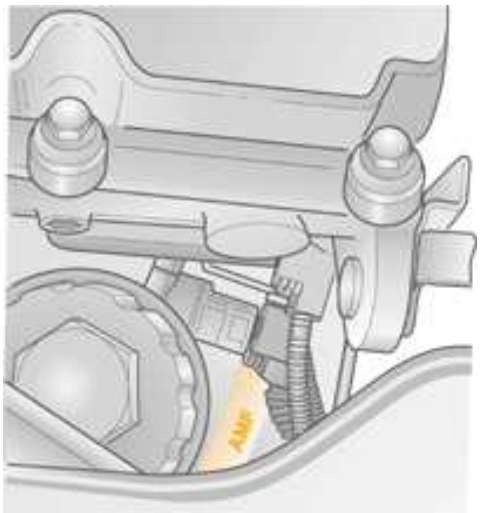

SSP240_047

1.4 l - 16 V (55 kW) AUA

SSP240_048

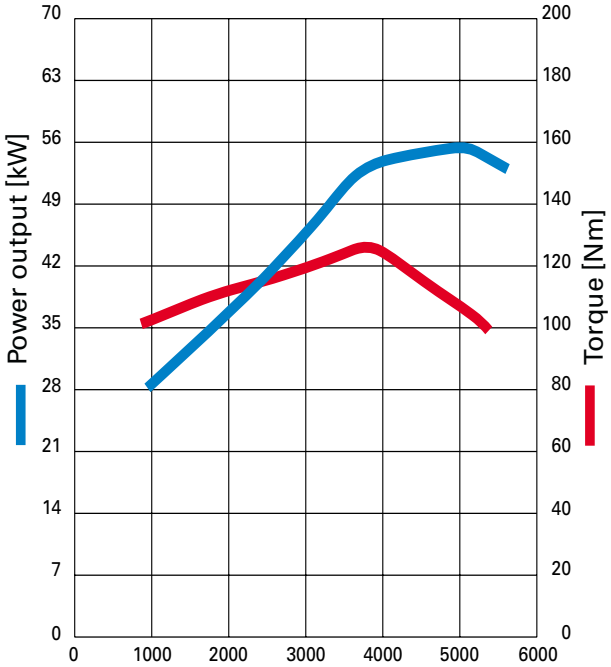

SSP240_049

Technical data

Engine code:	AUA
Design:	Four cylinder in-line engine Petrol engine
Capacity:	1390 cm^3
Power output:	55 kW (75 PS) at 5000 rpm
Torque:	126 Nm at 3800 rpm
Bore:	76.5 mm
Stroke:	75.6 mm
Compression:	10.5 : 1
Weight:	90 kg

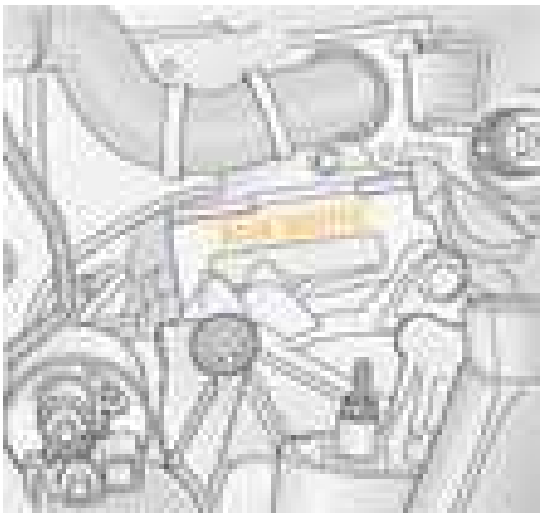

SSP240_050

Firing order:	1 - 3 - 4 - 2
Mixture induction:	Electronic, sequential multipoint injection, adaptive idlecompensation, overrun cut-off
Ignition system:	Distributorless ignition system with static high-voltage distribution, long-life spark plugs
Exhaust emissions control:	3-way catalytic converter, 2 heated lambda probes, activated charcoal filter
Exhaust emissions standard:	EU 4
Fuel:	Petrol, unleaded, 95 RON

Please refer to SSP 247 for a description of the design and function of the1.4 l engine.

- Lambda control with probes upstream and downstream of the catalytic converter (EOBD)
- Electric exhaust gas recirculation valve
- Valve actuation via rocker arms

Readiness code

The readiness code is an 8-digit code that indicates the status of the diagnoses relevant for emissions.

In normal vehicle operation, the diagnoses are carried out at regular intervals.

When using EOBD (Euro On-Board Diagnosis) it is recommended that the readiness code, address word 01 (function 15) is generated after repairs to emissions-relevant systems have been carried out. This enables a repair to be checked immediately.

Meaning of the 8-digit number block for the readiness code

The readiness code is only generated when all the displays are 0								
1	2	3	4	5	6	7	8	Diagnosis function
							0	Catalytic converter
						0		Always “0”
					0			Activated charcoal filter system (fuel tank breather system)
				0				Always “0”
			0					Always “0”
		0						Lambda probes
	0							Lambda probe heater
0								Exhaust gas recirculation system

Once the diagnosis for a system (e.g. lambda probes) has been run successfully, the corresponding position in the code will switch from 1 to 0.

Please refer to the workshop manual for a more detailed description of the procedure.

Gearbox

02J gearbox

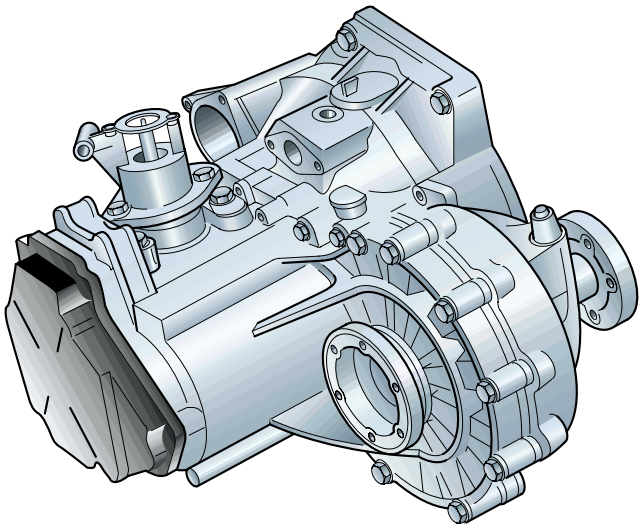

SSP240_052

The familiar 02J gearbox is used in the Audi A2 1.4 l TDI, and is suitable for torques of up to 250 Nm.

Please refer to SSP 247 for a description of the design and function of the 1.4 l engine .

02T gearbox

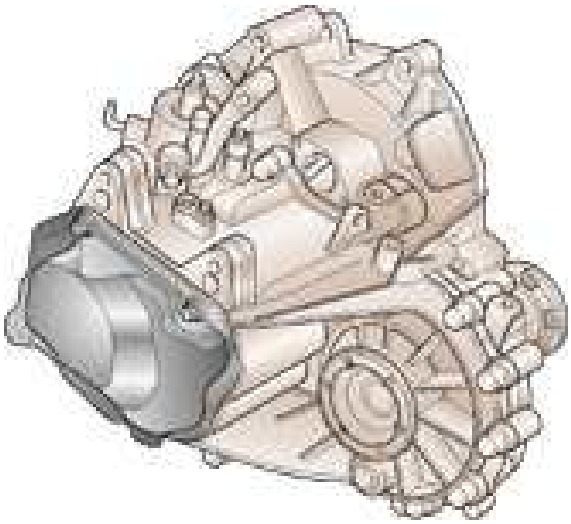

SSP240_051

The 02T gearbox is an extremely lightweight two-shaft gearbox. The housing components are made of magnesium.

It is designed to transmit torque values of up to 200 Nm.

Both gearboxes are actuated via gear selector cables and gate selector cables.

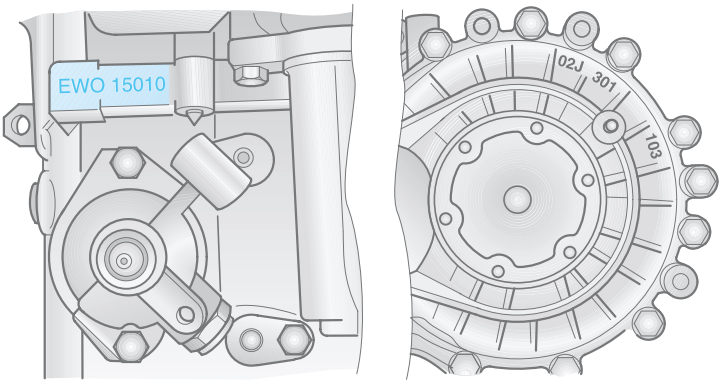

SSP240_054

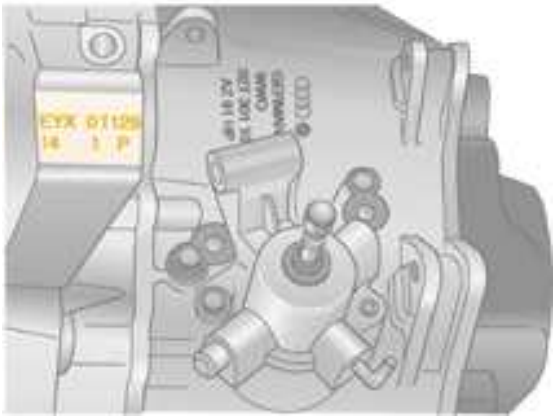

SSP240_053

Front axle

The front axle of the Audi A2 comprises McPherson struts and lower A-arms that are bolted to the wheel bearing housings and the console of the subframe.

The camber can be evened out by moving the subframe and the two front consoles. The toe is set separately on the right and left-hand sides by means of the track rods.

To reduce roll when cornering, an anti-roll bar has been fitted whose actuating arms are located directly below the spring plates.

The coil springs have large supporting bases in the suspension strut and are installed with their axes offset to minimise lateral forces. Spring and damper forces are applied to the body separately to increase ride comfort.

SSP240_055

Rear axle

The rear axle is a torsion beam axle. It is bolted to the body by means of stirrup-shaped aluminium profile sections.

The large guide bearings are arranged at an angle of 25 degrees to the transverse axis to minimise undesirable toe-out.

The springs and shock absorbers are arranged separately to maximise the width of the luggage compartment.

The toe can be set to be symmetrical by moving the “stirrups”. The camber cannot be adjusted.

The axle crossmember is made from hydroformed, thin-walled tube. Its V-shaped profile in the centre, that widens out towards the ends, makes the axle crossmember resistant to bending but relatively compliant to torsion. This means an additional anti-roll bar is not required.

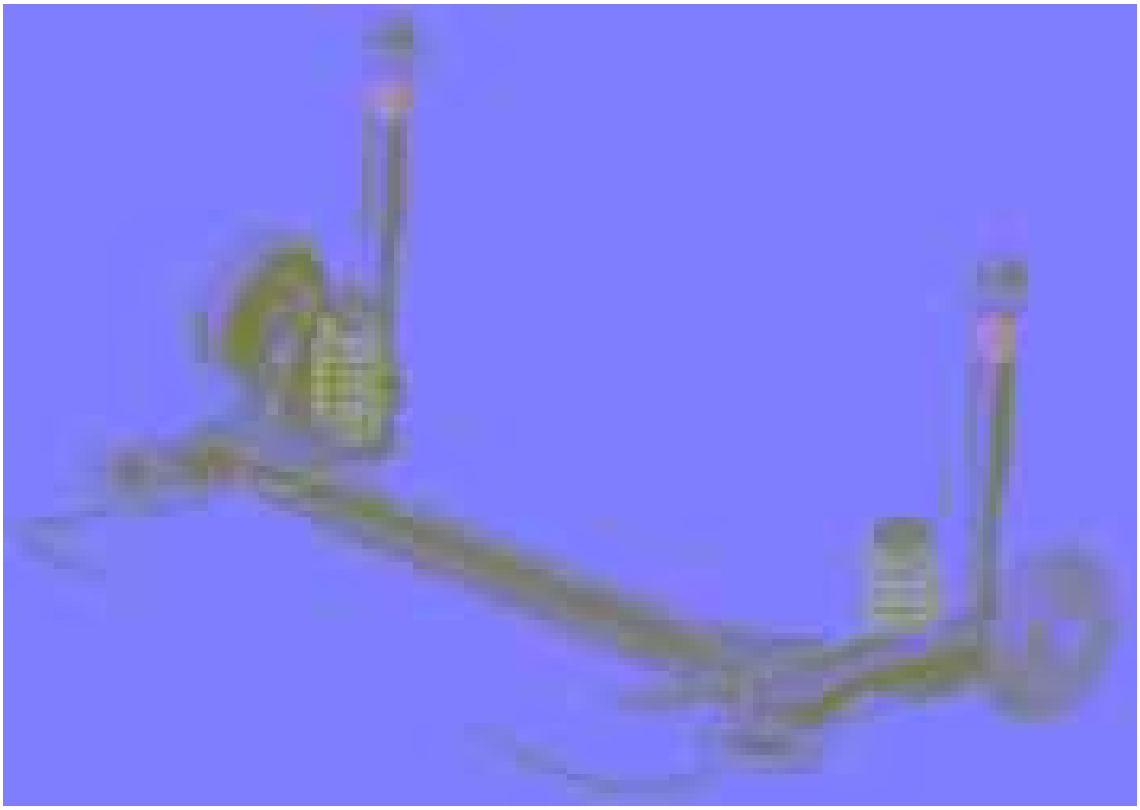

SSP240_056

Power steering

The system pressure required to provide steering assistance is generated by means of a hydraulic pump.

On the traditional, familiar power steering system, the pump is driven directly by the vehicle engine.

Some of the engine power is therefore always required to operate the pump.

When steering assistance is needed the most – i.e. when manoeuvring – the engine speed is at its lowest.
The pump output is designed for these conditions. The faster the steering speed, the higher the pump speed and therefore the volumetric flow rate.
At higher engine speeds, the unwanted pump output is discharged via a bypass system.

In the new steering system, the hydraulics still provide assistance to the steering effort supplied by the driver, but this time the hydraulic pump – a gear pump – is driven by an electric motor and is mechanically independent of the vehicle engine.

A new feature is the steering angle-dependent steering effort assistance.
For this, a steering angle sensor is located above the steering-gear housing, see Page 26, Fig. SSP240_059; the sensor transmits the steering angle speed to the electronic control system.
The steering angle information is sent directly to the control unit via a sensor cable.

The road speed is also recorded in the control unit during the evaluation.
This information is sent via the CAN bus.

The adjacent diagram shows the structure of the system.

SSP240_057

Components and fitting locations

Warning lamp for Servotronic K92

The warning lamp is integrated into the dash panel insert (driver information system).
Self-diagnosis is done using address word 17 (instrument cluster).

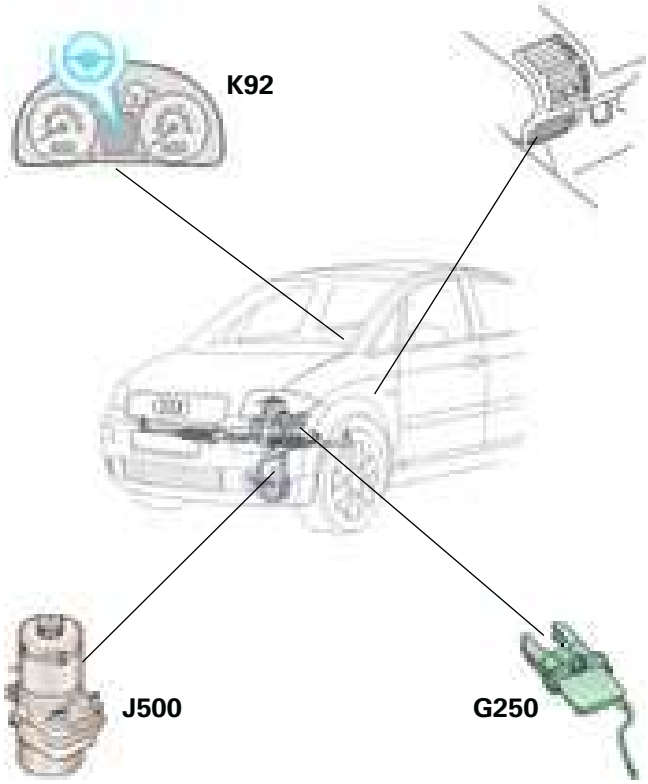

SSP240_083

Power steering sensor G250

The sensor is located in the valve dome of the power-assisted steering box.
It records the steering angle and calculated the steering angle speed.
If the sensor should fail, the steering function is still guaranteed.
The power steering shifts to a programmed emergency running mode. The steering forces required are greater.
Error functions are stored in the power steering control unit J500.

Power steering control unit J500

The control unit is integrated into the motor/pump unit.
It converts the signals for driving the gear pump as a function of steering angle speed and road speed. The delivery rate required at any particular moment is read from a map stored in the control unit. It detects and stores faults that occur during operation.
An anti-pumping device and a thermal protection facility are integrated into the control unit.

The diagnosis connection is located in the driver's storage compartment.

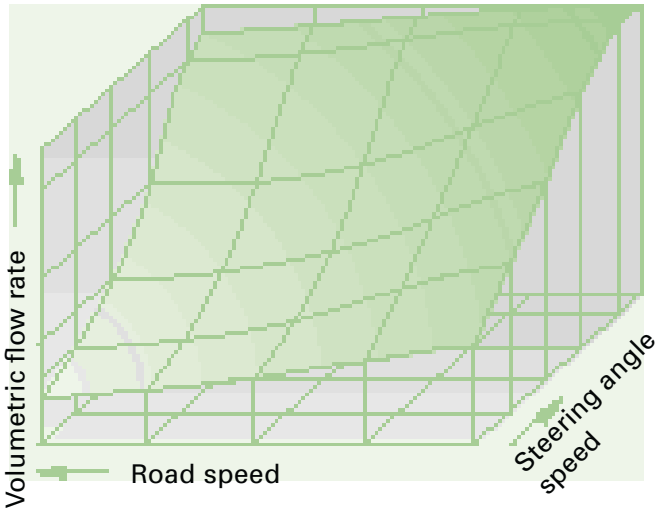

SSP240_130

The power steering control unit cannot be replaced separately.

Overview of system

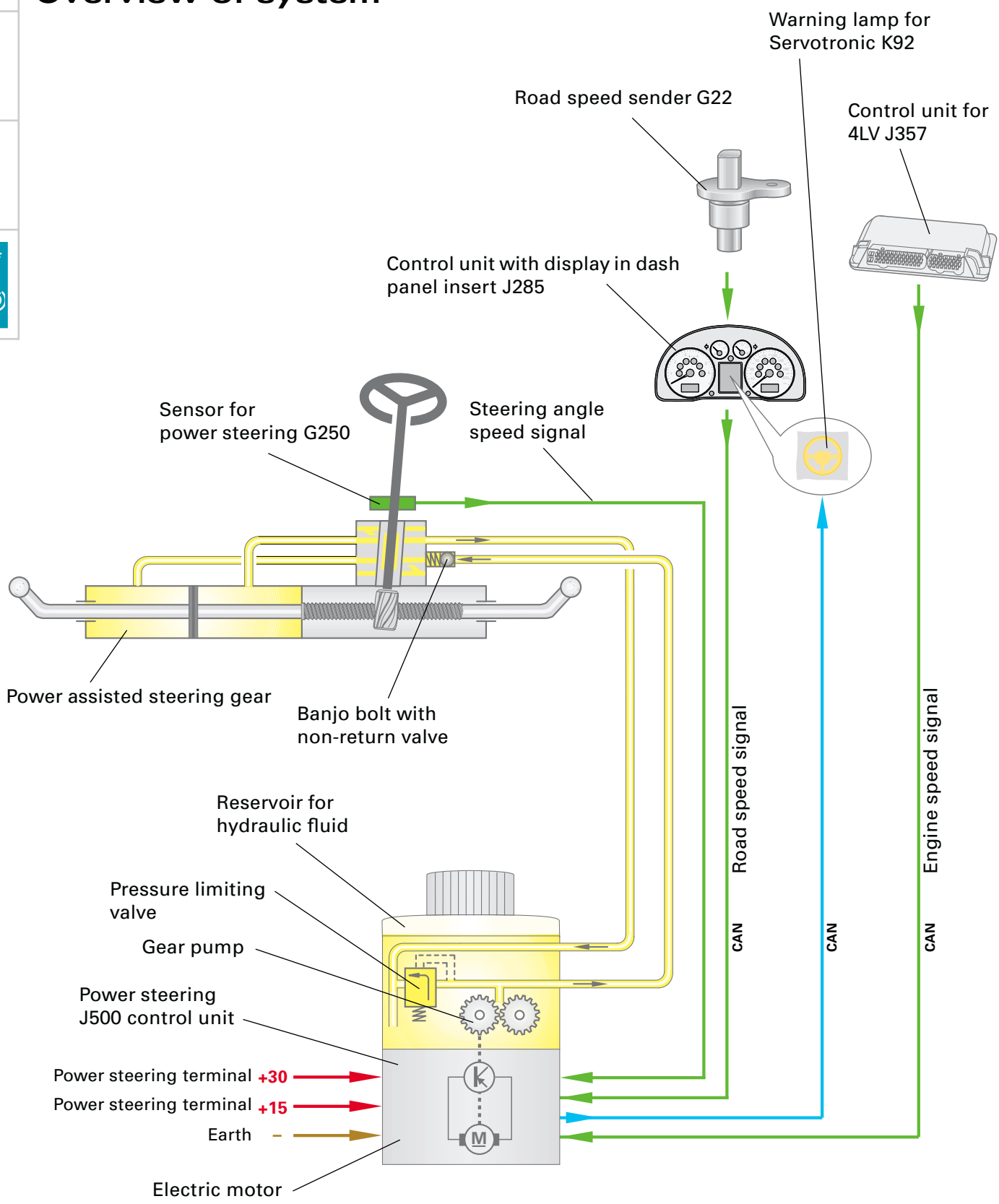

SSP240_058

Design and function

The EPHS (Electrically Powered Hydraulic Steering) steering system is a power steering system that operates as a function of steering angle speed and road speed.

The pump, V119, for the steering hydraulics comprises a gear pump and an electric motor.

Instead of the vane pump that is traditionally used on conventional power steering systems, this system uses a gear pump that is integrated into the motor/pump unit.

The gear pump is not driven directly by the vehicle's combustion engine; instead it is operated by an electric motor integrated into the motor/pump unit.

The electric motor only operates when the ignition is switched on and the engine is running.

Signals for steering angle speed, road speed and engine speed are sent to the control unit. This control unit regulates the speed of the electric motor and the gear pump, and thereby regulates the delivery rate or the volumetric flow rate of the hydraulic fluid.

Anti-pumping device

The electrohydraulic power steering has an anti-pumping device that is actuated in the event of faults, a failure or a crash.

The anti-pumping function can be cancelled by switching off the ignition and restarting the engine. If necessary, wait approx. 15 mins to allow the motor/pump unit to cool down after overheating. If, after waiting for this period, the anti-pumping function cannot be cancelled by starting the engine, there is a fault in the vehicle electrical system or the motor/pump unit is faulty. In this case carry out a self-diagnosis and if necessary renew the motor/pump unit.

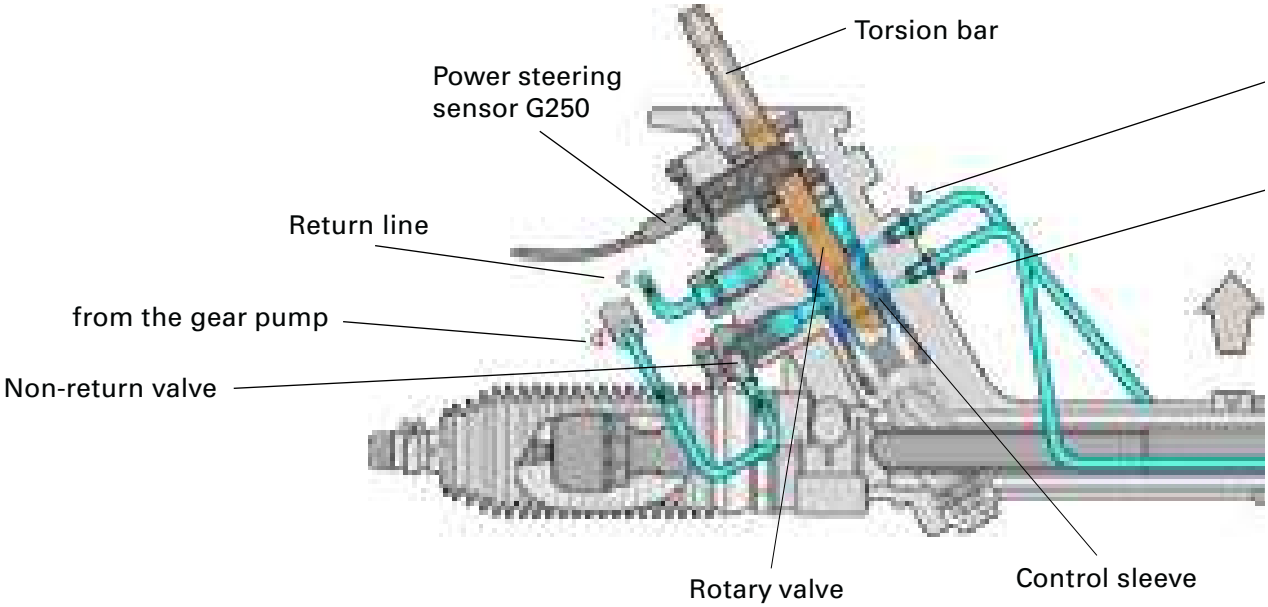

As with the familiar power steering, the hydraulic control unit contains a torsion bar that is connected on the one side with a rotary valve and on the other side with the input pinion and the control sleeve.

Straight-ahead driving

In straight-ahead driving situations, the torsion bar holds the rotary valve and the control sleeve in a neutral position. The power steering sensor does not detect any steering angle.
The fluid flows through the hydraulic control unit at virtually no pressure and returns to the reservoir via the return line.

The control grooves on the rotary valve and the control sleeve are in a neutral position with respect to each other so that the oil can enter both sides of the working cylinder and can run off to the reservoir via the return grooves on the control sleeve.

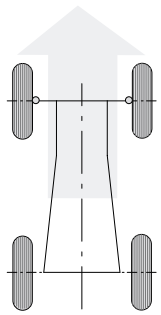

SSP240_075

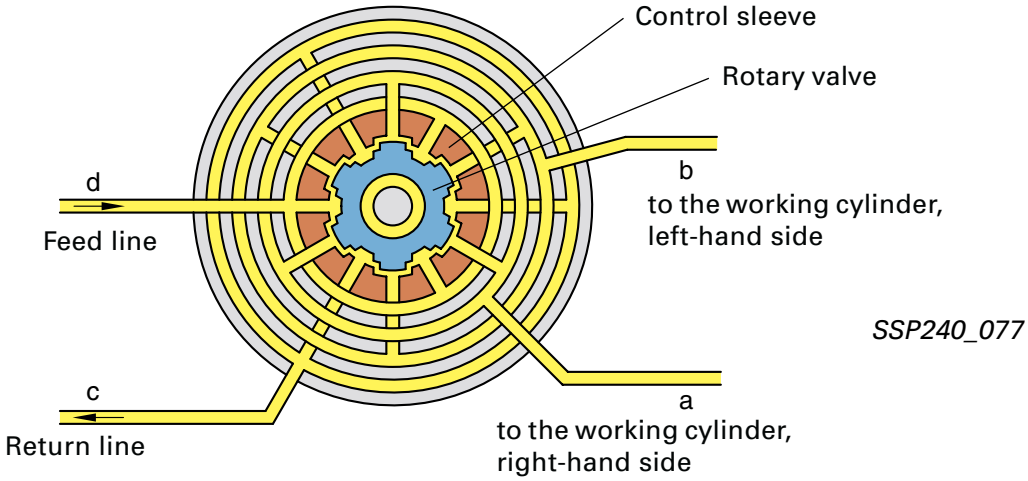

SSP240_077

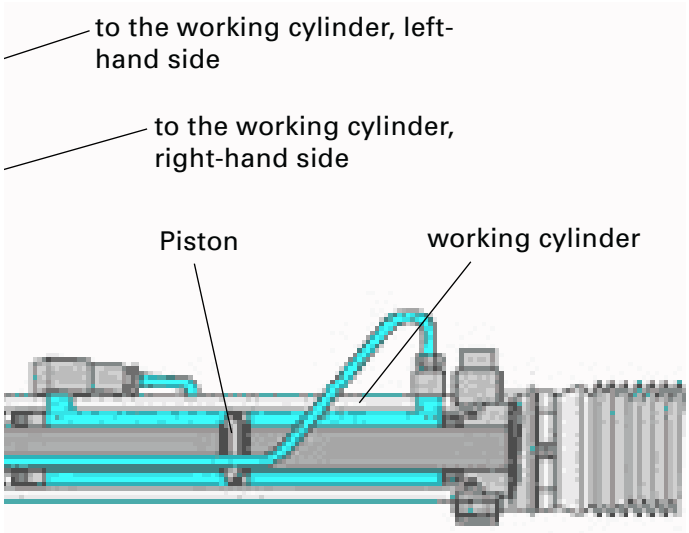

SSP240_074

From a hydraulics point of view, the function positions “right steering lock” and “left steering lock” are similar to the familiar power steering system.

Left steering lock

The deformation of the torsion bar results in the rotary valve being twisted against the control sleeve. The control grooves of the rotary valve release the pressurised fluid feed to the right-hand side of the working cylinder.

The pressurised fluid flows into the working cylinder and provides assistance for the steering motion.
At the same time, the rotary valve closes the feed to the left-hand side and opens the return from the left-hand side of the working cylinder.

The pressure on the right-hand side forces the oil from the left-hand side of the working cylinder into the return line.

When the steering manoeuvre is completed, the torsion bar ensures that the rotary valve and the control sleeve return to the neutral position.

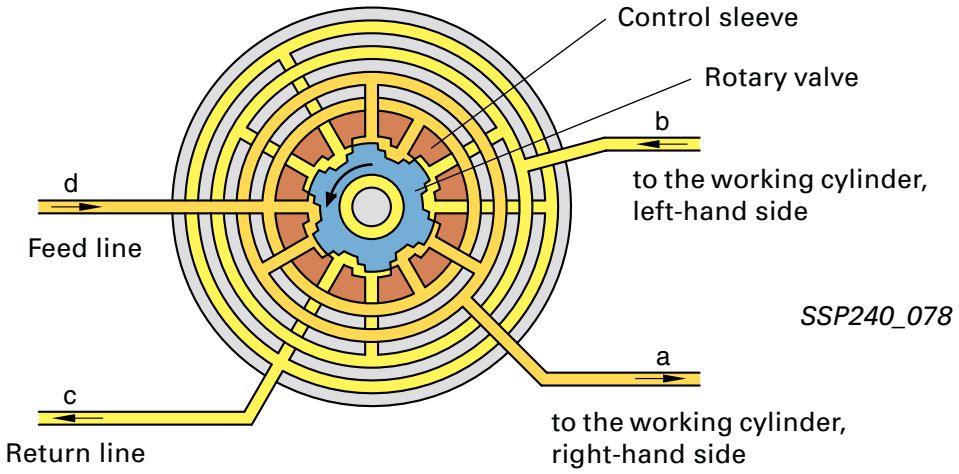

SSP240_078

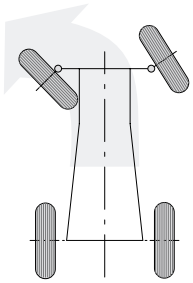

SSP240_076

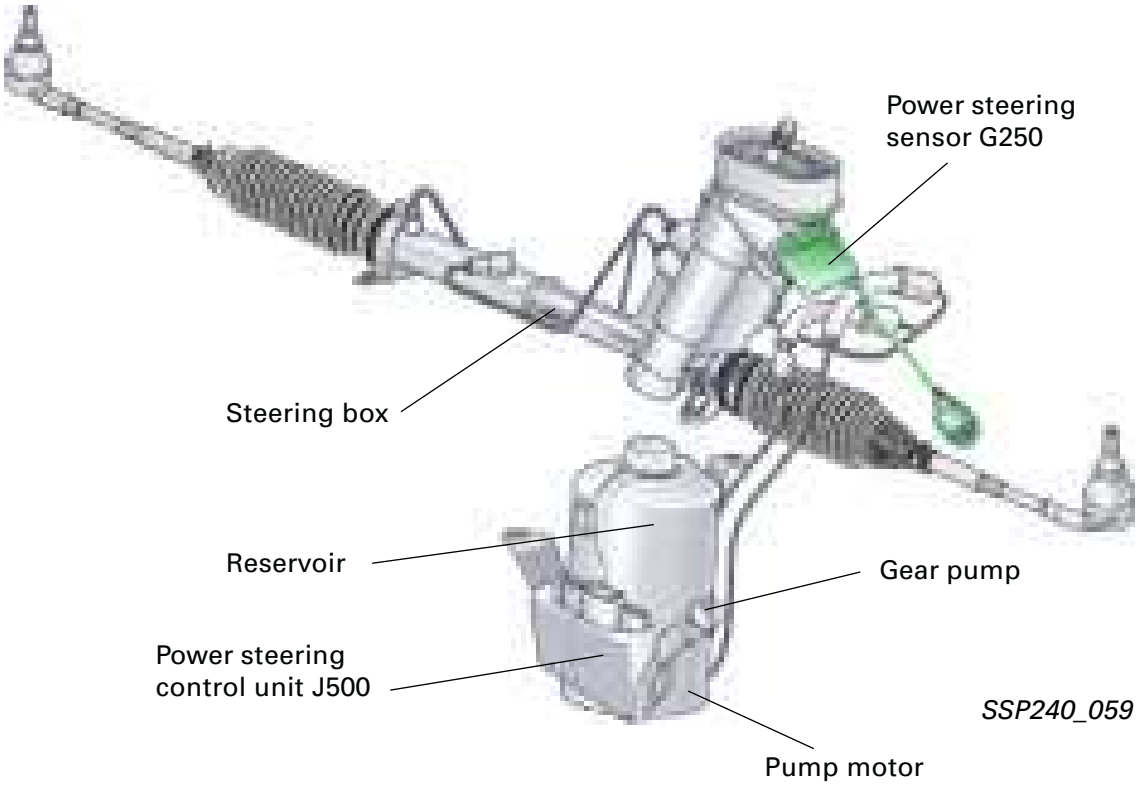

The hydraulics also provide assistance for the steering effort provided by the driver on the new steering system. The hydraulic gear pump is driven by an electric motor and is therefore independent of the vehicle engine. A new feature is the steering angle-dependent steering assistance.

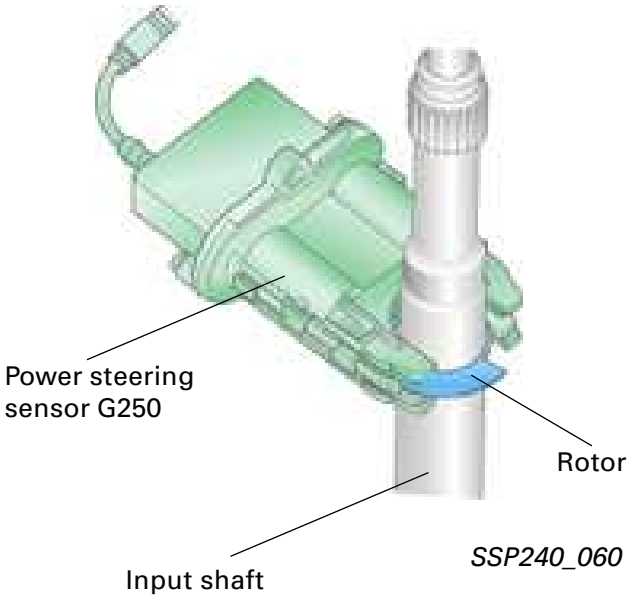

At a later date on the Audi A2 the signal from the steering angle sender G85 (see Page 33) will be used, thus eliminating the need for the power steering sensor G250.

Description of the power steering sensor G250 (capacitive sensor)

A rotor that is attached to the input shaft rotates in between 9 small plate capacitors. This detunes the capacitance of the plate capacitors.
From this change in capacitance, the sensor's electronics calculate signals (steering angle and steering speed) for the power steering control unit.

Schematic diagram of capacitor detuning

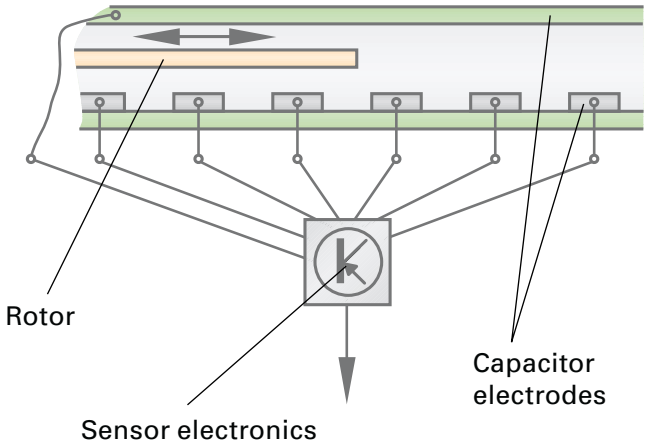

SSP240_119

Top view

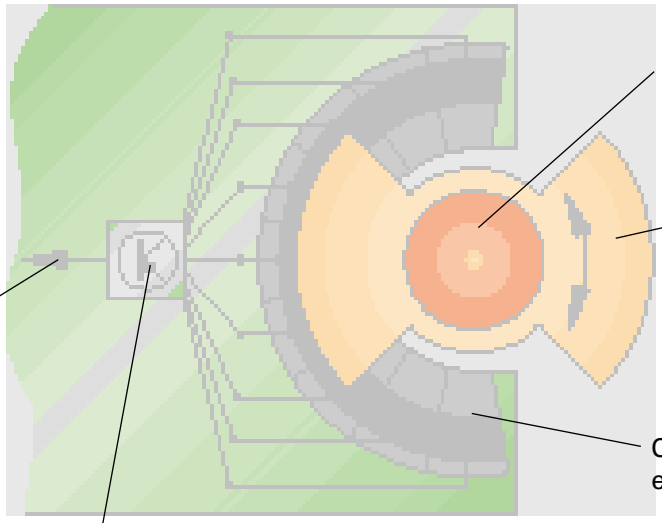

SSP240_042

The motor/pump unit consists of:

- the hydraulic unit with gear pump and electric motor
- the reservoir for the hydraulic fluid
- the control electronics for the electrohydraulic steering

The left-hand headlamp must be removed first in order to check/top up the hydraulic fluid.

Under no circumstances must the pressure and return lines for the power steering be detached.
Otherwise the plastic inserts in the pipes might be damaged.
If the pressure and return lines are lifted clear and tied in place, the bending radius must not be less than the minimum radius of 100 mm.

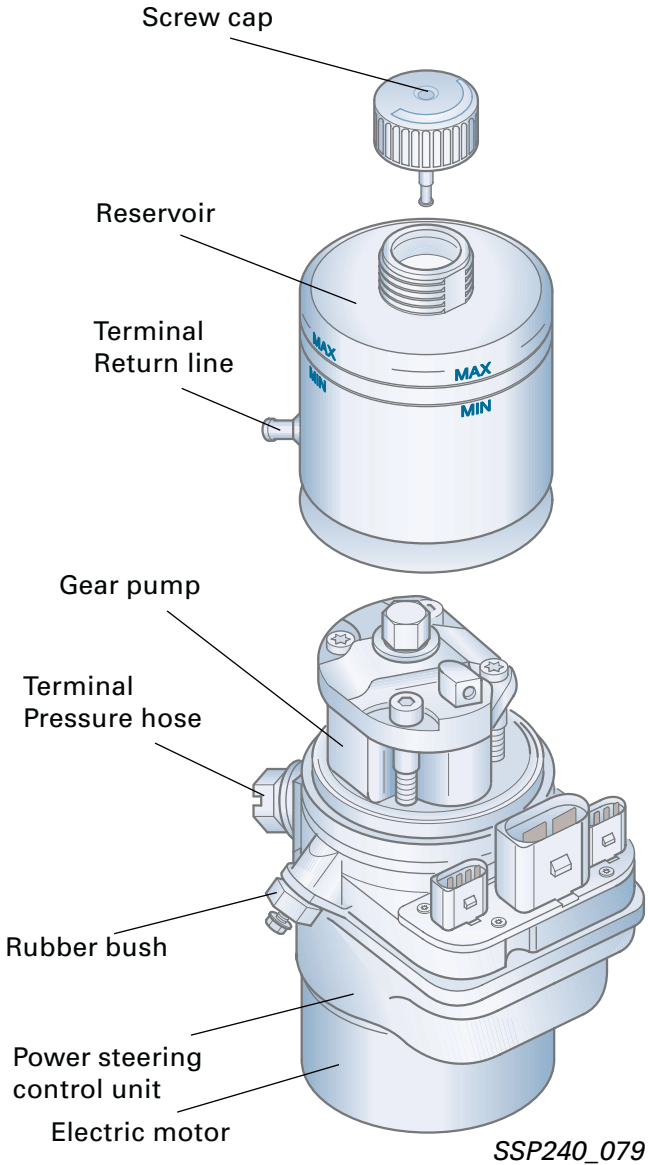

SSP240_079

The power steering control unit J500

converts the incoming

- engine speed (G28)
- road speed (G68)
- and steering speed (G250) signals

to drive the gear pump; this is done as a function of steering angle and road speed.

Self-diagnosis is done via the instrument cluster (address word 17) . Communication is exclusively via the drive system CAN bus.

Error messages are output via the instrument cluster.

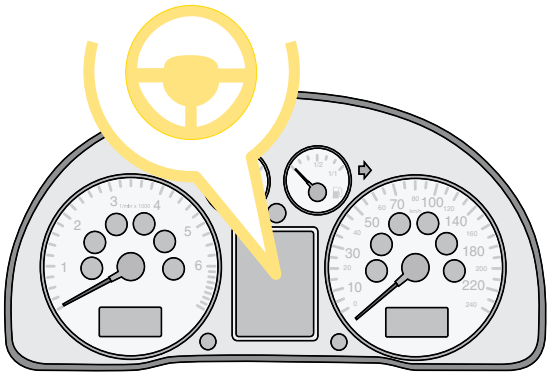
SSP240_082

Pump operation

Ignition	Vehicle engine	Electricpump	Steering assistance
on	running	running	available
off	stationary, road speed = 0 km/h	not running	none

steering assistance

Road speed	Steering angle speed	Delivery rate	Steering assistance
low e.g. parking	high	high	high (light steering)
high e.g. motorway driving	low	low	low (heavy steering)

ESP control system

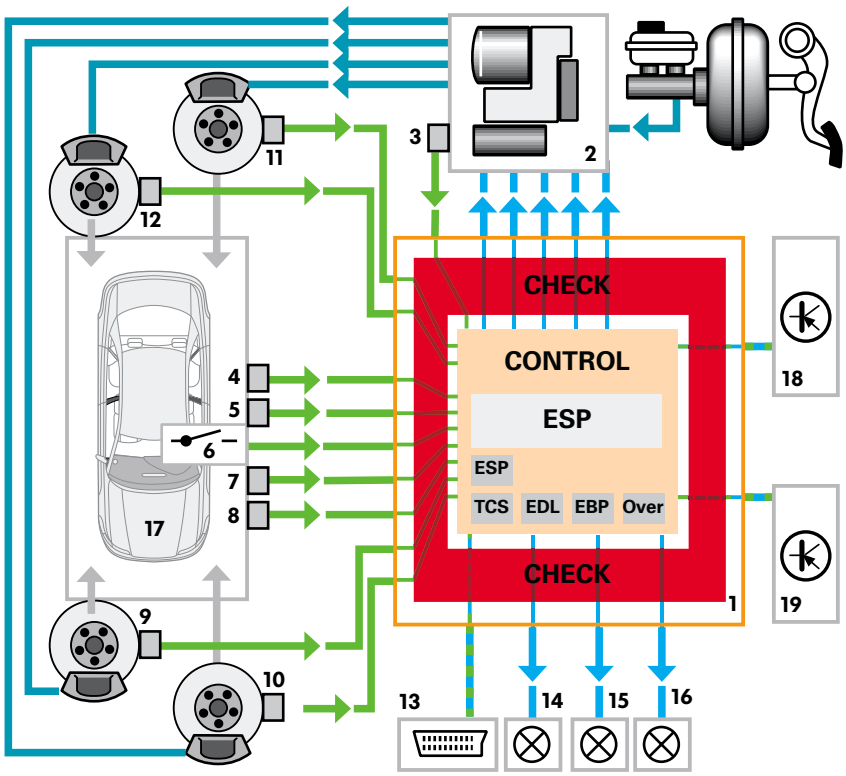

SSP240_062

1 Control unit for ABS with EDL/TCS/ESP J104
2 Hydraulic unit N55 with charging pump V64
3 Brake pressure senders 1 and 2 G201/G214
4 Lateral acceleration sender G200
5 Speed sensor G202
6 Button for TCS/ESP
7 Steering angle sender G85
8 Brake light switch
9 ... 12 active speed sensors G44 ... G47
13 Diagnosis wiring
14 Warning lamp for braking system K118
15 Warning lamp for ABS K47
16 Warnign lamp for TCS/ESP K155
17 Vehicle and driver behaviour
18 Cut-in to engine management
19 Cut-in to gearbox control system (vehicles with automatic transmission only)

The rotational speed sensors supply the wheel speed information continually for each individual wheel.
The steering angle sensor is the only sensor that supplies its data directly via the CAN bus to the control unit. The control unit uses both pieces of information to calculate a target steering direction and target vehicle behaviour.

The lateral acceleration sensor reports to the control unit if the vehicle is breaking away to the side, whilst the rate of rotation sensor reports if the vehicle is tending to skid. Using these two pieces of information, the control unit calculates the current condition of the vehicle.

If the target and actual values differ, a control intervention is calculated.

ESP decides:

- which wheel is braked or accelerated and by how much,
- whether the engine torque should be reduced and
- on vehicles with automatic transmission, whether the gearbox control unit needs to be activated.

Afterwards, the system checks by using the incoming data from the sensors, to see if the intervention has been successful:

- if yes, the intervention is completed and the behaviour of the vehicle continues to be monitored.
- if no, the control sequence is run again.

If a control intervention is being carried out, the ESP lamp will flash to inform the driver of this.

ESP system components

The active brake servo

In addition to the usual function of boosting the pressure exerted by the driver's foot on the brake pedal by means of a vacuum from the intake pipe or from a vacuum pump, the servo also has the task of generating the initial pressure for an ESP intervention.

This is necessary because the intake performance of the return pump is not always sufficient to generate the required pressure. The reason for this is the high viscosity of the brake fluid at low temperatures.

If an ESP control action is imminent the solenoid, activated by the control unit, pulls the metal core forwards and opens valves within the valve piston solenoid unit.

As when the brake pedal is actuated, this builds up an initial pressure in receptacle 1 (receptacle 2 remains empty) and thereby generates the pressure in the braking system which is then monitored by two brake pressure senders.

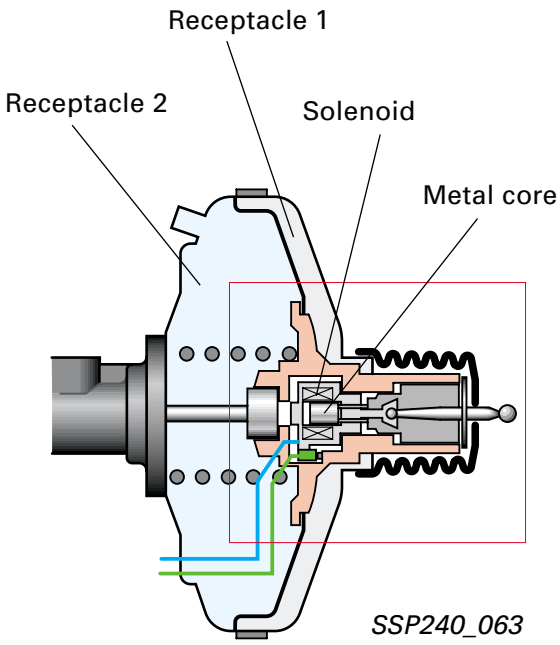

Senders 1 (G201) and 2 (G204) are duplicate designs to guarantee the maximum possible safety.

They are capacitive sensors and designed as plate capacitors.

If braking pressure is exerted on the moving plate, the gap between the two plates is reduced and the capacitance increases.

The change in capacitance is a direct measure of the change in pressure and provides measurements to calculate the brake forces and the pre-charging control.

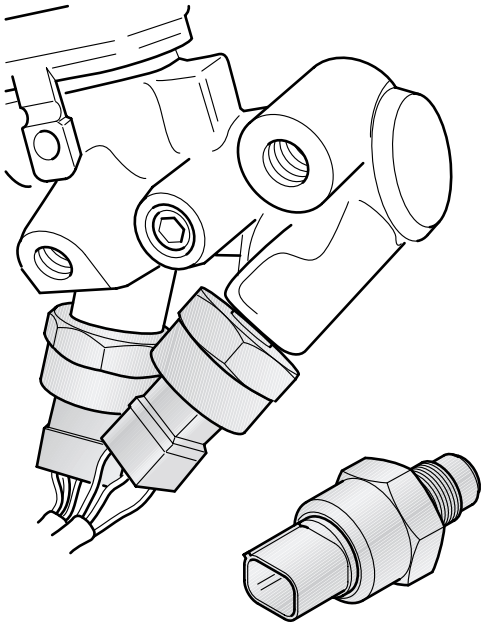

SSP240_065

Control unit for ABS with EDL/TCS/ESP J104

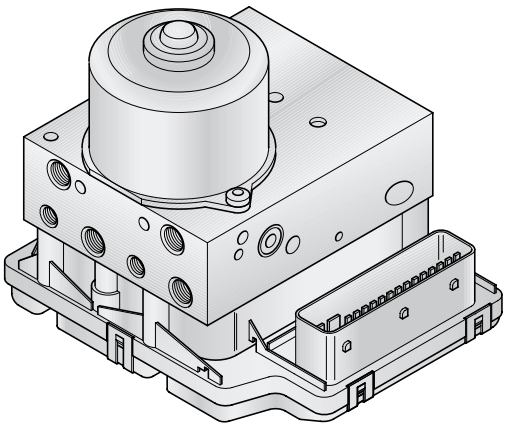

SSP240_061

The control unit for ABS/EDL, J104, is combined with the hydraulic unit to form one module. Both components can be renewed separately. It is not necessary to remove the entire unit when doing this.

Function

- Control of ESP, ABS, EDL, TCS, EBPD and overrun torque limiting functions,
- continuous monitoring of all electrical components and
- diagnosis aid for repair work

Relay for brake light suppression J508

When the ESP system switches on the solenoid, the brake pedal can move so much, because of the tolerances that arise, that the brake light switch closes the contact to the brake lights.

To avoid irritating following drivers, relay J508 interrupts the connection to the lights for as long as the solenoid is activated.

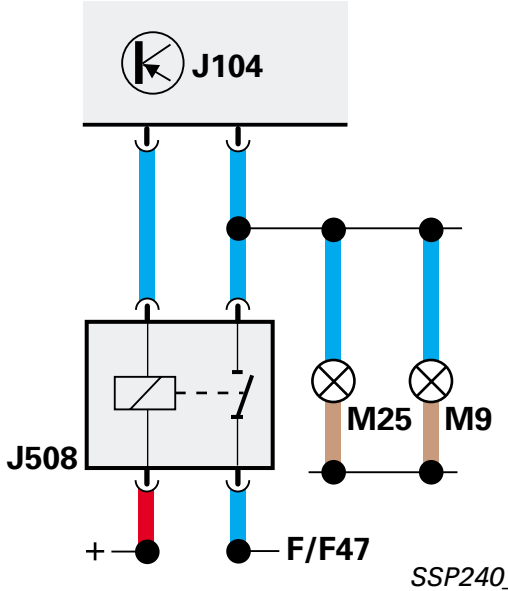

SSP240_066

Steering angle sender G85

The coil connector with slip ring forms the electrical connection between airbag control unit and the driver's module in the steering wheel.
The coil connector housing also accommodates the steering angle sensor (G85) which transmits the steering angle to control unit J104 via the CAN bus (see SSP 204).

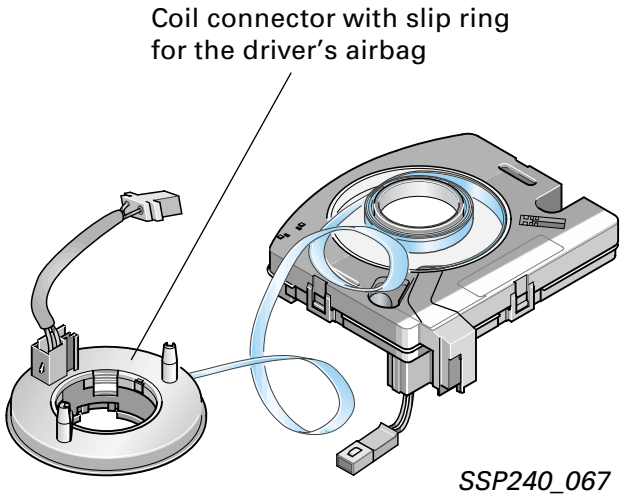

SSP240_067

After renewing the airbag coil spring/ steering angle sensor, a basic setting must be carried out.

Senders G200 and G202 are mounted on a common bracket. This is located near to the centre of gravity of the vehicle, on the tunnel between the centre console and the bulkhead.

The lateral acceleration sender G200

calculates the vehicle's lateral acceleration.

Sender for rate of rotation (G202)

measures the rate of rotation/yaw rate of the vehicle about the vertical axis.

The signals from the two senders enable control unit J104 to determine the current actual driving conditions. From these, the control components required for optimum driving conditions are derived.

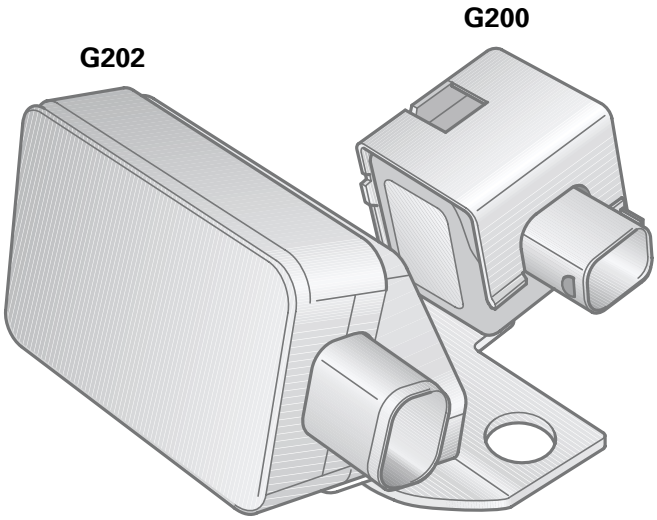

SSP240_141

Button for TCS E256

The ESP function cannot be switched off on the Audi A2.

The TCS function can be deactivated via a button (up to a speed of < 50 km/h).

For further information on ESP, please refer to SSP 204.

SSP240_069

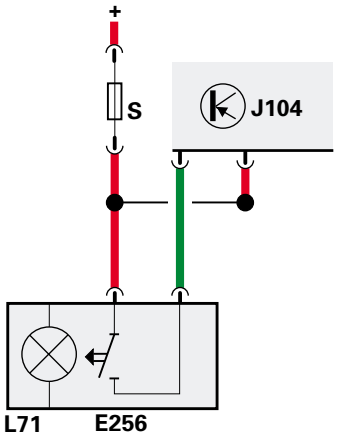

SSP240_070

The new active wheel sensor for ABS

A sensor is considered to be an active sensor if it needs an external power supply in order to perform its function.

The active speed sensor has a magneto-resistive element. Its resistance changes as a function of the magnetic lines of force intersected by the sensor ring/read track.

The sensor ring on the wheel hub comprises a read track with different fields magnetised to the north and south pole. The sensor ring rotates on the stationary sensor element.

Operating principle of the active sensor

In the immediate vicinity of the magnetised areas, the magnetic lines of force stand vertical on the read track. Depending on the polarity, they are either running away from the track or towards it. Because the distance between the read track and the sensor is very small, the lines of force penetrate the sensor element and change its resistance.

An electronic booster/trigger circuit incorporated into the sensor converts the changes in resistance into two different current levels.

This means that, if the resistance of the sensor element increases because of the direction of the magnetic lines of force running through it, the current will drop.

If the resistance falls because of a change in direction of the lines of force, the current increases.

Since the north and south poles alternate on the rotating read track, a square wave signal sequence is produced which enables the frequency to be a measure for rotational speed.

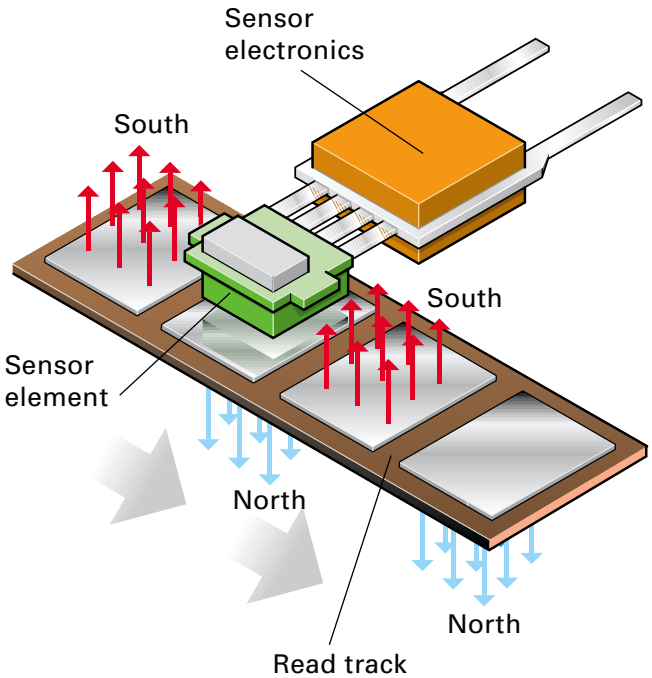

SSP240_071

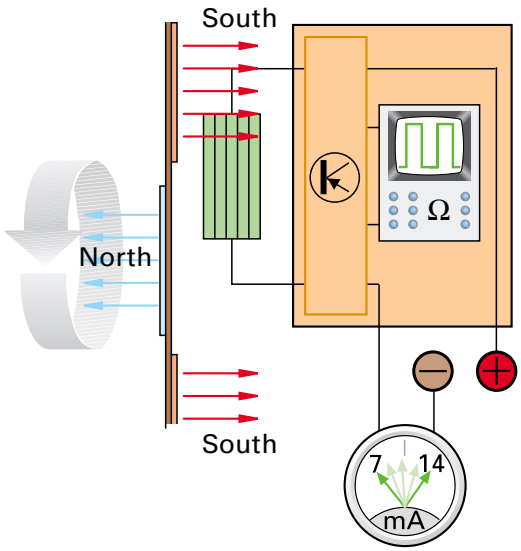

SSP240_072

Advantages

- The rotational speed of the wheel can be measured from 0 km/h and until the wheel is stationary.
- The direction of rotation of the wheel is detected.
- high corrosion resistance
- Compact installation

Diagnosis warning lamps and buttons

If a fault occurs during a control action, the system will try to bring the intervention to an end in the best way possible. After the control action has ended, the sub-system concerned will be switched off and the warning lamps will be activated.

The error that occurred and the activation of the warning lamps will be stored in the fault memory.

The TCS function can be switched off with the TCS button.

Warning lamps/buttons

Warning lamp for braking system K118

ABS warning lamp K47

TCS/ESP warning lamp K155

Button for TCS

Key

ESP - Electronic Stability Program
TCS - Traction Control System
ABS - Anti-lock Braking System
EBPD- Electronic Brake Pressure Distribution
BWL - Brake Warning Lamp

ABS/ESP/BWL lamp activation - Audi A2

System status	Warning lamps			
	Brake K118	ABS K47	ESP K155	TCS button E256 (only TCS off)
Ignition on. Test run for approx. 2 s.				
Undervoltage Suppresses BWL activation for 10 s every time undervoltage is detected				
After 10 s, BWL on				
System OK				
TCS/ESP intervention			flashes	
ESP intervention TCS off via button			flashes	actuated
TCS button off ABS and ESP remain active (currently no ESP intervention)				actuated
ESP failure				
ESP failure TCS button on, i.e. ESP lamp was already on				actuated
ABS/ESP failure Emergency EBPD remains active				
EBPD failure all systems switch off				

Vehicle electrical system

The electrical/electronic connector stations and the control units have also been decentralised on the Audi A2.

This ensures optimum wiring routing.

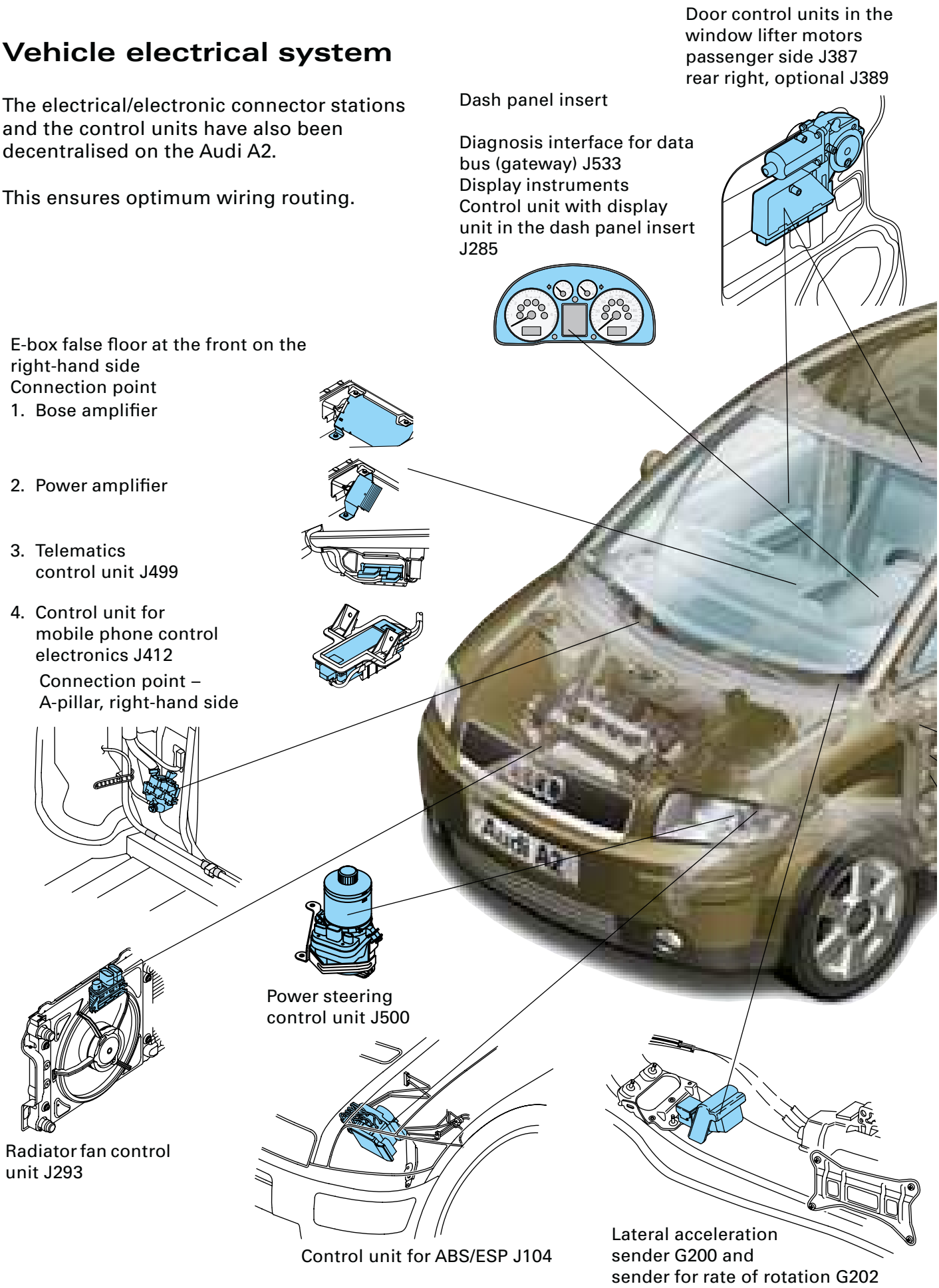

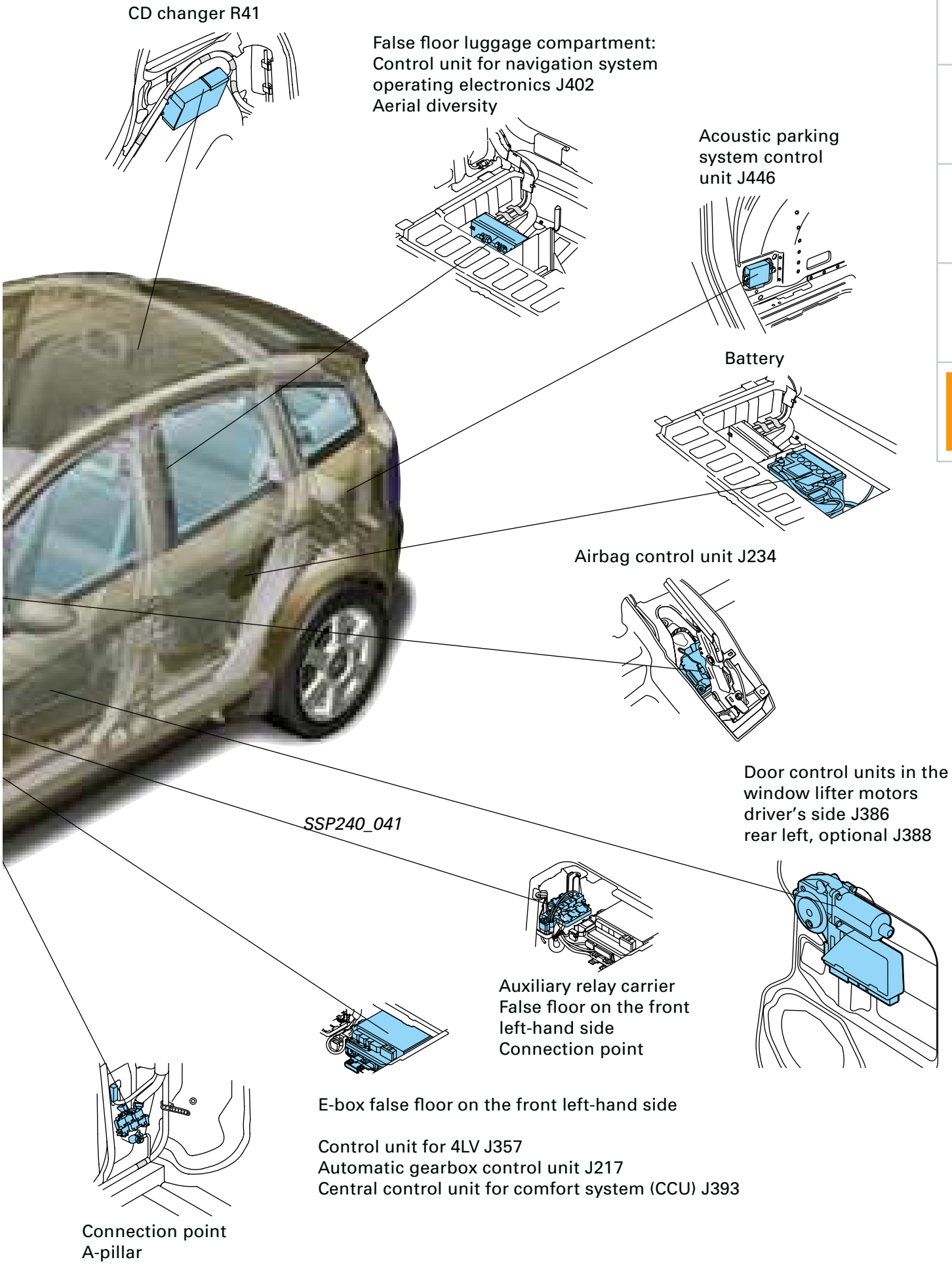
CD changer R41
False floor luggage compartment:
Control unit for navigation system
operating electronics J402
Aerial diversity
Acoustic parking
system control
unit J446
Battery
Airbag control unit J234
Door control units in the
window lifter motors
driver's side J386
rear left, optional J388
SSP240_041
Auxiliary relay carrier
False floor on the front
left-hand side
Connection point
E-box false floor on the front left-hand side
Control unit for 4LV J357
Automatic gearbox control unit J217
Central control unit for comfort system (CCU) J393
Connection point
A-pillar

CAN bus system

A substantially expanded CAN bus system has been installed in the Audi A2.

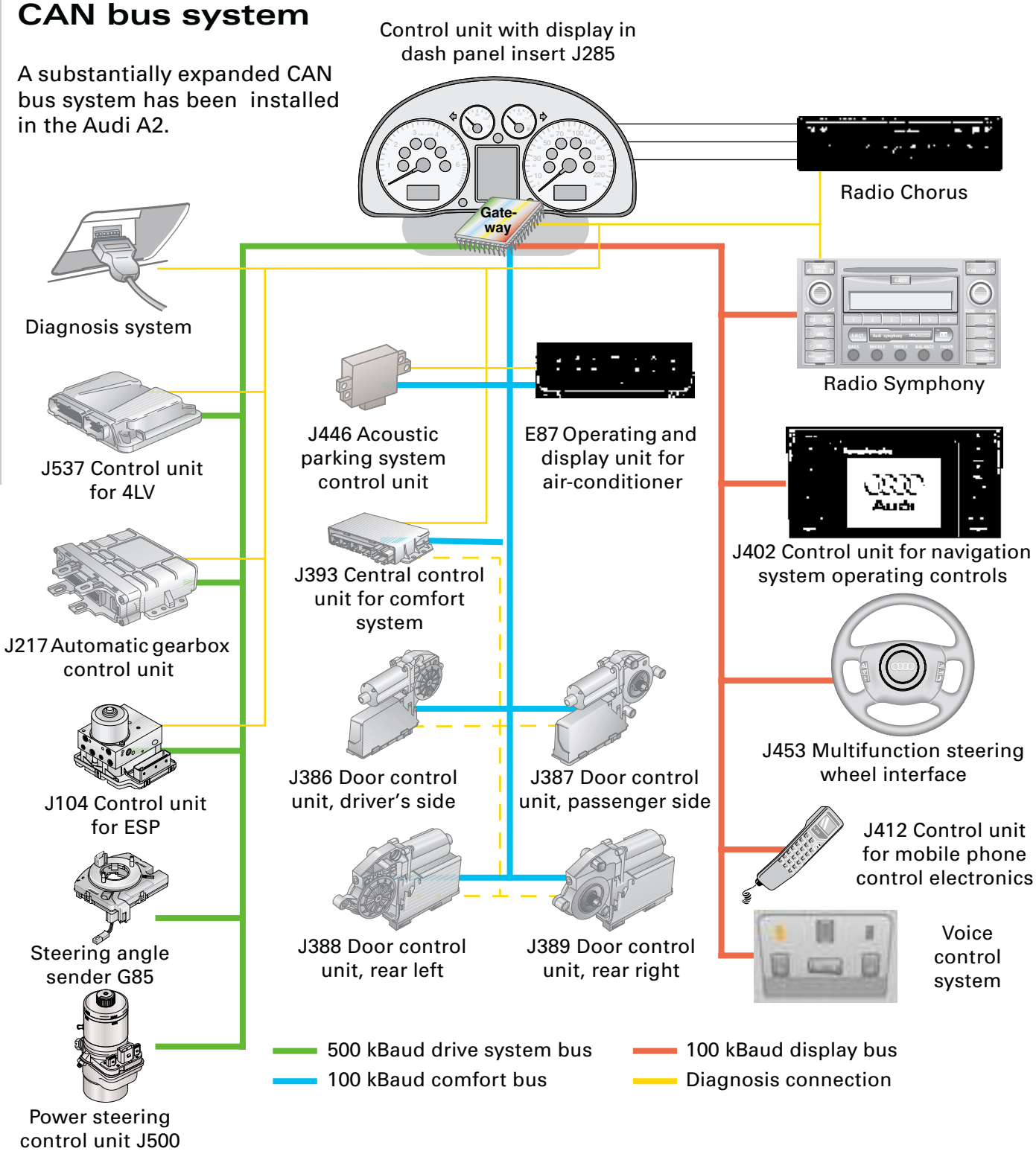

A transmission speed of 500 kBaud has been selected for the drive system bus sub-system to enable fast data transfer within systems that are vital for safety.

A lower transmission speed of 100 kBaud is sufficient for the two comfort and display sub-systems.

However, these systems have been kept separate to keep functional failures low in the event of a fault in the CAN bus sub-system.

Gateway in the dash panel insert

The task of the gateway in the dash panel insert is to facilitate the exchange data between the three CAN bus sub-systems, i.e.:

- the drive
- comfort and
- display (Infotainment) systems

Direct communication between these sub-systems is not possible on account of the different transmission speeds.

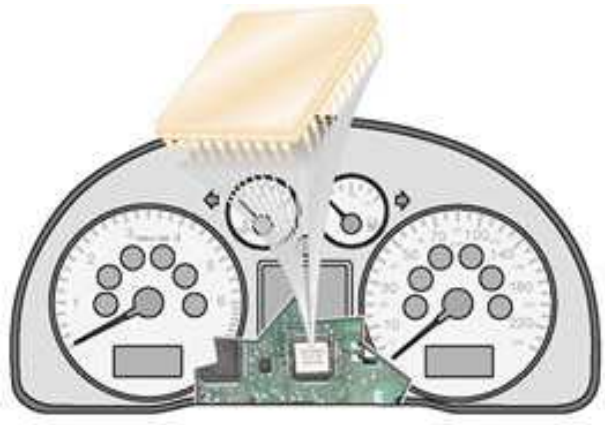

SSP240_088

To exchange information between these sub-systems a connection or an access gateway is required.

The gateway filters the data sets arriving from the bus sub-systems and transfers only the data that the other bus needs.

Example of a data exchange

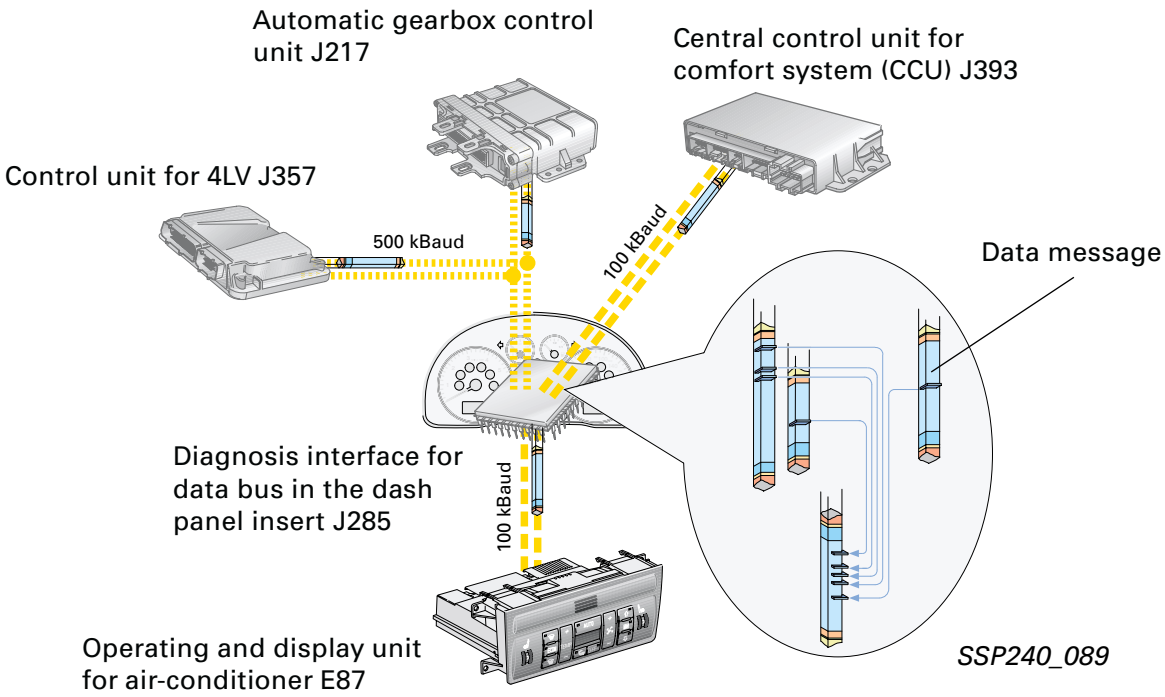

SSP240_089

When fault finding, note that error functions of sub-systems connected to the gateway can be caused by a fault in the dash panel insert or within another CAN bus sub-system.

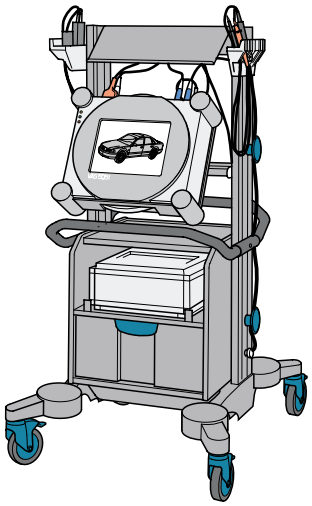

SSP240_090

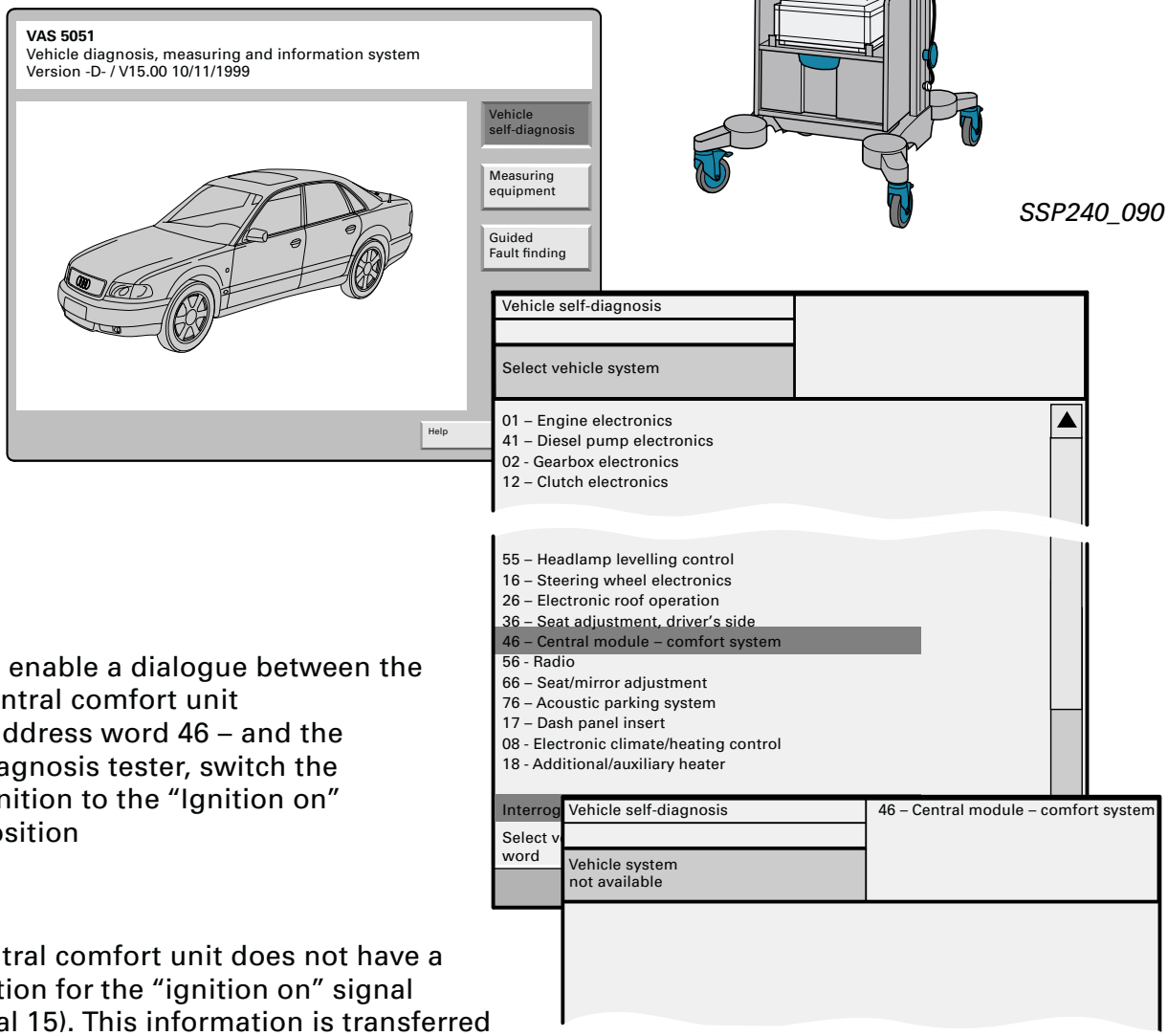

SSP240_017

To enable a dialogue between the central comfort unit
- address word 46 – and the diagnosis tester, switch the ignition to the "Ignition on" position

The central comfort unit does not have a connection for the "ignition on" signal (terminal 15). This information is transferred from the dash panel insert to the central comfort unit via the CAN bus.

For further information on the central comfort unit, see Page44onwards.

If therefore the function has no dialogue, the cause may be
- in the dash panel insert/display
- in its voltage supply
- in the CAN bus connection to the gateway and the central comfort unit

.

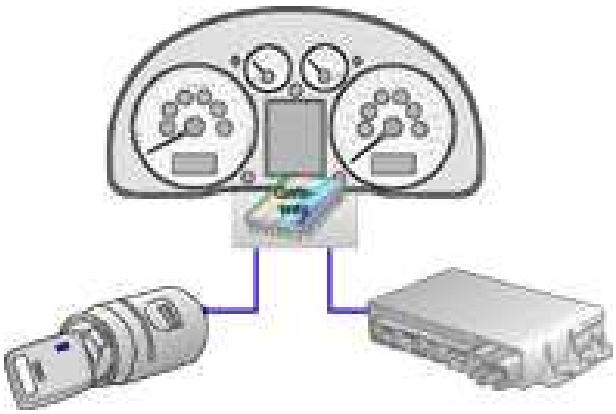

SSP240_092

Immobiliser III

The control unit, J334, for the immobiliser is integrated into the instrument cluster in the dash panel insert J285 or J218. If the control unit is faulty, it is possible, with diagnosis tester VAS 5051, model CD , version 15 onwards, to quickly download the data from the instrument cluster via “Guided fault finding”; the data can then be programmed into the new one.

Select “Skip” to go to the Select Function/ Component menu.

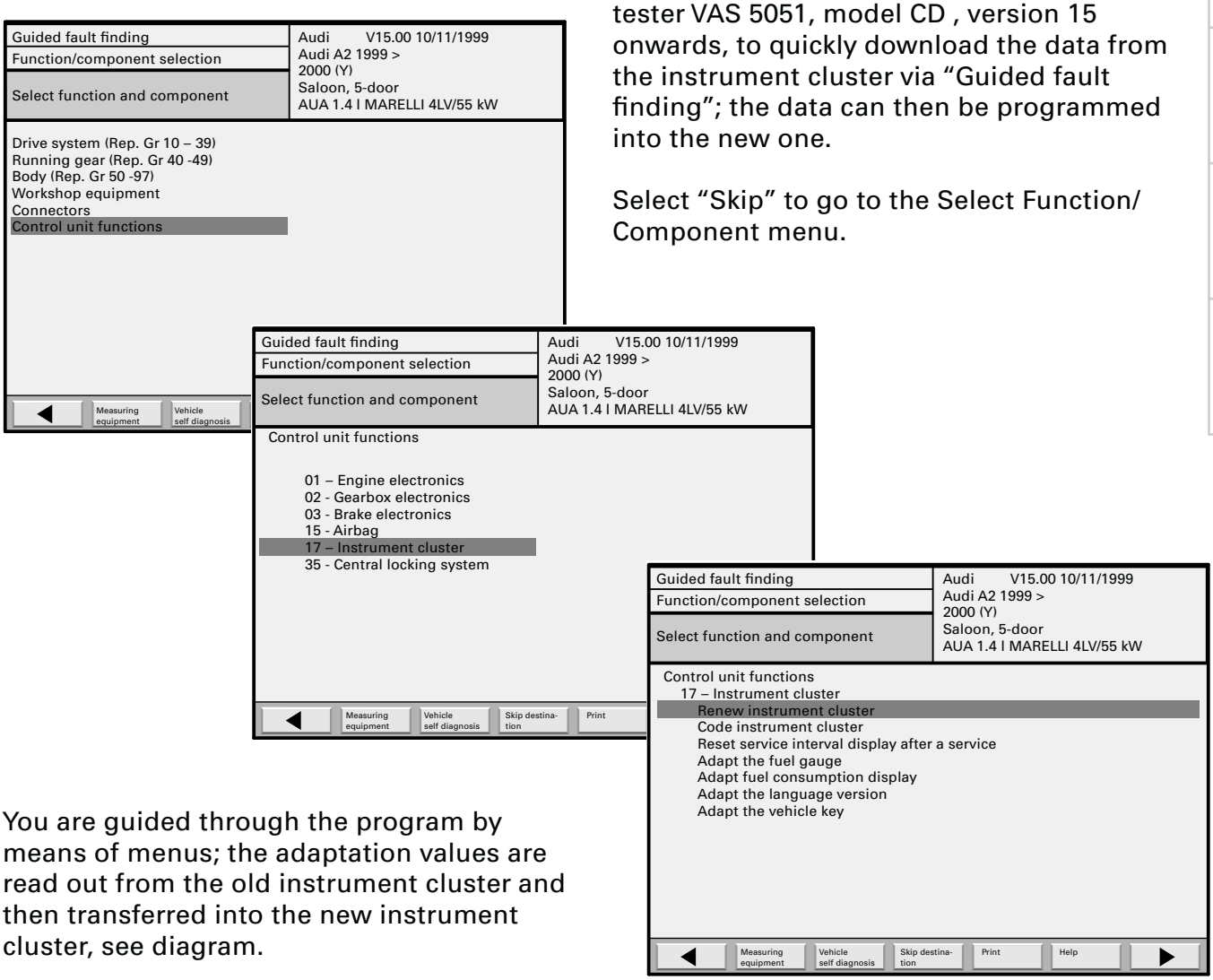

You are guided through the program by means of menus; the adaptation values are read out from the old instrument cluster and then transferred into the new instrument cluster, see diagram.

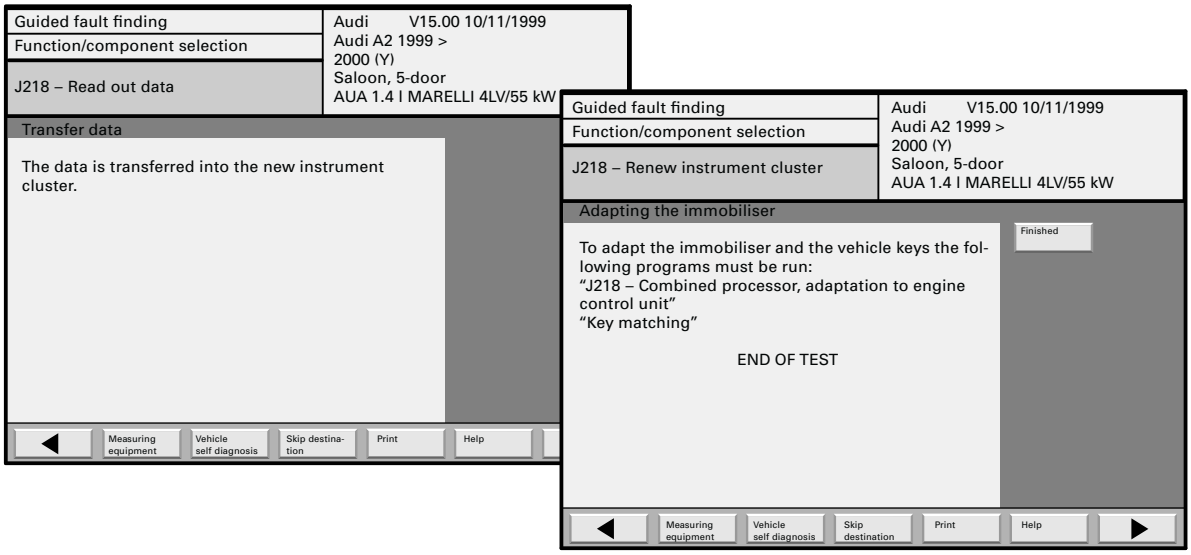

SSP240_093

Comfort system

The comfort system has been installed in the Audi A2 for the first time.

The comfort system comprises the central comfort unit and at least two door control units.

The following functions are performed

Standard equipment:

- Central locking
- Electric window lifters at the front
- Comfort closing
- Interior lighting
- Exit lights

Optional:

- Radio remote control
- Electric window lifters at the rear
- Anti-theft alarm with interior monitoring
- Electric Open-Sky roof

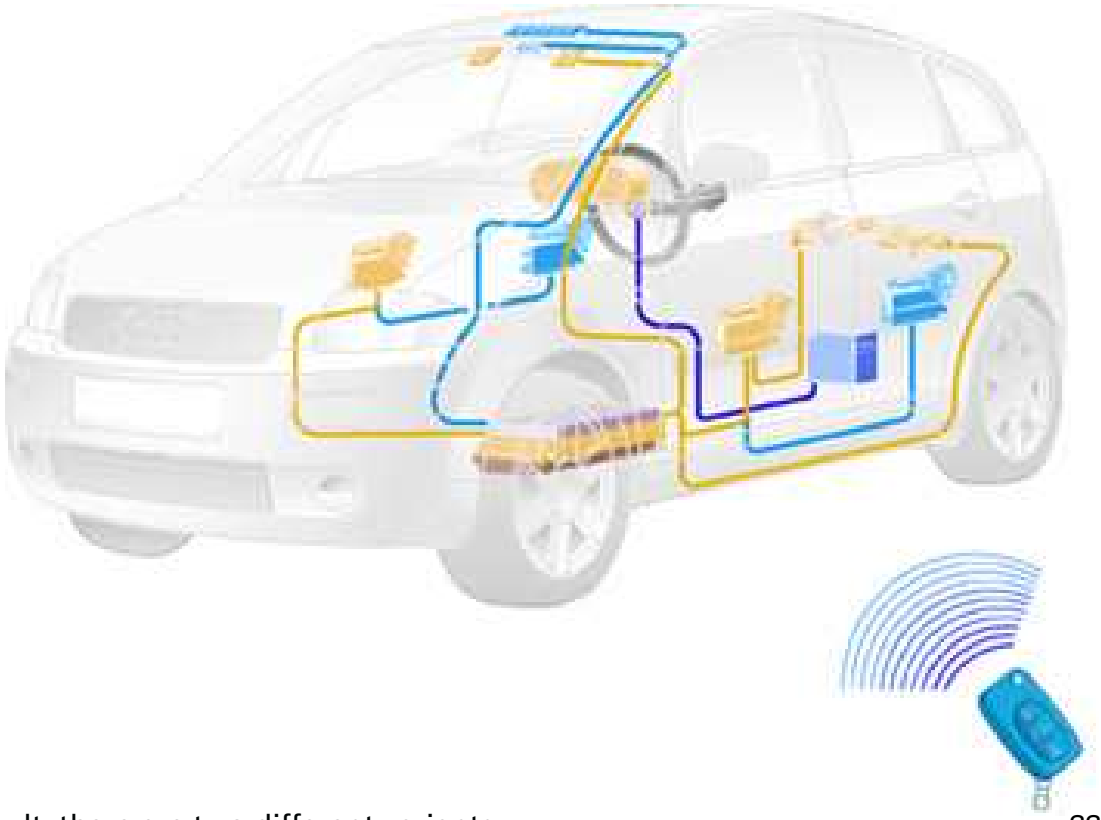

SSP240_094

As a result, there are two different variants:

- A central control unit with two door control units, if electric window lifters are only installed in the front doors.
- A central control unit with four door control units, if electric window lifters are installed in all the doors.

Central control unit for comfort system J393

The central control unit for the comfort system forms the Central Comfort Unit (CCU) and is incorporated into the comfort CAN bus system.

The following information is processed in the control unit and made available to other equipment:

If the rear doors do not have electric window lifters and therefore no door control units, the control of the central locking for the rear doors is taken over by the CCU.

Fuel filler flap release
- Switch for remote release/ fuel filler flap E204

Tailgate release
- Tailgate closed switch F206
- Button for release, tailgate lock cylinder F248
- 3. Remote control button

Anti-theft alarm
- Contact switch for bonnet F120
- Glass break sensor, rear window G304
- Earth contact, radio
- Switch for interior monitoring E183
- Sensor for interior monitoring G209

Aerial for central locking and anti-theft alarm system R47

Handbrake switch F9

Crash signal

Reversing lamp M17

Switch for heated rear window and exterior mirrors E161

when mechanical window lifters are fitted in the rear
- Door contact signal
- Locking signal
- Deadlock signal

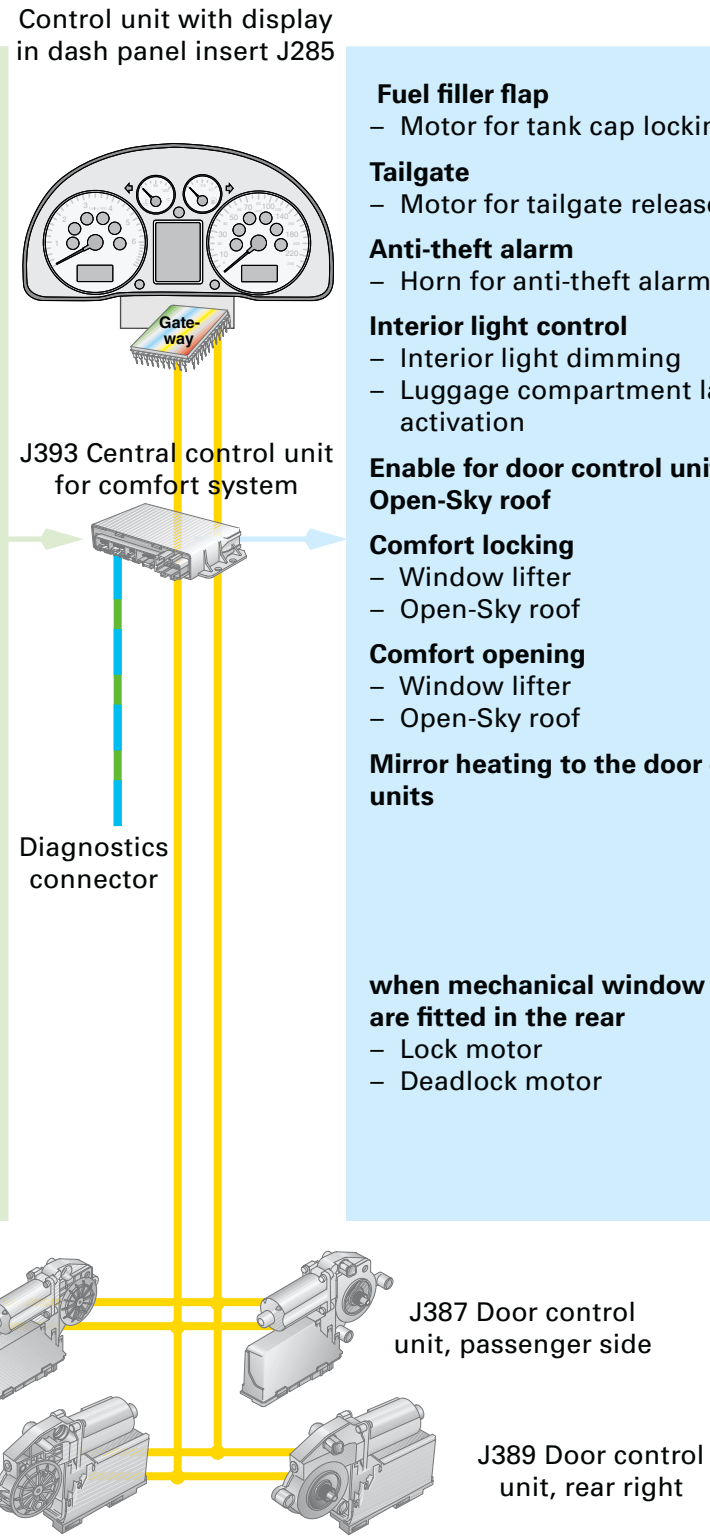

Fuel filler flap
- Motor for tank cap locking V155

Tailgate
- Motor for tailgate release V139

Anti-theft alarm
- Horn for anti-theft alarm H8

Interior light control
- Interior light dimming
- Luggage compartment lamp activation

Enable for door control units and Open-Sky roof

Comfort locking
- Window lifter
- Open-Sky roof

Comfort opening
- Window lifter
- Open-Sky roof

Mirror heating to the door control units

when mechanical window lifters are fitted in the rear
- Lock motor
- Deadlock motor

Door control units

The door control units are integrated into the housing for the window lifter motors and require the following signals:

Window lifter switch

Enable through central comfort unit

Door lock feedback signal
- Door contact signal
- Locked signal
- Deadlock signal

Additionally for the front doors
- Switch for releasing and locking the lock cylinder (passenger door, not if remote control fitted)

In addition for the driver's door
- Central locking switch
- Switch for childproof lock on rear window lifters
- Central window lifter operation
- Changeover switch for mirror adjustment
- Switch for mirror adjustment

Door control unit

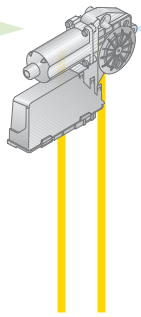

Comfort CAN

Door locking and release

Deadlocking and unlocking of the doors

Electric window lifter with excess force limitation

Switch illumination control system, exit lights

Additionally for the front doors
- Driver's door check LED control system
- Electric mirror adjustment
- Mirror heating

The window lifter motors

are controlled by means of an excess force limitation system. A Hall sensor determines the rotational speed of the motor shaft.

If the door window encounters an obstacle, the Hall sensor detects the change in the motor's rotational speed.

The door control unit then reverses the direction of the window.

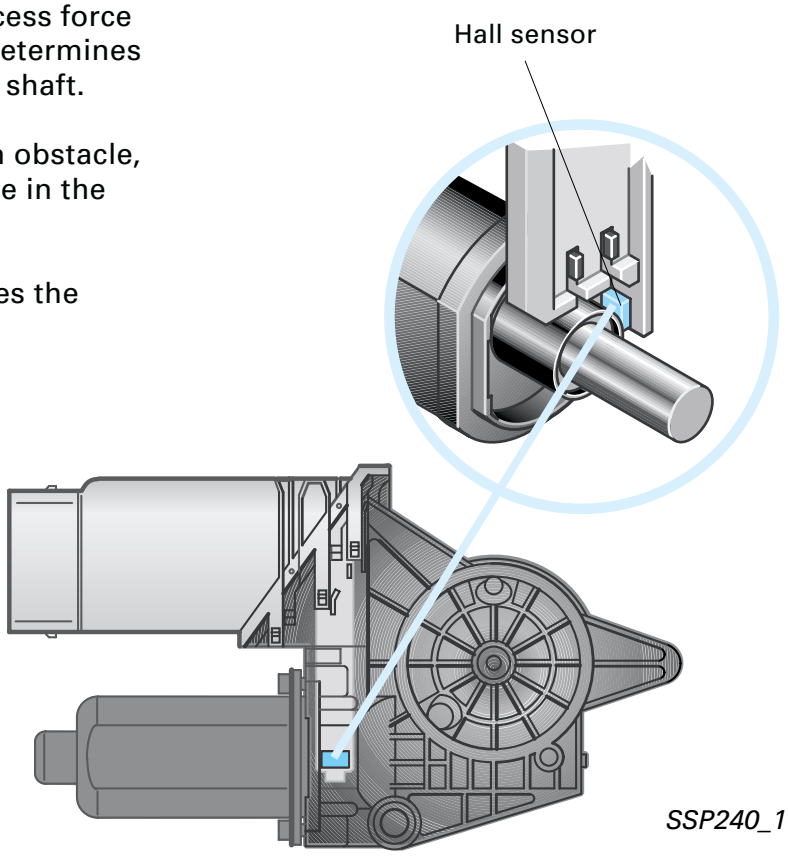

SSP240_104

Window lifter switch

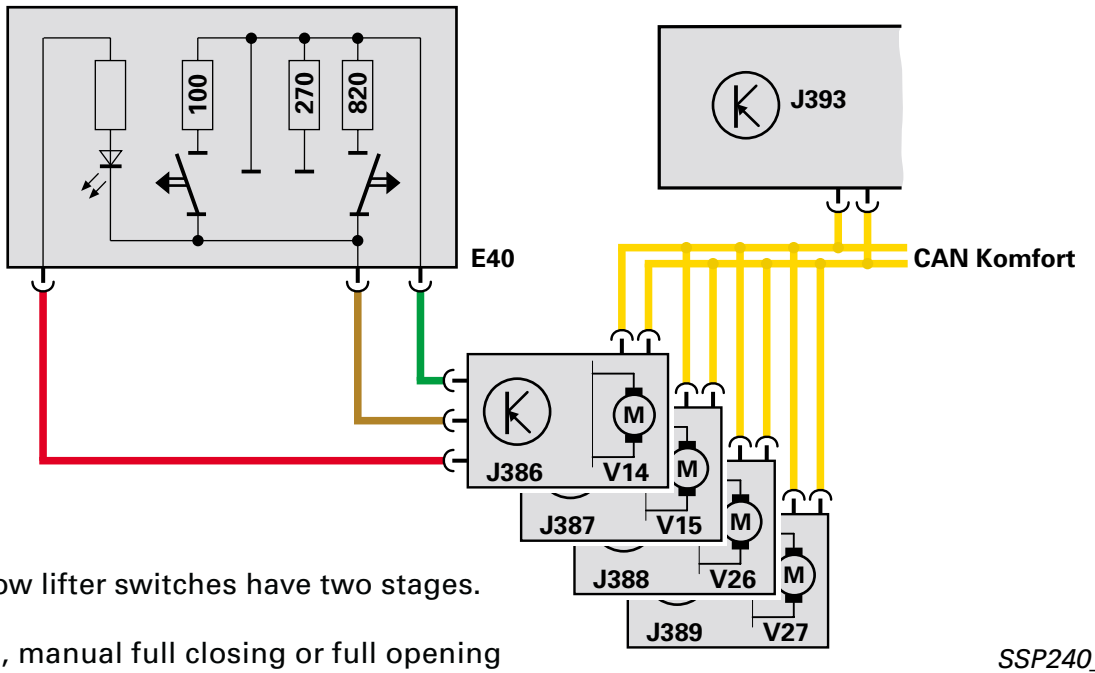

The window lifter switches have two stages.

1. Stage 1, manual full closing or full opening
2. Stage 2, automatic full closing or full opening

SSP240_142

Door lock

Each door lock has two electric motors incorporated into it, one for locking and releasing and one for deadlocking/unlocking.

In addition there are also the following micro-switches in the door locks.

- Locking via lock cylinder (front only)
- Releasing via lock cylinder (front only)
- Lock locked
- Lock deadlocked
- Door contact via 2nd catch on lock latch

Lock open

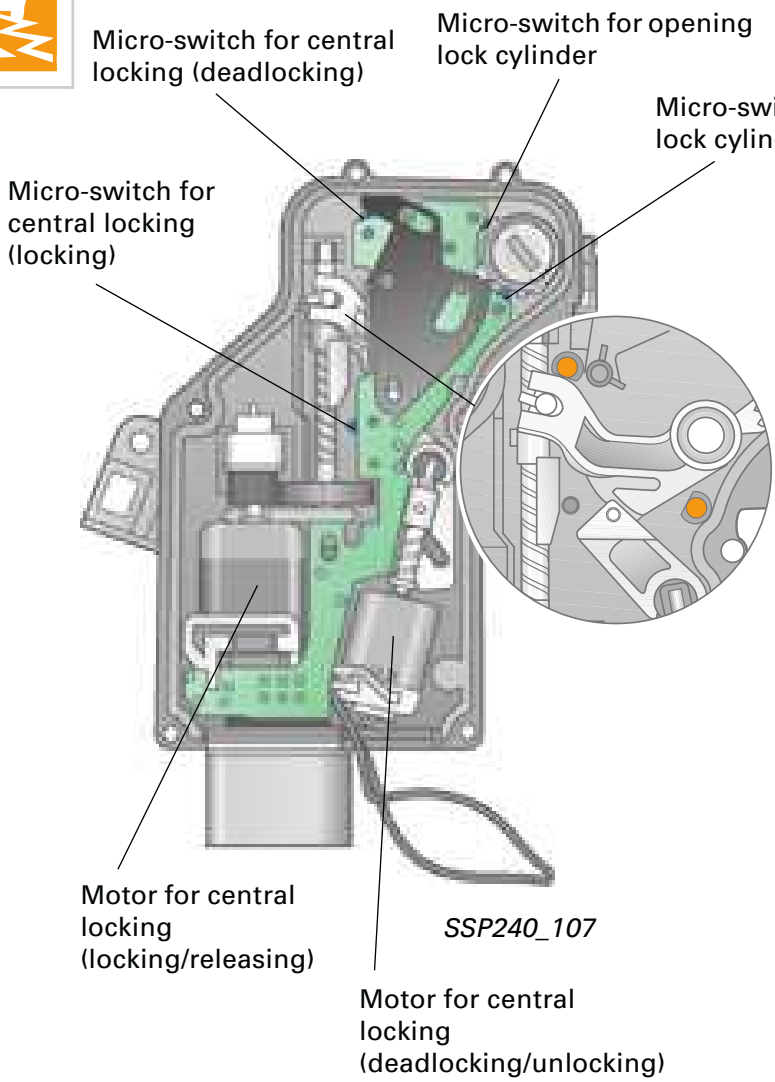

SSP240_107

Lock locked and deadlocked

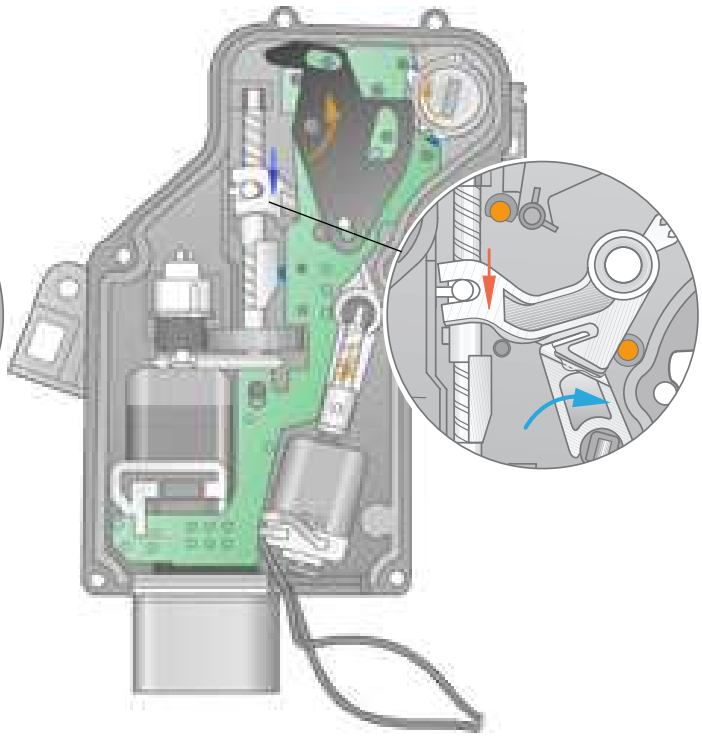

SSP240_108

If the vehicle is fitted with remote control, the lock cylinder is not fitted to the passenger door.

Control system for Open-Sky roof

For safety reasons, the comfort locking function on the Open-Sky roof is only activated via the lock cylinder in the door and not via the remote control. The comfort opening function can also be activated via the remote control.

SSP240_109

The check LED lamp

serves to indicate to the driver when locking the vehicle that there is a fault with the comfort system or the anti-theft alarm.

30 seconds after locking, the LED lamp will flash at a frequency of 0.5 Hz, regardless of whether there is a malfunction. This is so that a system malfunction is not evident outside the vehicle.

LED signals in the driver and passenger doors (anti-theft alarm not fitted)

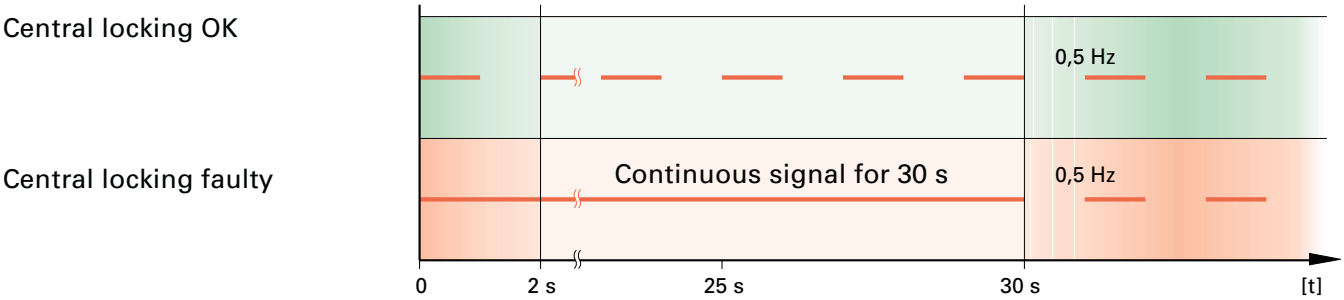

SSP240_110

LED signals in the driver and passenger doors (with anti-theft alarm and infrared monitoring)

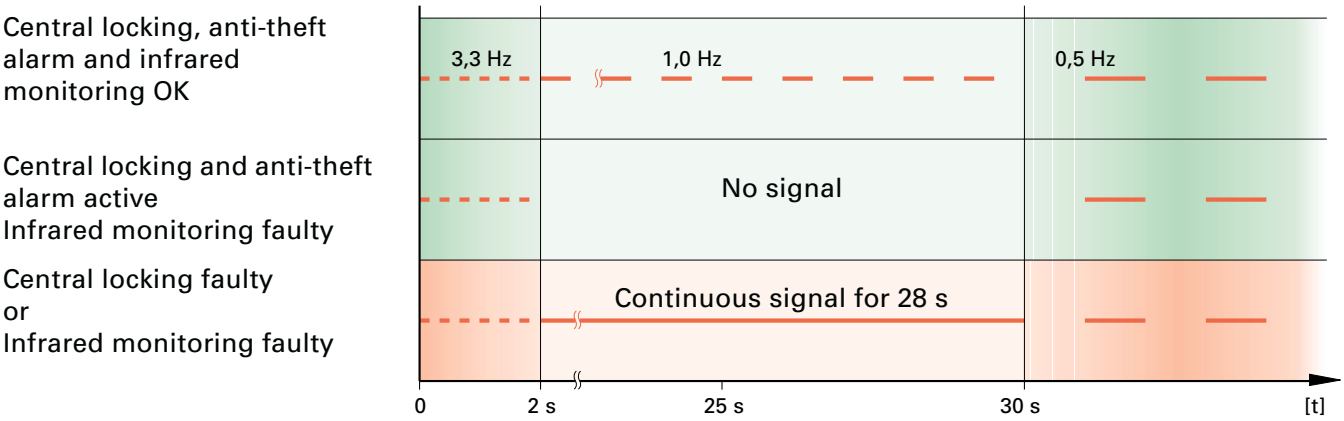

SSP240_111

Anti-theft alarm with interior monitoring

SSP240_112

The comfort system in the Audi A2 can be fitted with an anti-theft alarm and ultrasonic interior monitoring as optional equipment.

The position of the sensors for the interior monitoring does not allow the luggage compartment to be monitored.

Therefore, a glass breakage sensor has, for the first time, been installed in the rear window. This prevents anyone from gaining unauthorised access by breaking the rear window.

When the anti-theft alarm is activated, a wire incorporated into the rear window is checked continually by the central comfort unit for continuity. Any interruption is registered by the central comfort unit which then triggers the alarm.

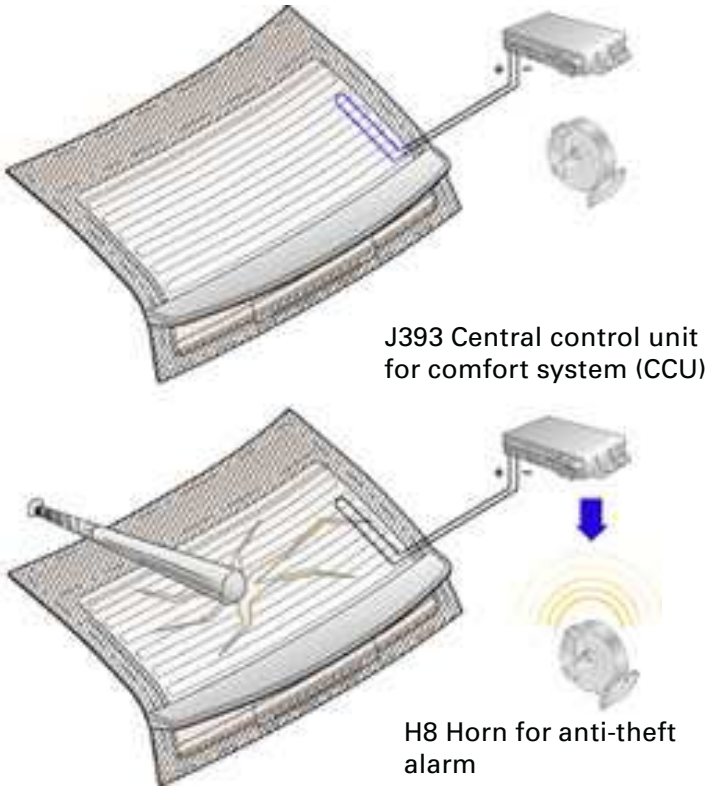

SSP240_113

Diagnostics

The comfort system has diagnostic capabilities.

Address word 46

The self-diagnosis of the entire comfort system is transmitted via the central comfort unit where it is placed on the K-line. The door control units do not have their own address word.

Self-diagnosis can only be called up with “ignition on”.

In the “coding control unit” function it is possible to activate special functions by adding additional values to the standard coding, for example

- selective central locking
- disable rear release after a specific speed threshold has been exceeded
- lock all doors after a specific speed threshold has been passed

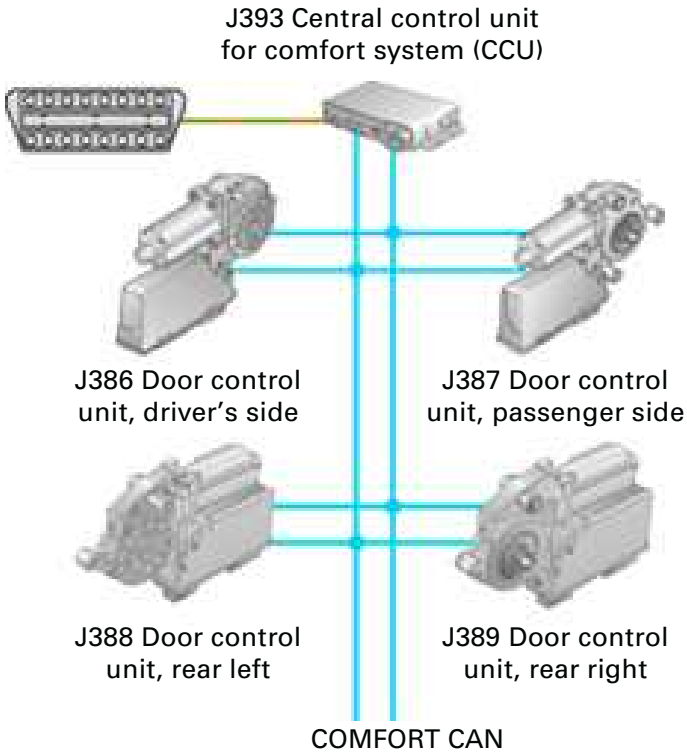

SSP240_114

For additional values and other options, please refer to the coding table in the current repair manual.

In the “adapt channel 21” function, it is possible to match a remote control key even without a second key.

Channel 60 informs the central comfort unit whether an air-conditioner operating panel is present. This is required for controlling the mirrors via the rear window heater.

The system variant is set using channel 61. Information as to whether two or four door control units are installed in the system is input here.

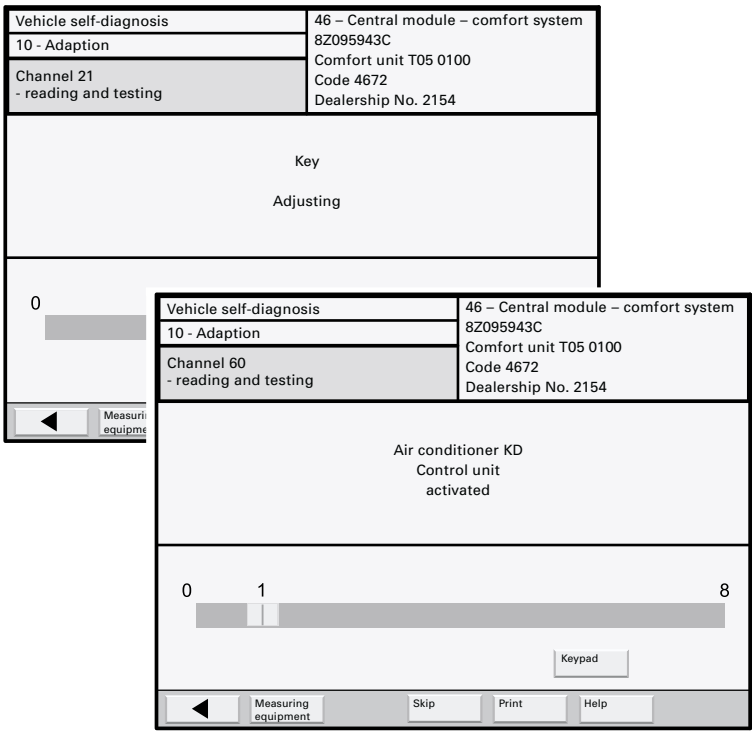

SSP240_115

Functional diagram
Comfort system

E39	Rear window lifter isolation switch
E40	Front left window lifter switch
E40	Front right window lifter switch
E43	Switch for mirror adjustment
E48	Changeover switch for mirror adjustment
E52	Rear left window lifter switch
E53	Rear left window lifter switch, driver
E54	Rear right window lifter switch
E55	Rear right window lifter switch, driver
E107	Window lifter switch, in passenger door
E150	Interior locking switch, driver's side
E183	Switch for interior monitor system
E204	Switch for remote release of fuel filler flap
F2	Door contact switch – driver's side
F3	Door contact switch – passenger side
F9	Handbrake check switch
F10	Rear left door contact switch
F11	Rear right door contact switch
F120	Contact switch for Front Top anti-theft alarm
F131	Front left actuator for central locking
F132	Rear left actuator for central locking
F133	Front right actuator for central locking
F134	Rear right actuator for central locking
F147	Make-up mirror contact switch – driver's side
F148	Make-up mirror contact switch – passenger side
F206	Tailgate closed switch
F241	Contact switch in lock cylinder, driver's side
F242	Contact switch in lock cylinder, passenger side (vehicles without remote control)
F243	Actuator for central locking (deadlock), driver's door
F244	Actuator for central locking (deadlock), passenger door
F245	Actuator for central locking (deadlock), rear left door
F246	Actuator for central locking (deadlock), rear right door
F248	Release button, tailgate lock cylinder
G209	Ultrasonic sensor for anti-theftalarm
G304	Glass break sensor, rear window
H8	Horn for anti-theft alarm
J285	Control unit with display in dash panel insert
J386	Door control unit, driver's side
J387	Door control unit, passenger side
J388	Rear left door control unit
J389	Rear right door control unit
J393	Central control unit for comfort system
M27	Left door warning light
R47	Aerial for central locking and anti-theft alarm system
S	Fuse
V14	Left window lifter motor
V15	Right window lifter motor
V17	Motor for mirror adjustment (driver's side)
V25	Motor for mirror adjustment (passenger side)
V26	Rear left window lifter motor
V27	Rear right window lifter motor
V56	Central locking motor - driver's door
V57	Central locking motor - passenger door
V97	Central locking motor – right rear door
V115	Central locking motor – left rear door
V139	Motor for tailgate release
V155	Motor for tank cap release
V161	Central locking motor (deadlock), driver's door
V162	Central locking motor (deadlock), passenger door
V163	Central locking motor (deadlock), rear left door
V164	Central locking motor (deadlock), rear right door
W	Front interior light
W3	Luggage compartment light
W13	Reading light, passenger side
W14	Illuminated make-up mirror (passenger side)
W19	Reading light, driver's side
W20	Illuminated make-up mirror (driver's side)
W43	Rear interior light

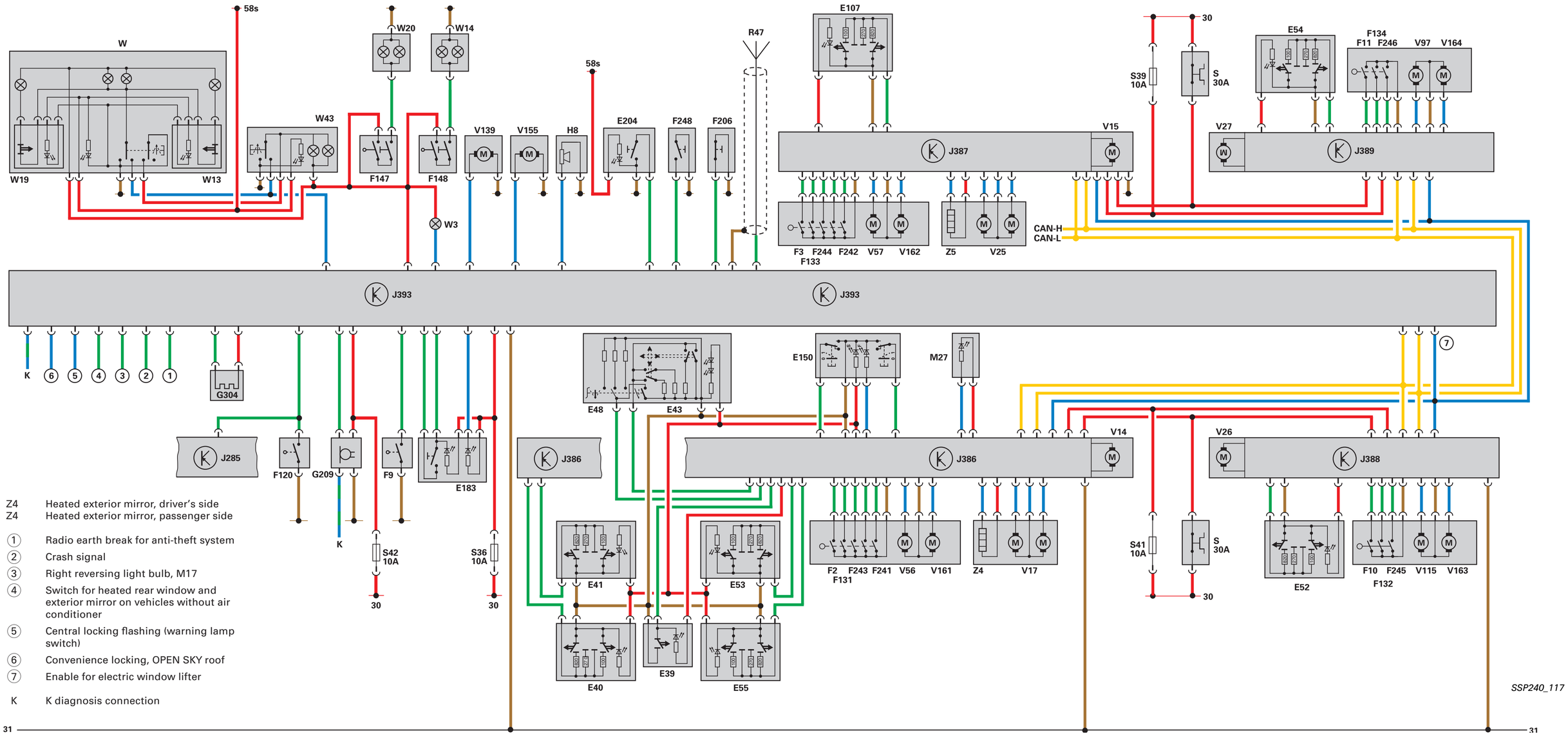
58s
W
W19
W13
W20
W14
W43
F147
F148
W3
V139
V155
H8
58s
E204
F248
F206
R47
E107
J387
V15
F3
F244
F242
V57
V162
F133
Z5
V25
CAN-H
CAN-L
30
S39
10A
S
30A
E54
F134
F11
F246
V97
V164
V27
J389
J393
J393
K
6
5
4
3
2
1
G304
7
E48
E43
E150
M27
J285
F120
G209
F9
E183
J386
J386
V14
V26
J388
K
S42
10A
S36
10A
30
30
E41
E53
F2
F243
F241
V56
V161
F131
Z4
V17
S41
10A
S
30A
30
E52
F10
F245
V115
V163
F132
E40
E39
E55
Z4 Heated exterior mirror, driver's side
Z4 Heated exterior mirror, passenger side
1 Radio earth break for anti-theft system
2 Crash signal
3 Right reversing light bulb, M17
4 Switch for heated rear window and exterior mirror on vehicles without air conditioner
5 Central locking flashing (warning lamp switch)
6 Convenience locking, OPEN SKY roof
7 Enable for electric window lifter
K K diagnosis connection
SSP240_117
31
31

Design and function

The fully automatic air conditioner works along the same familiar principle as the one in the A4 and has been adapted to the centre console of the Audi A2.

Sensors (condition detection) and actuators, together with the control unit, are responsible for automatic temperature and air flow regulation.

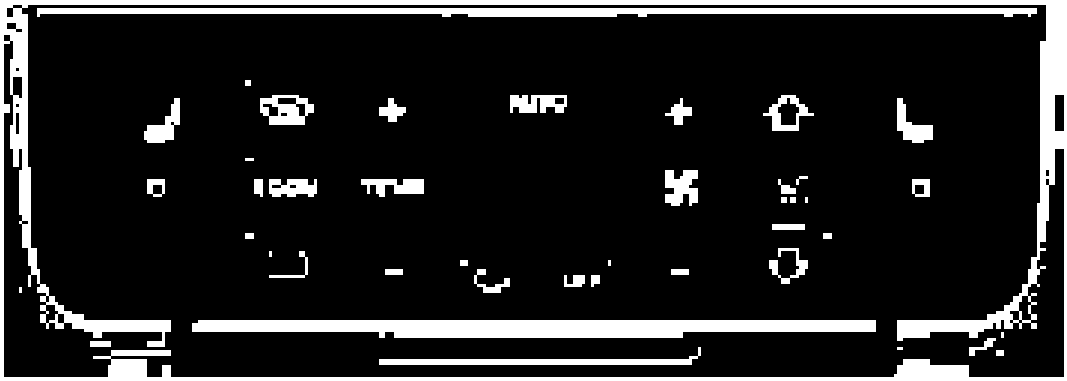

SSP240_001

In the Audi A2, three different bus systems operate at different transmission speeds. The control unit in the dash panel insert forms the interface (gateway) between the bus systems. The comfort databus continues to operate in emergency mode, even if one of the connections fails. A corresponding error message is stored in the fault memory.

When the ignition is switched on, the operating and display unit E87 starts with the temperature, air distribution and fresh-air blower speed settings that were valid the last time the ignition was switched off with this key.

Key identification is done by reading out the fixed transponder code. The immobiliser control unit, integrated into the dash panel insert, makes this information available to the operating and display unit E87, via the CAN bus.

Depending on the vehicle equipment, different control units can be connected to the comfort system control unit via the data bus.

J104	Control unit for ABS with EDL
J217	Automatic gearbox control unit
J285	Control unit with display in dash panel insert
J537	Control unit for 4LV (engine electronics)
E87	Operating and display unit for air-conditioner

Air-conditioner

Fresh-air flap

Fresh-air intake temperature sensor G89

Defroster flap positioning motor V107

Recirculated air flap positioning motor V113

Evaporator outlet temperature sender G263

Central flap

Defrost flap

Fresh-air blower V2

Recirculated-air flap

Central flap positioning motor V70

Pollen filter insert

Footwell flap

SSP240_002

Heat exchanger and PTC additional heater Z35

Sender for footwell vent temperature G192

Temperature flap positioning motor V68

Temperature flap

Distribution for dash panel vent

Centre vent temperature sender G191

SSP240_043

The air conditioner is a modular unit. Starting with a base unit, the other variants (i.e. semi or fully automatic control, additional heater, left or right-hand drive vehicles) can be created by adding additional components or swapping components.

The pollen filter is located in a housing insert between the fresh-air blower and the air distribution.

It is accessible from the passenger compartment.

After detaching the filter cover (push-fit components), the filter can be taken out from below.

On vehicles without air conditioner, the series resistor for the fresh-air blower N24 can be removed after removing the glove box.

After disconnecting the connector, the series resistor can be removed from the housing by twisting it to the left.

Vehicles with air conditioners do not have a series resistor. The fresh-air blower is regulated by the fresh-air blower control unit J126. It can be renewed after first removing the glove box and the fresh-air blower.

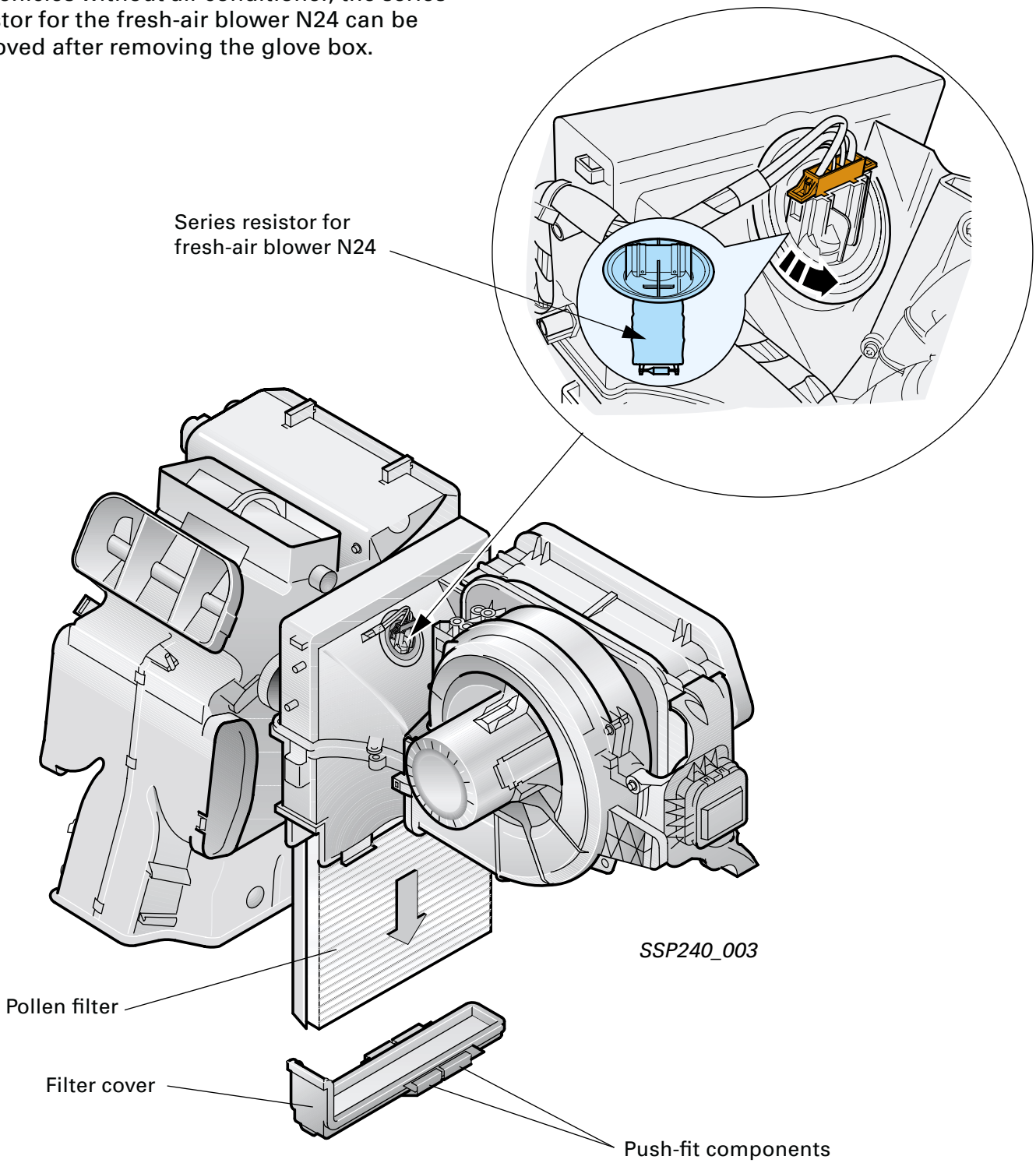

Air distribution

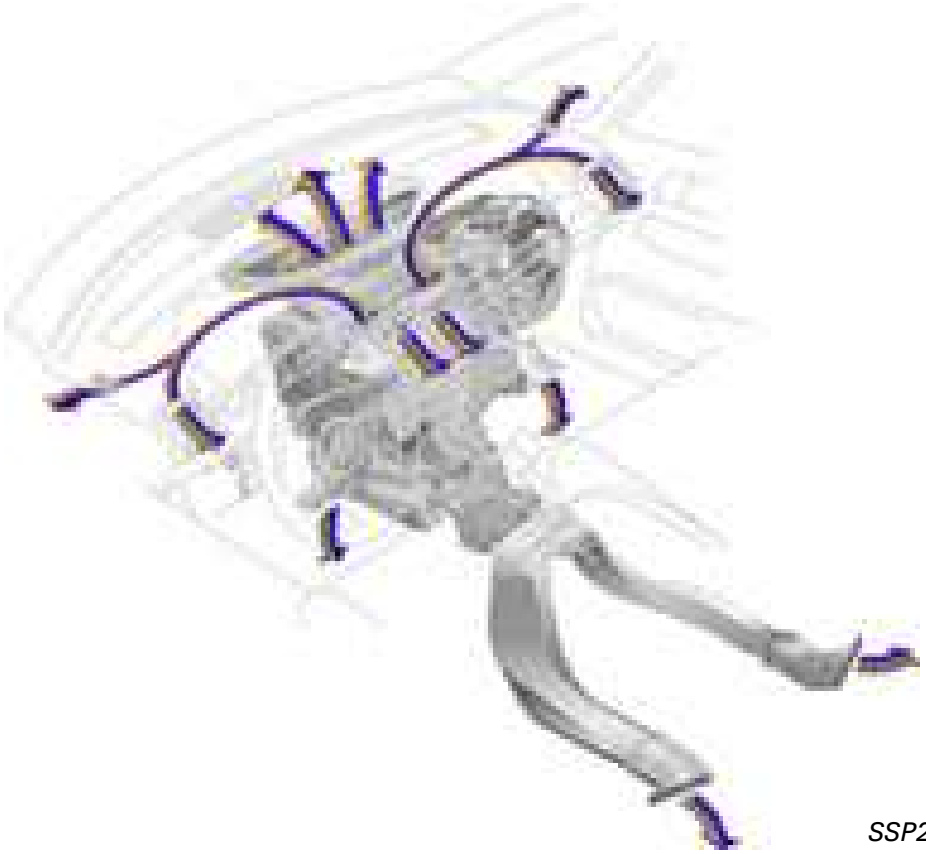

SSP240_007

Air distribution in vehicle interior

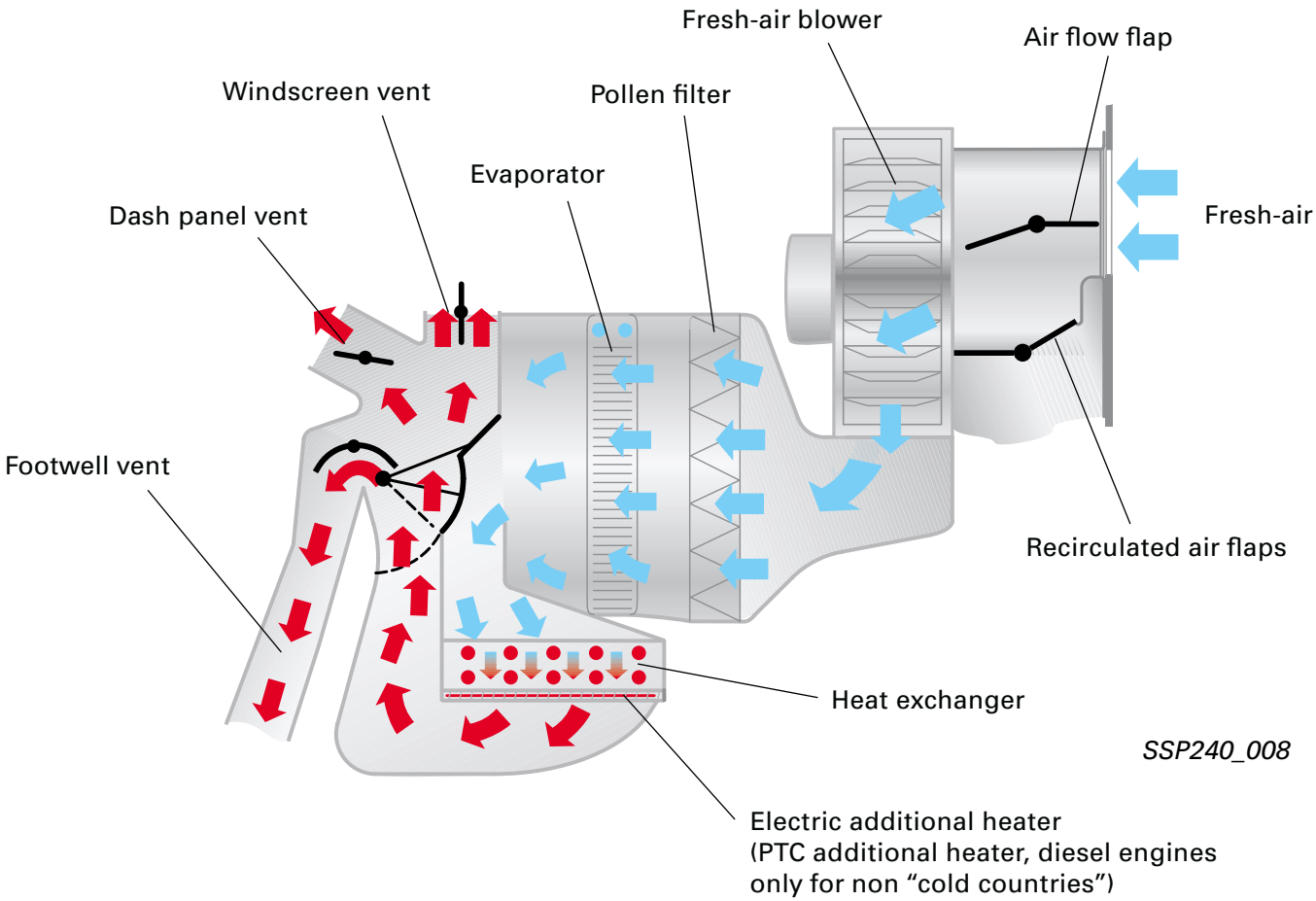

SSP240_008

Fresh/recirculated air flaps

The fresh-air/recirculated air flap is switched electrically by means of a positioning motor.

Using a system of levers, both flaps are adjusted as a function of each other, depending on the driver's requirements. In the "Defrost" position, the recirculated air switch is disabled electronically.

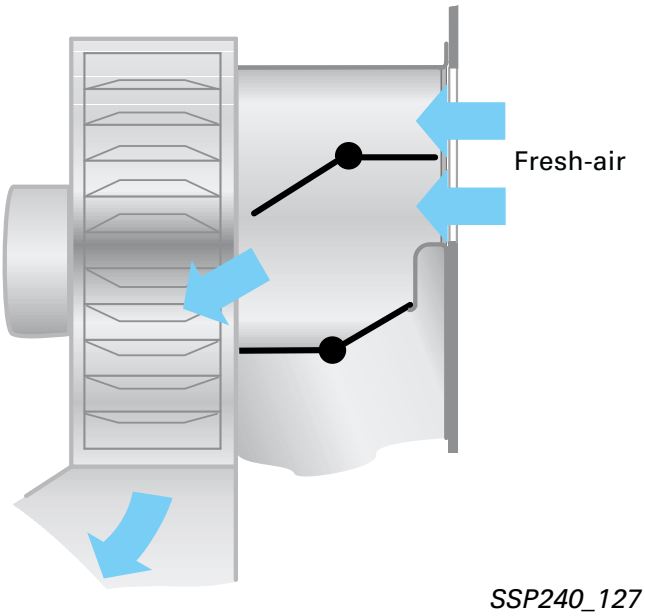

Flaps – fresh-air position

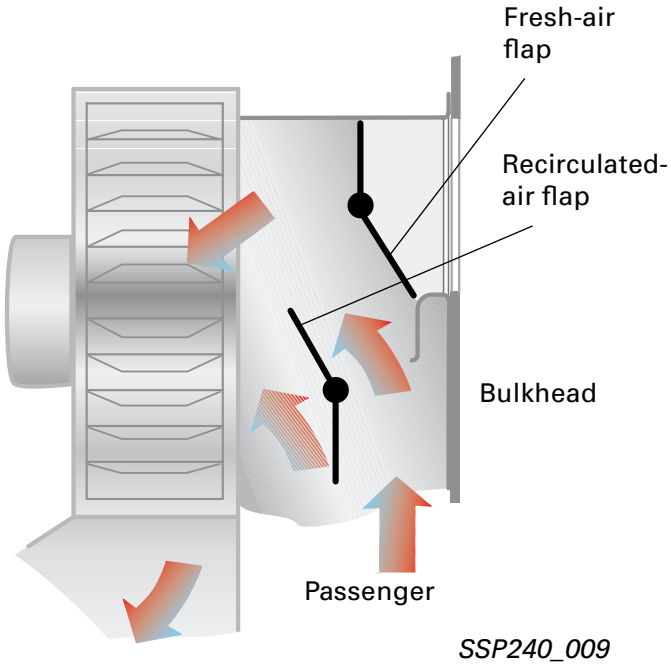

Flaps – recirculated air position

The heat exchanger is located at the bottom on the air distributor housing of the air conditioner.

It is possible to remove the heat exchanger with the air conditioner still in position.

The two coolant connections are held in place with two spring clips.

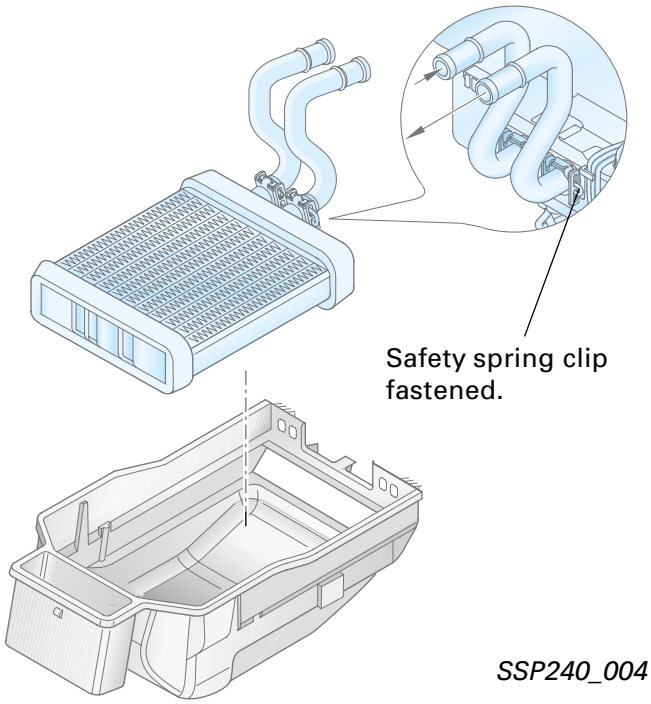

Compressor

The concept of the new compressor

- single-side operating swash-plate compressor with 6 reciprocating pistons
- variable displacement to match cooling requirements

Distinctive features:

- External control function by means of regulating valve N280
- Tubular piston
- Belt pulley drive (no magnetic clutch)

Belt drive:

- The compressor continues to operate when the system is switched off.
  The delivery rate in this case is below 2 %.

Operation

The regulating valve for the air conditioner compressor, N280, is controlled steplessly by the air conditioner operating and display unit, E87. This brings about a change in the pressure conditions in the compressor housing.
The slant of the swash plate changes and thereby determines the displacement.

For compressor control, external conditions, i.e., the temperature required by the occupants, the weather and thermal load in the system, are evaluated.

This task is done by the operating and display unit E87. It also evaluates a square-wave signal from the high-pressure sender, G65, that is dependent on the pressure in the refrigerant circuit.

The pulse width –A- increases as pressure increases. A signal ratio is produced from the pulse width –A- and signal distance –B-; the signal ratio is processed in the operating and display unit E87, i.e. a high signal ratio equals a high cooling performance and vice versa.

Depending on the various parameters that can have a regulating effect, the operating and display unit calculates a signal ratio as a setpoint selection for the flow of current to the regulating valve N280. The evaporator temperature at sender G265 is the reference signal for compressor control.

An optical and acoustic check of the system is no longer possible on account of the fact that there is no longer a magnetic clutch.

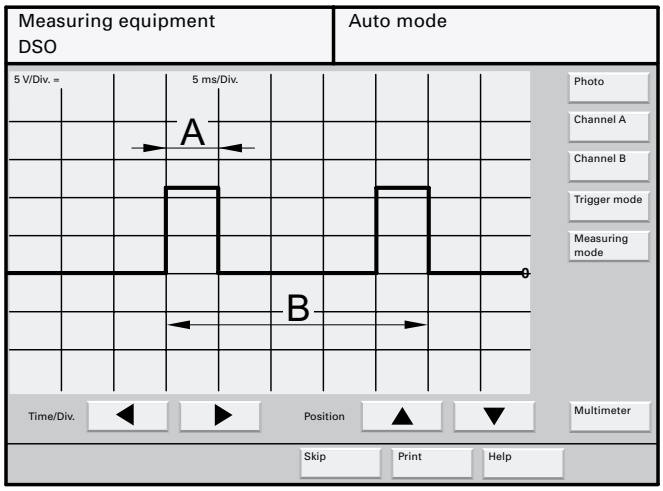

SSP240_118

Compressor at zero delivery

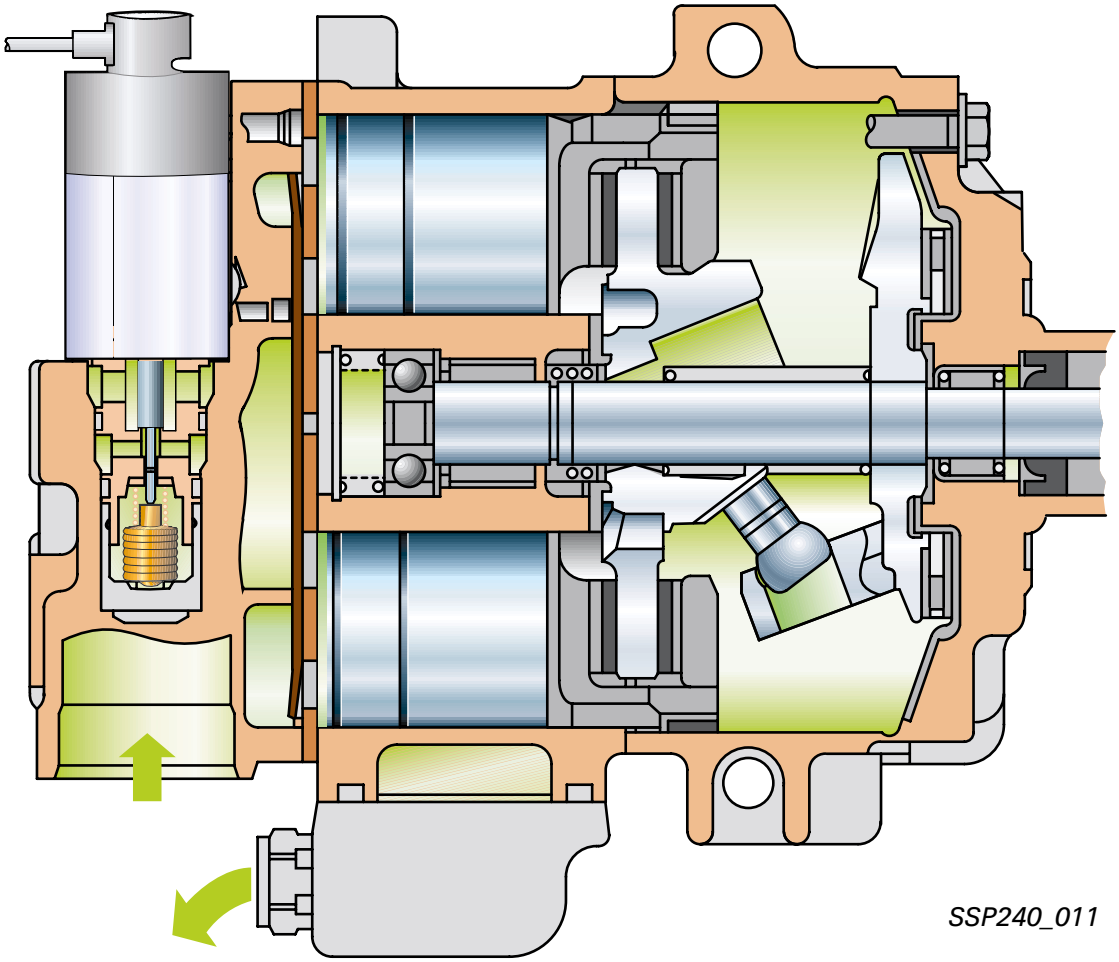

The compressor displacement can be varied by the slant of the swash plate. If the air conditioner compressor is not working, the swash plate is vertical (the stroke of the pistons is less than 2 %).

The swash plate is adjusted by the difference in pressures in the compressor.

- Suction pressure
  Pressure on the low pressure side of the system or pressure of the refrigerant upstream of the compressor.

- High pressure
  Pressure of the refrigerant after compression, main pressure for adjusting the swash plate towards full load.

- Crankcase pressure
  Backpressure in the crankcase of the compressor together with the swash plate return spring towards0 fill.

The regulating valve is responsible for balancing these differences in pressure; the regulating valve is exposed to all pressures.

The high pressure and the crankcase pressure are the main influences on the equilibrium of forces resulting from the pressures.

The high pressure acts on the piston in the compression chamber and tries to increase the slant of the swash plate = greater displacement.

The crankcase pressure develops a force that wants to move the swash plate into a vertical position.

Compressor at full load

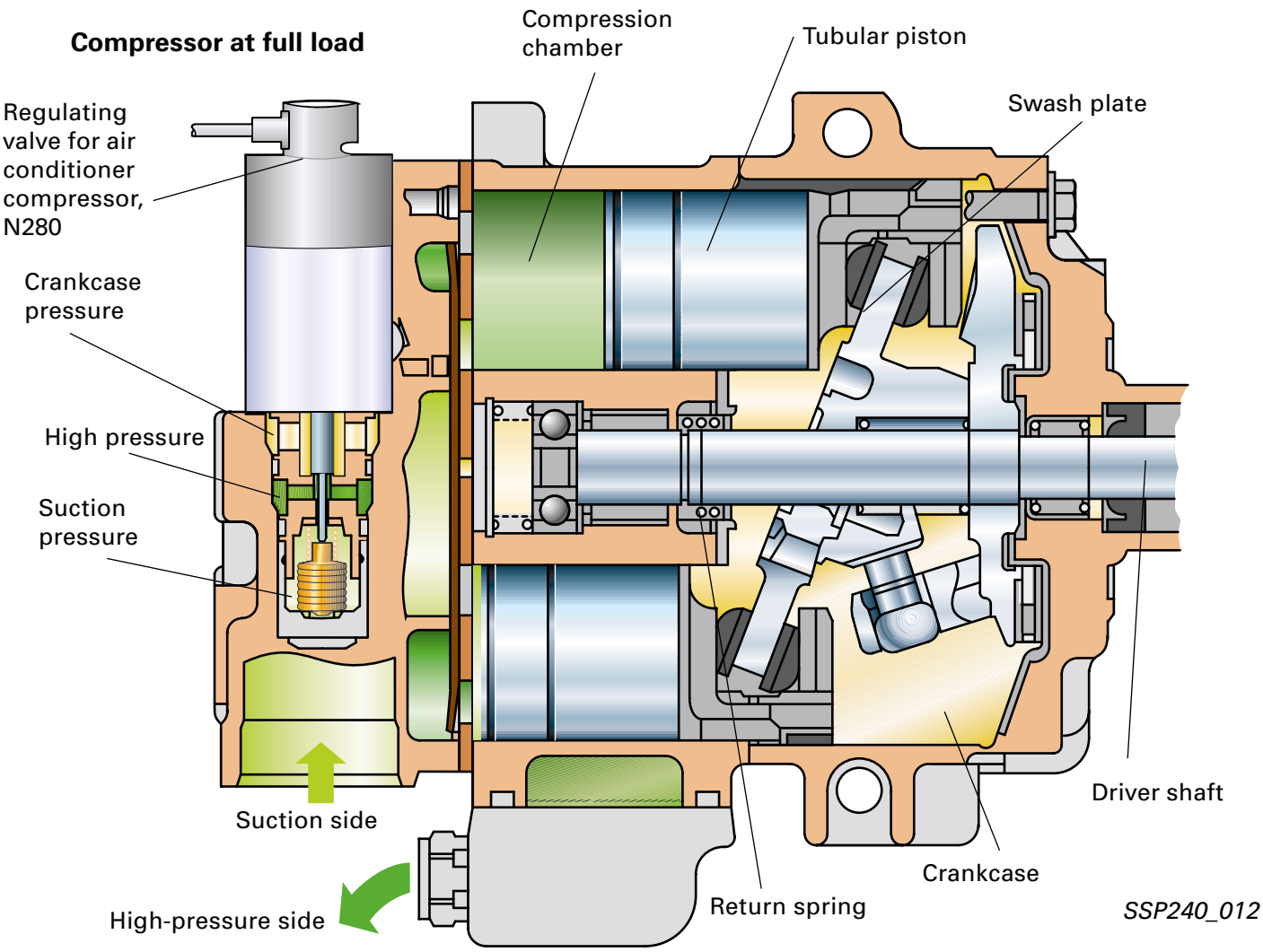

The electromagnetic regulating valve, N280, has a plunger and a pressure element.

The suction pressure determines the position of the pressure element, and thereby the regulating travel of the plunger.

If a higher cooling performance is required, the operating and display unit activates the regulating valve.
This moves the plunger down and reduces the cross section of the join between the high pressure (dark green) and the crankcase pressure (yellow).
This results in the high pressure becoming dominant; it then moves the swash plate to a slanting position by means of the piston.

If a lower cooling performance is required, the cross section of the join (between high pressure and crankcase pressure) is increased.

This causes the pressures in the compression chamber and the crankcase to balance out.

This moves the swash plate towards a zero delivery position, with the help of the return spring.

A signal ratio of 400 Hz enables the regulating valve, N280, to keep the push-rod in a “floating” state, thereby achieving optimum pressure regulation.

Pulley

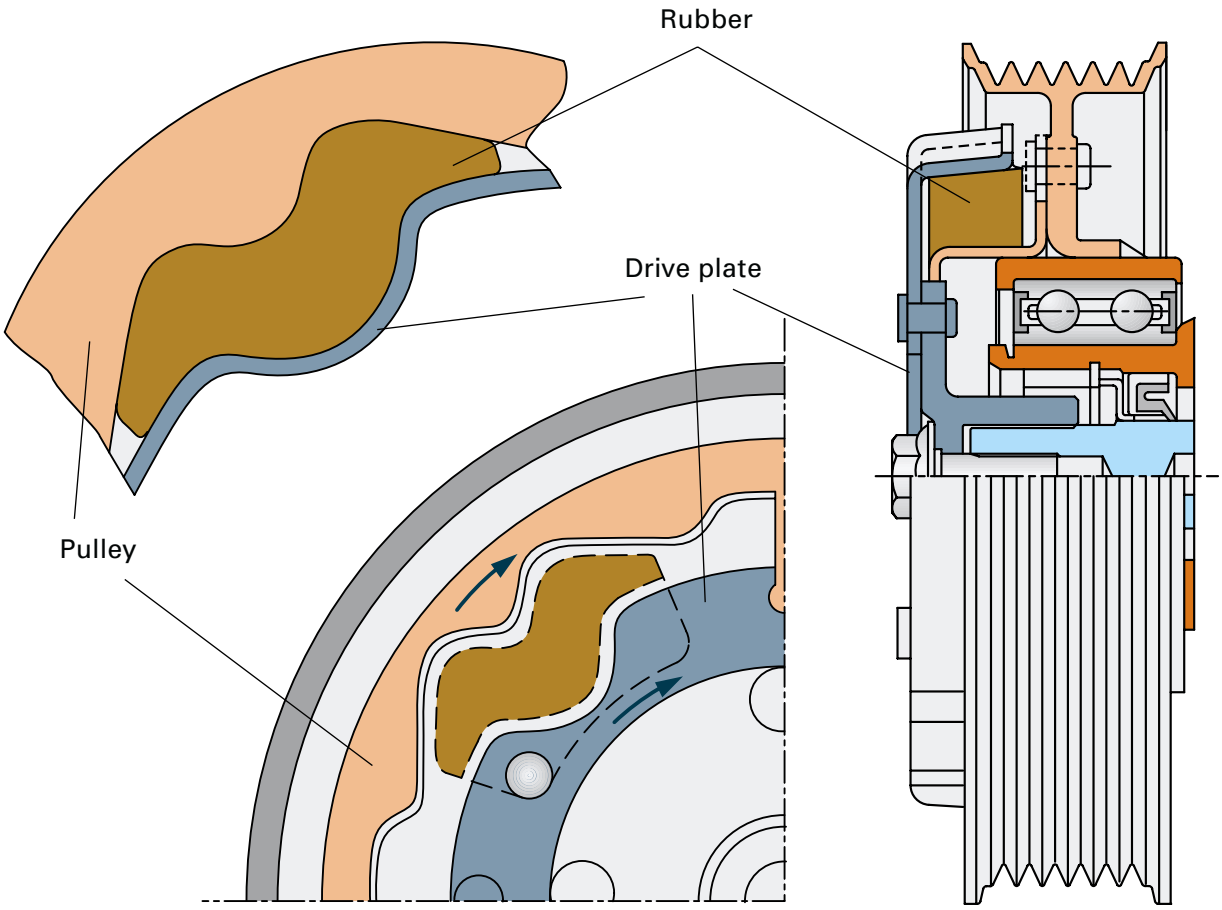

SSP240_040 *SSP240_013*

The pulley comprises a drive plate and a pulley.

The two components are joined together in a frictional connection by 1 moulded rubber element.

The rubber element with 4 recesses joins the pulley and the drive plate.

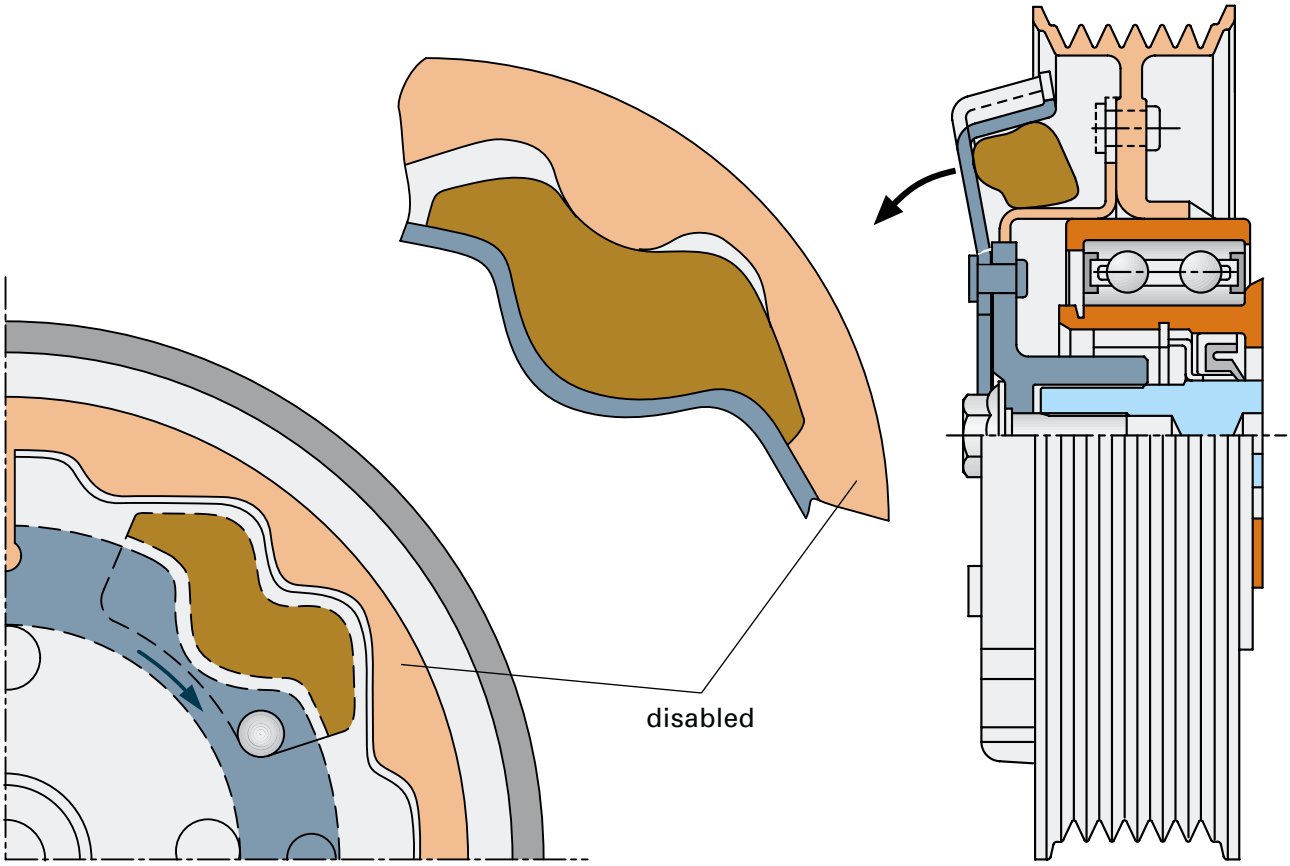

SSP240_040 *SSP240_014*

If a hazardous situation occurs – compressor is disabled – the transmission forces between the drive plate and the pulley increase considerably in the area around the moulded rubber parts.

The pulley pushes the rubber element in a rotating motion on to the disabled drive plate.

The rubber element deforms at the 4 recesses. The pressure on the drive plate increases and deforms it until there is no connection between the pulley and the drive plate. This prevents damage to the single-belt drive.

Additional heaters

PTC additional heater Z35

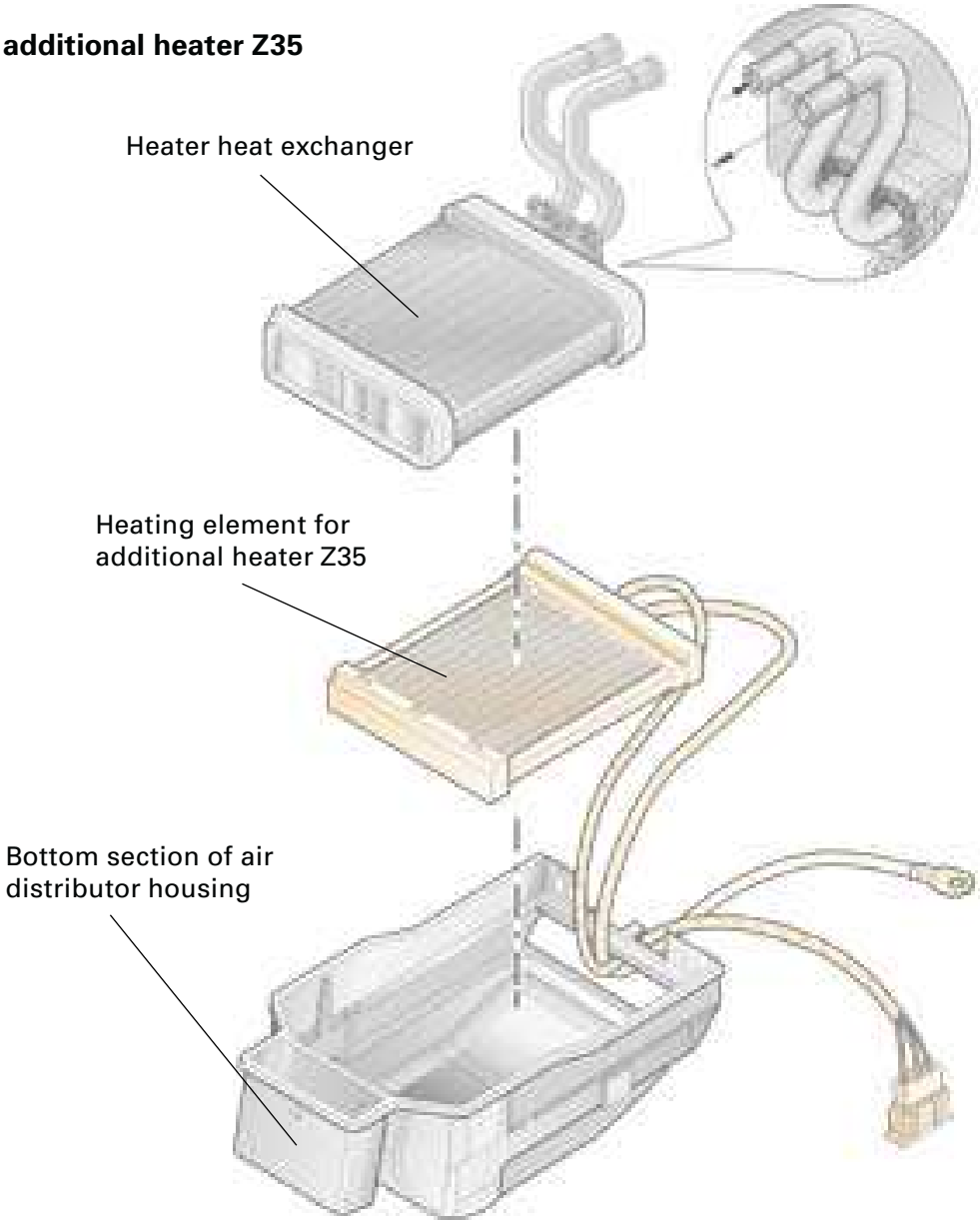

SSP240_005

In some countries, the heaters in vehicles with diesel engines is backed up by an electric additional heater.

When cold starting at low ambient temperatures, engines that are optimised for fuel consumption do not give off enough heat to the coolant to enable the passenger compartment to be heated with a conventional heater.

For this reason, it is advantageous to incorporate a PTC heater as an additional heater in the air conditioner.

It warms the air fed into the passenger compartment by using electrical energy from the vehicle's electrical system.
As a result, heat is instantly available after a cold start.

The PTC, a positive temperature coefficient thermistor, converts electrical energy into heat.

Power is supplied by means of two contact plates. They conduct the heat to the corrugated fin where the air fed into the passenger compartment is warmed.

Coolant additional heater

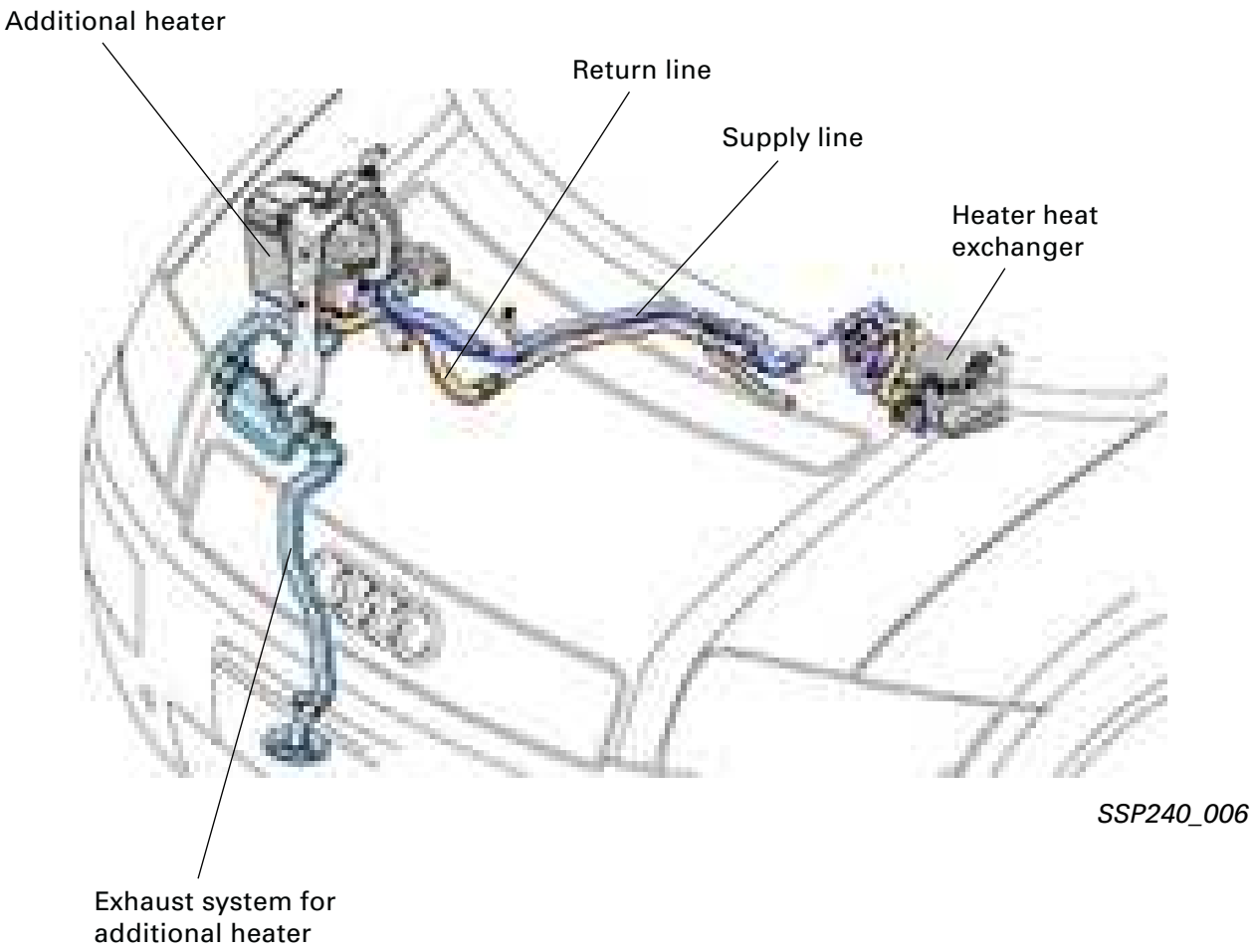

SSP240_006

This “additional heater” is mainly intended for the Audi A2 TDI vehicles in specific countries.

Its purpose is to heat up

- the engine’s coolant circuit and
- the passenger compartment (windscreen de-icing, demisting) more quickly

The control unit has diagnostic capabilities (address word 18). Entries in the fault memory are retained even after the power supply has been interrupted.

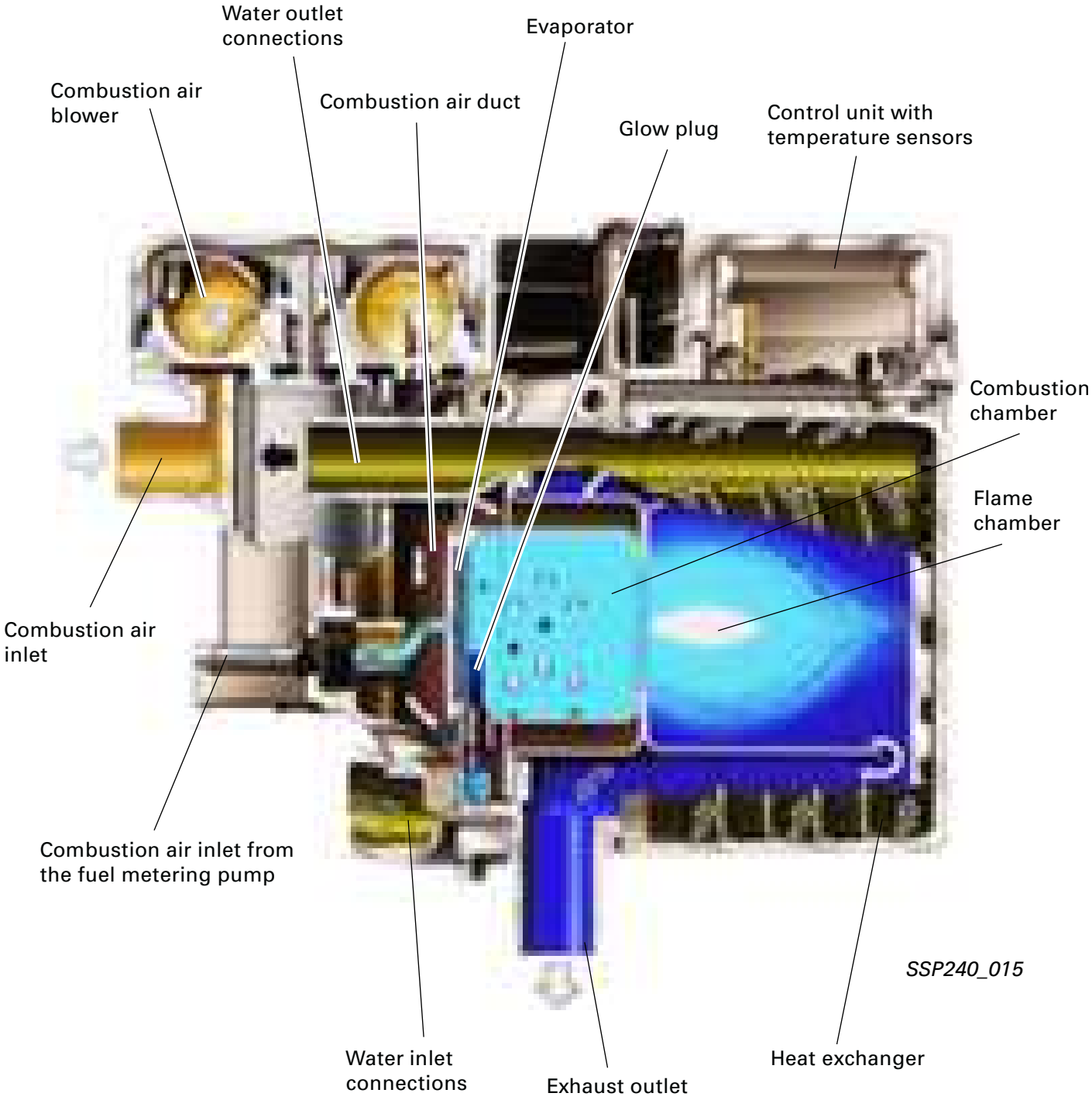
Water outlet connections
Evaporator
Combustion air blower
Combustion air duct
Glow plug
Control unit with temperature sensors
Combustion chamber
Flame chamber
Combustion air inlet
Combustion air inlet from the fuel metering pump
SSP240_015
Water inlet connections
Exhaust outlet
Heat exchanger

Sequence of operation

1. Hot water circuit

The water inlet of the coolant to be heated up is on the water inlet connection. After the heating phase, the water is led, via the water outlet, through the heat exchanger to the heating circuit of the engine.

2. Combustion air feed

The combustion air blower takes in fresh air and leads it through the combustion air duct to the combustion chamber.

3. Fuel supply system

Fuel is taken in by the fuel metering pump and is led via an internal pipe to the so-called evaporator.

4. Combustion process

The fuel mixes with the air in the combustion chamber.
The mixture is then ignited by the glow plug. The combustion taking place in the combustion chamber extends into the flame chamber where it becomes an actual flame. The exchange of heat between flame and heat exchanger takes place in the flame chamber.

5. Exhaust system

The exhaust gases are led out from the flame chamber via the exhaust outlet and an exhaust system and released into the air from the underride protection.

6. Control system

The system is started or switched off by an integral control unit acting on switching criteria (e.g. coolant temperature) from the engine control unit.
The different temperatures in the system, e.g. the flame temperature and the water temperature are monitored by temperature sensors and are regulated accordingly by the control unit.

Overview of system

Ambient temperature sensor G17

Dash panel temperature sensor G56
and
Temperature selection in the air conditioner operating and display unit E87

Centre vent temperature sender G191

Sender for footwell vent temperature G192

Fresh-air intake temperature sensor G89

Evaporator outlet temperature sender G263

High-pressure sender G65

Sunlight penetration photosensor G107

Signals:
Terminal 31b from automatic wash/wipe interval system
Air conditioner compressor

The system receives information on the following to carry out a control sequence:

- the vent temperatures (senders in the air conditioner)
- the outlet temperature at the evaporator
- the ambient temperature (via CAN from the control unit in the dash panel insert) from the sensor in the bumper
- the interior temperature from the temperature sensor in the control panel of the air conditioner and the selected temperature
- the pressure level in the refrigerant circuit
- specific engine parameters (e.g. high coolant temperature, acceleration, idle)

Automatic gearbox
control unit J217

Control unit for 4LV J357

Control unit with display in dash
panel insert J285

Diagnosis interface for data bus
J533 (gateway)

Diagnosis connection

Radiator fan control unit J293

Radiator fan V7

Control unit
for air conditioner

Regulating valve for air conditioner
compressor, N280

Temperature flap positioning motor, V68,
with potentiometer G92

Defrost flap positioning motor V107 and
potentiometer G135

Recirculated air flap positioning motor V113 and
potentiometer G143

Central flap positioning motor V70 and
potentiometer G112

Series resistor for fresh-air blower N24,
control unit for fresh-air blower, J126, with
fresh-air blower V2

Signals:
ECON signal
Engine speed increase
A/C compressor

SSP240_086

Functional diagram

E87	Operating and display unit for air-conditioner
G65	High-pressure sender
G89	Fresh-air intake duct temperature sensor
G92	Potentiometer in positioning motor for temperature flap
G107	Sunlight penetration photosensor
G112	Potentiometer in positioning motor for central flap
G135	Potentiometer in positioning motor for defrost flap
G143	Potentiometer in positioning motor for recirculated air flap
G191	Centre vent temperature sender
G192	Footwell vent temperature sender
G263	Evaporator outlet temperature sender
J126	Fresh-air blower control unit
N280	Regulating valve for air conditioner compressor
S	Fuse
V2	Fresh-air blower
V68	Temperature flap positioning motor
V70	Central flap positioning motor
V107	Defrost flap positioning motor
V154	Positioning motor for fresh-air/ recirculated air flap
Z1	Heated rear window

1	Start/stop signal from the automatic gearbox control unit J217
2	Signal for terminal 31b from the automatic wash/wipe interval system relay J31
3	Engine speed increase
4	ECON signal
5	A/C compressor
6	Fan stage 1
7	Fan stage 2

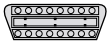
K diagnosis connection

CAN-H COMFORT
CAN-L COMFORT
} connection to the COMFORT data bus

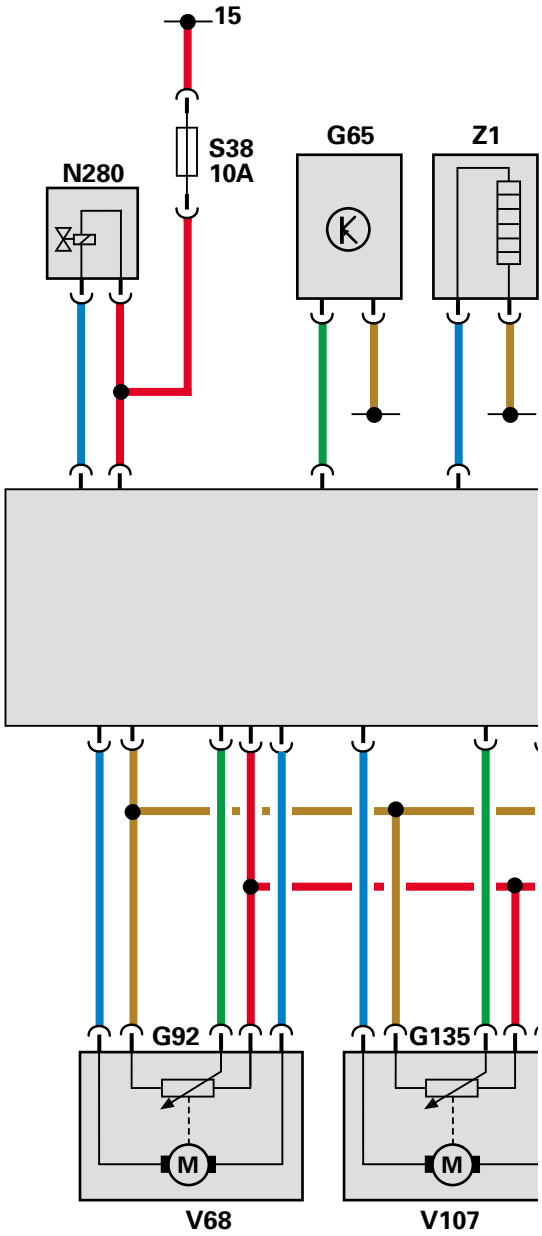

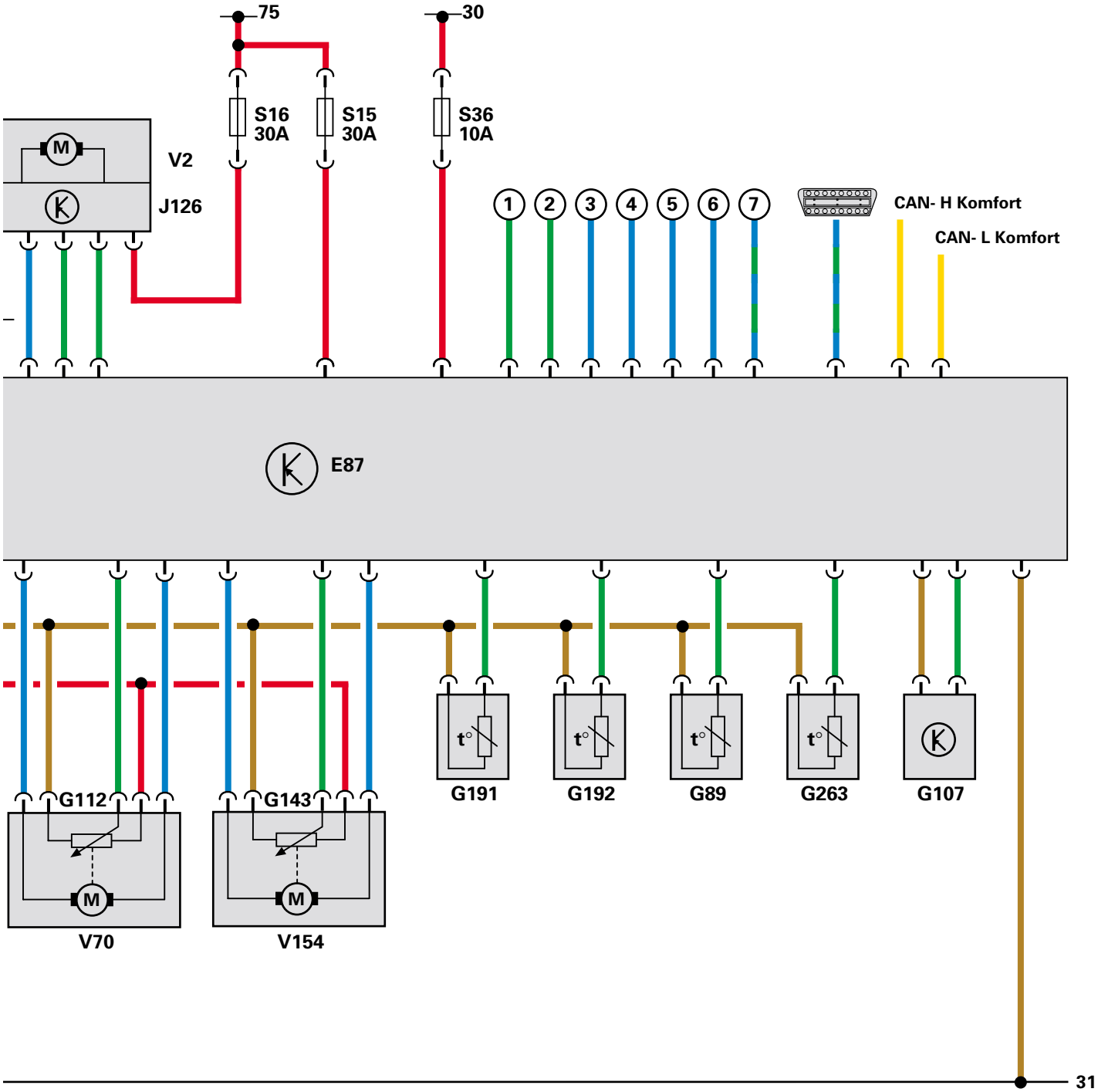
75
30
S16
30A
S15
30A
S36
10A
V2
J126
1
2
3
4
5
6
7
CAN- H Komfort
CAN- L Komfort
E87
G112
G143
G191
G192
G89
G263
G107
V70
V154
31

SSP240_087

Technical data of the Audi A2

Type of data	Unit	1.4 TDI (55 kW)	1.4 (55 kW)
Order code		8Z0 044	8Z0 014
Engine/Electrical system			
Enginecode		AMF	AUA
Engine weight, dry (DIN 70020-A)	kg	123	90
Engine type		In-line 3-cylinder diesel engine with exhaust gas turbocharger	In-line 4-cylinder spark ignition engine
Valve timing		Overhead camshaft (OHC)	Dual overhead camshaft (DOHC)
Valves per cylinder		2	4
Capacity	cm^3	1422	1390
Bore x stroke	mm	79.5 x 95.5	76.5 x 75.6
Compression	: 1	19.5	10.5
max. output	kW (PS)/at rpm	55 (75)/4000	55 /75)/5000
max. torque	Nm/at rpm	195/2200	126/3800
Engine management		Bosch EDC 15	Magneti Marelli
Mixture induction		Pump-nozzle direct injection, turbocharging	electronic sequential multipoint injection, adaptive idle compensation, overrun cut-off
Ignition system		Quick-start pre-heater system	Distributorless ignition system with static high-voltage distribution, long-life spark plugs
Exhaust emissions control		Oxidising catalyst, exhaust gas recirculation	2/3 way catalyst, 2 heated lambda probes, activated charcoal filter
Emissions class in accordance with 94/12/EC		EU 3	EU 4
Firing order		1 - 2 - 3	1 - 3 - 4 - 2
Battery	A/Ah	420 A/82 Ah	380 A/80 Ah
Alternator	A max.	120 A	90 A
Transmission			
Drive system		FWD	
Clutch		Hydraulic single-disc dry clutchwith asbestos-free linings	

Type of data	Unit	1.4 TDI (55 kW)	1.4 (55 kW)
Clutch diameter	mm	215	200
Type of gearbox		5-speed manual gearbox, all-synchromesh incl. reverse gear	
Gearbox code		EWO	EYX
Transmission ratio			
1. 1st gear		3.78	3.45
2. 2nd gear		2.12	2.10
3. 3rd gear		1.36	1.39
4. 4th gear		0.97	1.03
5. 5th gear		0.76	0.81
Reverse gear		3.60	3.18
Final drive ratio		3.39	3.88
Running gear/steering/brakes			
Front axle		McPherson strut suspension with lower A-arms, anti-roll bar	
Rear axle		Torsion beam axle with separate spring/shock absorber arrangement	
Steering		Electrohydraulic, maintenance-free rack and pinion steering	
Steering wheel turns, lock to lock		2.9	
Overall steering ratio		16.3	
Turning circle	m	10.5	
Braking system, front/rear		Dual circuit, diagonally split brakes, anti-lock braking system (ABS) with electronic brake pressure distribution (EBPD), electronic differential lock (EDL), traction control system (TCS), Electronic Stability Program (ESP)	
Running gear/steering/brakes			
Brake system		Sliding calliper disc brakes front, drum brakes rear	
Brake diameter front/rear	mm	256 x 22/14“/ 200 x 40	256 x 22/14“/ 200 x 40
Wheels		5.5 J x 15	
Wheel offset	mm	34	
Tyre size		175/60 R15 V	

Type of data	Unit	1.4 TDI (55 kW)	1.4 (55 kW)
Body/dimensions			
Type of body		Aluminium body with Audi Space Frame (ASF)®	
Number of doors/seats		5/4 (5)	
Cross-sectional area (A)	m^2	2.20	2.20
Drag coefficient$_w$		0.28	
Overall length	mm	3826	
Width not including mirrors	mm	1673	
Width including mirrors	mm	1868	
Vehicle height, unladen	m	1553	
Wheelbase	mm	2405	
Track, front/rear	mm	1462/1427	
Overhang, front/rear	mm	749/672	
Ground clearance, laden/ unladen	mm	100/139	
Liftover height	mm	673	
Lower tailgate width	mm	918	
Upper tailgate width	mm	869	
Loading width, luggage compartment	mm	960	
Luggage compartment length	mm	650	
Luggage compartment length/ width with rear seat bench folded down	mm	1190/960	
Luggage compartment length/ width with rear seat bench removed	mm	1390/960	
Loading height, luggage compartment	mm	951	
Luggage compartment volume	ltrs.	390/1085 (1140 – with rear seat bench removed)	
Comfort dimension	mm	1854	
Head room, front/rear	mm	994/985	
Head clearance front/rear	mm	83/51	
Seat height, front/rear	mm	267/401	
Elbow room, front/rear	mm	1374/1348	
Weights			
Unladen weight (without driver)	kg	990	895
Permissible gross weight	kg	1500	1380

Type of data	Unit	1.4 TDI (55 kW)	1.4 (55 kW)
Maximum payload, 4/5 seater	kg	510	485
Permissible axle load, front/ rear	kg	830/750	770/700
Permissible trailer loads		Supplied without trailer coupling	
Filling quantities			
Cooling system capacity	ltrs.	5.0 - 5.2	
Engine oil system capacity	ltrs.	4.3	3.3
Fuel tank capacity	ltrs.	34	
Windscreen washer system reservoir	ltrs.	2	
Performance/fuel consumption/noise			
Maximum speed	km/h	173	
at rpm		4072	5016
Acceleration			
0 ... 80 kmh	s	8.4	7.7
0 ... 100 kmh	s	12.3	12.0
Flexibility in 4th/5th gear			
60 ... 100 kmh	s	8.8/13.0	11.5/17.0
60 ... 120 kmh	s	14.8/19.7	17.5/27.5
Type of fuel		Diesel 49 CN/PME	Super unleaded 95 RON
Fuel consumption in accordance with MVEG II			
urban	l/100 km	5.6	8.2
extra-urban	l/100 km	3.5	4.7
overall	l/100 km	4.3	6.0
CO_2Emissions	g/km	116	144
Theoret. range	km	791	567
External noise level stationary/drive-by	dB(A)	80/72	74/71
Maintenance/warranty, inland			
Oil change interval	km	up to 50,000 km/2 years*	up to 30,000 km/2 years*
Inspection interval	km	up to 50,000 km/2 years*	up to 30,000 km/2 years*
Insurance classes	VK/TK/HK	14/25/16	11/18/12
Warranty Vehicle/paintwork/body	years	1 (no mileage limitation)/3/12	

*depending on maintenance interval display

Repair concept of the Audi A2

General repairs	–>	All Audi dealerships
Work on body (bonding, riveting))	–>	All Audi dealerships with body department including bonding/riveting
Structural damage Open Sky	–>	Only at aluminium repair centres (welding)

Special tools/workshop equipment

SSP240_105

Audi front cover

Order no.VAS 5191

SSP240_140

Protective hood for front top

Order no.VAS 6011

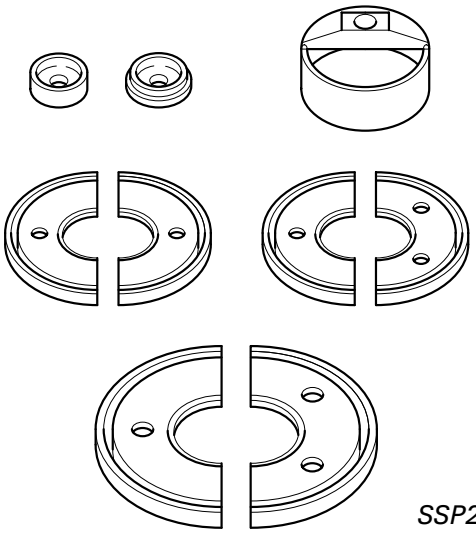

SSP240_132

Wheel bearing installer

Order no. T10064

SSP240_138

Fixing bolts

Order no. T10096

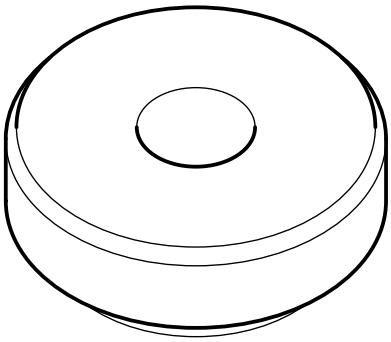

SSP240_137

Thrust pad for
front axle Al console bearings

Order no. T40023

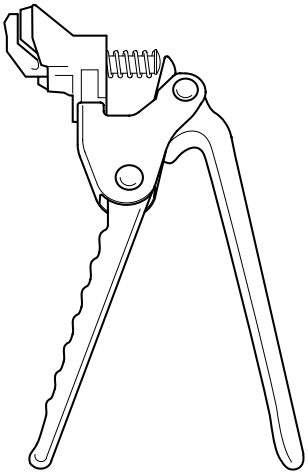

SSP240_136

Releasing pliers for brake pedal

Order no. T40024

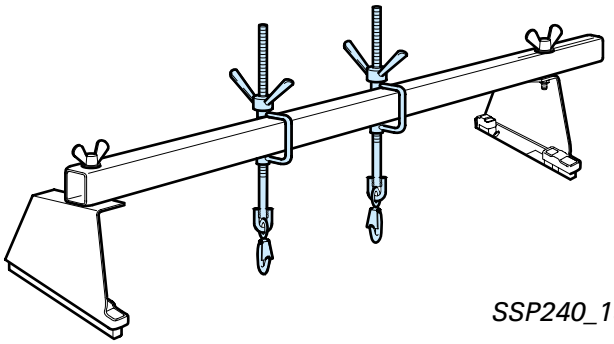

SSP240_133

Adapter for support bar

Order no. 10-222A 13

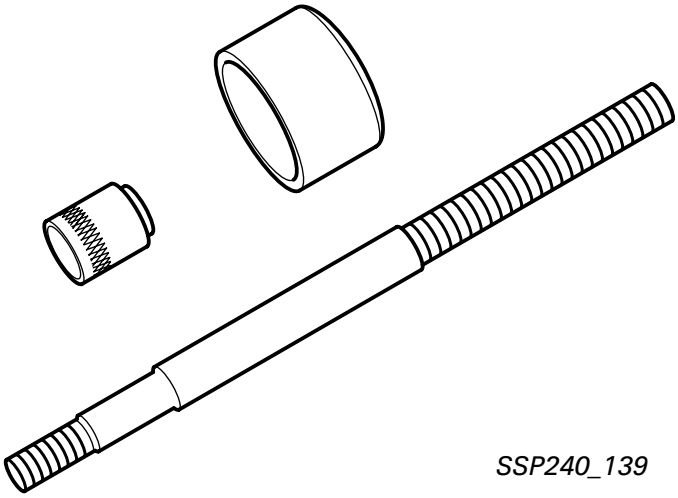

SSP240_139

Extension for hydraulic tool
(e.g. for V.A.G 1459 B)

Order no. not specified

Other special tools that are not listed, but which are required for the Audi A2, have been used in other models in the range.

All rights reserved, including the
right to make technical changes
AUDI AG
Department I/VK-5
D-85045 Ingolstadt
Fax 0841/89-36367
040.2810.59.20
Technical status 03/00
Printed in Germany