Maintenance

Audi A5 Coupé 2008

Edition 12.2017

Protected by copyright. Copying for private or commercial purposes, in part or in whole, is not permitted unless authorized by AUDI AG. AUDI AG does not guarantee or assume any liability with respect to the correctness of information in this document. Copyright by AUDI AG.

Maintenance

Heading

1. General information
2. Preparations
3. Maintenance
4. Exhaust emissions test

Protected by copyright. Copying for private or commercial purposes, in part or in whole, is not permitted unless authorised by AUDI AG. AUDI AG does not guarantee or accept any liability with respect to the correctness of information in this document. Copyright by AUDI AG.

Technical information should always be available to the foremen and mechanics, because their careful and constant adherence to the instructions is essential to ensure vehicle road-worthiness and safety. In addition, the normal basic safety precautions for working on motor vehicles must, as a matter of course, be observed.

All rights reserved.
No reproduction without prior agreement from publisher.

Copyright © 2018 Audi AG, Ingolstadt

Contents

1	**General information**	**1**
1.1	--- Change history ---	1
1.2	Engine number	1
1.3	Vehicle identification number	4
1.4	Vehicle data sticker	4
2	**Preparations**	**6**
2.1	Vehicle: raising	6
2.2	Engine cover panel: removing and installing	8
2.3	Noise insulation: removing and installing	12
2.4	Window regulators: activating automatic open/close function	16
2.5	Vehicle diagnostic tester: connecting	16
3	**Maintenance**	**19**
3.1	Diesel particulate filter: reading out ash deposit volume	22
3.2	Event memory: reading out and erasing	23
3.3	Navigation system (MMI basic): releasing eject button and running CD for languages	24
3.4	MMI navigation system: loading navigation CD/DVD	24
3.5	Service interval display: resetting service event	24
3.6	Transport mode: deactivating	25
3.7	Transport mode: checking activation and activating if necessary	25
3.8	Battery: reading out status and sending diagnostic log	26
3.9	Battery: checking electrolyte level	27
3.10	Battery: connecting stationary battery charging unit (min. 30A, charging voltage max. 14.8 V on IV characteristic curve)	29
3.11	Battery: determining and recording state of charge (SOC)	31
3.12	Mirror hanger indicating defective battery: renewing battery on affected vehicles	34
3.13	Data sheet for Radio Equipment Directive: printing and placing in glove compartment	34
3.14	Brake fluid: changing	34
3.15	Brake fluid (vehicles older than 12 months): changing	39
3.16	Brake fluid: checking fluid level	39
3.17	Brake system: checking condition of brake hoses, and checking that caps are fitted on bleeder screws	39
3.18	Brake pads: checking thickness	40
3.19	Brake discs: checking for surface rust and operating brakes to clean if necessary	41
3.20	Parking brake: releasing	42
3.21	Tyres: checking condition and wear pattern, and checking and recording tread depth	42
3.22	Tyres: checking tyre pressures and adjusting if necessary	44
3.23	Tyres (except spare wheel): checking tyre pressures and adjusting to 3.5 bar if necessary	45
3.24	Tyre Pressure Loss Indicator: storing changed tyre pressures	45
3.25	Tyre repair kit: checking that set is complete, and checking and recording expiry date	46
3.26	Wheel bolts: tightening to specified torque	46
3.27	Suspension struts on front and rear axle: removing locking elements and correctly fitting bump stops	47
3.28	Axles (front and rear): checking components for play, secure attachment and damage, and checking protective boots	49
3.29	Engine, gearbox, final drive and steering: checking for leaks and damage	52
3.30	Vehicle (from below): checking for damage	52
3.31	Underbody: checking trim, wheel housing liners, side members and pipes/wiring for damage, and checking that they are properly secured	52
3.32	Roof insert: checking operation	53
3.33	Roof insert - tilting sunroof: cleaning and lubricating	53
3.34	Roof insert - sliding/tilting sunroof: cleaning and lubricating	54
3.35	Rear spoiler hinges: lubricating	57
3.36	Door hinges with separate door arrester: cleaning and lubricating	57
3.37	Bonnet arrester hook: lubricating	58

Copyright by copyright. Copying for private or commercial purposes, in part or in whole, is not permitted unless authorised by AUDI AG. AUDI AG does not guarantee or accept any liability with respect to the accuracy of the information in this document. Copyright by AUDI AG.

3.38 Windscreen/rear window washer system: checking spray pattern and adjusting if necessary . . . 59
3.39 Wiper blades: checking for damage . . . 59
3.40 Headlight washer system: checking operation . . . 61
3.41 Headlights: checking for correct adjustment . . . 61
3.42 Headlights and reversing lights, side lights, number plate lights, turn signals, hazard warning lights: checking operation . . . 62
3.43 Luggage compartment lighting: checking operation . . . 63
3.44 Luggage compartment: removing protective film and felt pieces . . . 64
3.45 Glove box light, interior lighting and reading light: checking operation . . . 64
3.46 Horn: checking operation . . . 64
3.47 Passenger airbag: checking key switch on/off and setting to "on" . . . 65
3.48 Owner's literature: checking that all documents are present . . . 65
3.49 Service Schedule: affixing vehicle data sticker . . . 65
3.50 Service Schedule: entering Delivery Inspection . . . 65
3.51 Seat belts: checking that retaining rivets are fitted, and checking locking action of automatic belt retractor . . . 66
3.52 Vehicle interior: removing protective covers for seats and carpet . . . 66
3.53 Vehicle interior: checking that it is clean and cleaning if necessary . . . 66
3.54 Vehicle interior: removing any objects other than those protecting interior surfaces . . . 66
3.55 Vehicle interior and exterior: checking for and documenting any damage . . . 66
3.56 Instrument cluster: checking warning lamps . . . 67
3.57 Warning triangle: checking availability . . . 67
3.58 First-aid kit: checking and recording expiry date . . . 67
3.59 Vehicle keys: checking operation and recording number of keys given to customer . . . 67
3.60 Vehicle key: removing from ignition lock . . . 68
3.61 Vehicle key(s), wheel covers and owner's literature: checking availability and recording number present . . . 68
3.62 Sun visors: checking that they are folded up and folding up if necessary . . . 68
3.63 Luggage compartment cover and sun blind: checking that they are rolled up and rolling up if necessary . . . 68
3.64 Engine oil: draining . . . 68
3.65 Engine oil: extracting . . . 69
3.66 Engine oil: renewing oil filter . . . 70
3.67 Engine oil: filling up . . . 80
3.68 Engine oil: checking oil level and correcting if necessary . . . 81
3.69 Poly V-belts for ancillaries: checking . . . 83
3.70 Spark plugs: renewing . . . 84
3.71 Hydraulic system: checking fluid level . . . 97
3.72 Coolant level: checking (coolant level must reach at least top marking on coolant expansion tank) . . . 98
3.73 Air cleaner: renewing filter element and cleaning housing . . . 101
3.74 Plenum chamber and water drains: checking for dirt . . . 113
3.75 Snow screen: cleaning . . . 114
3.76 Dust and pollen filter: renewing . . . 115
3.77 Fuel filter: renewing . . . 116
3.78 Fuel tank: adding fuel additive . . . 117
3.79 Reducing agent (AdBlue®): filling up tank completely . . . 118
3.80 Vehicle doors: removing edge protection . . . 122
3.81 Vehicle exterior: checking unprotected areas for dirt, and cleaning if necessary . . . 122
3.82 Vehicle exterior: removing protective film . . . 122
3.83 Vehicle cover: checking position and correcting if necessary . . . 123
3.84 Vehicle cover: removing according to manufacturer's instructions . . . 123
3.85 Paintwork, trims, side windows and wiper blades: checking cleanliness . . . 123
3.86 Body: checking vehicle paintwork for damage and corrosion from below and with bonnet, rear lid and doors open . . . 123
3.87 Vehicles parked outdoors: locking . . . 123

Protected by copyright. Copying for private or commercial purposes, in part or in whole, is not permitted unless authorised by AUDI AG. AUDI AG does not guarantee or accept any liability with respect to the correctness of information in this document. Copyright by AUDI AG.

3.88 Road test . . . 123
3.89 Stock vehicles: observing measures specified in Maintenance table for stock vehicles (see “Before handing vehicle over to customer”) . . . 124
3.90 Accessories: installing . . . 124
3.91 Checklist "Documentation of cleaning and care routine": checking that list is present . . . 125
3.92 “Stock vehicle maintenance” checklist: signing and placing in vehicle wallet . . . 125
3.93 Cleaning and care: checking that required measures have been carried out on time . . . 125
3.94 Stock vehicle care management: deciding and recording date of next check . . . 125
3.95 Rear final drive: changing gear oil . . . 125
3.96 Rear final drive: changing ATF . . . 125
3.97 Front final drive: changing gear oil . . . 125
3.98 Display instruments: setting time and date . . . 126
3.99 Manual gearbox/automatic gearbox: selecting 1st gear/park . . . 126
3.100 Automatic gearbox (multitronic): changing ATF . . . 126
3.101 Dual clutch gearbox (S tronic): changing ATF and renewing exchangeable ATF filter . . . 126
3.102 Dual clutch gearbox (S tronic): changing ATF and renewing exchangeable ATF filter (if fitted) . . . 126
3.103 Dual clutch gearbox (S tronic): changing gear oil and renewing oil filter . . . 126
3.104 Interior mirror: calibrating compass . . . 126
3.105 Poly V-belt for supercharger with charge air coolers: renewing . . . 127
3.106 Poly V-belts for ancillaries and all pulleys: renewing . . . 127
3.107 Instrument cluster: resetting driver information system . . . 127
3.108 Toothed belt for camshaft drive: renewing . . . 127
3.109 Toothed belt for camshaft drive, and drive sprockets for camshaft, crankshaft and high-pressure pump: renewing . . . 127
3.110 Toothed belt for camshaft drive and tensioning roller: renewing . . . 127
3.111 Poly V-belt for ancillaries and pulley for power steering pump: renewing . . . 128
4 Exhaust emissions test . . . 129
4.1 Petrol engines: performing exhaust emissions test . . . 129
4.2 Diesel engines: performing exhaust emissions test . . . 136

Protected by copyright. Copying for private or commercial purposes, in part or in whole, is not permitted unless authorised by AUDI AG. AUDI AG does not guarantee or assume any liability with respect to the content of this document. Copyright by AUDI AG.

Protected by copyright. Copying for private or commercial purposes, in part or in whole, is not permitted unless authorised by AUDI AG. AUDI AG does not guarantee or accept any liability with respect to the correctness of information in this document. Copyright by AUDI AG.

1 General information

(AIGG000915; Edition 12.2017)

Change history ⇒ page 1

Engine number ⇒ page 1

Vehicle identification number ⇒ page 4

Vehicle data sticker ⇒ page 4

1.1 --- Change history ---

No.	Date	Chapter	Changes made
9	06.11.2017	Various chapters on stock vehicle management	Chapter modified
8	01.05.2017	Data sheet for Radio Equipment Directive: printing and placing in glove compartment ⇒ page 34	New chapter
		Door hinges with separate door arrester: cleaning and lubricating ⇒ page 57	Procedure modified to include: Lubricating door arrester
		Engine, gearbox, final drive and steering: checking for leaks and damage ⇒ page 52	Procedure modified to include: Checking belt drives
		Battery: checking that battery and battery cables are securely fitted	Chapter deleted
		Fuel tank: adding fuel additive ⇒ page 117	Chapter updated
7	02.11.2016	Door hinges with separate door arrester: cleaning and lubricating ⇒ page 57	New chapter
		Spark plugs: renewing ⇒ page 84	Tightening torques for spark plugs adjusted

Protected by copyright. Copying for private or commercial purposes, in part or in whole, is not permitted unless authorised by AUDI AG. AUDI AG does not guarantee or accept any liability with respect to the correctness of information in this document. Copyright by AUDI AG.

Note

For greater clarity, only the last three updates to the document are listed.

1.2 Engine number

Note

The engine number consists of the engine code letters (3 or 4 characters) and the serial number.

4-cyl. petrol engine 1.8 TFSI ⇒ page 2

4-cyl. petrol engine 2.0 TFSI ⇒ page 2

6-cyl. petrol engine 3.0 TFSI/3.2 FSI ⇒ page 3

8-cyl. petrol engine 4.2 FSI ⇒ page 3

4-cyl. diesel engine 2.0 TDI ⇒ page 3

6-cyl. diesel engine 2.7 TDI/3.0 TDI ⇒ page 4

1.2.1 4-cyl. petrol engine 1.8 TFSI

The engine number is stamped on the left side at the joint between the engine and the gearbox -arrow-.

The engine number is also given on the sticker on the toothed belt cover (top).

In addition, the engine code letters are listed on the vehicle data sticker ⇒ page 4 .

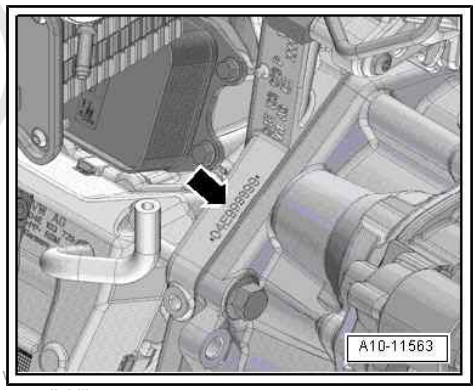

Protected by copyright. Copying for private or commercial purposes, in part or in whole, is not permitted unless authorised by AUDI AG. AUDI AG does not guarantee or accept any liability with respect to the correctness of information in this document. Copyright by AUDI AG.

1.2.2 4-cyl. petrol engine 2.0 TFSI

The engine number is stamped on the left side at the joint between the engine and the gearbox -arrow-.

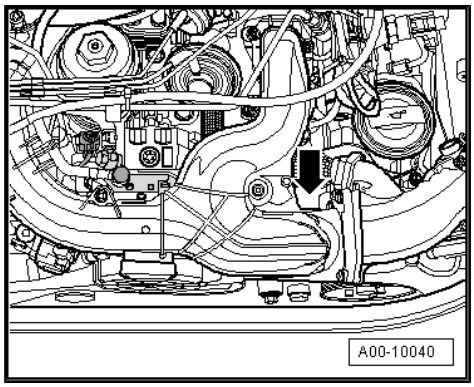

The engine number is also given on the sticker on the toothed belt cover (top).

In addition, the engine code letters are listed on the vehicle data sticker ⇒ page 4 .

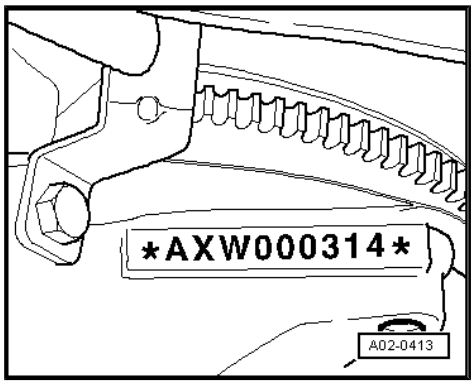

1.2.3 6-cyl. petrol engine 3.0 TFSI/3.2 FSI

The engine number is stamped on the left side at the joint between the engine and the gearbox -arrow-.

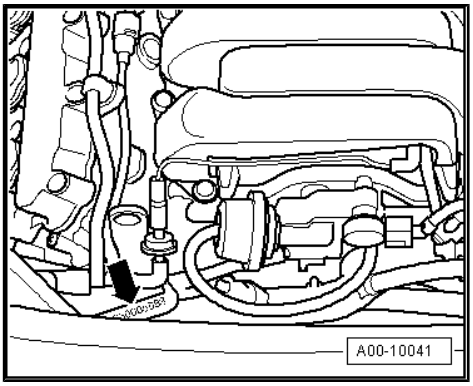

The engine number is also listed on the sticker on the toothed belt cover (top) -arrow-.

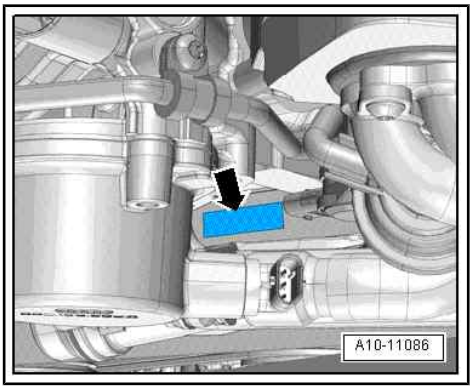

In addition, the engine code letters are listed on the vehicle data sticker ⇒ page 4 .

Protected by copyright. Copying for private or commercial purposes, in part or in whole, is not permitted unless authorised by AUDI AG. AUDI AG does not guarantee or accept any liability with respect to the correctness of information in this document. Copyright by AUDI AG.

1.2.4 8-cyl. petrol engine 4.2 FSI

The engine number is stamped on the left side at the joint between the engine and the gearbox -arrow-.

The engine number is also given on the sticker on the toothed belt cover (top).

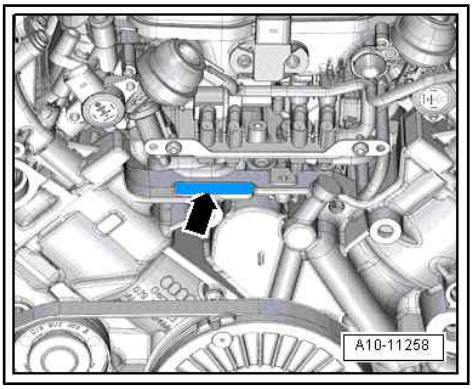

In addition, the engine code letters are listed on the vehicle data sticker ⇒ page 4 .

1.2.5 4-cyl. diesel engine 2.0 TDI

The engine number is stamped on the left side at the joint between the engine and the gearbox -arrow-.

The engine number is also given on the sticker on the toothed belt cover (top).

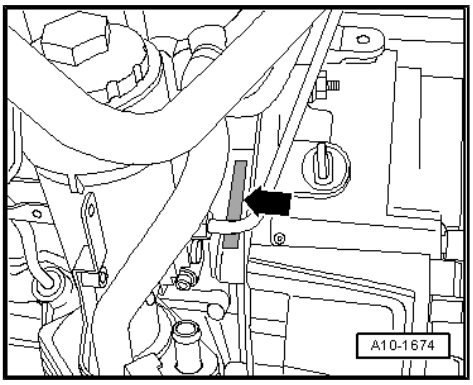

In addition, the engine code letters are listed on the vehicle data sticker ⇒ page 4 .

1.2.6 6-cyl. diesel engine 2.7 TDI/3.0 TDI

The engine number is stamped on the left side at the joint between the engine and the gearbox -arrow-.

The engine number is also given on the sticker on the toothed belt cover (top).

In addition, the engine code letters are listed on the vehicle data sticker ⇒ page 4 .

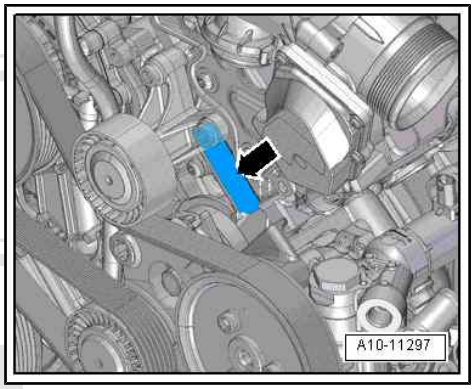

1.3 Vehicle identification number

Protected by copyright. Copying for private or commercial purposes, in part or in whole, is not permitted unless authorised by AUDI AG. AUDI AG does not guarantee or accept any liability with respect to the correctness of information in this document. Copyright by AUDI AG.

Depending on the equipment and country-specific version, the vehicle identification number is located:

- Optional: In the MMI under »Car systems«
- Stamped on the suspension turret (right-side) near the top of the wheel housing -illustration-
- On the vehicle data sticker ⇒ page 4

The vehicle identification number consists of the following:

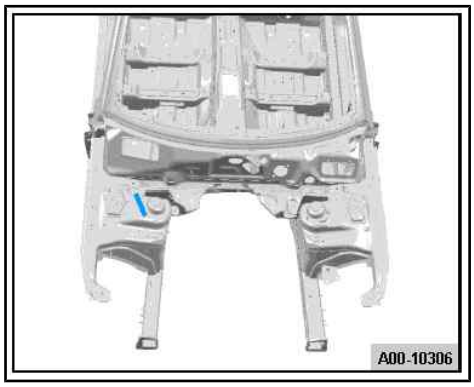

WAU	ZZZ	8T	Z	B	A/N	000 234
Manufacturer code	Filler characters	Type	Filler characters	Model year	Production location	Serial number

1.4 Vehicle data sticker

The vehicle data sticker is located:

- In the Service Schedule
- In the area of the spare wheel well under the floor covering -arrow-

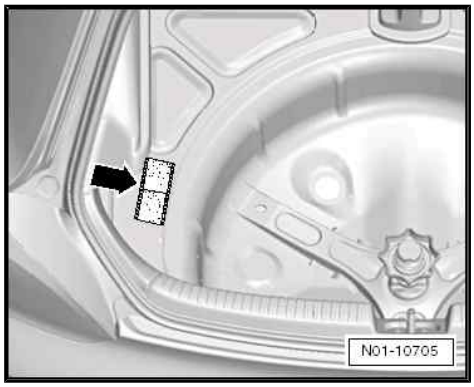

The vehicle data sticker contains the following vehicle data:

1 - Vehicle identification number

2 - Vehicle model, manufacturer's code, engine type and power output, production month and year

3 - Engine and gearbox code letters (not specified on some export models)

4 - Paint number, interior equipment number

5 - Numbers for optional extras

6 - Fuel consumption: urban, extra urban, combined, CO2 (not specified on some export models)

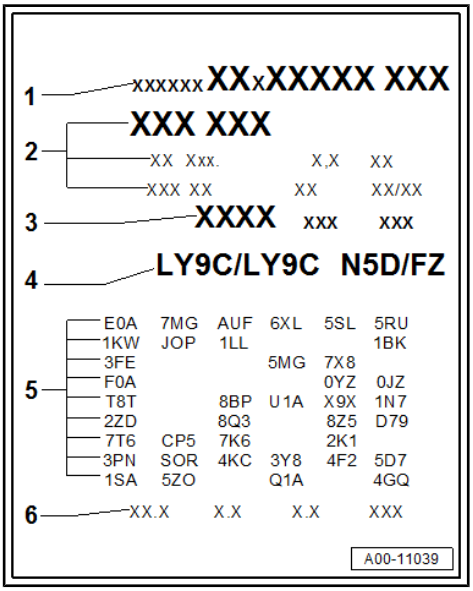

Protected by copyright. Copying for private or commercial purposes, in part or in whole, is not permitted unless authorised by AUDI AG. AUDI AG does not guarantee or accept any liability with respect to the correctness of information in this document. Copyright by AUDI AG.

2 Preparations

Vehicle: raising ⇒ page 6

Engine cover panel: removing and installing ⇒ page 8

Noise insulation: removing and installing ⇒ page 12

Window regulators: activating automatic open/close function ⇒ page 16

Vehicle diagnostic tester: connecting ⇒ page 16

2.1 Vehicle: raising

CAUTION

Risk of damage to vehicle due to incorrect use of lifting platform.

- Do not exceed the permissible lifting capacity of the lifting platform.
- The vehicle should be lifted only at the points shown in the illustration.
- Position support plates so that they are aligned centrally below the lifting points.
- Ensure sufficient clearance between low-mounted vehicle components and the lifting platform.

Procedure:

– Front: Position support plates of lifting platform under lifting point on side member -arrow-.

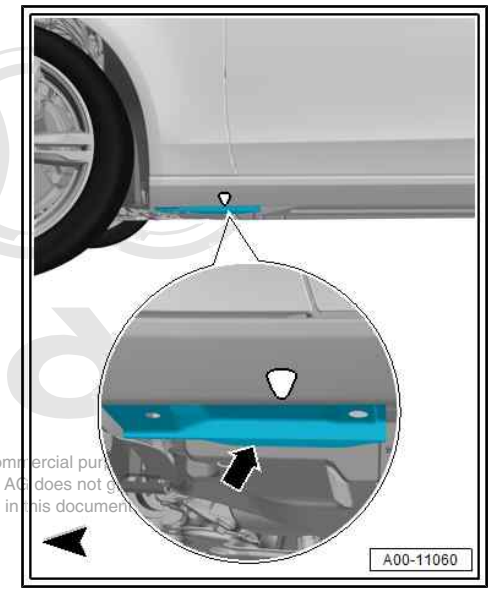

Protected by copyright. Copying for private or commercial purposes, in part or in whole, is not permitted unless authorised by AUDI AG. AUDI AG does not guarantee or assume any liability with respect to the correctness of information in this document.

– Rear: Position support plates of lifting platform under lifting point on side member -arrow-.

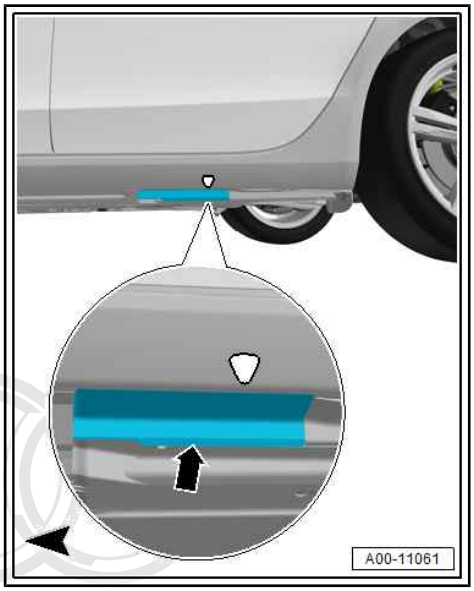

Note

- *The location of the lifting points is indicated by markings stamped on the side member trim.*
- *Applies to RS 5: Extend all support plates -2- far enough so that the lifting arm of the lifting platform does not touch the vehicle trim when the lifting arm is in position.*

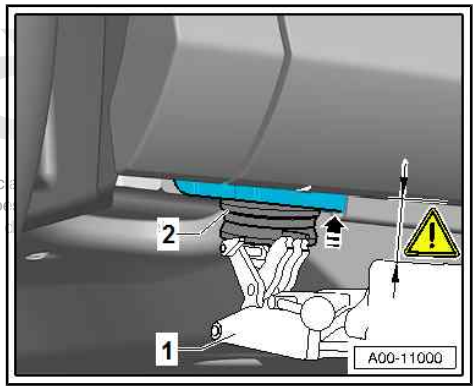

Protected by copyright. Copying for private or commercial purposes, in part or in whole, is not permitted unless authorised by AUDI AG. AUDI AG does not guarantee or assume any liability with respect to the correctness of information in this document.

2.2 Engine cover panel: removing and installing

4-cyl. petrol engine 1.8 TFSI/2.0 TFSI (version 1) ⇒ page 8
4-cyl. petrol engine 1.8 TFSI/2.0 TFSI (version 2) ⇒ page 8
6-cyl. petrol engine 3.0 TFSI (version 1) ⇒ page 9
6-cyl. petrol engine 3.0 TFSI (version 2) ⇒ page 9
6-cyl. petrol engine 3.2 FSI ⇒ page 10
8-cyl. petrol engine 4.2 FSI (version 1) ⇒ page 10
8-cyl. petrol engine 4.2 FSI (version 2) ⇒ page 10
4-cyl. diesel engine 2.0 TDI (version 1) ⇒ page 11
4-cyl. diesel engine 2.0 TDI (version 2) ⇒ page 11
4-cyl. diesel engine 2.0 TDI (version 3) ⇒ page 11
6-cyl. diesel engine 2.7 TDI/3.0 TDI ⇒ page 12

Protected by copyright. Copying for private or commercial purposes, in part or in whole, is not permitted unless authorised by AUDI AG. AUDI AG does not guarantee or accept any liability with respect to the correctness of information in this document. Copyright by AUDI AG.

2.2.1 4-cyl. petrol engine 1.8 TFSI/2.0 TFSI (version 1)

Procedure for removing:

– Carefully pull engine cover panel off retaining pins one after another -arrows-.

Procedure for installing:

– Position engine cover panel on retaining pins and then use your hands to press it onto retaining pins, one after the other.

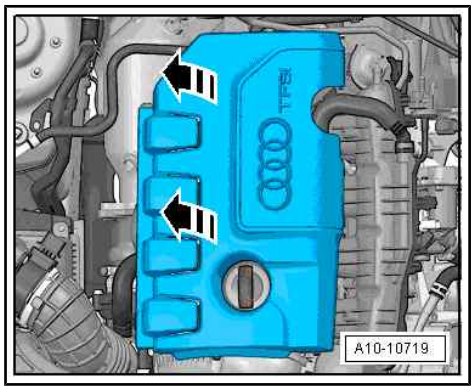

Note

There is more than one version of the engine cover panel for the 4-cylinder 1.8 TFSI/2.0 TFSI petrol engine ⇒ page 8 .

2.2.2 4-cyl. petrol engine 1.8 TFSI/2.0 TFSI (version 2)

Procedure for removing:

– Carefully pull engine cover panel off retaining pins one after another -arrows-.

Procedure for installing:

– Position engine cover panel on retaining pins and then use your hands to press it onto retaining pins, one after the other.

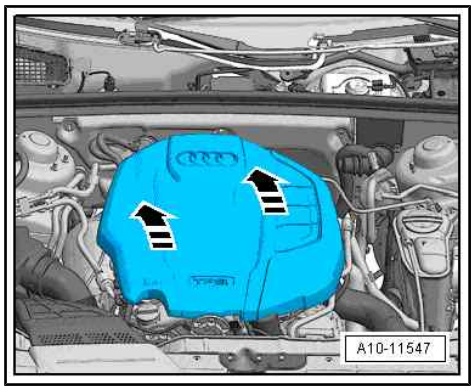

Note

There is more than one version of the engine cover panel for the 4-cylinder 1.8 TFSI/2.0 TFSI petrol engine ⇒ page 8 .

2.2.3 6-cyl. petrol engine 3.0 TFSI (version 1)

Procedure for removing:

– Carefully pull engine cover panels -1- and -2- off retaining pins one after another.

Procedure for installing:

– Position engine cover panels on retaining pins and then use your hands to press it onto retaining pins, one after the other.

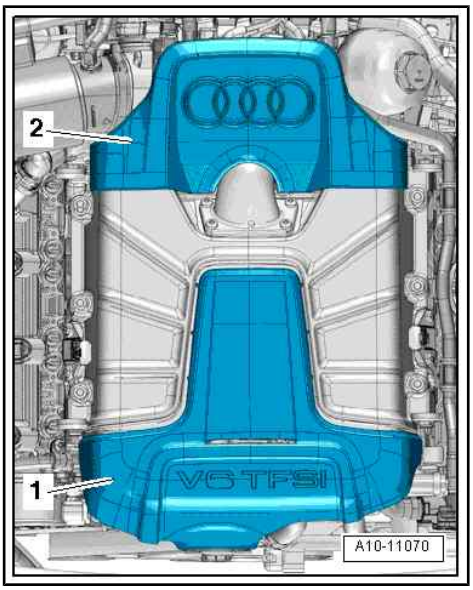

Note

There is more than one version of the engine cover panel for the 6-cylinder 3.0 TFSI petrol engine *⇒ page 9* *.*

2.2.4 6-cyl. petrol engine 3.0 TFSI (version 2)

Procedure for removing:

– Carefully pull engine cover panel off retaining pins one after another -arrows-.

Procedure for installing:

– Position engine cover panel on retaining pins and then use your hands to press it onto retaining pins, one after the other.

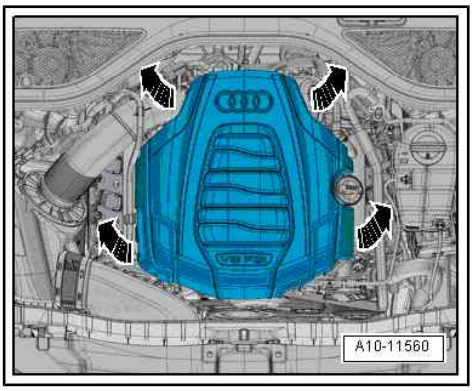

Note

There is more than one version of the engine cover panel for the 6-cylinder 3.0 TFSI petrol engine *⇒ page 9* *.*

Protected by copyright. Copying for private or commercial purposes, in part or in whole, is not permitted unless authorised by AUDI AG. AUDI AG does not guarantee or accept any liability with respect to the correctness of information in this document. Copyright by AUDI AG.

2.2.5 6-cyl. petrol engine 3.2 FSI

Procedure for removing:

– Carefully pull engine cover panels off retaining pins one after another -arrows-.

Procedure for installing:

– Position engine cover panels on retaining pins and then use your hands to press it onto retaining pins, one after the other.

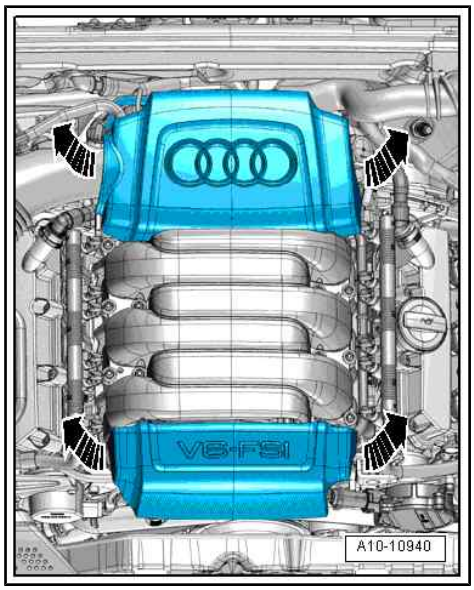

2.2.6 8-cyl. petrol engine 4.2 FSI (version 1)

Procedure for removing:

– Carefully pull engine cover panel off retaining pins one after another -arrows-.

Procedure for installing:

– Position engine cover panel on retaining pins and then use your hands to press it onto retaining pins, one after the other.

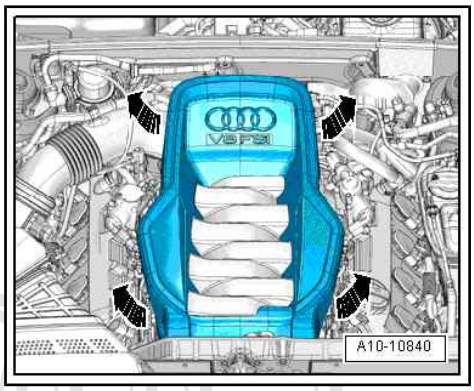

Note

There are additional versions of the engine cover panel for the 8-cylinder 4.2 FSI petrol engine *⇒ page 10* *.*

2.2.7 8-cyl. petrol engine 4.2 FSI (version 2)

Procedure for removing:

– Carefully pull engine cover panel off retaining pins one after another -arrows-.

Procedure for installing:

– Position engine cover panel on retaining pins and then use your hands to press it onto retaining pins, one after the other.

Protected by copyright. Copying for priv
permitted unless authorised by AUDI A
with respect to the correctness of in

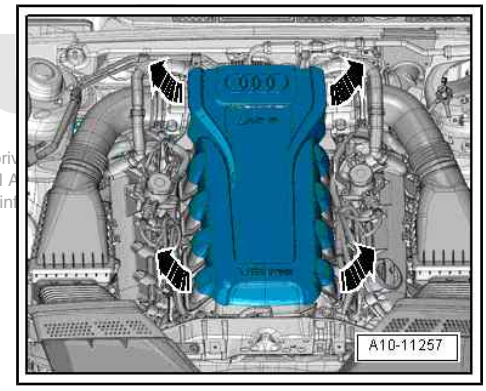

Note

There are additional versions of the engine cover panel for the 8-cylinder 4.2 FSI petrol engine *⇒ page 10* *.*

2.2.8 4-cyl. diesel engine 2.0 TDI (version 1)

Procedure for removing:

– Carefully pull engine cover panel off retaining pins one after another -arrows-.

Procedure for installing:

– Position engine cover panel on retaining pins and then use your hands to press it onto retaining pins, one after the other.

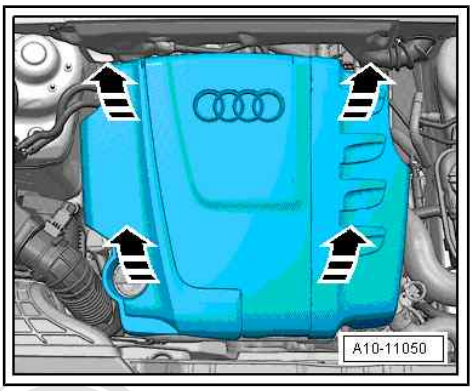

Note

There is more than one version of the engine cover panel for the 4-cylinder 2.0 TDI diesel engine ⇒ page 11 .

2.2.9 4-cyl. diesel engine 2.0 TDI (version 2)

Procedure for removing:

– Carefully pull engine cover panel off retaining pins one after another -arrows-.

Procedure for installing:

– Position engine cover panel on retaining pins and then use your hands to press it onto retaining pins, one after the other.

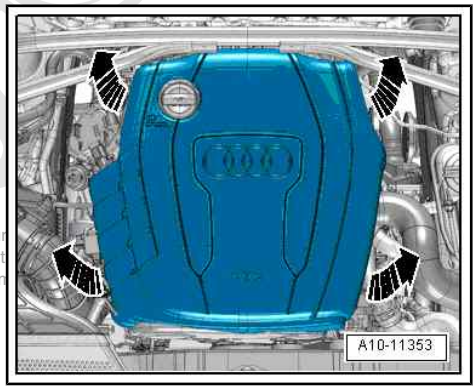

Protected by copyright. Copying for private or commercial pur
permitted unless authorised by AUDI AG. AUDI AG does not
with respect to the correctness of information in this docum

Note

There is more than one version of the engine cover panel for the 4-cylinder 2.0 TDI diesel engine ⇒ page 11 .

2.2.10 4-cyl. diesel engine 2.0 TDI (version 3)

– Carefully pull engine cover panel off retaining pins one after another -arrows-.

Procedure for installing:

– Position engine cover panel on retaining pins and then use your hands to press it onto retaining pins, one after the other.

Note

There is more than one version of the engine cover panel for the 4-cylinder 2.0 TDI diesel engine ⇒ page 11 .

2.2.11 6-cyl. diesel engine 2.7 TDI/3.0 TDI

Procedure for removing:

– Carefully pull engine cover panel off retaining pins one after another -arrows-.

Procedure for installing:

– Position engine cover panel on retaining pins and then use your hands to press it onto retaining pins, one after the other.

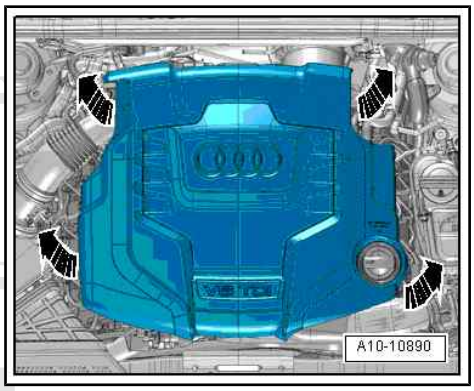

2.3 Noise insulation: removing and installing

Front noise insulation: all models except RS 5 ⇒ page 12

Protected by copyright. Copying for private or commercial purposes, in part or in whole, is not permitted unless authorised by AUDI AG. AUDI AG does not guarantee or accept any liability with respect to the correctness of information in this document. Copyright by AUDI AG.

Front noise insulation: RS 5 ⇒ page 13

Rear noise insulation: all models except RS 5 ⇒ page 15

Rear noise insulation: RS 5 ⇒ page 15

2.3.1 Front noise insulation: all models except RS 5

Special tools and workshop equipment required

- Torque screwdriver - V.A.G 1624- , measuring range 1 to 5 Nm
- Or: torque wrench - V.A.G 1783- , measuring range 2 to 10 Nm
- Or: torque wrench - V.A.G 1410- , measuring range 4 to 20 Nm
- Or: torque wrench - VAS 6854- , measuring range 5 to 13 Nm
- Or: torque wrench - VAS 6583- , measuring range 3 to 60 Nm

Table of tightening torques for installation:

Component/fastener	[Nm]
Bolt -2-	5

Procedure for removing:

– Remove bolts -2- from connection between wheel housing liner and noise insulation (front).

– Remove quick-release fasteners -3- from noise insulation (front).

– Pull noise insulation towards rear out of bottom section of bumper cover and detach.

Procedure for installing:

Install in reverse sequence. Note tightening torques (see table of tightening torques for installation ⇒ page 12).

Protected by copyright. Copying for private or commercial purposes, in part or in whole, is not permitted unless authorised by AUDI AG. AUDI AG does not guarantee or accept any liability with respect to the correctness of information in this document. Copyright by AUDI AG.

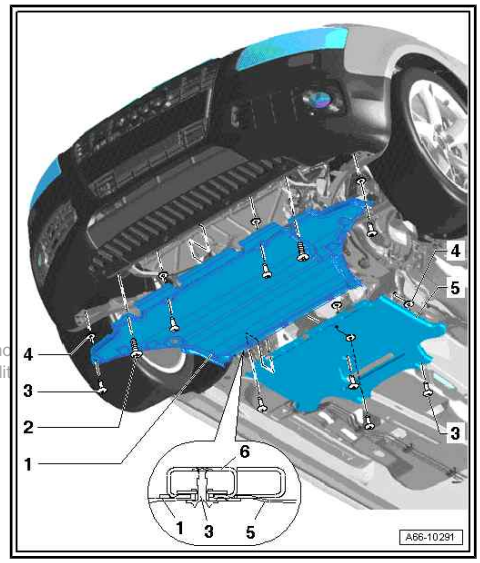

Note

- *Ensure that you feel the quick-release fasteners engage when installing.*
- *On vehicles with supplementary heater, opening of exhaust pipe must be routed vertically through grommet in noise insulation.*

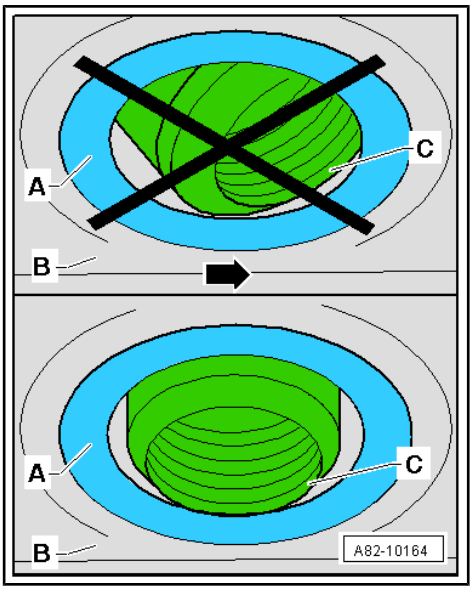

2.3.2 Front noise insulation: RS 5

Special tools and workshop equipment required

- Torque screwdriver - V.A.G 1624- , measuring range 1 to 5 Nm

Table of tightening torques for installation:

Component/fastener	[Nm]
Bolts for underbody trim	5
Bolts securing wheel housing liner	1.5

Procedure for removing:

– Remove bolts -arrows-.

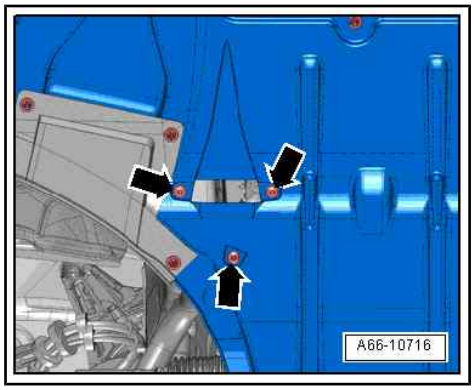

– Remove bolts -arrows- from connection between wheel housing liner (front) -1- and wheel spoiler (front).

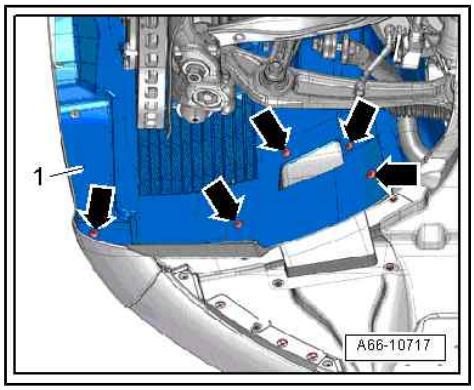

– Remove quick-release fasteners -arrows-.

– Pull noise insulation (front) -1- towards rear out of bottom section of bumper cover and detach.

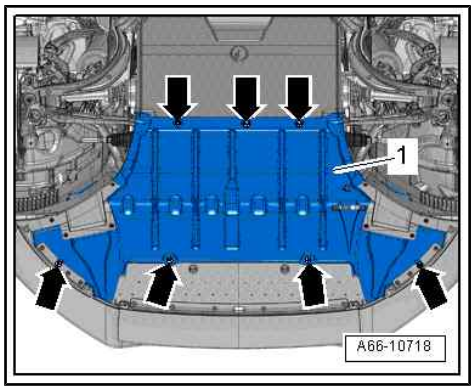

Procedure for installing:

Install in reverse sequence. Note tightening torques (see table of tightening torques for installation ⇒ page 13).

Protected by copyright. Copying for private or commercial purposes, in part or in whole, is not permitted unless authorised by AUDI AG. AUDI AG does not guarantee or accept any liability with respect to the correctness of information in this document. Copyright by AUDI AG.

Note

- *Ensure that you feel the quick-release fasteners engage when installing.*
- *On vehicles with supplementary heater, opening of exhaust pipe must be routed vertically through grommet in noise insulation.*

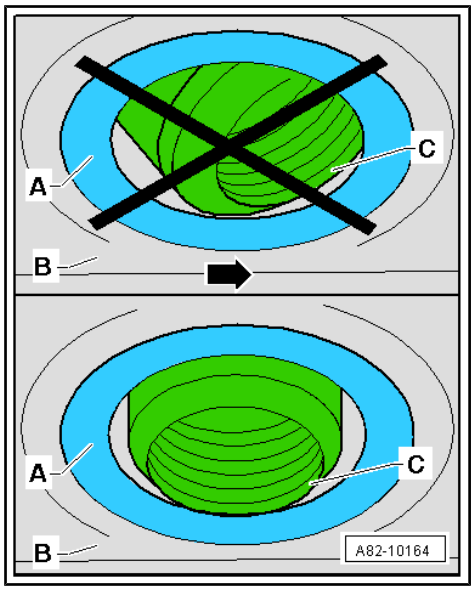

2.3.3 Rear noise insulation: all models except RS 5

Procedure for removing:

– Turn quick-release fasteners -6- 180° to the left to release.

– Pull out noise insulation panel towards rear.

Procedure for installing:

Install in reverse sequence.

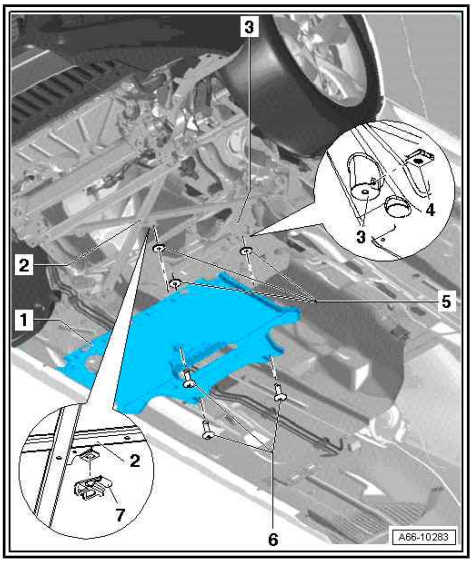

Note

Ensure that you feel the quick-release fasteners engage when installing.

2.3.4 Rear noise insulation: RS 5

Special tools and workshop equipment required

- Torque screwdriver - V.A.G 1624- , measuring range 1 to 5 Nm
- Or: torque screwdriver - VAS 6494- , measuring range 1.5 to 3 Nm
- Or: torque wrench - V.A.G 1783- , measuring range 2 to 10 Nm

Table of tightening torques for installation:

Component/fastener	[Nm]
Bolts -arrows-	2.1

Protected by copyright. Copying for private or commercial purposes, in part or in whole, is not permitted unless authorised by AUDI AG. AUDI AG does not guarantee or accept any liability with respect to the correctness of information in this document. Copyright by AUDI AG.

Procedure for removing:

– Remove bolts -arrows-.

– Pull out spreader pins -1-, -3- and -4- and remove together with fastener.

– Detach noise insulation (rear) -2-.

Procedure for installing:

Install in reverse sequence. Note tightening torques (see table of tightening torques for installation ⇒ page 15).

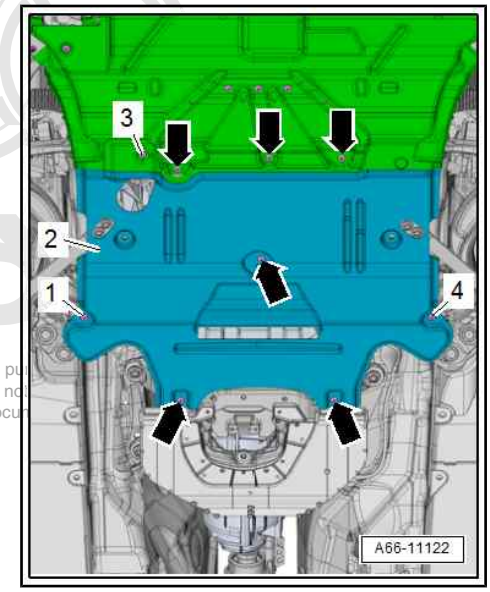

Note

Ensure that you feel the quick-release fasteners engage when installing.

Protected by copyright. Copying for private or commercial pu
permitted unless authorised by AUDI AG. AUDI AG does no
with respect to the correctness of information in this docu

2.4 Window regulators: activating automatic open/close function

If the vehicle battery was disconnected, the automatic open/close function for the electric windows must be reactivated.

Procedure:

– Pull up on window regulator switch until windows are completely closed.

– Release switch and pull on it again for at least one second.

– Repeat procedure with all window regulators.

2.5 Vehicle diagnostic tester: connecting

Special tools and workshop equipment required

♦ Diagnosis system - VAS 6160 A-

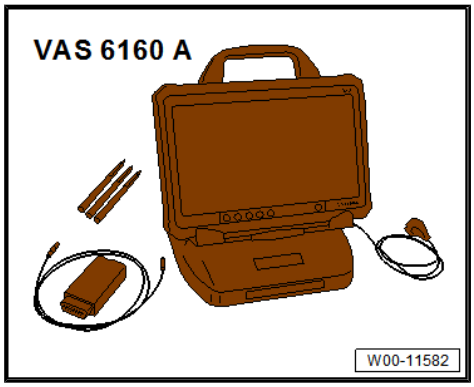

♦ Remote diagnosis head - VAS 5054A-

♦ Or: diagnosis interface - VAS 5055-

Procedure:

- Plug connector for remote diagnosis head - VAS 5054A- into diagnostic connection in vehicle.
- Switch on diagnostic system - VAS 6160 A- .
- Switch on ignition.
- Follow the menu on the screen to start the desired functions.

Protected by copyright. Copying for private or commercial purposes, in part or in whole, is not permitted unless authorised by AUDI AG. AUDI AG does not guarantee or accept any liability with respect to the correctness of information in this document. Copyright by AUDI AG.

Protected by copyright. Copying for private or commercial purposes, in part or in whole, is not permitted unless authorised by AUDI AG. AUDI AG does not guarantee or accept any liability with respect to the correctness of information in this document. Copyright by AUDI AG.

3 Maintenance

Rear final drive: changing gear oil ⇒ page 125

Rear final drive: changing ATF ⇒ page 125

Front final drive: changing gear oil ⇒ page 125

Display instruments: setting time and date ⇒ page 126

Automatic gearbox (multitronic): changing ATF ⇒ page 126

Battery: determining and recording state of charge (SOC) ⇒ page 31

Battery: checking electrolyte level ⇒ page 27

Battery: connecting stationary battery charging unit (min. 30A, charging voltage max. 14.8 V on IV characteristic curve) ⇒ page 29

Battery: reading out status and sending diagnostic log ⇒ page 26

Axles (front and rear): checking components for play, secure attachment and damage, and checking protective boots ⇒ page 49

Passenger airbag: checking key switch on/off and setting to "on" ⇒ page 65

Tyres (except spare wheel): checking tyre pressures and adjusting to 3.5 bar if necessary ⇒ page 45

Tyres: checking tyre pressures and adjusting if necessary ⇒ page 44

Tyres: checking condition and wear pattern, and checking and recording tread depth ⇒ page 42

Owner's literature: checking that all documents are present ⇒ page 65

Brake system: checking condition of brake hoses, and checking that caps are fitted on bleeder screws ⇒ page 39

Brake pads: checking thickness ⇒ page 40

Brake fluid (vehicles older than 12 months): changing ⇒ page 39

Brake fluid: checking fluid level ⇒ page 39

Brake fluid: changing ⇒ page 34

Brake discs: checking for surface rust and operating brakes to clean if necessary ⇒ page 41

Checklist "Documentation of cleaning and care routine": checking that list is present ⇒ page 125

“Stock vehicle maintenance” checklist: signing and placing in vehicle wallet ⇒ page 125

Roof insert - tilting sunroof: cleaning and lubricating ⇒ page 53

Roof insert - sliding/tilting sunroof: cleaning and lubricating ⇒ page 54

Roof insert: checking operation ⇒ page 53

Data sheet for Radio Equipment Directive: printing and placing in glove compartment ⇒ page 34

Diesel particulate filter: reading out ash deposit volume ⇒ page 22

Protected by copyright. Copying for private or commercial purposes, in part or in whole, is not permitted unless authorised by AUDI AG. AUDI AG does not guarantee or accept any liability with respect to the correctness of information in this document. Copyright by AUDI AG.

Dual clutch gearbox (S tronic): changing ATF and renewing exchangeable ATF filter ⇒ page 126

Dual clutch gearbox (S tronic): changing ATF and renewing exchangeable ATF filter (if fitted) ⇒ page 126

Dual clutch gearbox (S tronic): changing gear oil and renewing oil filter ⇒ page 126

Event memory: reading out and erasing ⇒ page 23

Headlights and reversing lights, side lights, number plate lights, turn signals, hazard warning lights: checking operation ⇒ page 62

Mirror hanger indicating defective battery: renewing battery on affected vehicles ⇒ page 34

Vehicle exterior: checking unprotected areas for dirt, and cleaning if necessary ⇒ page 122

Vehicle exterior: removing protective film ⇒ page 122

Vehicle interior and exterior: checking for and documenting any damage ⇒ page 66

Vehicle interior: checking that it is clean and cleaning if necessary ⇒ page 66

Vehicle interior: removing any objects other than those protecting interior surfaces ⇒ page 66

Vehicle interior: removing protective covers for seats and carpet ⇒ page 66

Vehicle (from below): checking for damage ⇒ page 52

Vehicle key(s), wheel covers and owner's literature: checking availability and recording number present ⇒ page 68

Vehicle key: removing from ignition lock ⇒ page 68

Vehicle key(s): checking operation and recording number of keys given to customer ⇒ page 67

Vehicle doors: removing edge protection ⇒ page 122

Vehicle cover: checking position and correcting if necessary ⇒ page 123

Vehicle cover: removing according to manufacturer's instructions ⇒ page 123

Bonnet arrester hook: lubricating ⇒ page 58

Cleaning and care: checking that required measures have been carried out on time ⇒ page 125

Suspension struts on front and rear axle: removing locking elements and correctly fitting bump stops ⇒ page 47

Luggage compartment cover and sun blind: checking that they are rolled up and rolling up if necessary ⇒ page 68

Glove box light, interior lighting and reading light: checking operation ⇒ page 64

Hydraulic system: checking fluid level ⇒ page 97

Vehicles parked outdoors: locking ⇒ page 123

Interior mirror: calibrating compass ⇒ page 126

Body: checking vehicle paintwork for damage and corrosion from below and with bonnet, rear lid and doors open ⇒ page 123

Poly V-belt for supercharger with charge air coolers: renewing ⇒ page 127

Protected by copyright. Copying for private or commercial purposes, in part or in whole, is not permitted unless authorised by AUDI AG. AUDI AG does not guarantee or accept any liability with respect to the correctness of information in this document. Copyright by AUDI AG.

Poly V-belts for ancillaries and all pulleys: renewing ⇒ page 127

Poly V-belts for ancillaries: checking ⇒ page 83

Poly V-belt for ancillaries and pulley for power steering pump: renewing ⇒ page 128

Luggage compartment lighting: checking operation ⇒ page 63

Luggage compartment: removing protective film and felt pieces ⇒ page 64

Instrument cluster: resetting driver information system ⇒ page 127

Instrument cluster: checking warning lamps ⇒ page 67

Fuel tank: adding fuel additive ⇒ page 117

Fuel filter: renewing ⇒ page 116

Coolant level: checking (coolant level must reach at least top marking on coolant expansion tank) ⇒ page 98

Paintwork, trims, side windows and wiper blades: checking cleanliness ⇒ page 123

Protected by copyright. Copying for private or commercial purposes, in part or in whole, is not permitted unless authorised by AUDI AG. AUDI AG does not guarantee or accept any liability with respect to the correctness of information in this document. Copyright by AUDI AG.

Air cleaner: renewing filter element and cleaning housing ⇒ page 101

Engine, gearbox, final drive and steering: checking for leaks and damage ⇒ page 52

Engine oil: draining ⇒ page 68

Engine oil: extracting ⇒ page 69

Engine oil: renewing oil filter ⇒ page 70

Engine oil: filling up ⇒ page 80

Engine oil: checking oil level and correcting if necessary ⇒ page 81

Navigation system (MMI basic): releasing eject button and running CD for languages ⇒ page 24

MMI navigation system: loading navigation CD/DVD ⇒ page 24

Parking brake: releasing ⇒ page 42

Road test ⇒ page 123

Wheel bolts: tightening to specified torque ⇒ page 46

Reducing agent (AdBlue®): filling up tank completely ⇒ page 118

Tyre Pressure Loss Indicator: storing changed tyre pressures ⇒ page 45

Tyre repair kit: checking that set is complete, and checking and recording expiry date ⇒ page 46

Manual gearbox/automatic gearbox: selecting 1st gear/park ⇒ page 126

Rear spoiler hinges: lubricating ⇒ page 57

Windscreen washer system: checking spray pattern and adjusting if necessary ⇒ page 59

Wiper blades: checking for damage ⇒ page 59

Headlights: checking for correct adjustment ⇒ page 61

Headlight washer system: checking operation ⇒ page 61

Copyright. Copying for private or commercial purposes, in part or in whole, is not permitted unless authorised by AUDI AG. AUDI AG does not guarantee or accept any liability with respect to the correctness of information in this document. Copyright by AUDI AG.

Snow screen: cleaning ⇒ page 114

Service interval display: resetting service event ⇒ page 24

Service Schedule: affixing vehicle data sticker ⇒ page 65

Service Schedule: entering Delivery Inspection ⇒ page 65

Seat belts: checking that retaining rivets are fitted, and checking locking action of automatic belt retractor ⇒ page 66

Horn: checking operation ⇒ page 64

Sun visors: checking that they are folded up and folding up if necessary ⇒ page 68

Stock vehicles: observing measures specified in Maintenance table for stock vehicles (see “Before handing vehicle over to customer”) ⇒ page 124

Dust and pollen filter: renewing ⇒ page 115

Stock vehicle care management: deciding and recording date of next check ⇒ page 125

Transport mode: deactivating ⇒ page 25

Transport mode: checking activation and activating if necessary ⇒ page 25

Door hinges with separate door arrester: cleaning and lubricating ⇒ page 57

Underbody: checking trim, wheel housing liners, side members and pipes/wiring for damage, and checking that they are properly secured ⇒ page 52

First-aid kit: checking and recording expiry date ⇒ page 67

Warning triangle: checking availability ⇒ page 67

Plenum chamber and water drains: checking for dirt ⇒ page 113

Toothed belt for camshaft drive, and drive sprockets for camshaft, crankshaft and high-pressure pump: renewing ⇒ page 127

Toothed belt for camshaft drive and tensioning roller: renewing ⇒ page 127

Toothed belt for camshaft drive: renewing ⇒ page 127

Accessories: installing ⇒ page 124

Spark plugs: renewing ⇒ page 84

3.1 Diesel particulate filter: reading out ash deposit volume

Table of test values and procedure guidelines:

Engine	Engine code	Method of analysis	Measured value designation for diagnostic tester	Maximum value for ash deposit
4-cyl. diesel engine 2.0 TDI	All	Guided Function	Particulate filter, oil ash deposit volume	Oil ash deposit volume: 175 ml
6-cyl. diesel engine 2.7 TDI/3.0 TDI	All engine codes except CCLA, CDUC, CKVB, CKVC, CLAB	Control unit self-diagnosis	[VO]_P_FLT_LD_VOL_ASH	Oil ash deposit volume: 370 ml
6-cyl. diesel engine 3.0 TDI	CCLA, CDUC, CLAB	Guided Functions	Particulate filter, oil ash deposit volume	Oil ash deposit volume: 370 ml

Engine	Engine code	Method of analysis	Measured value designation for diagnostic tester	Maximum value for ash deposit
6-cyl. diesel engine 3.0 TDI	CKVB, CKVC	Guided Functions	Particulate filter, oil ash deposit volume	Oil ash deposit volume: 380 ml

Procedure:

– Connect vehicle diagnostic tester ⇒ page 16 .

– Select Diagnosis mode and begin diagnosis.

– Perform vehicle identification.

– De-select “Working with Guided Fault Finding” by removing v and press Apply.

– Continue to follow instructions on screen.

– Switch to “Control units” tab.

– Select control unit “01 — Engine electronics” and carry out following functions via right mouse button:

Protected by copyright. Copying for private or commercial purposes, in part or in whole, is not permitted unless authorised by AUDI AG. AUDI AG does not guarantee or accept any liability with respect to the correctness of information in this document. Copyright by AUDI AG.

♦ Identify control unit

♦ Guided Functions/Control unit self-diagnosis

♦ 01 - Read measured values/Measured values

– Select desired measured value (see table of test values and procedure guidelines ⇒ page 22) by entering v and confirming with OK.

– Evaluate measured value and follow further instructions on screen.

– Perform the following measures according to the measured value:

Result:	Measure:
Measured value < critical value	Vehicle can be driven for a further 30,000 km (19,000 miles).
Measured value ≥ critical value	Renew diesel particulate filter and reset measured value to zero ⇒ Engine; Rep. gr. 26 ; Emission control system; Removing and installing particulate filter .

3.2 Event memory: reading out and erasing

Procedure:

– Connect vehicle diagnostic tester ⇒ page 16 .

– Select Diagnosis mode and begin diagnosis.

– Perform vehicle identification.

– Select “Working with Guided Fault Finding” by entering v and press Apply.

The control unit is then identified, and the event memory is interrogated. Observe notes and test conditions.

– Switch to “Control units” tab and call up “Event memory list” for an overview of all entries stored in event memory.

– Correct relevant faults and erase event memory.

Note

The event memory is erased automatically if the Guided Fault Finding is closed correctly.

3.3 Navigation system (MMI basic): releasing eject button and running CD for languages

Step 1 - releasing eject button:

– Connect vehicle diagnostic tester ⇒ page 16 .

– Select Diagnosis mode and begin diagnosis.

– Perform vehicle identification.

– De-select “Working with Guided Fault Finding” by removing v and press Apply.

– Switch to “Special functions” tab and select following program:

♦ 5F - Lock / release eject button

– Start program by selecting Carry out check.

– Continue to follow instructions on screen.

Step 2 - installing language:

– Activate MMI.

– Take “Navigation cues and speech dialogue system” CD out of glove box and insert it into CD/DVD drive.

– Press function selector button SETUP.

– Select following menu under control button »Settings«:

♦ Language

– Use MMI rotary pushbutton to select desired language.

– Put CD back when finished.

3.4 MMI navigation system: loading navigation CD/DVD

Procedure:

– Switch on ignition and activate MMI.

– Insert navigation CD/DVD into appropriate drive and read in navigation data.

3.5 Service interval display: resetting service event

Procedure:

– Connect vehicle diagnostic tester ⇒ page 16 .

– Select Diagnosis mode and begin diagnosis.

– Perform vehicle identification.

– De-select “Working with Guided Fault Finding” by removing v and press Apply.

– Switch to “Special functions” tab.

Protected by copyright. Copying for private or commercial purposes, in part or in whole, is not permitted unless authorised by AUDI AG. AUDI AG does not guarantee or accept any liability with respect to the correctness of information in this document. Copyright by AUDI AG.

– Select service event to be reset (select corresponding service event).
– Start program by selecting Carry out check.
– Continue to follow instructions on screen.

Note

Please refer to the relevant Maintenance table for information on which service channel to reset and what data to enter.

Protected by copyright. Copying for private or commercial purposes, in part or in whole, is not permitted unless authorised by AUDI AG. AUDI AG does not guarantee or accept any liability with respect to the correctness of information in this document. Copyright by AUDI AG.

3.6 Transport mode: deactivating

Procedure:

– Connect vehicle diagnostic tester ⇒ page 16 .
– Select Diagnosis mode and begin diagnosis.
– Perform vehicle identification.
– De-select “Working with Guided Fault Finding” by removing v and press Apply.
– Switch to “Special functions” tab and select following program:
♦ 19 - Activating / deactivating transport mode
– Start program by selecting Carry out check.
– Continue to follow instructions on screen.

Note

♦ *The transport mode serves to maintain the vehicle's ability to start.*
♦ *When the vehicle is in transport mode, many functions, e.g. radio, are restricted or unavailable.*

3.7 Transport mode: checking activation and activating if necessary

Checking transport mode ⇒ page 25

Activating transport mode ⇒ page 25

3.7.1 Checking transport mode

Procedure:

– Switch on ignition.
– Check whether »Transport mode on« is shown in instrument cluster.
– If necessary, activate transport mode ⇒ page 25 .

3.7.2 Activating transport mode

Procedure:

– Connect vehicle diagnostic tester ⇒ page 16 .
– Select Diagnosis mode and begin diagnosis.
– Perform vehicle identification.

– De-select “Working with Guided Fault Finding” by removing [v] and press [Apply].
– Switch to “Special functions” tab and select following program:
♦ 19 - Activating / deactivating transport mode
– Start program by selecting [Carry out check].
– Continue to follow instructions on screen.

Note

♦ *The transport mode serves to maintain the vehicle's ability to start.*
♦ *When the vehicle is in transport mode, many functions, e.g. radio, are restricted or unavailable.*

3.8 Battery: reading out status and sending diagnostic log

Protected by copyright. Copying for private or commercial purposes, in part or in whole, is not permitted unless authorised by AUDI AG. AUDI AG does not guarantee or accept any liability with respect to the correctness of information in this document. Copyright by AUDI AG.

Procedure:

– Connect vehicle diagnostic tester ⇒ page 16 .
– Select [Diagnosis] mode and begin diagnosis.
– Perform vehicle identification.
– Select “Working with Guided Fault Finding” by entering [v] and press [Apply].
– Switch to “Special functions” tab and select following program:
♦ A - Battery, Testing
– Start program by selecting [Carry out check].
– Continue to follow instructions on screen.
– Use results of test to determine following measures:

Result on vehicle diagnostic tester:	Measure:
“Battery OK”	No further measures necessary.
“Charge battery”	Charge battery ⇒ Electrical system; Rep. gr. 27 ; Battery; Charging battery .
“Battery is no longer of the same quality as when shipped”	Renew battery after consulting with customer ⇒ Electrical system; Rep. gr. 27 ; Battery; Removing and installing battery .

– Switch to [Control units] tab.
– Press [X Diagnosis] button and close diagnosis program.
– Send off diagnostic log online.

Note

♦ *A working network connection is necessary to send the diagnostic log file online.*
♦ *After the diagnosis is complete, you will receive confirmation that the test log was sent successfully.*

3.9 Battery: checking electrolyte level

Note

Batteries must not be opened.

Battery without magic eye ⇒ page 27

Battery with magic eye ⇒ page 28

3.9.1 Battery without magic eye

The battery is located in the luggage compartment.

Protected by copyright. Copying or distribution of this document is not permitted unless authorised by AUDI AG. AUDI AG does not guarantee or accept any liability with respect to the correctness of information in this document. Copyright by AUDI AG.

Removal steps:

– Take out luggage compartment floor covering.

– Applies to A5 Coupé: Unscrew nut -1- for tool kit and remove tool kit cover -2-.

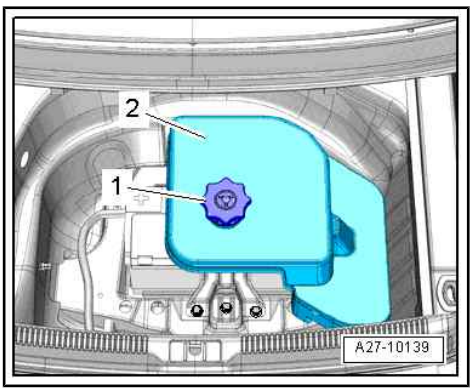

– Applies to A5 Sportback: Unscrew nut -1- for tool kit and remove tool kit cover -2-.

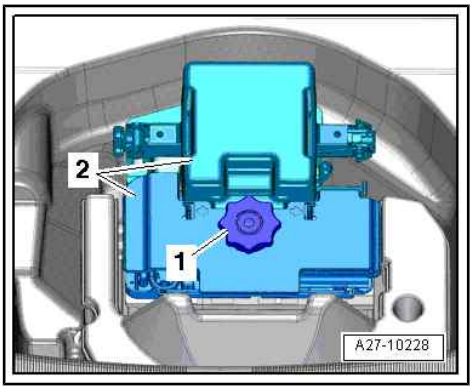

Procedure:

– Check battery housing for the following:

♦ Battery terminals are not corroded or damaged

♦ Mechanical damage to battery housing and cover, indicated by electrolyte leakage or crystals at the damaged area

– Damaged batteries must be renewed.

– Check electrolyte level of all battery cells using markings on housing.

– If electrolyte level of one or more battery cells is below MIN marking: Renew battery.

Install in reverse sequence.

Note

♦ *A bright hand-held light helps to better see the MIN and MAX markings on the housing.*

♦ *If battery is difficult to see: Use a small mirror to check the electrolyte level (shine a bright hand-held light at a right angle onto the battery cells).*

3.9.2 Battery with magic eye

WARNING

Risk of explosion if magic eye is colourless or light yellow!

- **Do not attempt to jump-start vehicle.**
- **Do not check or charge battery.**
- **Renew battery.**

The battery is located in the luggage compartment.

Removal steps:

– Take out luggage compartment floor covering.

– Applies to A5 Coupé: Unscrew nut -1- for tool kit and remove tool kit cover -2-.

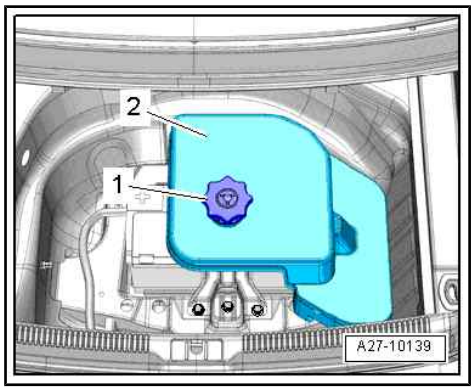

– Applies to A5 Sportback: Unscrew nut -1- for tool kit and remove tool kit cover -2-.

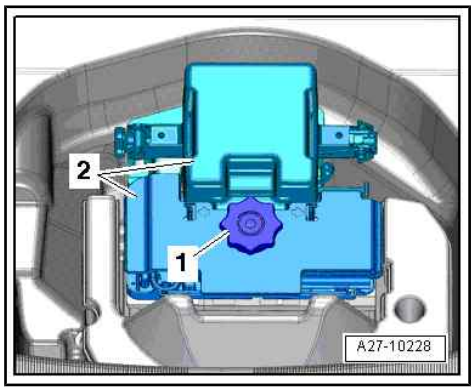

Procedure:

– Check battery housing for the following:

- Battery terminals are not corroded or damaged
- Mechanical damage to battery housing and cover, indicated by electrolyte leakage or crystals at the damaged area

– Damaged batteries must be renewed.

– Before checking electrolyte level: Tap magic eye -arrow- carefully with handle of a screwdriver.

Protected by copyright. Copying for private or commercial purposes, in part or in whole, is not permitted unless authorised by AUDI AG. AUDI AG does not guarantee or accept any liability with respect to the correctness of information in this document. Copyright by AUDI AG.

– Read off battery electrolyte level according to colour display. Two different results are possible:

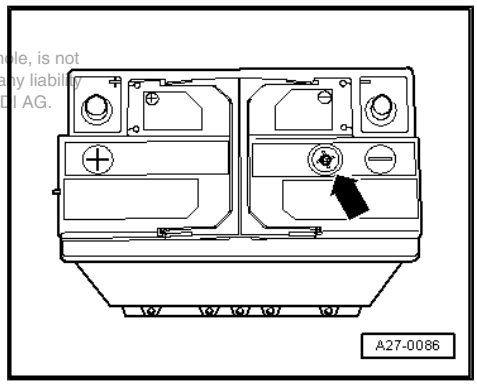

Colour of magic eye:	Measure:
Black or green	Electrolyte level OK: No further measures necessary
Colourless or light yellow	Electrolyte level too low: Battery must be renewed

Install in reverse sequence.

Note

- *The magic eye is also referred to as an ALI (acid level indicator).*
- *The magic eye is only for use in determining the electrolyte level.*
- *During battery charging or vehicle operation, air bubbles can form underneath the magic eye which could falsify the colour display. Tap magic eye lightly to release any bubbles.*

3.10 Battery: connecting stationary battery charging unit (min. 30A, charging voltage max. 14.8 V on IV characteristic curve)

WARNING

Risk of injury if battery terminal clamps are connected incorrectly.

- **Connect positive battery terminal clamp first, then connect negative battery terminal clamp.**

Special tools and workshop equipment required

- Battery charger - VAS 5906-

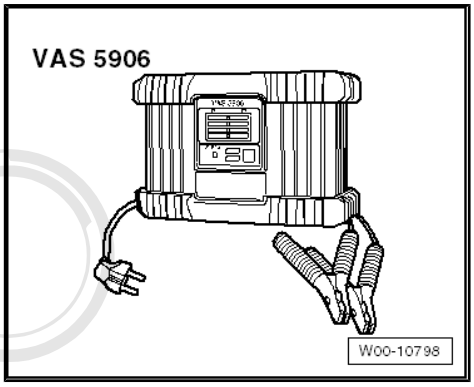

Only applies to vehicles intended for display.

Requirements:

- Ignition switched off.

Protected by copyright. Copying for private or commercial purposes, in part or in whole, is not permitted unless authorised by AUDI AG. AUDI AG does not guarantee or accept any liability with respect to the correctness of information in this document. Copyright by AUDI AG.

Removal steps:

– Take out luggage compartment floor.

– Applies to A5 Coupé: Unscrew nut -1- for tool kit and remove cover -2- and tool kit.

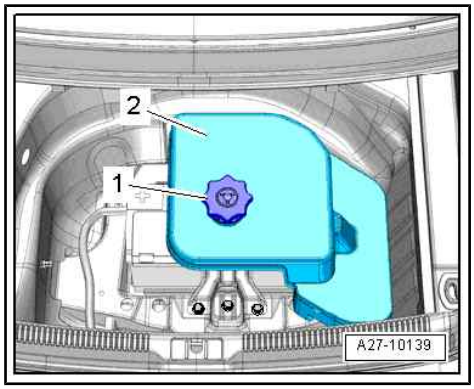

– Applies to A5 Sportback: Unscrew nut -1- for tool kit and remove tool kit cover -2-.
– If fitted, remove subwoofer ⇒ Communication; Rep. gr. 91 ; Sound system; Removing and installing subwoofer -R211- .

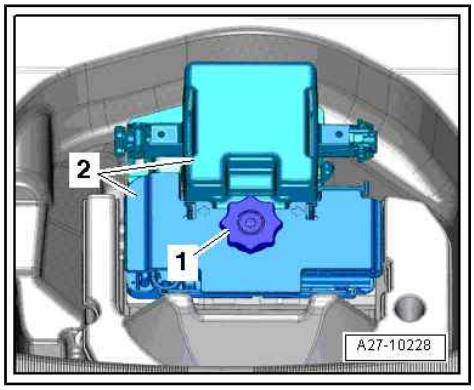

– Remove plastic stopper -C- in spare wheel well and store it in glove box.

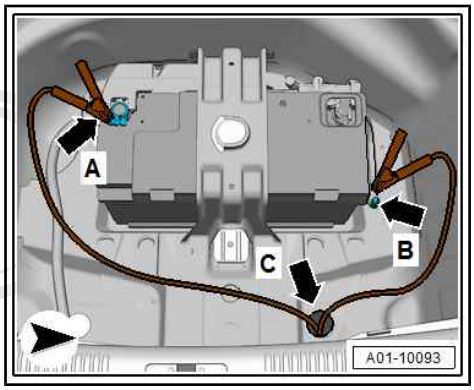

Procedure for connecting battery charger:

– Disconnect charger clamps from battery charger - VAS 5906- .
– Working from above, thread connector end of cable for charger clamps through hole in spare wheel well.
– Open battery terminal cover (+).
– First connect charger clamp (+) to positive battery terminal -A-.
– Then connect charger clamp (-) to earth point (-) -B- on body.
– Arrange wiring of battery charger - VAS 5906- neatly in spare wheel well.
– Stow tool kit in spare wheel well and fit cover for tool kit.
– Fit luggage compartment floor cover.
– Under vehicle: Connect cable for charger clamps to battery charger - VAS 5906- .
– Switch on battery charger - VAS 5906- and adjust settings as needed.
– Position battery charger - VAS 5906- under vehicle so that it is hidden from view as well as possible, ensuring that ventilation grille of charger is unobstructed.

Protected by copyright. Copying for private or commercial purposes, in part or in whole, is not permitted unless authorised by AUDI AG. AUDI AG does not guarantee or accept any liability with respect to the correctness of information in this document. Copyright by AUDI AG.

Procedure for disconnecting battery charger:

Remove in reverse sequence.

3.11 Battery: determining and recording state of charge (SOC)

Vehicles with transport mode ON ⇒ page 31

Vehicles with transport mode OFF ⇒ page 31

3.11.1 Vehicles with transport mode ON

Procedure:

– Read off battery charge level on instrument cluster.

– Use results of test to determine following measures:

State of charge (SOC):	Measure:
“≥ 80% (12.5 V)”	No further measures necessary.
“SOC < 80% (12.5 V) and SOC ≥ 10% (11.6 V)”	Charge battery ⇒ Rep. gr. 27 ; Battery; Charging battery .
“< 10% (11.6 V)”	Charge battery ⇒ Rep. gr. 27 ; Battery; Charging battery , and attach mirror hanger for “Battery defective”.

– Record charge level in maintenance table.

Note

If if is not possible to read off the state of charge in the instrument cluster, measure the battery's no load voltage ⇒ page 32 .

3.11.2 Vehicles with transport mode OFF

Special tools and workshop equipment required

♦ Battery tester - VAS 6161-

The battery is located under the luggage compartment floor.

Removal steps:

Coupé:

– Lift luggage compartment cover and engage at body.

– Unscrew nut -1- and take cover -2- off tool kit.

– If fitted, remove subwoofer ⇒ Rep. gr. 91 ; Sound system; Removing and installing subwoofer in rear shelf -R157-, Coupé .

– Open battery terminal covers.

Protected by copyright. Copying for priv
permitted unless authorised by AUDI A
with respect to the correctness of inf

Sportback:

– Take out luggage compartment floor.

– Unscrew nut -1- and remove mounting -2- for tool kit.

– If fitted, remove subwoofer ⇒ Rep. gr. 91 ; Sound system; Removing and installing subwoofer in rear shelf -R157-, Sportback .

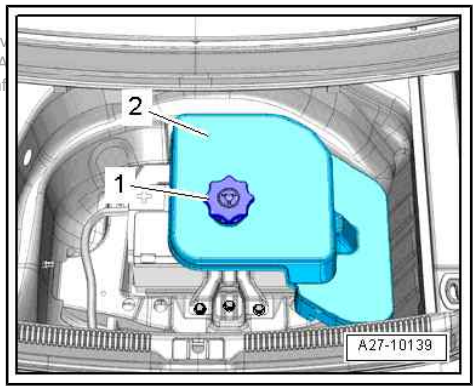

– Open battery terminal covers.

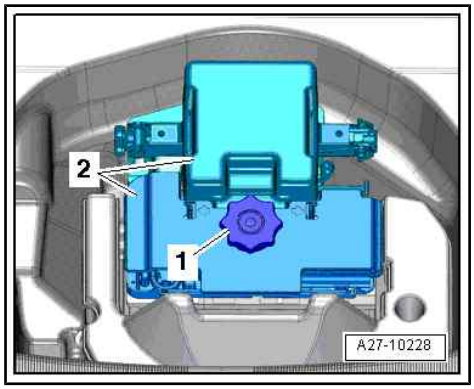

Procedure:

– Switch on battery tester - VAS 6161- and select “QC check, new vehicles”.

– Use battery tester - VAS 6161- to measure voltage between battery clamps.

– Use results of test to determine following measures:

Battery tester shows:	Measure:
“Battery Good”	No further measures necessary.
“Charge fully now”	Charge battery ⇒ Rep. gr. 27 ; Battery; Charging battery .
“Battery Faulty”	Charge battery ⇒ Rep. gr. 27 ; Battery; Charging battery , and attach mirror hanger for “Battery defective”.

– Record charge level in maintenance table.

Note

♦ *When using battery tester - VAS 6161- , ensure that the software is up to date.*

♦ *If if is not possible to measure the state of charge with battery tester - VAS 6161- , measure the battery's no load voltage* *⇒ page 32* .

Protected by copyright. Copying for private or commercial purposes, in part or in whole, is not permitted unless authorised by AUDI AG. AUDI AG does not guarantee or accept any liability with respect to the correctness of information in this document. Copyright by AUDI AG.

3.11.3 Measuring no load voltage of battery

Special tools and workshop equipment required

♦ Hand-held multimeter - V.A.G. 1526 C-

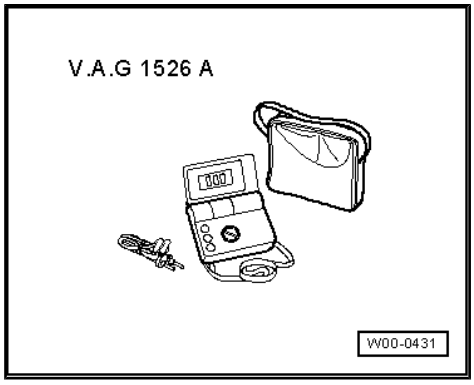

♦ Or: digital multimeter - V.A.G. 1715-

Requirements:

- Battery must not be placed under load from connected electrical equipment for at least 2 hours before test.
- Battery must not have been charged for at least 2 hours before test.
- Engine must remain off for at least 2 hours before test.
- Ignition switched off during test.

Removal steps:

Coupé:

– Lift luggage compartment cover and engage at body.

– Unscrew nut -1- and take cover -2- off tool kit.

– If fitted, remove subwoofer ⇒ Rep. gr. 91 ; Sound system; Removing and installing subwoofer in rear shelf -R157-, Coupé .

– Open battery terminal covers.

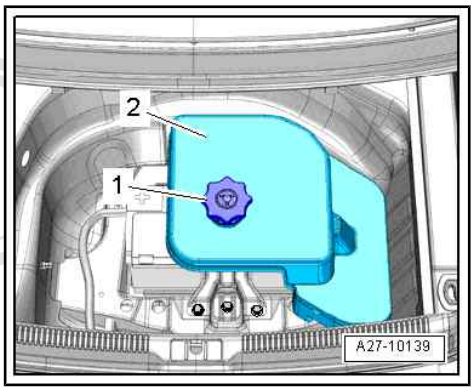

Sportback:

– Take out luggage compartment floor.

– Unscrew nut -1- and remove mounting -2- for tool kit.

– If fitted, remove subwoofer ⇒ Rep. gr. 91 ; Sound system; Removing and installing subwoofer in rear shelf -R157-, Sportback .

– Open battery terminal covers.

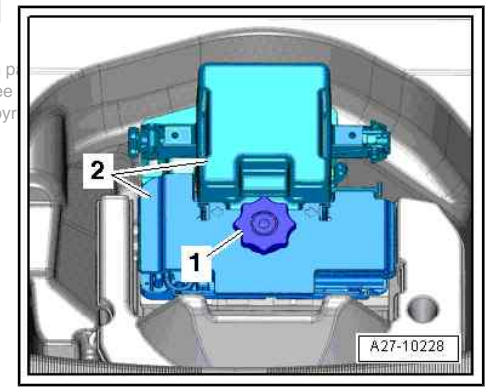

Procedure:

Protected by copyright. Copying for private or commercial purposes, in p
permitted unless authorised by AUDI AG. AUDI AG does not guarantee
with respect to the correctness of information in this document. Copyr

– Use hand-held multimeter - V.A.G. 1526 C- to measure voltage between battery clamps -2- and -3-.

– Use results of test to determine following measures:

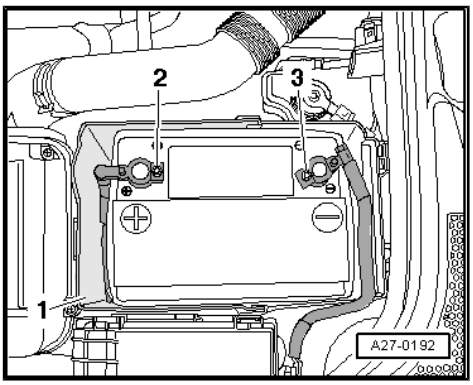

State of charge (SOC):	Measure:
“≥ 12.5 V”	No further measures necessary.
“SOC < 12.5 V and SOC ≥ 11.6 V”	Charge battery ⇒ Rep. gr. 27 ; Battery; Charging battery .
“< 11.6 V”	Charge battery ⇒ Rep. gr. 27 ; Battery; Charging battery , and attach mirror hanger for “Battery defective”.

Install in reverse sequence.

3.12 Mirror hanger indicating defective battery: renewing battery on affected vehicles

Only for vehicles with mirror hanger for “Battery defective”.

Procedure:

– Wait until shortly before vehicle delivery, then renew battery according to instructions in workshop manual ⇒ Rep. gr. 27 ; Battery; Removing and installing battery .

Protected by copyright. Copying for private or commercial purposes, in part or in whole, is not permitted unless authorised by AUDI AG. AUDI AG does not guarantee or accept any liability with respect to the correctness of information in this document. Copyright by AUDI AG.

3.13 Data sheet for Radio Equipment Directive: printing and placing in glove compartment

As part of the European Union’s Radio Equipment Directive (RED 2014/53/EU), legislation requires that a data sheet be provided containing information regarding which radio frequencies are used.

The Radio Equipment Directive data sheet can be downloaded at www.audi.com/generalinfo.

– Print out data sheet (same language as owner's literature) and fold it.

– Place data sheet in glove compartment.

Note

- *Only markets within the EU.*
- *The data sheet applies to all vehicles across Europe; it can therefore be printed out in advance and kept at hand.*

3.14 Brake fluid: changing

WARNING

Risk of accident if the brake pedal has too much free play.

- **Make sure that the brakes work properly before the vehicle is driven on the road.**

WARNING

Risk of injury due to caustic brake fluid.

- **Avoid contact with skin.**

CAUTION

Risk of damage due to improper handling of brake fluid.

- **Avoid contact with vehicle paint.**
- **Avoid contact with liquids containing mineral oils (oil, petrol, cleaning agents).**

Special tools and workshop equipment required

- Brake filling and bleeding equipment - VAS 5234-

- Tool set for brake bleeding - VAS 6564-

Protected by copyright. Copying for private or commercial purposes, in part or in whole, is not permitted unless authorised by AUDI AG. AUDI AG does not guarantee or accept any liability with respect to the correctness of information in this document. Copyright by AUDI AG.

Table of test values and procedure guidelines:

The value given in the table is for one brake caliper, i.e. if there are two bleeder screws on one caliper, the sum of the quantities discharged from both bleeder screws must equal the value given in the table.

Sequence of opening bleeder screws:		Quantity of brake fluid to discharge:
Brake calipers		
Front axle on driver's side	1.	0.20 ltr.
Front axle on passenger's side	2.	0.20 ltr.
Rear axle on driver's side	3.	0.30 ltr.
Rear axle on passenger's side	4.	0.30 ltr.
Clutch slave cylinder	5.	0.15 ltr.
⇒ Total quantity, automatic gearbox		1.00 ltr.
⇒ Total quantity, manual gearbox		1.15 ltr.

Step 1 - connecting brake filling and bleeding equipment:

– Unscrew filler cap -1- from brake fluid reservoir.

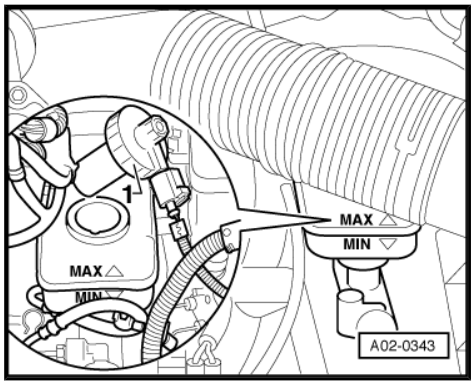

– Use extraction hose included in brake filling and bleeding equipment - VAS 5234- to extract brake fluid from reservoir (with strainer installed) until fluid is level with bottom edge of strainer. Make sure that no more fluid flows back into reservoir from strainer after extracting fluid.

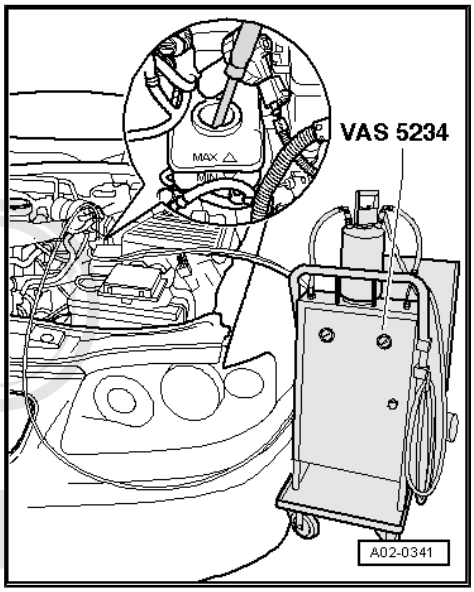

Protected by copyright. Copying for private or commercial purposes, in part or in whole, is not permitted unless authorised by AUDI AG. AUDI AG does not guarantee or accept any liability with respect to the correctness of information in this document. Copyright by AUDI AG.

– Screw adapter -1- onto brake fluid reservoir.
– Connect filling hose -2- included with brake filling and bleeding equipment - VAS 5234- to adapter.
– Set pressure on brake filling and bleeding equipment - VAS 5234- (see operating instructions).

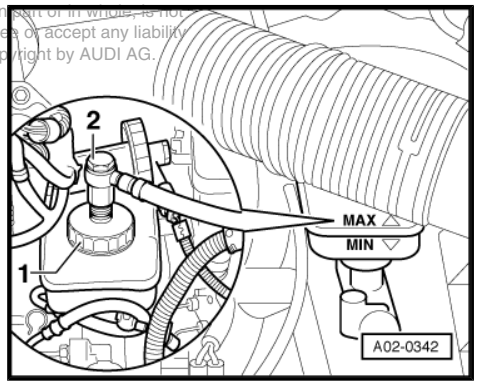

Step 2 - bleeding and filling brake system:

If there are two bleeder screws on each brake caliper, first bleed the inner, then the outer bleeder screw.

– Raise vehicle ⇒ page 6 .

Front axle:

– Brake caliper (driver's side): Remove cap(s) -1- from bleeder screw(s).

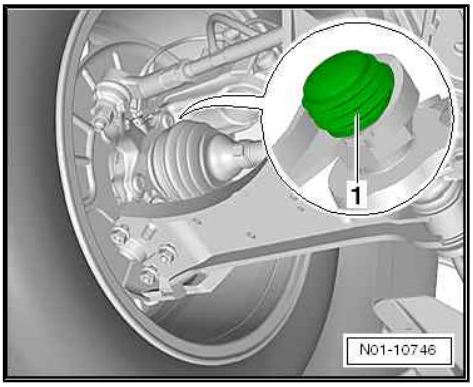

– Fit bleeder hose -1- attached to collector container onto bleeder screw from inside of rim.
– Open bleeder screw and allow brake fluid to discharge. Refer to table for correct quantity of brake fluid to discharge ⇒ page 35 .
– Close bleeder screw.
– If there are two bleeder screws on each brake caliper: Repeat procedure with second bleeder screw.
– Refit cap on bleeder screw(s).
– Repeat procedure on passenger's side.

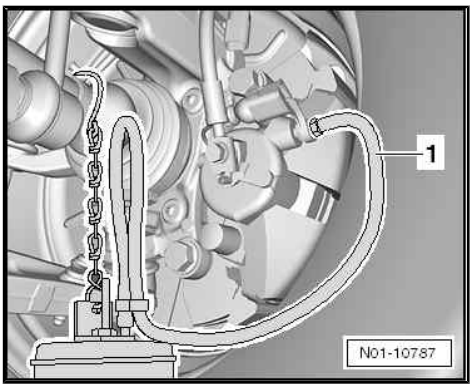

Rear axle:

– Brake caliper (driver's side): Remove cap(s) -1- from bleeder screw(s).
– Take reversible ratchet and appropriate socket from tool set for brake bleeding - VAS 6564- and fit together.

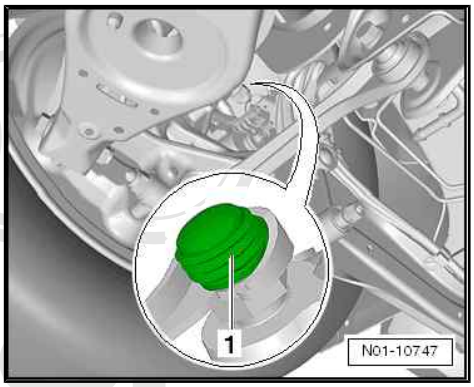

– Run bleeder hose -1- from inside of rim through reversible ratchet -2- and socket -3- and fit onto bleeder screw.
– Open bleeder screw with ratchet -2- and allow brake fluid to discharge. Refer to table for correct quantity of brake fluid to discharge ⇒ page 35 .
– Close bleeder screw.

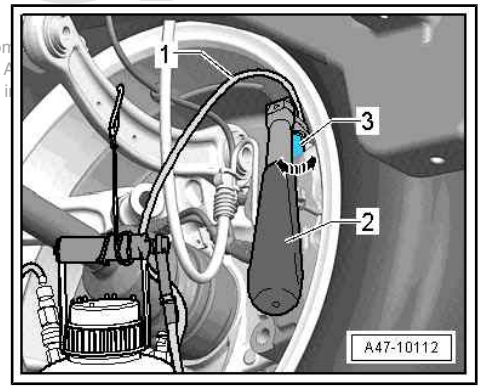

Copyright © AUDI AG. Copying for private or com
permitted unless authorised by AUDI AG. AUDI A
will not be liable for the use of information i

– If there are two bleeder screws on each brake caliper: Working from outside of rim, apply reversible ratchet -2- and socket -3- and repeat procedure.
– Refit cap on bleeder screw(s) on brake caliper.
– Repeat procedure on passenger's side.

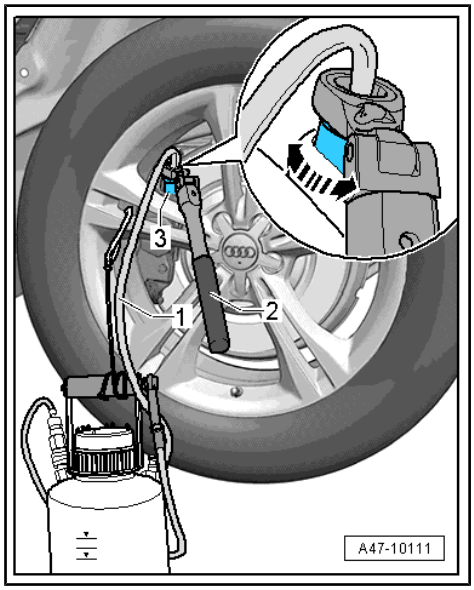

Step 3 - bleeding clutch slave cylinder

Only for vehicles with manual gearbox

– Remove components necessary for access; refer to ⇒ Manual gearbox; Rep. gr. 30 ; Clutch mechanism; Bleeding clutch mechanism .
– Fit bleeder hose attached to collector container -1- onto bleeder screw of clutch slave cylinder.
– Open bleeder screw and allow correct amount of brake fluid to flow out (see table of test values and procedure guidelines ⇒ page 35).
– Close bleeder screw and fit cap.

Step 4 - final steps:

– Close filling lever of brake filling and bleeding equipment - VAS 5234- .
– Detach filling hose from adapter.
– Unscrew adapter from brake fluid reservoir.
– Check brake fluid level and adjust if necessary (depending on brake pad wear) ⇒ page 39 .
– Screw cap onto brake fluid reservoir.
– Operate clutch pedal several times.
– Check pedal pressure and free travel: No more than $^{1}/_{3}$ of total pedal travel.
– Make sure that the brakes work properly before the vehicle is driven on the road.
– If free travel of brake pedal is greater than specified, or if brake function is impaired: Check brake system for leaks and renew brake fluid again.

Protected by copyright. Copying for private or commercial purposes, in part or in whole, is not permitted unless authorised by AUDI AG. AUDI AG does not guarantee or accept any liability with respect to the correctness of information in this document. Copyright by AUDI AG.

Note

- *The bleeder hose must fit tightly on the bleeder screw to prevent air from entering the brake system.*
- *In the case of certain wheel combinations, the wheels may have to be removed.*
- *With the aid of the tool set for brake bleeding - VAS 6564- , the rear brakes or, depending on version, the front and rear brakes can be bled without having to remove the wheels.*
- *Use genuine Audi brake fluid; see Electronic parts catalogue (ETKA).*
- *Do not reuse brake fluid.*
- *Always observe the relevant environmental regulations for disposal of brake fluid.*

3.15 Brake fluid (vehicles older than 12 months): changing

Only applies to vehicles older than 12 months (from date of manufacture).

Procedure:

– Change brake fluid ⇒ page 34 .

3.16 Brake fluid: checking fluid level

Protected by copyright. Copying for private or commercial purposes, in part or in whole, is not permitted unless authorised by AUDI AG. AUDI AG does not guarantee or accept any liability with respect to the correctness of information in this document. Copyright by AUDI AG.

Table of test values and procedure guidelines:

Type of service:	Fluid level specification:
Delivery Inspection	Fluid level must be at MAX marking.
Brake fluid change	Fluid level must be between MAX marking and MIN marking according to wear level of brake pads.

Checking the brake system for leaks is a repair measure and should be charged separately.

Procedure:

– Evaluate brake fluid level according to markings -arrows- on brake fluid reservoir.

– Perform the following measures according to the results of the check:

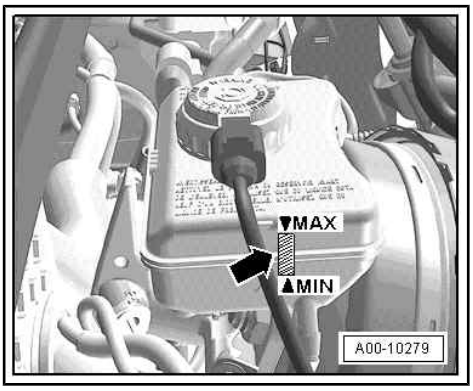

Fluid level:	Evaluation/measure:
Above MAX marking	Extract brake fluid.
Below specified level	Carry out brake system leak test ⇒ Brake system; Rep. gr. 47 ; Hydraulic system; Leak test .

Note

When the vehicle is in use, the fluid level drops due to wear and automatic adjustment of the brake pads.

3.17 Brake system: checking condition of brake hoses, and checking that caps are fitted on bleeder screws

Requirements:

- Brake hoses must not touch any components when steering is on full lock.
- Brake hoses must not be twisted.

Procedure:

- Check that all brake hoses are secured properly; when doing so, ensure that the conditions listed are met:
- Check all brake hoses for abrasion, porosity, blistering and cracking.
- Check that brake connections are seated correctly, and check for corrosion and leaks.
- If faults are found on brake hoses: Repair/renew relevant component.
- Check that caps are fitted and secured on bleeder screws of all brake calipers.
- Renew any missing caps.

3.18 Brake pads: checking thickness

Special tools and workshop equipment required

- ♦ Test pin - T40139- : Use the side with the thin probe (brake symbol) to measure brake pad thickness.

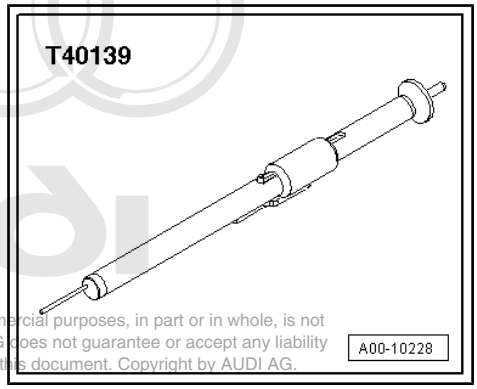

Protected by copyright. Copying for private or commercial purposes, in part or in whole, is not permitted unless authorised by AUDI AG. AUDI AG does not guarantee or accept any liability with respect to the correctness of information in this document. Copyright by AUDI AG.

Table of test values and procedure guidelines:

Model	Brake version	Brake pad wear limit including backplate and damper plate [mm]	Brake pad wear limit including backplate, not including damper plate [mm]
Front axle:			
All models except RS 5	PR Nos.: #1LT, #1LY	10.6	9.5
All models except RS 5	PR Nos. #1LA, #1LB, #1LD, #1LJ	9.6	8.5
RS 5	Steel-version brakes	9.2	8.2
RS 5	Ceramic brakes	8.4	7.4
Rear axle:			
All	All	8.8	8

Check only the thickness of the outer brake pads.

Procedure:

- Before you begin: Push sliding ring towards tip of test pin as far as it will go.
- Bring tip of test pin into contact with brake disc.

– Slide test pin towards brake pad until test pin makes contact with backplate of brake pad.
– Remove test pin and read off brake pad wear value -a- from scale on tool.
– Repeat procedure for all wheels.
– If brake pad thickness has reached wear limit (see table of test values and procedure guidelines ⇒ page 40): Renew brake pads ⇒ Brake system; Rep. gr. 46 ; Removing and installing brake pads .

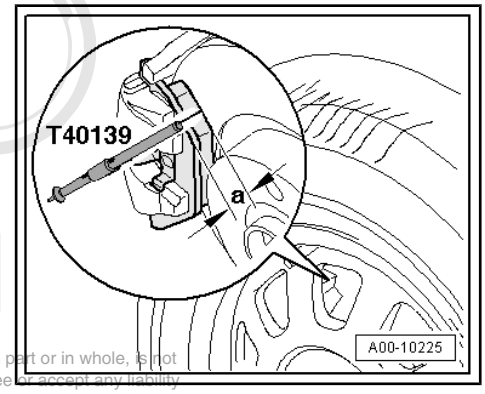

Protected by copyright. Copying for private or commercial purposes, in part or in whole, is not permitted unless authorised by AUDI AG. AUDI AG does not guarantee or accept any liability with respect to the correctness of information in this document. Copyright by AUDI AG.

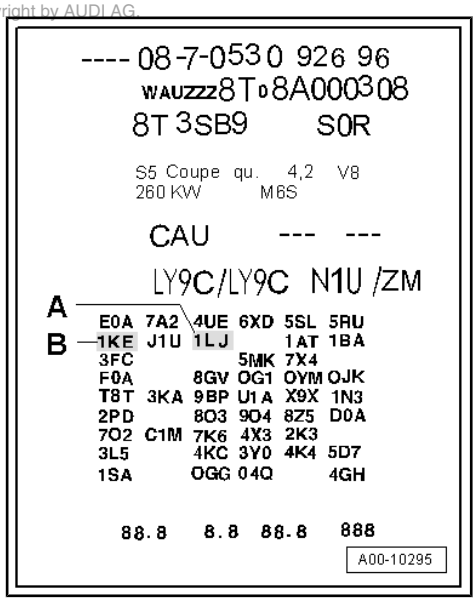

Note

- *When removing the test gauge, take care not to move the sliding ring. This would give an incorrect measurement.*
- *Note where the test gauge makes contact on the rear of the brake pad and include the thickness of the damper plate in the calculation if necessary.*
- *In the case of certain wheel combinations, the wheels must be removed.*
- *The PR number for the brake system can be found using the Electronic parts catalogue (ETKA) or by referring to items -A- and -B- on the vehicle data sticker.*

3.19 Brake discs: checking for surface rust and operating brakes to clean if necessary

Checking brake discs ⇒ page 41

Operating brakes to clean brake discs ⇒ page 42

3.19.1 Checking brake discs

Procedure:

– Check outside of all brake discs for surface rust.
– If necessary, operate brakes to clean brake discs ⇒ page 42 .

Note

The brake discs can be damaged irreparably if surface rust is not removed at the specified intervals.

3.19.2 Operating brakes to clean brake discs

Procedure:

– Accelerate vehicle to 40 km/h, then brake gently to 10 km/h (do this five times).

– Accelerate vehicle to 40 km/h, then brake sharply to a standstill (do this five times).

Note

The wheels should not spin or lock during acceleration and braking.

3.20 Parking brake: releasing

Mechanical parking brake ⇒ page 42

Electromechanical parking brake ⇒ page 42

3.20.1 Mechanical parking brake

Procedure:

– Release parking brake.

3.20.2 Electromechanical parking brake

Procedure:

– Press brake pedal, then press switch for electromechanical parking brake.

3.21 Tyres: checking condition and wear pattern, and checking and recording tread depth

Special tools and workshop equipment required

♦ Test pin - T40139- : Use the side with the thick probe and shoulder (scale marked with tyre symbol) to measure tread depth.

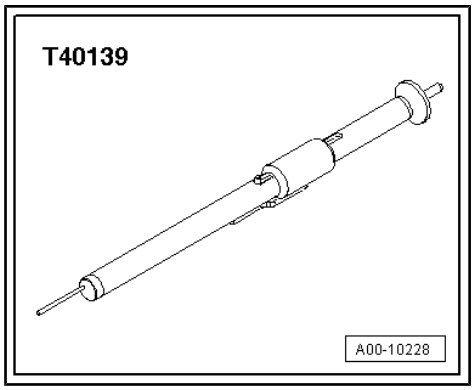

Table of test values and procedure guidelines:

Country-specific regulations for minimum tread depth apply; for countries not listed, evaluate values according to the country's specifications.

Protected by copyright. Copying for private or commercial purposes, in part or in whole, is not permitted unless authorised by AUDI AG. AUDI AG does not guarantee or accept any liability with respect to the correctness of information in this document. Copyright by AUDI AG.

Country	Minimum tread depth [mm]
EU countries	1.6[1)]
Brazil	1.6
China	1.6

Country	Minimum tread depth [mm]
India	1.6
Japan	1.6
Norway	1.6[1)]
Russia	1.6
Switzerland	1.6
Turkey	1.6
Ukraine	1.6[1)]
USA	1.6

1) Larger values for winter tyres where these are mandatory

Performing wheel alignment is a repair measure and should be charged separately.

Step 1 - checking condition:

– Check for and remove any foreign bodies in tyre tread.

– Check all tyres for following types of damages:

♦ Cuts, cracks, tears

♦ Scuffing or flattened areas on tyre tread

♦ Porous sidewalls

♦ Blisters on sidewalls

– If damage is found: Renew tyres.

Step 2 - checking tyre wear pattern:

– Check tyre wear pattern of front wheels; check for the following:

♦ Feathering on tread indicating possible incorrect toe setting

♦ One-sided tread wear indicating possible incorrect camber

– If the above types of wear are found: Check wheel alignment to determine the cause.

Step 3 - checking tread depth:

Protected by copyright. Copying for private or commercial purposes, in part or in whole, is not permitted unless authorized by AUDI AG. AUDI AG does not guarantee or assume any liability with respect to the correctness of information in this document. Copyright by AUDI AG.

– Measure tread depth on all tyres (including spare tyre) at several points using test pin - T40139- . Uneven tread depth indicates damage.

– Record average measurement for each tyre in Maintenance table.

– If minimum tread depth has been reached (as specified for your country; see table of test values and procedure guidelines ⇒ page 42): Renew tyre.

Note

Vehicles with four-wheel drive must be fitted with tyres with the same tread pattern. Otherwise the centre differential may be damaged.

3.22 Tyres: checking tyre pressures and adjusting if necessary

Note

The tyre valves must be sealed with valve caps. Otherwise, dirt could enter the valve, which will then become blocked and will no longer seal properly.

Front and rear axles ⇒ page 44

Spare wheel and temporary spare wheel ⇒ page 44

3.22.1 Front and rear axle

The tyre pressure specifications are listed on the sticker on the inside of the driver's door.

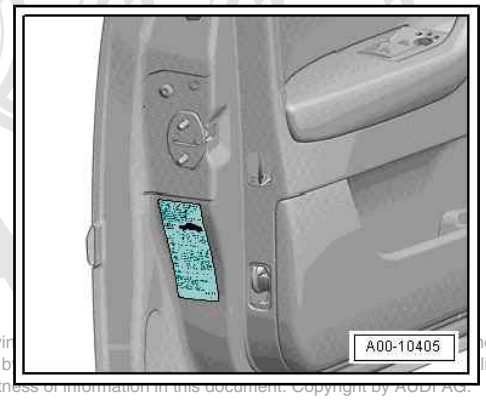

Tyre sizes not listed: See Wheel/tyre guide for tyre pressure specification ⇒ Wheel/Tyre Guide; Rep. gr. 44 ; Wheels, tyres, vehicle geometry; Tyre pressures .

Procedure:

– Check tyre pressure of all tyres.

– If necessary, adjust to correct tyre pressures.

Protected by copyright. Copyin ot permitted unless authorised b lity with respect to the correctness of information in this document. Copyright by AUDI AG.

Note

The tyre pressures listed only apply to cold tyres. When the tyres are warm, the actual pressures will be higher, but must not be reduced.

3.22.2 Spare wheel and temporary spare wheel

The following parameters apply to the tyre pressure specifications:

- Spare wheel with standard-size tyre: Inflate to maximum tyre pressure indicated on tyre pressure sticker.
- Temporary spare wheel: The correct tyre pressure is indicated on the sidewall.

Procedure:

– Check tyre pressure of spare wheel/temporary spare wheel.

– If necessary, adjust to correct tyre pressures.

Note

Depending on equipment version, there may only be a tyre repair kit supplied; see Maintenance table.

3.23 Tyres (except spare wheel): checking tyre pressures and adjusting to 3.5 bar if necessary

Note

The tyre valves must be sealed with valve caps. Otherwise, dirt could enter the valve, which will then become blocked and will no longer seal properly.

Procedure:

– Check tyre pressure of all tyres.

– If necessary, adjust tyre pressure to 3.5 bar and record pressure in maintenance table.

3.24 Tyre Pressure Loss Indicator: storing changed tyre pressures

Protected by copyright. Copying for private or commercial purposes, in part or in whole, is not permitted unless authorised by AUDI AG. AUDI AG does not guarantee or accept any liability with respect to the correctness of information in this document. Copyright by AUDI AG.

The Tyre Pressure Loss Indicator must be initialised after every time the tyre pressures are changed or the tyres are renewed.

Storing tyre pressures via MMI (version 1) ⇒ page 45

Storing tyre pressures via MMI (version 2) ⇒ page 45

3.24.1 Storing tyre pressures via MMI (version 1)

Requirements:

- The inflation pressures of all tyres must be adjusted to the correct values before the pressures are stored.

Procedure:

– Switch on ignition and activate MMI.

– Press function selector button CAR and navigate through following menu structure:

♦ Tyre pressure monitoring

– Use MMI rotary pushbutton to select option to store tyre pressures.

Note

There are other methods of saving the tyre pressures *⇒ page 45* *.*

3.24.2 Storing tyre pressures via MMI (version 2)

Requirements:

- The inflation pressures of all tyres must be adjusted to the correct values before the pressures are stored.

Procedure:

– Switch on ignition and activate MMI.

– Press function selector button CAR.

– Under »Car systems«, navigate through following menu structure:

♦ Servicing & checks

♦ Tyre pressure monitoring

– Use MMI rotary pushbutton to select option to store tyre pressures.

Note

There are other methods of saving the tyre pressures *⇒ page 45* .

3.25 Tyre repair kit: checking that set is complete, and checking and recording expiry date

The tyre repair kit is located in the spare wheel well.

Procedure:

– Check that the following components of the tyre repair kit are present:

♦ Compressor

♦ Tyre filler bottle incl. filler hose

– Take out the bottle and check the expiry date (printed on bottle -arrow-).

– Record expiry date in Maintenance table.

– If expiry date has been exceeded or if bottle has already been used: Renew tyre filler bottle.

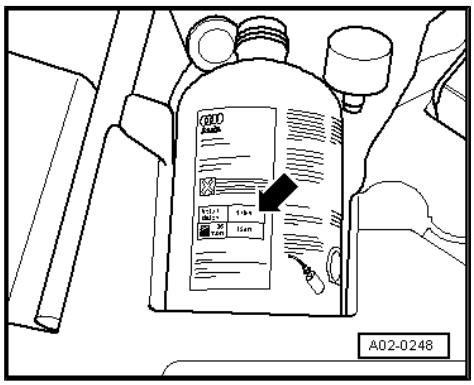

3.26 Wheel bolts: tightening to specified torque

Special tools and workshop equipment required

♦ Torque wrench - V.A.G 1332- , measuring range 40 to 200 Nm

♦ Or: torque wrench - V.A.G 1576- , measuring range 80 to 400 Nm

Table of test values and procedure guidelines:

Protected by copyright. Copying for private or commercial purposes, in part or in whole, is not permitted unless authorised by AUDI AG. AUDI AG does not guarantee or accept any liability with respect to the correctness of information in this document. Copyright by AUDI AG.

Fastener	Tightening torque [Nm]
Wheel bolt	120

The adapter for loosening and tightening anti-theft wheel bolts is included in the vehicle tool kit.

Procedure:

– Tighten wheel bolts in a diagonal sequence to specified torque (see table of test values and procedure guidelines ⇒ page 46).

– If adapter for anti-theft wheel bolts was used from tool kit: Put adapter back in tool kit.

3.27 Suspension struts on front and rear axle: removing locking elements and correctly fitting bump stops

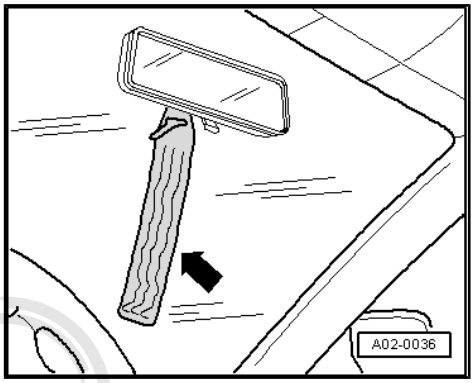

Note

- *These vehicles are identified by a coloured tag fixed to the mirror -arrow-.*
- *It is not necessary to remove the wheels to perform this operation.*

Suspension struts on front axle ⇒ page 47

Suspension struts on rear axle ⇒ page 48

Pressing in bump stop ⇒ page 49

3.27.1 Suspension struts on front axle

Requirements:

- Vehicle suspension extended

Procedure:

– Push all locking elements -A- off piston rod.

– When all locking elements have been removed from vehicle: Remove tag on interior mirror.

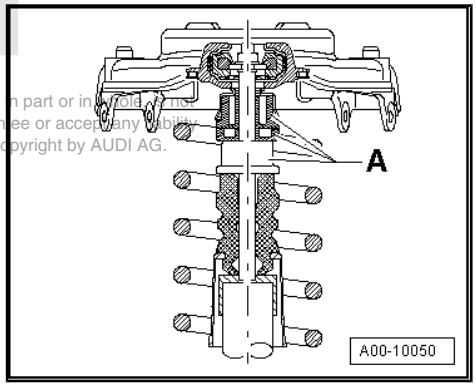

Protected by copyright. Copying for private or commercial purposes, in part or in whole, is not permitted unless authorised by AUDI AG. AUDI AG does not guarantee or accept any liability with respect to the correctness of information in this document. Copyright by AUDI AG.

– After road test: Check that all bump stops are firmly seated in shock absorber mountings.

– If necessary, press any loose bump stops into shock absorber mountings ⇒ page 49 .

Note

The bump stops of the suspension struts are pressed into the shock absorber mountings due to the compression movements during the road test.

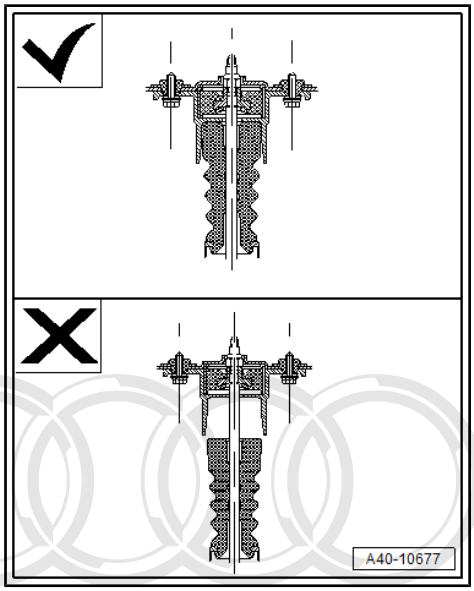

3.27.2 Suspension struts on rear axle

Requirements:

- Vehicle suspension extended

Procedure:

– Push all locking elements -1- off piston rod.

– When all locking elements have been removed from vehicle: Remove tag on interior mirror.

Protected by copyright. Copying for private or commercial purposes, in part or in whole, is not permitted unless authorised by AUDI AG. AUDI AG does not guarantee or accept any liability with respect to the correctness of information in this document. Copyright by AUDI AG.

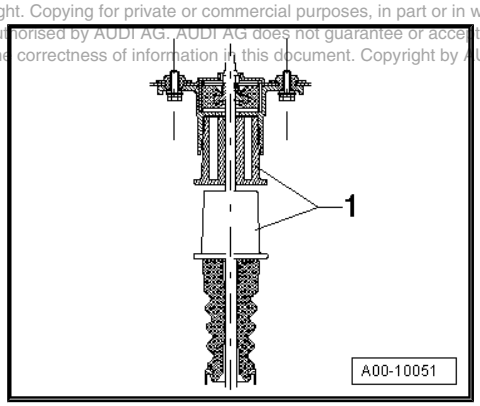

– After road test: Check that all bump stops are firmly seated in shock absorber mountings.

– If necessary, press any loose bump stops into shock absorber mountings ⇒ page 49 .

Note

The bump stops of the suspension struts are pressed into the shock absorber mountings due to the compression movements during the road test.

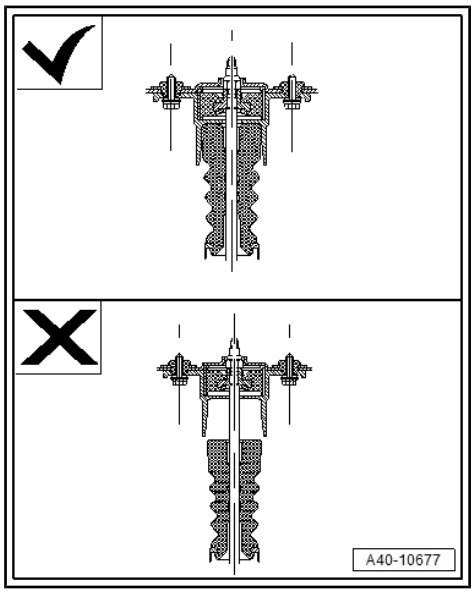

3.27.3 Pressing in bump stop

Special tools and workshop equipment required

♦ Soap-based lubricant, e.g. tyre assembly paste

Procedure:

– Remove coarse dirt from top edge of loose bump stop and coat with tyre assembly paste.

– Press bump stop firmly into shock absorber mounting by hand.

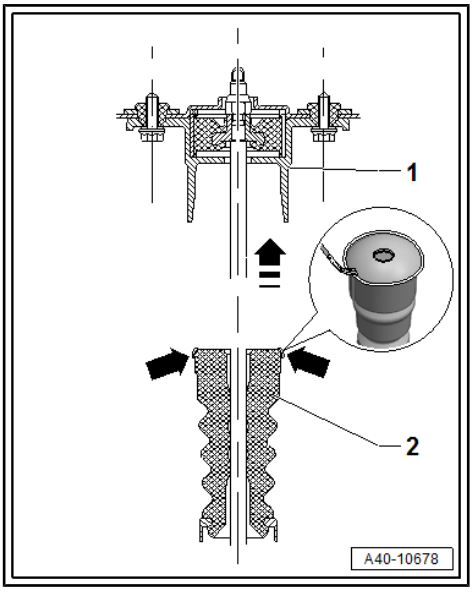

3.28 Axles (front and rear): checking components for play, secure attachment and damage, and checking protective boots

The following applies to all components shown below:

- There must be no noticeable or visual play.
- As a rule you can identify damage to the boots/drive shaft boots by emerging grease.
- Check that retaining rings and spring-type clips are seated correctly.

Protected by copyright. Copying for private or commercial purposes, in part or in whole, is not permitted unless authorised by AUDI AG. AUDI AG does not guarantee or accept any liability with respect to the correctness of information in this document. Copyright by AUDI AG.

Front axle ⇒ page 49

Rear axle ⇒ page 51

3.28.1 Front axle

Track control links, guide links and coupling rod:

– Check relative movement between wheel bearing housing and track control link/guide link.

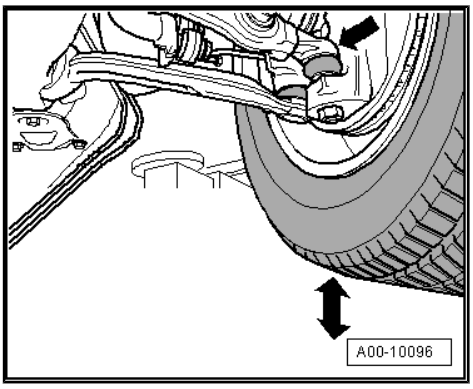

– Track control links and guide links: Check boots -arrows- of swivel joint all around for damage and make sure they are seated correctly.
– Check swivel joints for play.

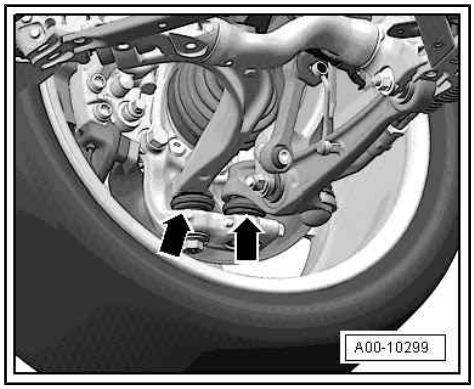

– Check all bonded rubber bushes of track control links and guide links -arrows- for play.
– Check play at coupling rod -1-.

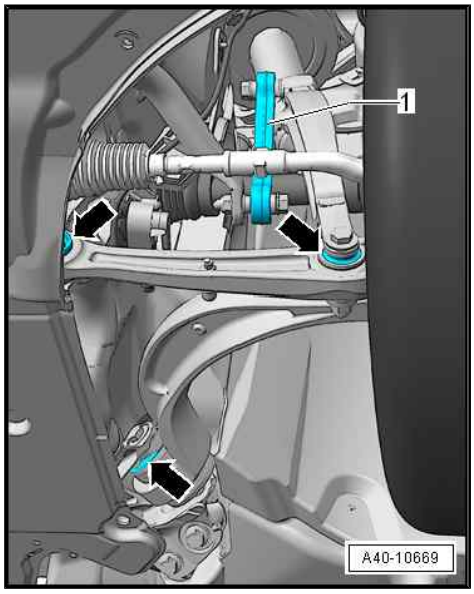

Track rod ball joint:

– Check boot -2- for track rod ball joint all around for damage and make sure it is seated correctly.
– Check play at track rod ball joint.

Copyright by AUDI AG. Copying or reproduction for commercial purposes, in part or in whole, is not permitted unless authorised by AUDI AG. AUDI AG does not guarantee or accept any liability with respect to the correctness of information in this document. Copyright by AUDI AG.

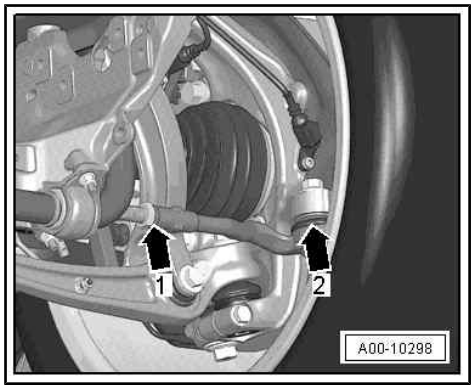

Upper links:

– Upper links: Check boots -arrows- of swivel joints all around for damage and make sure they are seated correctly.
– Check swivel joints for play.
– Check both bonded rubber bushes of upper links for play.

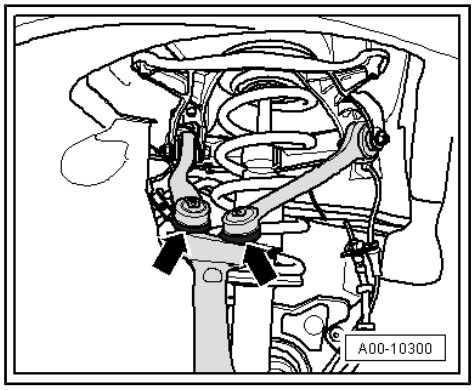

Anti-roll bar:

– Check anti-roll bar bush -3- for damage.

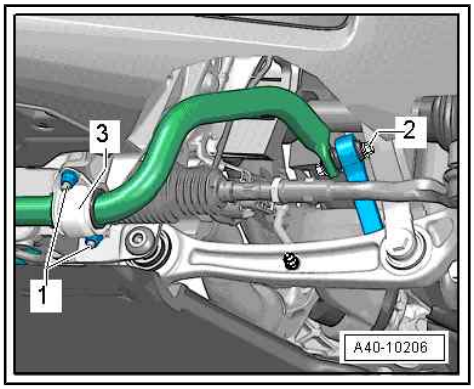

Drive shaft and steering rack:

– With steering turned: Check drive shaft boots -arrows- all around for damage and make sure they are seated correctly.
– Check boot -arrow- of steering rack all around for damage and correct seating.

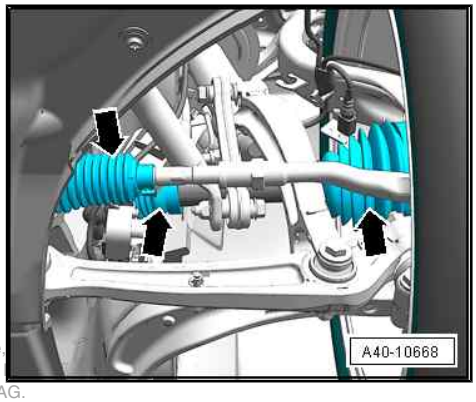

– Repeat checks for components on opposite side of vehicle.
– If faults are found on any of the above components: Renew relevant component.

Protected by copyright. Copying for private or commercial purposes, in part or in whole, permitted unless authorised by AUDI AG. AUDI AG does not guarantee or accept any with respect to the correctness of information in this document. Copyright by AUDI AG.

3.28.2 Rear axle

Lower and upper transverse links and anti-roll bar:

– Check relative movement between wheel bearing housing and both transverse links.
– Check bonded rubber bushes -arrows- of all transverse links for play.
– Check anti-roll bar bush -arrow- for damage.

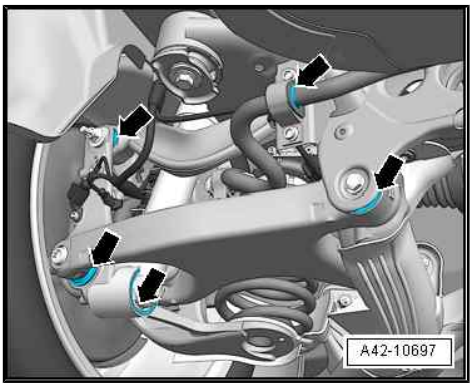

Track rod:

– Check play at bonded rubber bushes of track rod -5-.

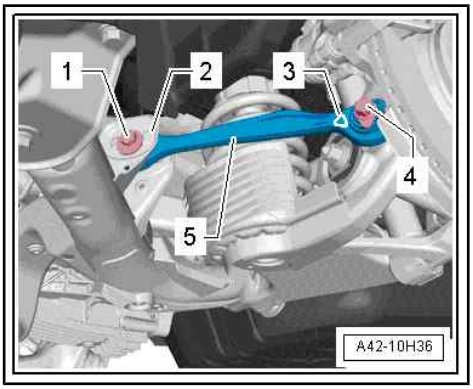

Coupling rod and drive shaft:

– Check play at coupling rod -1-.

– For vehicles with four-wheel drive: Check boots -arrows- of drive shafts to ensure they are not damaged and are seated correctly.

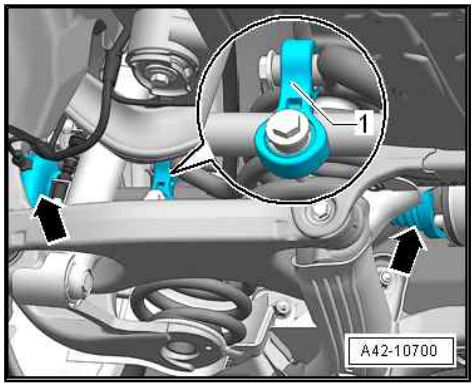

– Repeat checks for components on opposite side of vehicle.

– If faults are found on any of the above components: Renew relevant component.

3.29 Engine, gearbox, final drive and steering: checking for leaks and damage

Applies to vehicles up to and including model year 2014: For inspection every 60,000 km (38,000 miles)/4 years, remove noise insulation.

Applies to vehicles from model year 2015 onwards: Remove noise insulation for every inspection.

Removal steps:

– If necessary, remove noise insulation ⇒ page 12 .

Procedure:

– Check engine and engine ancillaries from below for leaks and damage.

– Check visible area of belt drives for damage.

– Check radiator and cooling circuit for leaks and damage.

– Check refrigerant circuit for damage (check air conditioner compressor, condenser and refrigerant lines including connections).

– Check gearbox, final drive and steering for leaks and damage.

– If faults are found: repair or renew relevant component.

3.30 Vehicle (from below): checking for damage

Procedure:

– Check underbody carefully and thoroughly for damage and loose fasteners.

– If faults are found: Renew missing fastener or damaged component.

3.31 Underbody: checking trim, wheel housing liners, side members and pipes/wiring for damage, and checking that they are properly secured

Protected by copyright. Copying for private or commercial purposes, in part or in whole, is not permitted unless authorised by AUDI AG. AUDI AG does not guarantee or accept any liability with respect to the correctness of information in this document. Copyright by AUDI AG.

Procedure:

– Check all underbody trim panels and wheel housing liners for tears and cracks.

– Use your hands to check that all underbody trim panels and wheel housing liners are secured correctly and check for missing fasteners.

– Inspect side members for deformations.
– Check visible area of pipes/wiring and connections for damage and ensure they are secured correctly.
– If faults are found: Renew missing fastener or damaged component.

3.32 Roof insert: checking operation

Only applies to equipment versions with tilting sunroof or sliding/tilting sunroof.

Cleaning and lubricating the roof insert is a repair measure and should be charged separately.

Procedure:

– Open and close roof system completely and check for unusual noises and stiffness/sticking.
– If there is unusual noise or stiffness/sticking: Clean and lubricate roof insert of tilting sunroof ⇒ page 53 / sliding/tilting sunroof ⇒ page 54 .

3.33 Roof insert - tilting sunroof: cleaning and lubricating

Special tools and workshop equipment required

♦ Lubricating paste - G 060 751 A2-
♦ Krytox lubricating paste - G 052 141 A2-
♦ Cleaning solution - D 009 401 04-
♦ Commercially available paintbrush: approx. 15 mm wide and bent by approx. 40° using workshop equipment
♦ Fine-pored sponge (e.g. a piece of household sponge without a scouring surface)

Cleaning and lubricating the roof insert is a repair measure and should be charged separately.

Protect vehicle interior from becoming dirty.

Step 1 - cleaning and lubricating slotted guide:

– Tilt open glass panel at rear.
– Remove grease and dirt from slotted guide with a lint-free cloth.

Protected by copyright. Copying for private or commercial purposes, in part or in whole, is not permitted unless authorised by AUDI AG. AUDI AG does not guarantee or accept any liability with respect to the correctness of information in this document. Copyright by AUDI AG.

– Use a paintbrush to lubricate slotted guide -arrow- with lubricating paste - G 060 751 A2- .
– Remove surplus lubricant from slotted guide with a lint-free cloth.
– Repeat procedure on opposite side of vehicle.

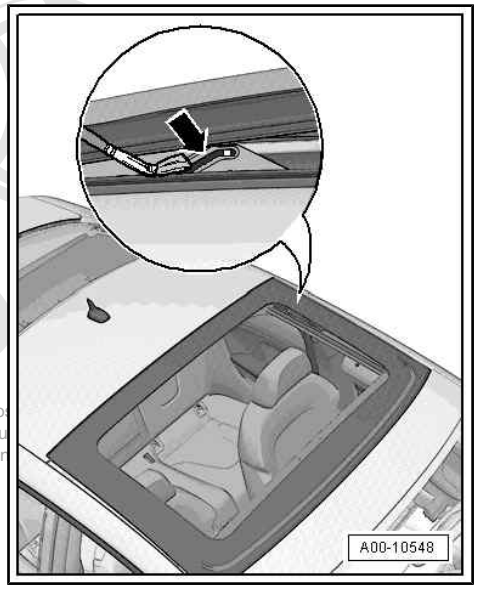

Step 2 - cleaning and lubricating glass panel seal:

Glass panel tilted open at rear.

– Remove grease and dirt from glass panel seal using cleaning solution - D 009 401 04- and a lint-free cloth.

Protected by copyright. Copying for private or commercial purpo
permitted unless authorised by AUDI AG. AUDI AG does not gu
with respect to the correctness of information in this documen

– Use a fine-pored sponge -1- to lubricate glass panel seal at rear -arrows- with Krytox lubricating paste - G 052 141 A2- . Make sure that no coarse residue remains visible after applying lubricant.
– Open and close roof system completely and check again for surplus lubricant.

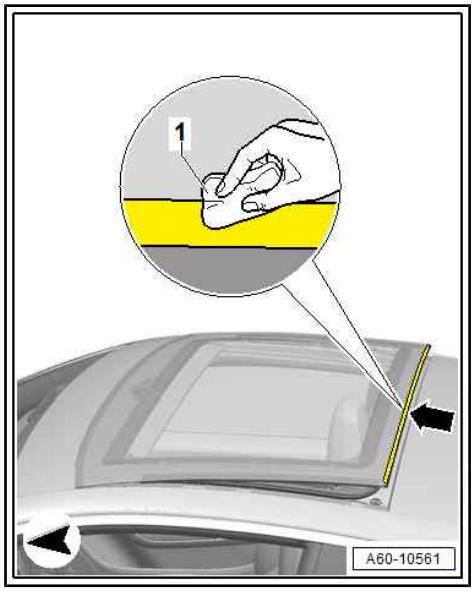

3.34 Roof insert - sliding/tilting sunroof: cleaning and lubricating

CAUTION

Risk of breaking cowl panel.

♦ **Use care when lifting cowl panel.**

Special tools and workshop equipment required

♦ Lubricating paste - G 060 751 A2-
♦ Krytox lubricating paste - G 052 141 A2-
♦ Cleaning solution - D 009 401 04-
♦ Industrial vacuum cleaner, e.g. wet/dry vacuum cleaner - VAS 5128-
♦ Commercially available paintbrush: approx. 15 mm wide and bent by approx. 40° using workshop equipment
♦ Fine-pored sponge (e.g. a piece of household sponge without a scouring surface)

Cleaning and lubricating the roof insert is a repair measure and should be charged separately.

Protect vehicle interior from becoming dirty.

Step 1 - cleaning and lubricating glass panel seal:

– Tilt open glass panel at rear.

– Remove all accessible grease and dirt residue from glass panel seal using cleaning solution - D 009 401 04- and a lint-free cloth.

– Use a fine-pored sponge -1- to lubricate sides and rear of glass panel seal -arrows- with Krytox lubricating paste - G 052 141 A2- . Make sure that no coarse residue remains visible after applying lubricant.

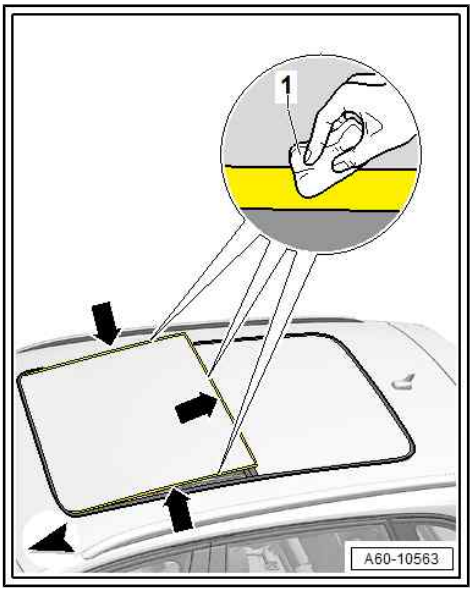

– Open glass panel completely.

– Using cleaning solution - D 009 401 04- and a lint-free cloth, remove any grease or dirt residue from front of glass panel seal in area that has not been lubricated yet.

– Use a fine-pored sponge -1- to lubricate glass panel seal at front -arrow- with Krytox lubricating paste - G 052 141 A2- . Make sure that no coarse residue remains visible after applying lubricant.

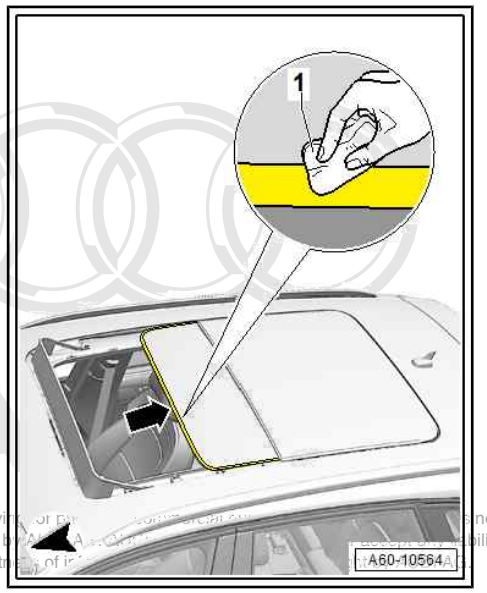

Step 2 - cleaning and lubricating wind deflector seal:

Glass panel opened completely.

To avoid risk of breakage, lift the wind deflector carefully with your hand but do not remove it for the following procedure.

– Remove grease and dirt from wind deflector seal using cleaning solution - D 009 401 04- and a lint-free cloth.

Protected by copyright. Copyi... not permitted unless authorised b... with respect to the correctn... of i...

– Use a fine-pored sponge -1- to lubricate rubber lip of wind deflector -arrow- along the entire length with Krytox lubricating paste - G 052 141 A2- . Make sure that no coarse residue remains visible after applying lubricant.

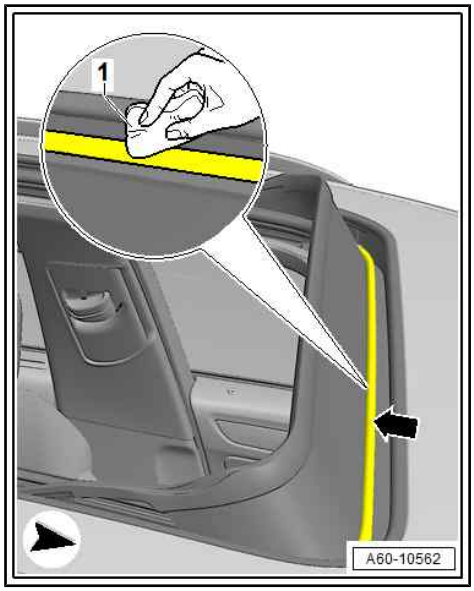

Step 3 - cleaning and lubricating guide rails:

Glass panel opened completely.

– First use an industrial vacuum cleaner to remove any loose residue from guide rails.

– Remove grease and dirt from guide rails with a lint-free cloth.

– Use a paintbrush to lubricate inside of guide rail -arrow- with lubricating paste - G 060 751 A2- .

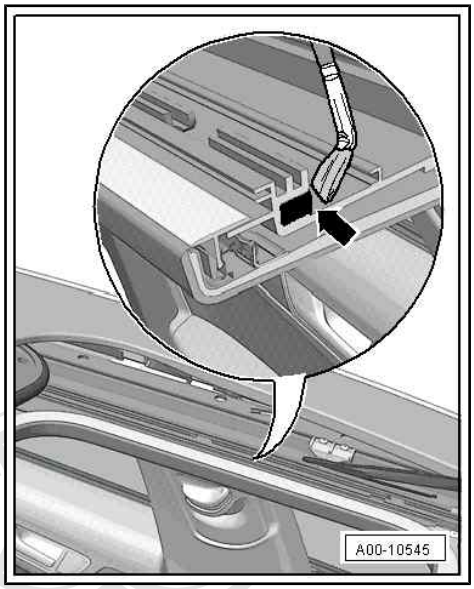

– Use a paintbrush to lubricate outside of guide rail -arrow- with lubricating paste - G 060 751 A2- .

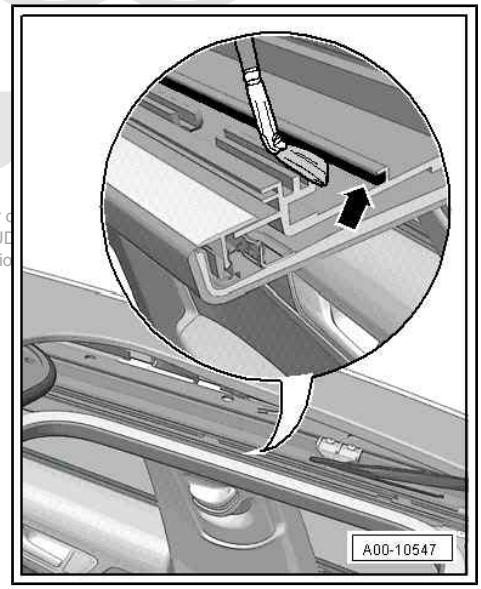

Protected by copyright. Copying for private or c
permitted unless authorised by AUDI AG. AUD
with respect to the correctness of informatio

– Use a paintbrush to lubricate side guide rail of sliding headliner -arrow- with lubricating paste - G 060 751 A2- .
– Remove surplus lubricant on guide rails with a lint-free cloth.
– Repeat procedure on opposite side of vehicle.

– Open and close roof system completely and check again for surplus lubricant.

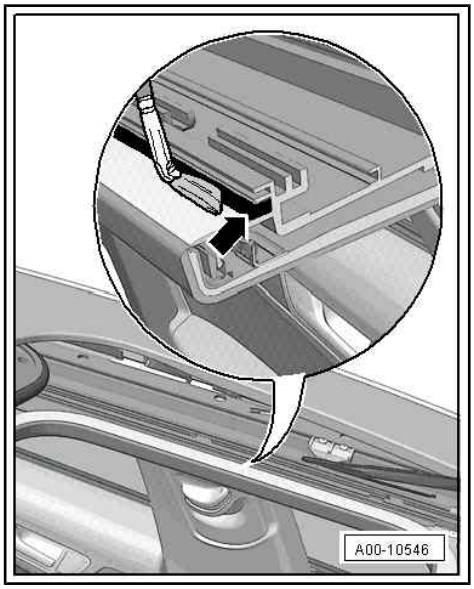

3.35 Rear spoiler hinges: lubricating

Special tools and workshop equipment required

♦ Lubricant - G 052 172 A1-

Requirements:

• The vehicle must be at least at room temperature.

Procedure:

– Switch on ignition and extend rear spoiler.
– First clean all lubricating points with a lint-free cloth.
– Apply lubricant - G 052 172 A1- to points marked on all rear spoiler hinge joints -arrows-.
– Extend and retract rear spoiler at least five times so that lubricant is able to penetrate.
– Remove surplus lubricant with cloth.
– Repeat procedure on opposite side.
– Retract rear spoiler.

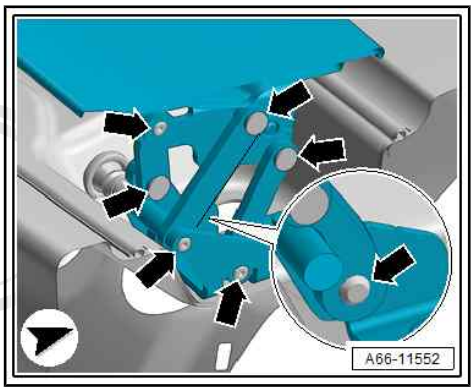

3.36 Door hinges with separate door arrester: cleaning and lubricating

Protected by copyright. Copying for private or commercial purposes, in part or in whole, is not permitted unless authorised by AUDI AG. AUDI AG does not guarantee or accept any liability with respect to the suitability of information in this document. Copyright by AUDI AG.

Special tools and workshop equipment required

♦ Universal spray oil - G 000 115 A2- for door arresters and hinges

Requirements:

• The vehicle must be at least at room temperature.

Procedure:

– First clean all lubricating points with a lint-free cloth.

– Lubricate door hinge (top and bottom) at points marked -arrows- as well as separate door arrester with universal oil spray - G 000 115 A2- .
– Move door several times so that the universal spray oil is able to penetrate.
– Use cloth to remove surplus lubricant from all door hinges.
– Repeat cleaning and lubricating procedure on all remaining doors of vehicle.

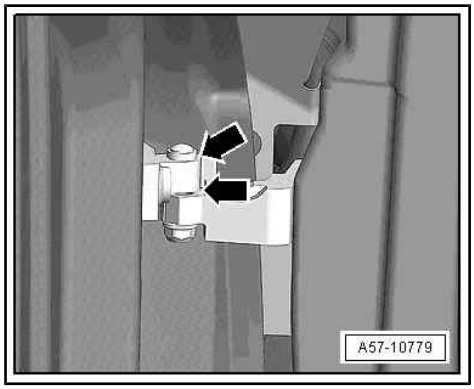

3.37 Bonnet arrester hook: lubricating

Special tools and workshop equipment required

♦ Universal spray oil - G 000 115 A2-

Requirements:

• The vehicle must be at least at room temperature.

Procedure:

– First clean all lubricating points with a lint-free cloth.
– Lubricate arrester hook with universal spray oil - G 000 115 A2- at points marked -arrows-.
– Operate moving parts several times so that the lubricant is able to penetrate.
– Remove surplus lubricant with cloth.

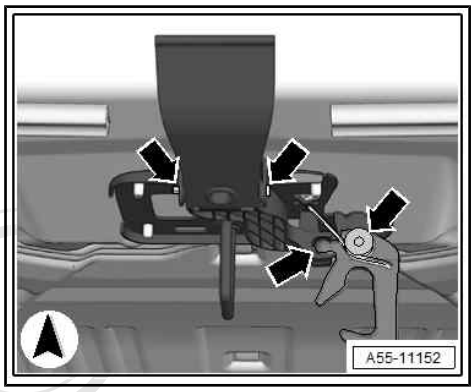

Protected by copyright. Copying for private or commercial purposes, in part or in whole, is not permitted unless authorised by AUDI AG. AUDI AG does not guarantee or accept any liability with respect to the correctness of information in this document. Copyright by AUDI AG.

3.38 Windscreen/rear window washer system: checking spray pattern and adjusting if necessary

Checking spray pattern on windscreen ⇒ page 59

Adjusting windscreen washer jets ⇒ page 59

3.38.1 Checking spray pattern on windscreen

The spray pattern must meet the following specifications:

- Evenly distributed, symmetrical spray pattern
- Uniform, precise jets of water
- Jet unit (passenger's side): Water from all washer jets makes contact within upper third of wiper area -illustration-
- Jet unit (driver's side): Spray pattern symmetrically opposite that of jet unit on passenger's side

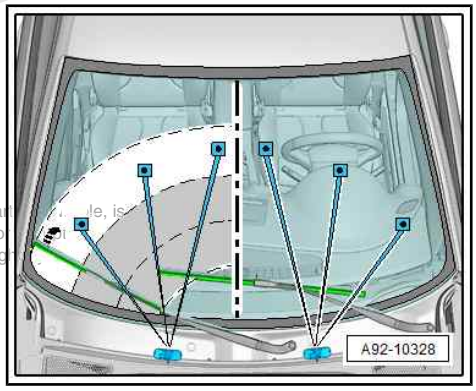

Protected by copyright. Copying for private or commercial purposes, in par
guarantee o
rectness of information in this document. Copyrig

Procedure:

– Operate windscreen washer system and check spray pattern.

– If spray pattern is not as specified, adjust windscreen washer jets ⇒ page 59 .

3.38.2 Adjusting windscreen washer jets

Special tools and workshop equipment required

♦ Commercially available adjusting tool (e.g. adjusting tool -T10127-) or suitable needle

Procedure:

– Use adjusting tool to align washer jets as required according to specification.

– If the spray pattern still does not correspond to the specification, clean washer jets ⇒ Vehicle electrics; Rep. gr. 92 ; Windscreen wash/wipe system; Adjusting and cleaning washer jets .

3.39 Wiper blades: checking for damage

Wiper blades: checking for damage (version 1) ⇒ page 59

Wiper blades: checking for damage (version 2) ⇒ page 60

Wiper blades: checking for damage (version 3) ⇒ page 60

3.39.1 Wiper blades: checking for damage (version 1)

Step 1 - service position:

– Switch off ignition.

– Press windscreen wiper lever downwards briefly.

Step 2 - checking:

– Lift windscreen wipers and check each wiper blade for tears, cuts, abraded areas or other damage.

– Repeat check on rear window.

– If you find damage: Renew relevant wiper blade. Windscreen wiper system ⇒ Electrical system; Rep. gr. 92 ; Windscreen wiper system; Removing and installing wiper blade .

Note

There are other methods of setting the service position ⇒ page 60 .

3.39.2 Wiper blades: checking for damage (version 2)

Step 1 - service position:

– Switch on ignition and activate MMI.

– Press function selector button CAR.

– Navigate through following menu structure:

♦ Windscreen wipers

♦ Service position

– Use MMI rotary pushbutton to activate service position for windscreen wipers.

Step 2 - checking:

– Lift windscreen wipers and check each wiper blade for tears, cuts, abraded areas or other damage.

– Repeat check on rear window.

– If you find damage: Renew relevant wiper blade. Windscreen wiper system ⇒ Electrical system; Rep. gr. 92 ; Windscreen wiper system; Removing and installing wiper blade .

Note

There are other methods of setting the service position ⇒ page 60 .

3.39.3 Wiper blades: checking for damage (version 3)

Protected by copyright. Copying for private or commercial purposes, in part or in whole, is not permitted unless authorised by AUDI AG. AUDI AG does not guarantee or accept any liability with respect to the correctness of information in this document. Copyright by AUDI AG.

Step 1 - service position:

– Switch on ignition and activate MMI.

– Press function selector button CAR.

– Under »Car systems«, navigate through following menu structure:

♦ Servicing & checks

♦ Wiper change pos.

– Use MMI rotary pushbutton to activate service position for windscreen wipers.

Step 2 - checking:

– Lift windscreen wipers and check each wiper blade for tears, cuts, abraded areas or other damage.

– Repeat check on rear window.

– If you find damage: Renew relevant wiper blade. Windscreen wiper system ⇒ Electrical system; Rep. gr. 92 ; Windscreen wiper system; Removing and installing wiper blade .

Note

There are other methods of setting the service position *⇒ page 59* .

3.40 Headlight washer system: checking operation

Not all vehicles are equipped with a headlight washer system (depending on equipment version).

Protected by copyright. Copying for private or commercial purposes, in part or in whole, is not permitted unless authorised by AUDI AG. AUDI AG does not guarantee or accept any liability with respect to the correctness of information in this document. Copyright by AUDI AG.

Procedure:

– Operate headlight washer system and check function.

– If water jet does not contact headlight: Renew relevant washer jets ⇒ Electrical system; Rep. gr. 92 ; Headlight washer system; Removing and installing washer jets .

Note

The headlight washer jets are set by the manufacturer and therefore cannot be adjusted.

3.41 Headlights: checking for correct adjustment

Special tools and workshop equipment required

♦ Headlight adjustment unit - VAS 5209B-

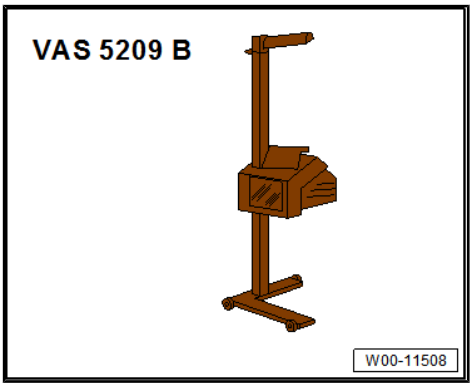

♦ Or: headlight adjustment unit - VAS 621 001-

Performed as part of an inspection, this check is merely an abbreviated form of the headlight adjustment check required, for example, after a repair, and does not take the place of a full headlight adjustment check.

Do not adjust the vehicle load or the tyre pressures for this procedure.

Do not adjust the headlights to their basic setting using the vehicle diagnostic tester.

Checking and adjusting the headlights according to the instructions in the Workshop Manual is a repair measure and must be charged separately.

Procedure:

– For vehicles with manually adjustable headlight range control: Use manual adjuster to set to basic setting.

– Activate dipped headlights.

– Align headlight adjustment unit parallel to vehicle and position it centrally in front of headlight at a distance of 30 to 70 cm -distance a-; deviation from centre of light emission surface must not exceed 3 cm -distance b-.

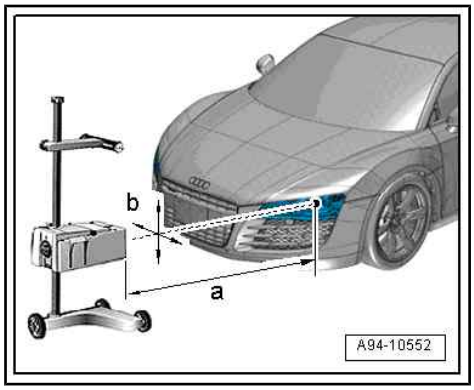

– Adjust dip setting of headlight adjustment unit so that beam of headlight falls on test screen according to following parameter: Horizontal light-dark border should coincide with setting line -1-.

– Read off dip setting of headlight adjuster.

– Repeat procedure on opposite side.

– Compare dip setting on left and right sides.

– If they deviate 2.0% or more from one another: Check and adjust headlight setting according to procedure specified in Workshop Manual ⇒ Electrical system; Rep. gr. 94 ; Headlights; Adjusting headlights .

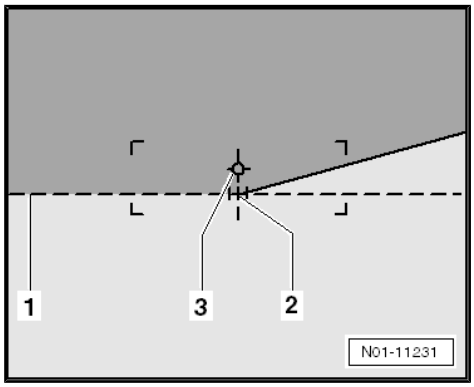

3.42 Headlights and reversing lights, side lights, number plate lights, turn signals, hazard warning lights: checking operation

Check the lights/signals listed below from the outside to ensure they function properly.

Procedure:

– Activate side lights and check that the following exterior lights function properly:

♦ Side lights (front)

♦ Side lights (rear)

♦ If applicable: additional tail light under open rear lid

– Switch on ignition.

– Check operation of daytime running lights (front).

– Operate right turn signal, left turn signal and hazard warning lights, and check that corresponding turn signal lamps at front, rear and side function properly.

– Activate dipped headlights and check that the following exterior lights function properly:

♦ Dipped headlights

♦ Tail lights

♦ Number plate lights

– Use appropriate switch to activate fog lights and check that they function properly.

– Check that main beam headlights function properly.

Protected by copyright. Copying for private or commercial purposes, in part or in whole, is not permitted unless authorised by AUDI AG. AUDI AG does not guarantee or accept any liability with respect to the correctness of information in this document. Copyright by AUDI AG.

– Operate brakes and check function of all brake lights.
– Engage reverse gear and check that all reversing lights function properly. This model is fitted with two reversing lights.
– Use appropriate switch to activate rear fog lights and check that they function properly. This model is fitted with two rear fog lights.
– Renew any defective bulbs.

Note

It is possible to deactivate the daytime running lights intentionally via the appropriate MMI setup menu.

3.43 Luggage compartment lighting: checking operation

A5 Coupé ⇒ page 63

A5 Sportback ⇒ page 63

3.43.1 A5 Coupé

Procedure:

– Check that luggage compartment light shown -arrow- functions properly.

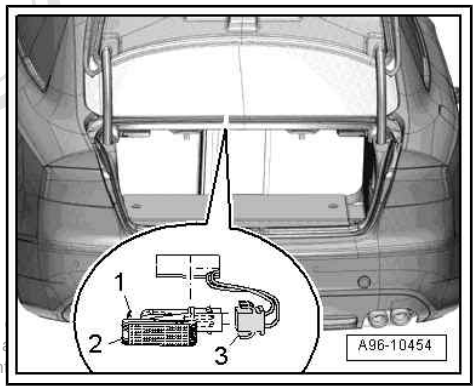

Protected by copyright. Copying for private or commercial purposes, in part permitted unless authorised by AUDI AG. AUDI AG does not guarantee or with respect to the correctness of information in this document. Copyrigh

3.43.2 A5 Sportback

Procedure:

– Check that luggage compartment lights shown -arrows- function properly.

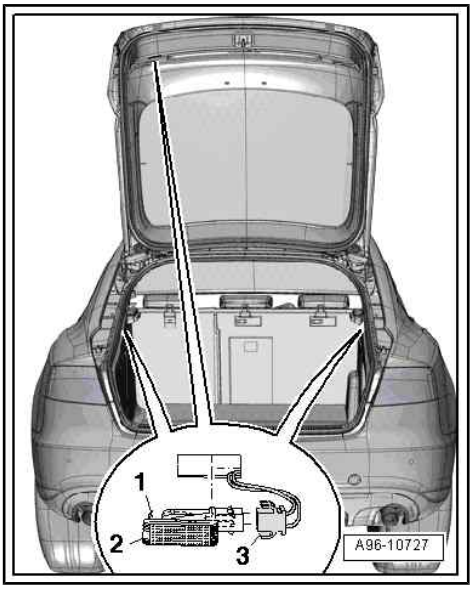

3.44 Luggage compartment: removing protective film and felt pieces

Procedure:

– Remove protective film and felt pieces carefully and completely from luggage compartment.

3.45 Glove box light, interior lighting and reading light: checking operation

Procedure:

– Open glove box and check that glove box light functions properly (if fitted).

– Use the appropriate switches to activate the following interior lights and check that the lights function properly:

♦ Interior lights in headliner at front

♦ Interior lights in headliner at rear

Note

Checking the ambient lighting is NOT part of the inspection.

3.46 Horn: checking operation

Procedure:

– Switch on ignition.

– Operate horn and check proper function of treble horn and bass horn.

Protected by copyright. Copying for private or commercial purposes, in part or in whole, is not permitted unless authorised by AUDI AG. AUDI AG does not guarantee or accept any liability with respect to the correctness of information in this document. Copyright by AUDI AG.

Note

Perform this check outdoors, e.g. when driving the vehicle to the workshop or during a road test.

3.47 Passenger airbag: checking key switch on/off and setting to "on"

Switch for “Airbag ON/OFF” is located in glove box -arrow-.

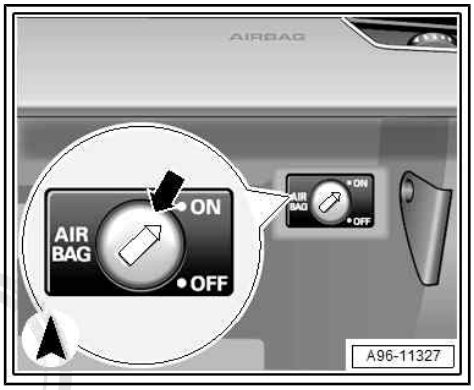

Procedure:

- Turn switch to “AIRBAG OFF” position.
- Switch ignition on and wait for vehicle to complete initial system check.
- Check that “PASSENGER AIRBAG OFF” display lights up in instrument cluster.
- Switch off ignition.
- Turn switch to “AIRBAG ON” position.
- Switch ignition on and wait for vehicle to complete initial system check.
- Check that “PASSENGER AIRBAG OFF” disappears.
- Switch off ignition.

Note

The amount of time needed for the vehicle system check varies depending on the model and equipment.

Reproduction or duplicating for private or commercial purposes, in part or in whole, is not permitted unless authorised by AUDI AG. AUDI AG does not guarantee or accept any liability with respect to the correctness of information in this document. Copyright by AUDI AG.

3.48 Owner's literature: checking that all documents are present

Procedure:

- Check that all parts of owner's literature are present, and prepare them for handover to customer.

3.49 Service Schedule: affixing vehicle data sticker

The vehicle data sticker can be found in the supplied pack.

Procedure:

- Remove vehicle data sticker from supplied pack.
- Affix vehicle data sticker in Service Schedule under “Warranty entitlement record”.

3.50 Service Schedule: entering Delivery Inspection

The field for documenting the Delivery Inspection can be found on page 2 of the Service Schedule.

Procedure:

- Apply stamp of Audi Workshop.
- Enter date of work carried out.
- Mark relevant field(s).

Note

Only for markets not using the Digital Service Schedule.

3.51 Seat belts: checking that retaining rivets are fitted, and checking locking action of automatic belt retractor

Procedure:

For all seat belts installed:

– Check that retaining rivets/clips are fitted.

– Check locking action of automatic belt retractors when belt is unrolled abruptly.

Note

If the seat belt is securing an object (e.g. child seat), do not release the seat belt. Only check the locking action when the belt is buckled; it is not necessary to check the retaining rivet/clip in this case.

3.52 Vehicle interior: removing protective covers for seats and carpet

Procedure:

– Remove protective covers for seats and carpet carefully and completely from vehicle interior.

3.53 Vehicle interior: checking that it is clean and cleaning if necessary

Procedure:

Check that the following items are clean (clean them if necessary):

- Front seats
- Rear seat bench
- Interior trim
- Carpets
- Floor mats
- Windows/windscreen

Protected by copyright. Copying for private or commercial purposes, in part or in whole, is not permitted unless authorised by AUDI AG. AUDI AG does not guarantee or accept any liability with respect to the correctness of information in this document. Copyright by AUDI AG.

3.54 Vehicle interior: removing any objects other than those protecting interior surfaces

Procedure:

– Remove any objects from vehicle other than those which are protecting interior surfaces.

3.55 Vehicle interior and exterior: checking for and documenting any damage

Procedure:

– Check interior of vehicle for damage and document any damage found.

– Check exterior of vehicle for damage and document any damage found.

3.56 Instrument cluster: checking warning lamps

Reading out the event memory is a repair measure and should be charged separately.

Procedure:

– Start engine and wait for vehicle to complete initial system check.

– Check whether warning lamps light up in instrument cluster.

– Switch off engine.

– If relevant warning lamps light up: Read out event memory ⇒ page 23 .

Note

The amount of time needed for the vehicle system check varies depending on the model and equipment.

3.57 Warning triangle: checking availability

Procedure:

– Check that warning triangle(s) is/are present.

Copyright © 2008 AUDI AG. All rights reserved. Reproduction or distribution, in part or in whole, is not permitted unless authorised by AUDI AG. AUDI AG does not guarantee or accept any liability with respect to the correctness of information in this document. Copyright © AUDI AG.

3.58 First-aid kit: checking and recording expiry date

The first-aid kit is located in the centre armrest of the rear seat bench.

Procedure:

– Take out first-aid kit and check expiry date printed on kit.

– Record expiry date in Maintenance table.

– If expiry date has passed: Renew first-aid kit.

3.59 Vehicle keys: checking operation and recording number of keys given to customer

Procedure:

– Open key ring to check each key individually.

– Start engine with each key individually.

– Record number of keys which have been matched and handed over in Maintenance table.

– If a vehicle key has not been matched: Re-match all keys to vehicle using Guided Function of vehicle diagnostic tester via online tool GeKo.

– If there is reason to suspect improper use (e.g. missing key): See current notices from AUDI AG under “Technical information ► Anti-theft protection” on ServiceNet.

Note

- *Only the key being checked may be inside the vehicle. Place all other keys out of transmission range.*
- *If the key has not been matched, the engine will turn off after a few seconds. In addition, the warning lamp for the immobiliser or the display "SAFE" will appear in the instrument cluster, depending on the vehicle equipment.*

3.60 Vehicle key: removing from ignition lock

Only applies to vehicles with ignition lock.

Procedure:

– Remove vehicle key from ignition lock.

3.61 Vehicle key(s), wheel covers and owner's literature: checking availability and recording number present

Procedure:

– Check whether there are keys for the vehicle and record number of keys in maintenance table.

– Check whether there are wheel covers for the vehicle and record number of wheel covers in maintenance table.

– Check whether owner's literature is in place and record number of copies in maintenance table.

– Wait until shortly before vehicle delivery to renew any missing components.

3.62 Sun visors: checking that they are folded up and folding up if necessary

Procedure:

– Check that sun visors are folded up, and fold them up if necessary.

3.63 Luggage compartment cover and sun blind: checking that they are rolled up and rolling up if necessary

Procedure:

– If a luggage compartment cover is fitted, check that it is rolled up (roll it up if necessary).

– Check that sun blinds are folded up (fold them up if necessary).

Protected by copyright. Copying for private or commercial purposes, in part or in whole, is not permitted unless authorised by AUDI AG. AUDI AG does not guarantee or accept any liability with respect to the correctness of information in this document. Copyright by AUDI AG.

3.64 Engine oil: draining

Note

- *Oil should always be changed when engine is warm.*
- *Always observe the relevant environmental regulations for disposal.*
- *Keep components clean.*

4-cyl. diesel engine 2.0 TDI ⇒ page 69

3.64.1 4-cyl. diesel engine 2.0 TDI

Special tools and workshop equipment required

- Used oil collection and extraction unit - V.A.S 6622 A-

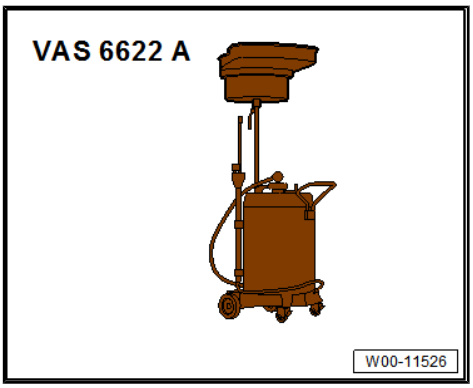

- Torque wrench - V.A.G 1331- , measuring range 6 to 50 Nm
- Or: torque wrench - VAS 5820- , measuring range 20 to 100 Nm
- Or: torque wrench - VAS 6583- , measuring range 3 to 60 Nm

Table of tightening torques for installation:

Component/fastener	[Nm]
Oil drain plug on sump	30

The engine oil is only drained on certain versions of the 4-cylinder 2.0 TDI diesel engine; observe the specifications in the Maintenance Table.

Removal steps:

– Remove noise insulation ⇒ page 12 .

Procedure:

– Place oil drip tray under engine sump.

– Unscrew oil drain plug of sump -arrow-.

– Drain engine oil from sump.

– Renew seal for oil drain plug.

– Screw oil drain plug into sump and tighten to specified torque (see table of tightening torques for installation ⇒ page 69).

Continue installation in reverse sequence.

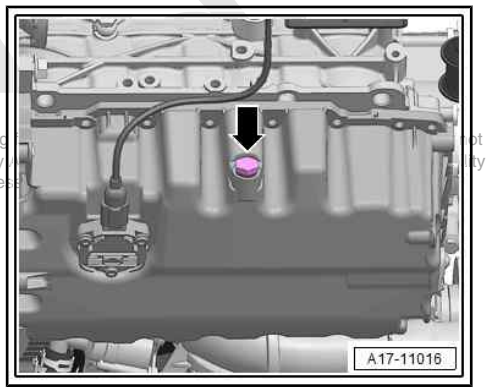

Protected by copyright. Copying ... not permitted unless authorised by ... with respect to the correctness ... ity

3.65 Engine oil: extracting

Special tools and workshop equipment required

- Used oil collection and extraction unit - V.A.S 6622 A-

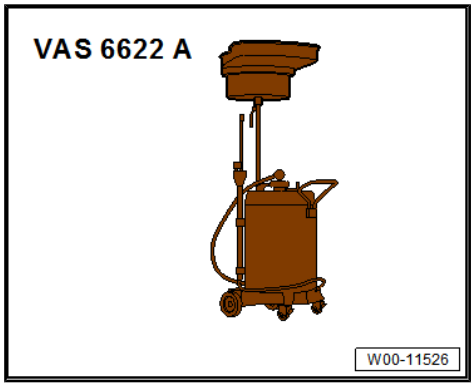

Procedure:

– Pull oil dipstick/sealing plug out of guide tube.

– Insert extraction probe of oil extraction unit into guide tube. Use flexible extraction probe with largest possible diameter and insert without using any significant force. Otherwise the tip can become diverted on the bottom of the sump and a large amount of used oil will remain in the engine.

– Extract engine oil completely. Observe operating instructions for extraction unit.

– Finally, install oil dipstick/sealing plug.

Note

- *Oil should always be changed when engine is warm.*
- *Always observe the relevant environmental regulations for disposal.*
- *Keep components clean.*

3.66 Engine oil: renewing oil filter

4-cyl. petrol engine 1.8 TFSI/2.0 TFSI (version 1) ⇒ page 70
4-cyl. petrol engine 1.8 TFSI/2.0 TFSI (version 2) ⇒ page 71
6-cyl. petrol engine 3.0 TFSI (version 1) ⇒ page 72
6-cyl. petrol engine 3.0 TFSI/3.2 FSI (version 2) ⇒ page 73
8-cyl. petrol engine 4.2 FSI ⇒ page 74
4-cyl. diesel engine 2.0 TDI (version 1) ⇒ page 75
4-cyl. diesel engine 2.0 TDI (version 2) ⇒ page 76
4-cyl. diesel engine 2.0 TDI (version 3) ⇒ page 77
6-cyl. diesel engine 2.7 TDI/3.0 TDI (version 1) ⇒ page 78
6-cyl. diesel engine 3.0 TDI (version 2) ⇒ page 79

This document is copyright. Copying or private or commercial purposes, in part or in whole, is not permitted unless authorised by AUDI AG. AUDI AG does not guarantee or accept any liability with respect to the accuracy of information in this document. Copyright by AUDI AG.

3.66.1 4-cyl. petrol engine 1.8 TFSI/2.0 TFSI (version 1)

Special tools and workshop equipment required

- Oil filter tool - 3417-

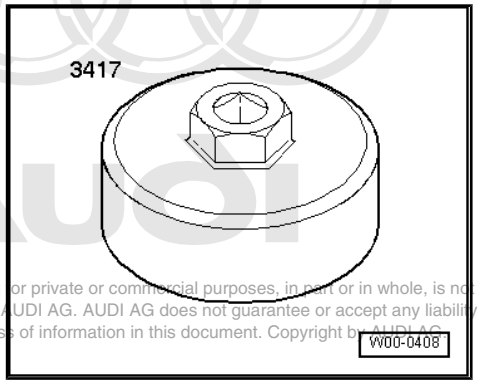

Protected by copyright. Copying for private or commercial purposes, in part or in whole, is not permitted unless authorised by AUDI AG. AUDI AG does not guarantee or accept any liability with respect to the correctness of information in this document. Copyright by AUDI AG.

- Hazet strap wrench - 2171-1-
- Torque wrench - V.A.G 1331- , measuring range 6 to 50 Nm
- Or: torque wrench - VAS 6583- , measuring range 3 to 60 Nm
- Or: torque wrench - VAS 5820- , measuring range 20 to 100 Nm

Table of tightening torques for installation:

Component/fastener	[Nm]
Oil filter cartridge	22

Removal steps:

– Remove engine cover panel ⇒ page 8 .

Procedure:

– Use Hazet strap wrench - 2171-1- or oil filter tool - 3417- to slacken oil filter cartridge -arrow- and then remove it.

– Clean sealing surface for oil filter at engine.

– Lubricate rubber seal on new oil filter cartridge with engine oil.

– Fit new oil filter cartridge on engine and tighten to specified torque (see table of tightening torques for installation ⇒ page 71).

Continue installation in reverse sequence.

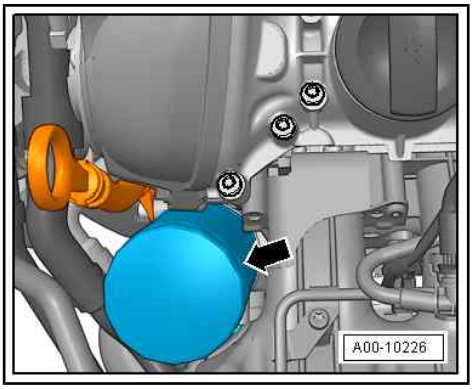

Note

There is more than one version of the oil filter for the 4-cylinder 1.8 TFSI/2.0 TFSI petrol engine *⇒ page 71* *.*

3.66.2 4-cyl. petrol engine 1.8 TFSI/2.0 TFSI (version 2)

Special tools and workshop equipment required

- Torque wrench - V.A.G 1331- , measuring range 6 to 50 Nm
- Or: torque wrench - VAS 6583- , measuring range 3 to 60 Nm
- Or: torque wrench - VAS 5820- , measuring range 20 to 100 Nm

Table of tightening torques for installation:

Component/fastener	[Nm]
Sealing cap	25

Removal steps:

– Remove engine cover panel ⇒ page 8 .

Procedure:

– Loosen sealing cap -arrow- of oil filter using socket (32 mm) . This causes a valve to open.

– Wait a few minutes to allow engine oil to drain from filter housing into crankcase.

– Completely remove sealing cap -arrow-. Make sure that no engine oil drips onto engine.

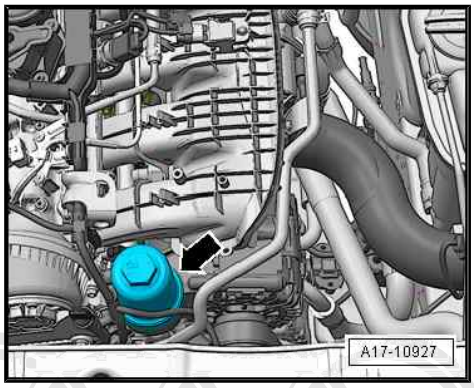

– Pull oil filter element -3- and O-ring -2- out of sealing cap -1-.

– Clean sealing surfaces of sealing cap.

– Lightly lubricate new O-ring -2- with engine oil and insert O-ring.

– Fit new oil filter element -3- in sealing cap.

– Screw sealing cap -1- into oil filter housing -2- and tighten it to specified torque using socket (32 mm) (see table of tightening torques for installation ⇒ page 72).

Continue installation in reverse sequence.

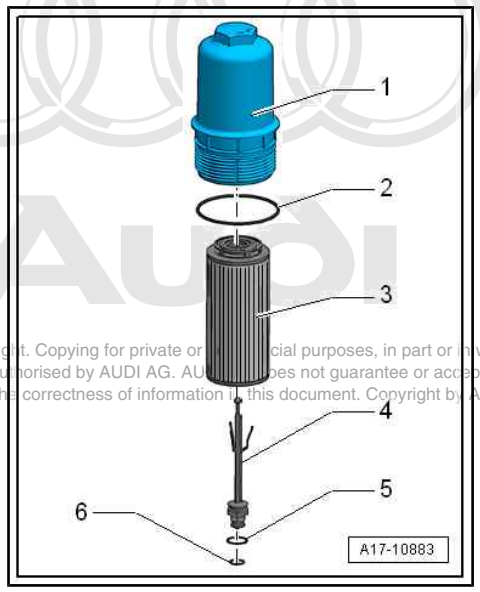

Protected by copyright. Copying for private or commercial purposes, in part or in whole, is not permitted unless authorised by AUDI AG. AUDI AG does not guarantee or accept any liability with respect to the correctness of information in this document. Copyright by AUDI AG.

Note

There is more than one version of the oil filter for the 4-cylinder 1.8 TFSI/2.0 TFSI petrol engine *⇒ page 70* *.*

3.66.3 6-cyl. petrol engine 3.0 TFSI (version 1)

Special tools and workshop equipment required

- Torque wrench - V.A.G 1331- , measuring range 6 to 50 Nm
- Or: torque wrench - VAS 6583- , measuring range 3 to 60 Nm
- Or: torque wrench - VAS 5820- , measuring range 20 to 100 Nm

Table of tightening torques for installation:

Component/fastener	[Nm]
Oil filter	25

Removal steps:

– Remove engine cover panel ⇒ page 8 .

Procedure:

– Loosen sealing cap -arrow- of oil filter using socket (32 mm) . This causes a valve to open.

– Wait a few minutes to allow engine oil to drain from filter housing into crankcase.

– Completely remove sealing cap. Make sure that no engine oil drips onto engine.

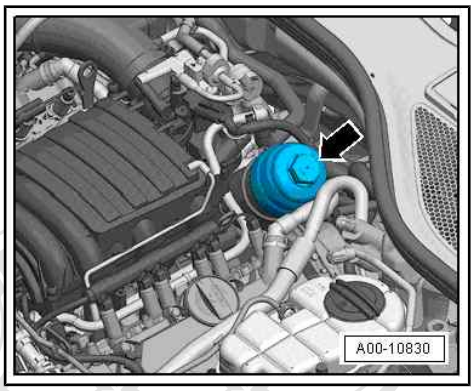

– Pull oil filter element -2- and seal -3- out of sealing cap -4-.

– Clean sealing surfaces of sealing cap -4-.

– Lightly lubricate new seal -3- with engine oil and fit it.

– Fit new oil filter element -2- in sealing cap.

– Screw sealing cap -4- into oil filter housing -1- and tighten it to specified torque using socket (32 mm) (see table of tightening torques for installation ⇒ page 73).

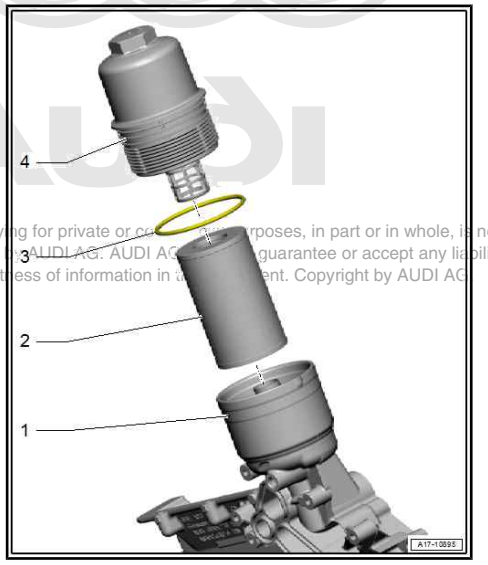

Continue installation in reverse sequence.

Copyright by AUDI AG. Copying for private or commercial purposes, in part or in whole, is not permitted unless authorised by AUDI AG. AUDI AG does not guarantee or accept any liability with respect to the correctness of information in this document. Copyright by AUDI AG.

Note

There is more than one version of the oil filter for the 6-cylinder 3.0 TFSI petrol engine *⇒ page 73* *.*

3.66.4 6-cyl. petrol engine 3.0 TFSI/3.2 FSI (version 2)

Special tools and workshop equipment required

- Torque wrench - V.A.G 1331- , measuring range 6 to 50 Nm
- Or: torque wrench - VAS 6583- , measuring range 3 to 60 Nm
- Or: torque wrench - VAS 5820- , measuring range 20 to 100 Nm

Table of tightening torques for installation:

Component/fastener	[Nm]
Sealing cap	25

Removal steps:

– Remove engine cover panel ⇒ page 8 .

Procedure:

– Loosen sealing cap -arrow- using socket (24 mm) . This causes a valve to open.

– Wait a few minutes to allow engine oil to drain from filter housing into crankcase.

– Completely remove sealing cap -arrow- of oil filter. Make sure that no engine oil drips onto engine.

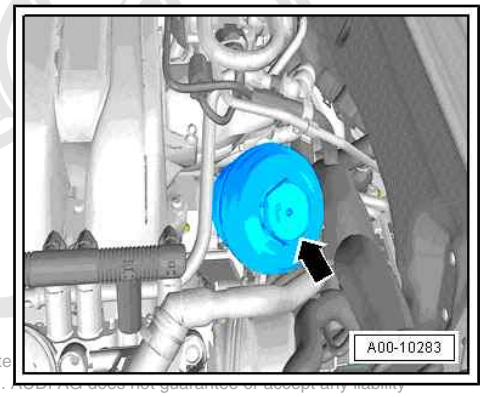

Protected by copyright. Copying for private
permitted unless authorised by AUDI AG.
with respect to the correctness of information in this document. Copyright by AUDI AG.

– Pull oil filter element and seal -2- out of sealing cap -1-.

– Clean sealing surface -B- of sealing cap -1-.

– Lightly lubricate new seal -2- with engine oil and insert into sealing cap. Note position of service tab -A- on seal. Flat side of seal profile must face outwards.

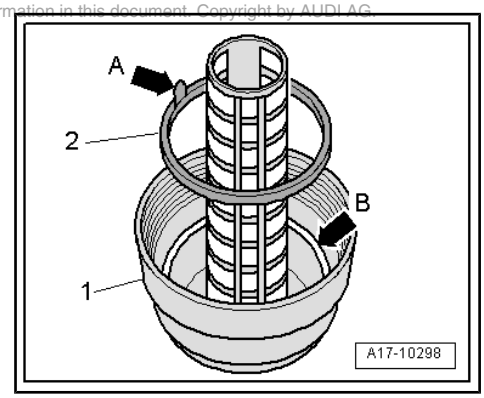

– Remove O-ring -2- on oil filter housing -1-.

– Lightly lubricate new O-ring -2- with engine oil and insert into groove -arrow-.

– Fit new oil filter element in sealing cap.

– Screw sealing cap into oil filter housing and tighten it to specified torque using socket (36 mm) (see table of tightening torques for installation ⇒ page 73).

Continue installation in reverse sequence.

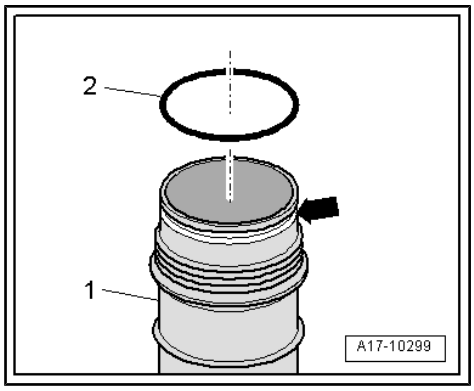

Note

There is more than one version of the oil filter for the 6-cylinder 3.0 TFSI petrol engine *⇒ page 72* *.*

3.66.5 8-cyl. petrol engine 4.2 FSI

Special tools and workshop equipment required

- Torque wrench - V.A.G 1331- , measuring range 6 to 50 Nm
- Or: torque wrench - VAS 6583- , measuring range 3 to 60 Nm
- Or: torque wrench - VAS 5820- , measuring range 20 to 100 Nm

Table of tightening torques for installation:

Component/fastener	[Nm]
Sealing cap	25

Removal steps:

– Remove engine cover panel ⇒ page 8 .

Procedure:

– Loosen sealing cap -arrow- using socket (24 mm) . This causes a valve to open.

– Wait a few minutes to allow engine oil to drain from filter housing into crankcase.

– Completely remove sealing cap. Make sure that no engine oil drips onto engine.

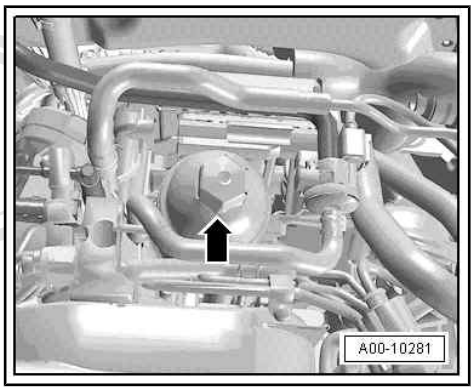

– Pull oil filter element -3- and O-ring -2- out of sealing cap -1-.

– Clean sealing surfaces of sealing cap -1-.

– Lightly lubricate new O-rings -4- and -2- with engine oil and insert O-rings into grooves.

– Fit new oil filter element -3- in sealing cap -1-.

– Fit sealing cap -1- on engine, paying attention to installation position of filter.

– Screw sealing cap -1- into oil filter housing and tighten it to specified torque using socket (32 mm) (see table of tightening torques for installation ⇒ page 75).

Continue installation in reverse sequence.

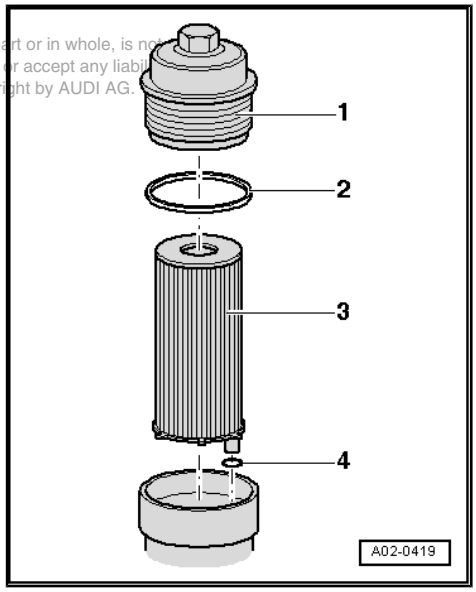

Protected by copyright. Copying for private or commercial purposes, in part or in whole, is not
permitted without the prior consent of AUDI AG. AUDI AG does not guarantee or accept any liability
with respect to the correctness of information in this document. Copyright by AUDI AG.

3.66.6 4-cyl. diesel engine 2.0 TDI (version 1)

Special tools and workshop equipment required

- Torque wrench - V.A.G 1331- , measuring range 6 to 50 Nm
- Or: torque wrench - VAS 6583- , measuring range 3 to 60 Nm
- Or: torque wrench - VAS 5820- , measuring range 20 to 100 Nm

Table of tightening torques for installation:

Component/fastener	[Nm]
Sealing cap	25

Removal steps:

– Remove engine cover panel ⇒ page 8 .

Procedure:

– Loosen sealing cap -1- of oil filter using socket (32 mm) . This causes a valve to open.

– Wait a few minutes to allow engine oil to drain from filter housing into crankcase.

– Completely remove sealing cap. Make sure that no engine oil drips onto engine.

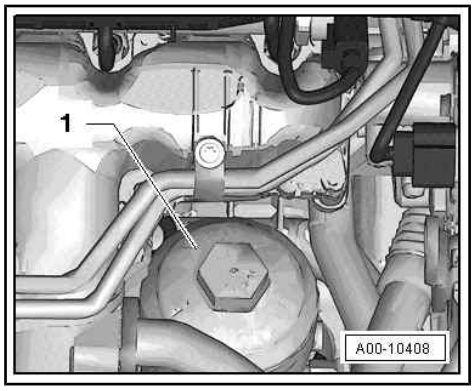

– Pull oil filter element -3- and O-ring -4- out of sealing cap -1-.

– Clean sealing surfaces of sealing cap -1-.

– Lightly lubricate new O-rings -2- and -4- with engine oil and insert O-rings.

– Fit new oil filter element -3- in sealing cap.

– Screw sealing cap -1- into oil filter housing -5- and tighten it to specified torque using socket (32 mm) (see table of tightening torques for installation ⇒ page 75).

Continue installation in reverse sequence.

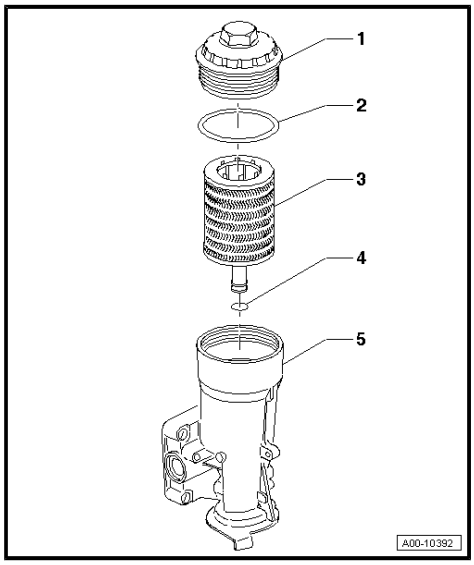

Note

There is more than one version of the oil filter for the 4-cylinder 2.0 TDI diesel engine *⇒ page 76* *.*

3.66.7 4-cyl. diesel engine 2.0 TDI (version 2)

Special tools and workshop equipment required

- Torque wrench - V.A.G 1331- , measuring range 6 to 50 Nm
- Or: torque wrench - VAS 6583- , measuring range 3 to 60 Nm
- Or: torque wrench - VAS 5820- , measuring range 20 to 100 Nm

Table of tightening torques for installation:

Component/fastener	[Nm]
Sealing cap	25

Protected by copyright. Copying for private or commercial purposes, in part or in whole, is not permitted unless authorised by AUDI AG. AUDI AG does not guarantee or accept any liability with respect to the correctness of information in this document. Copyright by AUDI AG.

Removal steps:

– Remove engine cover panel ⇒ page 8 .

Procedure:

– Loosen sealing cap -2- of oil filter using socket (36 mm) . This causes a valve to open.

– Wait a few minutes to allow engine oil to drain from filter housing into crankcase.

– Completely remove sealing cap. Make sure that no engine oil drips onto engine.

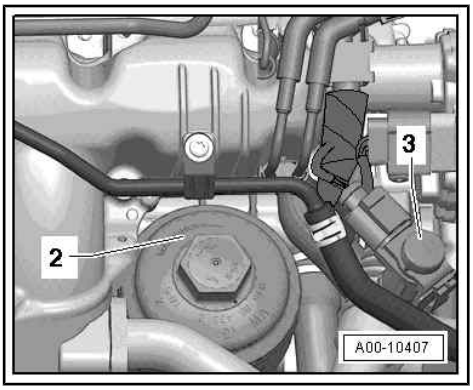

– Pull oil filter element -5- and O-ring -2- out of sealing cap -1-.

– Clean sealing surfaces of sealing cap -1-.

– Lightly lubricate new O-rings -2-, -3- and -4- with engine oil and insert O-rings.

– Fit oil filter element -5- in sealing cap.

– Screw sealing cap -7- into oil filter housing -2- and tighten it to specified torque using socket (32 mm) (see table of tightening torques for installation ⇒ page 76).

Continue installation in reverse sequence.

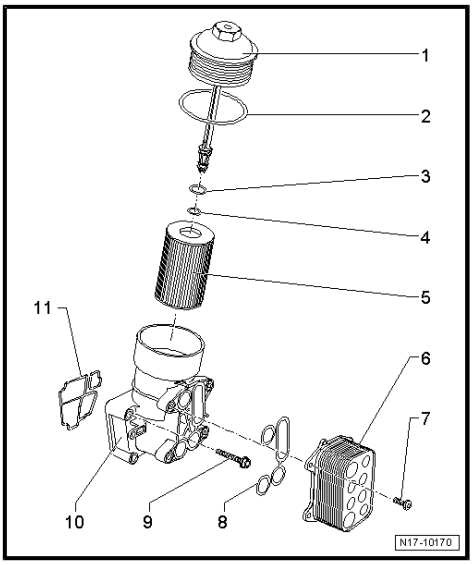

Note

There is more than one version of the oil filter for the 4-cylinder 2.0 TDI diesel engine *⇒ page 77* *.*

3.66.8 4-cyl. diesel engine 2.0 TDI (version 3)

Special tools and workshop equipment required

- Torque wrench - V.A.G 1331- , measuring range 6 to 50 Nm
- Or: torque wrench - VAS 6583- , measuring range 3 to 60 Nm
- Or: torque wrench - VAS 5820- , measuring range 20 to 100 Nm

Table of tightening torques for installation:

Component/fastener	[Nm]
Oil filter	25

Protected by copyright. Copying for private or commercial purposes, in part or in whole, is not permitted unless authorised by AUDI AG. AUDI AG does not guarantee or accept any liability with respect to the correctness of information in this document. Copyright by AUDI AG.

Removal steps:

– Remove engine cover panel ⇒ page 8 .

Procedure:

– Loosen sealing cap of oil filter using socket (32 mm) . This causes a valve to open.

– Wait a few minutes to allow engine oil to drain from filter housing into crankcase.

– Completely remove sealing cap. Make sure that no engine oil drips onto engine.
– Pull oil filter element -3- and O-ring -4- out of sealing cap -5-.
– Clean sealing surfaces of sealing cap -5-.
– Lightly lubricate new O-ring -4- with engine oil and insert O-ring.
– Fit new oil filter element -3- in sealing cap.
– Screw sealing cap -5- into oil filter housing -2- and tighten it to specified torque using socket (32 mm) (see table of tightening torques for installation ⇒ page 77).

Continue installation in reverse sequence.

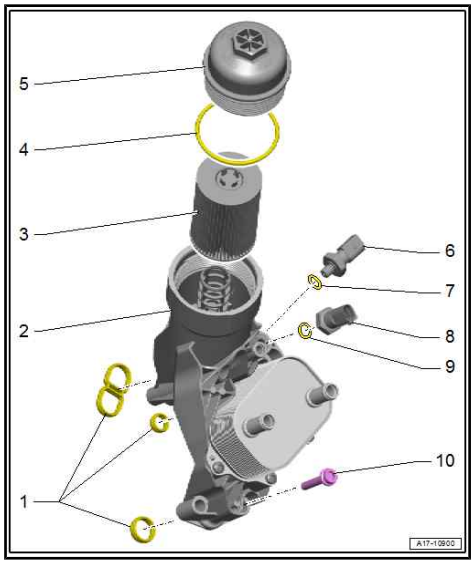

Note

There is more than one version of the oil filter for the 4-cylinder 2.0 TDI diesel engine *⇒ page 75* *.*

3.66.9 6-cyl. diesel engine 2.7 TDI/3.0 TDI (version 1)

Special tools and workshop equipment required

- Torque wrench - V.A.G 1331- , measuring range 6 to 50 Nm
- Or: torque wrench - VAS 6583- , measuring range 3 to 60 Nm
- Or: torque wrench - VAS 5820- , measuring range 20 to 100 Nm

Table of tightening torques for installation:

Component/fastener	[Nm]
Sealing cap	35

Protected by copyright. Copying for private or commercial purposes, in part or in whole, is not permitted unless authorised by AUDI AG. AUDI AG does not guarantee or accept any liability with respect to the correctness of information in this document. Copyright by AUDI AG.

Removal steps:

– Remove engine cover panel ⇒ page 8 .

Procedure:

– Loosen sealing cap -arrow- using socket (24 mm) . This causes a valve to open.
– Wait a few minutes to allow engine oil to drain from filter housing into crankcase.
– Completely remove sealing cap. Make sure that no engine oil drips onto engine.

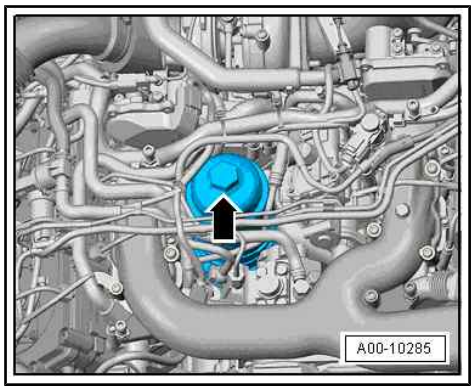

– Pull oil filter element -3- and O-ring -2- out of sealing cap -1-.
– Clean sealing surfaces of sealing cap -1-.
– Lightly lubricate new O-rings -2- and -4- with engine oil and insert O-rings into grooves.
– Fit new oil filter element -3- in sealing cap -1-.
– Screw sealing cap -7- into oil filter housing -2- and tighten it to specified torque using socket (32 mm) (see table of tightening torques for installation ⇒ page 78).

Continue installation in reverse sequence.

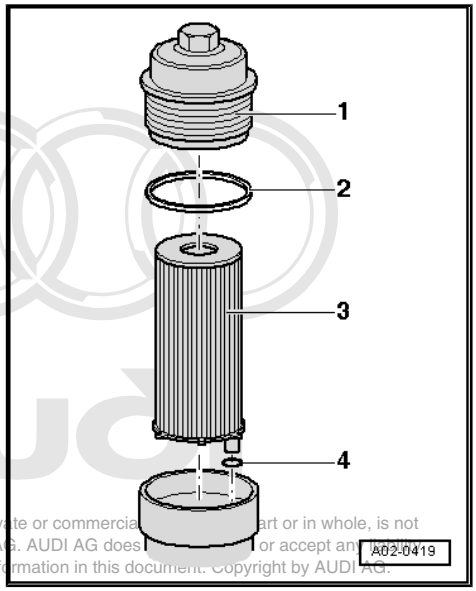

Note

There is more than one version of the oil filter for the 6-cylinder 3.0 TDI diesel engine *⇒ page 79* *.*

Protected by copyright. Copying for private or commercial purposes, in part or in whole, is not permitted unless authorised by AUDI AG. AUDI AG does not make or accept any legal liability with respect to the correctness of information in this document. Copyright by AUDI AG.

3.66.10 6-cyl. diesel engine 3.0 TDI (version 2)

Special tools and workshop equipment required

- Torque wrench - V.A.G 1331- , measuring range 6 to 50 Nm
- Or: torque wrench - VAS 6583- , measuring range 3 to 60 Nm
- Or: torque wrench - VAS 5820- , measuring range 20 to 100 Nm

Table of tightening torques for installation:

Component/fastener	[Nm]
Sealing cap	35

Removal steps:

– Remove engine cover panel ⇒ page 8 .

Procedure:

– Loosen sealing cap -arrow- of oil filter using socket (32 mm) . This causes a valve to open.
– Wait a few minutes to allow engine oil to drain from filter housing into crankcase.
– Completely remove sealing cap. Make sure that no engine oil drips onto engine.

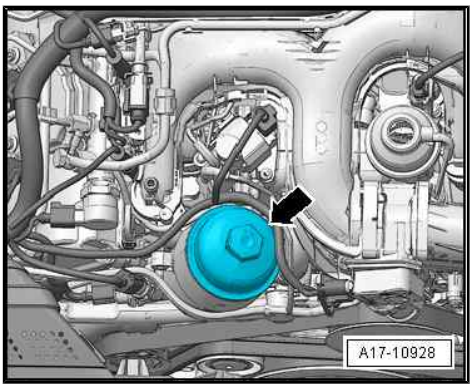

– Pull oil filter element -9- and O-ring -8- out of sealing cap -7-.
– Clean sealing surfaces of sealing cap -7-.
– Lightly lubricate new O-ring -8- with engine oil and insert O-ring.
– Fit new oil filter element -9- in sealing cap.
– Screw sealing cap -7- into oil filter housing -2- and tighten it to specified torque using socket (32 mm) (see table of tightening torques for installation ⇒ page 79).

Continue installation in reverse sequence.

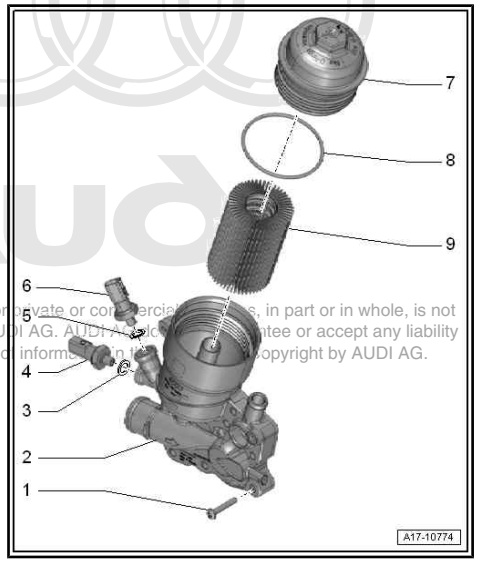

Protected by copyright. Copying for private or commercial purposes, in part or in whole, is not permitted unless authorised by AUDI AG. AUDI AG does not guarantee or accept any liability with respect to the correctness of information in this document. Copyright by AUDI AG.

Note

There is more than one version of the oil filter for the 6-cylinder 3.0 TDI diesel engine *⇒ page 78* *.*

3.67 Engine oil: filling up

CAUTION

Risk of engine damage if the engine is revved too soon after changing the oil!

- **The engine must only run at idling speed as long as the oil pressure warning lamp in the instrument cluster is on.**
- **Increase the engine speed only after the warning lamp has gone out.**

Special tools and workshop equipment required

- Oil filler funnel - VAS 6842-

Refer to ELSA maintenance table for engine-specific oil capacities and oil grades.

Procedure:

– Fill up engine oil using oil filler funnel - VAS 6842- .
– Then check oil level and adjust if necessary ⇒ page 81 .

– For all 4-cylinder petrol engines 1.8/2.0 TFSI with oil filler neck on timing chain cover: Clean sealing surface -arrow- on inside of oil filler neck with a lint-free cloth before screwing on filler cap.

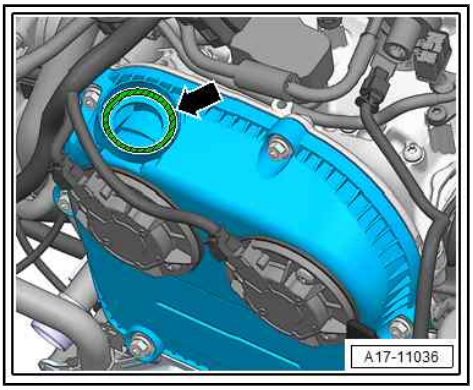

Note

The quantity of oil specified in the maintenance table refers to the oil change; it is not identical to the quantity required for the initial filling.

3.68 Engine oil: checking oil level and correcting if necessary

CAUTION

Risk of damage to catalytic converter if engine oil level is too high!

♦ **Drain engine oil until level meets specification.**

Requirements for all engines except V6 diesel engines and V8 petrol engines:

- Engine oil temperature at least 60 °C
- Wait a few minutes after switching off the engine to allow the oil to flow back into the sump.
- Vehicle must be level (horizontal).

Requirements for V6 diesel engines:

- The engine must be at operating temperature (90 °C oil temperature).
- Wait approx. two minutes after switching off the engine to allow the oil to drain back into the sump.
- Vehicle must be level (horizontal).

Protected by copyright. Copying for private or commercial purposes, in part or in whole, is not permitted unless authorised by AUDI AG. AUDI AG does not guarantee or accept any liability with respect to the correctness of information in this document. Copyright by AUDI AG.

Requirements for V8 petrol engines:

- The engine must be at operating temperature (90 °C oil temperature).
- Allow engine to run at idling speed for approx. one minute.
- Switch off engine and wait approx. five minutes (to allow oil to flow back slowly).
- Check engine oil level within one minute.
- Vehicle must be level (horizontal).

Checking oil level with dipstick ⇒ page 81

Checking oil level on MMI ⇒ page 82

3.68.1 Checking oil level with dipstick

Procedure:

– Pull out dipstick and wipe it off with a clean cloth.

– Re-insert dipstick into guide tube as far as it will go.

– Pull oil dipstick out again and read off oil level on marked area.

– Evaluate oil level and determine any necessary measures accordingly:

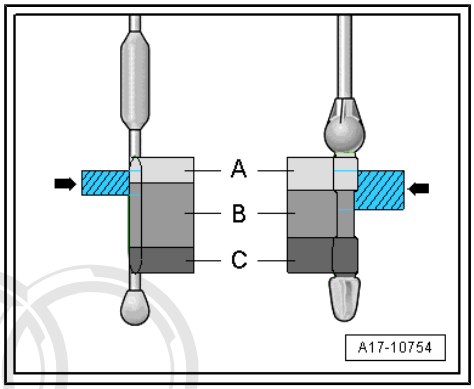

Fluid level:	Evaluation/measure:
Marked area -arrow-	Optimum oil level.
Area A	Oil must not be topped up.
Area B	Oil can be topped up.
Area C	Oil must be topped up.

Protected by copyright. Copying for private or commercial purposes, in part or in whole, is not permitted unless authorised by AUDI AG. AUDI AG does not guarantee or accept any liability with respect to the correctness of information in this document. Copyright by AUDI AG.

Note

Some engines are not fitted with an oil dipstick; if this is the case, use the oil level display in the MMI system *⇒ page 82* *.*

3.68.2 Checking oil level on MMI

Procedure:

– If necessary, close bonnet.

– Switch on ignition and activate MMI.

– Press function selector button CAR.

– Under »Car systems«, navigate through following menu structure:

♦ Servicing & checks

♦ Fluid level

– Read off and evaluate oil level on display.

– If necessary, correct oil level:

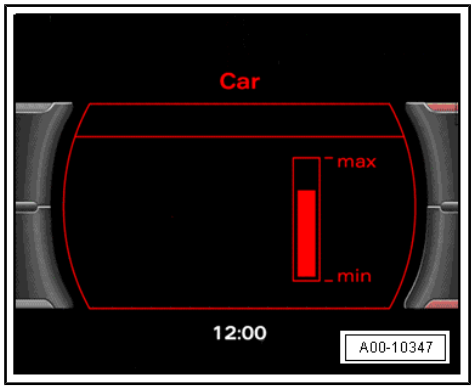

Fluid level	Evaluation/measure
At or just under “max”	Optimum oil level.
Significantly under “max”	Fill up engine oil to optimum level (close bonnet to refresh oil level display).

Note

- *The oil level display on the MMI is not refreshed when the bonnet is open.*
- *A warning lamp in the driver information system indicates that the level is too low.*

3.69 Poly V-belts for ancillaries: checking

This maintenance item only applies to certain countries: Note specification in Maintenance table.

Removal steps:

– Remove engine cover panel ⇒ page 8 .

– Remove poly V-belt ⇒ ; Rep. gr. 13 ; Cylinder block (pulley end); Removing and installing poly V-belt .

Procedure:

– Check poly V-belt (removed from vehicle) along entire length, as well as pulleys on engine that are within view. Look for the following types of damage:

- Cracks or tears in belt profile and on reverse side (cracks, core fractures, cross-sectional fractures)
- Layer separation (top layer, cord strands)
- Fraying of cord strands
- Foreign objects in belt profile and reverse side
- Excessive traces of oil and grease on rollers and pulleys
- Flank wear on pulleys (material wear, frayed flanks, surface cracks); see -illustration-

– Applies to vehicles with power steering pump: Check alternator freewheel.

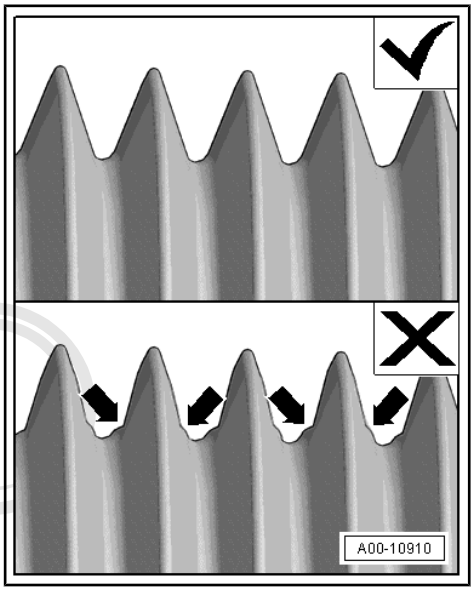

– If damage is found: Renew damaged component.

Install in reverse sequence.

Note

The example given here shows possible damage to a pulley. The appearance of other types of material wear on the load-bearing flanks of the ribbing can be different.

Protected by copyright. Copying for private or commercial purposes, in part or in whole, is not permitted unless authorised by AUDI AG. AUDI AG does not guarantee or accept any liability with respect to the correctness of information in this document. Copyright by AUDI AG.

3.70 Spark plugs: renewing

4-cyl. petrol engine 1.8 TFSI/2.0 TFSI (version 1) ⇒ page 84
4-cyl. petrol engine 1.8 TFSI/2.0 TFSI (version 2) ⇒ page 86
6-cyl. petrol engine 3.0 TFSI ⇒ page 88
6-cyl. petrol engine 3.2 FSI ⇒ page 91
8-cyl. petrol engine 4.2 FSI ⇒ page 93
Lubricating ignition coils ⇒ page 96

3.70.1 4-cyl. petrol engine 1.8 TFSI/2.0 TFSI (version 1)

Special tools and workshop equipment required

- Spark plug spanner - 3122B-

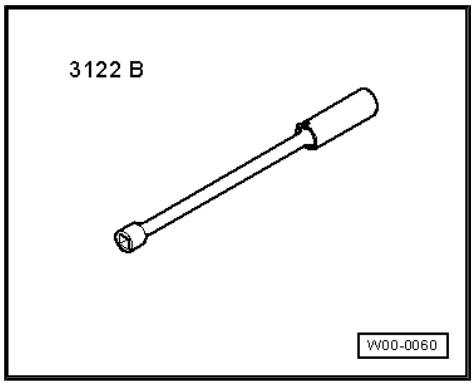

- Puller - T40039-

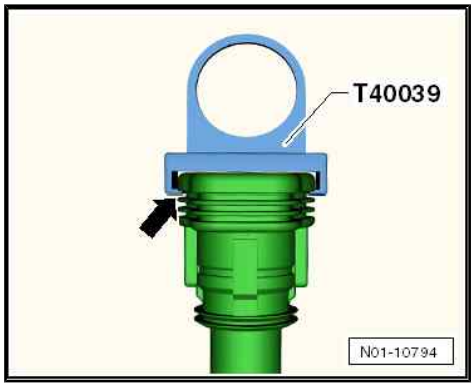

- Torque wrench - V.A.G 1331- , measuring range 6 to 50 Nm
- Or: torque wrench - VAS 6583- , measuring range 3 to 60 Nm

Table of tightening torques for installation:

Component/fastener	[Nm]
Spark plugs with M12 thread	20+5
Spark plugs with M14 thread	30+5
Bolt for ignition coil	10

Protected by copyright. Copying for private or commercial purposes, in part or in whole, is not permitted unless authorised by AUDI AG. AUDI AG does not guarantee or accept any liability with respect to the correctness of information in this document. Copyright by AUDI AG.

Removal steps:

– Remove engine cover panel ⇒ page 8 .

Step 1 - removing spark plugs:

– Release and unplug electrical connectors from actuators for camshaft adjustment.

– Unscrew bolts -1- for connector rail.

– Release connectors for ignition coils -2- and at the same time unplug all connectors from ignition coils.

– Place connector rail slightly to one side. Make sure that wiring is not kinked or damaged.

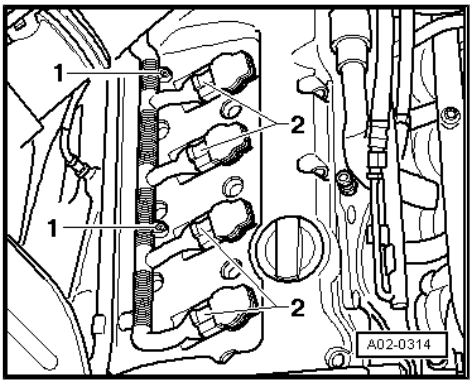

– Position puller - T40039- on thick rib at top of ignition coils and detach all ignition coils from spark plugs one after the other in direction of -arrow-.

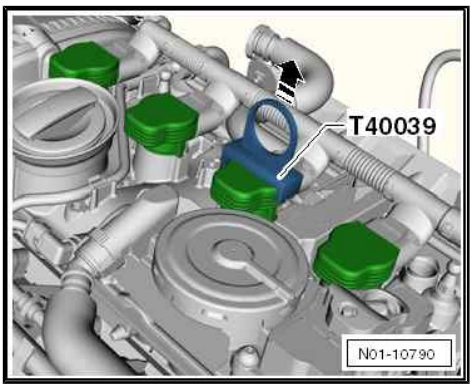

– Unscrew spark plugs from cylinder head using spark plug socket - VAS 3122B- .

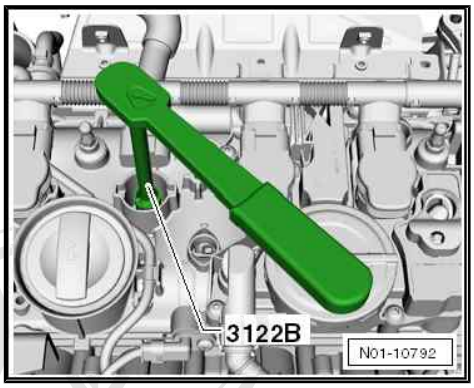

Step 2 - installing spark plugs:

– Install new spark plugs using spark plug socket and extension - VAS 3122B- and tighten to specified torque (see table of tightening torques for installation ⇒ page 84).

– Lubricate ignition coils ⇒ page 96 .

– Fit all ignition coils loosely into spark plug apertures and align with connectors of connector rail.

– Push ignition coils evenly onto spark plugs by hand (do not attempt to knock in coils with any kind of tool).

– Align connector rail and push all connectors onto ignition coils so that they engage.

– Install connector rail, screwing in securing bolts to specified torque (see table of tightening torques for installation ⇒ page 84).

Continue installation in reverse sequence.

Protected by copyright. Copying for private or commercial purposes, in part or in whole, is not permitted unless authorised by AUDI AG. AUDI AG does not guarantee or accept any liability with respect to the correctness of information in this document. Copyright by AUDI AG.

Note

There is more than one version of the spark plugs for the 4-cylinder 1.8 TFSI/2.0 TFSI petrol engine *⇒ page 86* *.*

3.70.2 4-cyl. petrol engine 1.8 TFSI/2.0 TFSI (version 2)

Special tools and workshop equipment required

- Spark plug spanner - 3122B-

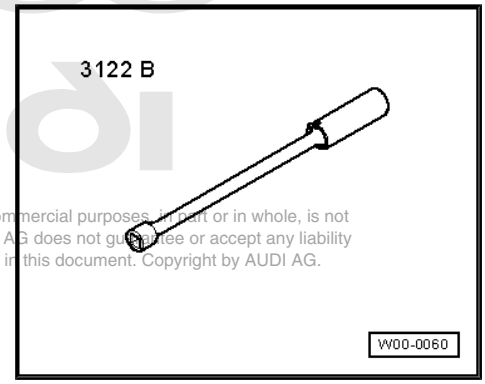

Protected by copyright. Copying for private or commercial purposes, in part or in whole, is not permitted unless authorised by AUDI AG. AUDI AG does not guarantee or accept any liability with respect to the correctness of information in this document. Copyright by AUDI AG.

- Puller - T10530-

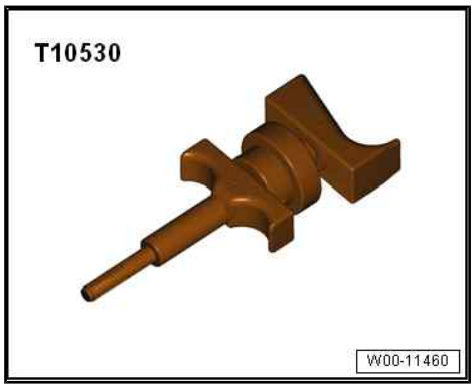

- Torque wrench - V.A.G 1331- , measuring range 6 to 50 Nm
- Or: torque wrench - VAS 6583- , measuring range 3 to 60 Nm

Table of tightening torques for installation:

Component/fastener	[Nm]
Spark plugs with M12 thread	20+5
Spark plugs with M14 thread	30+5
Bolt for ignition coil	10

Removal steps:

– Remove engine cover panel ⇒ page 8 .

Step 1 - removing spark plugs:

– Unplug electrical connector -1- for Lambda probe - G39- .

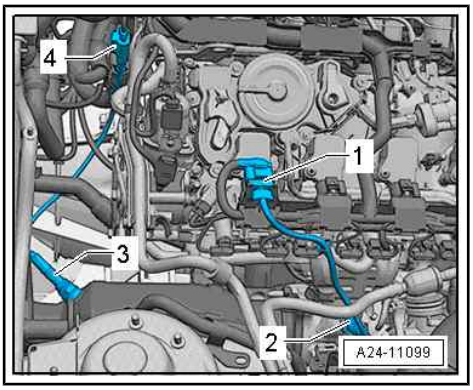

– Push ignition coil connectors -1-, -2-, -3- and -4- towards ignition coils, release retainers and detach connectors from ignition coils in direction of -arrow-.

– Place electrical connectors slightly to one side. Make sure that wiring is not kinked or damaged.

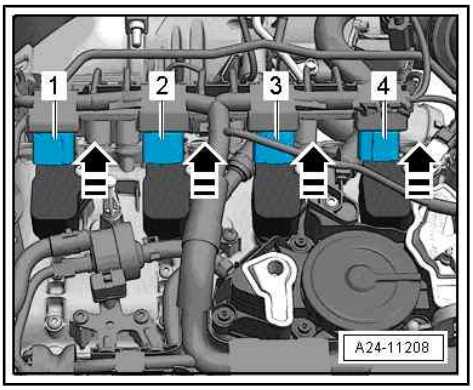

– Unscrew bolts -arrows- for ignition coils.

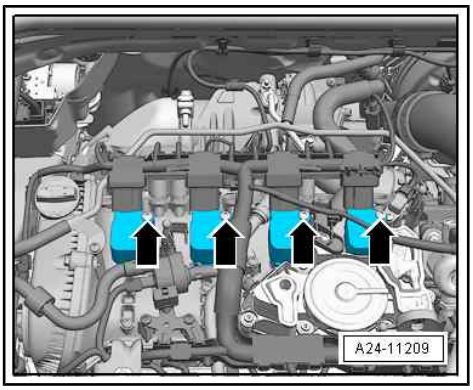

– Insert puller - T10530- into hole -1- of ignition coil and turn knurled nut -2- clockwise until puller is secured in place.

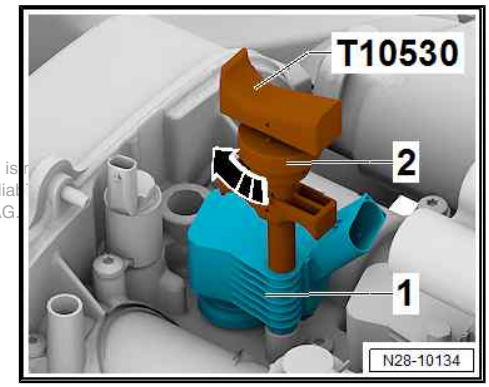

Protected by copyright. Copying for private or commercial purposes, in part or in whole, is not permitted unless authorised by AUDI AG. AUDI AG does not guarantee or accept any liability with respect to the correctness of information in this document. Copyright by AUDI AG.

– Carefully pull ignition coil out upwards using puller - T10530- .

– Repeat removal procedure with all other ignition coils.

– Unscrew spark plugs using spark plug socket and extension - VAS 3122B- .

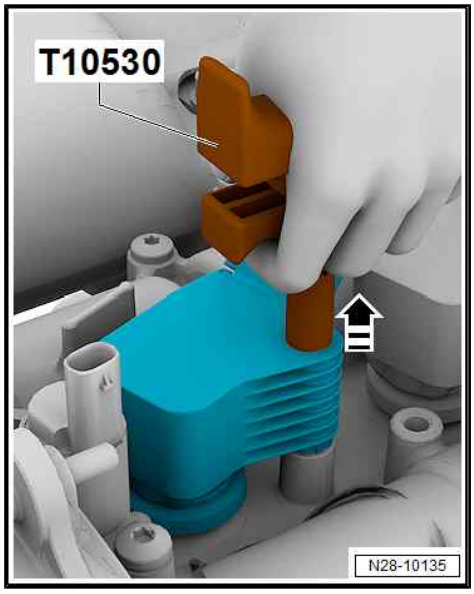

Step 2 - installing spark plugs:

– Install new spark plugs using spark plug socket and extension - VAS 3122B- and tighten to specified torque (see table of tightening torques for installation ⇒ page 86).

– Lubricate ignition coils ⇒ page 96 .

– Fit all ignition coils loosely into spark plug apertures and align with connectors of connector rail.

– Push ignition coils evenly onto spark plugs by hand (do not attempt to knock in coils with any kind of tool).

– Tighten bolts -arrows- for ignition coils to specified torque (see table of tightening torques for installation).

Continue installation in reverse sequence.

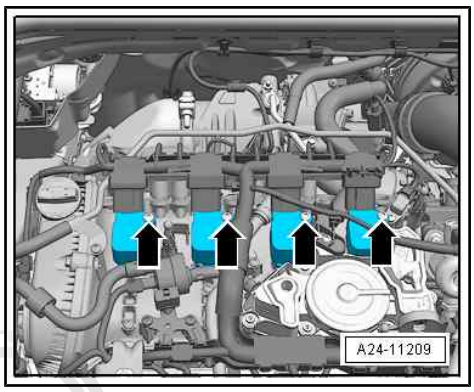

Note

There is more than one version of the spark plugs for the 4-cylinder 1.8 TFSI/2.0 TFSI petrol engine *⇒ page 84* *.*

3.70.3 6-cyl. petrol engine 3.0 TFSI

Special tools and workshop equipment required

♦ Spark plug spanner - 3122B-

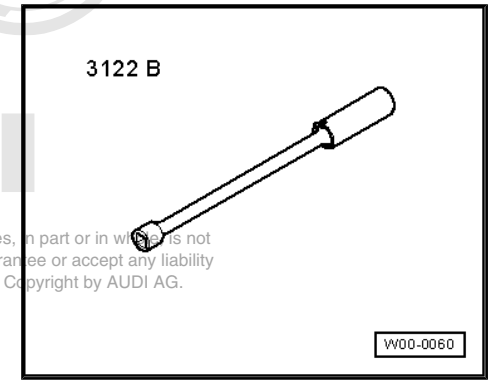

Protected by copyright. Copying for private or commercial purposes, in part or in whole, is not permitted unless authorised by AUDI AG. AUDI AG does not guarantee or accept any liability with respect to the correctness of information in this document. Copyright by AUDI AG.

♦ Puller - T40039-

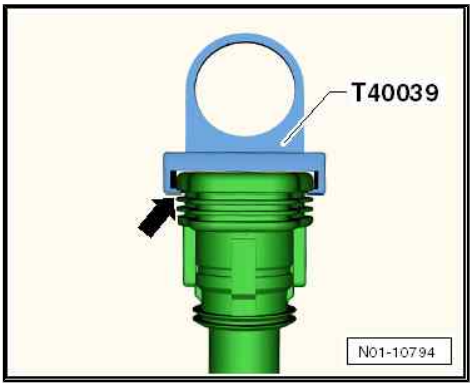

♦ Torque wrench - VAS 6583- , measuring range 3 to 60 Nm

Table of tightening torques for installation:

Component/fastener	[Nm]
Spark plugs with M12 thread	20+5
Spark plugs with M14 thread	30+5
Bolt for ignition coil	5

Removal steps:

– Remove engine cover panel ⇒ page 8 .

Step 1 - removing spark plugs, cylinder bank (right-side):

– Move fuel line -4- and line -1- from activated charcoal filter clear at air cleaner housing and air pipe.

– Disconnect vacuum hose -2-.

– Unfasten hose clip -3-, release retaining clips -arrows- and remove air pipe.

– Air cleaner (bottom section): removing ⇒ Rep. gr. 24 ; Air cleaner - exploded view .

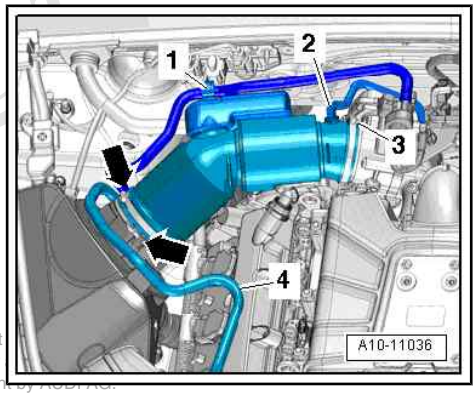

Protected by copyright. Copying for private or commercial purposes, in part permitted unless authorised by AUDI AG. AUDI AG does not guarantee or with respect to the correctness of information in this document. Copyright by AUDI AG.

– Unscrew bolts -arrows- for connector rail.

– Release connectors for ignition coils -arrows- and unplug all connectors from ignition coils at the same time.

– Place connector rail slightly to one side. Make sure that wiring is not kinked or damaged.

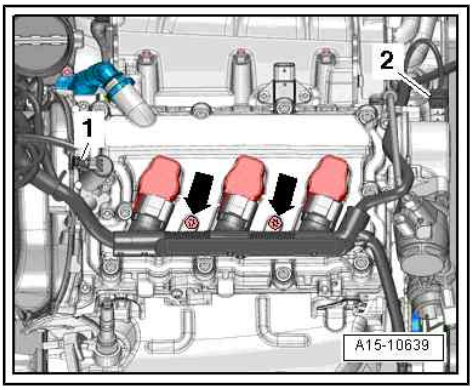

– Position puller - T40039- on thick rib at top of ignition coils and detach all ignition coils from spark plugs one after the other in direction of -arrow-.
– Unscrew spark plugs from cylinder head using spark plug socket - VAS 3122B- .

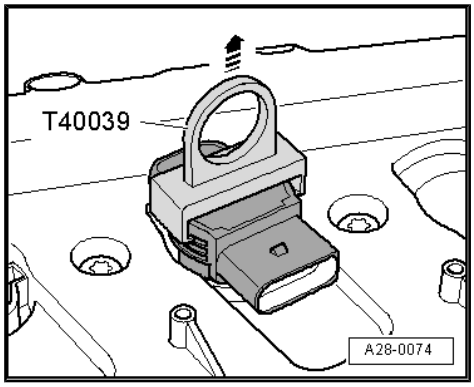

Step 2 - removing spark plugs, cylinder bank (left-side):

– Unscrew bolt -arrow- on coolant expansion tank.
– Unplug electrical connector for coolant shortage indicator switch - F66- on coolant expansion tank (bottom).
– Move coolant expansion tank to one side with coolant hoses -1- and -2- attached.

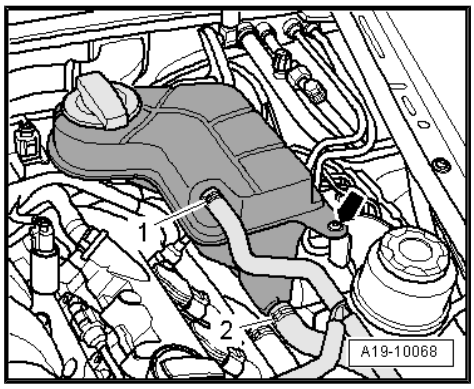

– Unscrew bolts -arrows- for connector rail.
– Release connectors for ignition coils and unplug all connectors from ignition coils at the same time.
– Place connector rail slightly to one side. Make sure that wiring is not kinked or damaged.

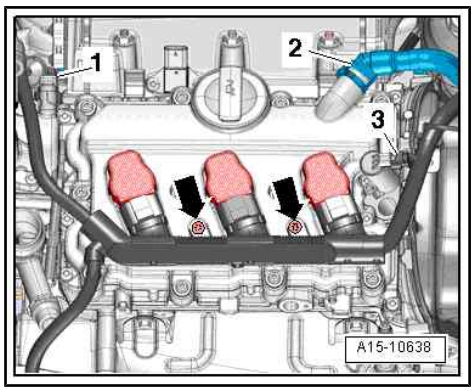

Protected by copyright. Copying for private or commercial purposes, in part or in whole, is not permitted unless authorised by AUDI AG. AUDI AG does not guarantee or accept any liability with respect to the correctness of information in this document. Copyright by AUDI AG.

– Position puller - T40039- on thick rib at top of ignition coils and detach all ignition coils from spark plugs one after the other in direction of -arrow-.

– Unscrew spark plugs from cylinder head using spark plug socket - VAS 3122B- .

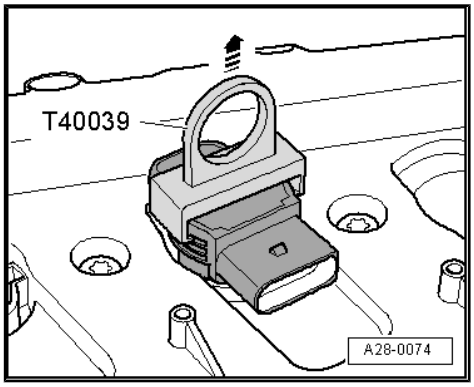

Step 3 - installing spark plugs:

– Install new spark plugs using spark plug socket and extension - VAS 3122B- and tighten to specified torque (see table of tightening torques for installation ⇒ page 89).

– Lubricate ignition coils ⇒ page 96 .

– Fit all ignition coils loosely into spark plug apertures and align with connectors of connector rail.

– Push ignition coils evenly onto spark plugs by hand (do not attempt to knock in coils with any kind of tool).

– Align connector rail and push all connectors onto ignition coils so that they engage.

– Install connector rail, screwing in securing bolts to specified torque (see table of tightening torques for installation ⇒ page 89).

Continue installation in reverse sequence.

Note

Different versions of coolant expansion tank may be fitted.

3.70.4 6-cyl. petrol engine 3.2 FSI

Special tools and workshop equipment required

♦ Spark plug spanner - 3122B-

Protected by copyright. Copying for private or commercial purposes, in part or in whole, is not permitted unless authorised by AUDI AG. AUDI AG does not guarantee or accept any liability with respect to the correctness of information in this document. Copyright by AUDI AG.

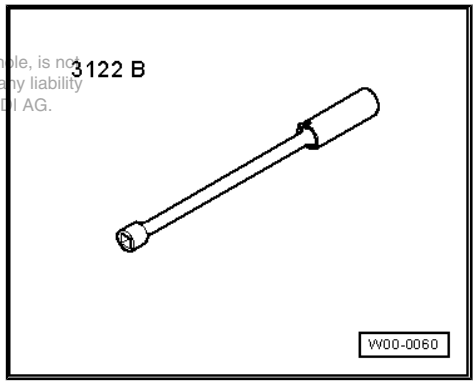

♦ Puller - T40039-

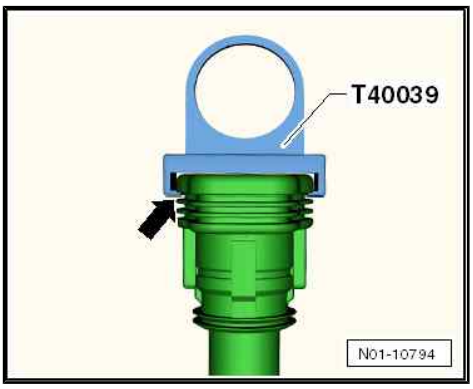

♦ Torque wrench - VAS 6583- , measuring range 3 to 60 Nm

Table of tightening torques for installation:

Component/fastener	[Nm]
Spark plugs with M12 thread	20+5
Spark plugs with M14 thread	30+5
Bolt for ignition coil	5

Removal steps:

– Remove engine cover panel ⇒ page 8 .

Step 1 - removing spark plugs, cylinder bank (right-side):

– Unfasten hose clip -3-, release retaining clips -arrows- and remove air pipe.

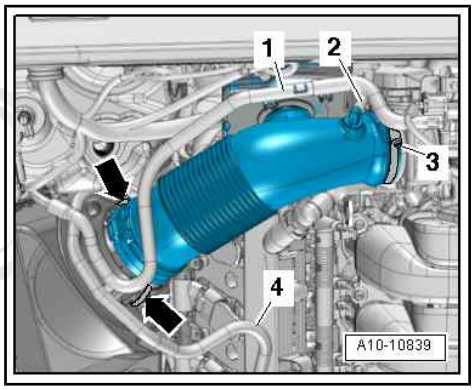

– Release and unplug electrical connectors -2-, -3-, -4-, -5-, -6-, -7-, -8- and -9- from actuators for camshaft adjustment.

– Unplug electrical connector -1- at Hall sender 3 - G300- .

– Unscrew bolts for connector rail.

– Release connectors for ignition coils -arrows- and unplug all connectors from ignition coils at the same time.

– Place connector rail slightly to one side. Make sure that wiring is not kinked or damaged.

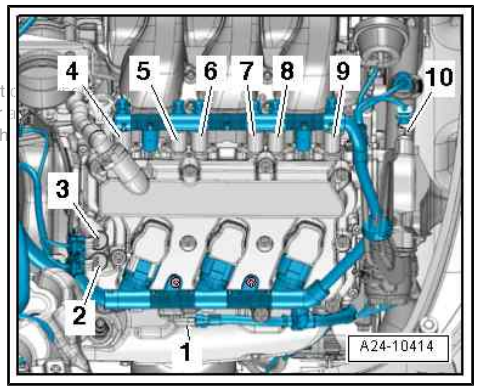

Reproduction for private or commercial purposes, in part permitted unless authorised by AUDI AG. AUDI AG does not guarantee or assume any liability for correctness of information in this document. Copyright

– Position puller - T40039- on thick rib at top of ignition coils and detach all ignition coils from spark plugs one after the other in direction of -arrow-.

– Unscrew spark plugs from cylinder head using spark plug socket - VAS 3122B- .

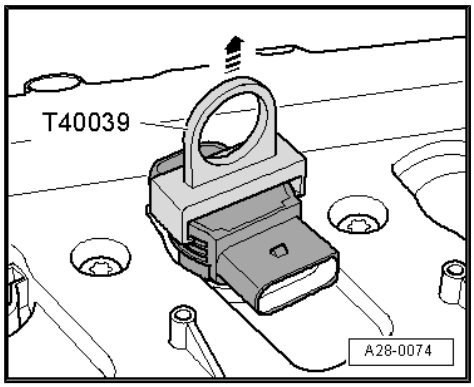

Step 2 - removing spark plugs, cylinder bank (left-side):

– Unscrew bolts -arrows- on coolant expansion tank.
– Unplug electrical connector for coolant shortage indicator switch - F66- on coolant expansion tank (bottom).
– Move coolant expansion tank to one side with coolant hoses -1-, -2- and -3- attached.

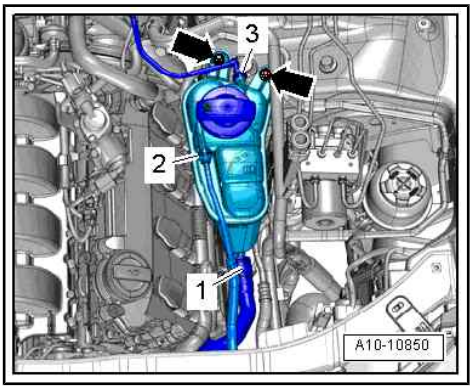

– Release and unplug electrical connectors -2-, -3-, -4-, -5-, -6-, -7-, -8- and -9- from actuators for camshaft adjustment.
– Unplug electrical connector -1- at Hall sender 3 - G163- .
– Unscrew bolts for connector rail.
– Release connectors for ignition coils and unplug all connectors from ignition coils at the same time.
– Place connector rail slightly to one side. Make sure that wiring is not kinked or damaged.

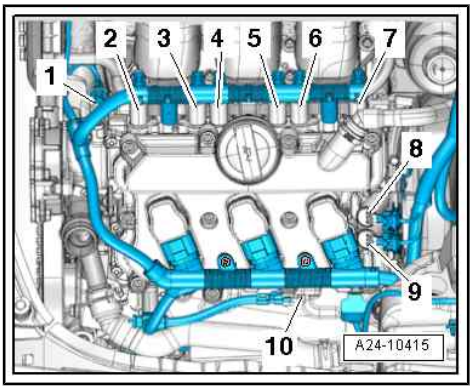

– Position puller - T40039- on thick rib at top of ignition coils and detach all ignition coils from spark plugs one after the other in direction of -arrow-.
– Unscrew spark plugs from cylinder head using spark plug socket - VAS 3122B- .

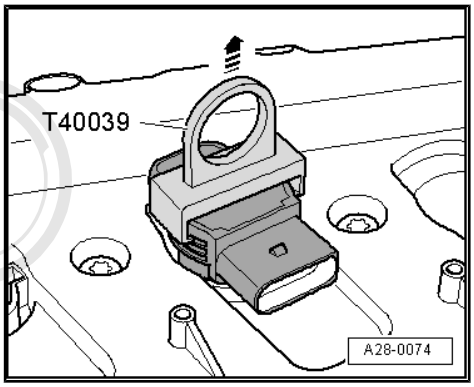

Step 3 - installing spark plugs:

– Install new spark plugs using spark plug socket and extension - VAS 3122B- and tighten to specified torque (see table of tightening torques for installation ⇒ page 92).
– Lubricate ignition coils ⇒ page 96 .
– Fit all ignition coils loosely into spark plug apertures and align with connectors of connector rail.
– Push ignition coils evenly onto spark plugs by hand (do not attempt to knock in coils with any kind of tool).
– Align connector rail and push all connectors onto ignition coils so that they engage.
– Plug electrical connectors into actuators for camshaft adjustment so that they engage.
– Install connector rail, screwing in securing bolts to specified torque (see table of tightening torques for installation ⇒ page 92).

Continue installation in reverse sequence.

Protected by copyright. Copying for private or commercial purposes, in part or in whole, is not permitted unless authorised by AUDI AG. AUDI AG does not guarantee or accept any liability with respect to the correctness of information in this document. Copyright by AUDI AG.

3.70.5 8-cyl. petrol engine 4.2 FSI

Special tools and workshop equipment required

- Spark plug spanner - 3122B-

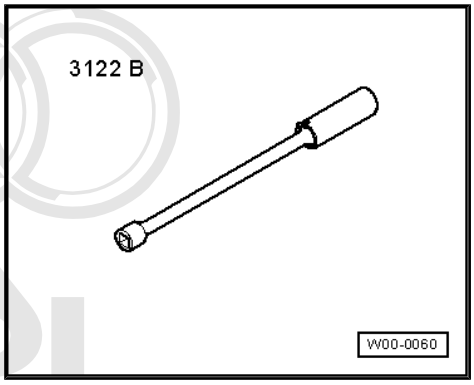

- Puller - T40039-

Protected by copyright. Copying for private or commercial pu
permitted unless authorised by AUDI AG. AUDI AG does no
with respect to the correctness of information in this docu

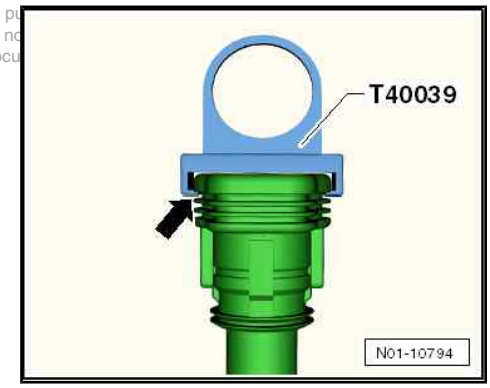

- Torque wrench - VAS 6583- , measuring range 3 to 60 Nm

Table of tightening torques for installation:

Component/fastener	[Nm]
Spark plugs with M12 thread	20+5
Spark plugs with M14 thread	30+5
Bolts for connector rail	5
Bracket for air cleaner housing	9

Removal steps:

– Remove engine cover panel ⇒ page 8 .

– Remove relevant air cleaner housing; ⇒ Rep. gr. 24 ; Removing and installing air cleaner housing .

Step 1 - removing spark plugs, cylinder bank (right-side):

– Unscrew nuts -arrows- and remove bracket -1- for air cleaner housing.

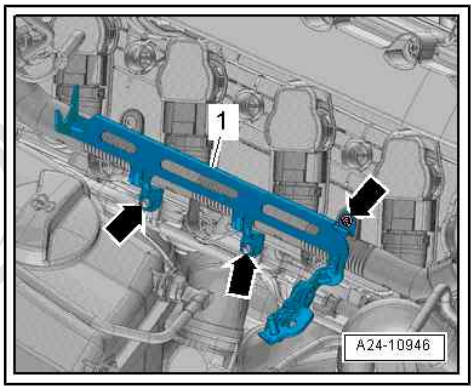

– Release and unplug electrical connector from actuator for camshaft adjustment.

– Remove bolts -1- and -2- for connector rail.

– Release connectors for ignition coils -arrows- and unplug all connectors from ignition coils at the same time.

– Place connector rail slightly to one side. Make sure that wiring is not kinked or damaged.

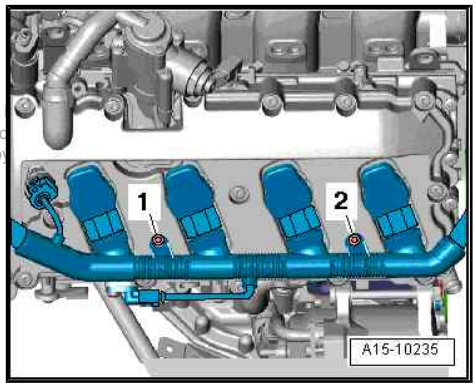

Protected by copyright. Copying for private or commercial purposes, in part or entirely, is not permitted unless authorised by AUDI AG. AUDI AG does not guarantee or accept any liability with respect to the correctness of information in this document. Copyright by AUDI AG.

– Position puller - T40039- on thick rib at top of ignition coils and detach all ignition coils from spark plugs one after the other in direction of -arrow-.

– Unscrew spark plugs from cylinder head using spark plug socket - VAS 3122B- .

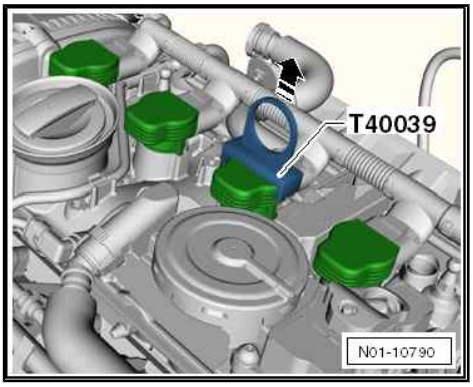

Step 2 - removing spark plugs, cylinder bank (left-side):

– Unscrew nuts -arrows- and remove bracket -1- for air cleaner housing.

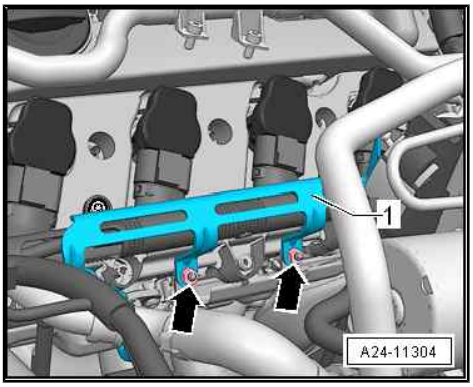

– Release and unplug electrical connector -arrow- from actuator for camshaft adjustment.
– Remove bolts -1- and -2- for connector rail.
– Release connectors for ignition coils -arrows- and unplug all connectors from ignition coils at the same time.
– Place connector rail slightly to one side. Make sure that wiring is not kinked or damaged.

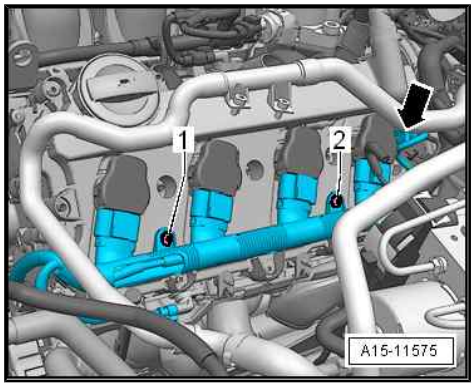

– Position puller - T40039- on thick rib at top of ignition coils and detach all ignition coils from spark plugs one after the other in direction of -arrow-.
– Unscrew spark plugs from cylinder head using spark plug socket - VAS 3122B- .

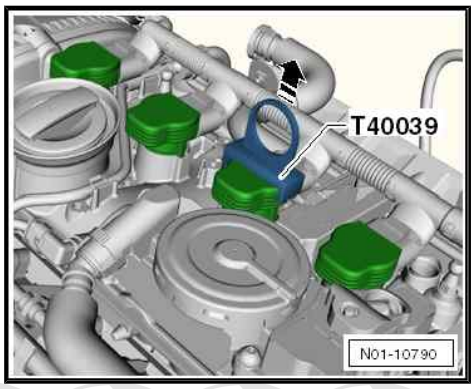

Step 3 - installing spark plugs:

– Install new spark plugs using spark plug socket and extension - VAS 3122B- and tighten to specified torque (see table of tightening torques for installation ⇒ page 94).
– Lubricate ignition coils ⇒ page 96 .
– Fit all ignition coils loosely into spark plug apertures and align with connectors of connector rail.
– Push ignition coils evenly onto spark plugs by hand (do not attempt to knock in coils with any kind of tool).
– Align connector rail and push all connectors onto ignition coils so that they engage.
– Plug electrical connectors into actuators for camshaft adjustment so that they engage.
– Install connector rail, screwing in securing bolts to specified torque (see table of tightening torques for installation ⇒ page 94).

Continue installation in reverse sequence.

Protected by copyright. Copying for private or commercial purposes, in part or in whole, is not permitted unless authorised by AUDI AG. AUDI AG does not guarantee or accept any liability with respect to the correctness of information in this document. Copyright by AUDI AG.

3.70.6 Lubricating pencil-type ignition coils

Special tools and workshop equipment required

♦ Spark plug connector grease - G 052 141 A2-

Procedure:

– Apply a bead of spark plug connector grease - G 052 141 A2- (1 to 2 mm thick) around circumference of sealing hose -arrow- of ignition coil.

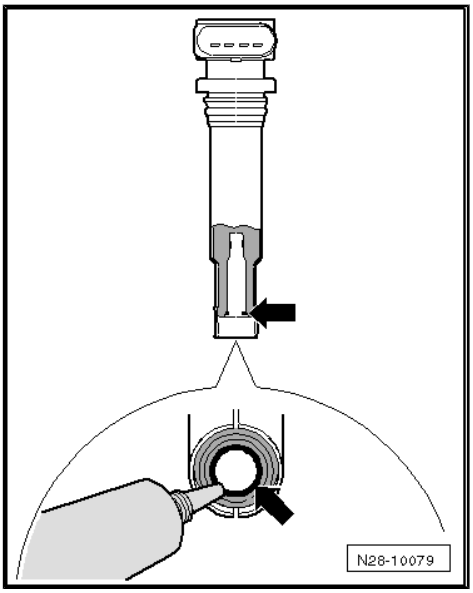

Note

New ignition coils are already lubricated when they are delivered; it is not necessary to lubricate them again when installing.

3.71 Hydraulic system: checking fluid level

Table of test values and procedure guidelines:

Hydraulic fluid temperature:	Fluid level specification:
Ambient temperature (approx. 20 °C)	Oil level within area -A-.
Hydraulic fluid at operating temperature (approx. 80 °C)	Fluid level within area -B-.

Protected by copyright. Copying for private or commercial purposes, in part or in whole, is not permitted unless authorised by AUDI AG. AUDI AG does not guarantee or accept any liability with respect to the correctness of information in this document. Copyright by AUDI AG.

The hydraulic fluid reservoir is located in the engine compartment.

Checking the hydraulic system for leaks is a repair measure and should be charged separately.

Requirements:

- Engine switched off
- Bring front wheels into straight-ahead position.

Procedure:

- Unscrew filler cap with dipstick.
- Clean dipstick with a clean cloth.
- Screw cap on hand tight and unscrew again.
- Check fluid level according to scale on dipstick.

- If fluid level does not meet specification: Perform following measures as appropriate:

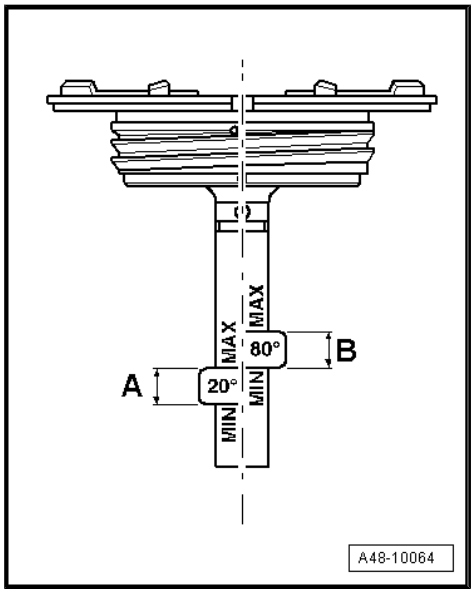

Fluid level:	Measure:
Above specified level	Extract hydraulic fluid.
Below specified level	Check hydraulic power steering system for leaks ⇒ Running gear, front-wheel drive and four-wheel drive; Rep. gr. 48 ; Hydraulic power steering; Checking steering system for leaks .

3.72 Coolant level: checking (coolant level must reach at least top marking on coolant expansion tank)

WARNING

Coolant expansion tank under pressure - risk of injuries!

- **Only open coolant expansion tank when engine is cold.**

Protected by copyright. Copying for private or commercial purposes, in part or in whole, is not permitted unless authorised by AUDI AG. AUDI AG does not guarantee or accept any liability with respect to the correctness of information in this document. Copyright by AUDI AG.

Note

- *Specification for coolant level is top marking on coolant expansion tank.*
- *Coolant additives may only be mixed with distilled water, as the effectiveness of the coolant and the corrosion protection it provides are greatly influenced by the quality of the water with which the coolant is mixed. To ensure an adequate water quality, the coolant additive should be mixed with distilled water.*
- *For approved coolant additives, refer to Electronic parts catalogue (ETKA).*
- *Coolant additives G12EVO, G13 and G12++ may be mixed together.*
- *G12EVO, G13 and G12++ may be mixed with coolant additives G11, G12 and G12+.*
- *G12 and G11 must NOT be mixed together.*
- *Do not reuse coolant.*
- *Only use water/coolant additive as a lubricant for coolant hoses.*
- *It is permissible to operate the vehicle if the coolant level is above the MAX marking on the coolant expansion tank (this is by technical design). Do NOT extract coolant.*
- *The vehicle must not be driven if the coolant level is below the top marking.*

Protected by copyright. Copying for private or commercial purposes, in part or in whole, is not permitted unless authorised by AUDI AG. AUDI AG does not guarantee or accept any liability with respect to the correctness of information in this document. Copyright by AUDI AG.

Checking coolant level and anti-freeze ⇒ page 99

Filling up coolant ⇒ page 101

3.72.1 Checking coolant level and anti-freeze

Special tools and workshop equipment required

- Refractometer - T10007 A-

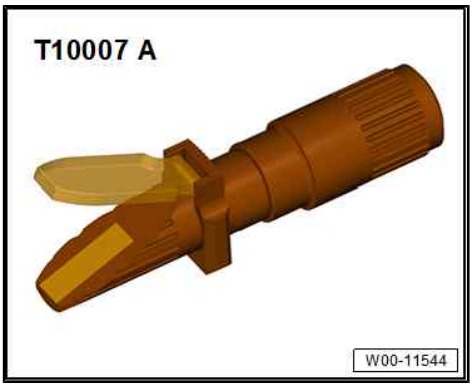

Table of test values and procedure guidelines:

Type of service:	Coolant level specification:
Delivery Inspection	Coolant at least at level of MAX marking.
Inspection	Coolant level between MIN and MAX markings.

Checking the cooling system for leaks is a repair measure and should be charged separately.

Requirements:

- Anti-freeze protection must be guaranteed to -25 °C (in countries with an arctic climate to -36 °C); note specification in Maintenance table.
- The proportion of coolant additive must not exceed 55 % (gives anti-freeze protection down to -48 °C); beyond this concentration the frost protection and the cooling efficiency are reduced again.
- The vehicle must be parked on a level surface.

Step 1 - checking coolant level:

– Check coolant level (according to marking -illustration-) in coolant expansion tank with engine cold.

– If coolant level is too low: Add required amount (using correct mixture ratio) ⇒ page 101 .

– If fluid losses are greater than can be reasonably expected: First use a leak test to determine the cause ⇒ Engine; Rep. gr. 19 ; Cooling system/coolant; Checking cooling system for leaks .

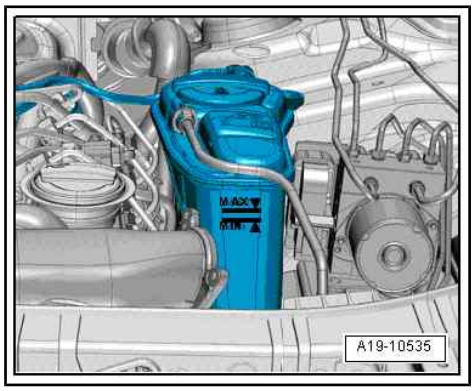

Step 2 - checking anti-freeze:

– Use a pipette to place a drop of coolant on glass of refractometer - T10007 A- . Light-dark border will now be clearly visible through refractometer.

– Check level of anti-freeze protection using corresponding scale on refractometer; to do so, read off value on light-dark border.

– If anti-freeze protection level does not meet specification in Maintenance table: Perform following measures:

Anti-freeze protection level:	Evaluation/measure:
> Specification	Depending on deviation from specification, remove a small amount of coolant and replace it with distilled water. Repeat procedure until coolant mixture meets correct specification.
< Specification	Depending on deviation from specification, remove a small amount of coolant and replace it with coolant additive. Repeat procedure until coolant mixture meets correct specification.

– Check coolant additive concentration once more following road test.

Protected by copyright. Copying for private or commercial purposes, in part or in whole, is not permitted unless authorised by AUDI AG. AUDI AG does not guarantee or accept any liability with respect to the correctness of information in this document. Copyright by AUDI AG.

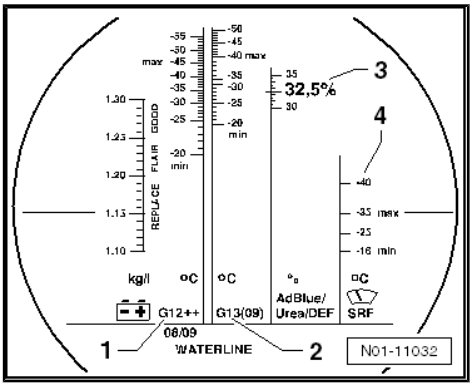

Note

- *The refractometer - T10007 A- must be used to determine the current anti-freeze concentration.*
- *Scale -1- on the refractometer applies to coolant additives G11, G12, G12+ and G12++.*
- *Scale -2- refers only to coolant additive G13.*
- *If more than one type of coolant additive has been used: Always use the scale for G13 to determine the anti-freeze protection.*
- *The temperature indicated on the refractometer - T10007 A- corresponds to the temperature at which the first ice crystals can form in the coolant.*
- *It is essential that anti-freeze be used in the cooling system all year round. In the correct concentration, coolant additives prevent scaling and frost and corrosion damage, and also raise the boiling point of the coolant.*
- *Because of its high boiling point, the coolant improves engine reliability under heavy loads in countries with tropical climates.*

3.72.2 Filling cooling system

Table of test values and procedure guidelines:

Frost protection to:	Coolant additive:	Water:
-25 °C	approx. 40 %	approx. 60 %
-36 °C	approx. 50 %	approx. 50 %

Procedure:

– Add required amount (using mixture ratio according to anti-freeze protection specification in Maintenance table). Use the table as a reference for the coolant mixture ratio.

Note

Small quantities of coolant can simply be topped up. Use the cooling system charge unit - VAS 6096- to add larger quantities of coolant.

3.73 Air cleaner: renewing filter element and cleaning housing

Protected by copyright. Copying for commercial purposes, in part or in whole, is not permitted unless authorised by AUDI AG. AUDI AG does not guarantee or accept any liability with respect to the correctness of information in this document. Copyright by AUDI AG.

Note

- *Use only silicone-free lubricants when installing intake hoses.*
- *Secure all hose connections with hose clips (same as original equipment); see Electronic parts catalogue (ETKA).*

Air cleaner housing: cleaning ⇒ page 113
4-cyl. petrol engine 1.8 TFSI/2.0 TFSI (version 1) ⇒ page 102
4-cyl. petrol engine 1.8 TFSI/2.0 TFSI (version 2) ⇒ page 103
6-cyl. petrol engine 3.0 TFSI (version 1) ⇒ page 104
6-cyl. petrol engine 3.0 TFSI/3.2 FSI (version 2) ⇒ page 105
8-cyl. petrol engine 4.2 FSI (version 1) ⇒ page 107
8-cyl. petrol engine 4.2 FSI (version 2) ⇒ page 108
4-cyl. diesel engine 2.0 TDI (version 1) ⇒ page 109
4-cyl. diesel engine 2.0 TDI (version 2) ⇒ page 110
6-cyl. diesel engine 2.7 TDI/3.0 TDI ⇒ page 111

3.73.1 4-cyl. petrol engine 1.8 TFSI/2.0 TFSI (version 1)

Special tools and workshop equipment required

- Torque screwdriver - VAS 6494- , measuring range 1.5 to 3 Nm
- Or: torque screwdriver - V.A.G 1624- , measuring range 1 to 5 Nm

Table of tightening torques for installation:

Component/fastener:	[Nm]
Securing bolts for air cleaner (top section)	1.5

Step 1 - removing air filter element:

– Release hose clip -2- and detach air pipe.

– Unplug electrical connector -1- for air mass meter - G70- .

– Remove securing bolts -arrows- and detach air cleaner (top section).

– Take out filter element.

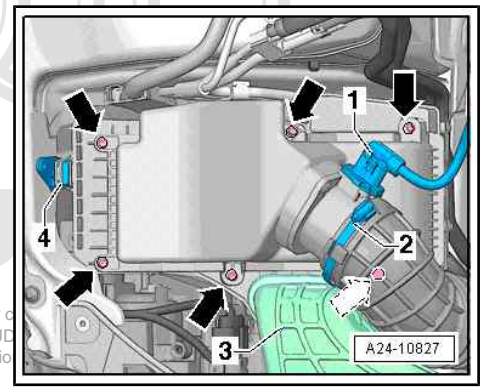

Step 2 - installing air filter element:

Protected by copyright. Copying for private or c
permitted unless authorised by AUDI AG. AUD
with respect to the correctness of informatio

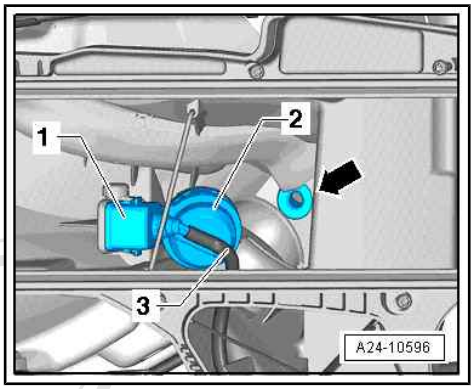

– Check for dirt in housing and water drains -arrow- and clean if necessary ⇒ page 113 .
– Insert new filter element -15- centrally in mounting -16- in air cleaner (bottom section).
– Fit air cleaner (top section) -17- onto air cleaner (bottom section) -11- without applying any significant force. Ensure that top and bottom sections of air cleaner are flush.
– Fit securing bolts in air cleaner (top section) and tighten to specified torque (see table of tightening torques for installation).
– Attach air pipe to air cleaner (top section) and fit hose clip.
– Plug electrical connector for air mass meter - G70- back in.

Continue installation in reverse sequence.

Note

There is more than one version of the air cleaner for the 4-cylinder 1.8 TFSI/2.0 TFSI petrol engine *⇒ page 103* *.*

Protected by copyright. Copying for private or commercial purposes, in part or in whole, is not permitted unless authorised by AUDI AG. AUDI AG does not guarantee or accept any liability with respect to the correctness of information in this document. Copyright by AUDI AG.

3.73.2 4-cyl. petrol engine 1.8 TFSI/2.0 TFSI (version 2)

Special tools and workshop equipment required

- Torque screwdriver - VAS 6494- , measuring range 1.5 to 3 Nm
- Or: torque screwdriver - V.A.G 1624- , measuring range 1 to 5 Nm

Table of tightening torques for installation:

Component/fastener:	[Nm]
Securing bolts for air cleaner (top section)	1.5

Step 1 - removing air filter element:

– Release hose clip -1- and detach air pipe.
– Remove securing bolts -arrows- and detach air cleaner (top section).
– Take out filter element.

Step 2 - installing air filter element:

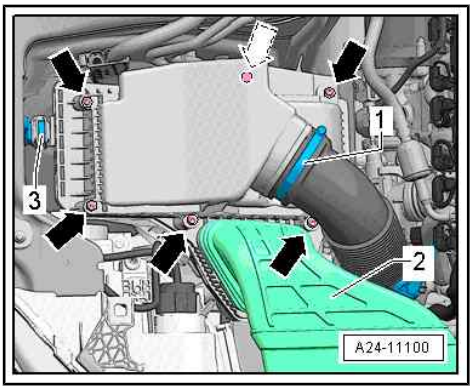

– Check for dirt in housing and water drains -arrow- and clean if necessary ⇒ page 113 .

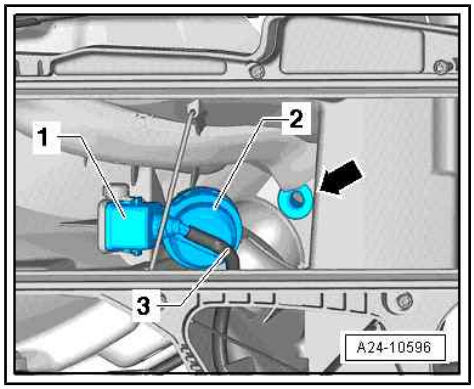

– Insert new filter element -11- centrally in mounting in air cleaner (bottom section).
– Fit air cleaner (top section) -13- onto air cleaner (bottom section) -9- without applying any significant force. Ensure that top and bottom sections of air cleaner are flush.
– Fit securing bolts in air cleaner (top section) and tighten to specified torque (see table of tightening torques for installation ⇒ page 103).
– Attach air pipe to air cleaner (top section) and fit hose clip.

Continue installation in reverse sequence.

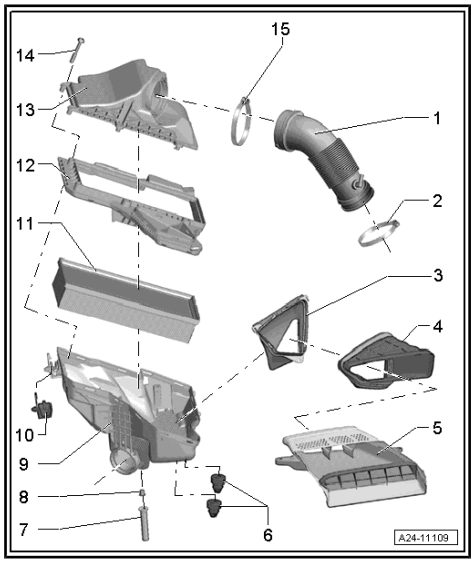

Note

There is more than one version of the air cleaner for the 4-cylinder 1.8 TFSI/2.0 TFSI petrol engine *⇒ page 102* *.*

3.73.3 6-cyl. petrol engine 3.0 TFSI (version 1)

Special tools and workshop equipment required

- Torque screwdriver - VAS 6494- , measuring range 1.5 to 3 Nm
- Or: torque screwdriver - V.A.G 1624- , measuring range 1 to 5 Nm

Table of tightening torques for installation:

Component/fastener:	[Nm]
Securing bolts for air cleaner (top section)	1.5
Securing bolts for air filter element	1.5

Protected by copyright. Copying for private or commercial purposes, in part or in whole, is not permitted unless authorised by AUDI AG. AUDI AG does not guarantee or accept any liability with respect to the correctness of information in this document. Copyright by AUDI AG.

Step 1 - removing air filter element:

– Release hose clips -3- and detach air pipe -1-.

– Unplug electrical connector -2- for air mass meter - G70- .

– Remove securing bolts -arrows- and detach air cleaner (top section).

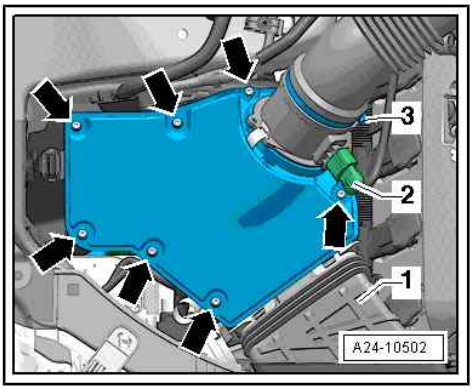

– Remove filter element from air cleaner (top section) by unscrewing both bolts -arrows-.

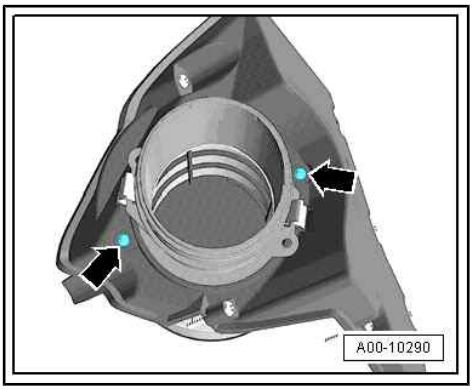

Step 2 - installing air filter element:

– Check for dirt in housing and water drains -arrow- and clean if necessary ⇒ page 113 .

– Insert new air filter element centrally in mounting in air cleaner (top section). Tab of air filter element -1- must rest against tab of air cleaner (top section) -2-.

– Place top section of air cleaner onto bottom section of air cleaner without applying any significant force. Ensure that top and bottom sections of air cleaner are flush.

– Fit securing bolts in air cleaner (top section) and tighten to specified torque (see table of tightening torques for installation ⇒ page 104).

– Attach air pipe to air cleaner (top section) and fit hose clip.

– Plug electrical connector for air mass meter - G70- back in.

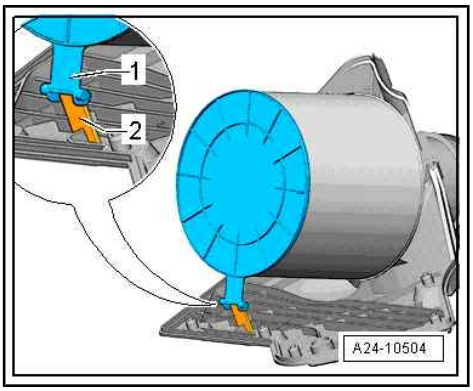

Continue installation in reverse sequence.

Note

There is more than one version of the air cleaner for the 6-cylinder 3.0 TFSI petrol engine *⇒ page 105* *.*

3.73.4 6-cyl. petrol engine 3.0 TFSI/3.2 FSI (version 2)

Special tools and workshop equipment required

♦ Torque screwdriver - VAS 6494- , measuring range 1.5 to 3 Nm

♦ Or: torque screwdriver - V.A.G 1624- , measuring range 1 to 5 Nm

Protected by copyright. Copying for private or commercial purposes, in part or in whole, is not permitted unless authorised by AUDI AG. AUDI AG does not guarantee or accept any liability with respect to the correctness of information in this document. Copyright by AUDI AG.

Table of tightening torques for installation:

Component/fastener:	[Nm]
Securing bolts for air cleaner (top section)	1.5
Securing bolts for air filter element	1.5

Step 1 - removing air filter element:

– Disengage fuel line -4- and hose -1- from retainer on air cleaner (top section).

– Loosen hose clip and retaining clip -arrows- and detach air pipe.

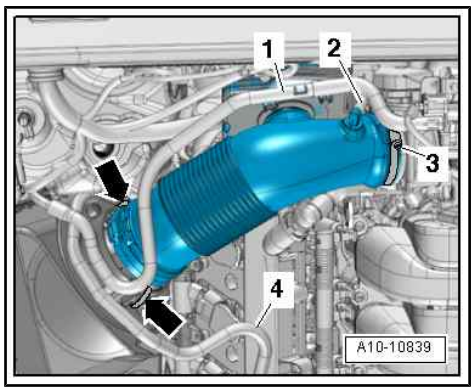

– Remove securing bolts -arrows- and detach air cleaner (top section).

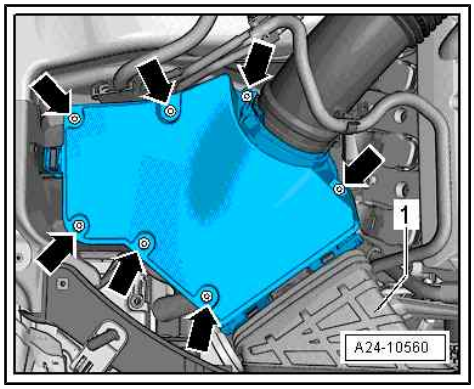

– Remove filter element from air cleaner (top section) by unscrewing both bolts -arrows-.

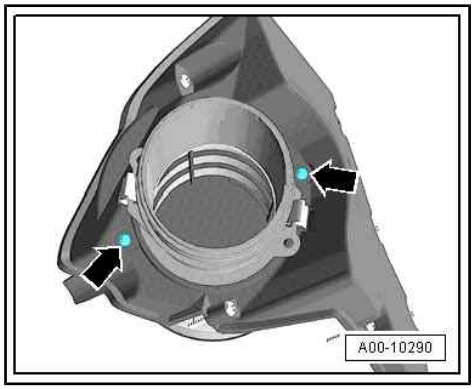

Step 2 - installing air filter element:

Protected by copyright. Copying for private or commercial purposes, in part or in whole, is not permitted unless authorised by AUDI AG. AUDI AG does not guarantee or accept any liability with respect to the correctness of information in this document. Copyright by AUDI AG.

– Check for dirt in housing and water drains -arrow- and clean if necessary ⇒ page 113 .

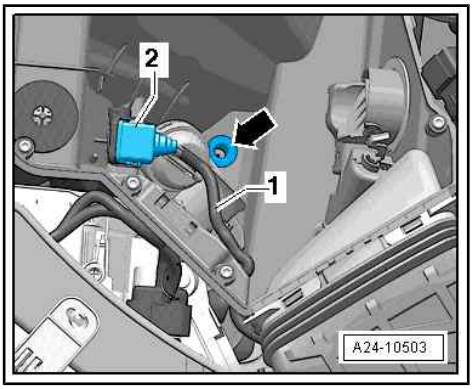

– Insert new air filter element centrally in mounting in air cleaner (top section). Tab of air filter element -1- must rest against tab of air cleaner (top section) -2-.
– Place top section of air cleaner onto bottom section of air cleaner without applying any significant force. Ensure that top and bottom sections of air cleaner are flush.
– Fit securing bolts in air cleaner (top section) and tighten to specified torque (see table of tightening torques for installation ⇒ page 106).
– Attach air pipe to air cleaner (top section) and fit hose clip.
– Plug electrical connector for air mass meter - G70- back in.

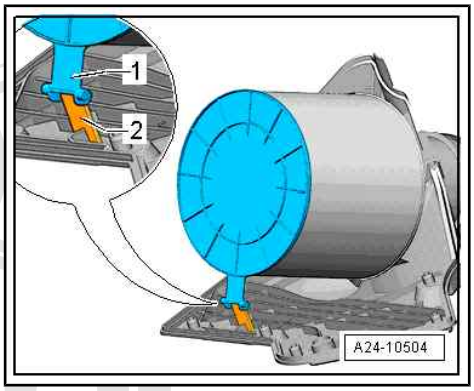

Continue installation in reverse sequence.

Note

Protected by copyright. Copying for private or commercial purposes, in part or in whole, is not permitted unless authorised by AUDI AG. AUDI AG does not guarantee or accept any liability with respect to the correctness of information in this document. Copyright by AUDI AG.

There is more than one version of the air cleaner for the 6-cylinder 3.0 TFSI petrol engine *⇒ page 104* *.*

3.73.5 8-cyl. petrol engine 4.2 FSI (version 1)

Special tools and workshop equipment required

- Torque screwdriver - VAS 6494- , measuring range 1.5 to 3 Nm
- Or: torque screwdriver - V.A.G 1624- , measuring range 1 to 5 Nm

Table of tightening torques for installation:

Component/fastener:	[Nm]
Securing bolts for air cleaner (top section)	1.5
Securing bolts for air filter element	1.5

Step 1 - removing air filter element:

– Release hose clips -3- and detach air pipe -1-.

– Unplug electrical connector -2- for air mass meter - G70- .

– Remove securing bolts -arrows- and detach air cleaner (top section).

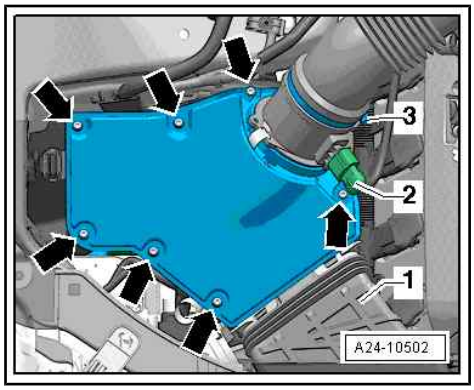

– Remove filter element from air cleaner (top section) by unscrewing both bolts -arrows-.

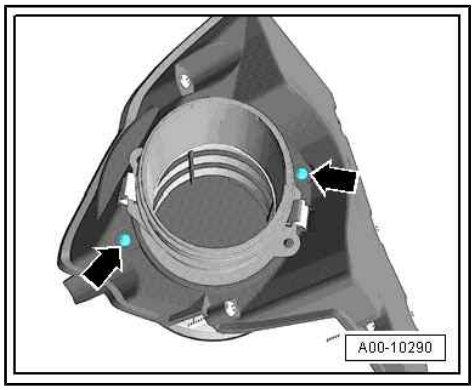

Step 2 - installing air filter element:

– Check for dirt in housing and water drains -arrow- and clean if necessary ⇒ page 113 .

– Insert new air filter element centrally in mounting in air cleaner (top section). Tab of air filter element -1- must rest against tab of air cleaner (top section) -2-.

– Place top section of air cleaner onto bottom section of air cleaner without applying any significant force. Ensure that top and bottom sections of air cleaner are flush.

– Fit securing bolts in air cleaner (top section) and tighten to specified torque (see table of tightening torques for installation ⇒ page 107).

– Attach air pipe to air cleaner (top section) and fit hose clip.

– Plug electrical connector for air mass meter - G70- back in.

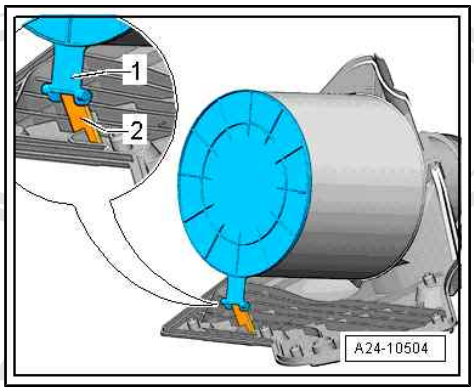

Continue installation in reverse sequence.

Protected by copyright. Copying for private or commercial purposes, in part or in whole, is not permitted unless authorised by AUDI AG. AUDI AG does not guarantee or accept any liability with respect to the correctness of information in this document. Copyright by AUDI AG.

Note

There is more than one version of the air cleaner for the 8-cylinder 4.2 FSI petrol engine *⇒ page 108* *.*

3.73.6 8-cyl. petrol engine 4.2 FSI (version 2)

Special tools and workshop equipment required

♦ Torque wrench - V.A.G 1783- , measuring range 2 to 10 Nm

♦ Or: torque screwdriver - V.A.G 1624- , measuring range 1 to 5 Nm

Table of tightening torques for installation:

Component/fastener:	[Nm]
Securing bolts for air cleaner (top section)	3.5

Step 1 - removing air filter element:

– Release hose clip -1- and detach air pipe.

– Remove securing bolts -arrows- and detach air cleaner (top section).

– Take out filter element.

– Repeat procedure on opposite side of vehicle.

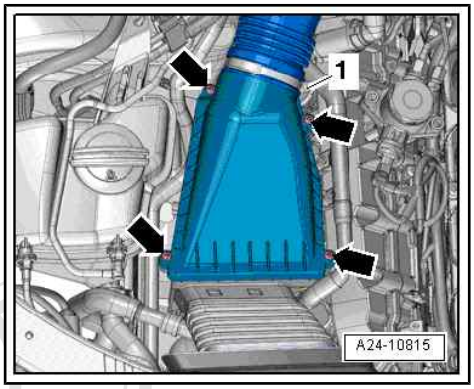

Step 2 - installing air filter element:

– Check for dirt in housing and water drains and clean if necessary ⇒ page 113 .

– Insert new filter element -13- centrally in mounting in air cleaner (bottom section).

– Fit air cleaner (top section) -13- onto air cleaner (bottom section) -17- without applying any significant force. Ensure that top and bottom sections of air cleaner are flush.

– Fit securing bolts in air cleaner (top section) and tighten to specified torque (see table of tightening torques for installation ⇒ page 108).

– Attach air pipe to air cleaner (top section) and fit hose clip.

– Repeat procedure on opposite side of vehicle.

Continue installation in reverse sequence.

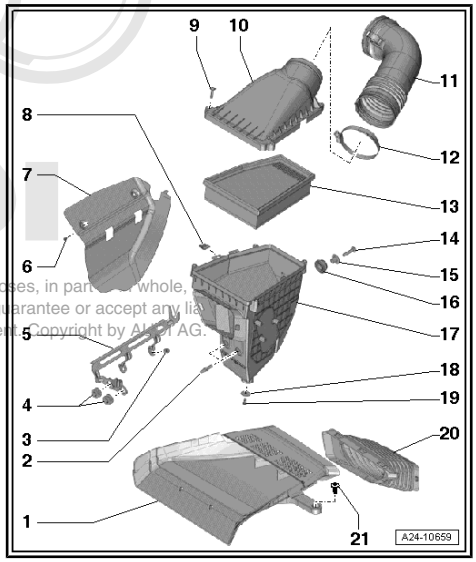

Protected by copyright. Copying for private or commercial purposes, in part or in whole, is permitted unless authorised by AUDI AG. AUDI AG does not guarantee or accept any liability with respect to the correctness of information in this document. Copyright by AUDI AG.

Note

There is more than one version of the air cleaner for the 8-cylinder 4.2 FSI petrol engine *⇒ page 107* *.*

3.73.7 4-cyl. diesel engine 2.0 TDI (version 1)

Special tools and workshop equipment required

- Torque screwdriver - VAS 6494- , measuring range 1.5 to 3 Nm
- Or: torque screwdriver - V.A.G 1624- , measuring range 1 to 5 Nm

Table of tightening torques for installation:

Component/fastener:	[Nm]
Securing bolts for air cleaner (top section)	1.5

Step 1 - removing air filter element:

– Release hose clip -2- and detach air pipe.

– Unplug electrical connector -1- for air mass meter - G70- .

– Remove securing bolts -arrows- and detach air cleaner (top section).

– Take out filter element.

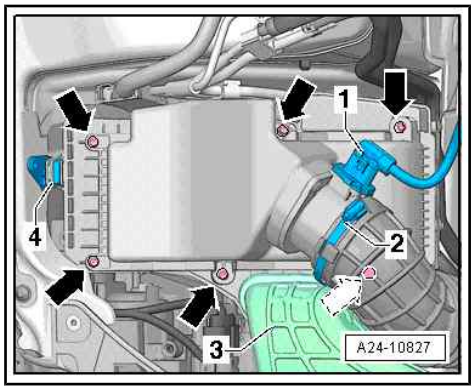

Step 2 - installing air filter element:

– Check for dirt in housing and water drains -arrow- and clean if necessary ⇒ page 113 .

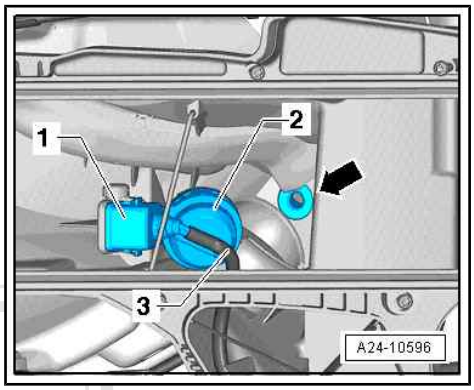

– Insert new air filter element -15- centrally in mounting -16- in air cleaner (bottom section).

– Fit air cleaner (top section) -17- onto air cleaner (bottom section) -11- without applying any significant force. Ensure that top and bottom sections of air cleaner are flush.

– Fit securing bolts in air cleaner (top section) and tighten to specified torque (see table of tightening torques for installation ⇒ page 109).

– Attach air pipe to air cleaner (top section) and fit hose clip.

– Plug electrical connector for air mass meter - G70- back in.

Continue installation in reverse sequence.

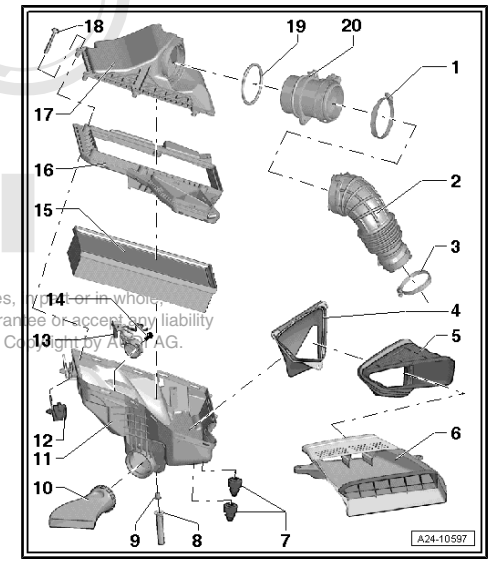

Protected by copyright. Copying for private or commercial purposes, in part or in whole, permitted unless authorised by AUDI AG. AUDI AG does not guarantee or accept any liability with respect to the correctness of information in this document. Copyright by AUDI AG.

Note

There is more than one version of the air cleaner for the 4-cylinder 2.0 TDI diesel engine *⇒ page 110* *.*

3.73.8 4-cyl. diesel engine 2.0 TDI (version 2)

Special tools and workshop equipment required

- Torque screwdriver - VAS 6494- , measuring range 1.5 to 3 Nm
- Or: torque screwdriver - V.A.G 1624- , measuring range 1 to 5 Nm

Table of tightening torques for installation:

Component/fastener:	[Nm]
Securing bolts for air cleaner (top section)	1.5

Component/fastener:	[Nm]
Securing bolts for air filter element	1.5

Step 1 - removing air filter element:

– Release hose clip -3- and detach air pipe.

– Unplug electrical connector -2- for air mass meter - G70- .

– Remove securing bolts -arrows- and detach air cleaner (top section).

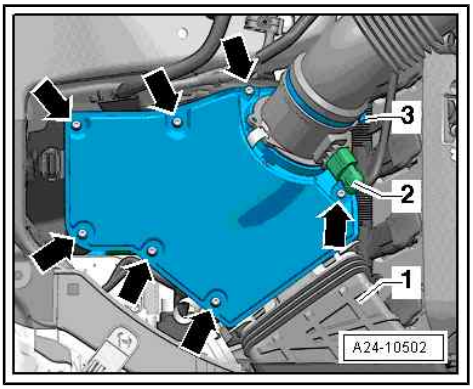

– Take out filter element by unscrewing both bolts -arrows-.

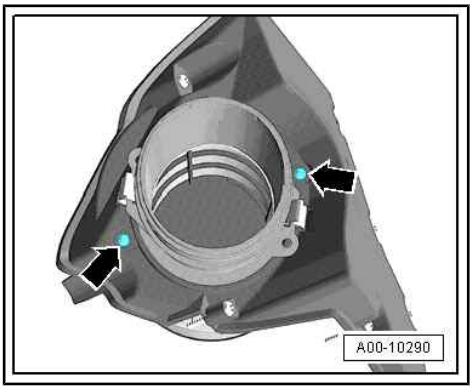

Step 2 - installing air filter element:

– Check for dirt in housing and water drains and clean if necessary ⇒ page 113 .

– Insert new air filter element centrally in mounting in air cleaner (top section). Tab of air filter element -1- must rest against tab of air cleaner (top section) -2-.

– Place top section of air cleaner onto bottom section of air cleaner without applying any significant force. Ensure that top and bottom sections of air cleaner are flush.

– Fit securing bolts in air cleaner (top section) and tighten to specified torque (see table of tightening torques for installation ⇒ page 110).

– Attach air pipe to air cleaner (top section) and fit hose clip.

– Plug electrical connector for air mass meter - G70- back in.

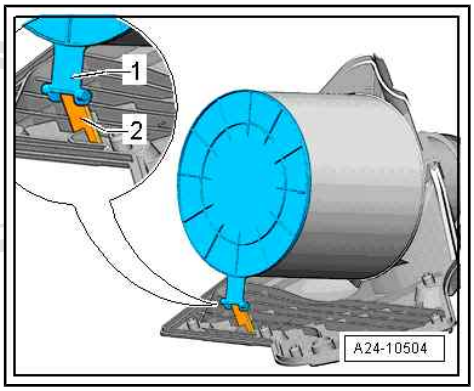

Continue installation in reverse sequence.

Protected by copyright. Copying for private or commercial purposes, in part or in whole, is not permitted unless authorised by AUDI AG. AUDI AG does not guarantee or accept any liability with respect to the correctness of information in this document. Copyright by AUDI AG.

Note

There is more than one version of the air cleaner for the 4-cylinder 2.0 TDI diesel engine *⇒ page 109* *.*

3.73.9 6-cyl. diesel engine 2.7 TDI/3.0 TDI

Special tools and workshop equipment required

♦ Torque screwdriver - VAS 6494- , measuring range 1.5 to 3 Nm

- Or: torque screwdriver - V.A.G 1624- , measuring range 1 to 5 Nm

Table of tightening torques for installation:

Component/fastener:	[Nm]
Securing bolts for air cleaner (top section)	1.5
Securing bolts for air filter element	1.5

Step 1 - removing air filter element:

– Release hose clip -3- and detach air pipe.

– Unplug electrical connector -2- for air mass meter - G70- .

– Remove securing bolts -arrows- and detach air cleaner (top section).

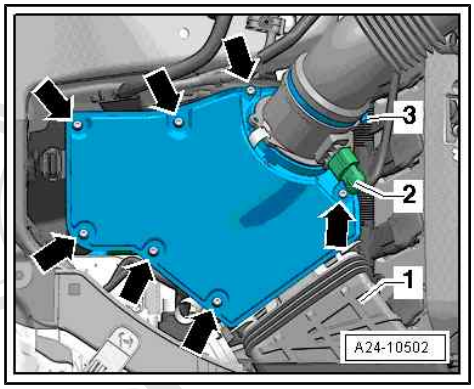

– Take out filter element by unscrewing both bolts -arrows-.

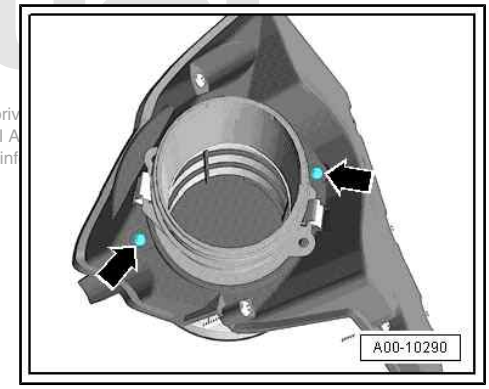

Step 2 - installing air filter element:

Protected by copyright. Copying for priv
permitted unless authorised by AUDI A

– Check for dirt in housing and water drains and clean if necessary ⇒ page 113 .

– Insert new air filter element centrally in mounting in air cleaner (top section). Tab of air filter element -1- must rest against tab of air cleaner (top section) -2-.

– Place top section of air cleaner onto bottom section of air cleaner without applying any significant force. Ensure that top and bottom sections of air cleaner are flush.

– Fit securing bolts in air cleaner (top section) and tighten to specified torque (see table of tightening torques for installation ⇒ page 112).

– Attach air pipe to air cleaner (top section) and fit hose clip.

– Plug electrical connector for air mass meter - G70- back in.

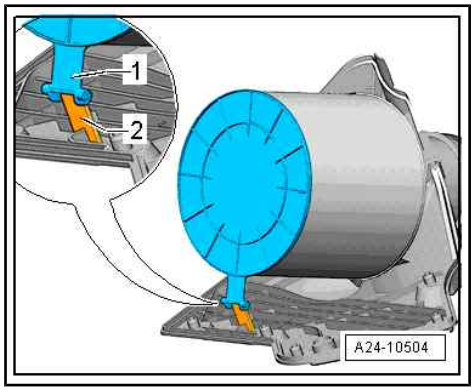

Continue installation in reverse sequence.

Note

DO NOT remove air mass meter. Follow instructions exactly; otherwise there is a risk of damage.

3.73.10 Cleaning air cleaner housing

Procedure:

– Remove any loose dirt or leaves out of air cleaner housing (top and bottom sections).

– Check whether water drain hose in air cleaner (bottom section) is dirty or blocked and clean if necessary.

Note

♦ *When cleaning air cleaner housing with compressed air: Cover air mass meter with a clean cloth.*

♦ *On vehicles for cold countries, the snow screen in the intake section must also be cleaned; see specification in ELSA Maintenance table.*

3.74 Plenum chamber and water drains: checking for dirt

Checking plenum chamber and water drains for dirt
⇒ page 113

Cleaning plenum chamber and water drains ⇒ page 114

3.74.1 Checking plenum chamber and water drains for dirt

Cleaning the plenum chamber, as well as the removal procedures required, are a repair measure and should be charged separately.

Removal steps:

– Remove plenum chamber cover ⇒ General body repairs, exterior; Rep. gr. 50 ; Bulkhead; Removing and installing plenum chamber cover .

Step 1 - checking plenum chamber and water drains (passenger's side):

Protected by copyright. Copying for private or commercial purposes, in part or in whole, is not permitted unless authorized by AUDI AG. AUDI AG does not guarantee or accept any liability with respect to the correctness of information in this document. Copyright by AUDI AG.

– Use a hand-held light to check for dirt in plenum chamber, water drain -2- and water drain grommet -1-.

– If necessary, clean plenum chamber and water drains ⇒ page 114 .

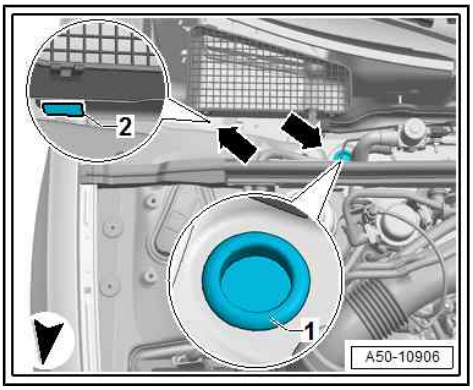

Step 2 - checking plenum chamber and water drains (driver's side):

– Use a hand-held light to check for dirt in plenum chamber and water drain grommet -1-.

– If necessary, clean plenum chamber and water drains ⇒ page 114 .

Install in reverse sequence.

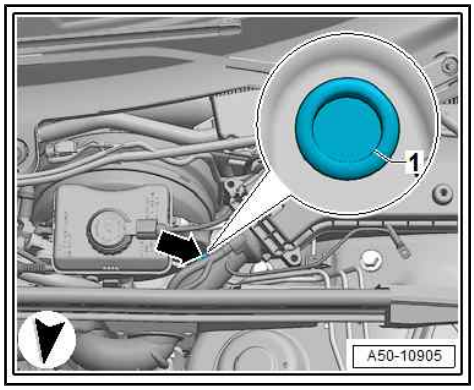

3.74.2 Cleaning plenum chamber and water drains

Special tools and workshop equipment required

- Suction feed spray-gun - VAG 1538-
- Nylon probe - VAG 1538/2-
- Flexible picking tool

Cleaning the plenum chamber, as well as the removal procedures required, are a repair measure and should be charged separately.

Procedure:

– Remove coarse dirt from plenum chamber and water drain grommets with a flexible picking tool.

– Remove fine dirt using suction-feed spray gun - V.A.G 1538- and nylon probe - V.A.G 1538/2- or a thin water hose.

3.75 Snow screen: cleaning

Removal steps:

– Remove fasteners from front end cover; to so do, first remove spreader pin from fastener.

– Remove spreader clips from lock carrier cover; to do so, carefully push locking pin into each spreader clip by dimension -x- -arrow- and pull out released spreader clip with locking pin.

– Detach lock carrier cover.

– Remove intake air duct for air cleaner ⇒ Power unit; Rep. gr. 23 ; Air cleaner; Exploded view - air cleaner housing .

Protected by copyright. Copying for private or commercial purposes, in part or in whole, is not permitted unless authorised by AUDI AG. AUDI AG does not guarantee or assume any liability with respect to the correctness of information in this document.

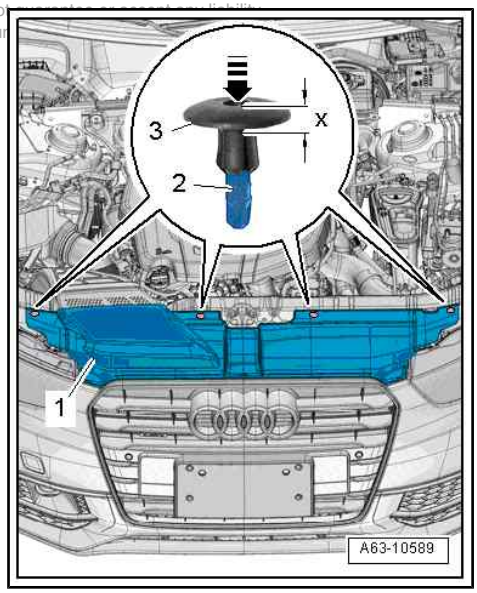

Procedure:

– Remove snow screen -1- and clean using compressed air.
– Use a suitable blunt tool to remove persistent dirt.
– If the snow screen is damaged it must be renewed.

Install in reverse sequence. When doing so, note the following:

– First press fastener into appropriate hole and then secure it with spreader pin.

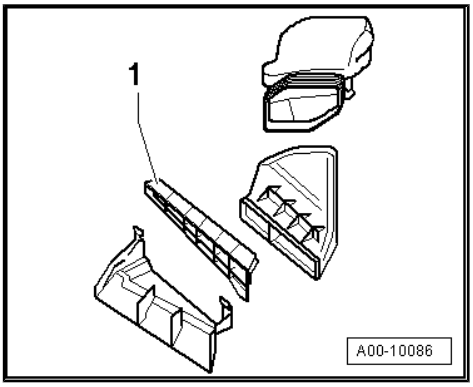

3.76 Dust and pollen filter: renewing

The dust and pollen filter is fitted under the glove box.

Removal steps:

Protected by copyright. Copying for private or commercial purposes, in part or in whole, is not permitted unless authorised by AUDI AG. AUDI AG does not guarantee or accept any liability with respect to the correctness of information in this document. Copyright by AUDI AG.

– On vehicles with special equipment used by driving schools: Remove pedal cluster if necessary; see installation instructions for equipment for driving schools.

Step 1 - removing filter element:

– Cover footwell beneath dust and pollen filter with paper.
– Remove screw fasteners -A- and detach insulating mat -B-.

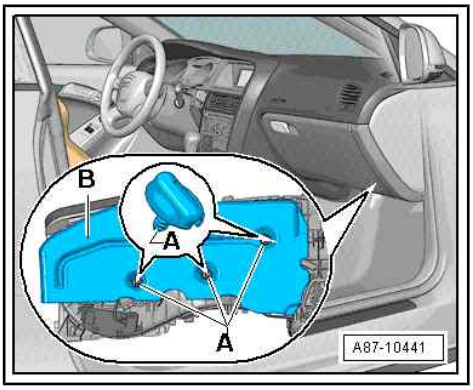

– Release retainer -1-.

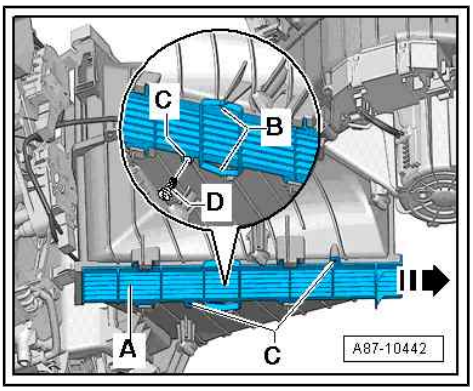

– Take out filter element -A- under retainers.

Step 2 - installing filter element:

– Clean aperture -B- with a vacuum cleaner before fitting new filter element.

– Fit filter element -A- correctly: angled side faces fresh air blower.

Continue installation in reverse sequence.

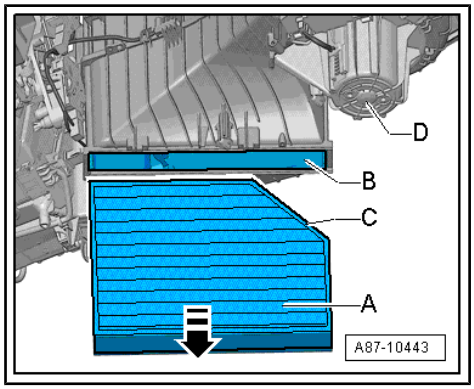

3.77 Fuel filter: renewing

WARNING

Fuel is hot and under pressure - risk of injuries!

- **Put on protective gloves.**
- **Put on safety goggles.**
- **Allow connections of fuel lines to cool down.**
- **Place cloths around connections and loosen them carefully.**

Special tools and workshop equipment required

- Hose clip pliers - VAS 6362-

Protected by copyright. Copying for private or commercial purposes, in part or in whole, is not permitted unless authorised by AUDI AG. AUDI AG does not guarantee or accept any liability with respect to the correctness of information in this document. Copyright by AUDI AG.

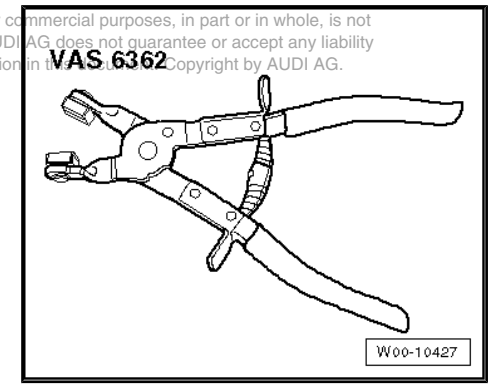

- Torque wrench - V.A.G 1783- , measuring range 2 to 10 Nm
- Reservoir

Table of tightening torques for installation:

Fastener	Tightening torque [Nm]
Nuts for bracket	8

The fuel filter is located on the underbody.

Removal steps:

– Remove underbody trim (right-side) ⇒ General body repairs, exterior; Rep. gr. 66 ; Underbody trim; Removing and installing underbody trim .

Step 1 - removing:

– Observe the safety precautions when working on the fuel system ⇒ Fuel supply system, diesel engines; Rep. gr. 00 ; Safety

precautions; Safety precautions when working on the fuel system .

– Remove nuts -1- and -2-.

– Swivel bracket -3- downwards in direction of -arrow-, disengage from mountings and detach bracket.

– Place drip tray under fuel filter.

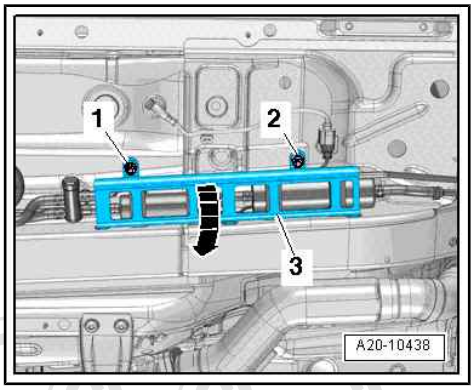

– Disengage fuel return hose -3- from rubber mountings -2-.

– Using hose clip pliers, disconnect outer ends of fuel supply hoses (do not loosen spring-type clips -1- and -4-) and detach fuel filter together with fuel supply hoses -5-.

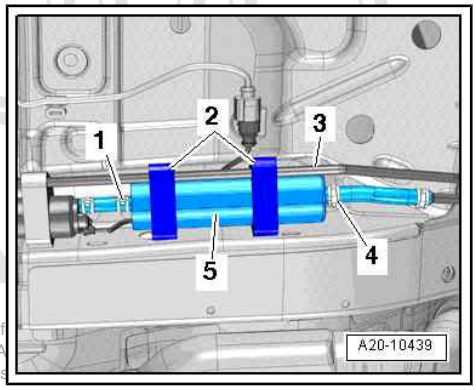

Step 2 - installing:

Install in reverse sequence. Note tightening torques (see table of tightening torques for installation ⇒ page 116).

Flow direction is indicated by arrows on filter housing.

...d by copyright. Copying f...
permitted unless authorised by A...
...rectness

– Then bleed fuel system ⇒ Engine; Rep. gr. 23 ; Injection system; Filling/bleeding fuel system .

Note

Renew spring-type clips.

3.78 Fuel tank: adding fuel additive

Special tools and workshop equipment required

♦ Or: multi-purpose additive for petrol fuels - G 001 780 M3-

Table of test values and procedure guidelines:

China, Middle East	Russia	India
VW 507 53 B: Applies to all petrol engines	VW 507 53 B: Applies to all petrol engines VW 507 53 A: Applies to all petrol engines except g-tron and E85 flexible fuel	VW 507 53 B: Applies to all petrol engines VW 507 53 A: Applies to all petrol engines except g-tron and E85 flexible fuel
Multi-purpose additive for petrol fuels - G 001 780 M3-	Multi-purpose additive for petrol fuels - G 001 780 M3-	Multi-purpose additive for petrol fuels - G 001 780 M3-

This maintenance item only applies to certain countries: Note specification in Maintenance table.

Procedure:

– Follow measuring guidelines on fuel additive container and add fuel additive to fuel tank according to current fuel tank level.

Note

- *Use only fuel additives that correspond to the standard VW 507 53 A or VW 507 53 B.*
- *After adding fuel additive, it is very important to tell the customer to fill up the fuel tank.*
- *Use no more than one container per filling, even if the tank has a capacity > 60 litres.*

3.79 Reducing agent (AdBlue®): filling up tank completely

WARNING

Risk of injury due to contact with reducing agent!

- **Do not kink lines of filling device/refuelling system.**
- **If you come into contact with this liquid: Rinse it off immediately with plenty of water and contact a medical professional.**

CAUTION

Risk of damage to trim and body components due to contact with reducing agent!

- **Do not kink lines of filling device/refuelling system.**
- **Clean the affected areas with clean water and a cotton cloth.**
- **Remove any crystallised reducing agent using warm water and a sponge.**

Note

Protected by copyright. Copying for private or commercial purposes, in part or in whole, is not permitted unless authorised by AUDI AG. AUDI AG does not guarantee or accept any liability with respect to the correctness of information in this document.

- *The reducing agent is statutory for vehicles with SCR system.*
- *The reducing agent is used for the after-treatment of exhaust gases of diesel-engined vehicles, i.e. to reduce the level of nitrogen oxides.*
- *The reducing agent is not a diesel additive and must not be filled into the diesel fuel tank.*
- *Do not add any additives to the reducing agent, and do not dilute it with water.*
- *Only use the reducing agent as supplied in its original container.*
- *In addition, please observe the reducing agent manufacturer's notices on usage and storage.*
- *Both filling device for AdBlue - VAS 6542- and AdBlue refuelling system - VAS 6960- can be used to fill up the reducing agent.*

Filling up reducing agent (AdBlue®) using filling device for AdBlue - VAS 6542- ⇒ page 119

Filling up reducing agent (AdBlue®) using AdBlue refuelling system - VAS 6960- ⇒ page 121

3.79.1 Filling up reducing agent (AdBlue®) using filling device for AdBlue - VAS 6542-

Special tools and workshop equipment required

- Filling device for AdBlue - VAS 6542-

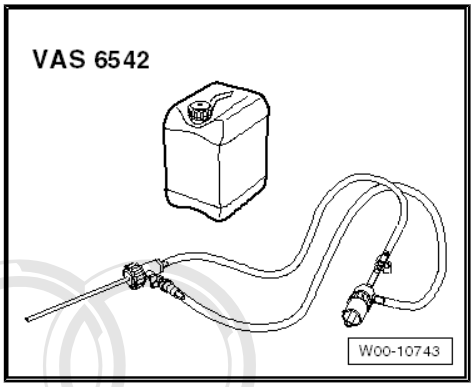

- Engine and gearbox jack - VAS 6931-

Protected by copyright. Copying for private or commercial purposes, in part or in whole, is not permitted unless authorised by AUDI AG. AUDI AG does not guarantee or accept any liability with respect to the correctness of information in this document. Copyright by AUDI AG.

- Mounting plate - V.A.G 1383A/1-

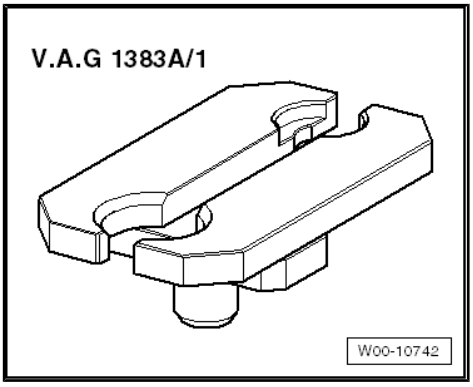

-

Components of filling device -VAS 6542-

1 - Breather connection for reducing agent container

2 - Union nut for reducing agent container

3 - Cut-off valve for breather line

4 - Quick-release coupling on breather line

5 - Filler line

6 - Cut-off valve for filler line

7 - Union nut for fuel filler neck

8 - Breather line

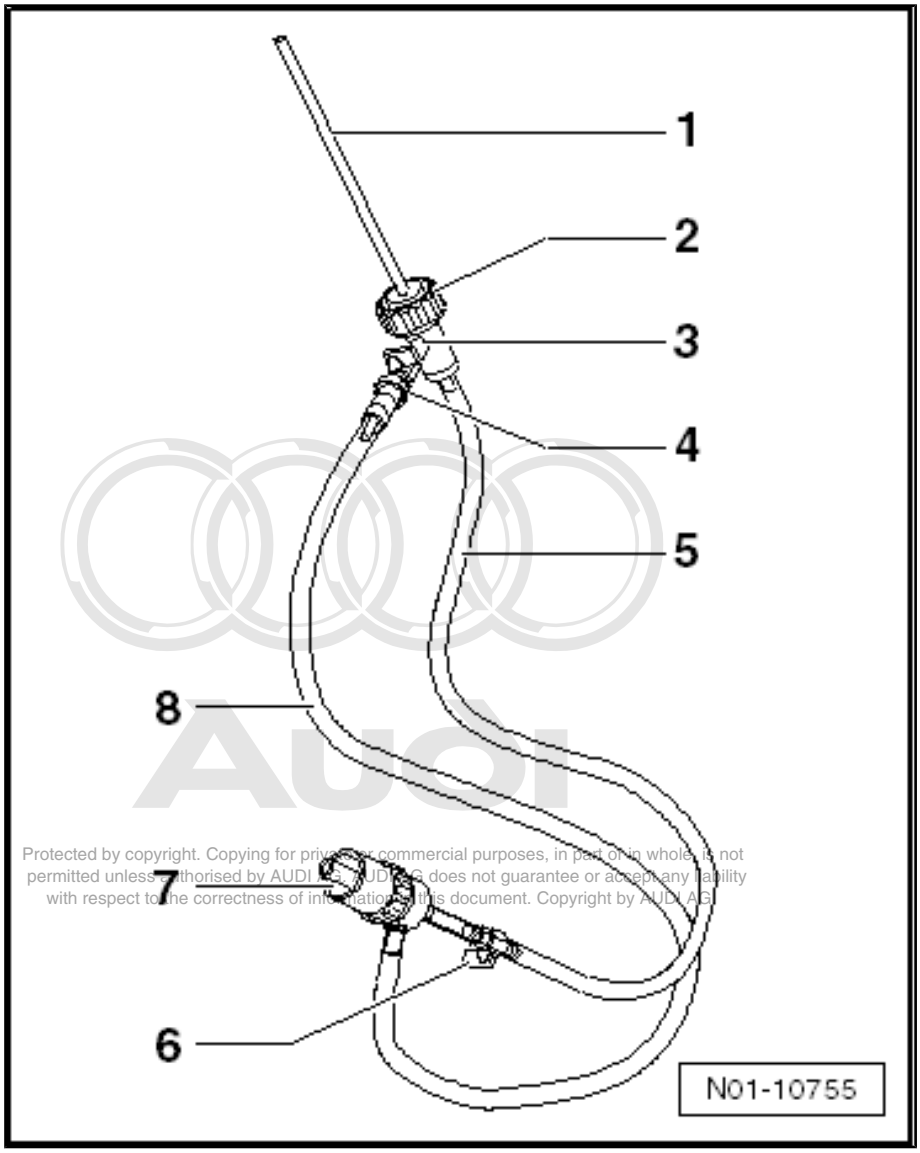

Protected by copyright. Copying for private or commercial purposes, in part or in whole, is not permitted unless authorised by AUDI AG. AUDI AG does not guarantee or accept any liability with respect to the correctness of information in this document. Copyright by AUDI AG.

Procedure:

– Open tank flap and unscrew cap of reducing agent tank.

– Clean filler neck of tank for reducing agent with a lint-free cotton cloth soaked with water.

– Close cut-off valves of breather and filler lines of filling device for AdBlue - VAS 6542- .

– Apply filling device for AdBlue - VAS 6542- to reducing agent container (see Electronic parts catalogue, ETKA) and screw it on as far as stop.

– Position reducing agent container on engine and gearbox jack - VAS 6931- with mounting plate - V.A.G 1383A/1- . The difference in height of the reducing agent container and the filler neck of the tank for reducing agent must be between 60 - 80 cm -dimension A-.

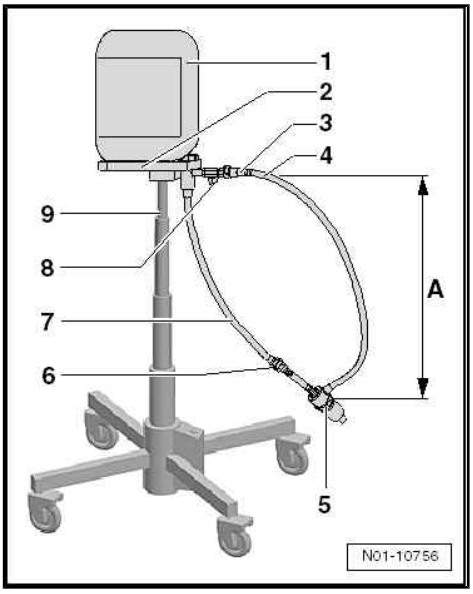

Protected by copyright. Copying for private or commercial purposes, in part or in whole, is not permitted unless authorised by AUDI AG. AUDI AG does not guarantee or accept any liability with respect to the correctness of information in this document. Copyright by AUDI AG.

– Position filling device for AdBlue - VAS 6542- on filler neck on vehicle and screw it on as far as stop.

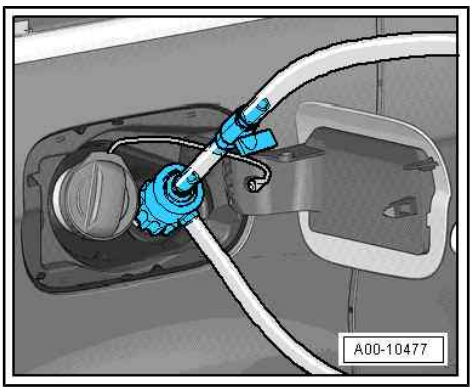

– Open cut-off valve for breather line.
– Open cut-off valve for filler line and fill reducing agent tank of vehicle completely. Tank is completely full when container contracts and bleeder line fills with liquid.
– Close cut-off valve for filler line.
– Close cut-off valve for breather line.
– Disconnect quick-release coupling on breather line and let any excess liquid flow into a suitable container.
– Unscrew filling device for AdBlue - VAS 6542- from fuel filler neck.
– Clean filler neck of reducing agent tank and filler cap with a lint-free cotton cloth soaked with water.
– Screw filler cap onto reducing agent tank.
– Take container off mounting plate and put it on the floor.
– Open cut-off valve on filler line and let remaining liquid drain back into container.
– Unscrew filling device for AdBlue - VAS 6542- from container.

Note

It is possible to overfill the reducing agent tank when using a filling device which operates using gravity. When filling the tank using VAS 6542 (or other filling device which operates in the same way), disconnect it from the vehicle immediately once filling is completed.

3.79.2 Filling up reducing agent (AdBlue®) using AdBlue refuelling system - VAS 6960-

Special tools and workshop equipment required

- AdBlue refuelling system - VAS 6960-

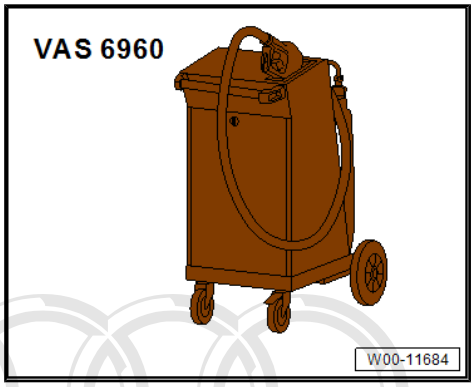

Procedure:

- Open tank flap and unscrew filler cap for reducing agent tank.
- Clean filler neck of tank for reducing agent with a lint-free cotton cloth soaked with water.
- Insert nozzle of AdBlue refuelling system - VAS 6960- into filler neck of reducing agent tank.
- Operate nozzle to fill up reducing agent completely.
- Remove nozzle from filler neck of reducing agent tank.
- Clean filler neck of reducing agent tank and filler cap with a lint-free cotton cloth soaked with water.
- Screw filler cap onto reducing agent tank.

Copyright by copyright. Copying for private or commercial purposes, in part or in whole, is not permitted unless authorised by AUDI AG. AUDI AG does not guarantee or accept any liability with respect to the correctness of information in this document. Copyright by AUDI AG.

Note

- *Observe operating instructions for AdBlue refuelling system - VAS 6960- .*
- *Nozzle of AdBlue refuelling system - VAS 6960- switches off automatically when maximum fill level is reached.*

3.80 Vehicle doors: removing edge protection

Procedure:

- Carefully remove edge protection from all vehicle doors.

3.81 Vehicle exterior: checking unprotected areas for dirt, and cleaning if necessary

Procedure:

- Check unprotected areas of vehicle exterior not covered by car cover or protective transport film for dirt/soiling.
- Clean any dirty areas.

3.82 Vehicle exterior: removing protective film

Procedure:

- Remove protective film carefully and completely.

3.83 Vehicle cover: checking position and correcting if necessary

Procedure:

– Check, and if necessary, correct position of vehicle cover on vehicle body.

– Check, and if necessary, correct position of protective transport film.

3.84 Vehicle cover: removing according to manufacturer's instructions

Procedure:

– Vehicle cover: Remove according to manufacturer's instructions.

3.85 Paintwork, trims, side windows and wiper blades: checking cleanliness

Procedure:

– Check that exterior paintwork, trims, side windows and wiper blades are clean.

– Clean any dirty components.

3.86 Body: checking vehicle paintwork for damage and corrosion from below and with bonnet, rear lid and doors open

Procedure:

– Open all vehicle doors, bonnet and rear lid.

– Check vehicle paintwork on inside and outside of body for damage and corrosion.

– Rectify defects of any kind (repair measure).

3.87 Vehicles parked outdoors: locking

Procedure:

– Use vehicle key to lock vehicle if it is parked outdoors.

3.88 Road test

Procedure:

– The following points must be checked during the road test:

- Engine: performance, misfiring, idling speed, acceleration, starting behaviour (engine cold and warm), engine noise
- Clutch: pulling away, pedal pressure, odours, noise due to load change
- Manual gearbox: ease of operation, gear lever position, gearbox noise
- Automatic gearbox: selector lever position, shift lock / ignition key lock, gearbox noise, kickdown, shift behaviour, instrument cluster display
- Brake pedal and handbrake: operation, travel and effectiveness, pulling to one side, response (delayed braking), juddering, squeal

Protected by copyright. Copying for private or commercial purposes, in part or in whole, is not permitted unless authorised by AUDI AG. AUDI AG does not guarantee or accept any liability with respect to the correctness of information in this document. Copyright by AUDI AG.

- ABS function: pulsing must be felt at brake pedal when performing ABS-controlled braking.
- Steering: operation, steering free play, steering wheel centralised when wheels are in straight-ahead position, moving off line when travelling straight
- Imbalance: wheels, drive shafts
- Wheel bearings: noises
- Roof insert: unusual noise during operation
- Horn: checking

Note

To what extent all of these can be checked depends on vehicle equipment and local conditions (urban/country).

3.89 Stock vehicles: observing measures specified in Maintenance table for stock vehicles (see “Before handing vehicle over to customer”)

Trademarks and Copyright Creative Commons Attribution-NonCommercial-NoDerivatives 4.0 Unauthorised use or commercial purposes, in part or in whole, is not permitted unless authorised by AUDI AG. AUDI AG does not guarantee or accept any liability with respect to the correctness of information in this document. Copyright by AUDI AG.

This maintenance item only applies to stock vehicles.

Procedure:

– Before handing vehicle over to customer: Check whether the following three measures for stock vehicles (as specified in the Maintenance table) are due, and carry them out as necessary:

- For vehicles older than 12 months (from date of manufacture): Renew brake fluid ⇒ page 34 .
- For vehicles with defective battery: Renew battery ⇒ Rep. gr. 27 ; Battery; Removing and installing battery .
- Check brake discs for surface rust; if necessary, operate brakes to remove rust according to manufacturer's instructions.

– Record measures performed in maintenance table for stock vehicles.

3.90 Accessories: installing

Procedure:

– If included with vehicle, place the following accessories in vehicle tool kit:

– Insert SD card for MMI.

Note

- *The available accessories may vary according to model, equipment and market.*
- *Depending on the vehicle model, the accessories may be found in the luggage compartment, glove box or supplied pack.*

3.91 Checklist "Documentation of cleaning and care routine": checking that list is present

Procedure:

– Check that checklist “Documentation of cleaning and care routine” is in glove box or front passenger footwell. This checklist is only present in vehicles which remained with the Importer or manufacturer longer than 14 days without being transported further; it documents all cleaning and care work carried out there.

– If missing, place checklist “Documentation of cleaning and care routine” in glove box.

3.92 “Stock vehicle maintenance” checklist: signing and placing in vehicle wallet

Protected by copyright. Copying for private or commercial purposes, in part or in whole, is not permitted unless authorized by AUDI AG. AUDI AG does not make any claim to liability with respect to the correctness of information in this document. Copyright by AUDI AG.

Procedure:

– Sign “Stock vehicle maintenance” checklist and place it in vehicle wallet.

3.93 Cleaning and care: checking that required measures have been carried out on time

Procedure:

– Check that all cleaning and care measures due previously were carried out on time.

– Carry out and document any cleaning and care which is due.

3.94 Stock vehicle care management: deciding and recording date of next check

Procedure:

– Decide date of next check with person in charge of stock vehicle care management.

– Record chosen date in maintenance table.

3.95 Rear final drive: changing gear oil

Procedure:

– Change gear oil according to Workshop Manual ⇒ Rep. gr. 39 ; Gear oil; Draining and filling gear oil .

3.96 Rear final drive: changing ATF

Procedure:

– Change ATF according to Workshop Manual ⇒ Rep. gr. 39 ; ATF; Draining and filling ATF .

3.97 Front final drive: changing gear oil

Procedure:

– Change gear oil according to Workshop Manual ⇒ Rep. gr. 39 ; Gear oil; Draining and filling gear oil .

3.98 Display instruments: setting time and date

Procedure:

– Change settings of display instruments: Refer to Operating Manual for radio/sound system/MMI system.

3.99 Manual gearbox/automatic gearbox: selecting 1st gear/park

Procedure:

Vehicles with manual gearbox: Select 1st gear.

Vehicles with automatic gearbox: Select park position.

3.100 Automatic gearbox (multitronic): changing ATF

Procedure:

– Change ATF according to Workshop Manual ⇒ ; Rep. gr. 37 ; ATF; Draining and filling ATF .

3.101 Dual clutch gearbox (S tronic): changing ATF and renewing exchangeable ATF filter

Procedure:

– Change ATF according to Workshop Manual ⇒ Rep. gr. 34 ; ATF; Draining and filling ATF .

– Renew exchangeable ATF filter according to Workshop Manual ⇒ Rep. gr. 34 ; Mechatronic unit; Removing and installing exchangeable ATF filter .

3.102 Dual clutch gearbox (S tronic): changing ATF and renewing exchangeable ATF filter (if fitted)

Procedure:

– Change ATF according to Workshop Manual ⇒ ; Rep. gr. 34 ; ATF; Draining and filling ATF .

– Renew exchangeable ATF filter according to Workshop Manual ⇒ ; Rep. gr. 34 ; ATF circuit; Removing and installing ATF filter .

3.103 Dual clutch gearbox (S tronic): changing gear oil and renewing oil filter

Procedure:

– Change gear oil according to Workshop Manual ⇒ ; Rep. gr. 34 ; Gear oil; Draining and filling gear oil .

Reproduction of this document or parts thereof in any form or by copying, printing, or for commercial purposes, in part or in whole, is not permitted unless authorised by AUDI AG. AUDI AG does not guarantee or accept any liability with respect to the correctness of information in this document. Copyright by AUDI AG.

– Renew oil filter according to Workshop Manual ⇒ ; Rep. gr. 34 ; Gear oil circuit; Removing and installing gear oil filter .

3.104 Interior mirror: calibrating compass

Procedure:

– Calibrate compass according to Workshop Manual ⇒ General body repairs, interior; Rep. gr. 68 ; Interior mirror; Calibrating digital compass .

3.105 Poly V-belt for supercharger with charge air coolers: renewing

Procedure:

– Renew poly V-belt for supercharger with charge air coolers according to specifications in Workshop Manual ⇒ ; Rep. gr. 13 ; Cylinder block (pulley end); Removing and installing poly V-belt .

3.106 Poly V-belts for ancillaries and all pulleys: renewing

Procedure:

– Renew poly V-belt for ancillaries according to specifications in Workshop Manual ⇒ ; Rep. gr. 13 ; Cylinder block (pulley end); Removing and installing poly V-belt .

– Renew pulleys according to Workshop Manual ⇒ ; Rep. gr. 13 ; Cylinder block (pulley end); Exploded view - cylinder block (pulley end) .

3.107 Instrument cluster: resetting driver information system

Procedure:

– Reset single journey memory and total journey memory of driver information system; refer to vehicle Owner's Manual.

3.108 Toothed belt for camshaft drive: renewing

Procedure:

– Renew toothed belt for camshaft drive according to specifications in Workshop Manual ⇒ ; Rep. gr. 15 ; Toothed belt drive; Removing and installing toothed belt .

3.109 Toothed belt for camshaft drive, and drive sprockets for camshaft, crankshaft and high-pressure pump: renewing

Protected by copyright. Copying for private or commercial purposes, in part or in whole, is not permitted unless authorised by AUDI AG. AUDI AG does not guarantee or accept any liability with respect to the correctness of information in this document. Copyright by AUDI AG.

Procedure:

– Renew toothed belt for camshaft drive according to specifications in Workshop Manual ⇒ ; Rep. gr. 15 ; Toothed belt drive; Removing and installing toothed belt .

– Renew drive sprockets for camshaft, crankshaft and high-pressure pump according to Workshop Manual ⇒ ; Rep. gr. 15 ; Toothed belt drive; Exploded view - toothed belt .

3.110 Toothed belt for camshaft drive and tensioning roller: renewing

Procedure:

– Renew toothed belt for camshaft drive according to specifications in Workshop Manual ⇒ ; Rep. gr. 15 ; Toothed belt drive; Removing and installing toothed belt .

– Renew tensioning roller according to Workshop Manual ⇒ ; Rep. gr. 15 ; Toothed belt drive; Exploded view - toothed belt .

3.111 Poly V-belt for ancillaries and pulley for power steering pump: renewing

Procedure:

- Renew poly V-belt for ancillaries according to specifications in Workshop Manual ⇒ ; Rep. gr. 13 ; Cylinder block (pulley end); Removing and installing poly V-belt .
- Renew pulley for power steering pump according to Workshop Manual ⇒ Running gear, axles, steering; Rep. gr. 48 ; Hydraulic power steering; Exploded view - power steering pump .

Protected by copyright. Copying for private or commercial purposes, in part or in whole, is not permitted unless authorised by AUDI AG. AUDI AG does not guarantee or accept any liability with respect to the correctness of information in this document. Copyright by AUDI AG.

4 Exhaust emissions test

Note

- *Please observe the statutory regulations applicable to your country.*
- *The exhaust emissions test described below conforms to the statutory regulations applicable in Germany.*

Petrol engines: performing exhaust emissions test ⇒ page 129

Diesel engines: performing exhaust emissions test ⇒ page 136

4.1 Petrol engines: performing exhaust emissions test

Note

- *The following description refers to vehicles equipped with on-board diagnosis (OBD) with a closed-loop catalytic converter.*
- *The OBD monitors all components and (sub)systems which affect the exhaust gas quality.*

Special tools and workshop equipment required

- Emissions test station - VAS 6300-

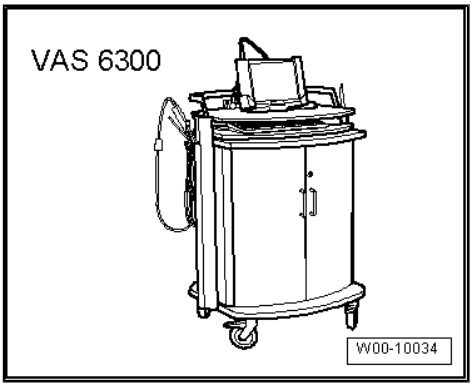

- Adapter wire, OBD communication - VAS 5052/16-1-

Note

- *In order for the exhaust emissions test to be carried out, all components of the emissions test station - VAS 6300- must be properly plugged in and connected to one another as specified in the operating instructions.*
- *All the required steps are displayed on the emissions test station - VAS 6300- .*

Test requirements

- All test requirements and data for the exhaust emissions test are stated on the exhaust emissions test data sheet for the required engine.
- If the specifications for the exhaust emissions test will be scanned in using a bar code, the data sheet must be available as a printout.

Protected by copyright. Copying for private or commercial purposes, in part or in whole, is not permitted unless authorised by AUDI AG. AUDI AG does not guarantee or accept any liability with respect to the correctness of information in this document. Copyright by AUDI AG.

- Automatic gearbox: selector lever in position “P” or “N”
- Manual gearbox: gear lever in neutral
- Handbrake applied

– Follow instructions shown on display.

Start screen

– Select “Emissions test” button -arrow-.

An overview of exhaust emissions test types will appear.

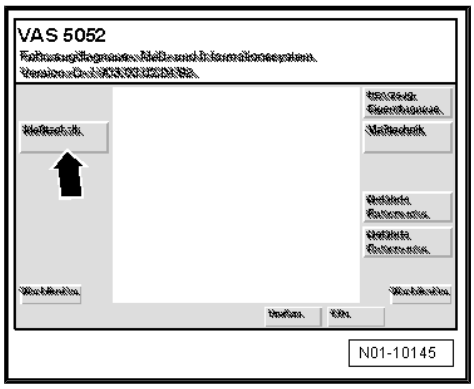

– Select “Emissions test, petrol” -arrow-.

A display for the warm-up period will be shown.

Protected by copyright. Copying for private or commercial purposes, in part or in whole, is not permitted unless authorised by AUDI AG. AUDI AG does not guarantee or accept any liability with respect to the correctness of information in this document. Copyright by AUDI AG.

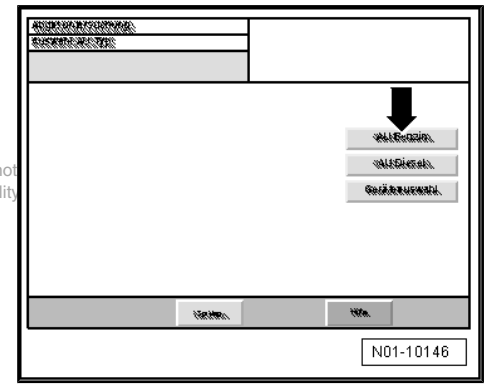

– Continue exhaust emissions test according to the instructions on the display.

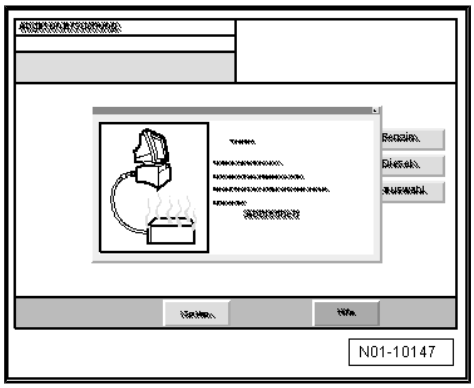

– When the options for the exhaust emissions test specifications are shown, select the option required -arrow-:

♦ Either “Standard specifications” (for an initial exhaust emissions test)

♦ Or “Last vehicle” (to repeat a previous exhaust emissions test)

– Confirm Next -item 1- on display.

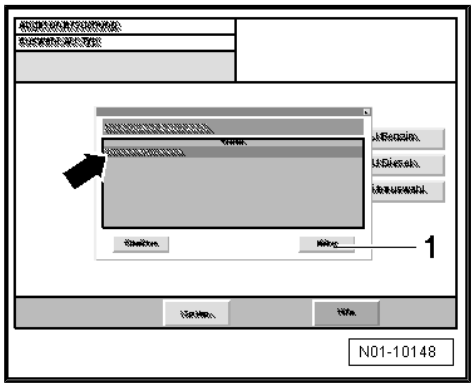

Entering vehicle data

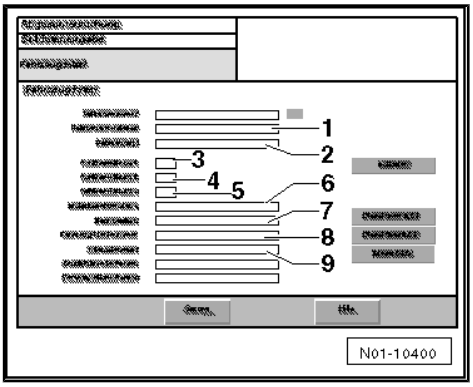

The input menu for vehicle data will be shown.

– Enter the following data from the registration document (part 1):

- -1- Vehicle manufacturer, e.g. Audi
- -2- Vehicle model, e.g. A6 / 4G
- -3- Code for 14.1, e.g. 0572
- -4- Code for 2.1, e.g. 0588
- -5- Code for 2.2, e.g. 846
- -6- Engine code: e.g. CHVA
- -7- Number plate: e.g. IN-MV 1234
- -8- Vehicle identification number, e.g. WAUZZZ4GZAN001234

– Enter mileage (km), e.g. 33350, at -item 9-.

Note

- *Additional functions can be selected using the* `Go to` *button.*
- *The* `Go to` *button can be used to cancel the test.*

– Select “With OBD” -arrow-.

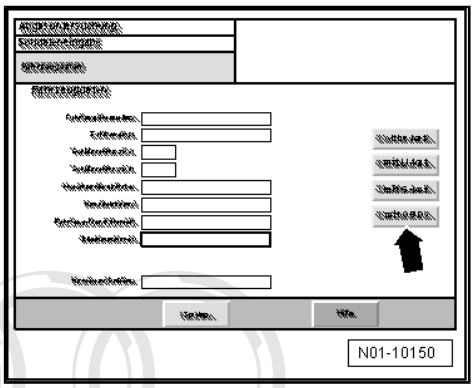

Protected by copyright. Copying for private or commercial purposes, in part or in whole, is not permitted unless authorised by AUDI AG. AUDI AG does not guarantee or accept any liability with respect to the correctness of information in this document. Copyright by AUDI AG.

Entering exhaust emissions test specifications

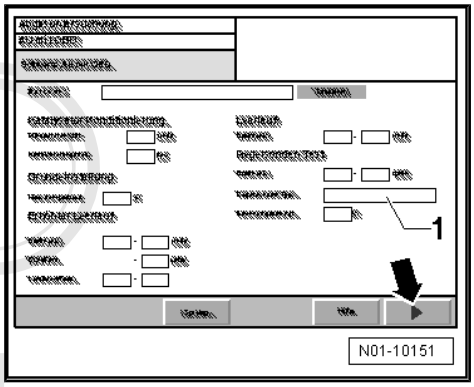

Note

- *The specifications must be entered manually if they are not available as a bar code.*
- *Refer to ⇒ Data sheets for exhaust emissions test (for required engine) for all test requirements and data for the exhaust emissions test.*

Entering exhaust emissions test specifications manually

– Follow instructions on display to enter data manually.

– Enter data listed on emissions test data sheet under “Test values for exhaust emissions test” on display in following order:

Protected by copyright. Copying for private or commercial purposes, in part or in whole, is not permitted unless authorised by AUDI AG. AUDI AG does not guarantee or accept any liability with respect to the correctness of information in this document. Copyright by AUDI AG.

1 - Test engine speed (idling speed)

2 - Warm-up period of catalytic converter

3 - Engine temperature

4 - Increased idling speed

5 - CO content at increased idling speed

6 - Lambda at increased idling speed

7 - Idling speed

8 - Select control probe type: either »two-state probe« or »broad-band probe« -item 1-.

9 - Lambda probe value

– Once you have entered all data correctly, confirm your entry with Next button -arrow-.

Entering exhaust emissions test specifications with a bar code

– If exhaust emissions test specifications are available as a bar code, use scanner pen to scan bar code on data sheet.

All required data will be shown on display.

– Press ▶ button -arrow- to continue procedure.

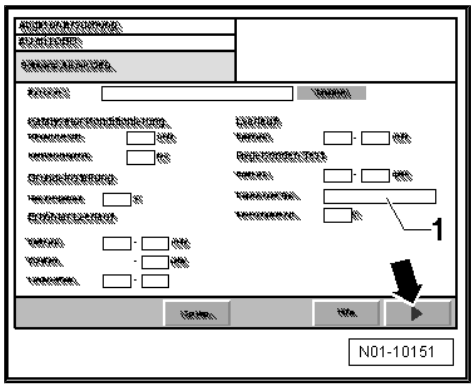

Visual inspection

– Follow instructions shown on display.

– Inspect all components relevant to exhaust emissions.

– Check that all components of exhaust system are fitted, complete and free of leaks and damage.

– If results of inspection are OK, press button for “OK” -arrow-.

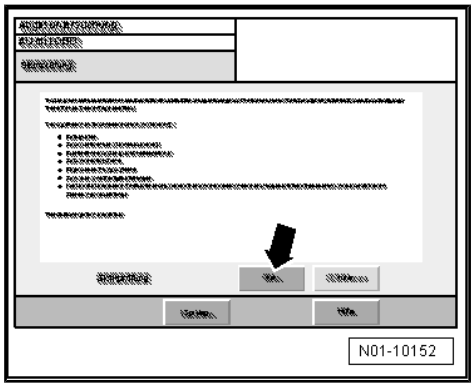

Note

Pressing the button for “Not OK” will start a test.

Plugging in diagnostic connector

The screen for the visual inspection must be shown with prompts to plug in the diagnostic connector -arrow A- and to check exhaust emissions warning lamp -arrow B-.

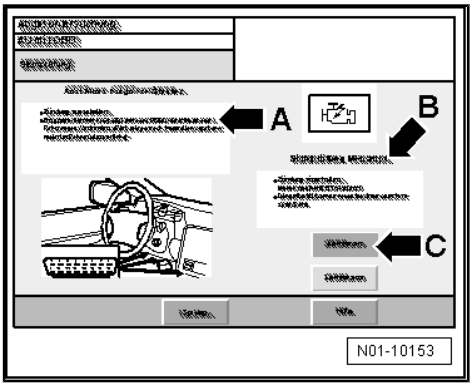

– Follow instructions shown on display -arrow A- and -arrow B-.
– Switch off ignition.

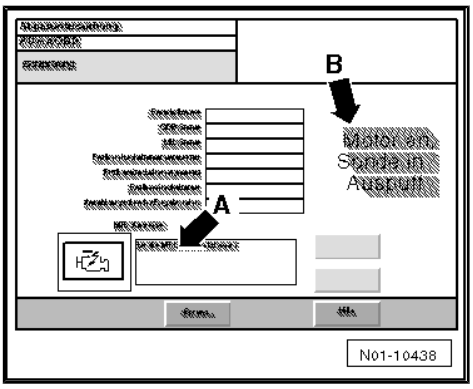

– Plug connector of diagnosis cable into EOBD connection.

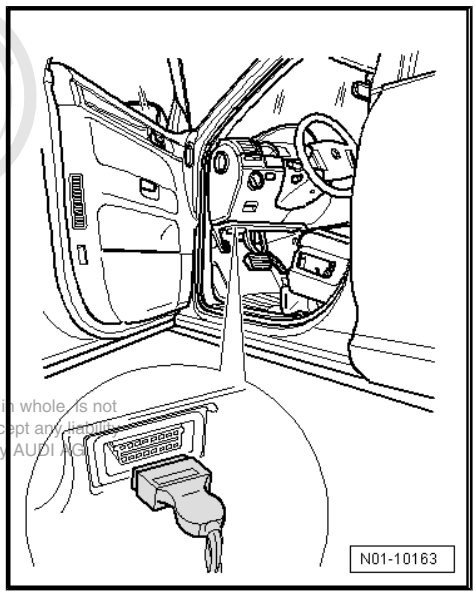

Protected by copyright. Copying for private or commercial purposes, in part or in whole, is not permitted unless authorised by AUDI AG. AUDI AG does not guarantee or accept any liability with respect to the correctness of information in this document. Copyright by AUDI AG.

Visual check of exhaust emissions warning lamp with engine off

– Switch on ignition.
– Check exhaust emissions warning lamp.
– If lamp lights up, press button for “Lamp on” -arrow C-.

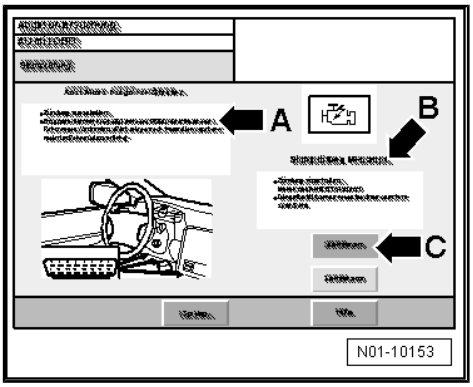

Note

The exhaust emissions test is failed if the exhaust emissions warning lamp does not light up during the visual check.

Visual check of exhaust emissions warning lamp with engine on

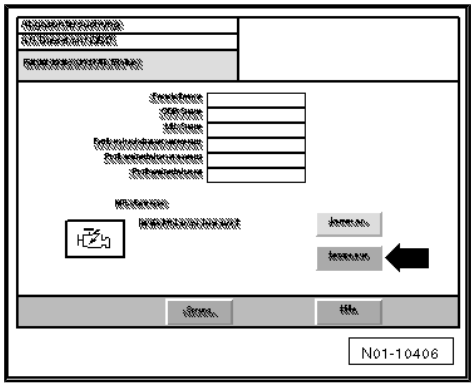

– Start engine and confirm that it is running by selecting “Yes” on display.

– Check exhaust emissions warning lamp; it must not light up or flash.

– Insert emission probe into exhaust pipe.

Note

Do not continue the exhaust emissions test until the test probe is in the exhaust pipe.

The system will automatically switch over to a test readiness check.

This checks that all test readiness checks supported by the control unit have been carried out.

– Confirm status of exhaust emissions warning lamp -arrow-.

Note

- *If all the display values are set to zero, a control probe test will not be performed.*
- *If not all the display values are set to zero, a control probe test will be performed in a later step.*

Catalytic converter temperature conditioning

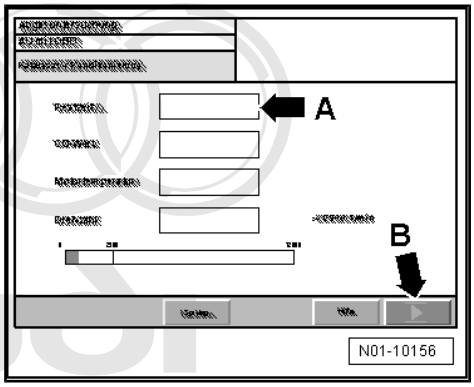

The system will automatically switch over to the warm-up phase of the catalytic converter.

– Follow instructions shown on display.

The measurement starts when the engine has reached the required speed.

– Keep engine speed within required range.

The remaining time for carrying out the warm-up phase will be shown -arrow A-.

Warm-up period

Protected by copyright. Copying for private or commercial purposes, in part or in whole, is not permitted unless authorised by AUDI AG. AUDI AG does not guarantee or accept any liability with respect to the correctness of information contained by AUDI AG.

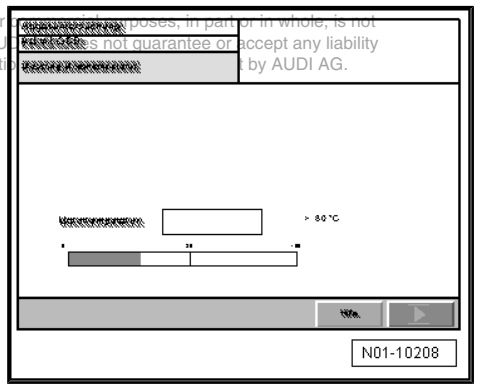

The system will automatically switch over to the screen for measuring the engine temperature.

– Follow instructions shown on display.

Note

This screen is only shown if the engine temperature has not yet reached 80 degrees Celsius.

– Bring engine up to required temperature.

Measurement at increased idling speed

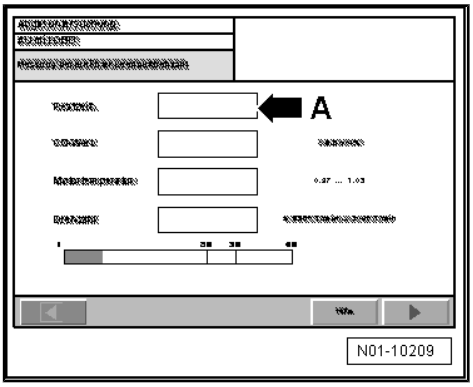

The system will automatically switch over to the screen for measuring at increased idling speed.

– Follow instructions shown on display.

The measurement starts when the engine has reached the required speed.

Note

Protected by copyright. Copying for private or commercial purposes, in part or in whole, is not permitted unless authorized by AUDI AG. Other rights are reserved. Copyright by AUDI AG.

- *You can skip the measurement by pressing the ▶ button (the emissions test will be failed).*
- *You can reset the test values with the ← button and repeat the test.*

– Keep engine speed within required range.

The remaining time for carrying out the measurement will be shown -arrow A-.

Measuring idling speed and CO content

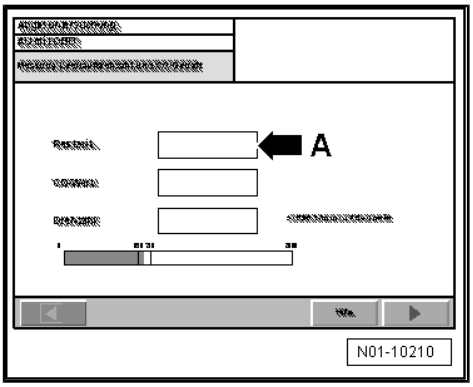

The system will automatically switch over to the screen for idling speed and CO content.

The measurement starts when the engine has reached the required speed.

The remaining time for carrying out the measurement will be shown -arrow A-.

Control probe test

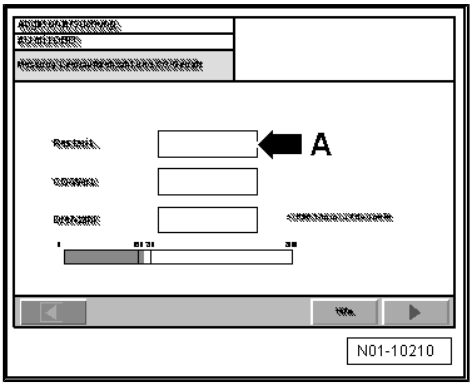

Note

The control probe test cannot be carried out unless all values displayed from the test readiness check are NOT set to zero.

The system will automatically switch over to the screen for the control probe test.

Note

The control probe test is carried out individually for each Lambda probe.

The measurement starts when the engine has reached the required speed.

– Keep engine speed within required range.

The remaining time for carrying out the measurement will be shown -arrow A-.

Evaluation

Once the exhaust emissions test is completed, the test log is displayed on the screen.

The result of the test will be shown.

You can enter remarks on the exhaust emissions test here -arrow A-. These will be added to the test log.

– If emissions test is passed, select date and “Emissions test seal granted” from drop-down menu -arrow B-.

– Confirm with “Yes” -arrow C-.

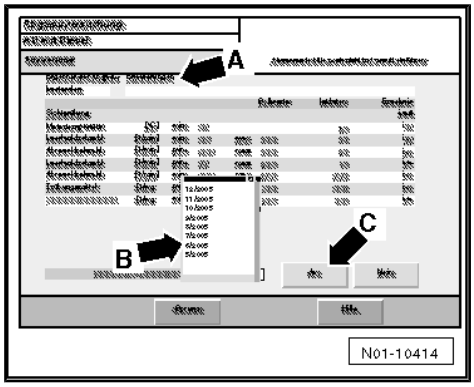

Printing

Following confirmation, two test certificates will be printed automatically.

– If additional certificates are required, press button for “Print” -arrow A-.

– Follow instructions shown on display.

– Remove emission probe from exhaust pipe.

– Then press ▶ button -arrow B-.

The exhaust emissions test is completed; a new test can now be performed.

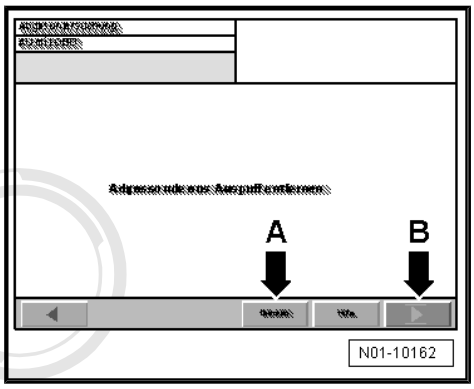

4.2 Diesel engines: performing exhaust emissions test

Protected by copyright. Copying for private or commercial purposes, in part or in whole, is not permitted unless authorised by AUDI AG. AUDI AG does not guarantee or accept any liability with respect to the correctness of information in this document. Copyright by AUDI AG.

Note

- *The following description refers to vehicles equipped with on-board diagnosis (OBD).*
- *The OBD monitors all components and (sub)systems which affect the exhaust gas quality.*

Special tools and workshop equipment required

- Emissions test station - VAS 6300-

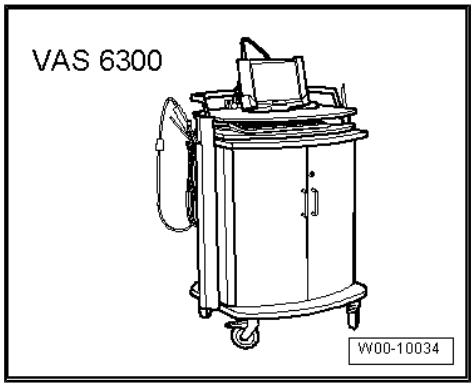

- Adapter wire, OBD communication - VAS 5052/16-1-

Note

- *In order for the exhaust emissions test to be carried out, all components of the emissions test station - VAS 6300- must be properly plugged in and connected to one another as specified in the operating instructions.*
- *All the required steps are displayed on the emissions test station - VAS 6300- .*

Test requirements

- All test requirements and data for the exhaust emissions test are stated on the exhaust emissions test data sheet for the required engine.
- If the specifications for the exhaust emissions test will be scanned in using a bar code, the data sheet must be available as a printout.
- Automatic gearbox: selector lever in position “P” or “N”
- Manual gearbox: gear lever in neutral
- Handbrake applied

– Follow instructions shown on display.

Start screen

– Select “Emissions test” button -arrow-.

An overview of exhaust emissions test types will appear.

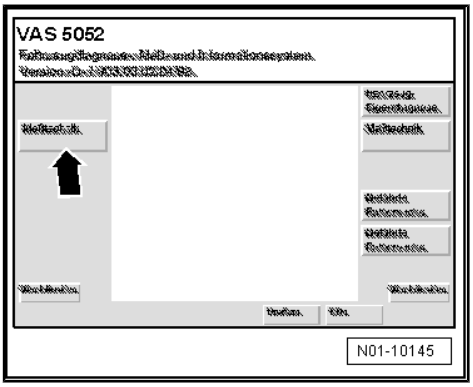

– Select “Emissions test, diesel” -arrow-.

A display for the warm-up period will be shown.

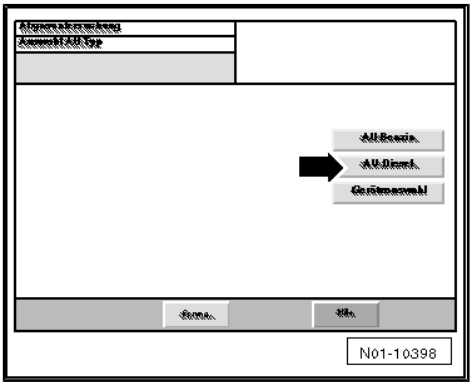

Protected by copyright. Copying for private or commercial purposes, in part or in whole, is not permitted unless authorised by AUDI AG. AUDI AG does not guarantee or accept any liability with respect to the correctness of information in this document. Copyright by AUDI AG.

– Continue exhaust emissions test according to the instructions on the display.

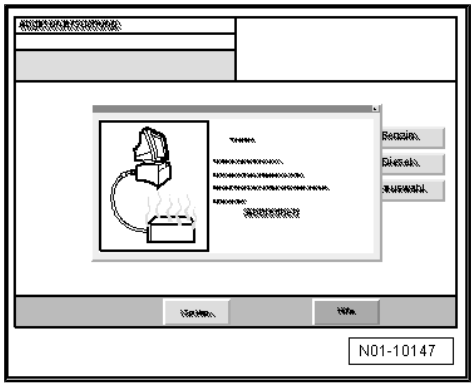

– When the options for the exhaust emissions test specifications are shown, select the option required -arrow-:

♦ Either “Standard specifications” (for an initial exhaust emissions test)

♦ Or “Last vehicle” (to repeat a previous exhaust emissions test)

– Confirm Next -item 1- on display.

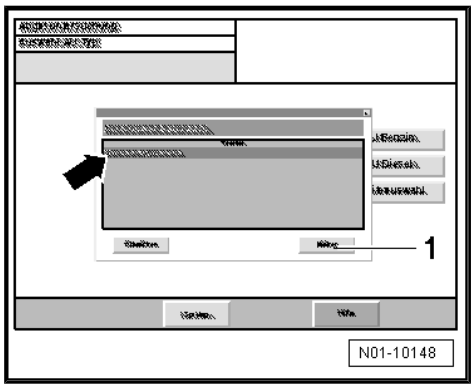

Entering vehicle data

The input menu for vehicle data will be shown.

– Enter the following data from the registration document (part 1):

♦ -1- Vehicle manufacturer, e.g. Audi

♦ -2- Vehicle model, e.g. A6 / 4G

♦ -3- Code for 14.1, e.g. 0572

♦ -4- Code for 2.1, e.g. 0588

♦ -5- Code for 2.2, e.g. 846

♦ -6- Engine code: e.g. CHVA

♦ -7- Number plate: e.g. IN-MV 1234

♦ -8- Vehicle identification number, e.g. WAUZZZ4GZAN001234

– Enter mileage (km), e.g. 33350, at -item 9-.

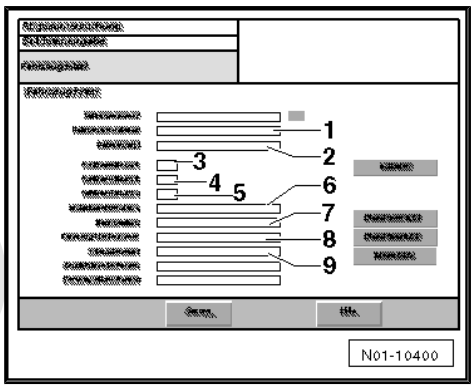

Protected by copyright. Copying for private or commercial purposes, in part or in whole, is not permitted unless authorised by AUDI AG. AUDI AG does not guarantee or accept any liability with respect to the correctness of information in this document. Copyright by AUDI AG.

Note

♦ *Additional functions can be selected using the Go to button.*

♦ *The Go to button can be used to cancel the test.*

– Select “Diesel OBD” -arrow-.

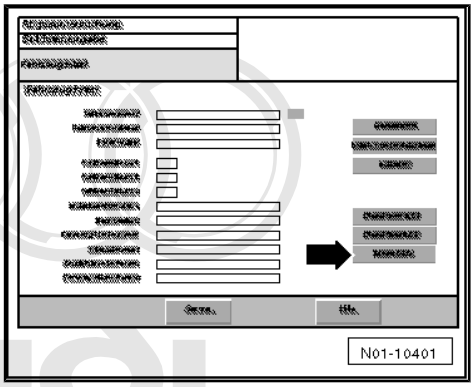

Entering exhaust emissions test specifications

There are various ways of entering the specifications:

- 1. Manually
- 2. By scanning the bar code from the emissions test data sheet
- 3. Via the ELSA web service

Note

- *To use the ELSA web service, the vehicle diagnostic tester being used to perform the exhaust emissions test must be integrated in the workshop network.*
- *When using the ELSA web service, the vehicle specifications are entered on the corresponding screen automatically via the network.*

Protected by copyright. Copying for private or commercial purposes, in part or in whole, is not permitted without the consent of AUDI AG. AUDI AG does not guarantee or accept any liability with respect to the correctness of information in this document. Copyright by AUDI AG.

Entering exhaust emissions test specifications manually

Note

Refer to ⇒ Data sheets for exhaust emissions test (for required engine) for all test requirements and data for the exhaust emissions test.

– Follow instructions on display to enter data manually.

– Enter data listed on emissions test data sheet under “Test values for exhaust emissions test” on display in following order:

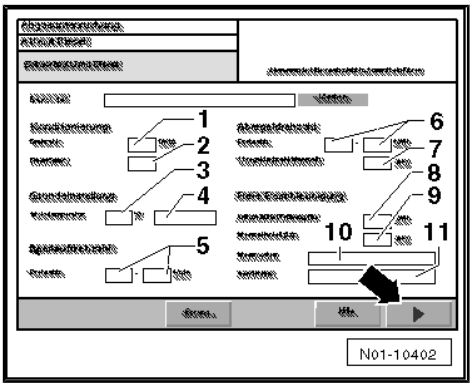

1 - Engine speed for temperature conditioning

2 - Number of times engine revved up for temperature conditioning

3 - Engine oil temperature (minimum value)

4 - Select method for measuring engine oil temperature

5 - Idling speed

6 - Governed speed

7 - Governed speed measuring time (to nearest second)

8 - Turbidity value (arithmetic mean)

9 - Select probe type (probe number)

10 - Select measurement mode

11 - Time required for measurement

– Once you have entered all data correctly, confirm your entry with ⇨ button -arrow-.

Entering exhaust emissions test specifications with a bar code

– If exhaust emissions test specifications are available as a bar code, use scanner pen to scan bar code on data sheet.

All required data will be shown on display -1-.

– Press button -arrow- to continue procedure.

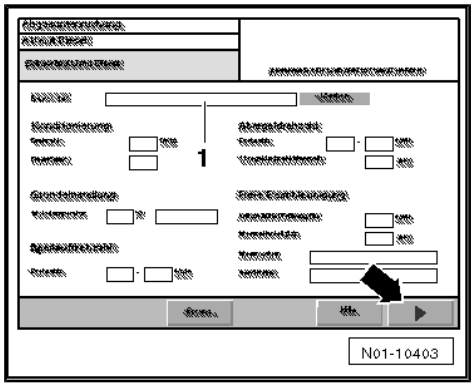

Visual inspection

– Follow instructions shown on display.

– Inspect all components relevant to exhaust emissions.

– Check that all components of exhaust system are fitted, complete and free of leaks and damage.

– If results of inspection are OK, press button for “OK” -arrow-.

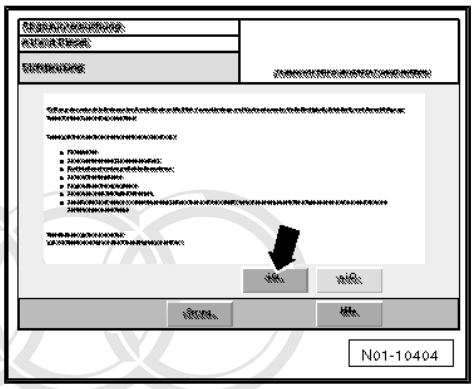

Note

Pressing the button for “Not OK” will start a test.

Plugging in diagnostic connector

- Ignition is switched off.

The screen for the visual inspection must be shown with prompts to plug in the diagnostic connector -arrow A- and to check exhaust emissions warning lamp -arrow B-.

– Follow instructions shown on display.

– Plug connector of diagnosis cable into EOBD connection.

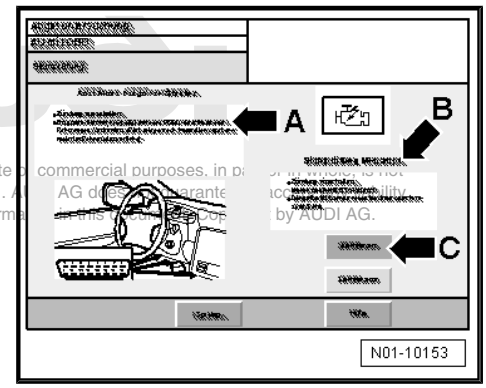

Protected by copyright. Copying for private or commercial purposes, in part or in whole, is not permitted unless authorised by AUDI AG. AUDI AG does not guarantee or accept any liability with respect to the correctness of information in this document. Copyright by AUDI AG.

Visual check of exhaust emissions warning lamp with engine off

– Switch on ignition.

– Check exhaust emissions warning lamp.

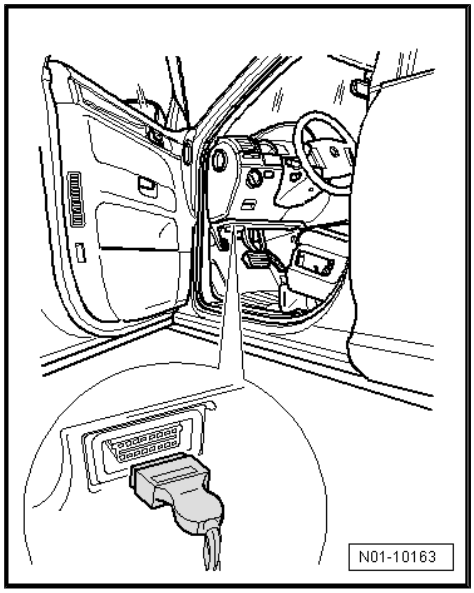

– If lamp lights up, press button for “Lamp on” -arrow C-.

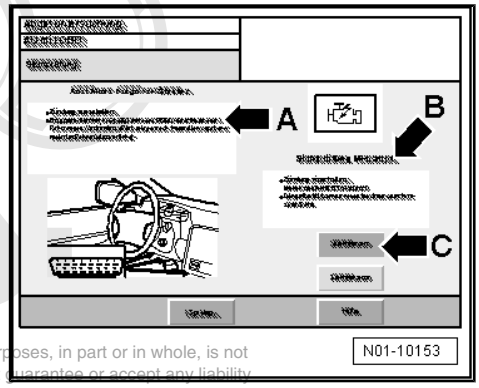

Note

The exhaust emissions test is failed if the exhaust emissions warning lamp does not light up during the visual check.

Protected by copyright. Copying for private or commercial purposes, in part or in whole, is not permitted unless authorised by AUDI AG. AUDI AG does not guarantee or accept any liability with respect to the correctness of information in this document. Copyright by AUDI AG.

Visual check of exhaust emissions warning lamp with engine on

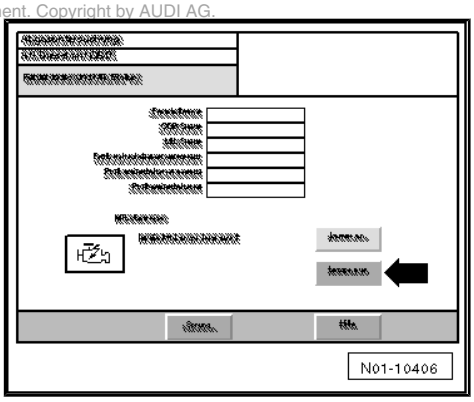

– Start engine and confirm that it is running by selecting “Yes” on display.

– Check exhaust emissions warning lamp; it must not light up or flash.

– Confirm status of exhaust emissions warning lamp -arrow-.

The system will automatically switch over to a test readiness check.

This checks that all test readiness checks supported by the control unit have been carried out.

Temperature conditioning

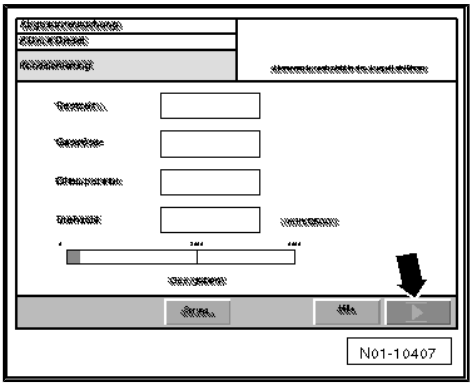

In the temperature conditioning phase, the engine and any emission control systems are brought up to operating temperature by revving up the engine several times; this makes them ready for the exhaust emissions test.

– Follow instructions shown on display.

– Keep engine speed within required range.

If you are certain that no temperature conditioning is necessary, press button -arrow- to proceed to next measurement.

Reading out the engine temperature

The engine temperature is read out from the engine control unit via the diagnostic connector.

After the required engine temperature has been reached, the system will automatically switch over to the screen for measuring the idling speed.

Measuring the idling speed

– Follow instructions shown on display.

The measurement starts when the engine has reached the required speed.

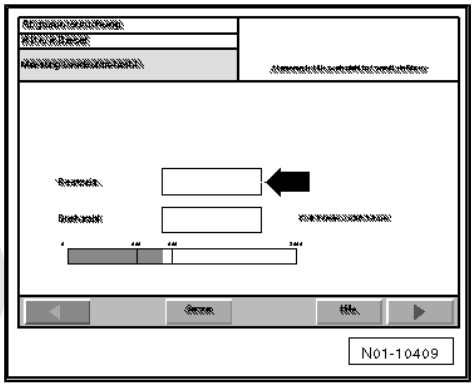

Note

- *Do not insert emission probe into exhaust pipe yet.*
- *You can skip the measurement by pressing the [→] button (the emissions test will be failed).*
- *The [←] button can be used to repeat the test.*

– Keep engine speed within required range.

The remaining time for carrying out the measurement will be shown -arrow-.

Protected by copyright. Copying for private or commercial purposes, in part or in whole, is not permitted unless authorised by AUDI AG. AUDI AG does not guarantee or accept any liability with respect to the correctness of information in this document. Copyright by AUDI AG.

Measuring the governed speed

The system will automatically switch over to the screen for measuring the governed speed.

The measurement starts when the engine has reached the required speed.

– Press the accelerator pedal down without delay and hold until measurement has been completed.

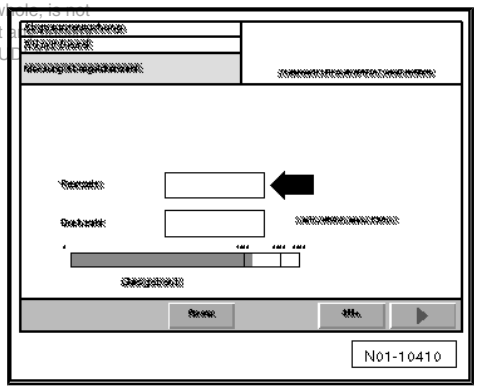

Note

- *If the rev limiter is activated, deactivate it before performing the exhaust emissions test:*
- *Switch on the ignition and then press and hold the [ESP] button until the corresponding symbol flashes in the instrument cluster.*

The remaining time for carrying out the measurement will be shown -arrow-.

Note

- *Do not insert emission probe into exhaust pipe yet.*
- *You can skip the measurement by pressing the [→] button (the emissions test will be failed).*

Air quality check

An air quality check is started before the free acceleration procedure is performed. The emission probe must NOT be in the exhaust pipe at this stage. Otherwise, measurement errors or error messages may occur during the subsequent measurement procedures.

– After air quality check is completed, insert emission probe in exhaust pipe.

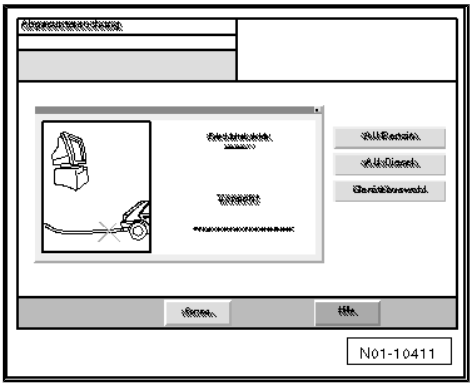

Free acceleration

The system will automatically switch over to the screen for the free acceleration procedure.

In the free acceleration procedure, the engine is accelerated as quickly as possible (without load) until the governed speed is reached.

The free acceleration test consists of at least four individual accelerations.

Free acceleration - phase 1

– Follow instructions shown on display -arrow A- and -arrow C-.

– Keep idling speed in specified speed range -arrow D-.

The remaining time for carrying out the measurement will be shown -arrow B-.

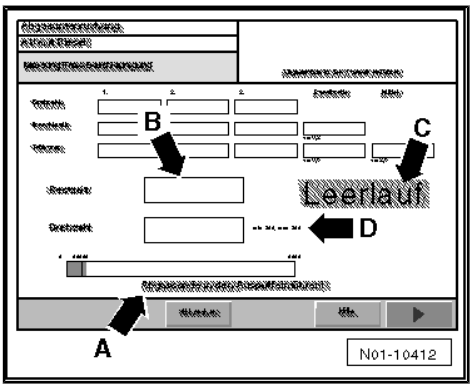

Note

- *The emission probe must be in the exhaust pipe.*
- *If the engine speed is not within the specified speed range, the measurement procedure is re-started.*
- *You can skip the measurement by pressing the ⇨ button (the emissions test will be failed).*

Protected by copyright. Copying for private or commercial purposes, in part or in whole, is not permitted unless authorised by AUDI AG. AUDI AG does not guarantee or accept any liability with respect to the correctness of information in this document. Copyright by AUDI AG.

Free acceleration - phase 2

– Follow instructions shown on display -arrow B-.

– Press accelerator pedal down fully when prompted to do so and hold it until display prompts you to let engine idle.

Free acceleration - phase 3

– Take your foot off accelerator pedal as soon as display shows prompt for engine idling speed -arrow B-, and let engine idle.

The result of the measurement procedure and information about the most recently performed free acceleration procedure will appear on the display -arrow A-. If the measured values are not OK, you will be informed at this stage about the reasons why the free acceleration test was failed.

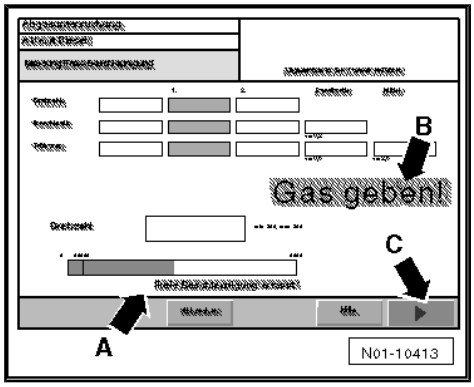

Note

- *If the field is white, the measured value is within the tolerated range.*
- *If the field is red, the measured value is outside the tolerated range.*
- *If the field is yellow, the measured value is outside the tolerated range but is subject to the judgement of the person performing the test.*

Further individual accelerations

The next individual acceleration is now performed, beginning with phase 1 of the free acceleration procedure.

It is possible to perform as many free acceleration procedures as desired until:

- Three free acceleration procedures in a row have been passed, and the acceleration range is OK.
- All values are OK with the exception of the acceleration range, and the ⏎ button -arrow C- has been pressed to continue the test procedure (in this case, the person performing the test judges whether or not the value is OK).
- The values are not OK, and the → button -arrow C- has been pressed to end/skip the measurement.

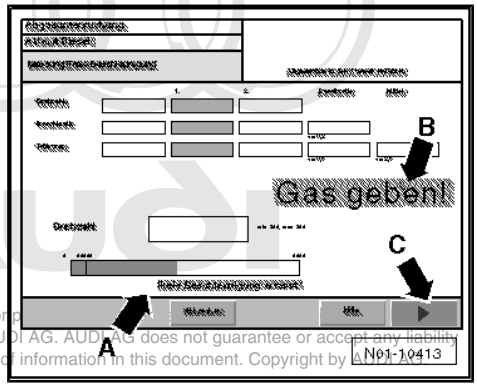

Protected by copyright. Copying for p
authorised by AUDI AG. AUDI AG does not guarantee or accept any liability
with respect to the correctness of information in this document. Copyright by AUDI AG

If all measured values are OK after the engine has been revved up three times (i.e. all fields are white), the exhaust emissions test has been passed.

If all measured values are OK after the engine has been revved up three times, the exhaust emissions test has been passed.

Evaluation

Once the exhaust emissions test is completed, the test log is displayed on the screen.

The result of the test will be shown.

You can enter remarks on the exhaust emissions test here -arrow A-. These will be added to the test log.

– If emissions test has been passed, select date and “Emissions test seal granted” from drop-down menu -arrow B-.

– Confirm with “Yes” -arrow C-.

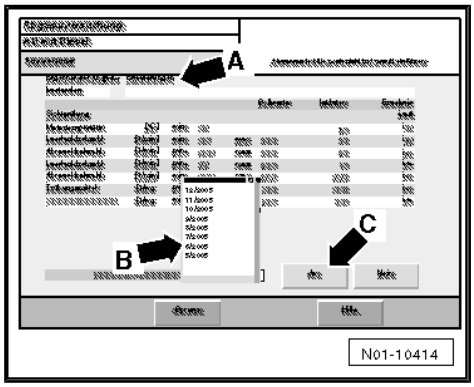

The emissions test log appears on the screen and can be printed out as often as desired using the “Print” button -arrow A- in the “Print preview” menu.

– You can close the “Print preview” menu by using the “Close” button -arrow B-.

– Follow instructions shown on display.

– Remove emission probe from exhaust pipe.

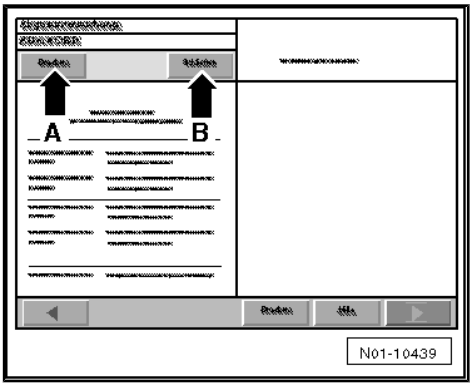

– Then press ⇥ button -arrow B-.

The exhaust emissions test is completed; a new test can now be performed.

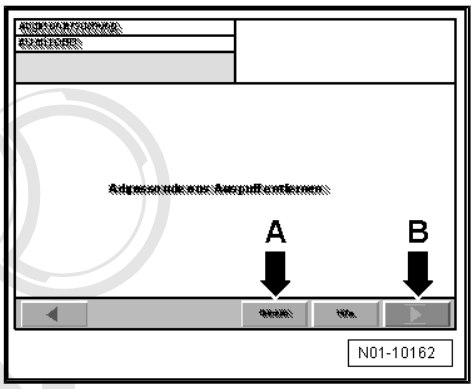

Protected by copyright. Copying for private or commercial purposes, in part or in whole, is not permitted unless authorised by AUDI AG. AUDI AG does not guarantee or accept any liability with respect to the correctness of information in this document. Copyright by AUDI AG.