2014 Engine

Engine Mechanical - 2.0L (LTG) - Component Locator - Regal

COMPONENT LOCATOR

DISASSEMBLED VIEWS

Camshaft Cover and Components

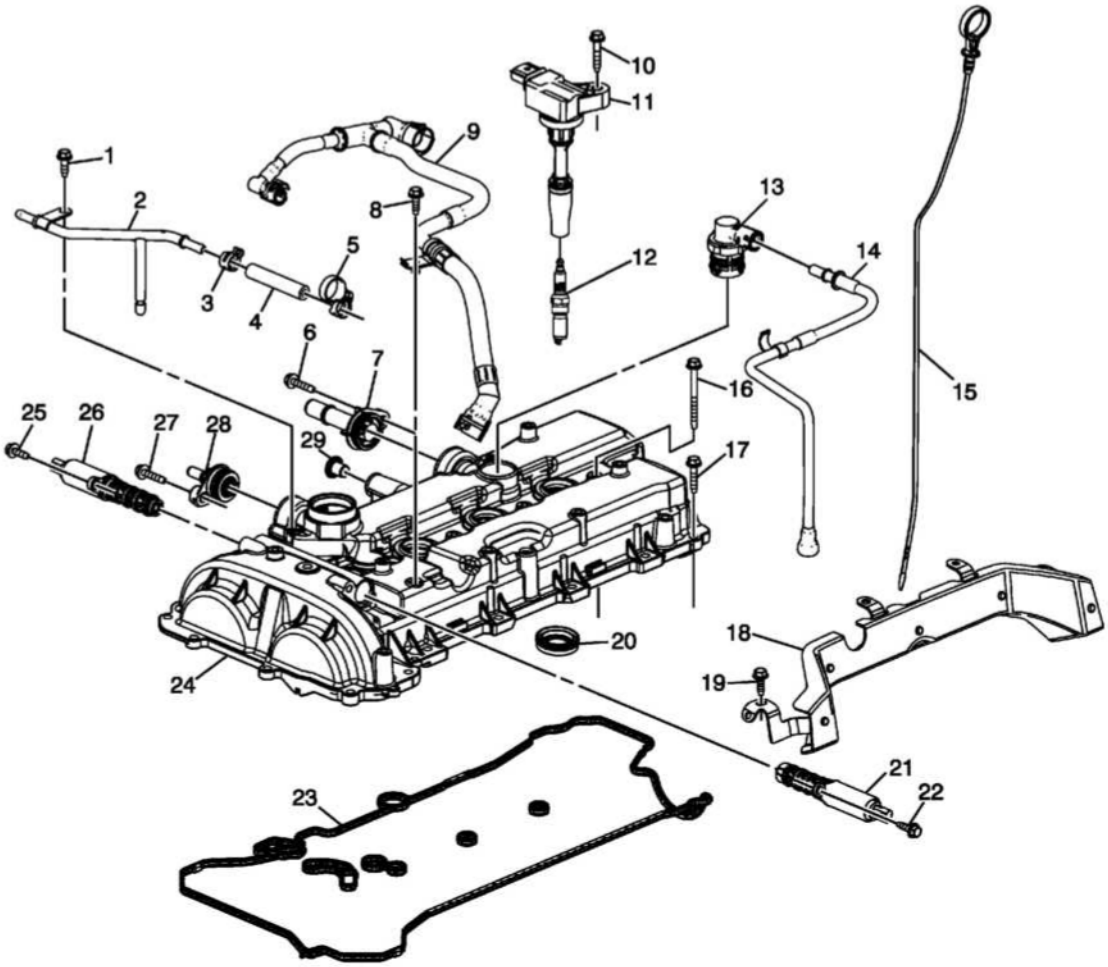

Fig. 1: Camshaft Cover and Components
Courtesy of GENERAL MOTORS COMPANY

Callout	Component Name
1	Engine Coolant Air Bleed Pipe Bolt
2	Engine Coolant Air Bleed Pipe
3	Engine Coolant Air Bleed Hose Clamp
4	Engine Coolant Air Bleed Hose
5	Engine Coolant Air Bleed Hose Clamp
6	PCV Valve Bolt
7	PCV Valve

8	PCV Tube Assembly Bolt
9	PCV Tube Assembly
10	Ignition Coil Bolt
11	Ignition Coil
12	Spark Plug
13	PCV Valve Assembly
14	PCV Tube Assembly
15	Oil Level Indicator
16	Camshaft Cover Bolt
17	Camshaft Cover Bolt
18	Camshaft Housing Cover Heat Shield
19	Camshaft Housing Cover Heat Shield Bolt
20	Spark Plug Shield Seal
21	Camshaft Position Actuator Control Solenoid Valve - Exhaust
22	Camshaft Position Actuator Control Solenoid Valve Bolt - Exhaust
23	Camshaft Cover Gasket
24	Camshaft Cover
25	Camshaft Position Actuator Control Solenoid Valve Bolt - Intake
26	Camshaft Position Actuator Control Solenoid Valve - Intake
27	PCV Valve Bolt
28	PCV Valve
29	Camshaft Cover Plug

Cylinder Head and Components

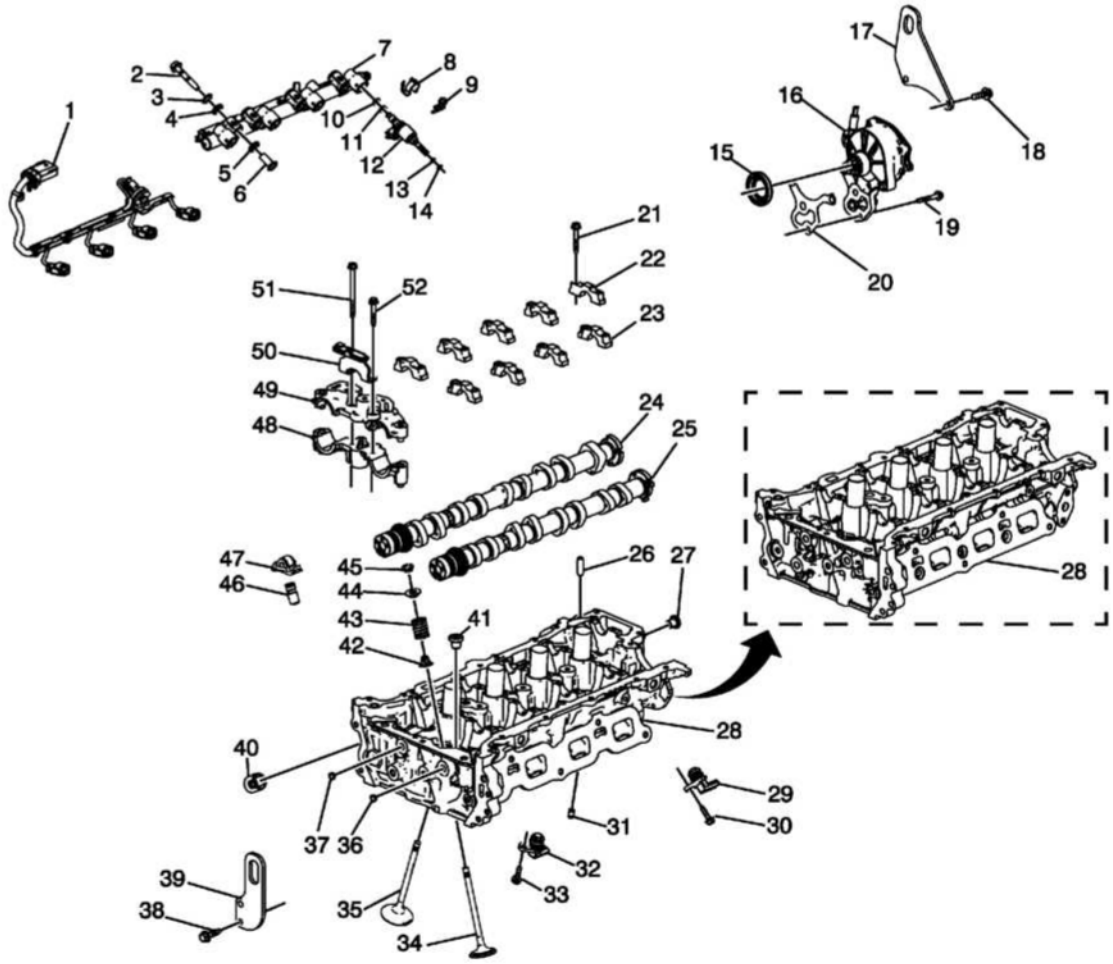

Fig. 2: Cylinder Head and Components
Courtesy of GENERAL MOTORS COMPANY

Callout	Component Name
1	Fuel Injector Wiring Harness
2	Fuel Injection Fuel Rail Bolt
3	Fuel Rail Insulator Bushing
4	Fuel Rail Insulator Washer
5	Fuel Rail Insulator Washer
6	Fuel Rail Insulator Sleeve
7	Fuel Injection Fuel Rail
8	Fuel Injector Holding Clamp
9	Fuel Injector Retainer
10	Fuel Injection Fuel Rail O-Ring Seal
11	Fuel Injector Seal Spacer
12	Direct Fuel Injector Assembly
13	Fuel Injector Nozzle Housing Seal
14	Fuel Injector Nozzle Housing Seal
15	Vacuum Pump Seal
16	Vacuum Pump Assembly

17	Engine Rear Lift Bracket
18	Engine Rear Lift Bracket Bolt
19	Vacuum Pump Bolt
20	Vacuum Pump Gasket
21	Camshaft Bearing Cap Bolt
22	Camshaft Bearing Cap
23	Camshaft Bearing Cap
24	Intake Camshaft
25	Exhaust Camshaft
26	Cylinder Head Locating Pin
27	Cylinder Head Oil Gallery Plug
28	Cylinder Head
29	Camshaft Position Sensor
30	Camshaft Position Sensor Bolt
31	Cylinder Head Oil Gallery Restrictor
32	Camshaft Position Sensor
33	Camshaft Position Sensor Bolt
34	Intake Valve
35	Exhaust Valve
36	Cylinder Head Oil Gallery Plug
37	Cylinder Head Oil Gallery Plug
38	Engine Front Lift Bracket Bolt
39	Engine Front Lift Bracket
40	Valve Lifter Follower
41	Cylinder Head Core Hole Plug
42	Valve Stem Oil Seal
43	Valve Spring
44	Valve Spring Retainer
45	Valve Stem Key
46	Hydraulic Valve Lash Adjuster
47	Valve Rocker Arm
48	Camshaft Bearing Front Lower Cap
49	Camshaft Bearing Front Cap
50	Timing Chain Cam to Cam Guide
51	Camshaft Bearing Cap Bolt
52	Timing Chain Guide Bolt

Intake Manifold and Components

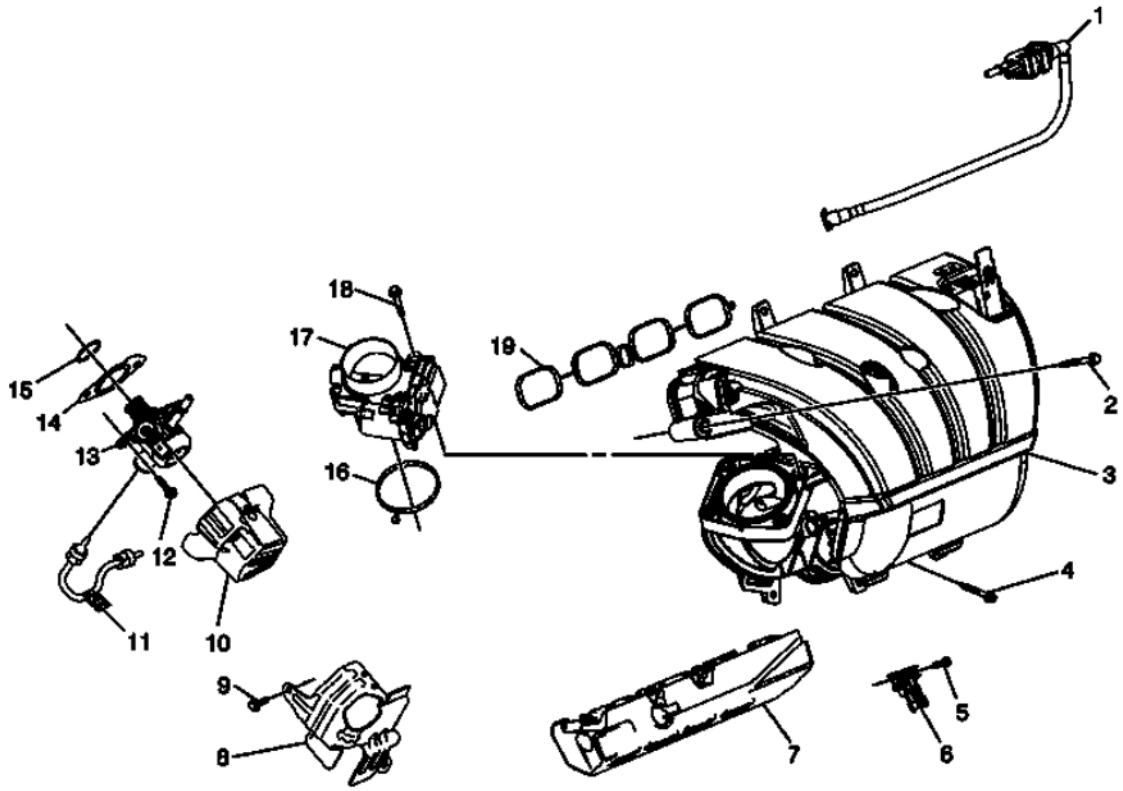

Fig. 3: Intake Manifold and Components
Courtesy of GENERAL MOTORS COMPANY

Callout	Component Name
1	Evaporative Emission Canister Purge Valve Assembly
2	Intake Manifold Bolt
3	Intake Manifold
4	Intake Manifold Bolt
5	Manifold Absolute Pressure (MAP) Sensor Bolt
6	Manifold Absolute Pressure (MAP) Sensor
7	Fuel Rail Noise Shield
8	Fuel Pump Cover
9	Fuel Pump Cover Bolt
10	Fuel Pump Insulator
11	Fuel Feed Intermediate Pipe Assembly
12	Fuel Pump Bolt
13	Fuel Pump
14	Fuel Pump Housing Gasket
15	Fuel Pump Housing O-Ring Seal
16	Throttle Body Assembly Gasket

17	Throttle Body Assembly
18	Throttle Body Assembly Bolt
19	Intake Manifold Gasket

Turbocharger and Components

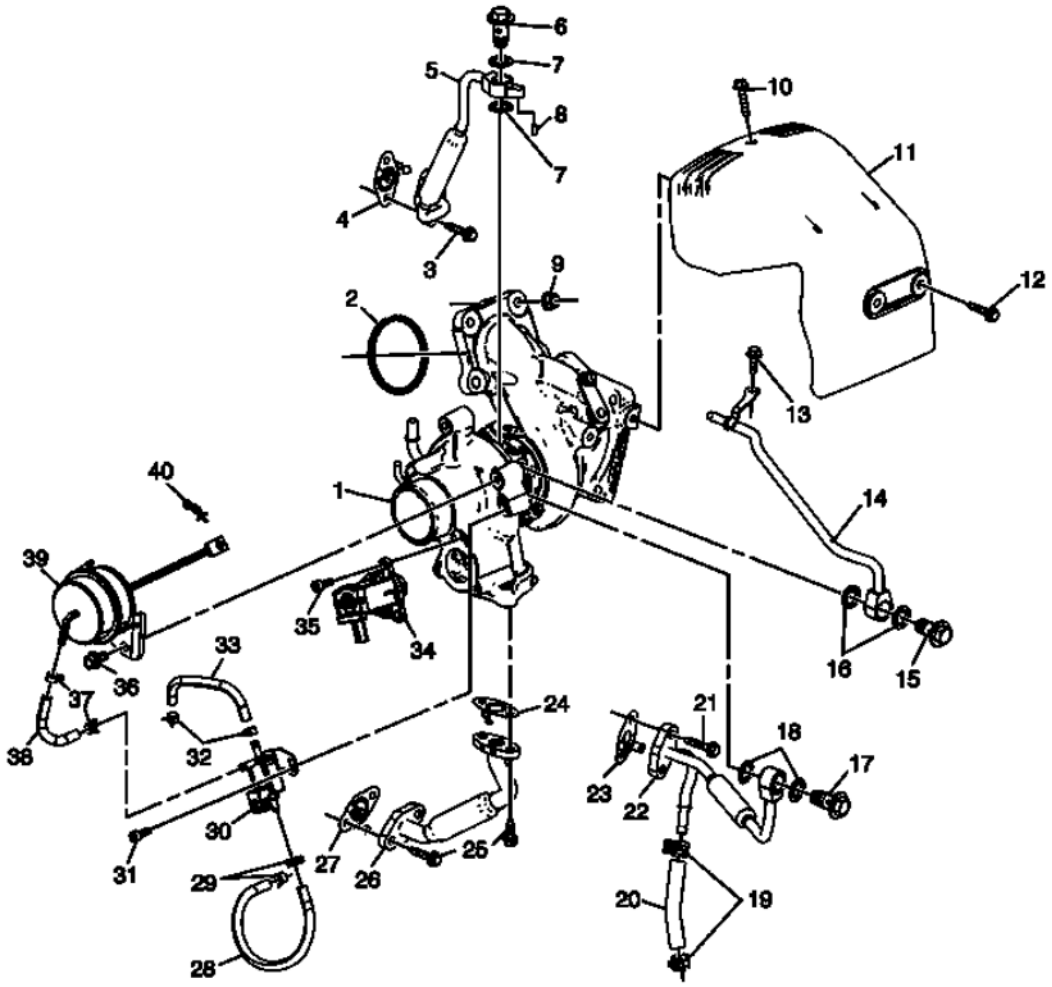

Fig. 4: Turbocharger and Components
Courtesy of GENERAL MOTORS COMPANY

Callout	Component Name
1	Turbocharger Gasket
2	Turbocharger Oil Feed Pipe Bolt
3	Turbocharger Oil Feed Pipe Gasket
4	Turbocharger Oil Feed Pipe Assembly
5	Turbocharger Oil Feed Pipe Bolt
6	Turbocharger Oil Feed Pipe Washer
7	Turbocharger Oil Feed Pipe Anti-Rotate Roll Pin
8	Turbocharger Nut
9	Turbocharger
10	Turbocharger Heat Shield Bolt

11	Turbocharger Heat Shield
12	Turbocharger Heat Shield Bolt
13	Turbocharger Coolant Return Pipe Bolt
14	Turbocharger Coolant Return Pipe Assembly
15	Turbocharger Coolant Return Pipe Bolt
16	Turbocharger Coolant Return Pipe Washer
17	Turbocharger Coolant Feed Pipe Bolt
18	Turbocharger Coolant Feed Pipe Washer
19	Turbocharger Coolant Feed Hose Clamp
20	Turbocharger Coolant Feed Hose
21	Turbocharger Coolant Feed Pipe Bolt
22	Turbocharger Coolant Feed Pipe Assembly
23	Turbocharger Coolant Feed Pipe Gasket
24	Turbocharger Oil Return Pipe Gasket
25	Turbocharger Oil Return Pipe Bolt
26	Turbocharger Oil Return Pipe Assembly
27	Turbocharger Oil Return Pipe Gasket
28	Turbocharger Wastegate Regulator Solenoid Valve Hose
29	Turbocharger Wastegate Regulator Solenoid Valve Hose Clamp
30	Turbocharger Wastegate Regulator Solenoid Valve
31	Turbocharger Wastegate Regulator Solenoid Valve Bolt
32	Turbocharger Wastegate Regulator Solenoid Valve Hose Clamp
33	Turbocharger Wastegate Regulator Solenoid Valve Hose
34	Turbocharger Air Bypass Valve Solenoid
35	Turbocharger Air Bypass Valve Solenoid Bolt
36	Turbocharger Wastegate Actuator Bolt
37	Turbocharger Wastegate Actuator Hose Clamp
38	Turbocharger Wastegate Actuator Hose
39	Turbocharger Wastegate Actuator
40	Turbocharger Wastegate Actuator Arm Retaining Clip

Exhaust Manifold and Components

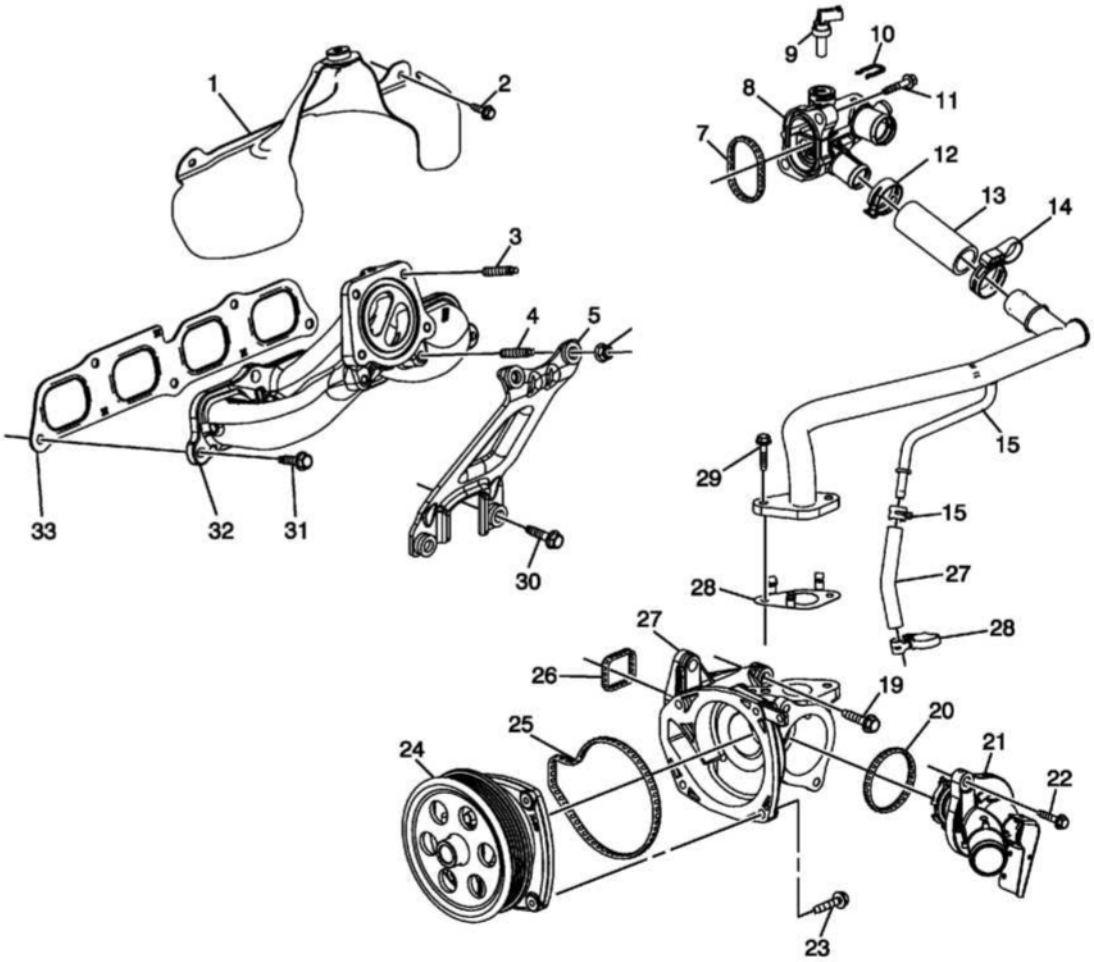

Fig. 5: Exhaust Manifold and Components
Courtesy of GENERAL MOTORS COMPANY

Callout	Component Name
1	Exhaust Manifold Heat Shield
2	Exhaust Manifold Heat Shield Bolt
3	Exhaust Manifold Stud
4	Exhaust Manifold Stud
5	Exhaust Manifold Brace
6	Exhaust Manifold Brace Nut
7	Water Outlet Gasket
8	Water Outlet
9	Engine Coolant Temperature Sensor
10	Engine Coolant Temperature Sensor Retainer
11	Water Outlet Bolt
12	Thermal Bypass Hose Clamp
13	Thermal Bypass Hose
14	Thermal Bypass Hose Clamp
15	Thermal Bypass Pipe
16	Engine Oil Cooler Coolant Outlet Hose Clamp

17	Engine Oil Cooler Coolant Outlet Hose
18	Engine Oil Cooler Coolant Outlet Hose Clamp
19	Water Pump Bolt
20	Engine Coolant Thermostat Housing Gasket
21	Engine Coolant Thermostat Housing
22	Engine Coolant Thermostat Housing Bolt
23	Water Pump Housing Bolt
24	Water Pump Front Housing
25	Water Pump Inlet Gasket
26	Water Pump Gasket
27	Water Pump Rear Housing
28	Thermal Bypass Pipe Gasket
29	Thermal Bypass Pipe Bolt
30	Exhaust Manifold Brace Bolt
31	Exhaust Manifold Bolt
32	Exhaust Manifold
33	Exhaust Manifold Gasket

Engine Block and Components

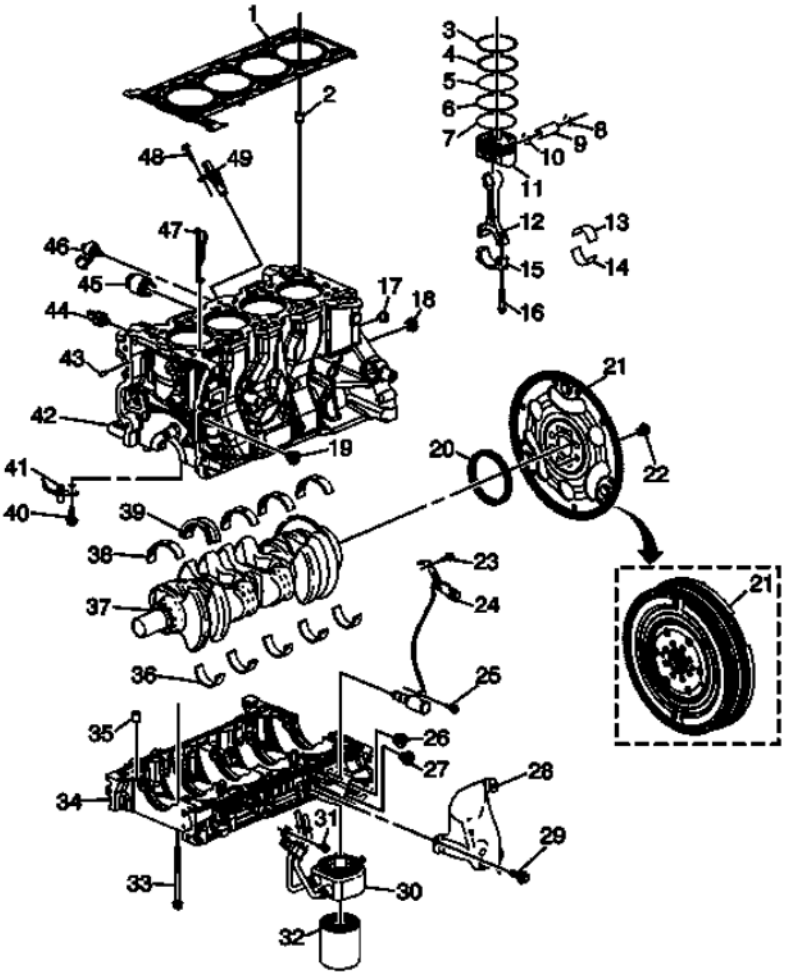

Fig. 6: Engine Block and Components
Courtesy of GENERAL MOTORS COMPANY

Callout	Component Name
1	Cylinder Head Gasket
2	Cylinder Head Locating Pin
3	Piston Upper Compression Ring
4	Piston Lower Compression Ring
5	Piston Oil Ring Rail
6	Piston Oil Ring Rail Spacer
7	Piston Oil Ring Rail
8	Piston Pin Retainer
9	Piston Pin
10	Piston Pin Retainer
11	Piston
12	Connecting Rod
13	Connecting Rod Bearing
14	Connecting Rod Bearing
15	Connecting Rod Cap
16	Connecting Rod Bolt
17	Engine Block Oil Gallery Plug
18	Engine Block Oil Gallery Plug
19	Engine Block Oil Gallery Plug
20	Crankshaft Rear Oil Seal
21	Automatic Transmission Flex Plate
22	Automatic Transmission Flex Plate Bolt
23	Oil Pump Flow Control Valve Assembly Bolt
24	Oil Pump Flow Control Valve Assembly
25	Oil Pump Flow Control Valve Assembly Bolt
26	Engine Block Oil Gallery Plug
27	Engine Block Oil Gallery Plug
28	Oil Pump and Compressor Heat Shield
29	Oil Pump and Compressor Heat Shield Bolt
30	Engine Oil Cooler Assembly
31	Engine Oil Cooler Assembly Bolt
32	Oil Filter
33	Lower Crankcase Bolt
34	Lower Crankcase
35	Lower Crankcase Locating Pin
36	Crankshaft Lower Bearing
37	Crankshaft
38	Crankshaft Upper Bearing
39	Crankshaft Upper Thrust Bearing
40	Piston Oil Nozzle Bolt

41	Piston Oil Nozzle
42	Engine Block
43	Engine Front Cover Locating Pin
44	Engine Oil Pressure Sensor
45	Engine Coolant Heater
46	Knock Sensor
47	Engine Block Coolant Baffle
48	Crankshaft Position Sensor Bolt
49	Crankshaft Position Sensor

Upper and Lower Oil Pan and Components

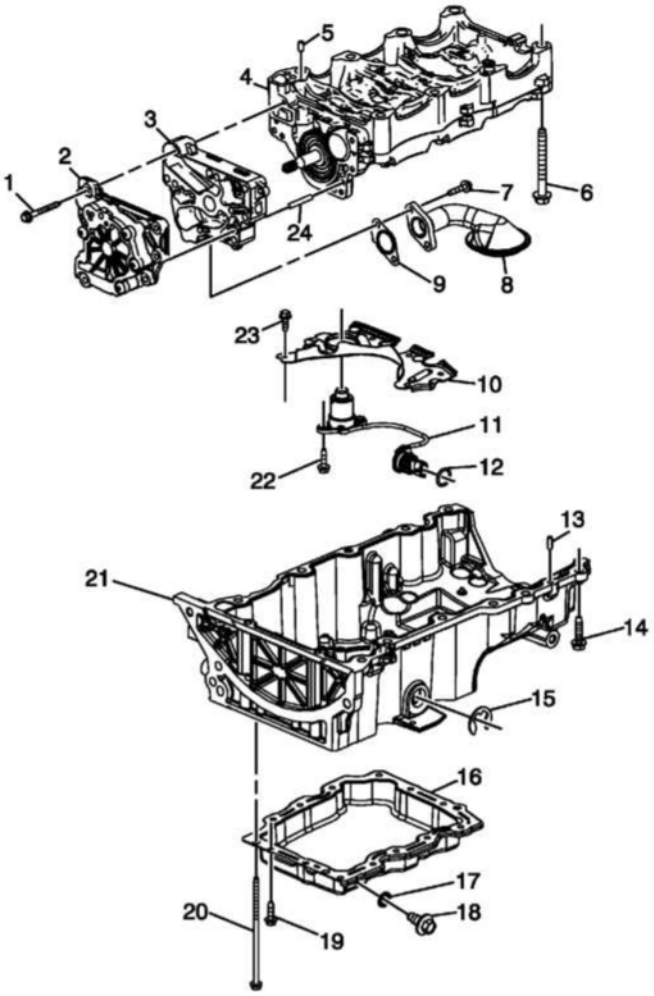

Fig. 7: Upper and Lower Oil Pan and Components
Courtesy of GENERAL MOTORS COMPANY

Callout	Component Name
1	Oil Pump Assembly Bolt
2	Oil Pump Assembly
3	Oil Pump Cover
4	Balancer Shaft Module

5	Balancer Shaft Housing Locating Pin
6	Balancer Shaft Housing Bolt
7	Oil Pump Suction Pipe Bolt
8	Oil Pump Screen Assembly with Suction Pipe
9	Oil Pump Screen Gasket
10	Oil Pan Baffle
11	Engine Oil Level Indicator Switch
12	Engine Oil Level Indicator Seal
13	Oil Pan Locating Pin
14	Oil Pan Bolt
15	Engine Oil Level Sensor Lead Clip
16	Lower Oil Pan
17	Oil Pan Drain Plug Seal
18	Oil Pan Drain Plug
19	Oil Pan Bolt
20	Oil Pan Bolt
21	Upper Oil Pan
22	Engine Oil Level Indicator Switch Bolt
23	Oil Pan Baffle Bolt
24	Oil Pump Locating Pin

Timing Chain and Components

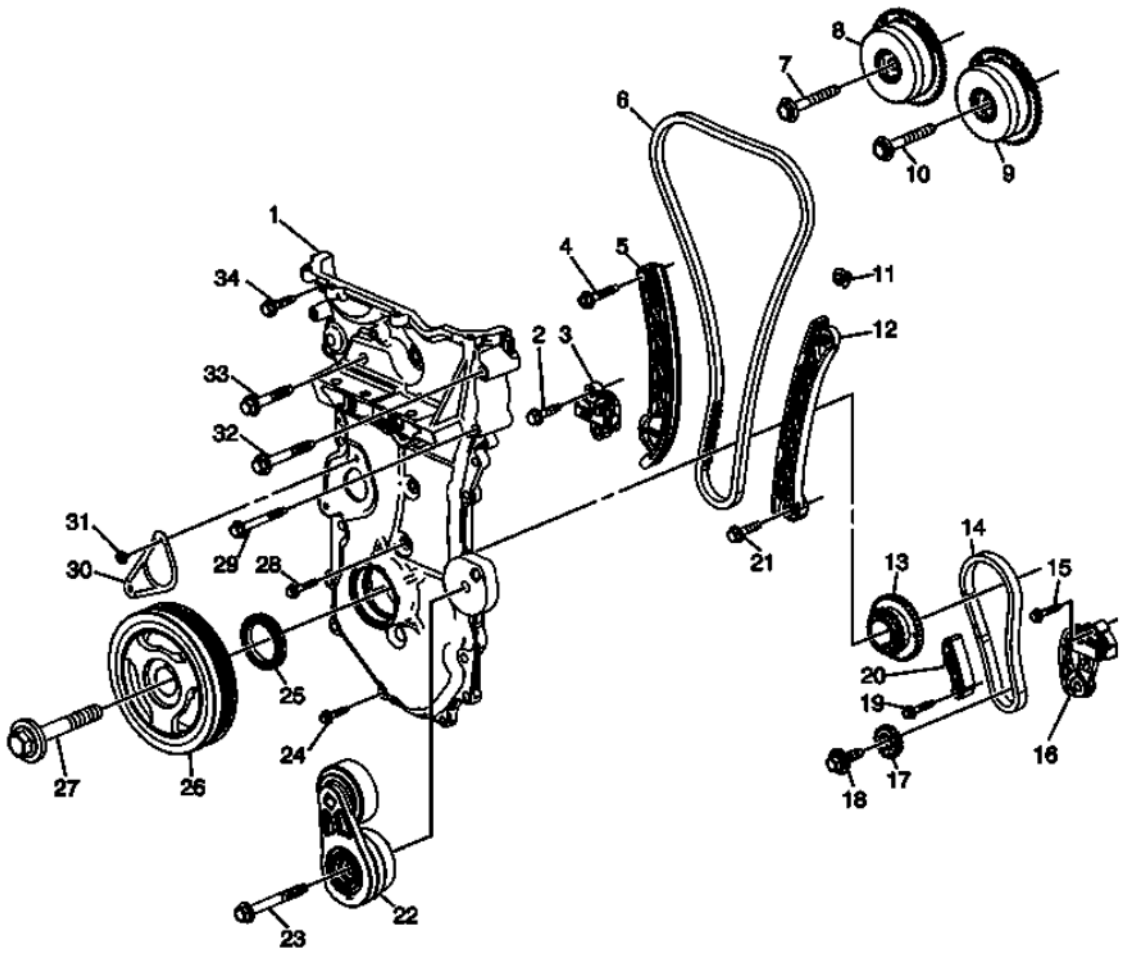

Fig. 8: Timing Chain and Components
Courtesy of GENERAL MOTORS COMPANY

Callout	Component Name
1	Engine Front Cover
2	Timing Chain Tensioner Bolt
3	Timing Chain Tensioner
4	Timing Chain Tensioner Pivot Arm Bolt
5	Timing Chain Tensioner Pivot Arm
6	Timing Chain
7	Camshaft Position Actuator Bolt
8	Intake Camshaft Position Actuator
9	Exhaust Camshaft Position Actuator
10	Camshaft Position Actuator Bolt
11	Timing Chain Oil Nozzle
12	Timing Chain Guide
13	Crankshaft Sprocket
14	Balancer Chain
15	Balancer Chain Tensioner Bolt
16	Balancer Chain Tensioner

17	Balancer Shaft Driven Sprocket
18	Balancer Shaft Sprocket Bolt
19	Balancer Chain Guide Bolt
20	Balancer Chain Guide
21	Timing Chain Guide Bolt
22	Drive Belt Tensioner
23	Drive Belt Tensioner Bolt
24	Engine Front Cover Bolt
25	Crankshaft Front Oil Seal
26	Crankshaft Balancer
27	Crankshaft Balancer Bolt
28	Engine Front Cover Bolt
29	Engine Front Cover Bolt
30	Timing Chain Tensioner Cover
31	Timing Chain Tensioner Cover Bolt
32	Engine Front Cover Bolt
33	Engine Front Cover Bolt
34	Engine Front Cover Bolt

ENGINE IDENTIFICATION

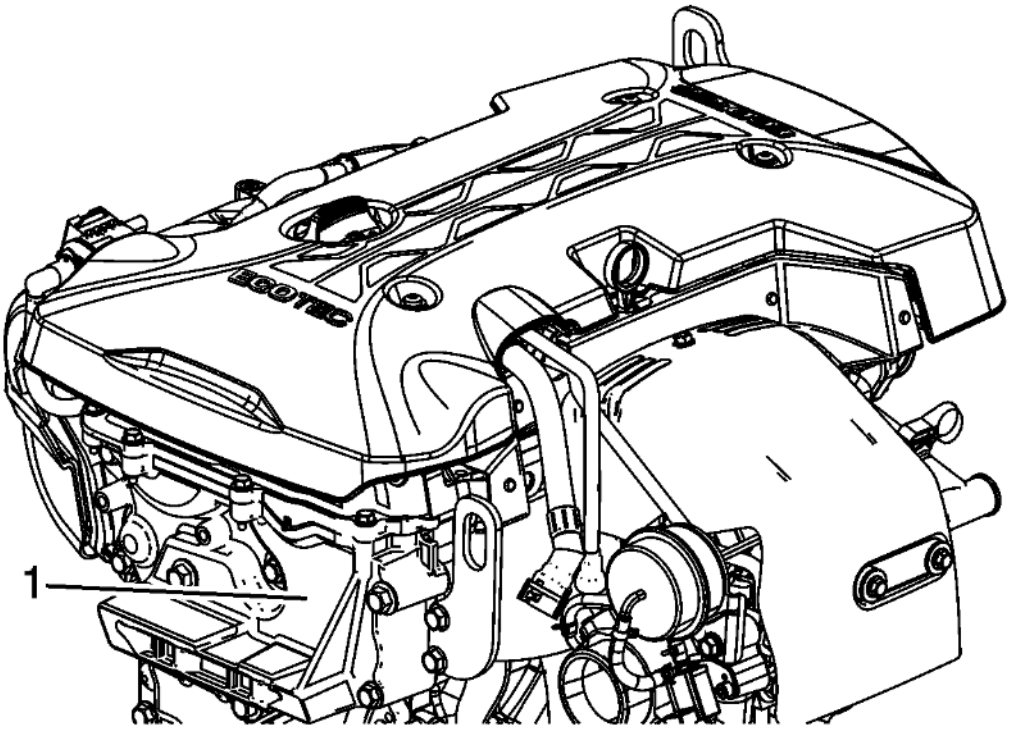

Fig. 9: Engine Identification (LTG)
Courtesy of GENERAL MOTORS COMPANY

Identification can be made through the use of the Engine Traceability label (1) on the engine.

2014 Engine

Engine Mechanical - 2.0L (LTG) - Description and Operation - Regal

DESCRIPTION AND OPERATION

TURBOCHARGER SYSTEM DESCRIPTION

Turbocharger Description and Operation

A turbocharger is a compressor that is used to increase the power output of an engine by increasing the mass of the oxygen and therefore the fuel entering the engine. A turbocharger is mounted either to the exhaust manifold or directly to the head. The turbine is driven by the energy generated by the flow of the exhaust gases. The turbine is connected by a shaft to the compressor which is mounted in the induction system of the engine. The centrifugal compressor blades compress the intake air above atmospheric pressure, thereby increasing the density of the air entering the engine.

The turbocharger incorporates a wastegate that is controlled by a pressure differential that is determined by the engine control module (ECM) by means of a PWM solenoid, in order to control boost pressure. A compressor recirculation valve, also controlled by the ECM, prevents compressor surging and damage by opening during sudden throttle closures. When the recirculation valve is opened it allows the air to recirculate back to the turbocharger compressor inlet.

The turbocharger is connected to the engine oiling system by a supply and drain pipe. Oil is required for the bearing system function and also serves to carry some heat from the turbocharger. There is a cooling system circuit in the turbocharger that further reduces operating temperatures and passively dissipates bearing housing heat away from the turbocharger on shut down.

Charge Air Cooler Description

The turbocharger engine system is supported by an air-to-air charge air cooler system, which uses fresh air drawn through a heat exchanger to reduce the temperature of the hot compressed air exiting the turbo compressor, prior to delivery to the engine combustion system. Inlet air temperature can be reduced by up to 100°C (180°F), enhancing performance because cooler air is denser in oxygen and promotes optimal combustion. The charge air cooler is connected to the turbocharger and to the throttle body by flexible ductwork that requires the use of special high torque fastening clamps. In order to prevent any type of air leak when servicing the ductwork, the tightening specifications, cleanliness and proper positioning of the clamps is critical, and must be strictly adhered to.

Benefits of Dual Cam Phasing

The camshafts of the Ecotec 2.0 liter turbocharged engine have camshaft position sensors and camshaft position actuators that the ECM uses to accurately control the continuously variable intake and exhaust valve timing. This allows the combustion process to be optimized by the ECM to increase the response of the turbocharger, providing a more immediate feeling of power to the driver.

Benefits of Gasoline Direct Injection

In the Ecotec 2.0 liter turbocharged engine, the fuel is introduced directly into the combustion chamber during the intake stroke. As the piston approaches top-dead center, the mixture is ignited by the spark plug, thereby giving the name spark ignition direct injection. Direct injection allows the mixture to be leaner, with

less fuel and more air at full power, and allows a slightly higher compression ratio, resulting in improved fuel consumption at part and full throttle.

The fact that the fuel is injected after the exhaust valve closes allows particularly high valve overlap values in certain engine operating ranges. This enhances the turbocharger response time. This would not be possible in a port fuel injection engine due to the fact that unburned fuel would escape through the open exhaust valve.

Direct injection's precise fuel delivery enables more complete combustion which reduces emissions particularly on cold starts.

Electronic Vacuum Pump

The purpose of the electronic vacuum pump, if equipped, is to keep the vacuum in the brake booster at an acceptable level under various operating conditions. The ECM monitors the input signal from the brake booster pressure sensor. When the vacuum in the brake booster is not in an acceptable range the control module will command the relay ON that controls the vacuum pump.

Recommendations for Service

The turbocharger is designed so that it does not require any special maintenance, and inspection is limited to a few periodic procedures. To ensure that the turbocharger's lifetime corresponds to that of the engine, the following engine manufacturer's service instructions must be strictly adhered to:

- Oil and filter change intervals
- Air filter change intervals
- Engine coolant change intervals
- Ignition system maintenance
- Injection system maintenance

The following causes are responsible for a majority of all turbocharger failures:

- Misdiagnosis of a non-failed turbocharger
- Penetration of foreign bodies into the turbine or the compressor
- Dirt or contaminants in the oil
- Inadequate oil supply and/or pressure
- Clogged oil return
- Higher than normal exhaust gas temperatures due to improper operation of the following:
    - The ignition system
    - The fuel injection system
    - The exhaust system

These failures can be avoided by regular maintenance.

CRANKCASE VENTILATION SYSTEM DESCRIPTION

General Description

A crankcase ventilation system is used to consume crankcase vapors in the combustion process instead of venting them to atmosphere. Fresh air from the intake system is supplied to the crankcase, mixed with blow by gases and then passed through a calibrated orifice into the intake manifold.

Operation

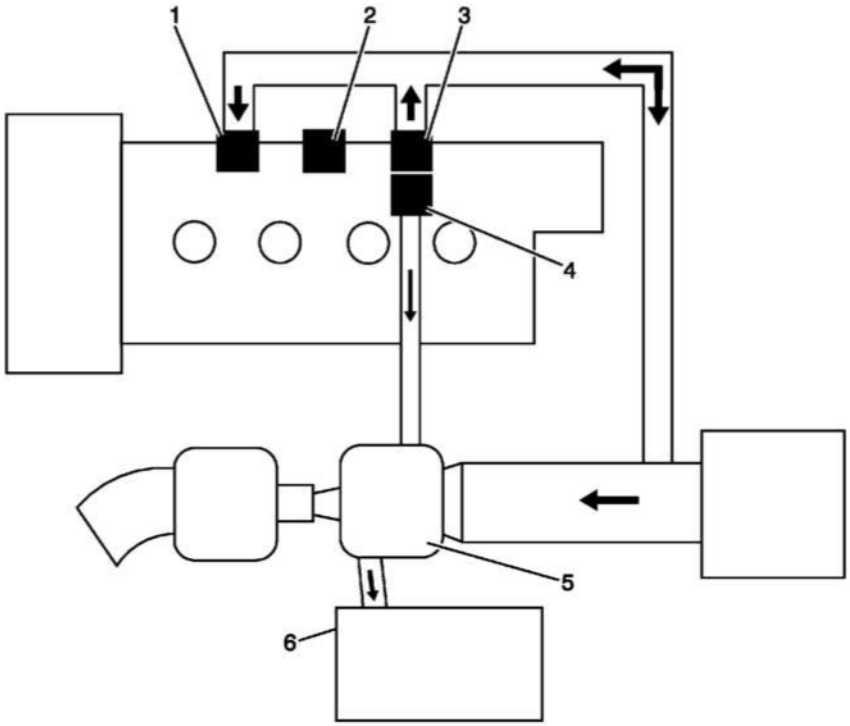

Fig. 1: Crankcase Ventilation System Components And Operational Diagram (LTG)
Courtesy of GENERAL MOTORS COMPANY

The primary control is through the positive crankcase ventilation (PCV) valve (2) which meters the flow at a rate depending on intake manifold vacuum. The PCV valve is an integral part of the camshaft cover. Fresh air is introduced to the engine through PVC (1) under normal operating conditions. If abnormal operating conditions occur, the system is designed to allow excessive amounts of blow by gases to back flow through the crankcase vent valve (3) into the intake system to be consumed by normal combustion.

Only on turbocharged engines, there is a one way valve (2) in the camshaft cover in order to prevent the crankcase from being pressurized by positive pressure in the intake manifold when the turbocharger is in operation. When the turbocharger is operational, the pressure in the intake manifold can exceed atmospheric pressure which, without the one way valve, would force oil and PCV gases out of the camshaft cover and into the induction system, via the hose to the camshaft cover. This can cause coking of the throttle body and induction system, and can reduce the efficiency of both combustion and the intercooler system, in normal operation the PCV gases are drawn into the air stream post intercooler (6). However, when the turbo is spooled up the turbo can become the vacuum source for the vent system. PVC#4 controls the max. flow so the crankcase stays at a normal vacuum during normal operating conditions.

Results of Incorrect Operation

A plugged orifice may cause the following conditions:

- Rough idle

- Stalling or slow idle speed
- Oil leaks
- Sludge in engine

A leaking orifice may cause the following conditions:

- Rough idle
- Stalling
- High idle speed

ENGINE COMPONENT DESCRIPTION

Engine Description

Cylinder Block

The cylinder block is constructed of aluminum alloy by precision sand-casting. The block has 5 crankshaft bearings with the thrust bearing located on the second bearing from the front of the engine. The cylinder block incorporates a bedplate design that forms an upper and lower crankcase. This design promotes cylinder block rigidity and reduced noise and vibration.

Crankshaft

The crankshaft is cast nodular iron with 8 counterweights. The number 8 counterweight is also the ignition system reluctor wheel. The main bearing journals are cross-drilled, and the upper bearings are grooved. The crankshaft has a slip fit balance shaft drove sprocket. Number 2 main bearing is the thrust bearing. The crankshaft balancer is used to control torsional vibration.

Connecting Rod and Piston

The connecting rods are powdered metal. The connecting rod incorporates the floating piston pin. The pistons are cast aluminum. The piston rings are of a low tension type to reduce friction. The top compression ring is ductile steel with a molybdenum facing and phosphate coated sides. The second compression ring is gray iron. The oil ring is a 3-piece spring construction with chromium plating for applications without a turbocharger. For applications with turbocharger, the oil ring is a 3-piece spring construction with nitride plating.

Oil Pan

The oil pan is die cast aluminum. The oil pan includes an attachment to the transmission to provide additional structural support.

Balance Shaft Assembly

The dual balancer shaft assembly is mounted to the lower crankcase located within the oil pan. The balance shafts are driven by a single inverted tooth chain that also drives the oil pump. The chain is tensioned by a hydraulic tensioner that is supplied pressure by the engine oil pump. This design promotes the maximum effectiveness of the balance shaft system and reduces noise and vibration.

Cylinder Head

The cylinder head is a semi-permanent mold. Pressed-in powdered metal valve guides and valve seat insets are used. The cylinder head incorporates camshaft journals and camshaft caps. The fuel injection nozzle is located in the intake port. The high pressure fuel pump is mounted on intake side. The secondary air injection valve is mounted to the exhaust side of cylinder head for applications without a turbocharger.

Valves

There are 2 intake and 2 exhaust valves per cylinder. Rotators are used on all of the intake valves. The rotators are located at the bottom of the valve spring to reduce valve train reciprocating mass. Positive valve stem seals are used on all valves.

Camshaft

Two camshafts are used, one for all intake valves and high pressure fuel pump, the other for all exhaust valves and mechanical vacuum pump. The camshafts are cast iron.

Valve Lash Adjusters

The valve train uses a roller finger follower acted on by a hydraulic lash adjuster. The roller finger follower reduces friction and noise.

Camshaft Cover

The camshaft cover has a steel crankcase ventilation baffling incorporated. The camshaft cover has mounting locations for the ignition system.

Camshaft Drive

A roller chain is used for camshaft drive. There is a tensioner and active guide used on the slack side of the chain to control chain motion and noise. The chain drive promotes long valve train life and low maintenance.

Intake and Exhaust Manifold

The intake manifold is made of composite plastic. The exhaust manifold is cast iron. The intake manifold incorporates a distribution and control system for positive crankcase ventilation (PCV) gases. The exhaust manifold is a dual plane design that promotes good low end torque and performance.

Mechanical Thermostat

The mechanical thermostat is positioned between the engine and the radiator. Its purpose is to control the flow of coolant to the radiator. The thermostat will not allow coolant flow through the radiator when cold, coolant flow occurs when the engine has warmed up. Once the engine reaches its operating temperature, generally about 95°C (203°F), the thermostat opens. This actuation of the thermostat starts to occur at 82°C (180°F), when the heated wax contained within a cylinder melts and rapidly expands, pushing the rod and valve assembly out of the cylinder, opening the valve. The temperature dependent actuation of the thermostat allows the engine to warm up as quickly as possible, the thermostat reduces engine wear, deposits and emissions. The open thermostat now allows the coolant to flow through the engine cooling

circuit to maintain optimal operation temperatures, which is achieved by directing the hot coolant through the radiator for cooling and recirculation.

Variable Flow Oil Pump Assembly

The oil pump assembly is located within the oil pan. The oil pump assembly is fastened directly to the rear of the balancer shaft assembly and is driven by the rotation of the balance shaft spline.

The oil pump assembly possesses variable flow capability which is made possible by a shift of the circular vane arrangement and the actuation of an oil control valve assembly guided by the ECM. The variable flow capability of the pump optimizes oil flow to the engine components when needed. During performance maneuvers and acceleration the oil pump operates in a steady high pressure state. However, during steady low load touring speeds on level terrain the oil pump operates in a steady low pressure state.

The ECM guided "on" and "off" actuation of the oil control valve assembly allows the chamber to be pressurized which takes the switch from high to low pressure mode. The high pressure state of the chamber compressing the spring and shifting the center of the circular vane arrangement nearer to that of the balancer drive shaft, decreasing the difference of the volume of oil contained between each vane. It is this small variation in volume which produces the steady low pressure flow. It is in this mode that the pump behaves as a smaller pump.

Advantages of variable flow oil pumping modes:

- The high performance steady pressure mode is where engine temperatures and friction are reduced because the pump only delivers the oil that the engine requires.
- The low load touring steady pressure mode is where the volume of oil flow is reduced to even more efficient levels when engine requirements allow. This efficiency reduces the resistance on reciprocating component, allowing engine revolutions with less power resulting in fuel economy savings.

LUBRICATION DESCRIPTION

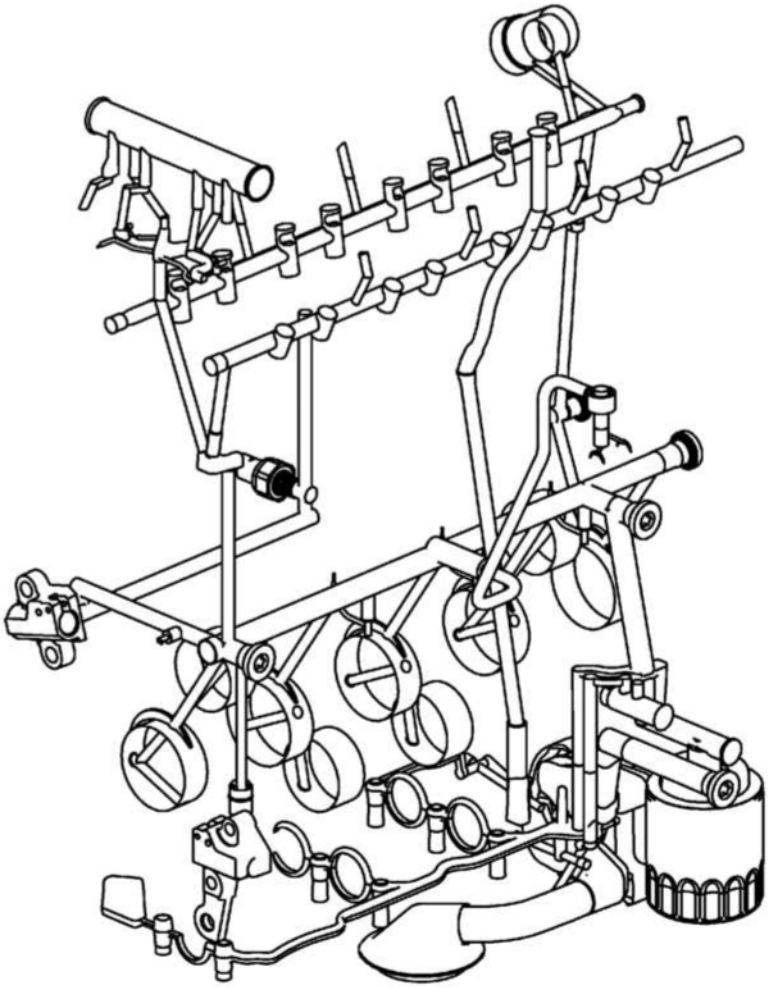

Fig. 2: Lubrication System (LTG)
Courtesy of GENERAL MOTORS COMPANY

Oil is applied under pressure to the crankshaft, connecting rods, balance shaft assembly, camshaft bearing surfaces, rocker arms, valve lash adjusters and timing chain hydraulic tensioner. All other moving parts are lubricated by gravity flow or splash. Oil enters the oil pump through a fixed inlet screen. The oil pump is driven by the balancer shaft assembly's sprocket. The oil pump body is attached to the rear of balancer shaft assembly. The pressurized oil passes through the cylinder head assembly restrictor orifice into the cylinder head's OCV and routed through passages cast into the camshaft cover assembly to each camshaft feed gallery and camshaft drip rail. OCV actuates the 2-Step intake rocker arm assemblies to control valve travel. The oil filter is a metal canister type. A by-pass valve in the filter assembly allows continuous oil flow in case the oil filter should become restricted. Oil then enters the gallery where it is distributed to the balance shafts, crankshaft, camshafts and camshaft timing chain oiler nozzle. The connecting rod bearings are oiled by constant oil flow passages through the crankshaft connecting the main journals to the rod journals. A groove around each upper main bearing furnishes oil to the drilled crankshaft passages. The pressurized oil passes through the cylinder head restrictor orifice into the cylinder head and then into each camshaft feed gallery. Cast passages feed each hydraulic element adjuster and drilled passages feed each camshaft bearing surface, rocker arm, and drip rail. An engine oil pressure switch or sensor is installed at the end. Oil returns to the oil pan through passages cast into the cylinder head. The timing chain lubrication drains directly into the oil pan.

CLEANLINESS AND CARE

An automobile engine is a combination of many machined, honed, polished, and lapped surfaces with tolerances that are measured in ten thousandths of an inch. When any internal engine parts are serviced, care and cleanliness are important. A liberal coating of engine oil should be applied to friction areas during assembly to protect and lubricate the surfaces during initial operation. Throughout this section, it should be understood that proper cleaning and protection of machined surfaces and friction areas are part of the repair procedure. This is considered standard shop practice even if not specifically stated.

When valve train components are removed for service, they should be retained in order. At the time of installation, they should be installed in the same locations and with the same mating surfaces as when removed.

SEPARATING PARTS

NOTE:

- **Disassembly of the piston, press fit design piston pin, and connecting rod may create scoring or damage to the piston pin and piston pin bore. If the piston, pin, and connecting rod have been disassembled, replace the components as an assembly.**
- **Many internal engine components will develop specific wear patterns on their friction surfaces.**
- **When disassembling the engine, internal components MUST be separated, marked, or organized in a way to ensure installation to their original location and position.**

Separate, mark, or organize the following components:

- Piston and the piston pin
- Piston to the specific cylinder bore
- Piston rings to the piston
- Connecting rod to the crankshaft journal
- Connecting rod to the bearing cap

  A paint stick or etching/engraving type tool are recommended. Stamping the connecting rod or cap near the bearing bore may affect component geometry.

- Crankshaft main and connecting rod bearings
- Camshaft and valve lash adjusters
- Valve lash adjusters, lash adjuster guides, pushrods and rocker arm assemblies
- Valve to the valve guide
- Valve spring and shim to the cylinder head location
- Engine block main bearing cap location and direction
- Oil pump drive and driven gears

REPLACING ENGINE GASKETS

Special Tools

EN-28410 Gasket Remover

For equivalent regional tools, refer to **Special Tools** .

Gasket Reuse and Applying Sealants

- Do not reuse any gasket unless specified.
- Gaskets that can be reused will be identified in the service procedure.
- Do not apply sealant to any gasket or sealing surface unless called out in the service information.

Separating Components

- Use a rubber mallet to separate components.
- Bump the part sideways to loosen the components.
- Bumping should be done at bends or reinforced areas to prevent distortion of parts.

Cleaning Gasket Surfaces

- Remove all gasket and sealing material from the part using the **EN-28410** remover or equivalent.
- Care must be used to avoid gouging or scraping the sealing surfaces.
- Do not use any other method or technique to remove sealant or gasket material from a part.
- Do not use abrasive pads, sand paper, or power tools to clean the gasket surfaces.
    - These methods of cleaning can cause damage to the component sealing surfaces.
    - Abrasive pads also produce a fine grit that the oil filter cannot remove from the oil.
    - This grit is abrasive and has been known to cause internal engine damage.

Assembling Components

- When assembling components, use only the sealant specified or equivalent in the service procedure.
- Sealing surfaces should be clean and free of debris or oil.
- Specific components such as crankshaft oil seals or valve stem oil seals may require lubrication during assembly.
- Components requiring lubrication will be identified in the service procedure.
- When applying sealant to a component, apply the amount specified in the service procedure.
- Do not allow the sealant to enter into any blind threaded holes, as it may prevent the bolt from clamping properly or cause component damage when tightened.
- Tighten bolts to specifications. Do not overtighten.

USE OF ROOM TEMPERATURE VULCANIZING (RTV) SEALANT

Room Temperature Vulcanizing sealant is specified for use. The correct sealer and amount must be used in the proper location to prevent oil leaks. Use only the specific sealer or the equivalent as recommended in the service procedure.

Room Temperature Vulcanizing (RTV) Sealer

- RTV sealant hardens when exposed to air. This type sealer is used where 2 rigid parts, such as the lower crankcase and the engine block, are assembled together.

- Do not use RTV sealant in areas where extreme temperatures are expected. These areas include: exhaust manifold, head gasket, or other surfaces where a gasket eliminator is specified.
- Follow all safety recommendations and directions that are on the container.

  To remove the sealant or the gasket material, refer to **Replacing Engine Gaskets**.

- Apply RTV to a clean surface. Use a bead size as specified in the procedure. Run the bead to the inside of any bolt holes. Do not allow the sealer to enter any blind threaded holes, as it may prevent the bolt from clamping properly or cause damage when the bolt is tightened.
- Assemble components while RTV is still wet, within 3 minutes. Do not wait for RTV to skin over.
- Tighten bolts to specifications. Do not overtighten.

TOOLS AND EQUIPMENT

Special tools are listed and illustrated throughout this section with a complete listing at the end of the section. These tools, or their equivalents, are specially designed to quickly and safely accomplish the operations for which they are intended. The use of these special tools will also minimize possible damage to engine components. Some precision measuring tools are required for inspection of certain critical components. Torque wrenches and a torque angle meter are necessary for the proper tightening of various fasteners.

To properly service the engine assembly, the following items should be readily available:

- Approved eye protection and safety gloves
- A clean, well lit, work area
- A suitable parts cleaning tank
- A compressed air supply
- Trays or storage containers to keep parts and fasteners organized
- An adequate set of hand tools
- Approved engine repair stand
- An approved engine lifting device that will adequately support the weight of the components

2014 Engine

Engine Mechanical - 2.0L (LTG) - Diagnostic Information and Procedures - Regal

DIAGNOSTIC INFORMATION AND PROCEDURES

DTC P06DA-P06DC

Diagnostic Instructions

- Perform the **Diagnostic System Check - Vehicle** prior to using this diagnostic procedure.
- Review **Strategy Based Diagnosis** for an overview of the diagnostic approach.
- **Diagnostic Procedure Instructions** provides an overview of each diagnostic category.

DTC Descriptors

DTC P06DA

Engine Oil Pressure Control Solenoid Valve Control Circuit

DTC P06DB

Engine Oil Pressure Control Solenoid Valve Control Circuit Low Voltage

DTC P06DC

Engine Oil Pressure Control Solenoid Valve Control Circuit High Voltage

Diagnostic Fault Information

Circuit	Short to Ground	Open / High Resistance	Short to Voltage	Signal Performance
Ignition	P0031, P0132, P0134, P0135, P0137, P0443, P0597, P0598, P06DB	P06DA	-	-
Control	P06DB	P06DC	P06DC	P06DD, P06DE

Circuit/System Description

The engine oil pressure control solenoid is a two port solenoid valve used to control engine oil pressure inside the mechanical engine oil pump. The ECM controls the commanded states of the engine oil pressure control solenoid with the following ECM input's.

- Engine Speed
- Engine Oil Temperature (calculated from the Engine Coolant Temperature Sensor)
- Engine Oil Pressure

- Engine Run Time

With the engine oil pressure control solenoid commanded Off, engine oil pressure is higher. When commanded On engine oil pressure is lower. The purpose of this diagnostic is to isolate an electrical problem with the engine oil pressure control solenoid or wiring.

Conditions for Running the DTC

- The system voltage is greater than 11 V.
- DTC P06DA, P06DB or P06DC runs continuously when the above conditions are met.

Conditions for Setting the DTC

The ECM detects that the commanded state of the driver and the actual state of the control circuit do not match for a minimum of 0.25 s.

Action Taken When the DTC Sets

- DTC P06DB is a Type A DTC.
- DTC P06DA and P06DC are Type B DTCs.
- ECM commands the engine oil pressure control solenoid valve OFF.
- ECM commands Reduced Engine Power.

Conditions for Clearing the MIL/DTC

- DTC P06DB is a Type A DTC.
- DTC P06DA and P06DC are Type B DTCs.

Reference Information

Schematic Reference

Engine Mechanical Schematics

Connector End View Reference

COMPONENT CONNECTOR END VIEWS - INDEX

Electrical Information Reference

- **Circuit Testing**
- **Connector Repairs**
- **Testing for Intermittent Conditions and Poor Connections**
- **Wiring Repairs**

DTC Type Reference

Powertrain Diagnostic Trouble Code (DTC) Type Definitions

Scan Tool Reference

Control Module References for scan tool information

Circuit/System Verification

1. Ignition ON.
2. Verify the parameters listed below do not display Malfunction when commanding the Engine Oil Pressure Control Solenoid Valve ON and OFF with a scan tool.
   - Engine Oil Pressure Control Solenoid Valve Control Circuit Low Voltage Test Status
   - Engine Oil Pressure Control Solenoid Valve Control Circuit Open Test Status
   - Engine Oil Pressure Control Solenoid Valve Control Circuit High Voltage Test Status
   - **If Malfunction is displayed**

     Refer to Circuit/System Testing.

   - **If Malfunction is not displayed**
3. Operate the vehicle within the Conditions for Running the DTC. You may also operate the vehicle within the conditions that you observed from the Freeze Frame/Failure Records data.
4. Verify the DTC does not set.
   - **If any DTC sets**

     Refer to Circuit/System Testing.

   - **If the DTC does not set**
5. All OK.

Circuit/System Testing

1. Ignition OFF, disconnect the harness connector at the Q44 Engine Oil Pressure Control Solenoid Valve, ignition ON.
2. Verify that a test lamp illuminates between the ignition circuit terminal 1 and ground.
   - **If the test lamp does not illuminate and the circuit fuse is good**
     1. Ignition OFF, remove the test lamp.
     2. Test for less than 2 ohms in the ignition circuit end to end.
        - If 2 ohms or greater, repair the open/high resistance in the circuit.
        - If less than 2 ohms verify the fuse is not open and there is voltage at the fuse.
   - **If the test lamp does not illuminate and the circuit fuse is open**
     1. Ignition OFF, remove the test lamp.

     NOTE: An internal short in any component supplied by the fuse may cause the fuse to open and set a DTC when the component is activated.

     2. Test for infinite resistance between the ignition circuit and ground

        - If less than infinite resistance, repair the short to ground in the circuit.
        - If infinite resistance, test all the components connected to fuse and replace as necessary.
    - **If the test lamp illuminates**
3. Verify that a test lamp does not illuminate between the ignition circuit terminal 1 and the control circuit terminal 2.
    - **If the test lamp illuminates**
    1. Ignition OFF, disconnect the harness connector at the K20 Engine Control Module.
    2. Test for infinite resistance between the control circuit and ground.
        - If less than infinite resistance, repair the short to ground on the circuit.
        - If infinite resistance, replace the K20 Engine Control Module.
    - **If the test lamp does not illuminate**
4. Remove the test lamp, command the Q44 Engine Oil Pressure Control Solenoid Valve ON with a scan tool.
5. Verify the scan tool Engine Oil Pressure Control Solenoid Valve Control Circuit High Voltage Test Status parameter displays OK.
    - **If OK is not displayed**
    1. Ignition OFF, disconnect the harness connector at the K20 Engine Control Module, ignition ON.
    2. Test for less than 1 V between the control circuit and ground.
        - If 1 V or greater, repair the short to voltage on the circuit.
        - If less than 1 V, replace the K20 Engine Control Module.
    - **If OK is displayed**
6. Install a 3 A fused jumper wire between the control circuit terminal 2 and the ignition circuit terminal 1.
7. Verify the scan tool Engine Oil Pressure Control Solenoid Valve Circuit High Voltage Test Status parameter is displaying Malfunction when commanding the Engine Oil Pressure Control Solenoid Valve ON with a scan tool.
    - **If Malfunction is not displayed**
    1. Ignition OFF, disconnect the harness connector at the K20 Engine Control Module.
    2. Test for less than 2 ohms in the control circuit end to end.
        - If 2 ohms or greater, repair the open/high resistance in the circuit.
        - If less than 2 ohms replace the K20 Engine Control Module.
    - **If Malfunction is displayed**
8. Test or replace the Q44 Engine Oil Pressure Control Solenoid Valve.

Component Testing

Static Test

1. Ignition OFF, disconnect the harness connector at the Q44 Engine Oil Pressure Control Solenoid Valve.
2. Test for 10-30 ohms between the control terminal 2 and the ignition voltage terminal 1.
    - **If not between 10.0-30.0 ohms**

Replace the Q44 Engine Oil Pressure Control Solenoid Valve.

- **If between 10.0-30.0 ohms**

3. Test for infinite resistance between each terminal and the Q44 Engine Oil Pressure Control Solenoid Valve housing.
   - **If not OL**

     Replace the Q44 Engine Oil Pressure Control Solenoid Valve.

   - **If OL**
4. All OK.

Repair Instructions

Perform the **Diagnostic Repair Verification** after completing the repair.

- **Oil Pump Flow Control Valve Replacement** Engine Oil Pressure Control Solenoid Valve Replacement
- **Control Module References** for engine control module replacement, programming, and setup

DTC P06DD OR P06DE

Diagnostic Instructions

- Perform the **Diagnostic System Check - Vehicle** prior to using this diagnostic procedure.
- Review **Strategy Based Diagnosis** for an overview of the diagnostic approach.
- **Diagnostic Procedure Instructions** provides an overview of each diagnostic category.

DTC Descriptors

DTC P06DD

Engine Oil Pressure Control Solenoid Valve Stuck Off

DTC P06DE

Engine Oil Pressure Control Solenoid Valve Stuck On

Circuit/System Description

The engine oil pressure control solenoid is a two port solenoid valve used to control engine oil pressure inside the mechanical engine oil pump. The ECM controls the commanded states of the engine oil pressure control solenoid with the following ECM input's.

- Engine Speed
- Engine Oil Temperature (calculated from the Engine Coolant Temperature Sensor)
- Engine Oil Pressure
- Engine Run Time

With the engine oil pressure control solenoid commanded Off, engine oil pressure is higher. When commanded On engine oil pressure is lower. The purpose of this diagnostic is to isolate either a stuck on or stuck off engine oil pressure control solenoid.

Conditions for Running the DTC

P06DD

- DTC P0101, P0102, P0103, P0106, P0107, P0108, P0111, P0112, P0113, P0114, P0117, P0118, P0119, P0128, P0335, P0336, P0521, P0522, P0523, P06DA, P06DB, P06DC, P06DD, P06DE, P111E, P2227, P2228, P2229 or P2230 is not set.
- Engine speed within range of 1,500 RPM to 2,500 RPM.

P06DE

- DTC P0101, P0102, P0103, P0106, P0107, P0108, P0111, P0112, P0113, P0114, P0117, P0118, P0119, P0128, P0335, P0336, P0521, P0522, P0523, P06DA, P06DB, P06DC, P06DD, P06DE, P111E, P2227, P2228, P2229 or P2230 is not set.
- Engine running for greater than 20 s.
- Engine speed is within range of 1500 RPM to 2500 RPM.
- Engine oil pressure control solenoid in low pressure for greater than 1.5 s.

Conditions for Setting the DTC

P06DD or P06DE

Engine oil pressure is above or below a calibrated amount during the time the solenoid is changing from ON to OFF states.

Action Taken When the DTC Sets

P06DD

DTC P06DD is a Type B DTC.

P06DE

DTC P06DE is a Type A DTC.

Conditions for Clearing the DTC

P06DD

DTC P06DD is a Type B DTC.

P06DE

DTC P06DE is a Type A DTC.

Reference Information

Schematic Reference

Engine Mechanical Schematics

Connector End View Reference

COMPONENT CONNECTOR END VIEWS - INDEX

Electrical Information Reference

- **Circuit Testing**
- **Connector Repairs**
- **Testing for Intermittent Conditions and Poor Connections**
- **Wiring Repairs**

DTC Type Reference

Powertrain Diagnostic Trouble Code (DTC) Type Definitions

Scan Tool Reference

Control Module References for scan tool information

Circuit/System Verification

1. Verify correct engine oil level and condition. Refer to **Engine Mechanical Specifications** .
2. Engine Running, increase and maintain the engine speed at 1,800 RPM.

   NOTE: Selecting the scan tool line graph function may make it easier to identify Engine Oil Pressure changes.

3. Verify the scan tool Engine Oil Pressure parameter changes greater than 30 kPa (4 PSI) when commanding the Engine Oil Pressure Control Solenoid On and Off.
   - **If the parameter does not change**

     Replace the Q44 Engine Oil Pressure Control Solenoid.

   - **If the parameter changes**
4. Operate the vehicle within the Conditions for Running the DTC. You may also operate the vehicle within the conditions that you observed from the Freeze Frame/Failure Records data.
5. Verify the DTC does not set.
   - **If the DTC sets**

     Refer to **Oil Pressure Diagnosis and Testing**.

   - **If the DTC does not set**
6. All OK.

Repair Instructions

Perform the **Diagnostic Repair Verification** after completing the repair.

Oil Pump Flow Control Valve Replacement Engine Oil Pressure Control Solenoid Replacement

SYMPTOMS - ENGINE MECHANICAL

Strategy Based Diagnostics

1. Perform the **Diagnostic System Check - Vehicle** before using the symptom tables, if applicable.
2. Review the system operations in order to familiarize yourself with the system functions. Refer to **Disassembled Views** , **Engine Component Description** , and **Lubrication Description** .

All diagnosis on a vehicle should follow a logical process. Strategy based diagnostics is a uniform approach for repairing all systems. The diagnostic flow may always be used in order to resolve a system condition. The diagnostic flow is the place to start when repairs are necessary.

Visual/Physical Inspection

- Inspect for aftermarket devices which could affect the operation of the engine.
- Inspect the easily accessible or visible system components for obvious damage or conditions which could cause the symptom.
- Check for the correct oil level, proper oil viscosity, and correct filter application.
- Verify the exact operating conditions under which the concern exists. Note factors such as engine RPM, ambient temperature, engine temperature, amount of engine warm-up time, and other specifics.
- Compare the engine sounds, if applicable, to a known good engine and make sure you are not trying to correct a normal condition.

Intermittent

Test the vehicle under the same conditions that the customer reported in order to verify the system is operating properly.

Symptom List

Refer to a symptom diagnostic procedure from the following list in order to diagnose the symptom:

- **Base Engine Misfire without Internal Engine Noises**
- **Base Engine Misfire with Abnormal Internal Lower Engine Noises**
- **Base Engine Misfire with Abnormal Valve Train Noise**
- **Base Engine Misfire with Coolant Consumption**
- **Base Engine Misfire with Excessive Oil Consumption**
- **Engine Noise on Start-Up, but Only Lasting a Few Seconds**
- **Upper Engine Noise, Regardless of Engine Speed**
- **Lower Engine Noise, Regardless of Engine Speed**
- **Engine Noise Under Load**

- **Engine Will Not Crank - Crankshaft Will Not Rotate**
- **Engine Compression Test**
- **Turbocharger Leaking Fluids Externally**
- **Turbocharger Noise**
- **Turbocharger Smoke or Smell**
- **Turbocharger Loss of Boost Pressure**
- **Oil Consumption Diagnosis**
- **Oil Pressure Diagnosis and Testing**
- **Oil Leak Diagnosis**
- **Drive Belt Chirping, Squeal, and Whine Diagnosis**
- **Drive Belt Rumbling and Vibration Diagnosis**
- **Drive Belt Falls Off and Excessive Wear Diagnosis**
- **Drive Belt Tensioner Diagnosis**

BASE ENGINE MISFIRE WITHOUT INTERNAL ENGINE NOISES

Base Engine Misfire without Internal Engine Noises

Cause	Correction
Abnormalities, severe cracking, bumps, or missing areas in the accessory drive belt Abnormalities in the accessory drive system and/or components may cause engine RPM variations and lead to a misfire DTC. A misfire code may be present without an actual misfire condition.	Replace the drive belt.
Worn, damaged, or mis-aligned accessory drive components or excessive pulley runout may lead to a misfire DTC. A misfire code may be present without an actual misfire condition.	Inspect the components, and repair or replace as required.
A loose or improperly installed engine flywheel or crankshaft balancer A misfire code may be present without an actual misfire condition.	Repair or replace the flywheel and/or balancer as required.
Restricted exhaust system A severe restriction in the exhaust flow can cause significant loss of engine performance and may set a DTC. Possible causes of restrictions include collapsed or dented pipes or plugged mufflers and/or catalytic converters.	Repair or replace as required.
Improperly installed or damaged vacuum hoses	Repair or replace as required.
Improper sealing between the intake manifold and cylinder heads or throttle body.	Replace the intake manifold, gaskets, cylinder heads, and/or throttle body as required.
Improperly installed or damaged MAP sensor The sealing grommet of the MAP sensor should not be torn or damaged.	Repair or replace the MAP sensor as required.
Damage to the MAP sensor housing	Replace the intake manifold.

Worn or loose rocker arms The rocker arm bearing end caps and/or needle bearings should be intact and in the proper position.	Replace the valve rocker arms as required.
Stuck valves Carbon buildup on the valve stem can cause the valve not to close properly.	Repair or replace as required.
Excessively worn or mis-aligned timing chain	Replace the timing chain and sprockets as required.
Worn camshaft lobes	Replace the camshaft and valve lash adjusters.
Excessive oil pressure A lubrication system with excessive oil pressure may lead to excessive valve lifter pump up and loss of compression.	• Perform an oil pressure test. Refer to **Oil Pressure Diagnosis and Testing**. • Repair or replace the oil pump as required. • Replace the oil control valve solenoid as required.
Faulty cylinder head gaskets and/or cracking or other damage to the cylinder heads and engine block cooling system passages Coolant consumption may or may not cause the engine to overheat.	• Inspect for spark plugs saturated by coolant. • Inspect the cylinder heads, engine block, and/or head gaskets. • Repair or replace as required.
Worn piston rings Oil consumption may or may not cause the engine to misfire.	• Inspect the spark plugs for oil deposits. • Inspect the cylinders for a loss of compression. Refer to **Engine Compression Test**. • Perform cylinder leak down and compression testing to identify the cause. • Repair or replace as required.
A damaged crankshaft reluctor wheel A damaged crankshaft reluctor wheel can result in different symptoms depending on the severity and location of the damage. • Systems with electronic communications, DIS or coil per cylinder, and severe reluctor ring damage may exhibit periodic loss of crankshaft position, stop delivering a signal, and then re-sync the crankshaft position. • Systems with electronic communication, DIS or coil per cylinder, and slight reluctor ring damage may exhibit no loss of crankshaft position and no misfire may occur. However, a P0300 DTC may be set. • Systems with mechanical communications, high voltage switch, and severe reluctor ring damage may cause additional pulses and effect fuel and spark delivery to the point of generating a P0300 DTC or P0336.	Replace the sensor and/or crankshaft as required.

BASE ENGINE MISFIRE WITH ABNORMAL INTERNAL LOWER ENGINE NOISES

Base Engine Misfire with Abnormal Internal Lower Engine Noises

Cause	Correction
Abnormalities, severe cracking, bumps or missing areas in the accessory drive belt Abnormalities in the accessory drive system and/or components may cause engine RPM variations, noises similar to a faulty lower engine, and also lead to a misfire condition. A misfire code may be present without an actual misfire condition.	Replace the drive belt.
Worn, damaged, or mis-aligned accessory drive components or excessive pulley runout A misfire code may be present without an actual misfire condition.	Inspect the components, repair or replace as required.
Loose or improperly installed engine flywheel or crankshaft balancer A misfire code may be present without an actual misfire condition.	Repair or replace the flywheel and/or balancer as required.
Worn piston rings Oil consumption may or may not cause the engine to misfire.	• Inspect the spark plugs for oil deposits. • Inspect the cylinders for a loss of compression. Refer to **Engine Compression Test**. • Perform cylinder leak down and compression testing to determine the cause. • Repair or replace as required.
Worn crankshaft thrust bearings Severely worn thrust surfaces on the crankshaft and/or thrust bearing may permit fore and aft movement of the crankshaft, and create a DTC without an actual misfire condition.	Replace the crankshaft and bearings as required.

BASE ENGINE MISFIRE WITH ABNORMAL VALVE TRAIN NOISE

Base Engine Misfire with Abnormal Valve Train Noise

Cause	Correction
Worn or loose rocker arms The rocker arm bearing end caps and/or needle bearings should be intact within the rocker arm assembly.	Replace the valve rocker arms as required.
Stuck valves Carbon buildup on the valve stem can cause the valve to not close properly.	Repair or replace as required.
Excessively worn or mis-aligned timing chain	Replace the timing chain and sprockets as required.
Worn camshaft lobes	Replace the camshaft, valve lash adjusters, and roller finger followers.
Sticking valve lash adjusters	Replace as required.

Malfunctioning camshaft position actuators - improper oil viscosity or contamination.	1. Verify correct oil pressure. If low, inspect the bottom of the oil filter for oil filter drain back feature. Refer to **Oil Pressure Diagnosis and Testing**. 2. Isolate the noise to a specific camshaft position actuator. Disconnect the electrical connector on the camshaft position actuator solenoid valves and start the vehicle. If noise is gone, repeat procedure to limit to an individual actuator. Refer to **Camshaft Position Actuator and Camshaft Replacement - Intake** , or **Camshaft Position Actuator and Camshaft Replacement - Exhaust** .

BASE ENGINE MISFIRE WITH COOLANT CONSUMPTION

Base Engine Misfire with Coolant Consumption

Cause	Correction
Faulty cylinder head gasket and/or cracking, or other damage to the cylinder head and engine block cooling system passages. Coolant consumption may or may not cause the engine to overheat.	• Inspect for spark plugs saturated by coolant. • Perform a cylinder leak down test. • Inspect the cylinder head and engine block for damage to the coolant passages and/or a faulty head gasket. • Repair or replace as required.

BASE ENGINE MISFIRE WITH EXCESSIVE OIL CONSUMPTION

Base Engine Misfire with Excessive Oil Consumption

Cause	Correction
Worn valves, valve guides and/or valve stem oil seals	• Inspect the spark plugs for oil deposits. • Repair or replace as required.
Worn piston rings Oil consumption may or may not cause the engine to misfire.	• Inspect the spark plugs for oil deposits. • Inspect the cylinders for a loss of compression. Refer to **Engine Compression Test**. • Perform cylinder leak down and compression testing to determine the cause. • Repair or replace as required.

ENGINE NOISE ON START-UP, BUT ONLY LASTING A FEW SECONDS

Engine Noise on Start-Up, but Only Lasting a Few Seconds

Cause	Correction
Incorrect oil filter without anti-drainback feature	Install the correct oil filter.

Incorrect oil viscosity	1. Drain the oil. 2. Install the correct viscosity oil.
High valve lash adjuster leak down rate	Replace the lash adjusters as required.
Worn crankshaft thrust bearing	1. Inspect the thrust bearing and crankshaft. 2. Repair or replace as required.
Damaged or faulty oil filter by-pass valve	1. Inspect the oil filter by-pass valve for proper operation. 2. Repair or replace as required.
Malfunctioning camshaft position actuators - improper oil viscosity or contamination.	1. Verify correct oil pressure. If low, inspect the bottom of the oil filter for oil filter drain back feature. Refer to **Oil Pressure Diagnosis and Testing**. 2. Isolate the noise to a specific camshaft position actuator. Disconnect the electrical connector on the camshaft position actuator solenoid valves and start the vehicle. If noise is gone, repeat procedure to limit to an individual actuator. Refer to **Camshaft Position Actuator and Camshaft Replacement - Intake** , or **Camshaft Position Actuator and Camshaft Replacement - Exhaust** .

UPPER ENGINE NOISE, REGARDLESS OF ENGINE SPEED

Upper Engine Noise, Regardless of Engine Speed

Cause	Correction
Low oil pressure	• Perform an oil pressure test. Refer to **Oil Pressure Diagnosis and Testing**. • Repair or replace as required.
Worn valve rocker arm	Replace the valve rocker arm.
Improper lubrication to the valve rocker arms	Inspect the following components, and repair or replace as required: • The valve rocker arm • The valve lifter • The oil filter bypass valve • The oil pump and pump screen • The engine block oil galleries
Broken valve spring	Replace the valve spring.
Worn or dirty valve lash adjusters	Replace the valve lash adjusters.
Stretched or broken timing chain and/or damaged sprocket teeth	Replace the timing chain and sprockets.
Worn, damaged, or faulty timing chain tensioners	Replace tensioners

Worn engine camshaft lobes	• Inspect the engine camshaft lobes. • Replace the camshaft and valve lash adjusters as required.
Worn valve guides or valve stems	Inspect the following components, and repair as required: • The valves • The valve guides
Stuck valves Carbon on the valve stem or valve seat may cause the valve to stay open.	Inspect the following components, and repair as required: • The valves • The valve guides

LOWER ENGINE NOISE, REGARDLESS OF ENGINE SPEED

Lower Engine Noise, Regardless of Engine Speed

Cause	Correction
Low oil pressure	• Perform an oil pressure test. Refer to **Oil Pressure Diagnosis and Testing**. • Repair or replace damaged components as required.
Worn accessory drive components - abnormalities, such as severe cracking, bumps, or missing areas in the accessory drive belt and/or misalignment of system components	1. Inspect the accessory drive system. 2. Repair or replace as required.
Loose or damaged crankshaft balancer	1. Inspect the crankshaft balancer. 2. Repair or replace as required.
Detonation or spark knock	Verify the correct operation of the ignition system. Refer to **Symptoms - Engine Controls** .
Loose torque converter bolts	1. Inspect the torque converter bolts and flywheel. 2. Repair or replace as required.
Loose or damaged flywheel	Repair or replace the flywheel.
Damaged oil pan, contacting the oil pump screen - an oil pan that has been damaged, may improperly position the oil pump screen, preventing proper oil flow to the oil pump.	1. Inspect the oil pan. 2. Inspect the oil pump screen. 3. Repair or replace as required.
Oil pump screen loose, damaged or restricted	1. Inspect the oil pump screen. 2. Repair or replace as required.
Excessive piston-to-cylinder bore clearance	1. Inspect the piston and cylinder bore. 2. Repair as required.
Excessive piston pin-to-bore clearance	1. Inspect the piston, piston pin, and the connecting rod.

	2. Repair or replace as required.
Excessive connecting rod bearing clearance	Inspect the following components, and repair as required: • The connecting rod bearings • The connecting rods • The crankshaft • The crankshaft journals
Excessive crankshaft bearing clearance	Inspect the following components, and repair as required: • The crankshaft bearings • The crankshaft journals
Incorrect piston, piston pin, and connecting rod installation - pistons must be installed with the mark or dimple on the top of the piston, facing the front of the engine. Piston pins must be centered in the connecting rod pin bore.	1. Verify the pistons, piston pins and connecting rods are installed correctly. 2. Repair as required.

ENGINE NOISE UNDER LOAD

Engine Noise Under Load

Cause	Correction
Low oil pressure	1. Perform an oil pressure test. Refer to **Oil Pressure Diagnosis and Testing**. 2. Repair or replace as required.
Detonation or spark knock	Verify the correct operation of the ignition. Refer to **Symptoms - Engine Controls** .
Loose torque converter bolts	1. Inspect the torque converter bolts and flywheel. 2. Repair as required.
Cracked flywheel, automatic transmission	1. Inspect the flywheel bolts and flywheel. 2. Repair as required.
Excessive connecting rod bearing clearance	Inspect the following components, and repair as required: • The connecting rod bearings • The connecting rods • The crankshaft
Excessive crankshaft bearing clearance	Inspect the following components, and repair as required: • The crankshaft bearings • The crankshaft journals • The cylinder block crankshaft bearing bore

Malfunctioning camshaft position actuators - improper oil viscosity or contamination.	1. Verify correct oil pressure. If low, inspect the bottom of the oil filter for oil filter drain back feature. Refer to **Oil Pressure Diagnosis and Testing**. 2. Isolate the noise to a specific camshaft position actuator. Disconnect the electrical connector on the camshaft position actuator solenoid valves and start the vehicle. If noise is gone, repeat procedure to limit to an individual actuator. Refer to **Camshaft Position Actuator Intake Solenoid Valve Replacement** , or **Camshaft Position Actuator Exhaust Solenoid Valve Replacement** .

ENGINE WILL NOT CRANK - CRANKSHAFT WILL NOT ROTATE

Engine Will Not Crank - Crankshaft Will Not Rotate

Cause	Correction
Seized accessory drive system component	1. Remove accessory drive belts. 2. Rotate crankshaft by hand at the balancer or flywheel location.
Hydraulically locked cylinder • Coolant/antifreeze in cylinder • Oil in cylinder • Fuel in cylinder	1. Remove spark plugs and check for fluid. 2. Inspect for broken head gasket. 3. Inspect for cracked engine block or cylinder head. 4. Inspect for a sticking fuel injector. 5. Inspect for cracked cylinder wall.
Seized automatic transmission torque converter	1. Remove the torque converter bolts. 2. Rotate crankshaft by hand at the balancer or flywheel location.
Seized manual transmission	1. Disengage the clutch. 2. Rotate crankshaft by hand at the balancer or flywheel location.
Broken timing chain and/or gears	1. Inspect timing chain and gears. 2. Repair as required.
Seized balance shaft	1. Inspect balance shaft. 2. Repair as required.
Material in cylinder • Broken valve • Piston material • Foreign material • Cracked cylinder wall	1. Inspect cylinder for damaged components and/or foreign materials. 2. Inspect for fallen cylinder wall. 3. Repair or replace as required.

Seized crankshaft or connecting rod bearings	1. Inspect crankshaft and connecting rod bearings. 2. Inspect for fallen cylinder wall. 3. Repair as required.
Bent or broken connecting rod	1. Inspect connecting rods. 2. Repair as required.
Broken crankshaft	1. Inspect crankshaft. 2. Repair as required.

COOLANT IN COMBUSTION CHAMBER

Coolant in Combustion Chamber

Cause	Correction
DEFINITION: Excessive white smoke and/or coolant type odor coming from the exhaust pipe may indicate coolant in the combustion chamber. Low coolant levels, an inoperative cooling fan, or a faulty thermostat may lead to an "overtemperature" condition which may cause engine component damage. 1. A slower than normal cranking speed may indicate coolant entering the combustion chamber. Refer to **Engine Will Not Crank - Crankshaft Will Not Rotate**. 2. Remove the spark plugs and inspect for spark plugs saturated by coolant or coolant in the cylinder bore. 3. Inspect by performing a cylinder leak-down test. During this test, excessive air bubbles within the coolant may indicate a faulty gasket or damaged component. 4. Inspect by performing a cylinder compression test. Two cylinders "side-by-side" on the engine block, with low compression, may indicate a failed cylinder head gasket. Refer to **Engine Compression Test**.	
Faulty cylinder head gasket	Replace the head gasket and components as required. Refer to **Cylinder Head Cleaning and Inspection** , and **Cylinder Head Replacement** .
Warped cylinder head	Replace the cylinder head and gasket. Refer to **Cylinder Head Cleaning and Inspection** .
Cracked cylinder head	Replace the cylinder head and gasket.
Cylinder head or block porosity	Replace the components as required.

COOLANT IN ENGINE OIL

Coolant in Engine Oil

Cause	Correction
DEFINITION: Foamy or discolored oil or an engine oil "overfill" condition may indicate coolant entering the engine crankcase. Low coolant levels, an inoperative cooling fan, or a faulty thermostat may lead to an "overtemperature" condition which may cause engine component damage. Contaminated engine oil and oil filter should be changed. 1. Inspect the oil for excessive foaming or an overfill condition. Oil diluted by coolant may not properly lubricate the crankshaft bearings and may lead to component damage. Refer to **Lower**	

Engine Noise, Regardless of Engine Speed. 2. Inspect by performing a cylinder leak-down test. During this test, excessive air bubbles within the cooling system may indicate a faulty gasket or damaged component. 3. Inspect by performing a cylinder compression test. Two cylinders "side-by-side" on the engine block with low compression may indicate a failed cylinder head gasket. Refer to **Engine Compression Test**.	
Faulty cylinder head gasket	Replace the head gasket and components as required. Refer to **Cylinder Head Cleaning and Inspection** , and **Cylinder Head Replacement** .
Warped cylinder head	Replace the cylinder head and gasket. Refer to **Cylinder Head Cleaning and Inspection** .
Cracked cylinder head	Replace the cylinder head and gasket.
Cylinder head or block porosity	Replace the components as required.

ENGINE COMPRESSION TEST

1. Charge the battery if the battery is not fully charged.
2. Disable the ignition system.
3. Disable the fuel injection system.
4. Remove all spark plugs.
5. Turn the ignition to the ON position.
6. Depress the accelerator pedal to position the throttle plate wide open.
7. Start with the compression gauge at zero and crank the engine through 4 compression strokes, 4 puffs.
8. Measure the compression for each cylinder. Record the readings.
9. If a cylinder has low compression, inject approximately 15 ml (1 tablespoon) of engine oil into the combustion chamber through the spark plug hole. Measure the compression again and record the reading.
10. The minimum compression in any 1 cylinder should not be less than 70 percent of the highest cylinder. No cylinder should read less than 690 kPa (100 psi). For example, if the highest pressure in any 1 cylinder is 1 035 kPa (150 psi), the lowest allowable pressure for any other cylinder would be 725 kPa (105 psi). (1 035 x 70% = 725) (150 x 70% = 105).
    - Normal - Compression builds up quickly and evenly to the specified compression for each cylinder.
    - Piston Rings Leaking - Compression is low on the first stroke. Compression builds up with the following strokes, but does not reach normal. Compression improves considerably when you add oil.
    - Valves Leaking - Compression is low on the first stroke. Compression usually does not build up on the following strokes. Compression does not improve much when you add oil.
    - If 2 adjacent cylinders have lower than normal compression, and injecting oil into the cylinders does not increase the compression, the cause may be a head gasket leaking between the cylinders.

TURBOCHARGER LEAKING FLUIDS EXTERNALLY

Turbocharger Leaking Fluids Externally

Condition	Action

Leaking Coolant from Coolant interfaces; Feed and/or Return Pipe	• Inspect Seal Surfaces on Bearing Housing, Pipes, and Banjo Bolt • If Turbo Seal Surface is damaged replace turbo • If Pipe Seal Surface is damaged replace Pipe • If Banjo Bolt Seal Surface is damaged replace Banjo Bolt • Reassemble with new seals in all cases
Leaking Coolant from area other than Coolant interfaces; NOT Feed and/or Return Pipe	Replace component that is leaking
Leaking Oil from Oil interfaces; Feed and/or Return Pipe	• Inspect Seal Surfaces on Bearing Housing, Pipes, and Bolts • If Turbo Seal Surface is damaged replace turbo • If Pipe Seal Surface is damaged replace Pipe • If Bolt Seal Surface is damaged replace Bolt • Reassemble with new seals in all cases
Oil on Compressor Cover	• Check for correct PCV System functionality, refer to **Crankcase Ventilation System Inspection/Diagnosis** • Check Turbocharger Oil Drain Pipe for restriction • Check PCV connection in Compressor Housing, inspect O-ring • Check Fresh Air Duct connection at Compressor inlet, look for damage and replace if necessary • Check Compressor Outlet connection, look for damage and replace if necessary
All Other External Turbocharger Leaks	Replace Turbocharger

TURBOCHARGER NOISE

Some noise is normal. Compare to a known good vehicle.

Turbocharger Noise

Condition	Action
Compressor Inlet leaks or Obstructions	Inspect for leaks or obstructions in the Turbocharger inlet.
Compressor Outlet Leaks or Obstruction	Inspect for leaks or obstructions in the Turbocharger outlet.
Charge Air Cooler and Engine Intake system Leaks or Obstructions	• Inspect for leaks • Inspect for obstructions
Damaged Electric Recirculation Valve	• Check Seal to Compressor Cover • Check DTCs for Bypass/Recirculation codes, replace if necessary
Compressor/Turbine Wheel Damage - Bent or	

Broken Blades	Replace the Turbocharger.
Compressor/Turbine Wheel to Housing contact	Replace the Turbocharger.

TURBOCHARGER SMOKE OR SMELL

Turbocharger Smoke or Smell

Condition	Action
Oil or Coolant Leak	Correct the leak.
Exhaust Leak	• Inspect Gaskets and Sealing Surfaces • Correct Leak • Look for external cracks in Turbocharger components **NOTE:** **Cracks in the Turbine Inlet Partition Wall are acceptable.** • Replace turbocharger assembly if external cracks found
Nearby Component Out of Position/Touching Turbocharger	Check for Turbine housing for contact with nearby components.

TURBOCHARGER LOSS OF BOOST PRESSURE

Turbocharger Loss of Boost Pressure

Condition	Action
Perceived Loss of Boost	• Check DTC codes • No Codes Present - Do not replace Turbocharger

CYLINDER LEAKAGE TEST

Special Tools

EN 35667-A Cylinder Head Leakdown Tester

For equivalent regional tools, refer to **Special Tools** .

NOTE: **A leakage test may be performed in order to measure cylinder/combustion chamber leakage. High leakage may indicate one or more of the following:**

- Worn or burnt valves
- Broken valve springs
- Stuck valve lash adjusters
- Incorrect valve lash/adjustment
- Damaged piston

- Worn piston rings
- Worn or scored cylinder bore
- Damaged cylinder head gasket
- Cracked or damaged cylinder head
- Cracked or damaged engine block

WARNING: Unless directed otherwise, the ignition and start switch must be in the OFF or LOCK position, and all electrical loads must be OFF before servicing any electrical component. Disconnect the negative battery cable to prevent an electrical spark should a tool or equipment come in contact with an exposed electrical terminal. Failure to follow these precautions may result in personal injury and/or damage to the vehicle or its components.

For Vehicles equipped with OnStar® (UE1) with Back Up Battery:

The Back Up Battery is a redundant power supply to allow limited OnStar® functionality in the event of a main vehicle battery power disruption to the VCIM (OnStar®module). Do not disconnect the main vehicle battery or remove the OnStar® fuse with the ignition key in any position other than OFF. Retained accessory power should be allowed to time out or be disabled (simply opening the driver door should disable retained accessory power) before disconnecting power. Disconnecting power to the OnStar® module in any way while the ignition is On or with retained accessory power activated may cause activation of the OnStar® Back-Up Battery system and will discharge and permanently damage the back-up battery. Once the Back-Up Battery is activated it will stay on until it has completely discharged. The back-up battery is not rechargeable and once activated the back-up battery must be replaced.

1. Disconnect the battery ground negative cable.
2. Remove the spark plugs. Refer to **Spark Plug Replacement** in Engine Controls.
3. Rotate the crankshaft to place the piston in the cylinder being tested at Top Dead Center (TDC) of the compression stroke.
4. Install the **EN 35667-A** tester or equivalent.

NOTE: It may be necessary to hold the crankshaft balancer bolt to prevent the engine from rotating.

5. Apply shop air pressure to the **EN 35667-A** tester and adjust according to the manufacturers instructions.
6. Record the cylinder leakage value. Cylinder leakage that exceeds 25 percent is considered excessive and may require component service. In excessive leakage situations, inspect for the following conditions:
   - Air leakage sounds at the throttle body or air inlet hose that may indicate a worn or burnt intake

valve or a broken valve spring.
- Air leakage sounds at the exhaust system tailpipe that may indicate a worn or burnt exhaust valve or a broken valve spring.
- Air leakage sounds from the crankcase, oil level indicator tube, or oil fill tube that may indicate worn piston rings, a damaged piston, a worn or scored cylinder bore, a damaged engine block or a damaged cylinder head.
- Air bubbles in the cooling system may indicate a damaged cylinder head or a damaged cylinder head gasket.

7. Perform the leakage test on the remaining cylinders and record the values.

ENGINE OIL LEVEL SENSOR DIAGNOSIS

Diagnostic Instructions

- Perform the **Diagnostic System Check - Vehicle** prior to using this diagnostic procedure.
- Review **Strategy Based Diagnosis** for an overview of the diagnostic approach.
- **Diagnostic Procedure Instructions** provides an overview of each diagnostic category.

Diagnostic Fault Information

Circuit	Short to Ground	Open/High Resistance	Short to Voltage
Engine Oil Level Sensor Signal	2	1	-
Engine Oil Level Sensor Ground	-	1	-
1. DIC message Engine Oil Level Low always ON 2. DIC message Engine Oil Level Low always OFF			

Typical Scan Tool Data

Engine Oil Level Switch

Circuit	Short to Ground	Open	Short to Voltage
Operating Conditions: Ignition ON **Parameter Normal Range:** OK			
Engine Oil Level Sensor/Switch Signal	OK	Low	OK
Engine Oil Level Sensor/Switch Ground	-	Low	-

Circuit/System Description

The engine oil level sensor/switch is normally-closed with proper engine oil level. The switch opens when the engine oil level drops below a calibrated level. The engine control module (ECM) monitors the engine oil level signal circuit when the ignition is ON, and the engine is OFF. With the switch in the closed position, the ECM detects a low voltage on the signal circuit. With the switch in the open position, the ECM detects a high voltage on the signal circuit. When high voltage is detected on the signal circuit, the ECM will send a serial data message to the instrument panel cluster (IPC). The IPC will then display a message on the driver information center (DIC) or illuminate a low engine oil level lamp.

The following information determines the message sent from the ECM to the IPC:

- The Low Engine Oil Level message lamp is displayed only after the ECM detects a high voltage on the signal circuit for three consecutive ignition cycles, followed by an ignition OFF event from 15 minutes to greater than 50 minutes, depending on engine oil temperatures.
- The Low Engine Oil Level message is turned OFF when the ECM detects a low voltage on the signal circuit after an ignition OFF event for greater than 90 seconds, followed by an ignition ON event for less than 1 second.

Reference Information

Schematic Reference

- **Engine Mechanical Schematics**
- **Instrument Cluster Schematics**

Connector End View Reference

COMPONENT CONNECTOR END VIEWS - INDEX

Description and Operation

- **Instrument Cluster Description and Operation**
- **Indicator/Warning Message Description and Operation**

Electrical Information Reference

- **Circuit Testing**
- **Connector Repairs**
- **Testing for Intermittent Conditions and Poor Connections**
- **Wiring Repairs**

Scan Tool Reference

Control Module References for scan tool information.

Circuit/System Verification

1. Verify proper engine oil level.
   - **If not at proper level**

     Add oil as necessary.

   - **If at proper level**
2. Ignition ON, verify the scan tool Engine Oil Level parameter reads OK.
   - **If not OK**

     Refer to Circuit/System Testing.

   - **If OK**

3. All OK.

Circuit/System Testing

NOTE: Verify proper engine oil level before continuing with diagnosis.

1. Ignition OFF and all vehicle systems OFF, disconnect the harness connector at the B35 Engine Oil Level Switch. It may take up to 2 minutes for all vehicle systems to power down.
2. Test for less than 5 ohms between the ground circuit terminal 1 and ground.
   - **If 5 ohms or greater**
     1. Ignition OFF, disconnect the harness connector at the K20 Engine Control Module.
     2. Test for less than 2 ohms in the ground circuit end to end.
        - If 2 ohms or greater, repair the open/high resistance in the circuit.
        - If less than 2 ohms, repair the open/high resistance in the ground connection.
   - **If less than 5 ohms**
3. Ignition ON.
4. Verify the scan tool Engine Oil Level Switch parameter reads Low.
   - **If the Engine Oil Level Switch parameter reads OK**
     1. Ignition OFF, disconnect the harness connector at the K20 Engine Control Module.
     2. Test for infinite resistance between the signal circuit terminal 2 and ground.
        - If less than infinite resistance, repair the short to ground on the circuit.
        - If infinite resistance, replace the K20 Engine Control Module.
   - **If the Engine Oil Level Switch parameter reads Low**

NOTE: If a short to voltage is found on the signal circuit, the fuse in the 3A jumper wire will open.

5. Install a 3A fused jumper wire between the signal circuit terminal 2 and the ground circuit terminal 1.
6. Verify the scan tool Engine Oil Level Switch parameter reads OK.
   - **If the Engine Oil Level Switch parameter reads Low**
     1. Ignition OFF, disconnect the harness connector at the K20 Engine Control Module, ignition ON.
     2. Test for less than 1 V between the signal circuit and ground.
        - If 1 V or greater, repair the short to voltage on the circuit.
        - If less than 1 V
     3. Test for less than 2 ohms in the signal circuit end to end.
        - If 2 ohms or greater, repair the open/high resistance on the circuit.
        - If less than 2 ohms, replace the K20 Engine Control Module.
   - **If the Engine Oil Level Switch parameter reads OK**
7. Test or replace the B35 Engine Oil Level Switch.

Repair Instructions

Perform the **Diagnostic Repair Verification** after completing the repair.

- **Engine Oil Level Indicator Switch Replacement (FWD)** , **Engine Oil Level Indicator Switch Replacement (AWD)**
- **Control Module References** for the ECM replacement, programming, and setup

OIL CONSUMPTION DIAGNOSIS

Excessive oil consumption, not due to leaks, is the use of 0.9 L (1 qt) or greater of engine oil within 3 200 kilometers (2,000 miles). The causes of excessive oil consumption include the following conditions:

- External oil leaks

  Tighten bolts and/or replace gaskets and oil seals as necessary.

- Incorrect oil level or improper reading of oil level indicator

  With the vehicle on a level surface, allow adequate drain down time and inspect for the correct oil level.

- Improper oil viscosity

  Use recommended SAE viscosity for the prevailing temperatures.

- Continuous high speed driving and/or severe usage
- Crankcase ventilation system restrictions or malfunctioning components
- Valve guides and/or valve stem oil seals worn, or the seal omitted

  Ream guides and install oversize service valves and/or new valve stem oil seals.

- Piston rings broken, improperly installed, worn, or not seated properly

  Allow adequate time for rings to seat. Replace broken or worn rings, as necessary.

- Piston improperly installed or mis-fitted

OIL PRESSURE DIAGNOSIS AND TESTING

Special Tools

- **CH-48027** Digital Pressure Gauge
- **EN-21867-850** Oil Pressure Gauge Adapter

For equivalent regional tools, refer to **Special Tools** .

1. With the vehicle on a level surface, allow adequate drain down time of 2-3 minutes and measure for a low oil level.

   Add the recommended grade engine oil and fill the crankcase until the oil level measures full on the

oil level indicator.

2. Run the engine, and verify low, or no oil pressure on the vehicle gauge or light.

   Listen for a noisy valve train or a knocking noise.

3. Inspect for the following:
   - Correct oil filter with anti-drain back feature and O-ring on the cylinder block side of the filter
   - Oil diluted by moisture or unburned fuel mixtures
   - Improper oil viscosity for the expected temperature
   - Incorrect or malfunctioning oil pressure sender
   - Incorrect or malfunctioning oil pressure gauge
   - Plugged oil filter
   - Malfunctioning oil bypass valve
4. Remove the oil pressure sender or another engine block oil gallery plug.
5. Install **EN-21867-850** adapter and **CH-48027** gauge and measure the engine oil pressure.
6. Compare the readings to specifications. Refer to **Engine Mechanical Specifications** .
7. If the engine oil pressure is below specifications, inspect the engine for one or more of the following:
   - Correct oil filter with anti-drain back feature and O-ring on the cylinder block side of the filter
   - Oil pump worn or dirty

     Refer to **Balancer With Oil Pump Shaft Cleaning and Inspection** .

   - Oil pump screen loose, plugged, or damaged
   - Oil pump screen O-ring seal missing or damaged
   - Malfunctioning oil control valve solenoid
   - Excessive bearing clearance

     Refer to **Crankshaft and Bearing Cleaning and Inspection** .

   - Cracked, porous or restricted oil galleries
   - Oil gallery plugs missing or incorrectly installed

     Refer to **Engine Block Assemble** .

   - Broken lash adjusters

OIL LEAK DIAGNOSIS

Oil Leak Diagnosis

Step	Action	Yes	No
DEFINITION: You can repair most fluid leaks by first, visually locating the leak, repairing or replacing the component, or by resealing the gasket surface. Once the leak is identified, determine the cause of the leak. Repair the cause of the leak as well as the leak itself.			
	1. Operate the vehicle until it reaches normal		

1	operating temperature. Refer to **Engine Mechanical Specifications** . 2. Park the vehicle on a level surface, over a large sheet of paper or other clean surface. 3. Wait 15 minutes. 4. Check for drippings. Are drippings present?	Go to Step 2	System OK
2	Can you identify the type of fluid and the approximate location of the leak?	Go to Step 10	Go to Step 3
3	1. Visually inspect the suspected area. Use a small mirror to assist in looking at hard to see areas. 2. Check for leaks at the following locations: • Sealing surfaces • Fittings • Cracked or damaged components Can you identify the type of fluid and the approximate location of the leak?	Go to Step 10	Go to Step 4
4	1. Completely clean the entire engine and surrounding components. 2. Operate the vehicle for several miles at normal operating temperature and at varying speeds. 3. Park the vehicle on a level surface, over a large sheet of paper or other clean surface. 4. Wait 15 minutes. 5. Identify the type of fluid, and the approximate location of the leak. Can you identify the type of fluid and the approximate location of the leak?	Go to Step 10	Go to Step 5
5	1. Visually inspect the suspected area. Use a small mirror to assist in looking at hard to see areas. 2. Check for leaks at the following locations: • Sealing surfaces • Fittings • Cracked or damaged components Can you identify the type of fluid and the approximate location of the leak?	Go to Step 10	Go to Step 6
	1. Completely clean the entire engine and surrounding components. 2. Apply an aerosol-type powder, for example, baby powder or foot powder, to the suspected area.		

6	3. Operate the vehicle for several miles at normal operating temperature and at varying speeds. 4. Identify the type of fluid, and the approximate location of the leak, from the discolorations in the powder surface. Can you identify the type of fluid and the approximate location of the leak?	Go to Step 10	Go to Step 7
7	1. Visually inspect the suspected area. Use a small mirror to assist in looking at hard to see areas. 2. Check for leaks at the following locations: • Sealing surfaces • Fittings • Cracked or damaged components Can you identify the type of fluid and the approximate location of the leak?	Go to Step 10	Go to Step 8
8	Use **EN 28428-E** Dye and Light Kit , in order to identify the type of fluid, and the approximate location of the leak. Refer to the manufacturer's instructions when using the tool. Can you identify the type of fluid and the approximate location of the leak?	Go to Step 10	Go to Step 9
9	1. Visually inspect the suspected area. Use a small mirror to assist in looking at hard to see areas. 2. Check for leaks at the following locations: • Sealing surfaces • Fittings • Cracked or damaged components Can you identify the type of fluid and the approximate location of the leak?	Go to Step 10	System OK
10	1. Inspect the engine for mechanical damage. Special interest should be shown to the following areas: • Higher than recommended fluid levels • Higher than recommended fluid pressures • Plugged or malfunctioning fluid filters or pressure bypass valves • Plugged or malfunctioning engine ventilation system • Improperly tightened or damaged fasteners • Cracked or porous components • Improper sealants or gaskets where required		

	• Improper sealant or gasket installation • Damaged or worn gaskets or seals • Damaged or worn sealing surfaces 2. Inspect the engine for customer modifications. Is there mechanical damage, or customer modifications to the engine?	Go to Step 11	System OK
11	Repair or replace all damaged or modified components. Did you complete the repair?	Go to Step 1	-

CRANKCASE VENTILATION SYSTEM INSPECTION/DIAGNOSIS

Special Tools

EN 23951 Valve Manometer

For equivalent regional tools, refer to **Special Tools** .

1. Verify clean air cleaner.
2. Verify oil fill cap is in place.
3. Verify oil level indicator is installed.
4. Remove the oil level indicator. Install a **EN 23951** valve manometer or equivalent, into the oil level indicator hole.
5. Start the engine.
6. Check for slight vacuum. The vacuum level should be less than 3.377 kPa (1 in Hg).
7. If vacuum is higher, inspect and verify that the clean air hose from cam cover to air intake is not blocked or kinked.
8. If vacuum is in the normal range, remove the PCV line from the fresh air valve near oil fill cap. Block fresh air valve and also plug the fresh air hose. Vacuum should increase on the manometer. If held too long, vacuum will be drawn through the crankshaft seals creating a sucking sound.
9. If vacuum does not increase, the orifice in the camshaft cover assembly could be plugged. The valve is between the camshaft cover assembly and the cylinder head assembly.
10. If there is zero vacuum or pressure, verify compression of the engine.
11. If compression is normal, check for a blocked orifice at the camshaft cover assembly. Clean the orifice.
12. The hose from valve cover to the turbo is also for the positive crankcase ventilation (PCV) and is used for PCV flow under normal operation and only PCV flow during turbo boost conditions. If the hose is plugged, replace the PCV hose assembly and PCV fitting assembly at the turbocharger.

Concern	Action
	Inspect for any of the following conditions: • Plugged air intake system • Plugged positive crankcase ventilation (PCV) orifice/check valve in the camshaft cover

External Oil Leak	assembly • Plugged or kinked PCV hoses • Damaged or incorrectly installed PCV hoses • Excessive crankcase pressure • Plugged PCV hose from camshaft cover to turbocharger
Rough Idle	Inspect for any of the following conditions: • Plugged or incorrectly installed air intake system • Plugged PCV orifice/check valve in the camshaft cover assembly • Plugged or kinked PCV hoses • Leaking or damaged PCV hoses • Leaking PCV hose from camshaft cover to turbocharger
Stalling or Slow Idle Speed	Inspect for any of the following conditions: • Plugged air intake system • Plugged PCV orifice in the camshaft cover assembly • Plugged or kinked PCV hoses • Leaking or damaged PCV hoses • Leaking PCV hose from camshaft cover to turbocharger
High Idle Speed	Inspect for any of the following conditions: • Air intake system incorrectly installed • Leaking or damaged PCV hoses
Sludge in the Engine	Inspect for any of the following conditions: • Plugged or incorrectly installed air intake system • Plugged PCV orifice in the camshaft cover assembly • Plugged or kinked PCV hoses • Plugged PCV hose from camshaft cover to turbocharger

DRIVE BELT CHIRPING, SQUEAL, AND WHINE DIAGNOSIS

Diagnostic Aids

- A chirping or squeal noise may be intermittent due to moisture on the drive belts or the pulleys. It may be necessary to spray a small amount of water on the drive belts in order to duplicate the customers concern. If spraying water on the drive belt duplicates the symptom, cleaning the belt pulleys may be

the probable solution.

- If the noise is intermittent, verify the accessory drive components by varying their loads making sure they are operated to their maximum capacity. An overcharged A/C system, power steering system with a pinched hose or wrong fluid, or a generator failing are suggested items to inspect.
- A chirping, squeal or whine noise may be caused by a loose or improper installation of a body or suspension component. Other items of the vehicle may also cause the noise.
- The drive belts will not cause a whine noise.

Test Description

The numbers below refer to the step numbers on the diagnostic table.

2

The noise may not be engine related. This step is to verify that the engine is making the noise. If the engine is not making the noise do not proceed further with this table.

3

The noise may be an internal engine noise. Removing the drive belts one at a time and operating the engine for a brief period will verify the noise is related to the drive belt. When removing the drive belt the water pump may not be operating and the engine may overheat. Also DTCs may set when the engine is operating with the drive belts removed.

4

Inspect all drive belt pulleys for pilling. Pilling is the small balls or pills or it can be strings in the drive belt grooves from the accumulation of rubber dust.

6

Misalignment of the pulleys may be caused from improper mounting of the accessory drive component, incorrect installation of the accessory drive component pulley, or the pulley bent inward or outward from a previous repair. Test for a misaligned pulley using a straight edge in the pulley grooves across two or three pulleys. If a misaligned pulley is found refer to that accessory drive component for the proper installation procedure for that pulley.

10

Inspecting of the fasteners can eliminate the possibility that a wrong bolt, nut, spacer, or washer was installed.

12

Inspecting the pulleys for being bent should include inspecting for a dent or other damage to the pulleys that would prevent the drive belt from not seating properly in all of the pulley grooves or on the smooth surface of a pulley when the back side of the belt is used to drive the pulley.

14

This test is to verify that the drive belt tensioner operates properly. If the drive belt tensioner is not operating properly, proper belt tension may not be achieved to keep the drive belt from slipping which could cause a squeal noise.

15

This test is to verify that the drive belt is not too long, which would prevent the drive belt tensioner from working properly. Also if an incorrect length drive belt was installed, it may not be routed properly and may be turning an accessory drive component in the wrong direction.

16

Misalignment of the pulleys may be caused from improper mounting of the accessory drive component, incorrect installation of the accessory drive component pulley, or the pulley bent inward or outward from a previous repair. Test for a misaligned pulley using a straight edge in the pulley grooves across two or three pulleys. If a misaligned pulley is found refer to that accessory drive component for the proper installation procedure for that pulley.

17

This test is to verify that the pulleys are the correct diameter or width. Using a known good vehicle compare the pulley sizes.

19

Replacing the drive belt when it is not damaged or there is not excessive pilling will only be a temporary repair.

Drive Belt Chirping, Squeal, and Whine Diagnosis

Step	Action	Yes	No
CAUTION: **Refer to Belt Dressing Caution .** DEFINITION: The following items are indications of chirping: • A high pitched noise that is heard once per revolution of the drive belt or a pulley. • Chirping may occur on cold damp start-ups and will subside once the vehicle reaches normal operating temp. DEFINITION: The following items are indications of drive belt squeal: • A loud screeching noise that is caused by a slipping drive belt. This is unusual for a drive belt with multiple ribs. • The noise occurs when a heavy load is applied to the drive belt, such as an air conditioning compressor engagement snapping the throttle, or slipping on a seized pulley or a faulty accessory drive component. DEFINITION: The following items are indications of drive belt whine:			

- A high pitched continuous noise.
- The noise may be caused by an accessory drive component failed bearing.

1	Did you review the Drive Belt Symptom operation and perform the necessary inspections?	Go to **Step 2**	Go to **Symptoms - Engine Mechanical**
2	Verify that there is a chirping, squeal or whine noise. Does the engine make the chirping squeal or whine noise?	Go to **Step 3**	Go to Diagnostic Aids
3	1. Remove the drive belt. If the engine has multiple drive belts, remove the belts one at a time and perform the test below each time a belt is removed. 2. Operate the engine for no longer than 30-40 seconds. 3. Repeat this test if necessary by removing the remaining belt(s). Does the chirping, squeal or whine noise still exist?	Go to **Symptoms - Engine Mechanical**	Go to **Step 4**
4	If diagnosing a chirping noise, inspect for severe pilling exceeding 1/3 of the belt groove depth. If diagnosing a squeal or whine noise, proceed to step 13. Do the belt grooves have pilling?	Go to **Step 5**	Go to **Step 6**
5	Clean the drive belt pulleys with a suitable wire brush. Did you complete the repair?	Go to **Step 20**	Go to **Step 6**
6	Inspect for misalignment of the pulleys. Are any of the pulleys misaligned?	Go to **Step 7**	Go to **Step 8**
7	Replace or repair any misaligned pulleys. Did you complete the repair?	Go to **Step 20**	Go to **Step 8**
8	Inspect for bent or cracked brackets. Did you find any bent or cracked brackets?	Go to **Step 9**	Go to **Step 10**
9	Replace any bent or cracked brackets. Did you complete the repair?	Go to **Step 20**	Go to **Step 10**
10	Inspect for improper, loose or missing fasteners. Did you find the condition?	Go to **Step 11**	Go to **Step 12**
11	**CAUTION:** **Refer to Fastener Caution .** 1. Tighten any loose fasteners. Refer to **Fastener Tightening Specifications** . 2. Replace any improper or missing fasteners. Did you complete the repair?	Go to **Step 20**	Go to **Step 12**

12	Inspect for a bent pulley. Did you find the condition?	Go to **Step 18**	Go to **Step 19**
13	Inspect for an accessory drive component seized bearing or a faulty accessory drive component. If diagnosing a whine noise and the condition still exist, proceed to Diagnostic Aids. Did you find and correct the condition?	Go to **Step 20**	Go to **Step 14**
14	Test the drive belt tensioner for proper operation. Refer to **Drive Belt Replacement** . Did you find and correct the condition?	Go to **Step 20**	Go to **Step 15**
15	Inspect for the correct drive belt length. Did you find and correct the condition?	Go to **Step 20**	Go to **Step 16**
16	Inspect for misalignment of a pulley. Did you find and correct the condition?	Go to **Step 20**	Go to **Step 17**
17	Inspect for the correct pulley size. Did you find and correct the condition?	Go to **Step 20**	Go to Diagnostic Aids
18	Replace the bent pulley. Did you complete the repair?	Go to **Step 20**	Go to **Step 19**
19	Replace the drive belt. Refer to **Drive Belt Replacement** . Did you complete the repair?	Go to **Step 20**	Go to Diagnostic Aids
20	Operate the system in order to verify the repair. Did you correct the condition?	System OK	Go to **Step 3**

DRIVE BELT RUMBLING AND VIBRATION DIAGNOSIS

Diagnostic Aids

The accessory drive components can have an affect on engine vibration. Vibration from the engine operating may cause a body component or another part of the vehicle to make rumbling noise. Vibration can be caused by, but not limited to the A/C system over charged, the power steering system restricted or the incorrect fluid, or an extra load on the generator. To help identify an intermittent or an improper condition, vary the loads on the accessory drive components.

The drive belt may have a rumbling condition that can not be seen or felt. Sometimes replacing the drive belt may be the only repair for the symptom.

If replacing the drive belt, completing the diagnostic table, and the noise is only heard when the drive belts are installed, there might be an accessory drive component with a failure. Varying the load on the different accessory drive components may aid in identifying which component is causing the rumbling noise.

Test Description

The numbers below refer to the step numbers on the diagnostic table.

2

This test is to verify that the symptom is present during diagnosing. Other vehicle components may cause a similar symptom.

3

This test is to verify that one of the drive belts is causing the rumbling noise or vibration. Rumbling noise may be confused with an internal engine noise due to the similarity in the description. Remove only one drive belt at a time if the vehicle has multiple drive belts. When removing the drive belts the water pump may not be operating and the engine may overheat. Also DTCs may set when the engine is operating with the drive belts removed.

4

Inspecting the drive belts is to ensure that they are not causing the noise. Small cracks across the ribs of the drive belt will not cause the noise. Belt separation is identified by the plys of the belt separating and may be seen at the edge of the belt our felt as a lump in the belt.

5

Small amounts of pilling is normal condition and acceptable. When the pilling is severe the drive belt does not have a smooth surface for proper operation.

9

Inspecting of the fasteners can eliminate the possibility that the wrong bolt, nut, spacer, or washer was installed.

11

This step should only be performed if the water pump is driven by the drive belt. Inspect the water pump shaft for being bent. Also inspect the water pump bearings for smooth operation and excessive play. Compare the water pump with a known good water pump.

12

Accessory drive component brackets that are bent, cracked, or loose may put extra strain on that accessory component causing it to vibrate.

Drive Belt Rumbling and Vibration Diagnosis

Step	Action	Yes	No

CAUTION:
Refer to Belt Dressing Caution .
 	
DEFINITION: The following items are indications of drive belt rumbling:
• A low pitch tapping, knocking, or thumping noise heard at or just above idle.
• Heard once per revolution of the drive belt or a pulley.
• Rumbling may be caused from:
  ○ Pilling, the accumulation of rubber dust that forms small balls (pills) or strings in the drive belt pulley groove
  ○ The separation of the drive belt			

- A damaged drive belt

DEFINITION: The following items are indications of drive belt vibration:

- The vibration is engine-speed related.
- The vibration may be sensitive to accessory load.

1	Did you review the Drive Belt Symptom operation and perform the necessary inspections?	Go to **Step 2**	Go to **Symptoms - Engine Mechanical**
2	Verify that there is a rumbling noise or that the vibration is engine related. Does the engine make the rumbling noise or vibration?	Go to **Step 3**	Go to Diagnostic Aids
3	1. Remove the drive belt. If the engine has multiple drive belts, remove the belts one at a time and perform the test below each time a belt is removed. 2. Operate the engine for no longer than 30-40 seconds. 3. Repeat this test if necessary by removing the remaining belt(s). Does the rumbling or vibration still exist?	Go to **Symptoms - Engine Mechanical** or **Vibration Analysis - Engine**	Go to **Step 4**
4	Inspect the drive belts for wear, damage, separation, sections of missing ribs, and debris build-up. Did you find any of these conditions?	Go to **Step 7**	Go to **Step 5**
5	Inspect for severe pilling of more than 1/3 of the drive belt pulley grooves. Did you find severe pilling?	Go to **Step 6**	Go to **Step 7**
6	1. Clean the drive belt pulleys using a suitable wire brush. 2. Reinstall the drive belts. Refer to **Drive Belt Replacement** . Did you correct the condition?	Go to **Step 8**	Go to **Step 7**
7	Install a new drive belt. Refer to **Drive Belt Replacement** . Did you complete the replacement?	Go to **Step 8**	Go to **Step 9**
8	Operate the system in order to verify the repair. Did you correct the condition?	System OK	Go to **Step 9**
9	Inspect for improper, loose or missing fasteners. Did you find any of these conditions?	Go to **Step 10**	Go to **Step 11**
	CAUTION: **Refer to Fastener Caution .**		

10	1. Tighten any loose fasteners. Refer to **Fastener Tightening Specifications** . 2. Replace improper or missing fasteners. Did you complete the repair?	Go to **Step 13**	Go to **Step 11**
11	Inspect for a bent water pump shaft. Refer to **Water Pump Replacement (LTG)** , **Water Pump Replacement (LUK)** . Did you find and correct the condition?	Go to **Step 13**	Go to **Step 12**
12	Inspect for bent or cracked brackets. Did you find and correct the condition?	Go to **Step 13**	Go to Diagnostic Aids
13	Operate the system in order to verify the repair. Did you correct the condition?	System OK	Go to **Step 3**

DRIVE BELT FALLS OFF AND EXCESSIVE WEAR DIAGNOSIS

Diagnostic Aids

If the drive belt repeatedly falls off the drive belt pulleys, this is because of pulley misalignment.

An extra load that is quickly applied on released by an accessory drive component may cause the drive belt to fall off the pulleys. Verify the accessory drive components operate properly.

If the drive belt is the incorrect length, the drive belt tensioner may not keep the proper tension on the drive belt.

Excessive wear on a drive belt is usually caused by an incorrect installation or the wrong drive belt for the application.

Minor misalignment of the drive belt pulleys will not cause excessive wear, but will probably cause the drive belt to make a noise or to fall off.

Excessive misalignment of the drive belt pulleys will cause excessive wear but may also make the drive belt fall off.

Test Description

The numbers below refer to the step numbers on the diagnostic table.

2

This inspection is to verify the condition of the drive belt. Damage may of occurred to the drive belt when the drive belt fell off. The drive belt may of been damaged, which caused the drive belt to fall off. Inspect the belt for cuts, tears, sections of ribs missing, or damaged belt plys.

4

Misalignment of the pulleys may be caused from improper mounting of the accessory drive component, incorrect installation of the accessory drive component pulley, or the pulley bent inward

or outward from a previous repair. Test for a misaligned pulley using a straight edge in the pulley grooves across 2 or 3 pulleys. If a misaligned pulley is found refer to that accessory drive component for the proper installation procedure of that pulley.

5

Inspecting the pulleys for being bent should include inspecting for a dent or other damage to the pulleys that would prevent the drive belt from not seating properly in all of the pulley grooves or on the smooth surface of a pulley when the back side of the belt is used to drive the pulley.

6

Accessory drive component brackets that are bent or cracked will let the drive belt fall off.

7

Inspecting of the fasteners can eliminate the possibility that a wrong bolt, nut , spacer, or washer was installed. Missing. loose, or the wrong fasteners may cause pulley misalignment from the bracket moving under load. Over tightening of the fasteners may cause misalignment of the accessory component bracket.

13

The inspection is to verify the drive belt is correctly installed on all of the drive belt pulleys. Wear on the drive belt may be caused by mis-positioning the drive belt by one groove on a pulley.

14

The installation of a drive belt that is too wide or too narrow will cause wear on the drive belt. The drive belt ribs should match all of the grooves on all of the pulleys.

15

This inspection is to verify the drive belt is not contacting any parts of the engine or body while the engine is operating. There should be sufficient clearance when the drive belt accessory drive components load varies. The drive belt should not come in contact with an engine or a body component when snapping the throttle.

Drive Belt Falls Off and Excessive Wear Diagnosis

Step	Action	Yes	No
CAUTION: **Refer to Belt Dressing Caution .** DEFINITION: The drive belt falls off the pulleys or may not ride correctly on the pulleys.DEFINITION: Wear at the outside ribs of the drive belt due to an incorrectly installed drive belt.			
1	Did you review the Drive Belt Symptom operation and perform the necessary inspections?	Go to **Step 2**	Go to **Symptoms - Engine Mechanical** .
	If diagnosing excessive wear, proceed to step 13.		

2	If diagnosing a drive belt that falls off, inspect for a damaged drive belt. Did you find the condition?	Go to **Step 3**	Go to **Step 4**
3	Install a new drive belt. Refer to **Drive Belt Replacement** . Does the drive belt continue to fall off?	Go to **Step 4**	System OK
4	Inspect for misalignment of the pulleys. Did you find and repair the condition?	Go to **Step 12**	Go to **Step 5**
5	Inspect for a bent or dented pulley. Did you find and repair the condition?	Go to **Step 12**	Go to **Step 6**
6	Inspect for a bent or a cracked bracket. Did you find and repair the condition?	Go to **Step 12**	Go to **Step 7**
7	Inspect for improper, loose or missing fasteners. Did you find loose or missing fasteners?	Go to **Step 8**	Go to **Step 9**
8	**CAUTION:** **Refer to Fastener Caution** 1. Tighten any loose fasteners. Refer to **Fastener Tightening Specifications** . 2. Replace improper or missing fasteners. Does the drive belt continue to fall off?	Go to **Step 9**	System OK
9	Test the drive belt tensioner for operating correctly. Refer to **Drive Belt Replacement** . Does the drive belt tensioner operate correctly?	Go to **Step 11**	Go to **Step 10**
10	Replace the drive belt tensioner. Refer to **Drive Belt Replacement** . Does the drive belt continue to fall off?	Go to **Step 11**	System OK
11	Inspect for failed drive belt idler and drive belt tensioner pulley bearings. Did you find and repair the condition?	Go to **Step 12**	Go to Diagnostic Aids
12	Operate the system in order to verify the repair. Did you correct the condition?	System OK	Go to **Step 2**
13	Inspect the drive belt for the proper installation. Refer to **Drive Belt Replacement** . Did you find this condition?	Go to **Step 16**	Go to **Step 14**
14	Inspect for the proper drive belt. Did you find this condition?	Go to **Step 16**	Go to **Step 15**
15	Inspect for the drive belt rubbing against a bracket, hose, or wiring harness. Did you find and repair the condition?	Go to **Step 17**	Go to Diagnostic Aids
16	Replace the drive belt. Refer to **Drive Belt Replacement** . Did you complete the replacement?	Go to **Step 17**	-
17	Operate the system in order to verify the repair. Did you correct the condition?	System OK	-

DRIVE BELT TENSIONER DIAGNOSIS

Drive Belt Tensioner Diagnosis

Step	Action	Yes	No
1	1. Remove the drive belt. Refer to **Drive Belt Replacement** . 2. Inspect the drive belt tensioner pulley. Is the drive belt tensioner pulley loose or misaligned?	Go to **Step 6**	Go to **Step 2**
2	Rotate the drive belt tensioner pulleys. Do the pulleys rotate without any unusual resistance or binding?	Go to **Step 3**	Go to **Step 6**
3	1. Use a torque wrench in order to measure the torque required to move the tensioner off of the stop. 2. Use a torque wrench on a known good tensioner in order to measure the torque required to move the tensioner off of the stop. Is the first torque reading within 10 percent of the second torque reading?	Go to **Step 4**	Go to **Step 6**
4	Inspect tensioner for indication of oil leaks. Does it show signs of oil leaking?	Go to **Step 6**	Go to **Step 5**
5	Remove top tensioner bolt, above hydraulic tensioner and verify tensioner assembly moves about center pivot by applying light force. Does the tensioner Asm move without binding?	System OK	Go to **Step 6**
6	Replace the drive belt tensioner. Refer to **Drive Belt Tensioner Replacement** . Is the repair complete?	System OK	-

2014 Engine

Engine Mechanical - 2.0L (LTG) - Repair Instructions - Off Vehicle - Regal

REPAIR INSTRUCTIONS - OFF VEHICLE

DRAINING FLUIDS AND OIL FILTER REMOVAL

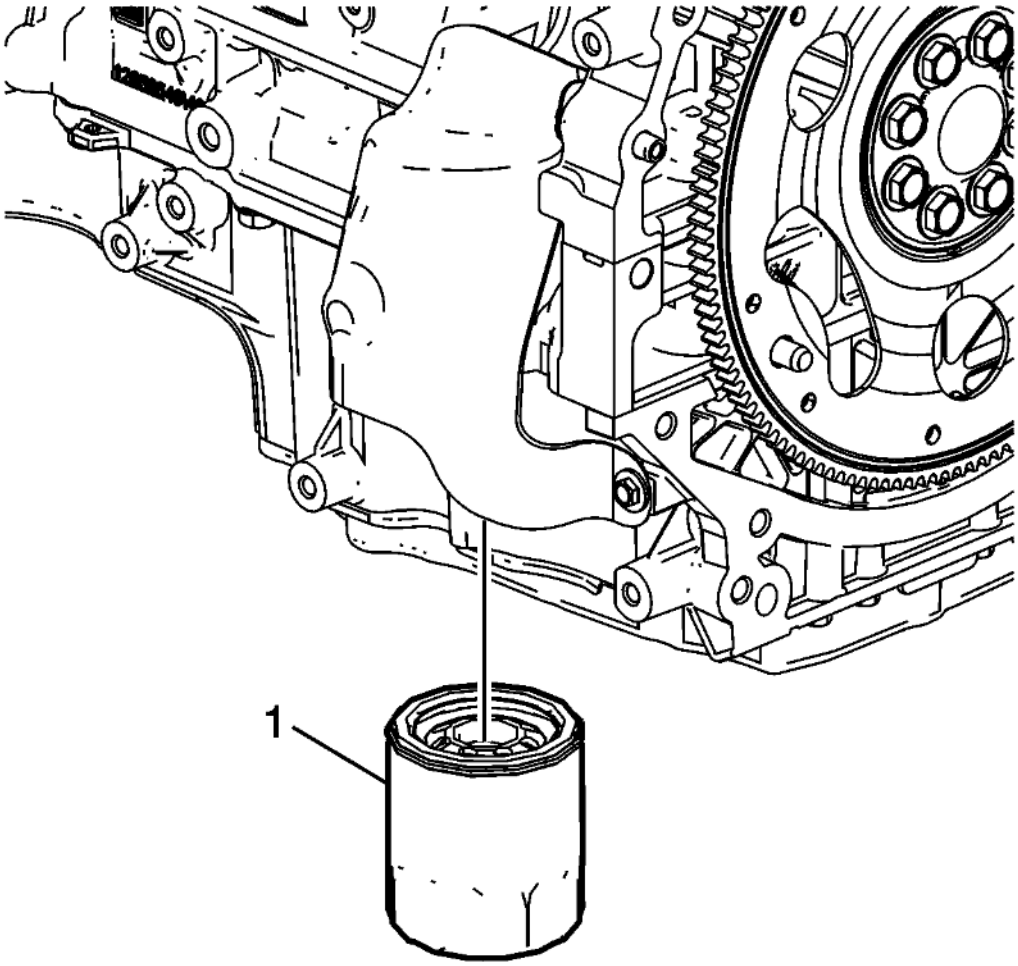

Fig. 1: Oil Filter
Courtesy of GENERAL MOTORS COMPANY

1. Remove the oil filter (1). Remove the oil pan drain plug and allow the oil to drain out.
2. Clean the oil filter housing in the engine block.

CAUTION: Refer to Fastener Caution .

3. Install the oil pan drain plug and tighten to 25 N.m (18 lb ft).
4. If cleaning or repairing the engine block, it is not necessary to reinstall the plug.

CRANKSHAFT BALANCER REMOVAL

Special Tools

- **EN-41816** Crankshaft Balancer Remover
- **EN-41816-A** Crankshaft End Protector
- **EN 50792** Flywheel Holding Tool

For equivalent regional tools, refer to **Special Tools** .

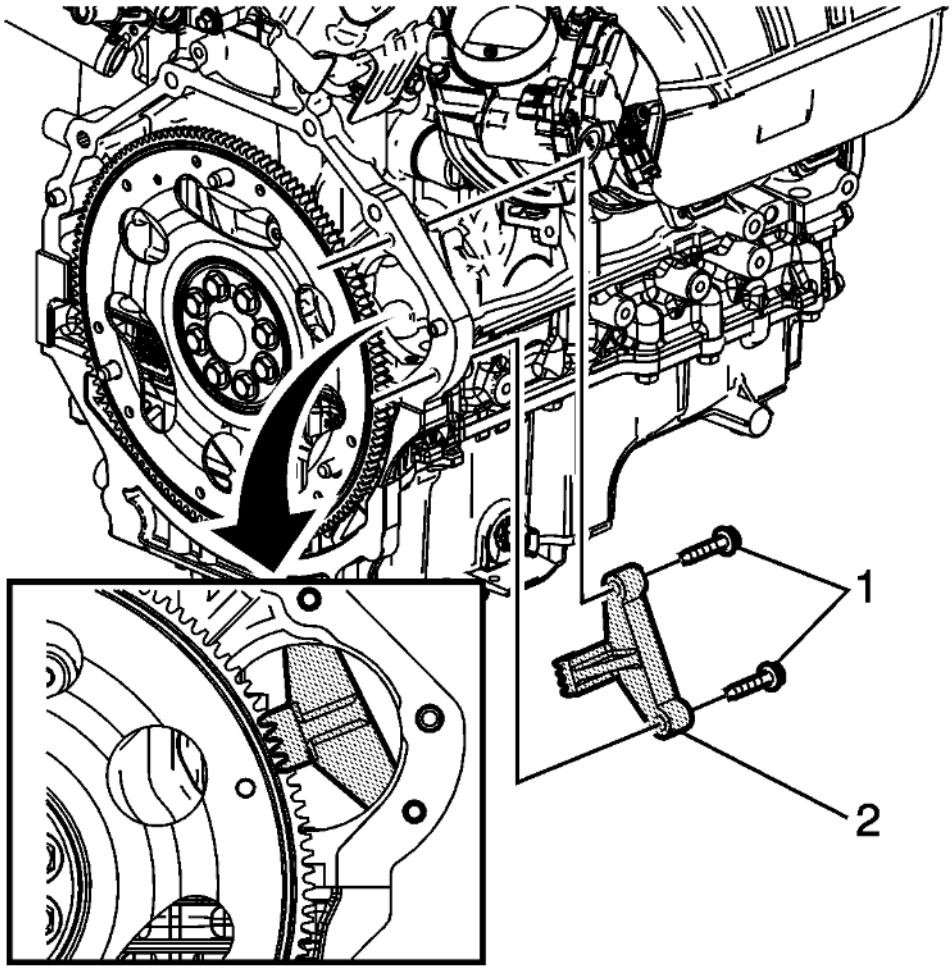

Fig. 2: Starter Motor Bolts
Courtesy of GENERAL MOTORS COMPANY

1. To prevent crankshaft rotation, install **EN 50792** holding tool (2) and starter motor bolts (1) at the starter motor location and engaging the flywheel.

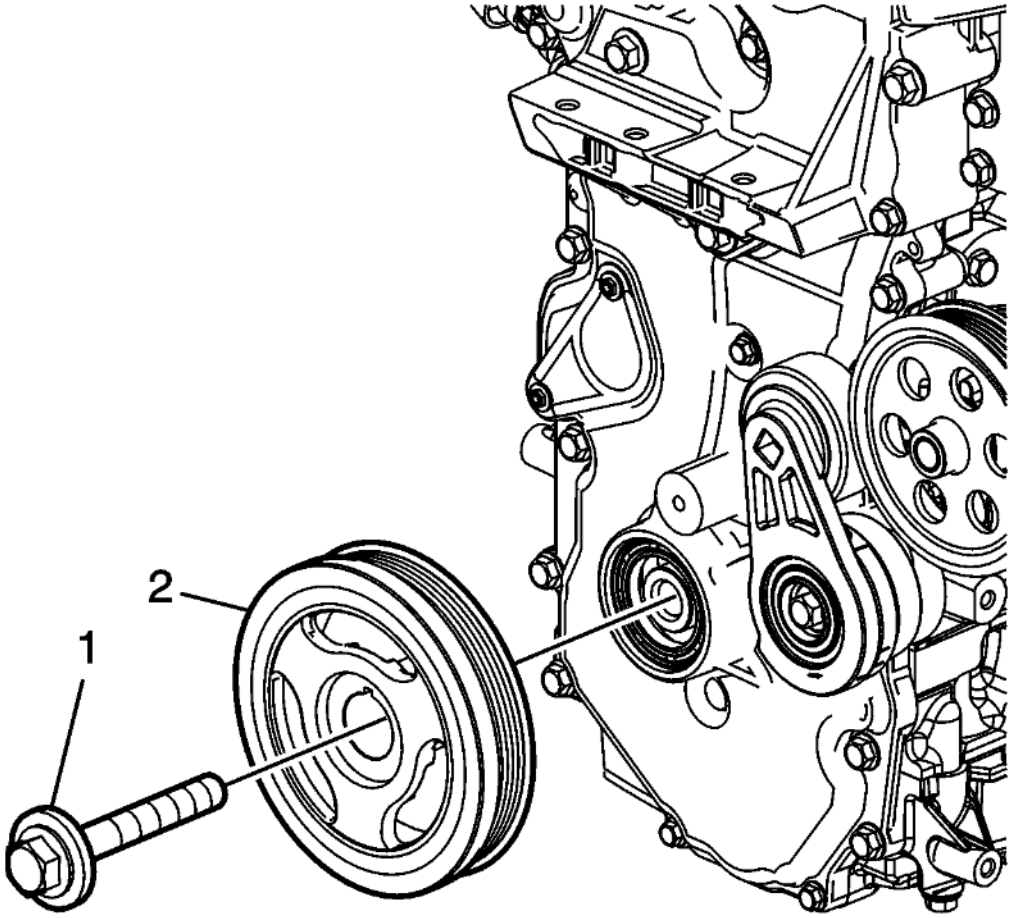

Fig. 3: Crankshaft Balancer
Courtesy of GENERAL MOTORS COMPANY

2. Remove and discard the crankshaft balancer bolt (1) and washer.
3. Install **EN-41816-A** protector to protect the crankshaft end during balancer removal.
4. Using **EN-41816** remover , remove the balancer (2).
5. Remove the special tools.

AUTOMATIC TRANSMISSION FLEX PLATE REMOVAL

Special Tools

EN 50792 Flywheel Holding Tool

For equivalent regional tools, refer to **Special Tools** .

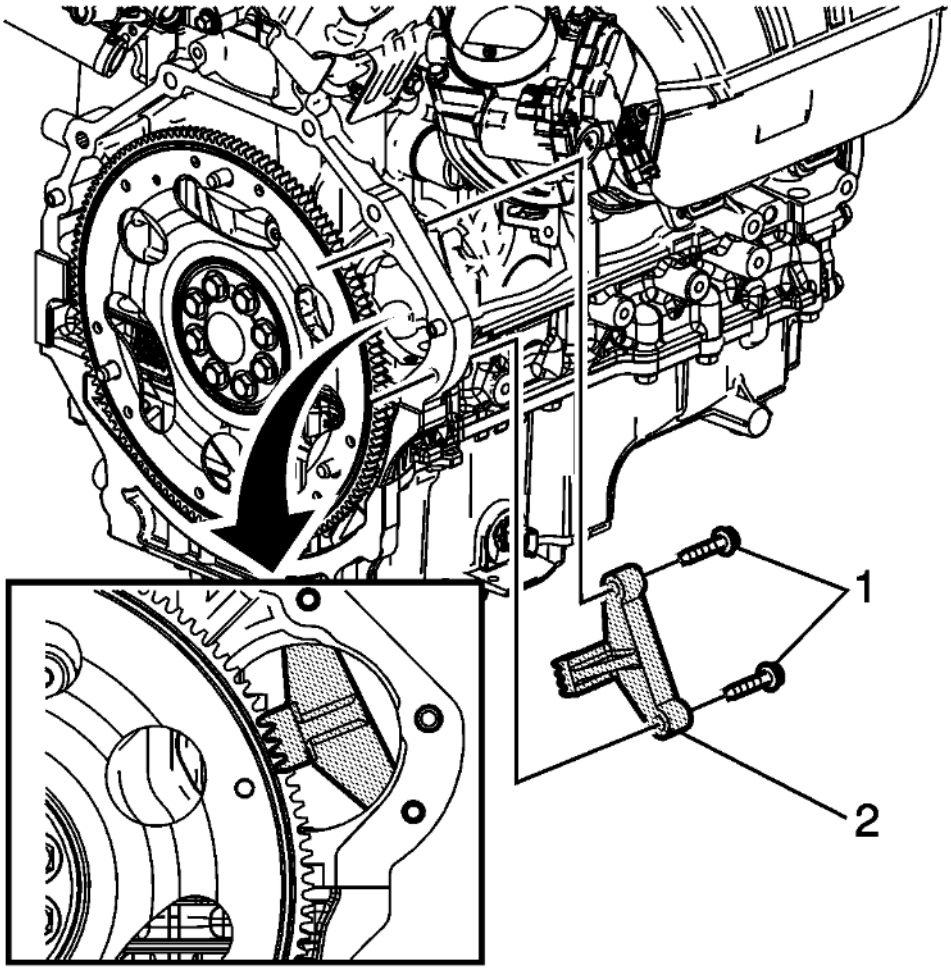

Fig. 4: Starter Motor Bolts
Courtesy of GENERAL MOTORS COMPANY

1. To prevent crankshaft rotation, install **EN 50792** holding tool (2) and starter motor bolts (1) at the starter motor location and engaging the flywheel.

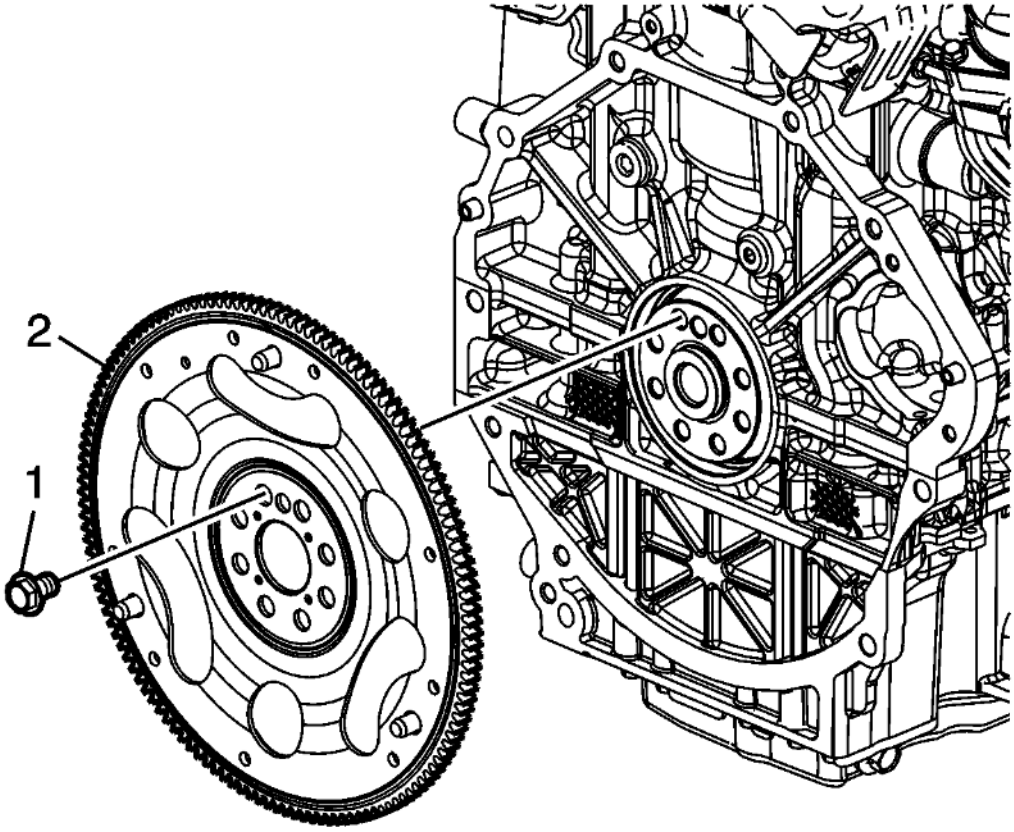

Fig. 5: Flywheel Attaching Bolts
Courtesy of GENERAL MOTORS COMPANY

2. Remove and discard the flywheel attaching bolts (1).
3. Remove the flywheel (2).
4. Remove **EN 50792** holding tool.

INTAKE MANIFOLD REMOVAL

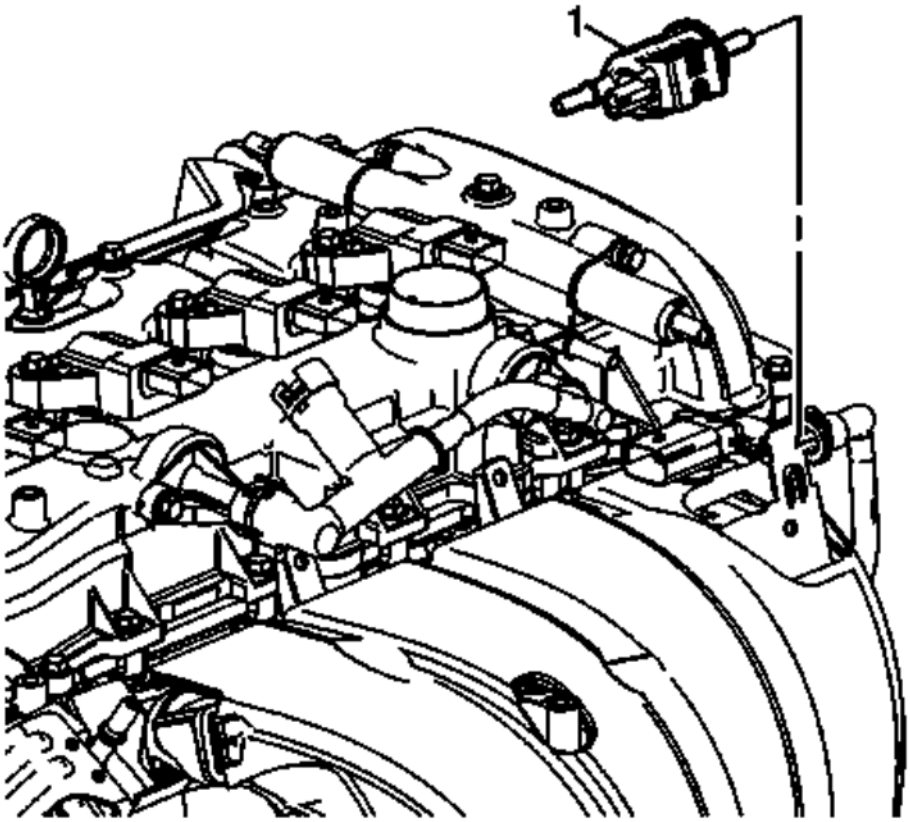

Fig. 6: EVAP Canister Valve
Courtesy of GENERAL MOTORS COMPANY

CAUTION: Never attempt to remove the intake manifold from a hot engine, allow the engine to cool to ambient temperature. The intake manifold can be damaged if it is removed when the engine is hot.

1. Remove the EVAP canister valve (1).

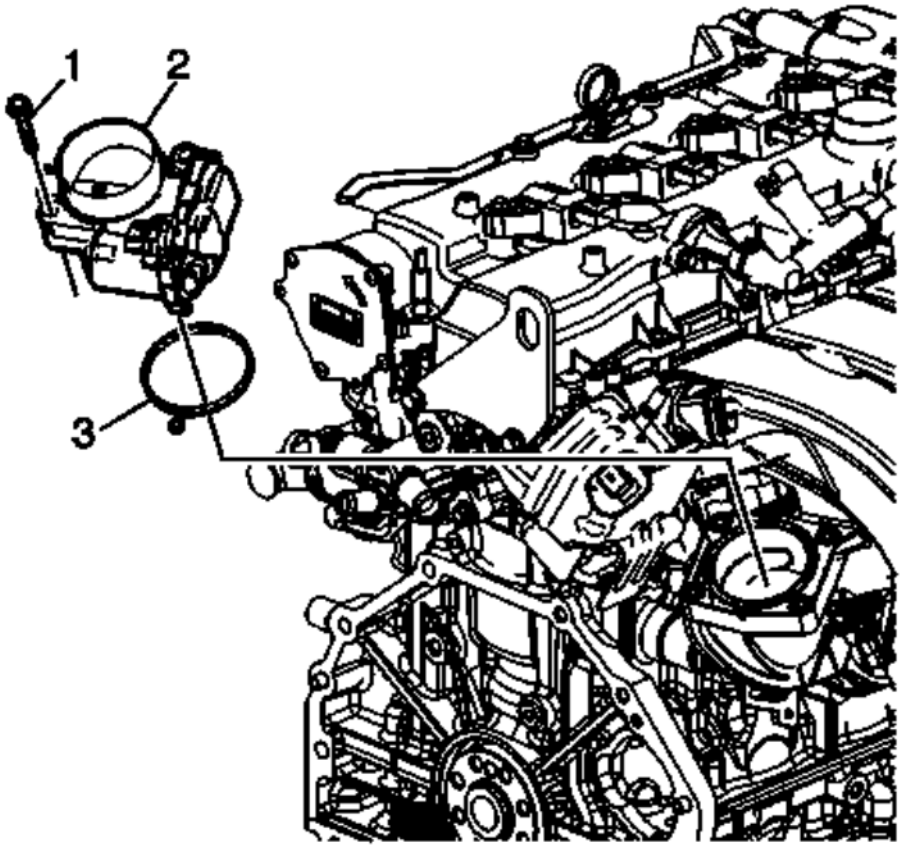

Fig. 7: Throttle Body Bolts
Courtesy of GENERAL MOTORS COMPANY

2. Remove the throttle body bolts (1).
3. Remove the throttle body (2) and seal (3).

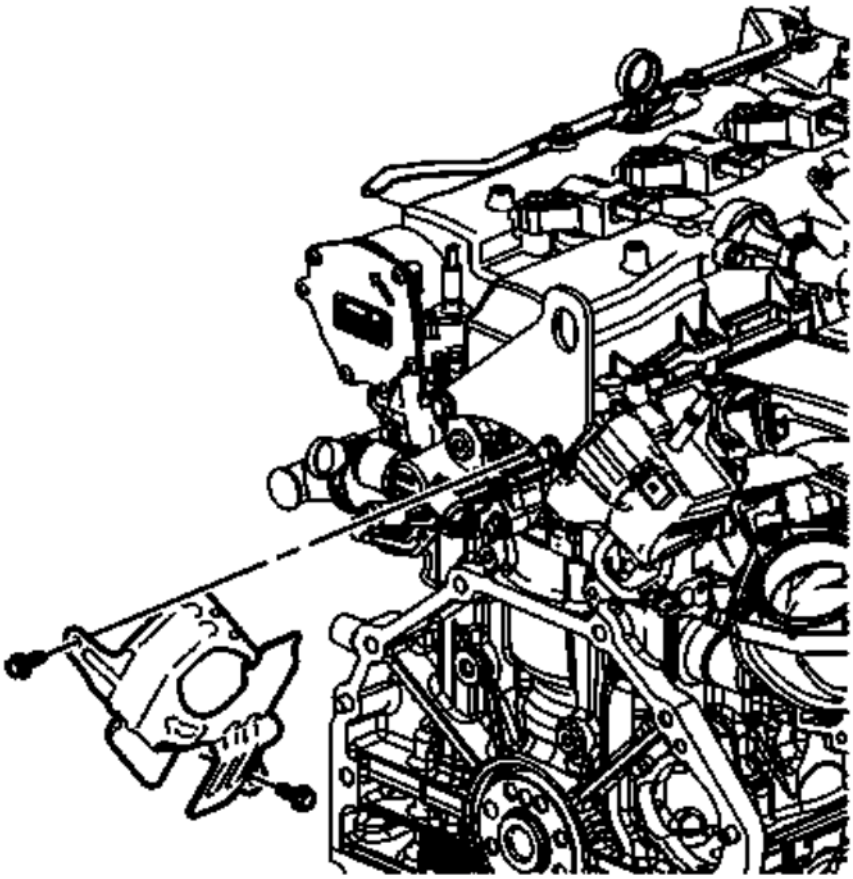

Fig. 8: Fuel Pump Cover Bolts And Cover
Courtesy of GENERAL MOTORS COMPANY

4. Remove the fuel pump cover bolts and cover.

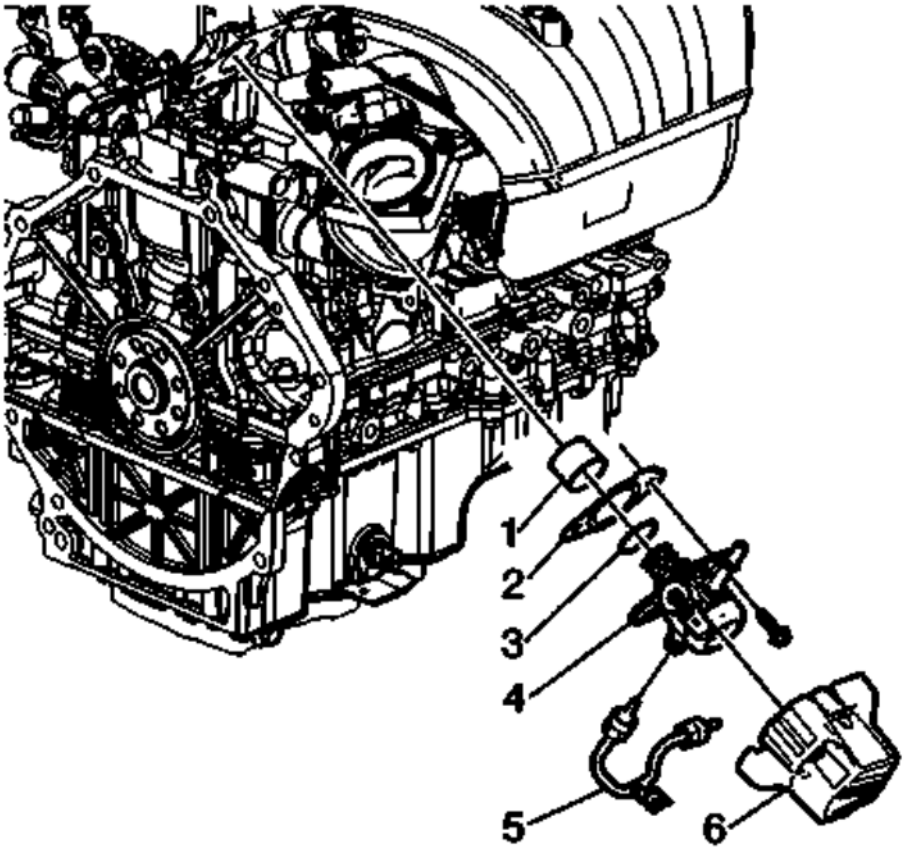

Fig. 9: Fuel Pump Insulator
Courtesy of GENERAL MOTORS COMPANY

5. Remove the fuel pump insulator (6).

WARNING: Fuel that flows out at high pressure can cause serious injury to the skin and eyes. ALWAYS depressurize the fuel system before removing components that are under high fuel pressure.

6. Remove and discard the fuel feed intermediate pipe (5).
7. Remove the fuel pump bolts.
8. Remove the fuel pump (4), O-ring (3), and gasket (2). Discard the O-ring and gasket.
9. Remove the valve lifter follower (1).

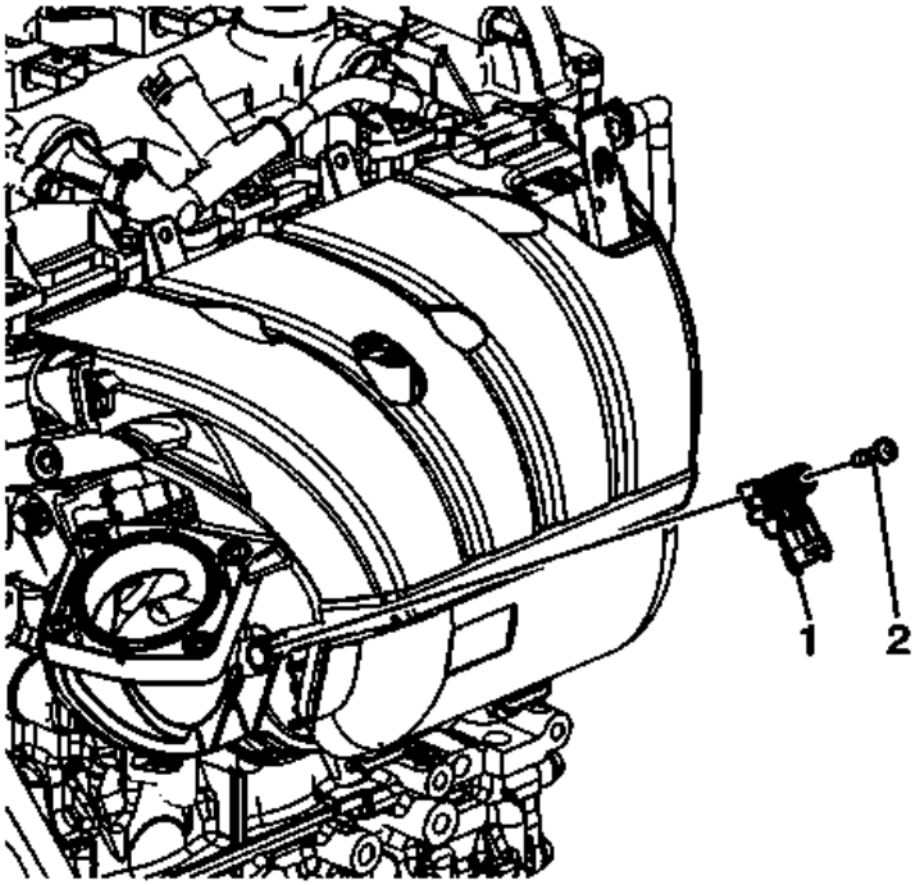

Fig. 10: MAP Sensor And Bolt
Courtesy of GENERAL MOTORS COMPANY

10. Remove the MAP sensor (1) and bolt (2).

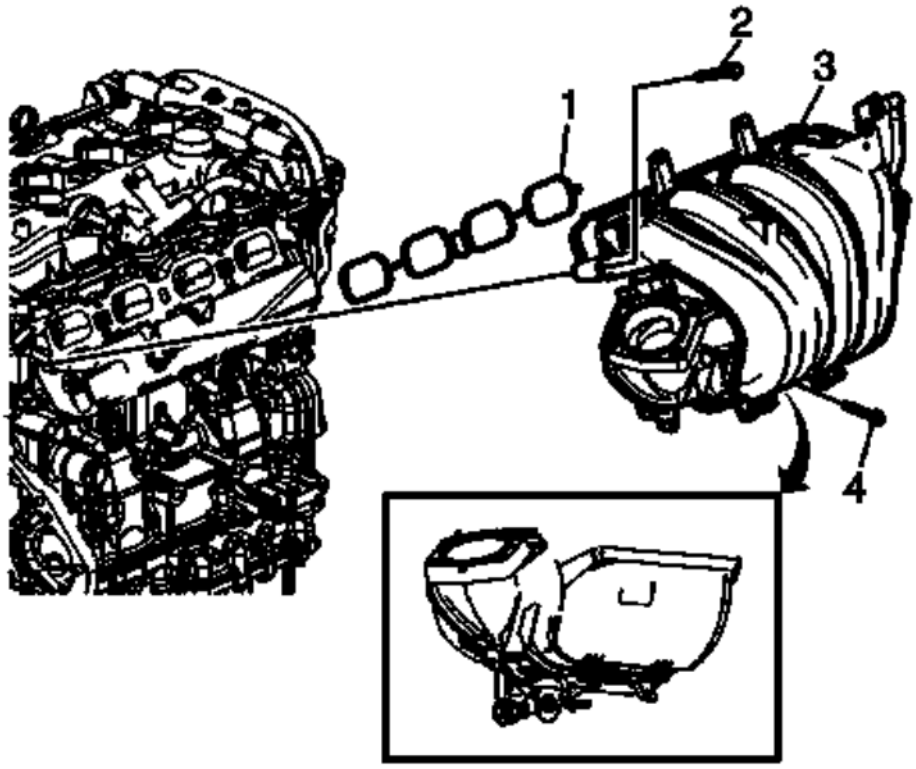

Fig. 11: Intake Manifold And Gasket
Courtesy of GENERAL MOTORS COMPANY

11. Remove the intake manifold retaining bolts (2, 4).
12. Remove the intake manifold (3) and gasket (1).
13. If the intake manifold needs to be replaced, transfer the throttle body to the new intake manifold.

TURBOCHARGER REMOVAL

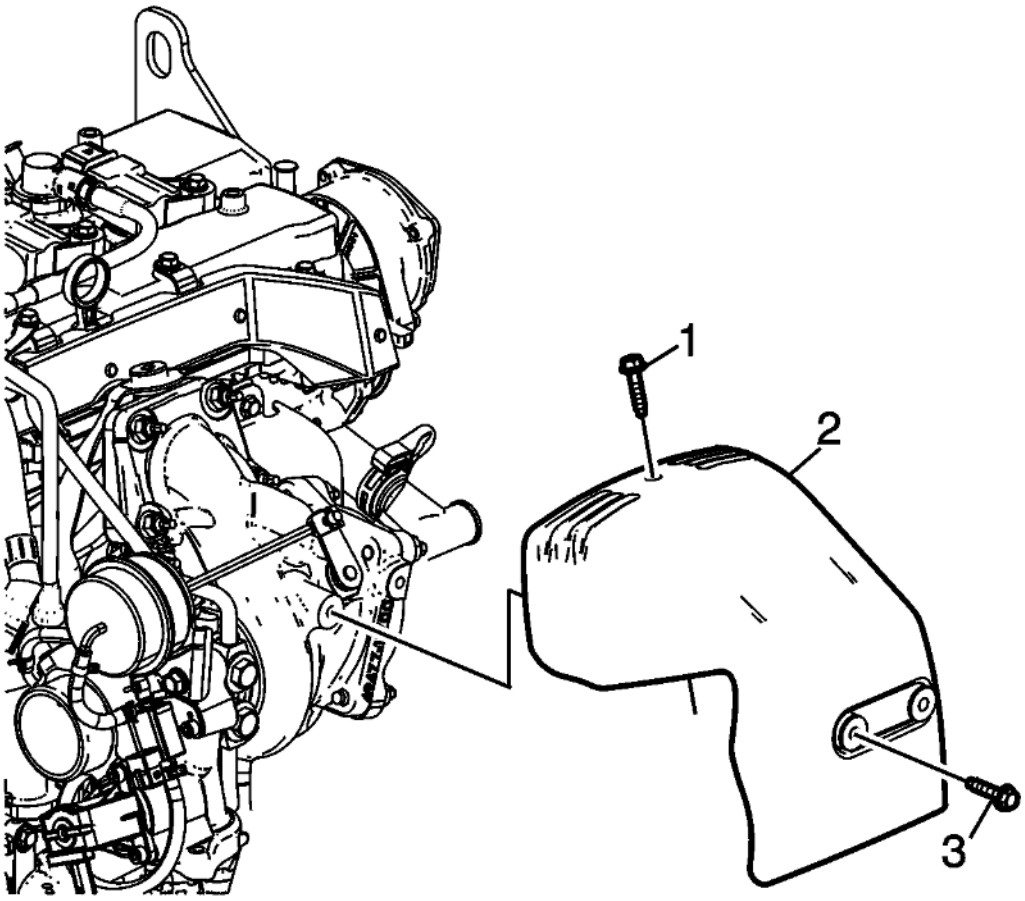

Fig. 12: Turbocharger Heat Shield Bolts
Courtesy of GENERAL MOTORS COMPANY

NOTE: **In the event that a bolt breaks upon removal of components, perform an extraction of the broken bolt.**

1. Remove the turbocharger heat shield bolts (1, 3).
2. Remove the turbocharger heat shield (2).

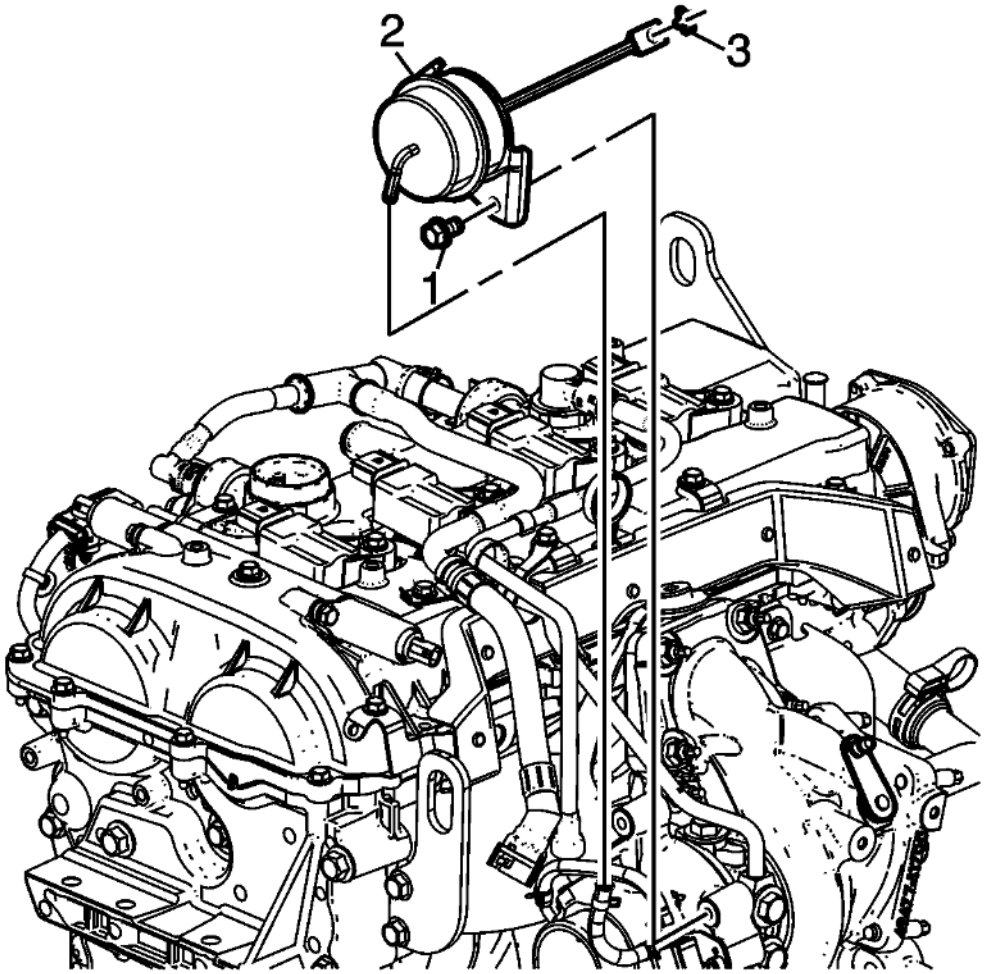

Fig. 13: Turbocharger Wastegate Actuator Arm Retainer
Courtesy of GENERAL MOTORS COMPANY

3. Remove the turbocharger wastegate actuator arm retainer (3).
4. Remove the turbocharger wastegate actuator bolts (1) and actuator (2).

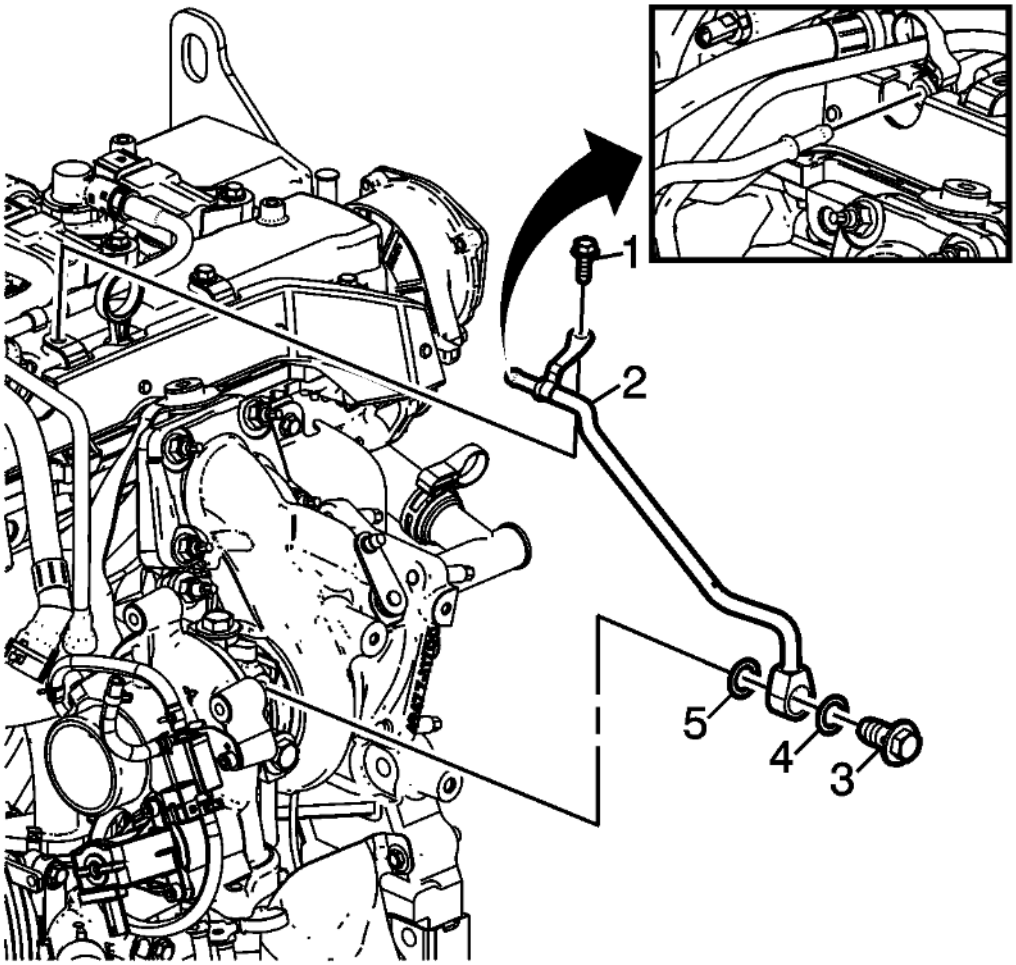

Fig. 14: Camshaft Cover Heat Shield Bolt
Courtesy of GENERAL MOTORS COMPANY

5. Remove the camshaft cover heat shield bolt (1) that retains the turbocharger coolant return pipe (2) at the camshaft cover.
6. Disconnect the turbocharger coolant return pipe from the air bleed hose.
7. Remove the turbocharger coolant return pipe bolt (3).
8. Remove the turbocharger coolant return pipe (2) and washers (4, 5). Discard the washers.

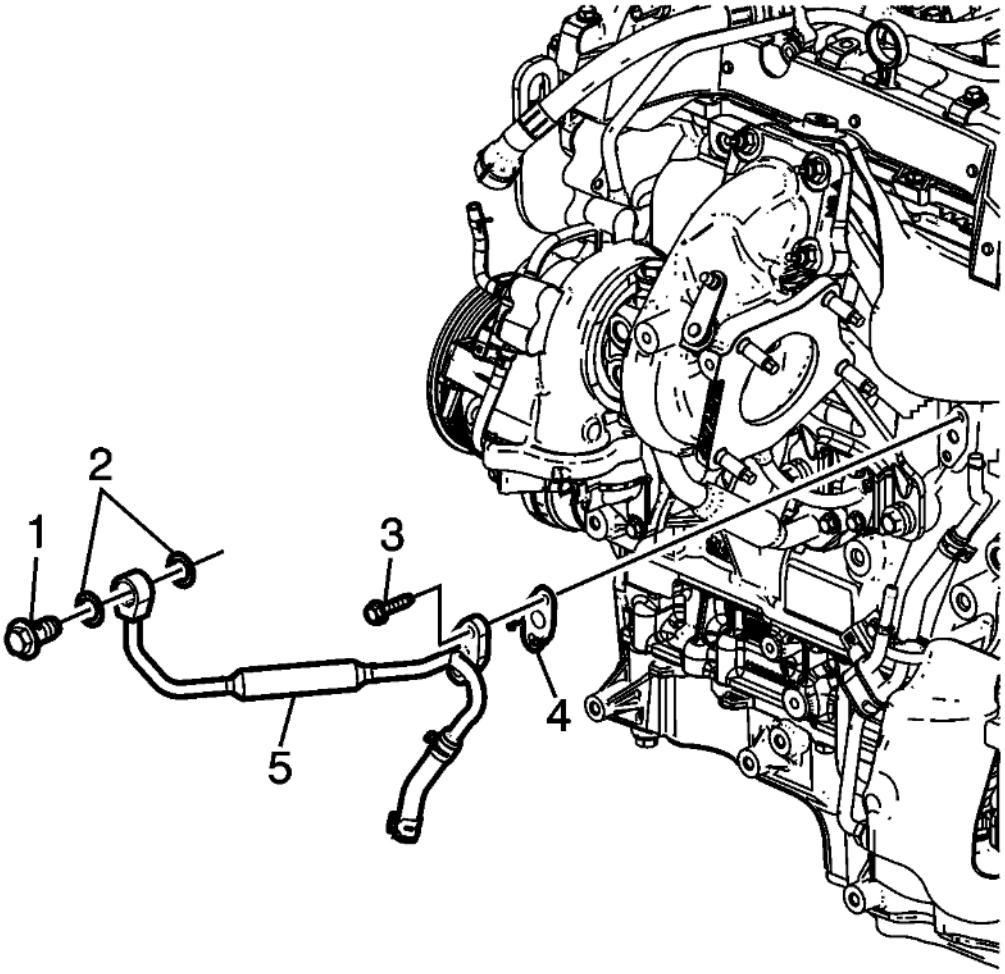

Fig. 15: Turbocharger Coolant Feed Pipe Bolts
Courtesy of GENERAL MOTORS COMPANY

9. Remove the turbocharger coolant feed pipe bolts (1, 3).
10. Disconnect the turbocharger coolant feed pipe hose from the engine oil cooler.
11. Remove the turbocharger coolant feed pipe gasket (4) and discard.
12. Remove the turbocharger coolant feed pipe (5) and washers (2). Discard the washers.

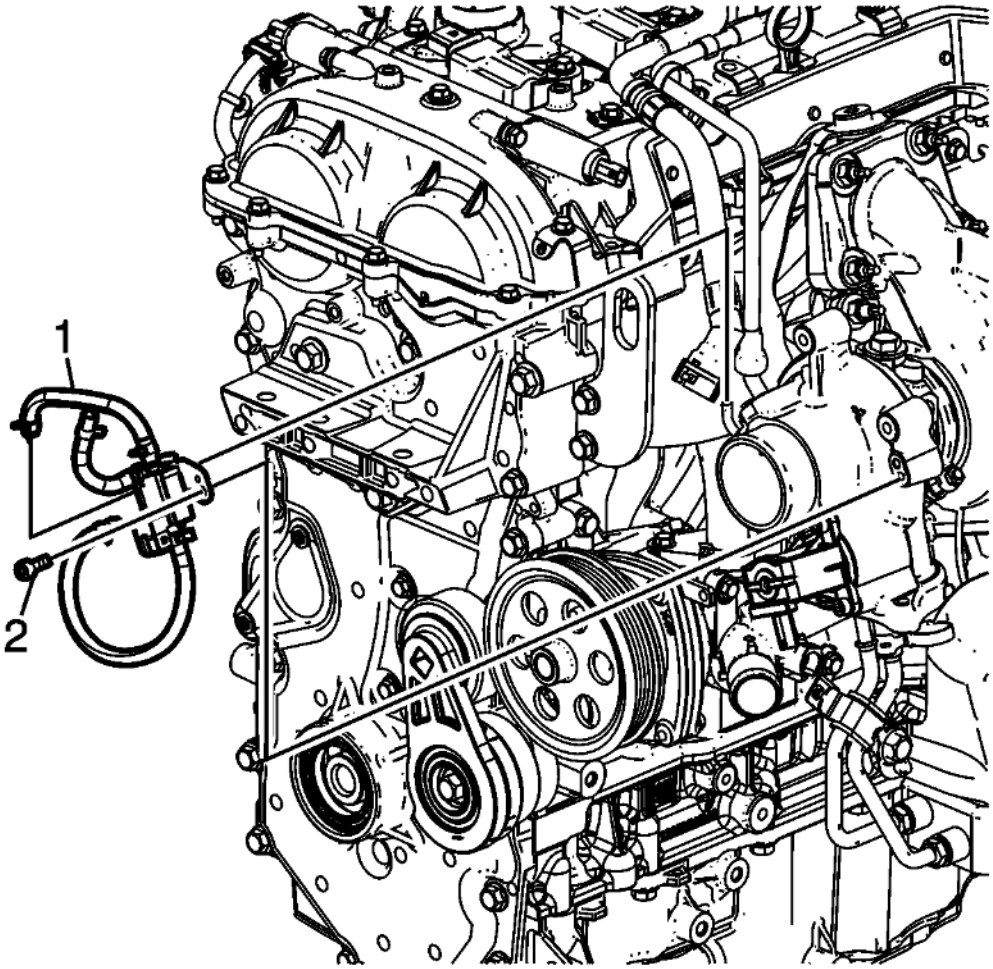

Fig. 16: Turbocharger Wastegate Regulator Solenoid Valve
Courtesy of GENERAL MOTORS COMPANY

13. Disconnect the turbocharger wastegate regulator solenoid valve hoses from the turbocharger.
14. Remove the turbocharger wastegate regulator solenoid valve bracket bolt (2).
15. Remove the turbocharger wastegate regulator solenoid valve (1).

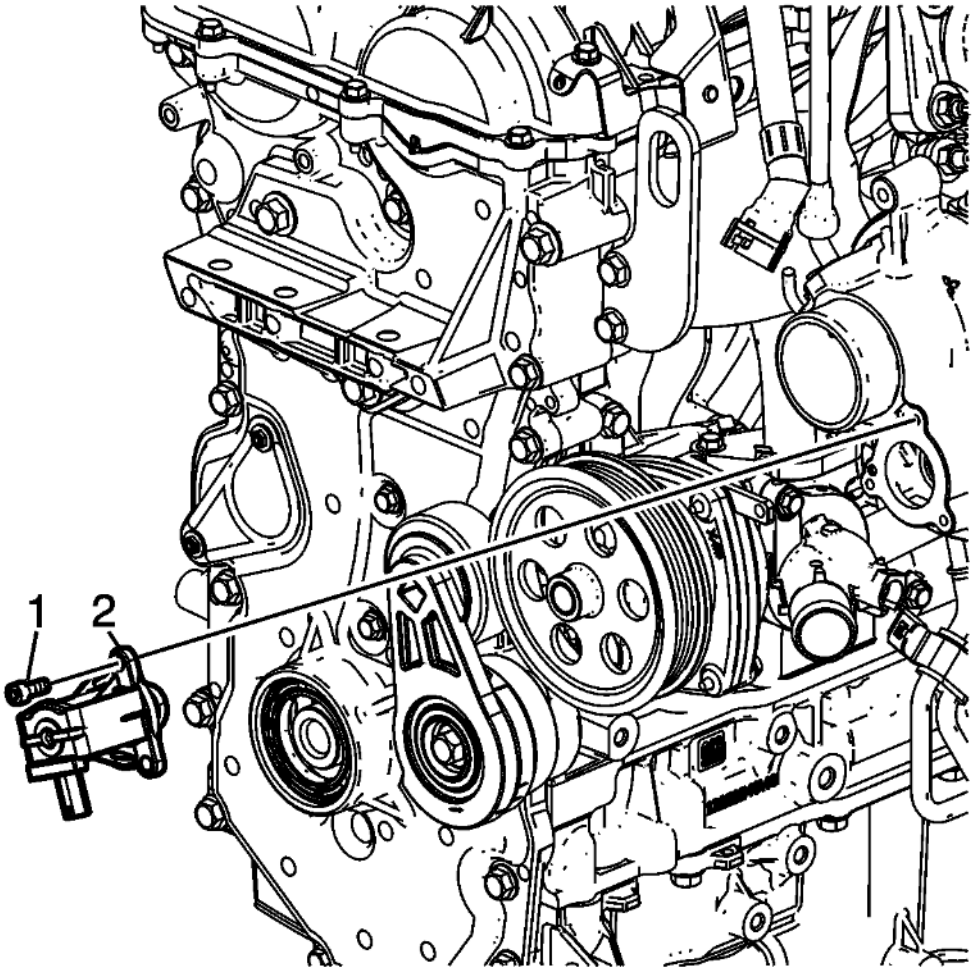

Fig. 17: Turbocharger Bypass Valve Solenoid Bolts
Courtesy of GENERAL MOTORS COMPANY

16. Remove the turbocharger bypass valve solenoid bolts (1).
17. Remove the turbocharger bypass valve solenoid (2).

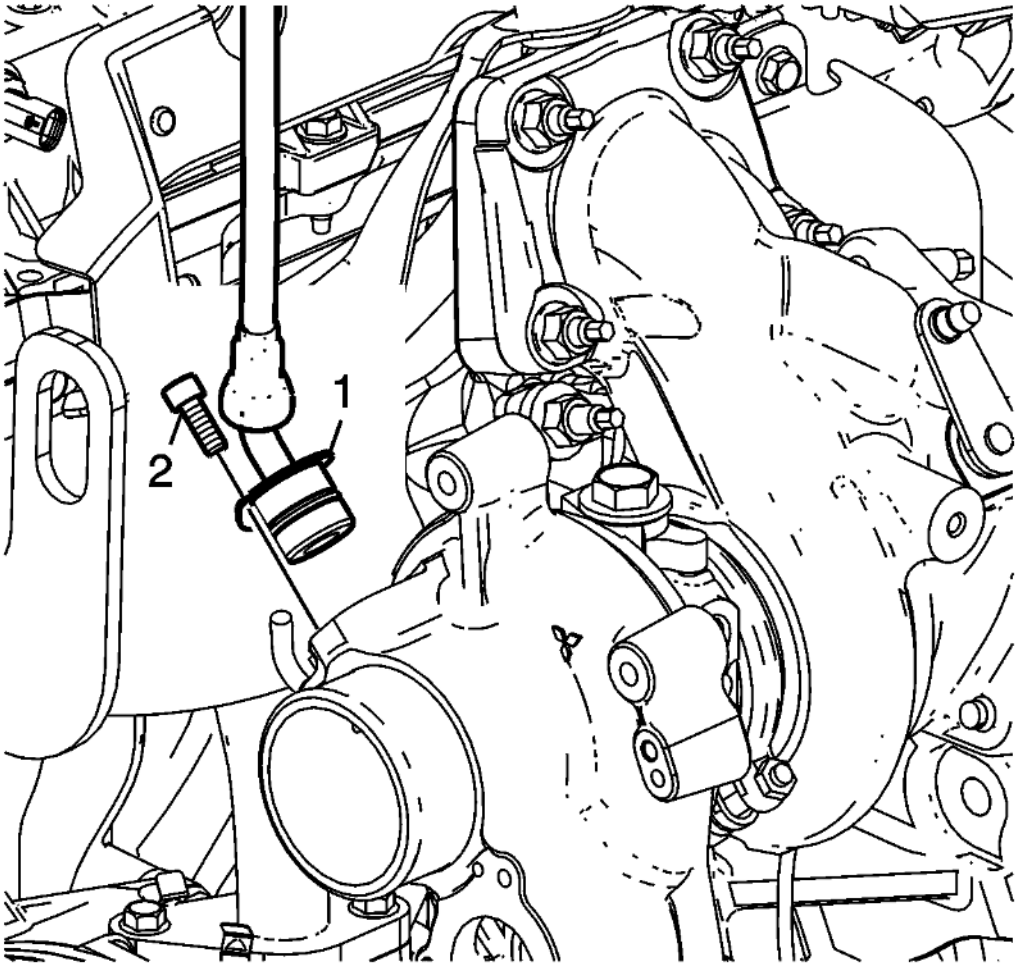

Fig. 18: PCV Hose Fitting Bolt
Courtesy of GENERAL MOTORS COMPANY

NOTE: **Do not disturb the joint between the PCV hose and PCV hose fitting at the turbocharger. This is a permanent connection.**

18. Remove the PCV hose fitting bolt (2). Disconnect the PCV hose fitting (1) with the PCV hose attached from the turbocharger.

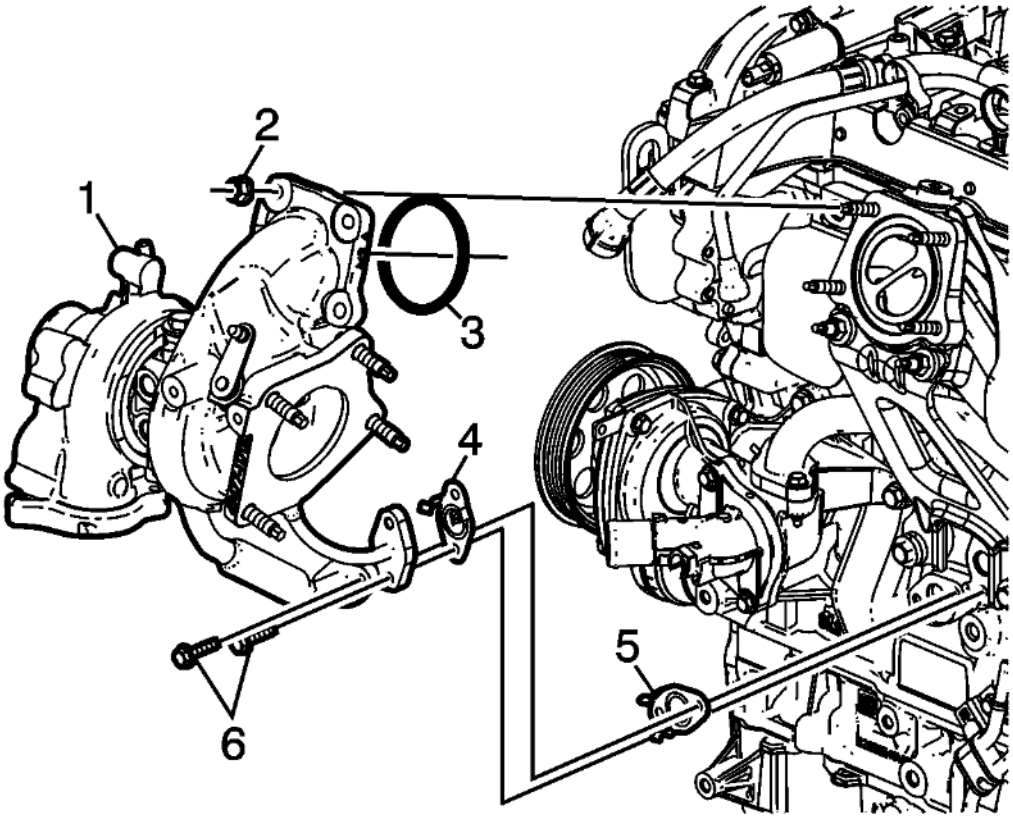

Fig. 19: Turbocharger Nuts
Courtesy of GENERAL MOTORS COMPANY

19. Remove the turbocharger nuts (2) and discard.
20. Remove the turbocharger oil feed and return pipe bolts (6) at the engine block.
21. Remove the turbocharger (1) with the oil return pipe and oil feed pipe attached.
22. Remove the turbocharger oil feed and oil return pipe gaskets (4, 5) and discard.
23. Remove the turbocharger gasket (3) and discard.

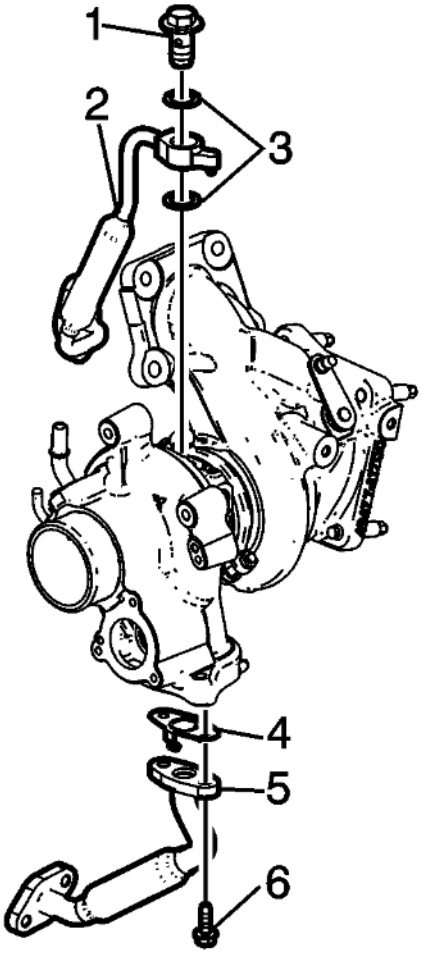

Fig. 20: Turbocharger Oil Feed Pipe Bolt
Courtesy of GENERAL MOTORS COMPANY

24. Remove the turbocharger oil feed pipe bolt (1) from the turbocharger.
25. Remove the turbocharger oil feed pipe (2) and washers (3). Discard the washers.
26. Remove the turbocharger oil return pipe bolts (6).
27. Remove the turbocharger oil return pipe (5).
28. Remove and discard the turbocharger oil return pipe gasket (4).
29. Clean and inspect the turbocharger and components. Refer to **Turbocharger Cleaning and Inspection**.

EXHAUST MANIFOLD REMOVAL

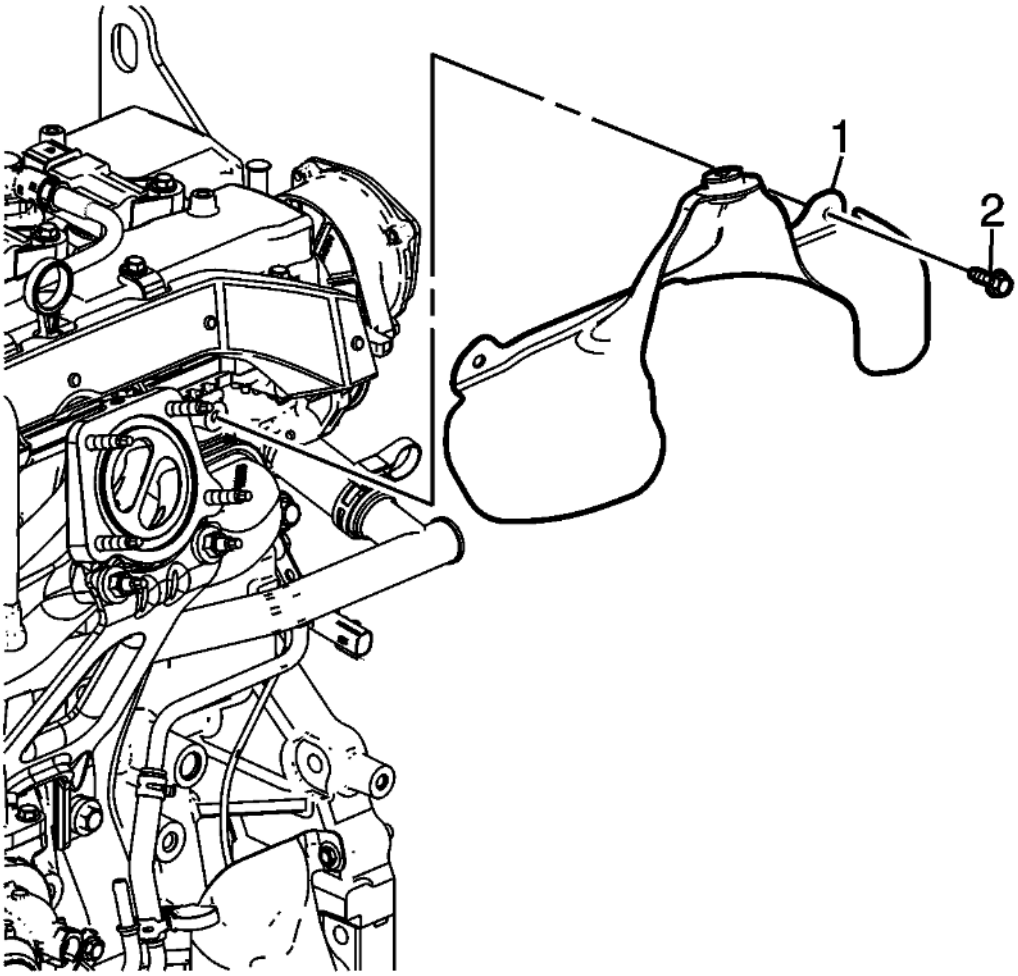

Fig. 21: Exhaust Manifold Heat Shield Bolts
Courtesy of GENERAL MOTORS COMPANY

NOTE: **In the event that a bolt breaks upon removal of components, perform an extraction of the broken bolt.**

1. Remove the exhaust manifold heat shield bolts (2).
2. Remove the exhaust manifold heat shield (1).

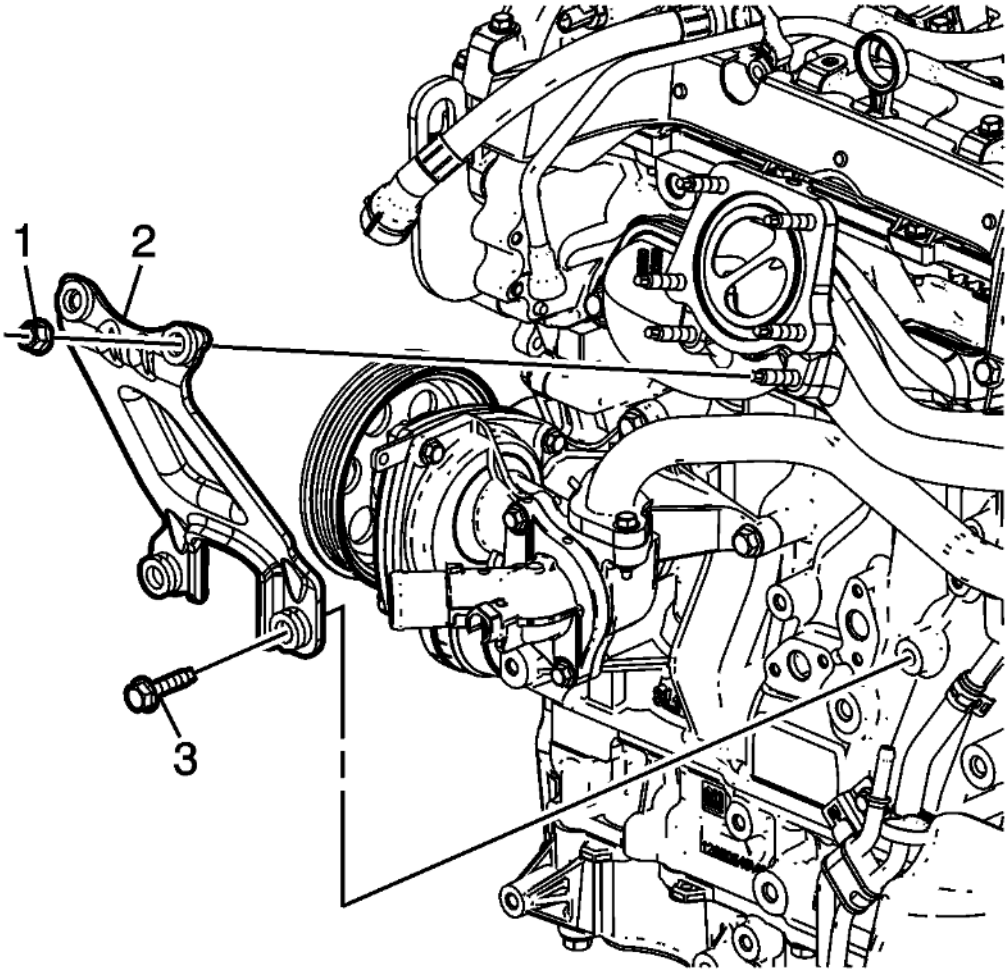

Fig. 22: Exhaust Manifold Brace Nuts
Courtesy of GENERAL MOTORS COMPANY

3. Remove the exhaust manifold brace nuts (1) and discard.
4. Remove the exhaust manifold brace bolts (3).
5. Remove the exhaust manifold brace (2).

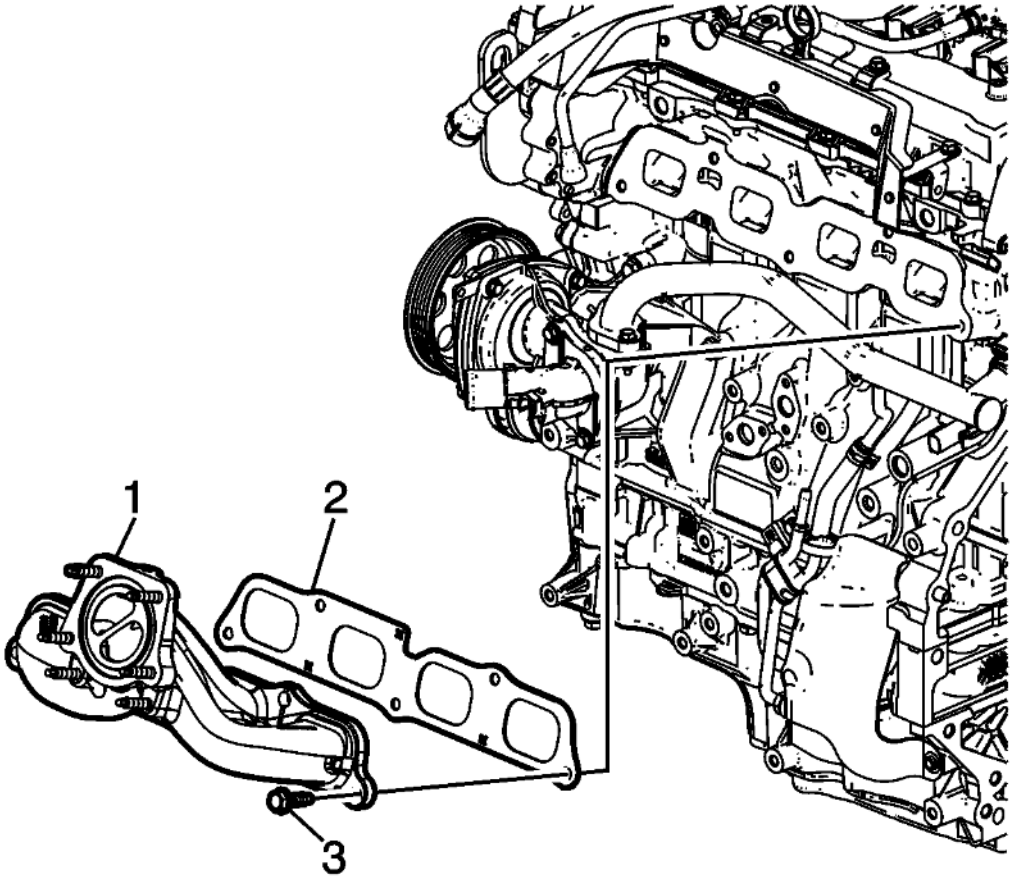

Fig. 23: Exhaust Manifold And Cylinder Head Bolts
Courtesy of GENERAL MOTORS COMPANY

6. Remove and discard the exhaust manifold to cylinder head bolts (3).
7. Remove the exhaust manifold (1).
8. Remove and discard the exhaust manifold gasket (2).
9. Clean all of the sealing surfaces.

SECONDARY AIR INJECTION CHECK VALVE REMOVAL

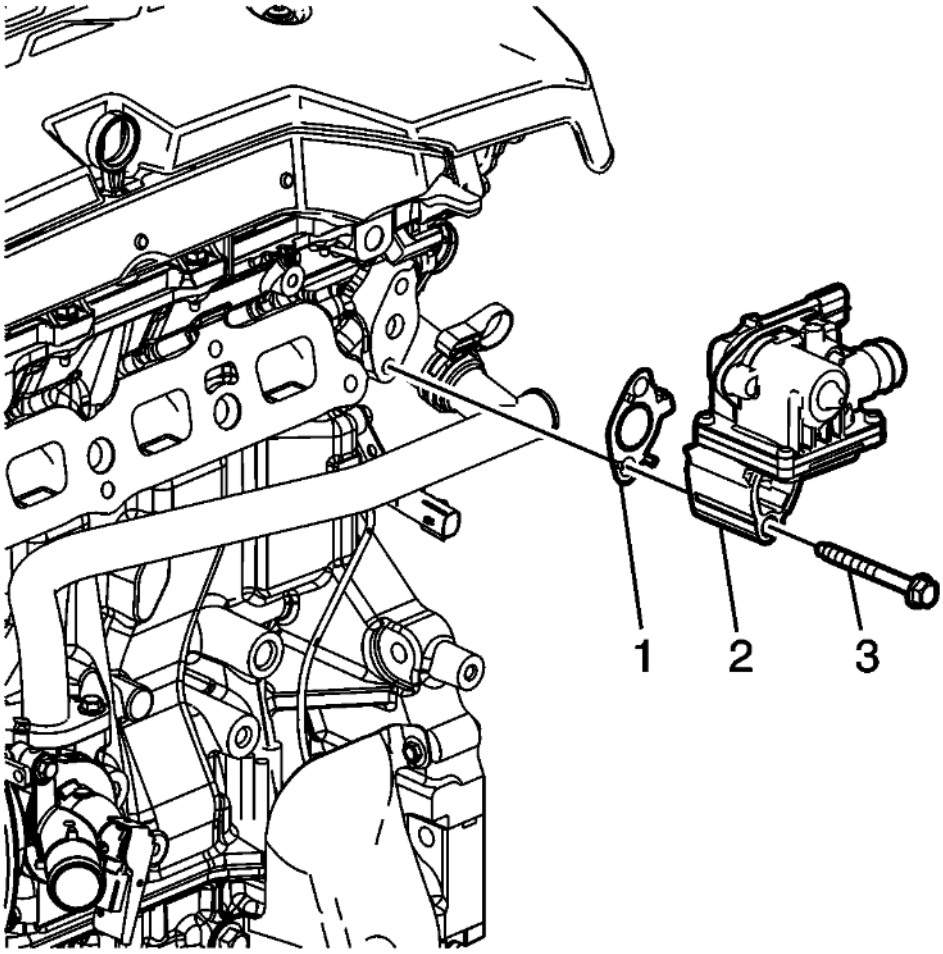

Fig. 24: Secondary Air Injection Check Valve Bolts
Courtesy of GENERAL MOTORS COMPANY

1. Remove the secondary air injection check valve bolts (3).
2. Remove the secondary air injection check valve assembly (2).
3. Remove and discard the check valve gasket (1).

FUEL RAIL AND INJECTORS REMOVAL

Special Tools

EN-49248 Fuel Rail Assembly Remover

For equivalent regional tools, refer to **Special Tools**

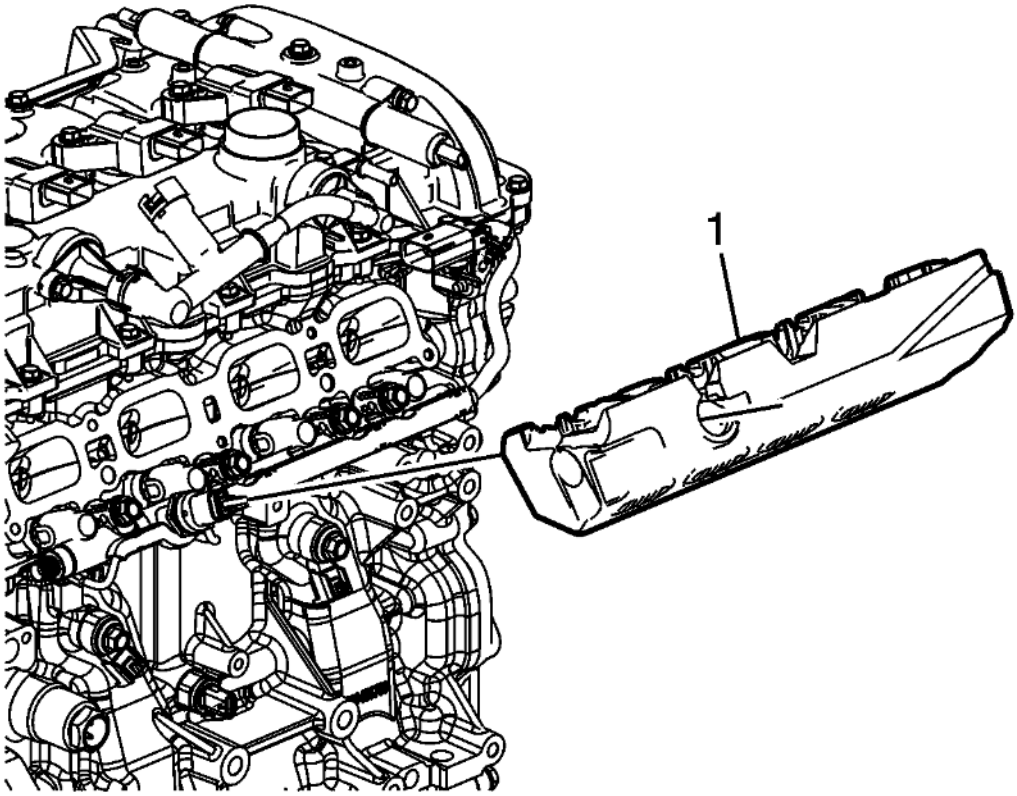

Fig. 25: Fuel Injection Fuel Rail Noise Shield
Courtesy of GENERAL MOTORS COMPANY

1. Remove the fuel injection fuel rail noise shield (1).

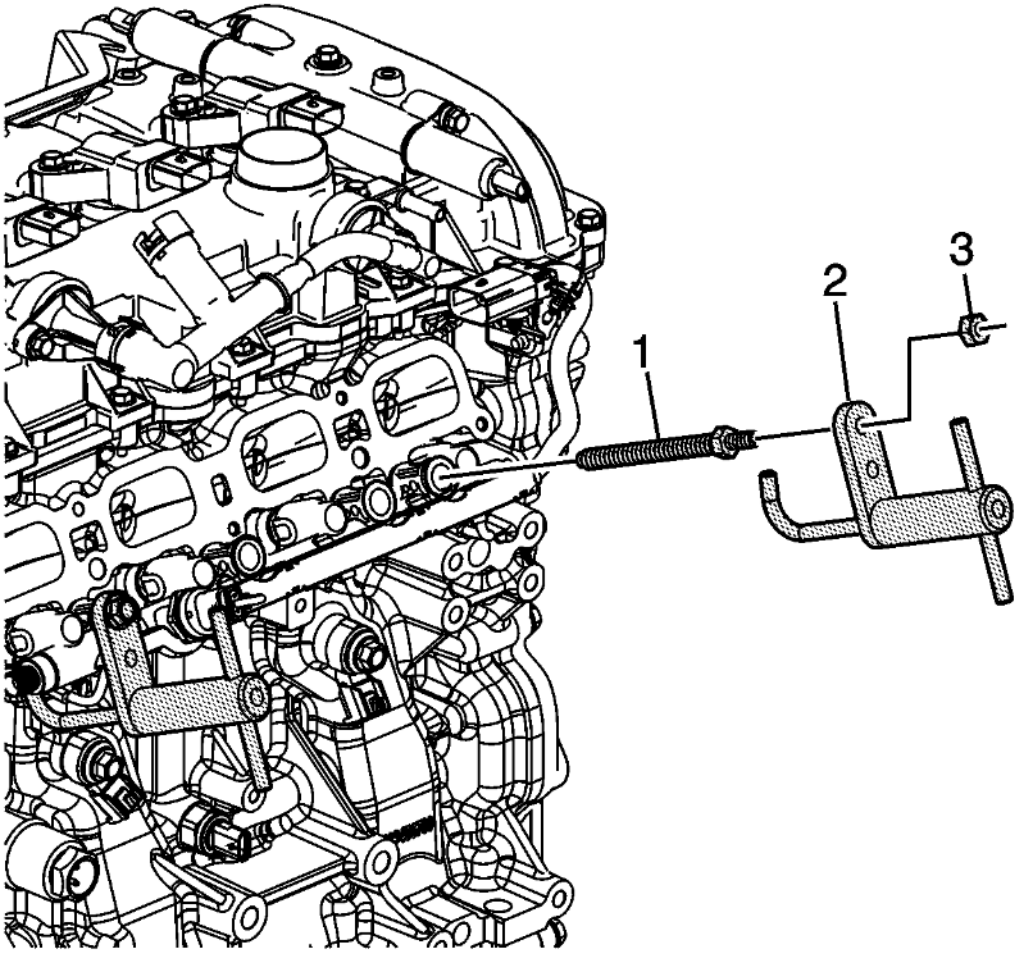

Fig. 26: Identifying Fuel Rail Assembly Remover Studs
Courtesy of GENERAL MOTORS COMPANY

2. Disconnect the electrical harness from the fuel rail harness connection.
3. Remove the fuel rail assembly retaining bolts and upper rubber grommet, if necessary.

NOTE: **Use care to avoid contact with the fuel rail harness during special tool installation and fuel rail removal.**

4. Install **EN-49248** studs (1) into the 2 outermost fuel rail assembly retaining bolt locations. Tighten the studs to 22 N.m (16 lb ft).
5. Install **EN-49248** remover (2) onto each stud, and engage the hooks to the fuel rail. Install the nuts (3) retaining the remover onto the studs and tighten until snug.

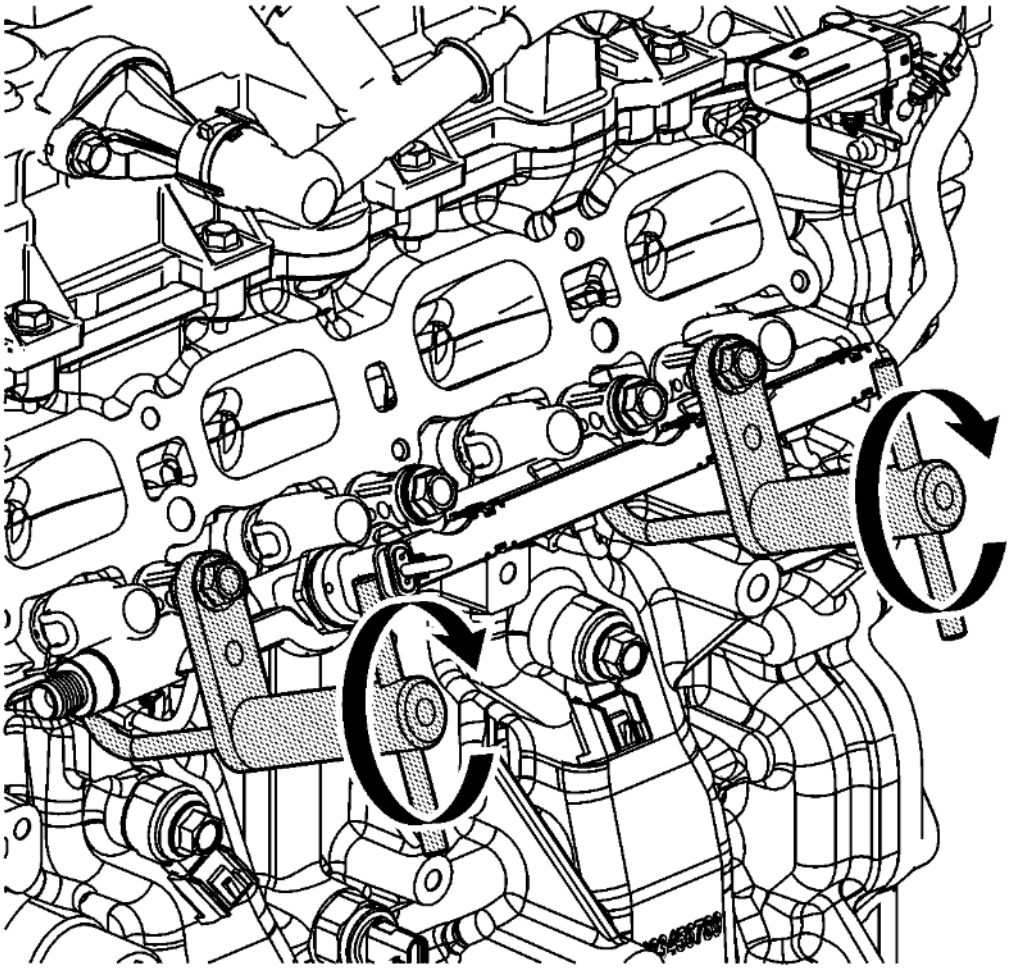

Fig. 27: Fuel Rail Assembly Using Fuel Rail Assembly Remover
Courtesy of GENERAL MOTORS COMPANY

NOTE: **EN-49248 will assist in the proper removal of the fuel rail assembly. Ensure that the following conditions are met:**

- **Turn the handles simultaneously in order to pull the fuel rail straight out along the fuel injector axis.**
- **DO NOT twist when pulling out on the fuel rail and injector assembly.**

6. Using **EN-49248** remover , remove the fuel rail assembly.

CAMSHAFT COVER REMOVAL

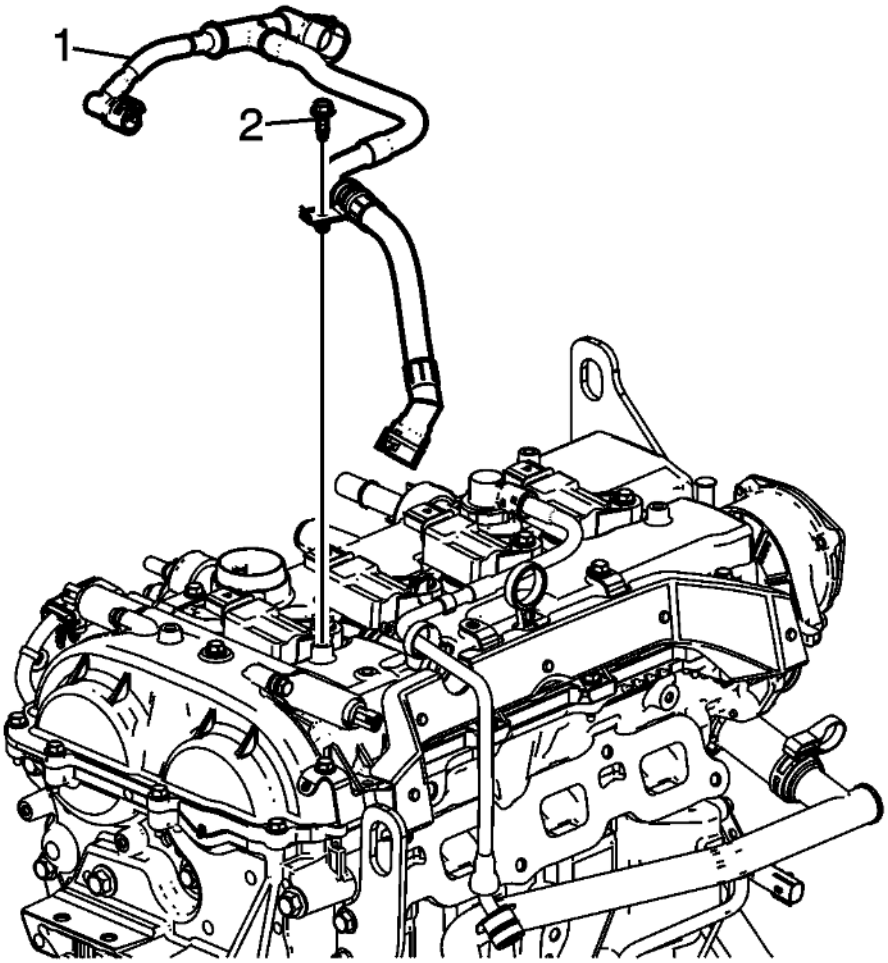

Fig. 28: PCV Hose Bolt
Courtesy of GENERAL MOTORS COMPANY

1. Remove the PCV hose bolt (2) from the camshaft cover.
2. Disconect the PCV tube assembly (1) at the quick-connect fittings.

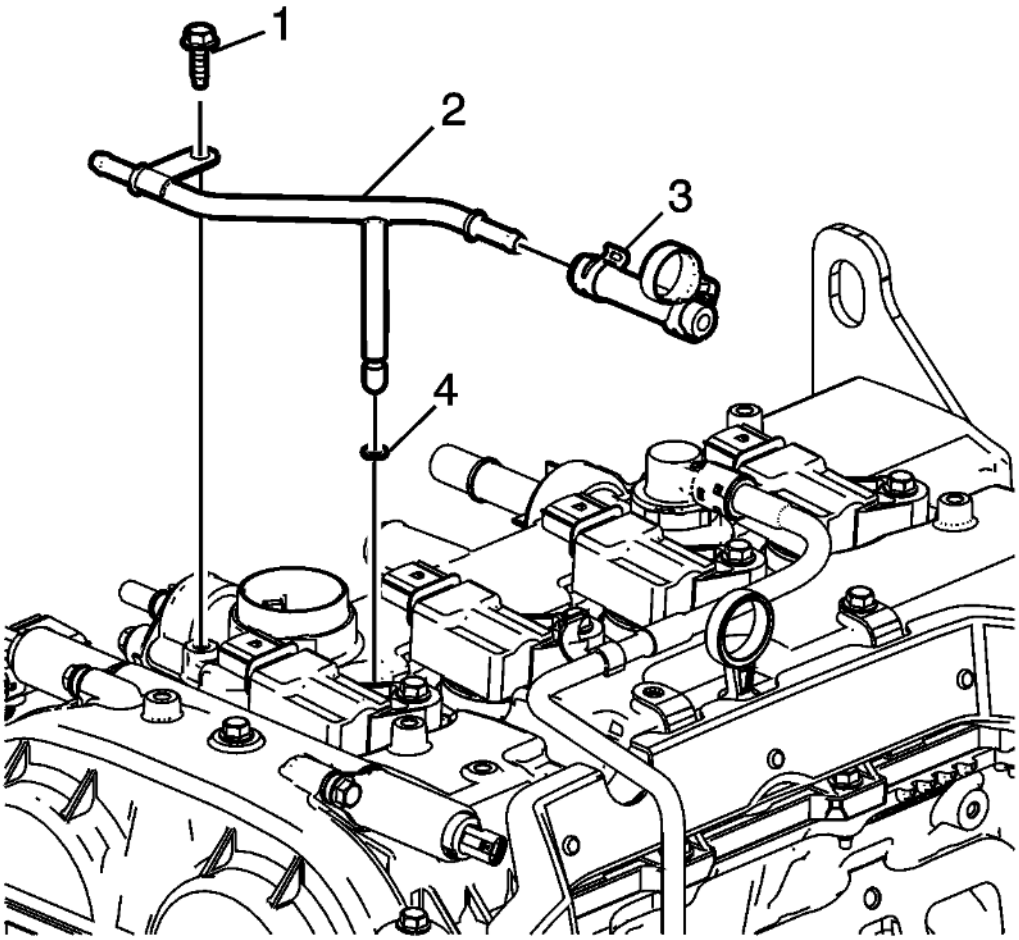

Fig. 29: Engine Coolant Air Bleed Pipe Bolt
Courtesy of GENERAL MOTORS COMPANY

3. Remove the engine coolant air bleed pipe bolt (1).
4. Remove the engine coolant air bleed pipe (2), hose (3), and O-ring (4). Inspect O-ring and discard if necessary.

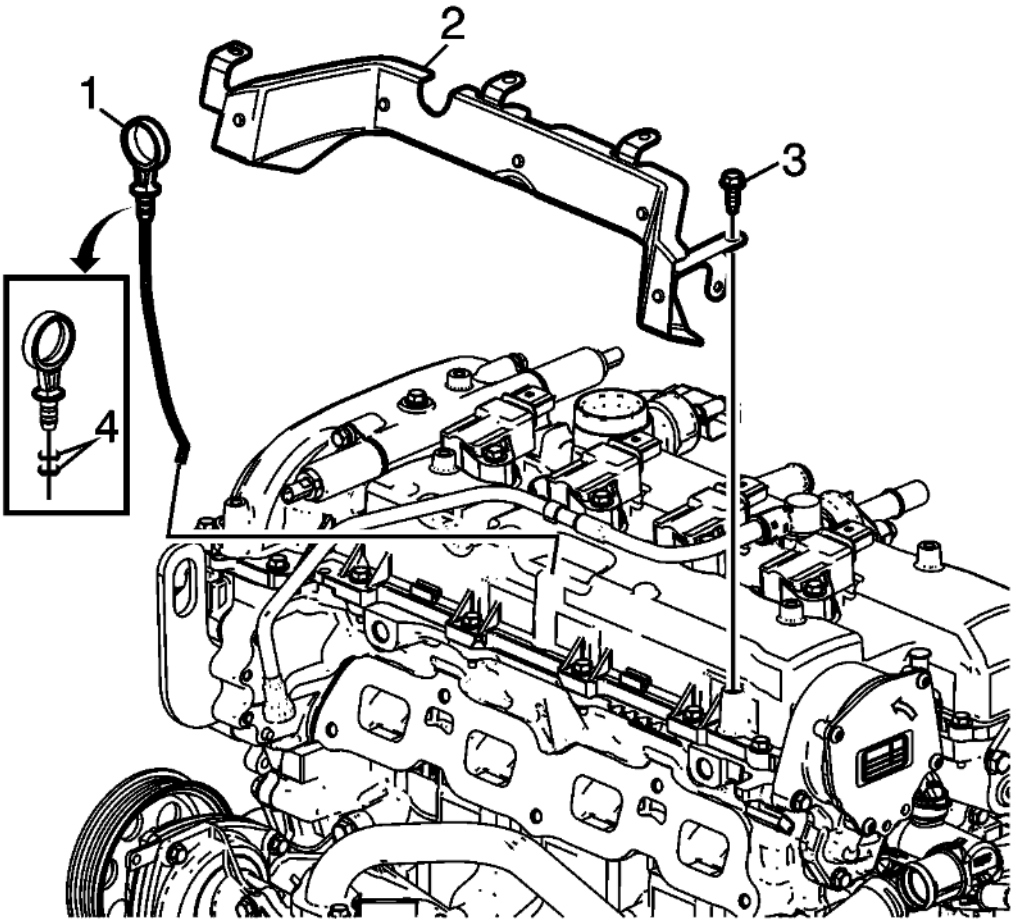

Fig. 30: Camshaft Cover Heat Shield
Courtesy of GENERAL MOTORS COMPANY

5. Remove the oil level indicator (1). Inspect and replace the oil indicator O-ring seals (4), if necessary.
6. Remove the camshaft cover heat shield (2) and bolts (3).

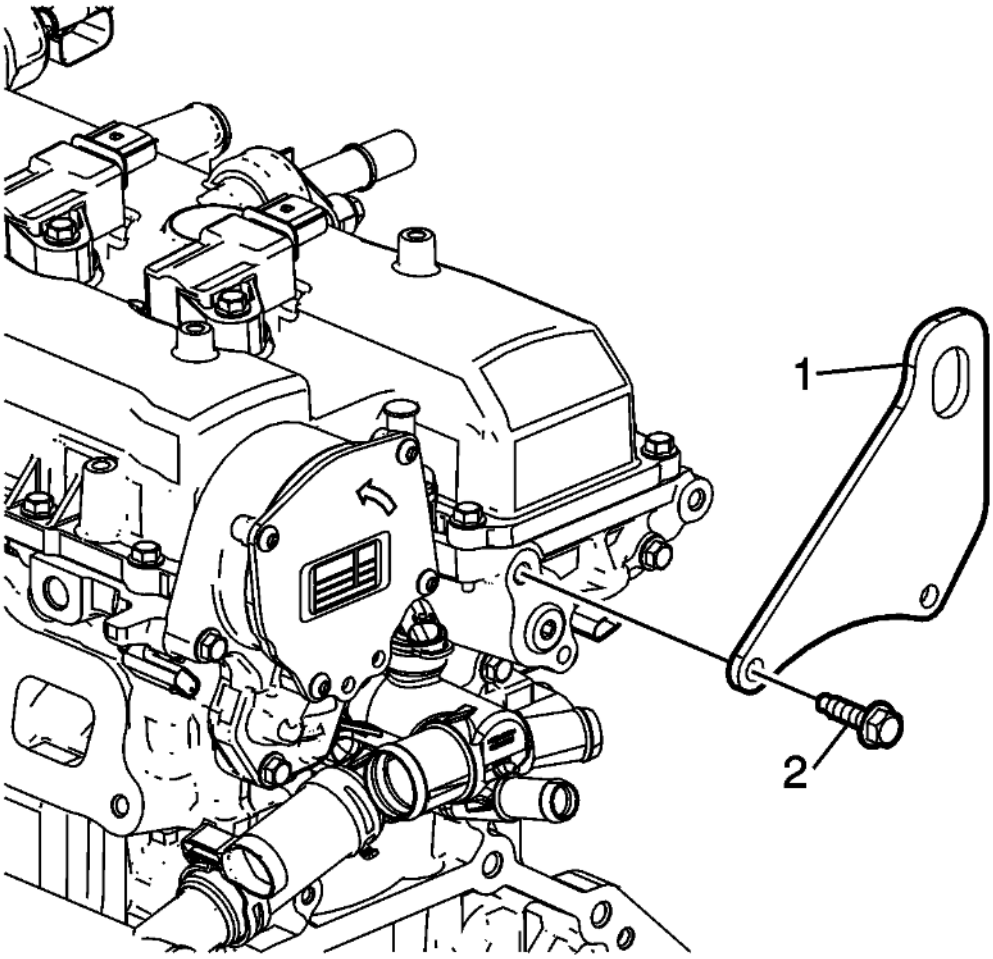

Fig. 31: Rear Lift Bracket And Bolts
Courtesy of GENERAL MOTORS COMPANY

7. Remove the rear lift bracket (1) and bolts (2).

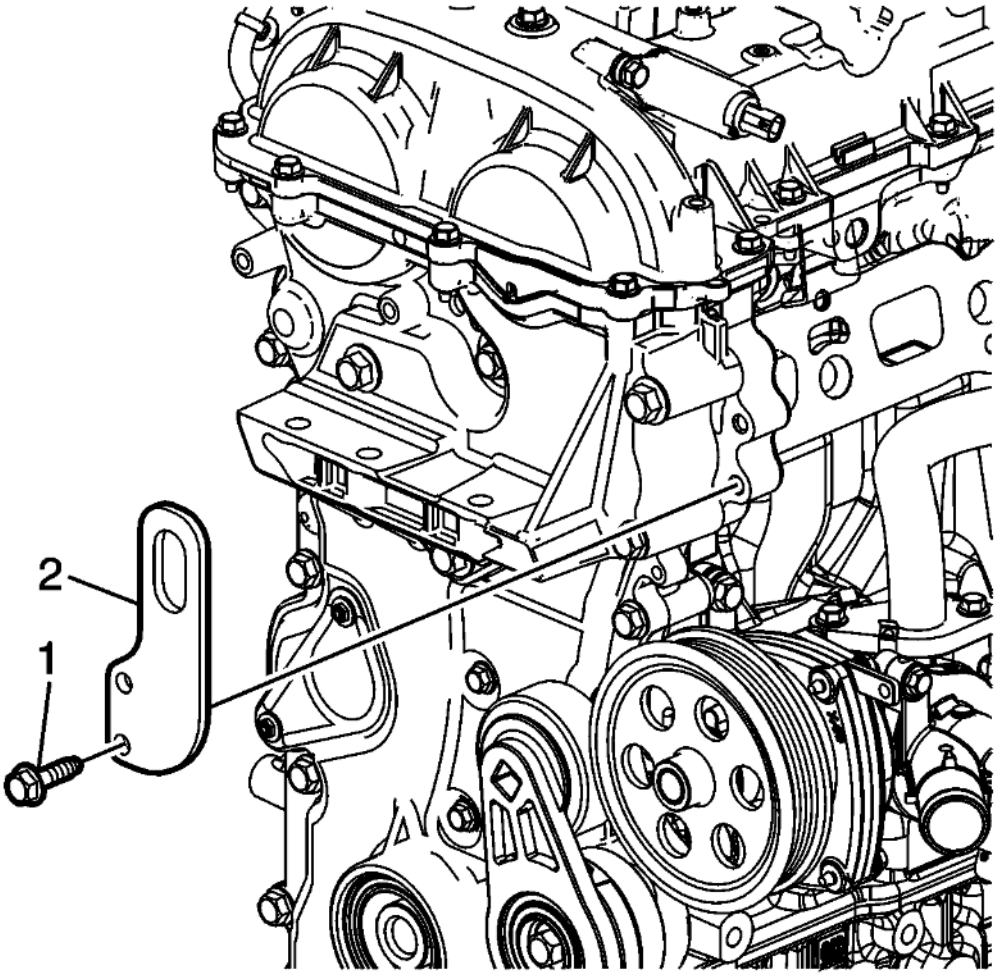

Fig. 32: Front Lift Bracket
Courtesy of GENERAL MOTORS COMPANY

8. Remove the front lift bracket (2) and bolts (1).

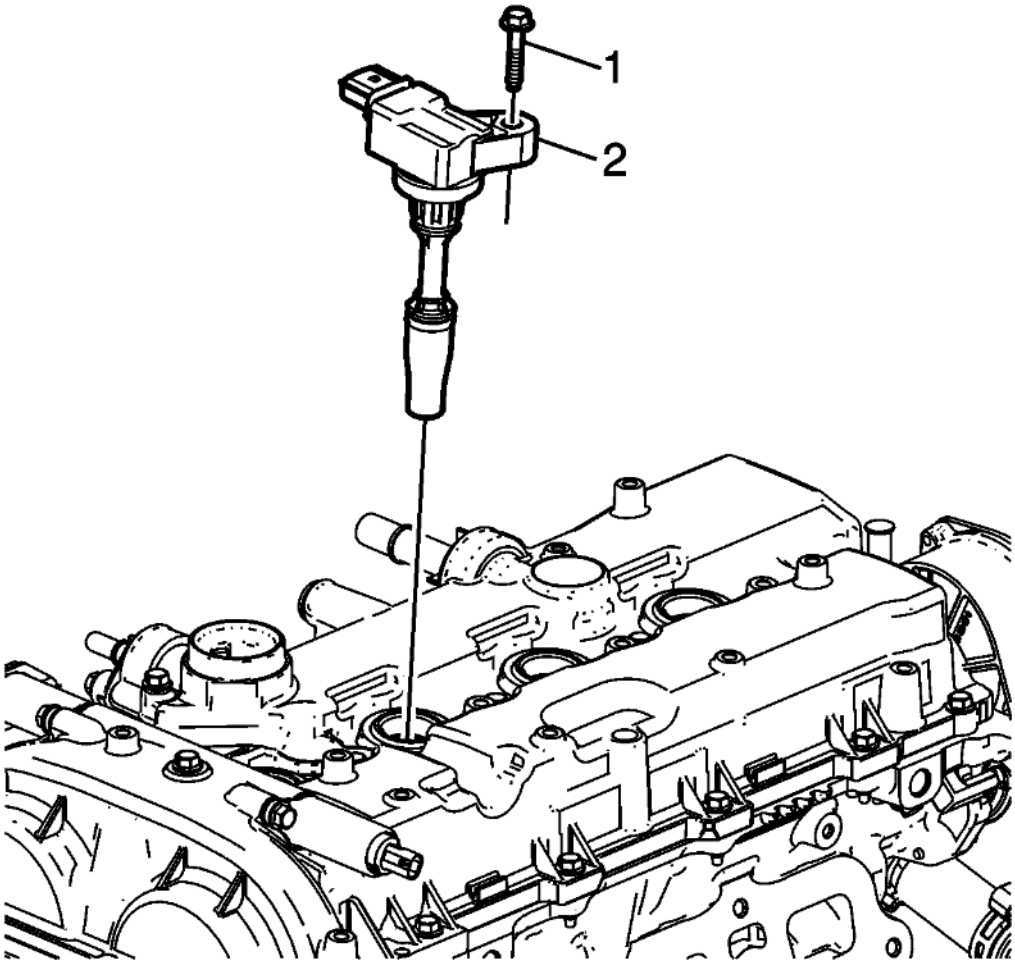

Fig. 33: Ignition Coils And Bolts
Courtesy of GENERAL MOTORS COMPANY

9. Remove the ignition coils (2) and bolts (1).

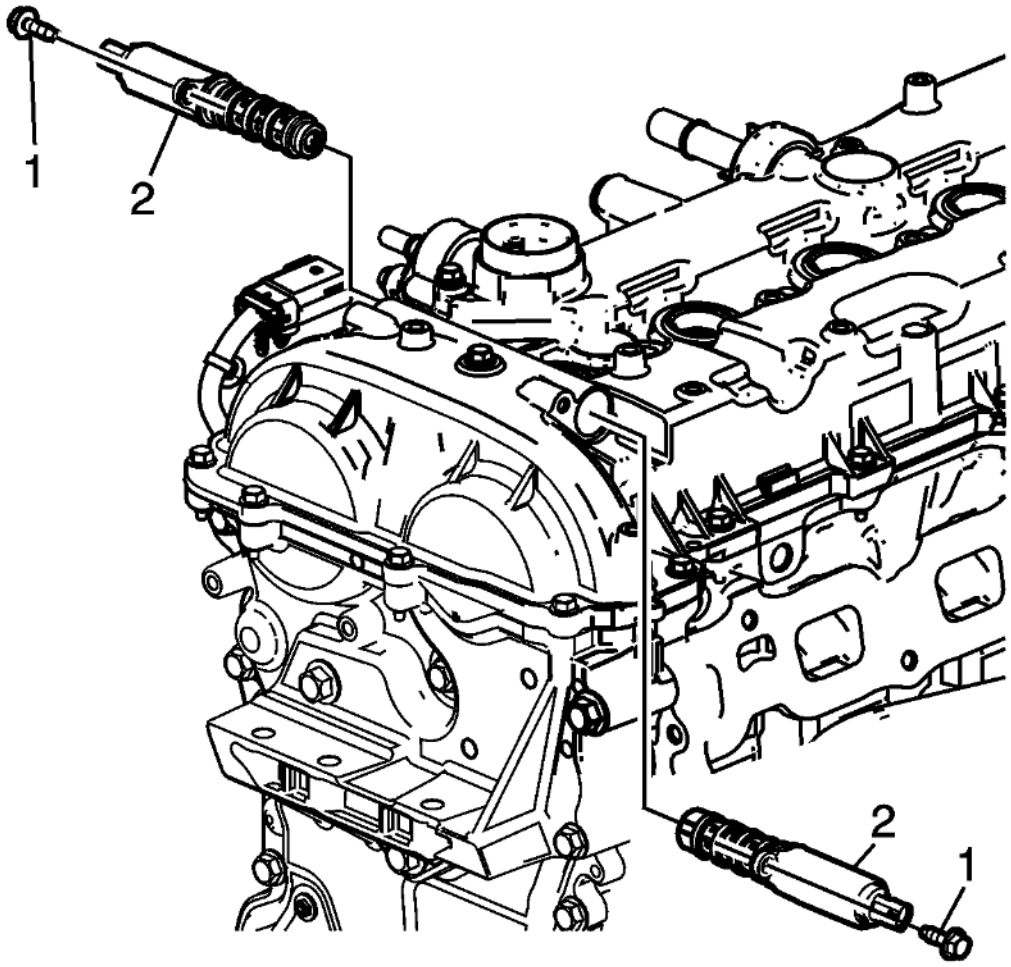

Fig. 34: Camshaft Position Actuator Control Solenoid Valves
Courtesy of GENERAL MOTORS COMPANY

10. Remove the camshaft position actuator control solenoid valves (2) and bolts (1).

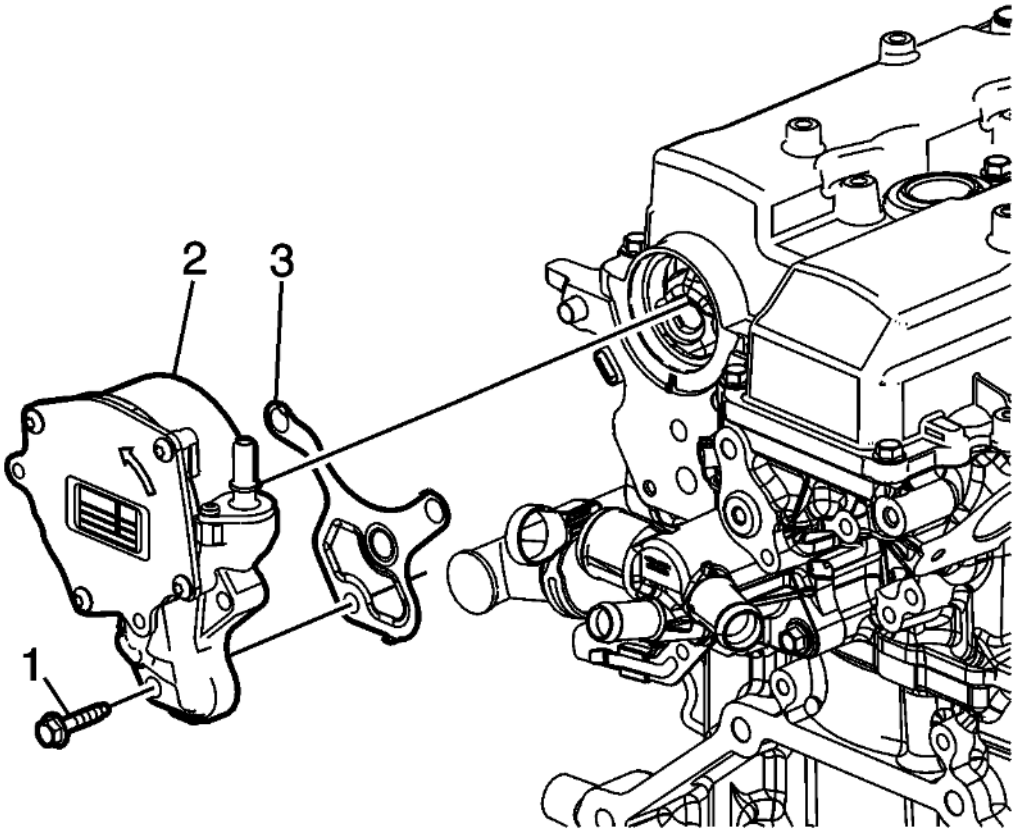

Fig. 35: Vacuum Assembly And Bolts
Courtesy of GENERAL MOTORS COMPANY

11. Remove the vacuum assembly (2) and bolts (1).
12. Remove the vacuum assembly gasket (3) and discard.

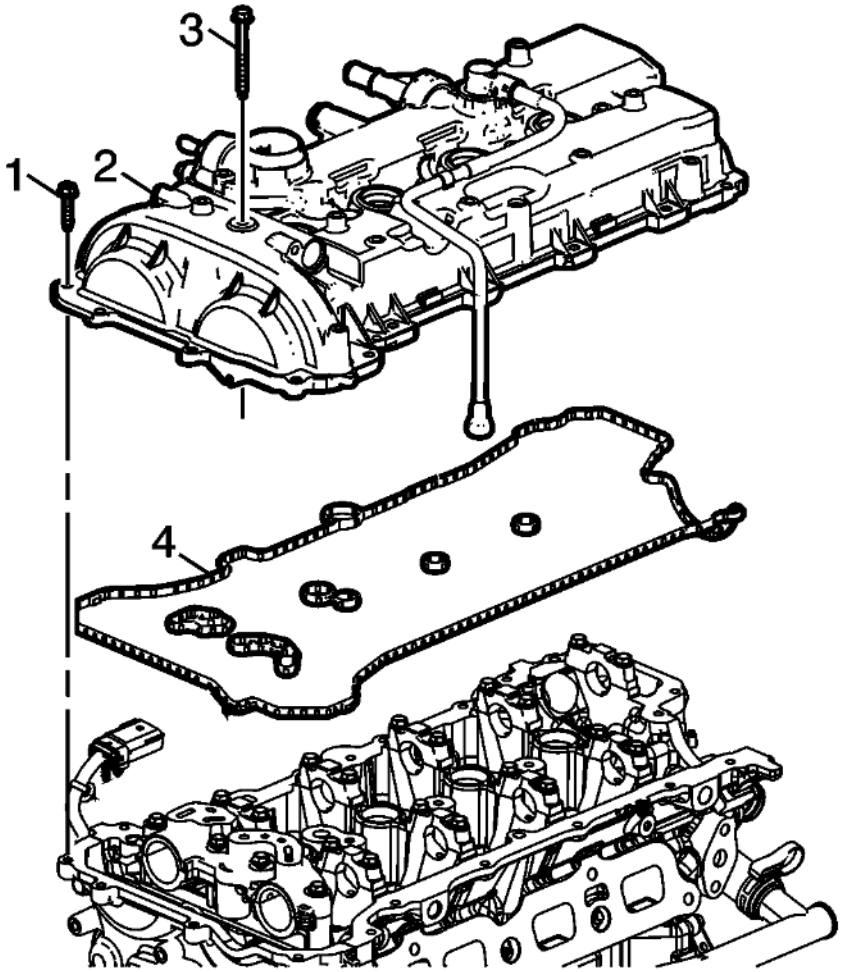

Fig. 36: Camshaft Cover Assembly
Courtesy of GENERAL MOTORS COMPANY

13. Remove the camshaft cover assembly (2).
14. Remove and discard the camshaft cover gasket (4).

ENGINE FRONT COVER REMOVAL (LTG)

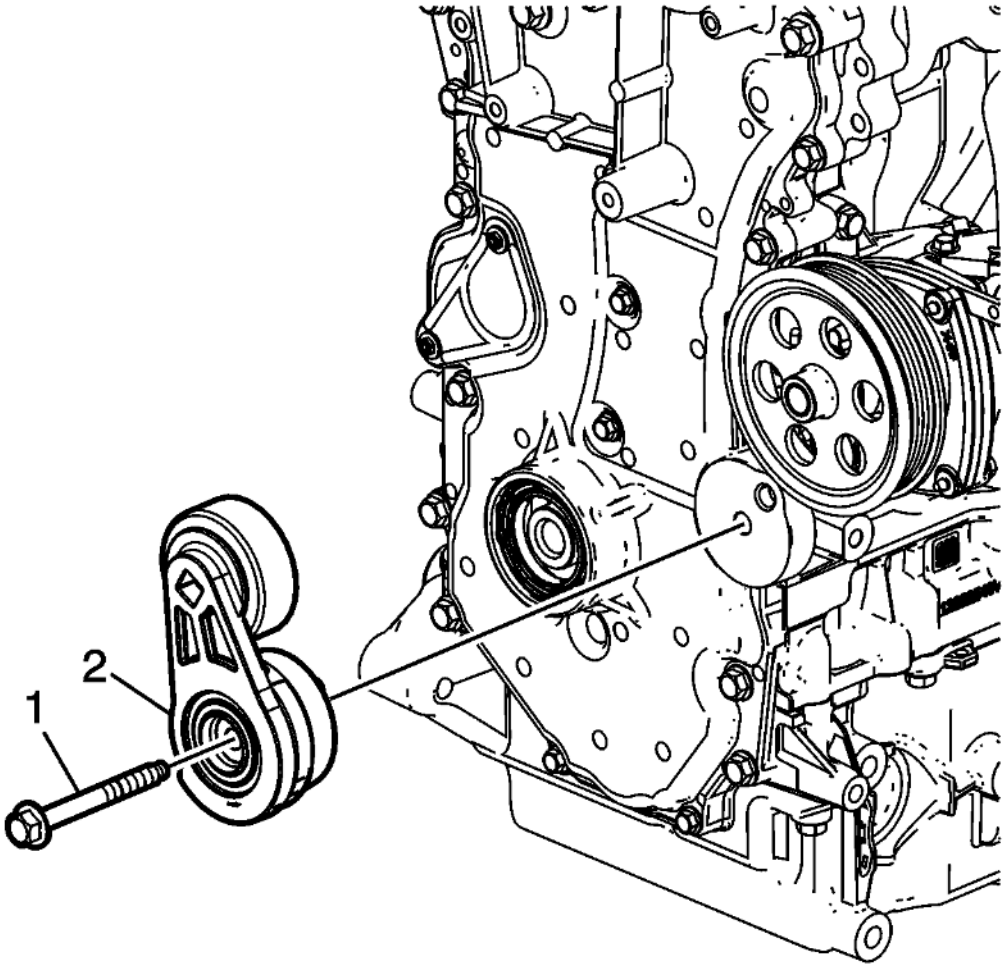

Fig. 37: Accessory Drive Belt Tensioner
Courtesy of GENERAL MOTORS COMPANY

1. Remove the accessory drive belt tensioner bolt (1).
2. Remove the accessory drive belt tensioner (2).

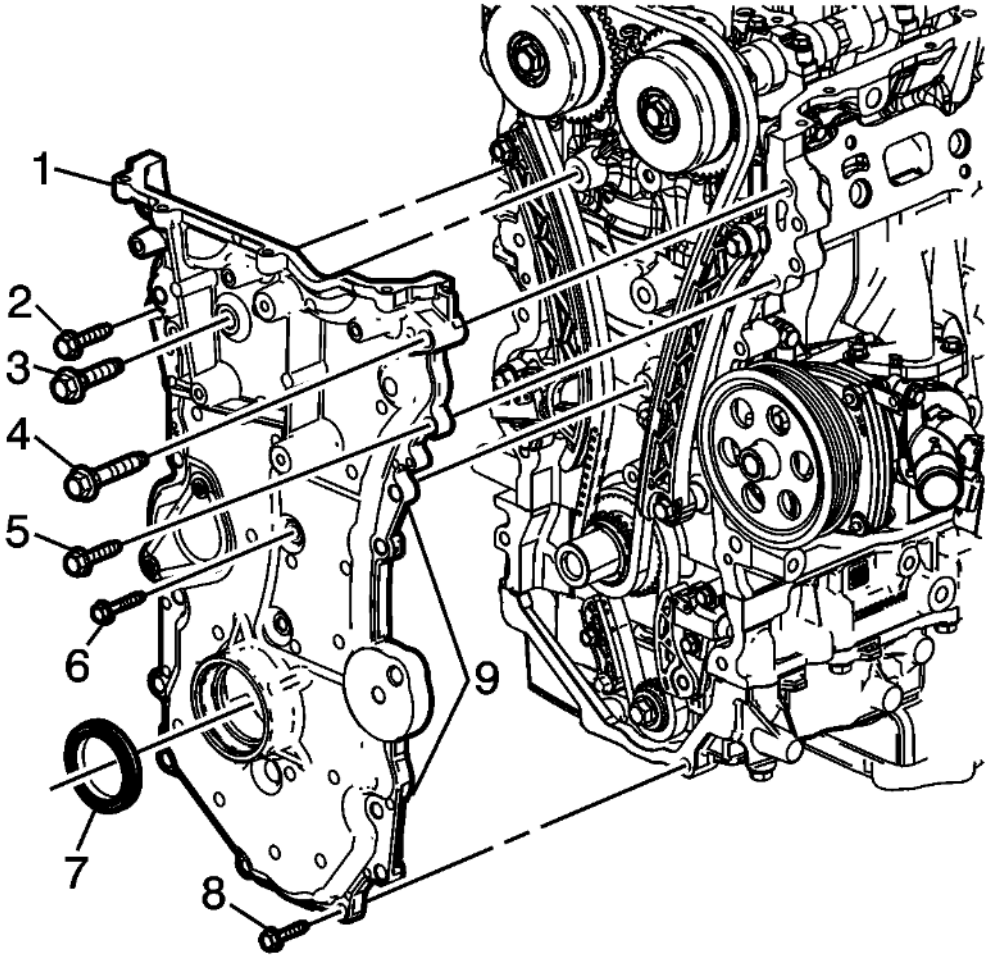

Fig. 38: Exploded View Of Engine Front Cover And Components
Courtesy of GENERAL MOTORS COMPANY

3. Remove the engine front cover bolts (2-6, 8).
4. Remove the engine front cover (1).
5. Remove the front oil seal (7) with an appropriate tool.

CAMSHAFT TIMING CHAIN AND TENSIONER REMOVAL

Special Tools

EN 50837 Timing Chain Tensioner Retraction Tool

For equivalent regional tools, refer to **Special Tools** .

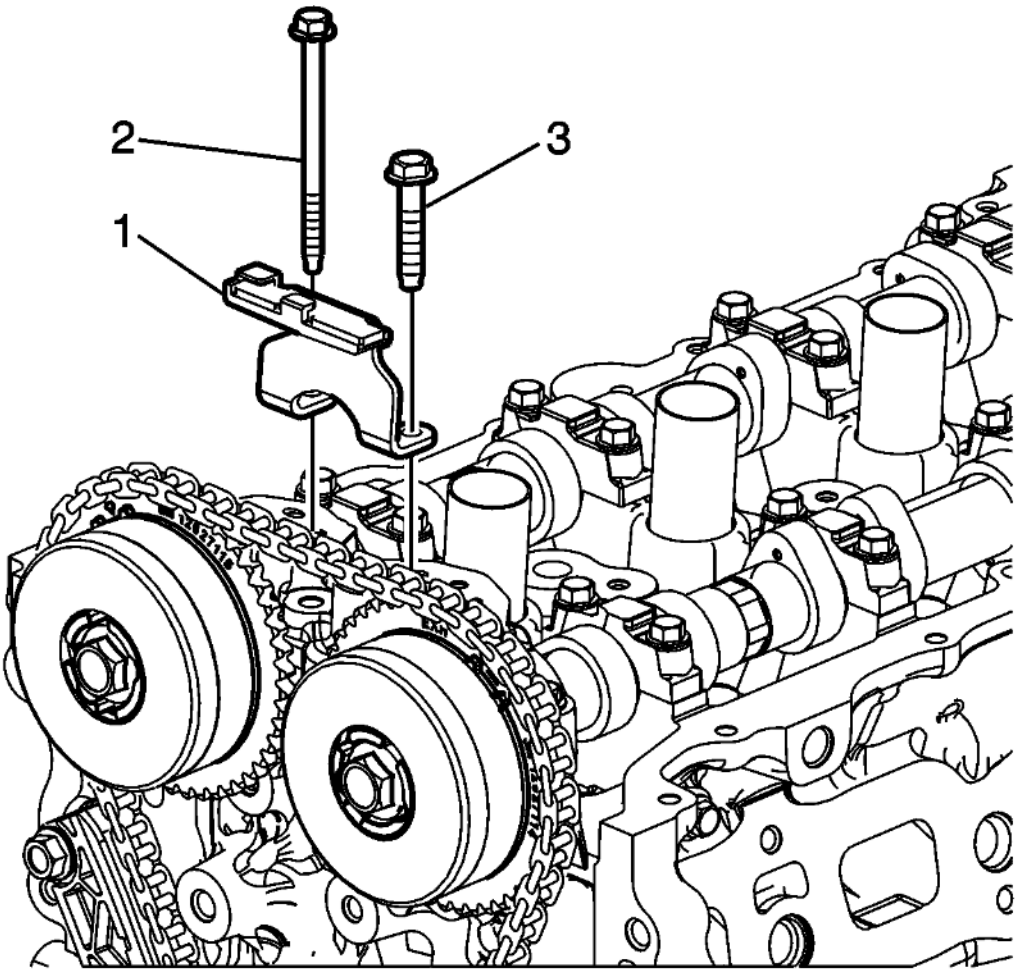

Fig. 39: Upper Timing Chain Guide Bolts
Courtesy of GENERAL MOTORS COMPANY

1. Remove the upper timing chain guide bolts (2, 3).
2. Remove the upper timing chain guide (1).

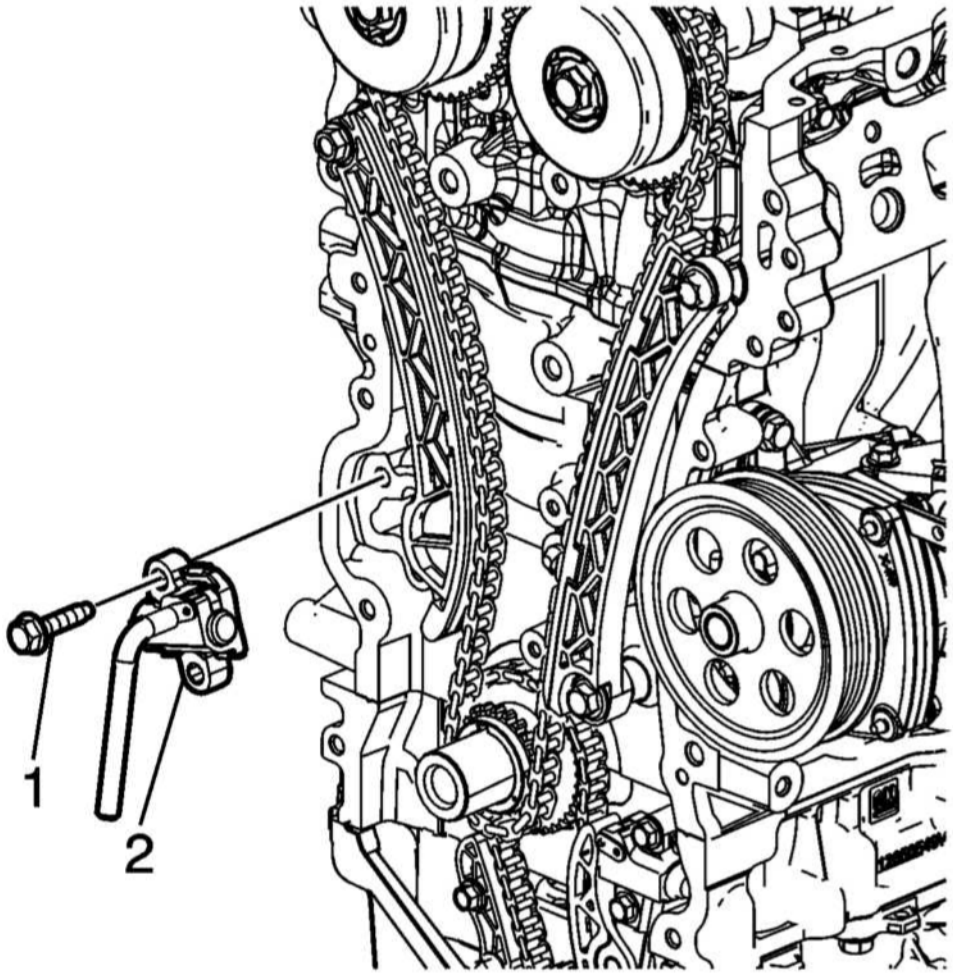

Fig. 40: Timing Chain Tensioner Bolts
Courtesy of GENERAL MOTORS COMPANY

3. Remove the timing chain tensioner bolts (1) and timing chain tensioner (2).
4. Compress and lock the tensioner using **EN-50837** retention tool.
    1. Insert **EN-50837** retention tool into the lever arm and push in a counterclockwise direction.
    2. Compress the tensioner while holding lever arm.
    3. Relax the force on the lever and tensioner slightly, allowing the tensioner to extend 3 ratchet clicks, and then hold in place.
    4. Pull lever clockwise using **EN-50837** retention tool until the hole in the lever aligns with the hole in the tensioner assembly. Push the point of **EN-50837** retention tool through the lever and into the tensioner assembly.

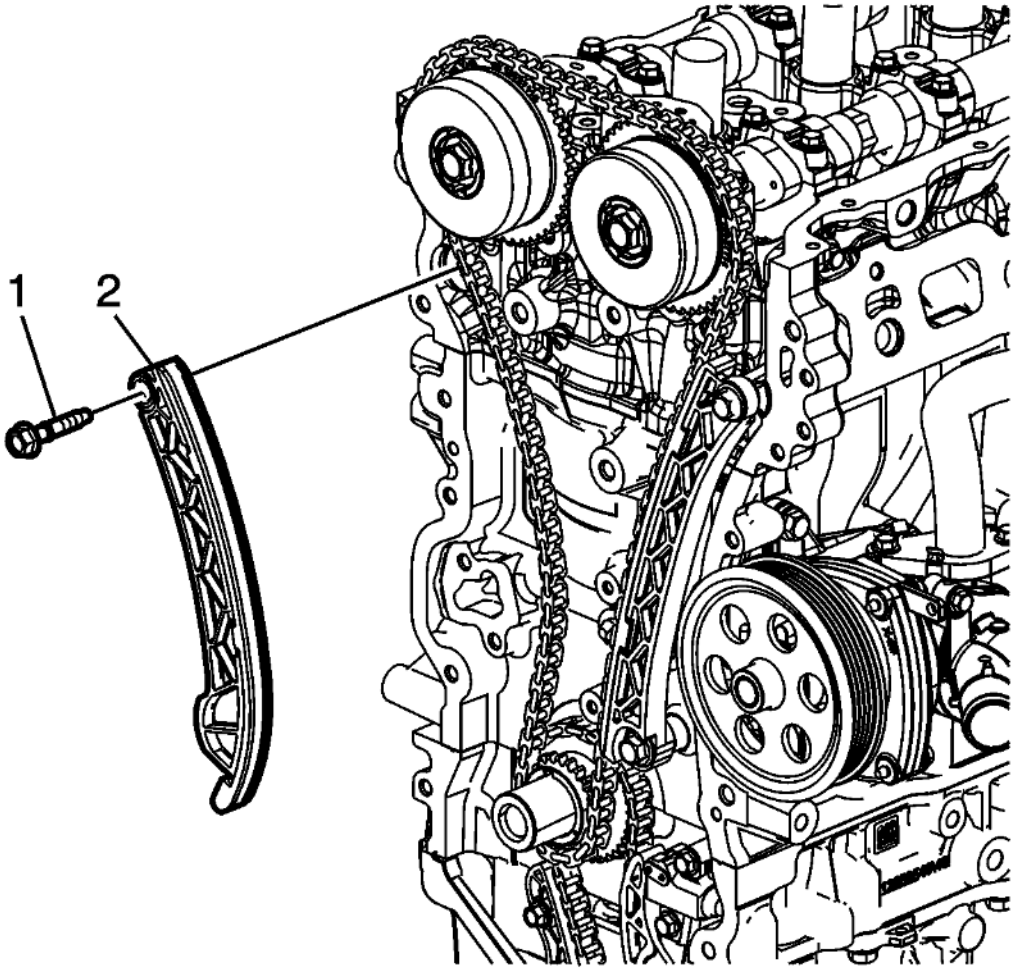

Fig. 41: Timing Chain Tensioner Pivot Arm Bolt
Courtesy of GENERAL MOTORS COMPANY

5. Remove the timing chain tensioner pivot arm bolt (1).
6. Remove the timing chain tensioner pivot arm (2).

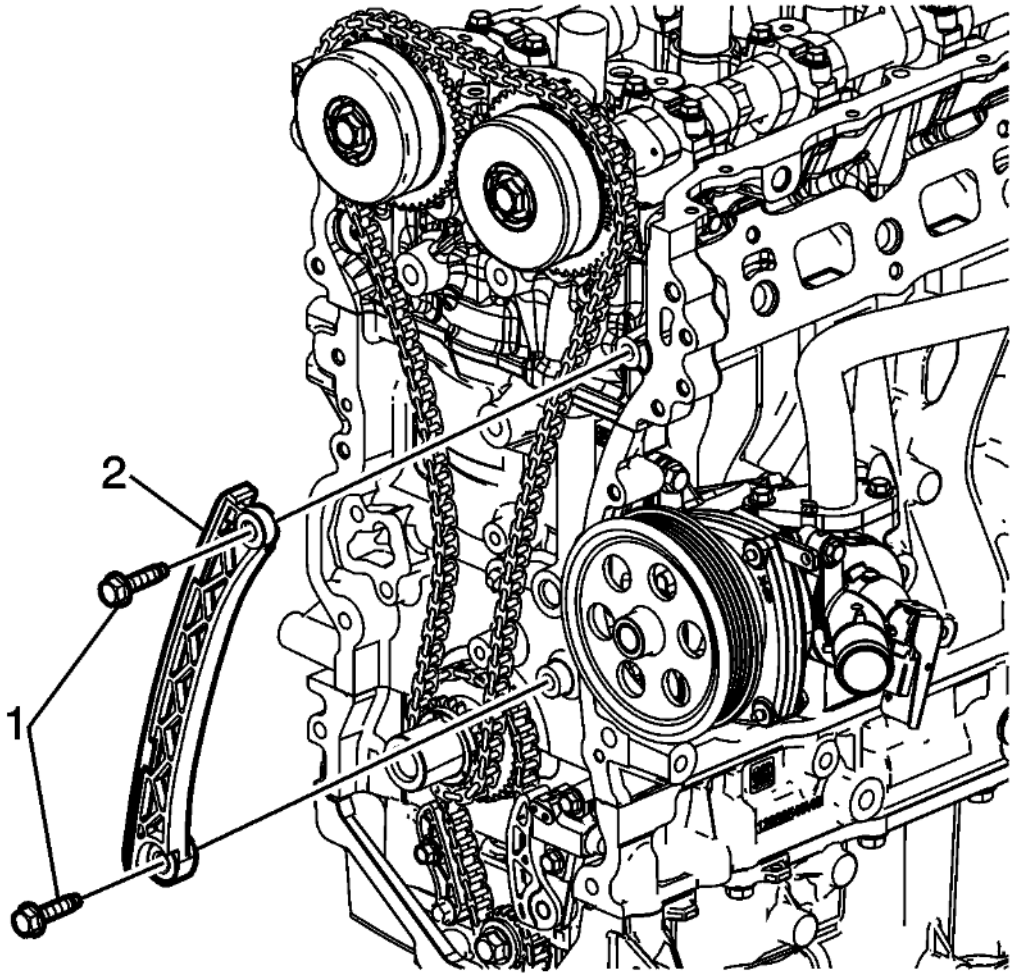

Fig. 42: Timing Chain Guide Bolts
Courtesy of GENERAL MOTORS COMPANY

7. Remove the timing chain guide bolts (1).
8. Remove the timing chain guide (2).

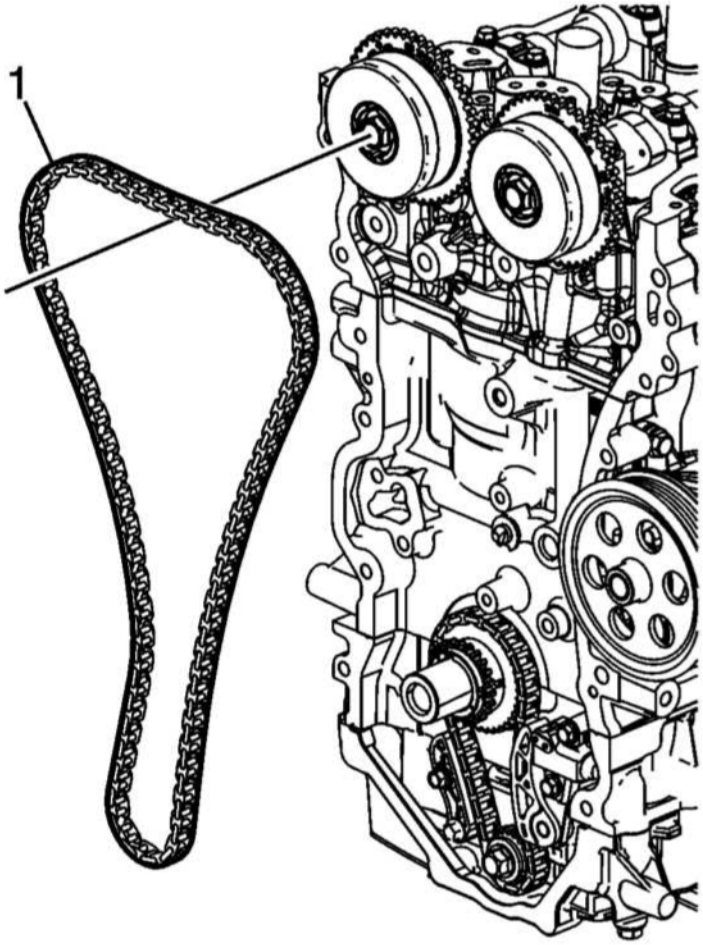

Fig. 43: Timing Chain
Courtesy of GENERAL MOTORS COMPANY

9. Remove the timing chain (1).

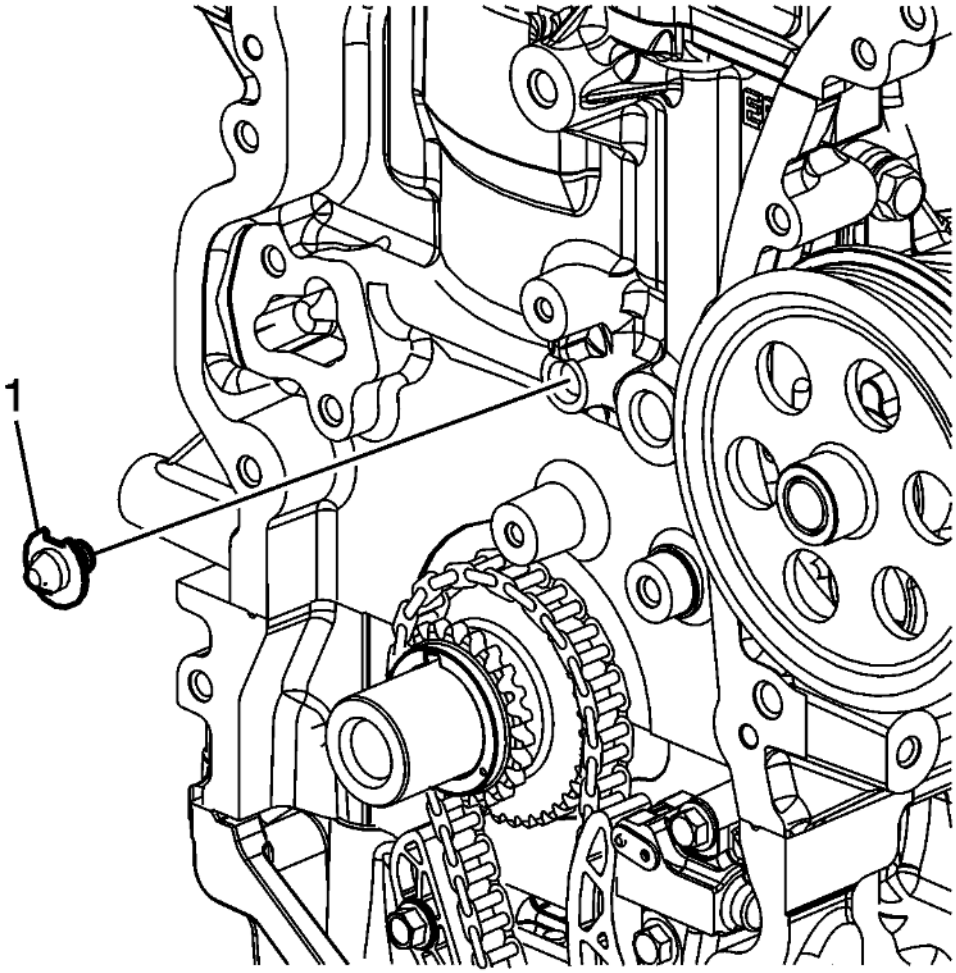

Fig. 44: Timing Chain Oil Nozzle
Courtesy of GENERAL MOTORS COMPANY

10. Remove the timing chain oil nozzle (1).

OIL PAN REMOVAL

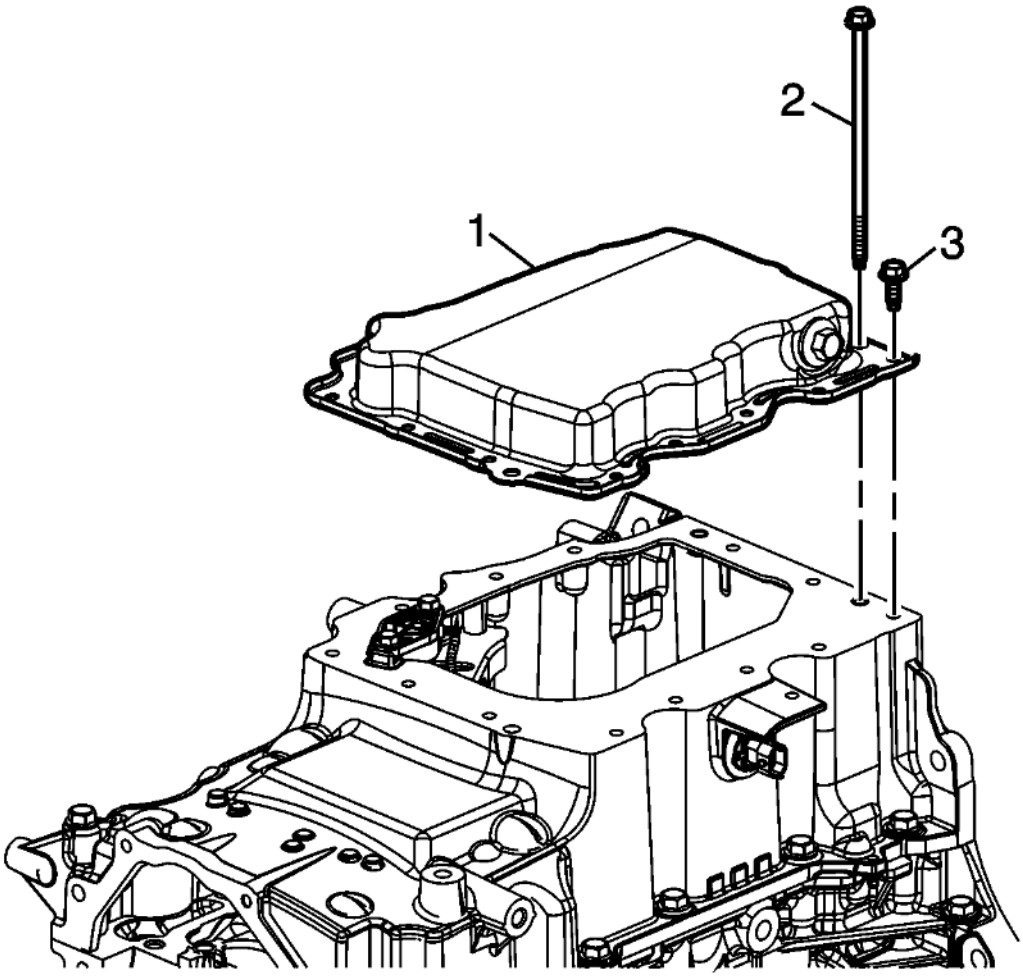

Fig. 45: Lower Oil Pan Bolts
Courtesy of GENERAL MOTORS COMPANY

1. Remove the lower oil pan bolts (3) and two oil pan to lower crankcase bolts (2).
2. Remove the lower oil pan (1).

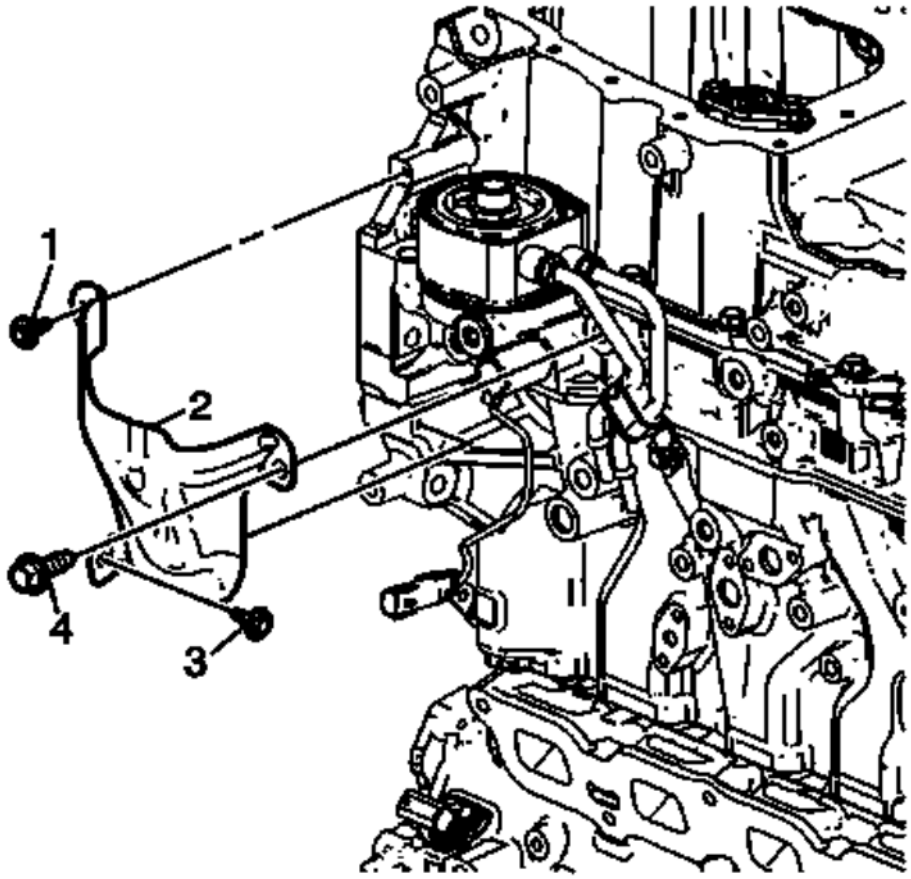

Fig. 46: Oil Pump Flow Control Valve Cover
Courtesy of GENERAL MOTORS COMPANY

3. Remove the oil pump flow control valve cover (2) and bolts (1, 3, 4).

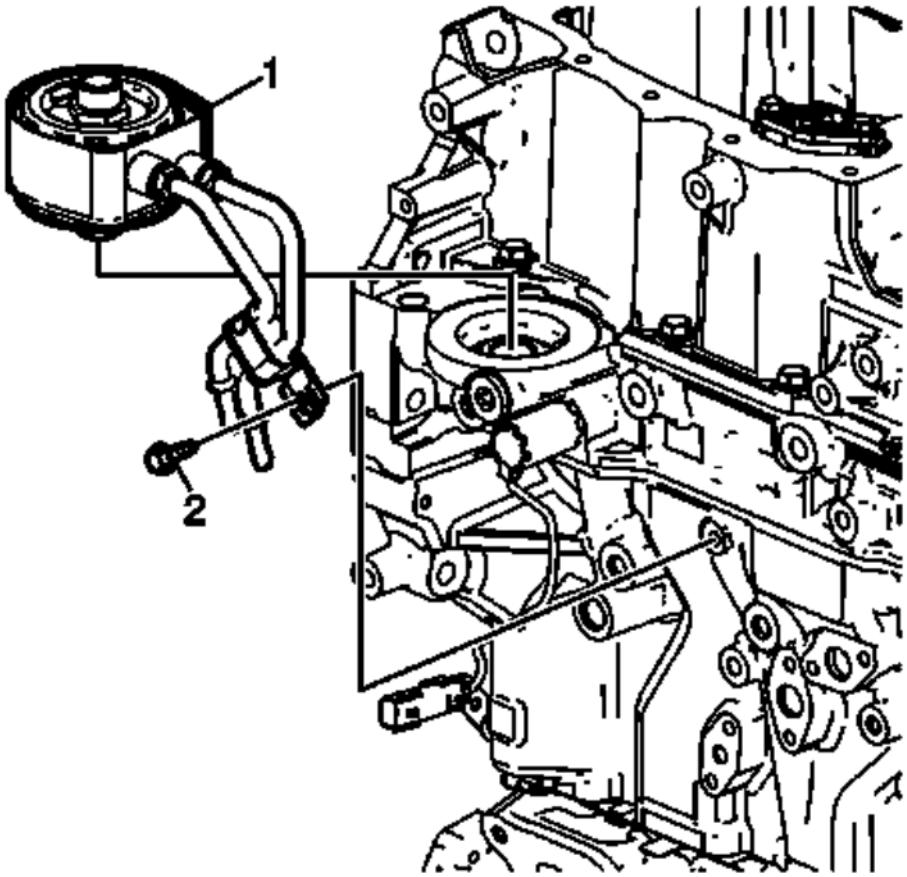

Fig. 47: Engine Oil Cooler And Bolts
Courtesy of GENERAL MOTORS COMPANY

4. Remove the engine oil cooler (1) and bolts (2).

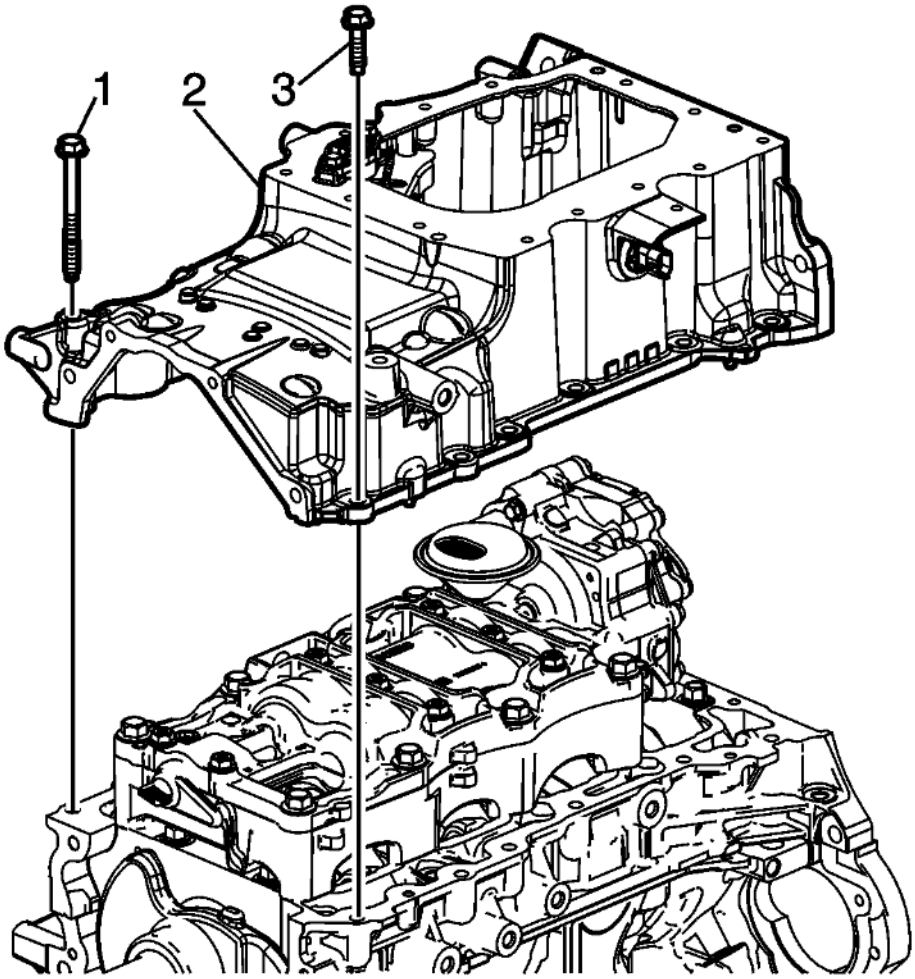

Fig. 48: upper oil pan and bolts
Courtesy of GENERAL MOTORS COMPANY

5. Remove the upper oil pan (2) and bolts (1, 3).

BALANCER CHAIN, SPROCKET, AND TENSIONER REMOVAL

Special Tools

EN-50837 Timing Chain Tensioner Retraction Tool

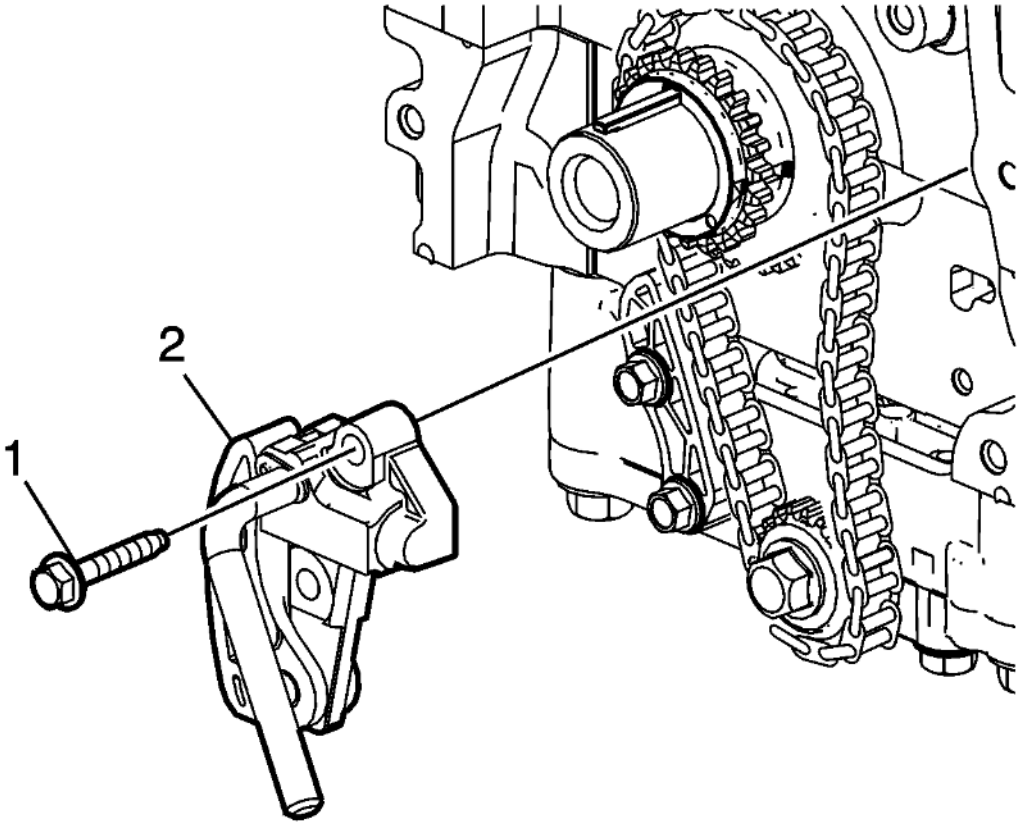

Fig. 49: Balancer Chain Tensioner Bolt
Courtesy of GENERAL MOTORS COMPANY

1. Remove the balancer chain tensioner bolt (1).
2. Remove the balancer chain tensioner (2).
3. Compress and lock the tensioner using **EN-50837** retention tool.
    1. Insert **EN-50837** retention tool into the lever arm and push in a counterclockwise direction.
    2. Compress the tensioner while holding lever arm.
    3. Relax the force on the lever and tensioner slightly, allowing the tensioner to extend 3 ratchet clicks, and then hold in place.
    4. Pull lever clockwise using **EN-50837** retention tool until the hole in the lever aligns with the hole in the tensioner assembly. Push the point of **EN-50837** retention tool through the lever and into the tensioner assembly.

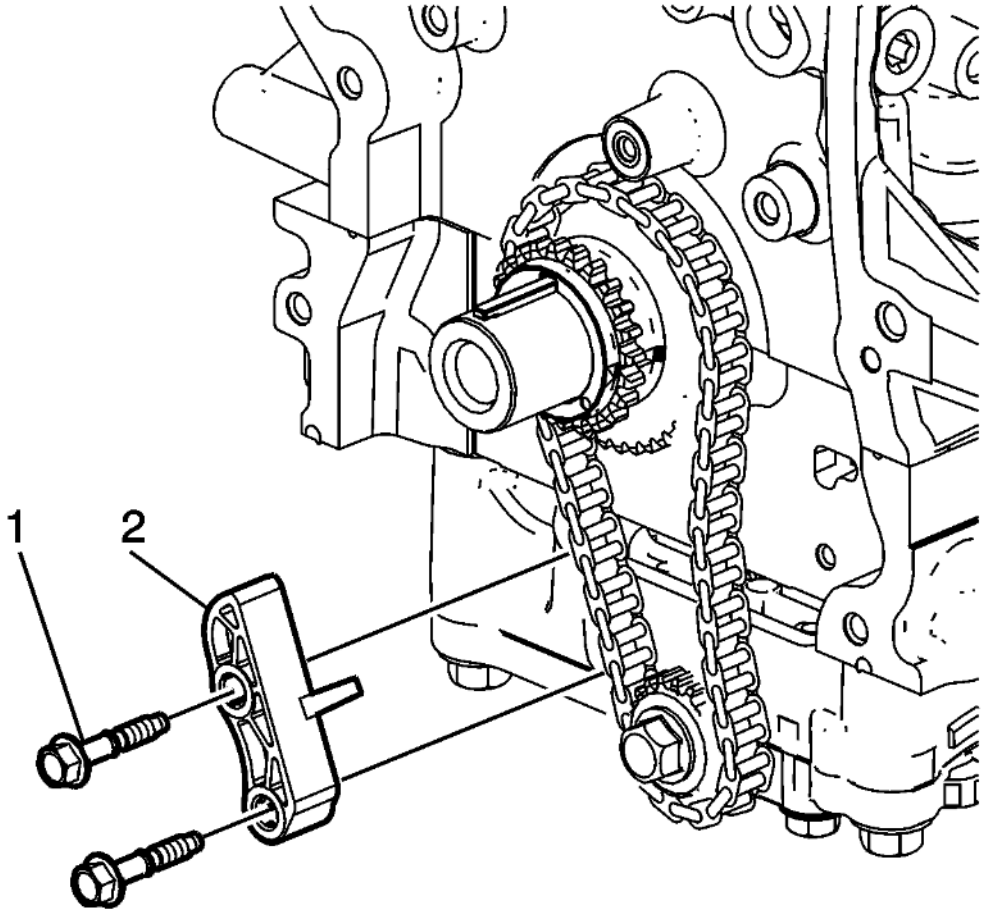

Fig. 50: Balancer Chain Guide Bolt
Courtesy of GENERAL MOTORS COMPANY

4. Remove the balancer chain guide bolt (1).
5. Remove the balancer chain guide (2).

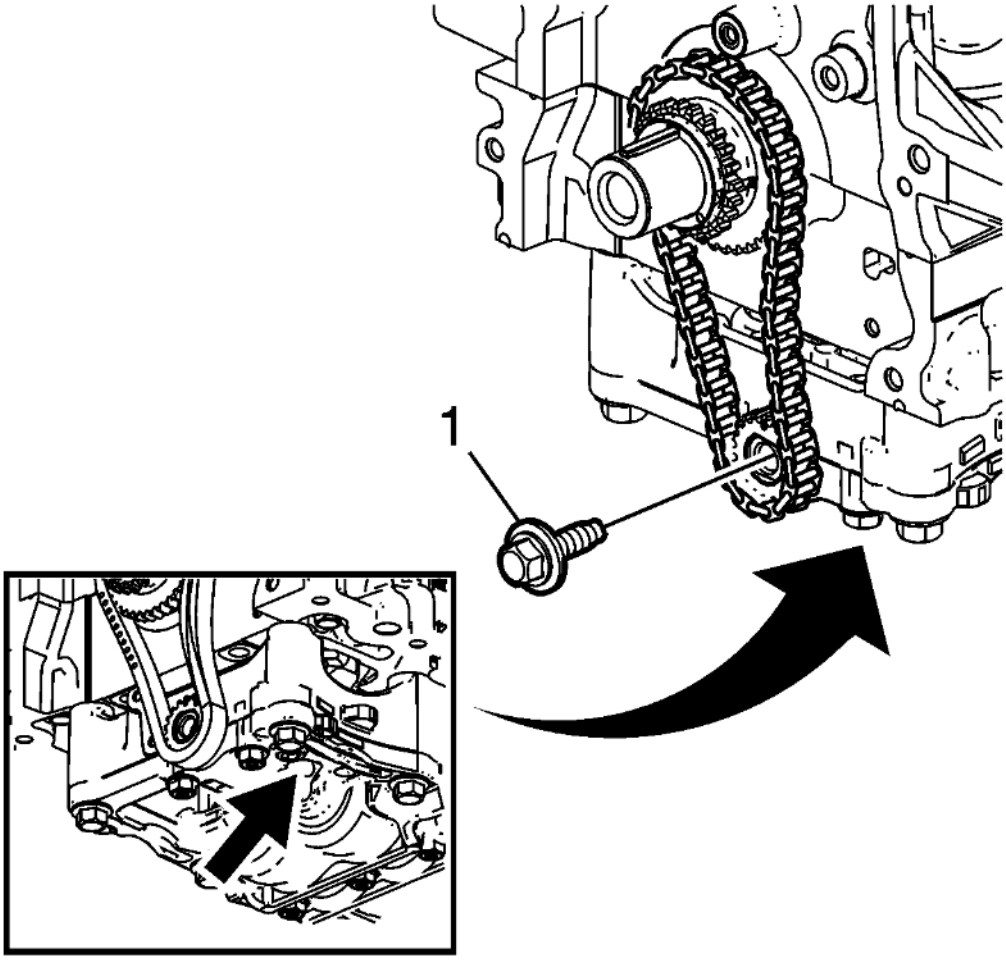

Fig. 51: Balancer Shaft Driven Sprocket Bolt
Courtesy of GENERAL MOTORS COMPANY

6. Use an 18 mm open end wrench over flat on balance shaft while loosening balancer shaft sprocket bolt. Remove and discard the balancer shaft driven sprocket bolt (1).

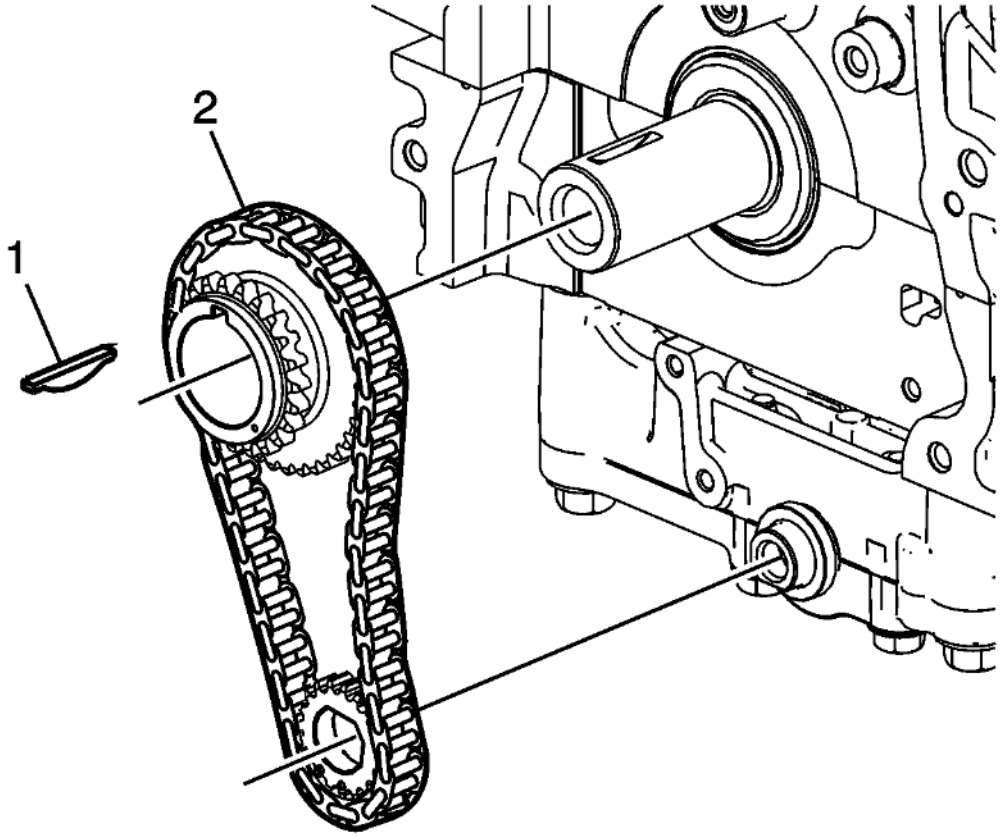

Fig. 52: Balancer Shaft Driven Sprocket And Balancer Chain
Courtesy of GENERAL MOTORS COMPANY

7. Remove the crankshaft key (1).
8. Remove the crankshaft sprocket, balancer shaft driven sprocket, and balancer chain (2) simultaneously.

INTAKE AND EXHAUST CAMSHAFT, BEARING CAP, AND LASH ADJUSTER REMOVAL

Intake Camshaft and Components Removal

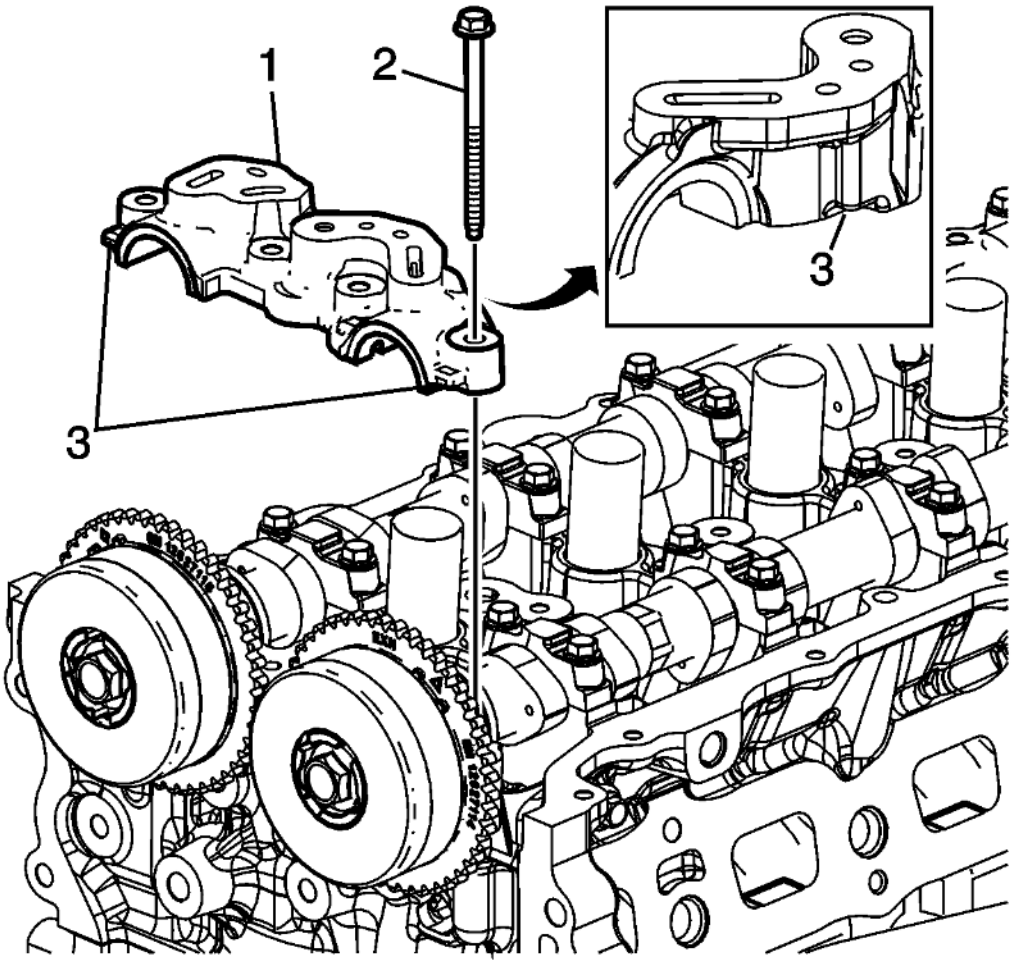

Fig. 53: Camshaft Front Bearing Cap Bolts
Courtesy of GENERAL MOTORS COMPANY

1. Remove the camshaft front bearing cap bolts (2).

NOTE:

- **Locate the pry points (3) on the camshaft front bearing cap.**
- **When using the pry points to remove the front bearing cap, use a protective material between the camshaft lobes, the cylinder head flange, and pry tool.**
- **Use 2 pry tools simultaneously to pry the upper front bearing cap away from the lower bearing cap evenly.**

2. Using suitable pry tools, remove the camshaft front bearing cap (1)

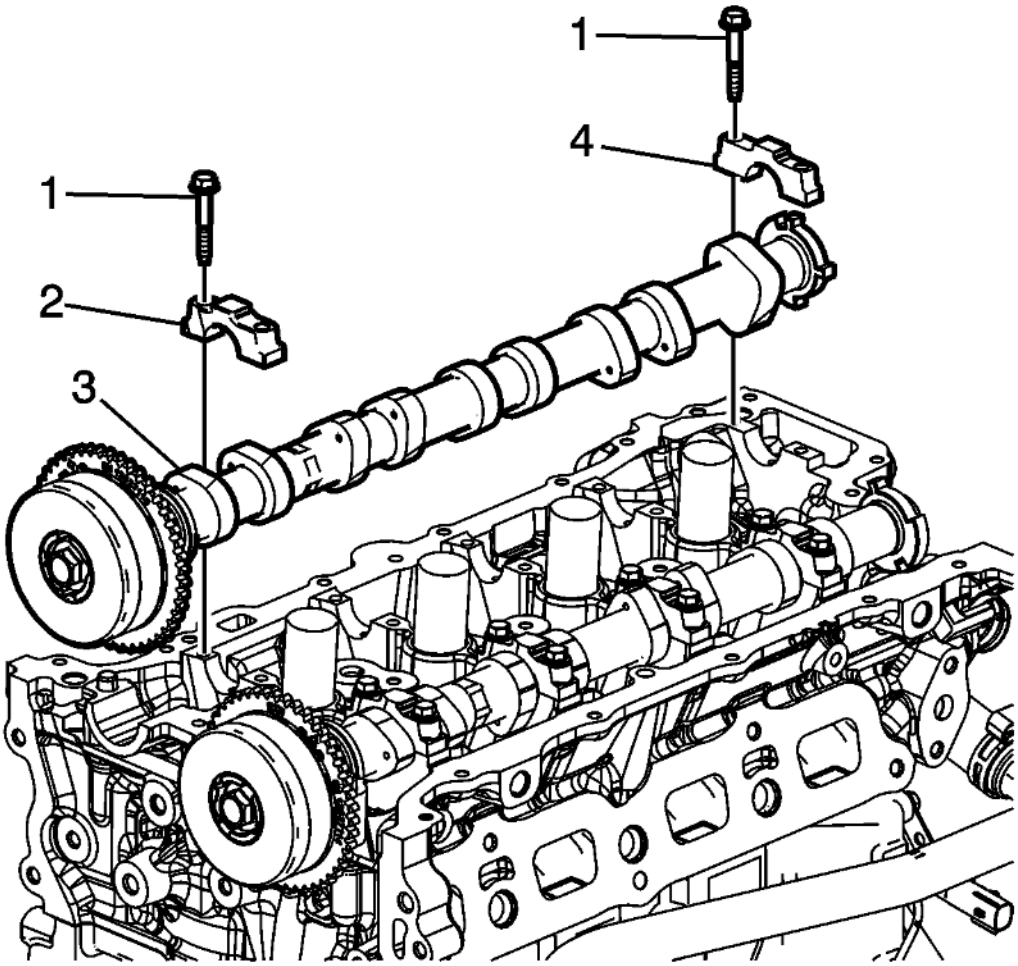

Fig. 54: Intake Camshaft Bearing Rear Cap Bolts And Cap
Courtesy of GENERAL MOTORS COMPANY

3. Mark the intake camshaft rear cap to ensure it is installed in the same position. Remove the intake camshaft bearing rear cap bolts (1) and cap (4).

NOTE: **Loosen each bolt on each cap one turn at a time until there is no spring tension pushing on the camshaft.**

4. Mark the camshaft caps (2) to ensure they are installed in the same position.
5. Remove the intake camshaft cap bolts (1).
6. Remove the camshaft caps (2).
7. Remove the intake camshaft (3).

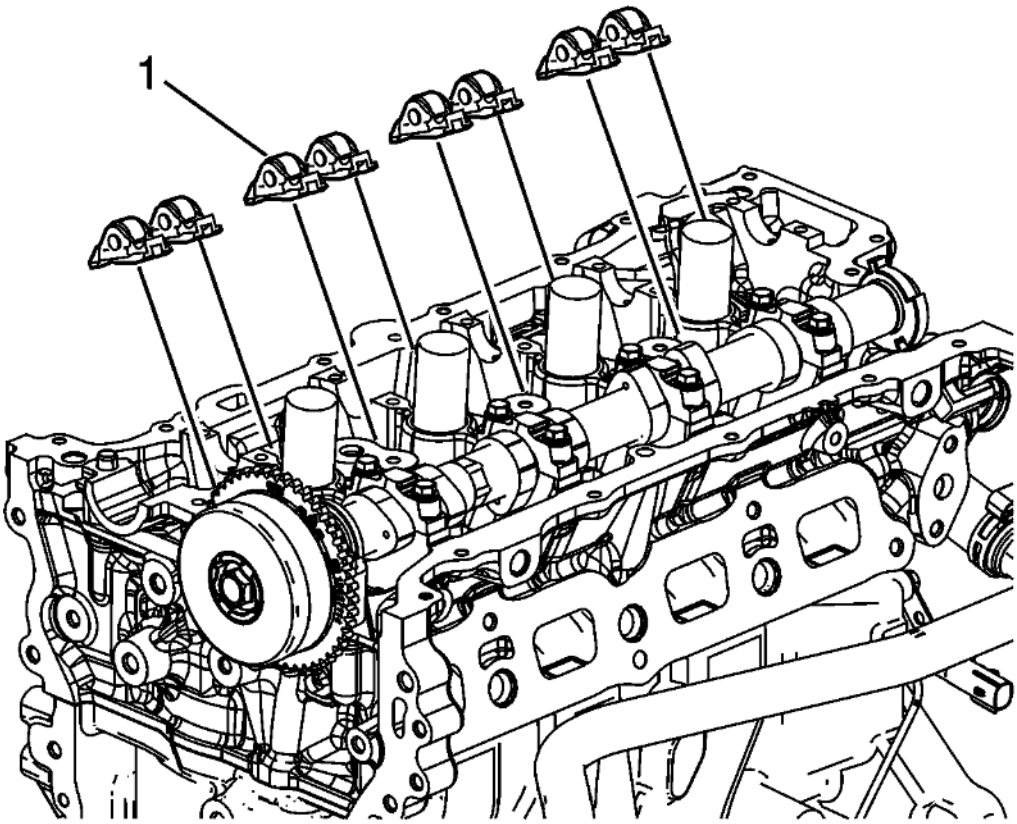

Fig. 55: Intake Camshaft Roller Finger Followers
Courtesy of GENERAL MOTORS COMPANY

NOTE: **Keep all of the roller finger followers and hydraulic lash adjusters in order so that they can be reinstalled in their respective locations.**

8. Remove the intake camshaft roller finger followers (1).

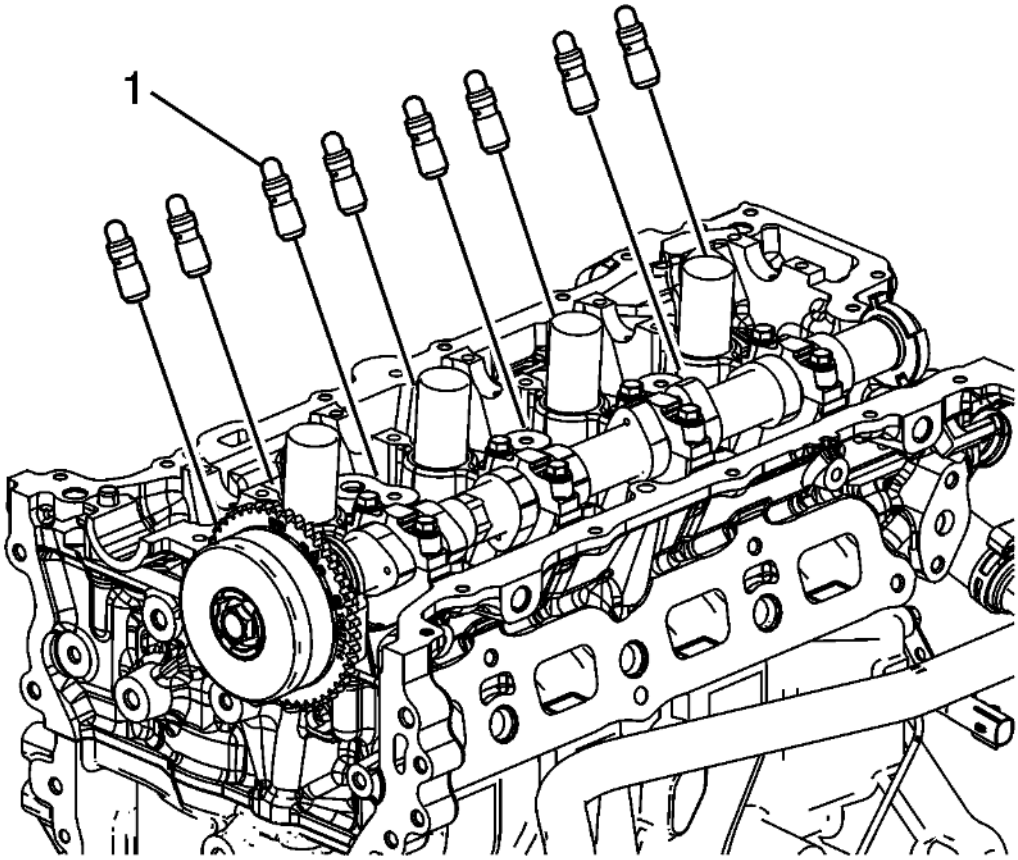

Fig. 56: Hydraulic Lash Adjusters
Courtesy of GENERAL MOTORS COMPANY

9. Remove the hydraulic lash adjusters (1).

Exhaust Camshaft and Components Removal

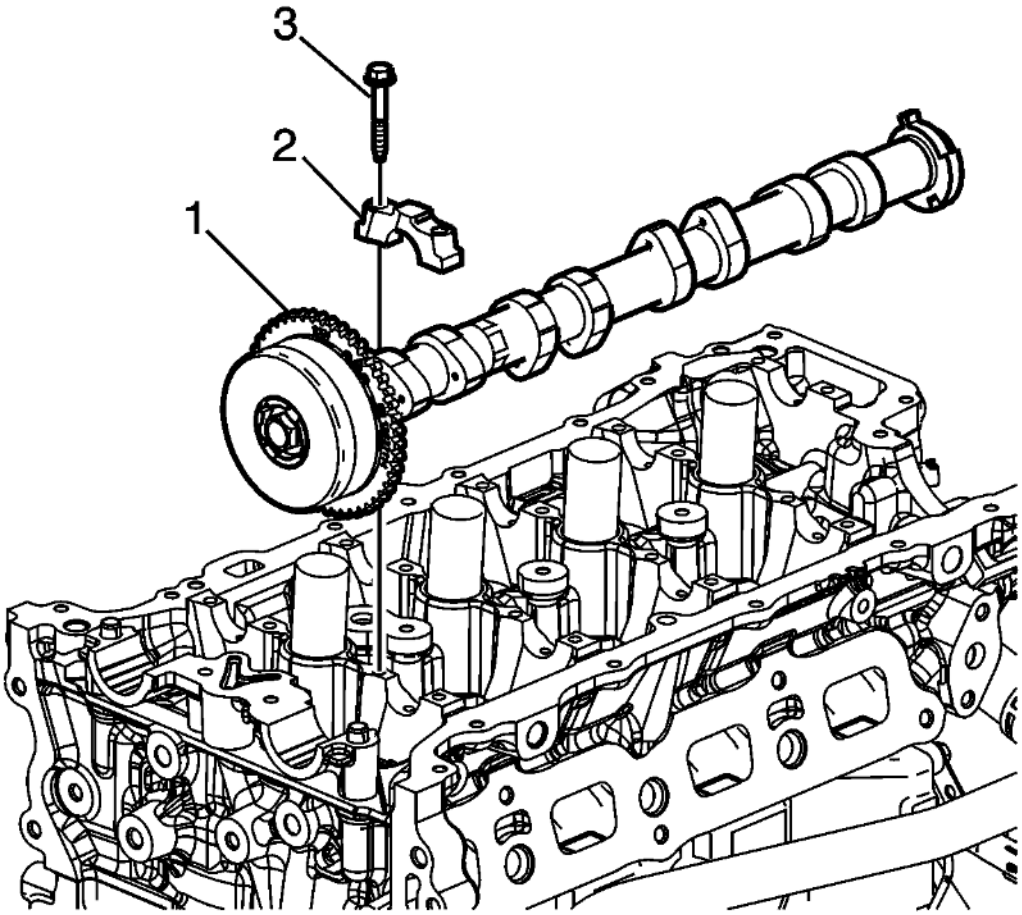

Fig. 57: Mark Camshaft Caps
Courtesy of GENERAL MOTORS COMPANY

NOTE: **Loosen each bolt on each cap one turn at a time until there is no spring tension pushing on the camshaft.**

1. Mark camshaft caps (2) to ensure they are installed in the same position.
2. Remove the exhaust camshaft cap bolts (3).
3. Remove the camshaft caps (2) ensuring they are marked and refitted in same position on assembly.
4. Remove the exhaust camshaft (1).

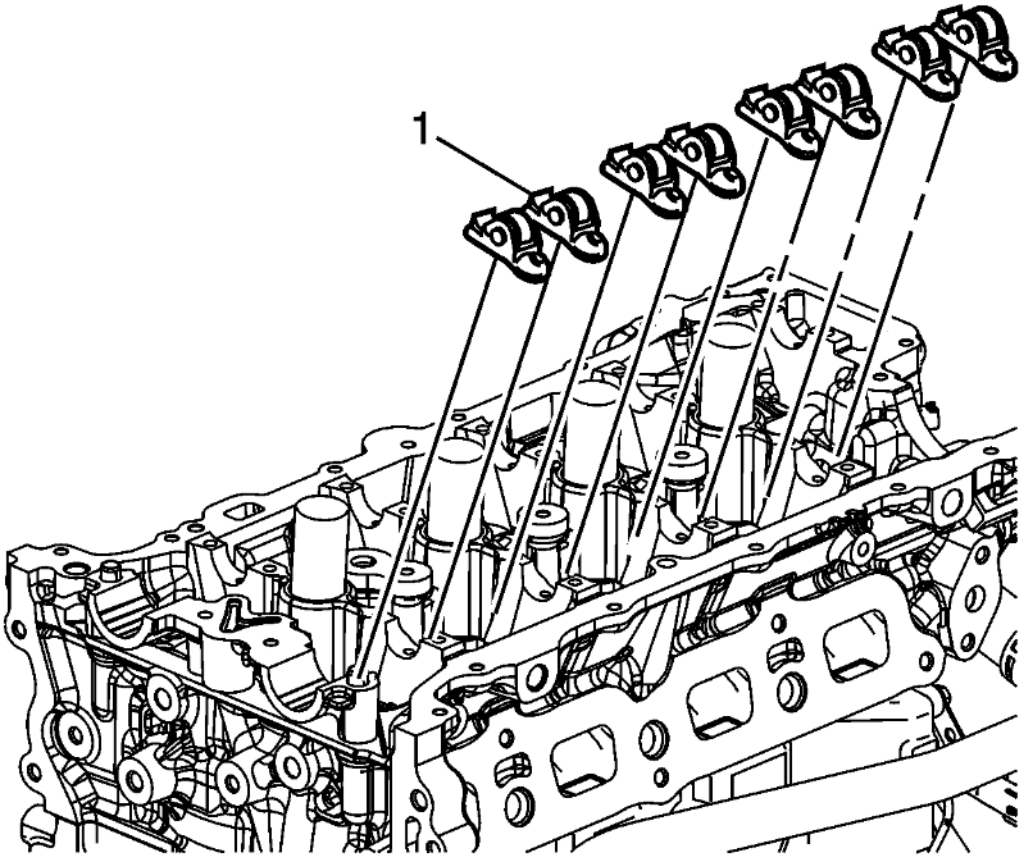

Fig. 58: Exhaust Camshaft Roller Finger Followers
Courtesy of GENERAL MOTORS COMPANY

NOTE: **Keep all of the roller finger followers and hydraulic lash adjusters in order so that they can be reinstalled in their respective locations.**

5. Remove the exhaust camshaft roller finger followers (1).

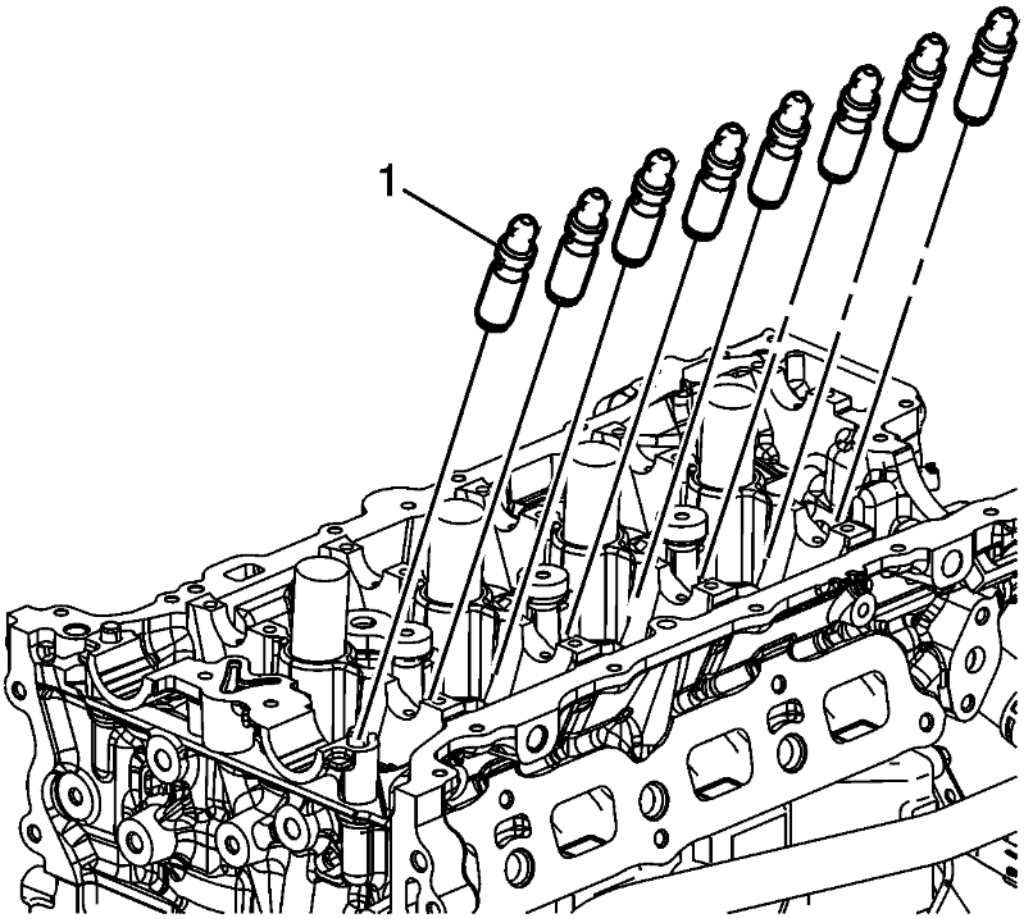

Fig. 59: Hydraulic Lash Adjusters
Courtesy of GENERAL MOTORS COMPANY

6. Remove the hydraulic lash adjusters (1).

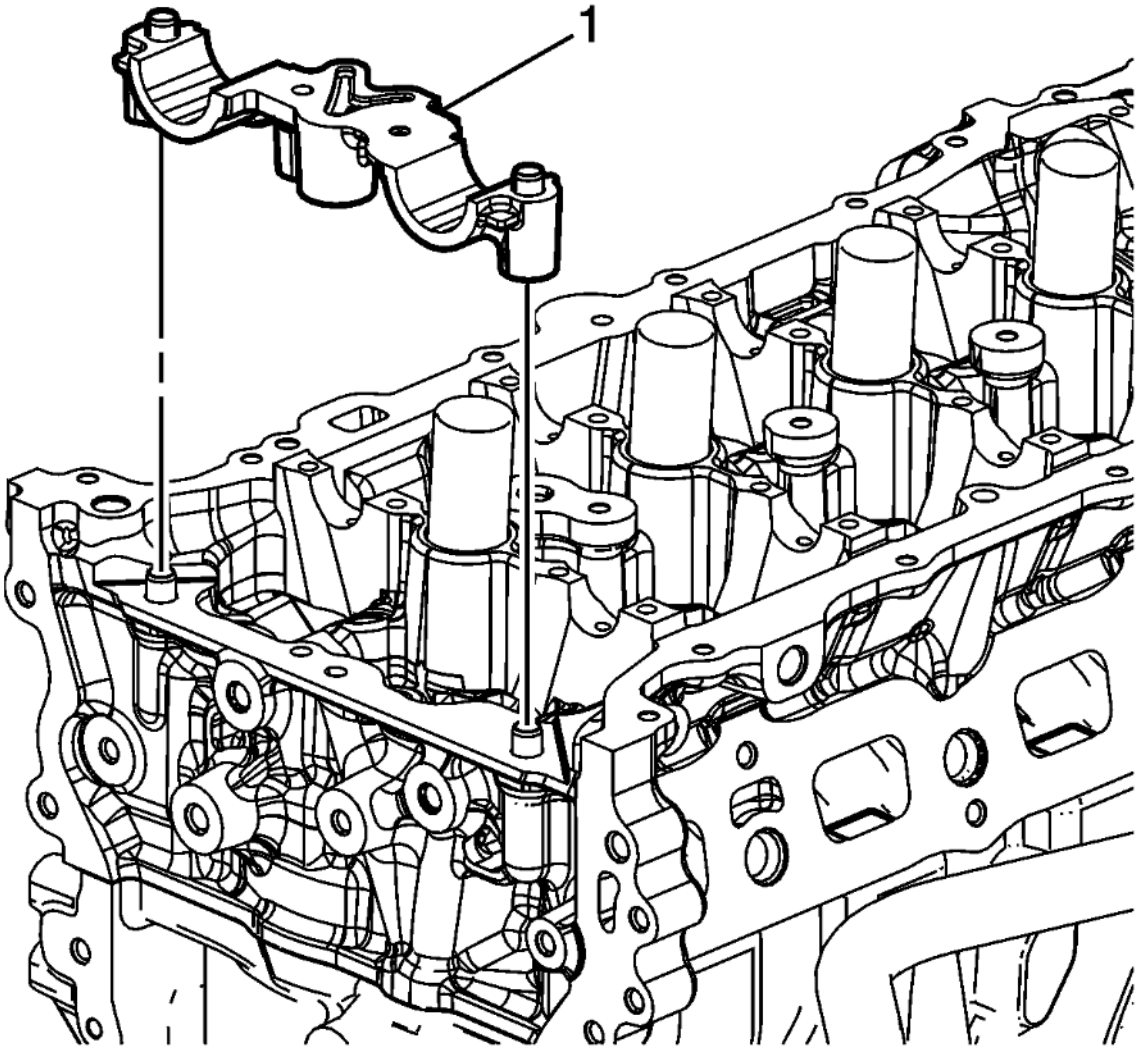

Fig. 60: Camshaft Bearing Lower Front Cap
Courtesy of GENERAL MOTORS COMPANY

7. Remove the camshaft bearing lower front cap (1).

WATER PUMP REMOVAL

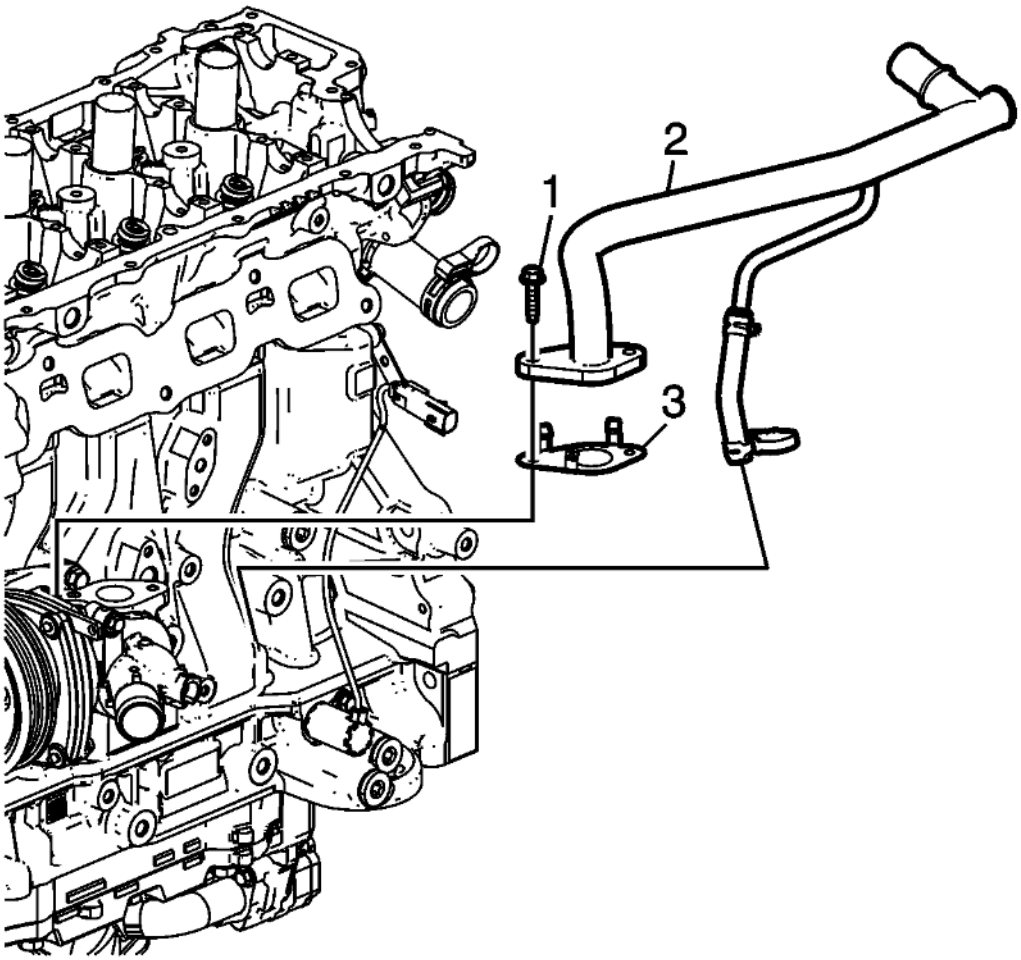

Fig. 61: Thermal Bypass Pipe Bolts And Gasket
Courtesy of GENERAL MOTORS COMPANY

1. Disconnect the thermal bypass hose at the engine oil cooler.
2. Remove the thermal bypass pipe bolts (1) at the water pump assembly.
3. Disconnect the pipe from the water outlet assembly.
4. Remove the thermal bypass pipe (2) and gasket (3) from the water pump assembly. Discard the gasket.

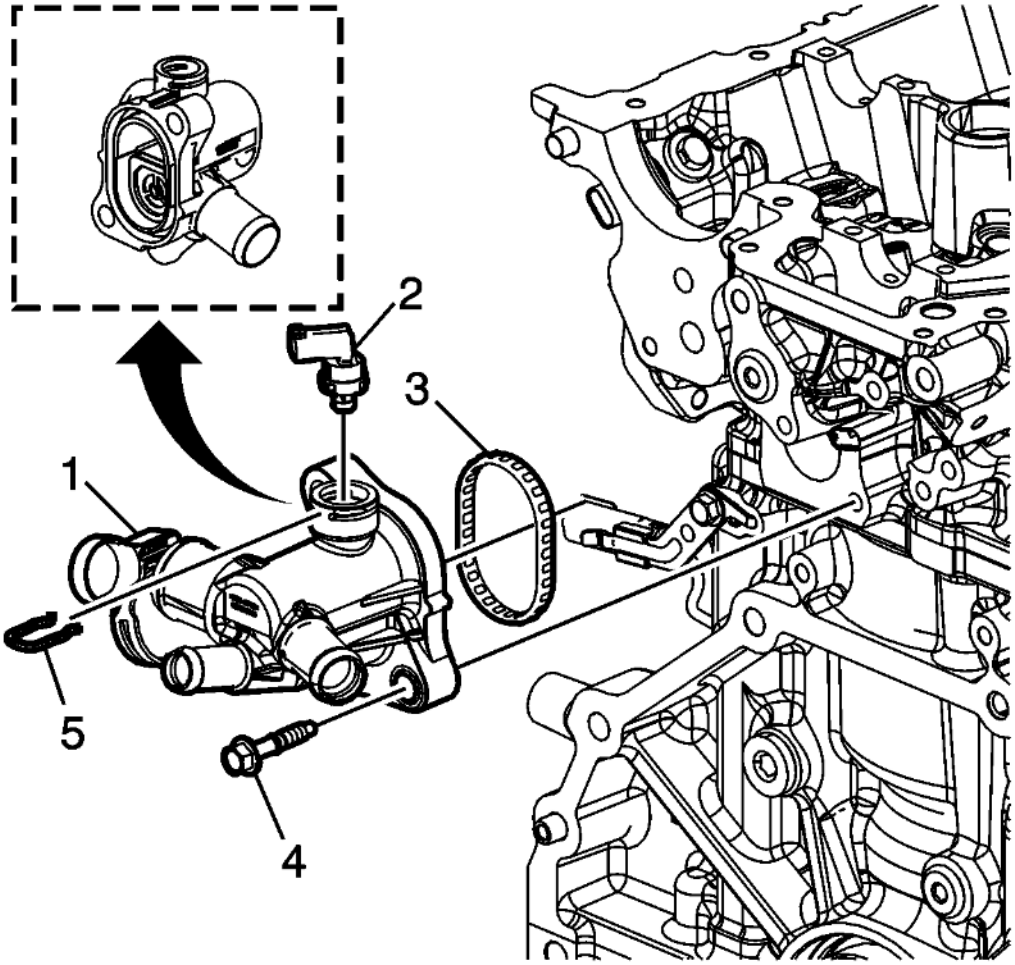

Fig. 62: Retaining Clip And Engine Coolant Temperature Sensor
Courtesy of GENERAL MOTORS COMPANY

5. Remove the retaining clip (5) and engine coolant temperature sensor (2).
6. Remove the water outlet assembly (1), bolts (4), and gasket seal (3). Discard the gasket.

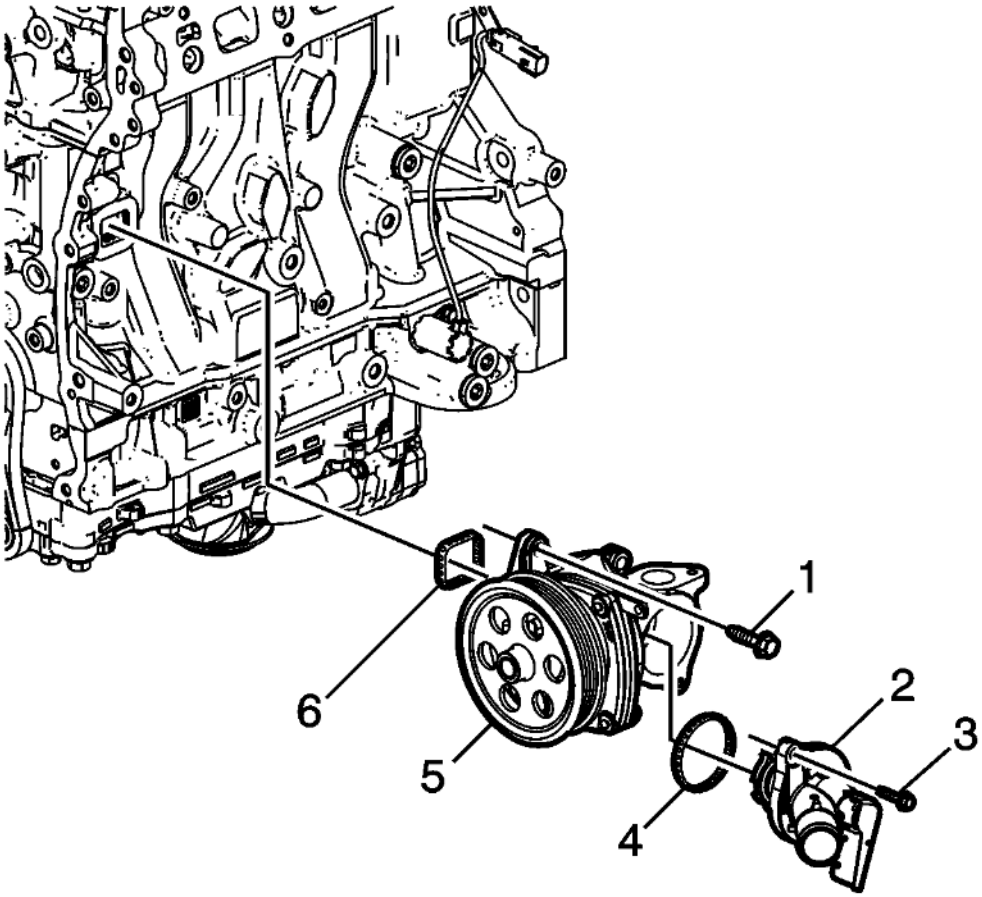

Fig. 63: Thermostat Assembly And Gasket Seal
Courtesy of GENERAL MOTORS COMPANY

7. Remove the thermostat assembly (2), bolts (3), and gasket seal (4). Discard the gasket.
8. Remove the water pump assembly (5), bolts (1), and seal (6). Discard the seal.

CYLINDER HEAD REMOVAL

Special Tools

EN 38188 Cylinder Head Broken Bolt Extractor Kit

For equivalent regional tools, refer to **Special Tools** .

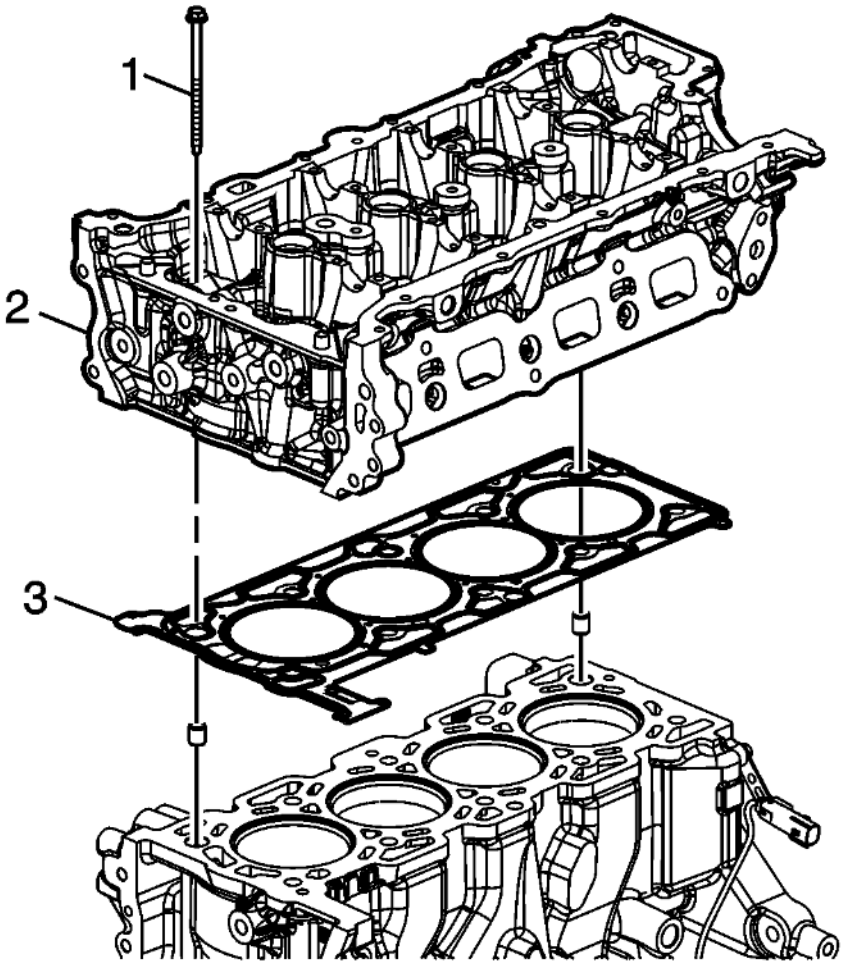

Fig. 64: Cylinder Head Gasket
Courtesy of GENERAL MOTORS COMPANY

1. Remove and discard the cylinder head bolts (1).

CAUTION: In order to prevent damage to the valves and injectors during cylinder head removal, set the cylinder head on blocks.

2. Remove the cylinder head (2).
3. Remove the cylinder head gasket (3).
4. Inspect the cylinder head locating pins. Remove the locating pins and discard, if necessary.
5. Clean all of the gasket surfaces.
6. Use the following procedures when cleaning the cylinder head and cylinder block surfaces:
   - Use a razor blade gasket scraper to clean the cylinder head and cylinder block gasket surfaces. Do not scratch or gouge any surface.

NOTE: Do not use any other method or technique to clean these gasket surfaces.

   - Use a new razor blade for each cylinder head and cylinder block.

NOTE: **Be careful not to gouge or scratch the gasket surfaces. Do not gouge or scrape the combustion chamber surfaces. The feel of the gasket surface is important, not the appearance. There will be indentations from the gasket left in the cylinder head after all of the gasket material is removed. These small indentations will be filled in by the new gasket.**

- Hold the razor blade as parallel to the gasket surface as possible.

NOTE: **Do not use a tap to clean the cylinder head bolt holes.**

7. Clean the old sealer/lube and dirt from the bolt holes.
8. Clean the bolt holes with a nylon bristle brush.

WARNING: **Wear safety glasses to avoid injury when using compressed air or any cleaning solvent. Bodily injury may occur if fumes are inhaled or if skin is exposed to chemicals.**

9. When cleaning the cylinder head bolt holes use a suitable commercial spray liquid solvent and compressed air from an extended-tip blow gun to reach the bottom of the holes.
10. Remove any broken long cylinder head bolts using the **EN 38188** kit.

BALANCER WITH OIL PUMP SHAFT REMOVAL

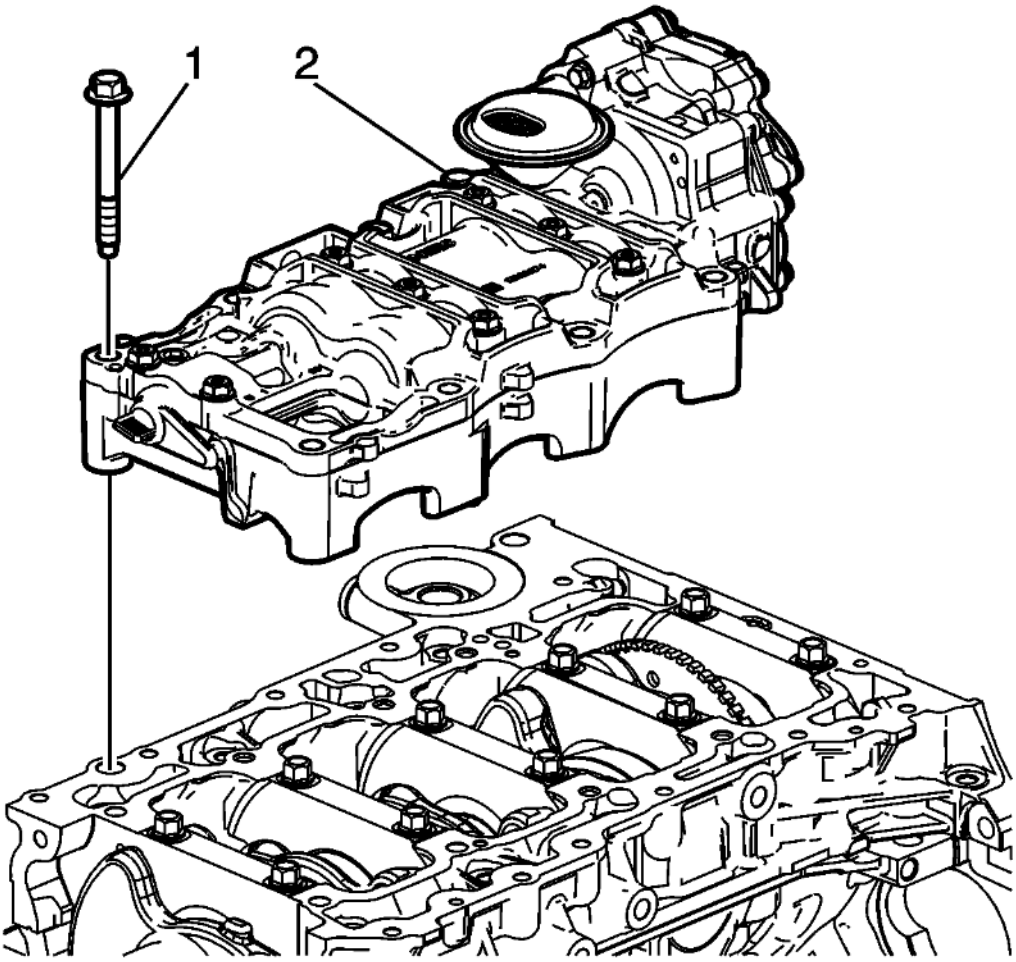

Fig. 65: Balancer And Oil Pump Shaft Assembly Bolts
Courtesy of GENERAL MOTORS COMPANY

1. Remove the balancer and oil pump shaft assembly bolts (1).
2. Remove the balancer and oil pump shaft assembly (2).

PISTON, CONNECTING ROD, AND BEARING REMOVAL

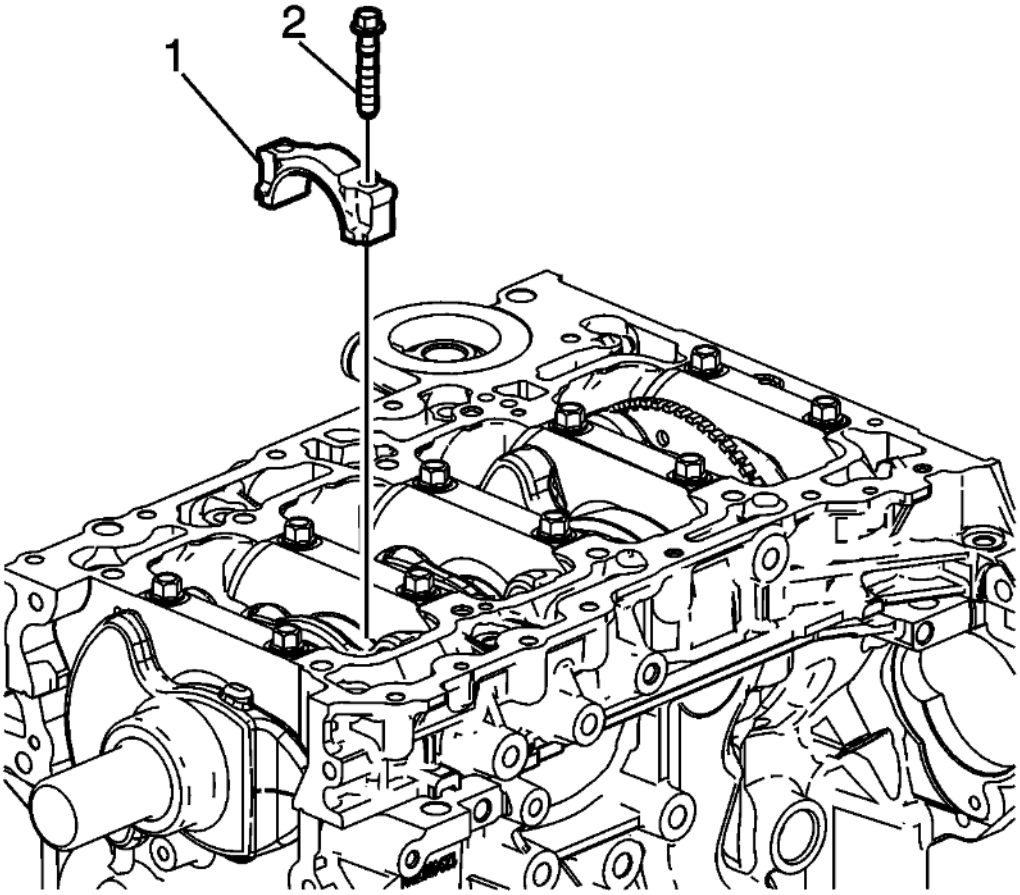

Fig. 66: Connecting Rod Cap
Courtesy of GENERAL MOTORS COMPANY

1. Rotate the crankshaft to a position where the connecting rod bolts are the most accessible.
2. Mark the connecting rod and cap with the cylinder position. Also mark their orientation. This will ensure the caps and connecting rods are re-assembled properly.
3. Remove any ridge at the top of the cylinder bore to avoid damage to the piston ring lands.
4. Remove and discard the connecting rod bolts (2).
5. Remove the connecting rod cap (1).

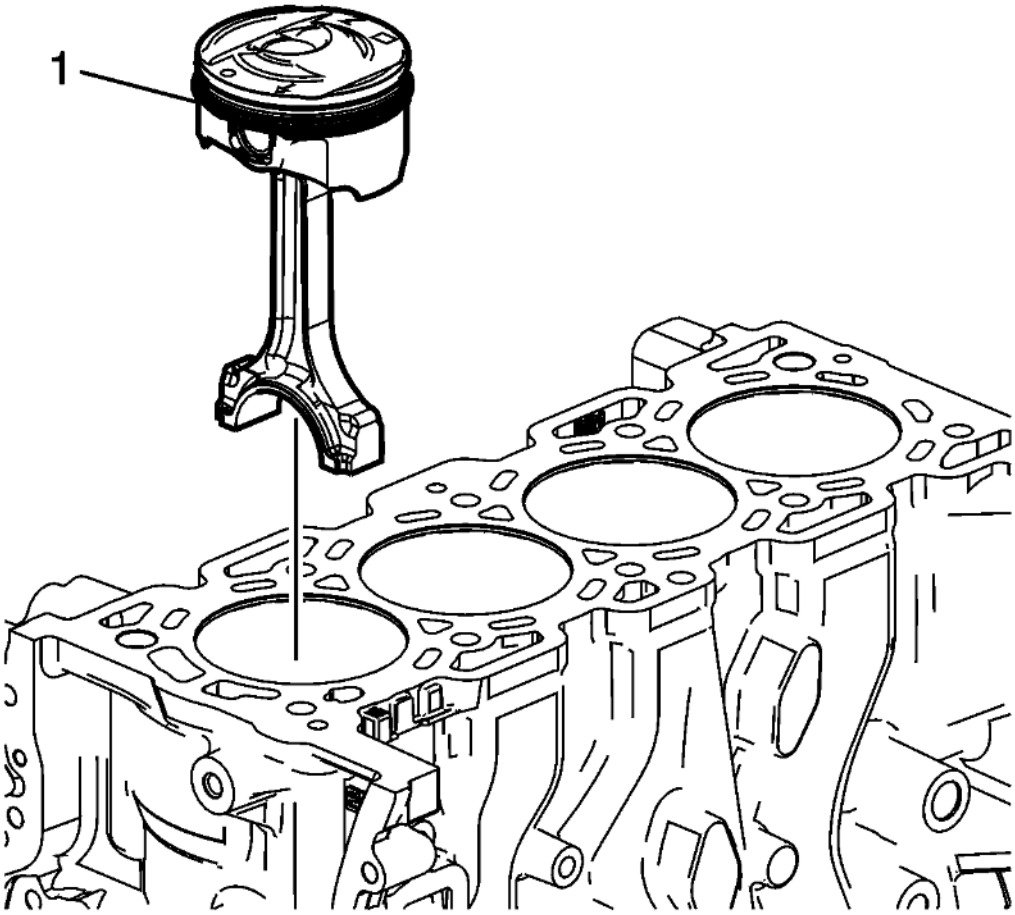

Fig. 67: Piston And Connecting Rod Assembly
Courtesy of GENERAL MOTORS COMPANY

6. Remove the piston and connecting rod assembly (1).

LOWER CRANKCASE REMOVAL

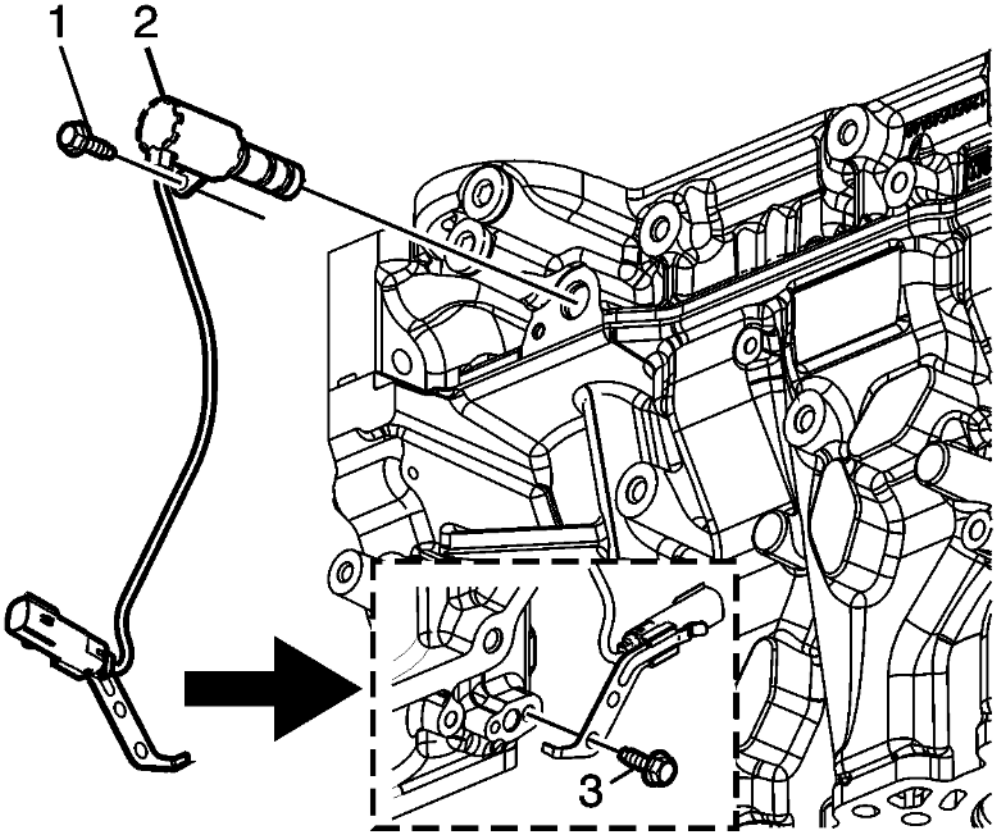

Fig. 68: Oil Pump Flow Control Valve And Bolts
Courtesy of GENERAL MOTORS COMPANY

1. Remove the oil pump flow control valve (2) and bolts (1, 3).

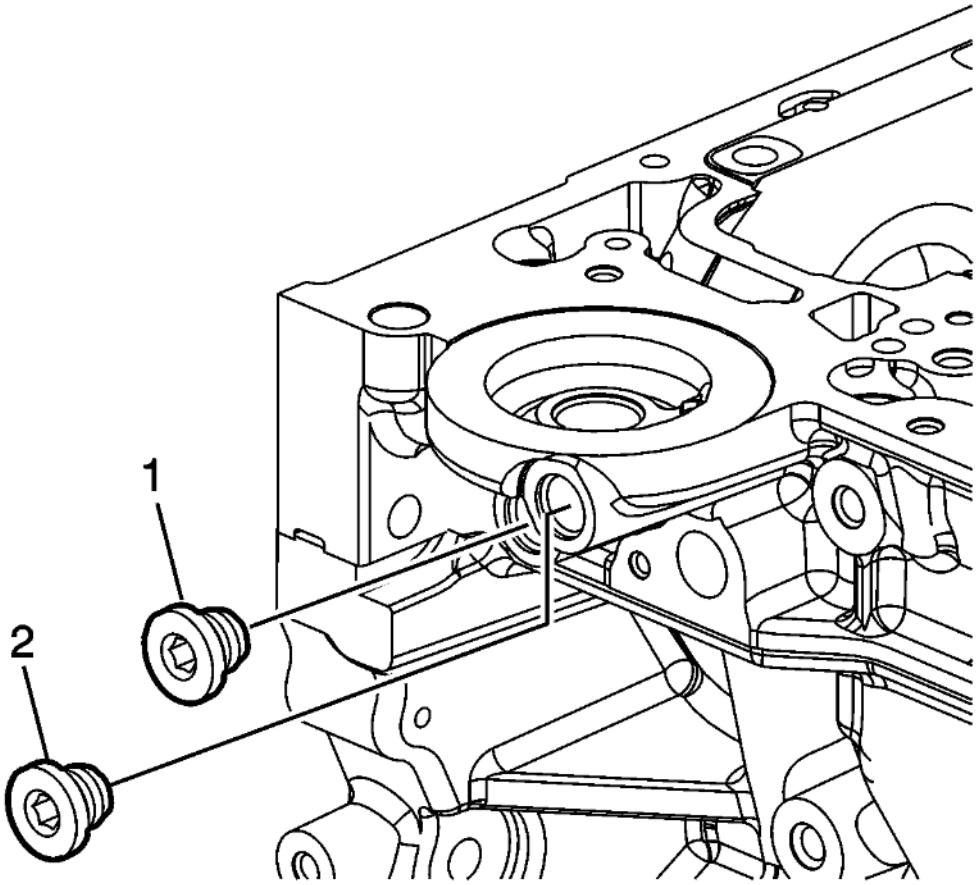

Fig. 69: Oil Gallery Plugs
Courtesy of GENERAL MOTORS COMPANY

2. Remove the oil gallery plugs (1, 2).

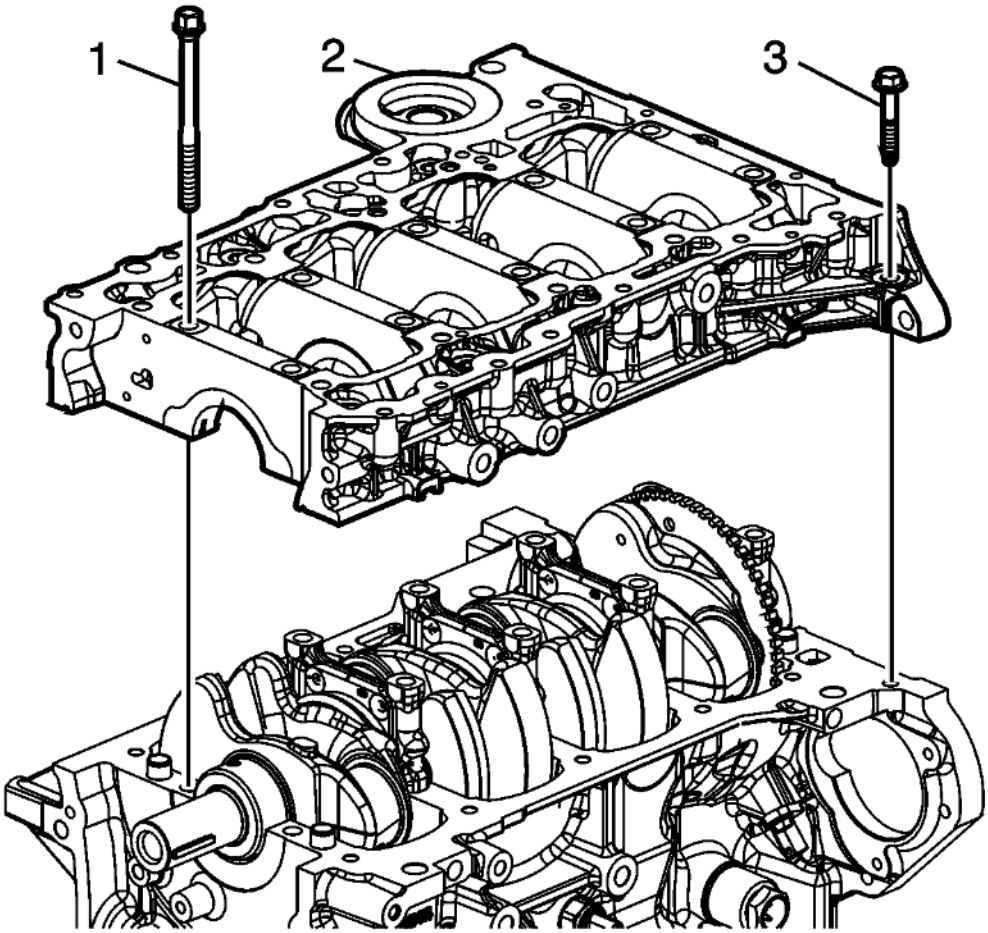

Fig. 70: Lower Crankcase Perimeter Bolts
Courtesy of GENERAL MOTORS COMPANY

3. Remove the lower crankcase perimeter bolts (3).
4. Remove and discard the crankshaft bearing bolts (1).
5. Gently separate the lower crankcase (2) from the block.

CRANKSHAFT AND BEARING REMOVAL

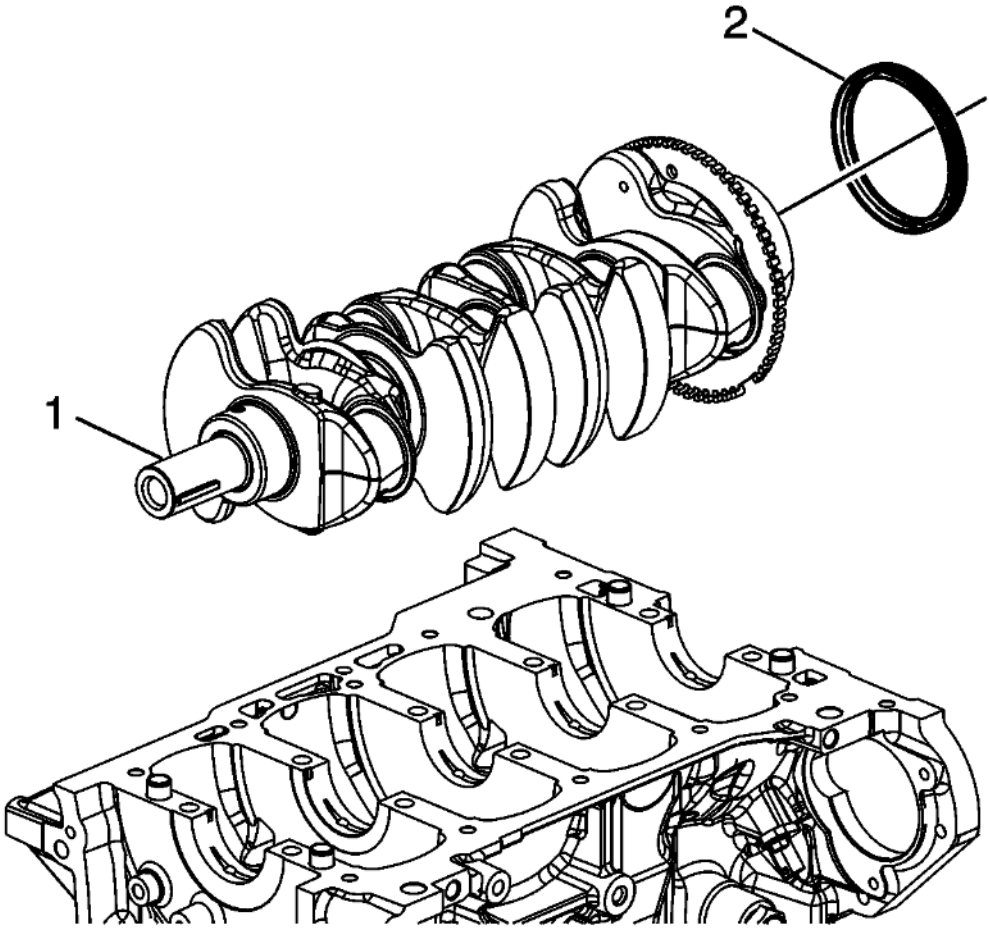

Fig. 71: Crankshaft
Courtesy of GENERAL MOTORS COMPANY

1. Remove the crankshaft (1) from the block.
2. Remove the crankshaft rear oil seal (2) from the block and discard.

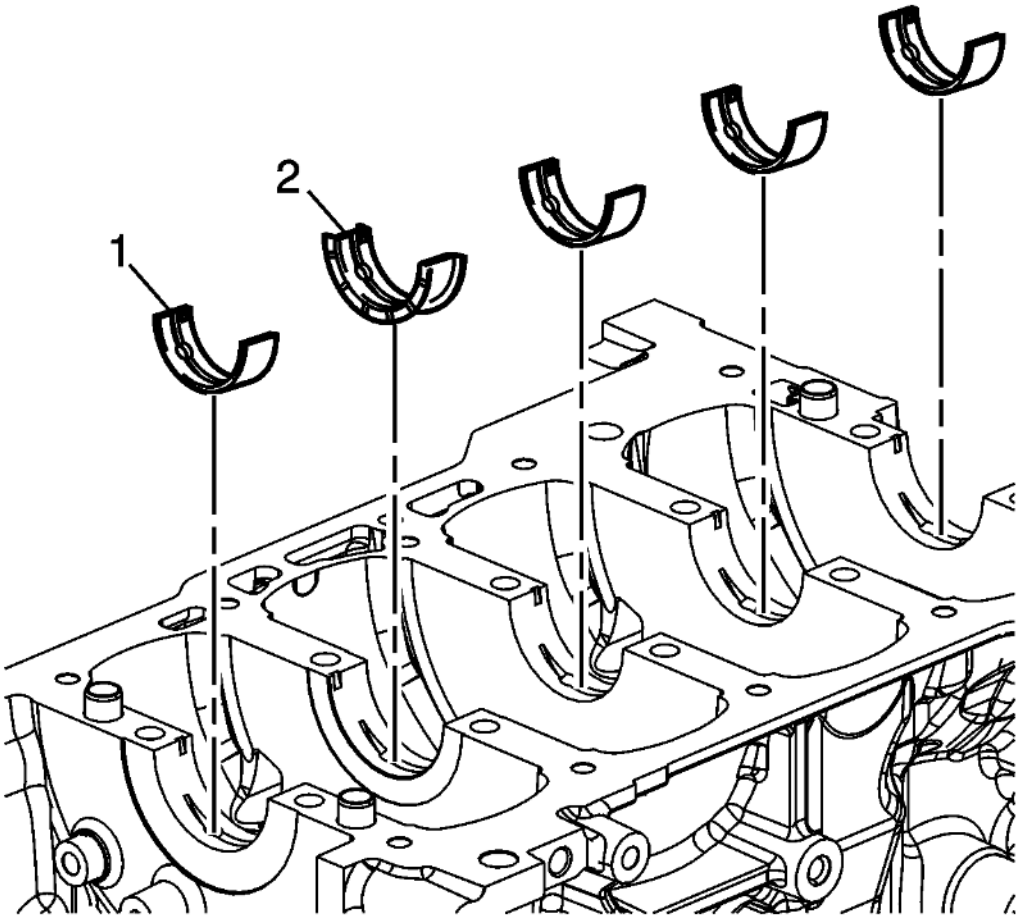

Fig. 72: Crankshaft Upper Bearings
Courtesy of GENERAL MOTORS COMPANY

NOTE: **Crankshaft bearings MUST be separated, marked, or organized in a way to ensure installation to their original location and position, when suitable for use.**

3. Remove the crankshaft upper bearings (1) and the crankshaft upper thrust bearing (2) from the block.

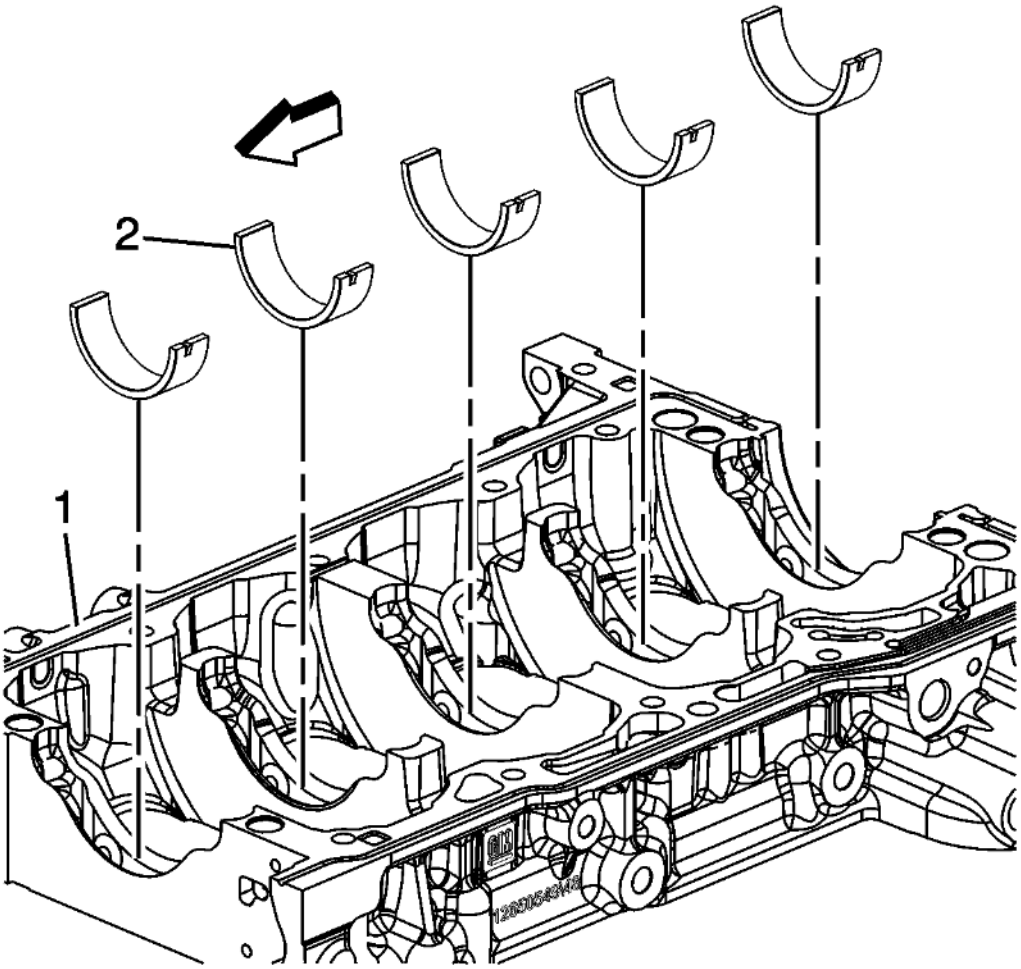

Fig. 73: Crankshaft Lower Bearings
Courtesy of GENERAL MOTORS COMPANY

4. Remove the crankshaft lower bearings (2) from the lower crankcase (1).
5. Clean the oil, sludge, and carbon.
6. Inspect the oil passages for obstructions.
7. Inspect the threads.
8. Inspect the bearing journals and the thrust surfaces for the following conditions:
   - Cracks
   - Chips
   - Gouges
   - Roughness
   - Grooves
   - Overheating (discoloration)
9. Inspect the corresponding bearing inserts for imbedded foreign material. If foreign material exists find the cause and repair it.

NOTE: **Replace the crankshaft if cracks, severe gouges or burned spots are found. Slight roughness may be removed with a fine polishing cloth**

soaked in clean engine oil. Burrs may be removed with a fine oil stone.

10. Measure the crankshaft journals. Use a micrometer or dial indicator to measure the taper and runout. Note the result for the later selection of bearing inserts. If not within limits the crankshaft must be replaced.

    Note the location of the main bearing high spots. If they are not in line, the crankshaft is bent and must be replaced.

ENGINE BLOCK DISASSEMBLE

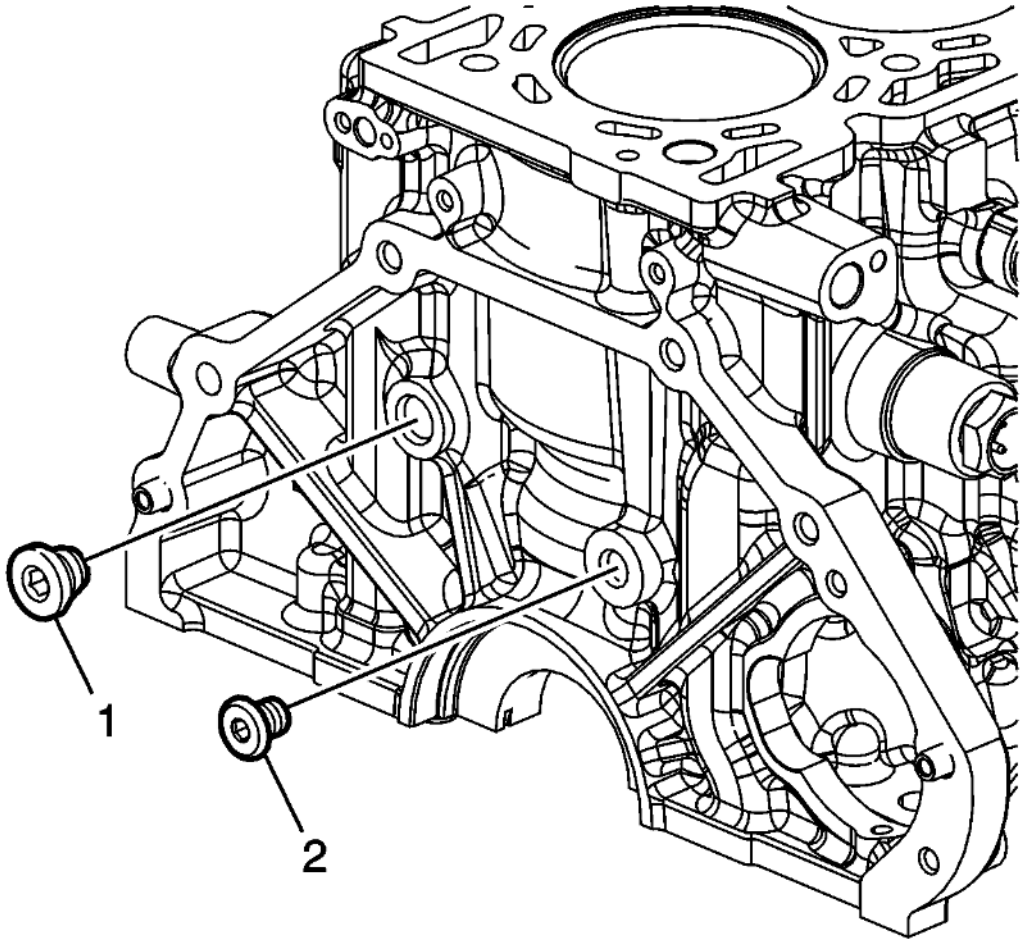

Fig. 74: Engine Oil Gallery Plugs
Courtesy of GENERAL MOTORS COMPANY

1. Remove the engine oil gallery plugs (1, 2) from the rear of the block.

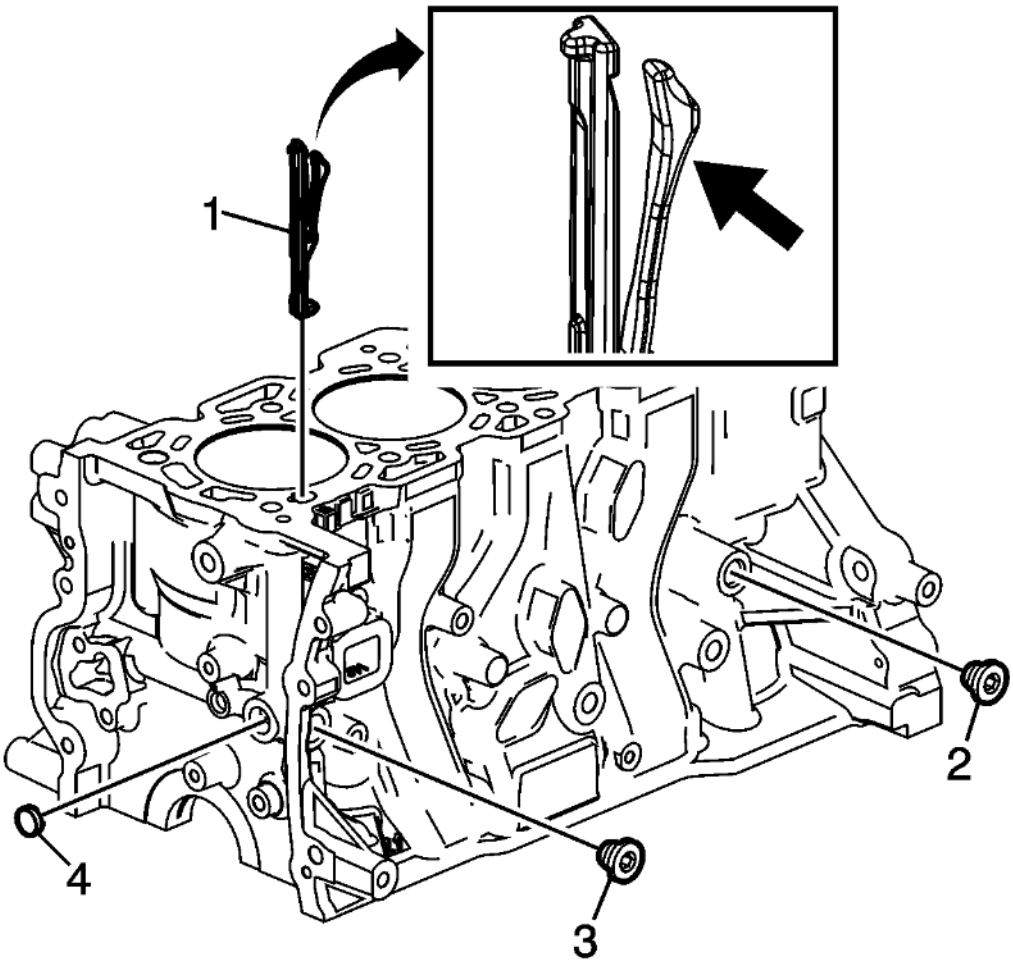

Fig. 75: Engine Oil Gallery Plugs
Courtesy of GENERAL MOTORS COMPANY

2. Remove the engine oil gallery plugs (2, 3, 4) from the left side and front of of the block.
3. Use a suitable hook tool to catch the clip feature and gently remove the engine oil baffle (1).

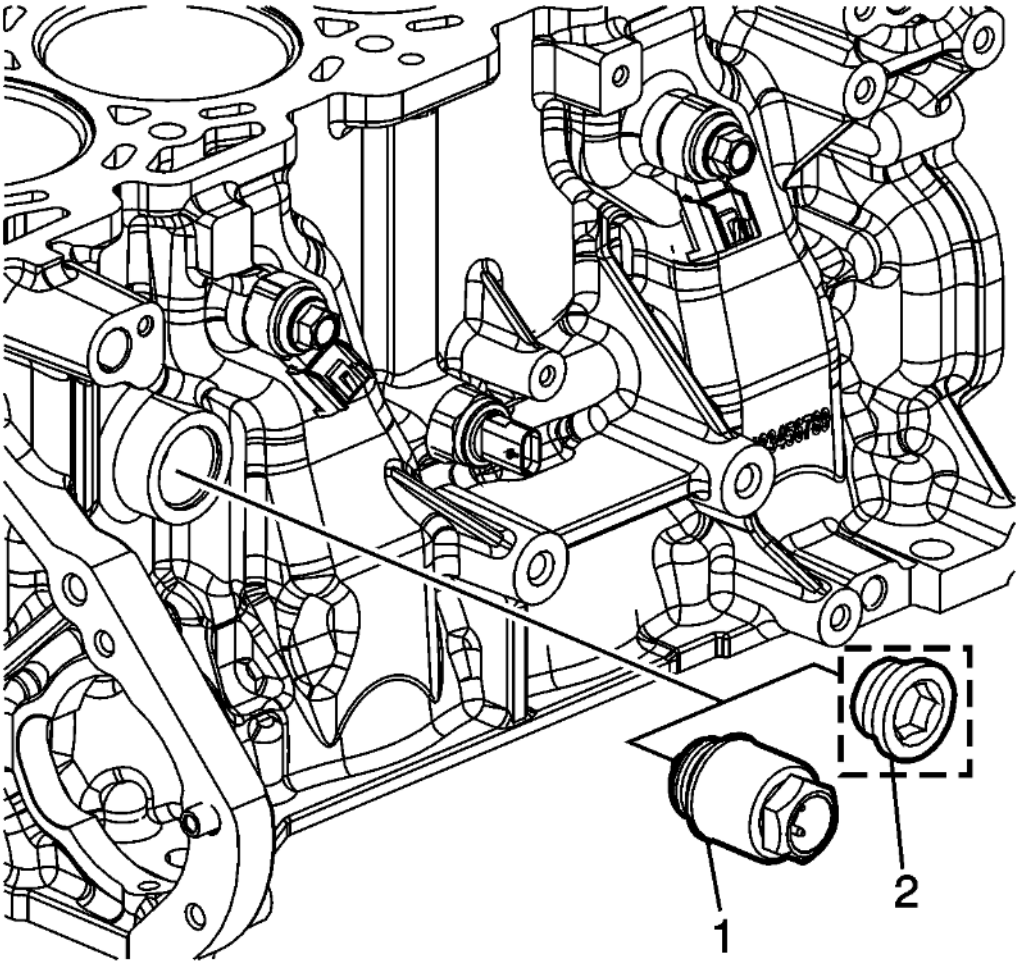

Fig. 76: Engine Coolant Heater
Courtesy of GENERAL MOTORS COMPANY

4. Remove the engine coolant heater (1), if equipped. Remove the engine coolant heater hole plug (2) if the heater is not present.

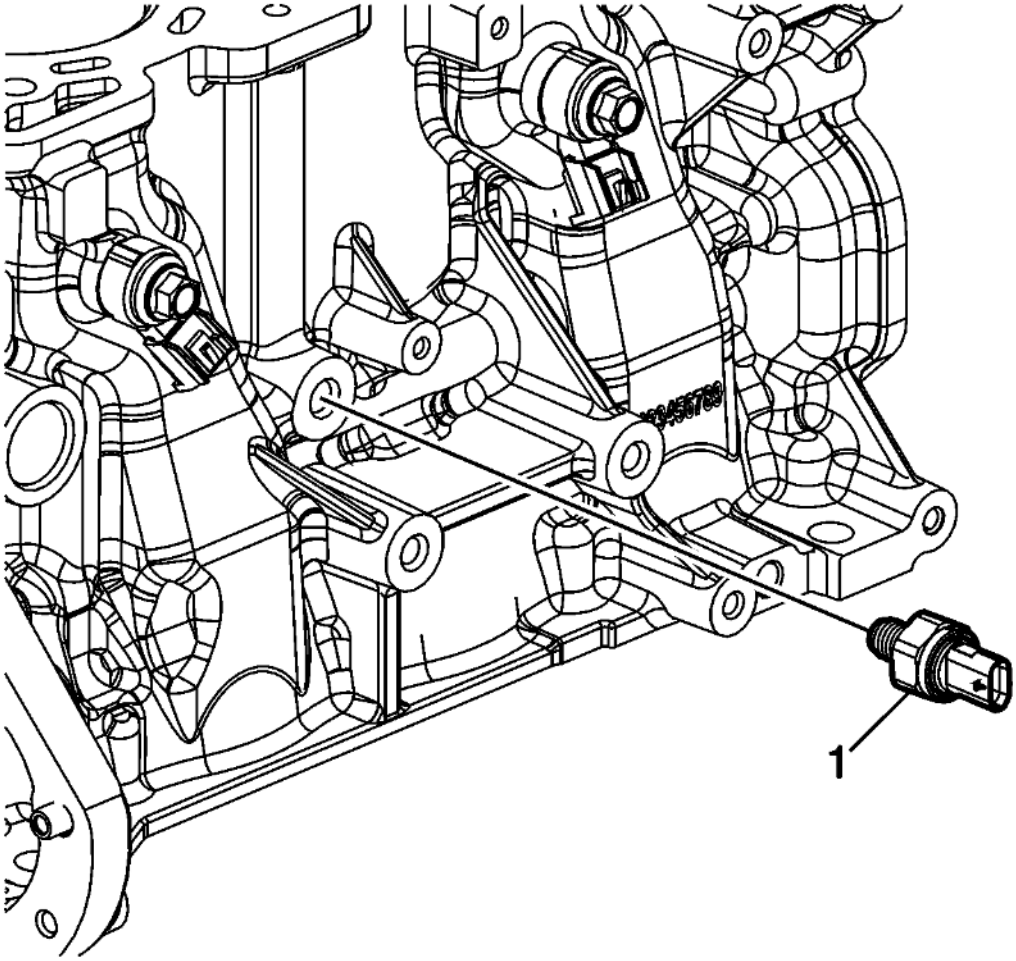

Fig. 77: Engine Oil Pressure Sensor
Courtesy of GENERAL MOTORS COMPANY

5. Remove the engine oil pressure sensor (1).

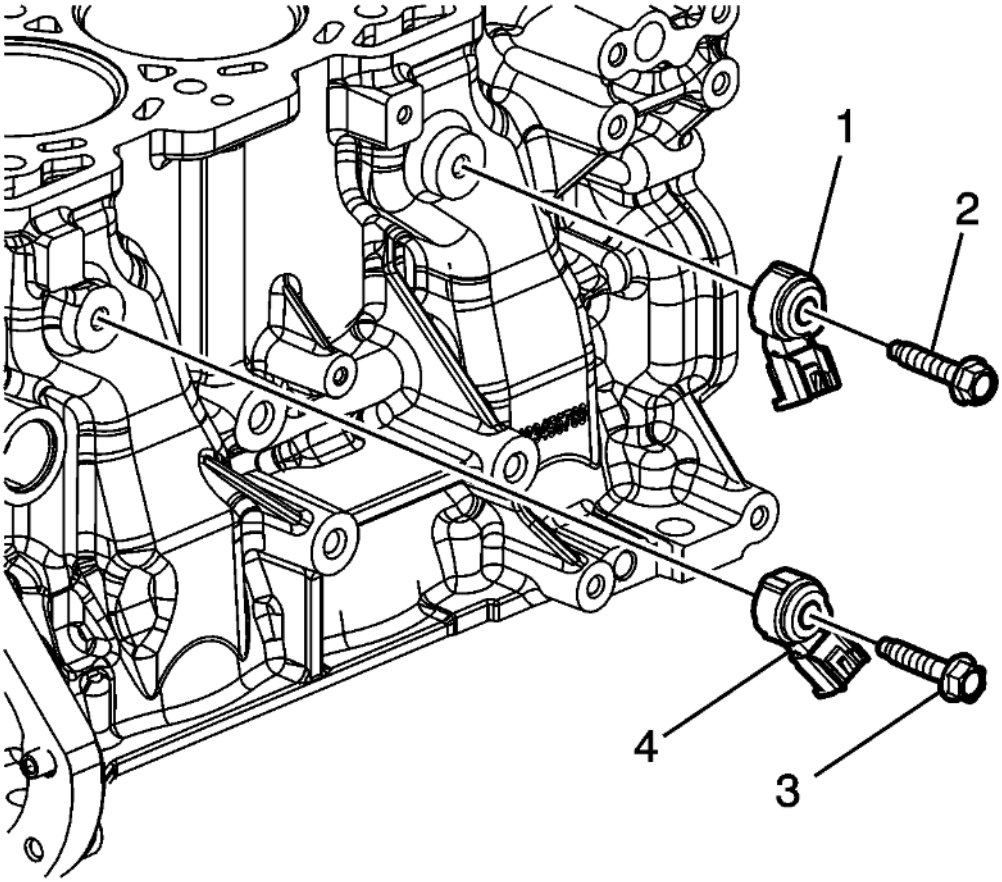

Fig. 78: Knock Sensors And Bolts
Courtesy of GENERAL MOTORS COMPANY

6. Remove the knock sensors (1, 4) and bolts (2, 3).

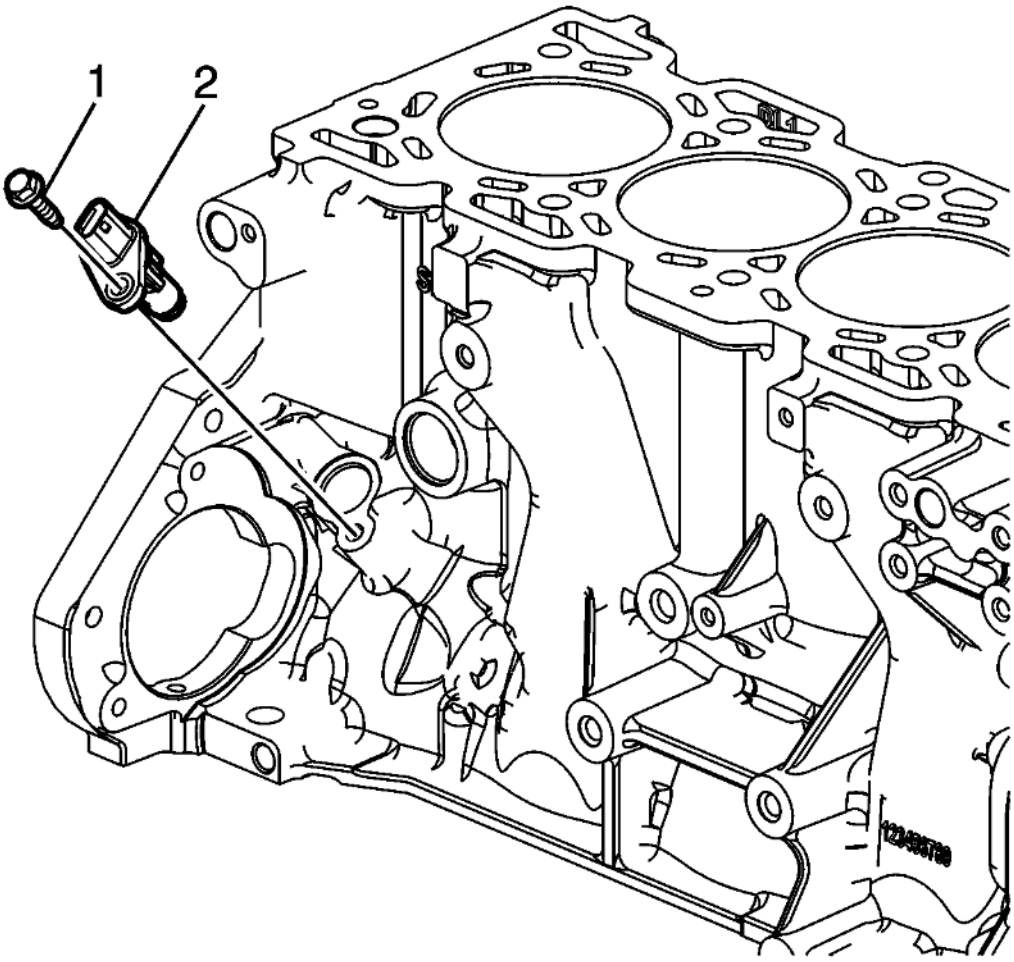

Fig. 79: Crankshaft Position (CKP) Sensor
Courtesy of GENERAL MOTORS COMPANY

7. Remove the crankshaft position (CKP) sensor (2) and bolt (1).

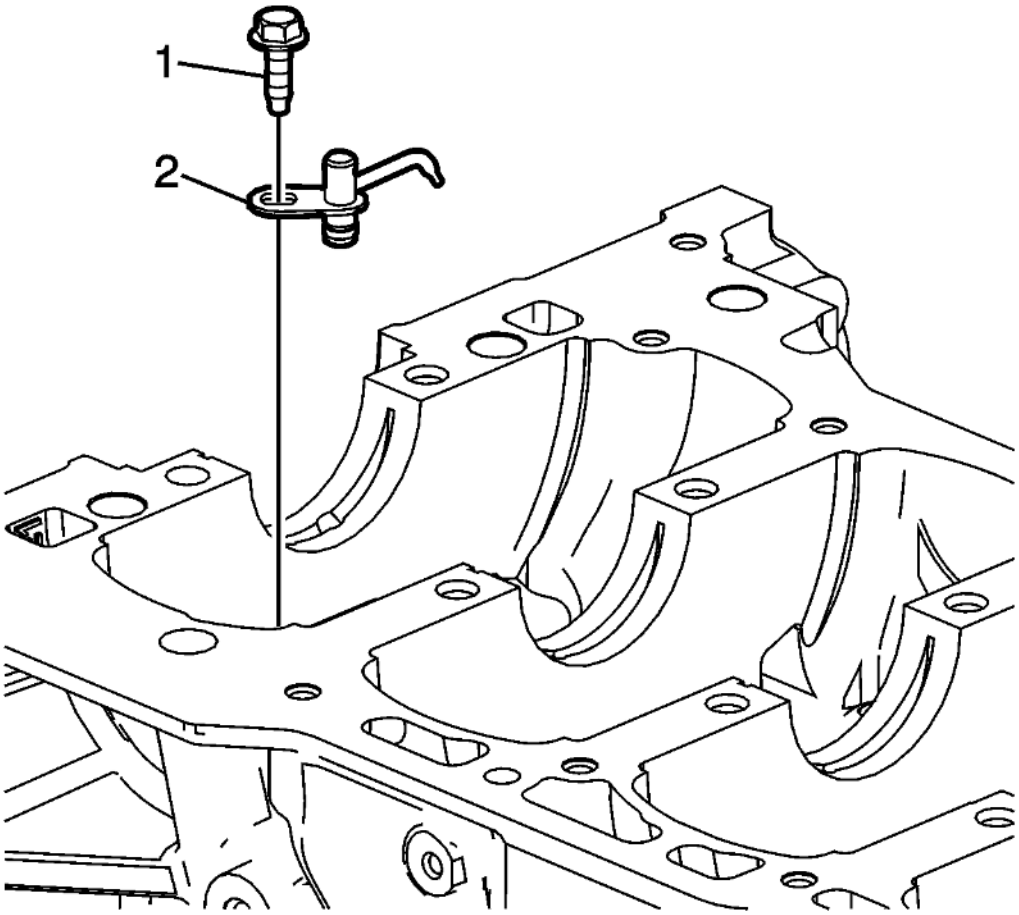

Fig. 80: Piston Oil Nozzle Assembly Bolt
Courtesy of GENERAL MOTORS COMPANY

8. Loosen the piston oil nozzle assembly bolt (1) and remove the piston oil nozzle assembly (2).

ENGINE BLOCK CLEANING AND INSPECTION

Special Tools

- **EN-8087** Cylinder Bore Gauge
- **GE-7872** Magnetic Base Dial Indicator

For equivalent regional tools, refer to **Special Tools** .

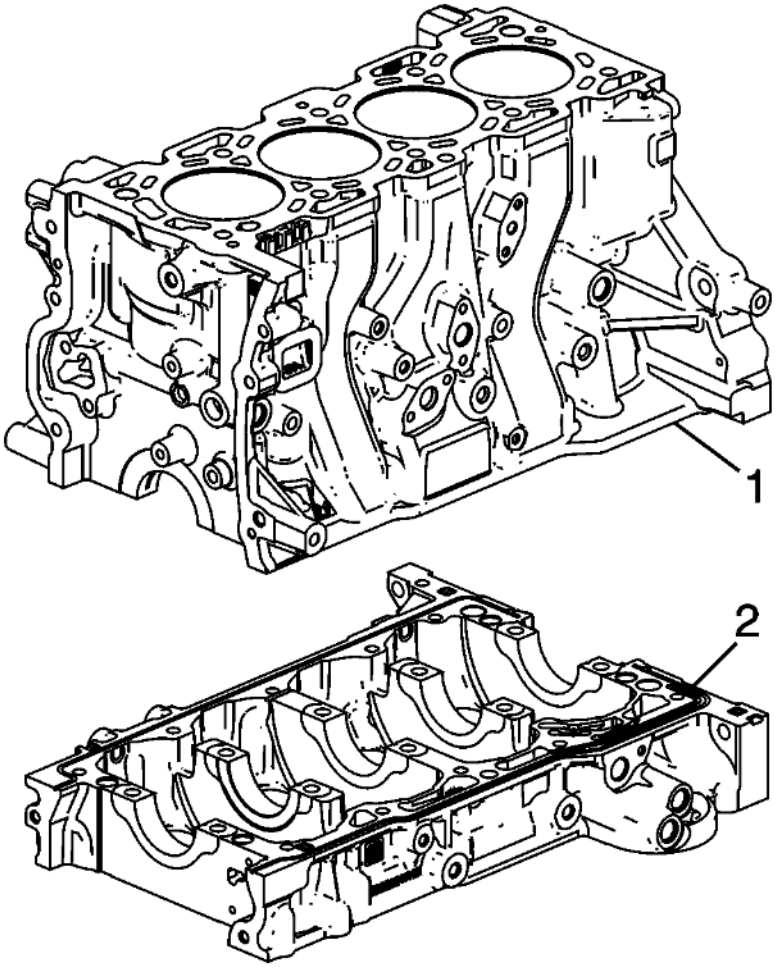

Fig. 81: Sealing Material And Engine Block
Courtesy of GENERAL MOTORS COMPANY

1. Clean the sealing material from the engine block (1) and lower crankcase (2) gasket mating surfaces with a suitable tool.
2. Clean the engine block and lower crankcase in a cleaning tank with solvent appropriate for aluminum.
3. Flush the engine block with clean water or steam.
4. Clean the oil passages.
5. Clean the blind holes.
6. Inspect the cylinder bores for glazing. If the bore is glazed but otherwise serviceable, refer to Deglazing Procedure in **Cylinder Boring and Honing**.
7. Spray the cylinder bores and the machined surfaces with engine oil.
8. Inspect the threaded holes. Clean the threaded holes with a rifle brush. If necessary, drill out the holes and install thread inserts. Refer to **Thread Repair**.

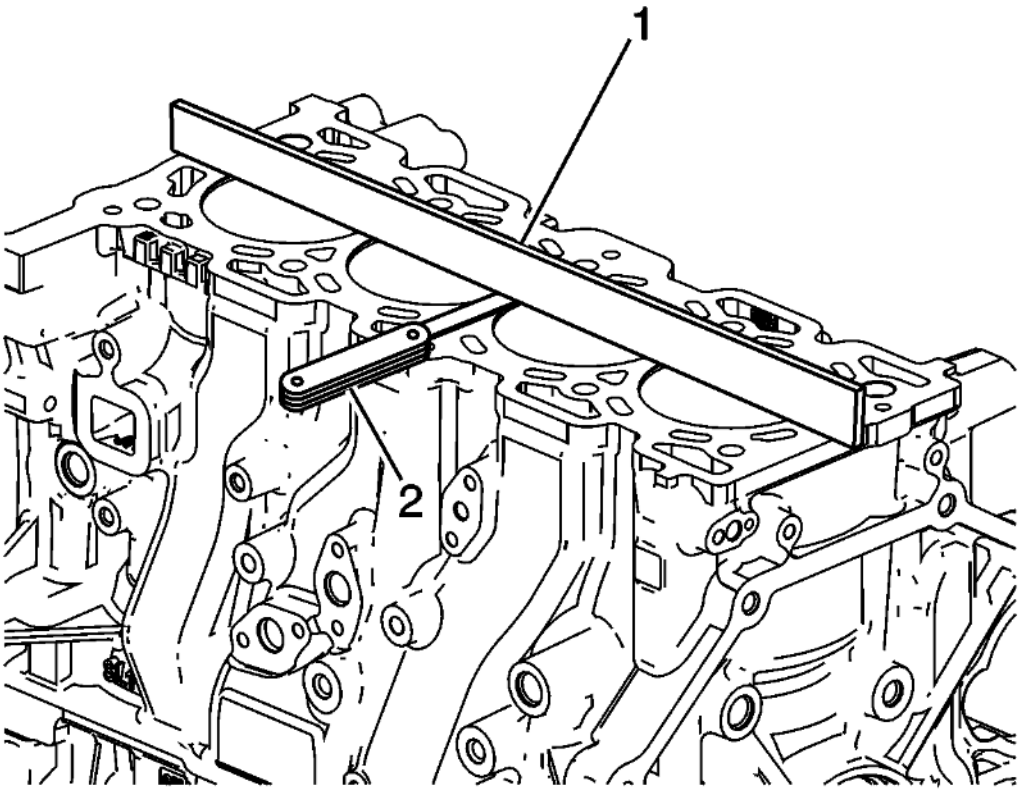

Fig. 82: Using Straight Edge
Courtesy of GENERAL MOTORS COMPANY

NOTE: **Do not attempt to machine the lower crankcase to engine block surfaces.**

9. Use a straight edge (1) and a feeler gauge (2) to check the deck surface for flatness. Carefully machine minor irregularities. Replace the block if more than 0.254 mm (0.010 in) must be removed.
10. Inspect the oil pan rail for nicks. Inspect the front cover attaching area for nicks. Use a flat mill file to remove any nicks.

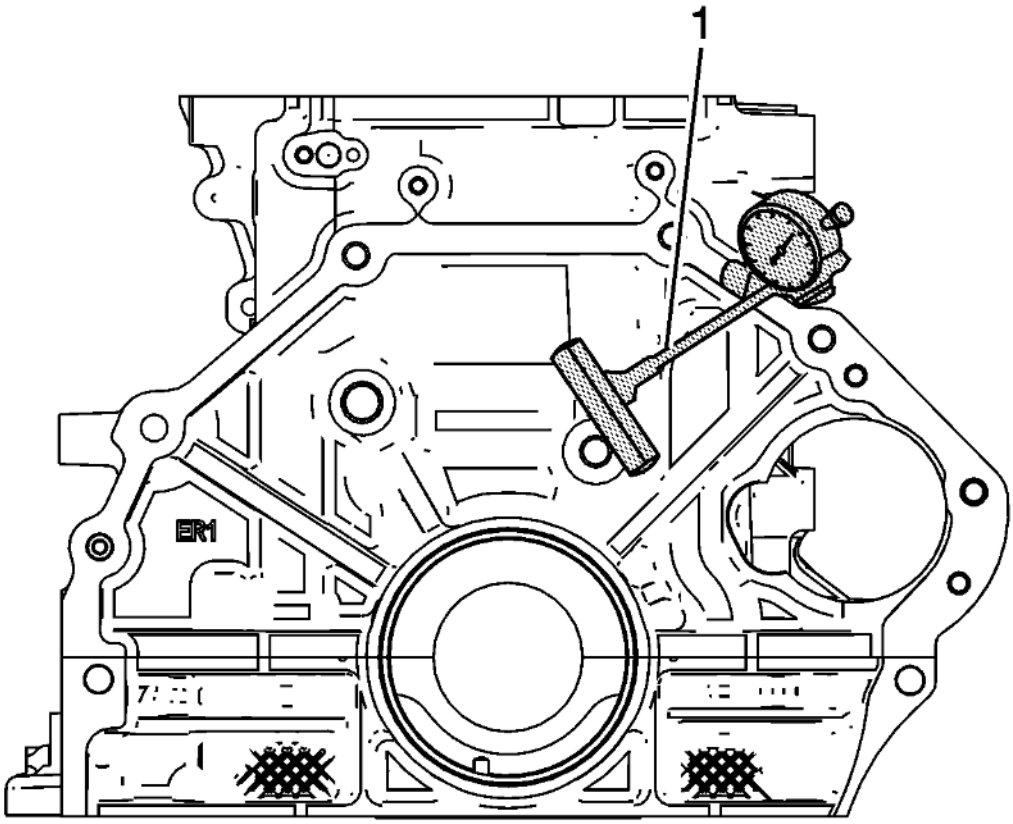

Fig. 83: Measuring Crankshaft Flange Runout Using Dial Indicator
Courtesy of GENERAL MOTORS COMPANY

11. Inspect the mating surfaces of the transmission face.

CAUTION: A broken flywheel may result if the transmission case mating surface is not flat.

12. Use the following procedure in order to measure the engine block flange runout at the mounting bolt hole bosses:
    1. Temporarily install the crankshaft and upper bearings. Measure the crankshaft flange runout using the **GE-7872** dial indicator (1)
    2. Hold the gauge plate flat against the crankshaft flange.
    3. Place the dial indicator stem on the transmission mounting bolt hole boss. Set the indicator to 0.
    4. Record the readings obtained from all of the bolt hole bosses. The measurements should not vary more than 0.203 mm (0.008 in).
    5. Recheck the crankshaft flange runout if the readings vary more than 0.203 mm (0.008 in).
    6. Remove the crankshaft and bearings.

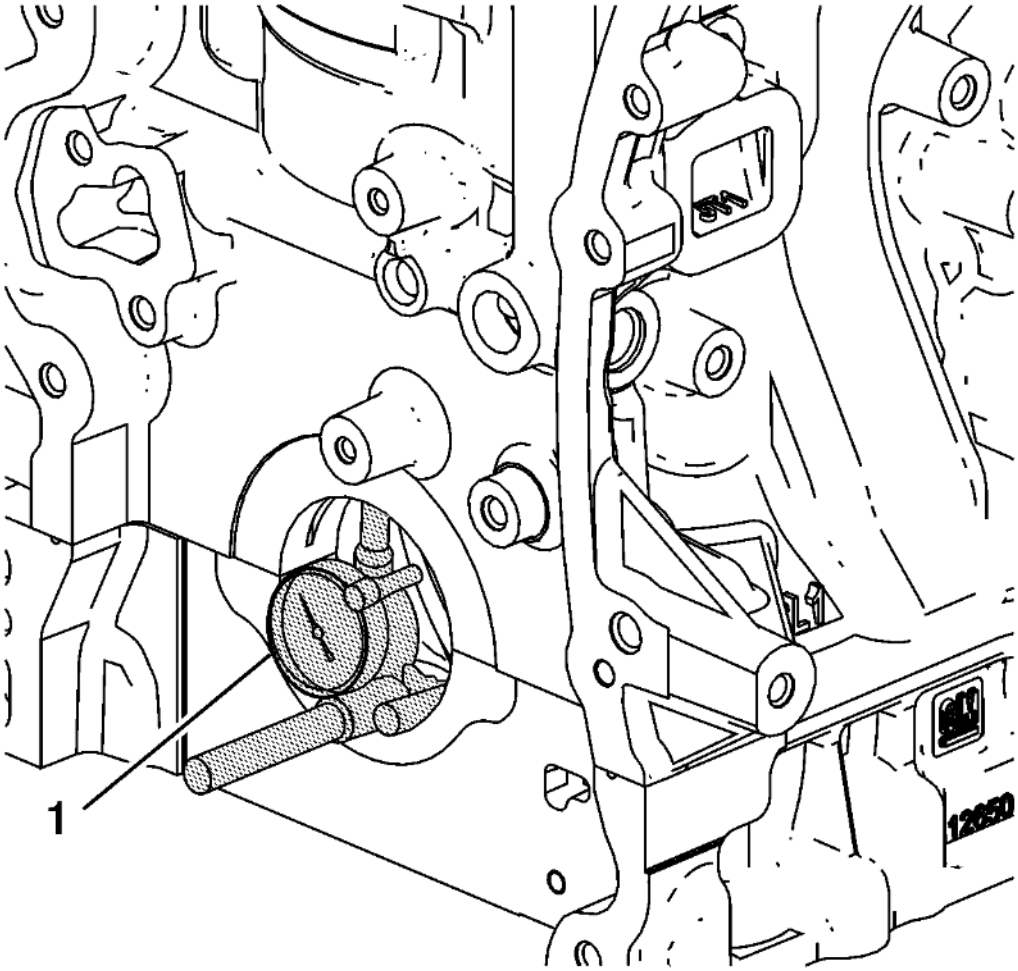

Fig. 84: Cylinder Bore Gauge
Courtesy of GENERAL MOTORS COMPANY

13. Install the bed plate and bolts. Tighten the bed plate bolts to specification.
14. Inspect the crankshaft main bearing bores. Use the **EN-8087** gauge (1) to measure the bearing bore concentricity and alignment. Refer to **Engine Mechanical Specifications** .
15. Replace the engine block and bed plate if the crankshaft bearing bores are out of specification.
16. Remove the bed plate.

Measuring Cylinder Bore Diameter

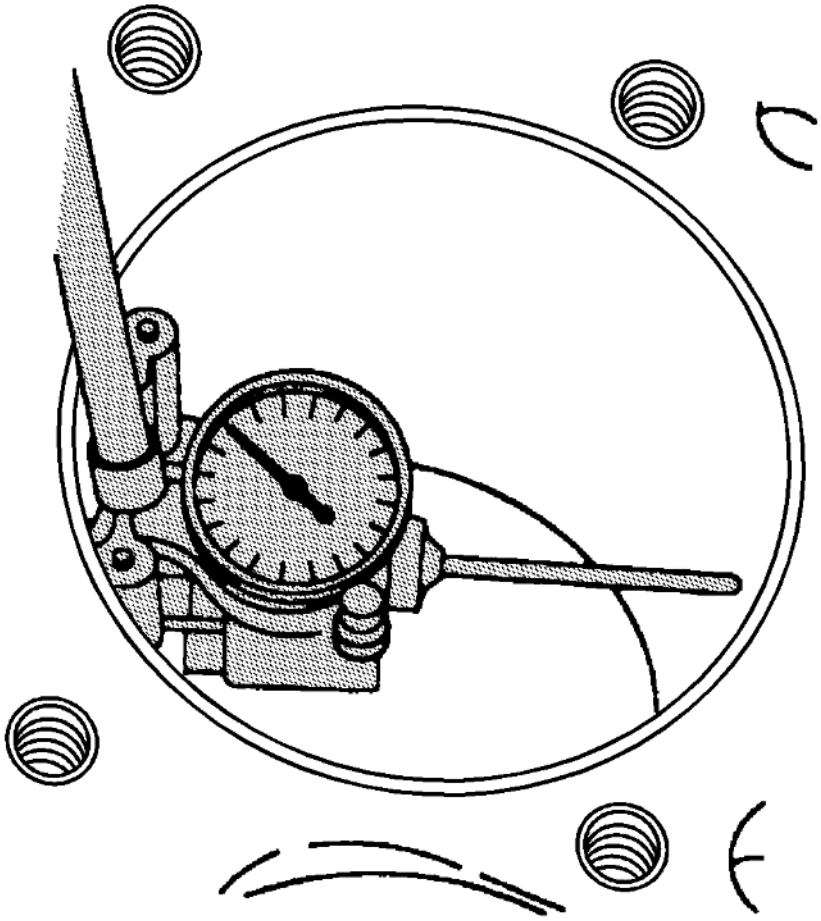

Fig. 85: Measuring Cylinder Bore
Courtesy of GENERAL MOTORS COMPANY

1. Measure the cylinder bore diameter 35 mm (1.378 in) from the deck face using the **EN-8087** gauge.
2. Compare your results with the **Engine Mechanical Specifications** , . If the cylinder diameter exceeds the specifications, the cylinder block may be oversized to 0.25 mm (0.010 in). There is only one size of oversized pistons and rings available for service. Refer to **Cylinder Boring and Honing**.

Measuring Cylinder Bore Taper

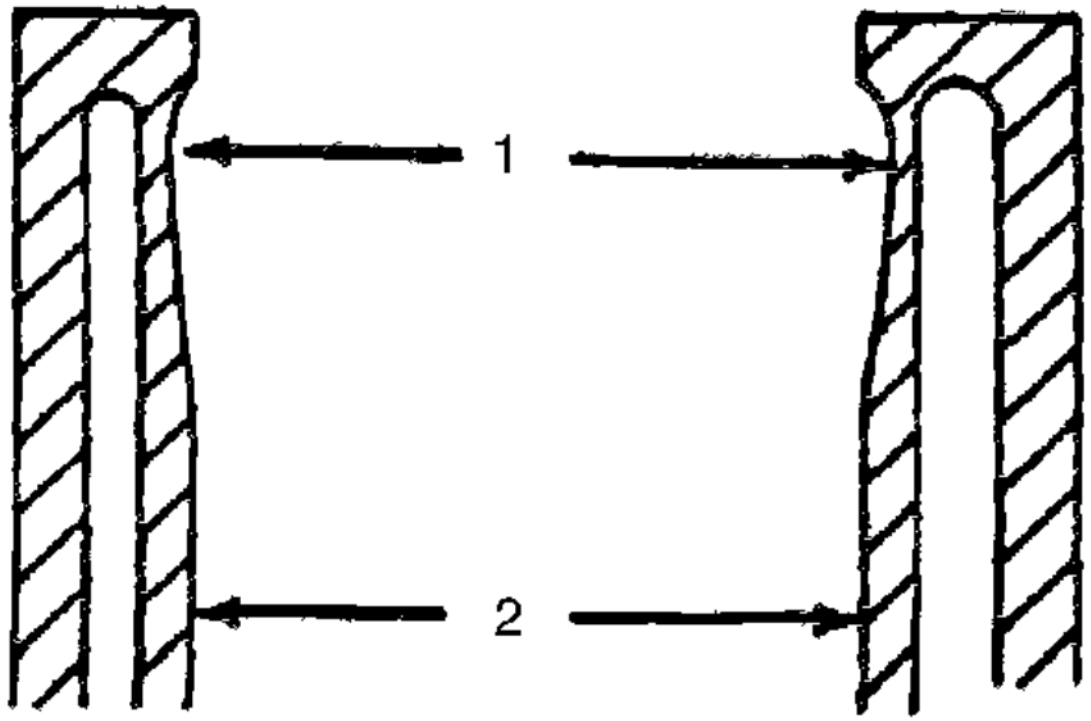

Fig. 86: Measuring Head Gasket Dimensions
Courtesy of GENERAL MOTORS COMPANY

1. Measure the cylinder bore along the thrust surfaces, perpendicular to the crankshaft centerline, at 10 mm (0.394 in) below the deck surface (1) and record your measurement.
2. Measure the cylinder bore along the thrust surfaces, perpendicular to the crankshaft centerline, at 125 mm (4.921 in) below the deck surface (2) and record your measurement.
3. Calculate the difference between the 2 measurements. The result will be the cylinder taper.
4. Compare your results with the **Engine Mechanical Specifications** , . If the cylinders exceed the specifications, the cylinder block may be oversized to 0.25 mm (0.010 in). There is only one size of oversized pistons and rings available for service. Refer to **Cylinder Boring and Honing**.

Measuring Cylinder Bore Out-of-Round

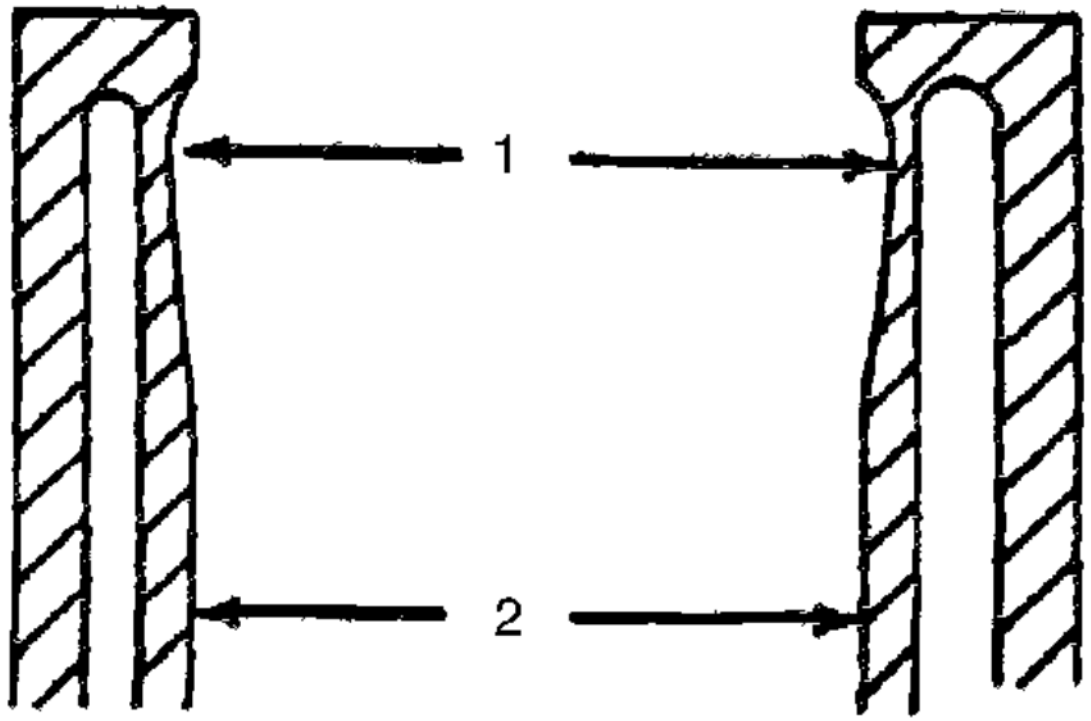

Fig. 87: Measuring Head Gasket Dimensions
Courtesy of GENERAL MOTORS COMPANY

1. Measure both the thrust and non-thrust cylinder diameter at 10 mm (0.394 in) below the deck surface (1). Record your measurements.
2. Calculate the difference between the 2 measurements. The result will indicate out-of-round at the upper end of the cylinder.
3. Measure both the thrust and non-thrust cylinder diameter at 125 mm (4.921 in) below the deck surface (2). Record your measurements.
4. Calculate the difference between the 2 measurements. The result will indicate out-of-round at the lower end of the cylinder.
5. Compare your results with the **Engine Mechanical Specifications** , . If the cylinders exceed these specifications, the cylinder block may be oversized to 0.25 mm (0.010 in). There is only one size of oversized pistons and rings available for service. Refer to **Cylinder Boring and Honing**.

CYLINDER BORING AND HONING

Boring Procedure

1. Measure all pistons with a micrometer to determine the cylinder bore diameter. Refer to **Engine Block Cleaning and Inspection**.
2. Before you use any type of boring bar, use a fine file and clean the top of the cylinder block, removing any dirt or burrs. If you do not check the cylinder block, the boring bar may be improperly positioned or tilted and the cylinder bore could be bored at an incorrect angle.
3. Carefully follow the instructions furnished by the manufacturer regarding use of the equipment.
4. When you bore the cylinders, ensure all the crankshaft bearing caps are in place. Tighten the crankshaft bearing caps to the proper torque in order to avoid distortion of the cylinder bores during final assembly.
5. When you take the final cut with a boring bar, leave 0.075 mm (0.003 in) on the cylinder bore diameter for the finish honing and fit of the piston.

Honing Procedure

NOTE: **Fine vertical scratches made by the ring ends do not, by themselves, cause excessive oil consumption. Do not hone the cylinder in order to remove these scratches.**

1. When honing the cylinders, follow the manufacturer's recommendations for equipment use, cleaning, and lubrication. Use only clean, sharp stones of the proper grade for the amount of material you remove. Dull, dirty stones cut unevenly and generate excessive heat. Do not hone to final clearance with a coarse or medium-grade stone. Leave sufficient metal so that all stone marks may be removed with fine-grade stones. Perform final honing with a fine-grade stone, honing the cylinder to the proper clearance.

NOTE: **All measurements of the piston or the cylinder bore should be made with the components at normal room temperature.**

2. During the honing operation, thoroughly clean the cylinder bore. Repeatedly check the cylinder bore for fit with the selected piston.
3. When honing a cylinder for fit to an oversize piston, first perform the preliminary honing with a 100-grit stone.

NOTE: **A 240-grit stone is preferred for final honing. If a 240-grit stone is not available, a 220-grit stone may be used as a substitute.**

4. Perform final cylinder honing with a 240-grit stone and obtain a 45 degree cross hatch pattern.
5. The finish marks should be clean but not sharp. The finish marks should also be free from imbedded particles and torn or folded metal.
6. By measuring the selected piston at the sizing point and by adding the average of the clearance specification, you can determine the final cylinder honing dimension required.
7. After final honing and before the piston is checked for fit, clean the cylinder bores with hot water and detergent. Scrub the bores with a stiff bristle brush and rinse the bores thoroughly with hot water. Do not allow any abrasive material to remain in the cylinder bores. This abrasive material may cause premature wear of the new piston rings and the cylinder bores. Abrasive material will also contaminate the engine oil and may cause premature wear of the bearings. After washing the cylinder bore, dry the bore with a clean rag.

8. Perform final measurements of the piston and the cylinder bore.
9. Permanently mark the top of the piston for the specific cylinder to which it has been fitted.
10. Apply clean engine oil to each cylinder bore in order to prevent rusting.

Deglazing Procedure

1. If the bore is glazed but otherwise serviceable, lightly break the glaze with a hone. Replace the piston rings. Refer to **Piston, Connecting Rod, and Bearing Installation**.

   NOTE: A 240-grit stone is preferred for final honing. If a 240-grit stone is not available, a 220-grit stone may be used as a substitute.

2. Using a ball type or self centering honing tool, deglaze the cylinder bore lightly. Deglazing should be done only to remove any deposits that may have formed. Use a 240-grit stone of silicone carbide, or equivalent, material when preforming the deglazing procedure.
   1. The honing stones must be clean, sharp, and straight.
   2. Move the hone slowly up and down to produce a 45 degree cross-hatch pattern.
   3. Clean the bore thoroughly with soap and water.
   4. Dry the bore.
   5. Rub clean engine oil in the bore.
   6. Re-measure the bore.
3. If the cylinder bore is out of specification, the cylinder bore may be oversized to 0.25 mm (0.010 in). There is only one size of oversized pistons and rings available for service.
4. If honing is not required, clean the cylinder bores with hot water and detergent. Apply clean engine oil to the bore after washing and drying the bore.

CRANKSHAFT BALANCER CLEANING AND INSPECTION

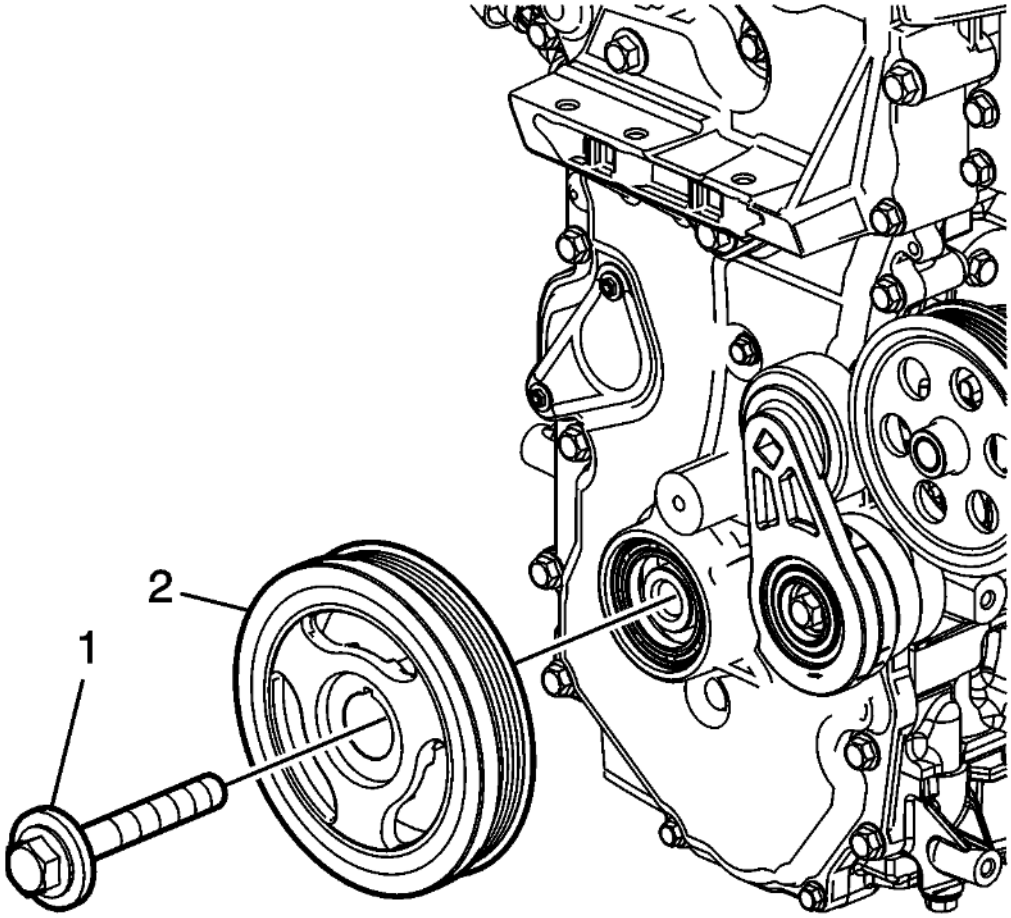

Fig. 88: Crankshaft Balancer
Courtesy of GENERAL MOTORS COMPANY

1. Clean the crankshaft balancer (2).
2. Clean the belt grooves of all dirt or debris with a wire brush.

WARNING: Refer to Safety Glasses Warning .

3. Dry the crankshaft balancer with compressed air.
4. Inspect the crankshaft balancer for the following:
   - Worn, grooved, or damaged hub seal surface.
   - A crankshaft balancer hub seal surface with excessive scoring, grooves, rust or other damage must be replaced.

NOTE: In order for the belt to track properly, the belt grooves should be free of all dirt or debris.

   - Dirty or damaged belt grooves

The balancer belt grooves should be free of any nicks, gouges, or other damage that may not allow the belt to track properly.

- Minor imperfections may be removed with a fine file.
- Worn, chunking or deteriorated rubber between the hub and pulley.

AUTOMATIC TRANSMISSION FLEX PLATE CLEANING AND INSPECTION

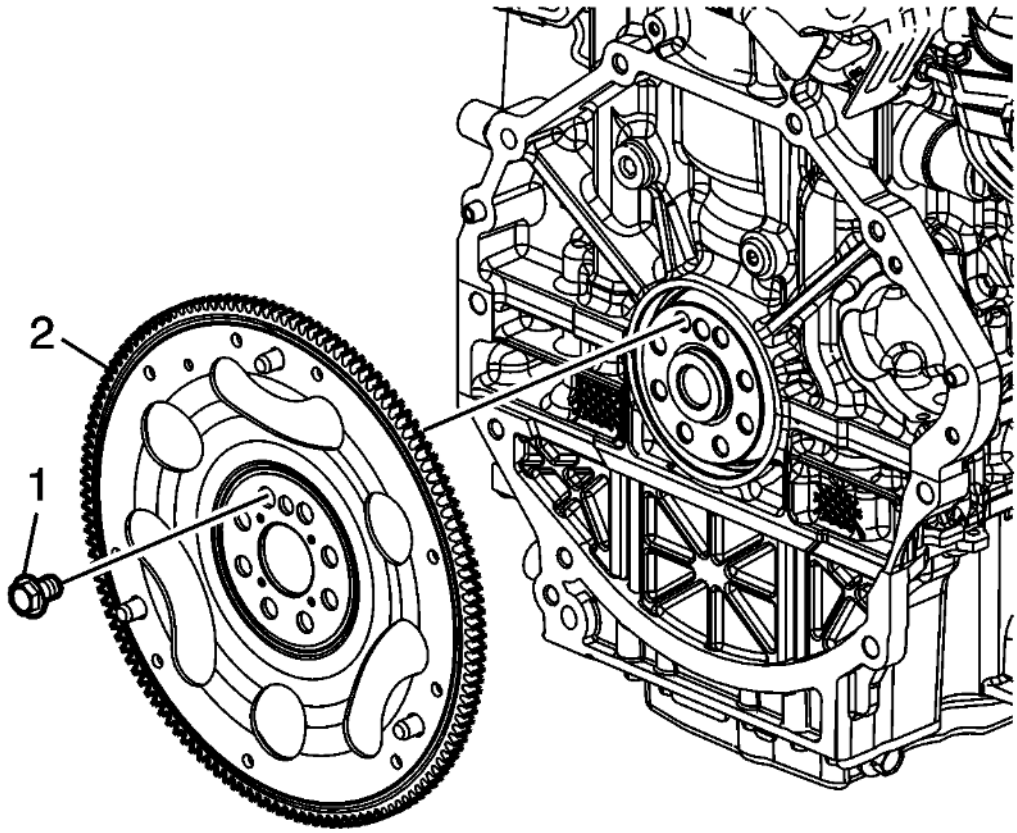

Fig. 89: Flywheel Attaching Bolts
Courtesy of GENERAL MOTORS COMPANY

1. Clean the flywheel (2) in solvent.

   WARNING: Refer to Safety Glasses Warning .

2. Dry the flywheel with compressed air.
3. Inspect the flywheel for the following:
   - Damaged ring gear teeth.
   - Stress cracks around the flywheel-to-crankshaft bolt hole locations.

- Weight saving holes.

CRANKSHAFT AND BEARING CLEANING AND INSPECTION

Special Tools

GE-7872 Magnetic Base Dial Indicator Set

For equivalent regional tools, refer to **Special Tools** .

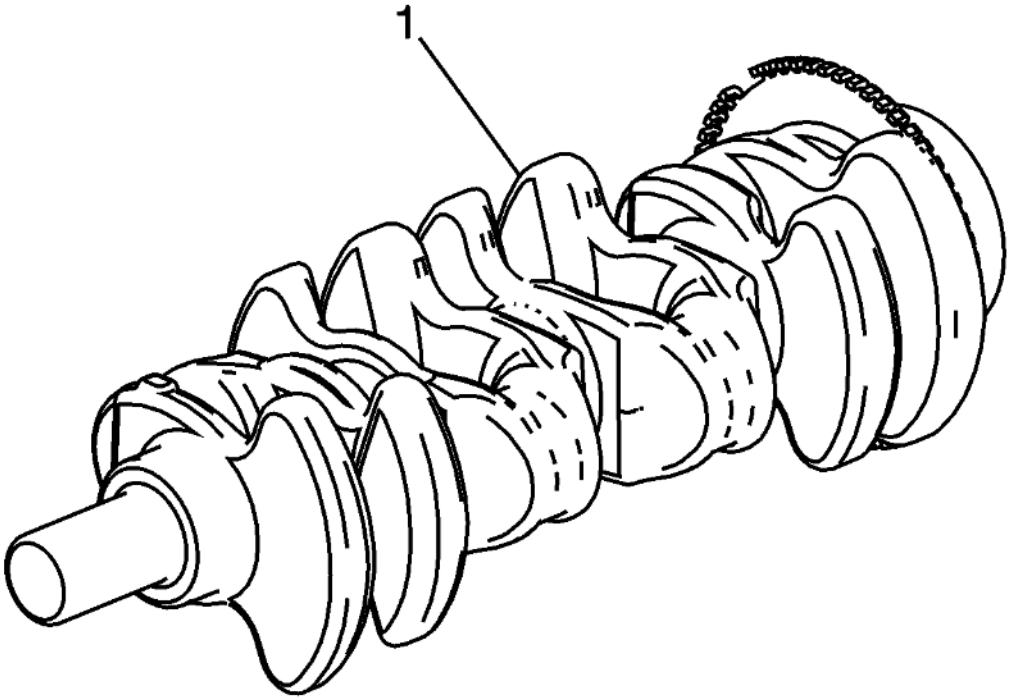

Fig. 90: Measuring Bearing Clearance Using Method A
Courtesy of GENERAL MOTORS COMPANY

NOTE: **Use care when handling the crankshaft. Avoid damage to the bearing surfaces or the lobes of the crankshaft position reluctor ring. Damage to the teeth of the crankshaft position reluctor ring may affect on-board diagnostic (OBD) II system performance.**

1. Clean the crankshaft (1) with solvent.
2. Thoroughly clean all oil passages and inspect for restrictions or burrs.

WARNING: Refer to Safety Glasses Warning .

3. Dry the crankshaft with compressed air.

NOTE: **Reluctor ring teeth should not have imperfections on the rising or falling edges.**

Imperfections of the reluctor ring teeth may effect OBD II system performance.

4. Perform a visual inspection of the crankshaft for damage.
5. Inspect the crankshaft journals for wear. The journals should be smooth, with no signs of scoring, wear, or damage.
6. Inspect the crankshaft journals for grooves or scoring.
7. Inspect the crankshaft journals for scratches or wear.
8. Inspect the crankshaft journals for pitting or imbedded bearing material.
9. Measure the crankshaft journals for out-of-round.
10. Measure the crankshaft journals for taper.

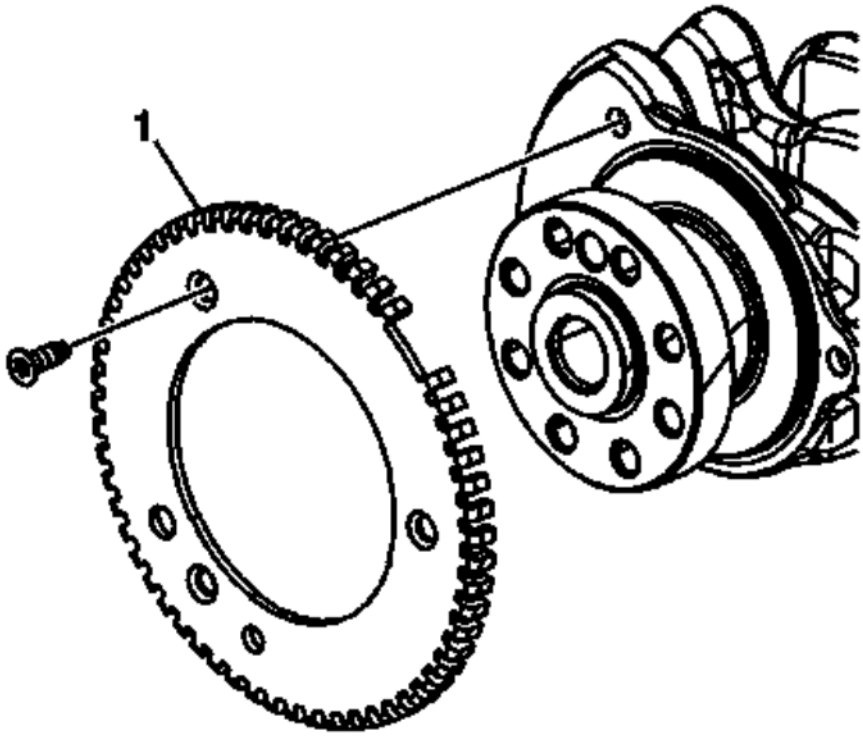

Fig. 91: Crankshaft Position Reluctor Ring
Courtesy of GENERAL MOTORS COMPANY

11. The crankshaft position reluctor ring (1) may be replaced if damaged. Tighten the crankshaft position reluctor ring bolts to 15 N.m (11 lb ft).

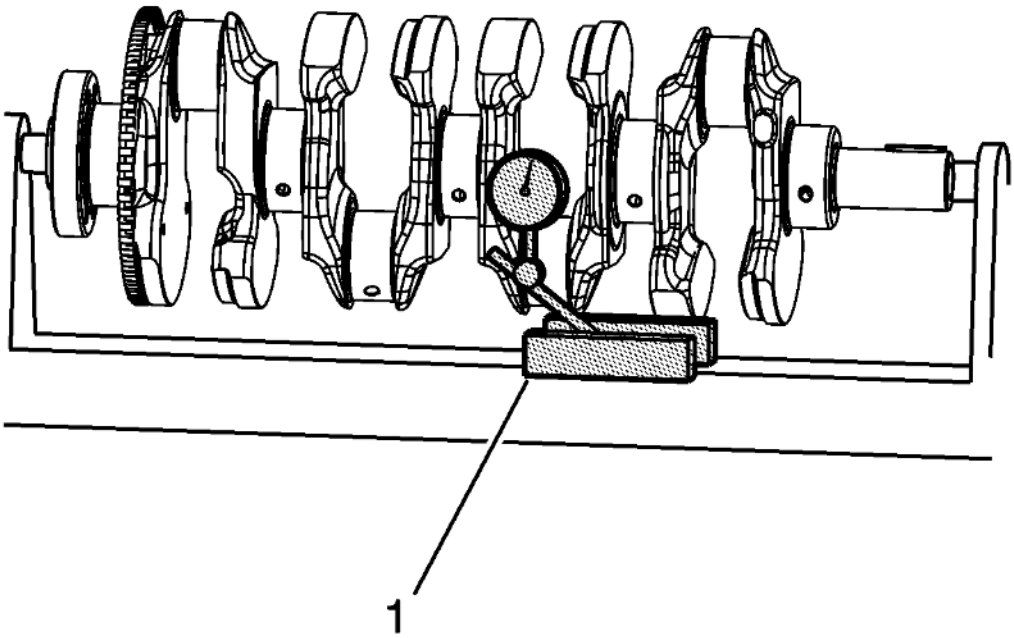

Fig. 92: Magnetic Base Dial Indicator Set
Courtesy of GENERAL MOTORS COMPANY

12. Measure the crankshaft runout.

    Using wooden V-blocks, support the crankshaft on the front and rear journals.

13. Use the **GE-7872** indicator (1) in order to measure the crankshaft runout at the front and rear intermediate journals.
14. Use the **GE-7872** indicator in order to measure the runout of the crankshaft rear flange.
15. Replace the crankshaft if the measurements are not within specifications.

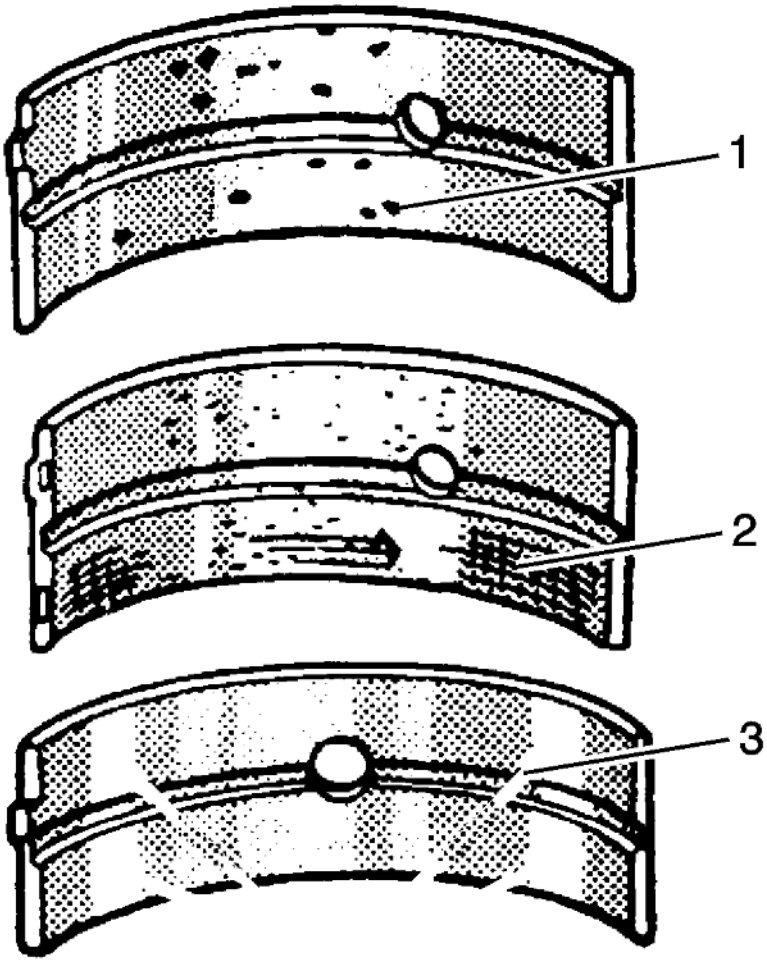

Fig. 93: Identifying Crankshaft Bearings For Craters Or Pockets
Courtesy of GENERAL MOTORS COMPANY

NOTE: **Crankshaft bearings MUST be separated, marked, or organized in a way to ensure installation to their original location and position, when suitable for use.**

16. Inspect crankshaft bearings for craters or pockets (1). Flattened sections on the bearing halves also indicate fatigue.
17. Inspect the crankshaft bearings for excessive scoring or discoloration (2).
18. Inspect the crankshaft bearings for dirt or debris imbedded into the bearing material.
19. Inspect the crankshaft bearings for improper seating indicated by bright, polished sections of the bearing (3).

    If the lower half of the bearing is worn or damaged, both upper and lower halves should be replaced.

    Generally, if the lower half is suitable for use, the upper half should also be suitable for use.

PISTON AND CONNECTING ROD DISASSEMBLE

Special Tools

- **EN-46745** Piston Pin Clip Remover/Installer
- **EN-46745-4** Piston Pin Clip Remover/Installer Adapter

For equivalent regional tools, refer to **Special Tools** .

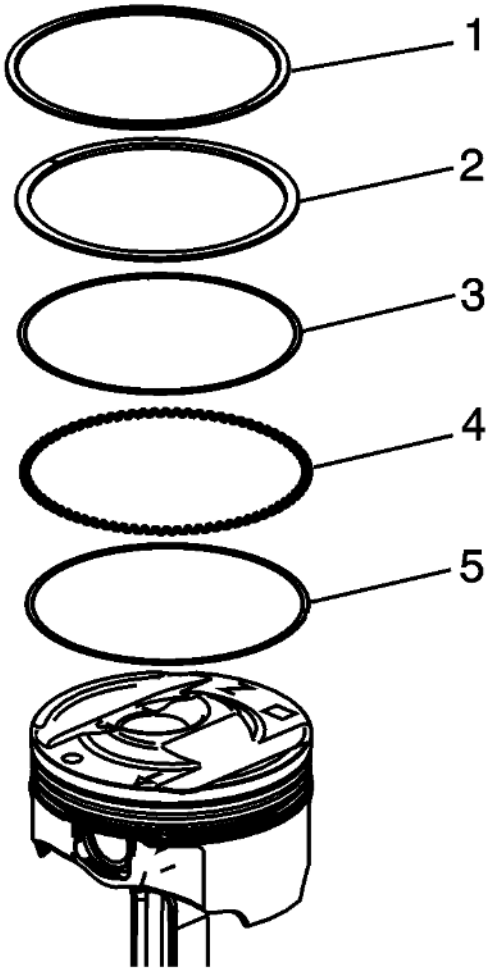

Fig. 94: Piston Rings
Courtesy of GENERAL MOTORS COMPANY

WARNING: Handle the piston carefully. Worn piston rings are sharp and may cause bodily injury.

1. Disassemble the piston rings (1, 2, 3, 4, 5). Use a suitable tool to expand the rings. The piston rings must not be reused.

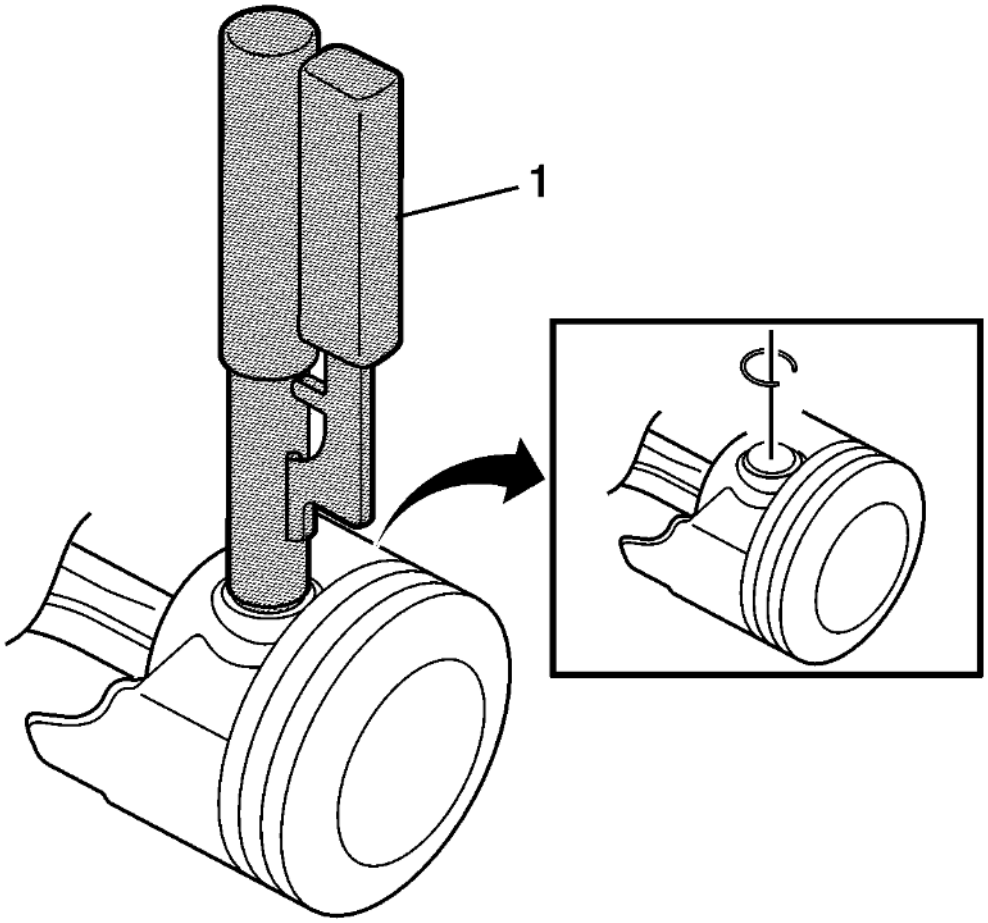

Fig. 95: View of Piston Pin Retainers
Courtesy of GENERAL MOTORS COMPANY

NOTE: **Two retainers hold the piston pins in place. No special tools are required to remove the piston pins. Ensure that the piston pin is not damaged. Do not reuse the retainers.**

2. Remove the piston pin retainers using the **EN-46745** remover (1) and **EN-46745-4** adapter.

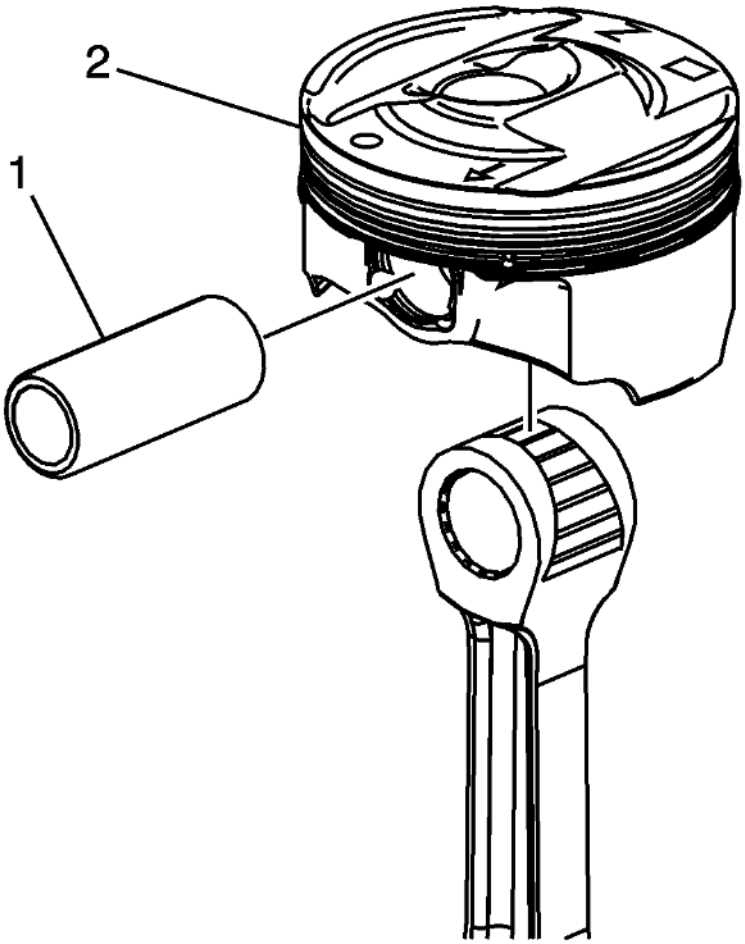

Fig. 96: Piston Pin And Connecting Rod
Courtesy of GENERAL MOTORS COMPANY

3. Remove the piston pin (1) and the connecting rod (3) from the piston (2).

PISTON, CONNECTING ROD, AND BEARING CLEANING AND INSPECTION

Connecting Rod Measurement

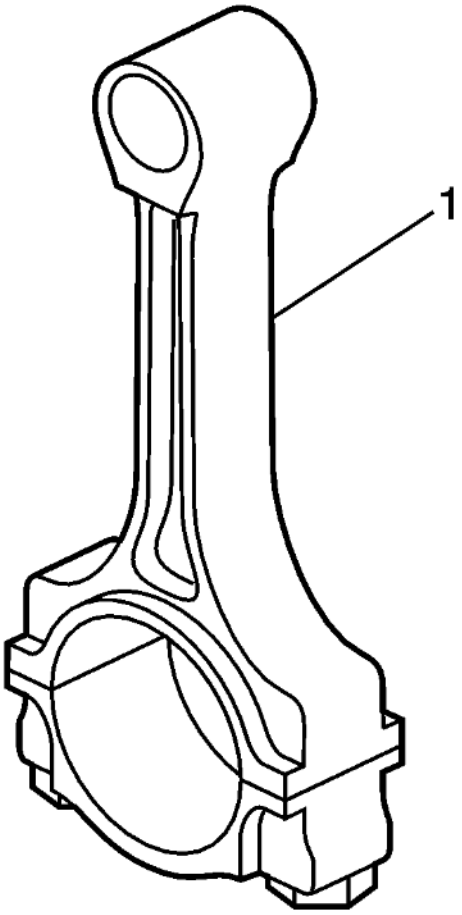

Fig. 97: Connecting Rod
Courtesy of GENERAL MOTORS COMPANY

1. Clean the connecting rods (1) in solvent and dry with compressed air.
2. Inspect the connecting rods for the following:
   - Signs of being twisted, bent, nicked, or cracked
   - Scratches or abrasion on the rod bearing seating surface
3. If the connecting rod bores contain minor scratches or abrasions, clean the bores in a circular direction with a light emery paper. DO NOT scrape the rod or rod cap.
4. If the beam of the rod is scratched or has other damage replace the connecting rod.
5. Measure the piston pin to connecting rod bore using the following procedure:
   1. Using an outside micrometer, take two measurements of the piston pin in the area of the connecting rod contact.
   2. Using an inside micrometer, measure the connecting rod piston pin bore.
   3. Subtract the piston pin diameter from the piston pin bore diameter.
   4. The clearance should not be more than 0.021 mm (0.0008 in).
6. If there is excessive clearance, replace the piston pin.
7. If there is still excessive clearance, replace the connecting rod.

Piston Measurement

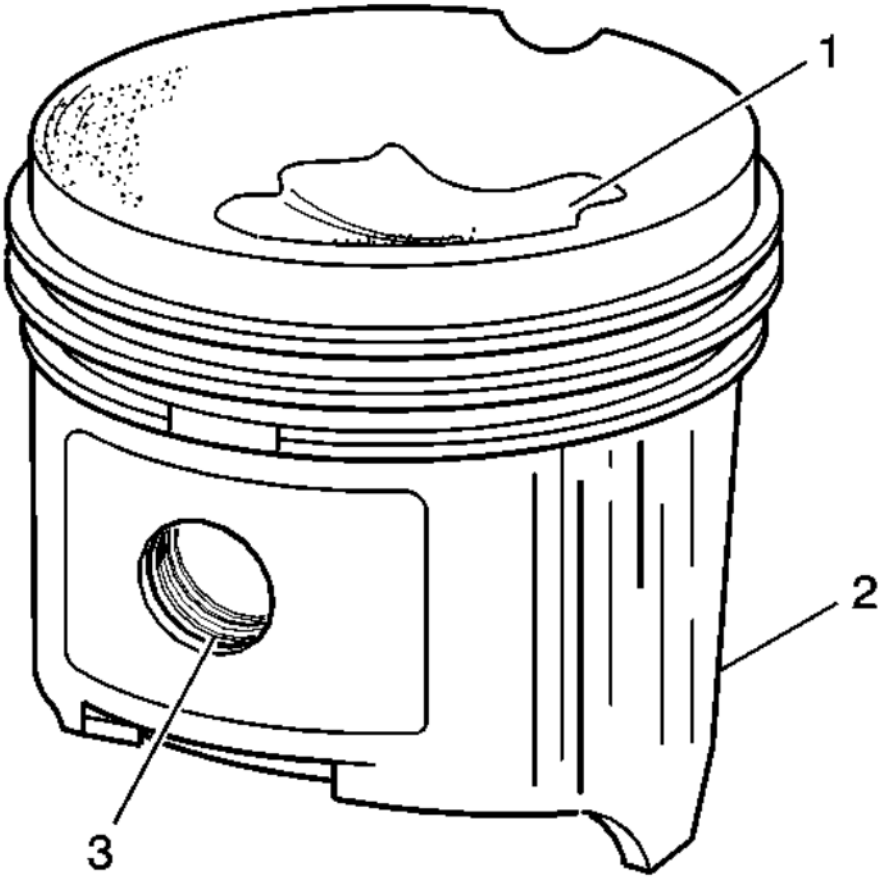

Fig. 98: Identifying Piston Damage Inspection Areas
Courtesy of GENERAL MOTORS COMPANY

1. Clean the piston skirts and the pins with a cleaning solvent. DO NOT wire brush any part of the piston.
2. Clean the piston ring grooves with a groove cleaner. Make sure oil ring holes and slots are clean.
3. Inspect the pistons for the following conditions:
   - Cracked ring lands, skirts, or pin bosses
   - Ring grooves for nicks, burrs that may cause binding
   - Warped or worn ring lands
   - Eroded areas at the top of the piston (1)
   - Scuffed or damaged skirts (2)
   - Worn piston pin bores (3)
4. Replace pistons that show any signs or damage or excessive wear.
5. Measure the piston pin bore to piston pin clearances using the following procedure:
   1. Piston pin bores and pins must be free of varnish or scuffing.

2. Use an outside micrometer to measure the piston pin in the piston contact areas.
3. Using an inside micrometer, measure the piston pin bore.
4. Subtract the measurement of the piston pin bore from the piston pin. The clearance should be within 0.002-0.012 mm (0.00007-0.00047 in).
5. If the clearance is excessive, determine which component is out of specification.

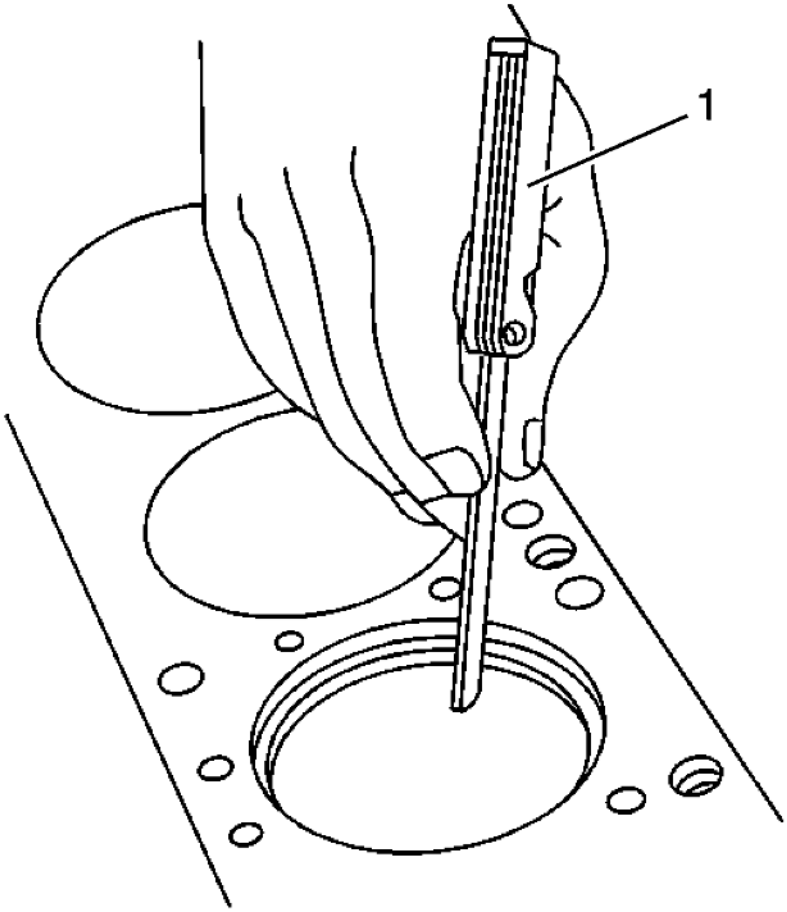

Fig. 99: Measuring Piston Ring End Gap
Courtesy of GENERAL MOTORS COMPANY

6. Measure the piston ring end gap using the following procedure:
   1. Place the piston ring in the area of the bore where the piston ring will travel (approximately 25 mm or 1 inch down from the deck surface). Be sure the ring is square with the cylinder bore by positioning the ring with the piston head.
   2. Measure the end gap of the piston ring with feeler gauges (1). Compare the measurements with those provided below:
      - The top compression ring end gap should be 0.20-0.40 mm (0.0060-0.015 in).
      - The second compression ring end gap should be 0.35-0.55 mm (0.0137-0.0216 in).
      - The oil ring end gap should be 0.25-0.76 mm (0.0098-0.029 in).
   3. If the clearance exceeds the provided specifications, the piston rings must be replaced.

4. Repeat the procedure for all the piston rings.

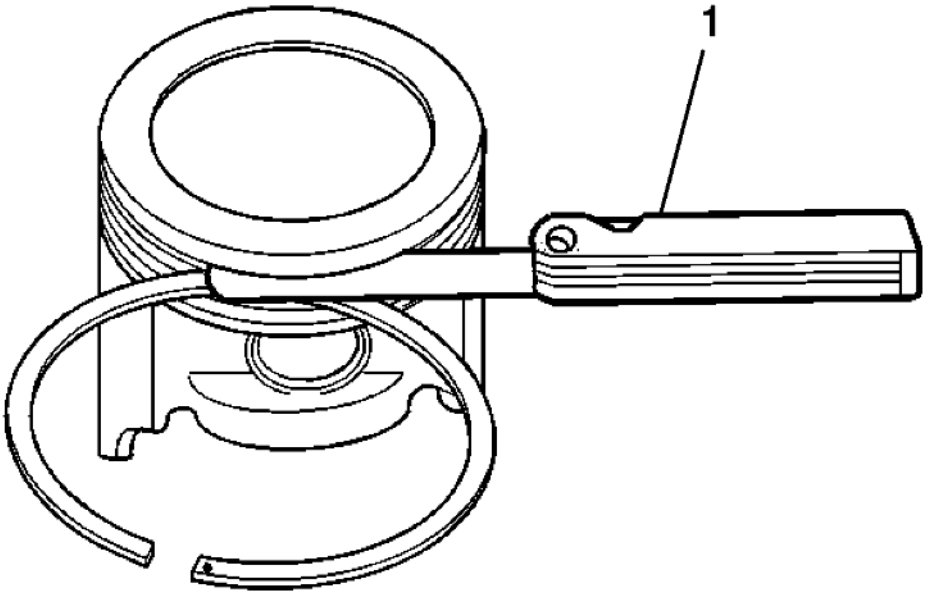

Fig. 100: Measuring Piston Ring Side Clearance
Courtesy of GENERAL MOTORS COMPANY

7. Measure the piston ring side clearance using the following procedure:
    1. Roll the piston ring entirely around the piston ring groove. If any binding is caused by a distorted piston ring, replace the ring.
    2. With the piston ring on the piston, use feeler gauges (1) to check clearance at multiple locations.
    3. The clearance between the surface of the top piston ring and the ring land should be no greater than 0.075 mm (0.0030 in).
    4. If the clearance is greater than specifications, replace the piston ring.
    5. If the new ring does not reduce the top ring side clearance to 0.075 mm (0.0030 in) or less, install a new piston.
8. The top compression ring may be installed with either side up. There is a locating dimple on the 2nd compression ring near the end for identification of the top side. Install the 2nd compression ring with the dimple facing up.
9. The clearance between the surface of the second piston ring and the ring land should be no greater than 0.069 mm (0.0026 in).
10. If the new ring does not reduce the clearance to 0.069 mm (0.0026 in) or less, install a new piston.

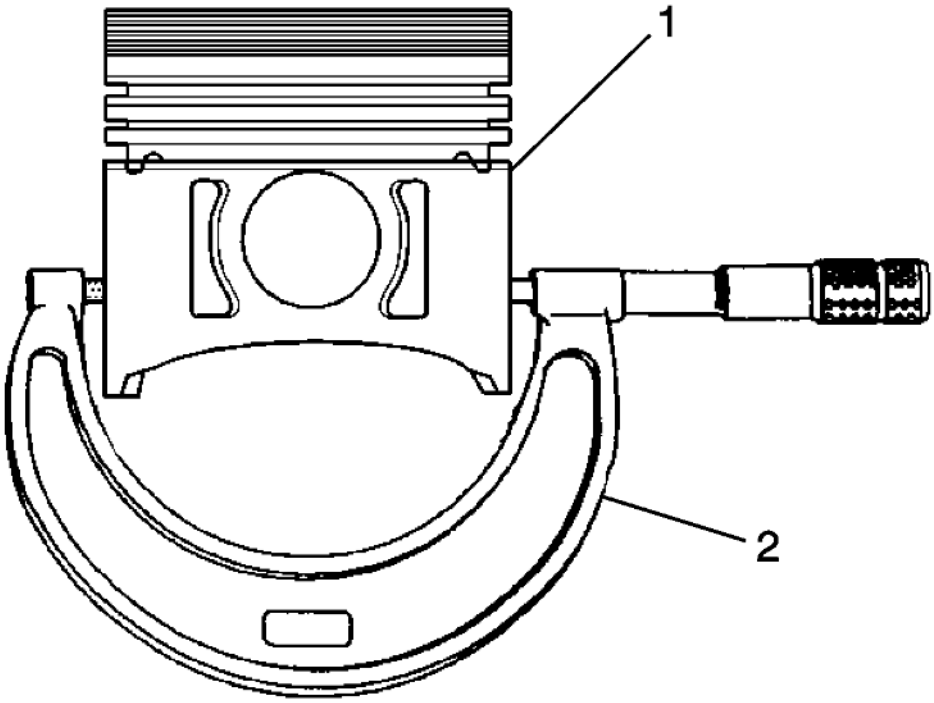

Fig. 101: Measuring Piston Width
Courtesy of GENERAL MOTORS COMPANY

11. Measure piston width using the following procedure:
    1. Using an outside micrometer (2), measure the width of the piston 14.5 mm (0.570 in) above the bottom of the piston skirt at the thrust surface perpendicular to the centerline of the piston pin.
    2. Compare the measurement of the piston to its original cylinder by subtracting the piston width from the cylinder diameter.
    3. The proper clearance specification for the piston is 0.010-0.041 mm (0.0006-0.0016 in).
12. If the clearance obtained through measurement is greater than these specifications and the cylinder bores are within specification, replace the piston (1).

Piston Selection

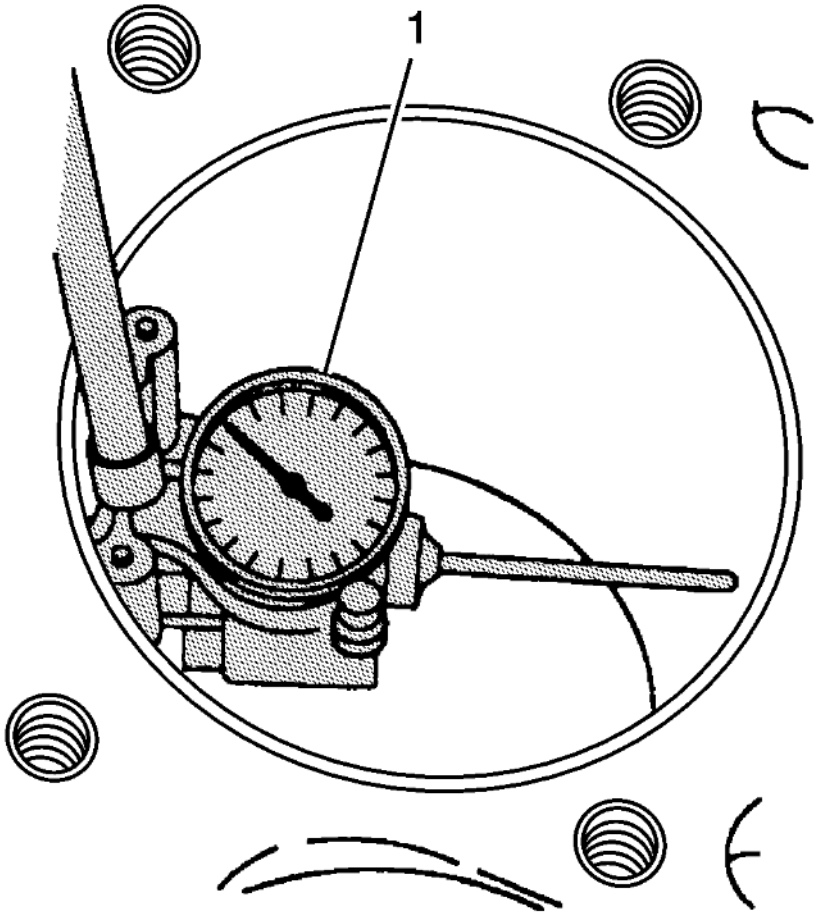

Fig. 102: Measuring Cylinder Bore
Courtesy of GENERAL MOTORS COMPANY

NOTE: **Measurements of all components should be taken with the components at normal room temperature.**

For proper piston fit, the engine block cylinder bores must not have excessive wear or taper.

A used piston and pin set may be reinstalled if, after cleaning and inspection, they are within specifications.

1. Inspect the engine block cylinder bore. Refer to **Engine Block Cleaning and Inspection**.
2. Inspect the piston and the piston pin.
3. Use a bore gauge (1) and measure the cylinder bore diameter. Measure at a point 64 mm (2.5 in) from the top of the cylinder bore.

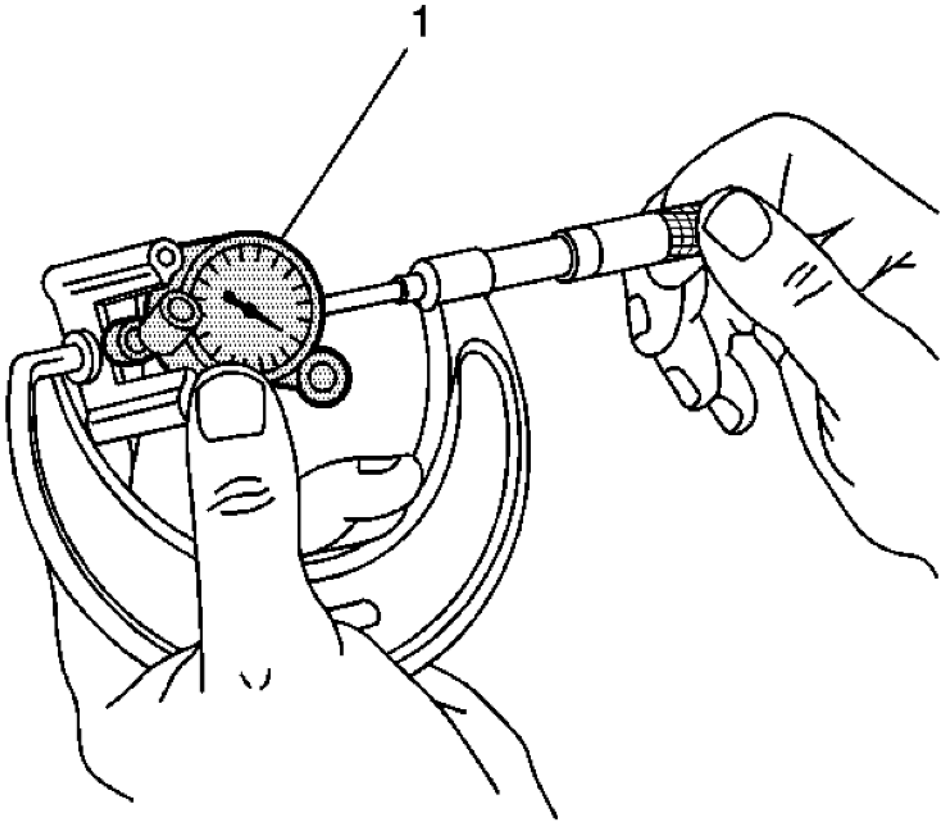

Fig. 103: Measuring Bore Gauge
Courtesy of GENERAL MOTORS COMPANY

4. Measure the bore gauge with a micrometer (1) and record the reading.

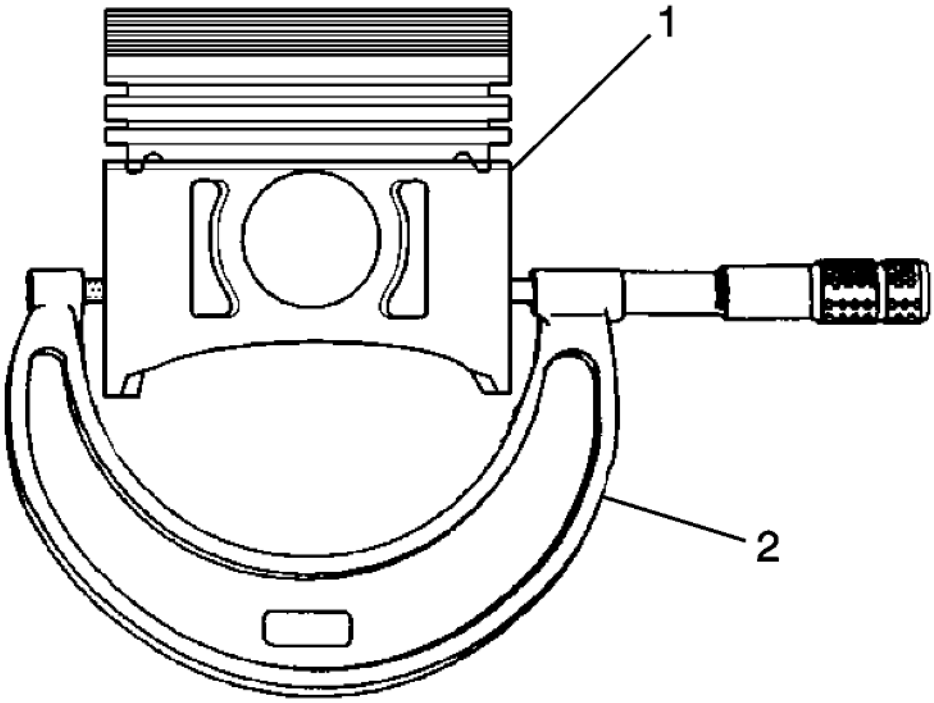

Fig. 104: Measuring Piston Width
Courtesy of GENERAL MOTORS COMPANY

5. With a micrometer (2) or caliper at a right angle to the piston (1), measure the piston 14 mm (0.570 in) from the bottom of the skirt.
6. Subtract the piston diameter from the cylinder bore diameter in order to determine piston-to-bore clearance.
7. For proper piston-to-bore clearance. Refer to **Engine Mechanical Specifications** .
8. If the proper clearance cannot be obtained, select another piston and measure for the clearances.
9. If the proper fit cannot be obtained, hone the cylinder bore or replace the cylinder block.
10. When the piston-to-cylinder bore clearance is within specifications, mark the top of the piston using a permanent marker for installation to the proper cylinder. Refer to **Separating Parts** .

PISTON AND CONNECTING ROD ASSEMBLE

Special Tools

- **EN-46745** Piston Pin Clip Remover/Installer
- **EN-46745-4** Piston Pin Clip Remover/Installer Adapter

For equivalent regional tools, refer to **Special Tools** .

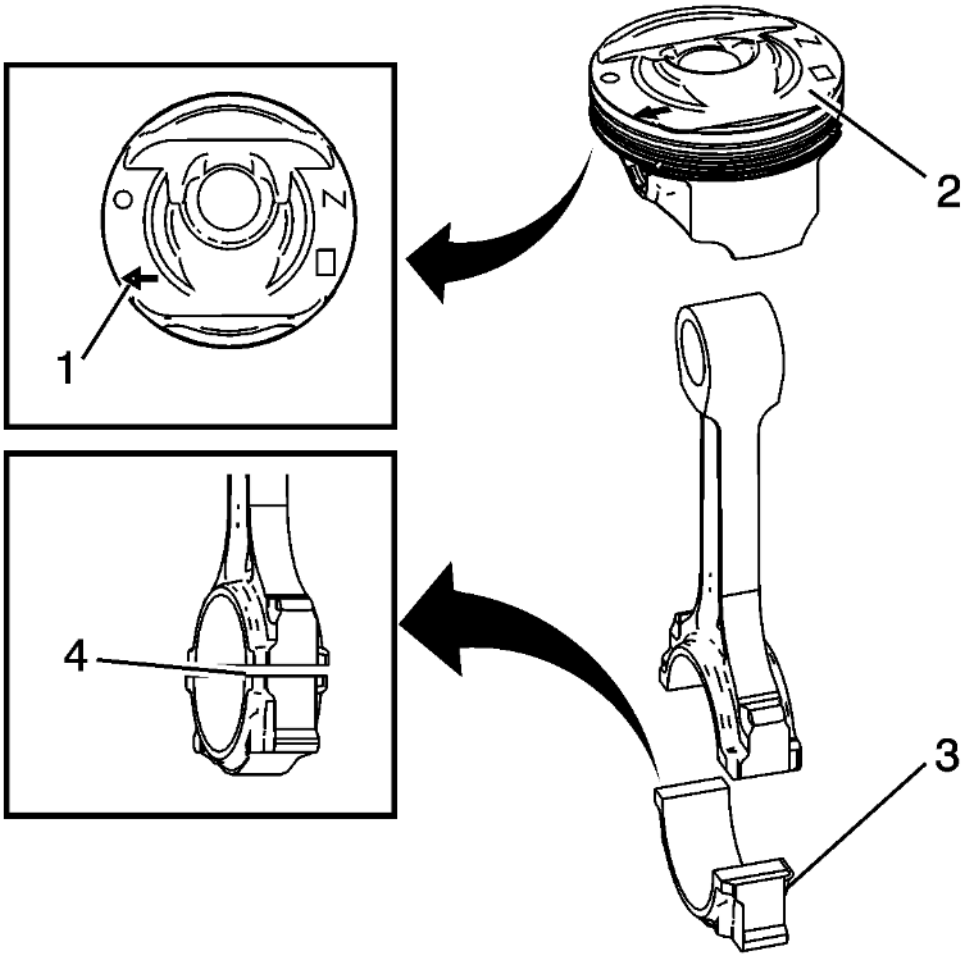

Fig. 105: Connecting Rod And Piston
Courtesy of GENERAL MOTORS COMPANY

NOTE: **Install the piston onto the connecting rod with the arrow on top of the piston oriented to the same side as the cast feature at the split line of the connecting rod.**

1. The arrow (1), on the top of the piston, must go to the front of the block.
2. The feature at the split line (4), located on one side of the connecting rod, must go to the front of the block.
3. Assemble the connecting rod (3) and the piston (2).

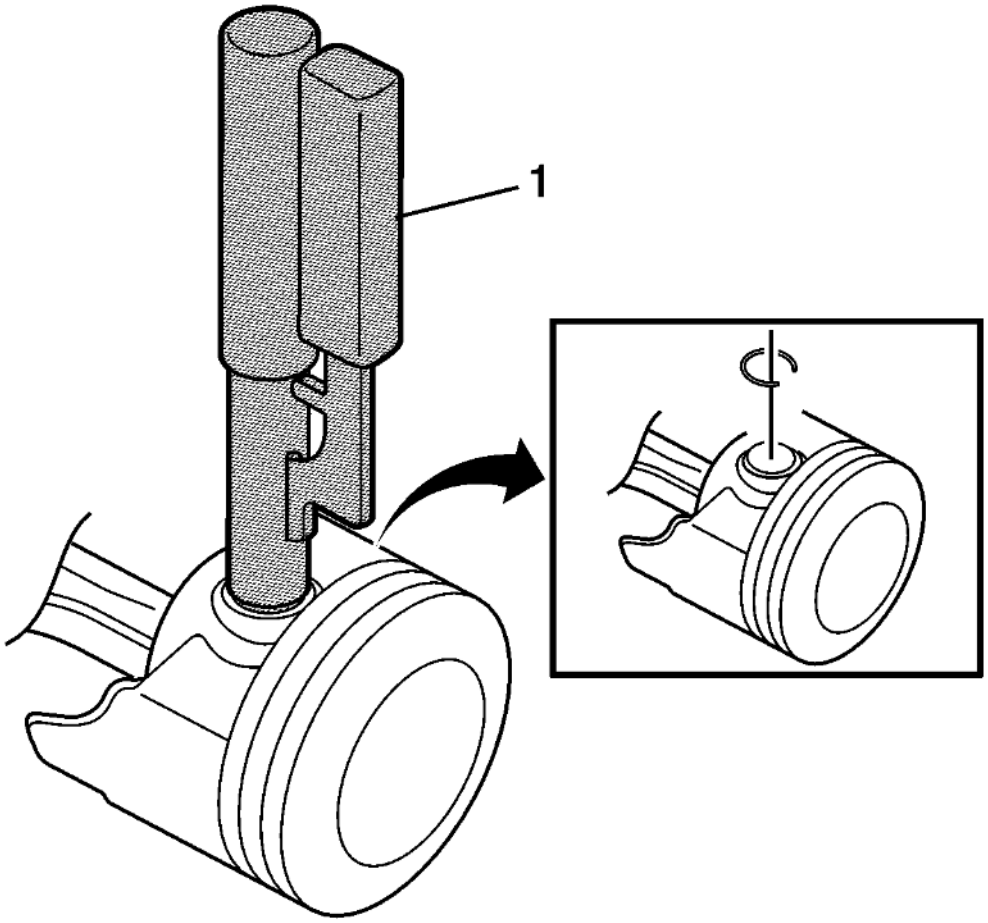

Fig. 106: View of Piston Pin Retainers
Courtesy of GENERAL MOTORS COMPANY

CAUTION: Install the piston pin retainers correctly in the retaining groove during assembly in order to avoid engine damage.

NOTE: Use NEW retainers.

4. Use the following procedure to assemble the piston pin and the retainer:
   1. Coat the piston pin with oil.
   2. Install one side of one NEW piston pin retainer into the retaining groove using **EN-46745** installer and **EN-46745-4** adapter. Rotate the retainer until it is fully seated in the groove.
   3. Install the connecting rod and the piston pin.

      Push the piston pin until it bottoms in the previously installed retainer.

   4. Install the second NEW piston pin retainer, using **EN-46745** installer (1) and **EN-46745-4** adapter.
   5. Ensure that the piston moves freely.

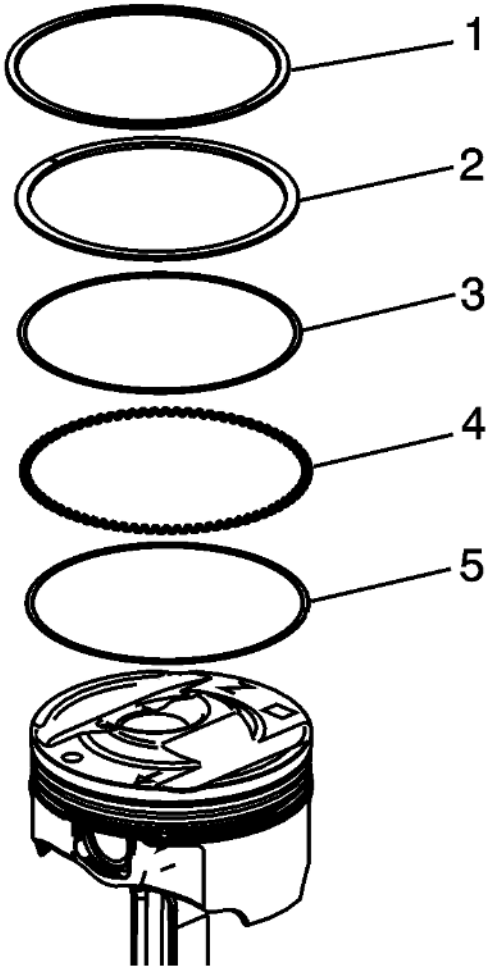

Fig. 107: Piston Rings
Courtesy of GENERAL MOTORS COMPANY

CAUTION: Use a piston ring expander to install the piston rings. The rings may be damaged if expanded more than necessary.

5. Install the following components of the oil control ring assembly:
    1. The piston oil ring rail (5)
    2. The piston oil ring rail spacer (4)
    3. The second piston oil ring rail (3)
6. Install the piston lower compression ring (2). Place the manufacturer's mark facing up.
7. Install the piston upper compression ring (1).

CAMSHAFT ASSEMBLY DISASSEMBLE

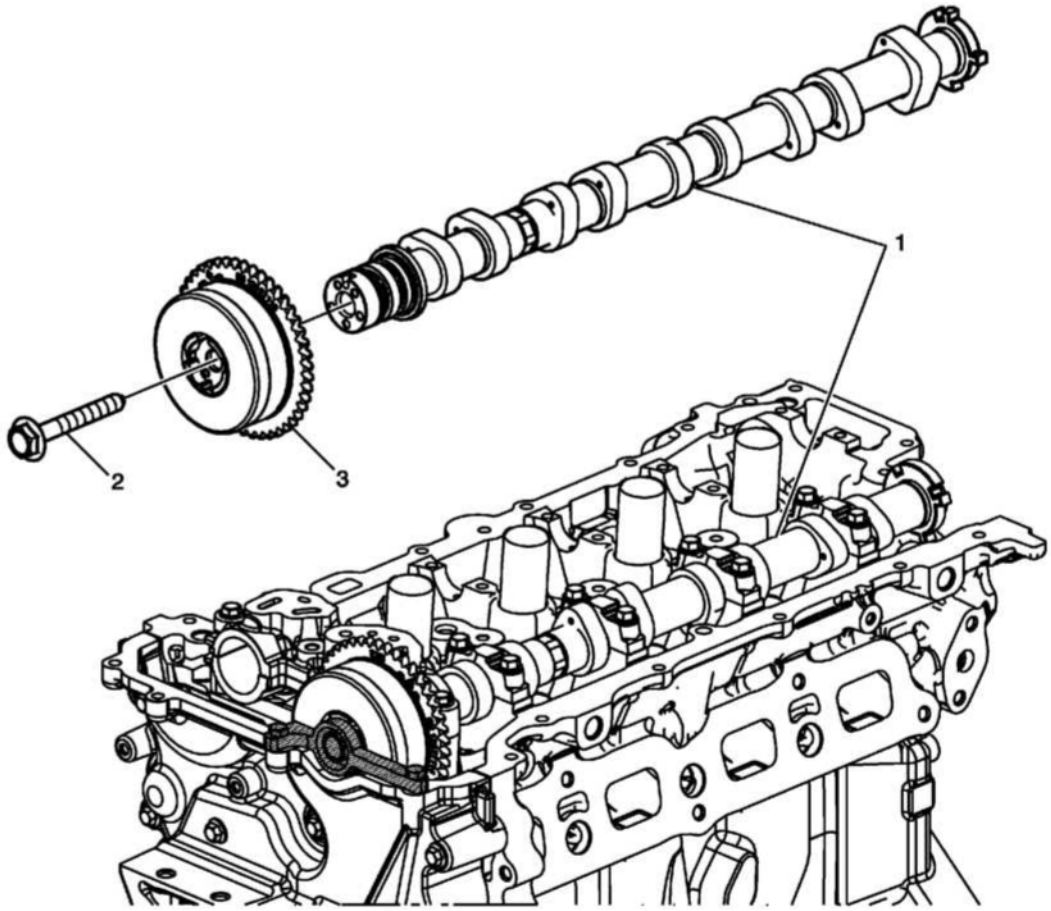

Fig. 108: Camshaft Assembly
Courtesy of GENERAL MOTORS COMPANY

Camshaft Assembly Disassemble

Callout	Component Name
Preliminary Procedures 1. Temporarily install the cylinder head to the engine block, with the engine block securely attached to a mounting device. 2. Temporarily install the engine front cover to the cylinder head, using the upper bolts to hold the cover in position. 3. Install one of the camshafts in the exhaust camshaft position on the cylinder head. 4. Install the camshaft bearing front upper cap and bolts. 5. Install the camshaft bearing caps and bolts. 6. Install **EN-50793** locking tool onto the camshaft actuator and engine front cover. 7. The camshaft actuator bolt can now be loosened and the actuator removed from the camshaft. Repeat preliminary procedure for the remaining camshaft assembly.	
1	Camshaft, Intake and Exhaust
	Camshaft Position Actuator Bolt

2	**NOTE:** **Discard the bolt.** **Special Tools** **EN-50793** Camshaft Actuator Locking Tool For equivalent regional tools, refer to **Special Tools** .
3	Camshaft Position Actuator, Intake and Exhaust

CAMSHAFT CLEANING AND INSPECTION

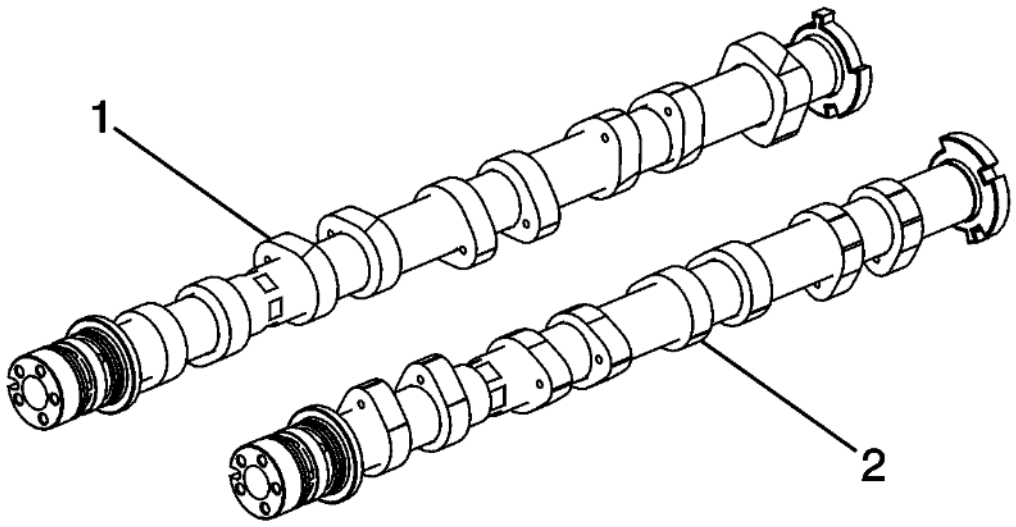

Fig. 109: Camshaft Journals And Lobes
Courtesy of GENERAL MOTORS COMPANY

1. Inspect the camshaft journals and lobes for wear or scoring.
2. Inspect the camshaft sprocket alignment notch for damage.
3. Wash the camshafts (1, 2) in solvent.
4. Oil the camshafts.

CAMSHAFT ASSEMBLY ASSEMBLE

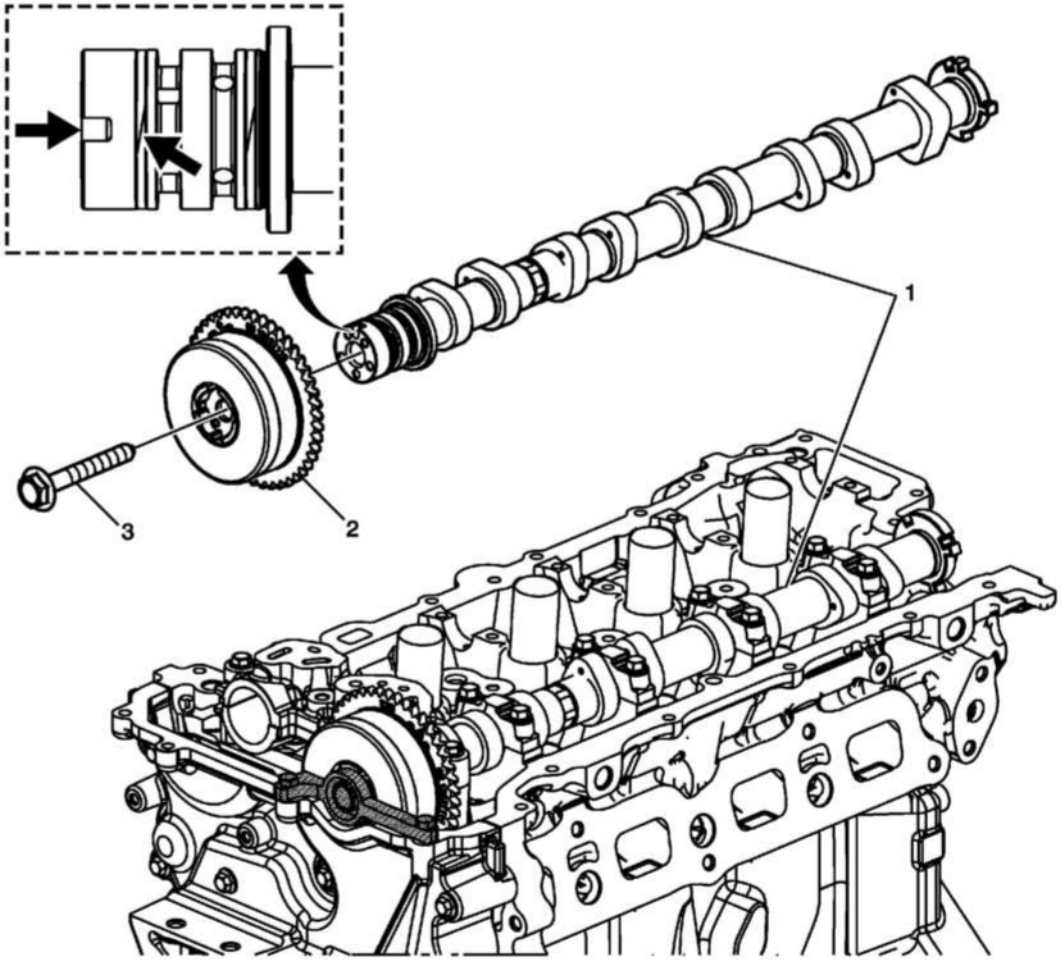

Fig. 110: Camshaft Assembly (LTG)
Courtesy of GENERAL MOTORS COMPANY

Camshaft Assembly Assemble

Callout	Component Name
Preliminary Procedures 1. Temporarily install the cylinder head to the engine block, with the engine block securely attached to a mounting device. 2. Temporarily install the engine front cover to the cylinder head, using the upper bolts to hold the cover in position. 3. Install one of the camshafts in the exhaust camshaft position on the cylinder head. 4. Install the camshaft bearing front upper cap and bolts. 5. Install the camshaft bearing caps and bolts. 6. Install the appropriate actuator for the camshaft currently installed on the cylinder head. 7. Install **EN-50793** locking tool onto the camshaft actuator and engine front cover. 8. The camshaft actuator bolt can now be installed and tightened to final specification. Repeat preliminary procedure for the remaining camshaft assembly.	
	Camshaft, Intake and Exhaust

1	**NOTE:** **Ensure that the oil seal near the front of the camshaft is rotated so that the split line on the oil seal is aligned with the notch, and both the notch and split line are at 12 O'clock when installed on the cylinder head.**
2	Camshaft Position Actuator, Intake and Exhaust **NOTE:** **Upon camshaft assembly, ensure the camshaft actuator pin aligns with the camshaft notch. The actuator, camshaft, and bolt can be assembled by hand and then placed on the cylinder head for final torque.**
3	Camshaft Position Actuator Bolt **CAUTION:** **Refer to Fastener Caution .** **CAUTION:** **This vehicle is equipped with torque-to-yield or single use fasteners. Install a NEW torque-to-yield or single use fastener when installing this component. Failure to replace the torque-to-yield or single use fastener could cause damage to the vehicle or component.** **Tighten** 30 (22 lb ft) plus 100 Degrees. **Special Tools** **EN-50793** Camshaft Actuator Locking Tool For equivalent regional tools, refer to **Special Tools** .

CAMSHAFT TIMING CHAIN, SPROCKET, AND TENSIONER CLEANING AND INSPECTION

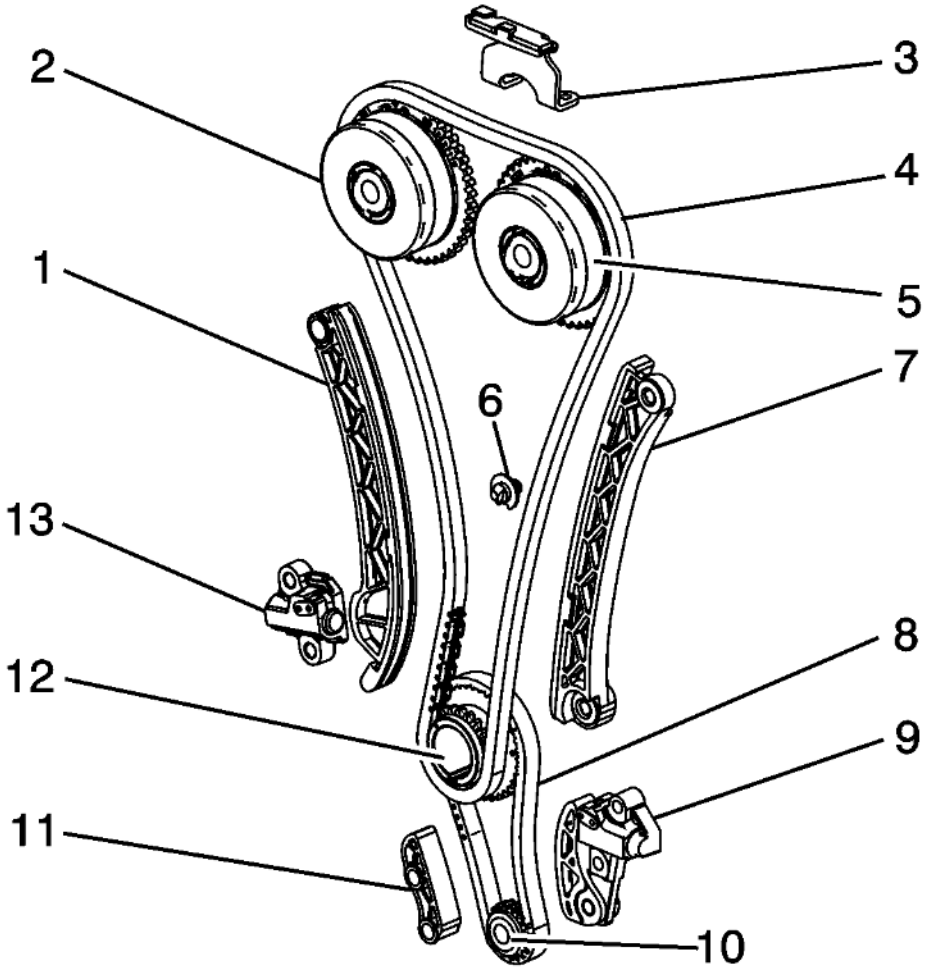

Fig. 111: Camshaft Timing Chain, Sprocket, And Tensioner
Courtesy of GENERAL MOTORS COMPANY

1. Inspect the timing chain guides (3, 7) and timing chain tensioner pivot arm (1) for cracking or wear.
2. Replace the timing chain guides if wear exceeds 1.12 mm (0.045 in) depth on the chain guide surface.
3. Inspect the timing chain tensioner (13) shoe for wear.
4. Replace the timing chain tensioner if shoe wear exceeds 1.12 mm (0.045 in) depth on the chain guide surface.
5. Inspect the timing chain (4) and actuators (2, 5) for wear.
6. Inspect the camshaft actuator faces for signs of movement.
7. Inspect the camshaft actuator teeth and chain for signs of excessive wear, chipping, or seizure of the timing chain links.
8. Inspect the timing chain oil nozzle (6) for collapse or cracks at the bolt boss. Discard and replace the oil nozzle body if it is damaged.
9. Verify oil nozzle oil flow with compressed air.
10. Inspect the timing chain tensioner (13) for scoring or free movement.
11. Inspect the timing chain tensioner washer. If damaged, replace the timing chain tensioner.
12. Inspect the crankshaft sprocket (12) for excessive wear or chipping.
13. Inspect the balancer chain (8) for wear.

14. Inspect the balancer chain guide (11) for wear.
15. Inspect the balancer chain tensioner (9) for wear.
16. Inspect the balancer shaft driven sprocket (10) for wear or chipping.

CYLINDER HEAD DISASSEMBLE

Special Tools

- **EN-50717** Valve Spring Compressor
- **EN-36017** Valve Seal Remover
- **EN-43963** Valve Spring Compressor (off car)

For equivalent regional tools, refer to **Special Tools** .

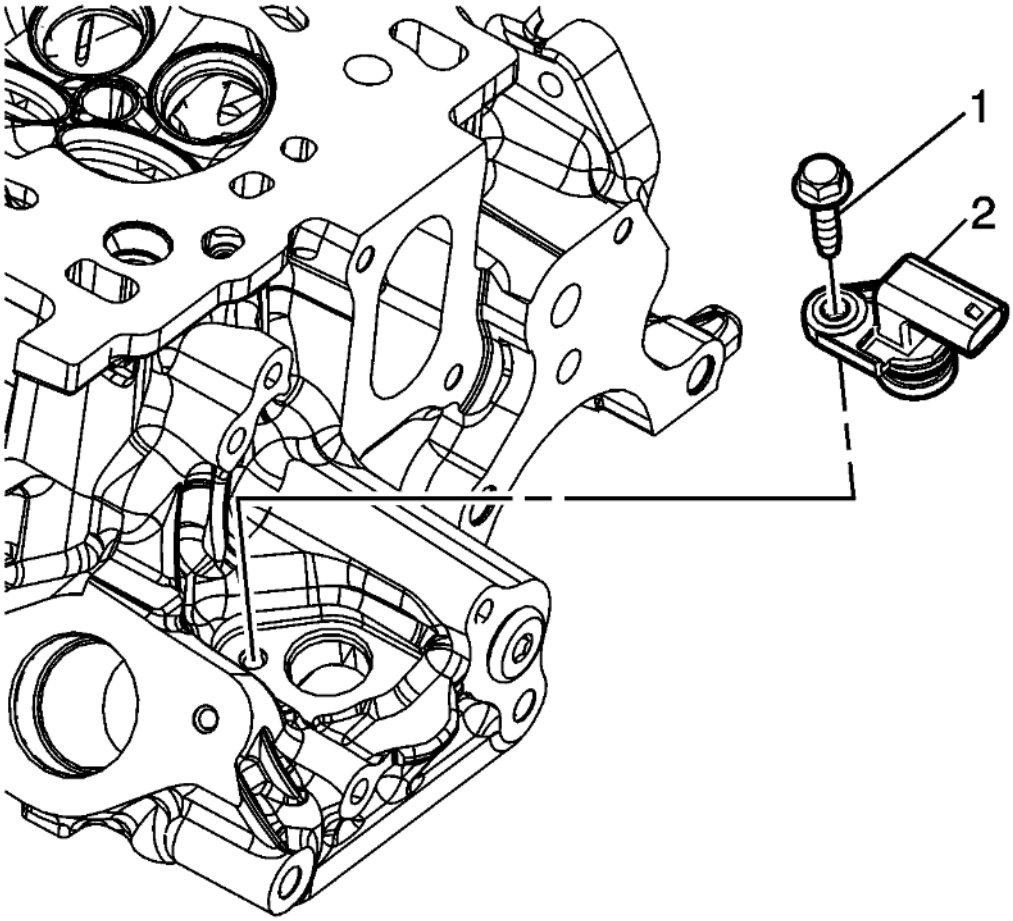

Fig. 112: Intake Camshaft Position Sensor And Bolt
Courtesy of GENERAL MOTORS COMPANY

1. Remove the intake camshaft position sensor (2) and bolt (1).

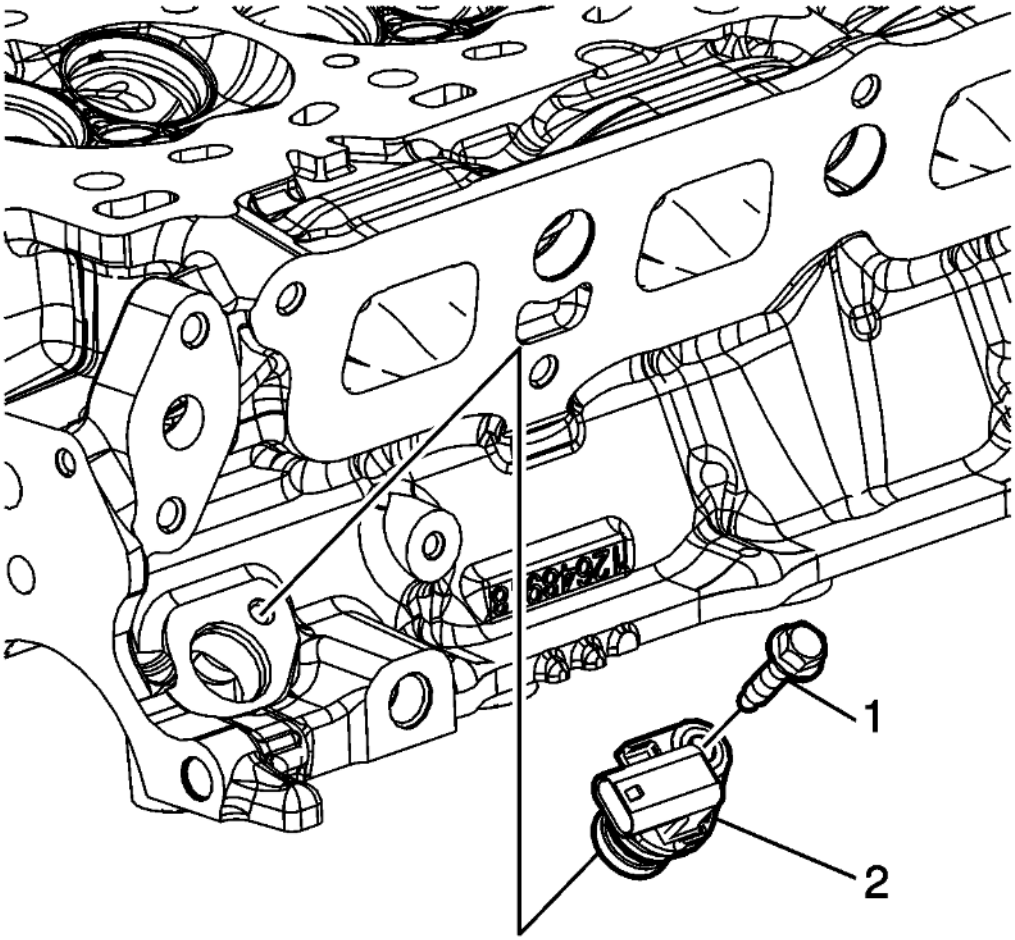

Fig. 113: Exhaust Camshaft Position Sensor And Bolt
Courtesy of GENERAL MOTORS COMPANY

2. Remove the exhaust camshaft position sensor (2) and bolt (1).

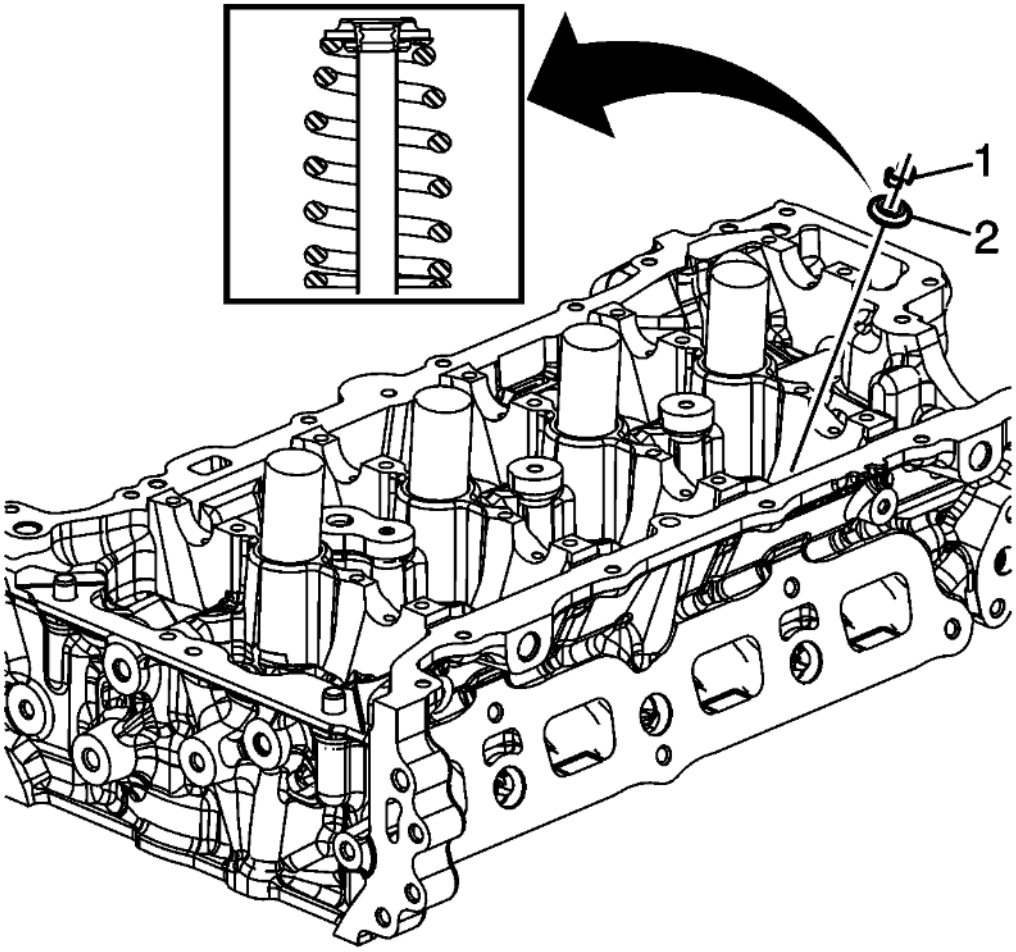

Fig. 114: Valve Keys, Springs, And Retainers
Courtesy of GENERAL MOTORS COMPANY

WARNING: Compressed valve springs have high tension against the valve spring compressor. Valve springs that are not properly compressed by or released from the valve spring compressor can be ejected from the valve spring compressor with intense force. Use care when compressing or releasing the valve spring with the valve spring compressor and when removing or installing the valve stem keys. Failing to use care may cause personal injury.

CAUTION: Do not compress the valve springs to less than 24.0 mm (0.943 in). Contact between the valve spring retainer and the valve stem oil seal can cause potential valve stem oil seal damage.

NOTE: Ensure that the valve train components are kept together and identified in order for proper installation in their original position.

3. Perform the following procedure to remove the valve keys, springs, and retainers:
   1. Using the **EN-50717** fixture and the **EN-43963** compressor adapter , compress the valve spring.

2. Remove the valve keys (1).
3. Slowly release the compression from the valve spring assembly.
4. Remove the retainer (2).

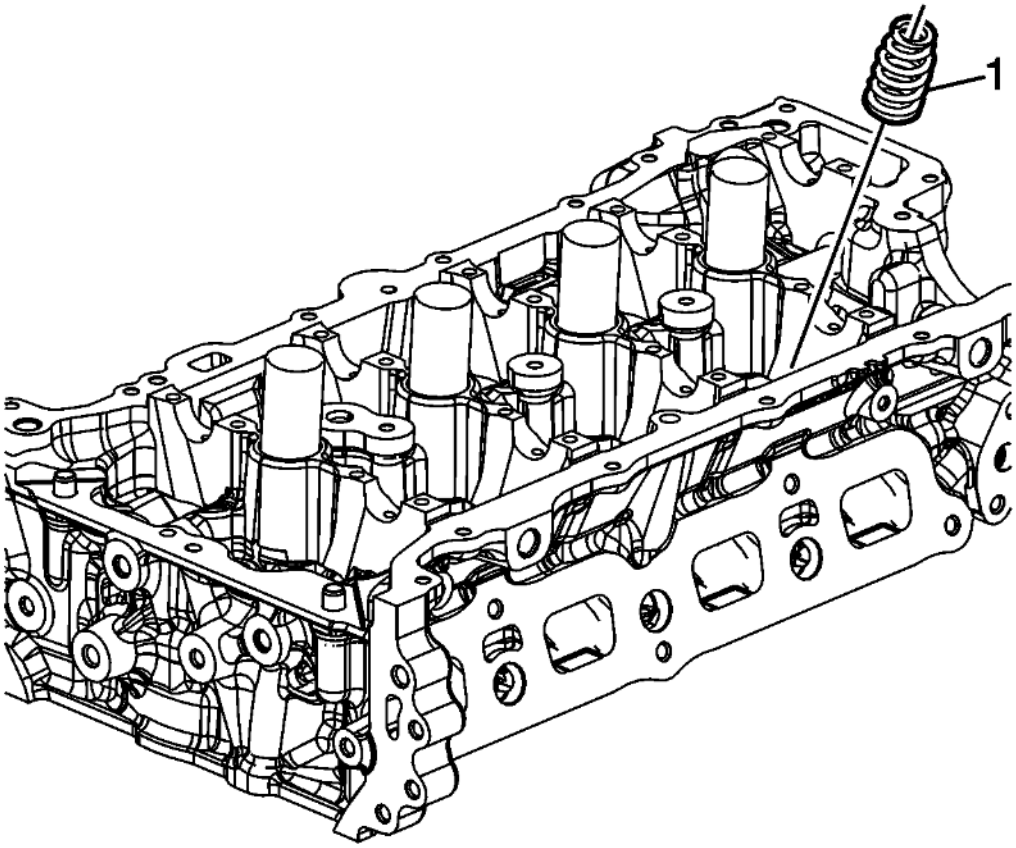

Fig. 115: Springs
Courtesy of GENERAL MOTORS COMPANY

4. Remove the springs (1).

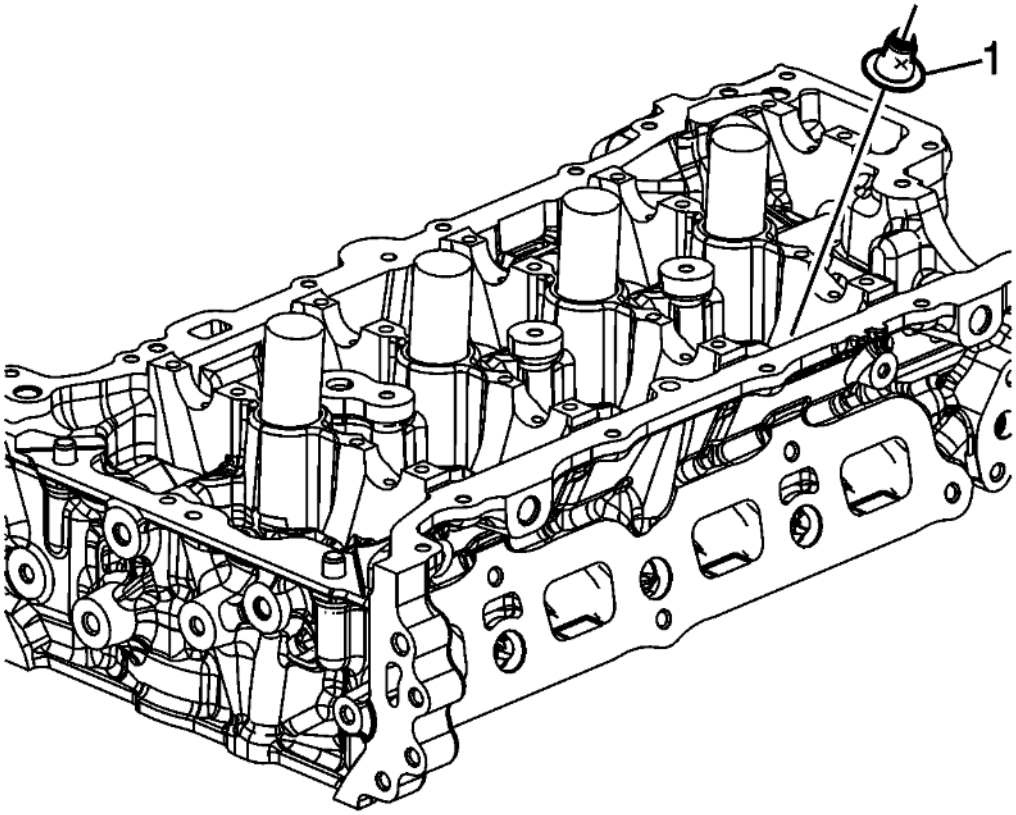

Fig. 116: Valve Seals
Courtesy of GENERAL MOTORS COMPANY

CAUTION: Do not damage the valve guide. Remove any burrs that have formed at the key groove by chamfering the valve stem with an oil stone or a file.

5. Using **EN-36017** remover , remove the valve seals (1). Discard the seals, do not reuse.

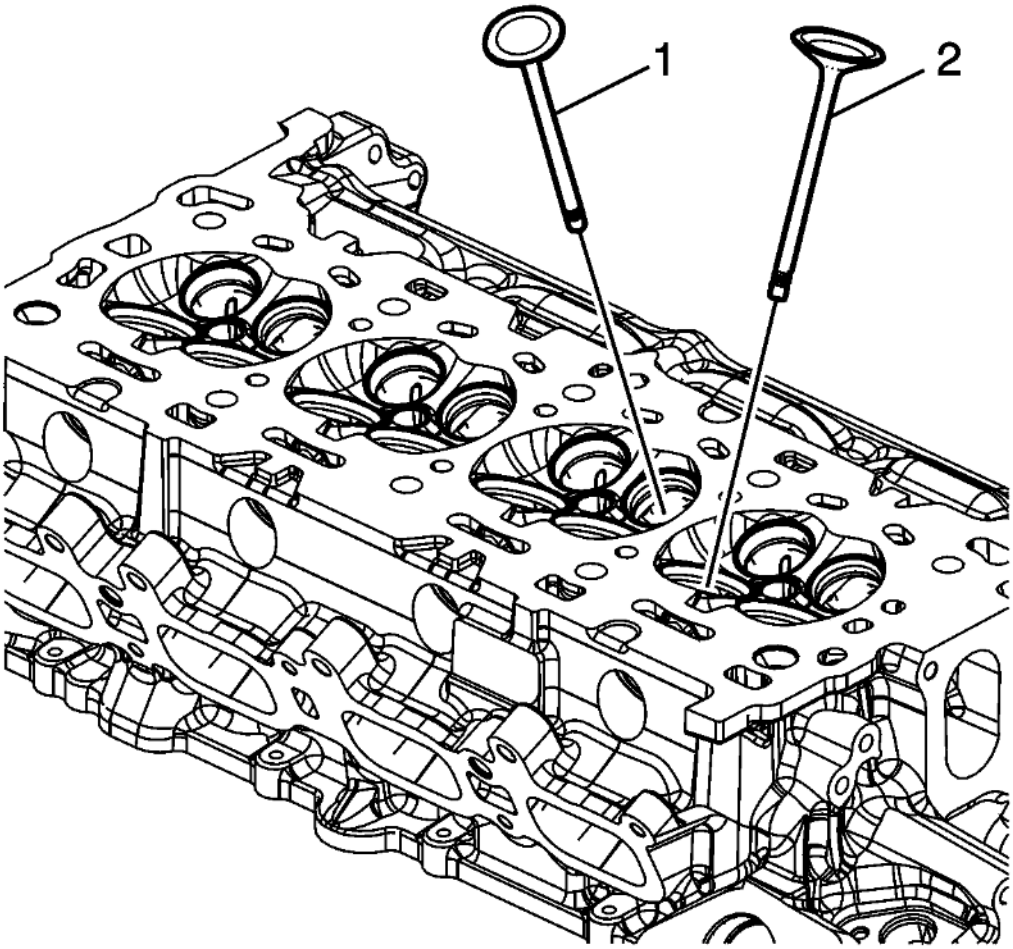

Fig. 117: Valves
Courtesy of GENERAL MOTORS COMPANY

6. Remove the valves (1, 2).

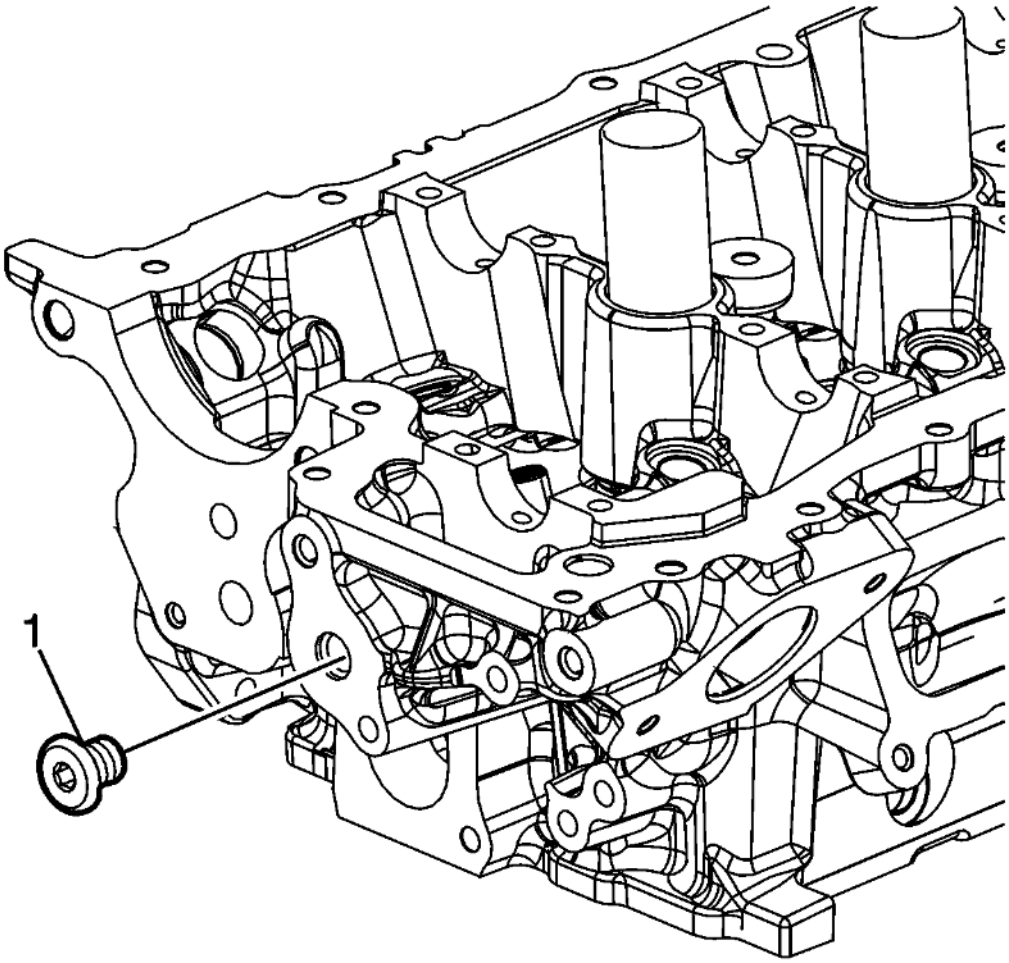

Fig. 118: Cylinder Head Plug
Courtesy of GENERAL MOTORS COMPANY

7. Remove the cylinder head plug (1).

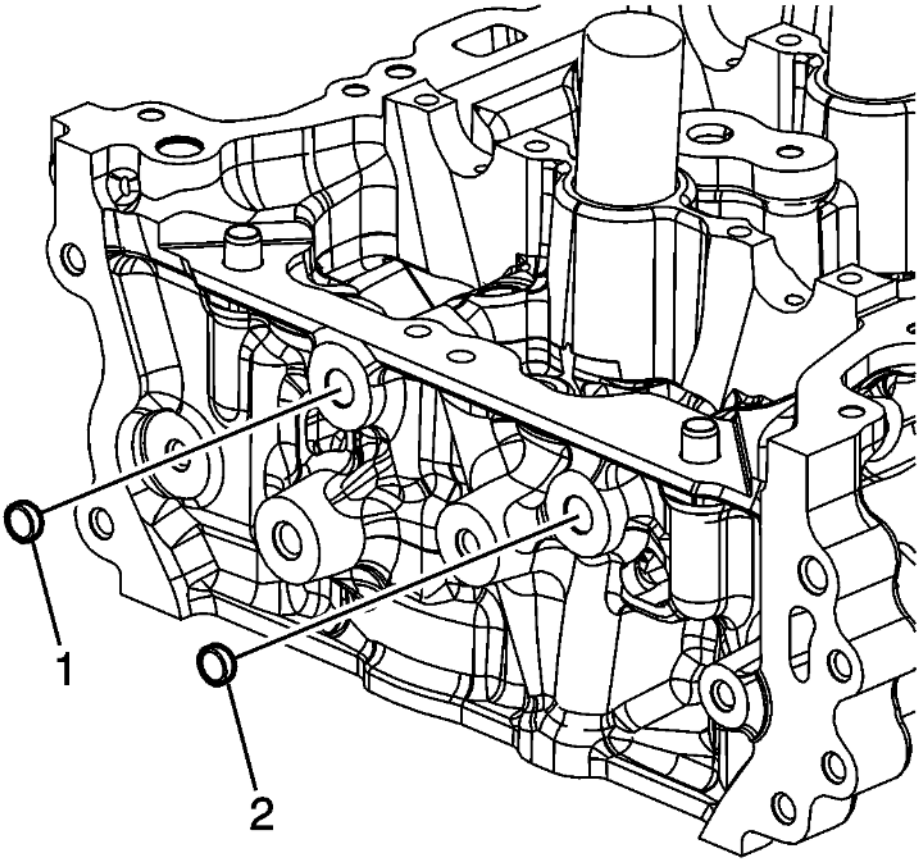

Fig. 119: Cylinder Head Plugs
Courtesy of GENERAL MOTORS COMPANY

8. Remove the cylinder head plugs (1, 2).

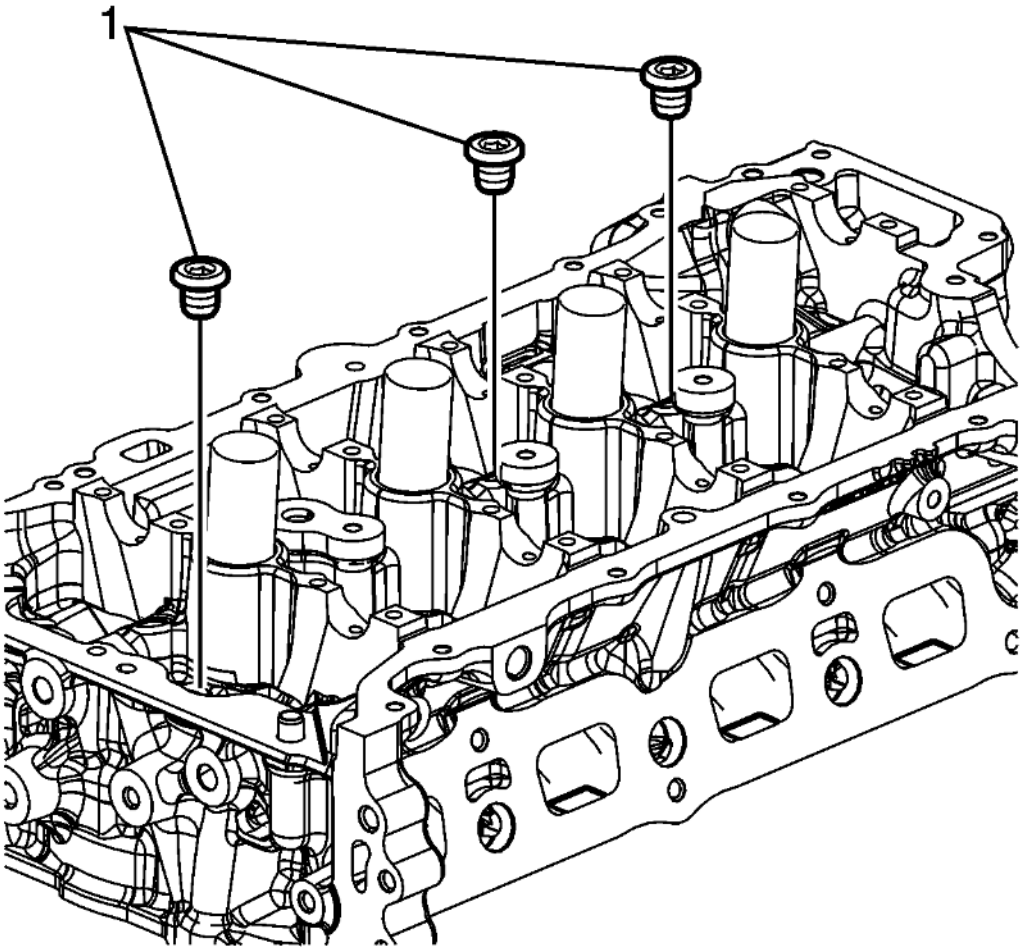

Fig. 120: Cylinder Head Plugs
Courtesy of GENERAL MOTORS COMPANY

9. Remove the cylinder head plugs (1).

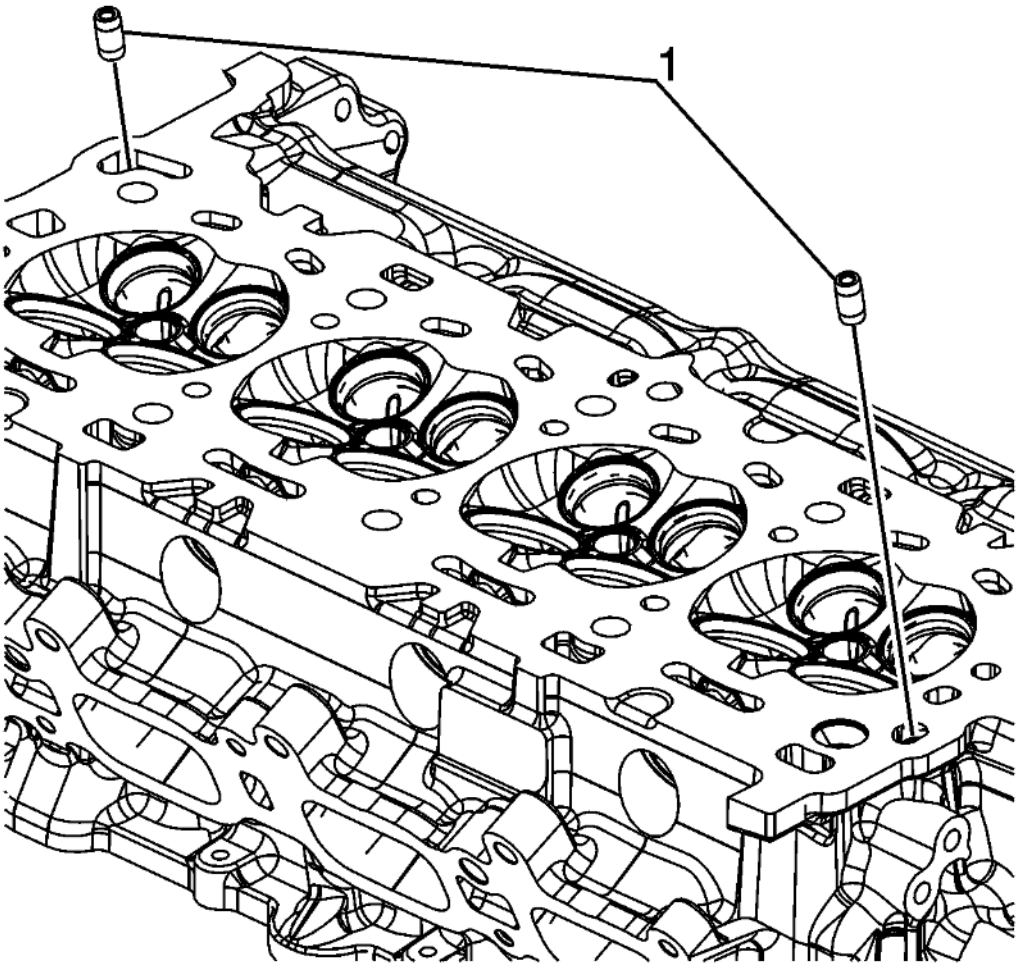

Fig. 121: Cylinder Head Oil Gallery Restrictors
Courtesy of GENERAL MOTORS COMPANY

10. Remove the cylinder head oil gallery restrictors (1).

CYLINDER HEAD CLEANING AND INSPECTION

Special Tools

- **EN 22738-B** Valve Spring Tester
- **EN-28410** Gasket Remover
- **EN-39358** Spark Plug Socket
- **GE 7872** Magnetic Base Dial Indicator

For equivalent regional tools, refer to **Special Tools** .

Valve Cleaning and Inspection

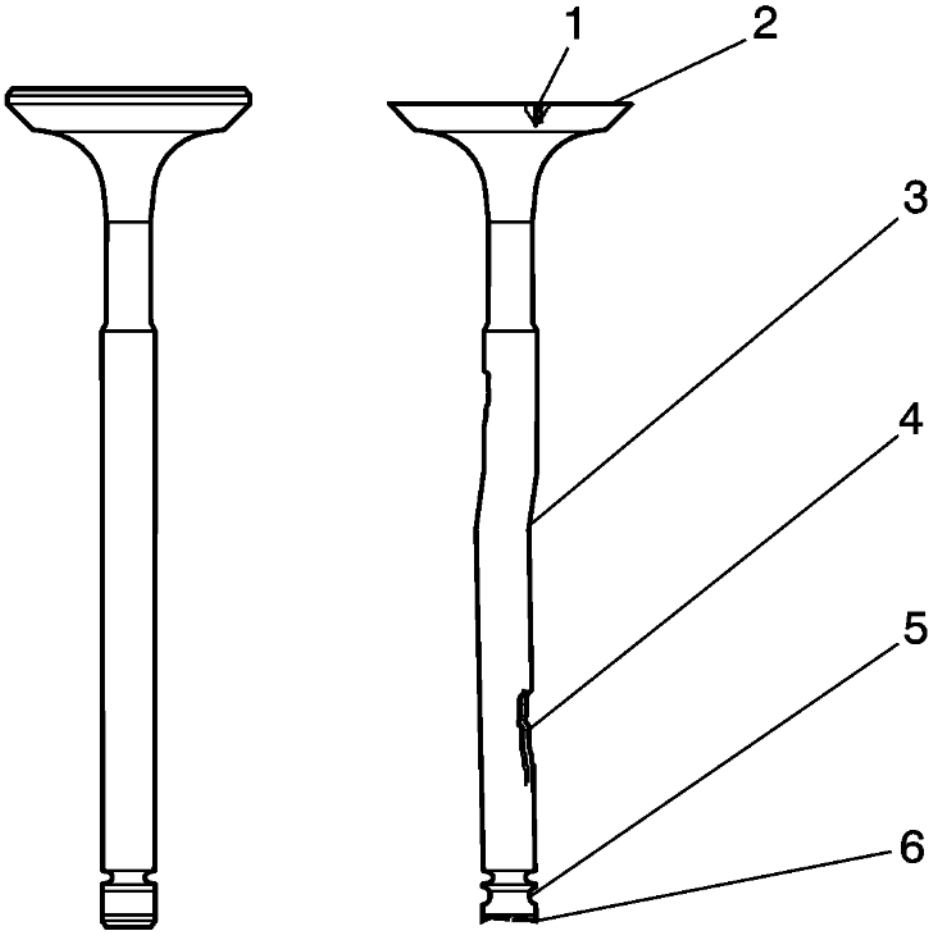

Fig. 122: Valve Inspection Areas
Courtesy of GENERAL MOTORS COMPANY

NOTE: **Do not use a wire brush on any part of the valve stem.**

NOTE: **Do not grind or condition the intake valve. If the intake valve is out of specification, replace the valve.**

1. Clean the valves of carbon, oil and varnish. Use a soft bristle wire brush to clean any carbon build-up from the valve head. Varnish can be removed by soaking in Parts Immersion Solvent. Refer to **Adhesives, Fluids, Lubricants, and Sealers** .
2. Clean the valve guides.
3. Inspect the valve stem for pitting or wear (4).
4. Inspect the valve key groove for chipping or wear (5). Replace the valve if chipped or worn.
5. Inspect the valve face for burning or cracking (1). If pieces are broken off, inspect the corresponding piston and cylinder head area for damage.
6. Inspect the valve stem for burrs and scratches. Burrs and minor scratches may be removed with an oil stone.
7. Inspect the valve stem for straightness (3) and the valve head for bending or distortion using V blocks. Bent or distorted valves must be replaced.

8. Clean the deposits from the valve face. Inspect the valve face for grooving.
9. Replace the valve if the face is grooved. Valve faces cannot be machined. If worn, or damaged, the valves must be replaced.
10. Replace the valve if the valve head O.D. and chamfer (2) is worn or out of specification. Refer to **Valve and Seat Grinding**.
11. The valves may be lightly lapped to the valve seats.
12. Replace the valve if the valve tip (6) is worn.
13. If no apparent wear, pitting, grooving, or distortion is present, perform the valve measurement and reconditioning procedure to verify valve specification. Refer to **Valve and Seat Grinding**.

Valve Guide Measurement

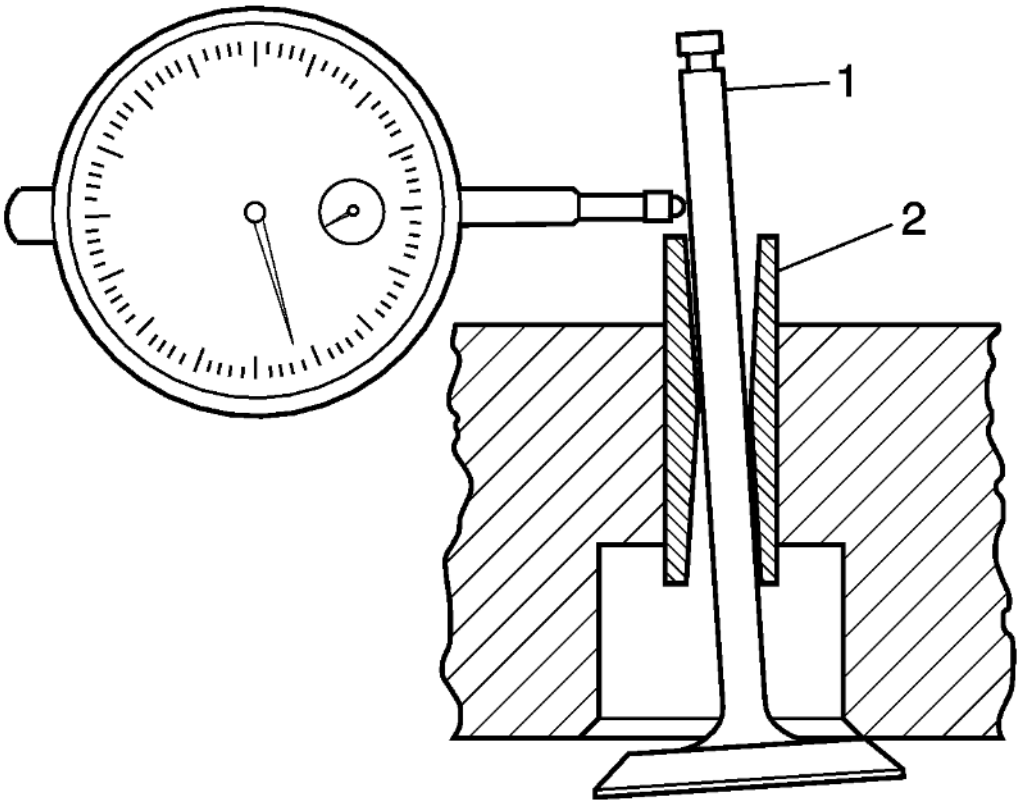

Fig. 123: Inspecting For Excessive Valve Stem To Guide Clearance
Courtesy of GENERAL MOTORS COMPANY

1. Measure the valve stem (1)-to-guide (2) clearance. Excessive valve stem-to-guide clearance may cause an excessive oil consumption and may also cause a valve to break. Insufficient clearance will result in noisy and sticky functioning of the valve and will disturb the engine assembly smoothness.
2. Clamp the **GE 7872** dial indicator to the cylinder head at the camshaft cover rail.
3. Locate the dial indicator so that the movement of the valve stem from side to side, crossways to the

cylinder head, will cause a direct movement of the indicator stem. The dial indicator stem must contact the side of the valve stem just above the valve guide.

4. Drop the valve head about 0.064 mm (0.0025 in) off the valve seat.
5. Use light pressure when moving the valve stem from side to side in order to obtain a clearance reading. Refer to **Engine Mechanical Specifications** for proper clearance.

NOTE: Valve guide wear at the bottom 10 mm (0.390 in) of the valve guide is not significant to normal operation.

6. If the clearance for the valve is greater than specifications and a new standard diameter valve stem will not bring the clearance within specifications, replace the cylinder head.

Valve Spring Cleaning and Inspection

1. Clean the valve springs in solvent.

WARNING: Refer to Safety Glasses Warning .

2. Dry the valve springs with compressed air.
3. Inspect the valve springs for broken coils or coil ends.

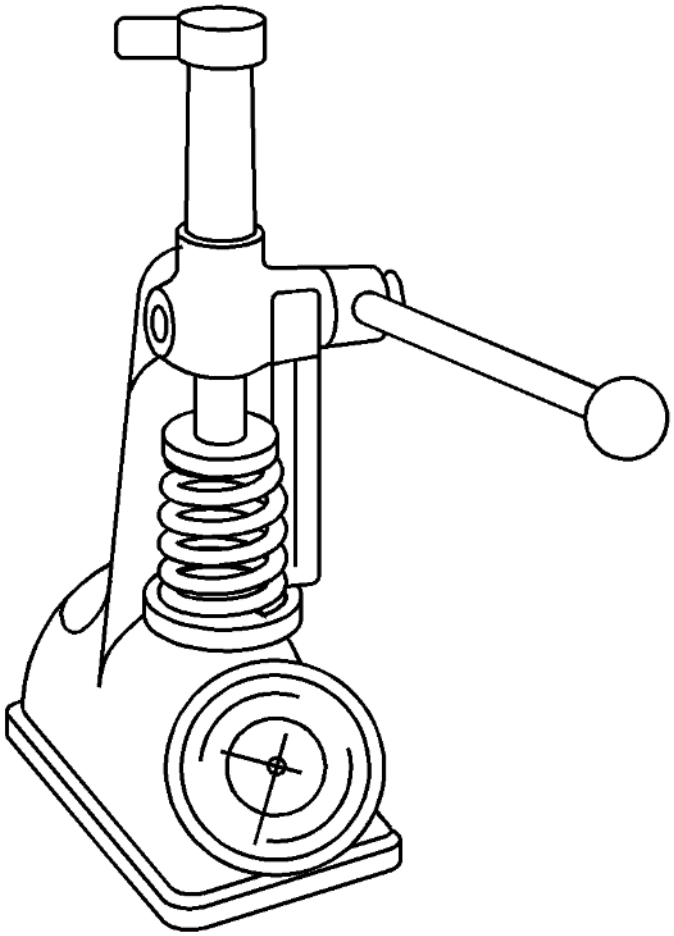

Fig. 124: Measuring Valve Spring Tension
Courtesy of GENERAL MOTORS COMPANY

4. Measure the valve spring tension using the **EN 22738-B** tester. Refer to **Engine Mechanical Specifications**
5. If low valve spring load is found, replace the valve springs. DO NOT use shims to increase spring load. The use of shims can cause the valve spring to bottom out before the camshaft lobe is at peak lift.

Valve Rocker Arm Cleaning and Inspection

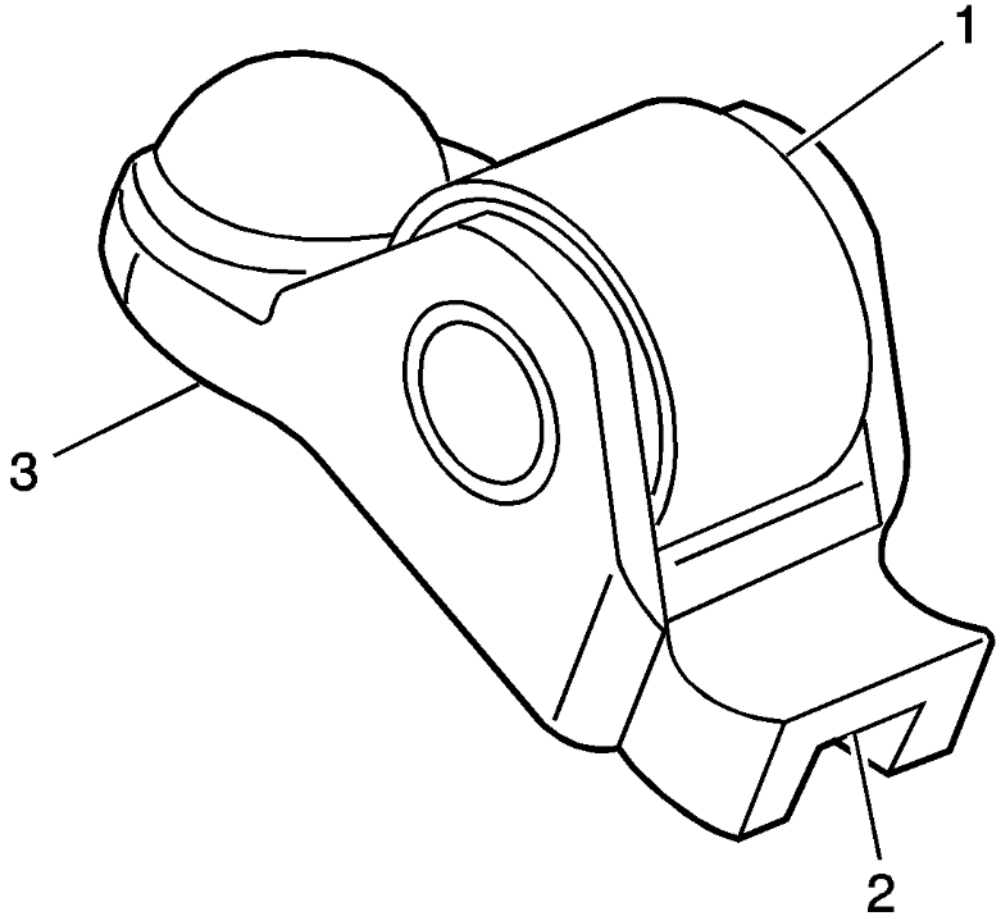

Fig. 125: Inspecting Valve Rocker Arms
Courtesy of GENERAL MOTORS COMPANY

1. Inspect the camshaft follower roller (1) for the following:
   - Flat spots
   - Excessive scoring and pitting
   - Ensure the roller spins freely
2. Inspect the camshaft follower valve tip area (2).
3. Inspect the camshaft follower stationary hydraulic lash adjuster (SHLA) pivot area (3).
4. Replace the camshaft follower or followers as necessary.

Cylinder Head and Gasket Surface Cleaning and Inspection

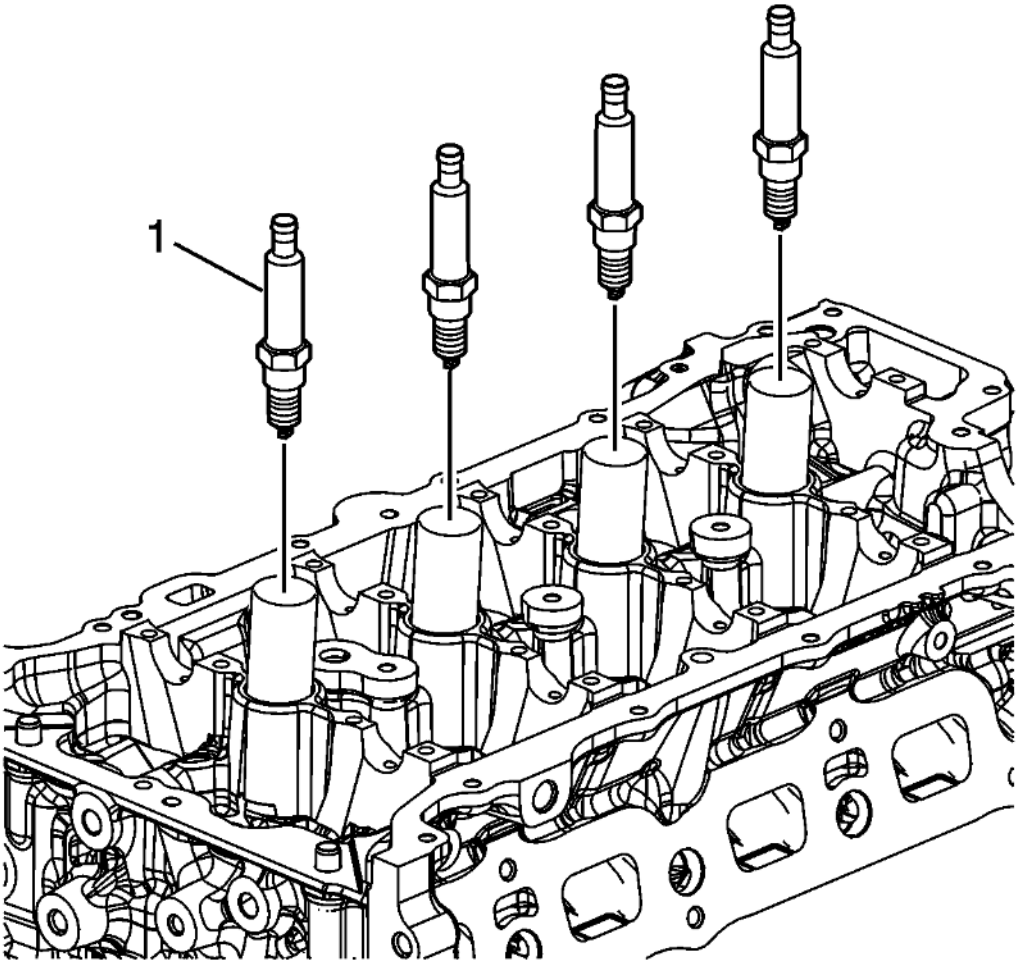

Fig. 126: Spark Plugs
Courtesy of GENERAL MOTORS COMPANY

1. Remove the spark plugs (1) using **EN-39358** socket.
2. Inspect the cylinder head gasket and mating surfaces for leaks, corrosion and blow-by. If the gasket has failed, use the following faults to determine the cause:
    1. Improper installation
    2. Loose or warped cylinder head
    3. Missing, off location or not fully seated dowel pins
    4. Corrosion in the seal area around the coolant passages
    5. Chips or debris in the cylinder head bolt holes
    6. Bolt holes in the cylinder block not drilled or tapped deep enough

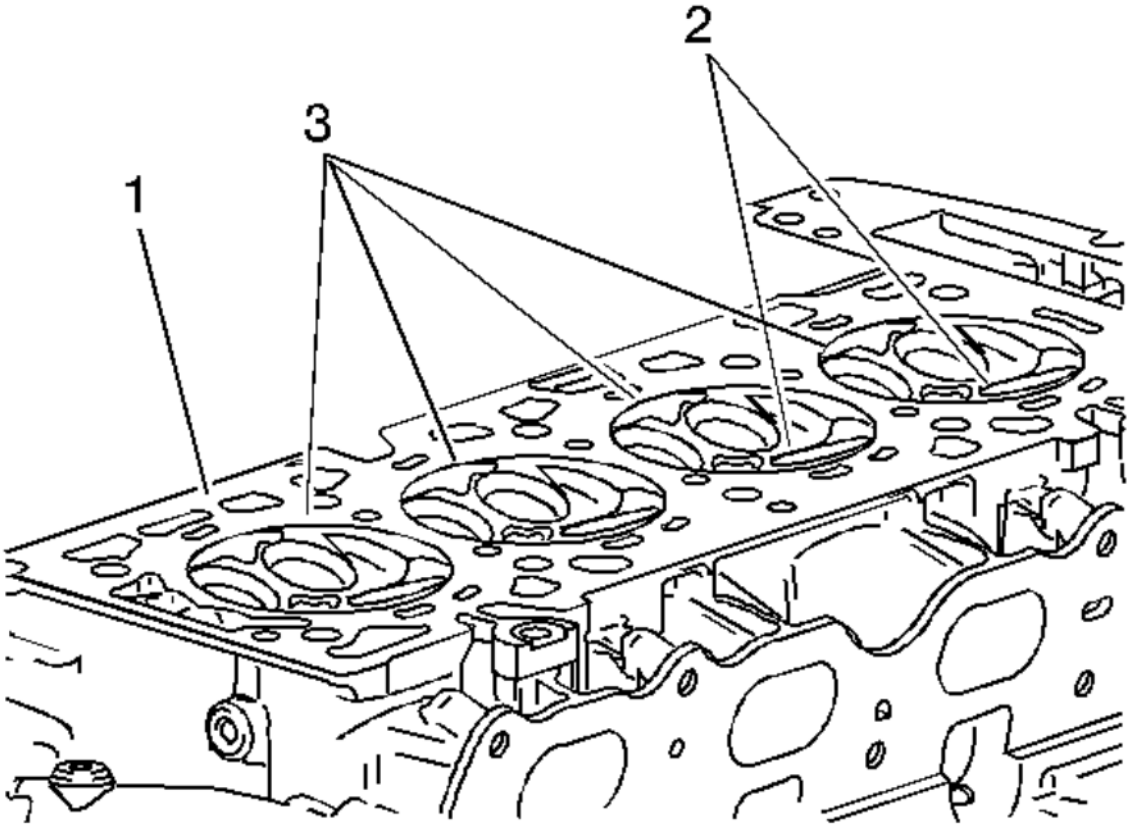

Fig. 127: Locating Combustion Chambers
Courtesy of GENERAL MOTORS COMPANY

3. Inspect the cylinder head gasket surface.
   - Cylinder head may be reused if corrosion is found only outside a 4 mm (0.375 in) band around each combustion chamber (1).
   - Replace the cylinder head if the area between the valve seats is cracked (2).
   - Replace the cylinder head if corrosion has been found inside a 4 mm (0.375 in) band around each combustion chamber (3).

NOTE: Do not use a wire brush on any gasket sealing surface.

4. Remove the sealant from the rear cap mating surface with **EN-28410** remover. Care must be used to avoid gouging or scraping the sealing surfaces.
5. Clean the cylinder head. Remove all varnish, soot and carbon to the bare metal.
6. Clean the valve guides.
7. Clean the threaded holes. Use a nylon bristle brush.

8. Clean the remains of the sealer from the plug holes.
9. Inspect the cylinder head for cracks. Check between the valve seats and in the exhaust ports.

NOTE: Do not attempt to weld the cylinder head, replace it.

10. Inspect the cylinder head deck for corrosion, sand inclusions and blow holes.

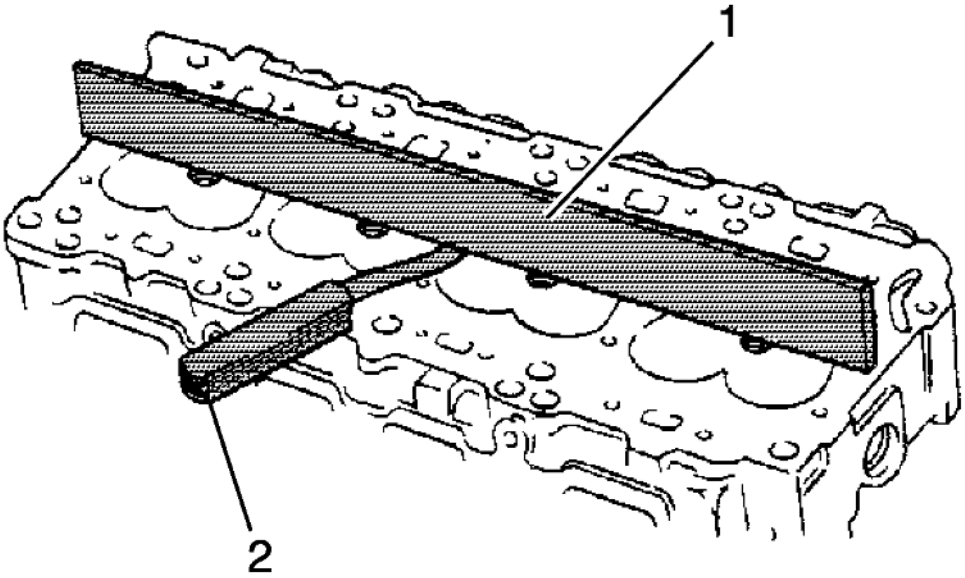

Fig. 128: Checking Cylinder Head Deck Surface For Flatness
Courtesy of GENERAL MOTORS COMPANY

11. Using a straight edge (1) and feeler gauge (2), inspect the cylinder head deck surface for flatness. Refer to **Engine Mechanical Specifications** . If the cylinder head is out of specification, replace the cylinder head. Do not machine the cylinder head.
12. Inspect all the threaded holes for damage. Threads may be reconditioned with thread inserts.
13. Inspect the sealing surfaces.

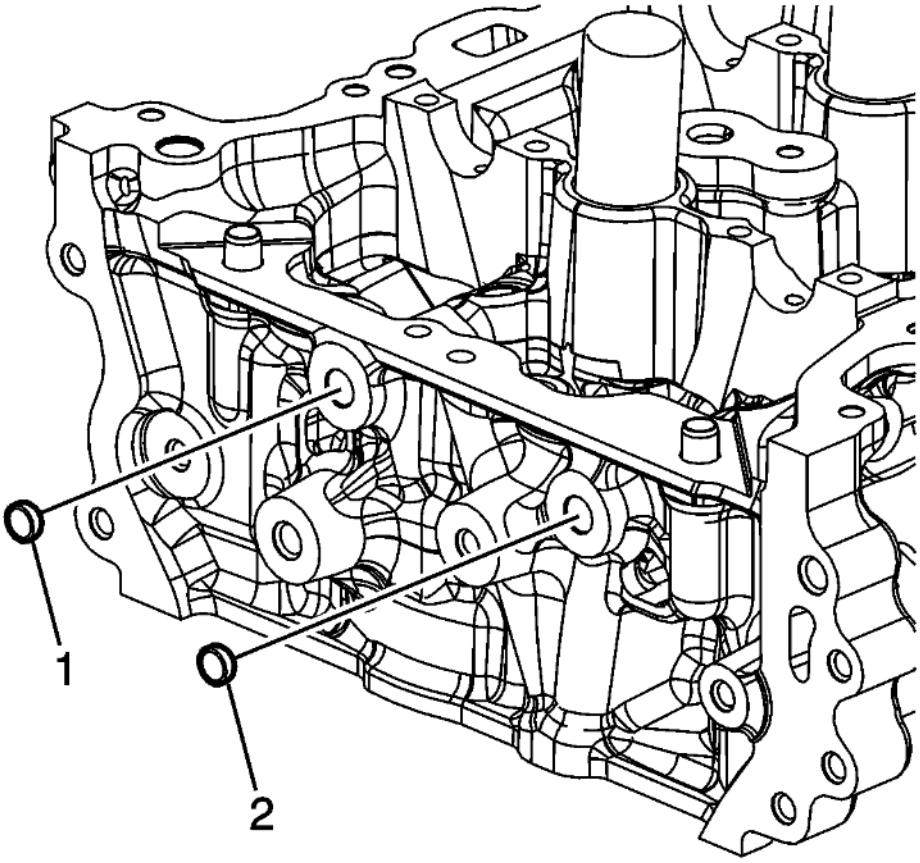

Fig. 129: Cylinder Head Plugs
Courtesy of GENERAL MOTORS COMPANY

14. Inspect the cylinder head plugs (1, 2) and verify the oil orifice is clear and free of debris.

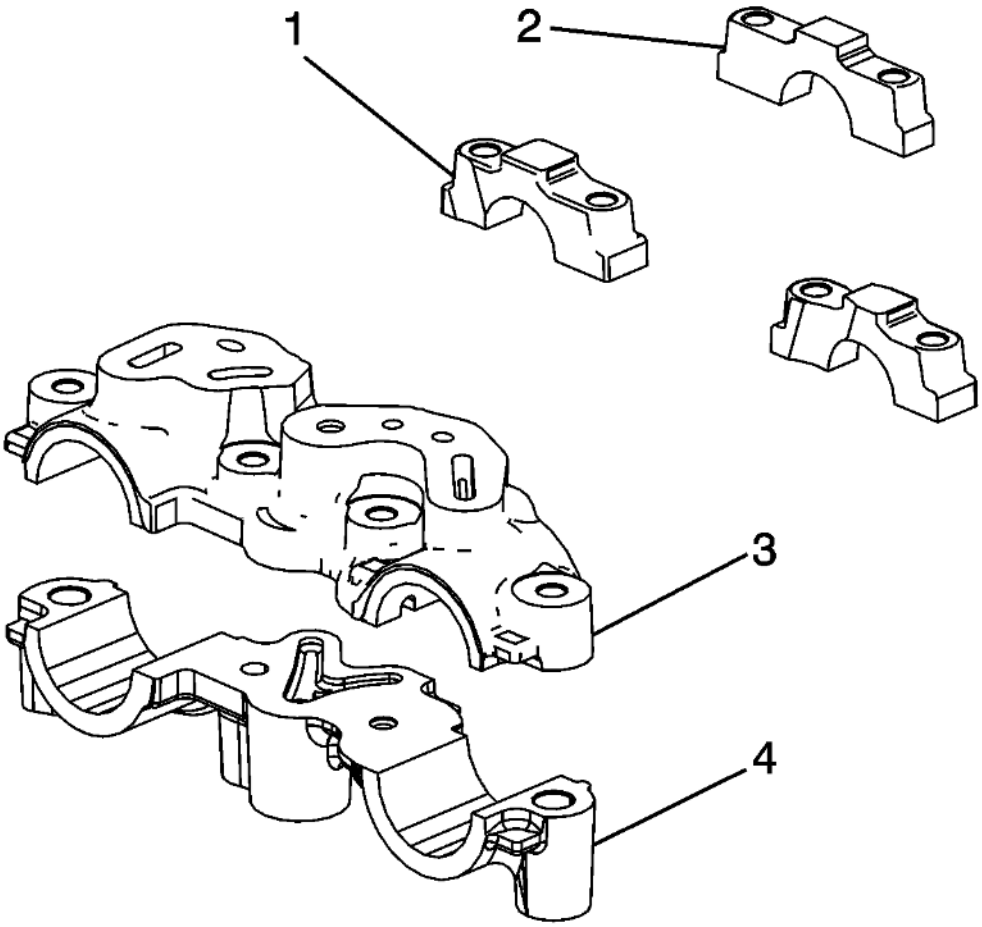

Fig. 130: Intake Camshaft Bearing Rear Cap
Courtesy of GENERAL MOTORS COMPANY

15. Inspect the intake camshaft bearing rear cap (2) for damage.
16. Inspect the camshaft bearing caps (1) for damage.
17. Inspect the camshaft front upper and lower bearing caps (3, 4) for damage.

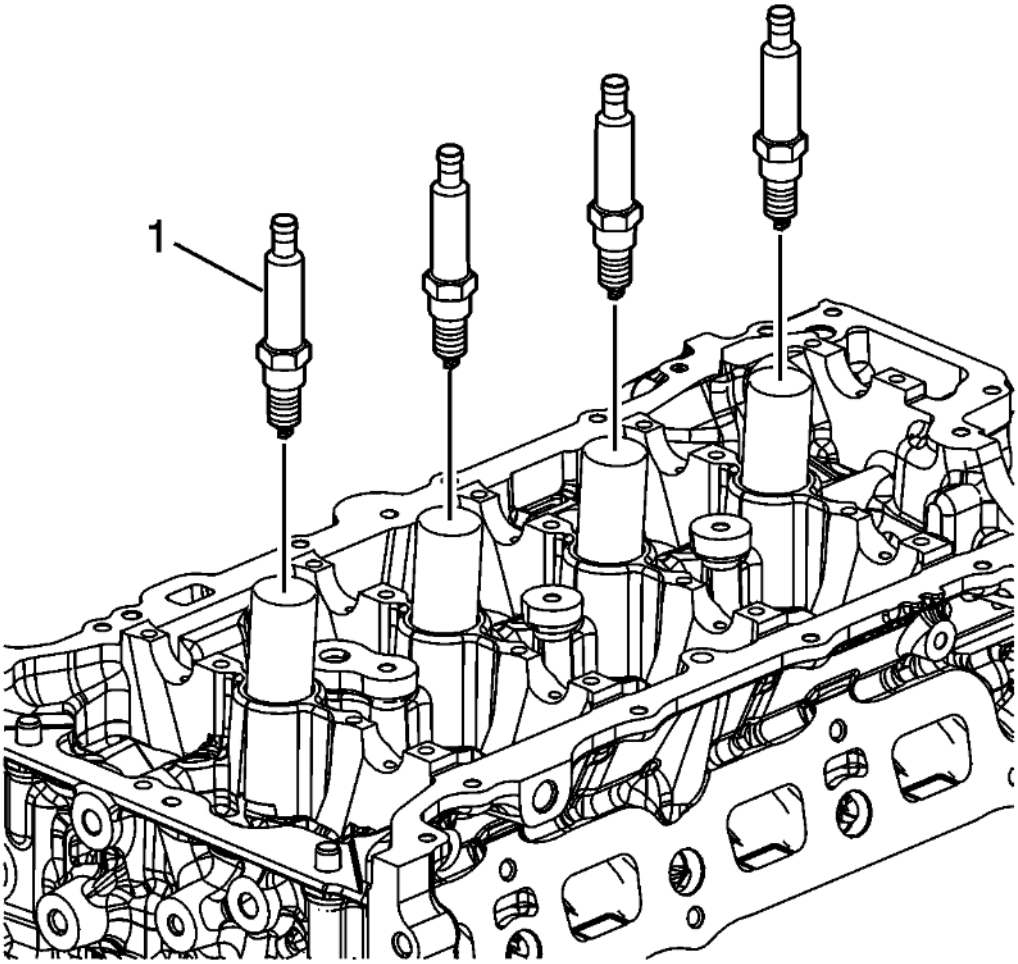

Fig. 131: Spark Plugs
Courtesy of GENERAL MOTORS COMPANY

CAUTION: Refer to Component Fastener Tightening Caution .

18. Install the spark plugs (1) using **EN-39358** socket. Tighten the plugs to 20 N.m (15 lb ft).

VALVE AND SEAT GRINDING

Valve Measurement and Reconditioning Overview

- Proper valve service is critical to engine performance. Therefore, all detailed measurement procedures must be followed to identify components that are out of specification.
- If the measurement procedures reveal that the valve or valve seat must be reconditioned, it is critical to perform the measurement procedures after reconditioning.

Valve Seat Width Measurement Procedure

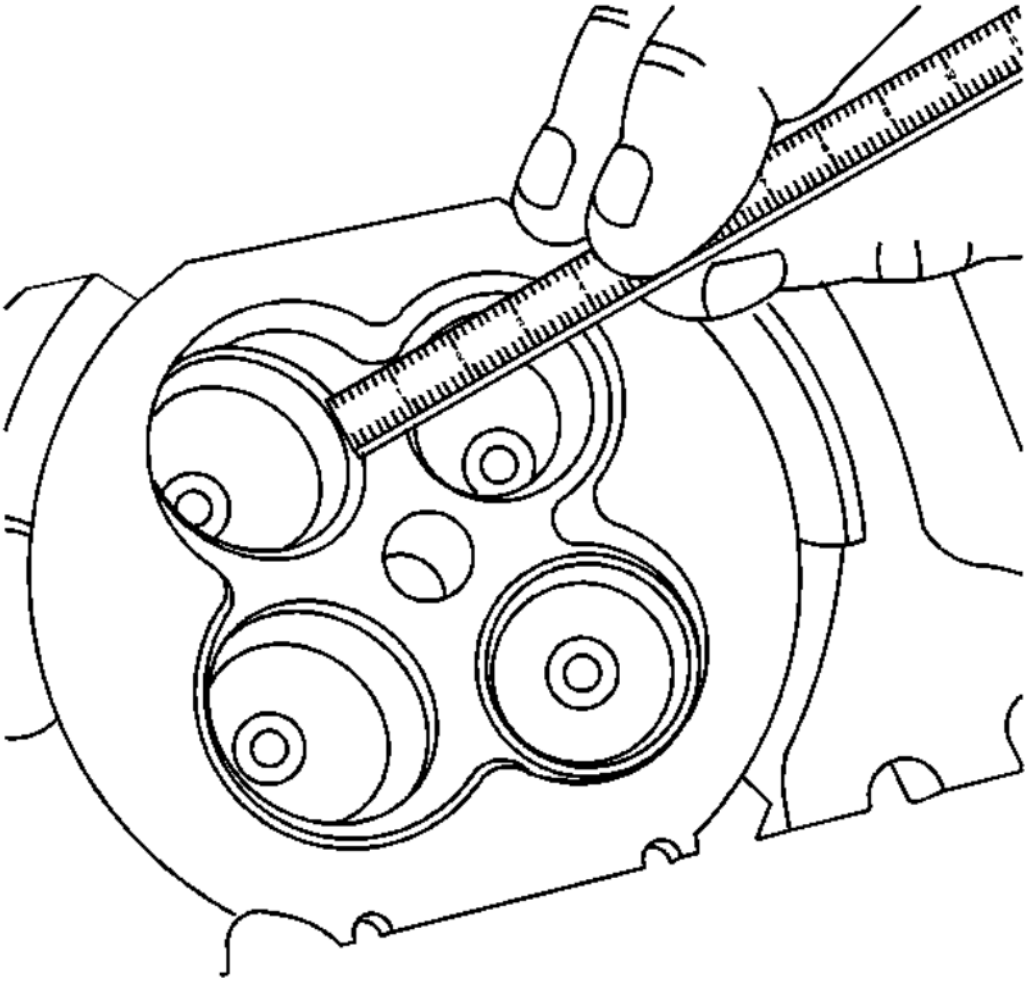

Fig. 132: Checking Valve Seat Width
Courtesy of GENERAL MOTORS COMPANY

1. Measure the valve seat width in the cylinder head using a proper scale.

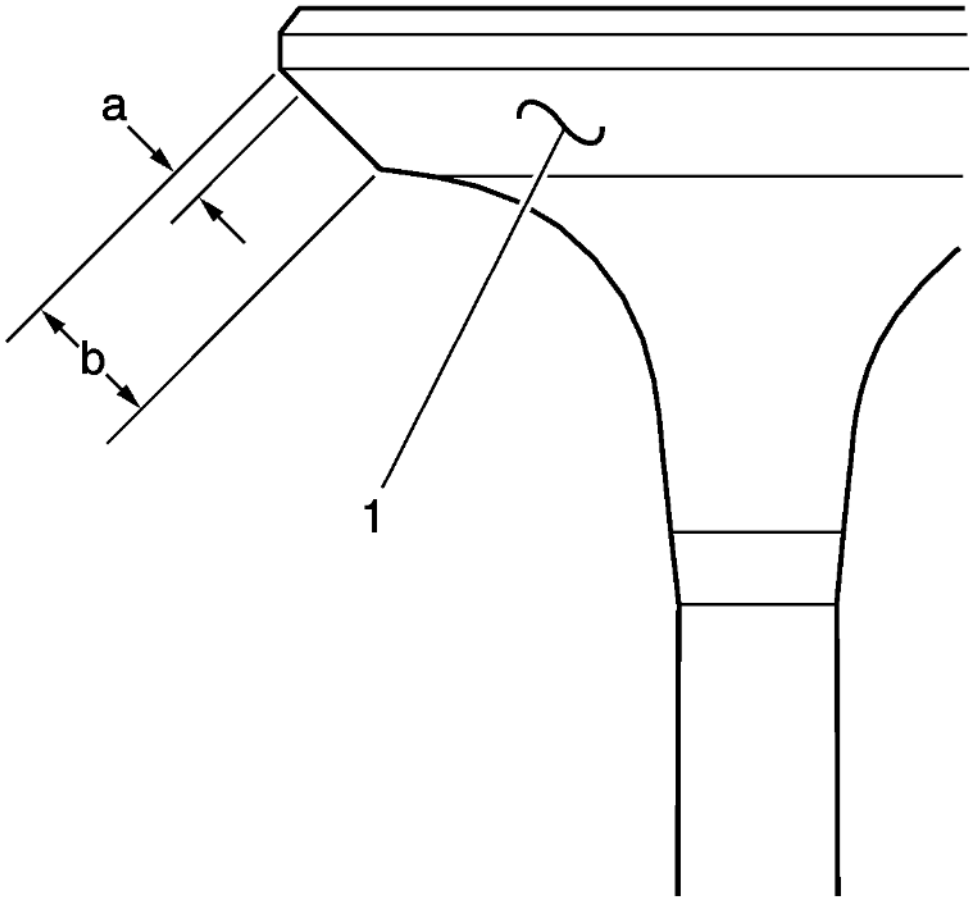

Fig. 133: Valve Face Seat width
Courtesy of GENERAL MOTORS COMPANY

2. Measure the seat width (b) on the valve face (1) using a proper scale.

NOTE: **The seat contact area must be at least 0.5 mm (0.020 in) from the outer diameter, margin (a), of the valve. If the contact area is too close to the margins, the seat must be reconditioned to move the contact area away from the margin.**

3. Compare your measurements with the specifications listed in **Engine Mechanical Specifications** .
4. If the seat widths are acceptable, check the valve seat roundness using the Valve Seat Roundness Measurement Procedure.
5. If the seat width is not acceptable, you must grind the valve seat using the Valve and Seat Reconditioning Procedure to bring the width back into specification. Proper valve seat width is critical to providing the correct amount of valve heat dissipation.

Valve Seat Roundness Measurement Procedure

1. Measure the valve seat roundness using a dial indicator attached to a tapered pilot installed in the guide. The pilot should have a slight bind when installed in the guide.

CAUTION: The correct size pilot must be used. Do not use adjustable diameter pilots. Adjustable pilots may damage the valve guides.

2. Compare your measurements with the specifications listed in **Engine Mechanical Specifications** .
3. If the valve seat exceeds the roundness specification, you must grind the valve and valve seat using the Valve and Seat Reconditioning Procedure.
4. If new valves are being used, the valve seat roundness must be within 0.05 mm (0.002 in).

Valve Head O.D. and Chamfer Measurement Procedure

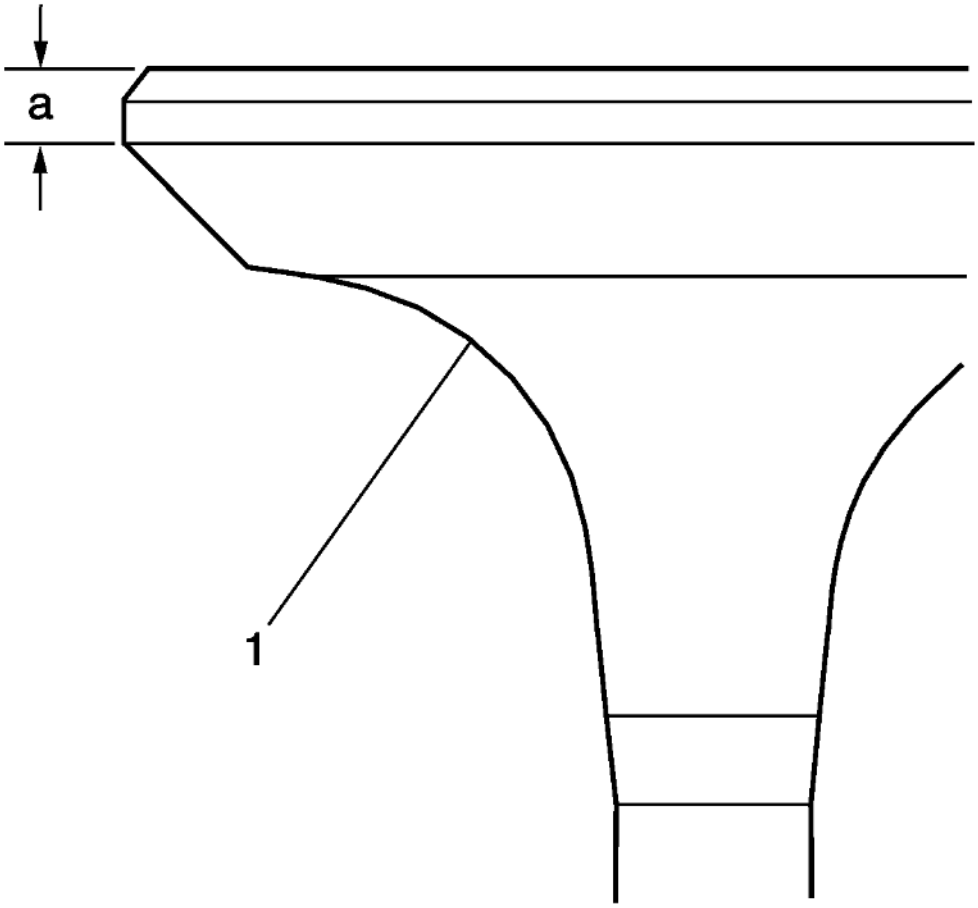

Fig. 134: View Of Valve Head O.D. & Chamfer
Courtesy of GENERAL MOTORS COMPANY

1. Measure the valve head O.D. and chamfer (a) using an appropriate scale. Refer to **Engine Mechanical Specifications** .
2. If the valve head O.D. and chamfer is within specification, test the valve (1) for seat concentricity using the Valve-to-Seat Concentricity Measurement Procedure. Reinspect the valve head O.D. and chamfer after completing the concentricity measurement if valve seat reconditioning is performed.

Valve-to-Seat Concentricity Measurement Procedure

NOTE:

- **Checking the valve-to-seat concentricity determines whether the valve and seat are sealing properly.**
- **You must measure the valve face and the valve seat to ensure proper valve sealing.**

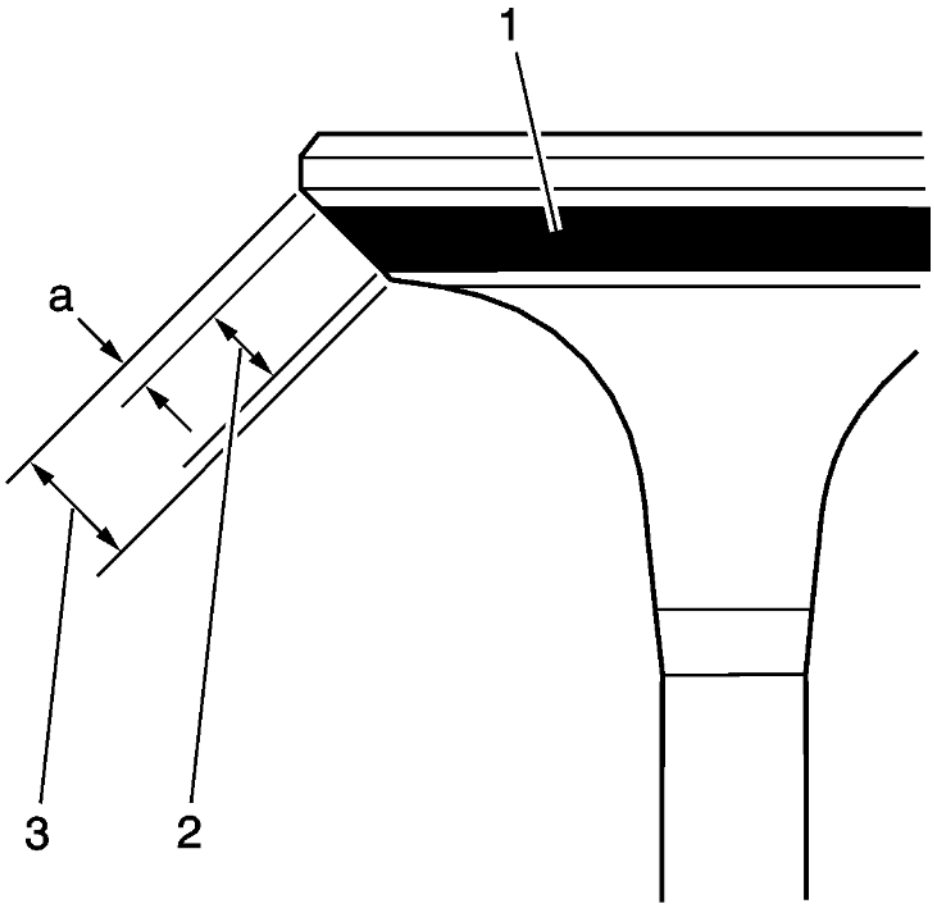

Fig. 135: Inspecting Valve Face
Courtesy of GENERAL MOTORS COMPANY

1. Coat the valve face (3) lightly with blue dye (1).
2. Install the valve in the cylinder head.
3. Turn the valve against the seat with enough pressure to wear off the dye.
4. Remove the valve from the cylinder head.
5. Inspect the valve face.
   - If the valve face is concentric, providing a proper seal, with the valve stem, a continuous mark (2) will be made around the entire face.

NOTE: **The wear mark MUST be at least 0.5 mm (0.020 in) from the outer diameter, the margin (a), of the valve. If the wear mark is too close to the margin, the seat must be reconditioned to move the contact area away from the margin.**

NOTE: **Do not grind or condition the intake valve. If the intake valve is out of specification, replace the valve.**

- If the face is not concentric with the stem, the mark will NOT be continuous around the valve face. The valve should be refaced or replaced and the seat must be reconditioned using the Valve and Seat Reconditioning Procedure.

Valve and Seat Reconditioning Procedure

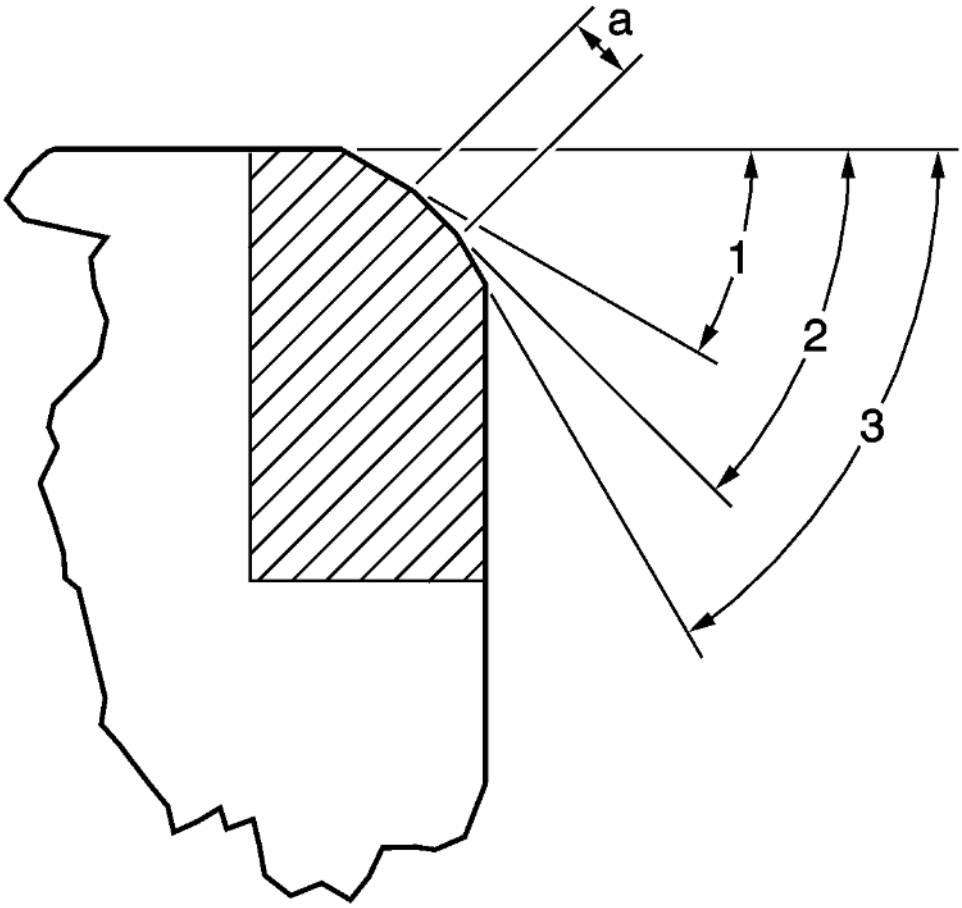

Fig. 136: Valve Seating Surface Angle
Courtesy of GENERAL MOTORS COMPANY

NOTE:

- **If the valve seat width, roundness or concentricity is beyond specifications, you must grind the seats in order to ensure proper heat dissipation and prevent the build up of carbon on the seats.**
- **It is necessary to reface the valve if seat reconditioning is required unless a new valve is used.**

1. Grind the valve seating surface (a) to the proper angle specification (2) listed in **Engine Mechanical Specifications** .
2. Grind the valve relief surface to the proper angle specification (1) listed in **Engine Mechanical**

Specifications , to correctly position the valve seating surface (a) to the valve.

3. Grind the valve undercut surface to the proper angle specification (3) listed in **Engine Mechanical Specifications** , to narrow the valve seating surface width (a) to the specifications listed in **Engine Mechanical Specifications** .

NOTE: **Do not grind or condition the intake valve. If the intake valve seat has been reconditioned, replace the corresponding intake valve.**

4. Replace the intake valve if it is out of specification. Refer to **Engine Mechanical Specifications** .
5. If the original exhaust valve is being used, grind the valve to the specifications listed in **Engine Mechanical Specifications** . Measure the valve head O.D. and chamfer again after grinding using the Valve Head O.D. and Chamfer Measurement Procedure. Replace the exhaust valve if it is out of specification. New valves do not require grinding.
6. When grinding the valves and seats, grind off as little material as possible. Cutting valve seat results in lowering the valve spring pressure.
7. Install the valve in the cylinder head.
   - If you are using refaced exhaust valves, lap the valves into the seats with a fine grinding compound. The refacing and reseating operations should leave the refinished surfaces smooth and true so that minimal lapping is required. Excessive lapping will groove the valve face and prevent a good seat when hot.
   - Be sure to clean any remaining lapping compound from the valve and seat with solvent and compressed air prior to final assembly.
8. After obtaining the proper valve seat width in the cylinder head, you must re-measure the valve stem height using the Valve Stem Height Measurement Procedure.
9. If the valve stem height is acceptable, test the seats for concentricity using the Valve-to-Seat Concentricity Measurement Procedure.

Valve Stem Height Measurement Procedure

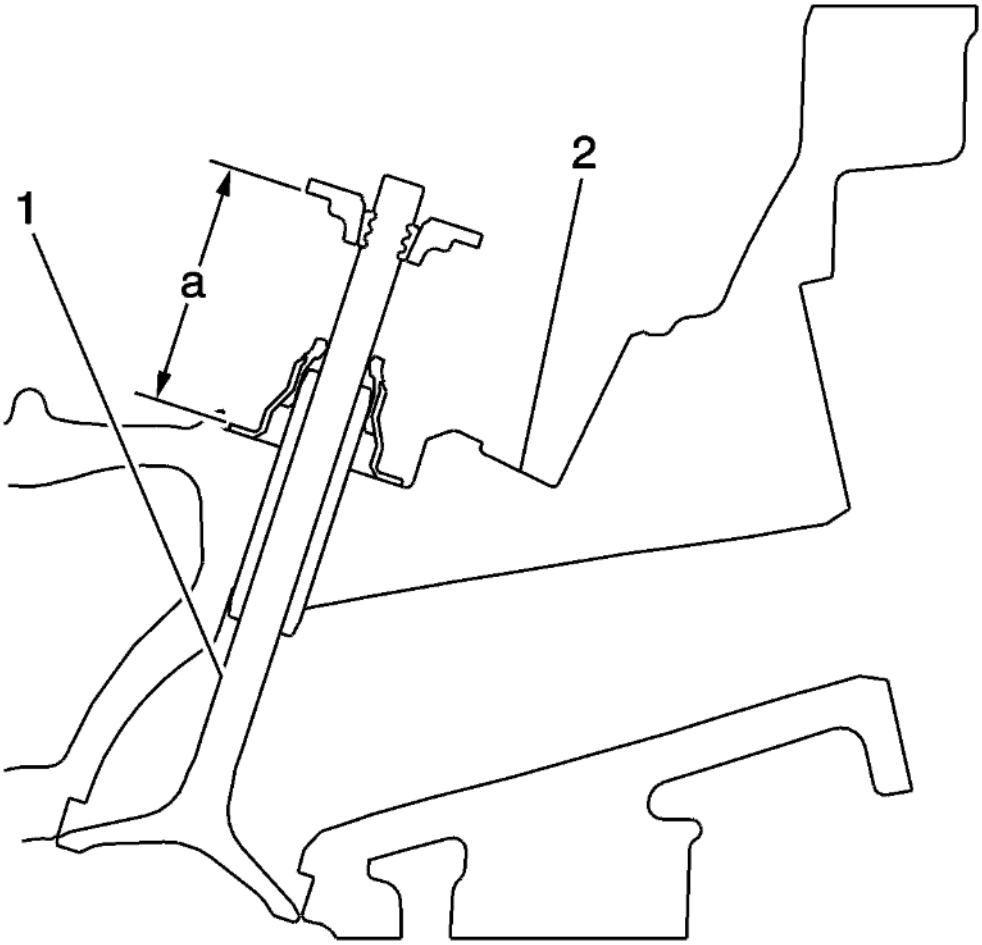

Fig. 137: Valve Stem Height Measurement
Courtesy of GENERAL MOTORS COMPANY

NOTE: To determine the valve stem height measurement, measure from the valve spring seat to the valve spring retainer.

1. Install the valve (1) into the valve guide in the cylinder head (2).
2. Ensure the valve is seated to the cylinder head valve seat.
3. Install the valve stem oil seal.
4. Install the valve spring retainer and valve stem locks.
5. Measure the distance (a) between the valve seal lip to the bottom of the valve spring retainer. Refer to **Engine Mechanical Specifications** .
6. If the maximum height specification is exceeded, a new valve should be installed and the valve stem height re-measured.

CAUTION: DO NOT grind the valve stem tip. The tip of the valve is hardened and grinding the tip will eliminate the hardened surface causing premature wear and possible engine damage.

CAUTION: DO NOT use shims in order to adjust valve stem height. The use

of shims will cause the valve spring to bottom out before the camshaft lobe is at peak lift and engine damage could result.

7. If the valve stem height still exceeds the maximum height specification, the cylinder head must be replaced.

CYLINDER HEAD ASSEMBLE

Special Tools

- **EN-50717** Valve Spring Compressor
- **EN-9666** Valve Spring Tester
- **EN-43963** Valve Spring Compressor (off car)

For equivalent regional tools, refer to **Special Tools** .

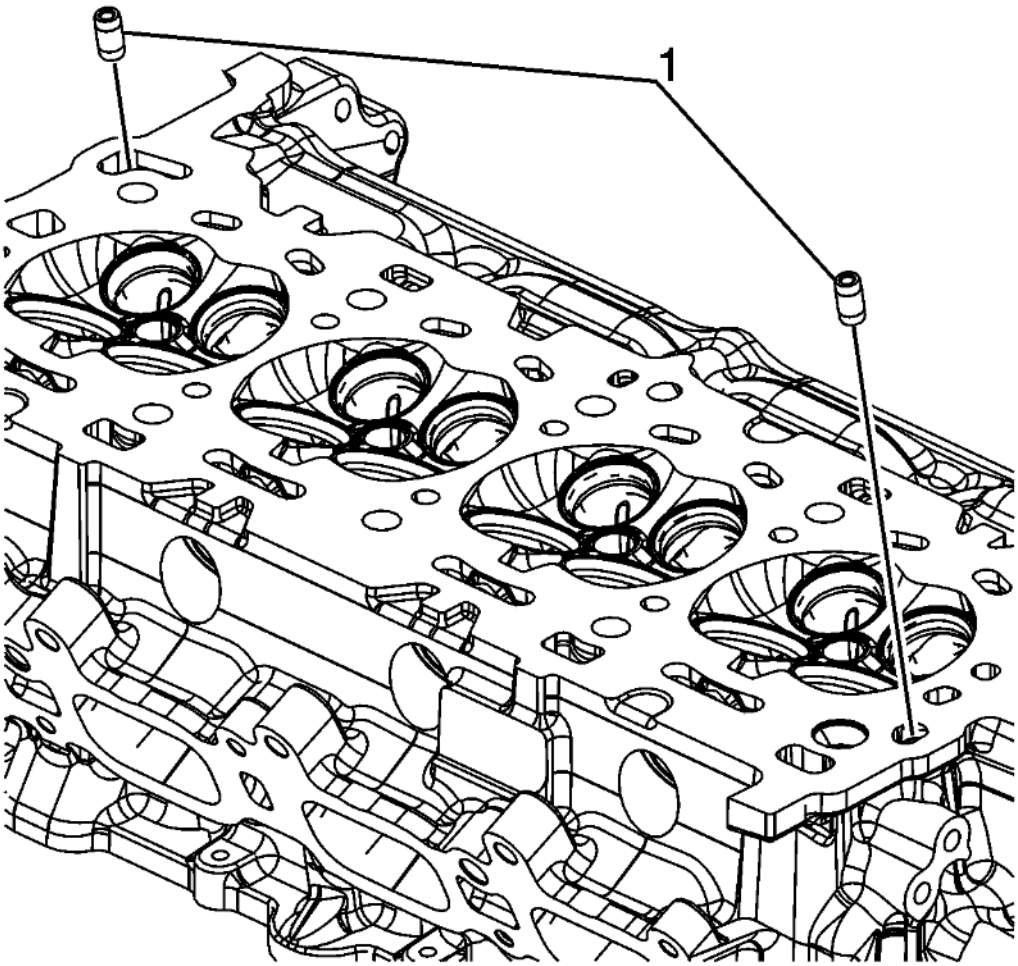

Fig. 138: Cylinder Head Oil Gallery Restrictors
Courtesy of GENERAL MOTORS COMPANY

1. Install the cylinder head oil gallery restrictors (1).

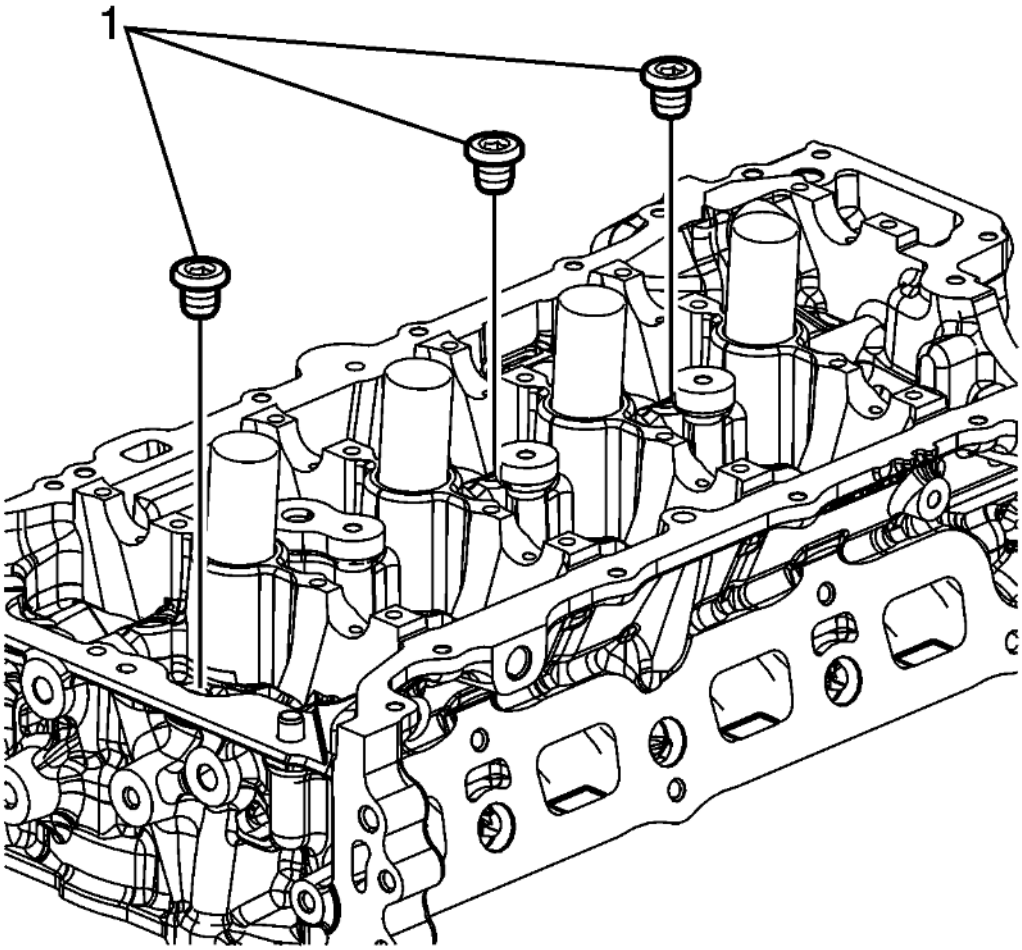

Fig. 139: Cylinder Head Plugs
Courtesy of GENERAL MOTORS COMPANY

CAUTION: Refer to Component Fastener Tightening Caution .

CAUTION: In order to avoid damage, install the spark plugs after the cylinder head has been installed on the engine.

2. Install NEW cylinder head plugs. Coat the plugs with sealer. Refer to **Adhesives, Fluids, Lubricants, and Sealers** .
3. Install the water jacket hole plugs (1) in the top of the cylinder head. Tighten the plugs to 50 N.m (37 lb ft).

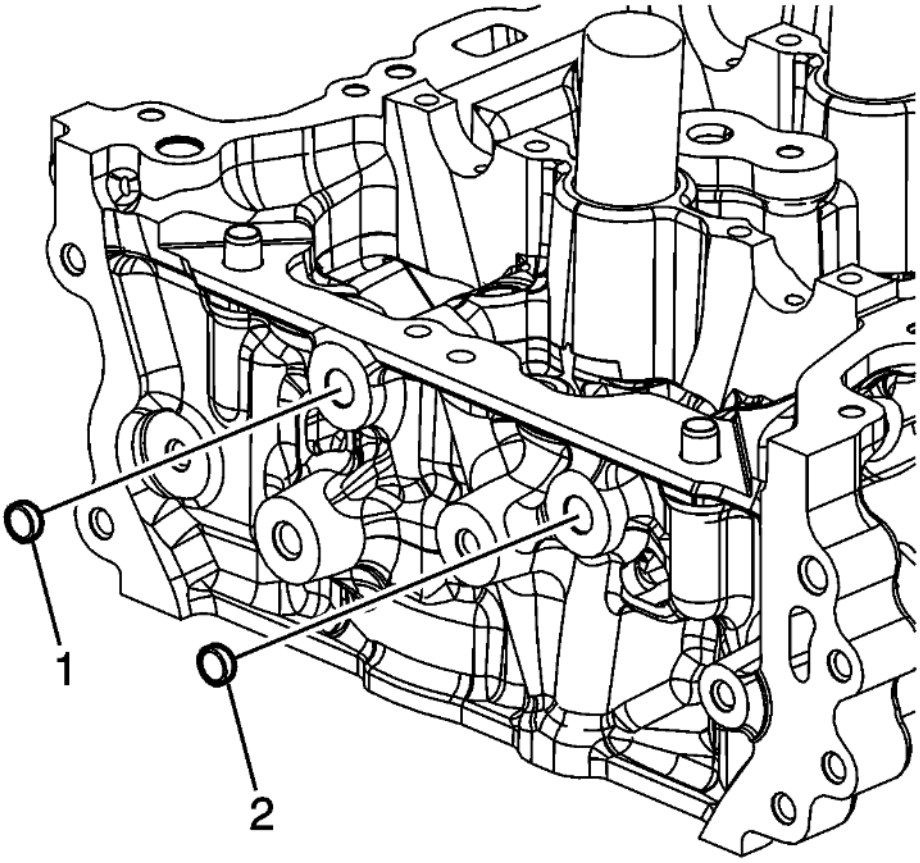

Fig. 140: Cylinder Head Plugs
Courtesy of GENERAL MOTORS COMPANY

4. Install the oil gallery plugs (1, 2) in the front of the cylinder head.

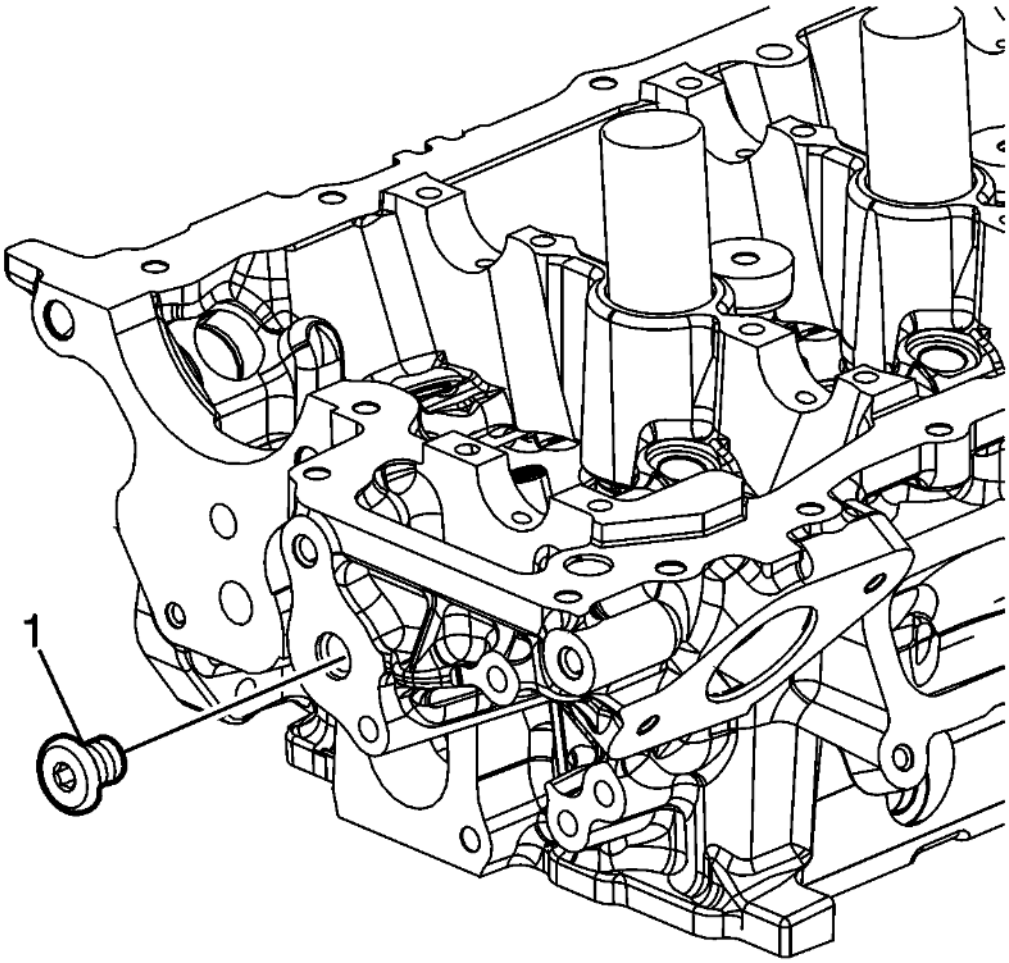

Fig. 141: Cylinder Head Plug
Courtesy of GENERAL MOTORS COMPANY

5. Install the oil gallery plug (1) in the rear of the cylinder head. Tighten the plug to 40 N.m (30 lb ft).
6. Inspect the valve springs for the following conditions:
   - Expanded height
   - Unparallel spring ends
   - Spring tension using **EN-9666** tester
   - Any distorted springs should be replaced

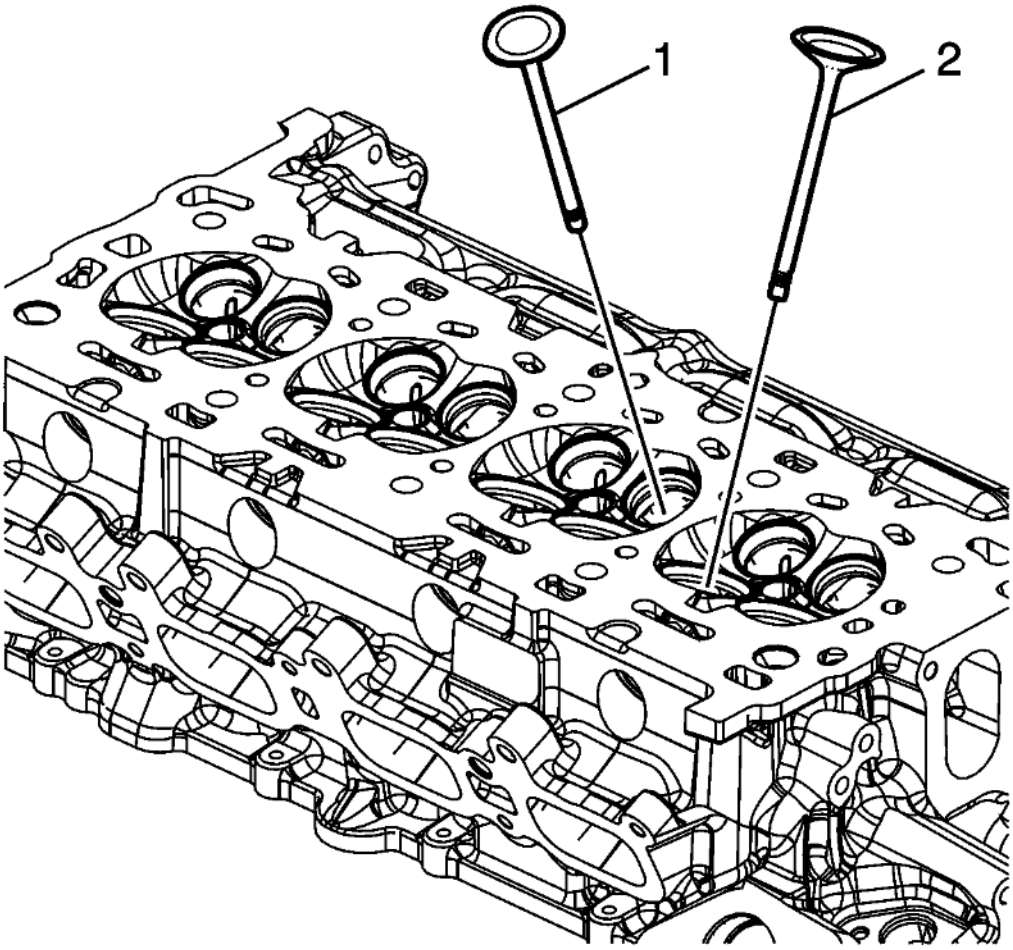

Fig. 142: Valves
Courtesy of GENERAL MOTORS COMPANY

7. Inspect the valves and the valve seats. Refer to **Valve and Seat Grinding**.
8. Install the valves (1, 2). Replace the valves, if required.

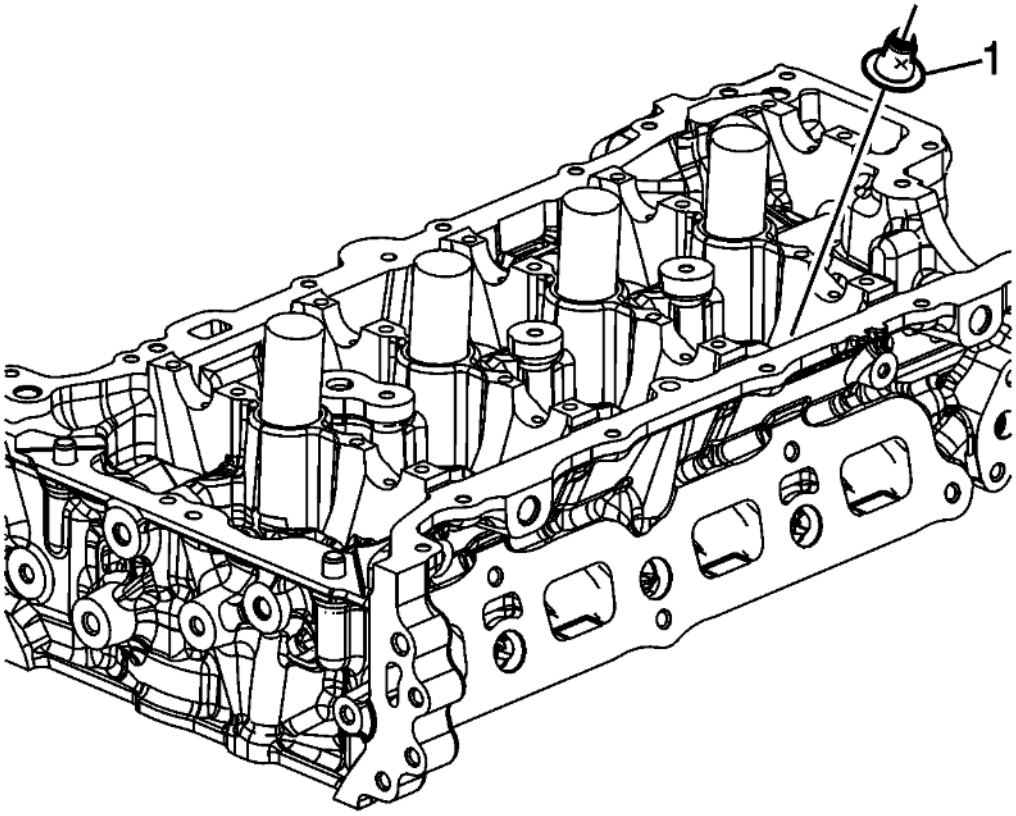

Fig. 143: Valve Seals
Courtesy of GENERAL MOTORS COMPANY

NOTE: **Always use NEW valve stem oil seals when assembling the cylinder head.**

9. Install the NEW valve seals (1). Fully seat the seals on the valve guides.

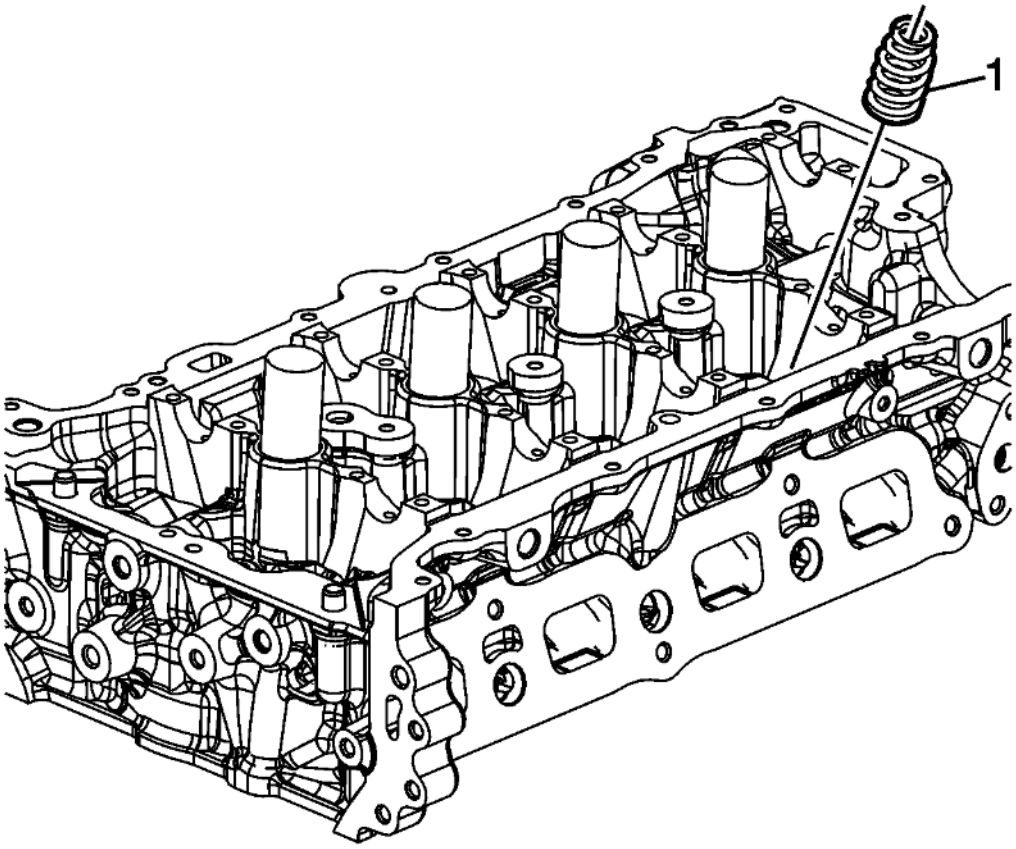

Fig. 144: Springs
Courtesy of GENERAL MOTORS COMPANY

10. Install the springs (1).

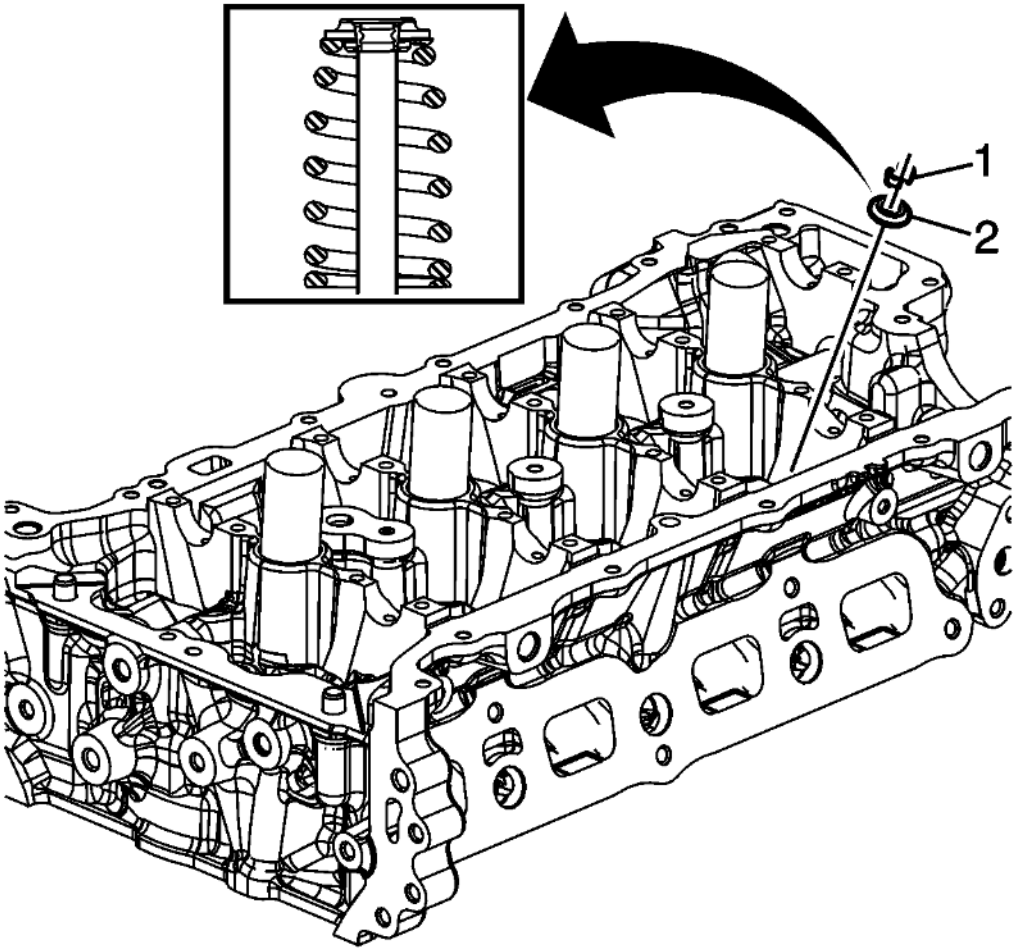

Fig. 145: Valve Keys, Springs, And Retainers
Courtesy of GENERAL MOTORS COMPANY

WARNING: Compressed valve springs have high tension against the valve spring compressor. Valve springs that are not properly compressed by or released from the valve spring compressor can be ejected from the valve spring compressor with intense force. Use care when compressing or releasing the valve spring with the valve spring compressor and when removing or installing the valve stem keys. Failing to use care may cause personal injury.

CAUTION: Do not compress the valve springs to less than 24.0 mm (0.943 in). Contact between the valve spring retainer and the valve stem oil seal can cause potential valve stem oil seal damage.

11. Install the retainers and keys using the following procedure:
    1. Install the retainer (2).
    2. Using the **EN-50717** compressor and the **EN-43963** adapter , compress the valve spring.
    3. Install the valve keys (1).

4. Slowly release the compression from the valve/spring assembly.
5. Inspect for proper valve key seating.

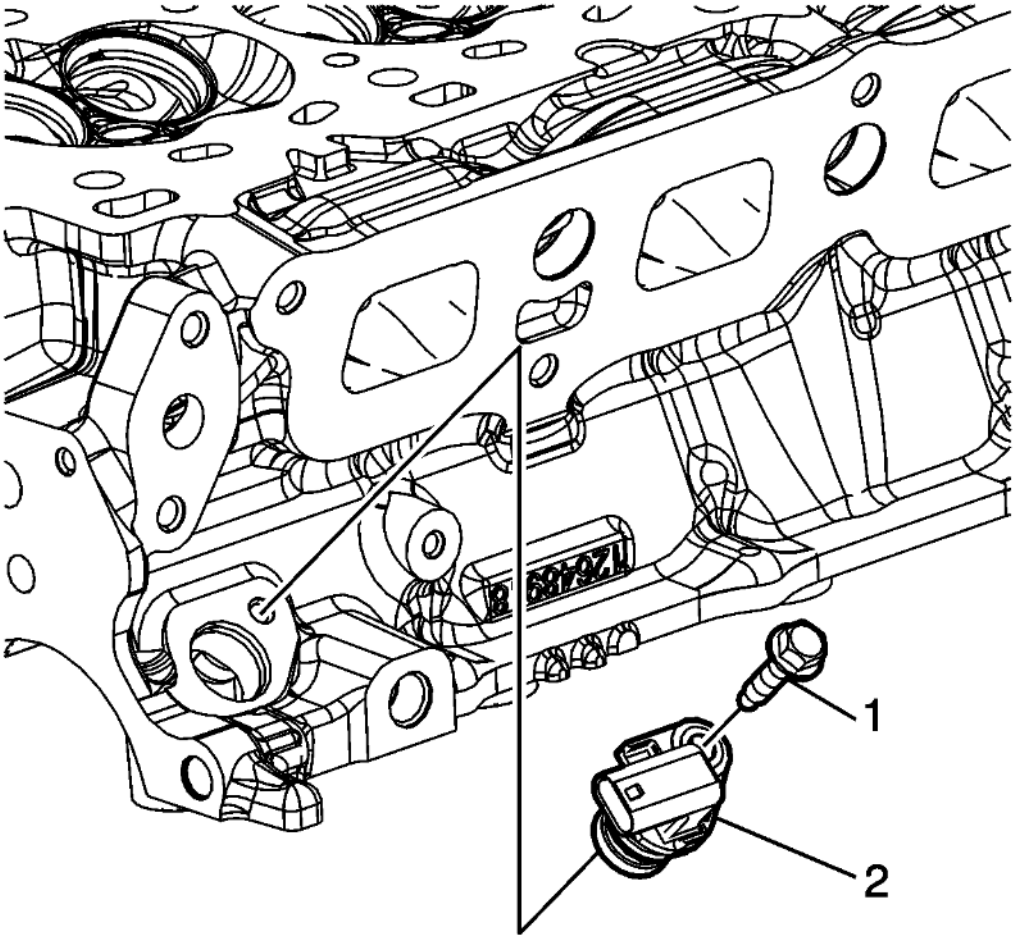

Fig. 146: Exhaust Camshaft Position Sensor And Bolt
Courtesy of GENERAL MOTORS COMPANY

12. Lubricate the camshaft position sensor O-ring with clean engine oil.

CAUTION: Refer to Fastener Caution .

13. Install the exhaust camshaft position sensor (2) and bolt (1). Tighten the bolt to 10 N.m (89 lb in).

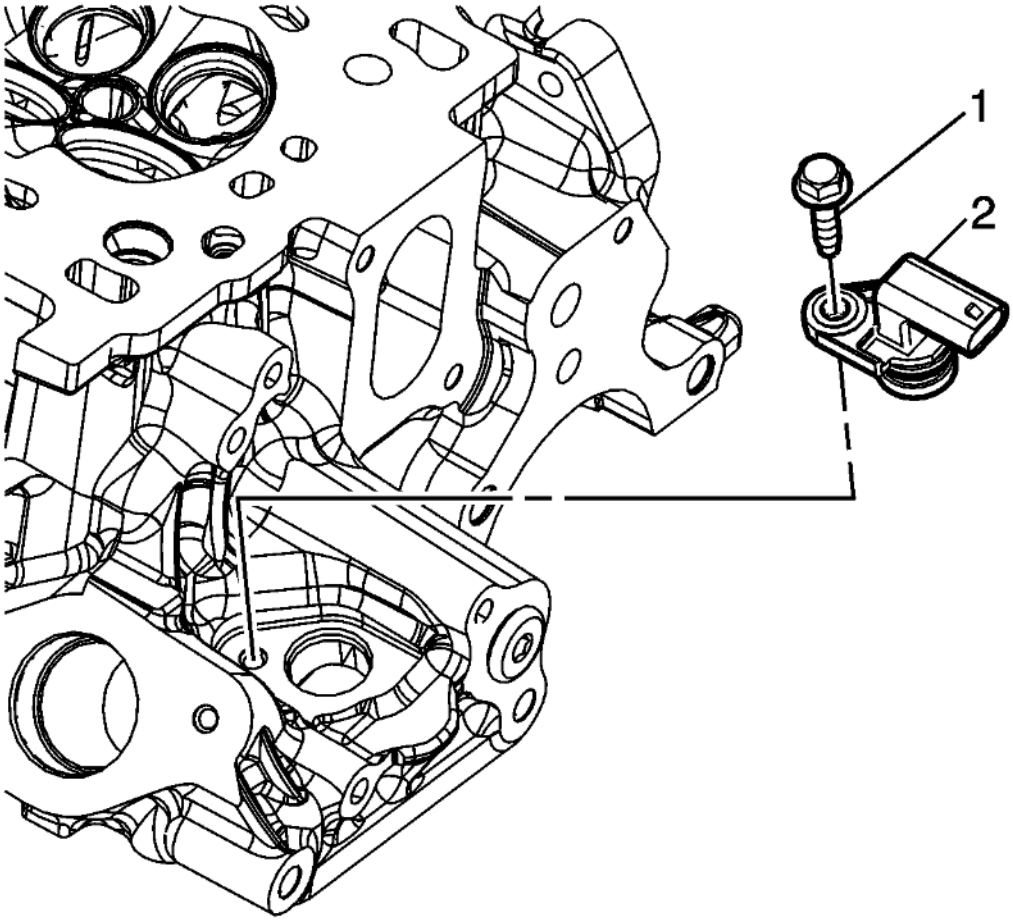

Fig. 147: Intake Camshaft Position Sensor And Bolt
Courtesy of GENERAL MOTORS COMPANY

14. Lubricate the camshaft position sensor O-ring with clean engine oil.
15. Install the intake camshaft position sensor (2) and bolt (1). Tighten the bolt to 10 N.m (89 lb in).

BALANCER WITH OIL PUMP SHAFT DISASSEMBLE

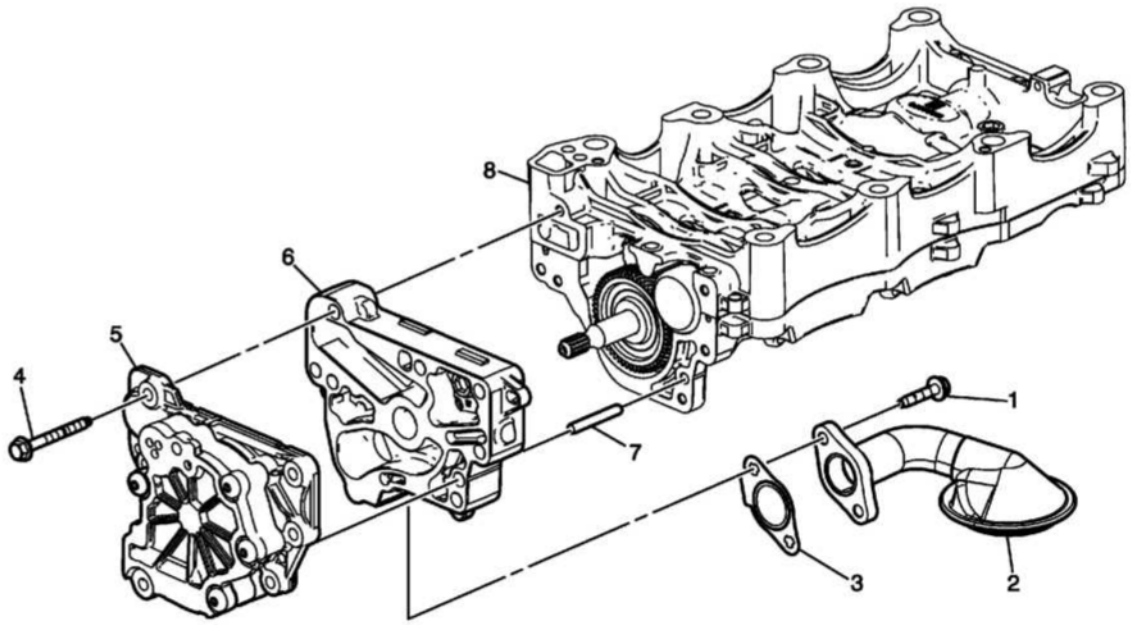

Fig. 148: Balancer With Oil Pump Shaft
Courtesy of GENERAL MOTORS COMPANY

Balancer With Oil Pump Shaft Disassemble

Callout	Component Name
1	Oil Pump Suction Pipe Bolt
2	Oil Pump Screen Assembly with Suction Pipe
3	Oil Pump Screen Gasket **NOTE:** **Discard the gasket.**
4	Oil Pump Assembly Bolt
5	Oil Pump Assembly
6	Oil Pump Cover
7	Oil Pump Locating Pin
8	Balancer Shaft Module

BALANCER WITH OIL PUMP SHAFT CLEANING AND INSPECTION

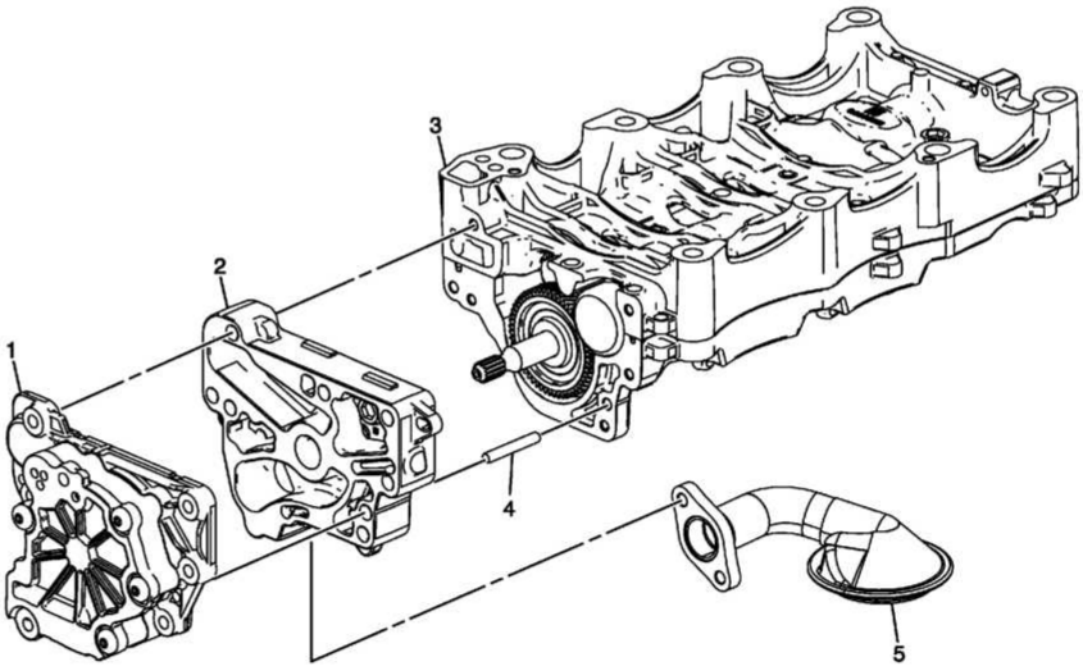

Fig. 149: Balancer With Oil Pump Shaft
Courtesy of GENERAL MOTORS COMPANY

Balancer With Oil Pump Shaft Cleaning and Inspection

Callout	Component Name
Preliminary Procedures 1. Completely inspect the balancer with oil pump shaft assembly and components. 2. Clean all mating surfaces. 3. Inspect all threaded holes for damage. 4. Inspect the oil pump screen assembly.	
1	Oil Pump Assembly
2	Oil Pump Cover
3	Balancer Shaft Module
4	Oil Pump Locating Pin
5	Oil Pump Screen Assembly with Suction Pipe

BALANCER WITH OIL PUMP SHAFT ASSEMBLE

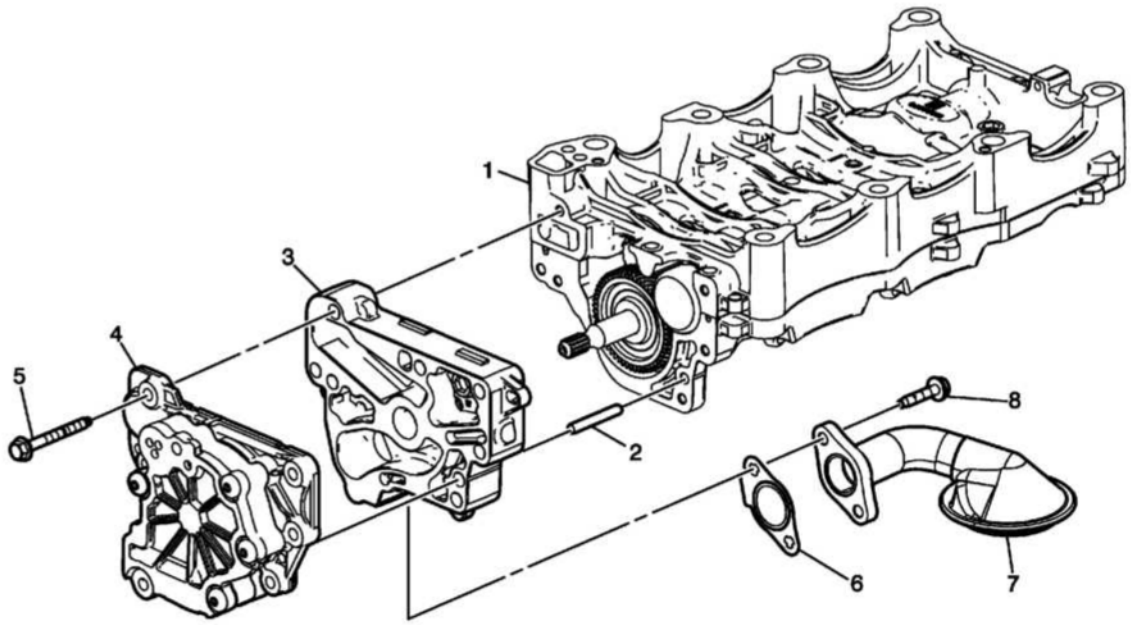

Fig. 150: Balancer Shaft Module, Oil Pump Locating Pin And Oil Pump Assembly
Courtesy of GENERAL MOTORS COMPANY

Balancer With Oil Pump Shaft Assemble

Callout	Component Name
1	Balancer Shaft Module
2	Oil Pump Locating Pin
3	Oil Pump Cover
4	Oil Pump Assembly
5	Oil Pump Assembly Bolt **CAUTION:** **Refer to Fastener Caution .** **Tighten** 10 (89 lb in)
6	Oil Pump Screen Gasket **NOTE:** **Use NEW gasket.**
7	Oil Pump Screen Assembly with Suction Pipe
8	Oil Pump Suction Pipe Bolt **Tighten** 10 (89 lb in)

CAMSHAFT COVER CLEANING AND INSPECTION

Camshaft Cover - Right Side

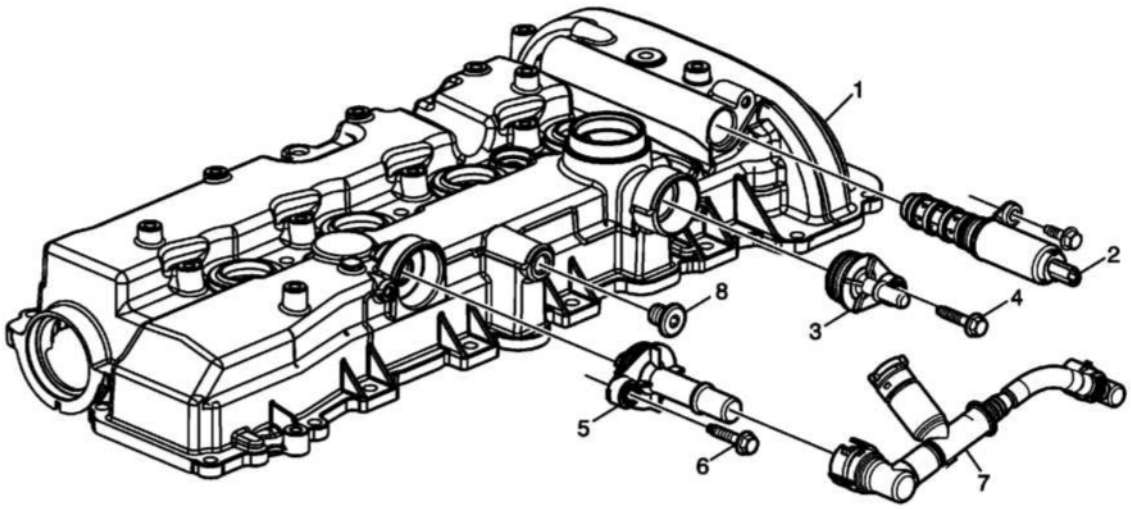

Fig. 151: Camshaft Cover -- Right Side
Courtesy of GENERAL MOTORS COMPANY

Camshaft Cover - Right Side

Callout	Component Name
Preliminary Procedure Thoroughly clean the camshaft cover and mating surfaces. Inspect each component, O-rings, and fasteners, and replace as necessary.	
1	Camshaft Cover
2	Camshaft Position Actuator Control Solenoid Valve - Intake
3	PCV Valve
4	PCV Valve Bolt **CAUTION:** **Refer to Fastener Caution .** **Tighten** 10 N.m (89 lb in)
5	PCV Valve
6	PCV Valve Bolt **Tighten** 10 N.m (89 lb in)
7	PCV Tube Assembly **NOTE:**

	Component may vary by model.
8	Camshaft Cover Plug **Tighten** 35 N.m (26 lb ft)

Camshaft Cover - Left Side

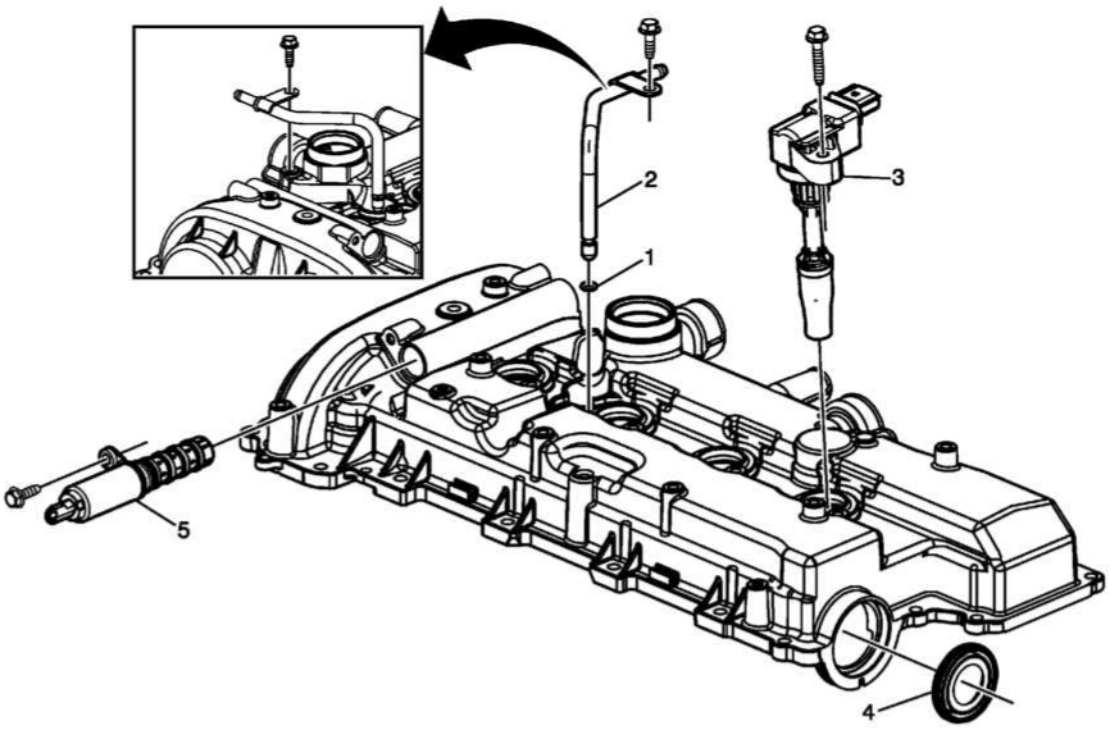

Fig. 152: Camshaft Cover -- Left Side
Courtesy of GENERAL MOTORS COMPANY

Camshaft Cover - Left Side

Callout	Component Name
Preliminary Procedure Inspect each component, O-rings, and fasteners, and replace as necessary.	
1	Engine Coolant Air Bleed Pipe O-Ring
2	Engine Coolant Air Bleed Pipe **NOTE:** **Component may vary by model.**
3	Ignition Coil
4	Vacuum Pump Seal **Special Tools** **DT 45866** Input Shaft Seal Installer For equivalent regional tools, refer to **Special Tools** .
5	Camshaft Position Actuator Control Solenoid Valve

Camshaft Cover - PCV Valve Components for Turbocharger Models

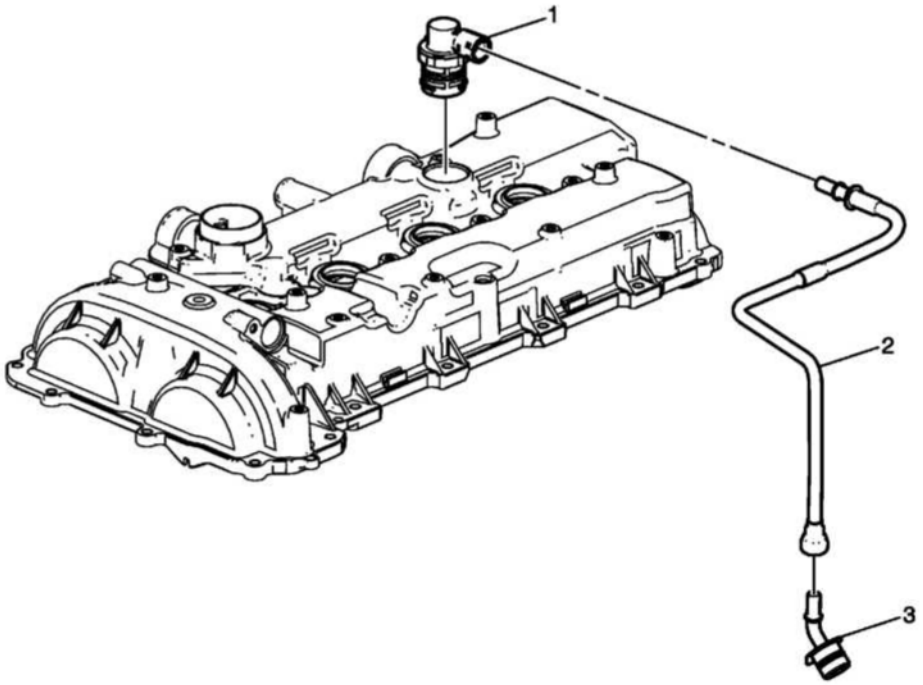

Fig. 153: Camshaft Cover -- PCV Valve Components for Turbocharger Models
Courtesy of GENERAL MOTORS COMPANY

Camshaft Cover - PCV Valve Components for Turbocharger Models

Callout	Component Name
Preliminary Procedure Inspect each component while attached to the camshaft cover. Do not remove the PCV components unless inspection indicates a suspect component. Replace the PCV valve, PCV tube assembly, and PCV hose fitting as an assembly. The connections between these components are permanent.	
1	PCV Valve **NOTE:** **When the PCV valve is removed, small particles of the valve will break and fall into the cover.** **Procedure** Inspect the PCV valve. If the PCV valve is suspect, use a suitable tool to pry the valve off of the cover. Retrieve any particles that fall onto the baffle in the cover. Discard the valve and particles.
2	PCV Tube Assembly
3	PCV Hose Fitting

Camshaft Cover - Bottom

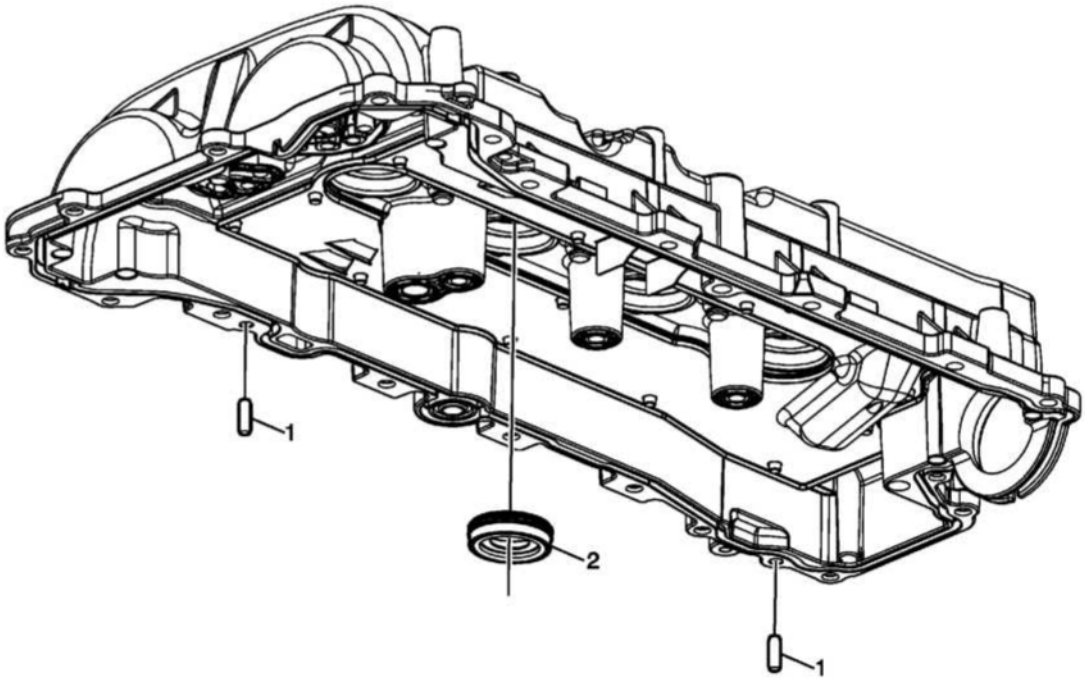

Fig. 154: Camshaft Cover Pins & Seal -- Bottom
Courtesy of GENERAL MOTORS COMPANY

Camshaft Cover - Bottom

Callout	Component Name
Preliminary Procedure Inspect each component, O-rings, and fasteners, and replace as necessary.	
1	Camshaft Cover Locating Pin
2	Spark Plug Shield Seal **Special Tools** **EN 34115** Sprocket Bearing Installer For equivalent regional tools, refer to **Special Tools** .

TURBOCHARGER CLEANING AND INSPECTION

Turbocharger and Components

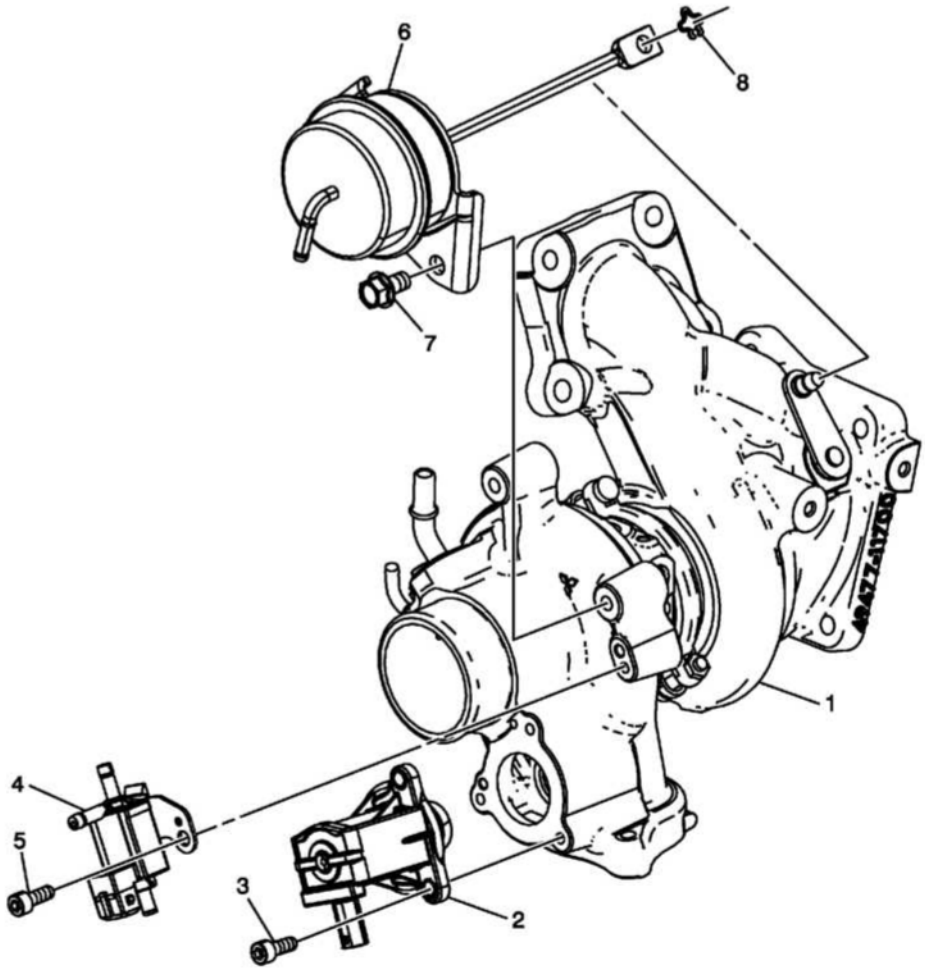

Fig. 155: Turbocharger and Components
Courtesy of GENERAL MOTORS COMPANY

Turbocharger and Components

Callout	Component Name
Preliminary Procedure 1. Completely inspect the turbocharger and all other engine components that may cause similar conditions before replacing the turbocharger. Refer to **Symptoms - Engine Mechanical** . 2. Clean all mating surfaces. 3. Inspect all threaded holes for damage. 4. Inspect the compressor and turbine blades for bent or broken conditions, and foreign material. PCV fluids and combustion product buildup are common and not a sign of failure. Replace the turbocharger if damage is found.	
1	Turbocharger
2	Turbocharger Bypass Valve Solenoid **NOTE:** **Inspect the bypass valve solenoid for damage. Replace if necessary.**
	Turbocharger Bypass Valve Solenoid Bolt

3	**CAUTION:** **Refer to Fastener Caution .** **Tighten** 8 N.m (71 lb in)
4	Turbocharger Wastegate Regulator Solenoid Valve **NOTE:** **Inspect the solenoid valve and bracket for damage only. Do not disassemble solenoid valve from bracket. Replace if necessary.**
5	Turbocharger Wastegate Regulator Solenoid Valve Bracket Bolt **Tighten** 8 N.m (71 lb in)
6	Turbocharger Wastegate Actuator **NOTE:** **Inspect the wastegate actuator rod for damage or tampering. Replace the wastegate actuator if damage is found.**
7	Turbocharger Wastegate Actuator Bolt **Tighten** 8 N.m (71 lb in)
8	Turbocharger Wastegate Actuator Arm Retainer

Turbocharger Inlet and Wastegate Regulator Solenoid Hoses

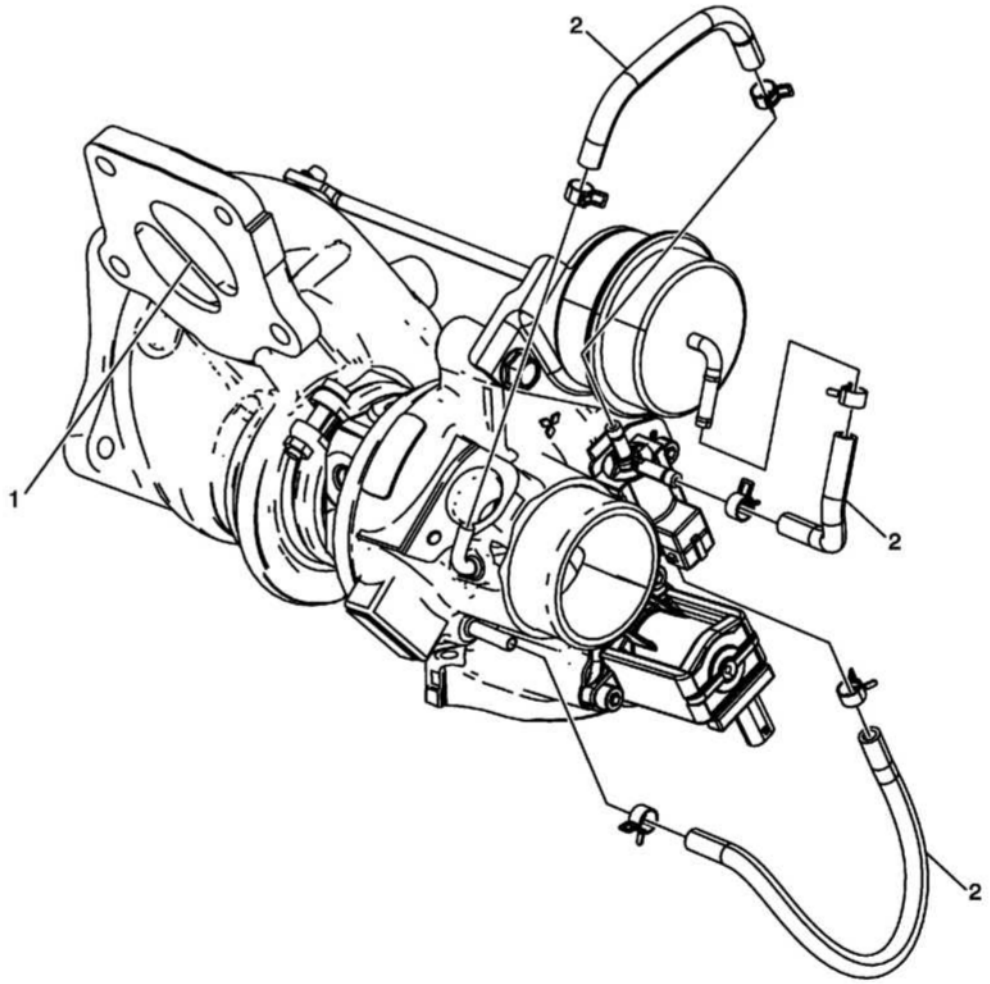

Fig. 156: Turbocharger Inlet and Wastegate Regulator Solenoid Hoses
Courtesy of GENERAL MOTORS COMPANY

Turbocharger Inlet and Wastegate Regulator Solenoid Hoses

Callout	Component Name
Preliminary Procedure 1. Inspect the turbocharger compressor inlet, compressor outlet, turbine inlet, and turbine outlet surfaces for damage. Replace the turbocharger if damage is found. 2. Inspect the turbocharger wastegate regulator solenoid hoses for damage. Replace the hoses if necessary.	
1	Turbocharger Inlet Flange Partition Wall **NOTE:** **Do not replace the turbocharger if cracks are found on the turbocharger inlet flange partition wall. Replacement should only be performed if external leaks are present or a section is loose or missing.**
2	Turbocharger Wastegate Regulator Solenoid Hoses

FUEL RAIL AND INJECTORS CLEANING AND INSPECTION

Special Tools

- **EN-47909** Injector Bore and Sleeve Cleaning Kit
- **EN-48266** Fuel Injector Seal Installer and Sizer
- **EN-50791** Fuel Injector Nozzle Installer

For equivalent regional tools, refer to **Special Tools** .

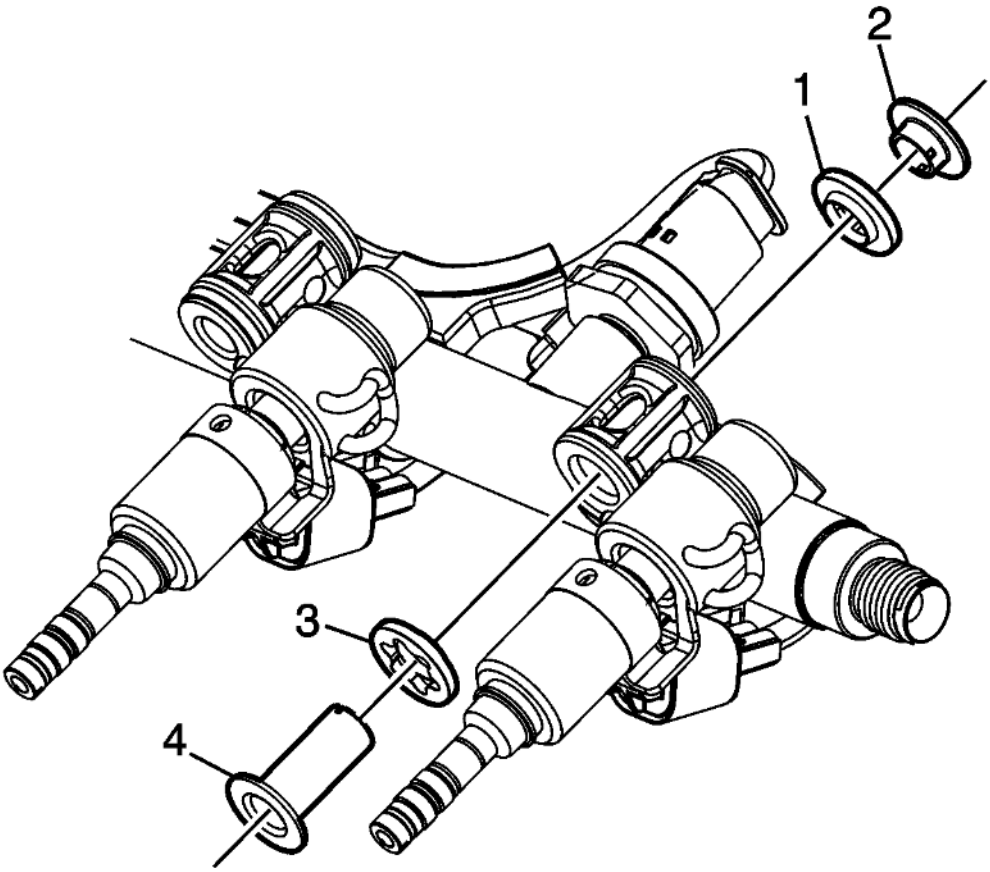

Fig. 157: Fuel Rail Insulator Assemblies
Courtesy of GENERAL MOTORS COMPANY

1. Remove and inspect the fuel rail insulator assemblies (1-4). Replace the entire assembly if any components show signs of wear or the insulators (4) show the following conditions:
    - Dry or cracked appearance
    - Flattened or misshapen appearance

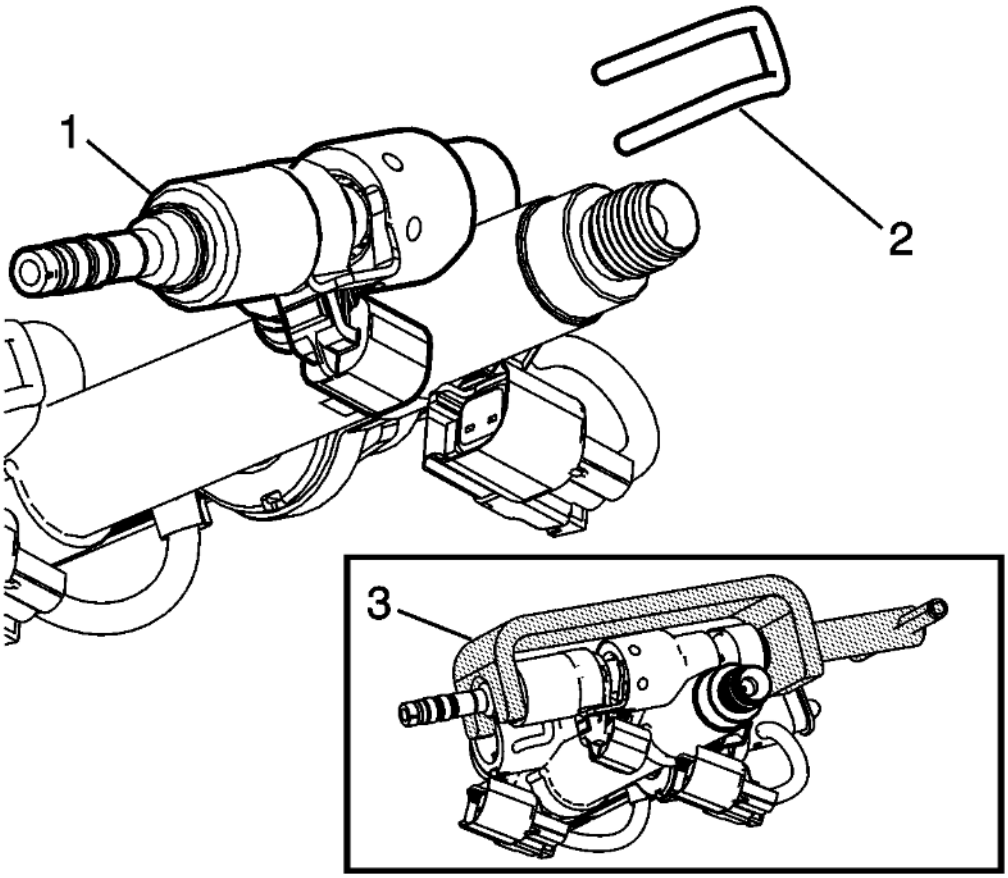

Fig. 158: Fuel Injector And Retaining Pin
Courtesy of GENERAL MOTORS COMPANY

2. Disconnect the electrical connections from the fuel injectors.
3. Use **EN-50791** installer (3) to compress the fuel injector (1), and relieve pressure on the retaining pin (2). Remove the fuel injector retaining pin (2). Remove **EN-50791** installer once the retaining pin is removed.

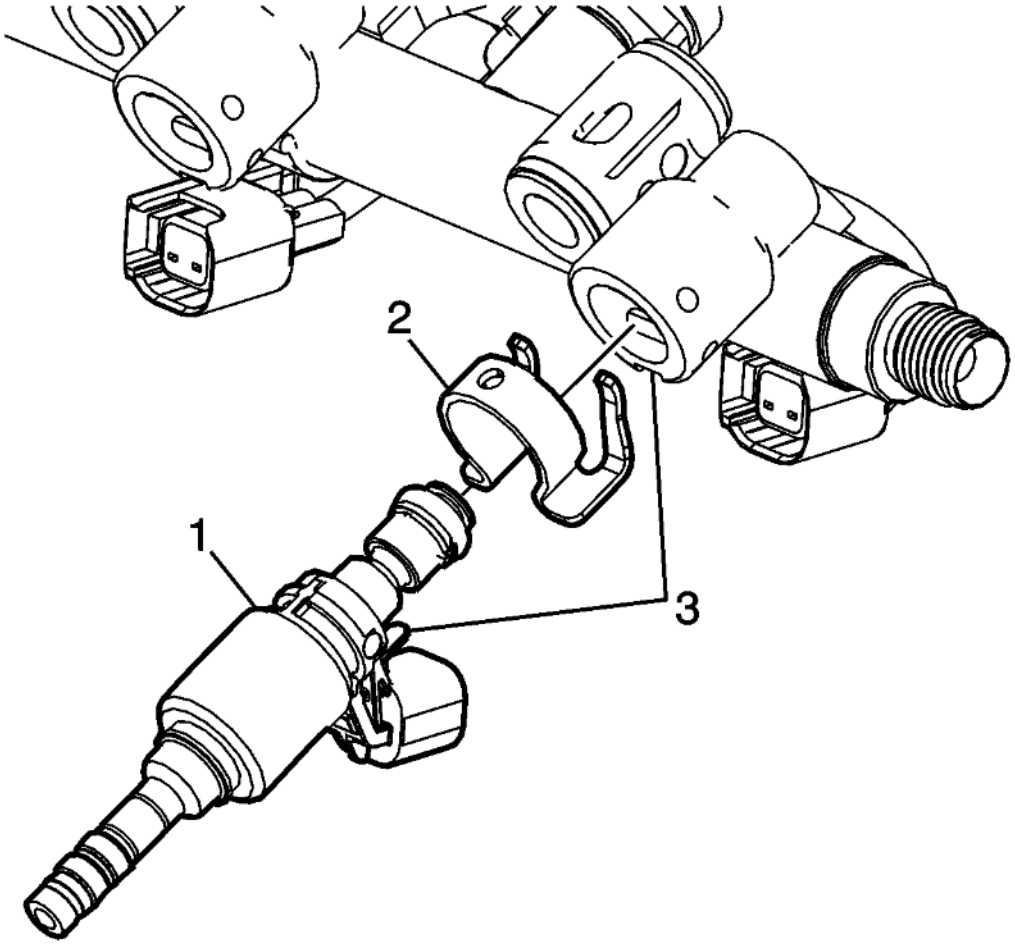

Fig. 159: Injectors And Fuel Rail Slot
Courtesy of GENERAL MOTORS COMPANY

NOTE: **Support the fuel injector at the widest point. Support the fuel rail along the bottom.**

- **DO NOT support or hold the fuel injector by the tip or connector**
- **DO NOT tilt or excessively twist the injector during removal**

4. Remove the injectors (1) from the fuel rail by pulling straight out along the fuel injector axis. Slight rotation of the fuel injector is acceptable as long as excessive force is not applied to the fuel injector tab while engaged in the fuel rail slot (3).
5. Remove the fuel injector holding clamp (2) from the rear of the fuel injector.

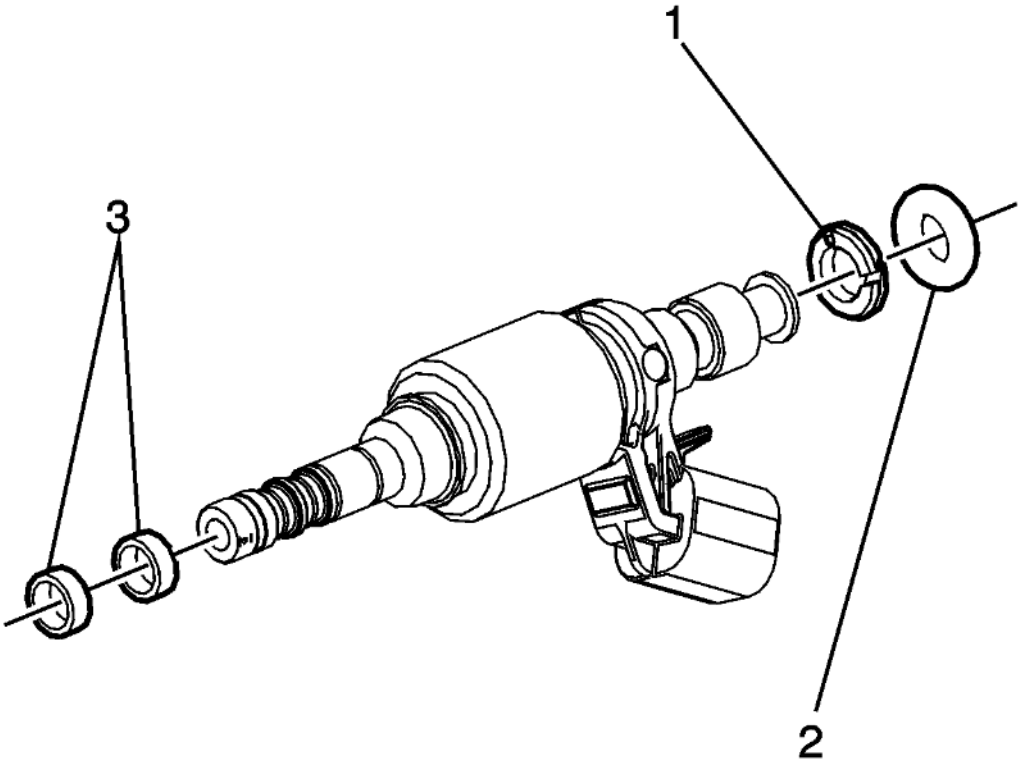

Fig. 160: Fuel Injector O-ring And Plastic Spacer
Courtesy of GENERAL MOTORS COMPANY

6. Remove and discard the fuel injector O-ring (2) and plastic spacer (1).
7. Remove and discard the fuel injector seals (3).

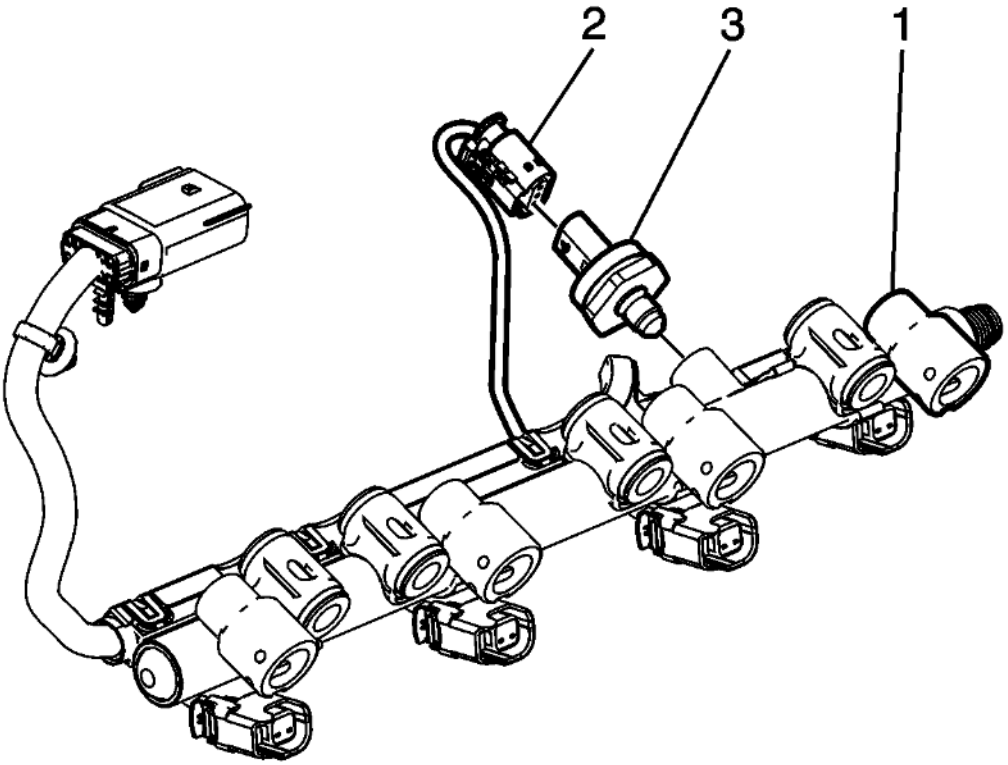

Fig. 161: Fuel Rail
Courtesy of GENERAL MOTORS COMPANY

NOTE: **Do not soak or submerge the fuel rail or injectors in solvent. Do not use solvent on the fuel rail label.**

8. Clean the exterior of the fuel rail (1) and injectors in solvent.
9. Using **EN-47909** cleaning kit , clean the fuel injector bores and sleeves.
10. Inspect the fuel rail and components for the following conditions:
    - Damage, debris, or restrictions to the fuel rail
    - Damage, debris, or restrictions to the fuel ports in the fuel rail
    - Damage to the mounting area for the fuel rail
    - Damage to the fuel rail mounting bolts
    - Damage to the threads on the fuel rail fuel feed fitting
11. Replace the fuel rail if any damage is found. Do not attempt to repair a fuel rail.

CAUTION: Refer to Fastener Caution .

NOTE: **Remove and inspect the fuel pressure sensor only if the sensor is suspect.**

12. Inspect the fuel pressure sensor (3) for damage.
    1. Disconnect the harness connector (2) from the fuel pressure sensor.
    2. Remove the fuel pressure sensor. Dry the fuel pressure sensor bore in the fuel rail with a lint free cloth. The bore should be free of fuel, debris, and burrs.
    3. Lubricate the fuel rail fuel pressure sensor bore with clean engine oil.
    4. Lubricate the threads and sealing area on the fuel pressure sensor with clean engine oil.
    5. Install the fuel pressure sensor hand tight.
    6. Remove the fuel pressure sensor and re-lubricate the bore, threads, and sealing area.
    7. Install the fuel pressure sensor and tighten to 33 N.m (25 lb ft).
    8. Connect the harness connector to the fuel pressure sensor.

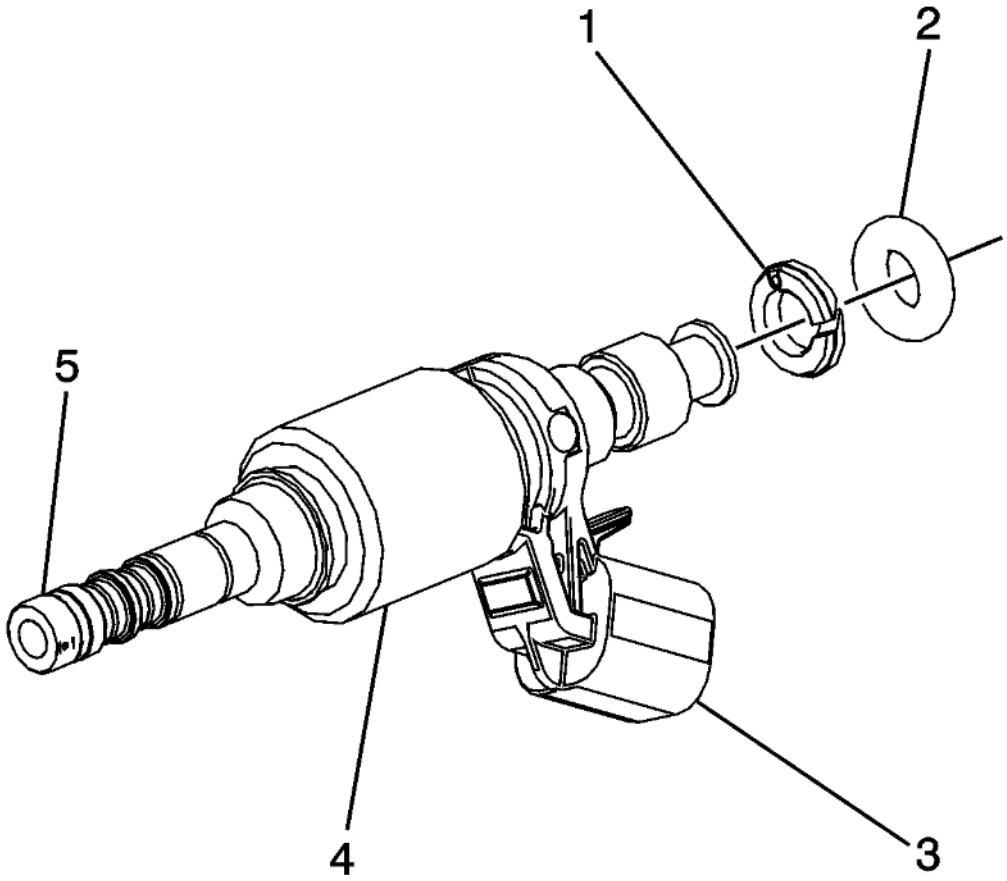

Fig. 162: Fuel Injector Connector
Courtesy of GENERAL MOTORS COMPANY

13. Inspect the fuel injectors for the following conditions:
    - Damage to the fuel injector connector (3)

- Damage to the fuel injector harness connector
- Damage to the fuel injector tip (5)
- Damage to the fuel injector (4)

14. Replace the fuel injector if any damage is found. Do not attempt to repair a fuel injector.
15. Install the a new fuel injector spacer (1).
16. Lubricate the new O-ring (2) with clean, silicone-free 5W30 engine oil.
17. Install the O-ring on the injector.

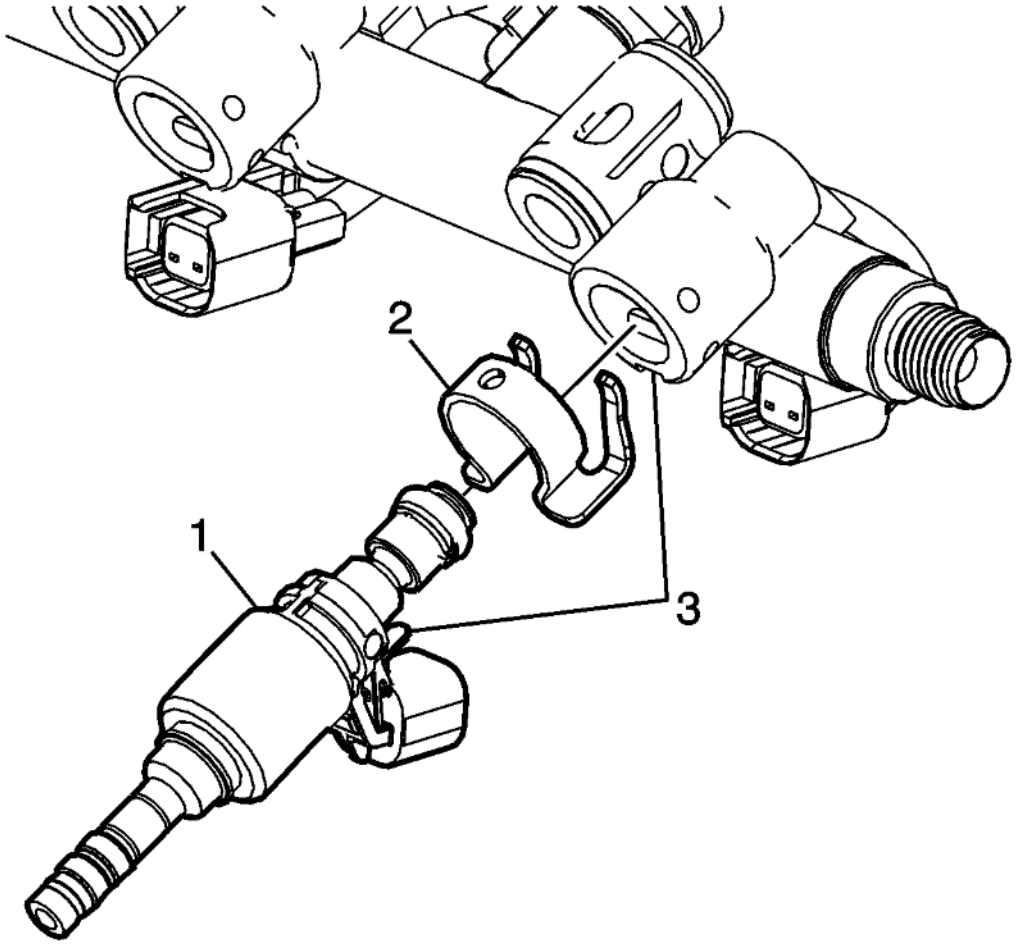

Fig. 163: Injectors And Fuel Rail Slot
Courtesy of GENERAL MOTORS COMPANY

18. Install the fuel injector holding clamp (2) onto the rear of the fuel injector.
19. Hand install fuel injectors (1) to the fuel rail, carefully aligning the fuel injector tab to the slot in the fuel rail (3).

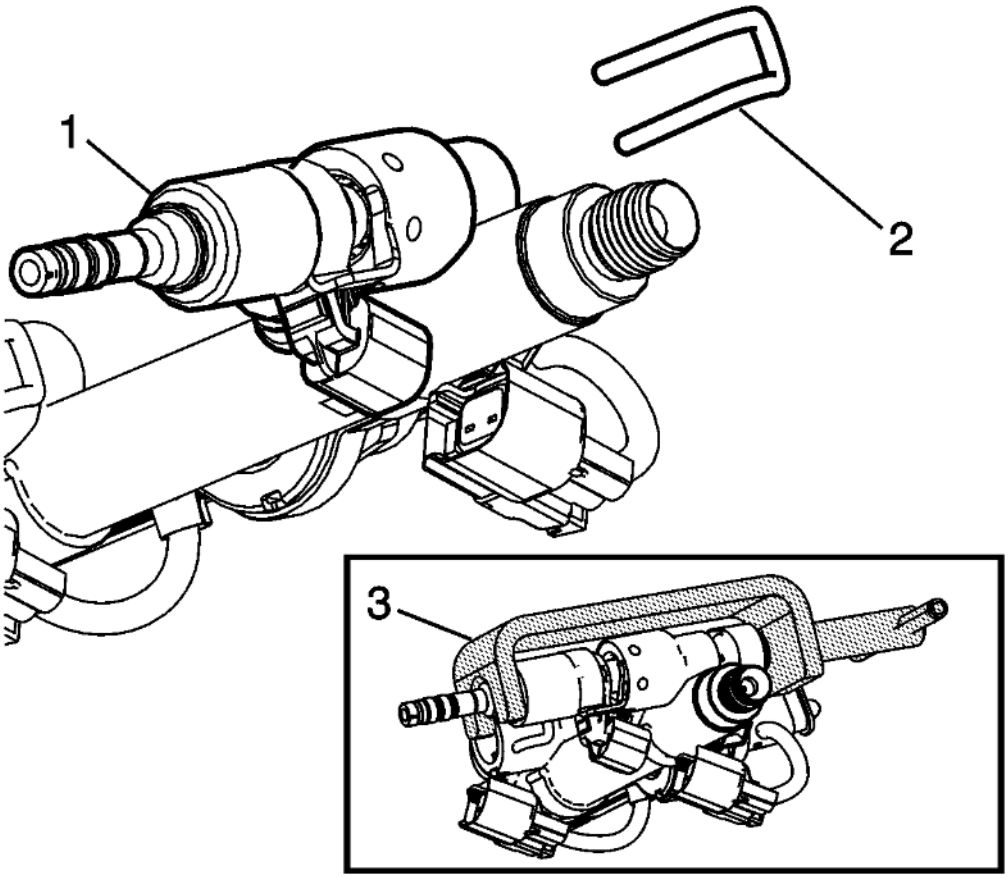

Fig. 164: Fuel Injector And Retaining Pin
Courtesy of GENERAL MOTORS COMPANY

NOTE: **The injector must be fully installed and properly aligned with the fuel rail before installing the retaining pin.**

20. Using **EN-50791** installer (3), compress the fuel injector (1) into the fuel rail.
21. Ensure the fuel injector is fully seated in the fuel rail, and install the fuel injector retaining pin (4).
22. Ensure the fuel injector retaining pin is fully seated in the fuel rail. Remove **EN-50791** installer. Repeat process until all fuel injectors are properly installed to the fuel rail.

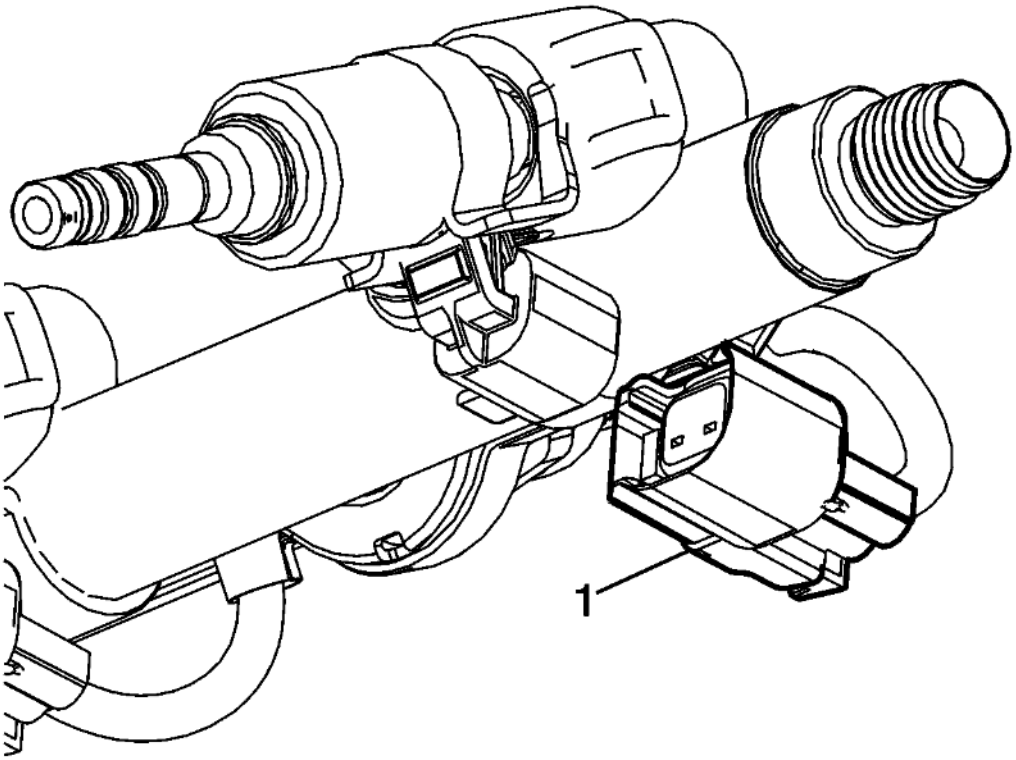

Fig. 165: Fuel Rail Harness Connectors
Courtesy of GENERAL MOTORS COMPANY

23. Connect the electrical connection to the fuel rail.
24. Connect the fuel rail harness connectors (1) to the fuel injectors.

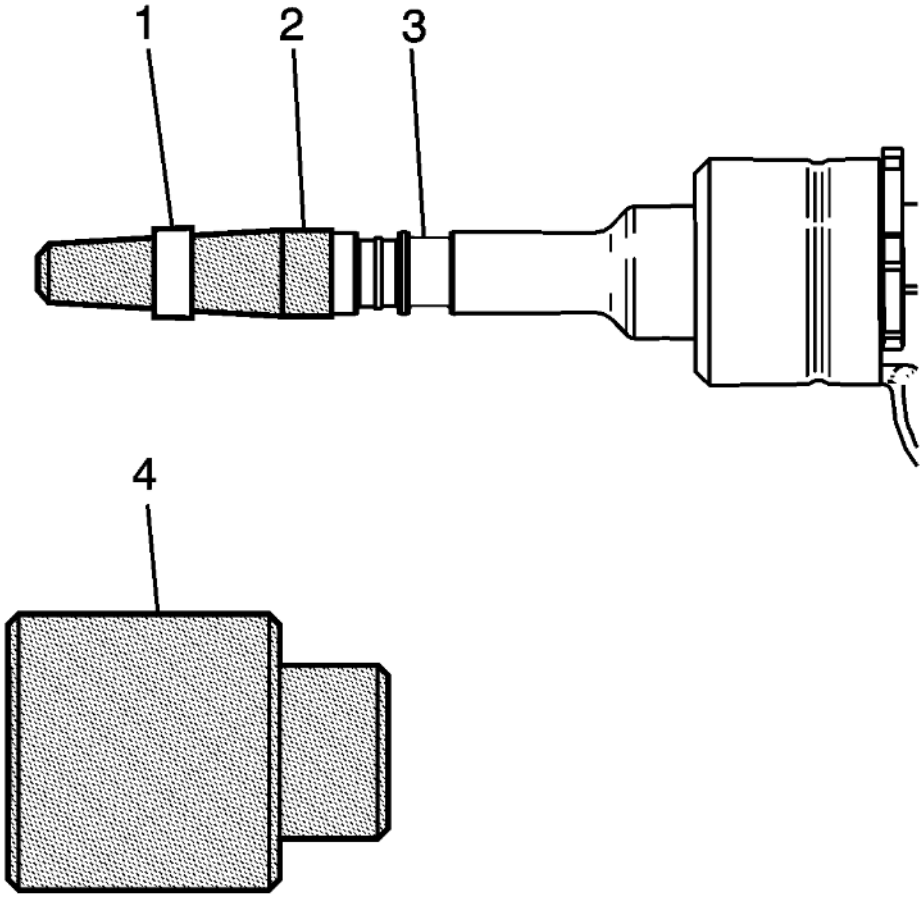

Fig. 166: Second Recessed Area And NEW Seal
Courtesy of GENERAL MOTORS COMPANY

NOTE: **Do not use any type of lubricant when installing the NEW seals on the fuel injector tip.**

25. Install **EN-48266** protector (2) onto the fuel injector tip. Place a NEW seal (1) on **EN-48266** protector.
26. Install a seal into the second recessed area (3) of the fuel injector.
27. Compress the seal with your fingers, then resize the seal using the **EN-48266** sizer (4).
28. Place a second NEW seal (1) on **EN-48266** protector.
29. Install the seal into the first recessed area of the fuel injector.
30. Compress the seal with your fingers, then resize the seal using the **EN-48266** sizer (4).

INTAKE MANIFOLD CLEANING AND INSPECTION

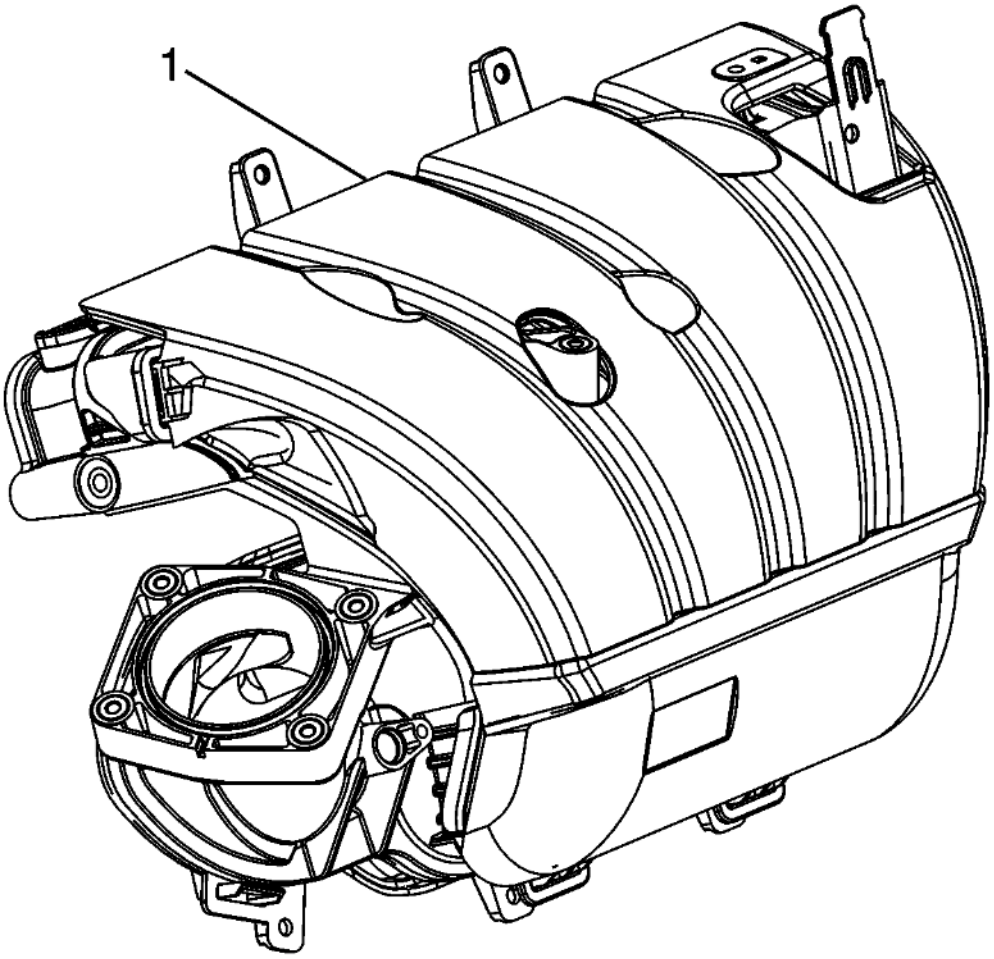

Fig. 167: Intake Manifold
Courtesy of GENERAL MOTORS COMPANY

1. Clean the intake manifold (1) mating surfaces.
2. Inspect the intake manifold for damage.
3. Inspect the intake manifold for cracks near metallic inserts.

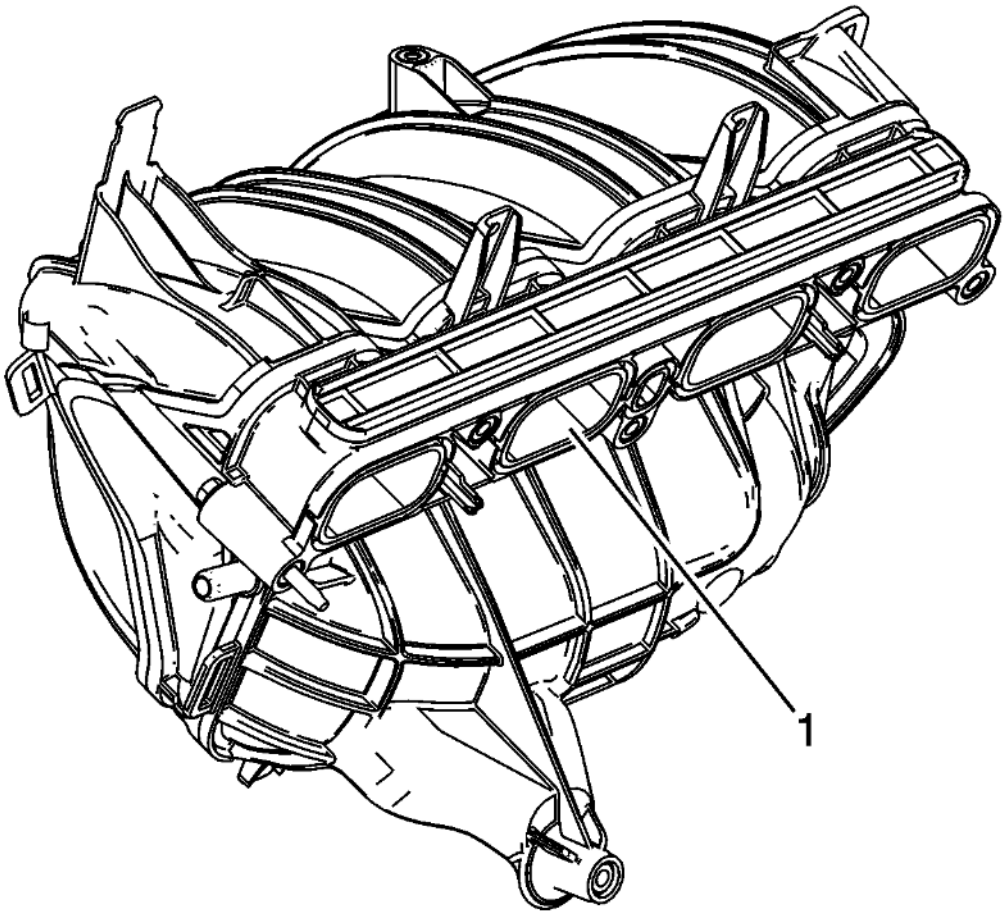

Fig. 168: Crankcase Ventilation Passages
Courtesy of GENERAL MOTORS COMPANY

4. Inspect the crankcase ventilation passages (1) in the intake manifold face for blockage.

WARNING: Refer to Safety Glasses Warning .

5. Clean the crankcase ventilation passages with compressed air if necessary. Use a maximum of 172 kPa (25 psi) of air pressure.
6. Replace the intake manifold as necessary.

EXHAUST MANIFOLD CLEANING AND INSPECTION

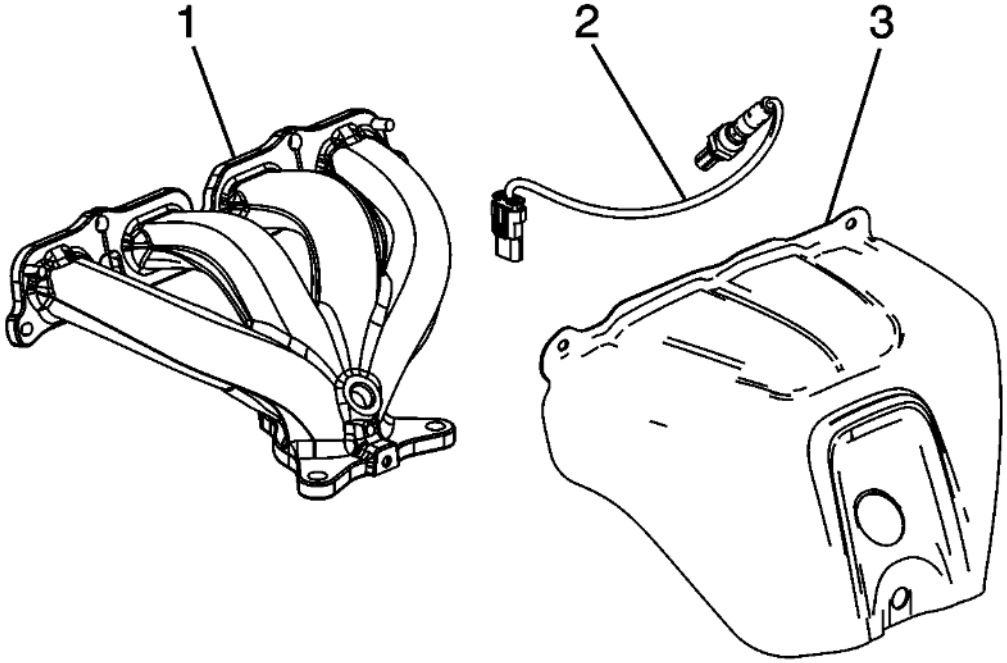

Fig. 169: Exhaust Manifold And Oxygen Sensor
Courtesy of GENERAL MOTORS COMPANY

NOTE:

- **Do not reuse the exhaust manifold-to-cylinder head gaskets. Upon installation of the exhaust manifold, install a NEW gasket. An improperly installed gasket or leaking exhaust system may effect On-Board Diagnostics (OBD) II system performance.**
- **Remove the oxygen sensor prior to cleaning the manifold. Do not submerge the oxygen sensor in cleaning solvent.**

1. Remove the oxygen sensor (2) from the manifold.
2. Clean the exhaust manifold (1) in solvent.

WARNING: Refer to Safety Glasses Warning .

3. Dry the exhaust manifold with compressed air.
4. Inspect the exhaust manifold (1) for damage.
5. Inspect the heat shield (3) for damage.

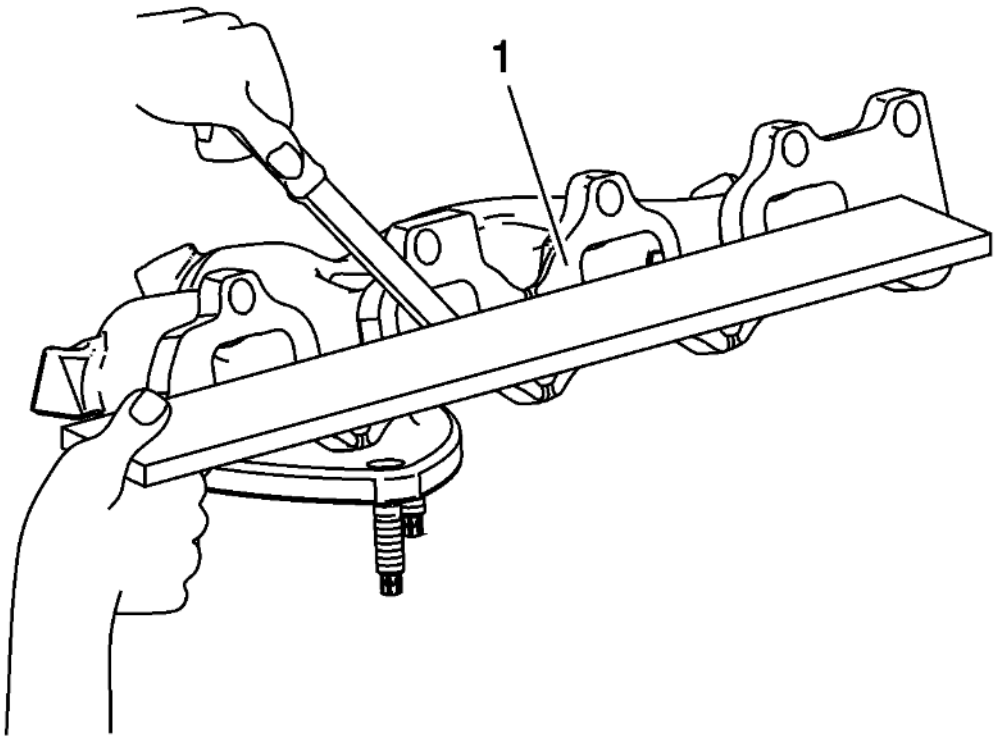

Fig. 170: Measuring Exhaust Manifold Mounting Face
Courtesy of GENERAL MOTORS COMPANY

6. Use a straight edge and a feeler gauge and measure the exhaust manifold mounting face (1) for warpage.

   An exhaust manifold face with warpage in excess of 0.25 mm (0.0100 in) may cause an exhaust leak and may effect OBD II system performance. Exhaust manifolds not within specifications must be replaced.

OIL PAN CLEANING AND INSPECTION

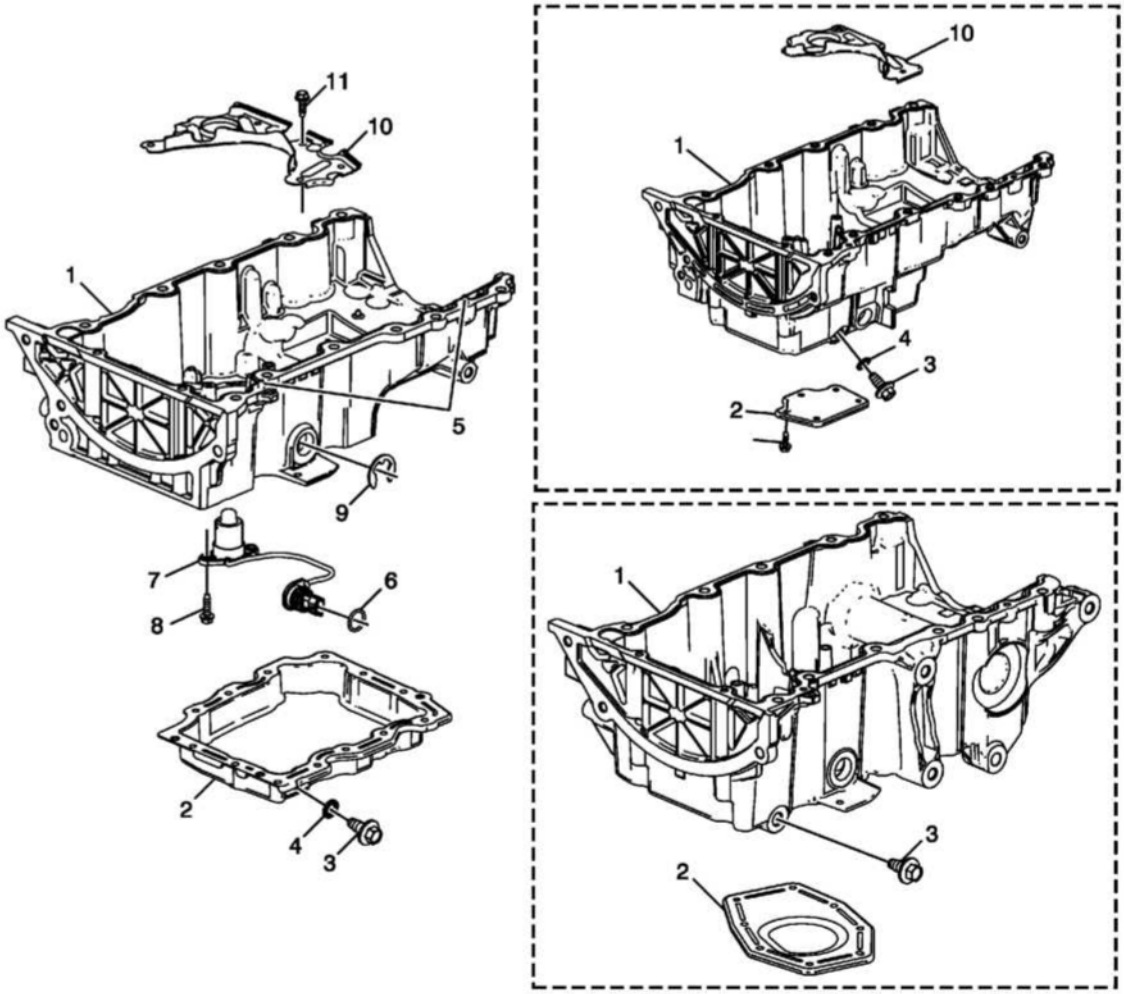

Fig. 171: Oil Pan Cleaning And Inspection
Courtesy of GENERAL MOTORS COMPANY

Oil Pan Cleaning and Inspection

Callout	Component Name
Preliminary Procedure 1. Thoroughly clean the oil pans and mating surfaces. Inspect each component, O-rings, and fasteners, and replace as necessary. 2. Remove all sludge and oil deposits. 3. Inspect the oil pan for cracking near the pan rail and the transmission mounting points. 4. Inspect the oil pan for cracking resulting from impact or flying road debris.	
1	Upper Oil Pan **NOTE:** **Component may vary depending on model.**
2	Lower Oil Pan **NOTE:** **Component may vary depending on model.**

3	Engine Oil Drain Plug
4	Engine Oil Drain Plug Washer
5	Oil Pan Locating Pins **NOTE:** **It is not necessary to remove the locating pins unless the inspection indicates replacement.**
6	Engine Oil Level Indicator Switch O-ring Seal
7	Engine Oil Level Indicator Switch
8	Engine Oil Level Indicator Switch Bolt **CAUTION:** **Refer to Fastener Caution .** **Tighten** 10 N.m (89 lb in)
9	Engine Oil Level Indicator Switch Connector Retainer
10	Oil Pan Baffle
11	Oil Pan Baffle Bolt **Tighten** 10 N.m (89 lb in)

THREAD REPAIR

Special Tools

- **EN 42385-700** High Feature Thread Repair Kit
- **EN 42385-850** Thread Repair Kit
- **EN 42385-880** Head Bolt Thread Repair Adapter Kit

For equivalent regional tools, refer to **Special Tools** .

General Thread Repair

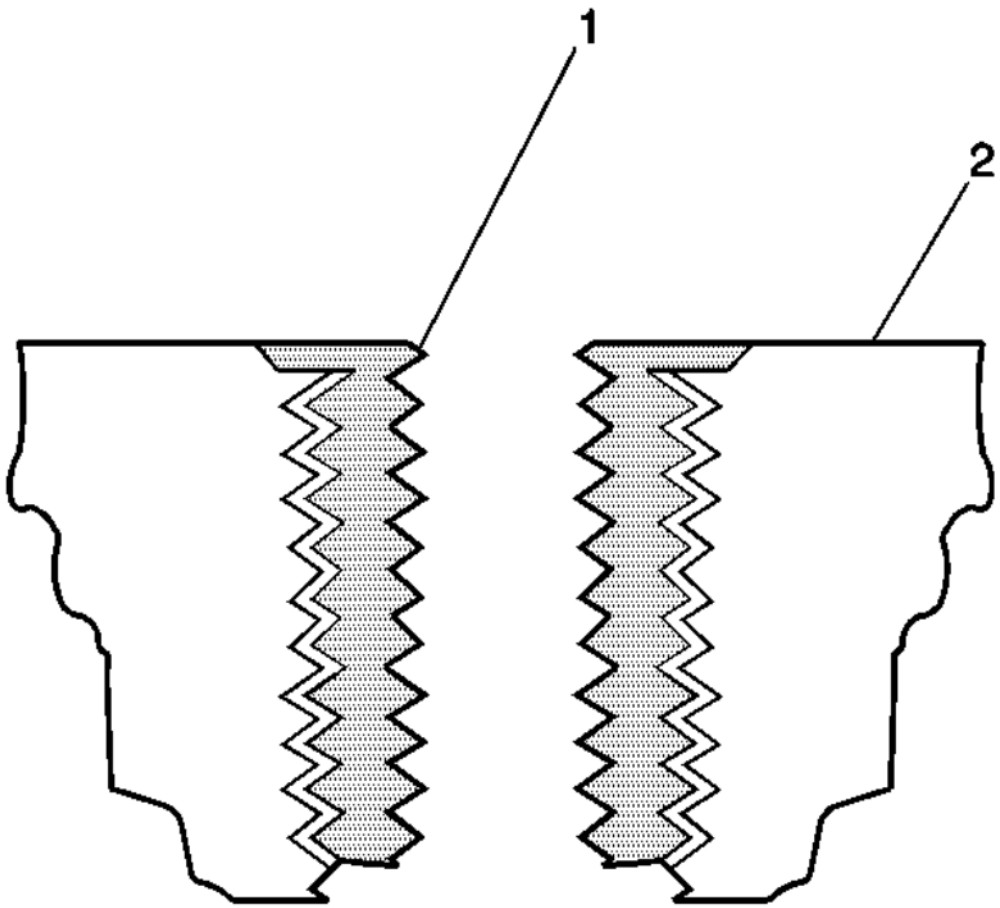

Fig. 172: View Of Bushing Type Insert & Base Material
Courtesy of GENERAL MOTORS COMPANY

The thread repair process involves a solid, thin walled, self-locking, carbon steel, bushing type insert (1). During the bushing installation process, the driver tool expands the bottom external threads of the insert into the base material (2). This action mechanically locks the insert in place. Also, when installed to the proper depth, the flange of the insert will be seated against the counterbore of the repaired hole.

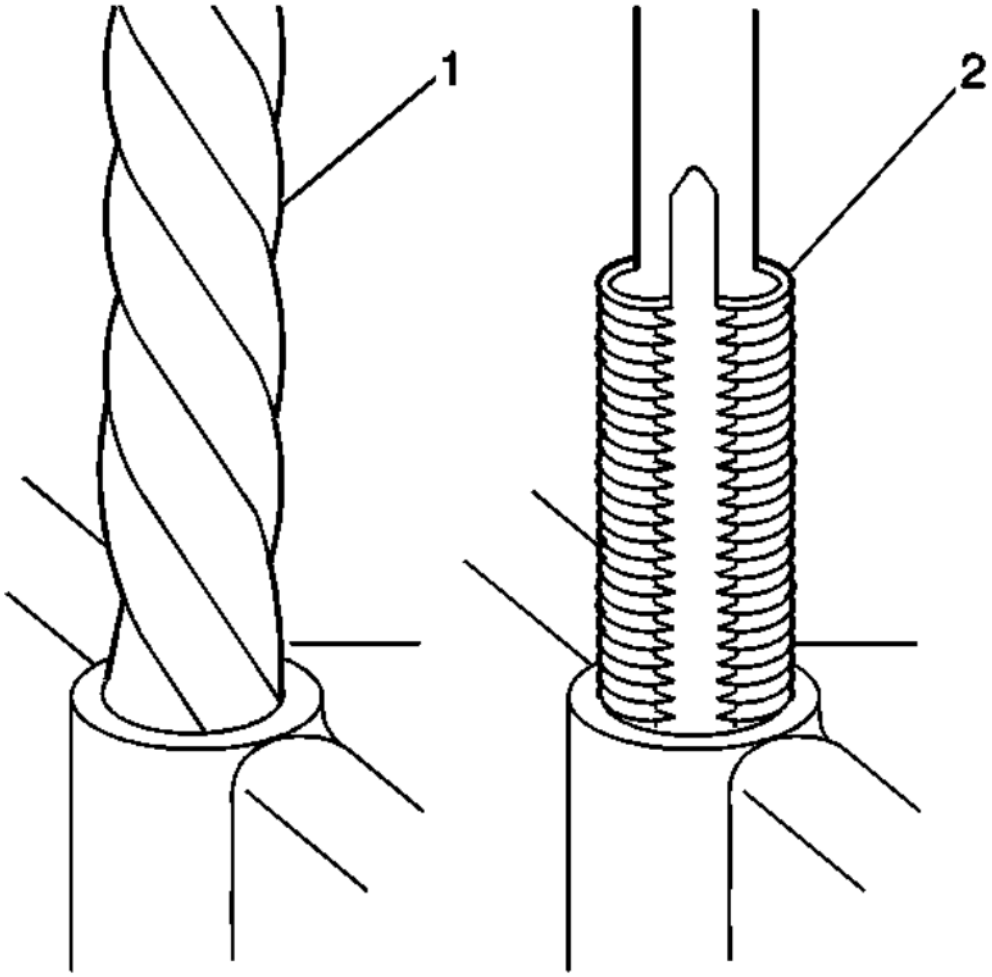

Fig. 173: Drilling & Tapping Threads
Courtesy of GENERAL MOTORS COMPANY

NOTE: **The use of a cutting fluid, WD 40®, or equivalent, is recommended when performing the drilling, counterboring, and tapping procedures. Refer to Adhesives, Fluids, Lubricants, and Sealers .**

Driver oil MUST be used on the installer driver tool.

The tool kits are designed for use with either a suitable tap wrench or drill motor.

1. Drill out the threads of the damaged hole (1).
   - M6 inserts require a minimum drill depth of 15 mm (0.59 in).
   - M8 inserts require a minimum drill depth of 20 mm (0.79 in).
   - M10 inserts require a minimum drill depth of 23.5 mm (0.93 in).

WARNING: Refer to Safety Glasses and Compressed Air Warning .

2. Using compressed air, clean out any chips.

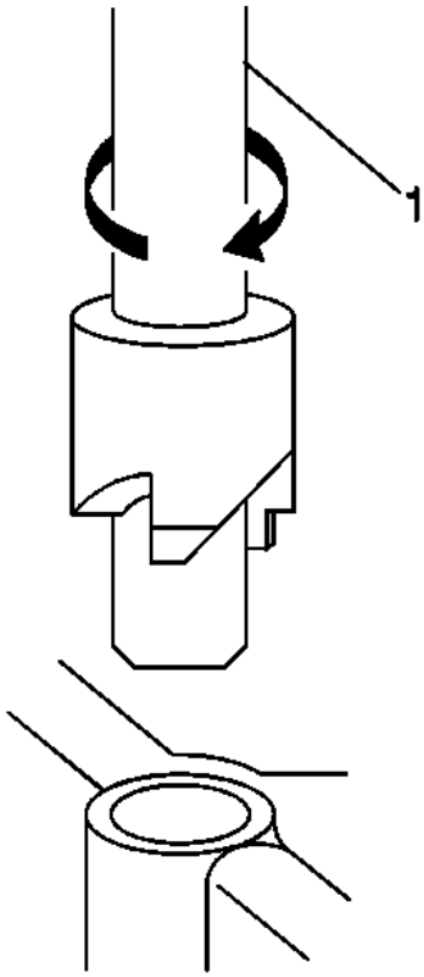

Fig. 174: Identifying Tool Used To Counterbore The Hole
Courtesy of GENERAL MOTORS COMPANY

3. Counterbore the hole to the full depth permitted by the tool (1).
4. Using compressed air, clean out any chips.

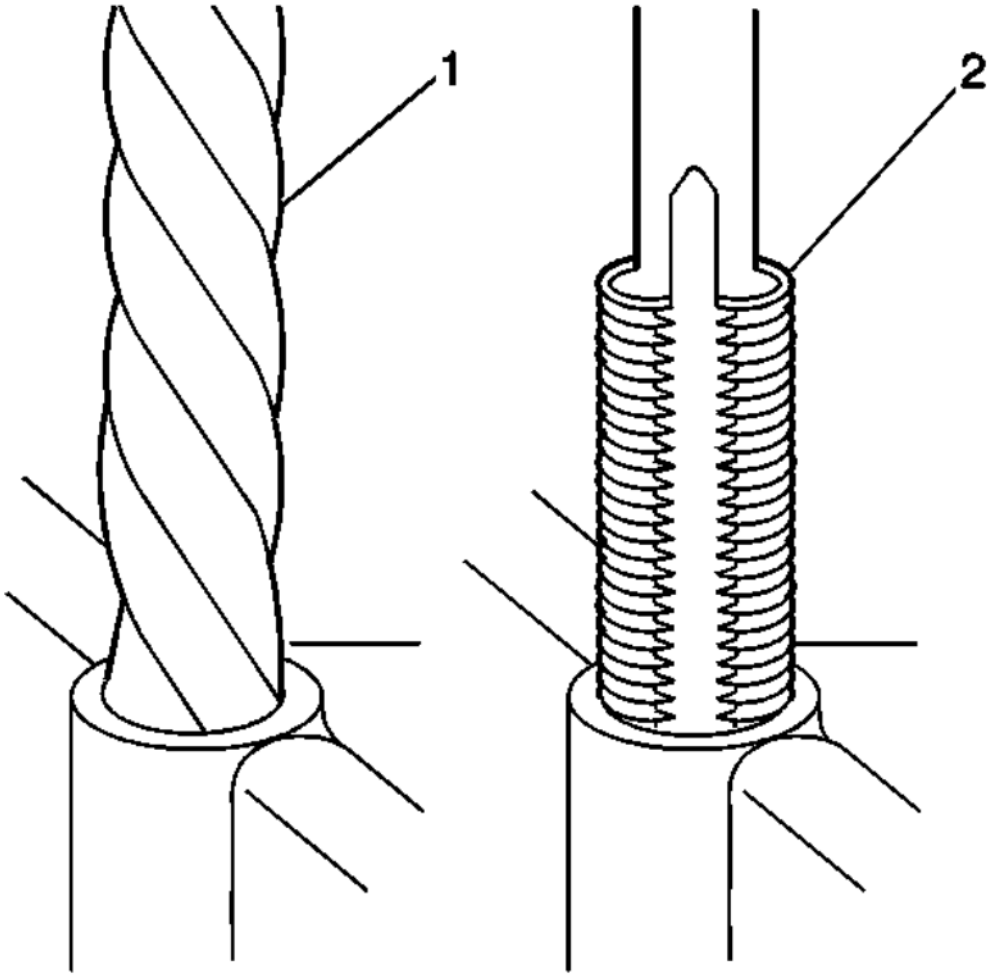

Fig. 175: Drilling & Tapping Threads
Courtesy of GENERAL MOTORS COMPANY

5. Using a tap wrench (2), tap the threads of the drilled hole.
   - M6 inserts require a minimum tap depth of 15 mm (0.59 in).
   - M8 inserts require a minimum tap depth of 20 mm (0.79 in).
   - M10 inserts require a minimum tap depth of 23.5 mm (0.93 in).

WARNING: Refer to Safety Glasses and Compressed Air Warning .

WARNING: Refer to Cleaning Solvent Warning .

6. Using compressed air, clean out any chips.
7. Spray cleaner into the hole. Refer to **Adhesives, Fluids, Lubricants, and Sealers** .
8. Using compressed air, clean any cutting oil and chips out of the hole.

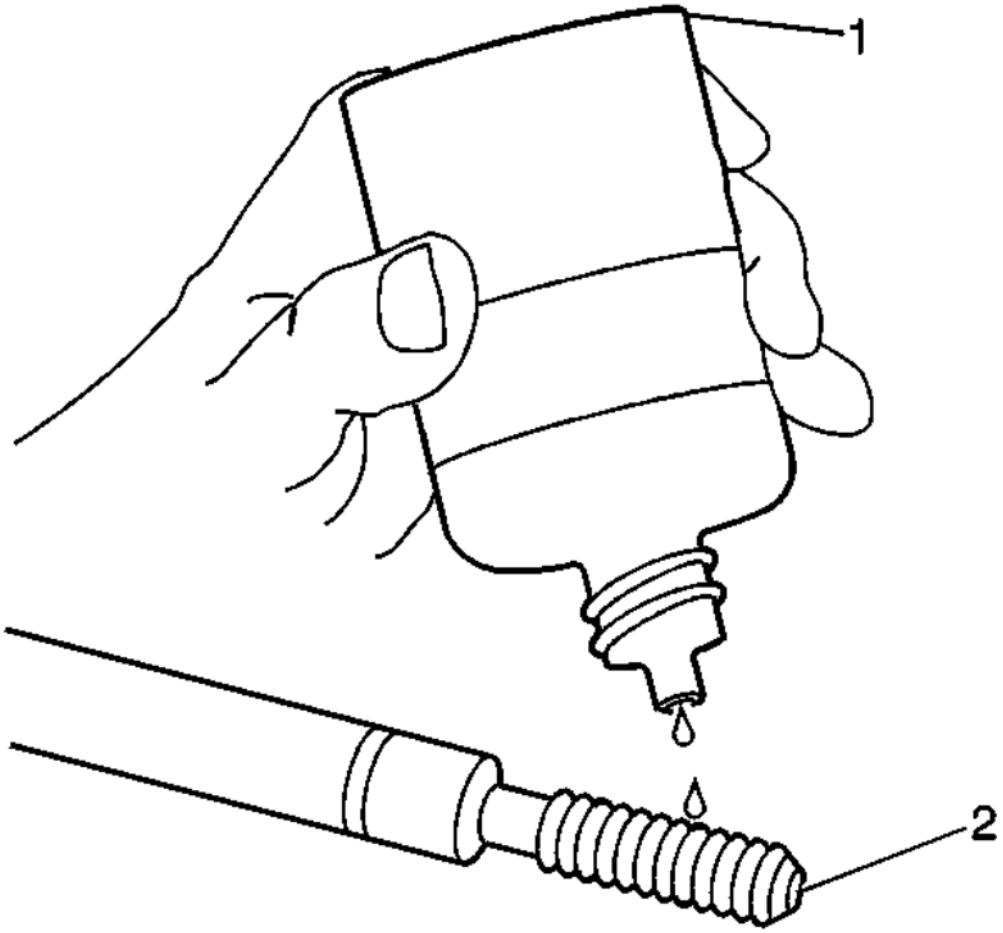

Fig. 176: Lubricating Installer Tool Using Driver Oil
Courtesy of GENERAL MOTORS COMPANY

NOTE: **Do not allow oil or other foreign material to contact the outside diameter (OD) of the insert.**

9. Lubricate the threads of the installer tool (2) with the driver oil (1).

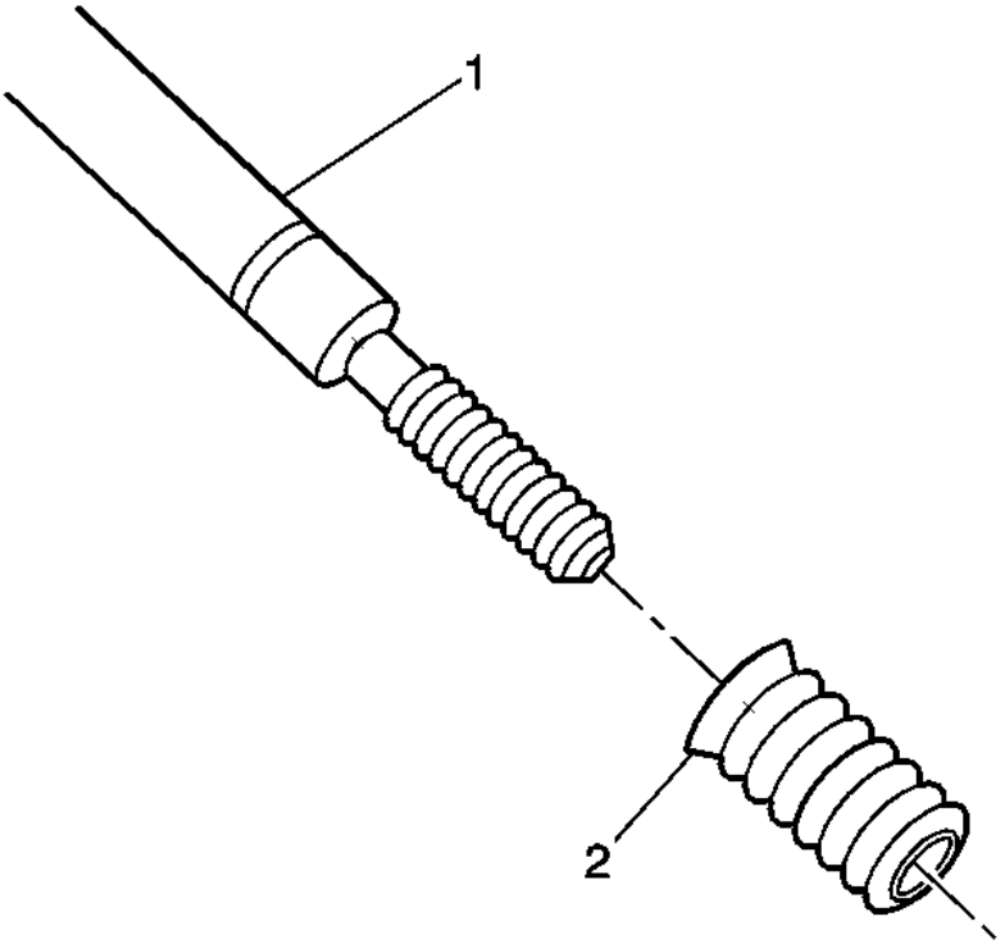

Fig. 177: View of Bushing Type Insert
Courtesy of GENERAL MOTORS COMPANY

10. Install the insert (2) onto the driver tool (1).

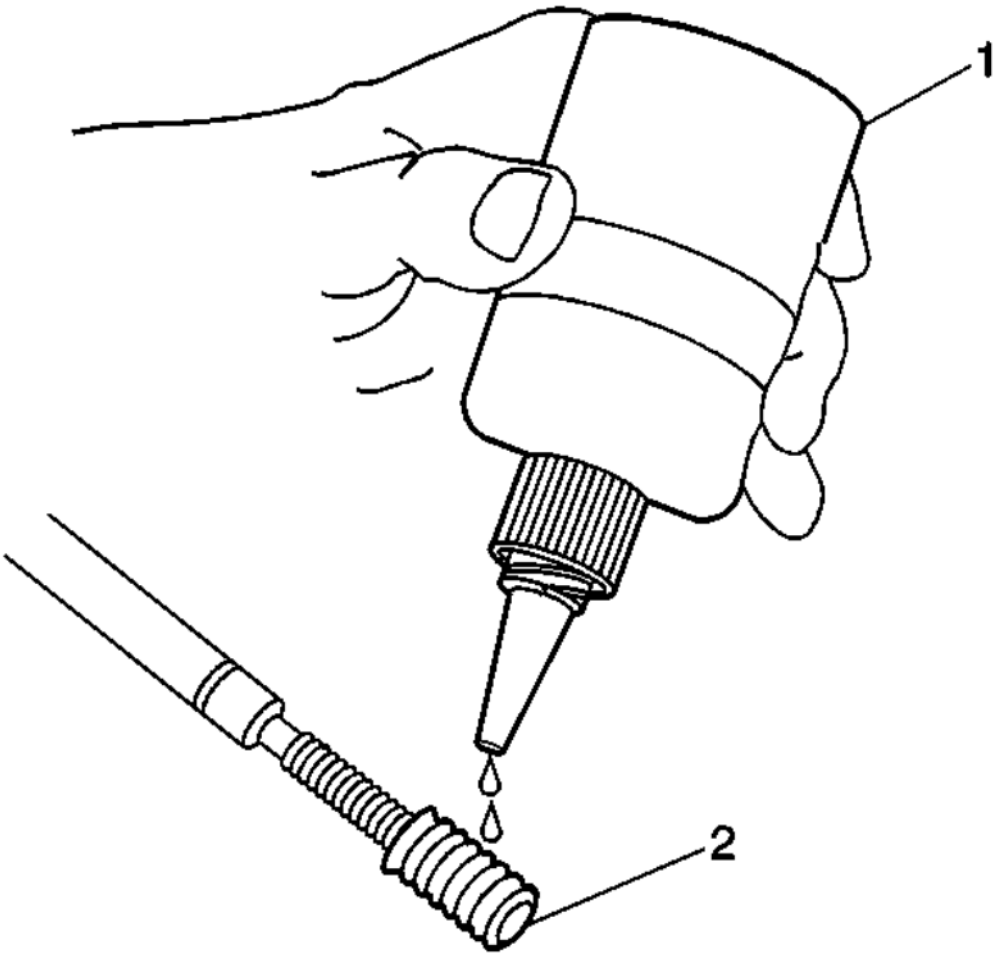

Fig. 178: Applying Threadlock To Insert
Courtesy of GENERAL MOTORS COMPANY

11. Apply threadlock LOCTITE™ 277, **EN 42385-109 (1)** loctite , or equivalent to the insert OD threads (2).

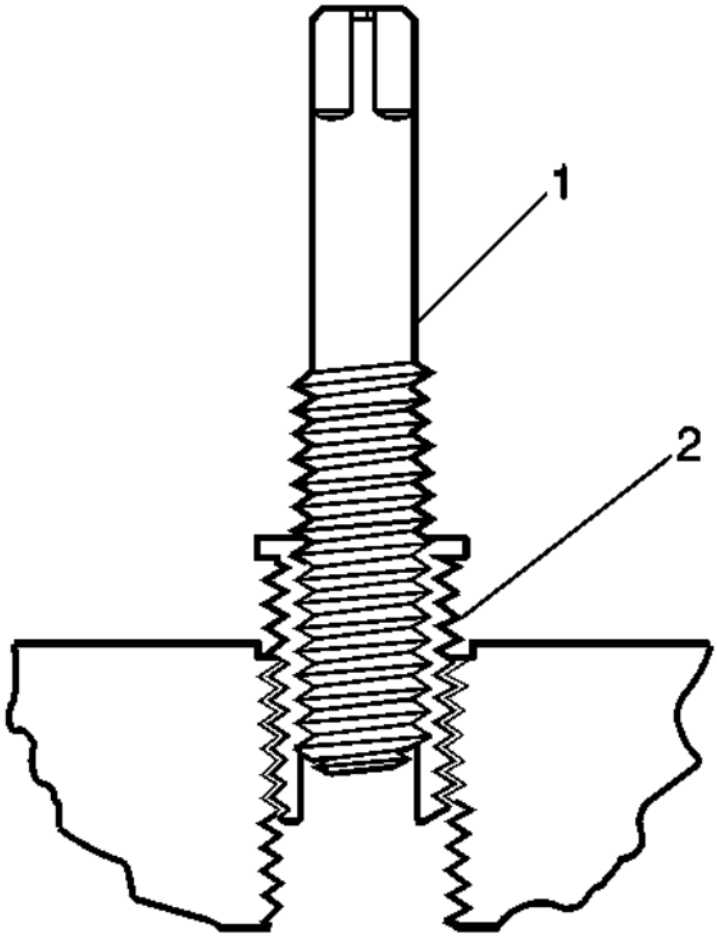

Fig. 179: View Of Insert In Tapped Bolt Hole
Courtesy of GENERAL MOTORS COMPANY

12. Install the insert (2) into the hole.

    Install the insert until the flange of the insert contacts the counterbored surface. Continue to rotate the installer tool (1) through the insert.

    The installer tool will tighten up before screwing completely through the insert. This is acceptable. You are forming the bottom threads of the insert and mechanically locking the insert to the base material threads.

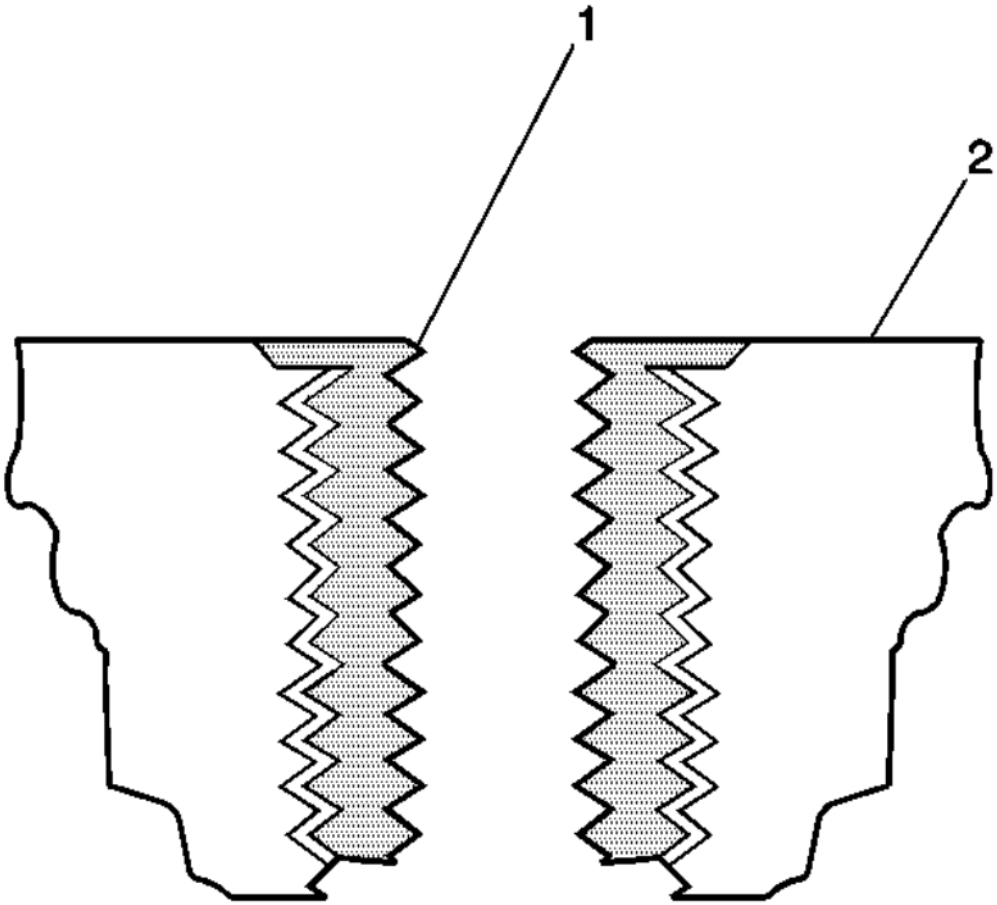

Fig. 180: View Of Bushing Type Insert & Base Material
Courtesy of GENERAL MOTORS COMPANY

13. Inspect the insert for proper installation into the hole.

    A properly installed insert (1) will be either flush or slightly below flush with the surface of the base material (2).

Cylinder Head Bolt Hole Thread Repair

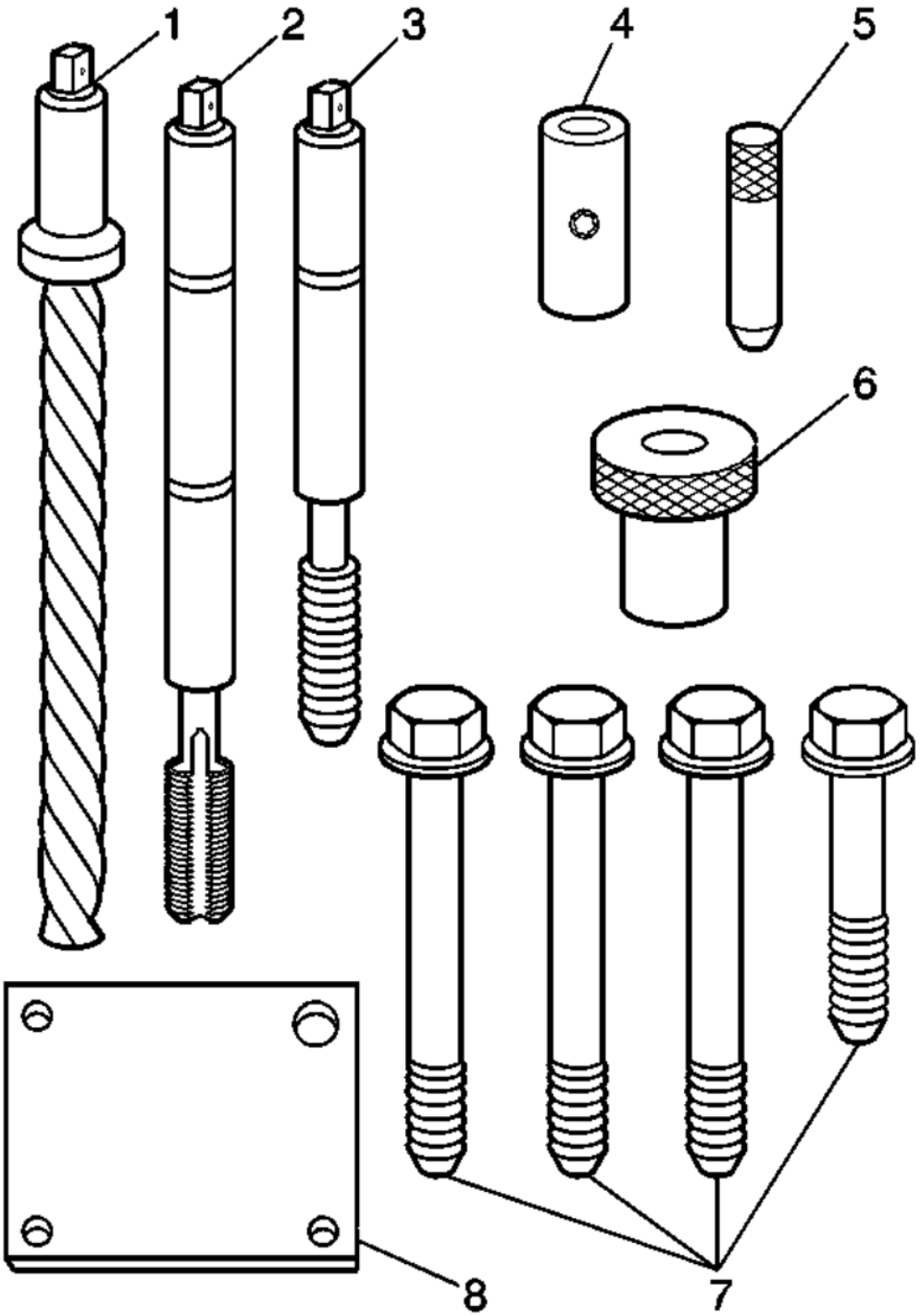

Fig. 181: Identifying Thread Repair Kit Components
Courtesy of GENERAL MOTORS COMPANY

NOTE: **The tools listed may not necessarily represent the exact tools used for the procedure.**

1. The cylinder head bolt hole thread repair kit consists of the following items:
   - Drill (1)
   - Tap (2)
   - Installer (3)
   - Sleeve (4)
   - Alignment Pin (5)
   - Bushing (6)
   - Bolts (7)
   - Fixture Plate (8)

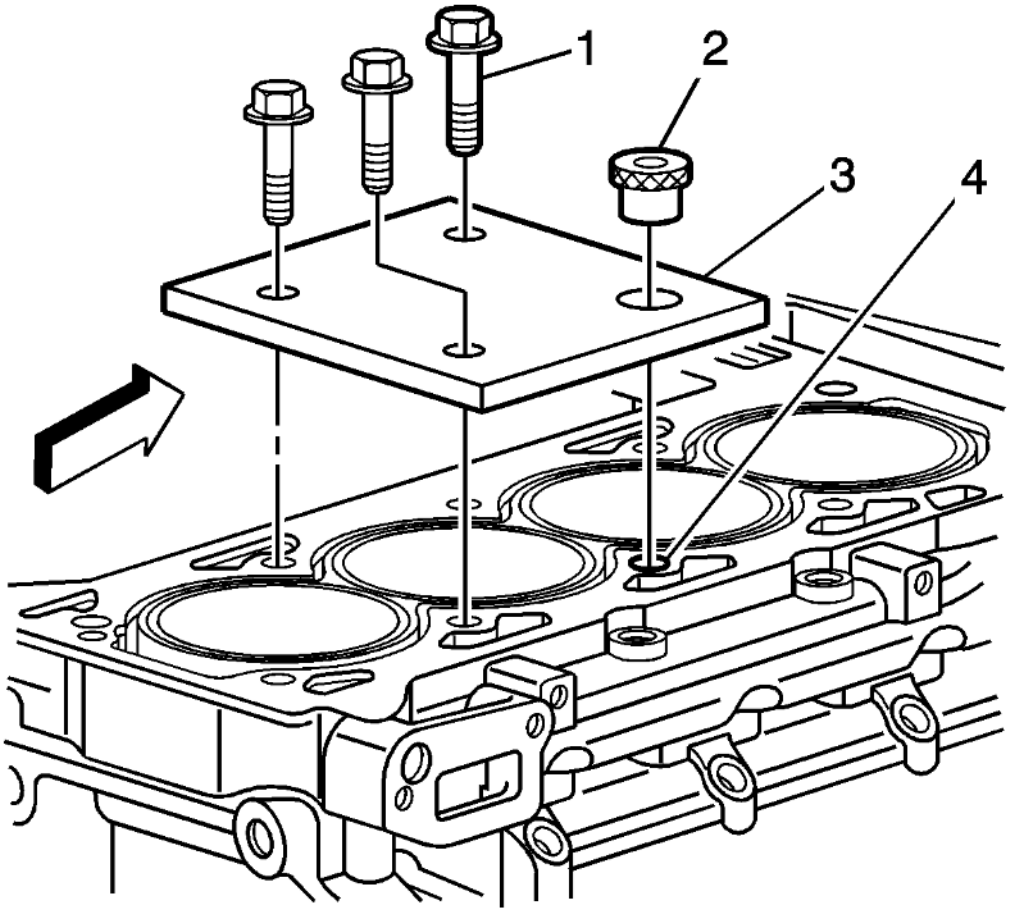

Fig. 182: Installing Fixture Plate, Bolts, & Bushing
Courtesy of GENERAL MOTORS COMPANY

WARNING: Refer to Safety Glasses and Compressed Air Warning .

NOTE: The use of a cutting fluid, WD 40®, or equivalent, is recommended when performing the drilling and tapping procedures. Refer to Adhesives, Fluids, Lubricants, and Sealers .

Driver oil MUST be used on the installer driver tool.

The tool kits are designed for use with either a suitable tap wrench or drill motor.

2. Install the fixture plate (3), bolts (1), and bushing (2) onto the engine block deck.

   Position the fixture plate and bushing over the hole that is to be repaired (4).

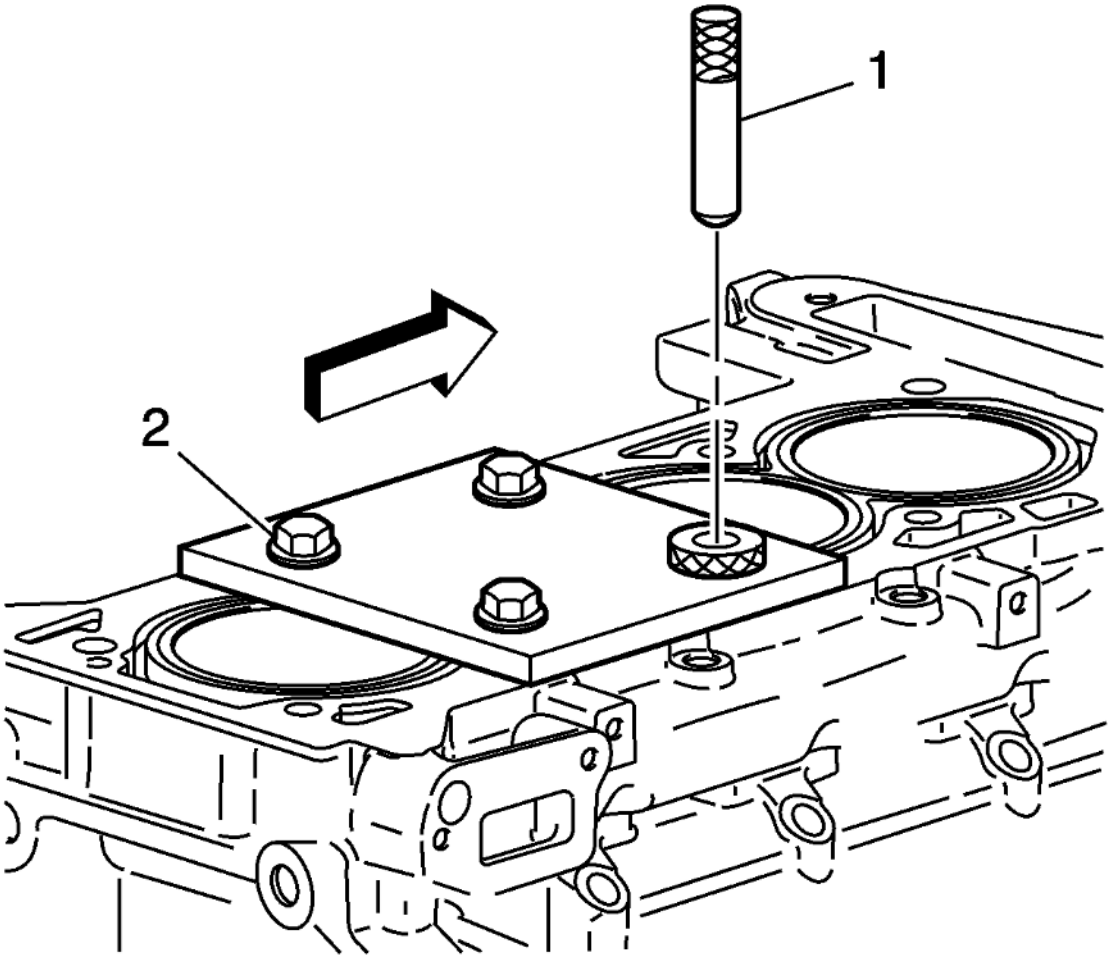

Fig. 183: Identifying Alignment Pin
Courtesy of GENERAL MOTORS COMPANY

3. Position the alignment pin (1) through the bushing and into the hole.
4. With the alignment pin in the desired hole, tighten the fixture retaining bolts (2).
5. Remove the alignment pin from the hole.

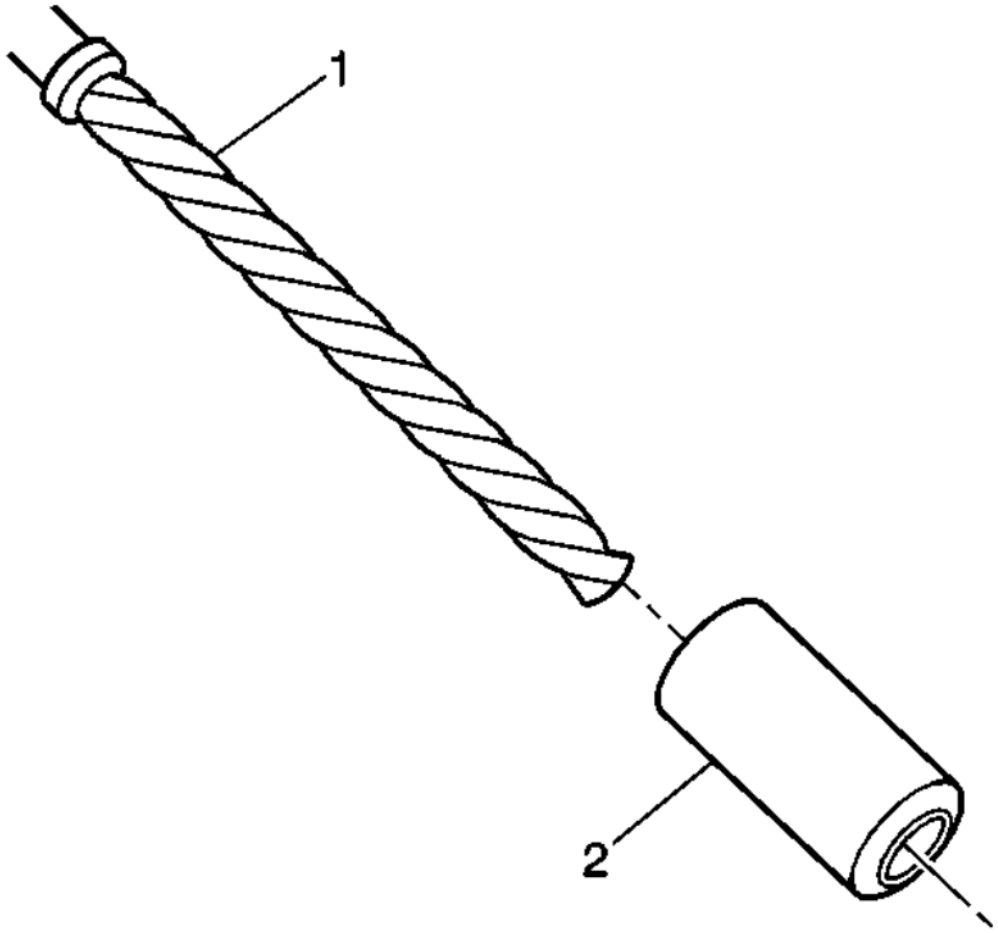

Fig. 184: View Of Stop Collar & Counterbore Drill
Courtesy of GENERAL MOTORS COMPANY

6. Install the sleeve (2) onto the drill (1), if required.

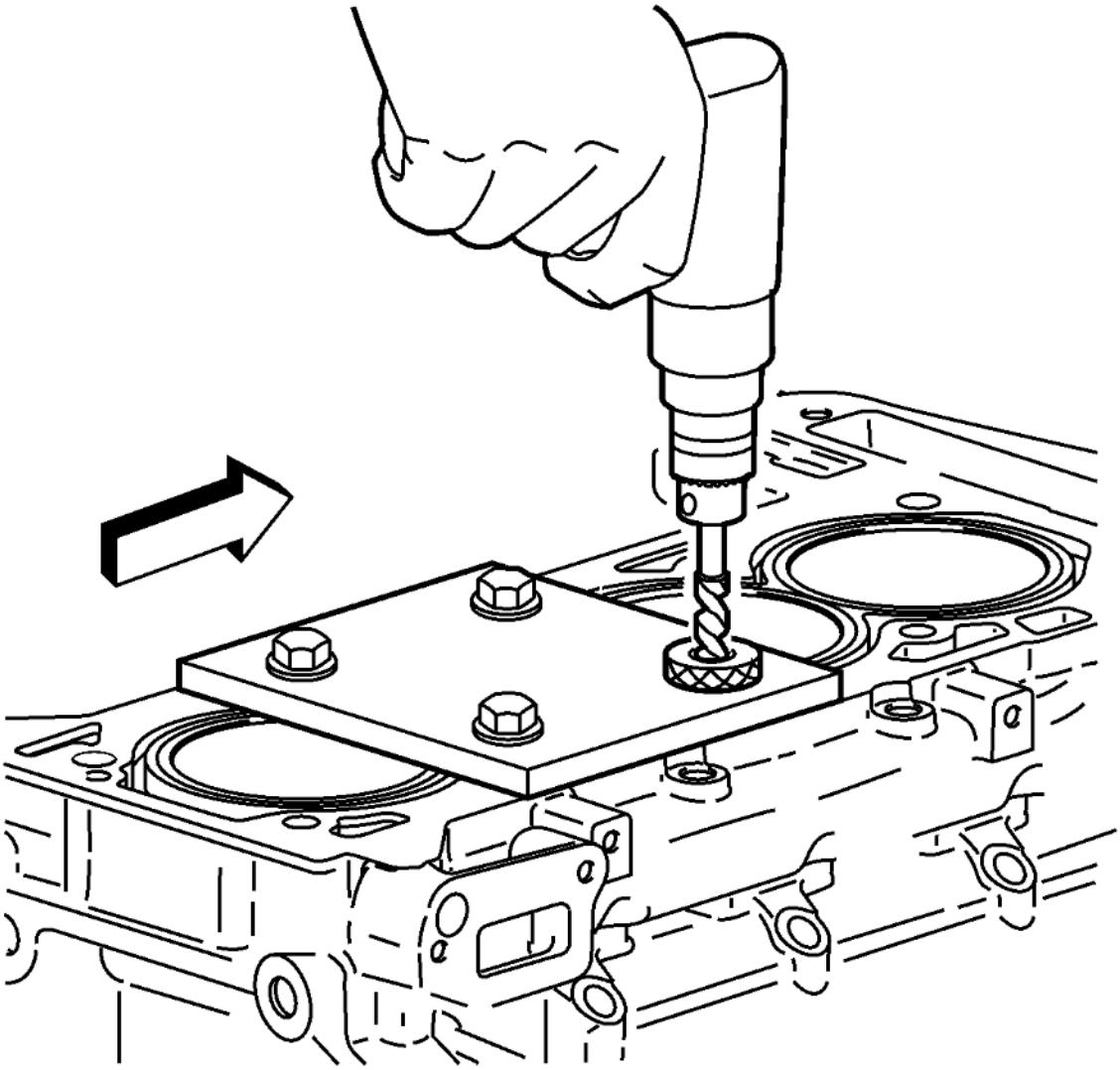

Fig. 185: Drilling Out Threads Of Damaged Hole
Courtesy of GENERAL MOTORS COMPANY

NOTE: **During the reaming process, it is necessary to repeatedly remove the drill and clean the chips from the hole.**

7. Drill out the threads of the damaged hole.

   Drill the hole until the stop collar of the drill bit or the sleeve contacts the bushing.

   WARNING: Refer to Safety Glasses and Compressed Air Warning .

8. Using compressed air, clean out any chips.

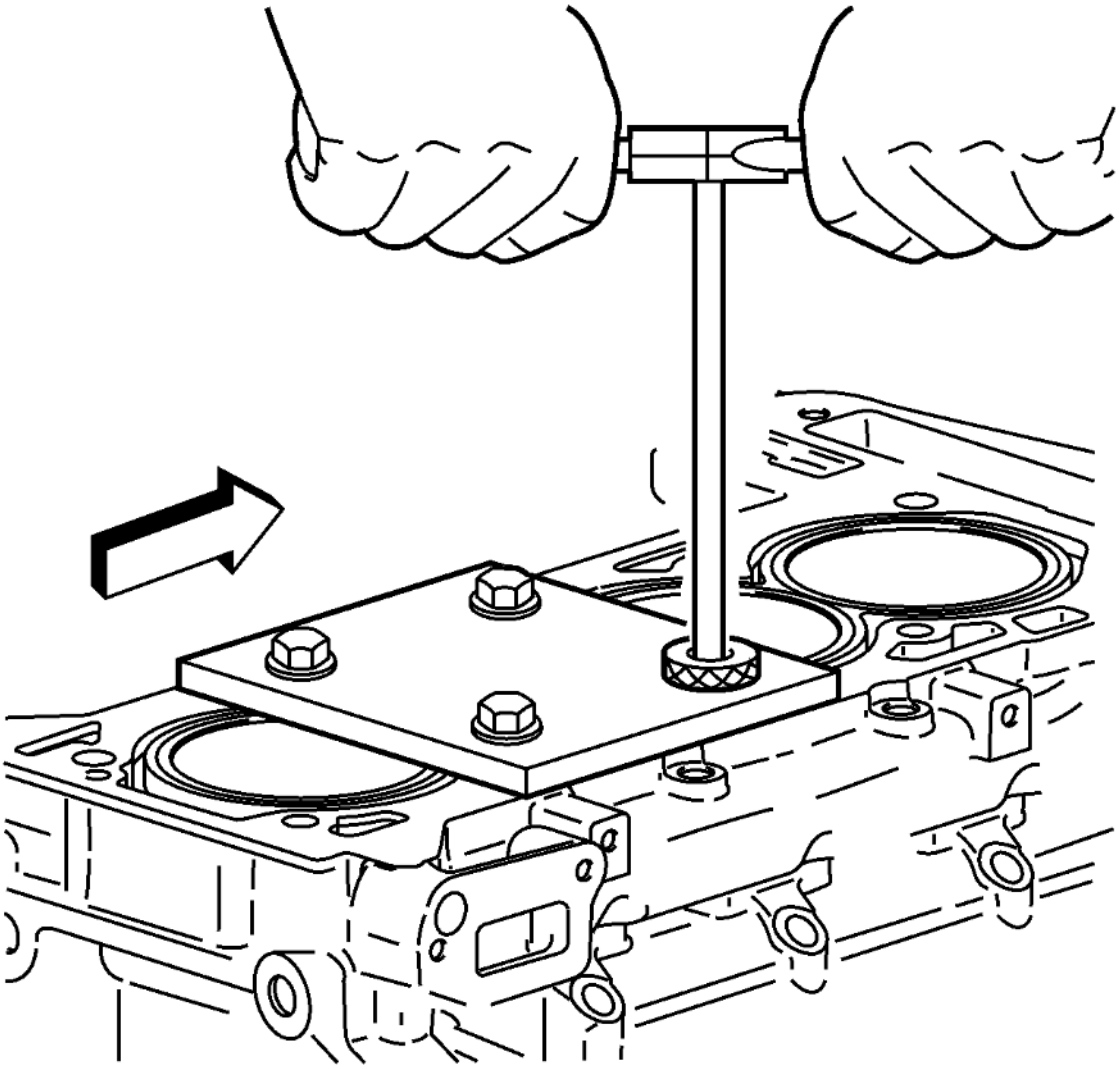

Fig. 186: Tapping Threads Of Drilled Hole With Tap Wrench
Courtesy of GENERAL MOTORS COMPANY

9. Using a tap wrench, tap the threads of the drilled hole.

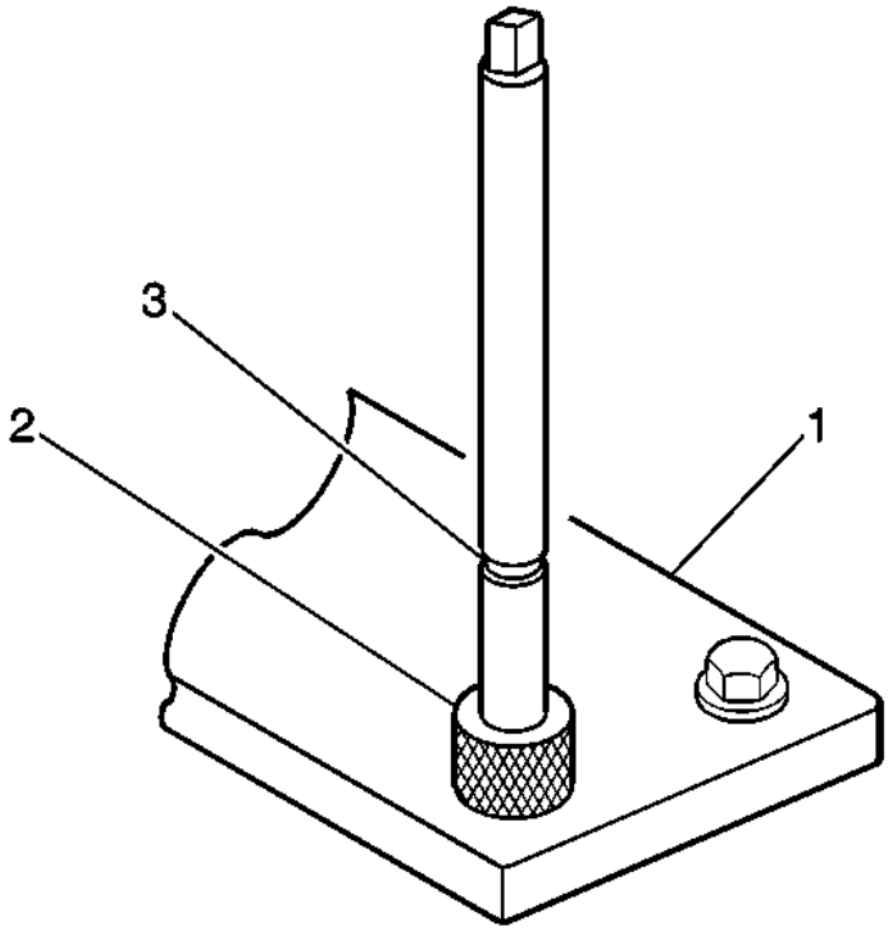

Fig. 187: View Of Fixture Plate, Drill Bushing & Tool Marking
Courtesy of GENERAL MOTORS COMPANY

10. Using a TAP wrench, tap the threads of the drilled hole.

    In order to tap the new threads to the proper depth, rotate the tap into the hole until the mark (3) on the tap align with the top of the drill bushing (2).

11. Remove the fixture plate (1), bushing (2), and bolts.

    WARNING: Refer to Safety Glasses and Compressed Air Warning .

    WARNING: Refer to Cleaning Solvent Warning .

12. Using compressed air, clean out any chips.
13. Spray cleaner into the hole. Refer to **Adhesives, Fluids, Lubricants, and Sealers** .
14. Using compressed air, clean any cutting oil and chips out of the hole.

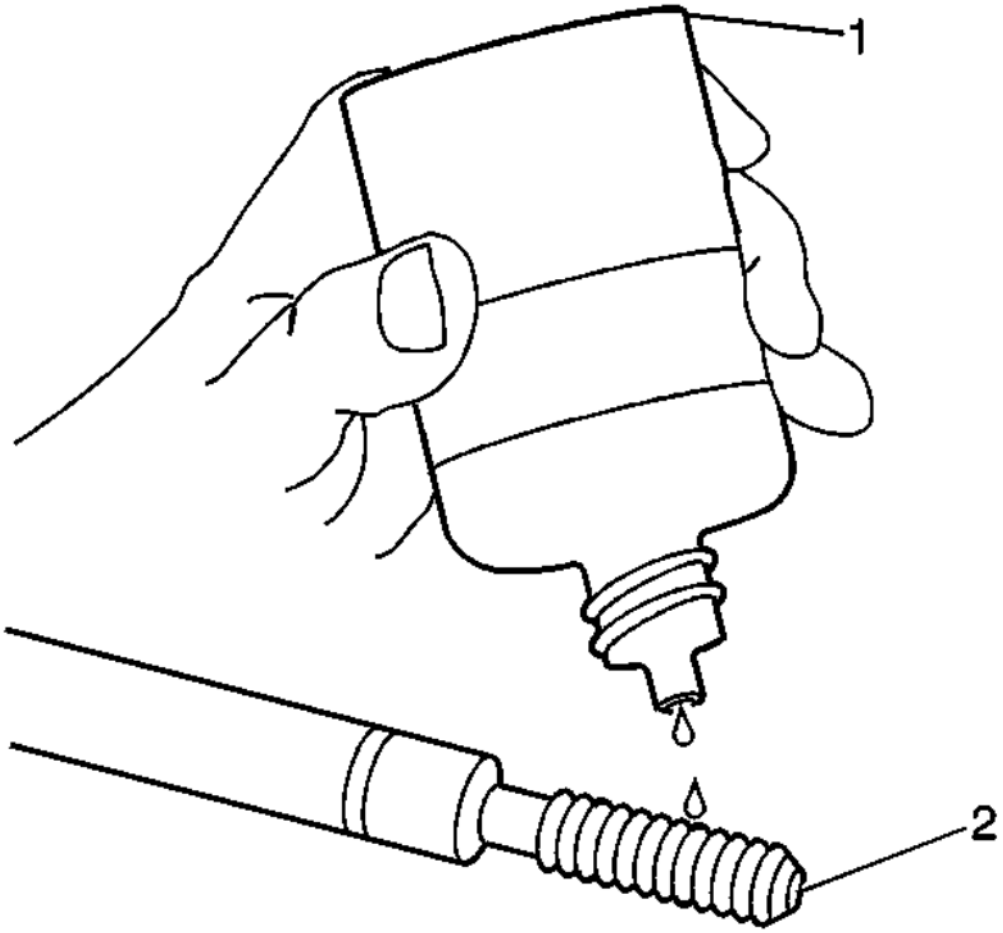

Fig. 188: Lubricating Installer Tool Using Driver Oil
Courtesy of GENERAL MOTORS COMPANY

NOTE: **Do not allow oil or other foreign material to contact the outside diameter (OD) of the insert.**

15. Lubricate the threads of the installer tool (2) with the driver oil (1).

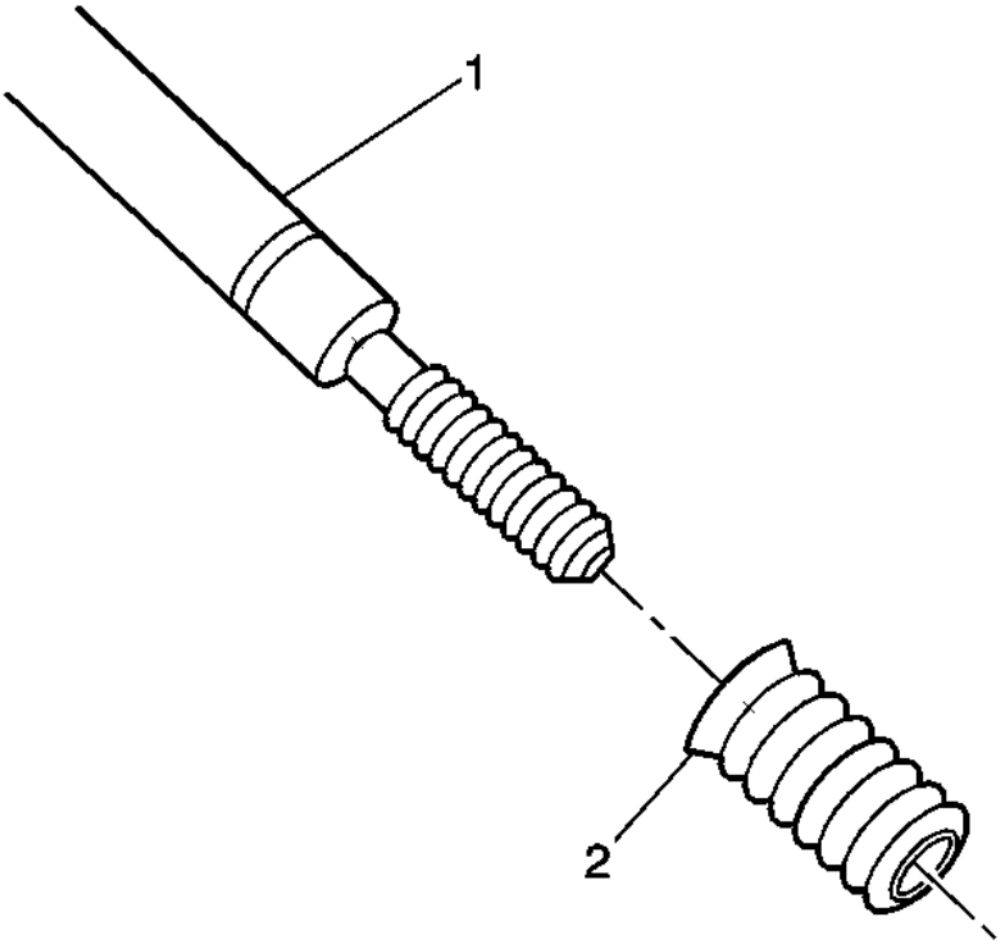

Fig. 189: View of Bushing Type Insert
Courtesy of GENERAL MOTORS COMPANY

16. Install the insert (2) onto the driver tool (1).

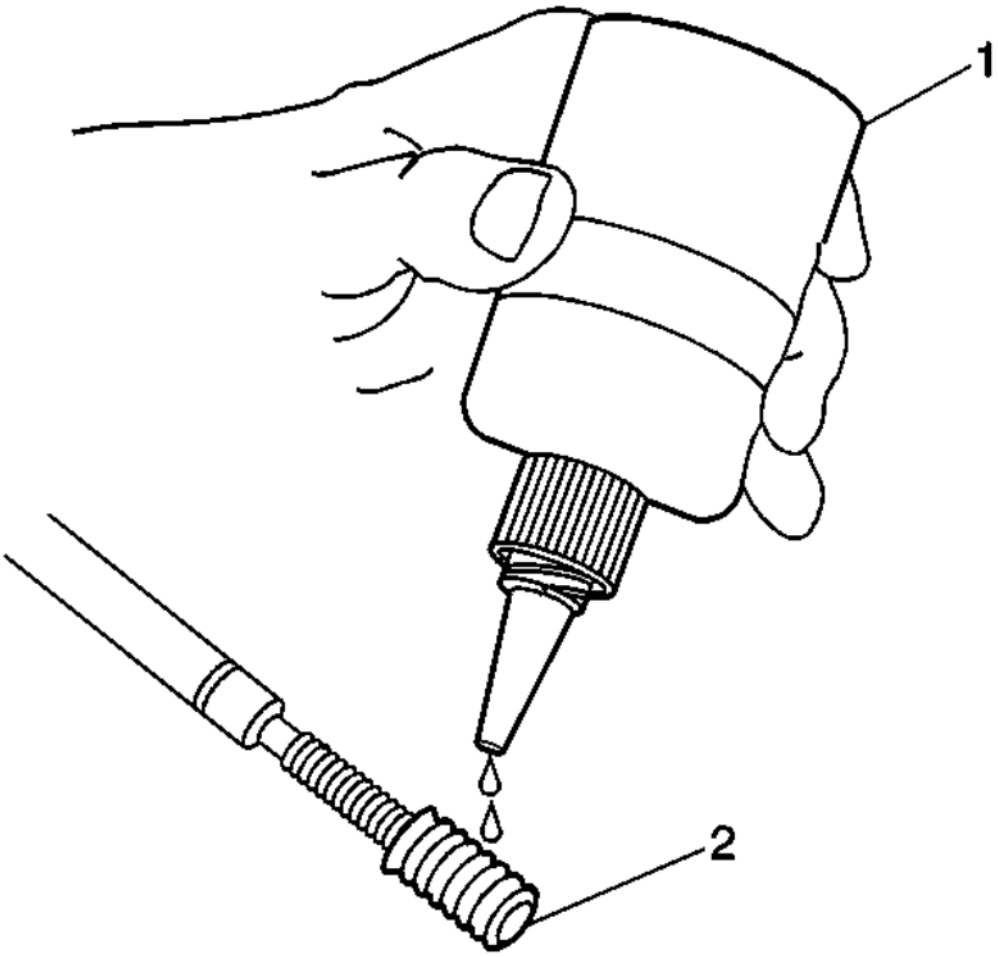

Fig. 190: Applying Threadlock To Insert
Courtesy of GENERAL MOTORS COMPANY

17. Apply threadlock LOCTITE™ 277, **EN 42385-109** loctite (1), or equivalent to the insert OD threads (2).

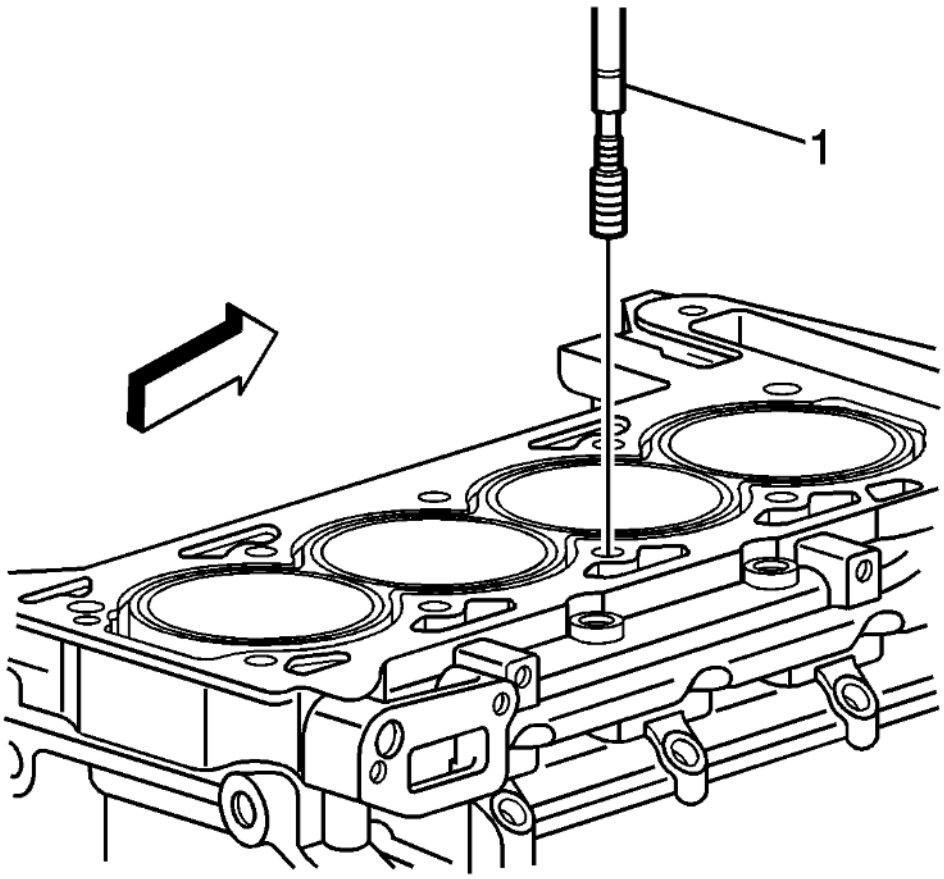

Fig. 191: Installing & Inserting Driver Into Hole
Courtesy of GENERAL MOTORS COMPANY

18. Install the insert and driver (1) into the hole.

    Rotate the driver tool until the mark on the tool aligns with the deck surface of the engine block.

    The installer tool will tighten up before screwing completely through the insert. This is acceptable. You are forming the bottom threads of the insert and mechanically locking the insert to the base material threads.

SERVICE PRIOR TO ASSEMBLY

The importance of cleanliness during assembly cannot be overstated. Dirt or debris will cause engine damage. An automobile engine is a combination of many machined, honed, polished and lapped surfaces with tolerances that are measured in ten thousandths of an inch. When any internal engine parts are serviced, care and cleanliness are important. A liberal coating of engine oil should be applied to friction areas during assembly in order to protect and lubricate the surfaces on initial operation. Throughout this section, it should be understood that proper cleaning and protection of machined surfaces and friction areas are part of the repair procedure. This is considered standard shop practice even if not specifically stated.

Lubricate all moving parts with engine oil or a specified assembly lubricant. This will provide lubrication

for initial start up.

ENGINE BLOCK ASSEMBLE

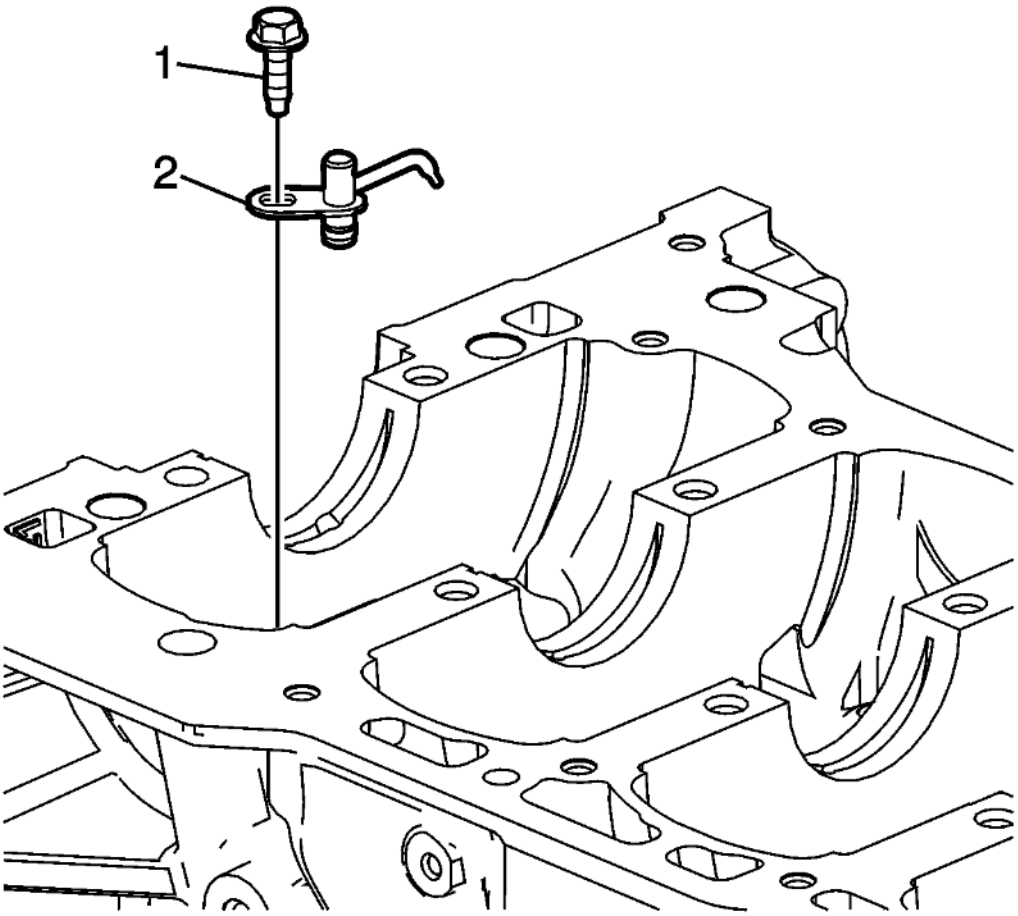

Fig. 192: Piston Oil Nozzle Assembly Bolt
Courtesy of GENERAL MOTORS COMPANY

1. Install the piston oil nozzle assemblies (2), if equipped.

   CAUTION: Refer to Fastener Caution .

2. Install the piston oil nozzle bolts (1) and tighten to 10 N.m (89 lb in).

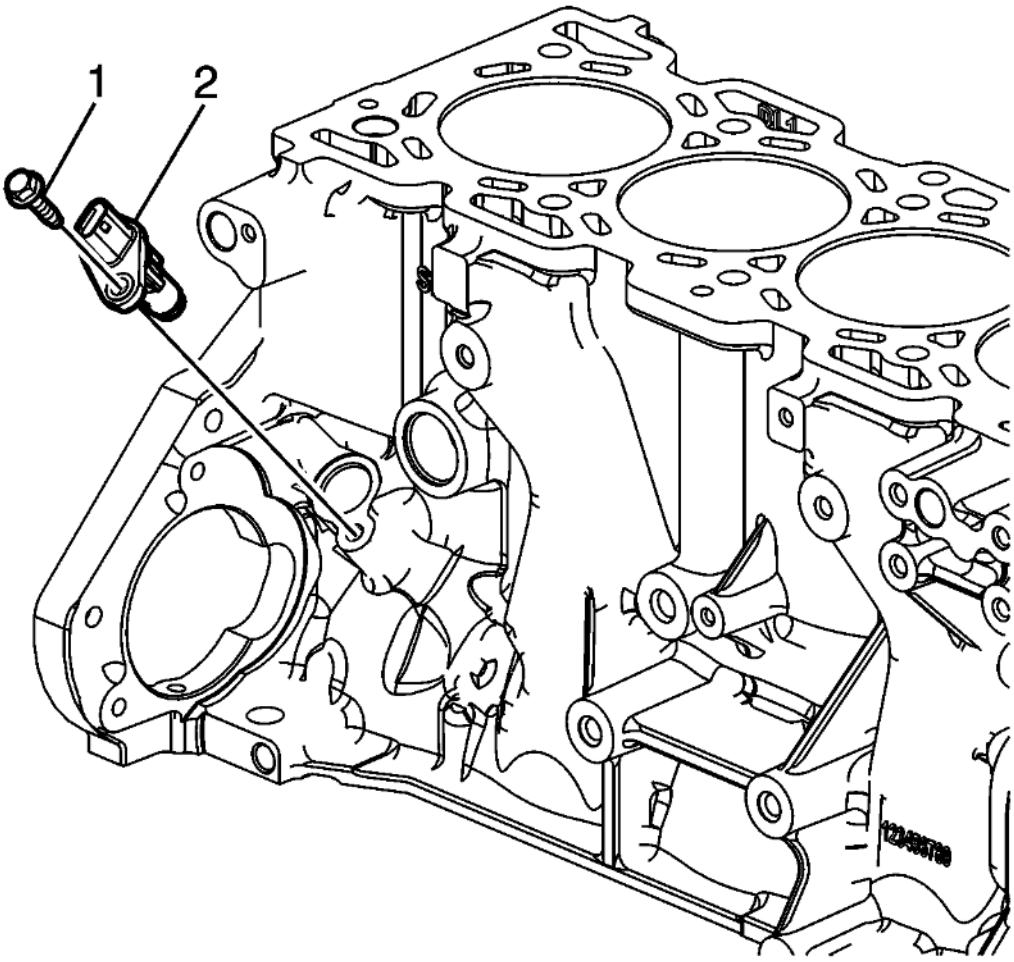

Fig. 193: Crankshaft Position (CKP) Sensor
Courtesy of GENERAL MOTORS COMPANY

3. Lubricate the crankshaft position sensor O-ring with engine oil. Refer to **Adhesives, Fluids, Lubricants, and Sealers** .

CAUTION: Refer to Component Fastener Tightening Caution .

4. Install the crankshaft position sensor (2) and bolt (1) and tighten to 10 N.m (89 lb in).

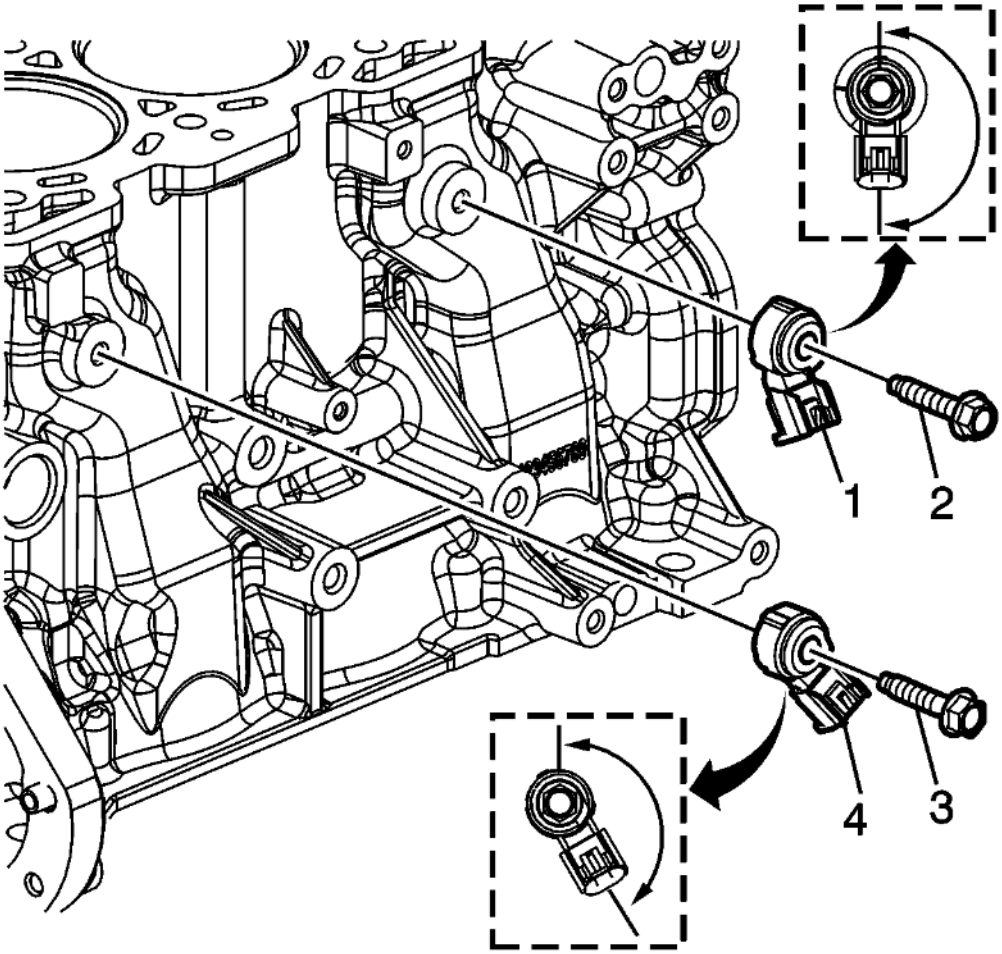

Fig. 194: Knock Sensor
Courtesy of GENERAL MOTORS COMPANY

5. Install the knock sensor (1) at 6 O' clock. Install the bolt (2) and tighten to 25 N.m (18 lb ft).
6. Install the knock sensor (4) at 5 O' clock. Install the bolt (3) and tighten to 25 N.m (18 lb ft).

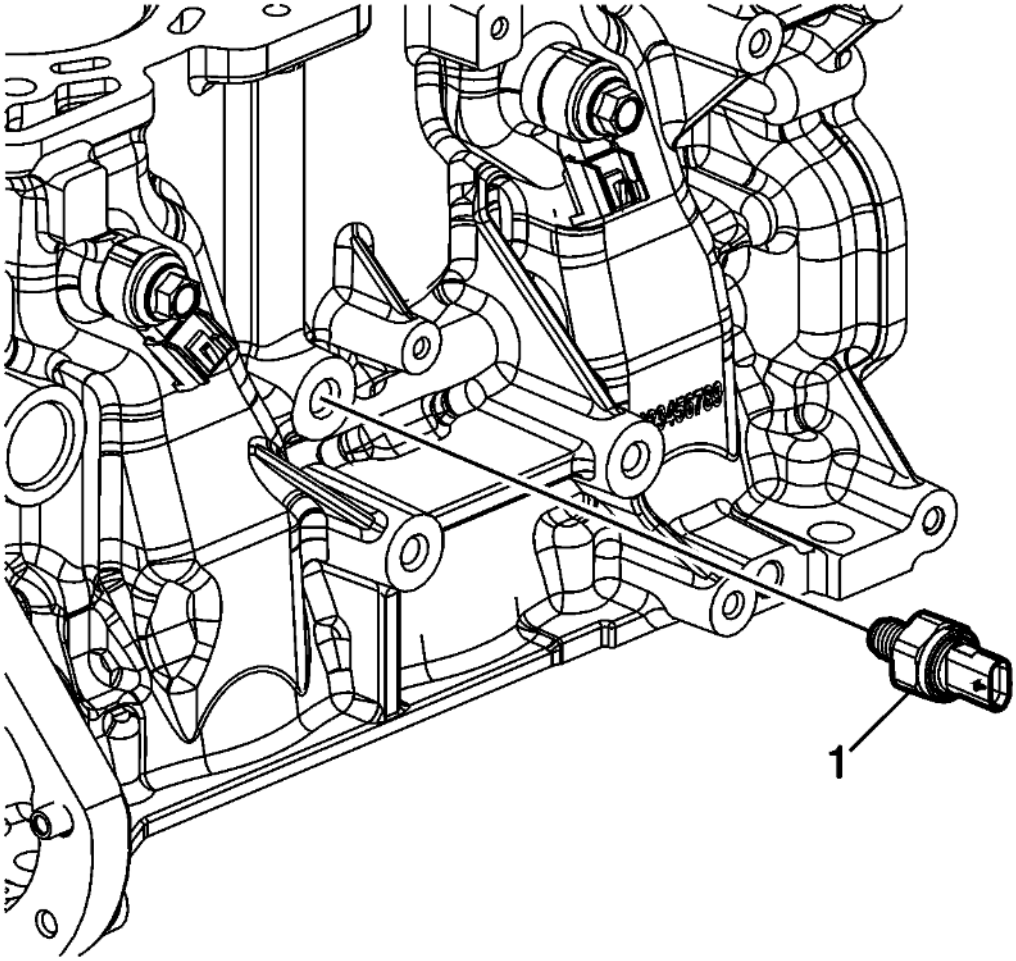

Fig. 195: Engine Oil Pressure Sensor
Courtesy of GENERAL MOTORS COMPANY

7. Install the engine oil pressure sensor (1) and tighten to 27 N.m (20 lb ft).

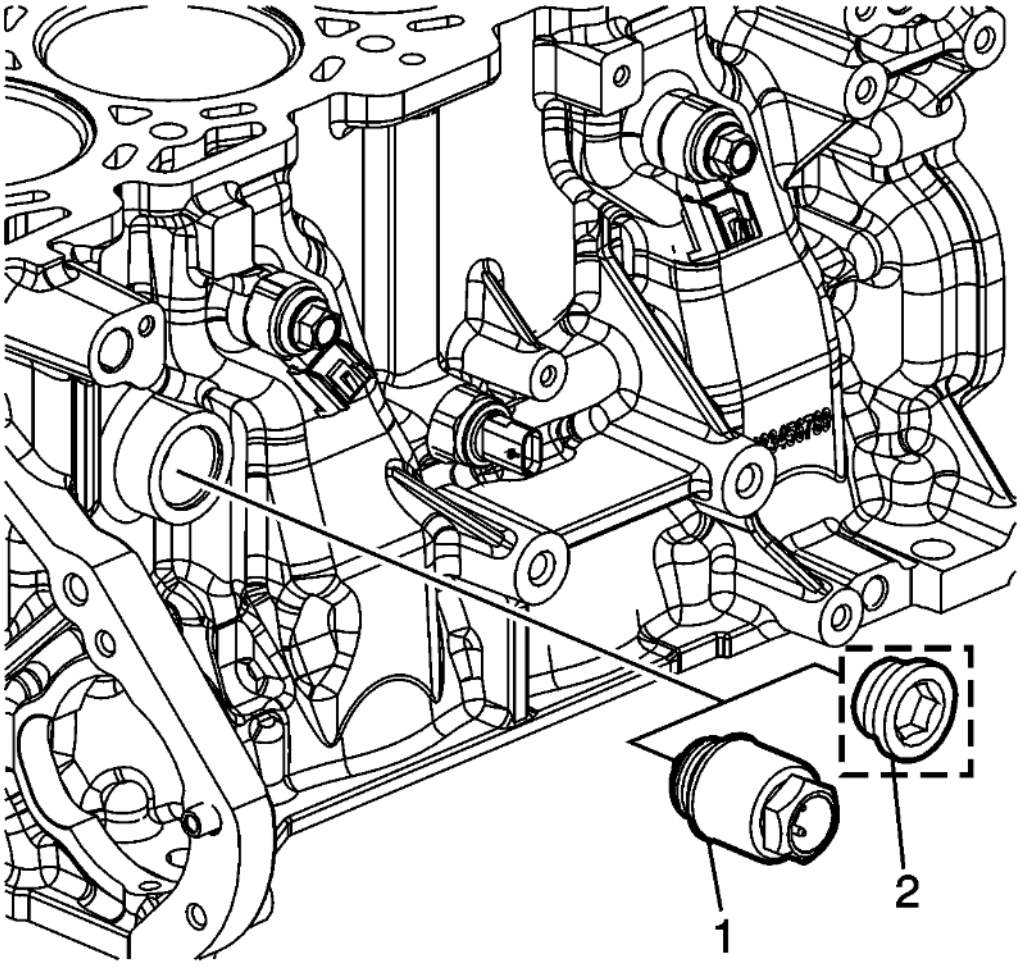

Fig. 196: Engine Coolant Heater
Courtesy of GENERAL MOTORS COMPANY

8. Install the engine coolant heater assembly (1), if equipped. Tighten the assembly to 50 N.m (37 lb ft).
9. If the engine coolant heater assembly is not equipped, install the engine coolant heater hole plug (2). Tighten the plug to 60 N.m (44 lb ft).

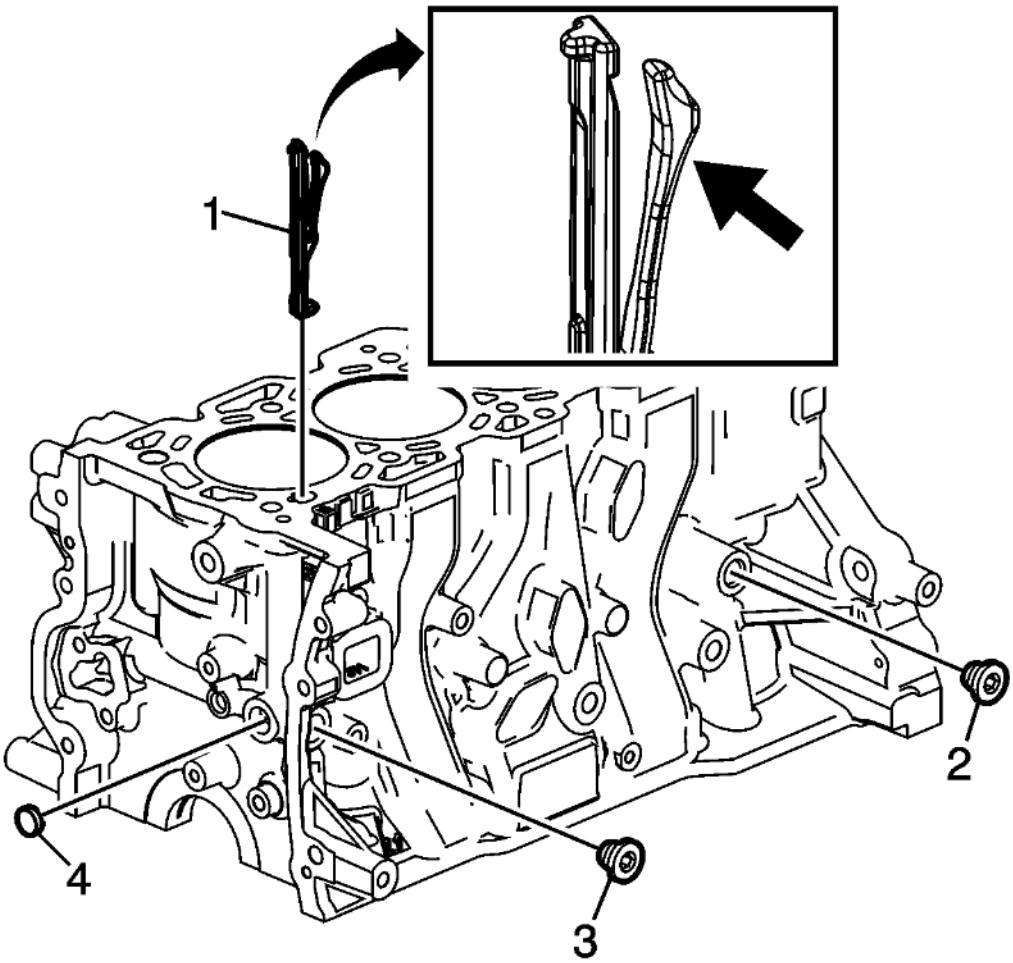

Fig. 197: Engine Oil Gallery Plugs
Courtesy of GENERAL MOTORS COMPANY

10. Apply sealant to all plugs prior to installation. Refer to **Adhesives, Fluids, Lubricants, and Sealers** .
11. Install the engine oil gallery cup plug (4).
12. Install the engine oil gallery plugs (2, 3), with sealant, and tighten to 65 N.m (48 lb ft).

NOTE: **Always install the baffle with the forked end pointed up. Do not force the baffle into place. Aligning the shape of the orifice and the baffle, and gently depressing the clip will allow the baffle to easily drop into place.**

13. Carefully align and install the engine oil baffle (1).

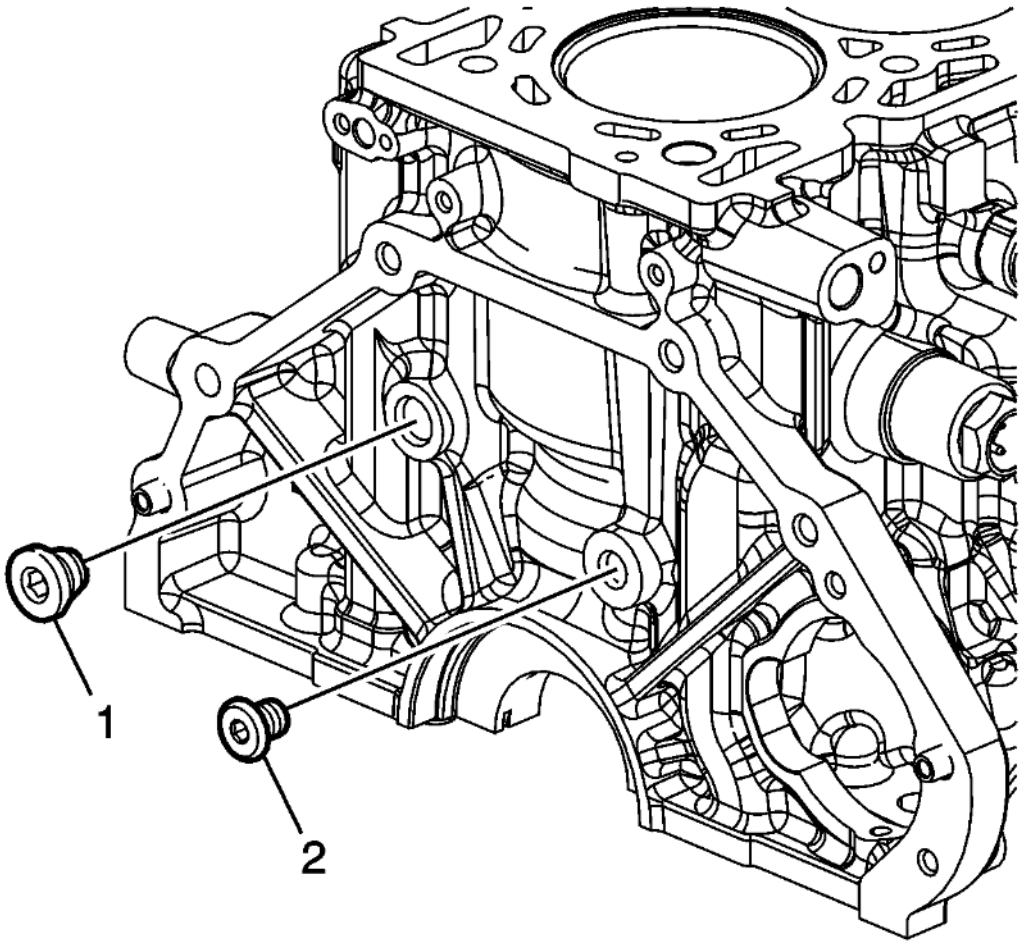

Fig. 198: Engine Oil Gallery Plugs
Courtesy of GENERAL MOTORS COMPANY

14. Install the engine oil gallery plug (1), with sealant, and tighten to 65 N.m (48 lb ft).
15. Install the engine oil gallery plug (2), with sealant, and tighten to 40 N.m (30 lb ft).

CRANKSHAFT AND BEARING INSTALLATION

Special Tools

- **EN-8087** Cylinder Bore Checking Gauge
- **EN 45059** Angle Meter

For equivalent regional tools, refer to **Special Tools** .

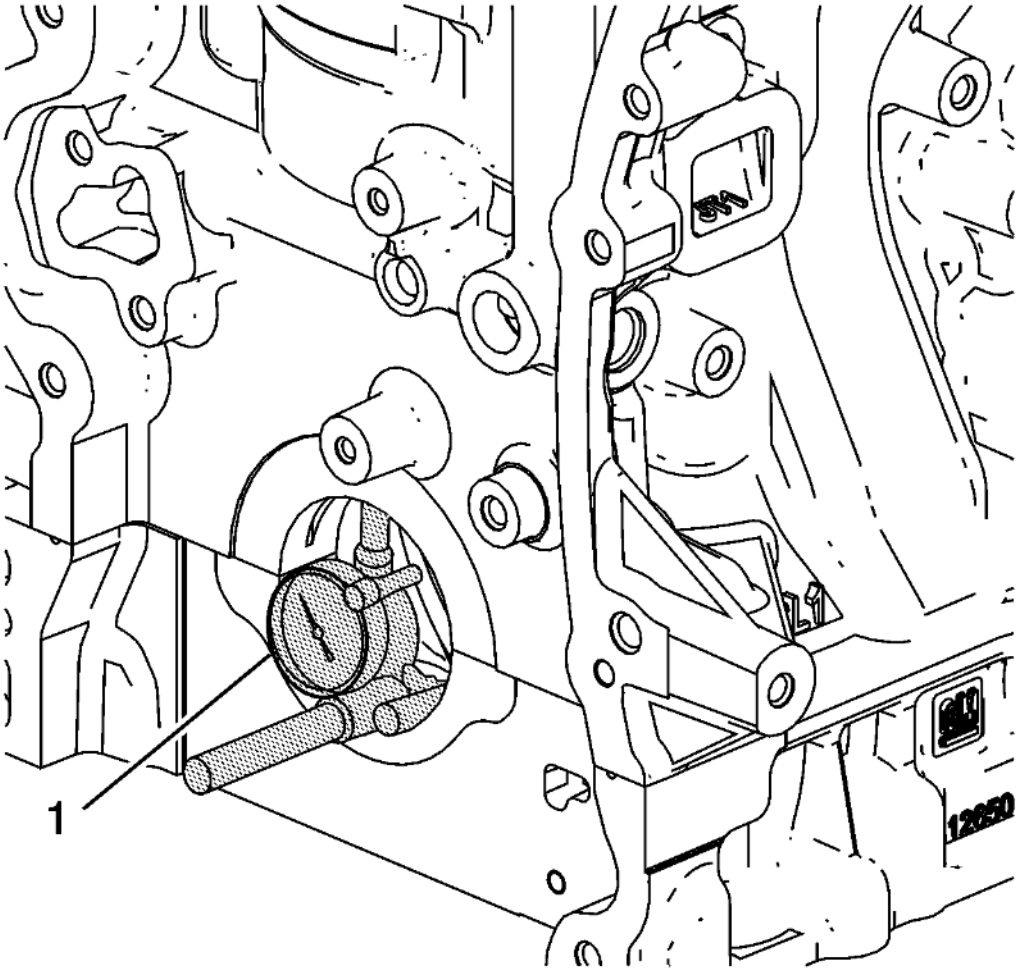

Fig. 199: Cylinder Bore Checking Gauge
Courtesy of GENERAL MOTORS COMPANY

NOTE:

- **Crankshaft bearings MUST be separated, marked, or organized in a way to ensure installation to their original location and position, when suitable for use.**
- **If crankshaft bearing failure is due to other than normal wear, investigate the cause. Inspect the crankshaft or connecting rod bearing bores.**

Inspect the connecting rod bearing bores or crankshaft main bearing bores using the following procedure:

- Tighten the bedplate to specification using the **EN 45059** meter.
- Measure the bearing bore for taper and out-of-round using the **EN-8087** gauge (1).
- No taper or out-of-round should exist.

Bearing Selection

1. Measure the bearing clearance to determine the correct replacement bearing insert size. There are two methods to measure bearing clearance. Method A gives more reliable results and is preferred.

- Method A yields measurement from which the bearing clearance can be computed.
- Method B yields the bearing clearance directly. Method B does not give any indication of bearing run-out.

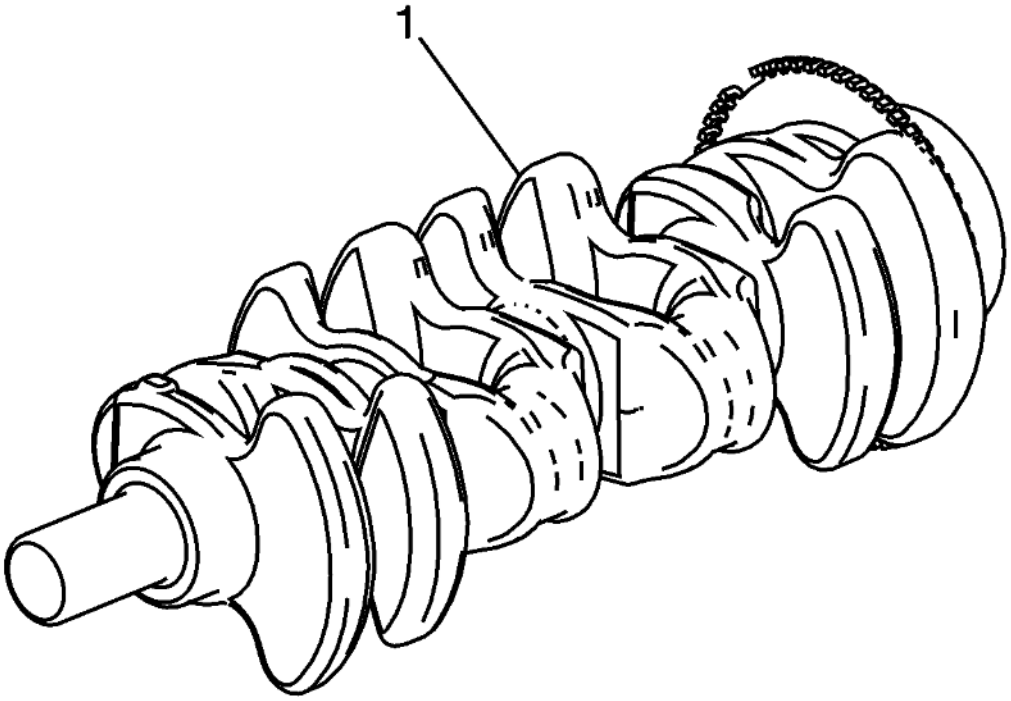

Fig. 200: Measuring Bearing Clearance Using Method A
Courtesy of GENERAL MOTORS COMPANY

NOTE: Do not mix inserts of different nominal size in the same bearing bore.

2. To measure bearing clearance using Method A, use the following procedure:
   1. Measure the crankshaft bearing journal diameter with a micrometer in several places, 90 degrees apart. Average the measurements.
   2. Measure the crankshaft bearing journal taper and runout.
   3. Install the lower crankcase and tighten the bearing cap bolts to specification.
   4. Measure bearing inside diameter (ID) in several places 90 degrees apart, average measurements.
   5. Subtract journal measurement from bearing ID measurement to determine clearance.
   6. Determine whether clearance is within specification.
   7. If out of specification, choose different inserts.
   8. Measure the connecting rod inside diameter in the same direction as the length of the rod with

an inside micrometer.

9. Measure the crankshaft main bearing inside diameter with an inside micrometer.

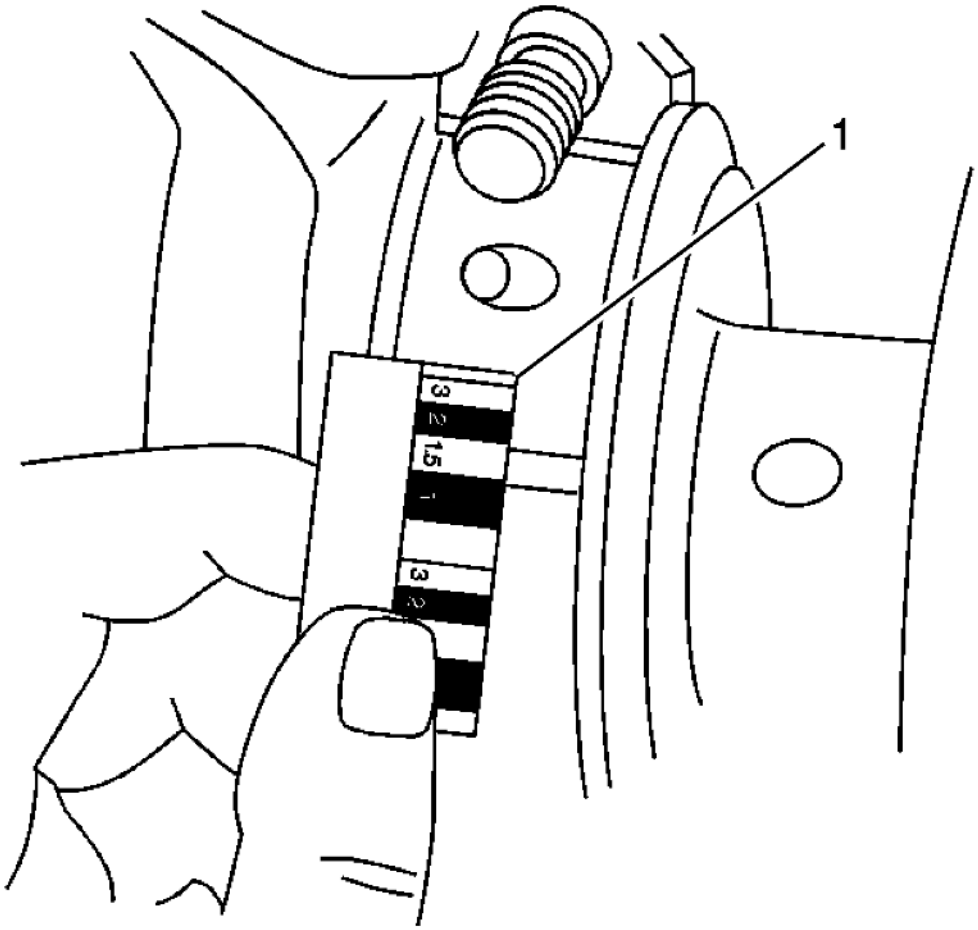

Fig. 201: Measuring Bearing Clearance Using Method B
Courtesy of GENERAL MOTORS COMPANY

3. To measure bearing clearance using Method B, use the following procedure:
   1. Clean the used bearing inserts.
   2. Install the used bearing inserts.
   3. Place a piece of gaging plastic across the entire bearing width at 90 degrees to block/lower crankcase split line.
   4. Install the bearing caps.

CAUTION: In order to prevent the possibility of cylinder block or crankshaft bearing cap damage, the crankshaft bearing caps are tapped into the cylinder block cavity using a brass, lead, or a leather mallet before the attaching bolts are installed. Do not use attaching bolts to pull the crankshaft bearing caps into the seats. Failure to use this process may damage a cylinder block or a bearing cap.

5. Install the bearing cap bolts to specification.

NOTE: Do not rotate the crankshaft.

6. Remove the bearing cap, leaving the gauging plastic in place. It does not matter whether the gauging plastic adheres to the journal or to the bearing cap.
7. Measure the gauging plastic at its widest point with the scale (1) printed on the gauging plastic package.
8. Remove the gauging plastic.

Crankshaft Installation

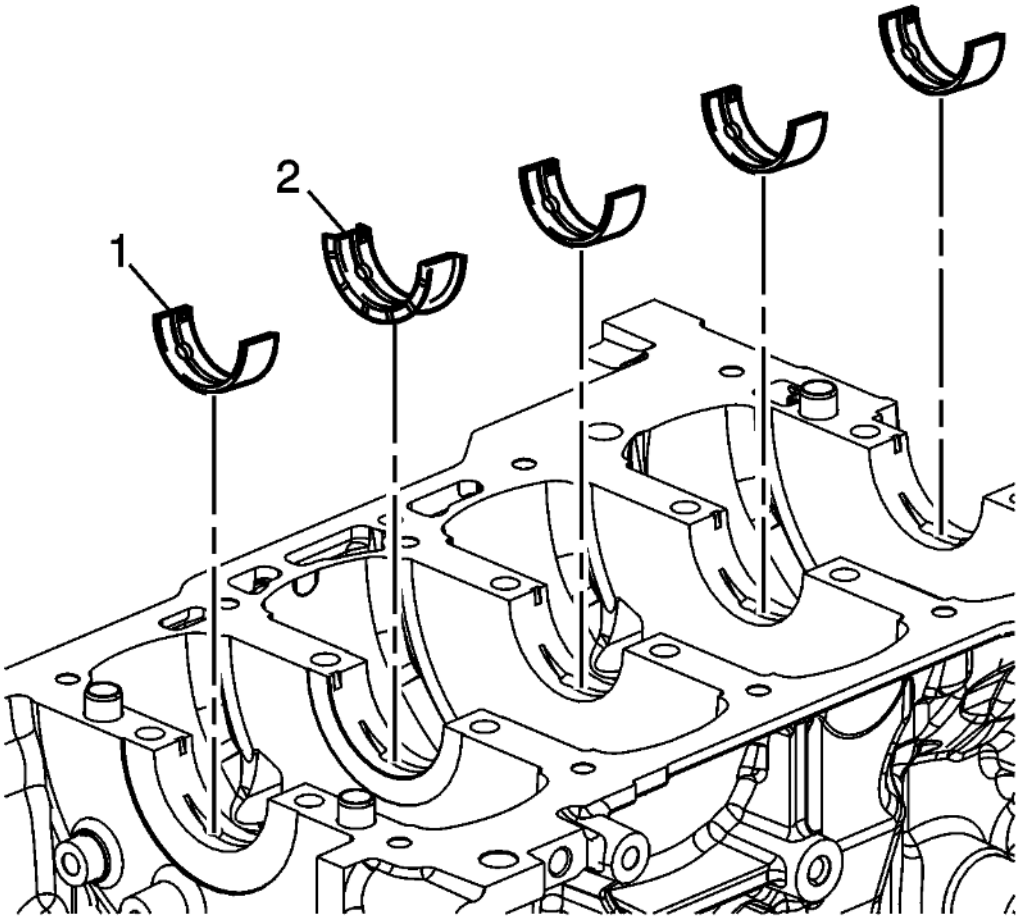

Fig. 202: Crankshaft Upper Bearings
Courtesy of GENERAL MOTORS COMPANY

NOTE: Crankshaft bearings MUST be separated, marked, or organized in a way to ensure installation to their original location and position, when suitable for use.

1. Install the upper crankshaft bearings (1) and lubricate bearing surfaces with engine oil.

2. Install the crankshaft upper thrust bearing (3) and lubricate bearing surfaces with engine oil.

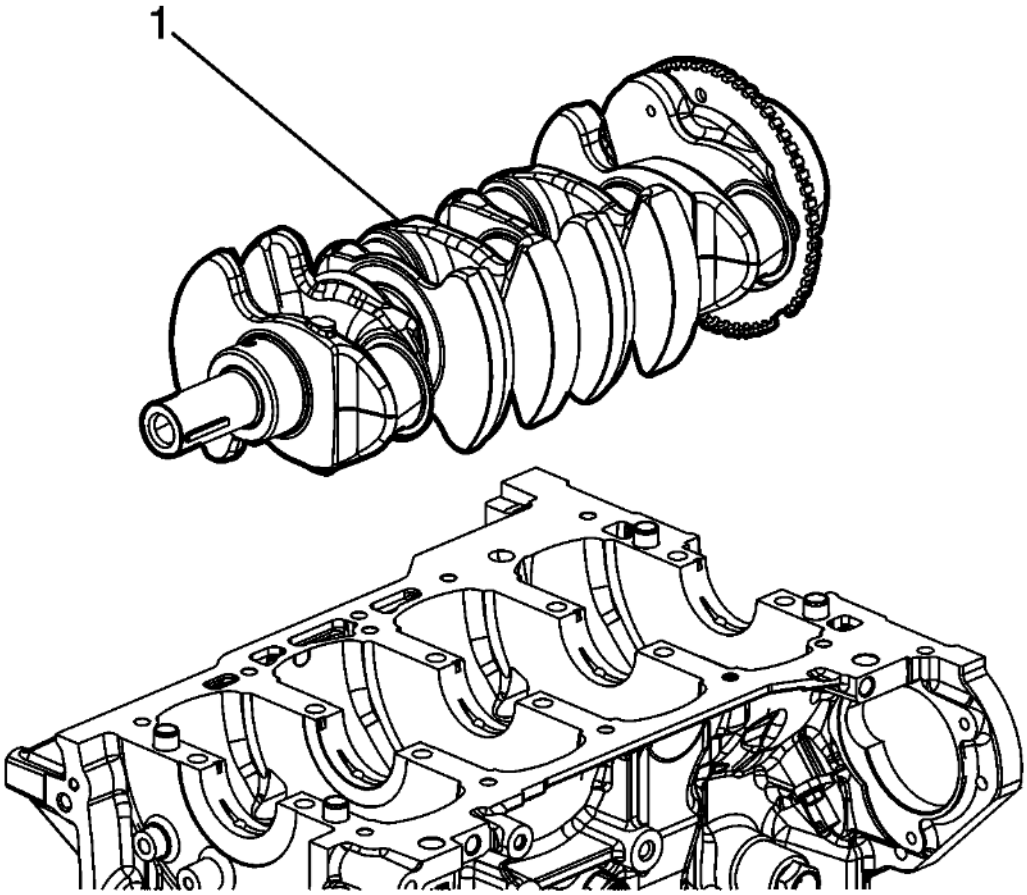

Fig. 203: Crankshaft
Courtesy of GENERAL MOTORS COMPANY

3. Install the crankshaft (1) on the journals.

LOWER CRANKCASE INSTALLATION

Special Tools

- **EN 45059** Angle Meter
- **EN-51380** Seal Installer

For equivalent regional tools, refer to **Special Tools** .

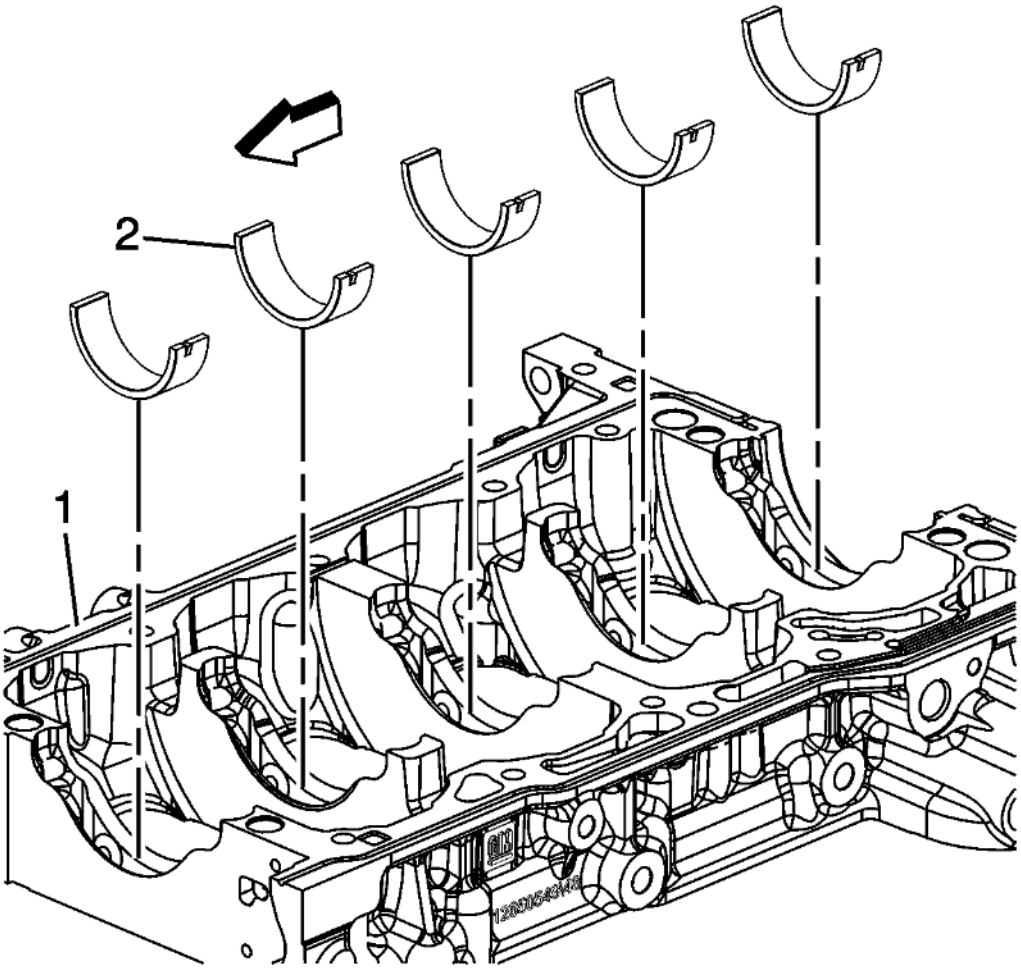

Fig. 204: Crankshaft Lower Bearings
Courtesy of GENERAL MOTORS COMPANY

NOTE: **Crankshaft bearings MUST be separated, marked, or organized in a way to ensure installation to their original location and position, when suitable for use.**

1. Install the lower bearing halves (2), without grooves, into the lower crankcase (1). Apply oil to bearing surfaces.

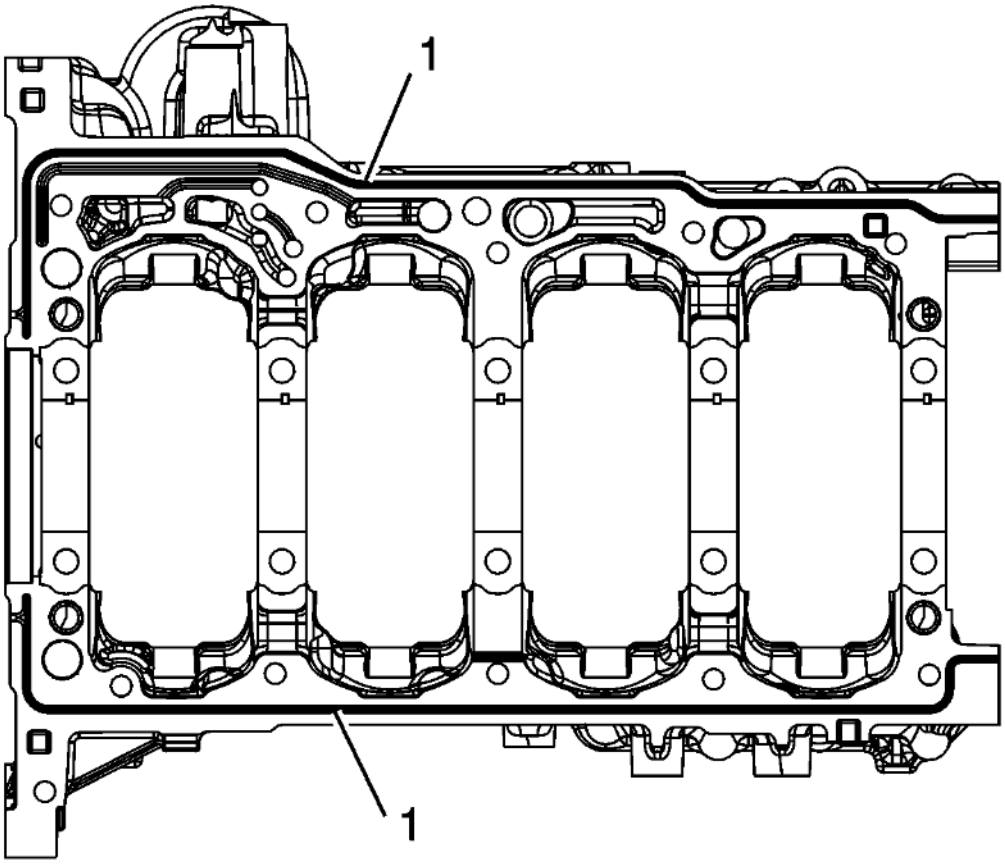

Fig. 205: Applying Bead Of Sealer Directly In Groove
Courtesy of GENERAL MOTORS COMPANY

NOTE:

- **The block assembly surface must be free of contamination prior to applying the sealer.**
- **Install and align the bedplate to block within 20 minutes of applying the sealer.**
- **The bedplate must be fastened to final torque specification within 60 minutes of applying the sealer.**

2. Apply a 4.25 mm bead of sealer directly in the groove (1) of the block to bedplate mating surfaces. Refer to **Adhesives, Fluids, Lubricants, and Sealers** .

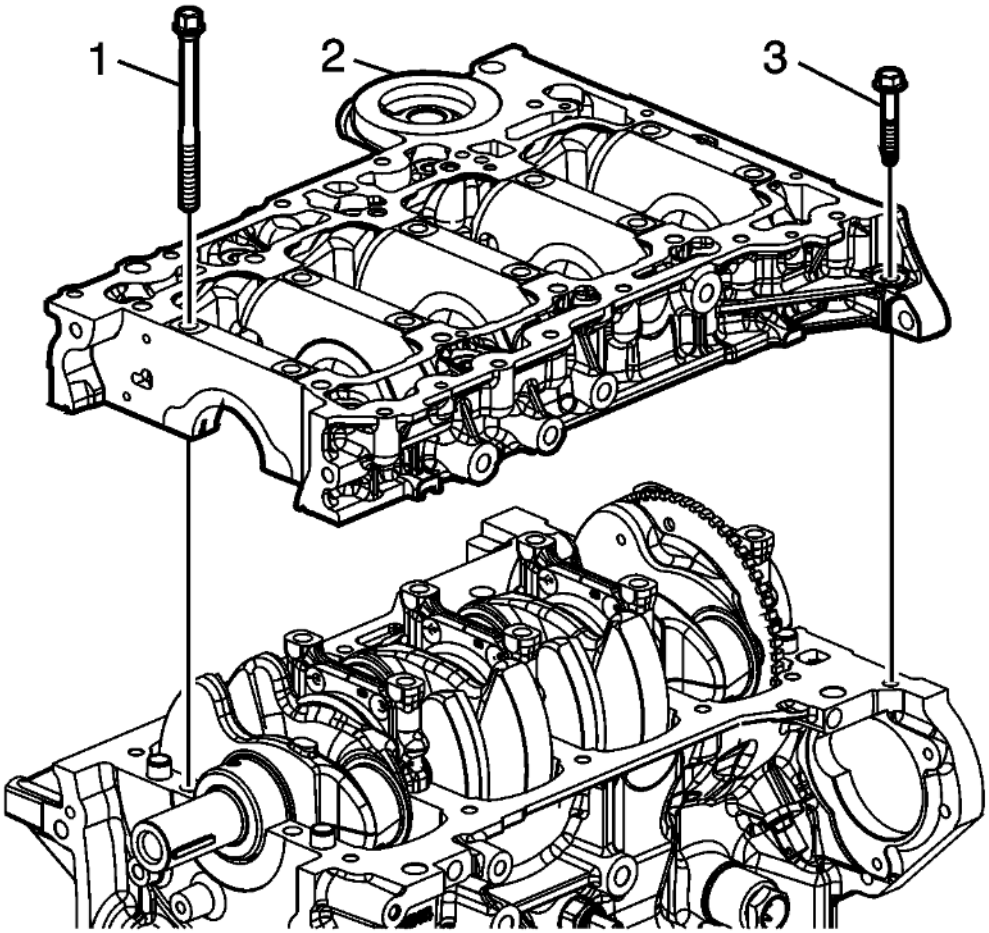

Fig. 206: Lower Crankcase Perimeter Bolts
Courtesy of GENERAL MOTORS COMPANY

3. Install the lower crankcase (2). Tap gently into place with a suitable tool if necessary. Ensure it is aligned properly on the dowels.

CAUTION: This vehicle is equipped with torque-to-yield or single use fasteners. Install a NEW torque-to-yield or single use fastener when installing this component. Failure to replace the torque-to-yield or single use fastener could cause damage to the vehicle or component.

4. Install the NEW crankshaft bearing bolts (1) finger tight.
5. Install NEW lower crankcase perimeter bolts (3) finger tight.

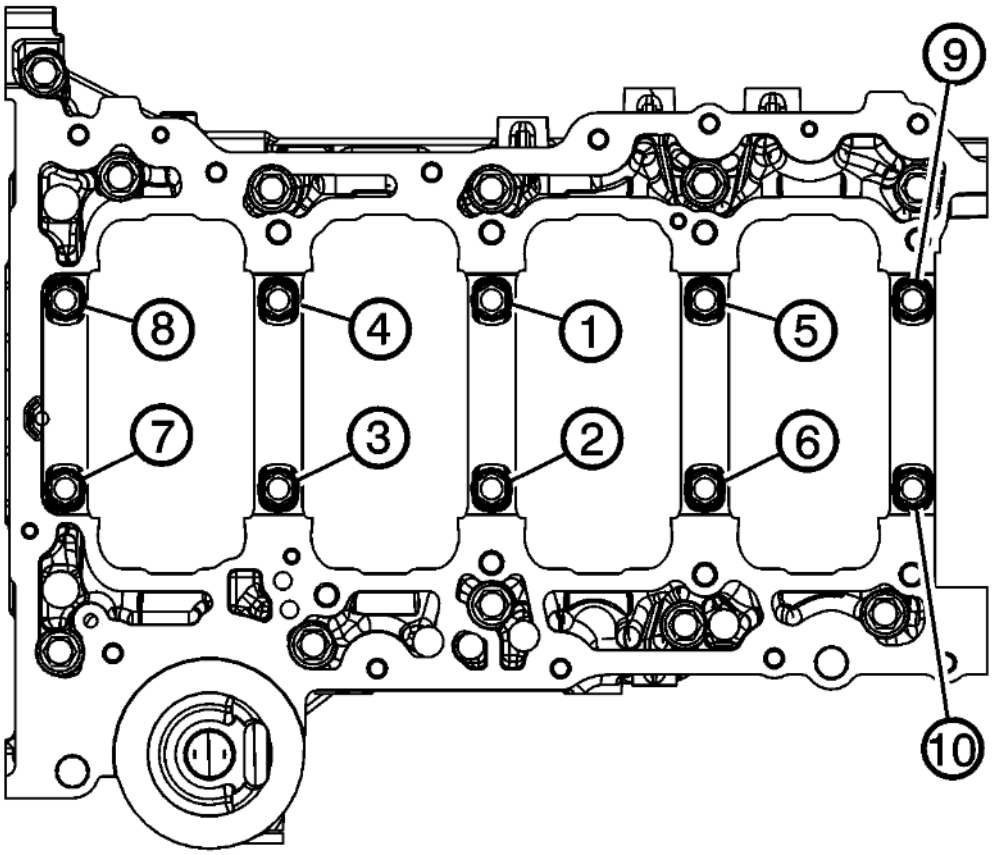

Fig. 207: Crankshaft Bearing Bolts In Sequence
Courtesy of GENERAL MOTORS COMPANY

CAUTION: Refer to Fastener Caution .

6. Tighten the crankshaft bearing bolts in sequence using the following procedure:
   1. Tighten the crankshaft bearing bolts a first pass in sequence to 20 N.m (15 lb ft).
   2. Tighten the crankshaft bearing bolts a final pass in sequence using the **EN 45059** meter an additional 140 degrees.

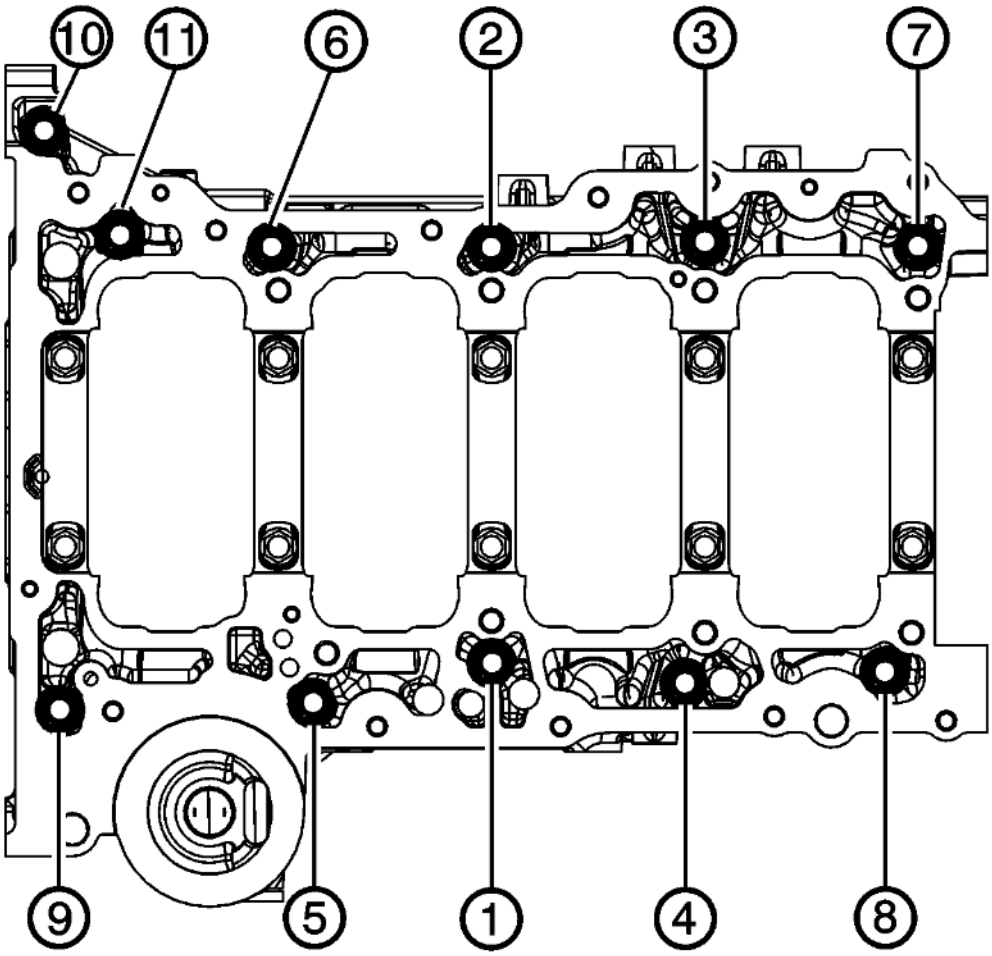

Fig. 208: Lower Crankcase Perimeter Bolts In Sequence
Courtesy of GENERAL MOTORS COMPANY

7. Tighten the lower crankcase perimeter bolts in sequence to 25 N.m (18 lb ft).

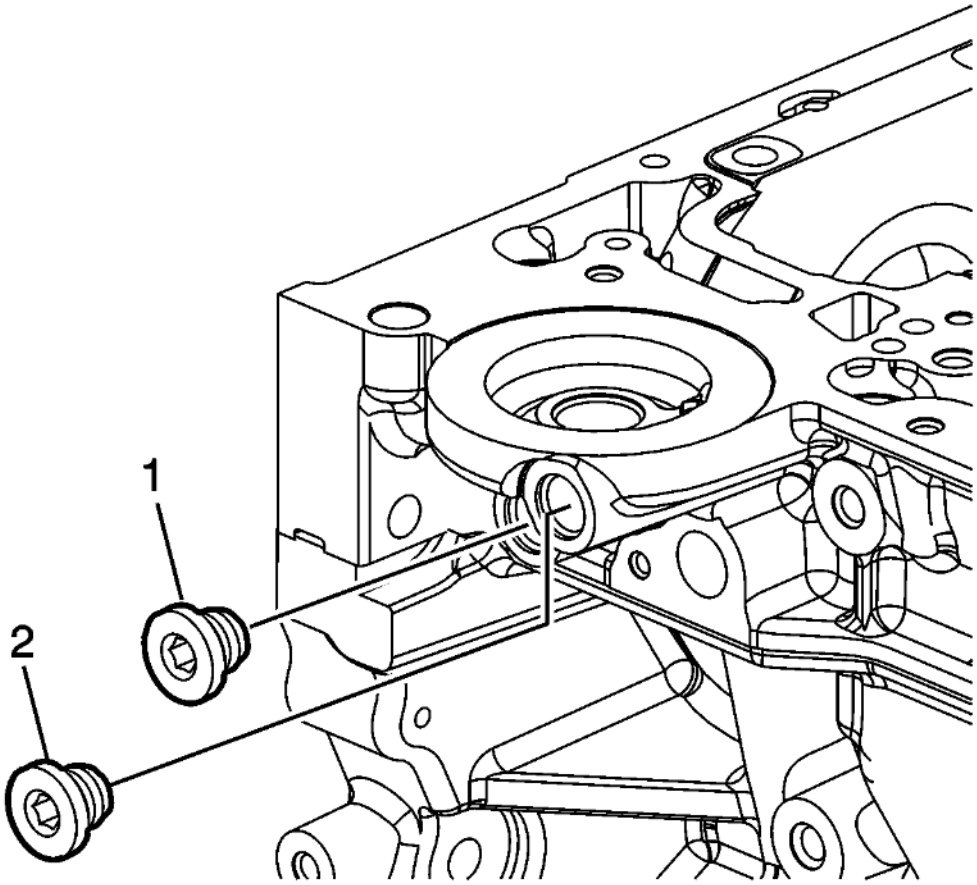

Fig. 209: Oil Gallery Plugs
Courtesy of GENERAL MOTORS COMPANY

8. Install the engine oil gallery plugs (1, 2). Tighten the plugs to 65 N.m (48 lb ft).

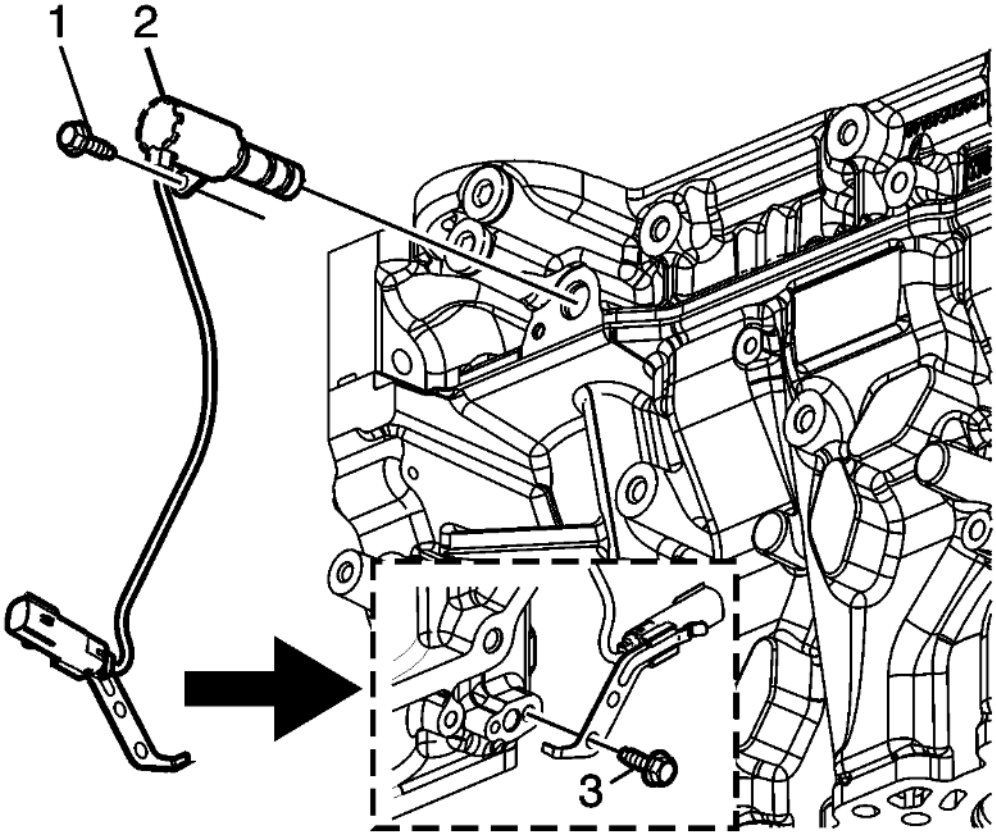

Fig. 210: Oil Pump Flow Control Valve And Bolts
Courtesy of GENERAL MOTORS COMPANY

9. Install the oil pump flow control valve (2) and bolts (1, 3). tighten the bolts to 10 N.m (89 lb in).

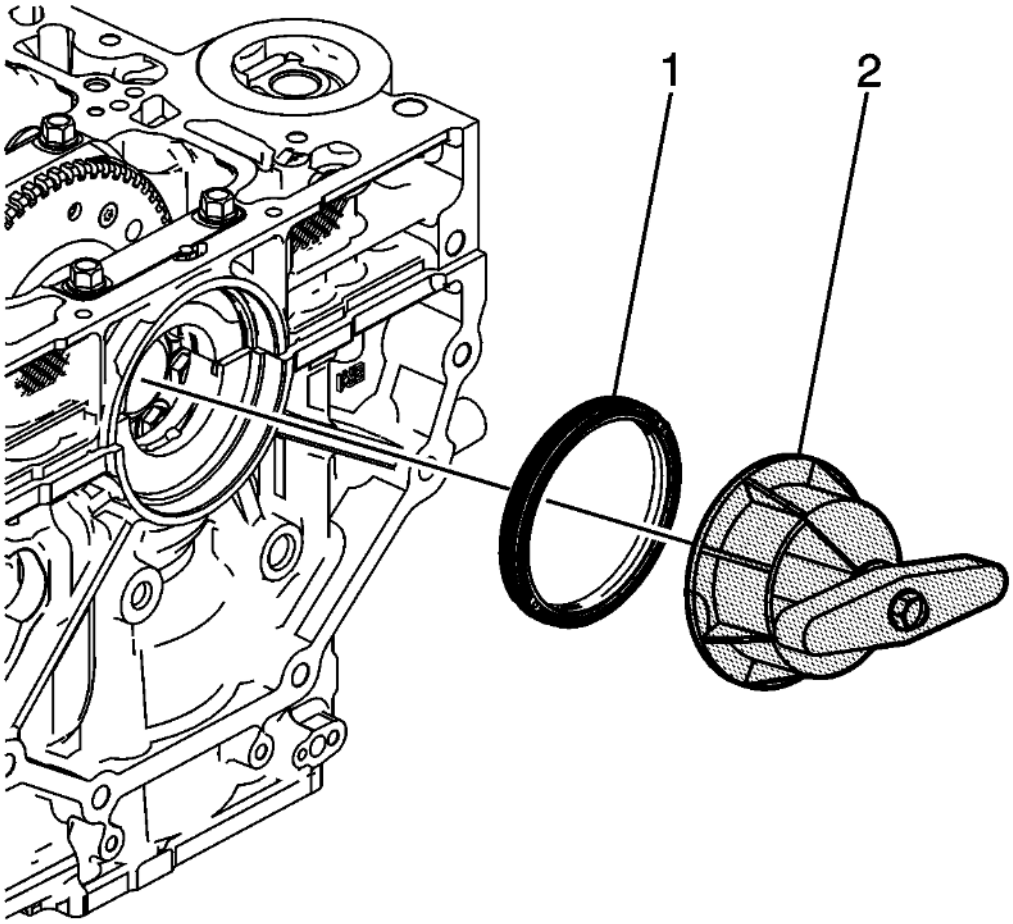

Fig. 211: Crankshaft Rear Oil Seal
Courtesy of GENERAL MOTORS COMPANY

10. Using **EN-51380** installer (2), install the crankshaft rear oil seal (1) flush or recessed up to 0.5 mm to block.
11. Rotate the crankshaft to ensure that it moves freely and does not bind.
12. Measure and record the crankshaft endplay. Refer to **Engine Mechanical Specifications** .

PISTON, CONNECTING ROD, AND BEARING INSTALLATION

NOTE: This procedure is not used in Europe.

Special Tools

- **EN-8037** Ring Compressor
- **EN-43966** Connecting Rod Guides
- **EN 45059** Angle Meter

For equivalent regional tools, refer to **Special Tools** .

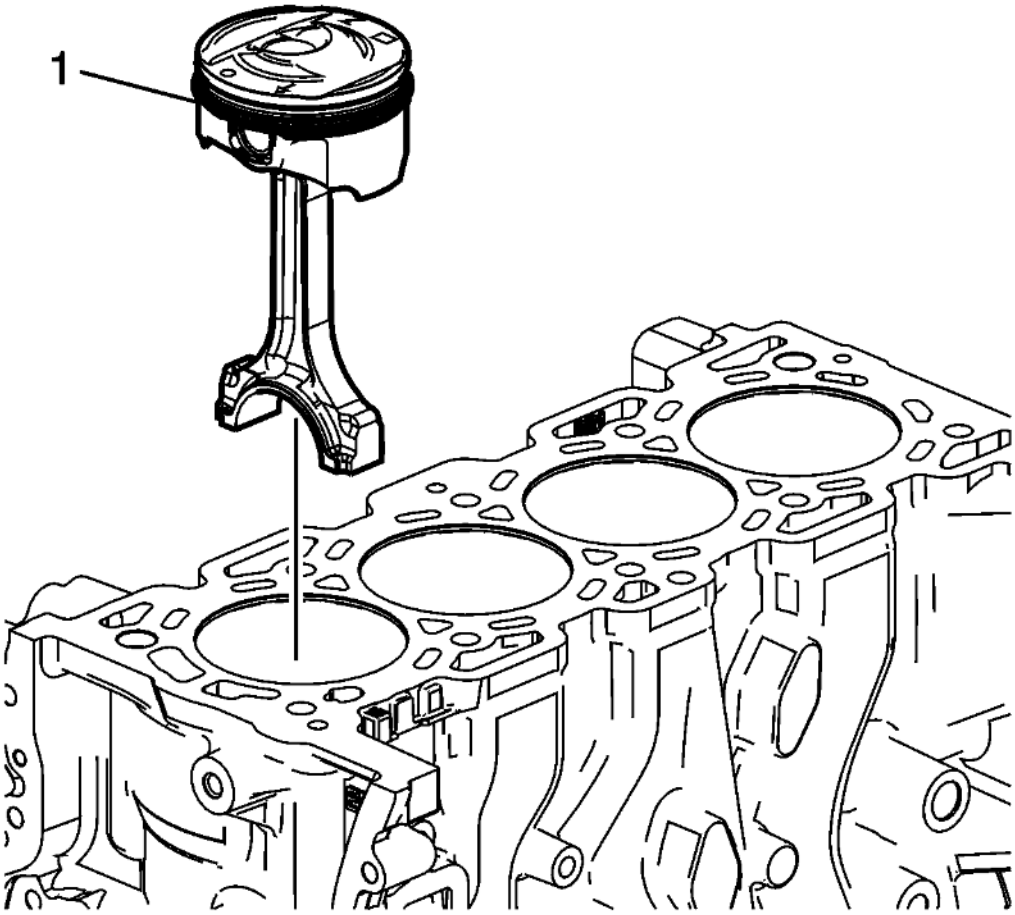

Fig. 212: Piston And Connecting Rod Assembly
Courtesy of GENERAL MOTORS COMPANY

NOTE: **The connecting rods and caps must be installed in the same order and orientation in which they were removed. If new connecting rods are required, the connecting rod is provided as an assembly, and the upper rod will need to be disassembled from the lower cap.**

1. Install the connecting rod bearings. Use NEW bearings.

   NOTE: **The connecting rod bearing anti-rotation tab grooves are to point toward the right-hand side of the engine.**

   1. Install the bearing inserts into the connecting rod and the connecting rod cap.
   2. Lubricate the connecting rod bearings with engine oil.
2. Install the **EN-43966** guides (2) into the connecting rod bolt holes. This protects the crankshaft journal during piston and connecting rod installation.
3. Install **EN-8037** compressor , piston (1), and the connecting rod to the correct bore.
   1. Stagger each piston ring end gap equally around the piston.
   2. Lubricate the piston and the piston rings with engine oil.

3. Do not disturb the piston ring end gap location.
4. The piston must be installed so that the arrow mark on the top of the piston points to the front of the engine.
5. Lubricate the engine bore with engine oil, then place the piston in its matching bore.
6. Tap the piston into its bore with a hammer handle. Guide the connecting rod to the connecting rod journal while tapping the piston into place.
7. Hold the **EN-8037** compressor against the engine block until all the rings have entered the cylinder bore.
8. Remove the connecting rod guides from the connecting rod bolt holes.

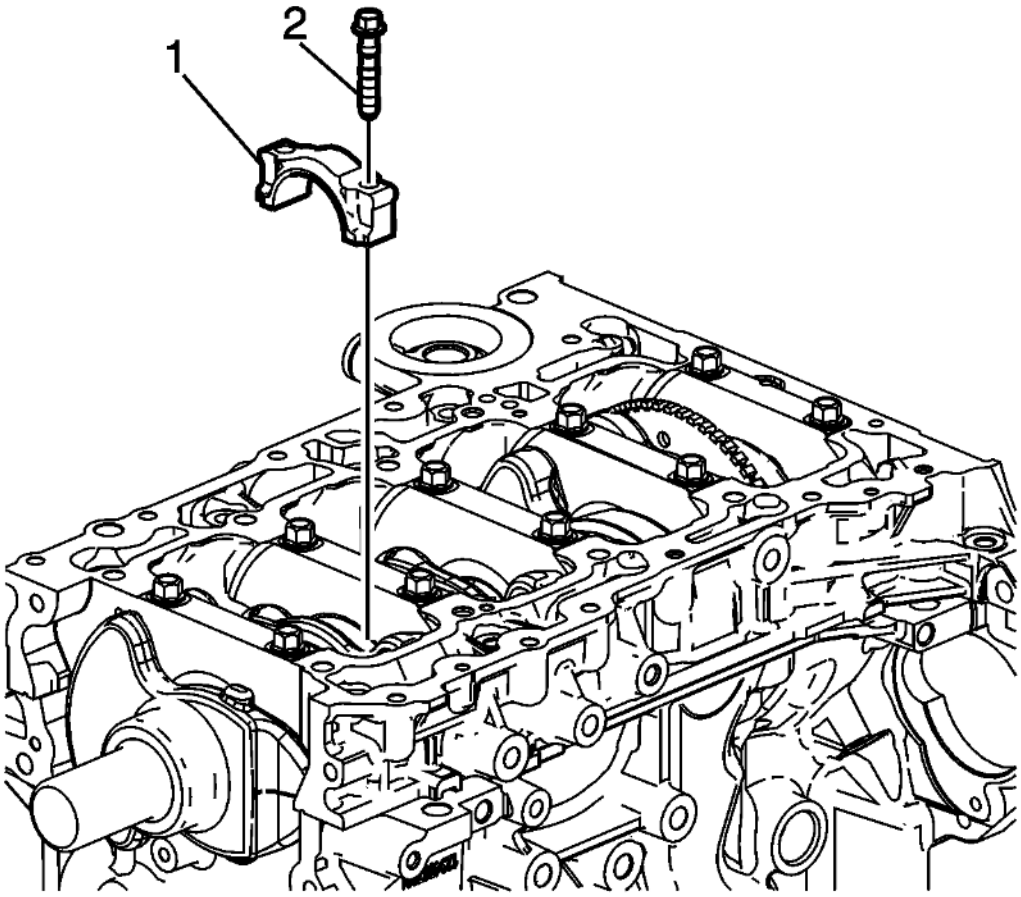

Fig. 213: Connecting Rod Cap
Courtesy of GENERAL MOTORS COMPANY

NOTE: Ensure that the connecting rod cap is properly oriented on the connecting rod.

4. Install the connecting rod cap (1).

CAUTION: Refer to Fastener Caution .

CAUTION: This vehicle is equipped with torque-to-yield or single use fasteners. Install a NEW torque-to-yield or single use fastener when installing this component. Failure to replace the torque-to-yield or single use fastener could cause damage to the vehicle or component.

5. Install the NEW connecting rod bolts (2).
   1. Tighten all the connecting rod bolts a first pass to 25 N.m (18 lb ft).
   2. Tighten all the connecting rod bolts a final pass an additional 110 degrees using the **EN 45059** meter.
6. Install the remaining connecting rods and piston assemblies.

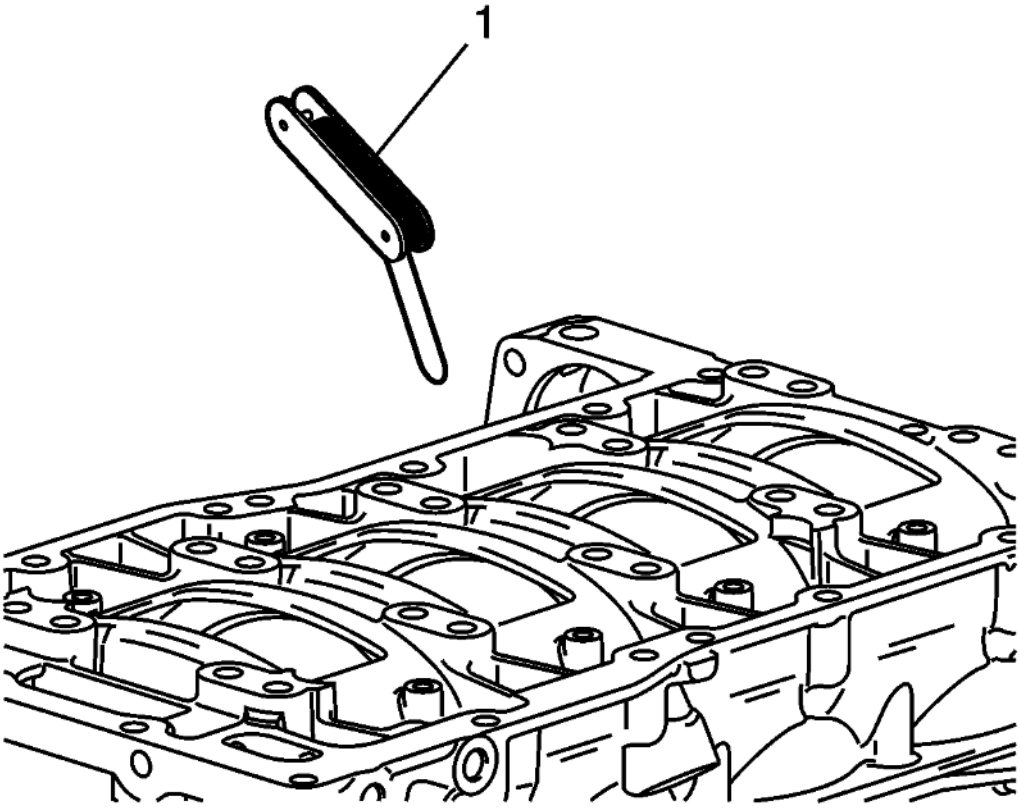

Fig. 214: View of Checking Rod Side Clearance With Feeler Gage
Courtesy of GENERAL MOTORS COMPANY

NOTE: Rotate the crankshaft to ensure that it moves freely and does not bind.

7. Measure the connecting rod side clearance with a feeler gauge (1). Refer to **Engine Mechanical Specifications** .

8. Measure the piston deck height. Refer to **Engine Mechanical Specifications** .

BALANCER WITH OIL PUMP SHAFT INSTALLATION

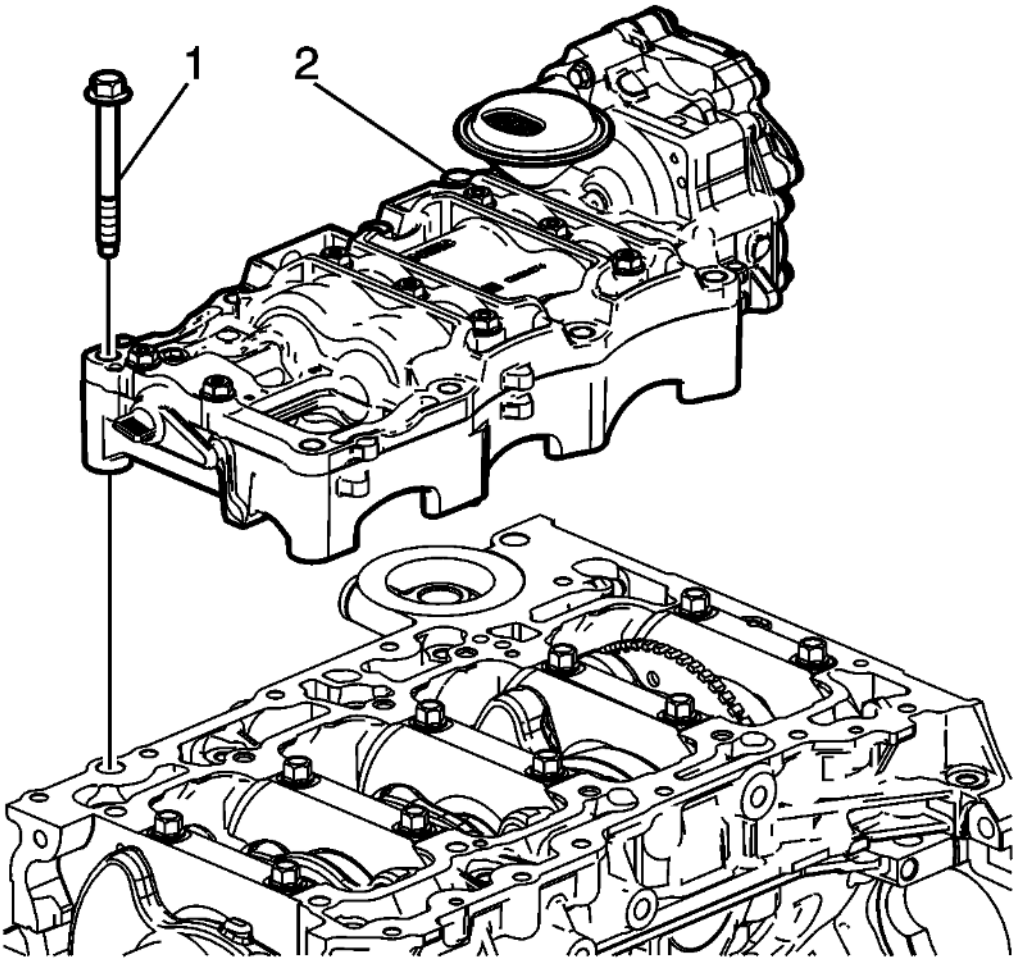

Fig. 215: Balancer And Oil Pump Shaft Assembly Bolts
Courtesy of GENERAL MOTORS COMPANY

1. Install the balancer and oil pump shaft assembly (2).
2. Install the balancer and oil pump shaft assembly bolts (1) finger tight.

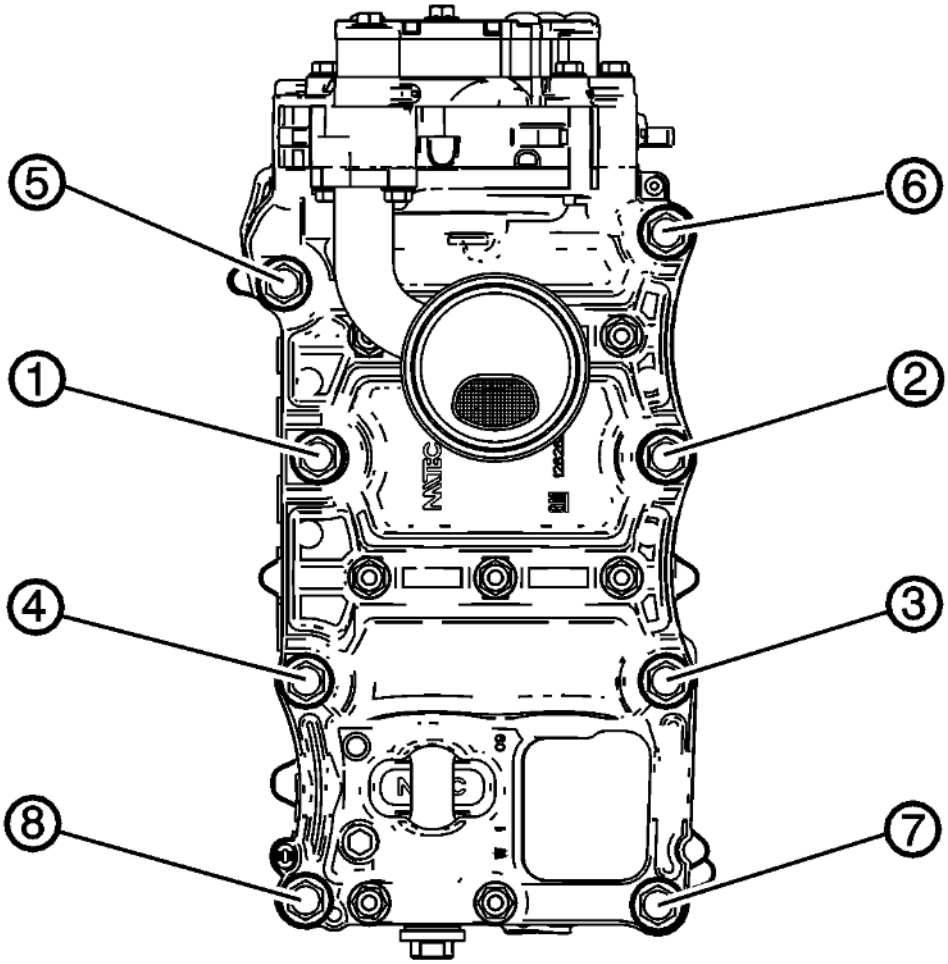

Fig. 216: Balancer And Oil Pump Shaft Assembly Bolt Tightening Sequence
Courtesy of GENERAL MOTORS COMPANY

3. Tighten the bolts twice in sequence to 58 N.m (43 lb ft).

CYLINDER HEAD INSTALLATION

Special Tools

EN 45059 Angle Meter

For equivalent regional tools, refer to **Special Tools**

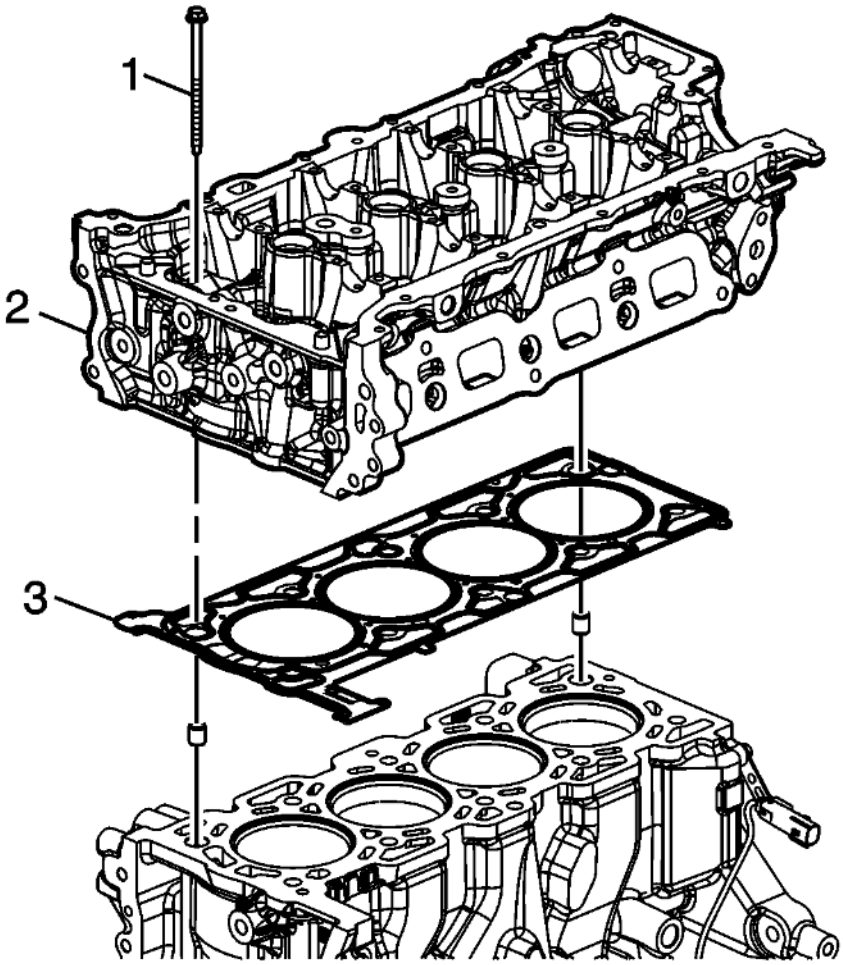

Fig. 217: Cylinder Head Gasket
Courtesy of GENERAL MOTORS COMPANY

NOTE: **Do not use any sealing material. Ensure that all mating surfaces are clean and free of debris.**

1. If necessary, install NEW cylinder head locating pins.
2. Install the cylinder head gasket (3) to the block.
3. Install the cylinder head (2). Ensure the number 1 cylinder is at top dead center (TDC). The key on the crankshaft should be on top in the 12 o'clock position.

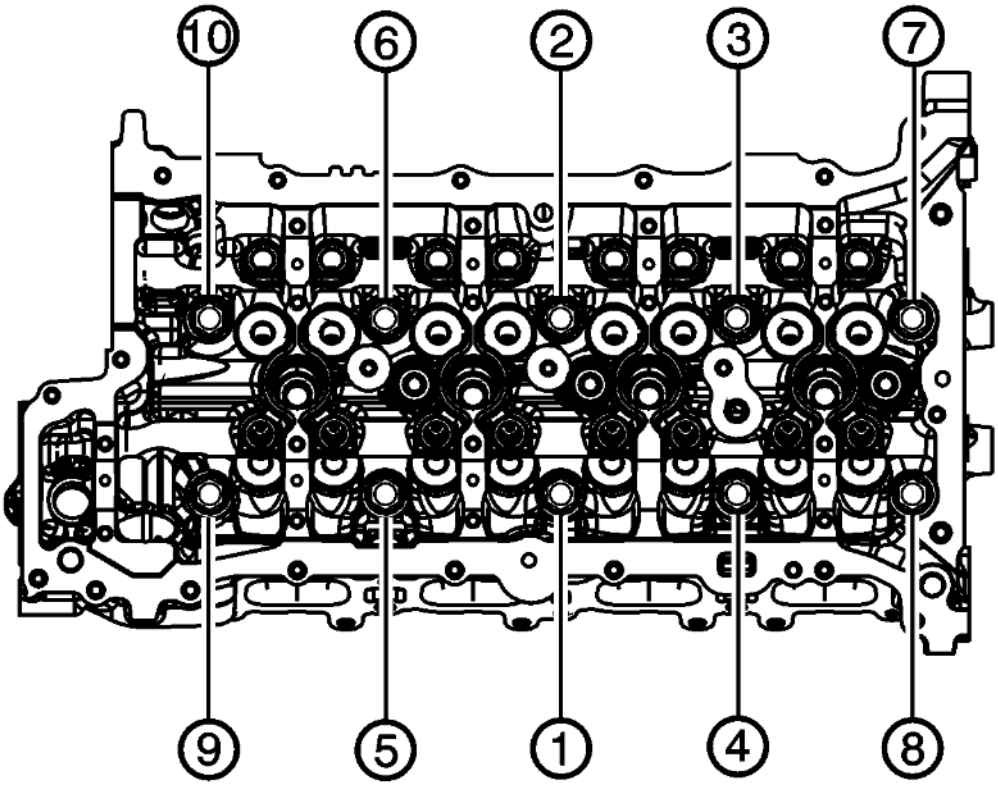

Fig. 218: Cylinder Head Gasket And Cylinder Head
Courtesy of GENERAL MOTORS COMPANY

CAUTION: Refer to Fastener Caution .

CAUTION: This vehicle is equipped with torque-to-yield or single use fasteners. Install a NEW torque-to-yield or single use fastener when installing this component. Failure to replace the torque-to-yield or single use fastener could cause damage to the vehicle or component.

4. Install the NEW cylinder head bolts.
    1. Tighten the bolts in sequence to 30 N.m (22 lb ft).
    2. Tighten the bolts an additional 190 degrees in sequence using the **EN 45059** meter.

WATER PUMP INSTALLATION

Prior to installing the water pump, read the entire procedure. Pay special attention to avoid part damage and to ensure proper sealing.

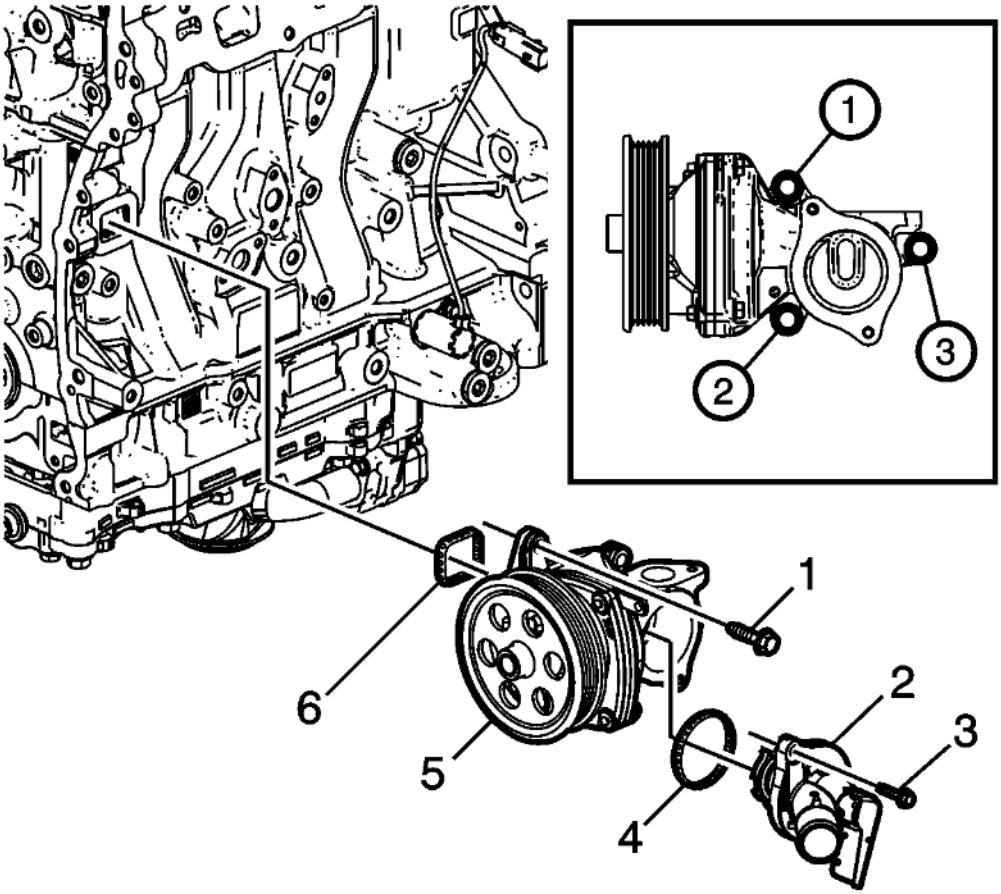

Fig. 219: Water Pump Gasket And Water Pump Bolts
Courtesy of GENERAL MOTORS COMPANY

1. Install a NEW water pump gasket (6) and the water pump assembly (5).
2. Install the water pump bolts (1). Finger tighten the bolts.

CAUTION: Refer to Fastener Caution .

NOTE: The sequence allows the fasteners closest to compress the seal.

3. Tighten the water pump bolts in sequence to 25 N.m (18 lb ft).
4. Install a NEW thermostat assembly gasket (4) and the thermostat assembly (2).
5. Install the thermostat assembly bolts (3) and tighten to 10 N.m (89 lb in).

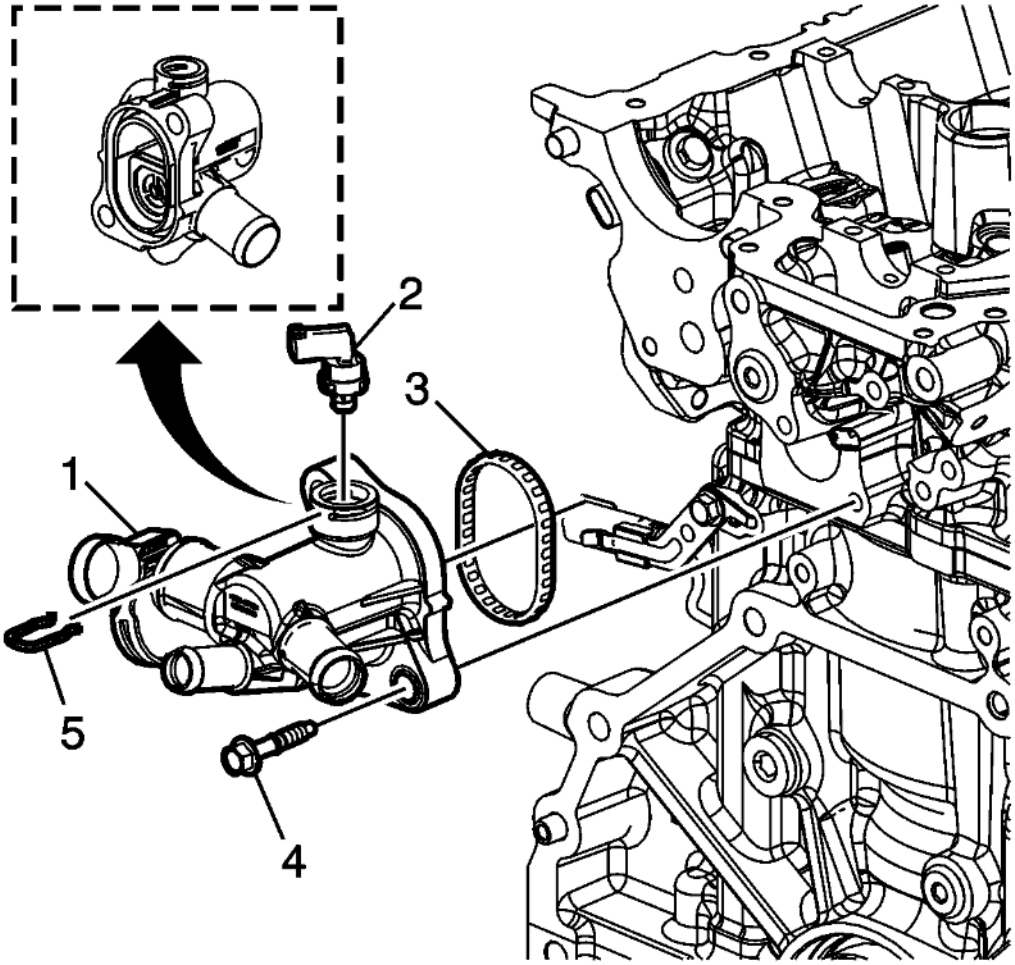

Fig. 220: Retaining Clip And Engine Coolant Temperature Sensor
Courtesy of GENERAL MOTORS COMPANY

6. Install a NEW water outlet assembly gasket (3), and the water outlet assembly (1).
7. Install the water outlet assembly bolts (4) and tighten to 10 N.m (89 lb in).
8. Install the engine coolant temperature sensor (2).
9. Install the engine coolant temperature sensor retaining clip (5).

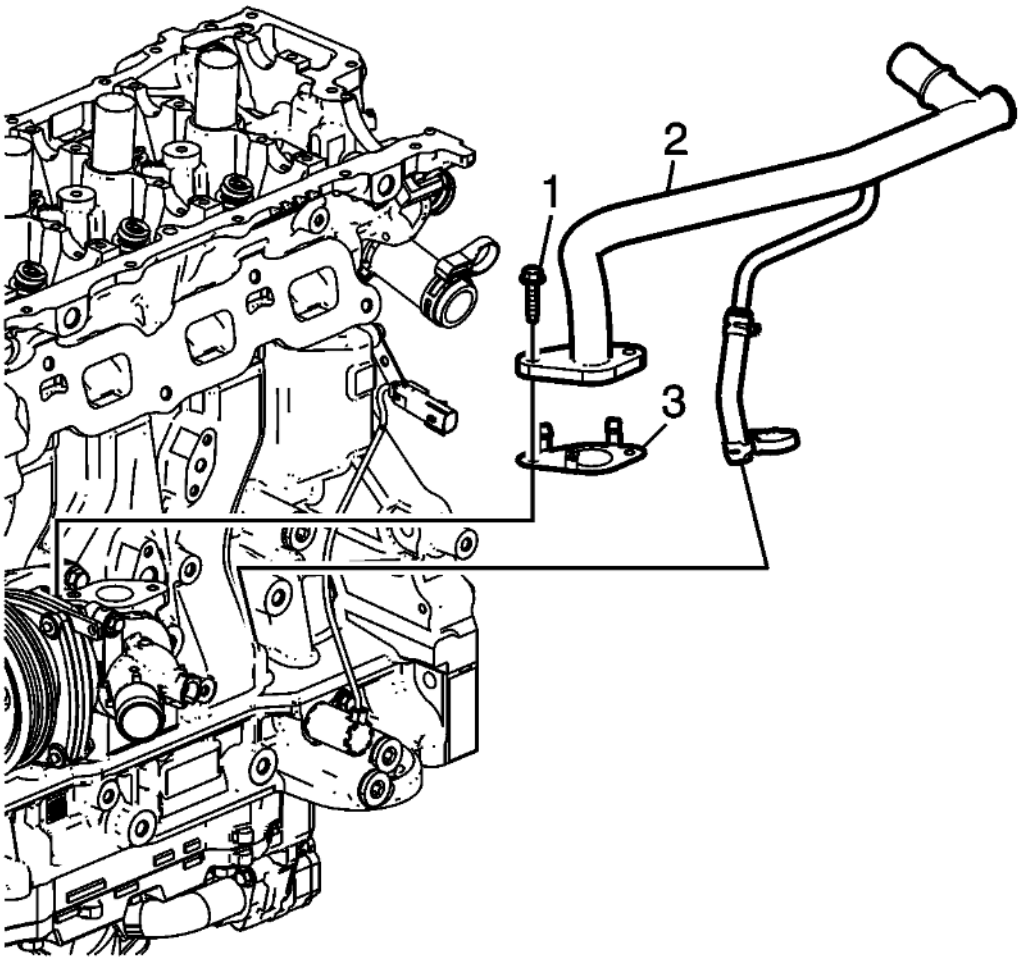

Fig. 221: Thermal Bypass Pipe Bolts And Gasket
Courtesy of GENERAL MOTORS COMPANY

10. Connect the thermal bypass pipe (2) to the water outlet assembly.
11. Connect the thermal bypass hose to the engine oil cooler.
12. Install a NEW thermal bypass pipe gasket (3) on the thermal bypass pipe. Install the thermal bypass pipe to the water pump assembly. Install the bolts (1) and tighten to 10 N.m (89 lb in).

INTAKE AND EXHAUST CAMSHAFT, BEARING CAP, AND LASH ADJUSTER INSTALLATION

Exhaust Camshaft Installation

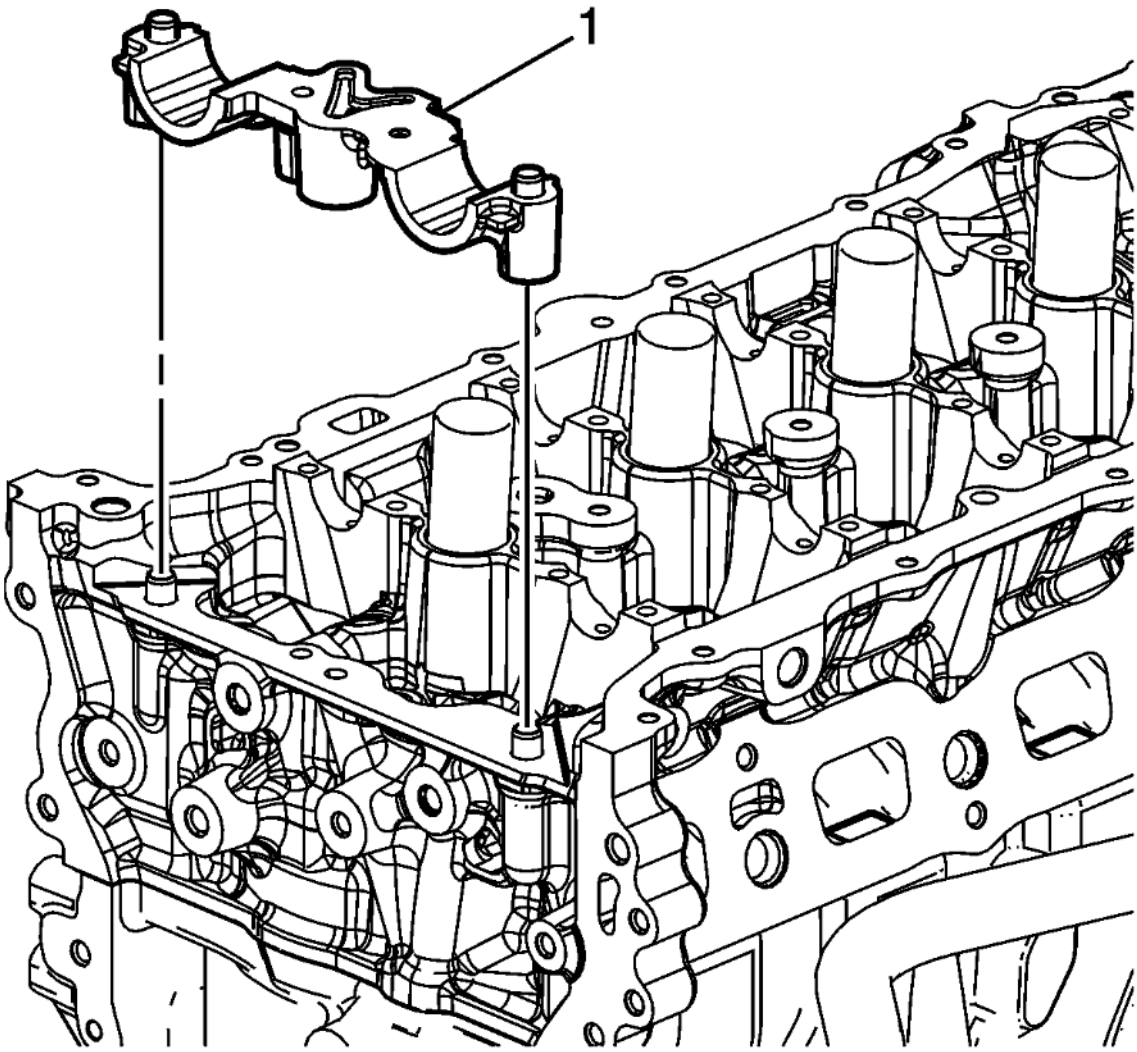

Fig. 222: Camshaft Bearing Lower Front Cap
Courtesy of GENERAL MOTORS COMPANY

1. Install the camshaft bearing lower front cap (1).

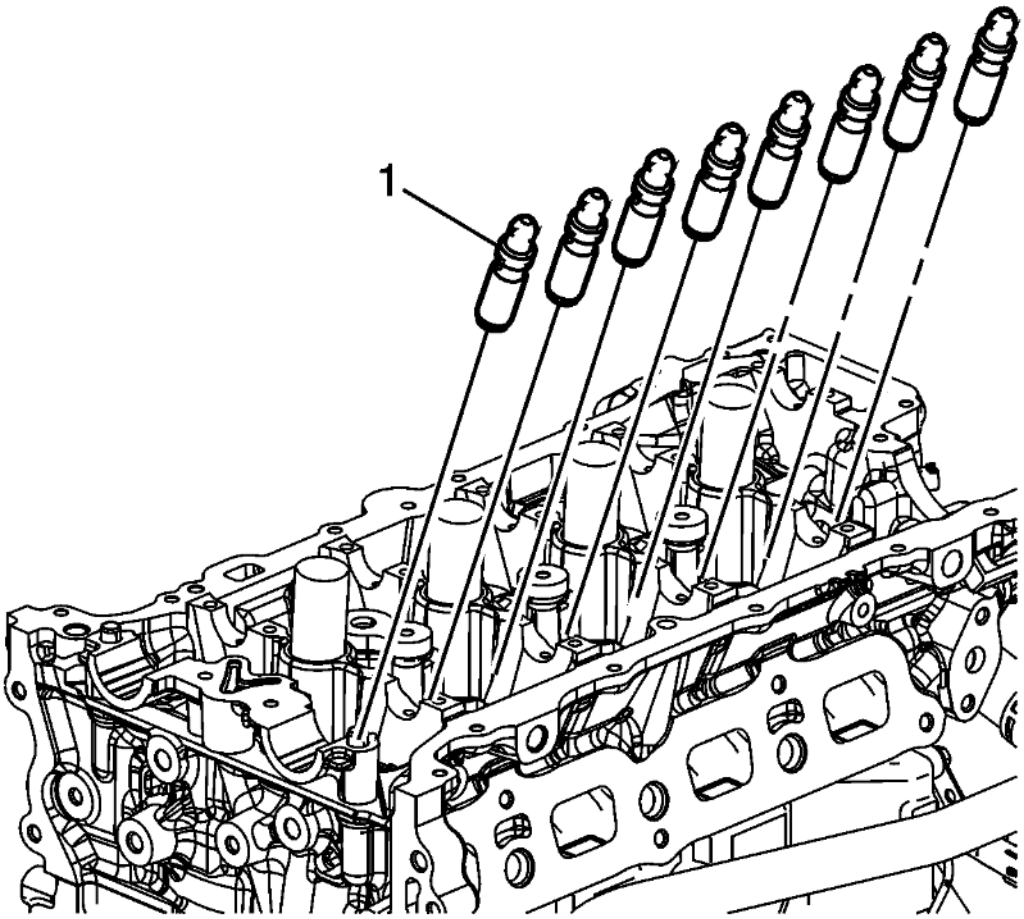

Fig. 223: Hydraulic Lash Adjusters
Courtesy of GENERAL MOTORS COMPANY

NOTE: **Pre-fill the low pressure chamber with engine oil. Maintain a vertical orientation of the assembly to retain the oil in the reservoir and high pressure chamber. Do not install the lash adjusters without pre-filling the low pressure chamber. Apply engine oil to the outer diameter surface of all adjusters.**

2. Lubricate and install the hydraulic valve lash adjusters (1) into their bores in the cylinder head. Refer to **Adhesives, Fluids, Lubricants, and Sealers** .

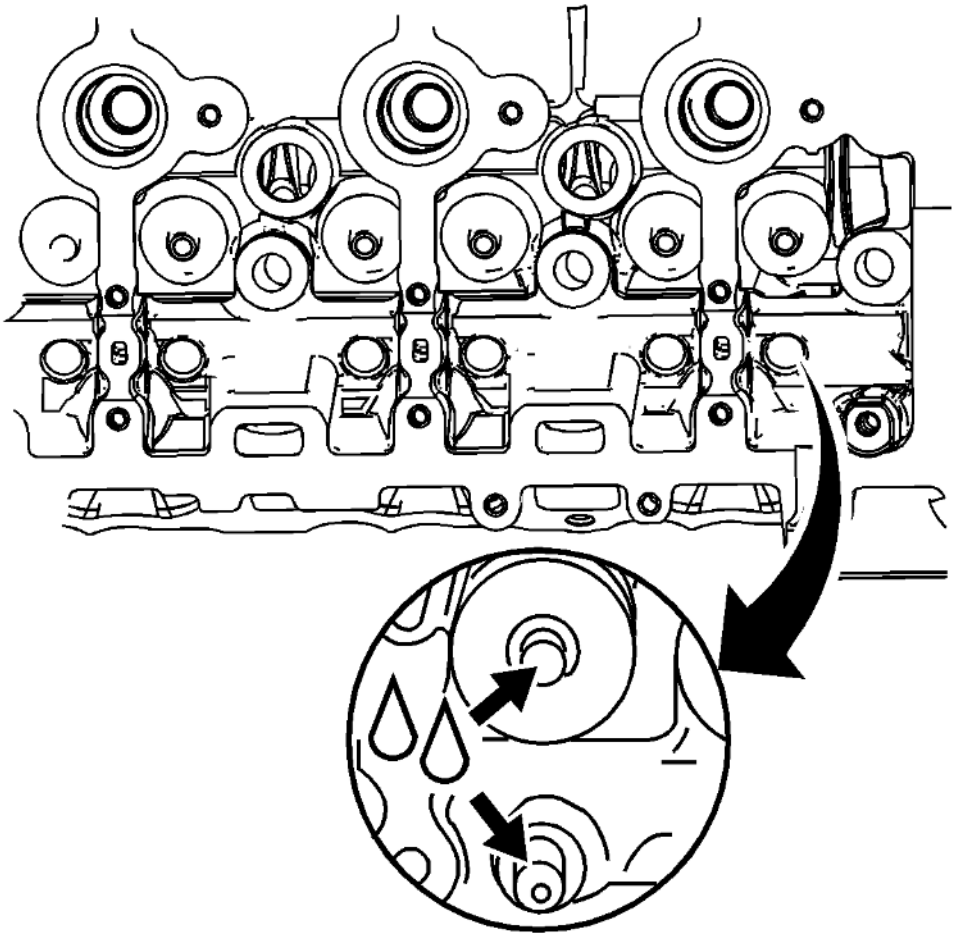

Fig. 224: Valve Tips
Courtesy of GENERAL MOTORS COMPANY

3. Lubricate the valve tips. Refer to **Adhesives, Fluids, Lubricants, and Sealers** .

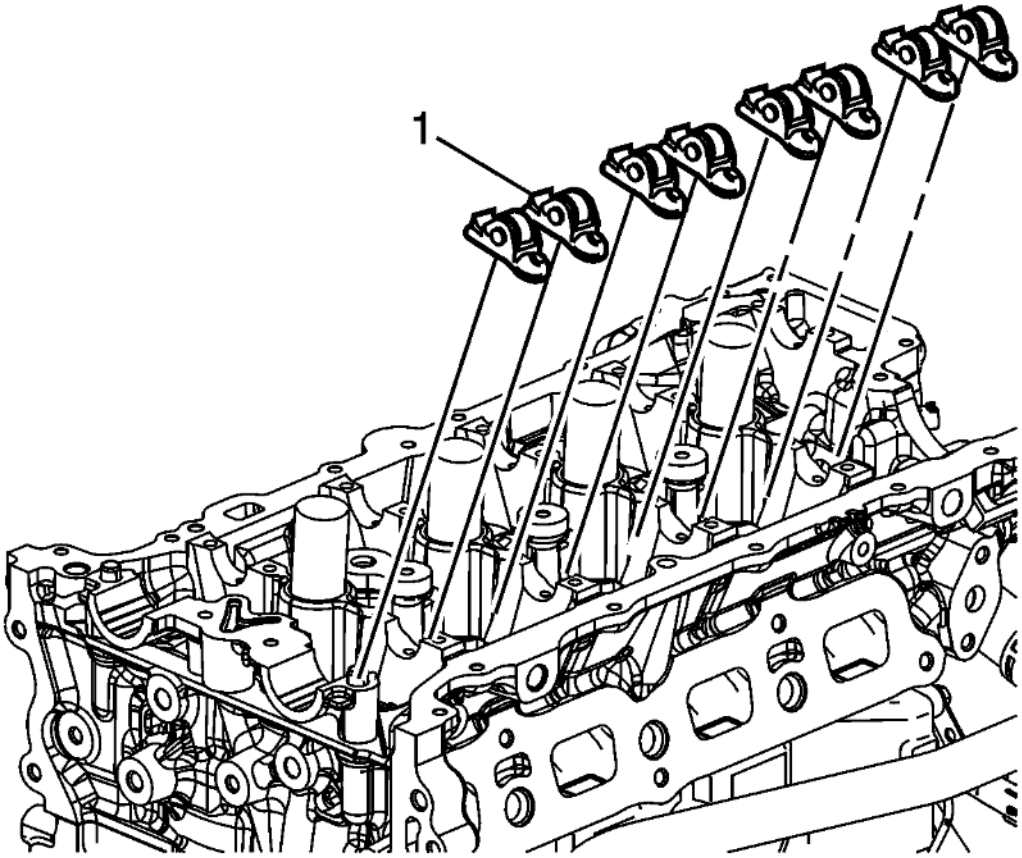

Fig. 225: Exhaust Camshaft Roller Finger Followers
Courtesy of GENERAL MOTORS COMPANY

NOTE: **Used rocker arms must be returned to the original position on the camshaft. If the camshaft is being replaced, the rocker arms actuated by the camshaft must also be replaced.**

NOTE: **Pre-oil roller bearings before installation.**

4. Lubricate the roller bearings with valve rocker arm lubricant. Refer to **Adhesives, Fluids, Lubricants, and Sealers** .
5. Position the valve rocker arm (1) on the tip of the valve stem and on the lash adjuster and lubricate. Refer to **Adhesives, Fluids, Lubricants, and Sealers** .

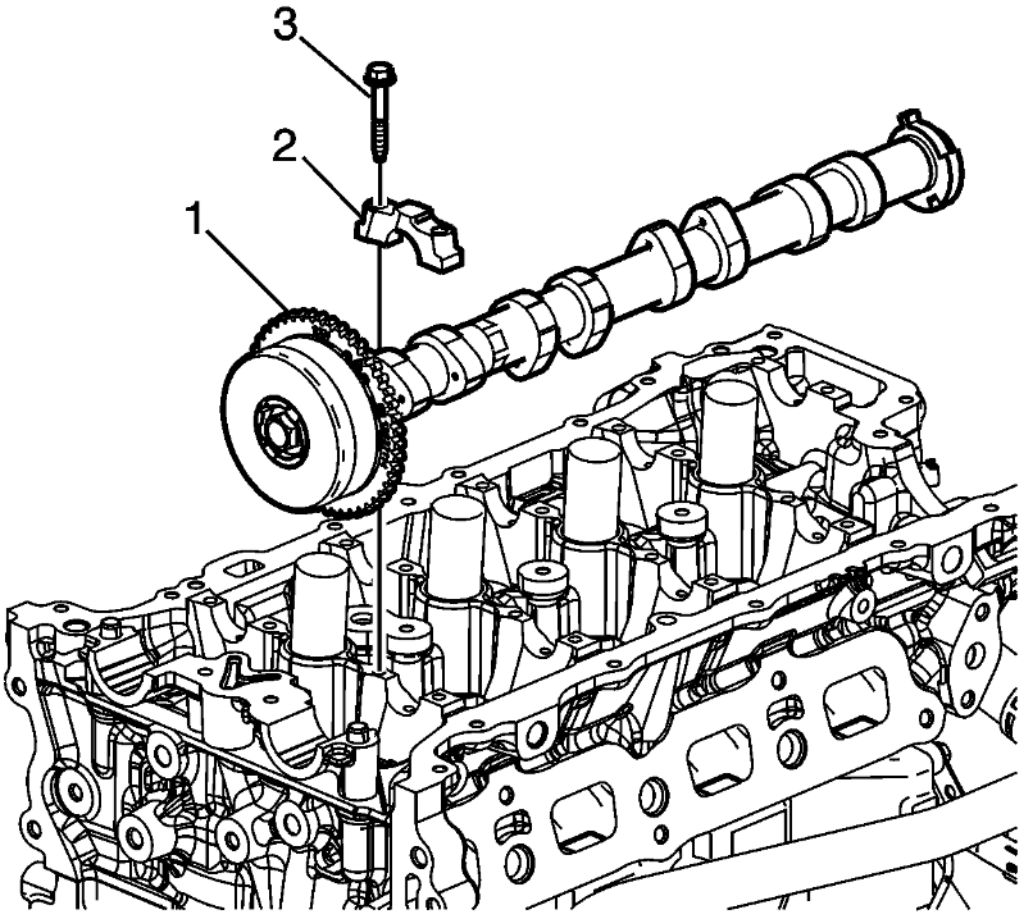

Fig. 226: Mark Camshaft Caps
Courtesy of GENERAL MOTORS COMPANY

NOTE: **Apply lubricant to all lobes and journals prior to installing the camshafts.**

6. Lubricate the exhaust camshaft lobes and journals with camshaft lubricant. Refer to **Adhesives, Fluids, Lubricants, and Sealers** .
7. Set the exhaust camshaft (1) on top of the rocker arms in the camshaft bearing journals with the actuator timing mark at approximately the 1 O'clock position.

NOTE:

- **Do not apply final torque at this time. Camshaft cap final torque is applied in sequence when all caps are installed on both intake and exhaust camshafts.**
- **To properly position the camshaft caps, install the camshaft cap bolts into the camshaft caps prior to installing the camshaft caps on the camshafts.**

8. Install the camshaft cap bolts (3) into the camshaft caps (2).
9. Install the camshaft caps (2) and hand start the camshaft cap bolts (3).

Intake Camshaft Installation

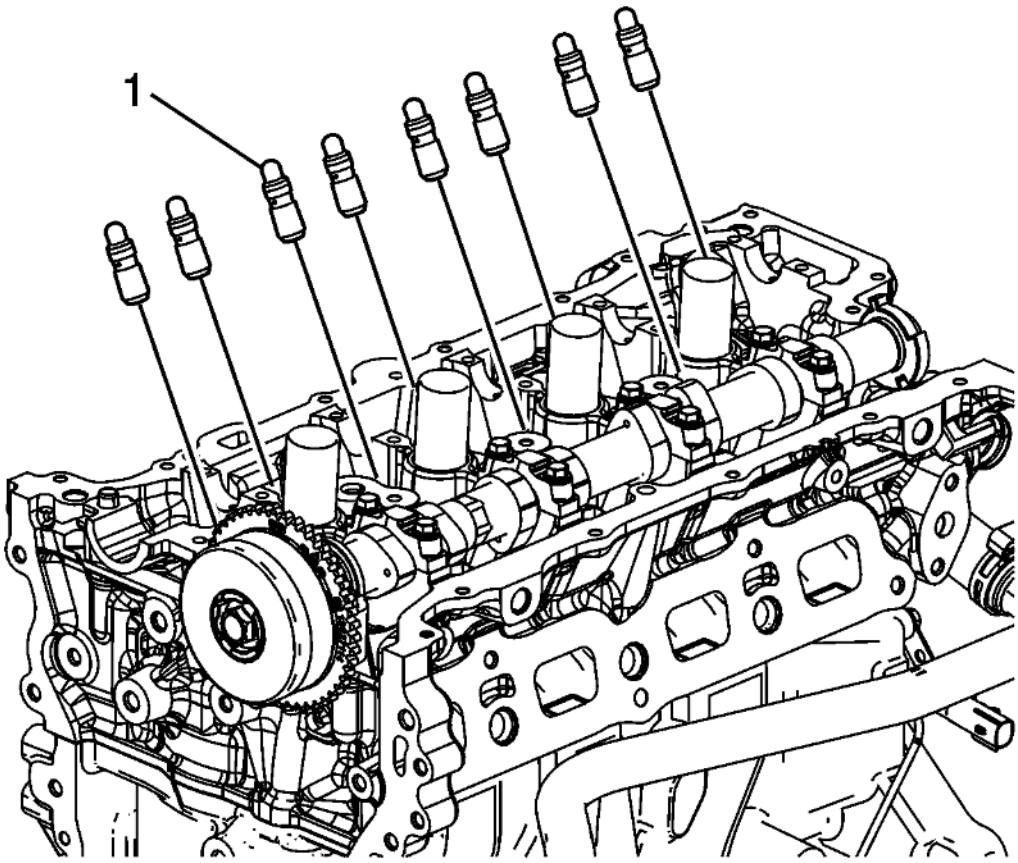

Fig. 227: Hydraulic Lash Adjusters
Courtesy of GENERAL MOTORS COMPANY

NOTE: **Pre-fill the low pressure chamber with engine oil. Maintain a vertical orientation of the assembly to retain the oil in the reservoir and high pressure chamber. Do not install the lash adjusters without pre-filling the low pressure chamber. Apply engine oil to the outer diameter surface of all adjusters.**

1. Lubricate and install the hydraulic valve lash adjusters (1) into their bores in the cylinder head. Refer to **Adhesives, Fluids, Lubricants, and Sealers** .

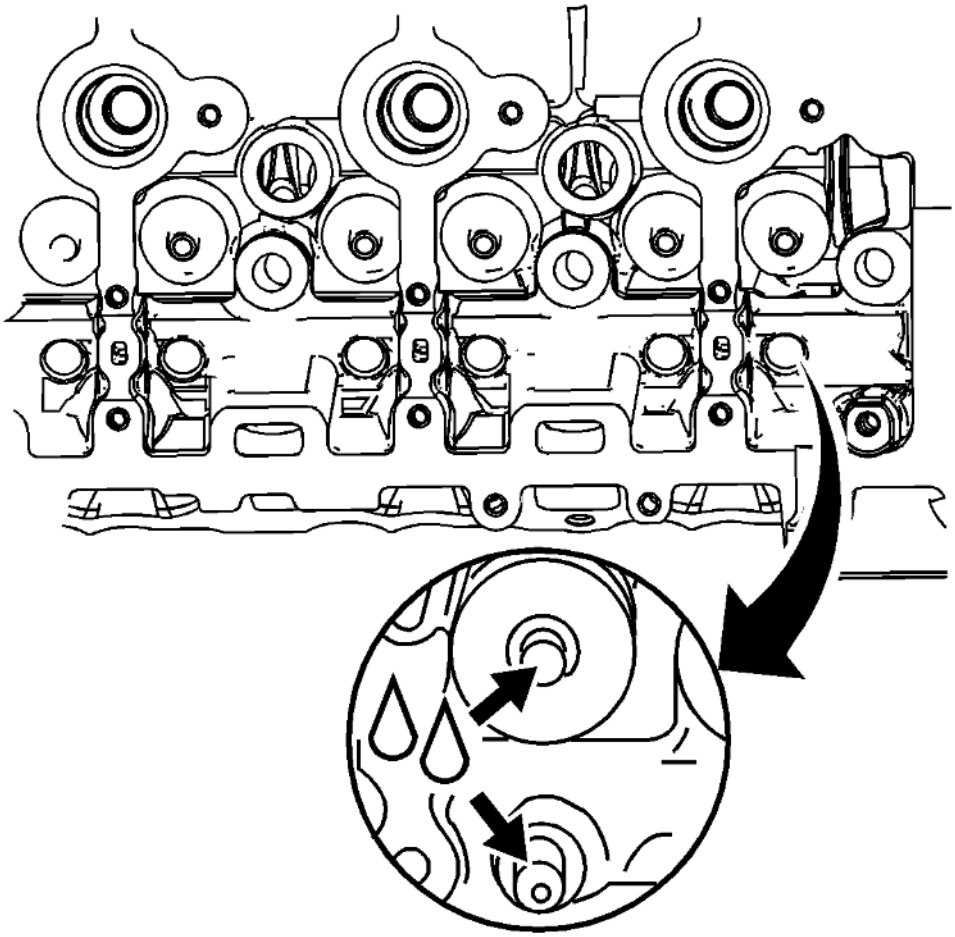

Fig. 228: Valve Tips
Courtesy of GENERAL MOTORS COMPANY

2. Lubricate the valve tips. Refer to **Adhesives, Fluids, Lubricants, and Sealers** .

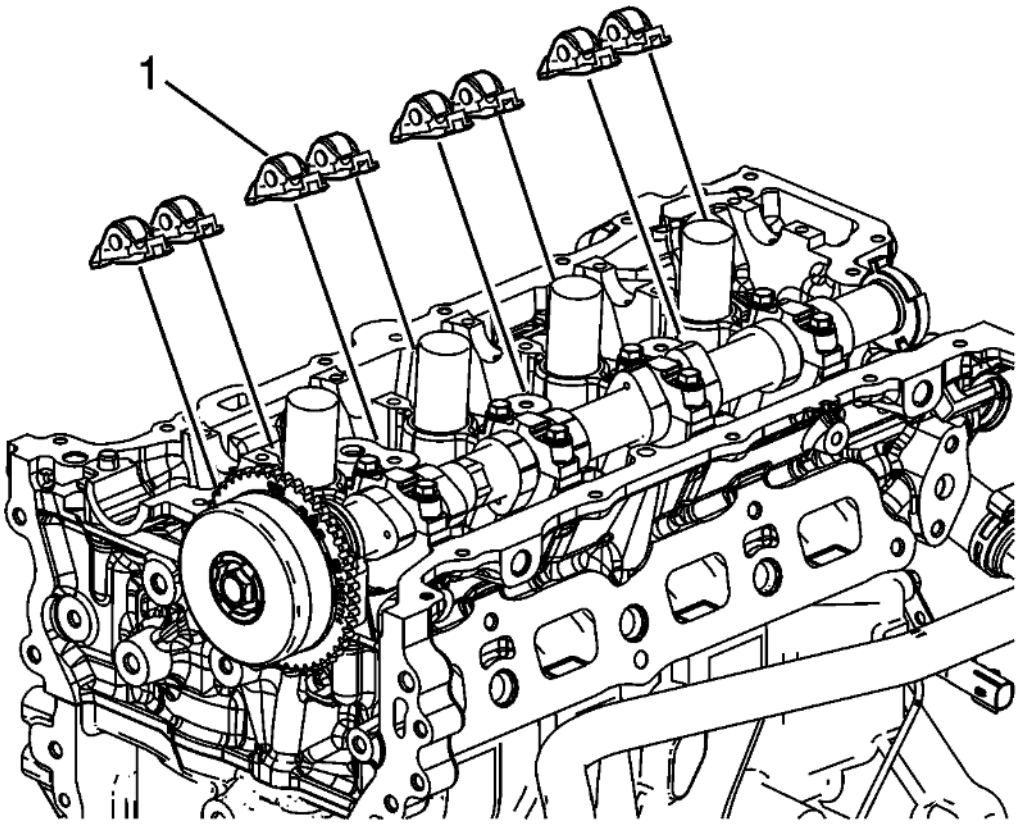

Fig. 229: Intake Camshaft Roller Finger Followers
Courtesy of GENERAL MOTORS COMPANY

NOTE: **Used rocker arms must be returned to the original position on the camshaft. If the camshaft is being replaced, the rocker arms actuated by the camshaft must also be replaced.**

NOTE: **Pre-oil roller bearings before installation.**

3. Lubricate the roller bearings with valve rocker arm lubricant. Refer to **Adhesives, Fluids, Lubricants, and Sealers** .
4. Position the valve rocker arm (1) on the tip of the valve stem and on the lash adjuster and lubricate. Refer to **Adhesives, Fluids, Lubricants, and Sealers** .

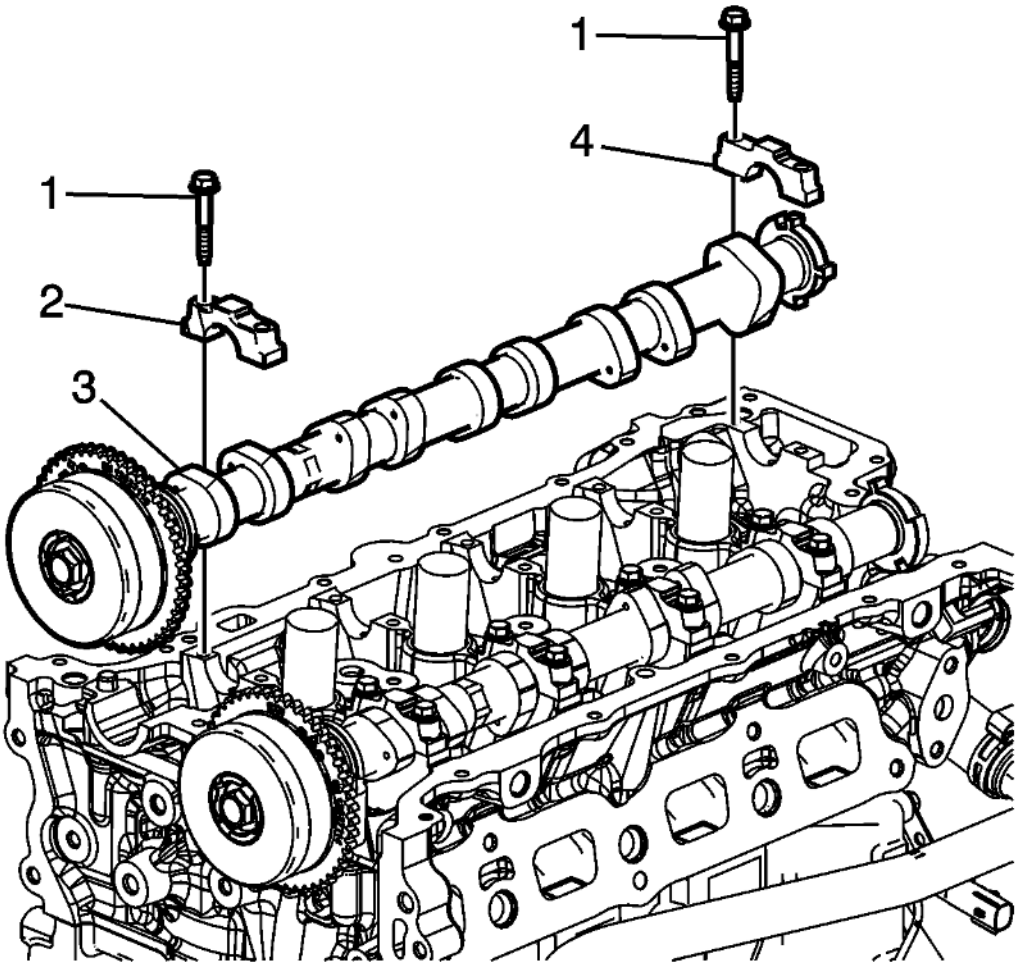

Fig. 230: Intake Camshaft Bearing Rear Cap Bolts And Cap
Courtesy of GENERAL MOTORS COMPANY

NOTE: **Apply lubricant to all lobes and journals prior to installing the camshafts.**

5. Lubricate the intake camshaft lobes and journals with camshaft lubricant. Refer to **Adhesives, Fluids, Lubricants, and Sealers** .

   Set the intake camshaft (3) on top of the roller followers in the camshaft bearing journals with the intake actuator timing mark at approximately the 11 O'clock position.

   NOTE: **To properly position the camshaft caps, install the camshaft cap bolts into the camshaft caps prior to installing the camshaft caps on the camshafts.**

6. Install the camshaft cap bolts (1) into the camshaft caps (2, 4).
7. Install the camshaft caps (2) and hand start the camshaft cap bolts (1).
8. Install the camshaft rear cap (4) and hand start the camshaft cap bolts (1).

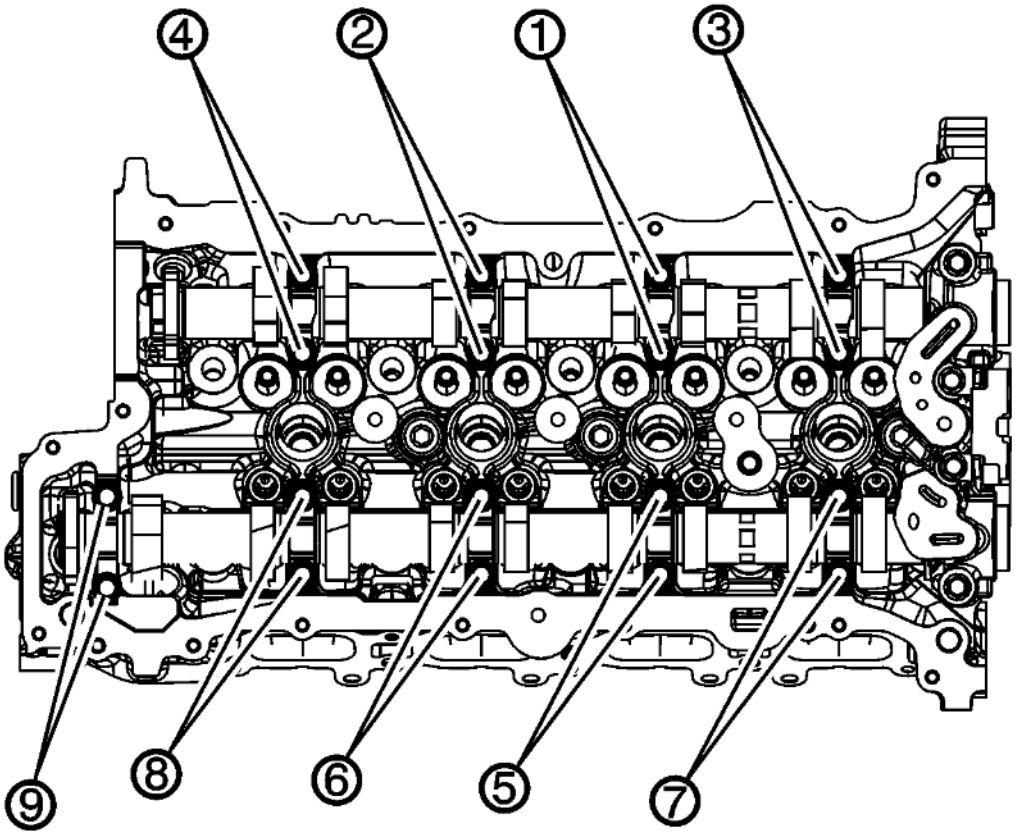

Fig. 231: Camshaft Cap Bolts In Sequence
Courtesy of GENERAL MOTORS COMPANY

CAUTION: Refer to Fastener Caution .

NOTE: During the tightening sequence, locate and tighten each camshaft cap bolt installed into the circular hole first. Then, tighten the bolt installed into the slotted hole.

9. Tighten the camshaft cap bolts in sequence using the following procedure:
    1. Tighten the camshaft cap bolts in sequence to 8 N.m (71 lb in).
    2. Loosen both bolts in each cap in sequence to 180 degrees.
    3. Tighten the camshaft cap bolts in sequence to 10 N.m (89 lb in) twice.

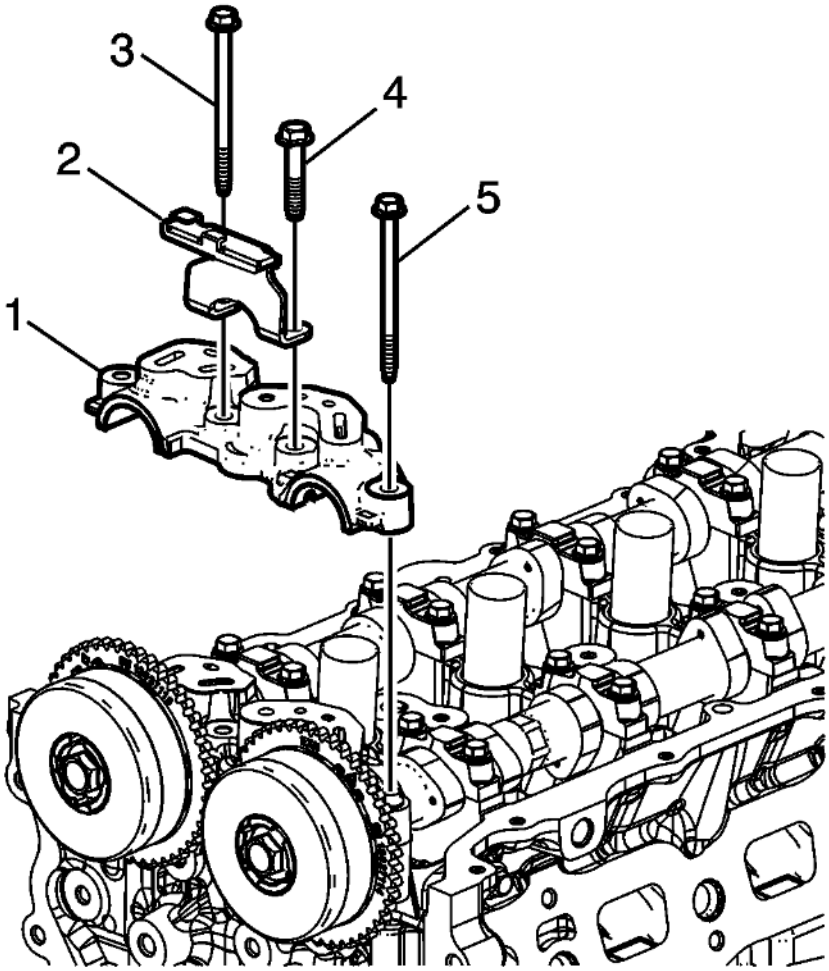

Fig. 232: Front Camshaft Bearing Cap
Courtesy of GENERAL MOTORS COMPANY

NOTE: **Installation of the timing chain guide (2) and bolts (3, 4), and final torque for the front bearing cap is performed after the timing chain is installed.**

10. Install the front camshaft bearing cap (1). Install the 2 outer bolts (5) for the front camshaft bearing cap finger tight.

BALANCER CHAIN, SPROCKET, AND TENSIONER INSTALLATION

Special Tools

EN-50837 Timing Chain Tensioner Retraction Tool

For equivalent regional tools, refer to **Special Tools** .

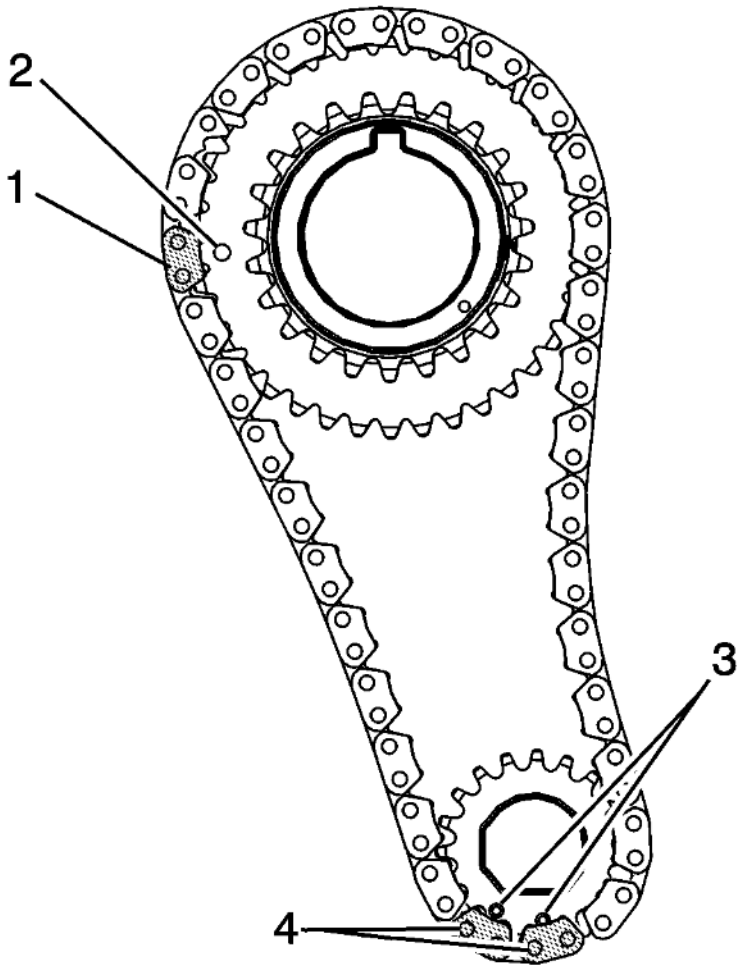

Fig. 233: Timing Link Lines Up And Timing Mark
Courtesy of GENERAL MOTORS COMPANY

NOTE: **Proper setup is critical to ensure correct timing when installing the sprockets and chain simultaneously onto the shafts. The timing links are heat treated blued steel.**

1. Assemble the crankshaft sprocket, balancer shaft driven sprocket, and balancer chain. Ensure the timing link (1) lines up with the timing mark (2) on the crankshaft sprocket. Ensure that both timing teeth (3) on the balancer shaft driven sprocket line up with the timing links (4).

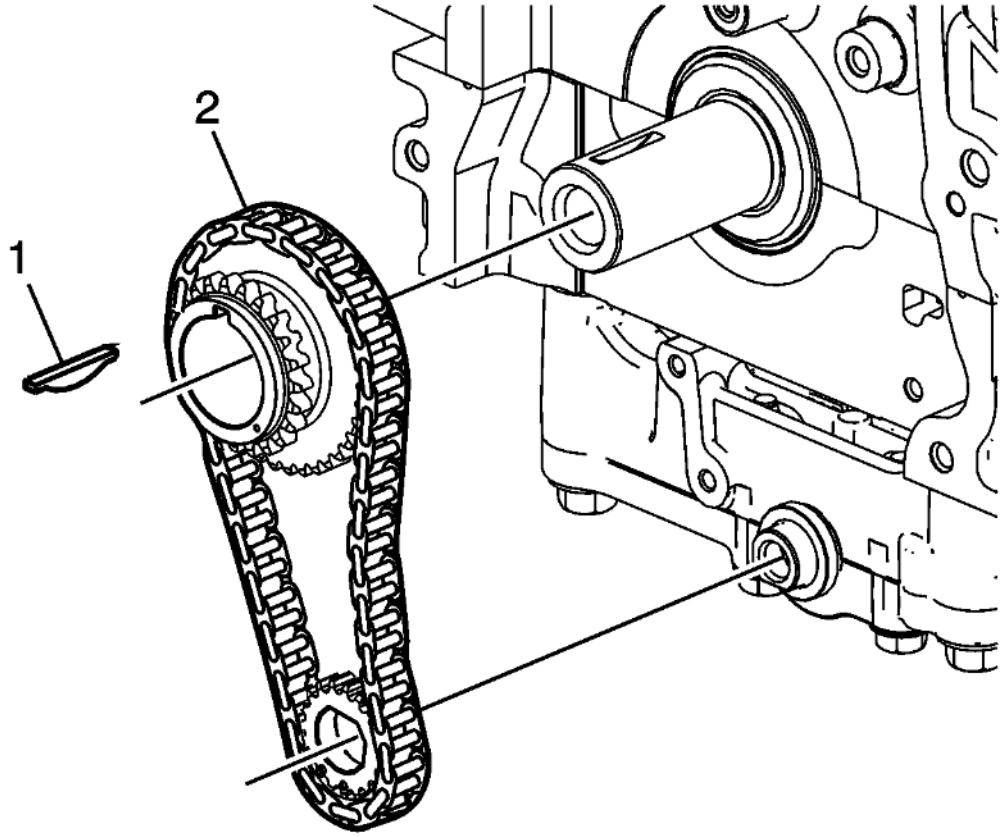

Fig. 234: Balancer Shaft Driven Sprocket And Balancer Chain
Courtesy of GENERAL MOTORS COMPANY

NOTE: The crankshaft keyway should be in the 12 O'clock position.

2. Install the sprockets and chain (2) as an assembly to the crankshaft and balancer shaft assembly.
3. Install the crankshaft key (1).

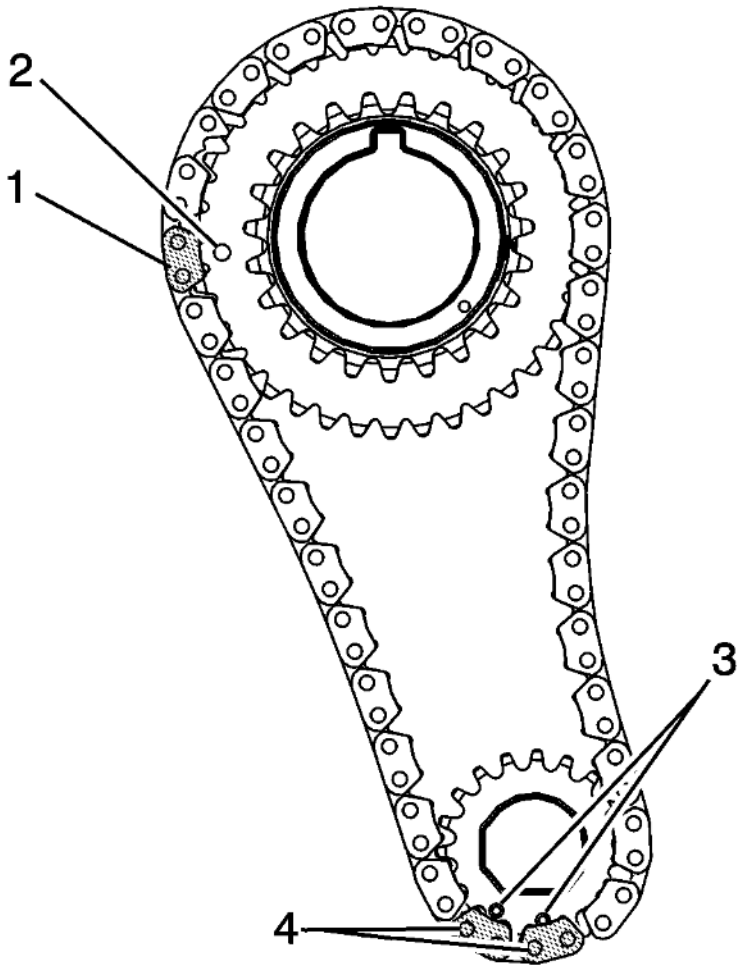

Fig. 235: Timing Link Lines Up And Timing Mark
Courtesy of GENERAL MOTORS COMPANY

4. Ensure the timing link (1) is aligned with the crankshaft sprocket timing mark (2).
5. Ensure the adjacent timing links (4) are aligned with both of the timing marks (3) on the balancer shaft driven sprocket.

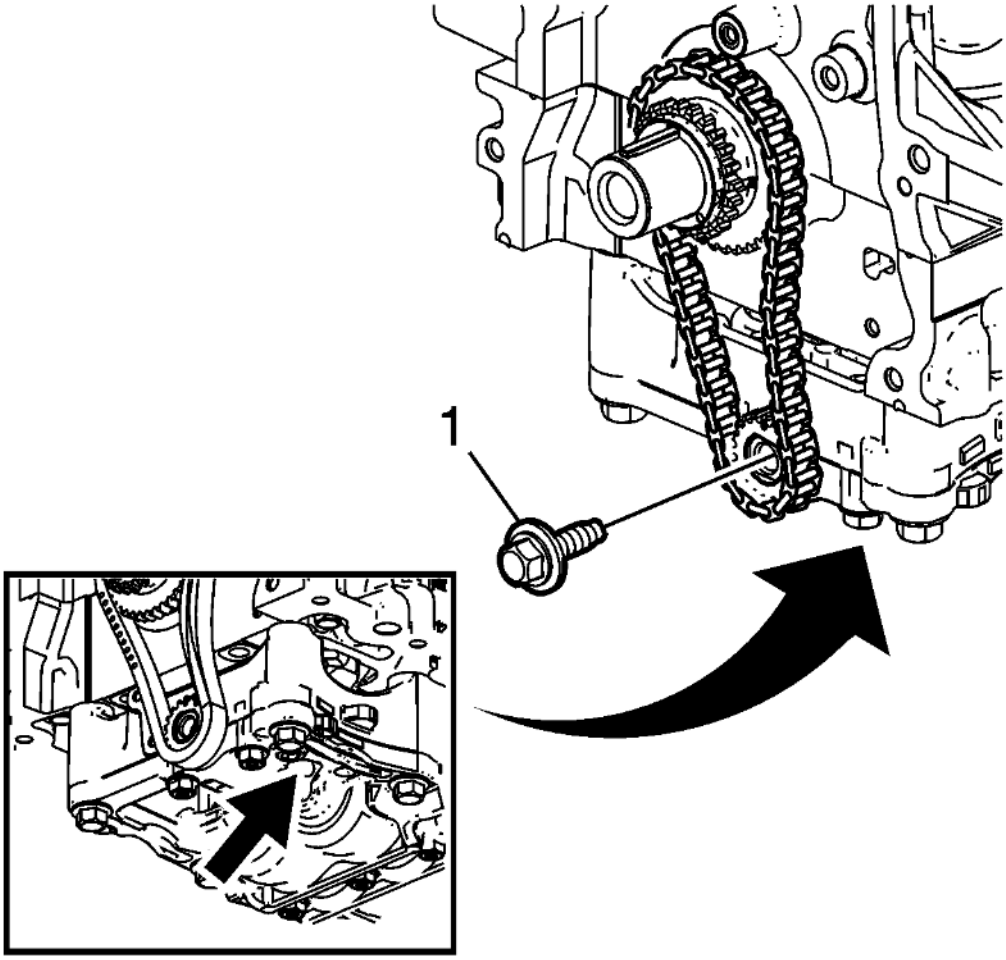

Fig. 236: Balancer Shaft Driven Sprocket Bolt
Courtesy of GENERAL MOTORS COMPANY

CAUTION: This vehicle is equipped with torque-to-yield or single use fasteners. Install a NEW torque-to-yield or single use fastener when installing this component. Failure to replace the torque-to-yield or single use fastener could cause damage to the vehicle or component.

6. Install the NEW balancer shaft driven sprocket bolt (1).

CAUTION: Refer to Fastener Caution .

7. Use an 18 mm open end wrench over flat on balance shaft while tightening the balancer shaft sprocket bolt to specification. Tighten the balancer shaft driven sprocket bolt to 40 N.m (30 lb ft) plus 50 degrees.

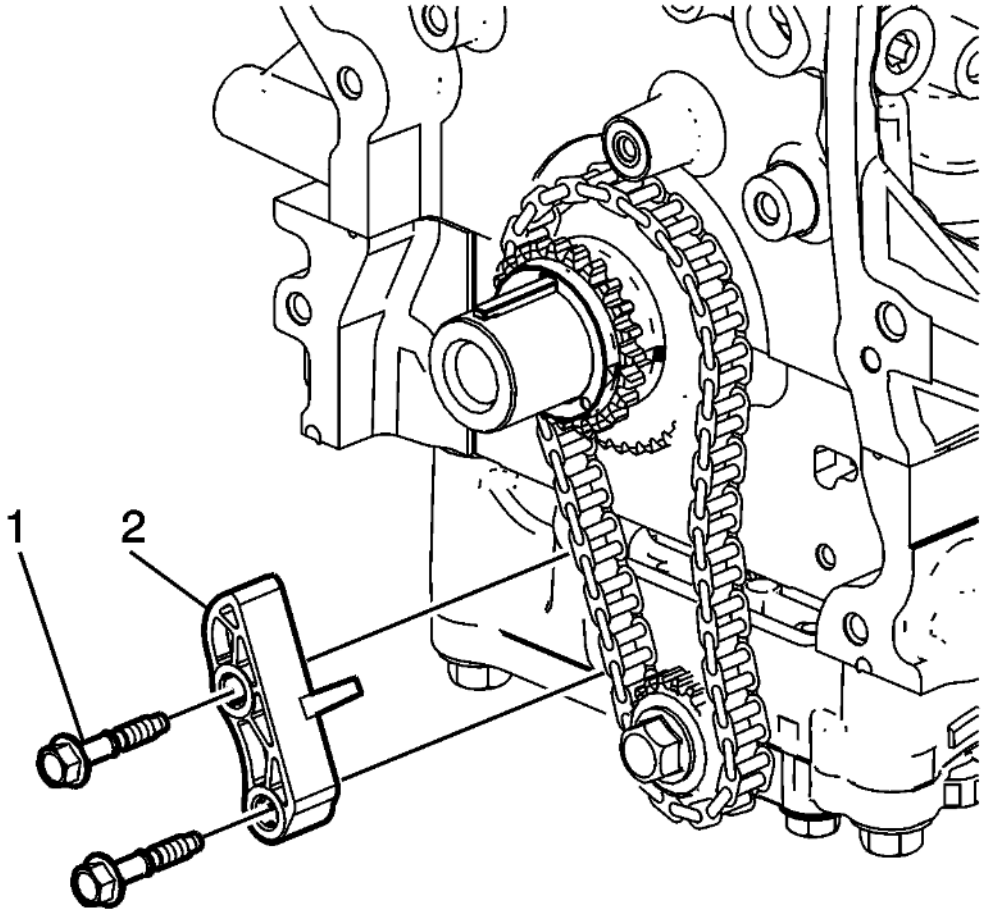

Fig. 237: Balancer Chain Guide Bolt
Courtesy of GENERAL MOTORS COMPANY

NOTE: **Ensure the guide is installed in the correct orientation. The long end must point toward the crankshaft and the flat edge must be adjacent to the balance chain.**

8. Install the balancer chain guide (2).
9. Install the balancer chain guide bolts (1). Tighten the bolts to 10 N.m (89 lb in).

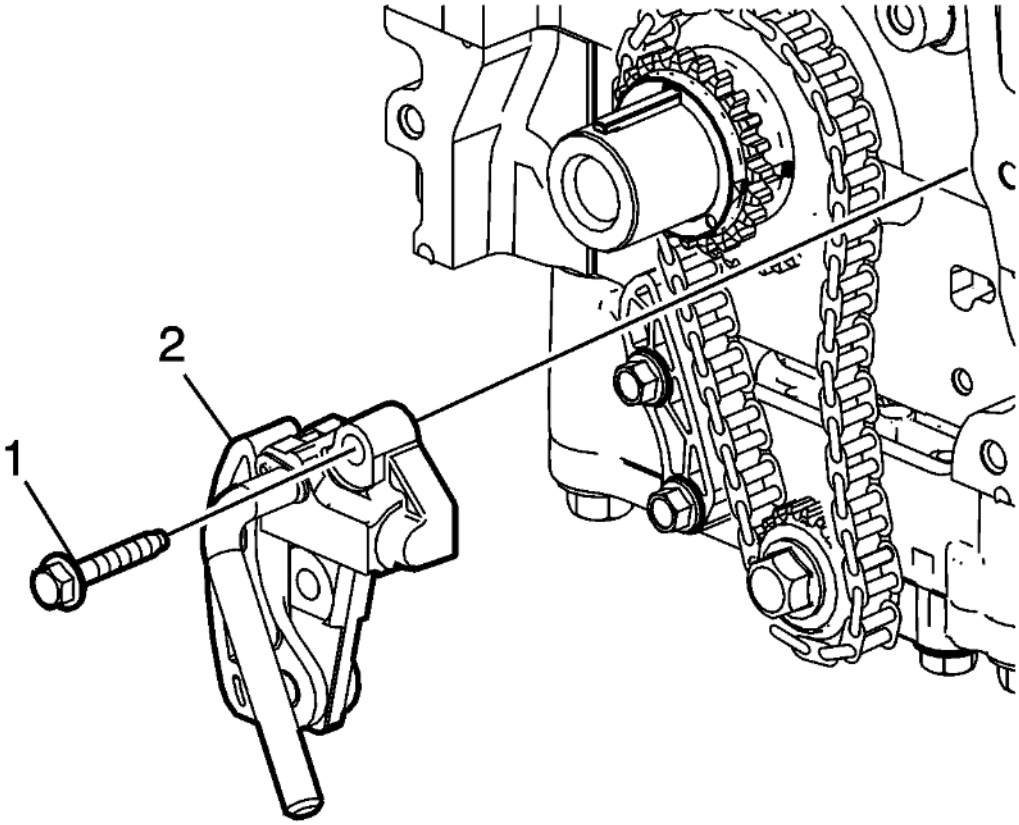

Fig. 238: Balancer Chain Tensioner Bolt
Courtesy of GENERAL MOTORS COMPANY

10. Install the balancer chain tensioner (2).
11. Install the balancer chain tensioner bolts (1). Tighten the bolts to 10 N.m (89 lb in).
12. Remove **EN-50837** retention tool to restore the tension to the balancer chain.

OIL PAN INSTALLATION

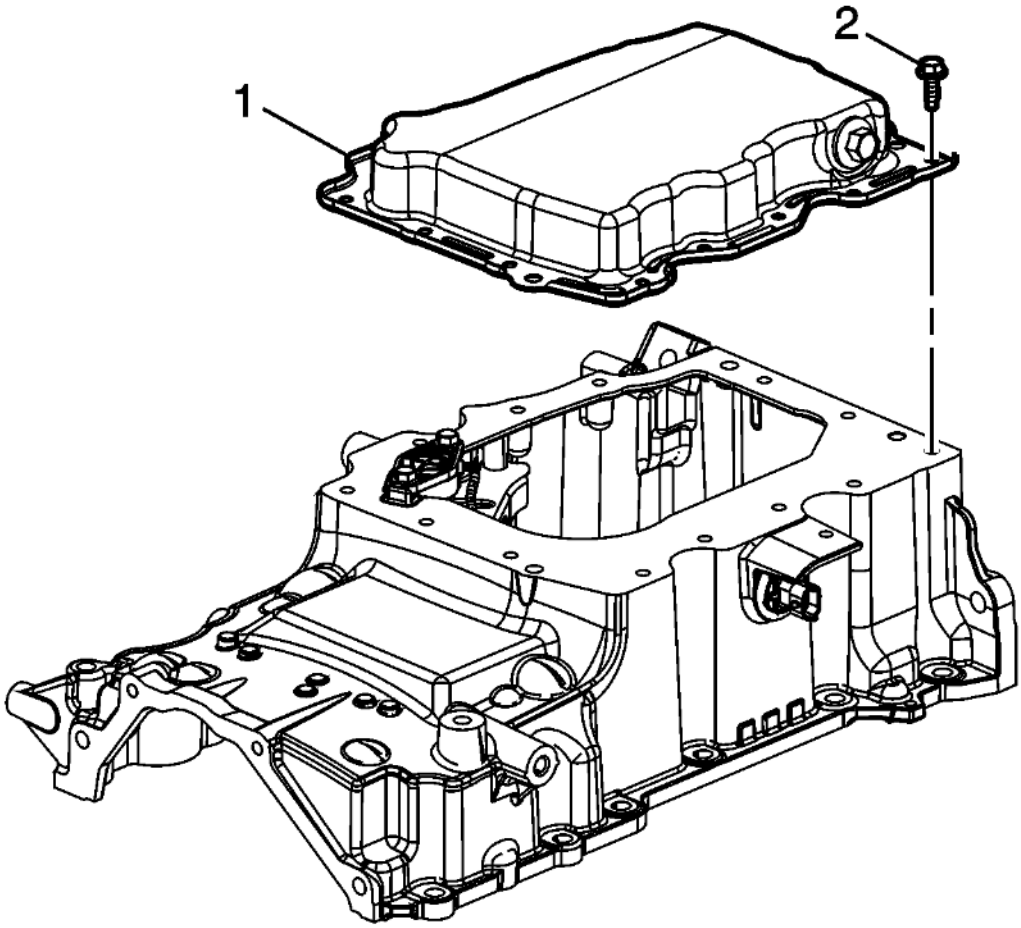

Fig. 239: Lower Oil Pan
Courtesy of GENERAL MOTORS COMPANY

NOTE:

- **The oil pan sealing surfaces must be free of contamination prior to applying the sealer.**
- **Install and align the oil pans within 20 minutes of applying the sealer.**
- **The oil pans must be fastened to final torque specification within 60 minutes of applying the sealer.**

1. Apply a bead of RTV sealant to the perimeter of the lower oil pan.
2. Install the lower oil pan (1) to the upper oil pan.

CAUTION: Refer to Fastener Caution .

NOTE: Two long bolts secure the lower oil pan and upper oil pan together to the lower crankcase.

3. Install the short lower oil pan bolts (2) and tighten to 10 N.m (89 lb in).

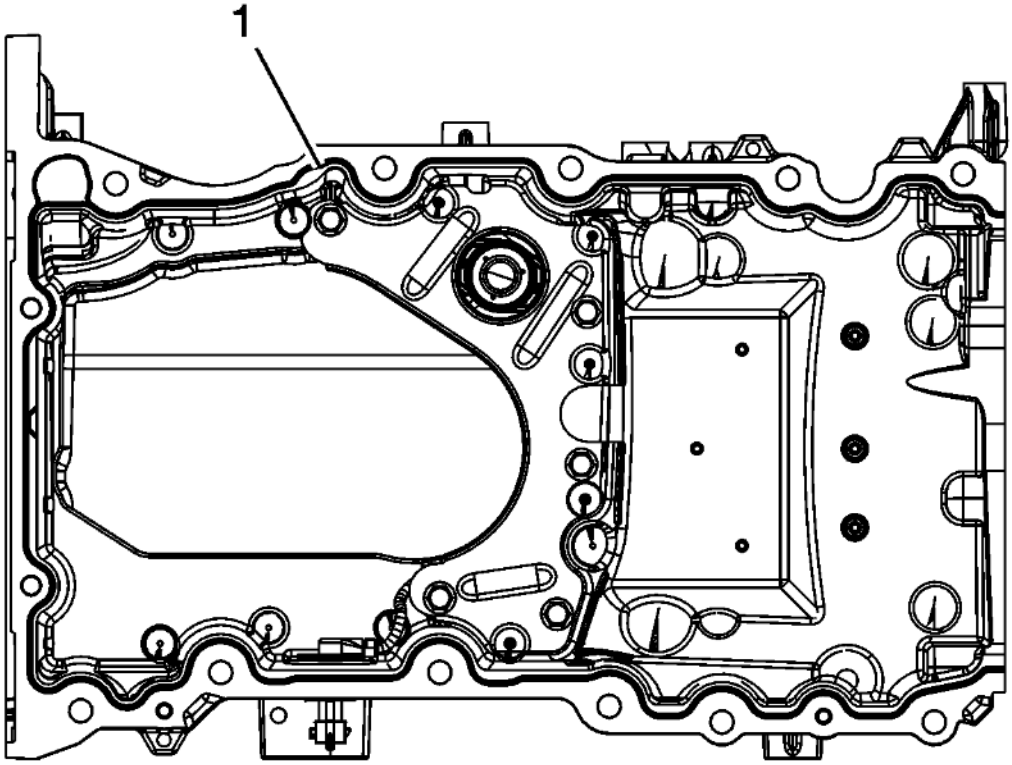

Fig. 240: Short Lower Oil Pan Bolts
Courtesy of GENERAL MOTORS COMPANY

NOTE:

- **The lower crankcase surface must be free of contamination prior to applying the sealer.**
- **Install and align the oil pan to block within 20 minutes of applying the sealer.**
- **The oil pan must be fastened to final torque specification within 60 minutes of applying the sealer.**

4. Apply a 4.25 mm bead of sealer (1) on the level part of the flange around the perimeter of the oil pan. Refer to **Adhesives, Fluids, Lubricants, and Sealers** .

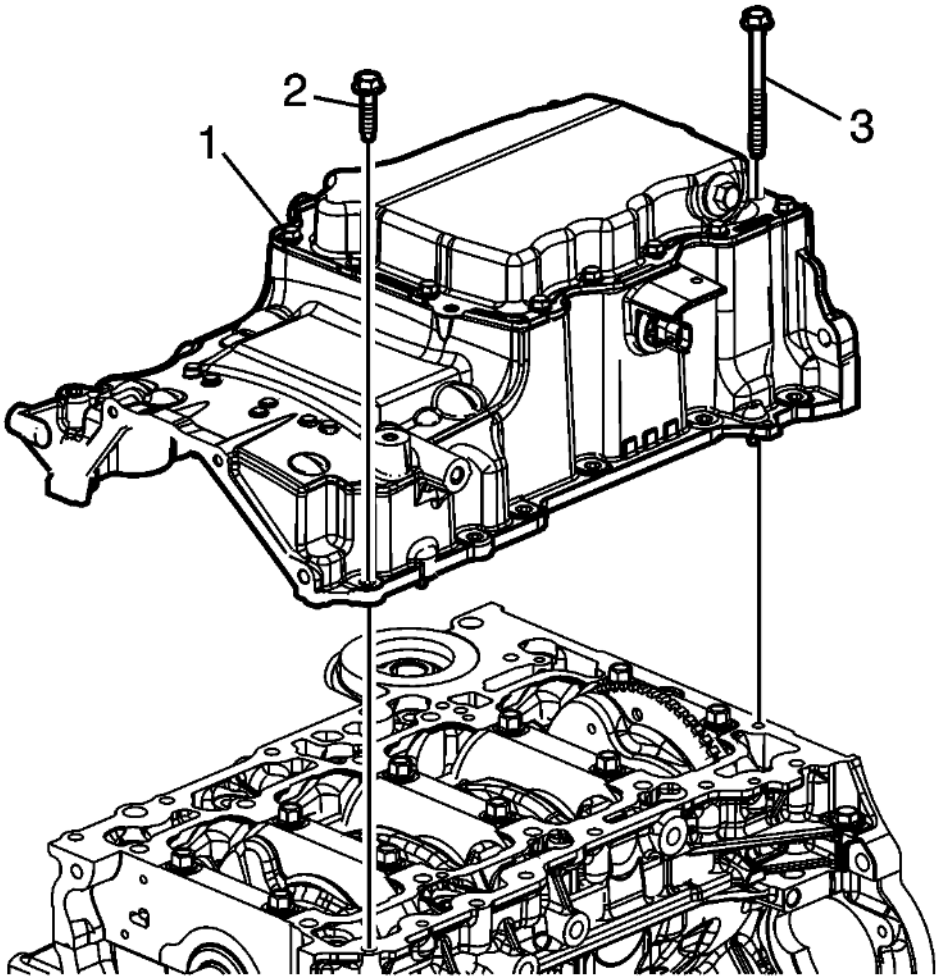

Fig. 241: Oil Pan And Oil Pan Bolts
Courtesy of GENERAL MOTORS COMPANY

5. Install the oil pan (1).
6. Install the oil pan bolts (2, 3) finger tight.

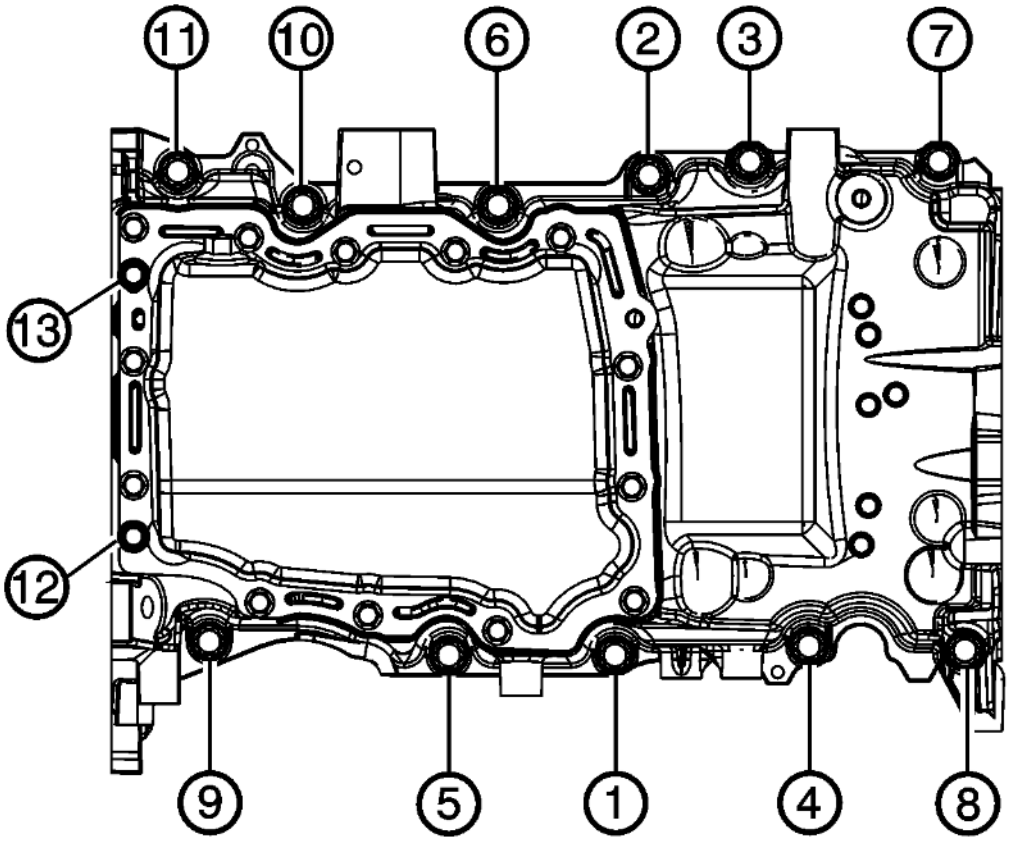

Fig. 242: Oil Pan Bolts In Sequence
Courtesy of GENERAL MOTORS COMPANY

7. Tighten the oil pan bolts in sequence to final torque twice using the following procedure:
    1. Tighten bolts in sequence 1-11 to 25 N.m (18 lb ft).
    2. Tighten bolts in sequence 12-13 to 10 N.m (89 lb in).

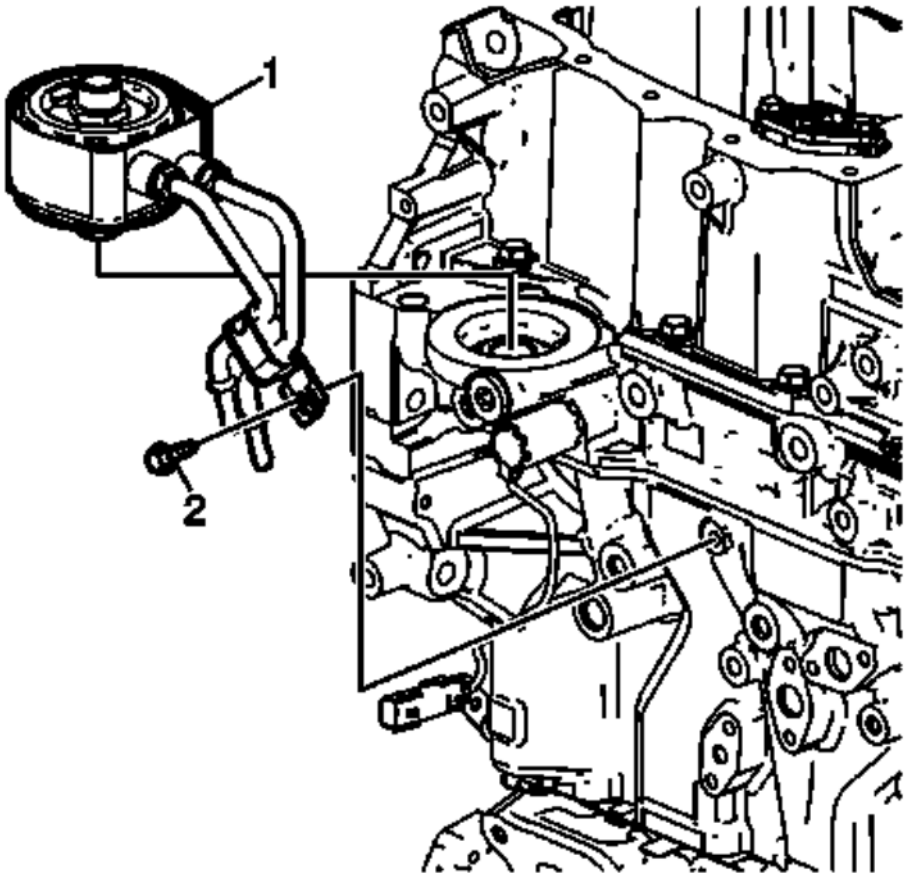

Fig. 243: Engine Oil Cooler And Bolts
Courtesy of GENERAL MOTORS COMPANY

8. Install the engine oil cooler (1).
9. Install the engine oil cooler bolt (2) and tighten to 10 N.m (89 lb in).

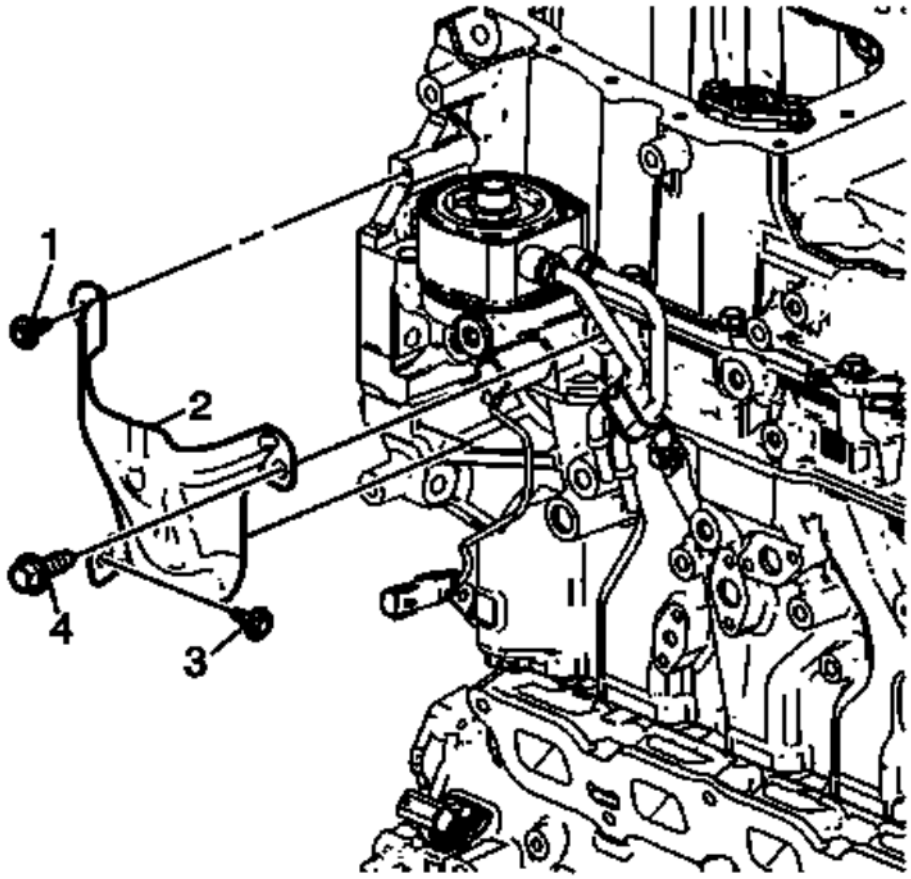

Fig. 244: Oil Pump Flow Control Valve Cover
Courtesy of GENERAL MOTORS COMPANY

10. Install the oil pump flow control valve cover (2).
11. Install the valve cover bolts (1, 3) and tighten to 9 N.m (80 lb in).
12. Install the valve cover bolt (4) and tighten to 58 N.m (43 lb ft).

CAMSHAFT TIMING CHAIN AND TENSIONER INSTALLATION

Special Tools

- **EN 45059** Angle Meter
- **EN 50837** Timing Chain Tensioner Retraction Tool

For equivalent regional tools, refer to **Special Tools** .

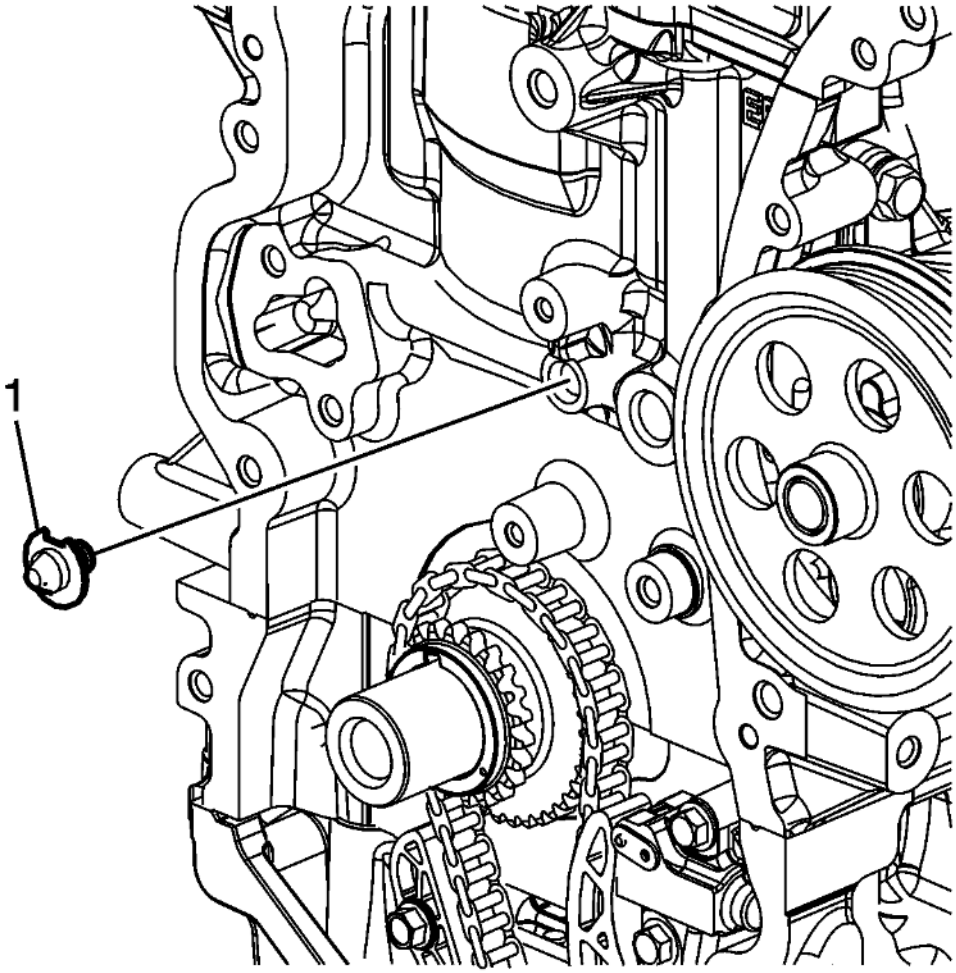

Fig. 245: Timing Chain Oil Nozzle
Courtesy of GENERAL MOTORS COMPANY

NOTE: **Ensure the timing chain oil nozzle is rotated with the notch facing upward, and aligned with the tab on the engine block.**

1. Install the timing chain oil nozzle (1).

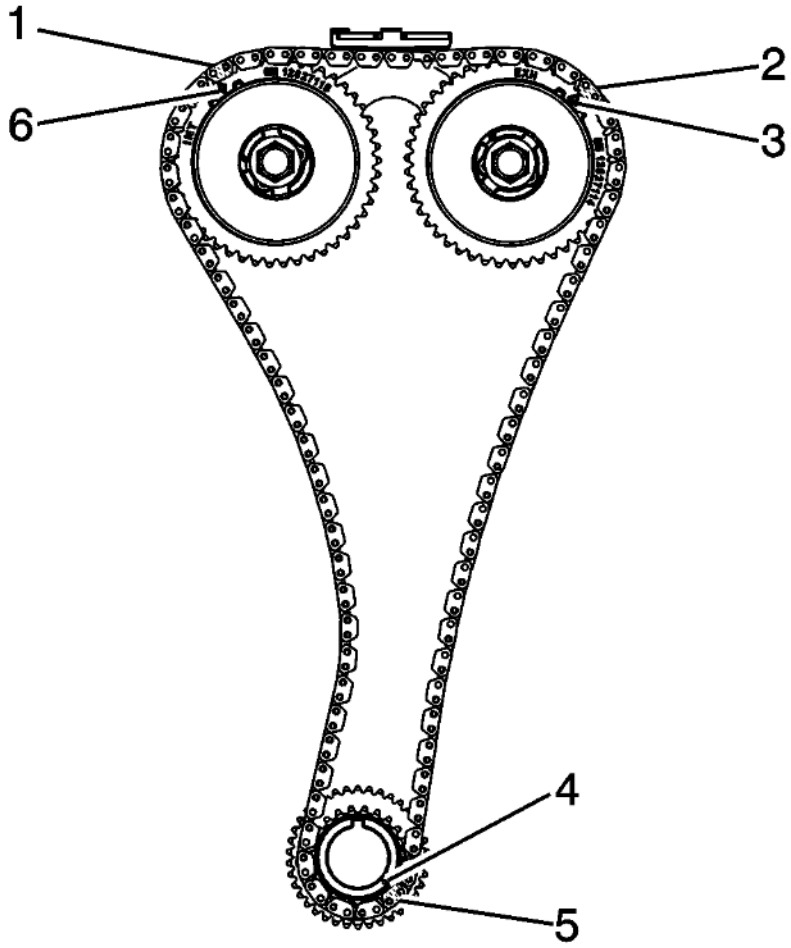

Fig. 246: Timing Chain Oil Nozzle
Courtesy of GENERAL MOTORS COMPANY

NOTE: **There are three colored links on the timing chain. The two links that align to the timing marks on the actuators are the same color. The timing link that aligns with the timing mark on the crankshaft sprocket is a unique color. Use the following procedure to line up the links with the actuators. Orient the chain so that the colored links are visible.**

2. Loop the timing chain over the intake and exhaust camshaft actuators, aligning the unique colored link (2) with the timing mark on the exhaust camshaft actuator (3).

NOTE: **The unique colored links will not initially align with the intake actuator timing mark or the crankshaft sprocket timing mark.**

3. Ensure the crankshaft key in the 12 O'clock position. Loop the timing chain onto the crankshaft sprocket.

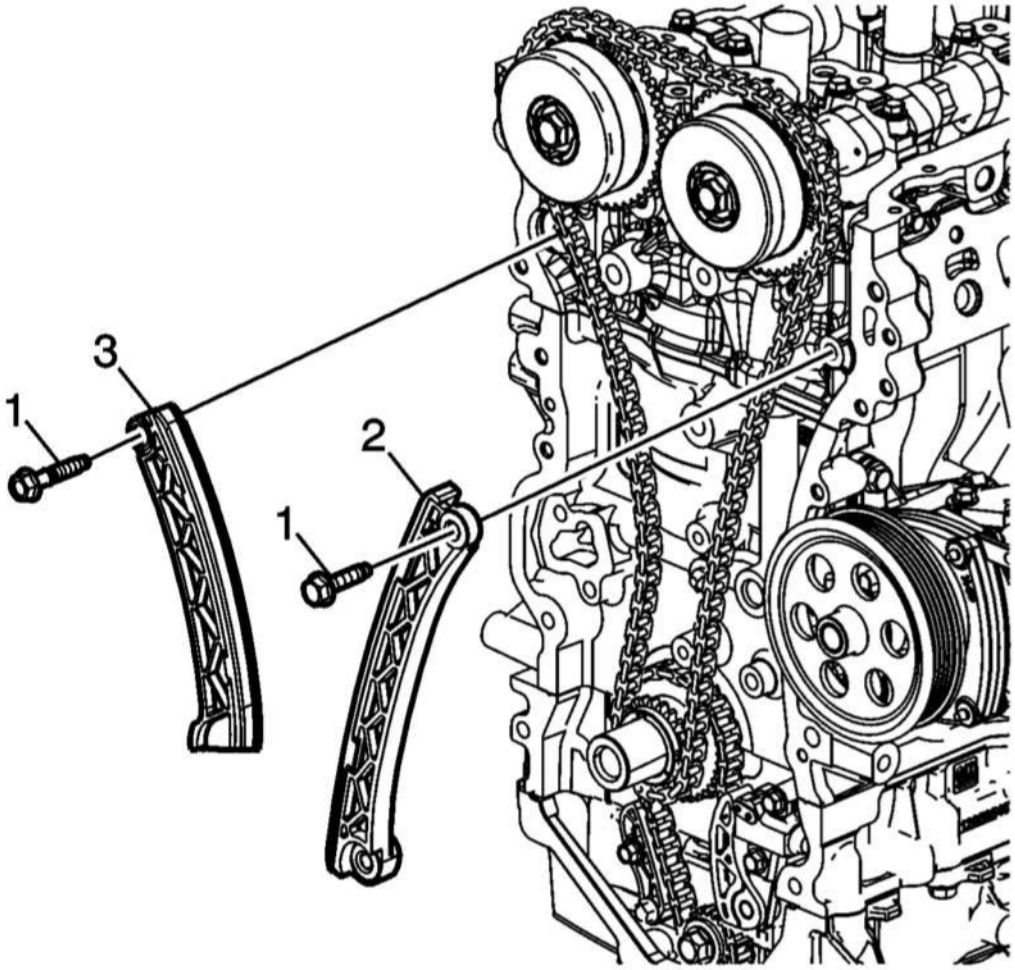

Fig. 247: Timing Chain Guide And Upper Bolt
Courtesy of GENERAL MOTORS COMPANY

NOTE: **Timing will be established before the final install and torque of the guide bolts.**

4. Install the timing chain guide (2) and upper bolt (1) only, finger tight.
5. Install the timing chain tensioner pivot arm (3).
6. Install the pivot arm bolt (1) finger tight.

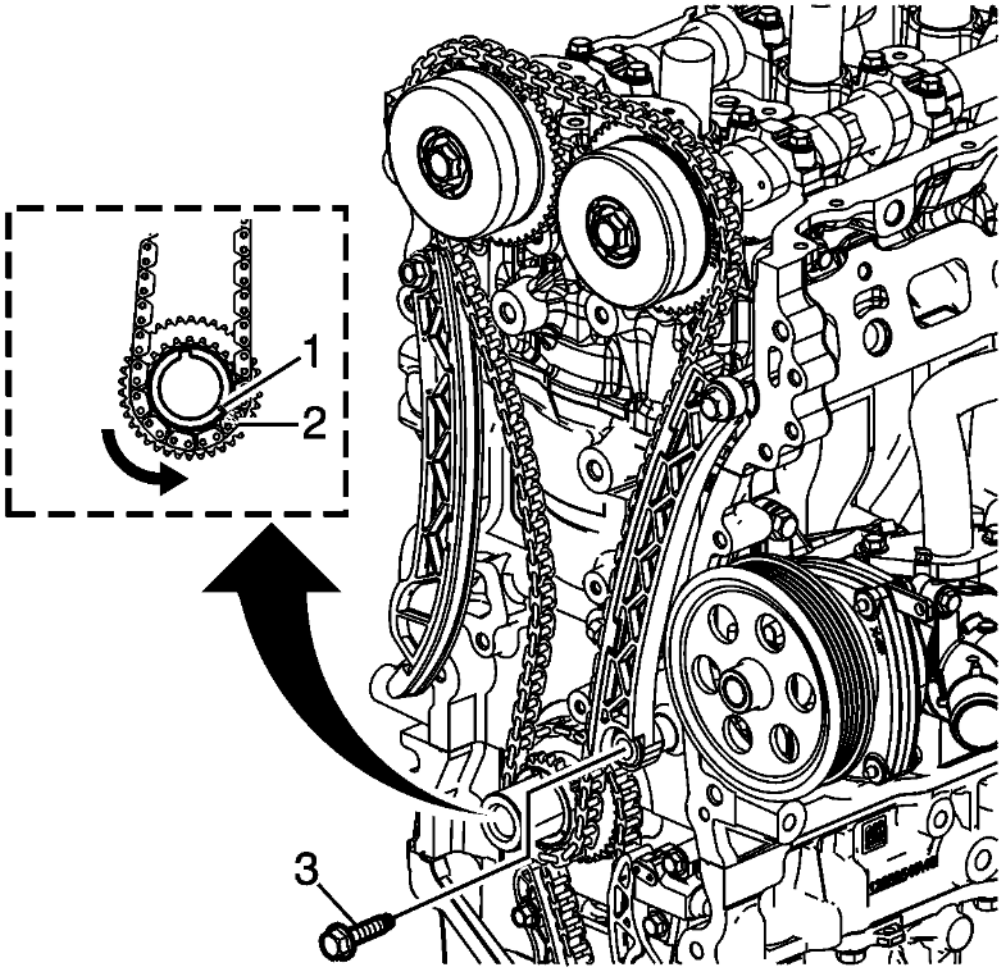

Fig. 248: Crankshaft Sprocket
Courtesy of GENERAL MOTORS COMPANY

7. With a suitable tool, rotate the crankshaft counterclockwise to align the timing mark on the crankshaft sprocket (1) with the timing link (2).

NOTE:

- **Continue to rotate the crankshaft counterclockwise as necessary to maintain timing alignment.**
- **Ensure that the alignment mark on the exhaust camshaft actuator remains aligned with the timing link.**

8. Rotate the lower end of the fixed timing chain guide into installation position and install the lower bolt (3).

CAUTION: Refer to Fastener Caution .

9. Tighten the timing chain guide upper and lower bolts to 25 N.m (18 lb ft).

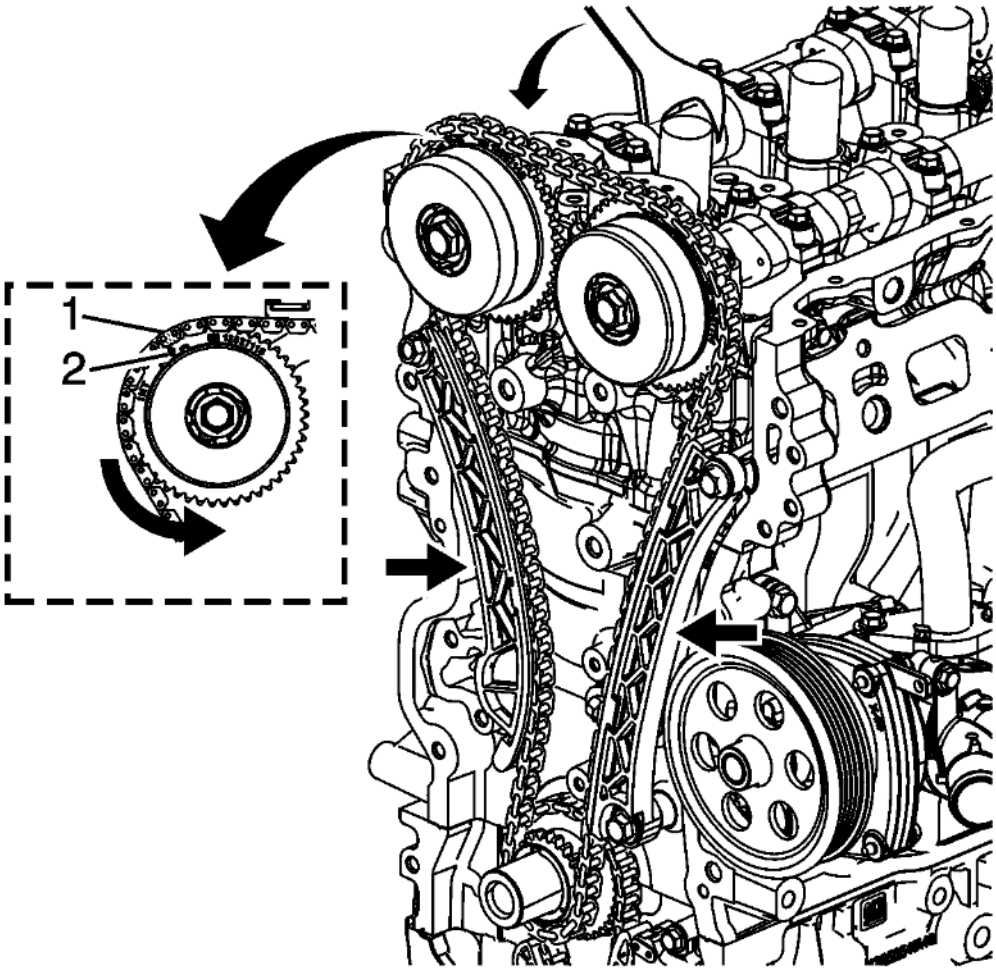

Fig. 249: Timing Mark On Intake Actuator
Courtesy of GENERAL MOTORS COMPANY

NOTE:

- **The timing for the exhaust camshaft actuator and the crankshaft sprocket has been established.**
- **Applying or loosening pressure by hand between the timing chain guides will allow the chain to slip or bind during counterclockwise rotation of the camshaft.**

10. Using a suitable tool, rotate the intake camshaft counterclockwise until the timing mark on the intake actuator (2) is aligned with the timing link (1). Maintain tension on intake camshaft until the timing chain tensioner can be installed and activated.

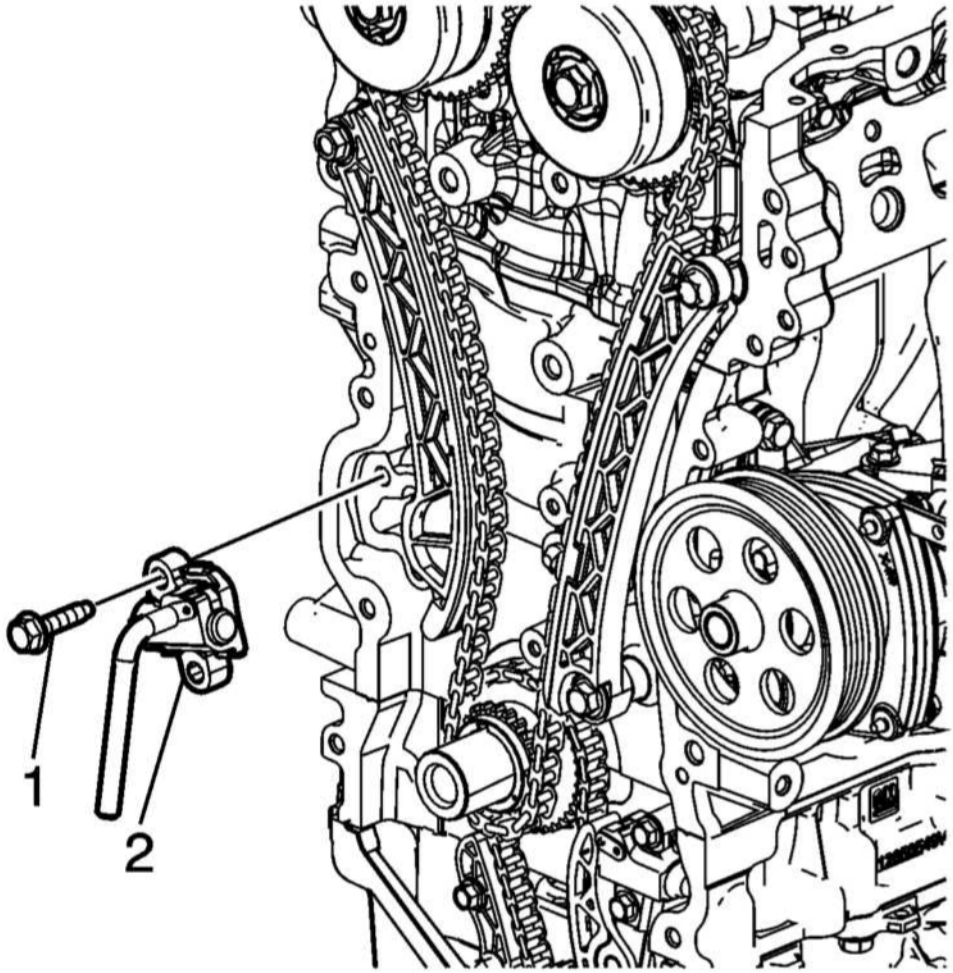

Fig. 250: Timing Chain Tensioner Bolts
Courtesy of GENERAL MOTORS COMPANY

NOTE: **Ensure EN-50837 retraction tool is installed and the tensioner is locked in a compressed state before installing.**

11. While maintaining the intake camshaft actuator timing alignment, install the timing chain tensioner (2) and bolts (1) and tighten to 25 N.m (18 lb ft).
12. Tighten the pivot arm bolt to 25 N.m (18 lb ft).
13. Remove **EN-50837** retraction tool.

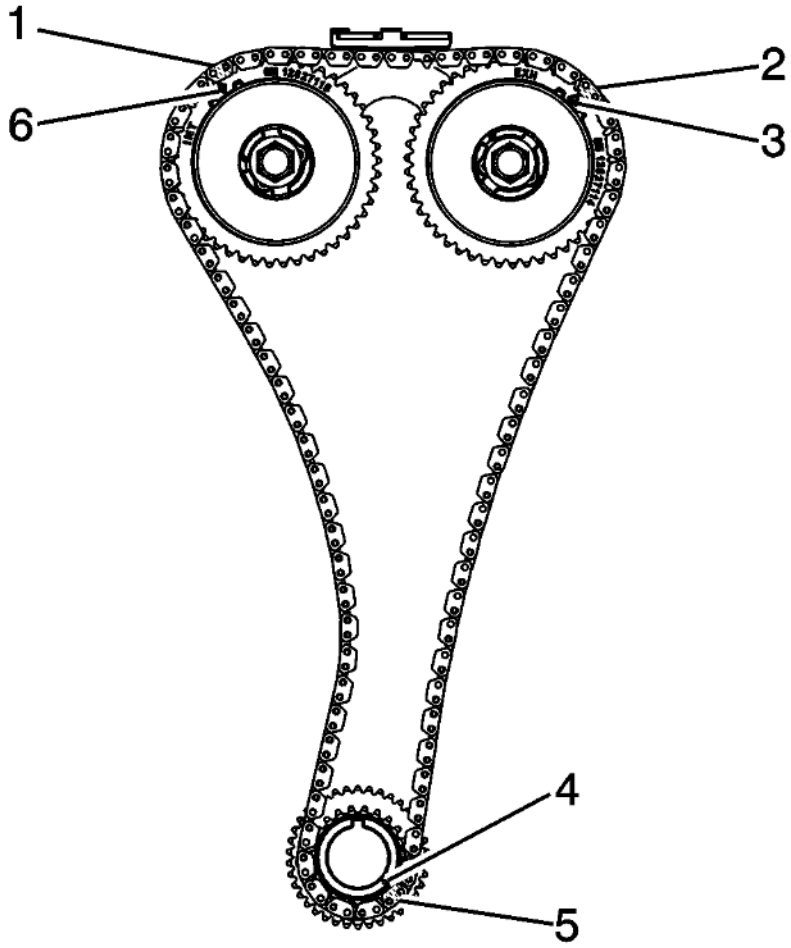

Fig. 251: Timing Chain Oil Nozzle
Courtesy of GENERAL MOTORS COMPANY

14. Verify the timing links on the timing chain are properly aligned to the timing marks:
    1. The timing links (1, 2) are aligned to the appropriate timing marks on the camshaft actuators (6, 3).
    2. The unique colored link (5) is aligned to the timing mark on the crankshaft sprocket (4).
15. If they are not, repeat the portion of the procedure necessary to align the timing marks.

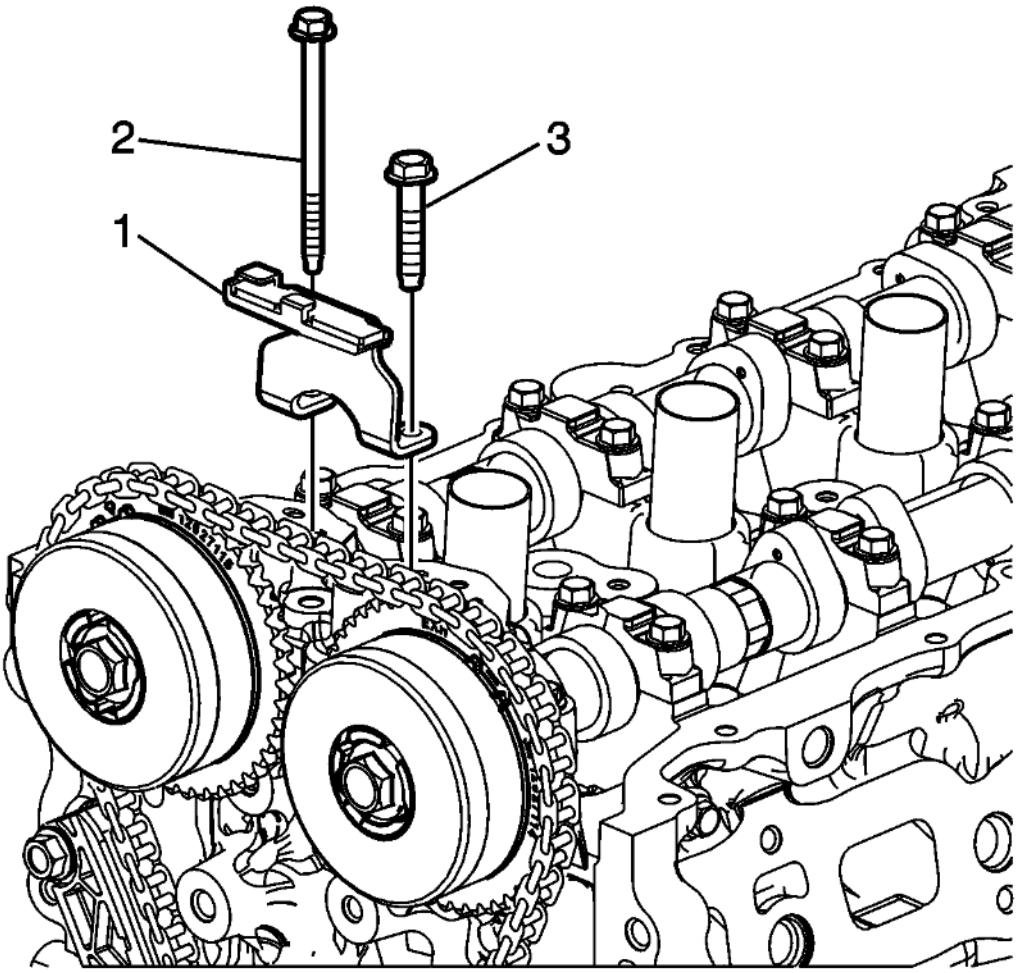

Fig. 252: Upper Timing Chain Guide Bolts
Courtesy of GENERAL MOTORS COMPANY

16. Install the timing chain guide (1) and bolts (2, 3) finger tight.

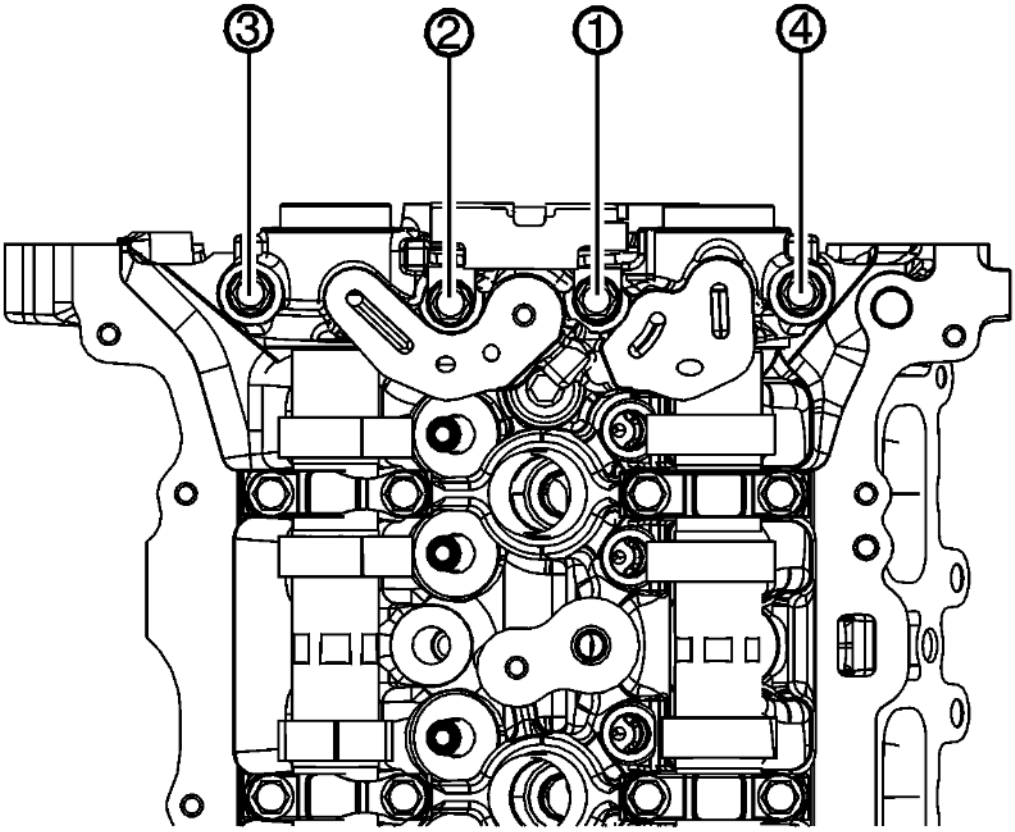

Fig. 253: Front Camshaft Cap Bolt Tightening Sequence
Courtesy of GENERAL MOTORS COMPANY

17. Tighten the front camshaft cap bolts in sequence to 10 N.m (89 lb in) twice.

NOTE: **Rotating the crankshaft will engage the tensioner and remove slack from the timing chain.**

18. Rotate the crankshaft slightly in a clockwise direction. If the timing chain jumps actuator teeth, repeat procedure to align the timing marks.

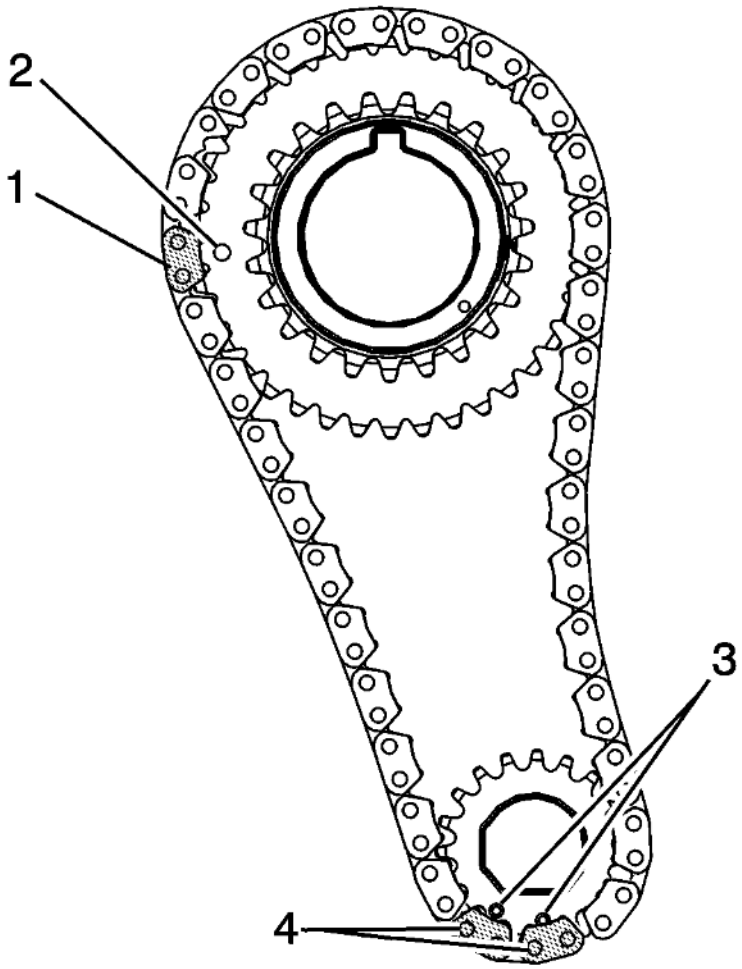

Fig. 254: Timing Link Lines Up And Timing Mark
Courtesy of GENERAL MOTORS COMPANY

NOTE: **Because of slight clockwise rotation, all chain marks may be advanced slightly in relation to the actuator and sprocket marks, yet still aligned.**

19. Verify the timing links on the balance chain are properly aligned to the timing marks:
    1. The timing link (1) is aligned to the timing mark on the crankshaft sprocket (2).
    2. The adjacent timing links (4) are aligned with both timing marks (3) on the balancer shaft driven sprocket.

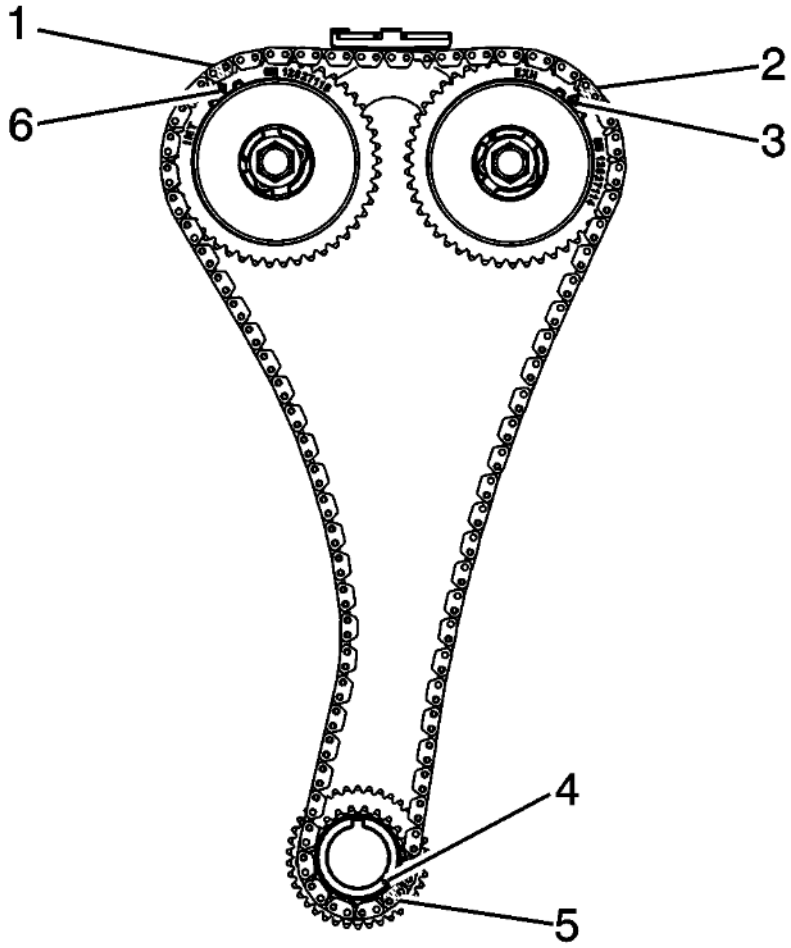

Fig. 255: Timing Chain Oil Nozzle
Courtesy of GENERAL MOTORS COMPANY

NOTE: **Because of slight clockwise rotation, all chain marks may be advanced slightly in relation to the actuator and sprocket marks, yet still aligned.**

20. Verify the timing links on the timing chain are properly aligned to the timing marks:
    1. The timing links (1, 2) are aligned to the appropriate timing marks on the camshaft actuators (6, 3).
    2. The unique colored link (5) is aligned to the timing mark on the crankshaft sprocket (4).
21. If they are not, repeat the portion of the procedure necessary to align the timing marks.

ENGINE FRONT COVER INSTALLATION (LTG)

Special Tools

EN-50820 Front Crankshaft Seal Installer

For equivalent regional tools, refer to **Special Tools** .

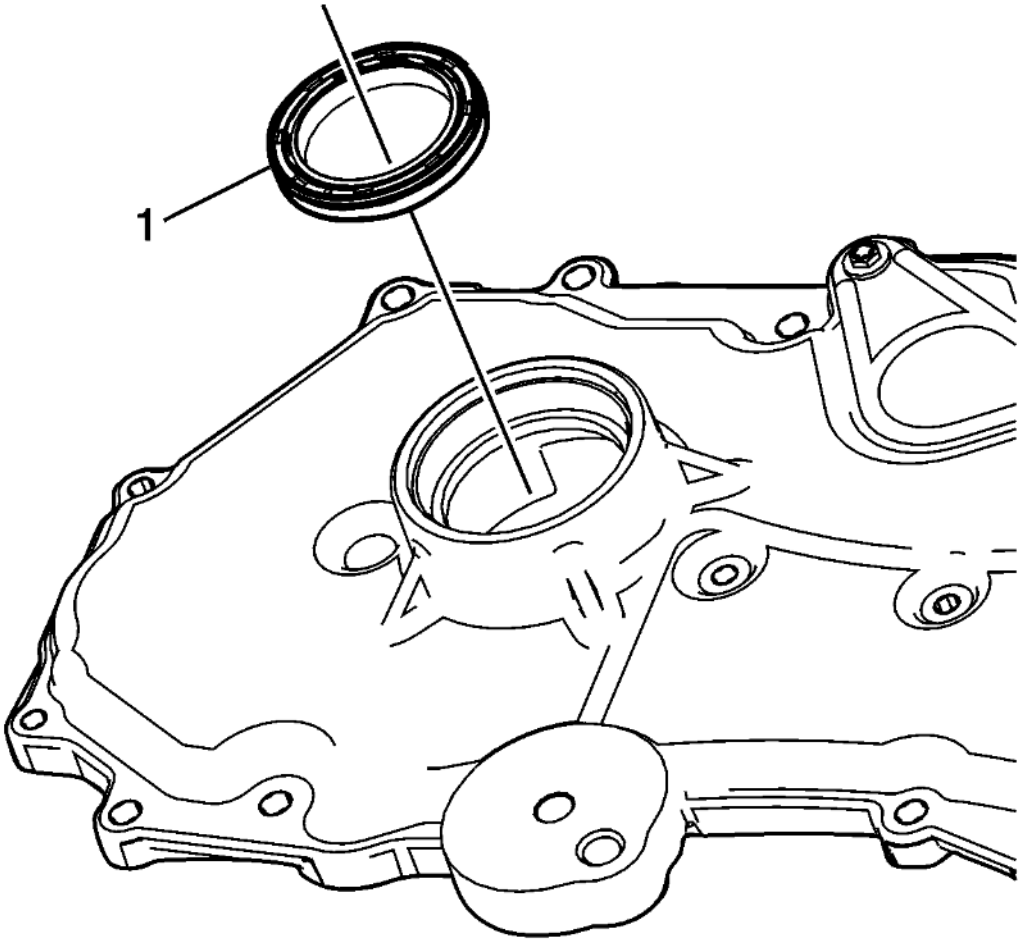

Fig. 256: Front Crankshaft Seal
Courtesy of GENERAL MOTORS COMPANY

1. Using **EN-50820** installer , install the front crankshaft seal (1) into the engine front cover.

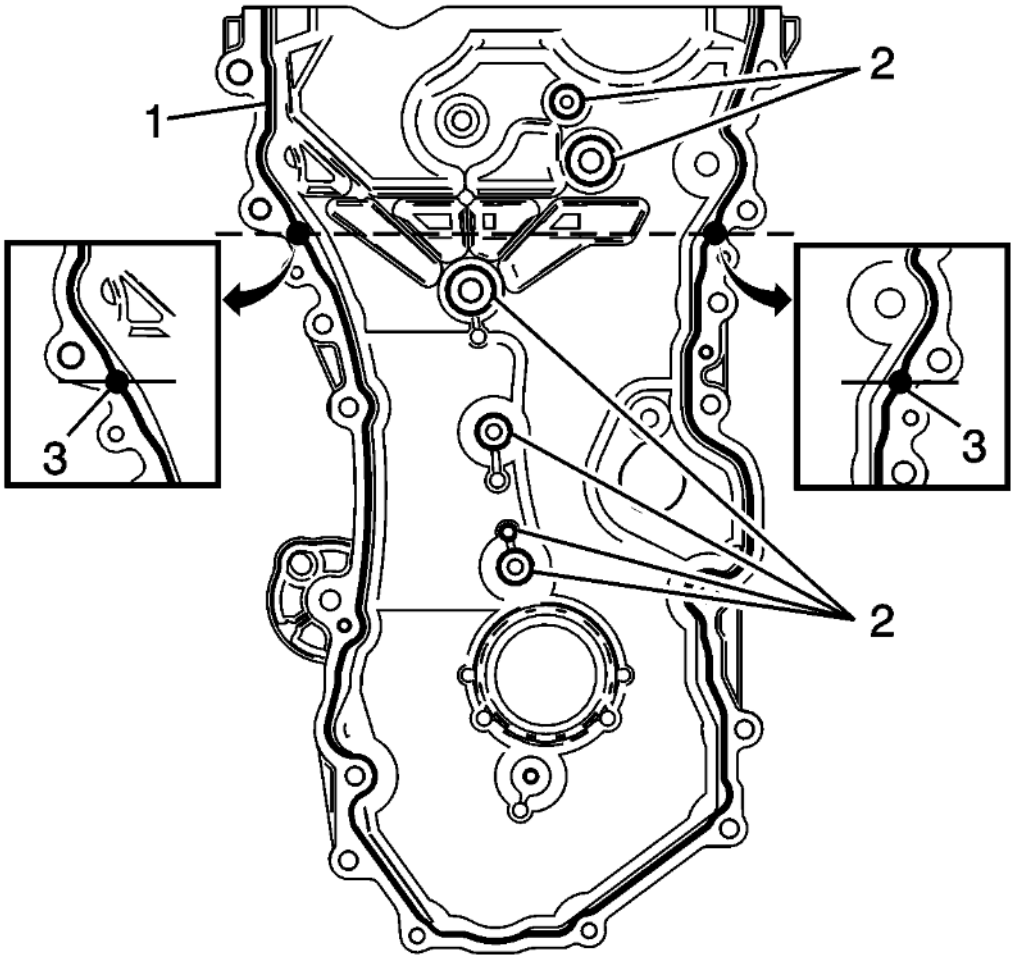

Fig. 257: Applying Bead Of Sealer Directly In Flange
Courtesy of GENERAL MOTORS COMPANY

NOTE:

- **The engine front cover surface must be free of contamination prior to applying the sealer.**
- **Install and align the cover within 20 minutes of applying the sealer.**
- **The cover must be fastened to final torque specification within 60 minutes of applying the sealer.**
- **Additional sealant is necessary to reduce the possibility of leakage where the cylinder head to engine block interface along the bead path flange on the front cover.**

2. Apply a 5 mm bead of sealer directly in the flange (1) of the engine front cover perimeter mating surface. Also apply a 5 mm bead of sealer directly to the locations indicated (2). Finally, apply a 14 mm dab of sealant at the locations indicated (3). Refer to **Adhesives, Fluids, Lubricants, and Sealers** .

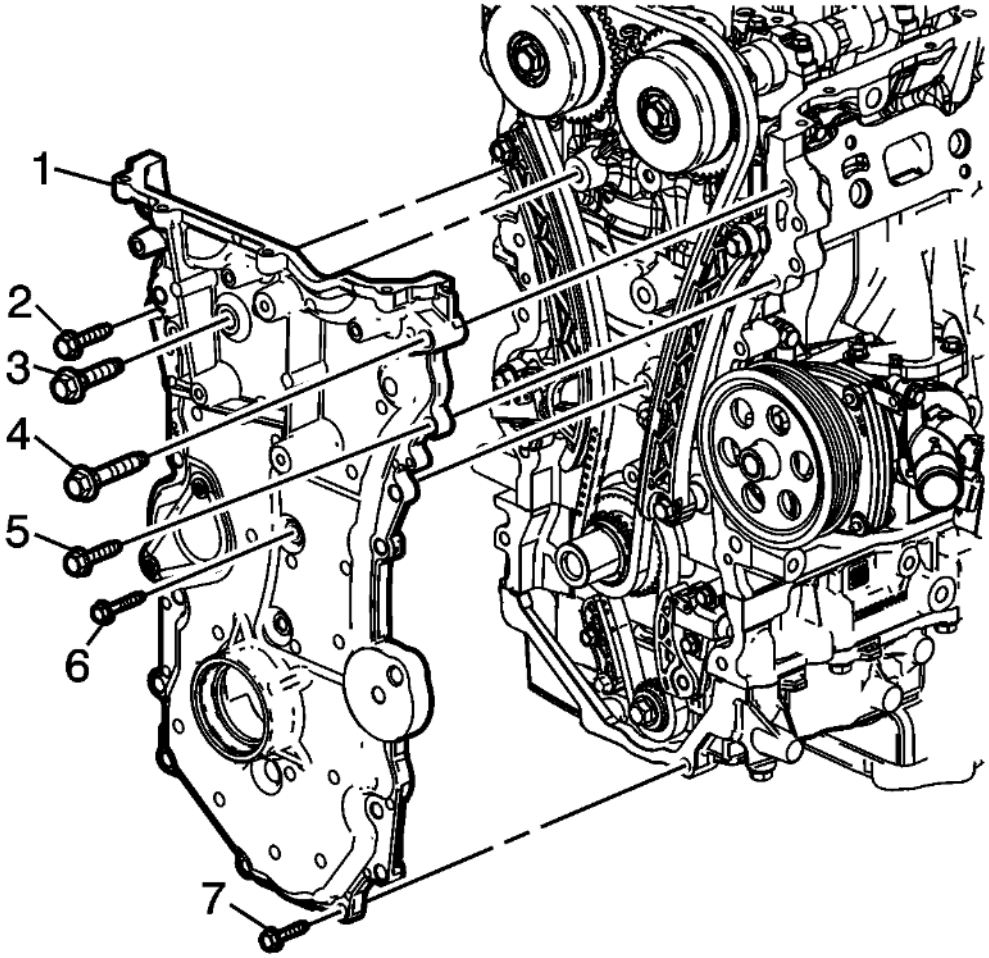

Fig. 258: Exploded View Of Engine Front Cover
Courtesy of GENERAL MOTORS COMPANY

3. Install the engine front cover (1).
4. Hand start the engine front cover bolts (2-6, 7).

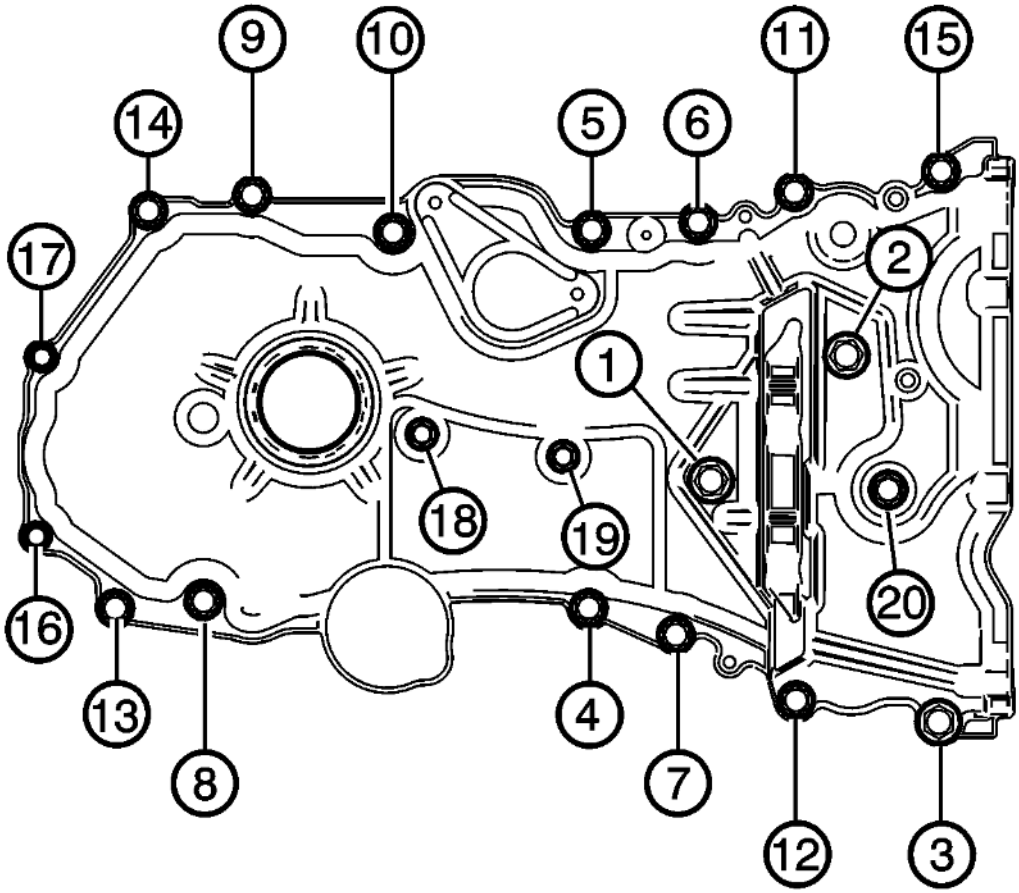

Fig. 259: Engine Front Cover
Courtesy of GENERAL MOTORS COMPANY

CAUTION: Refer to Fastener Caution .

5. Tighten the engine front cover bolts in sequence to final torque twice:
    1. Tighten sequence 1-3 bolts to 58 N.m (43 lb ft).
    2. Tighten sequence 4-11 bolts to 25 N.m (18 lb ft).
    3. Tighten sequence 12 bolt to 25 N.m (18 lb ft).
    4. Tighten sequence 13-15 bolts to 25 N.m (18 lb ft).
    5. Tighten sequence 16-17 bolts to 10 N.m (89 lb in).
    6. Tighten sequence 18-19 bolts to 10 N.m (89 lb in).
    7. Tighten sequence 20 bolt to 25 N.m (18 lb ft).

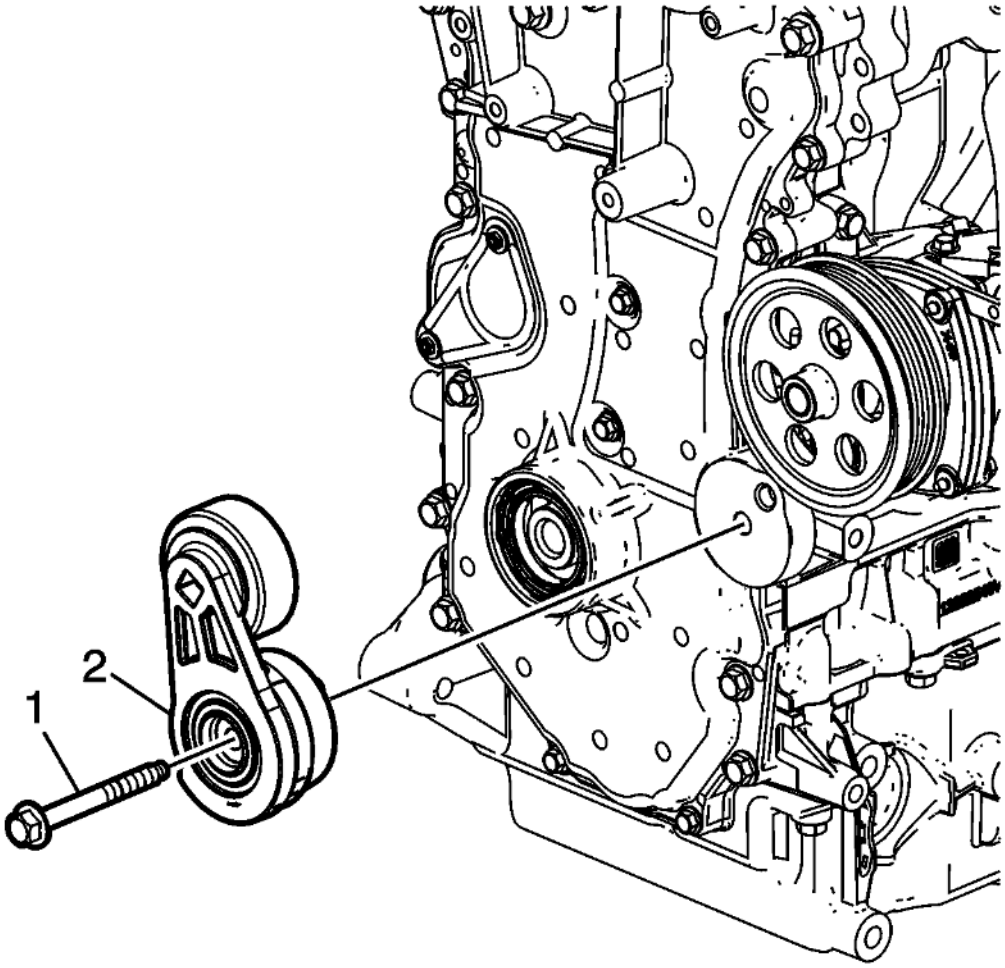

Fig. 260: Accessory Drive Belt Tensioner
Courtesy of GENERAL MOTORS COMPANY

6. Install the accessory drive belt tensioner (2).
7. Install the accessory drive belt tensioner bolt (1) and tighten to 58 N.m (43 lb ft).

CAMSHAFT COVER INSTALLATION

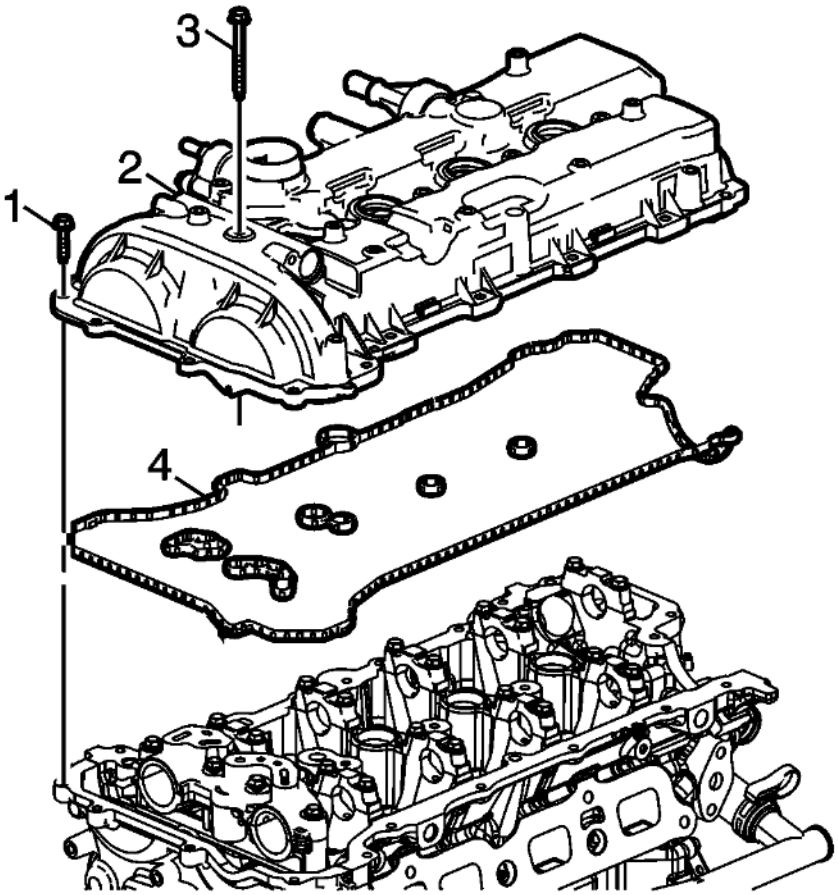

Fig. 261: Camshaft Cover Assembly
Courtesy of GENERAL MOTORS COMPANY

1. Assemble the camshaft cover (2) and a NEW gasket (4). Ensure that the gasket is located in the retaining groove in the camshaft cover.
2. Install the cover on the cylinder head and hand start the bolts (1, 3).

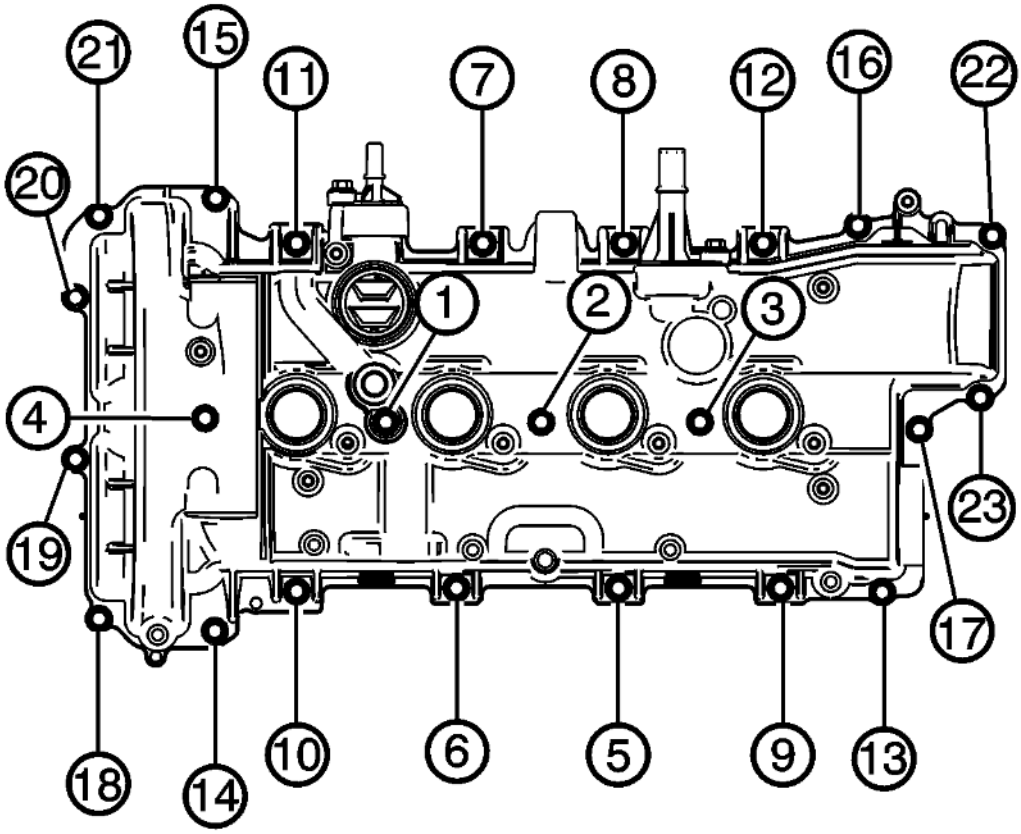

Fig. 262: Camshaft Cover Bolt Tightening Sequence
Courtesy of GENERAL MOTORS COMPANY

CAUTION: Refer to Fastener Caution .

3. Tighten the camshaft cover bolts in sequence to 10 N.m (89 lb in).

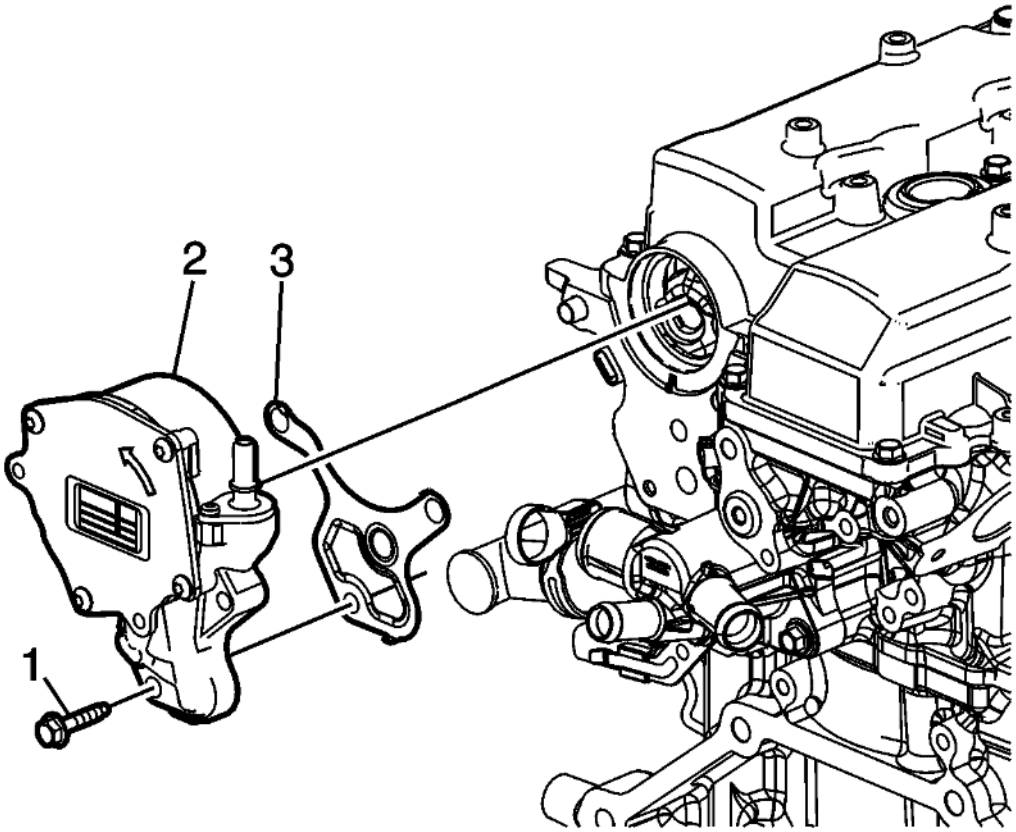

Fig. 263: Vacuum Assembly And Bolts
Courtesy of GENERAL MOTORS COMPANY

NOTE: **Ensure the vacuum pump seal does not need to be replaced, and the sealing surface is clean prior to installing the gasket and pump.**

4. Inspect the vacuum pump seal. Refer to **Camshaft Cover Cleaning and Inspection**.
5. Install a NEW vacuum pump assembly gasket (3) on the vacuum pump assembly (2).
6. Install the vacuum pump assembly (2) and bolts (1). Tighten the bolts to 10 N.m (89 lb in).

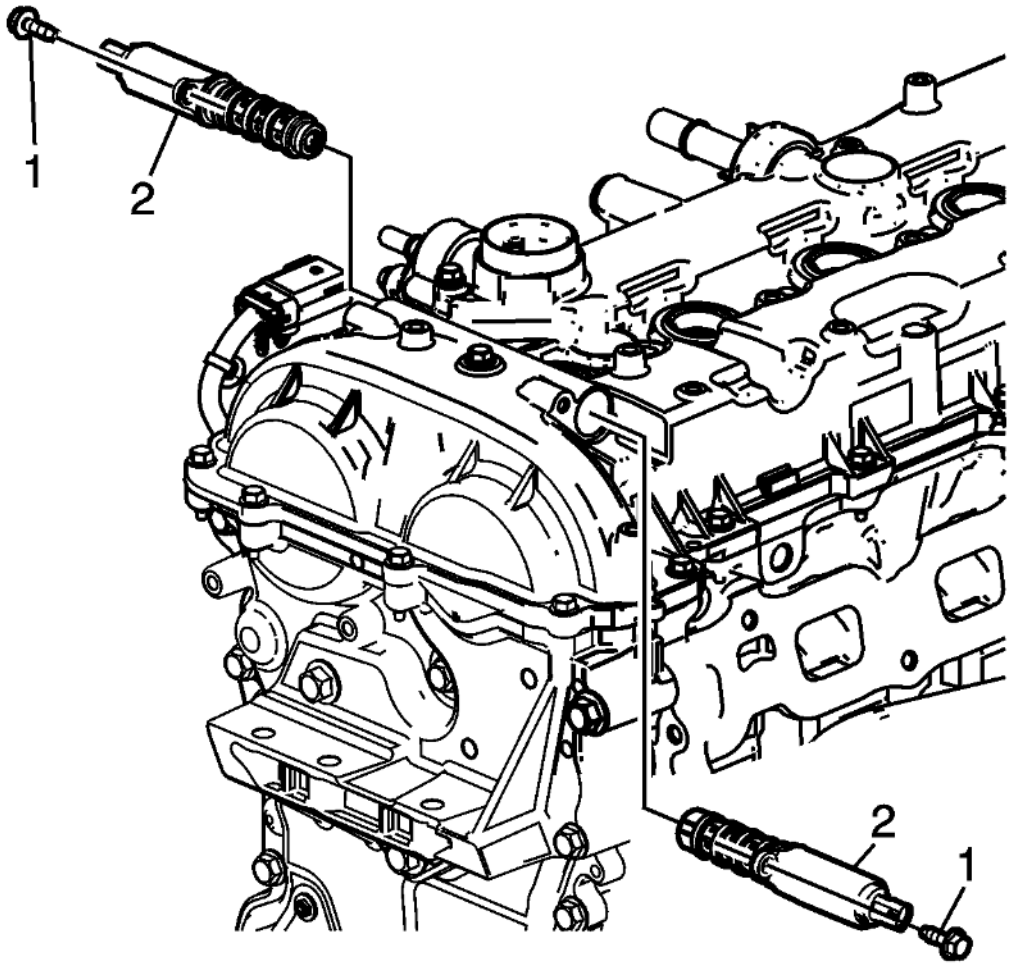

Fig. 264: Camshaft Position Actuator Control Solenoid Valves
Courtesy of GENERAL MOTORS COMPANY

7. Install the camshaft position actuator control solenoid valves (2) and bolts (1). Tighten the bolts to 10 N.m (89 lb in).

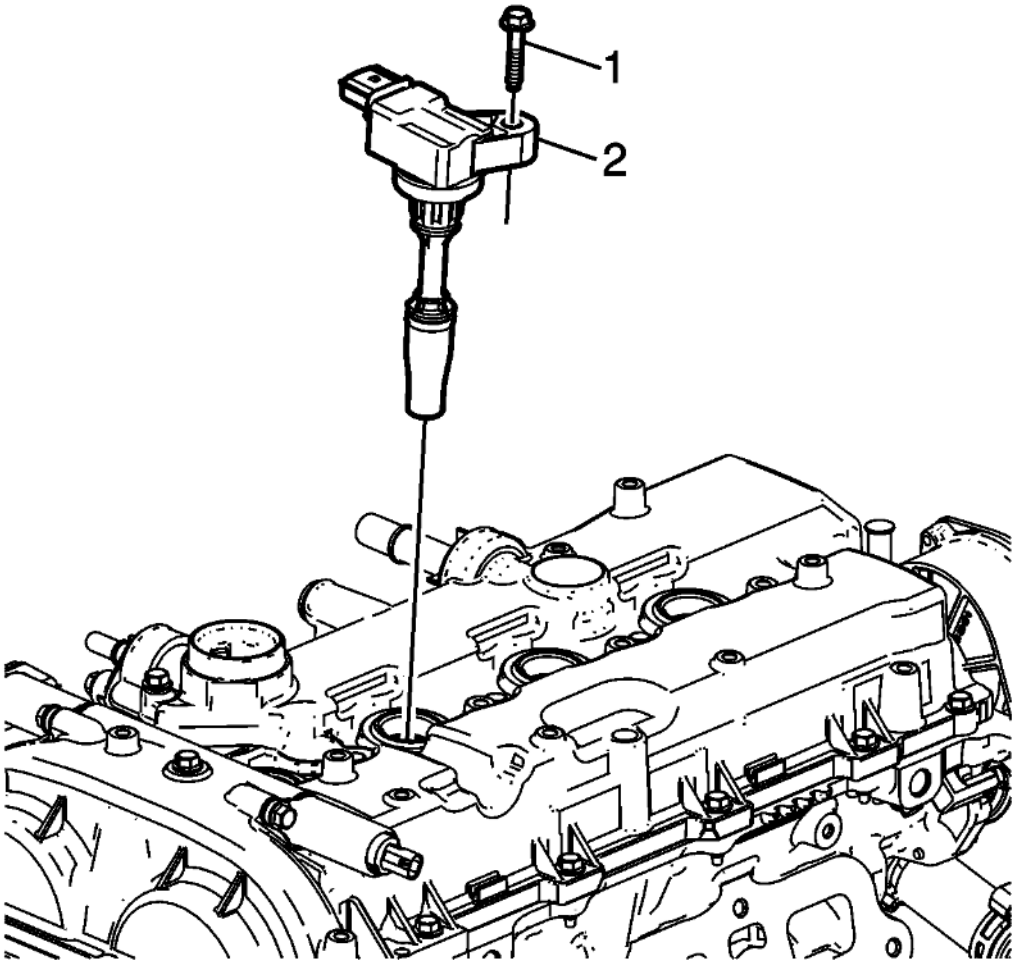

Fig. 265: Ignition Coils And Bolts
Courtesy of GENERAL MOTORS COMPANY

8. Inspect the inside of the ignition coil rubber boot for a thin, even coat of grease. If there is no grease present or additional grease is necessary, complete the following procedure:
    1. Apply a thin coating of dielectric grease evenly to the inside of the ignition coil rubber boot, up to a depth of 15 mm from the end of the boot. Refer to **Adhesives, Fluids, Lubricants, and Sealers** .
    2. Remove any excess grease from around the end of the boot, and ensure there is not an excessive amount within the boot.
9. Install the ignition coils (2) and bolts (1). Tighten the bolt to 10 N.m (89 lb in).

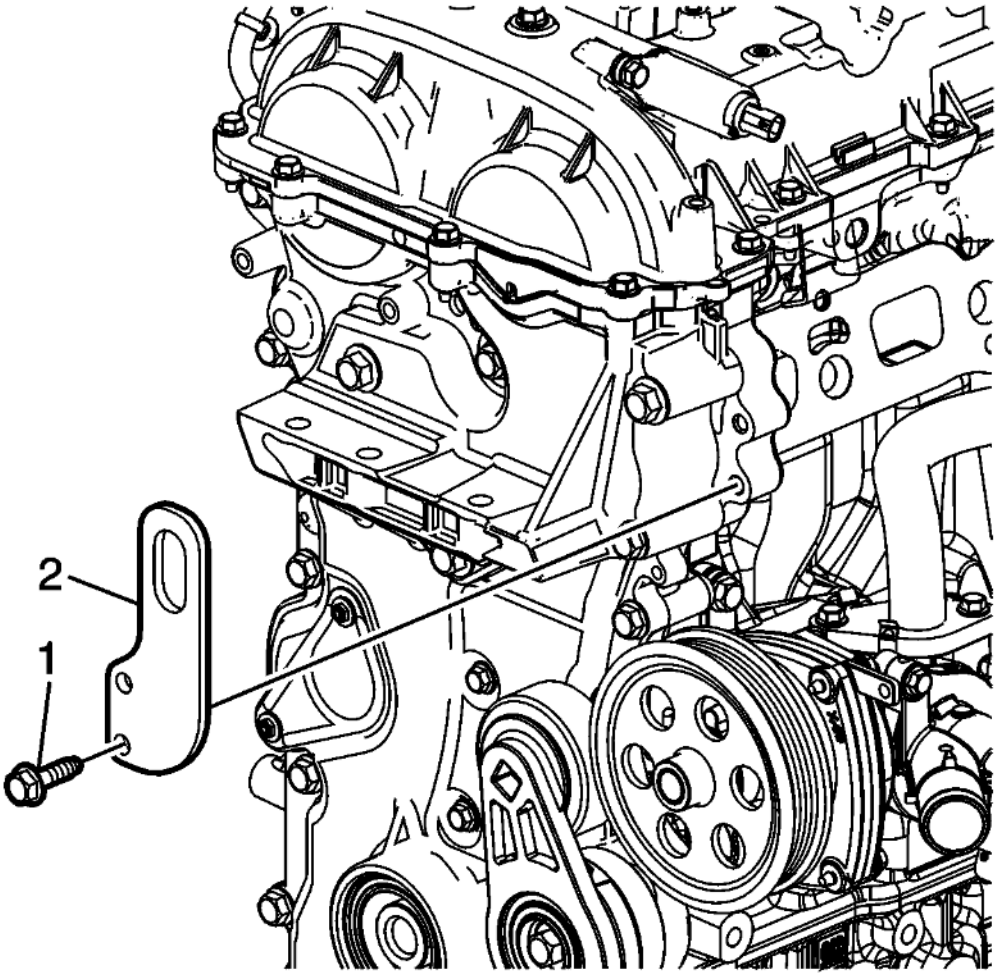

Fig. 266: Front Lift Bracket
Courtesy of GENERAL MOTORS COMPANY

10. Install the front lift bracket (2).
11. Install the front lift bracket bolts (1) and tighten to 25 N.m (18 lb ft).

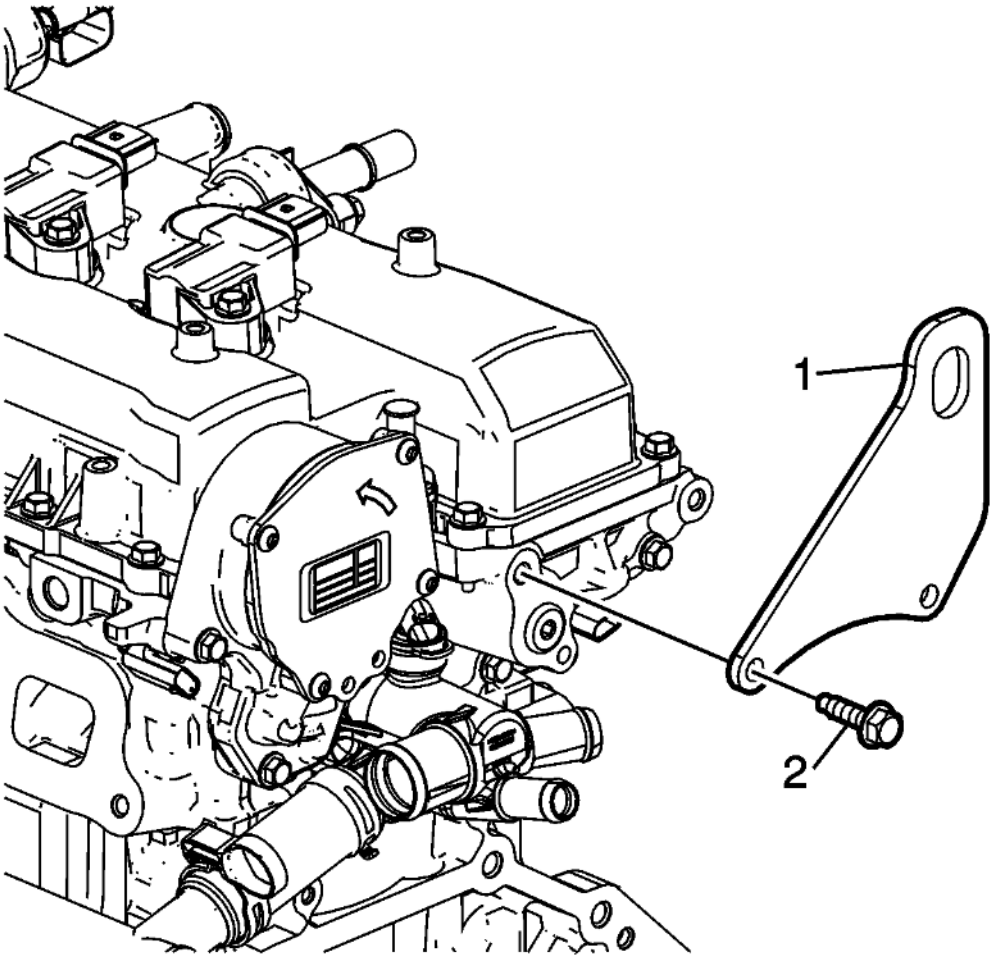

Fig. 267: Rear Lift Bracket And Bolts
Courtesy of GENERAL MOTORS COMPANY

12. Install the rear lift bracket (1).
13. Install the rear lift bracket bolts (2) and tighten to 25 N.m (18 lb ft).

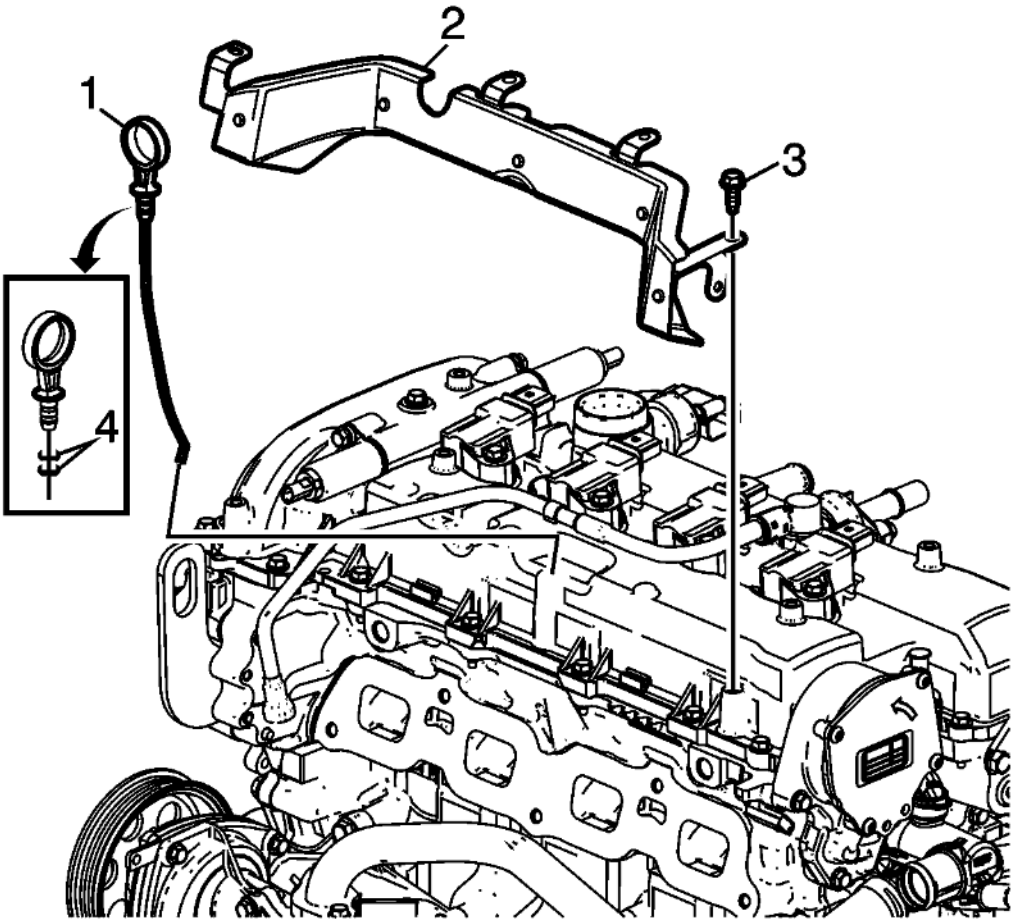

Fig. 268: Camshaft Cover Heat Shield
Courtesy of GENERAL MOTORS COMPANY

14. Install the camshaft cover heat shield (2) and bolts (3). Tighten the bolts to 10 N.m (89 lb in).
15. Inspect the oil level indicator O-ring seals (4) and replace if necessary. Install the oil level indicator (1).

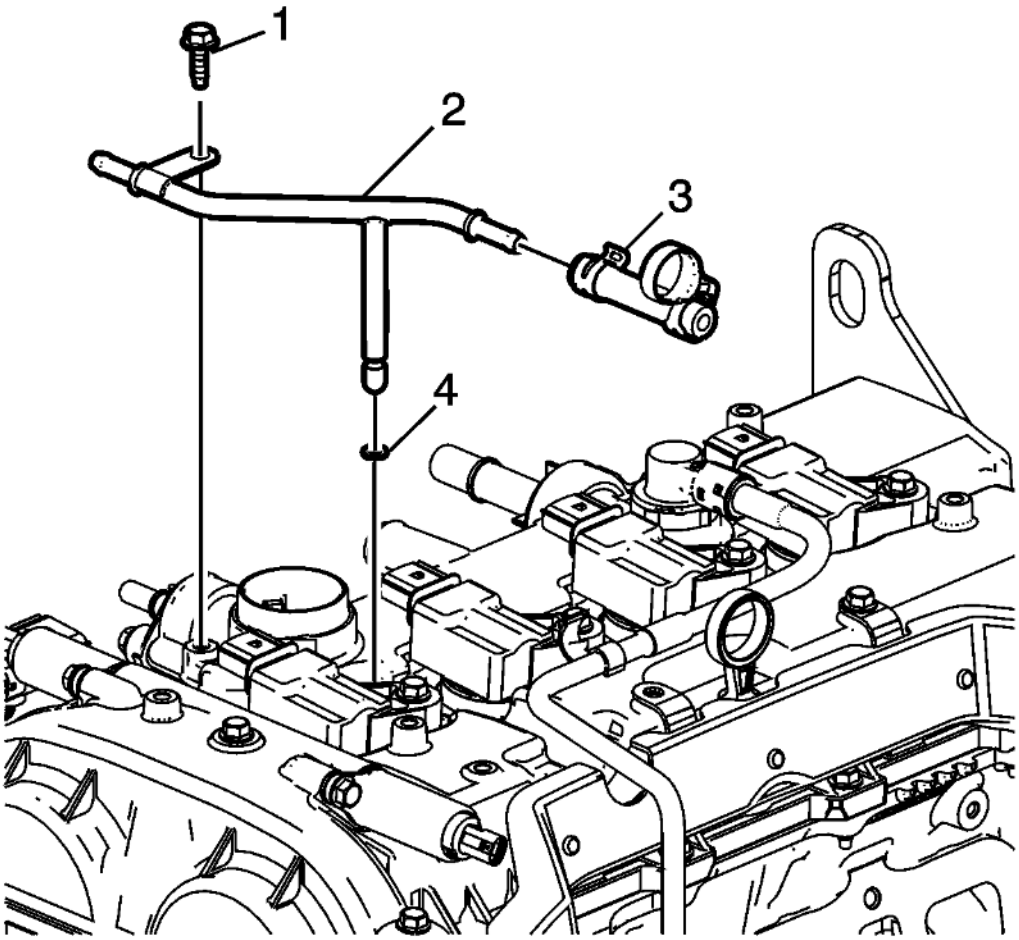

Fig. 269: Engine Coolant Air Bleed Pipe Bolt
Courtesy of GENERAL MOTORS COMPANY

16. Inspect the O-ring (4) on the engine coolant air bleed pipe. Replace if necessary.
17. Install the engine coolant air bleed hose (3), if necessary.
18. Install the engine coolant air bleed pipe (2).
19. Install the pipe bolt (1) and tighten to 10 N.m (89 lb in).

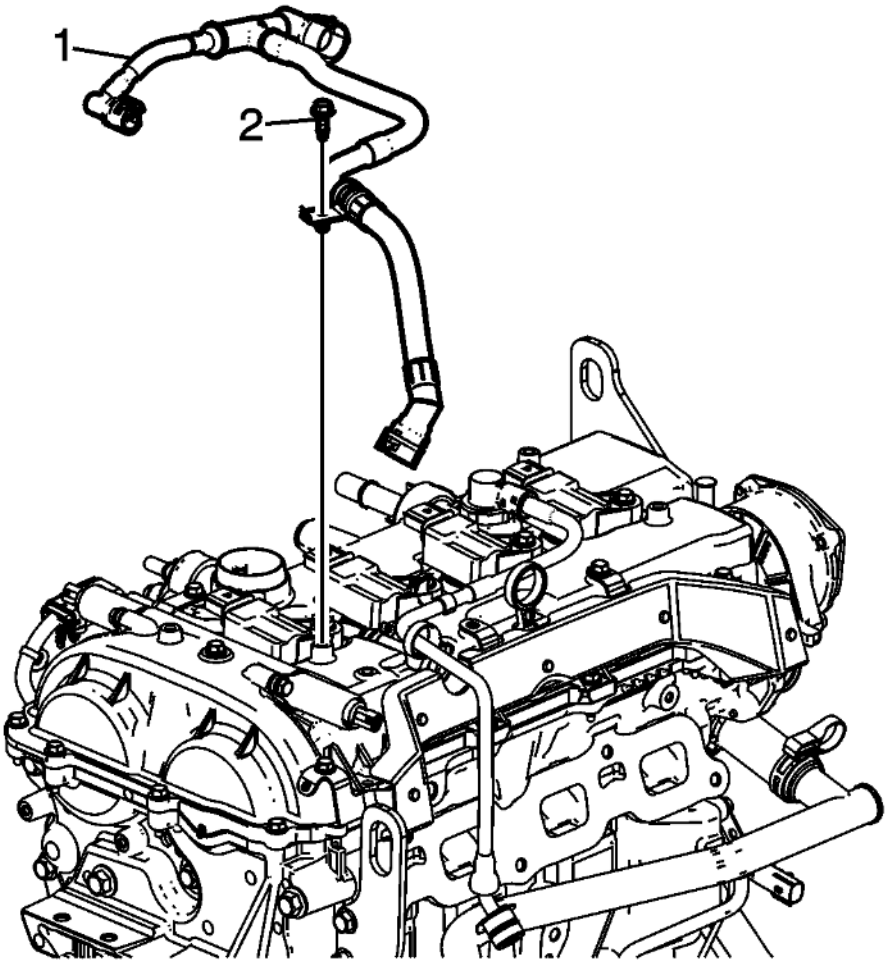

Fig. 270: PCV Hose Bolt
Courtesy of GENERAL MOTORS COMPANY

20. Install the PCV hose assembly (1) at the quick-connect fittings.
21. Install the PCV hose bolt (2) and tighten to 12 N.m (106 lb in).

FUEL RAIL AND INJECTORS INSTALLATION

Special Tools

EN-47909 Injector Bore and Sleeve Cleaning Kit

For equivalent regional tools, refer to **Special Tools** .

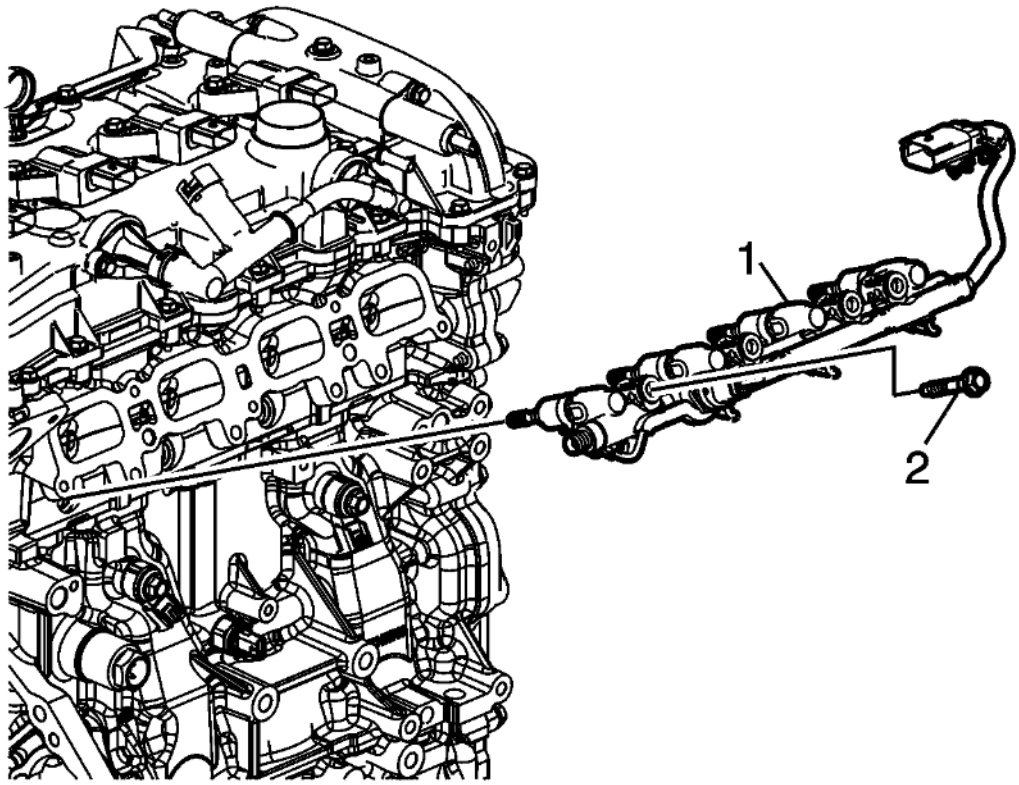

Fig. 271: Fuel Rail
Courtesy of GENERAL MOTORS COMPANY

1. Clean the fuel injector bore in the cylinder head using the **EN-47909** kit.
2. Replace the fuel rail insulators, if necessary. Refer to **Fuel Rail and Injectors Cleaning and Inspection**. Replace the fuel rail bolts, if necessary.
3. Install the fuel rail (1) with injectors into the cylinder head evenly.

NOTE: **Mount the bolts evenly to avoid cocking of the fuel injectors during installation.**

4. Hand start the 2 outer fuel rail bolts (2) to seat the injectors into the injector bores.
5. Hand start the remaining fuel rail bolts.

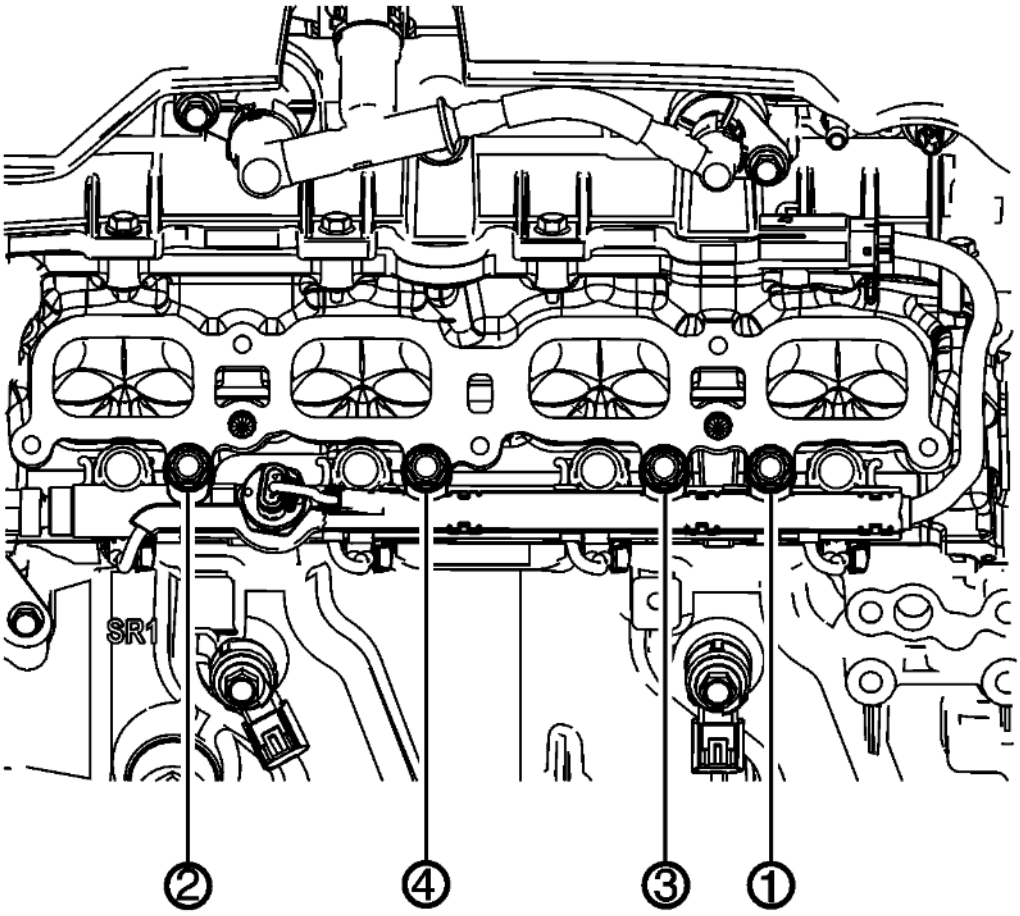

Fig. 272: Fuel Rail Bolt Tightening Sequence
Courtesy of GENERAL MOTORS COMPANY

CAUTION: Refer to Fastener Caution .

6. Tighten the fuel rail bolts in sequence to 25 N.m (18 lb ft).
7. Connect the electrical harness to the fuel rail harness connections.

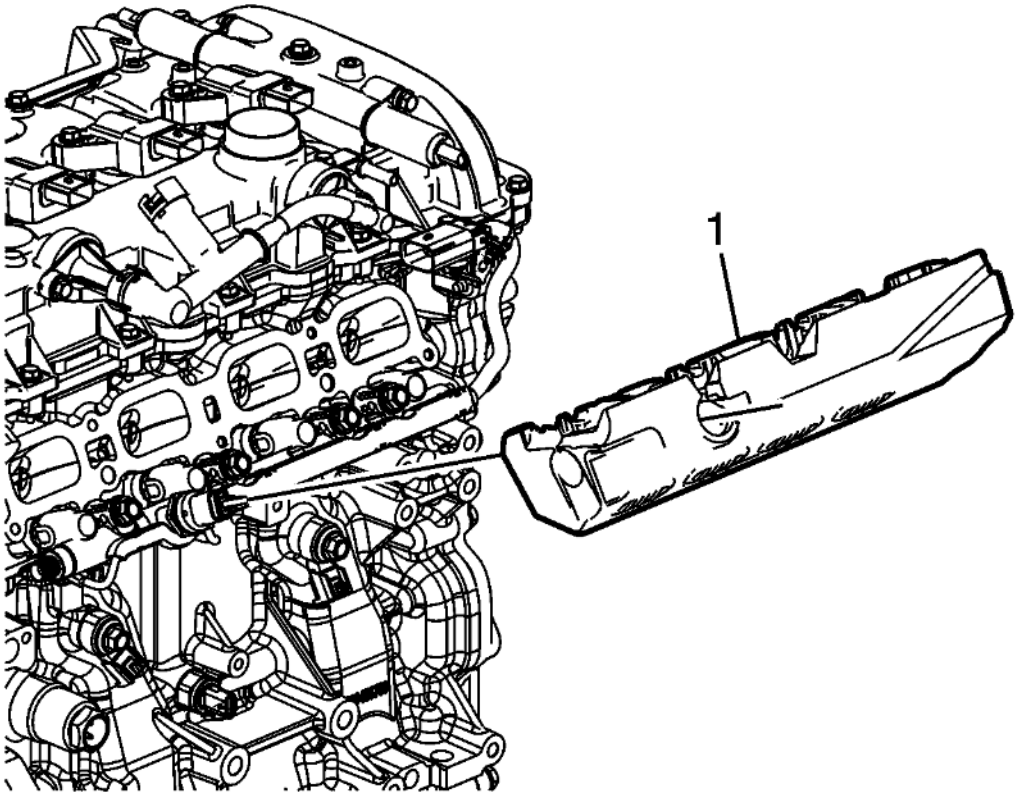

Fig. 273: Fuel Injection Fuel Rail Noise Shield
Courtesy of GENERAL MOTORS COMPANY

8. Install the fuel injection fuel rail noise shield (1).

SECONDARY AIR INJECTION CHECK VALVE INSTALLATION

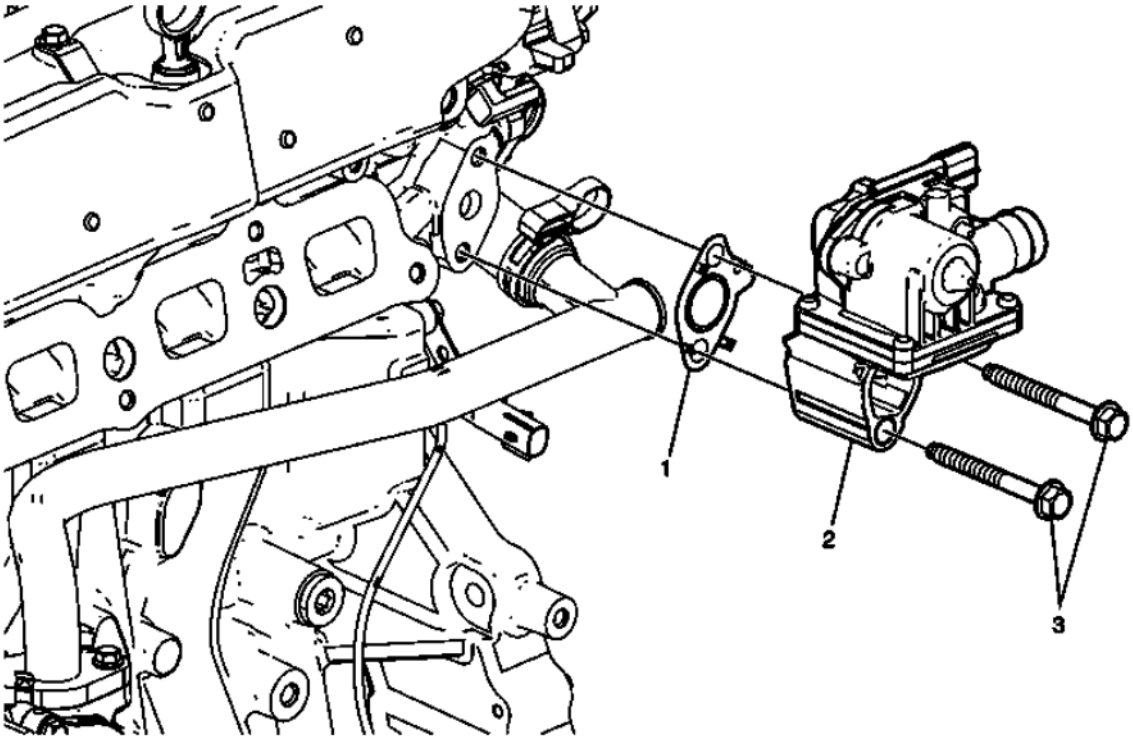

Fig. 274: Secondary Air Injection Check Valve
Courtesy of GENERAL MOTORS COMPANY

Secondary Air Injection Check Valve Installation

Callout	Component Name
1	Secondary Air Injection Check Valve Gasket
2	Secondary Air Injection Check Valve
3	Secondary Air Injection Check Valve Bolt (Qty: 2) **CAUTION:** **Refer to Fastener Caution .** **Tighten** 25 (18 lb ft)

EXHAUST MANIFOLD INSTALLATION

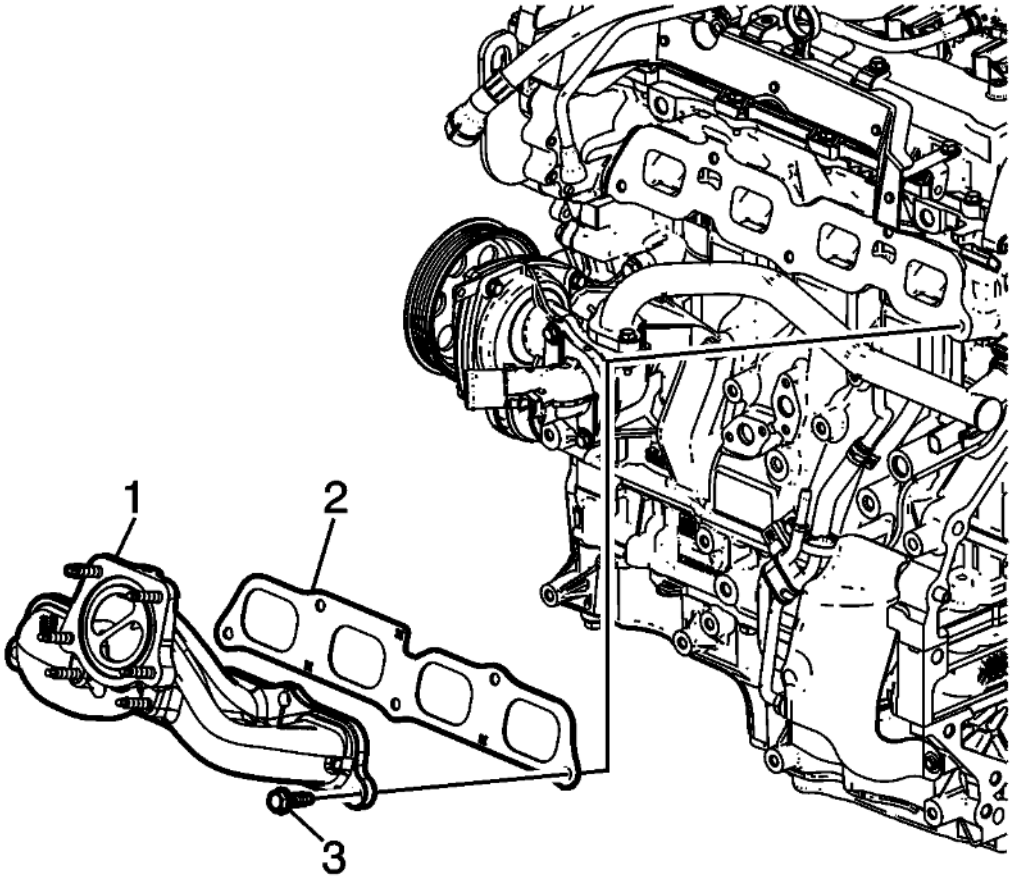

Fig. 275: Exhaust Manifold And Cylinder Head Bolts
Courtesy of GENERAL MOTORS COMPANY

1. Install a NEW exhaust manifold gasket (2).
2. Install the exhaust manifold (1) to the cylinder head.
3. Hand start NEW exhaust manifold to cylinder head retaining bolts (3).

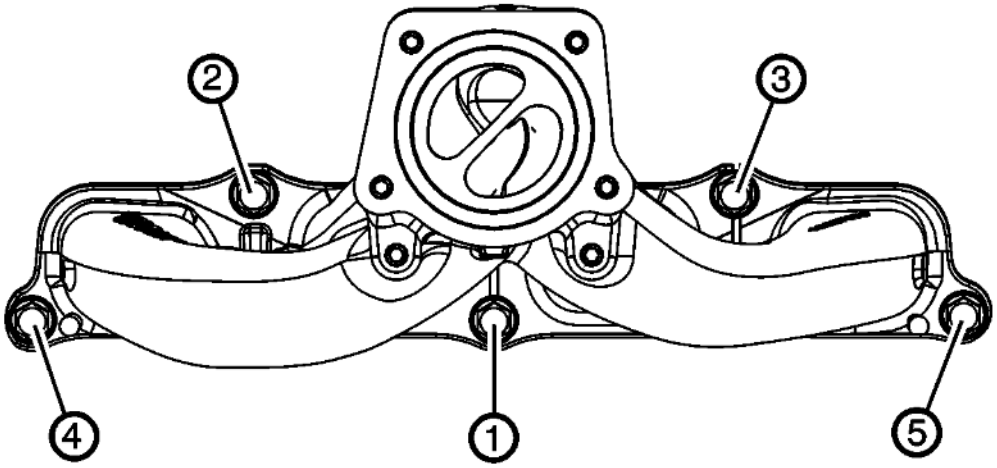

Fig. 276: Exhaust Manifold Bolt Tightening Sequence
Courtesy of GENERAL MOTORS COMPANY

CAUTION: Refer to Fastener Caution .

NOTE: Fasteners have adhesive patch and must be tightened to final torque within 5 minutes.

4. Tighten the NEW exhaust manifold to cylinder head bolts three passes in sequence to 20 N.m (15 lb ft).

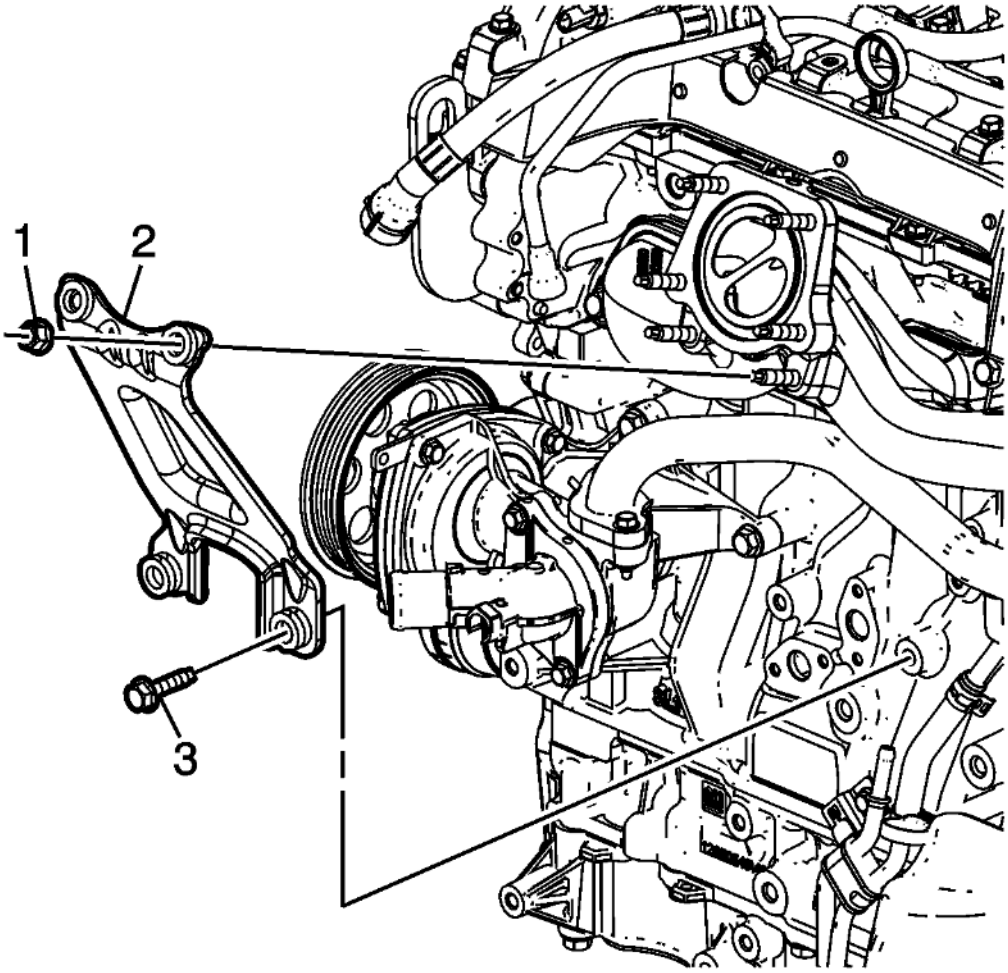

Fig. 277: Exhaust Manifold Brace Nuts
Courtesy of GENERAL MOTORS COMPANY

5. Install the exhaust manifold brace (2).
6. Install the exhaust manifold brace bolts (3) and tighten to 25 N.m (18 lb ft)
7. Install NEW exhaust manifold brace nuts (1) and tighten to 25 N.m (18 lb ft)

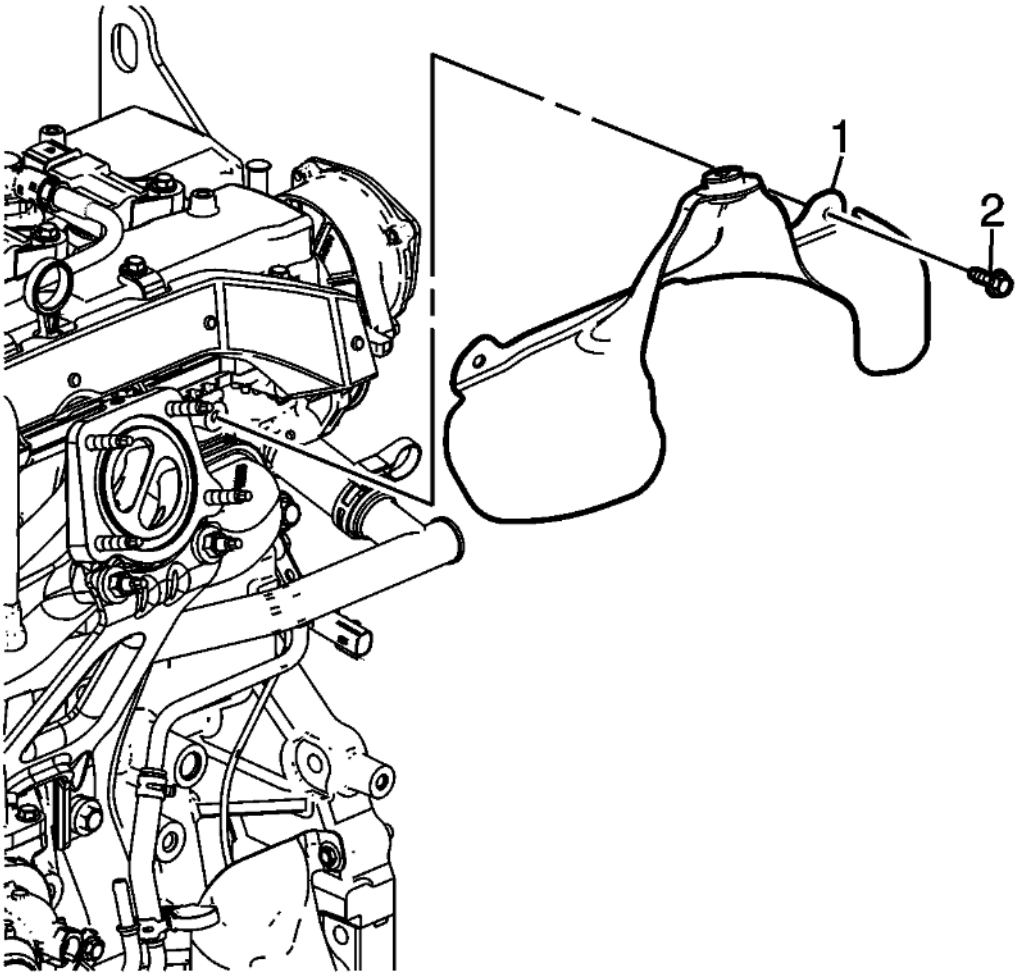

Fig. 278: Exhaust Manifold Heat Shield Bolts
Courtesy of GENERAL MOTORS COMPANY

8. Install the exhaust manifold heat shield (1).
9. Install the exhaust manifold heat shield bolts (2) and tighten to 14 N.m (124 lb in).

INTAKE MANIFOLD INSTALLATION

Special Tools

EN-50790 HP Fuel Pump Installation Alignment Gauge

For equivalent regional tools, refer to **Special Tools** .

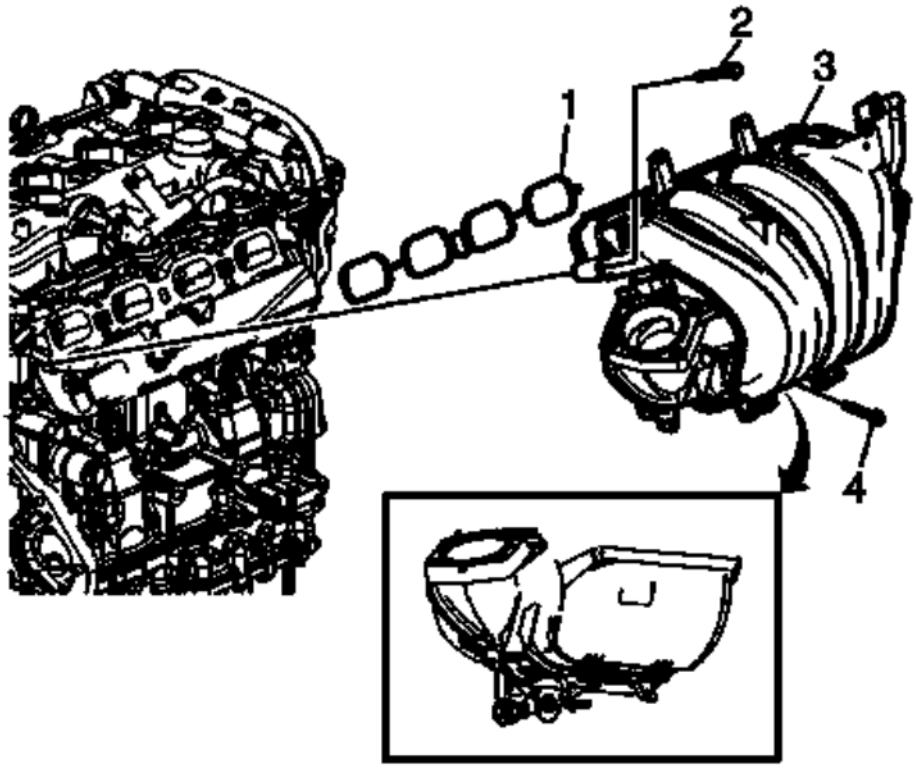

Fig. 279: Intake Manifold And Gasket
Courtesy of GENERAL MOTORS COMPANY

1. Install a NEW gasket (1) on the intake manifold (3). Install the intake manifold and hand start the intake manifold bolts (2, 4).

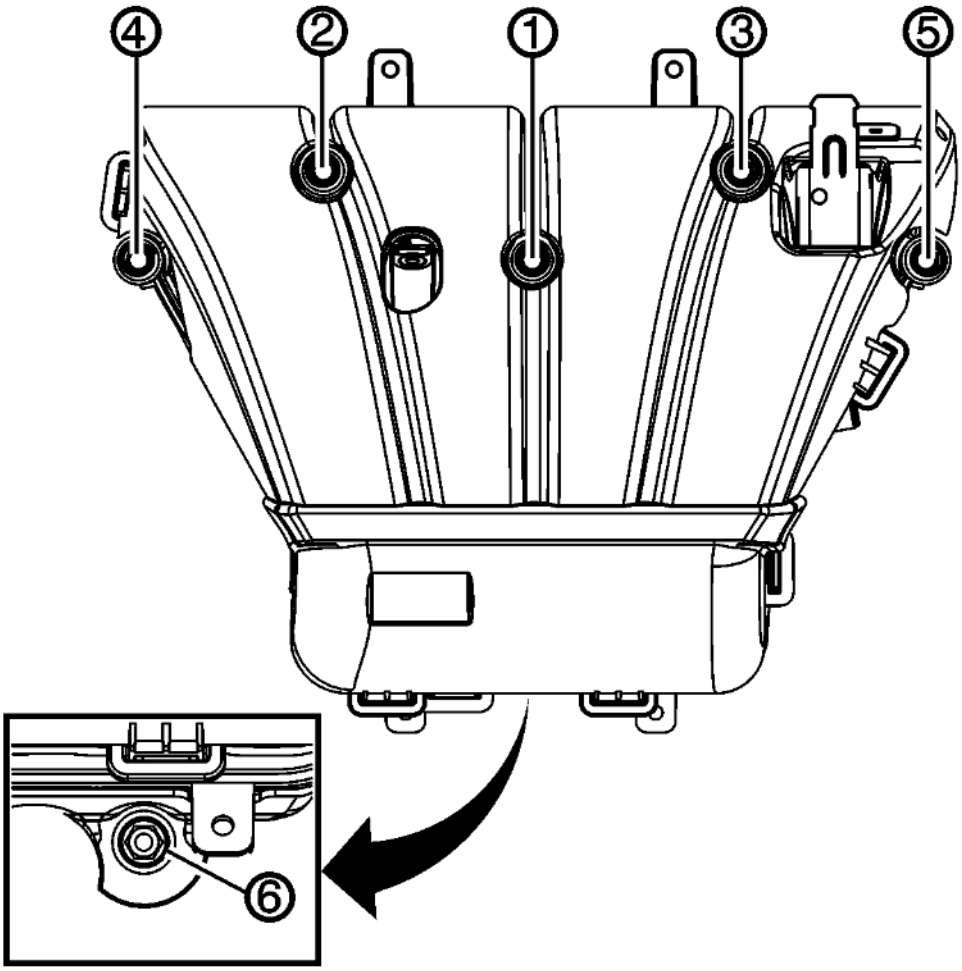

Fig. 280: Tightening Fastener In Sequence
Courtesy of GENERAL MOTORS COMPANY

CAUTION: Refer to Fastener Caution .

2. Tighten the bolts and nuts in sequence twice to 12 N.m (106 lb in).

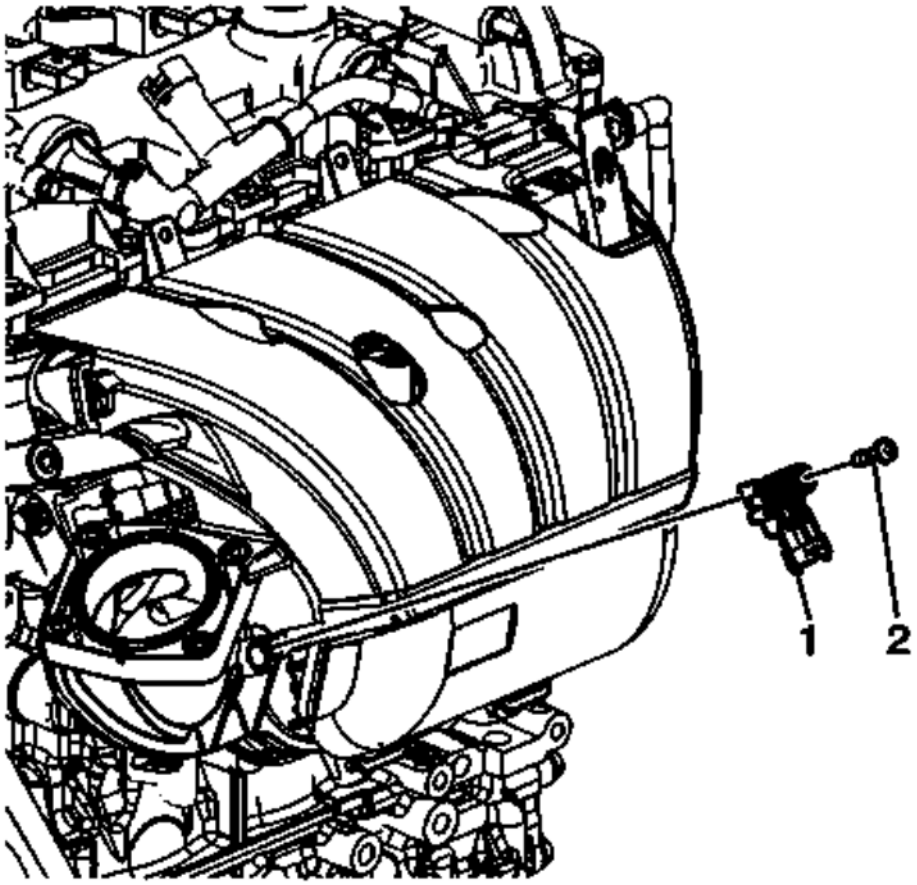

Fig. 281: MAP Sensor And Bolt
Courtesy of GENERAL MOTORS COMPANY

3. Install the MAP sensor (1) and bolt (2). Tighten the bolt to 5 N.m (44 lb in).

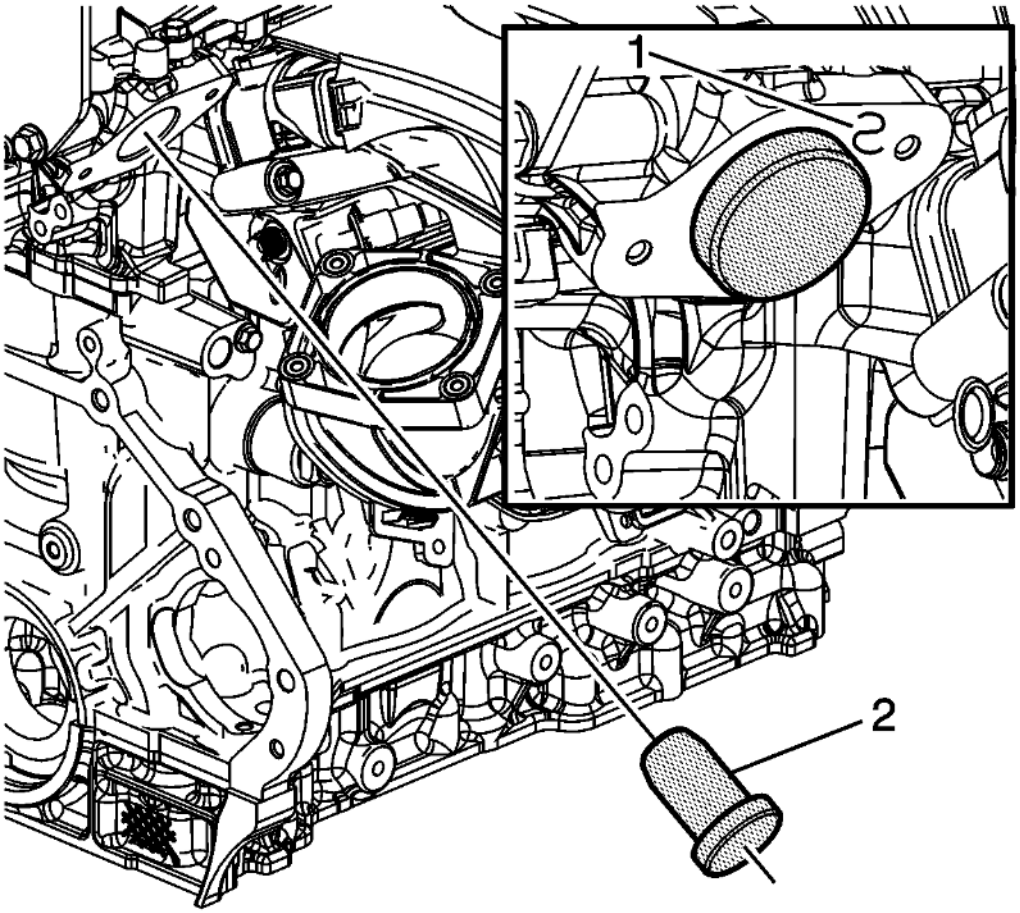

Fig. 282: View Of HP Fuel Pump Installation Alignment Gauge
Courtesy of GENERAL MOTORS COMPANY

NOTE: **The camshaft must be in the base circle position before the high pressure fuel pump is installed.**

4. Use the **EN-50790** alignment gauge (2) to ensure that the camshaft lobe is in the base circle position. At base circle position, the tool will be flush with the head (1).

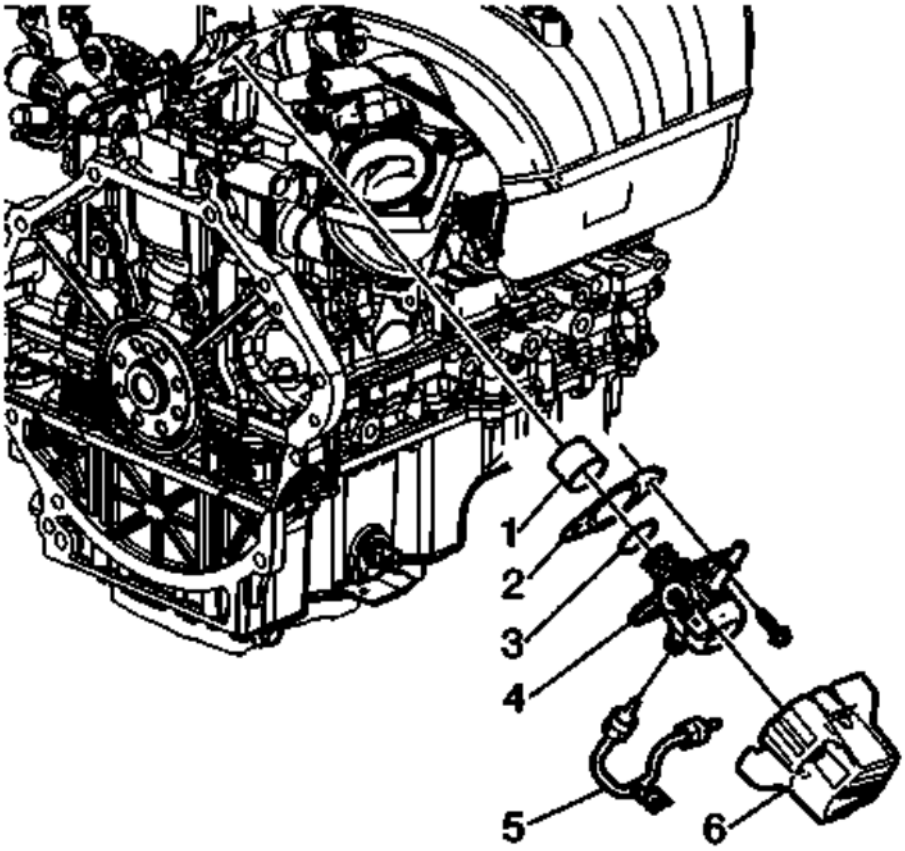

Fig. 283: Fuel Pump Insulator
Courtesy of GENERAL MOTORS COMPANY

5. Lubricate the high pressure fuel pump cylinder head bore with clean, silicone-free 5W30 engine oil.

NOTE: **Ensure that the high pressure fuel pump roller lifter is oriented properly, and the camshaft is at base circle.**

6. Lubricate the high pressure fuel pump roller lifter (1) with 5W30 engine oil and install into the cylinder head bore.

NOTE: **Ensure the fuel pump housing gasket (2) is properly aligned with the tab upward at the 2 O'clock position.**

7. Install a NEW fuel pump housing O-ring (3) and gasket (2).
8. Install the fuel pump assembly (4).
9. Hand start the fuel pump assembly bolts evenly. Tighten the fuel pump bolts evenly to 15 N.m (11 lb ft).
10. Hand start both ends of the NEW fuel feed intermediate pipe (5).
    1. Tighten the fitting nut to the fuel rail to 15 N.m (11 lb ft).
    2. Tighten the fitting nut to the fuel pump to 15 N.m (11 lb ft).
    3. Tighten the fitting nut to the fuel rail a final pass to 30 N.m (22 lb ft).

4. Tighten the fitting nut to the fuel pump a final pass to 30 N.m (22 lb ft).

11. Install the fuel pump insulator (6).

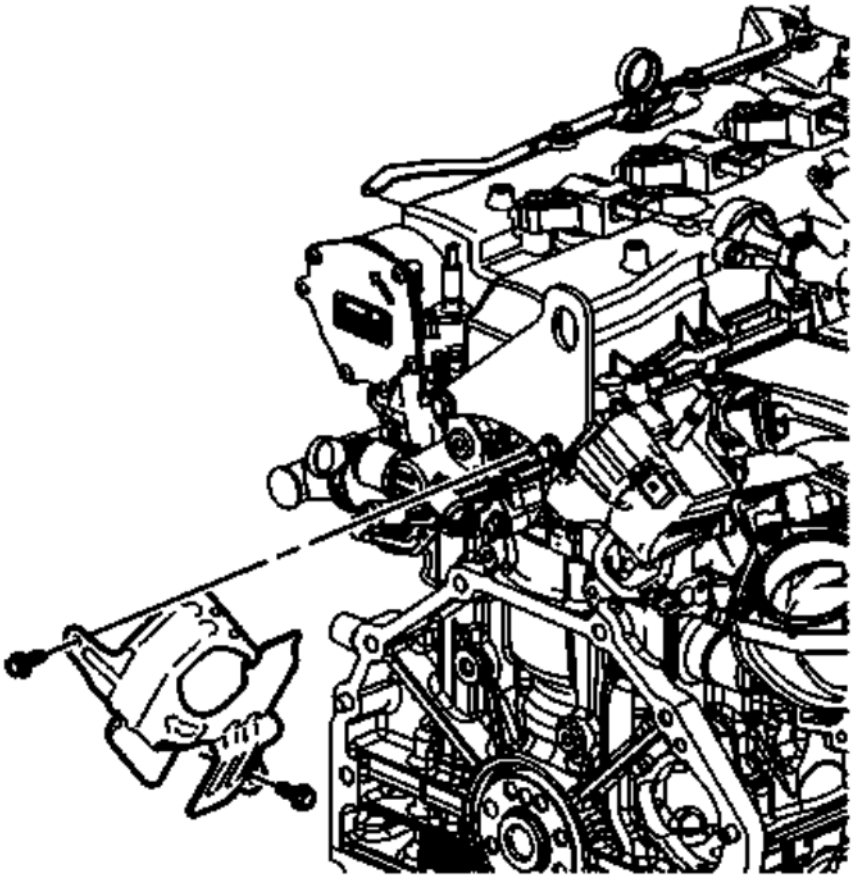

Fig. 284: Fuel Pump Cover Bolts And Cover
Courtesy of GENERAL MOTORS COMPANY

12. Install the fuel pump cover and bolts. Tighten the bolts to 10 N.m (89 lb in).

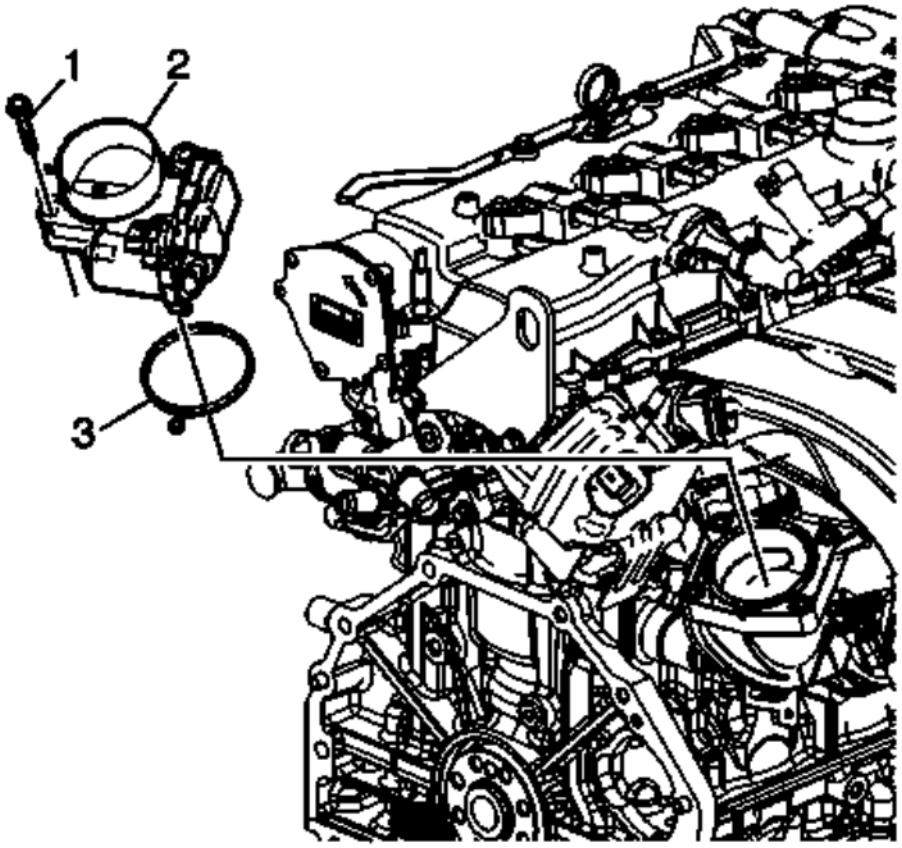

Fig. 285: Throttle Body Bolts
Courtesy of GENERAL MOTORS COMPANY

13. Install a new throttle body gasket (3).
14. Install the throttle body (2).
15. Install the throttle body bolts (1) and tighten to 10 N.m (89 lb in).

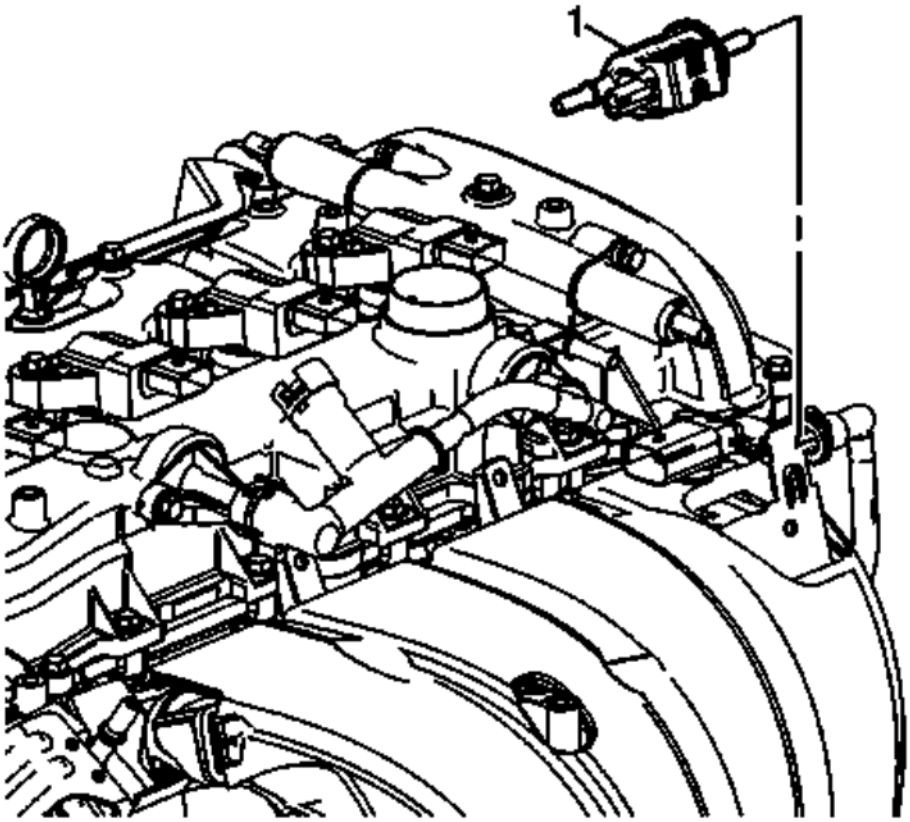

Fig. 286: EVAP Canister Valve
Courtesy of GENERAL MOTORS COMPANY

NOTE: **Ensure the quick-connect is clean and free of debris. The latch should move freely prior to installation.**

16. Install the EVAP canister valve (1) and connect the EVAP canister valve tube.

TURBOCHARGER INSTALLATION

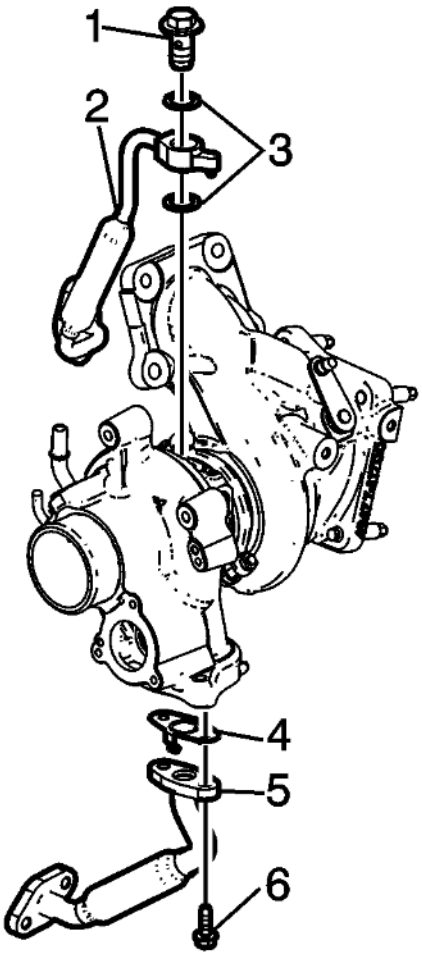

Fig. 287: Turbocharger Oil Feed Pipe Bolt
Courtesy of GENERAL MOTORS COMPANY

NOTE: **The exhaust pipe studs do not come installed on new turbochargers. If the turbocharger is being replaced, new studs will need to be installed.**

1. Install the turbocharger oil feed pipe (2) and NEW washers (3) onto the turbocharger.

CAUTION: Refer to Fastener Caution .

2. Install the turbocharger oil feed pipe bolt (1) and tighten to 35 N.m (26 lb ft).
3. Install a NEW turbocharger oil return pipe gasket (4).
4. Install the turbocharger oil return pipe (5) onto the turbocharger.
5. Install the turbocharger oil return pipe bolts (6) and tighten to 10 N.m (89 lb in).

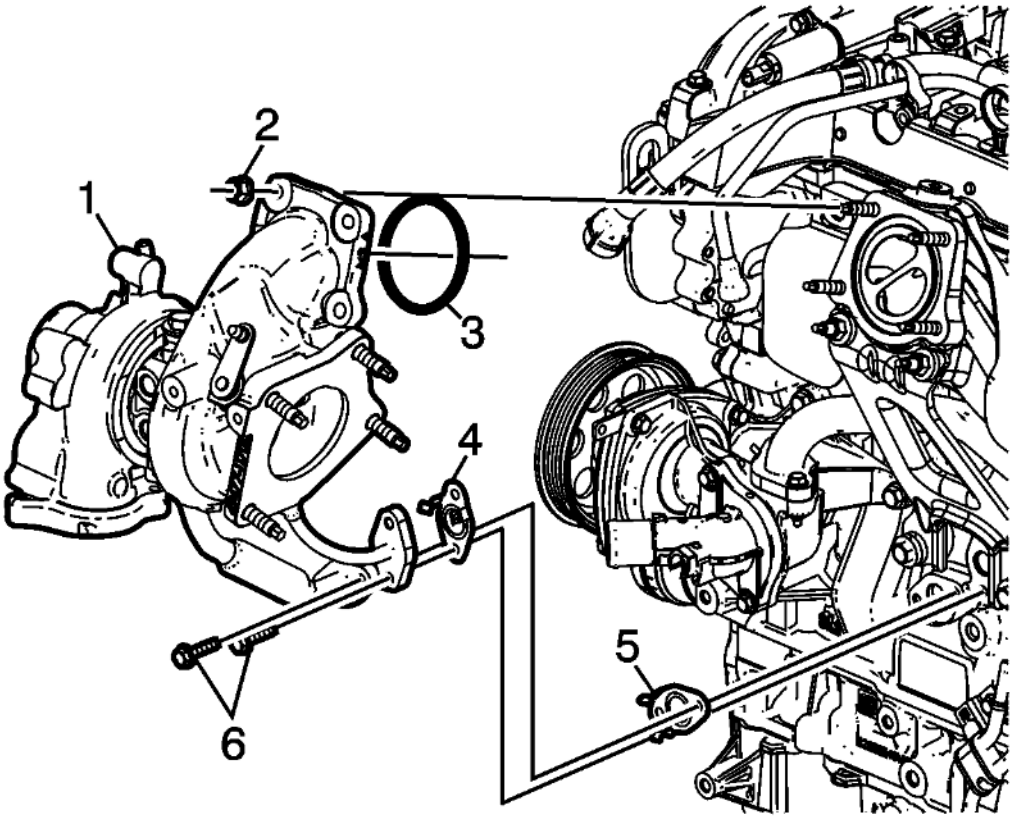

Fig. 288: Turbocharger Nuts
Courtesy of GENERAL MOTORS COMPANY

6. Install a NEW turbocharger gasket (3) on the turbocharger.
7. Install NEW turbocharger oil feed and oil return pipe gaskets (4, 5).
8. Install the turbocharger (1).

CAUTION: This vehicle is equipped with torque-to-yield or single use fasteners. Install a NEW torque-to-yield or single use fastener when installing this component. Failure to replace the torque-to-yield or single use fastener could cause damage to the vehicle or component.

9. Install NEW turbocharger nuts (2) finger tight.
10. Install the turbocharger oil feed and return pipe bolts (6) at the engine block. tighten the bolts to 10 N.m (89 lb in).

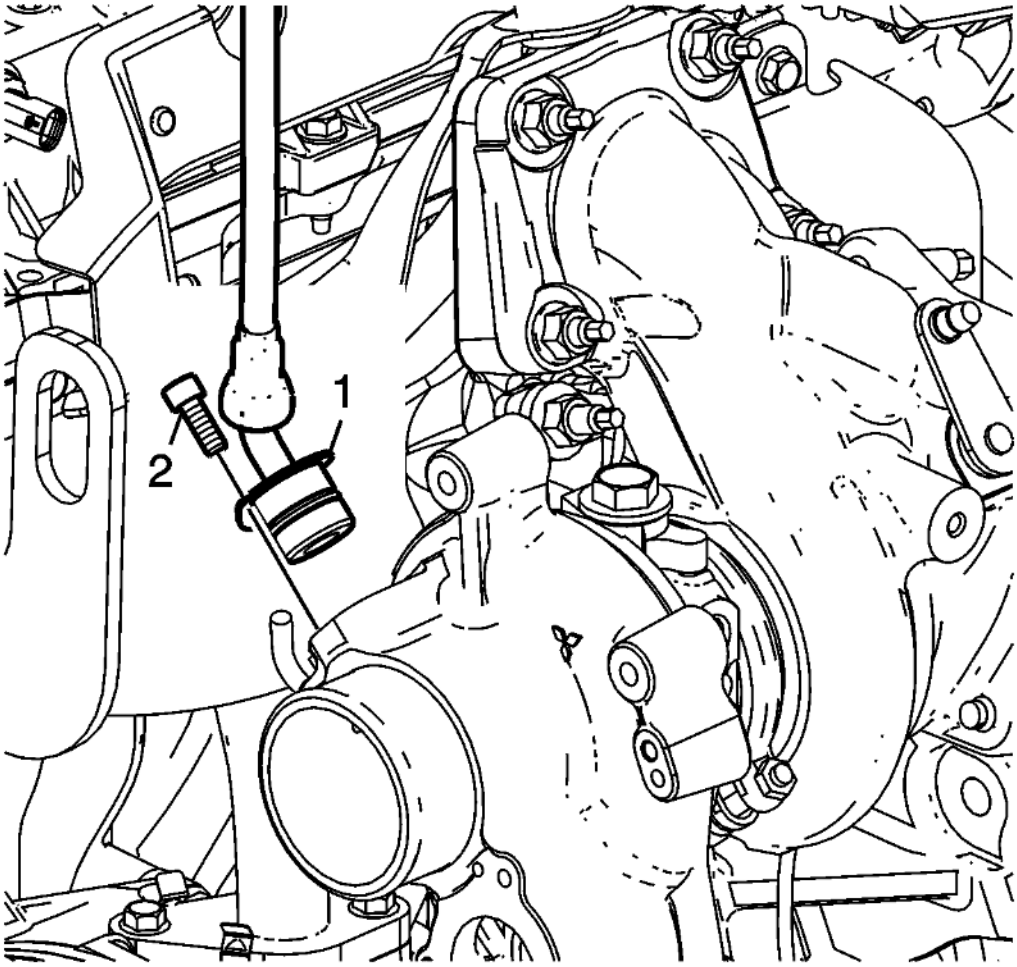

Fig. 289: PCV Hose Fitting Bolt
Courtesy of GENERAL MOTORS COMPANY

NOTE: **The PCV hose and fitting assembly connection is permanent. Reinstall these components as an assembly unless new components are being used.**

11. Install the PCV hose and fitting assembly (1) to the turbocharger. Install the PCV hose fitting assembly bolt (2) and tighten to 8 N.m (71 lb in).

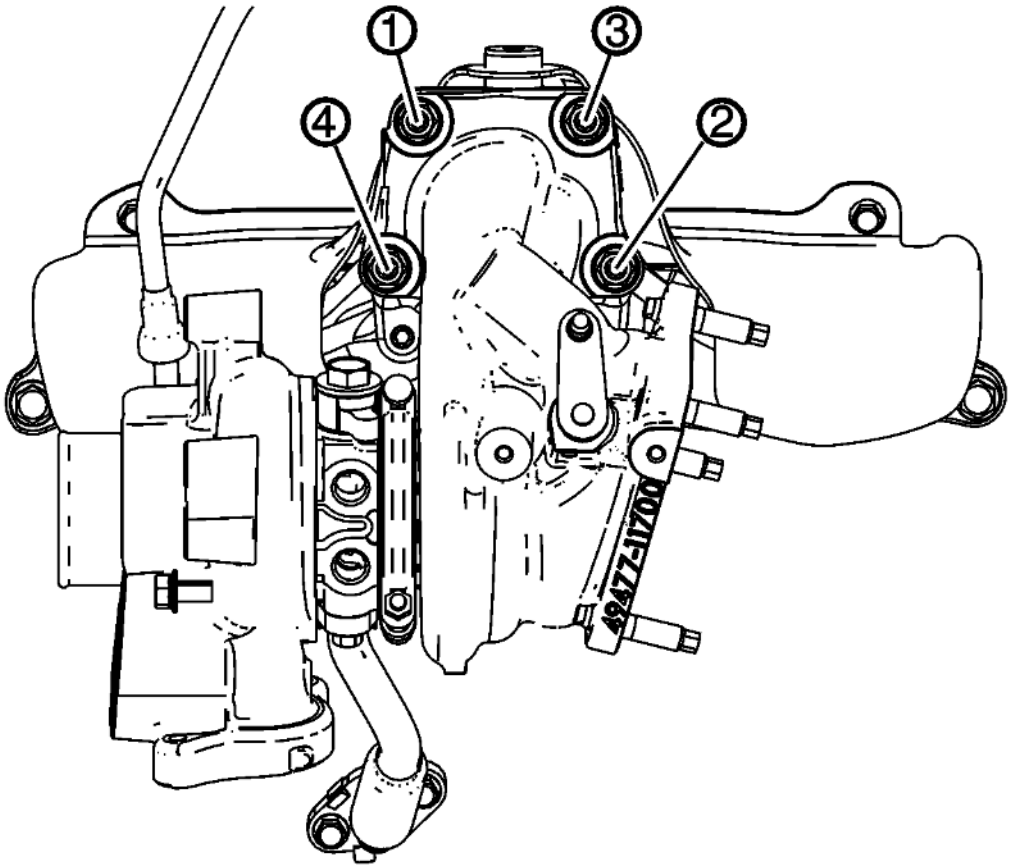

Fig. 290: Turbocharger Nut Tightening Sequence
Courtesy of GENERAL MOTORS COMPANY

12. Tighten the turbocharger nuts in sequence to 30 N.m (22 lb ft) plus 90 degrees.

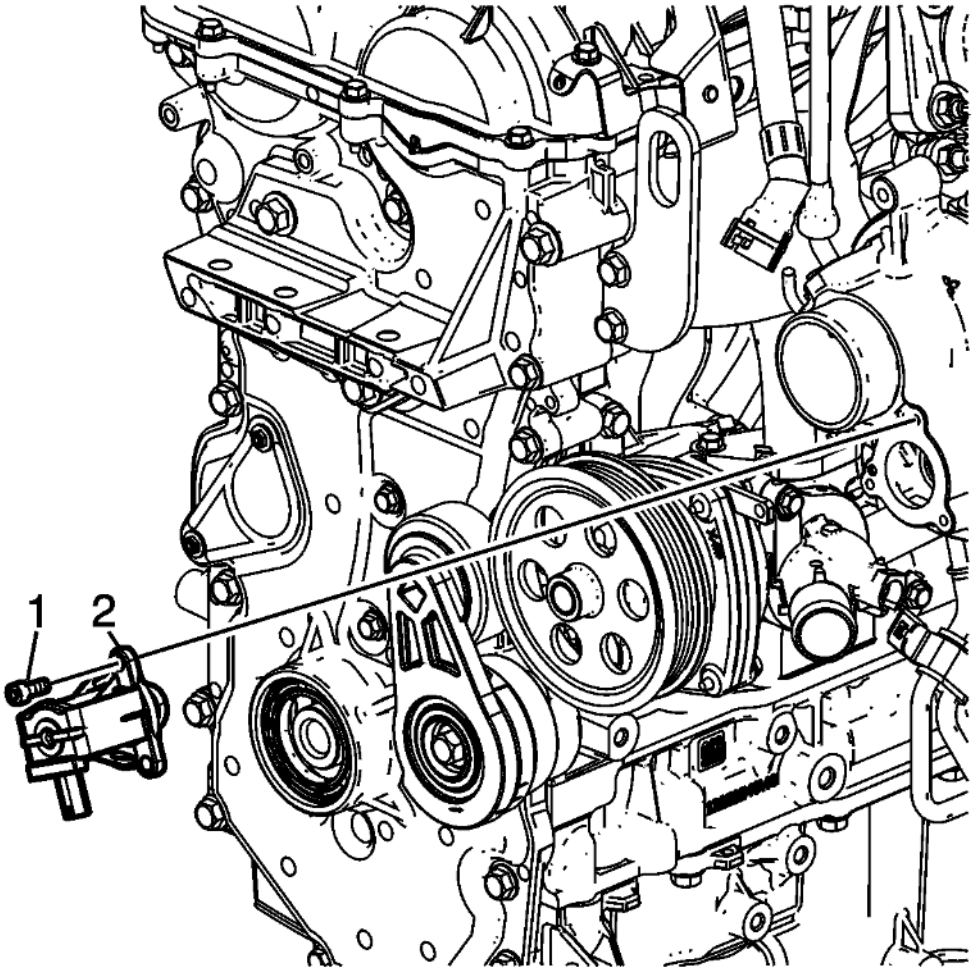

Fig. 291: Turbocharger Bypass Valve Solenoid Bolts
Courtesy of GENERAL MOTORS COMPANY

13. Install the turbocharger bypass valve solenoid (2).
14. Install the turbocharger bypass valve solenoid bolts (1) and tighten to 8 N.m (71 lb in).

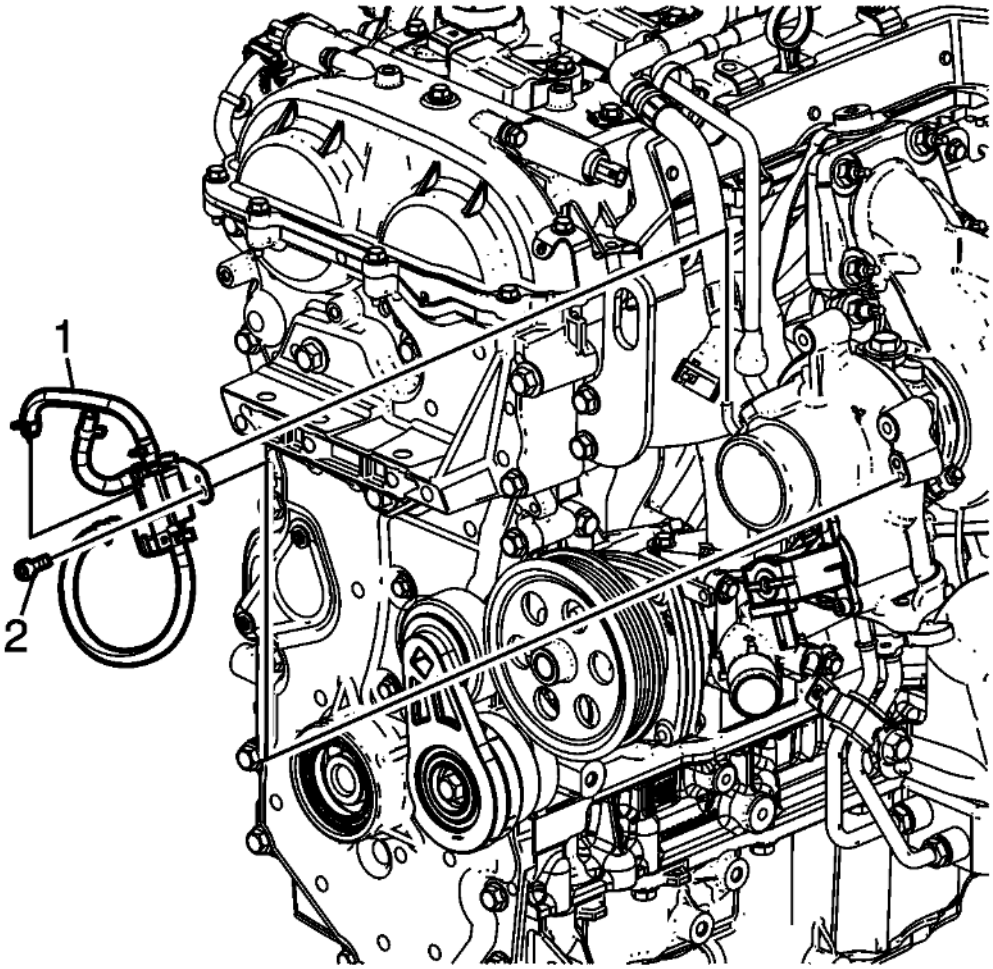

Fig. 292: Turbocharger Wastegate Regulator Solenoid Valve
Courtesy of GENERAL MOTORS COMPANY

15. Install the turbocharger wastegate regulator solenoid valve (1).
16. Install the turbocharger wastegate regulator solenoid valve bracket bolt (2) and tighten to 8 N.m (71 lb in).
17. Connect the turbocharger wastegate regulator solenoid valve hoses to the turbocharger.

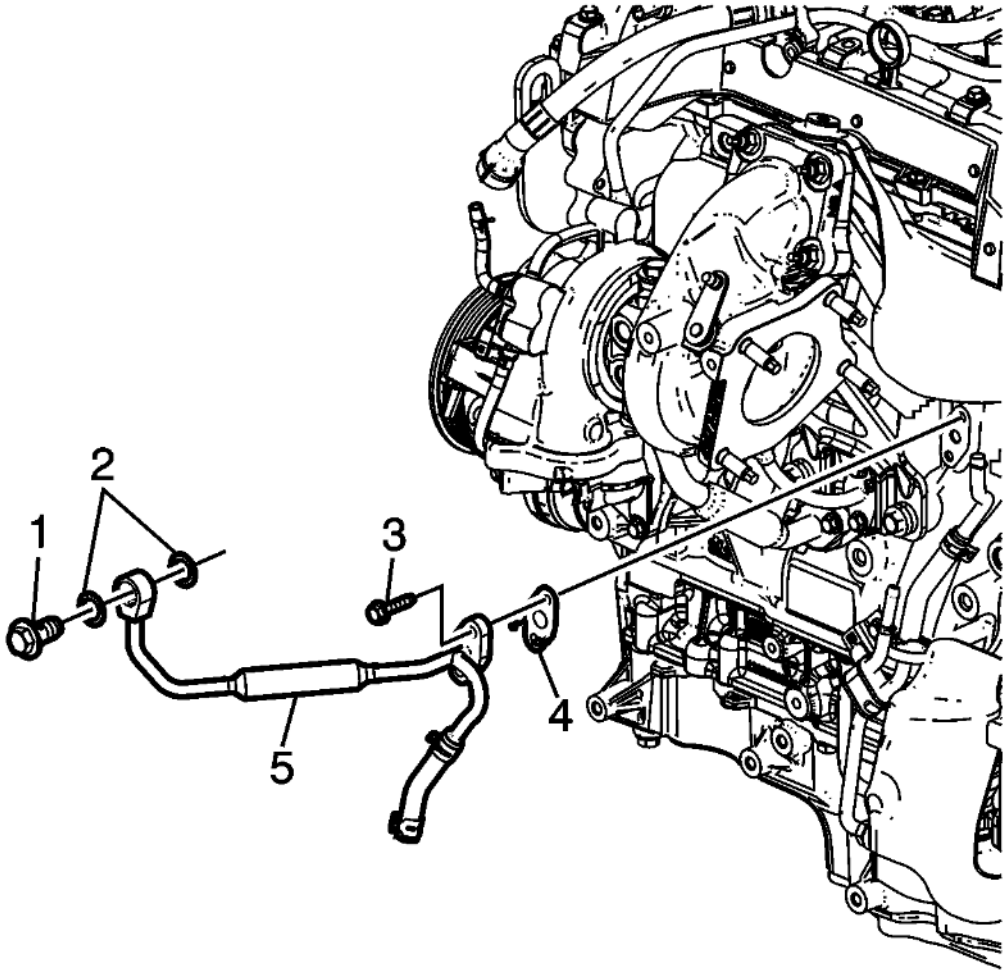

Fig. 293: Turbocharger Coolant Feed Pipe Bolts
Courtesy of GENERAL MOTORS COMPANY

18. Install the turbocharger coolant feed pipe (5) and NEW washers (2) on the turbocharger.
19. Install the turbocharger coolant feed pipe bolt (1) and tighten to 35 N.m (26 lb ft).
20. Install a NEW turbocharger coolant feed pipe gasket (4).
21. Install the turbocharger coolant feed pipe bolts (3) and tighten to 10 N.m (89 lb in).
22. Connect the turbocharger coolant feed pipe hose to the engine oil cooler.

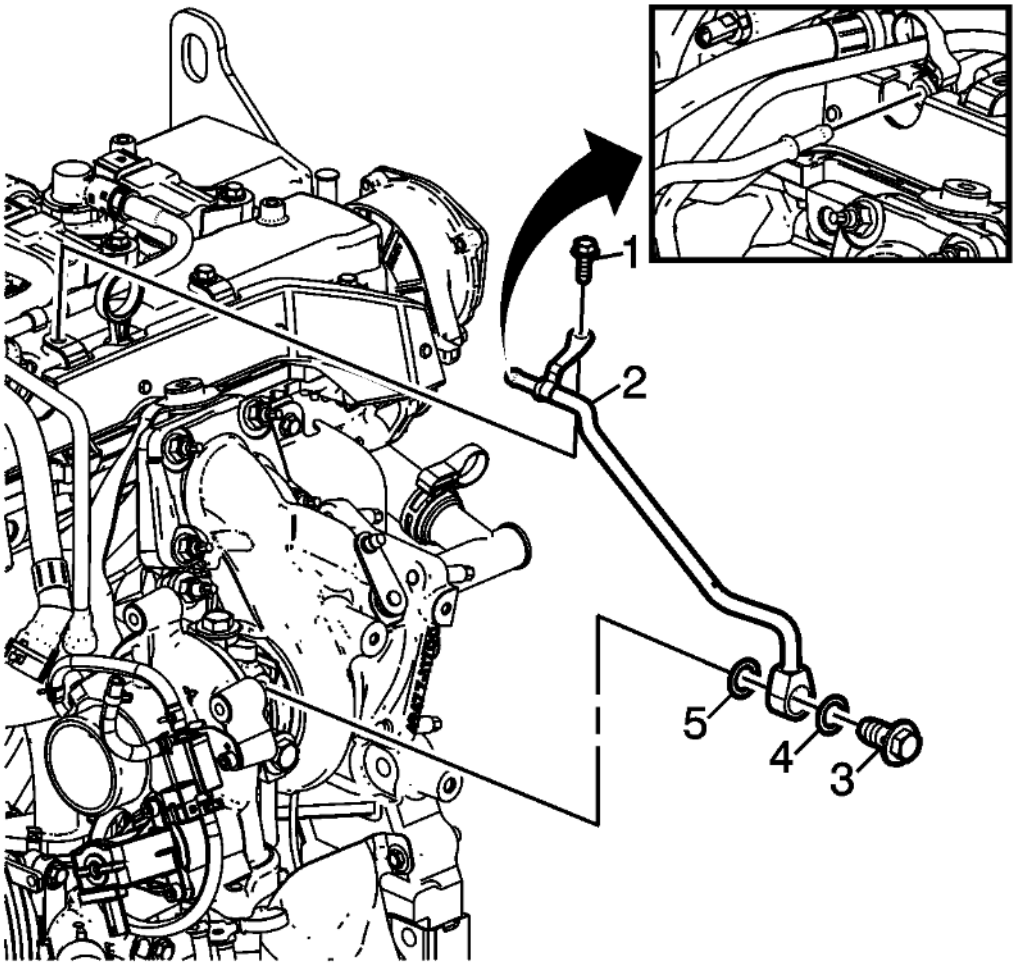

Fig. 294: Camshaft Cover Heat Shield Bolt
Courtesy of GENERAL MOTORS COMPANY

23. Install the turbocharger coolant return pipe (2) and NEW washers (4, 5) on the turbocharger.
24. Install the turbocharger coolant return pipe bolt (3) and tighten to 35 N.m (26 lb ft).
25. Connect the turbocharger coolant return pipe to the air bleed hose.
26. Install the camshaft cover heat shield bolt (1) that retains the turbocharger coolant return pipe (2) at the camshaft cover. Tighten the bolt to 10 N.m (89 lb in).

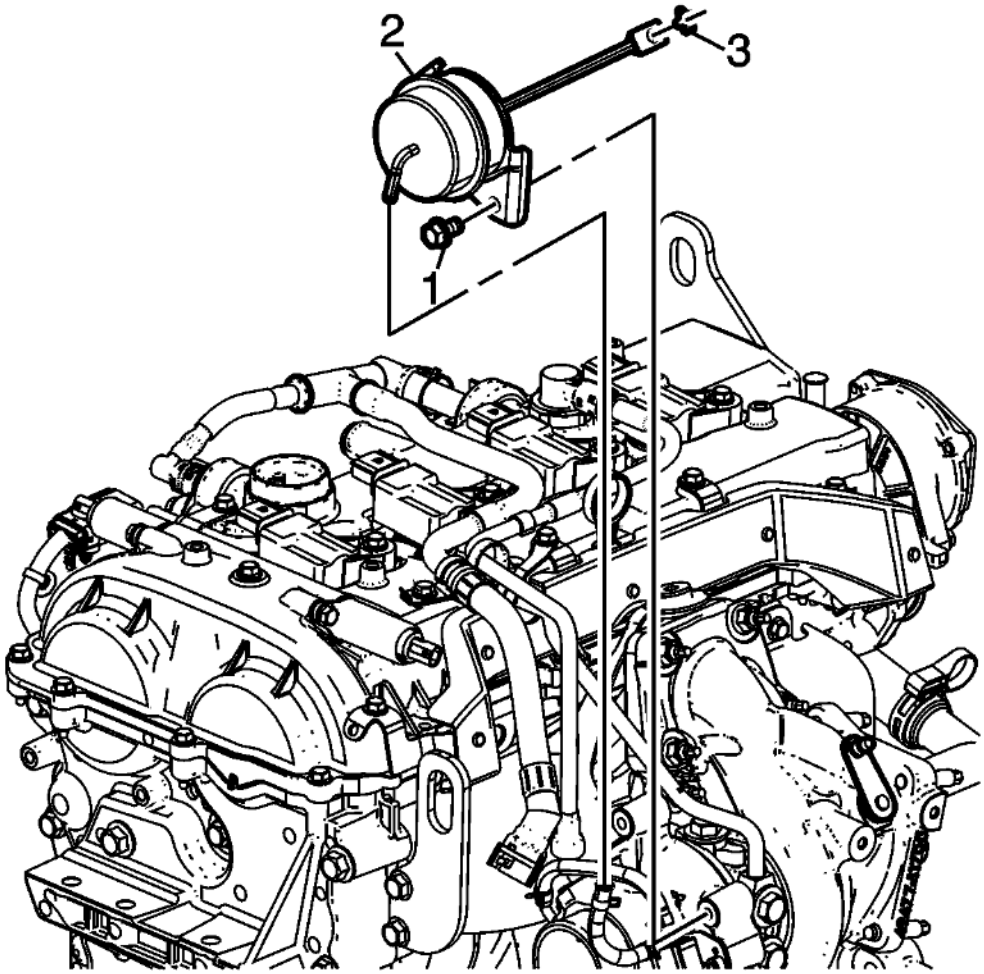

Fig. 295: Turbocharger Wastegate Actuator Arm Retainer
Courtesy of GENERAL MOTORS COMPANY

27. Install the turbocharger wastegate actuator (2) and actuator bolts (1) and tighten to 8 N.m (71 lb in).
28. Install the turbocharger wastegate actuator arm retainer (3).

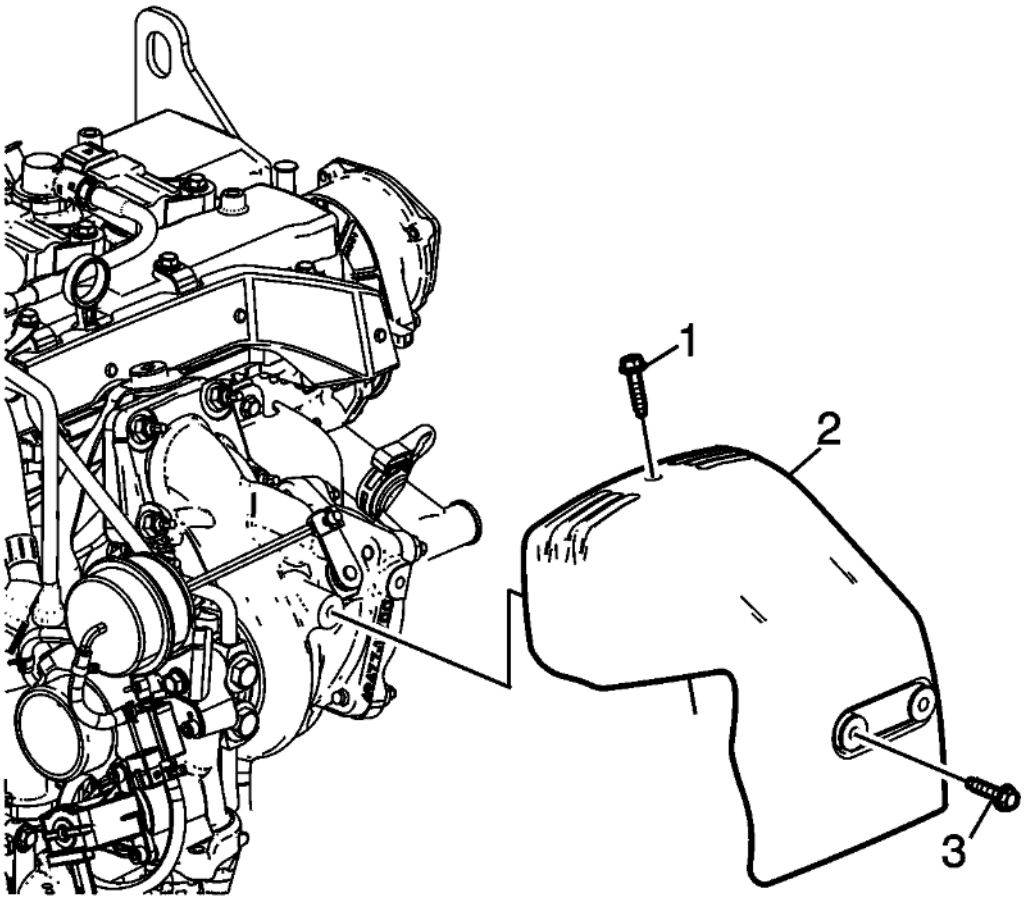

Fig. 296: Turbocharger Heat Shield Bolts
Courtesy of GENERAL MOTORS COMPANY

29. Install the turbocharger heat shield (2).
30. Install the turbocharger heat shield bolts (1, 3) and tighten to 14 N.m (124 lb in).

AUTOMATIC TRANSMISSION FLEX PLATE INSTALLATION

Special Tools

- **EN-50792** Flywheel Holding Tool
- **EN-45059** Angle Meter

For equivalent regional tools, refer to **Special Tools** .

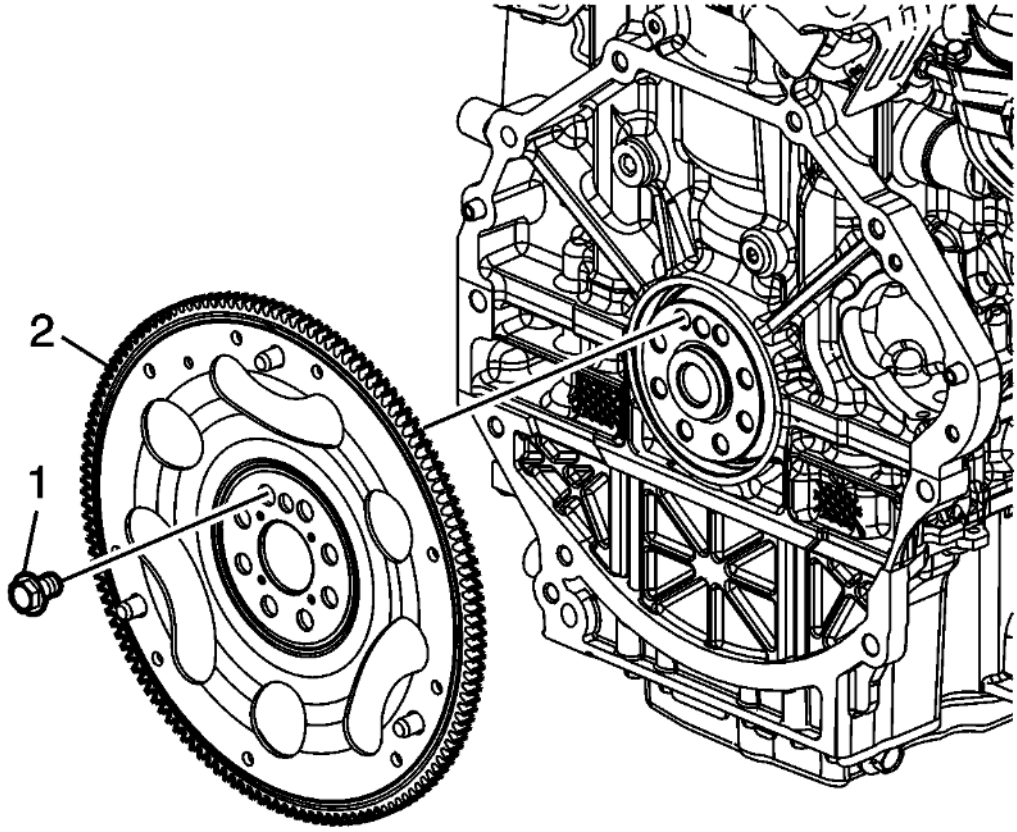

Fig. 297: Flywheel Attaching Bolts
Courtesy of GENERAL MOTORS COMPANY

CAUTION: This vehicle is equipped with torque-to-yield or single use fasteners. Install a NEW torque-to-yield or single use fastener when installing this component. Failure to replace the torque-to-yield or single use fastener could cause damage to the vehicle or component.

NOTE: Fasteners have adhesive patch and must be tightened to final torque within 5 minutes.

1. Install the flywheel (2) and hand start NEW bolts (1).

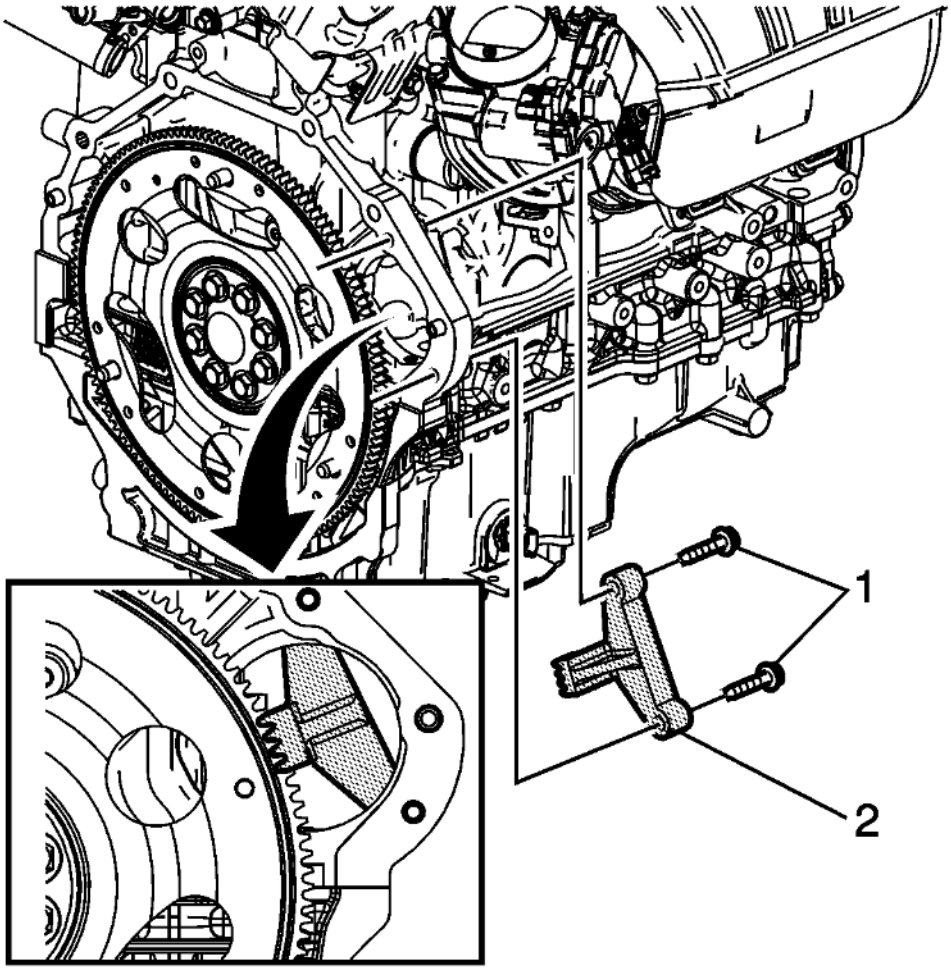

Fig. 298: Starter Motor Bolts
Courtesy of GENERAL MOTORS COMPANY

2. To prevent crankshaft rotation, install **EN-50792** flywheel holding tool (2) and starter motor bolts (1) at the starter motor location and engaging the flywheel.

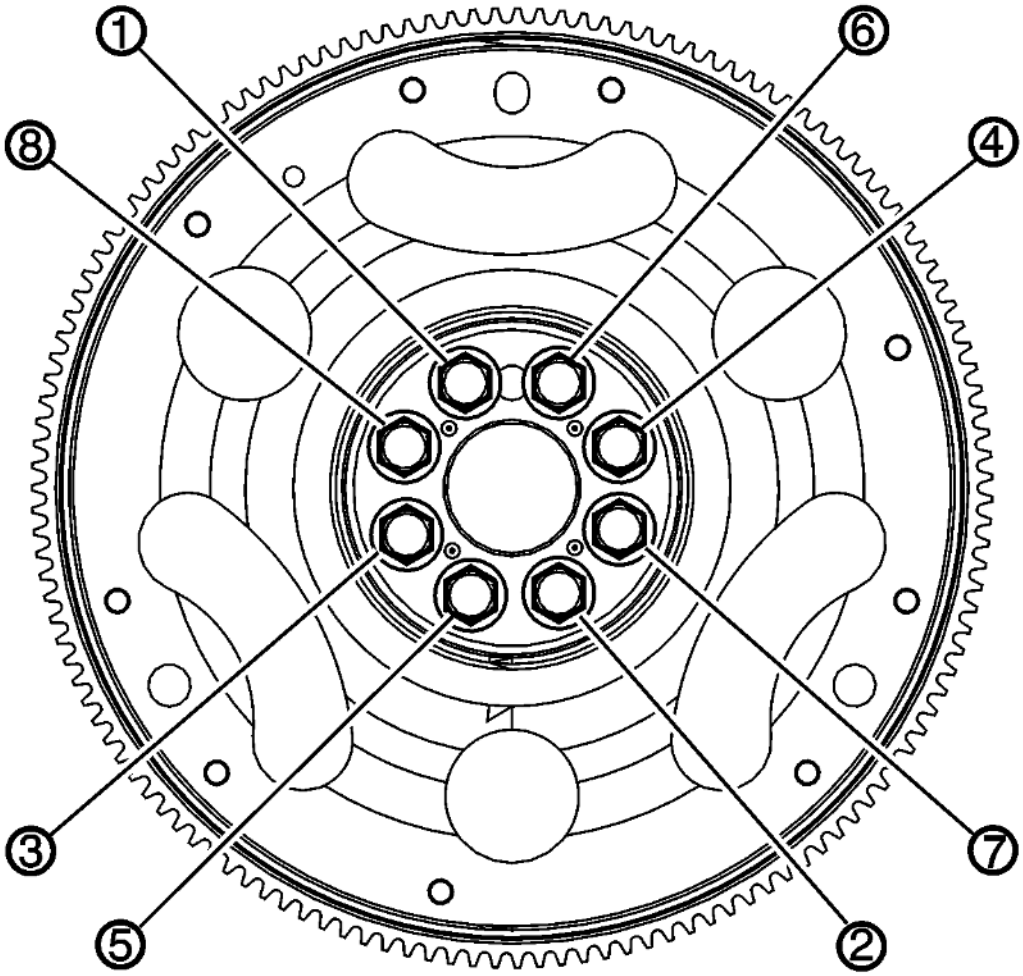

Fig. 299: Flywwheel Bolt Tightening Sequence
Courtesy of GENERAL MOTORS COMPANY

CAUTION: Refer to Fastener Caution .

3. Tighten the bolts evenly using the following procedure:
    1. Tighten the bolts a first pass in sequence to 20 N.m (15 lb ft).
    2. Tighten the bolts a second pass in sequence to 30 N.m (22 lb ft).
    3. Tighten the bolts a final pass in sequence 40 degrees using the **EN-45059** meter.
4. Remove **EN-50792** flywheel holding tool.

CRANKSHAFT BALANCER INSTALLATION

Special Tools

- **EN 45059** Angle Meter
- **EN 48034** Crankshaft Balancer Installer
- **EN-50792** Flywheel Holding Tool

For equivalent regional tools, refer to **Special Tools** .

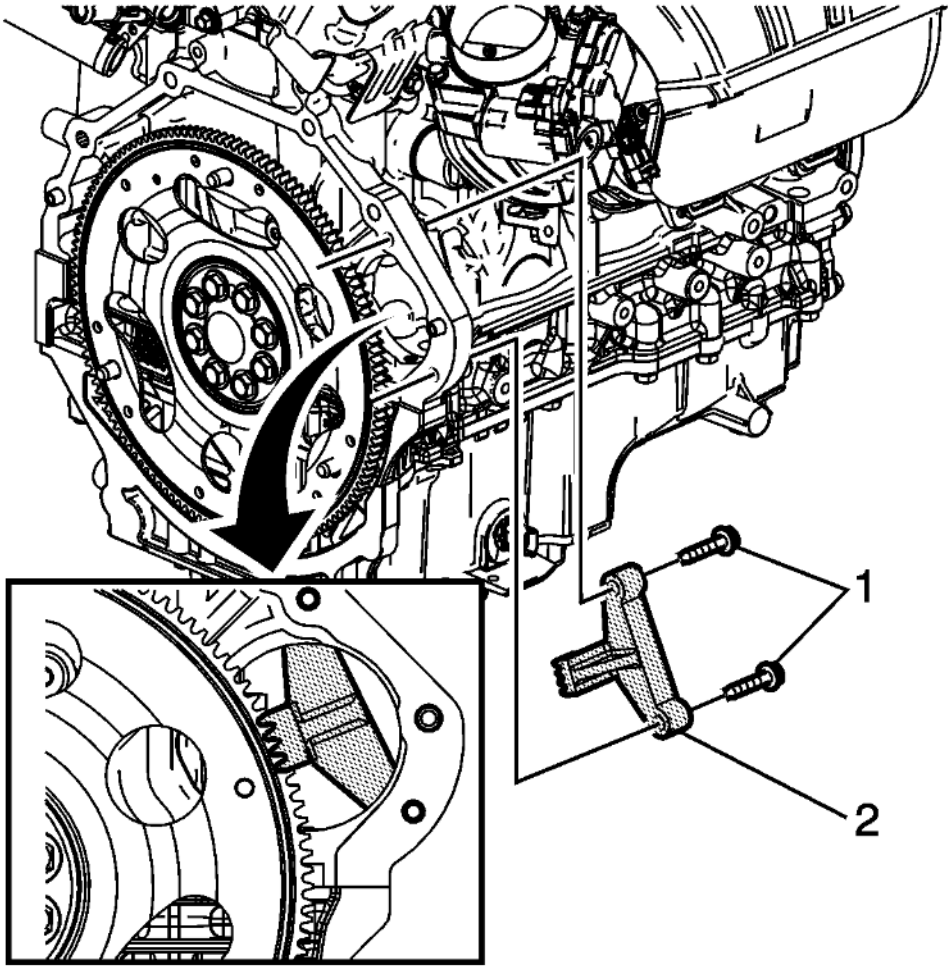

Fig. 300: Starter Motor Bolts
Courtesy of GENERAL MOTORS COMPANY

1. To prevent crankshaft rotation, install **EN-50792** flywheel holding tool (2) and starter motor bolts (1) at the starter motor location and engaging the flywheel.

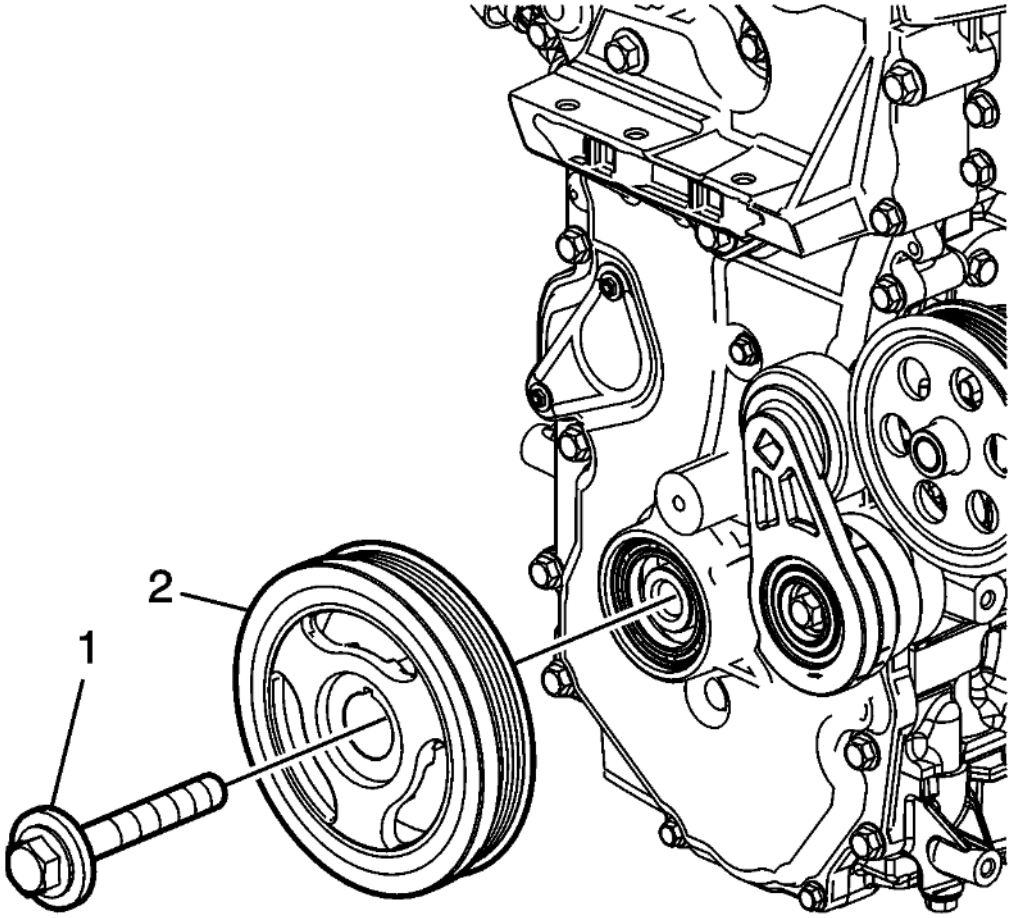

Fig. 301: Crankshaft Balancer
Courtesy of GENERAL MOTORS COMPANY

2. Using **EN-48034** installer , install the crankshaft balancer (2).

CAUTION: Refer to Fastener Caution .

CAUTION: This vehicle is equipped with torque-to-yield or single use fasteners. Install a NEW torque-to-yield or single use fastener when installing this component. Failure to replace the torque-to-yield or single use fastener could cause damage to the vehicle or component.

3. Install a NEW crankshaft balancer bolt and washer. Tighten the bolt to 150 N.m (111 lb ft) plus 180 degrees using the **EN 45059** meter.
4. Remove **EN-50792** flywheel holding tool.

OIL FILTER INSTALLATION

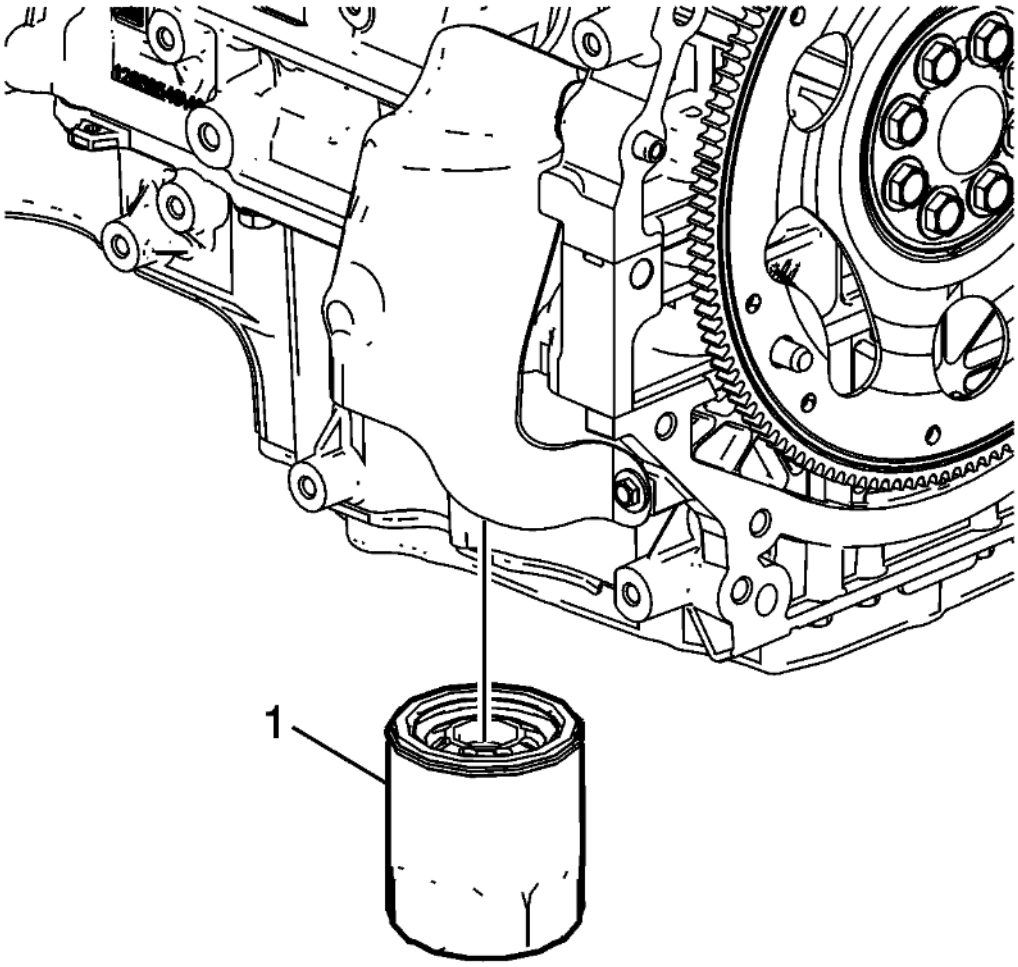

Fig. 302: Oil Filter
Courtesy of GENERAL MOTORS COMPANY

1. Lubricate the O-ring on the oil filter with 5W30 engine oil.
2. Install a new oil filter (1).

CAUTION: Refer to Fastener Caution .

3. Tighten the oil filter to 30 N.m (22 lb ft).

ENGINE PRELUBING

NOTE: This procedure is not used in Europe.

Special Tools

EN-45299 Engine Preluber

For equivalent regional tools, refer to **Special Tools** .

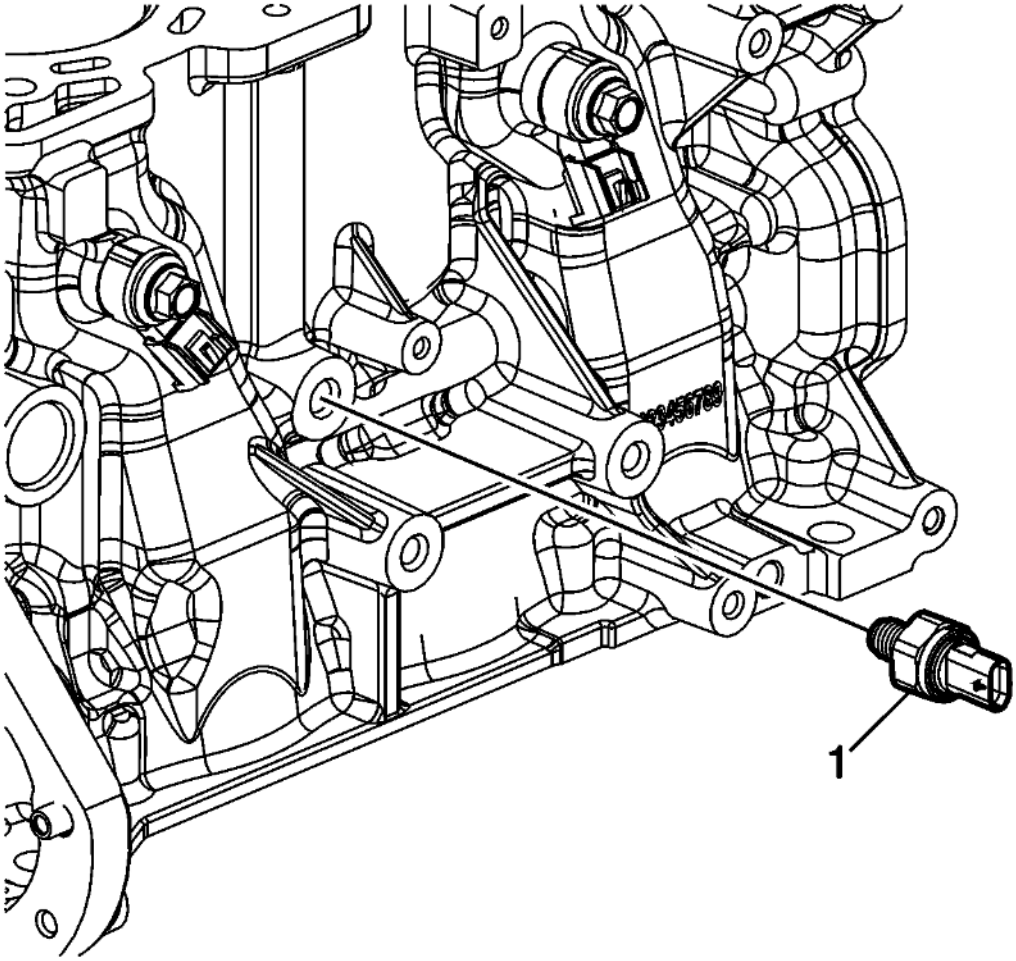

Fig. 303: Engine Oil Pressure Sensor
Courtesy of GENERAL MOTORS COMPANY

NOTE: **A constant and continuous flow of clean engine oil is required in order to properly prime the engine. Ensure an approved engine oil is used, as specified in the owners manual.**

1. Remove the engine oil pressure sensor (1).
2. Install the M12 x 1.75 adapter P/N 509376.

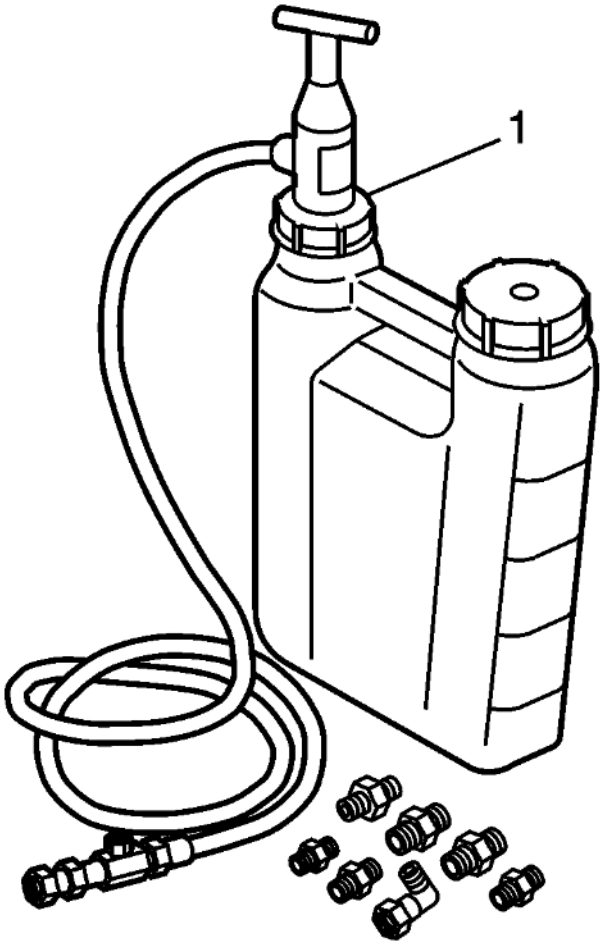

Fig. 304: View of Flexible Hose, Adapter and Preluber
Courtesy of GENERAL MOTORS COMPANY

3. Install the flexible hose to the adapter and open the valve.
4. Pump the handle on the **EN-45299** preluber (1) in order to flow a minimum of 1-1.9 liters (1-2 quarts) of engine oil. Observe the flow of engine oil through the flexible hose and into the engine assembly.
5. Close the valve and remove the flexible hose and adapter from the engine.

CAUTION: Refer to Fastener Caution .

6. Install the engine oil pressure sensor and tighten to 27 N.m (20 lb ft).
7. Top-off the engine oil to the proper level.

2014 Engine

Engine Mechanical - 2.0L (LTG) - Repair Instructions - On Vehicle - Regal

REPAIR INSTRUCTIONS - ON VEHICLE

INTAKE MANIFOLD COVER REPLACEMENT

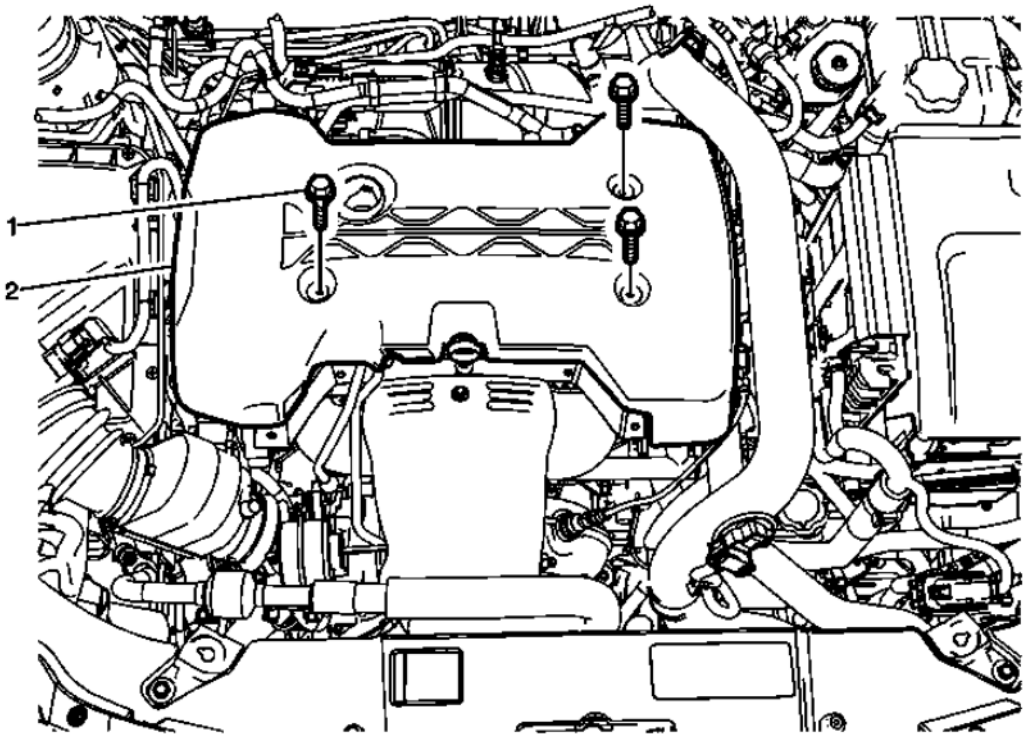

Fig. 1: Intake Manifold Cover (LTG)
Courtesy of GENERAL MOTORS COMPANY

Intake Manifold Cover Replacement

Callout	Component Name
1	Intake Manifold Cover Fastener (Qty,3) **CAUTION:** **Refer to Fastener Caution .** **Tighten** 9 (80 lb in)
2	Intake Manifold Cover **Procedure** Remove the oil cap before removing the intake manifold cover.

DRIVE BELT REPLACEMENT

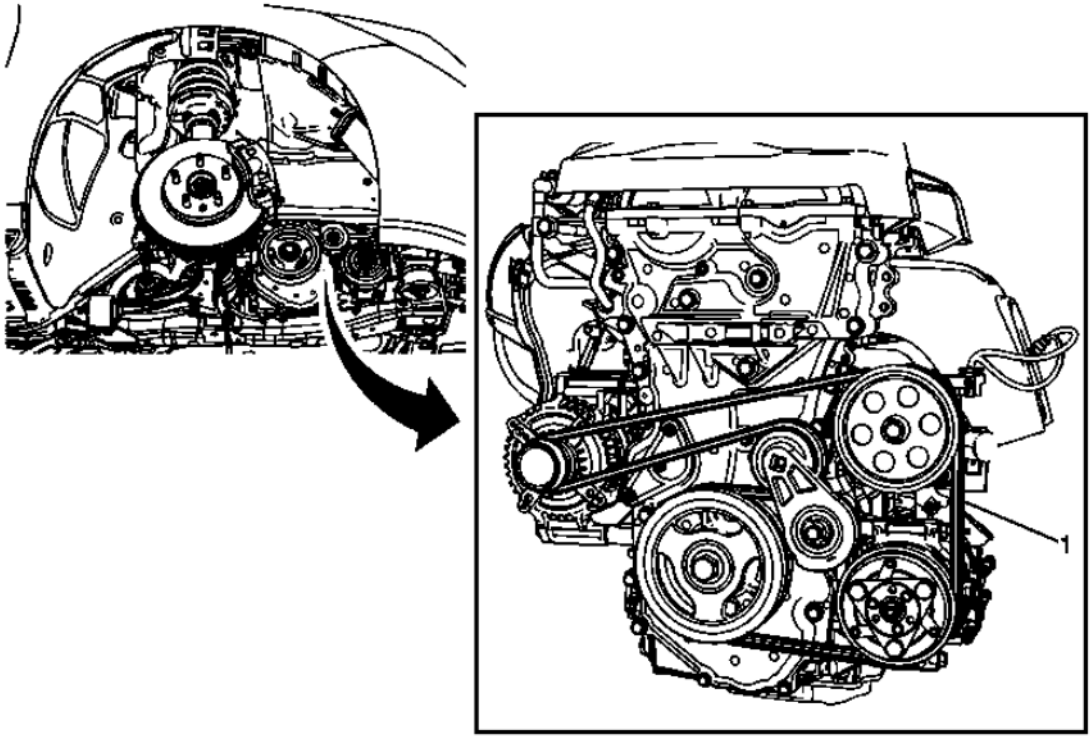

Fig. 2: Drive Belt Routing (LTG)
Courtesy of GENERAL MOTORS COMPANY

Drive Belt Replacement

Callout	Component Name
Preliminary Procedure Remove the front wheelhouse front liner. Refer to **Front Wheelhouse Front Liner Replacement** .	
1	Drive Belt **Procedure** 1. Use the proper tool to rotate the drive belt tensioner. 2. Remove the drive belt from the pulleys and tensioner.

DRIVE BELT TENSIONER REPLACEMENT

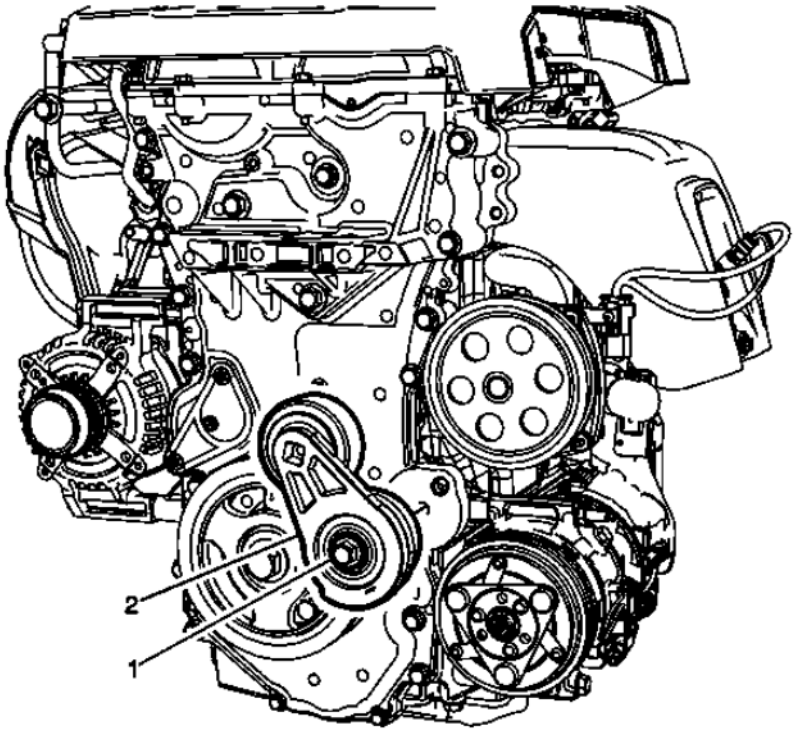

Fig. 3: Drive Belt Tensioner
Courtesy of GENERAL MOTORS COMPANY

Drive Belt Tensioner Replacement

Callout	Component Name
Preliminary Procedures Remove the drive belt. Refer to **Drive Belt Replacement**.	
1	Drive belt tensioner fastener **CAUTION:** **Refer to Fastener Caution .** **Tighten** 58 (43 lb ft)
2	Drive belt tensioner

ENGINE MOUNT INSPECTION

NOTE: **Before replacing any engine mount due to suspected fluid loss, verify that the source of the fluid is the engine mount, not the engine or accessories.**

1. Install the engine support fixture. Refer to **Engine Support Fixture**. Raising the engine removes the weight from the engine mount and creates slight tension in the rubber.
2. Observe the engine mount while raising the engine. Replace the engine mount if the engine mount exhibits any of the following conditions:

- The hard rubber surface is covered with heat check cracks.
- The rubber is split through the center of the engine mount.
- The GLYCOL™ fluid is leaking from the engine mount.

3. Inspect the system for loose vacuum hose connections or vacuum leaks. Refer to Vacuum Operated Engine Mounts Description and Operation.
4. Inspect the engine mount valve assemblies for loose electrical connections. Inspect the electrical system connected to the engine mount valve assemblies. Refer to **Diagnostic System Check - Vehicle** .
5. Inspect for the presence of glycol fluid in the vacuum system. Remove the hose assembly connections at the engine mounts. If fluid is present in the engine mount vacuum system, the entire vacuum system should be replaced.

POWERTRAIN MOUNT BALANCING

NOTE: **Follow the balance procedure steps listed below. Powertrain mounts must be tightened in sequence.**

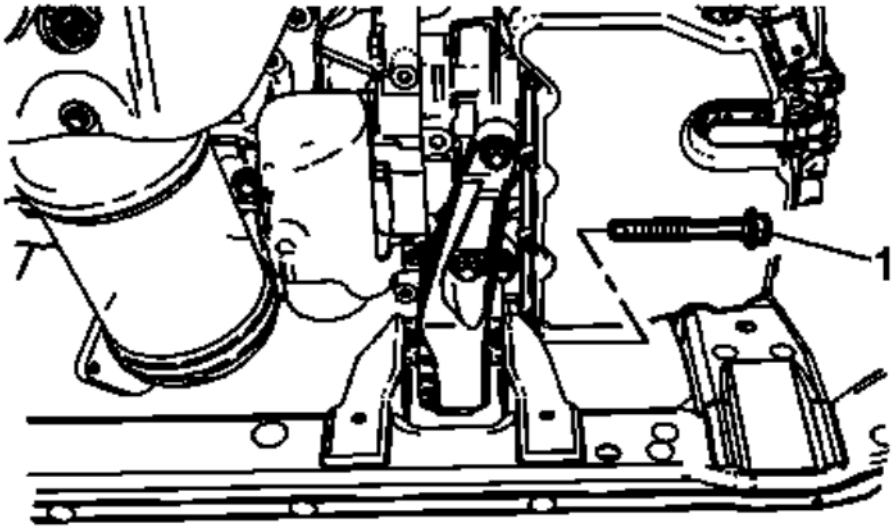

Fig. 4: Front Transaxle Mount Through Bolt
Courtesy of GENERAL MOTORS COMPANY

1. Remove the air cleaner assembly. Refer to **Air Cleaner Assembly Replacement** .
2. Remove the battery tray. Refer to **Battery Tray Replacement** .

3. Raise and support the vehicle. Refer to **Lifting and Jacking the Vehicle** .
4. Loosen the front transaxle mount through bolt (1).
5. Loosen the rear transaxle mount through bolt.
6. Lower the vehicle.
7. Position two floor jacks with wood blocks under the engine and transaxle in order to support the powertrain assembly.

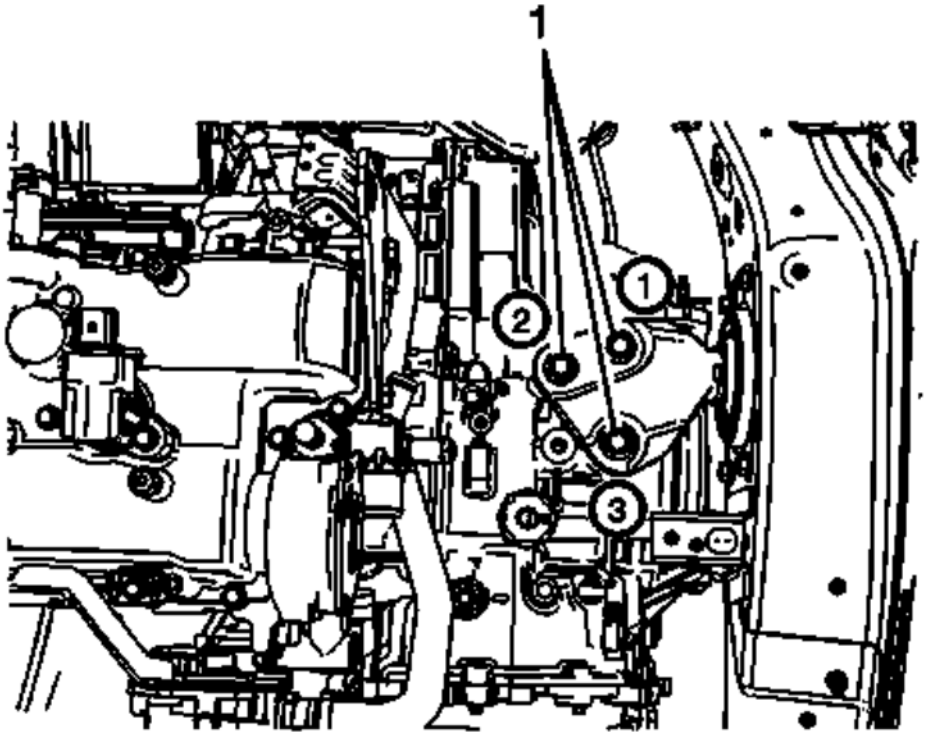

Fig. 5: Transaxle Mount Bolts
Courtesy of GENERAL MOTORS COMPANY

8. Loosen the transaxle mount bolts (1).

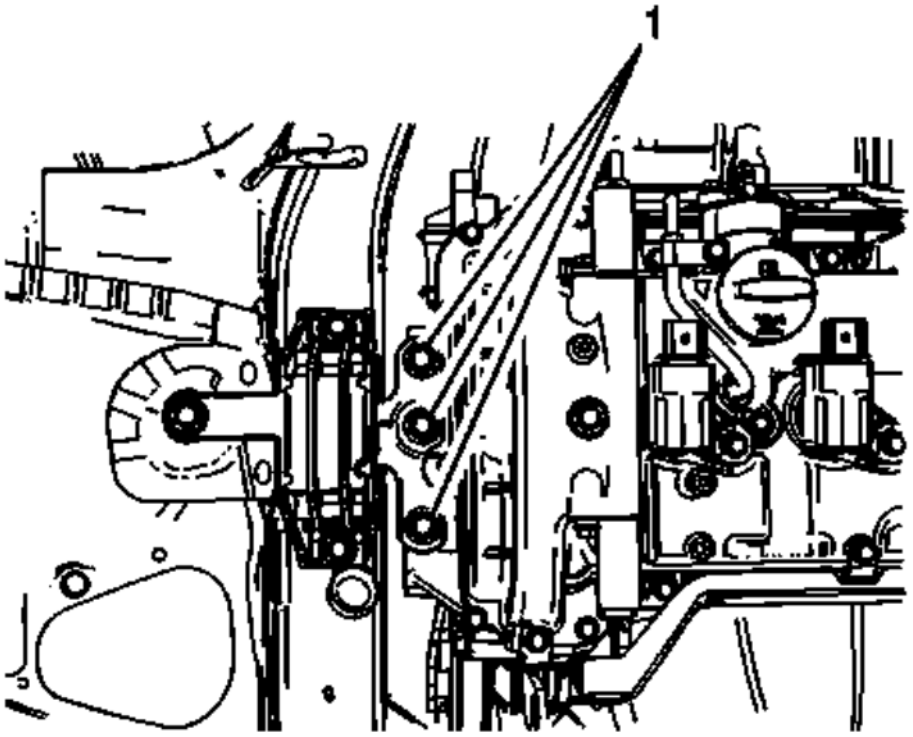

Fig. 6: Engine Mount
Courtesy of GENERAL MOTORS COMPANY

9. Loosen the engine mount to bracket bolts (1).
10. Reposition both floor jacks in order to allow a 1/8 inch gap between the mount and bracket.

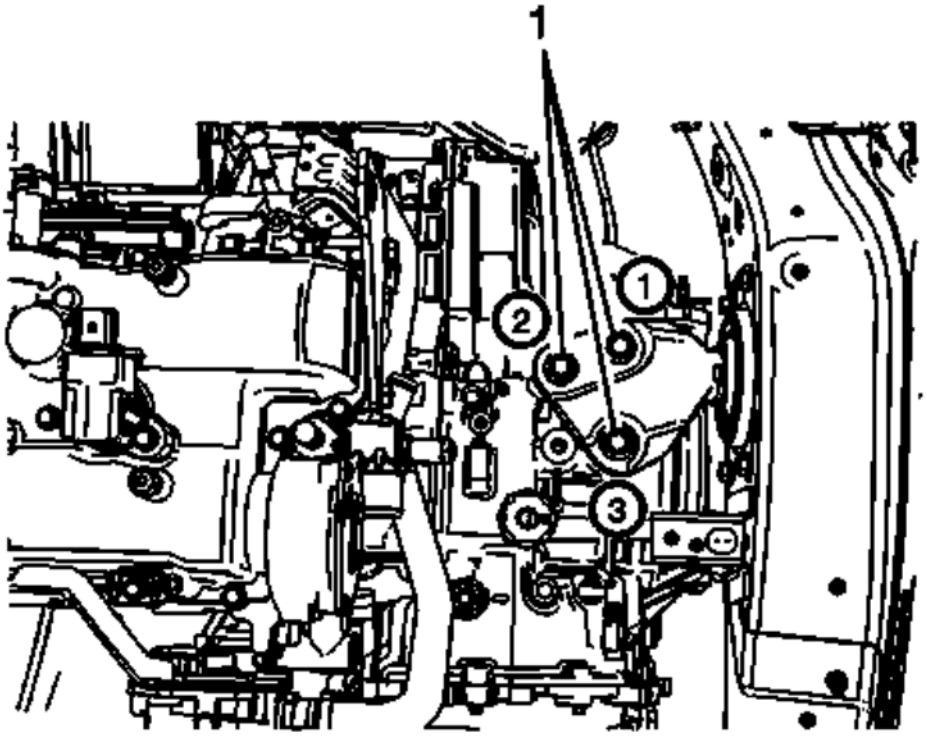

Fig. 7: Transaxle Mount Bolts
Courtesy of GENERAL MOTORS COMPANY

CAUTION: Refer to Fastener Caution .

11. Tighten the transaxle mount bolts (1) to 50 (37 lb ft) in sequence.

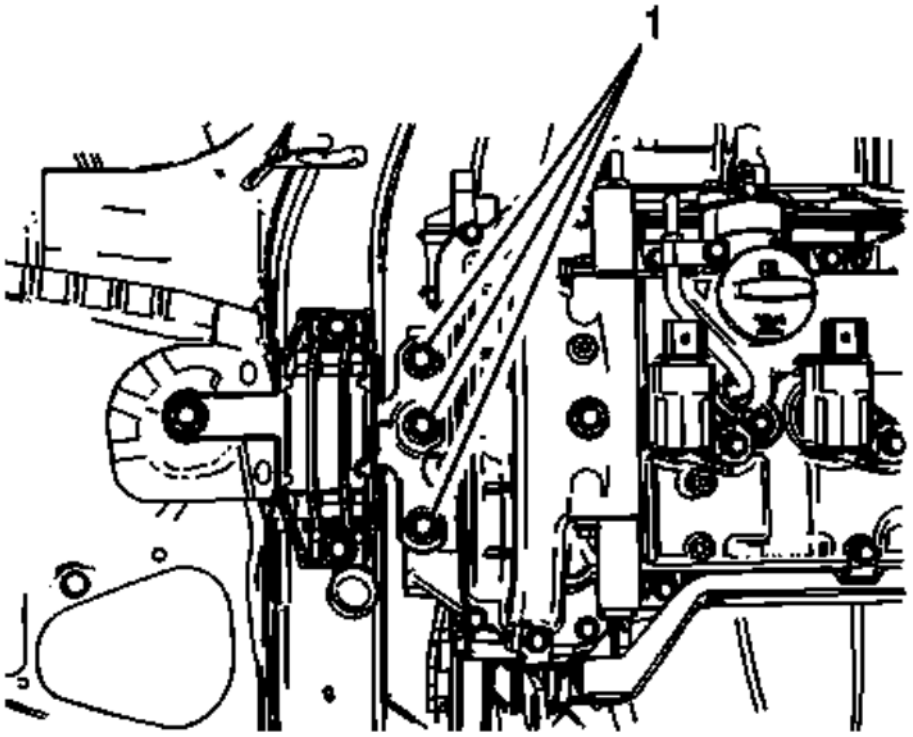

Fig. 8: Engine Mount
Courtesy of GENERAL MOTORS COMPANY

12. Tighten the engine mount to bracket bolts (1) to 62 (46 lb ft) in the following sequence.
13. Remove the floor jacks from under the oil pan.
14. Shake the powertrain vigorously from front to rear and allow the powertrain to settle.
15. Raise the vehicle.
16. Tighten the rear transaxle mount through bolt to 100 (74 lb ft).

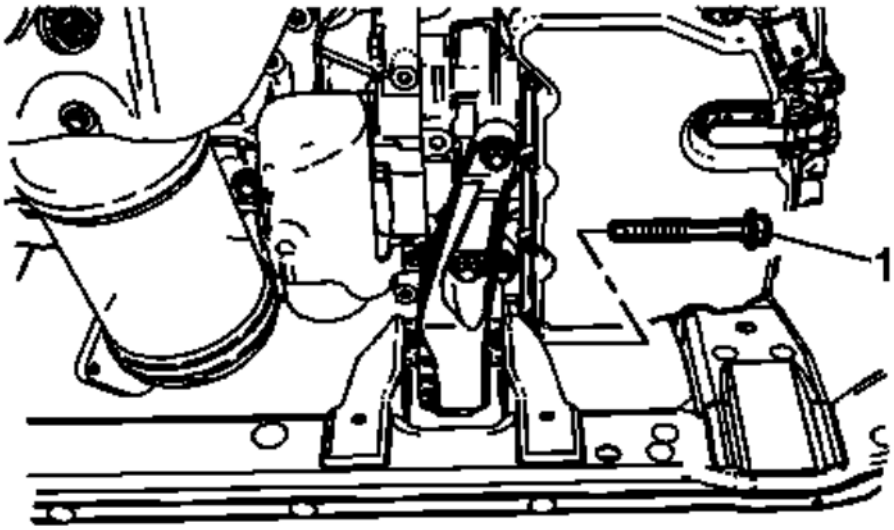

Fig. 9: Front Transaxle Mount Through Bolt
Courtesy of GENERAL MOTORS COMPANY

17. Tighten the front transaxle mount through bolt (1) to 100 (74 lb ft).
18. Lower the vehicle.
19. Install the battery tray. Refer to **Battery Tray Replacement** .
20. Install the air cleaner assembly. Refer to **Air Cleaner Assembly Replacement** .

POWERTRAIN MOUNT BALANCING - LOWER

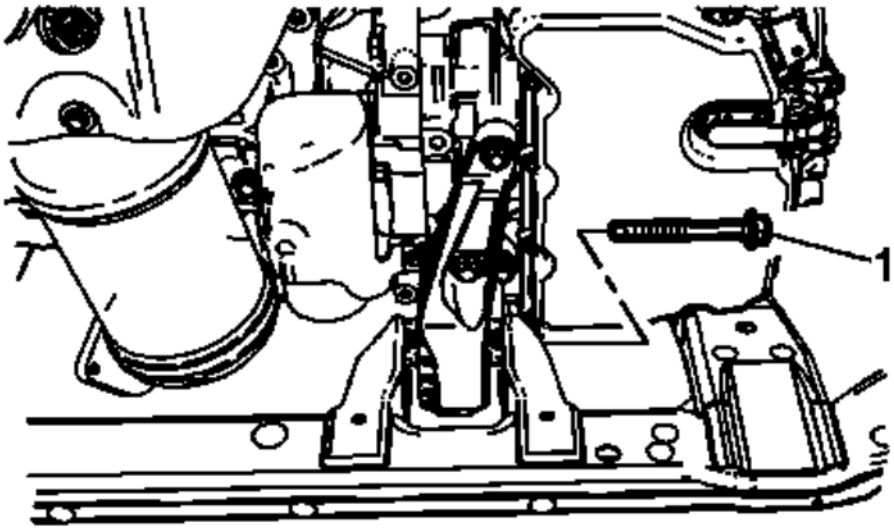

Fig. 10: Front Transaxle Mount Through Bolt
Courtesy of GENERAL MOTORS COMPANY

NOTE: **Follow the balance procedure steps listed below. Powertrain mounts must be tightened in sequence.**

1. Raise and support the vehicle. Refer to **Lifting and Jacking the Vehicle** .
2. Loosen the front transaxle mount through bolt (1).
3. Loosen the rear transaxle mount through bolt.
4. Shake the powertrain vigorously from front to rear and allow the powertrain to settle.

CAUTION: Refer to Fastener Caution .

5. Tighten the rear transaxle mount through bolt to 100 (74 lb ft).
6. Tighten the front transaxle mount through bolt (1) to 100 (74 lb ft).
7. Lower the vehicle.

ENGINE MOUNT REPLACEMENT

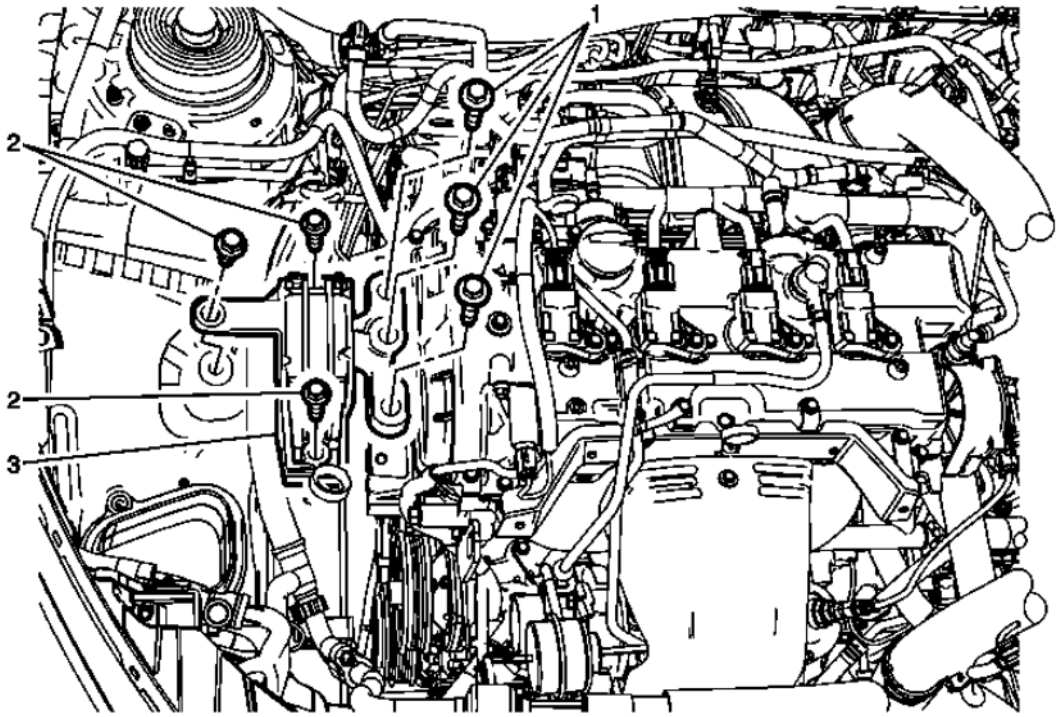

Fig. 11: Engine Mount (LTG)
Courtesy of GENERAL MOTORS COMPANY

Engine Mount Replacement

Callout	Component Name
Preliminary Procedures 1. Remove the intake manifold cover. Refer to **Intake Manifold Cover Replacement**. 2. Remove the air cleaner assembly. Refer to **Air Cleaner Assembly Replacement** . 3. Install the engine support fixture. Refer to **Engine Support Fixture**.	
1	Engine Mount Bolt (Qty: 3) **CAUTION:** **Refer to Fastener Caution .** **Tighten** 62 N.m (46 lb ft)
2	Engine Mount Bolt (Qty: 3) **Tighten** 62 N.m (46 lb ft)
3	Engine Mount

ENGINE SUPPORT FIXTURE

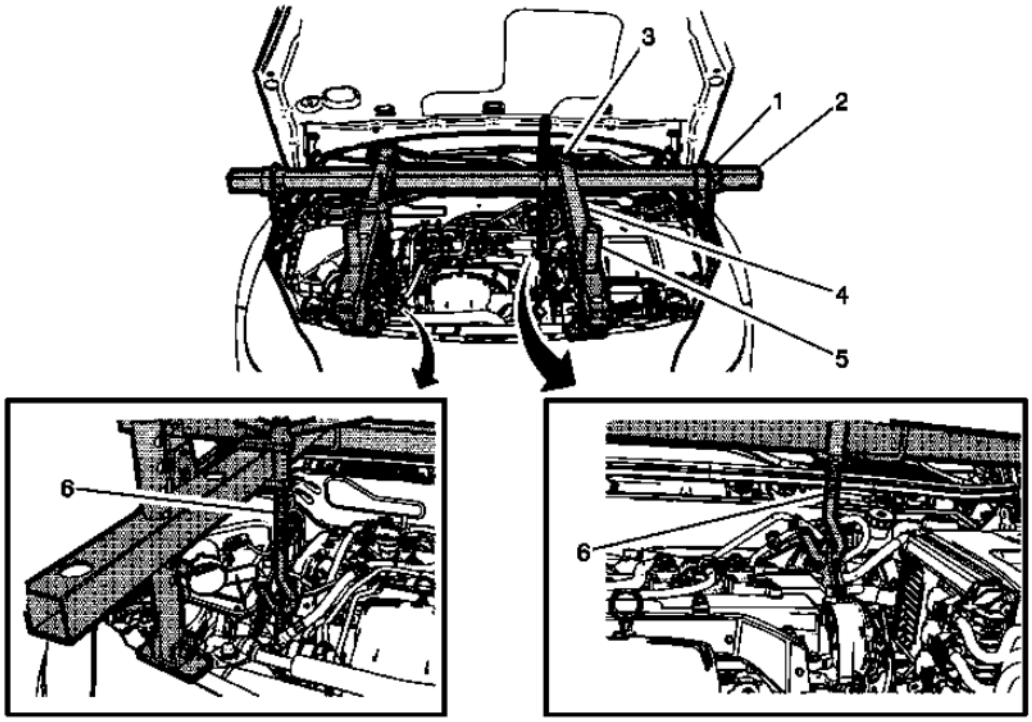

Fig. 12: Engine Support Fixture
Courtesy of GENERAL MOTORS COMPANY

Engine Support Fixture

Callout	Component Name
Preliminary Procedure 1. Remove the intake manifold cover. Refer to **Intake Manifold Cover Replacement**. 2. Remove the hood strut. Refer to **Hood Strut Replacement** . 3. Remove the charge air cooler outlet air tube. Refer to **Charge Air Cooler Outlet Air Tube Replacement** . **Special Tools EN-51007** Engine Support Fixture.For equivalent regional tools. Refer to **Special Tools** .	
1	Engine Support Fixture Adapter Leg (Qty: 2) **Procedure** Install the bracket to fender frame. Do not install on top of the fender lip.
2	Main Support Beam
3	Cross Bracket (Qty: 2)
4	Strut Tower Support Assembly (Qty: 2) **Procedure** Adjust the length of the strut tower support assembly.
5	Radiator Tube Shelf Assembly (Qty: 2)
6	Hook Assembly (Qty: 2) **Procedure**

	1. If the engine is not equipped with engine lift brackets, install **J-36857** engine lift bracket in place. 2. Use a grade 10.9 bolt to install the engine lift bracket.

TURBOCHARGER HEAT SHIELD REPLACEMENT

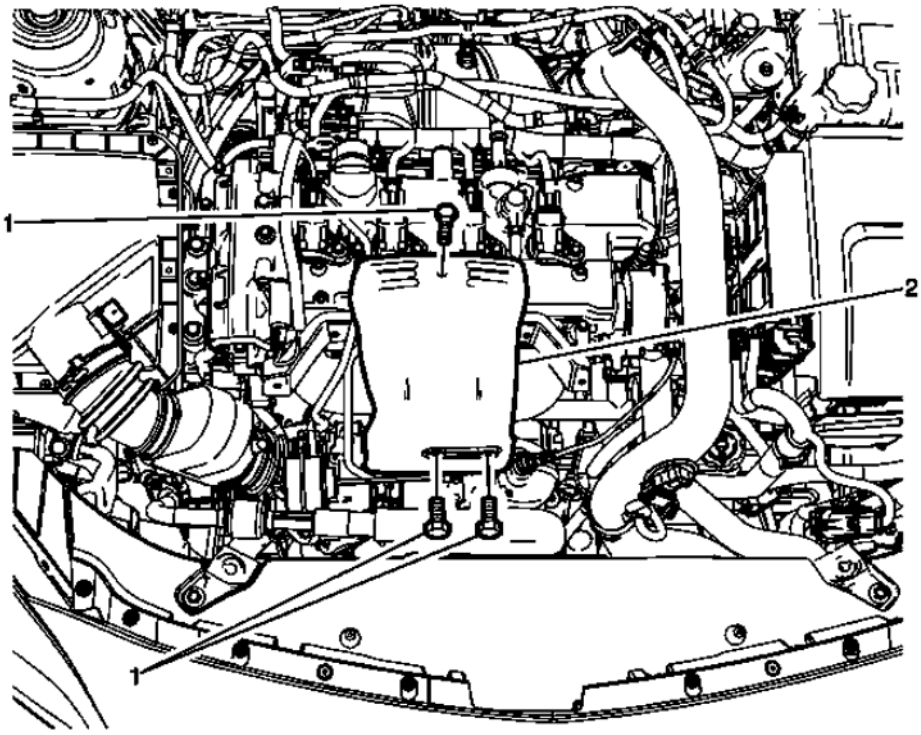

Fig. 13: Turbocharger Heat Shield
Courtesy of GENERAL MOTORS COMPANY

Turbocharger Heat Shield Replacement

Callout	Component Name
1	Turbocharger Heat Shield Fastener (Qty;3) **CAUTION:** **Refer to Fastener Caution .** **Tighten** 14 (10 lb ft)
2	Turbocharger Heat Shield

TURBOCHARGER REPLACEMENT

Removal Procedure

1. Remove the intake manifold cover. Refer to **Intake Manifold Cover Replacement**.
2. Remove the air cleaner outlet duct. Refer to **Air Cleaner Outlet Duct Replacement** .

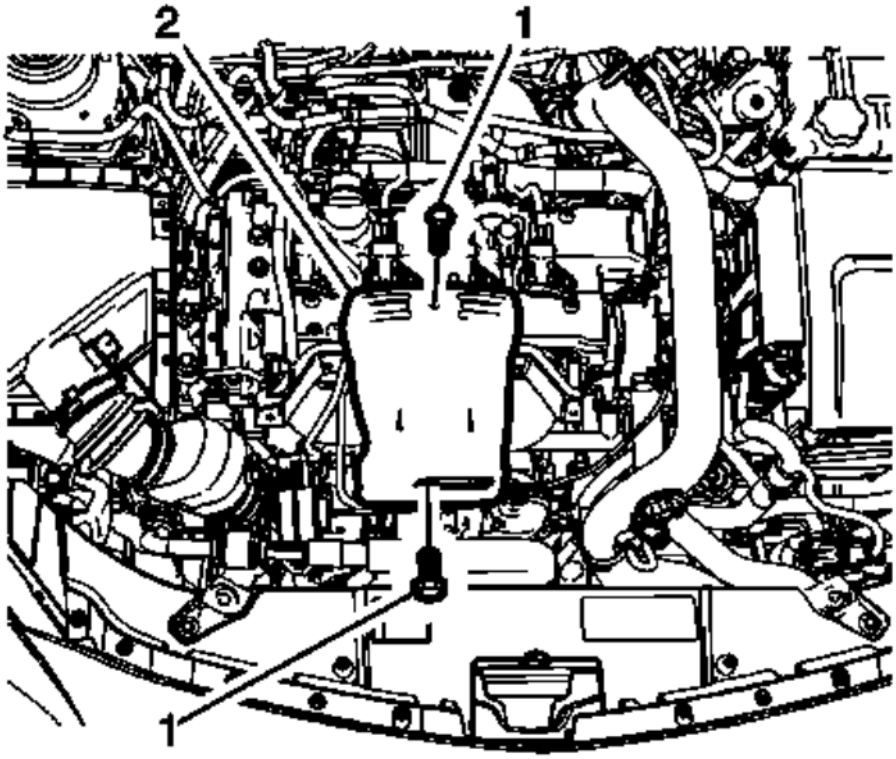

Fig. 14: Turbocharger Heat Shield
Courtesy of GENERAL MOTORS COMPANY

3. Remove the turbocharger heat shield (2). Refer to **Turbocharger Heat Shield Replacement**.
4. Remove the catalytic converter. Refer to **Catalytic Converter Replacement (LTG)** .
5. Raise and support the vehicle. Refer to **Lifting and Jacking the Vehicle** .
6. Remove the PCV hose. Refer to **Positive Crankcase Ventilation Hose/Pipe/Tube Replacement (Camshaft Cover to Air Cleaner Resonator to Outlet Duct)**.

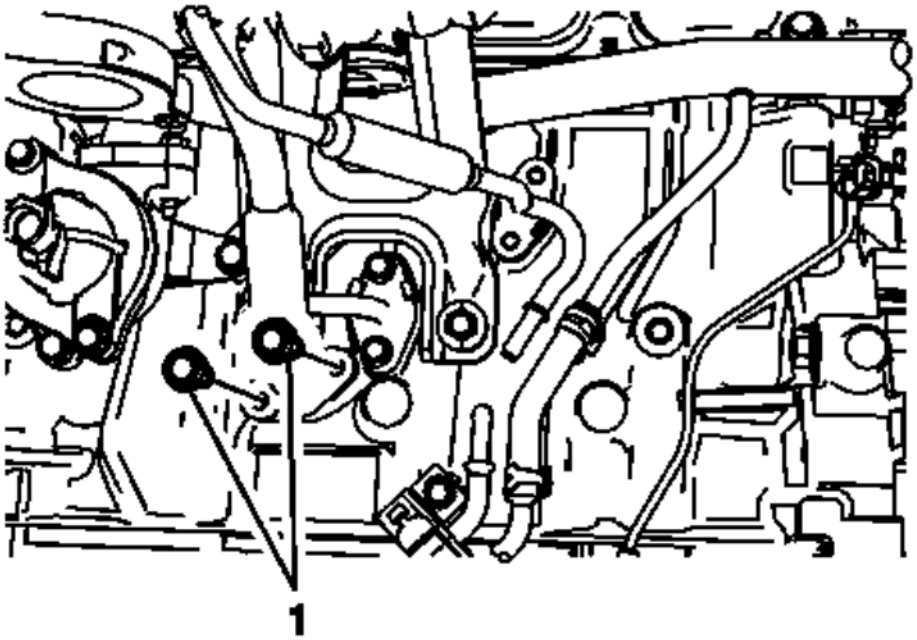

Fig. 15: Turbocharger Oil Return Pipe Bolts
Courtesy of GENERAL MOTORS COMPANY

7. Remove the turbocharger oil return pipe bolts (1).

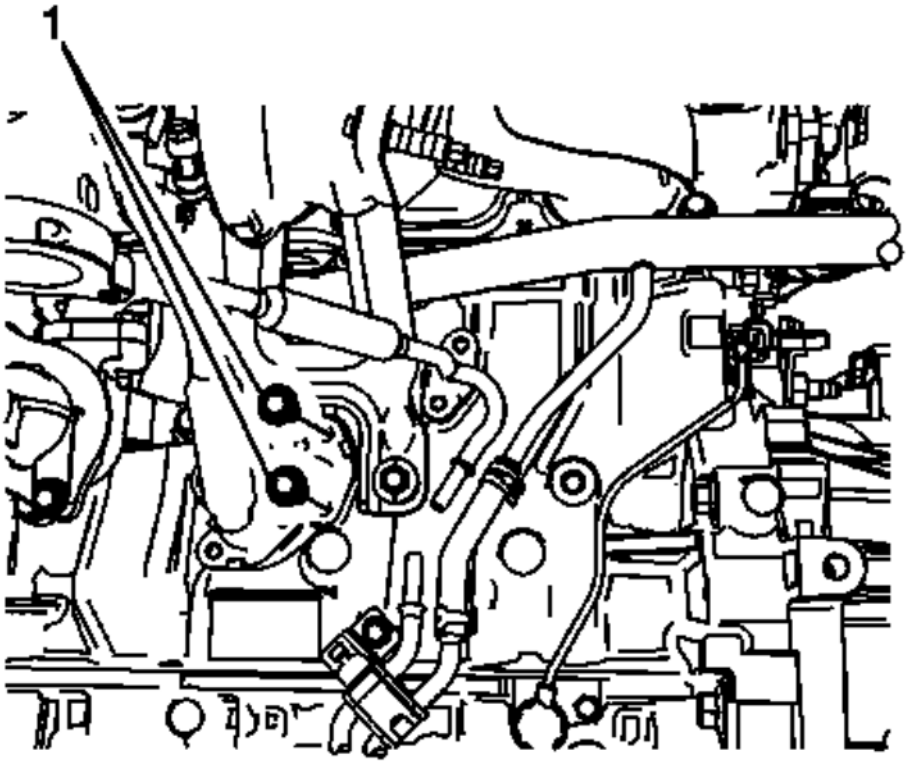

Fig. 16: Turbocharger Oil Feed Pipe Bolts
Courtesy of GENERAL MOTORS COMPANY

8. Remove the turbocharger oil feed pipe bolts (1).

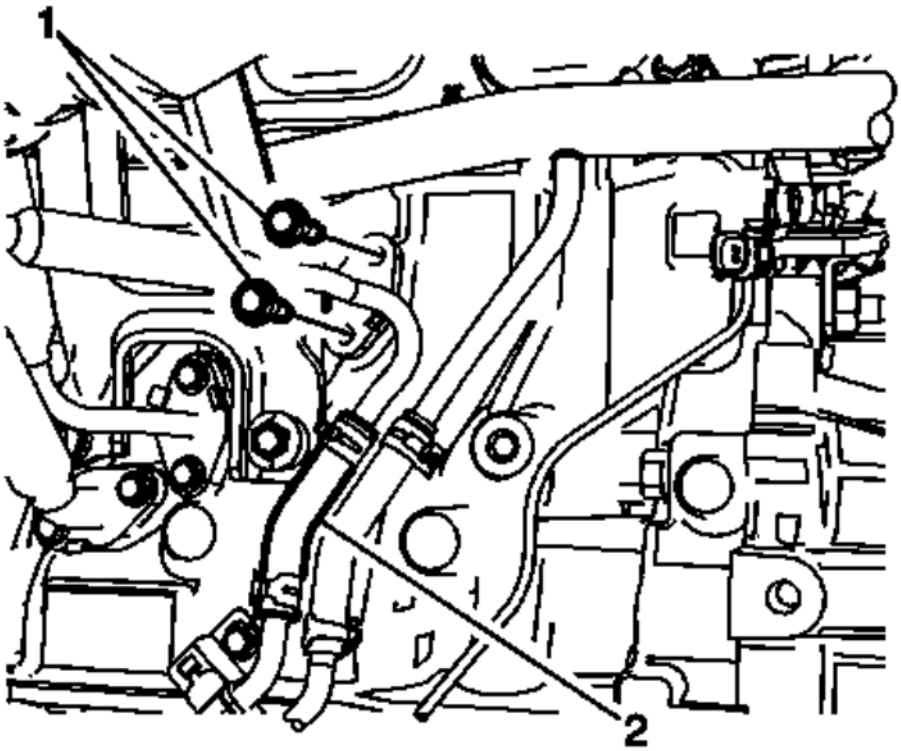

Fig. 17: Turbocharger Coolant Feed Pipe Bolts
Courtesy of GENERAL MOTORS COMPANY

9. Remove the turbocharger coolant feed pipe bolts (1). Refer to **Turbocharger Coolant Feed Pipe Replacement (LTG)** .
10. Remove the turbocharger coolant return pipe. Refer to **Turbocharger Coolant Return Pipe Replacement (LTG)** .

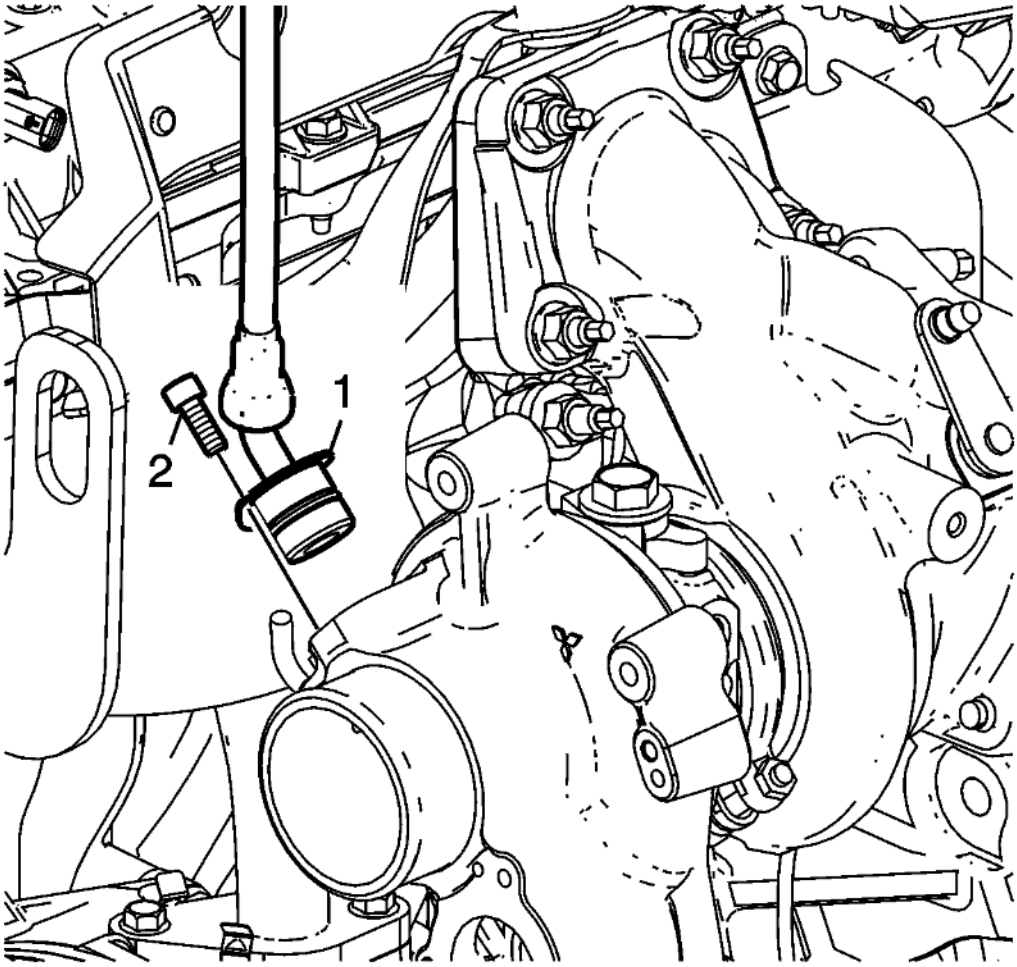

Fig. 18: PCV Hose Fitting Bolt
Courtesy of GENERAL MOTORS COMPANY

NOTE: **Do not disturb the joint between the PCV hose and PCV hose fitting at the turbocharger. This is a permanent connection.**

11. Remove the PCV hose fitting bolt (2). Disconnect the PCV hose fitting (1) with the PCV hose attached from the turbocharger.

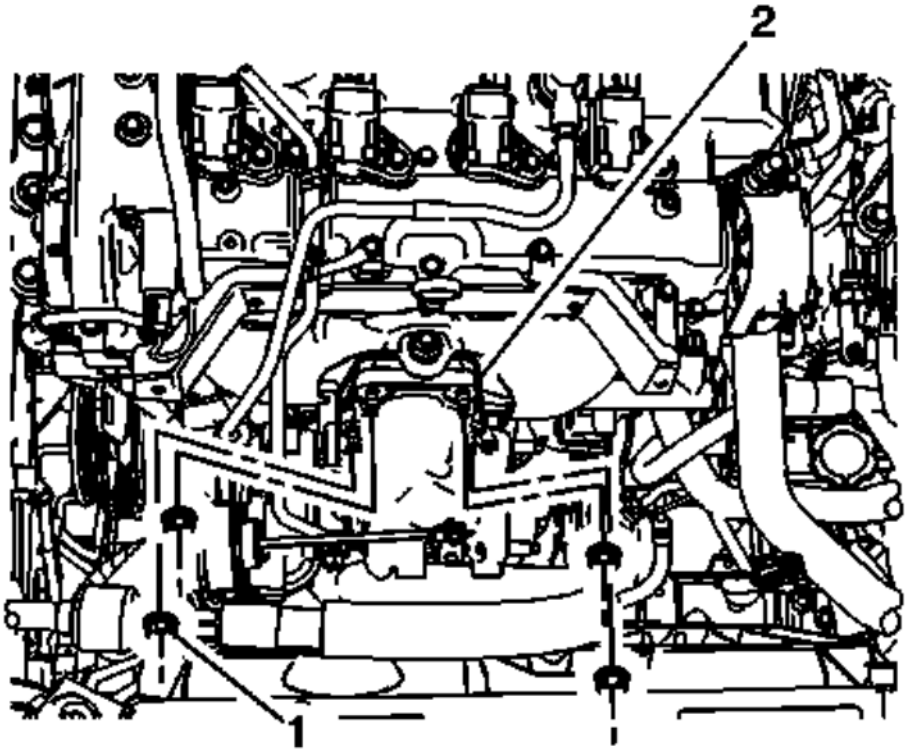

Fig. 19: Turbocharger Nuts And Turbocharger
Courtesy of GENERAL MOTORS COMPANY

12. Remove the turbocharger nuts (1) and turbocharger (2).
13. For turbocharger cleaning and inspection, refer to **Turbocharger Cleaning and Inspection** .

Installation Procedure

NOTE: **The exhaust pipe studs do not come installed on new turbochargers. If the turbocharger is being replaced, new studs will need to be installed.**

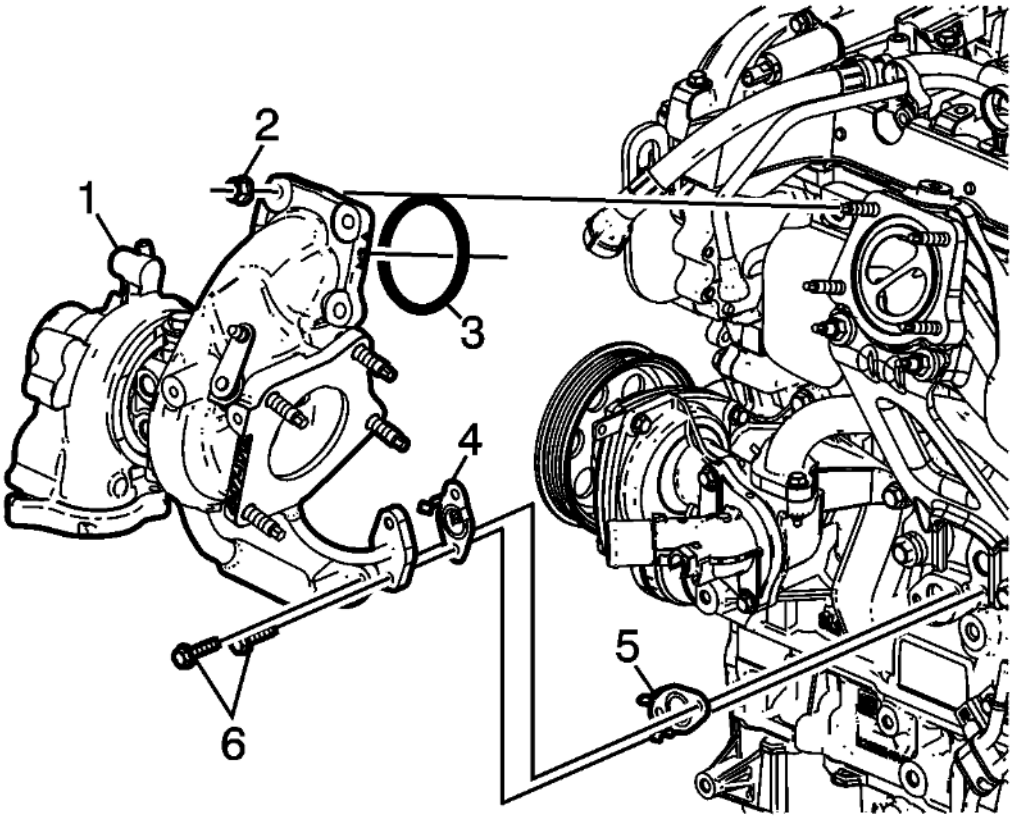

Fig. 20: Turbocharger Nuts
Courtesy of GENERAL MOTORS COMPANY

1. Install a NEW turbocharger gasket (3) on the turbocharger.
2. Install NEW turbocharger oil feed and oil return pipe gaskets (4, 5).
3. Install the turbocharger (1).
4. Install NEW turbocharger nuts (2) finger tighten.

CAUTION: Refer to Fastener Caution .

5. Install the turbocharger oil feed and return pipe bolts (6) at the engine block. Tighten the bolts to 10 (89 lb in).

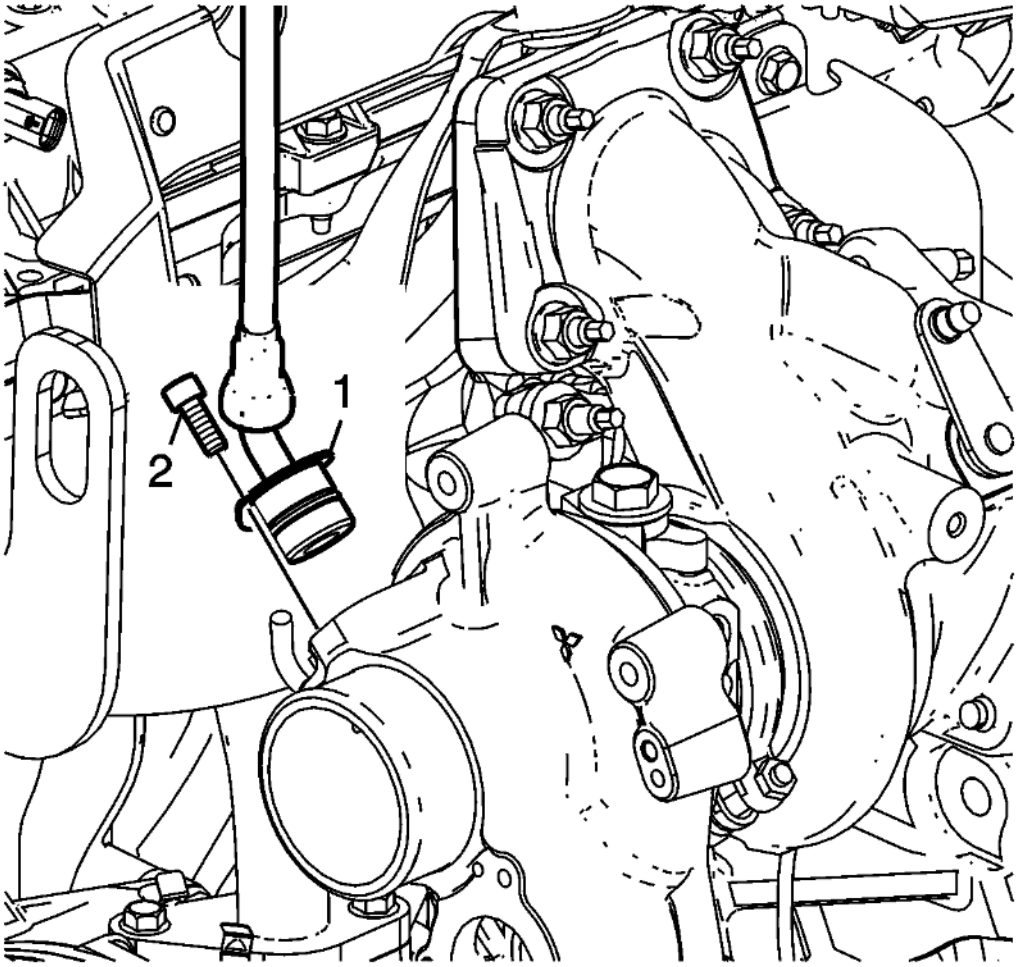

Fig. 21: PCV Hose Fitting Bolt
Courtesy of GENERAL MOTORS COMPANY

NOTE: **The PCV hose and fitting assembly connection is permanent. Reinstall these components as an assembly unless new components are being used.**

6. Install the PCV hose and fitting assembly (1) to the turbocharger. Install the PCV hose fitting assembly bolt (2) and tighten to 8 (6 lb ft)

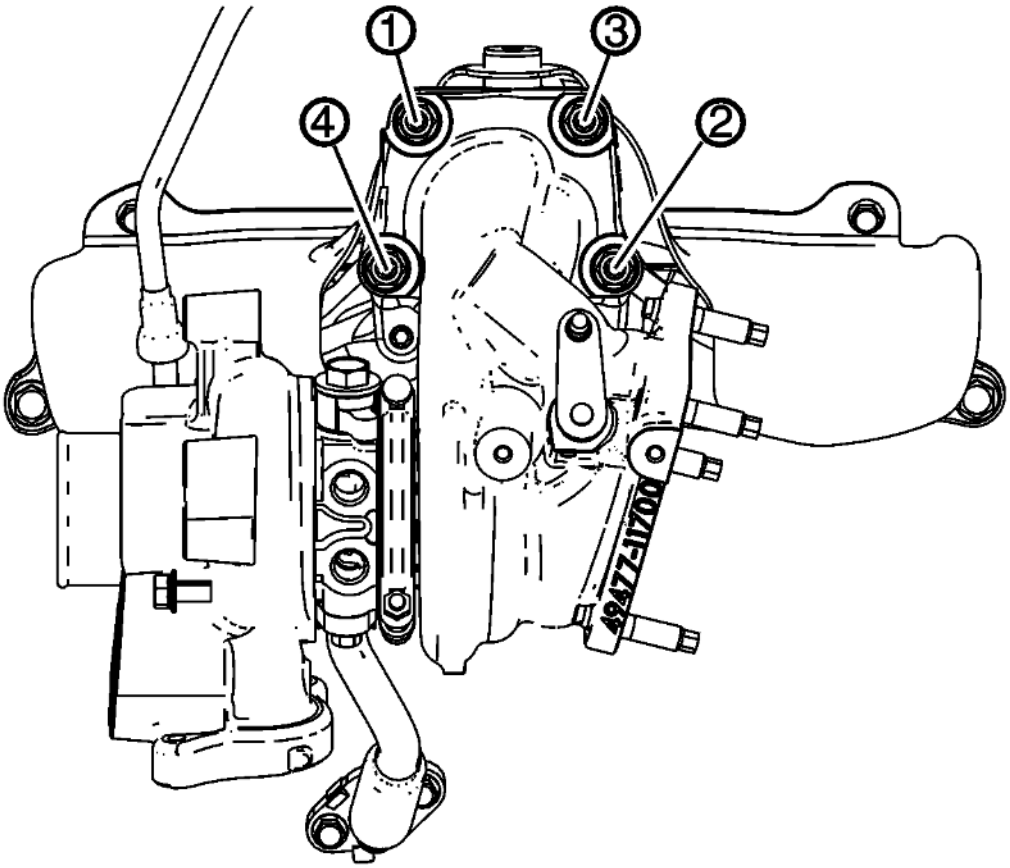

Fig. 22: Turbocharger Nut Tightening Sequence
Courtesy of GENERAL MOTORS COMPANY

7. Tighten the turbocharger nuts in sequence:
    1. First pass 30 (22 lb ft).
    2. Final pass plus 90 degrees.

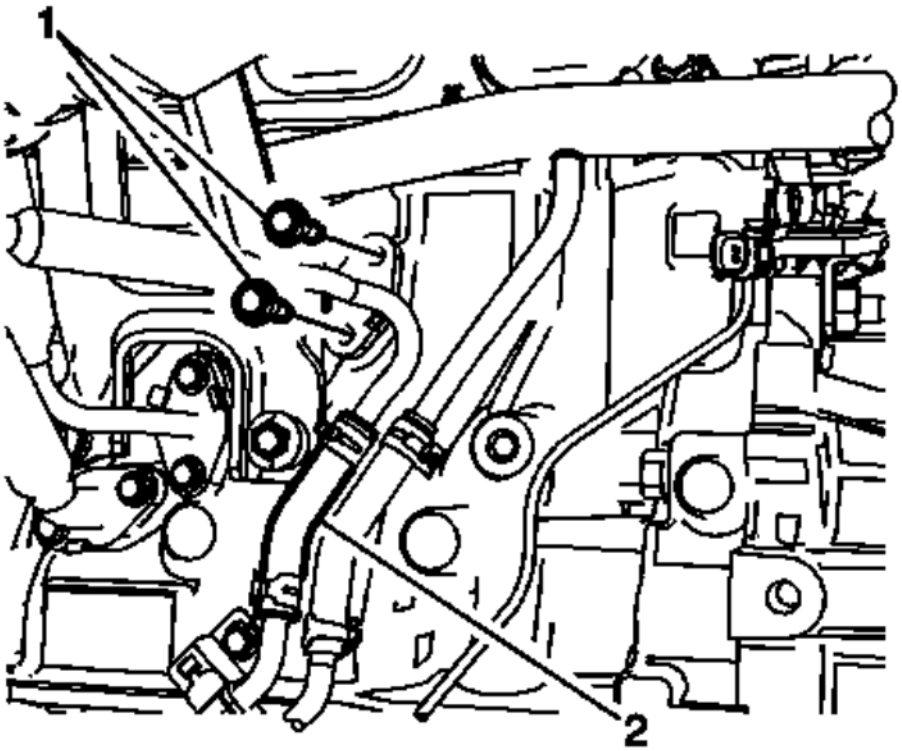

Fig. 23: Turbocharger Coolant Feed Pipe Bolts
Courtesy of GENERAL MOTORS COMPANY

8. Install the turbocharger coolant feed pipe bolts (1) and tighten to 10 (89 lb in).
9. Install the turbocharger coolant return pipe. Refer to **Turbocharger Coolant Return Pipe Replacement (LTG)** .
10. Install the catalytic converter. Refer to **Catalytic Converter Replacement (LTG)** .

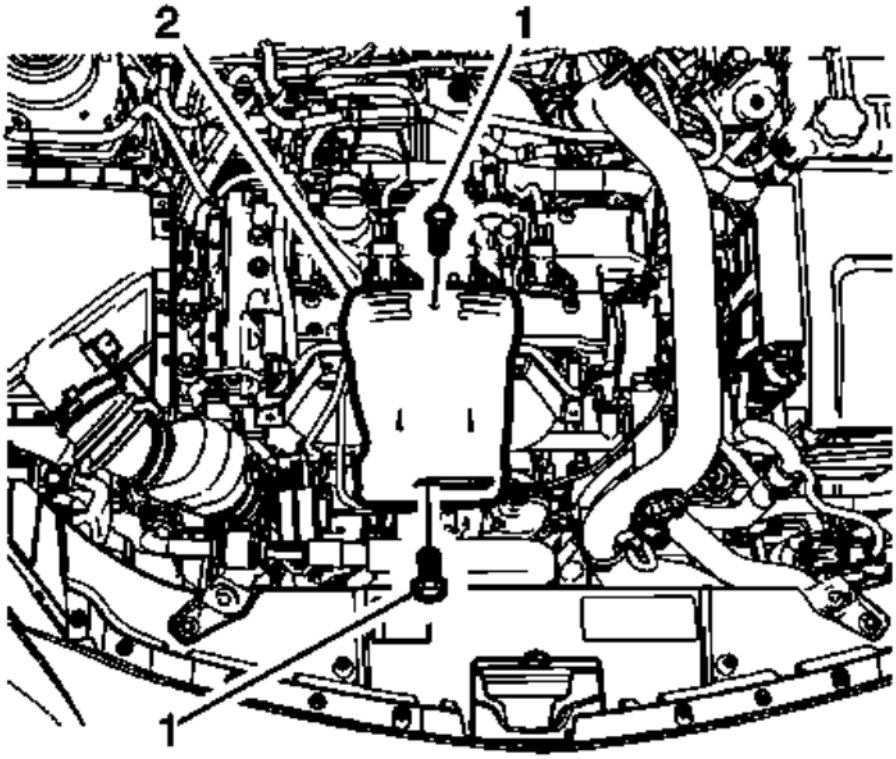

Fig. 24: Turbocharger Heat Shield
Courtesy of GENERAL MOTORS COMPANY

11. Install the turbocharger heat shield (2). Refer to **Turbocharger Heat Shield Replacement**.
12. Install the air cleaner outlet duct. Refer to **Air Cleaner Outlet Duct Replacement** .
13. Install the intake manifold cover. Refer to **Intake Manifold Cover Replacement**.

TURBOCHARGER OIL RETURN PIPE REPLACEMENT

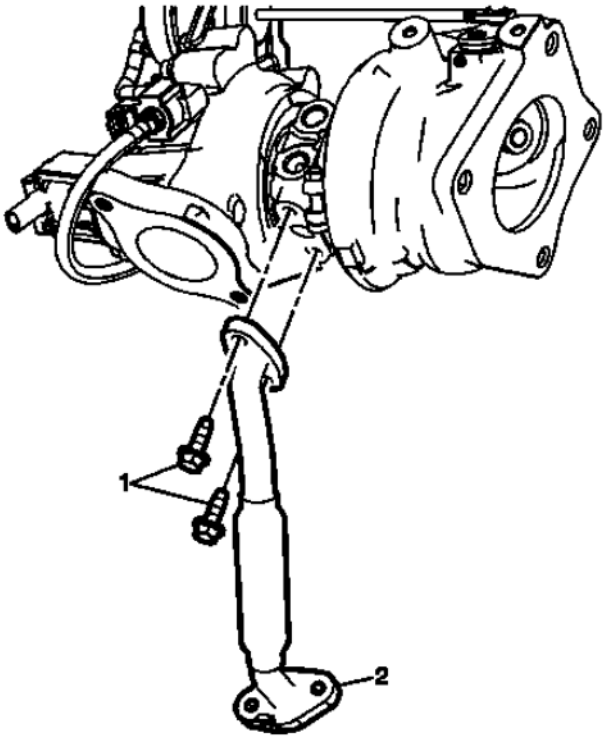

Fig. 25: Turbocharger Oil Return Pipe
Courtesy of GENERAL MOTORS COMPANY

Turbocharger Oil Return Pipe Replacement

Callout	Component Name
Preliminary Procedure Remove the turbocharger. Refer to **Turbocharger Replacement**.	
1	Turbocharger Oil Return Pipe Fastener (Qty; 2) **CAUTION:** **Refer to Fastener Caution .** **Tighten** 10 (89 lb in)
2	Turbocharger Oil Return Pipe **Procedure** A NEW turbocharger oil return gasket should be used whenever installing the pipe.

TURBOCHARGER OIL FEED PIPE REPLACEMENT

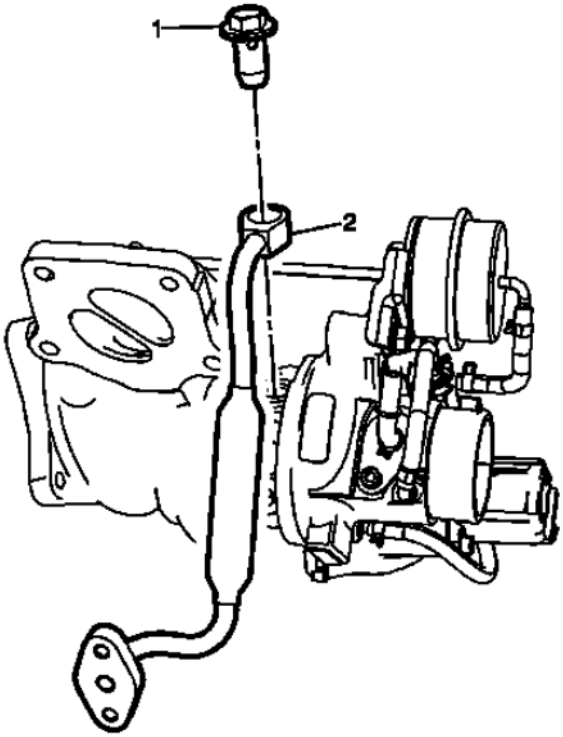

Fig. 26: Turbocharger Oil Feed Pipe
Courtesy of GENERAL MOTORS COMPANY

Turbocharger Oil Feed Pipe Replacement

Callout	Component Name
Preliminary Procedure Remove the turbocharge. Refer to **Turbocharger Replacement**.	
1	Turbocharger Oil Feed Pipe Fastener **CAUTION:** **Refer to Fastener Caution .** **Tighten** 35 (26 lb ft)
2	Turbocharger Oil Feed Pipe **NOTE:** **A NEW turbocharger oil feed gasket should be used whenever the pipe is installed.**

POSITIVE CRANKCASE VENTILATION HOSE/PIPE/TUBE REPLACEMENT (CAMSHAFT COVER TO AIR CLEANER RESONATOR TO OUTLET DUCT)

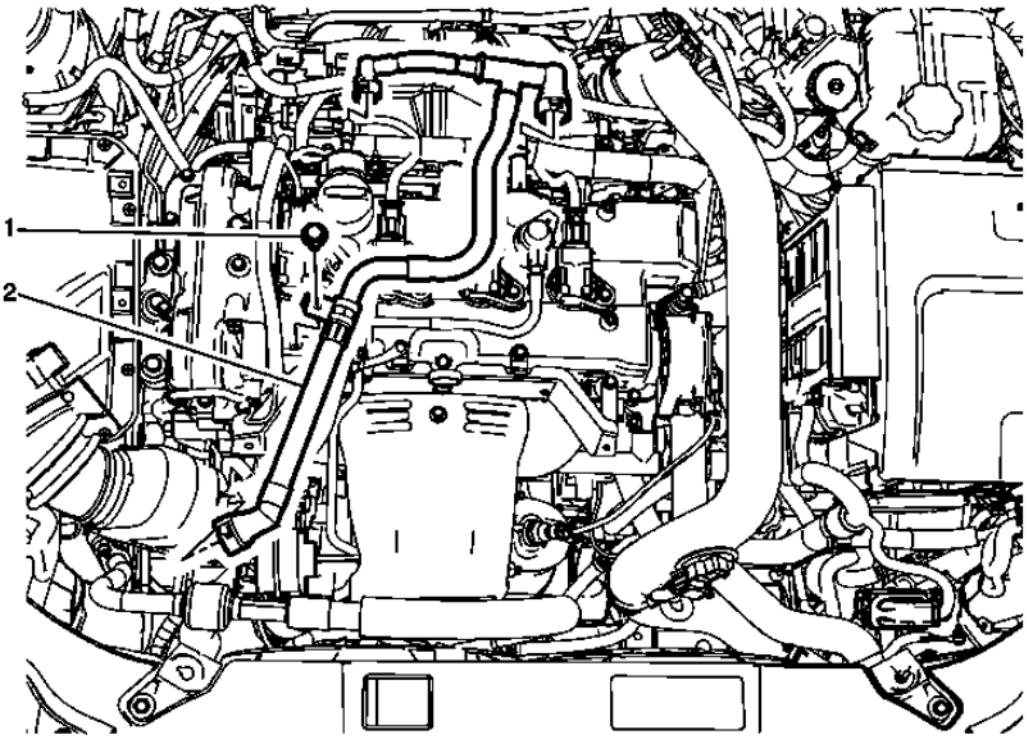

Fig. 27: Positive Crankcase Ventilation Hose/Pipe/Tube (Camshaft Cover to Air Cleaner Resonator to Outlet Duct)
Courtesy of GENERAL MOTORS COMPANY

Positive Crankcase Ventilation Hose/Pipe/Tube Replacement (Camshaft Cover to Air Cleaner Resonator to Outlet Duct)

Callout	Component Name
Preliminary Procedures Remove the intake manifold cover. Refer to **Intake Manifold Cover Replacement**.	
1	Positive Crankcase Ventilation Hose Fastener **CAUTION:** **Refer to Fastener Caution .** **Tighten** 9 (80 lb in)
2	Positive Crankcase Ventilation Hose

INTAKE MANIFOLD REPLACEMENT

Removal Procedure

1. Remove the intake manifold cover. Refer to **Intake Manifold Cover Replacement**.
2. Remove the charge air cooler outlet tube. Refer to **Charge Air Cooler Outlet Air Tube Replacement** .
3. Disconnect the fuel feed pipe. Refer to **Fuel Feed Front Pipe Replacement** .

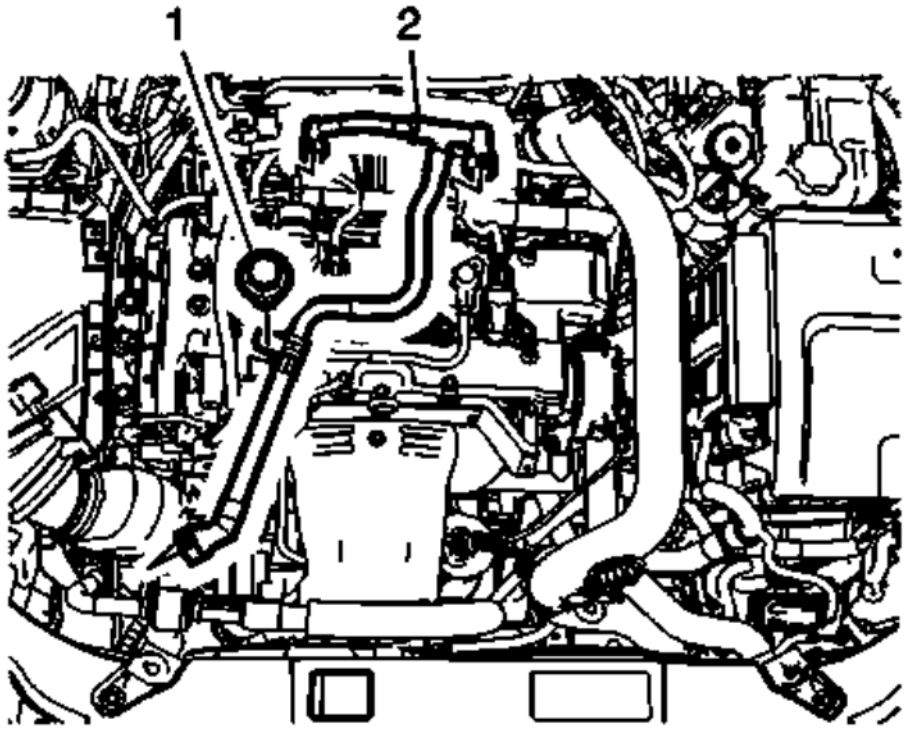

Fig. 28: PCV Pipe
Courtesy of GENERAL MOTORS COMPANY

4. Remove the PCV pipe (2). Refer to **Positive Crankcase Ventilation Hose/Pipe/Tube Replacement (Camshaft Cover to Air Cleaner Resonator to Outlet Duct)**.

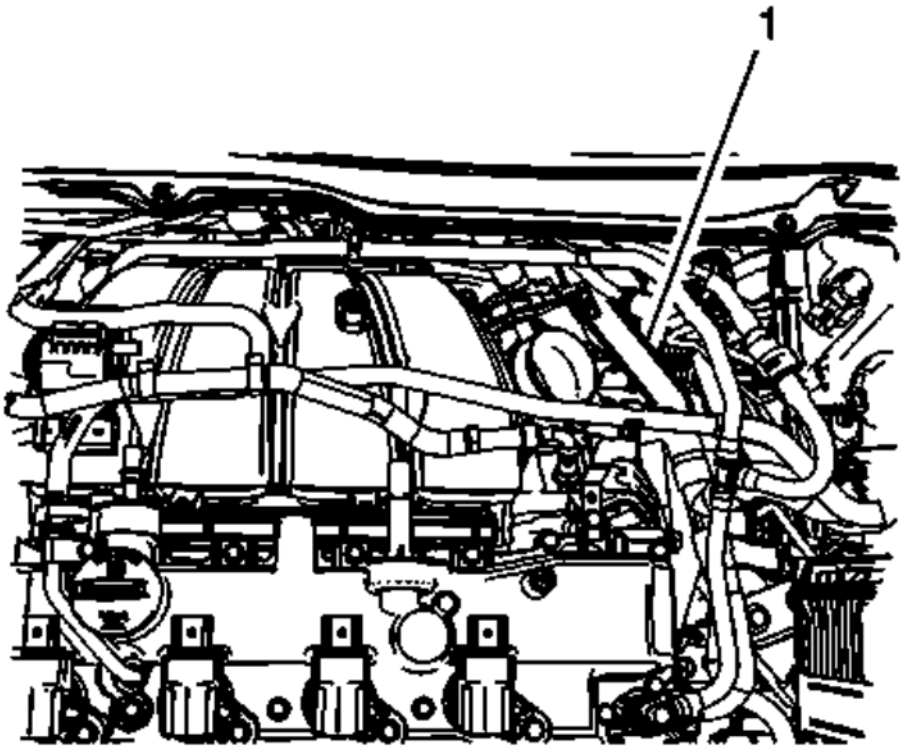

Fig. 29: Brake Vacuum Pipe
Courtesy of GENERAL MOTORS COMPANY

5. Remove the brake vacuum pipe (1). Refer to **Power Brake Booster Vacuum Pipe Replacement (LTG)** .

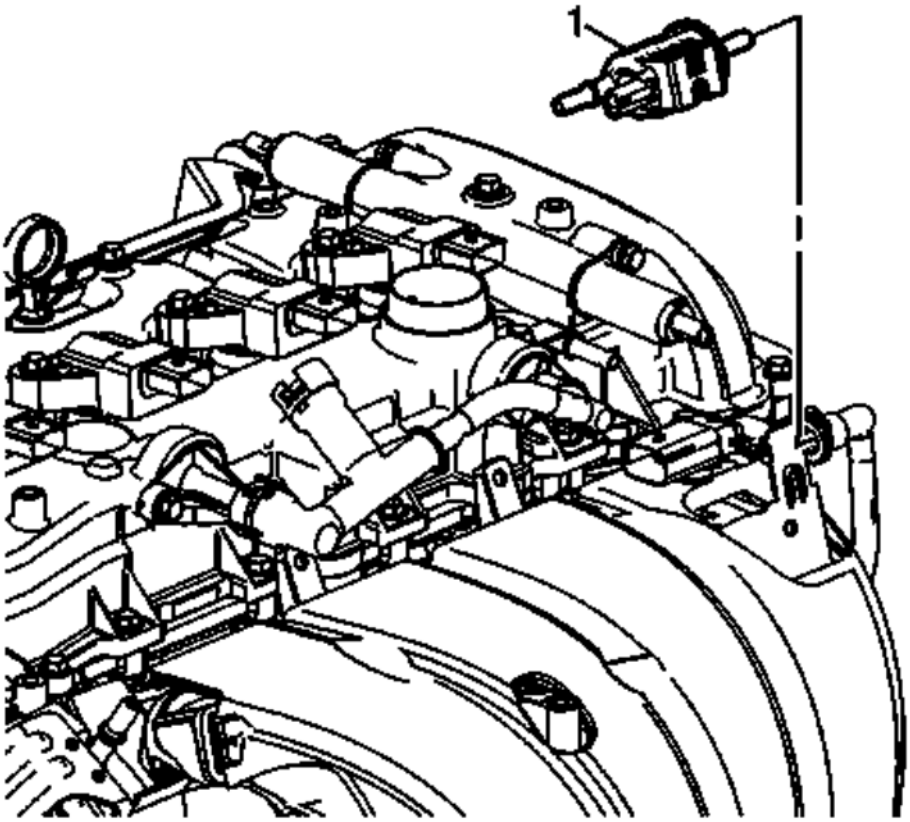

Fig. 30: EVAP Canister Valve
Courtesy of GENERAL MOTORS COMPANY

6. Remove the EVAP Canister Purge Solenoid Valve. (1).
7. Remove the throttle body. Refer to **Throttle Body Assembly Replacement** .
8. Remove the fuel pump. Refer to **Fuel Pump Replacement** .

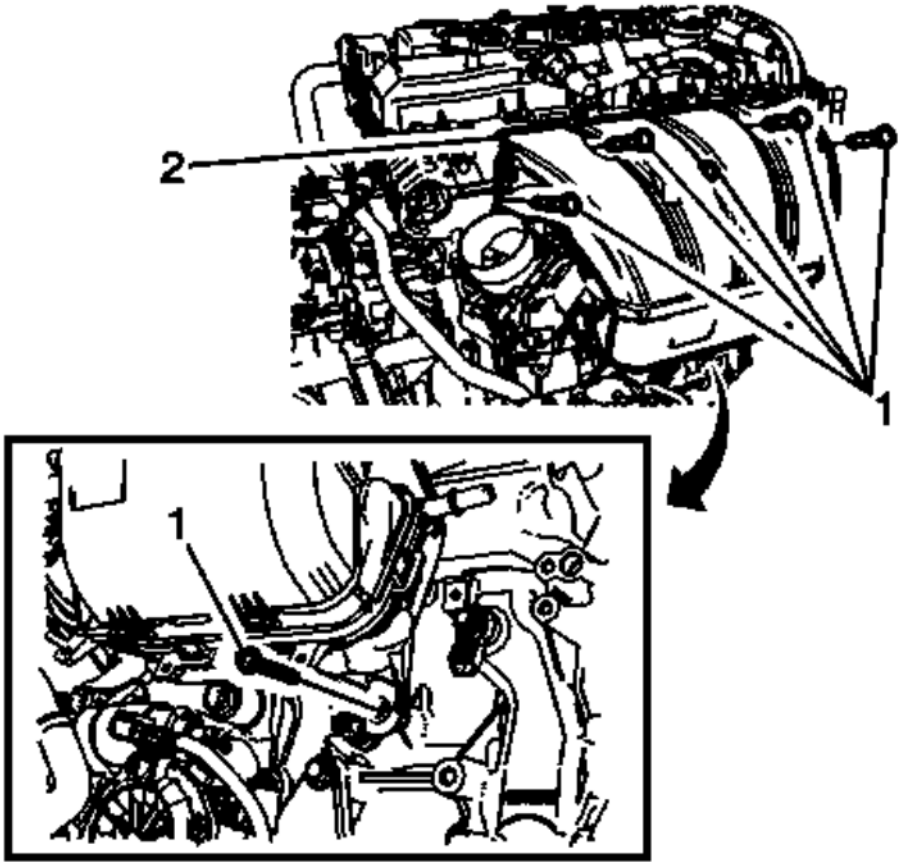

Fig. 31: Intake Bolts
Courtesy of GENERAL MOTORS COMPANY

9. Remove the intake bolts (1).
10. Remove the intake manifold (2) from the vehicle.

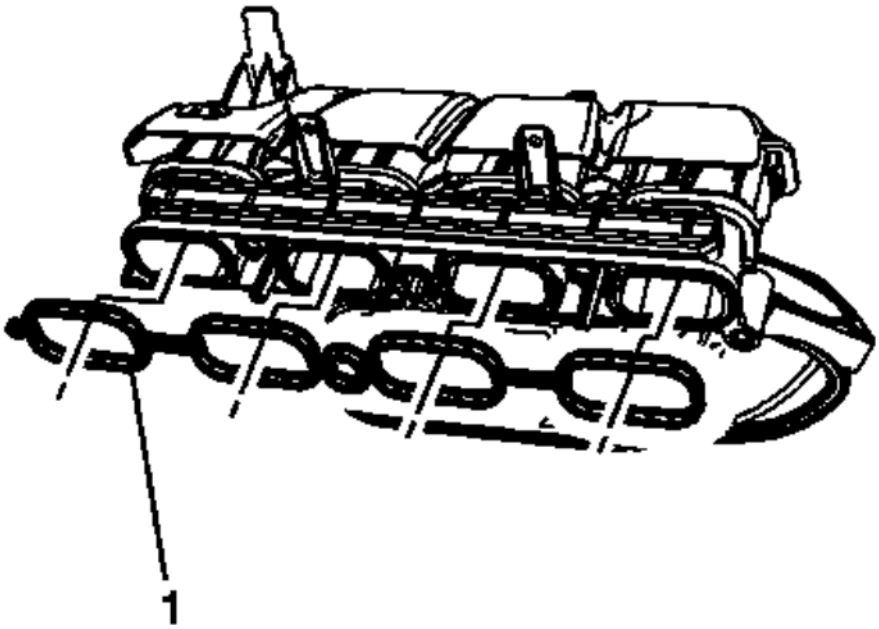

Fig. 32: Intake Manifold Gasket
Courtesy of GENERAL MOTORS COMPANY

11. Remove the intake manifold gasket (1) and DISCARD.
12. For intake manifold cleaning and inspection. Refer to **Intake Manifold Cleaning and Inspection** .

Installation Procedure

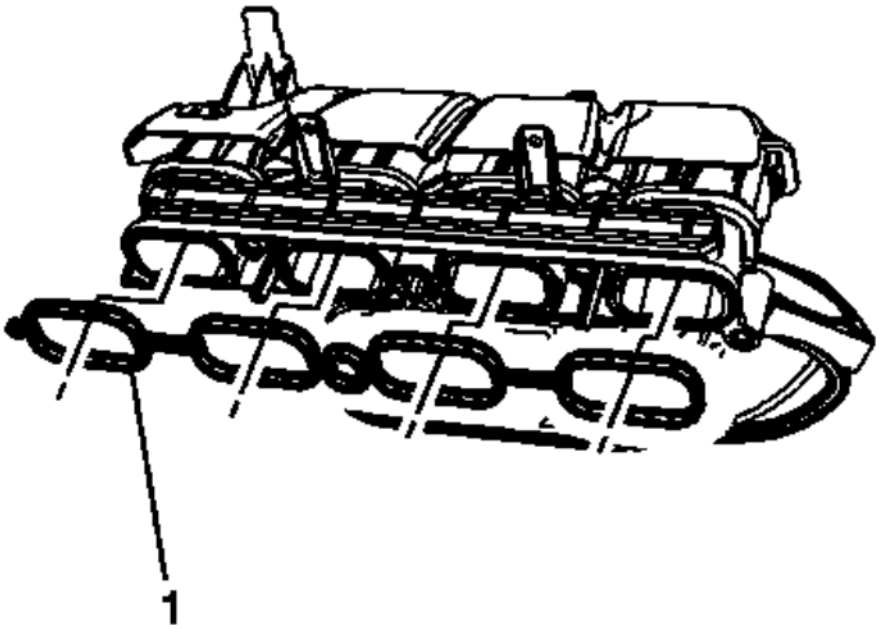

Fig. 33: Intake Manifold Gasket
Courtesy of GENERAL MOTORS COMPANY

1. Install the intake manifold gasket (1).

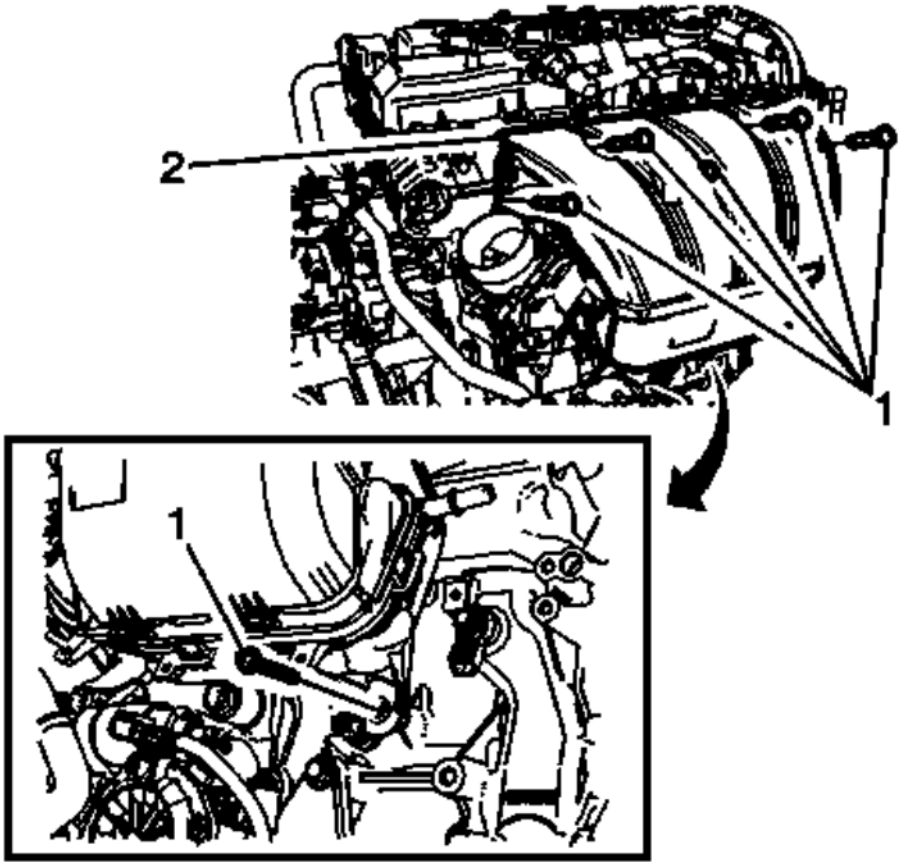

Fig. 34: Intake Bolts
Courtesy of GENERAL MOTORS COMPANY

2. Install the intake manifold (2).
3. Hand start the intake manifold bolts (1).

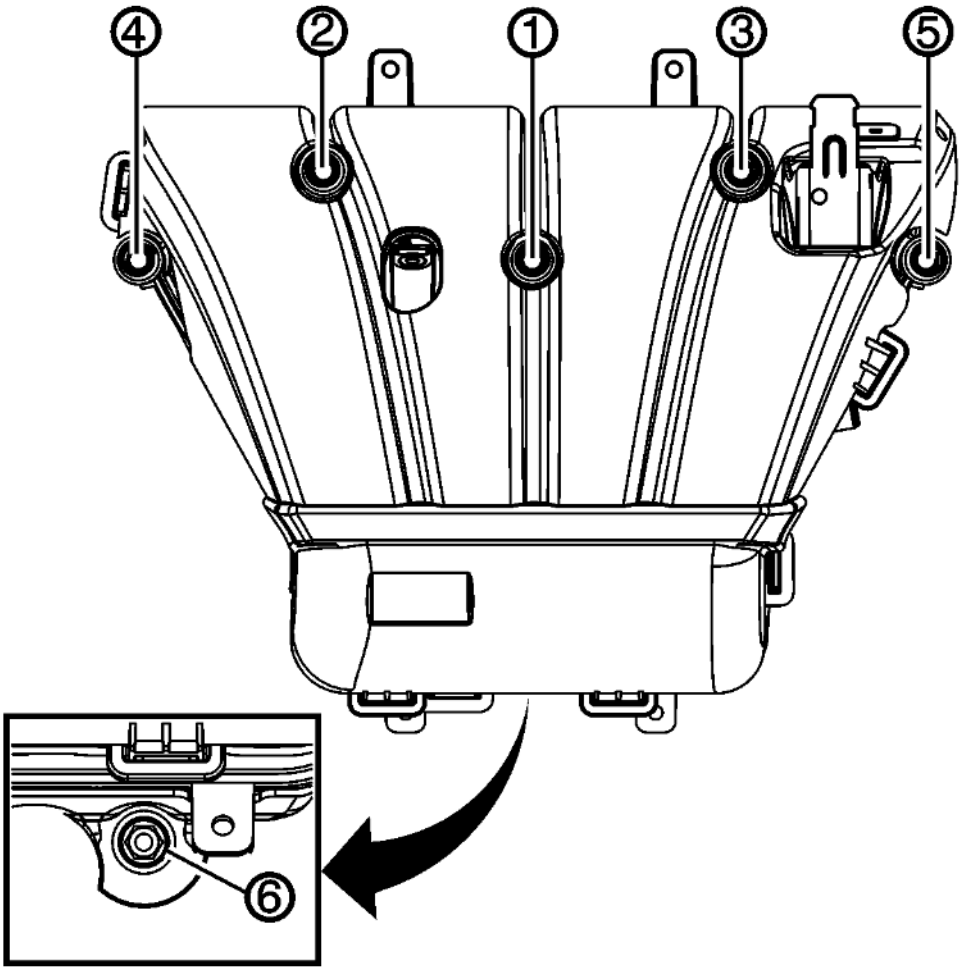

Fig. 35: Intake Manifold Bolt Tightening Sequence
Courtesy of GENERAL MOTORS COMPANY

CAUTION: Refer to Fastener Caution .

4. Tighten the fastener in sequence twice to 12 (106 lb in).
5. Install the fuel pump. Refer to **Fuel Pump Replacement** .
6. Install the throttle body. Refer to **Throttle Body Assembly Replacement** .

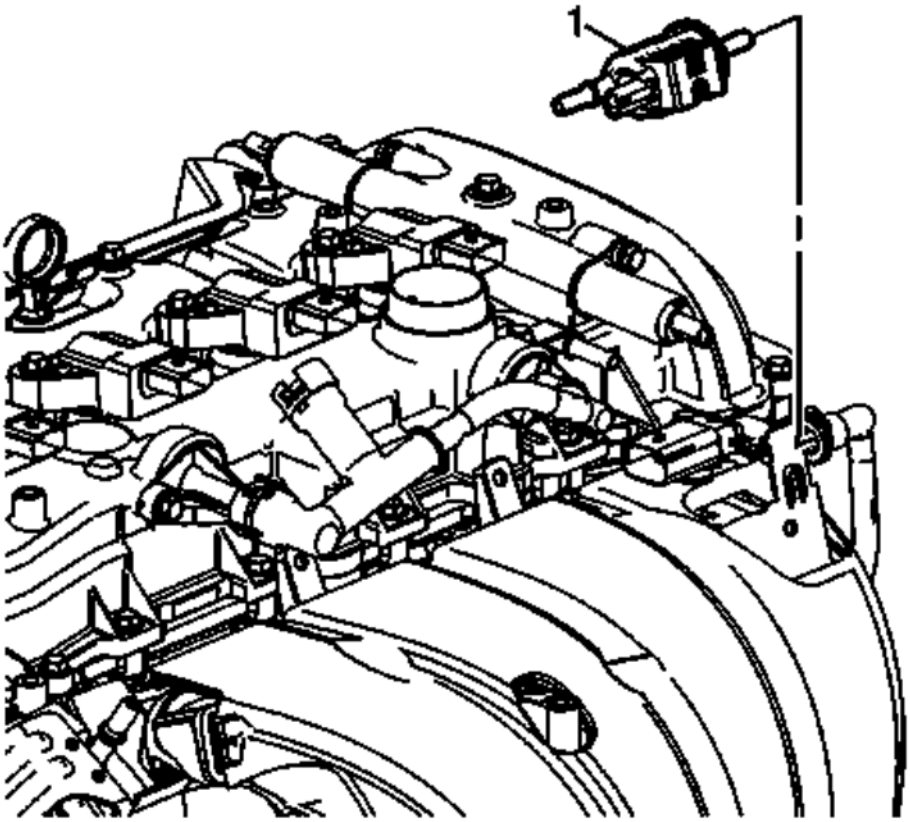

Fig. 36: EVAP Canister Valve
Courtesy of GENERAL MOTORS COMPANY

7. Install the EVAP Canister Purge Solenoid Valve (1).

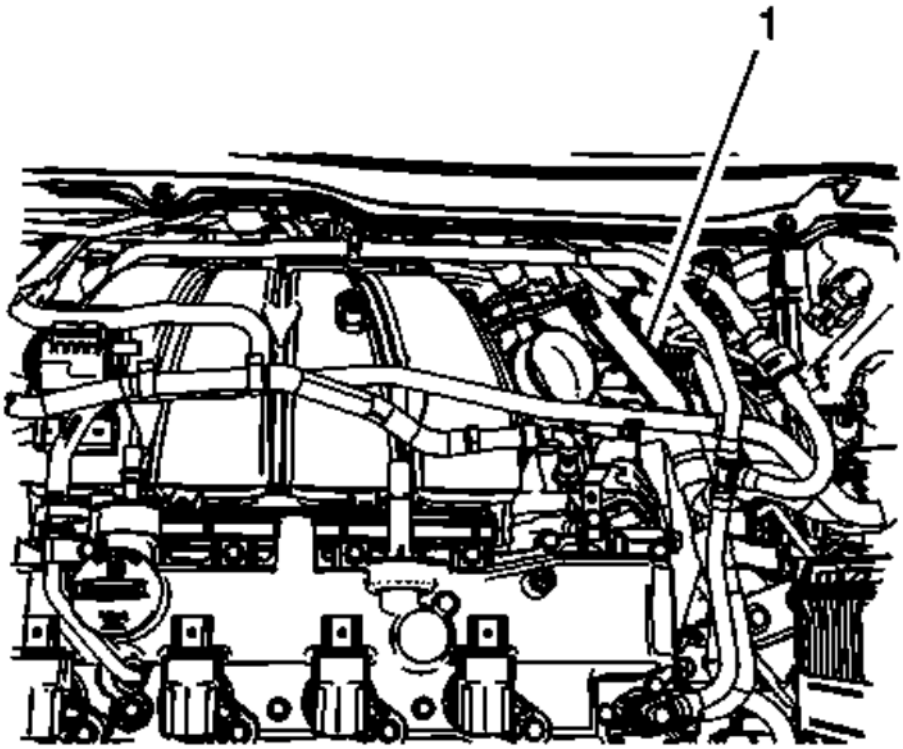

Fig. 37: Brake Vacuum Pipe
Courtesy of GENERAL MOTORS COMPANY

8. Install the brake vacuum pipe (1). Refer to **Power Brake Booster Vacuum Pipe Replacement (LTG)** .

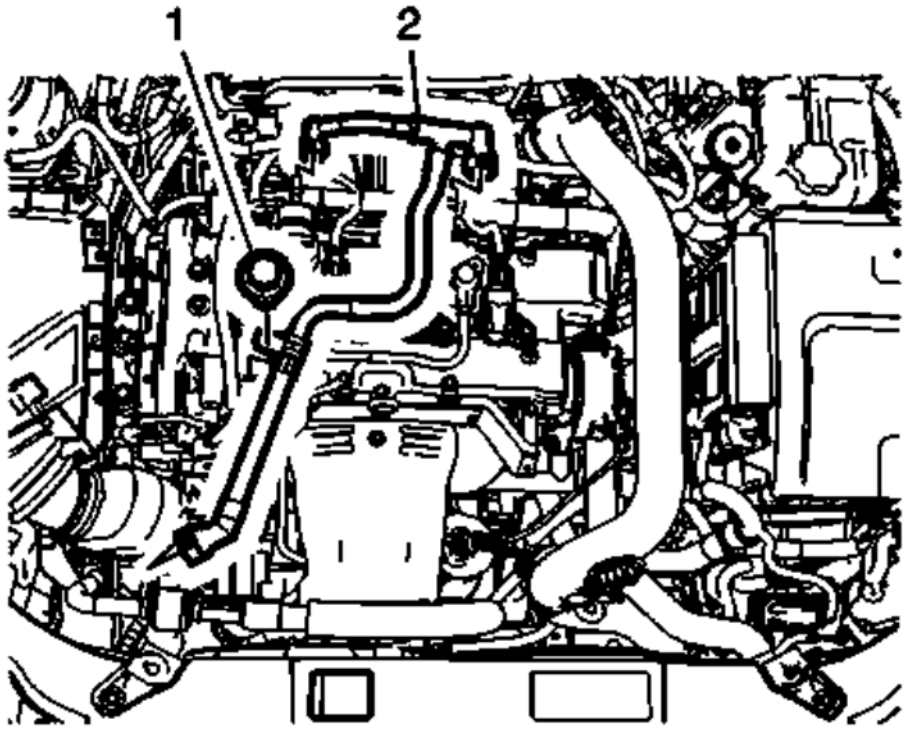

Fig. 38: PCV Pipe
Courtesy of GENERAL MOTORS COMPANY

9. Install the PCV pipe (2). Refer to **Positive Crankcase Ventilation Hose/Pipe/Tube Replacement (Camshaft Cover to Air Cleaner Resonator to Outlet Duct)**.
10. Install the charge air cooler outlet tube. Refer to **Charge Air Cooler Outlet Air Tube Replacement** .
11. Connect the fuel feed pipe. Refer to **Fuel Feed Front Pipe Replacement** .
12. Install the intake manifold cover. Refer to **Intake Manifold Cover Replacement**.

CRANKSHAFT BALANCER REPLACEMENT

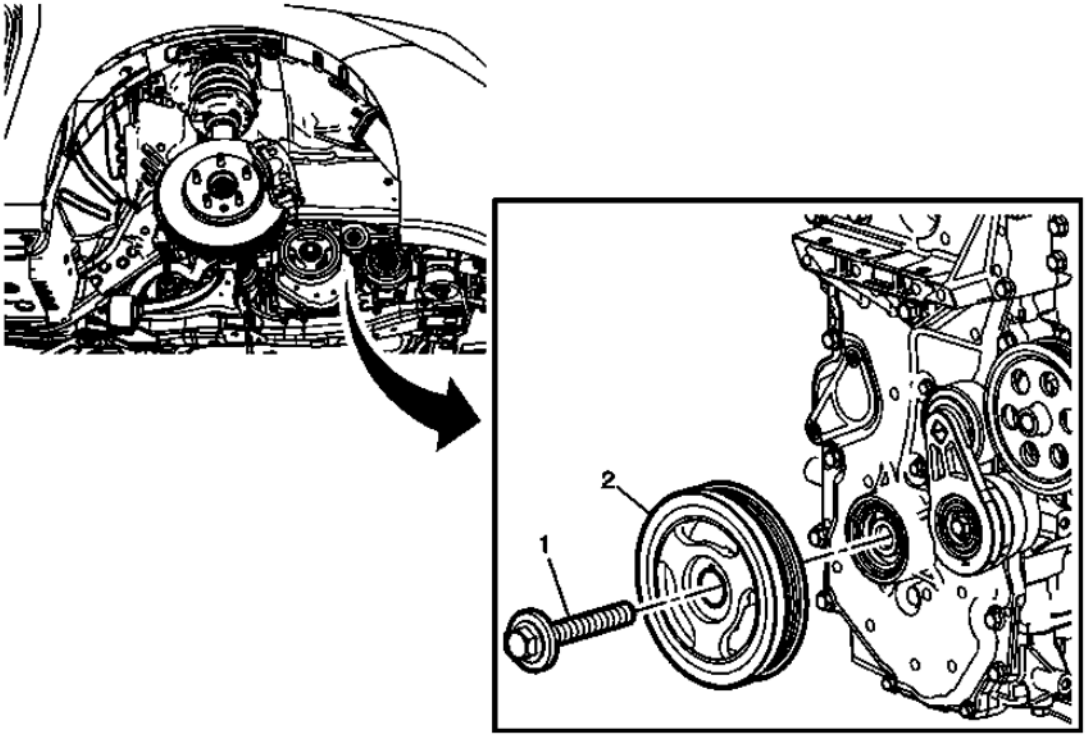

Fig. 39: Crankshaft Balancer
Courtesy of GENERAL MOTORS COMPANY

Crankshaft Balancer Replacement

Callout	Component Name
Preliminary Procedures 1. Remove the starter . Refer to **Starter Replacement (LTG)** . 2. Install the **EN-46106** flywheel holder. 3. Remove the drive belt. Refer to **Drive Belt Replacement**. **Special Tools** • **EN-41816** Crankshaft Balancer Remover • **EN-45059** Angle Meter • **EN-46106** Flywheel Holder For equivalent regional tools, refer to **Special Tools** .	
1	Crankshaft Balancer Bolt **CAUTION:** **Refer to Fastener Caution .** **Procedure** Install a NEW crankshaft bolt and washer. **Tighten**

	150 (111 lb ft) plus 180 degrees.
2	Crankshaft Balancer

CRANKSHAFT FRONT OIL SEAL REPLACEMENT

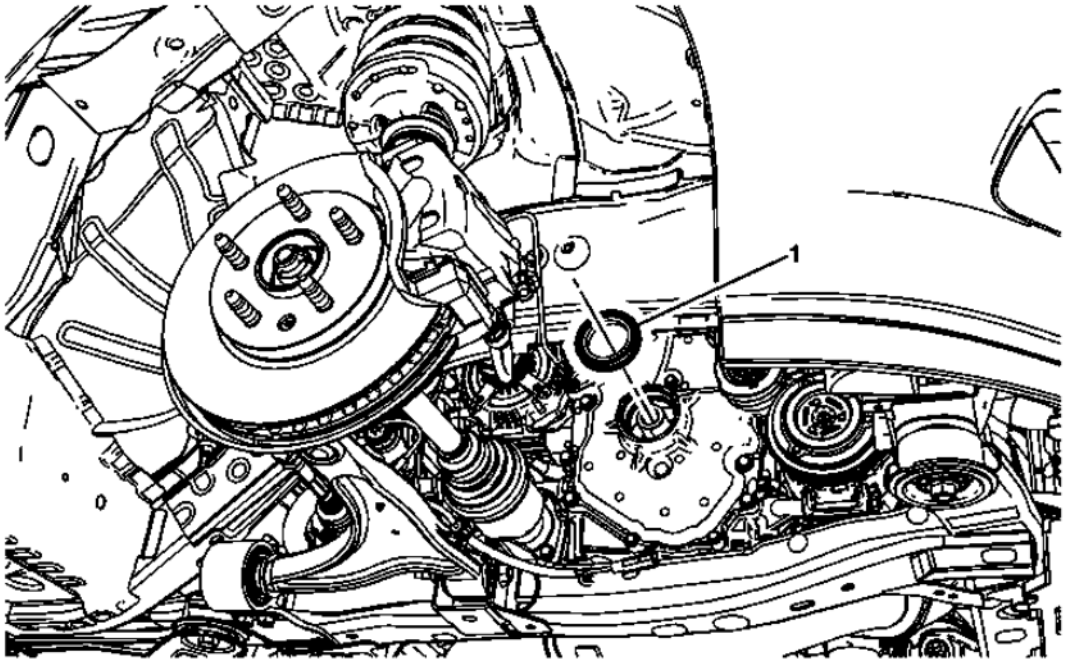

Fig. 40: Crankshaft Front Oil Seal
Courtesy of GENERAL MOTORS COMPANY

Crankshaft Front Oil Seal Replacement

Callout	Component Name
Preliminary Procedure Remove the crankshaft balancer. Refer to **Crankshaft Balancer Replacement**.	
1	Front Crankshaft Seal **Procedure** 1. Use a suitable tool to remove the front cover oil seal. 2. Use the **EN 50820** Front Crankshaft Seal Installer to install the seal. **Special Tools** **EN 50820** Front Crankshaft Seal Installer For equivalent regional tools, refer to **Special Tools** .

ENGINE FRONT COVER REPLACEMENT

Removal Procedure

Special Tools

EN-50820 Front Crankshaft Seal Installer

KM-470-B Angular Torque Gauge

For equivalent regional tools, refer to **Special Tools** .

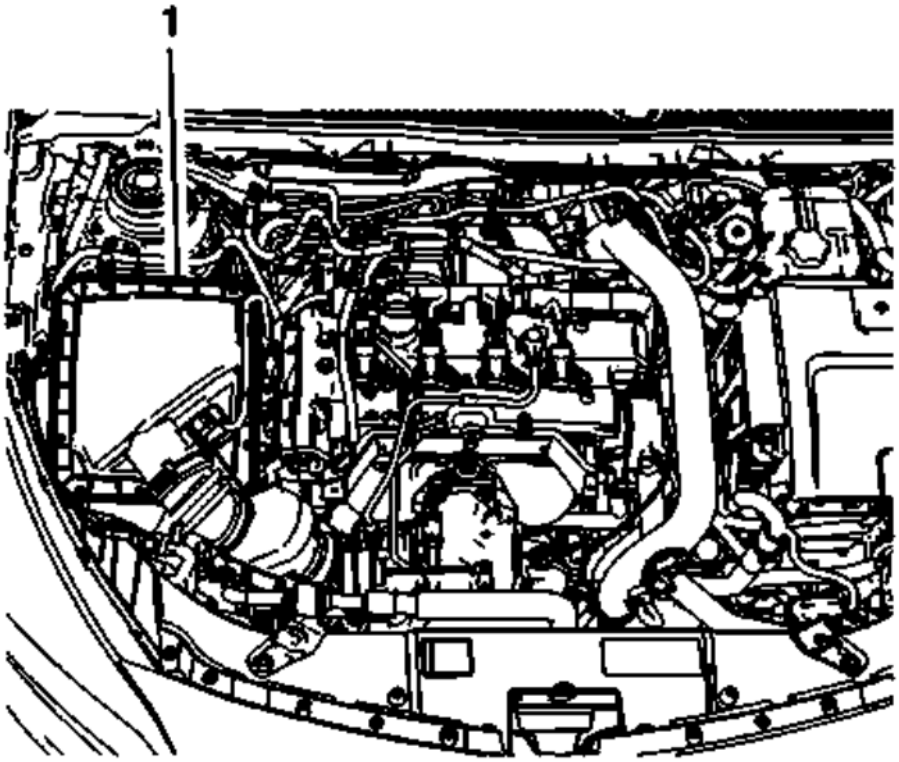

Fig. 41: Air Cleaner Assembly
Courtesy of GENERAL MOTORS COMPANY

1. Remove the air cleaner assembly (1). Refer to **Air Cleaner Assembly Replacement** .
2. Remove the camshaft cover. Refer to **Camshaft Cover Replacement**.

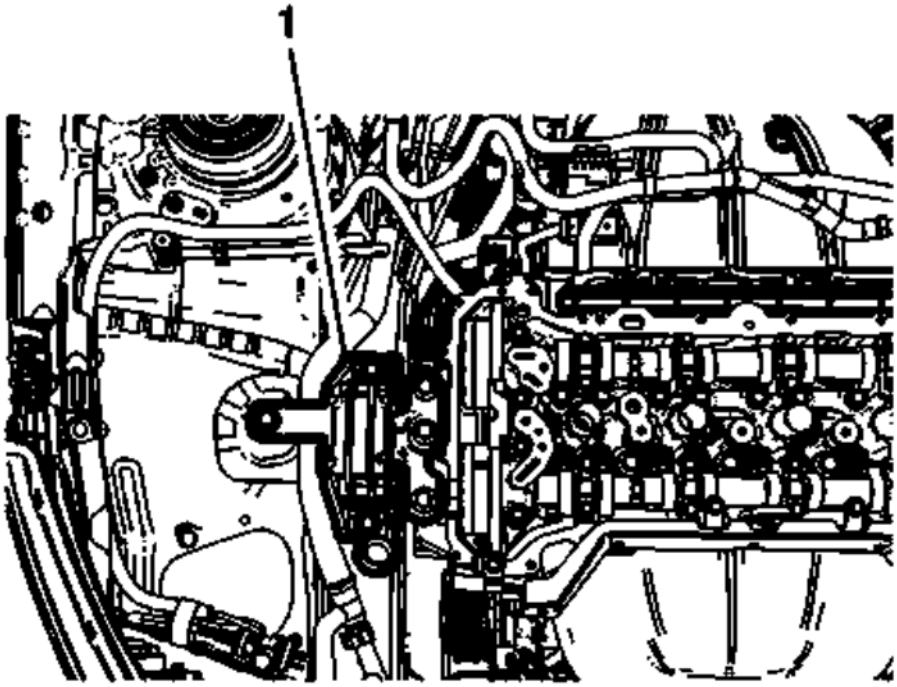

Fig. 42: Engine Mount
Courtesy of GENERAL MOTORS COMPANY

3. Remove the engine mount (1). Refer to **Engine Mount Replacement**.
4. Remove the crankshaft balancer. Refer to **Crankshaft Balancer Replacement**.
5. Remove the drive belt tensioner. Refer to **Drive Belt Tensioner Replacement**.

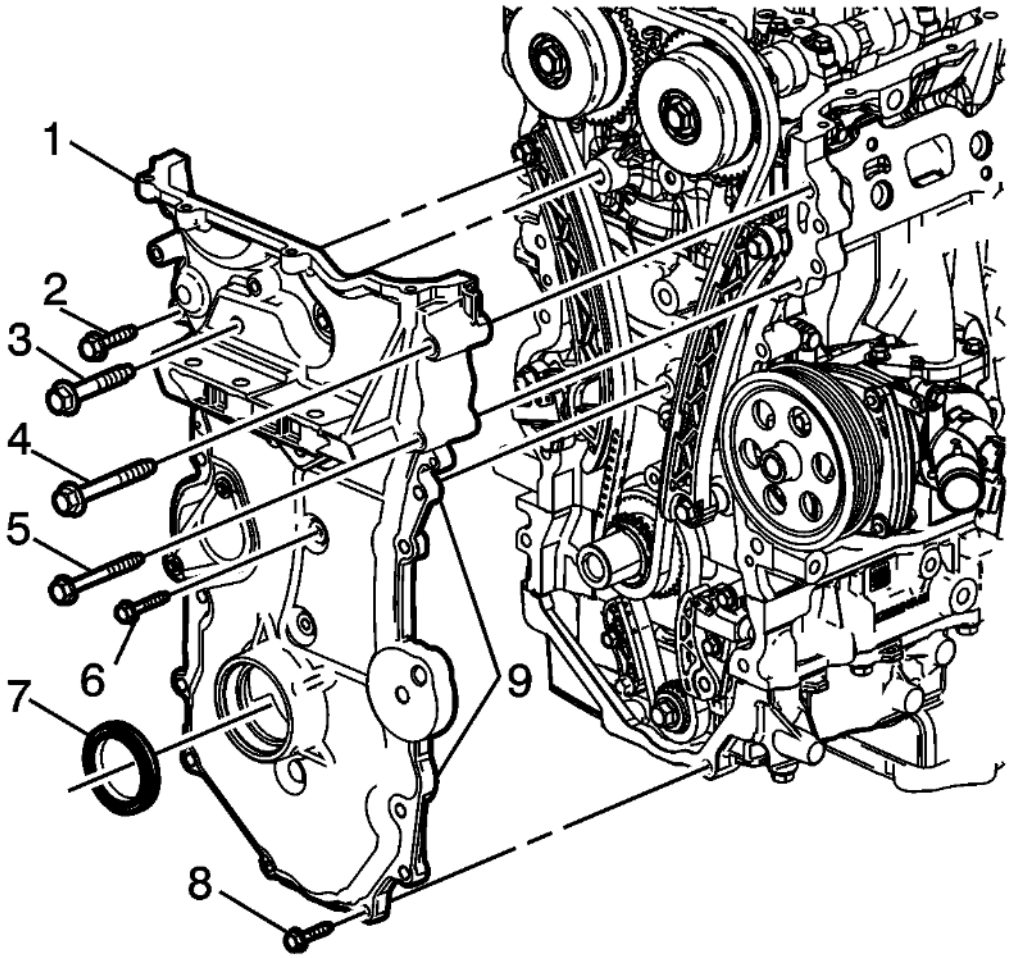

Fig. 43: Front Oil Seal
Courtesy of GENERAL MOTORS COMPANY

6. Remove the engine front cover bolts (2-6, 8).
7. Remove the engine front cover (1).
8. Remove the front oil seal (7) with an appropriate tool.

Installation Procedure

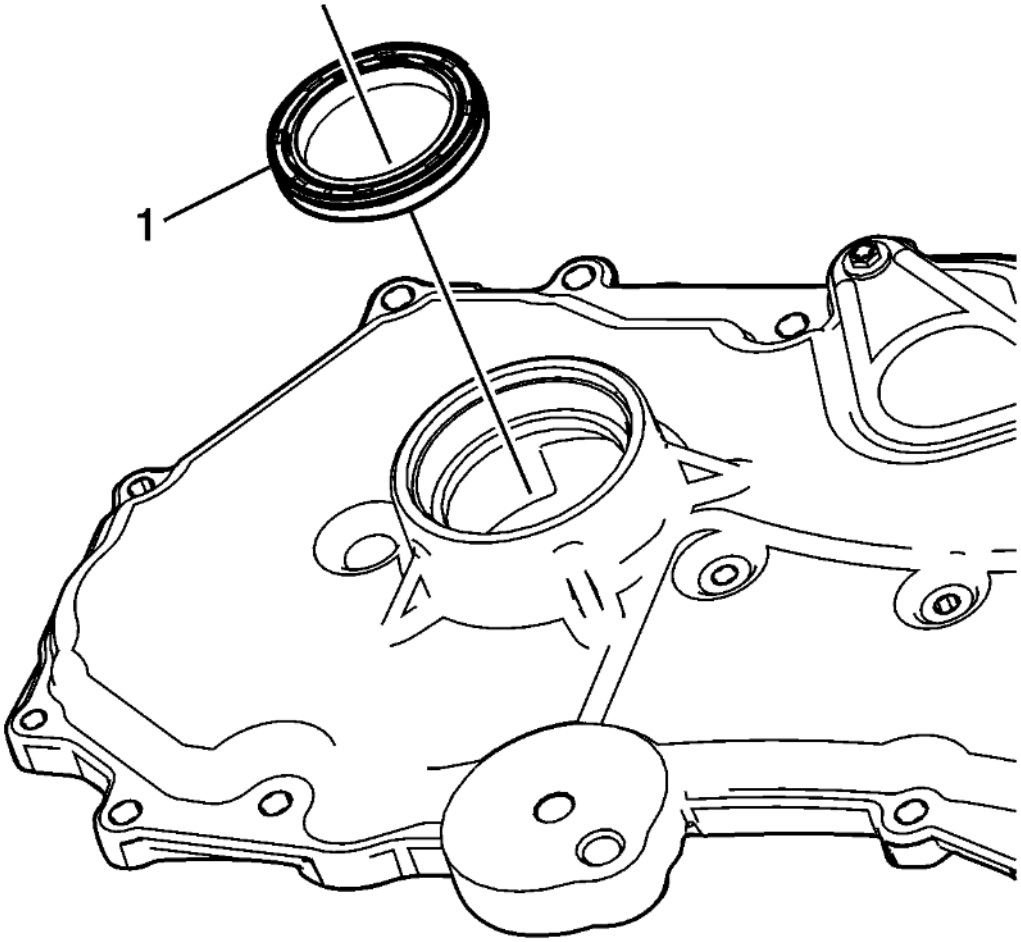

Fig. 44: Front Crankshaft Seal
Courtesy of GENERAL MOTORS COMPANY

1. Using **EN-50820** installer , install the front crankshaft seal (1) into the engine front cover.

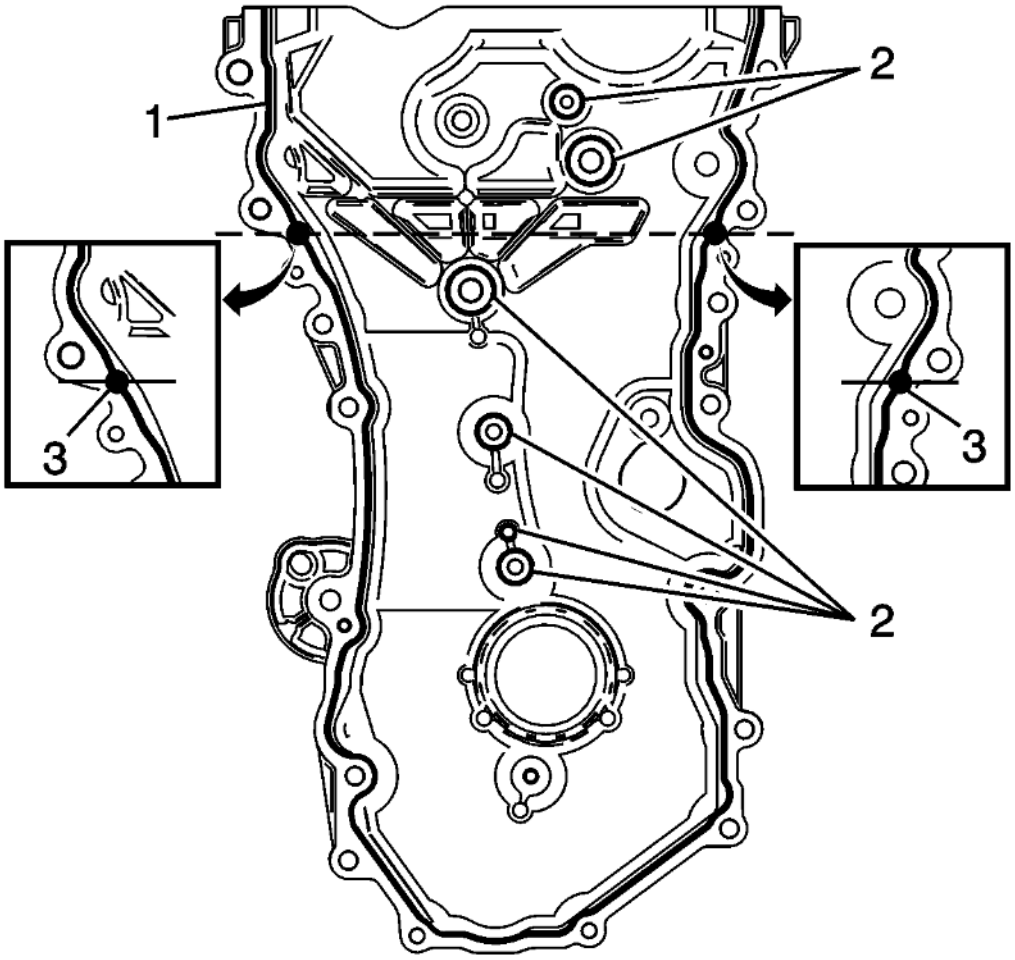

Fig. 45: Applying Bead Of Sealer Directly In Flange
Courtesy of GENERAL MOTORS COMPANY

NOTE:

- **The engine front cover surface must be free of contamination prior to applying the sealer.**
- **Install and align the cover within 20 minutes of applying the sealer.**
- **The cover must be fastened to final torque specification within 60 minutes of applying the sealer.**
- **Additional sealant is necessary to reduce the possibility of leakage where the cylinder head to engine block interface along the bead path flange on the front cover.**

2. Apply a 5 mm bead of sealer directly in the flange (1) of the engine front cover perimeter mating surface. Also apply a 5 mm bead of sealer directly to the locations indicated (2). Finally, apply a 14 mm dab of sealant at the locations indicated (3). Refer to **Adhesives, Fluids, Lubricants, and Sealers** .

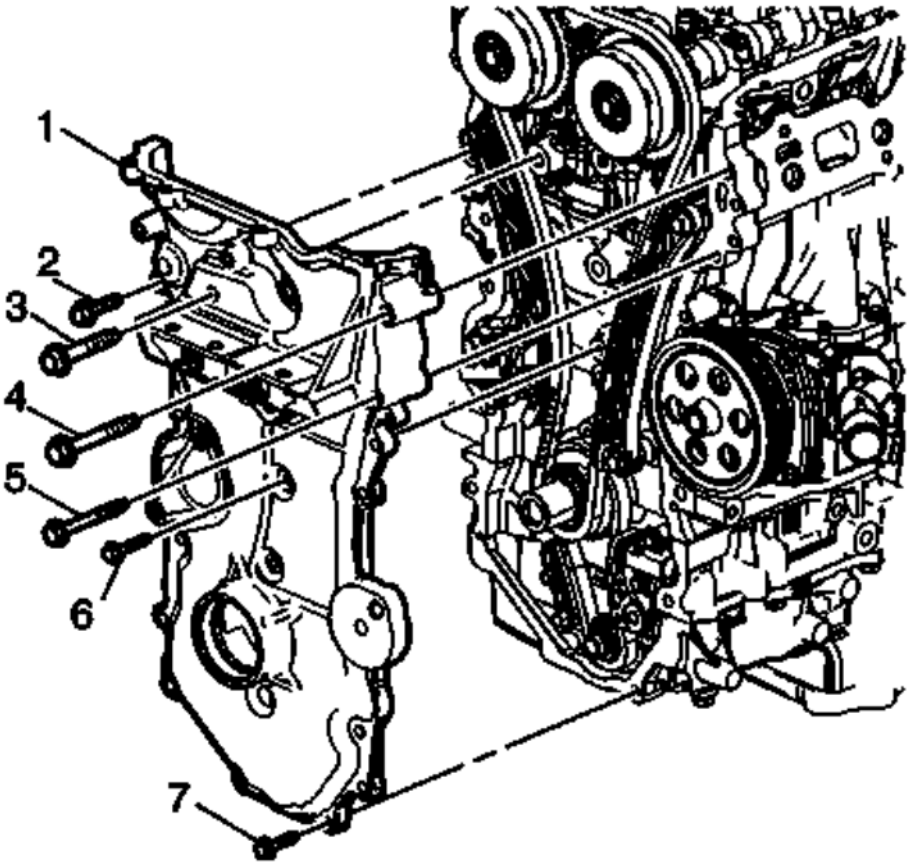

Fig. 46: Engine Front Cover
Courtesy of GENERAL MOTORS COMPANY

3. Install the engine front cover (1).
4. Hand start the engine front cover bolts (2-6, 7).

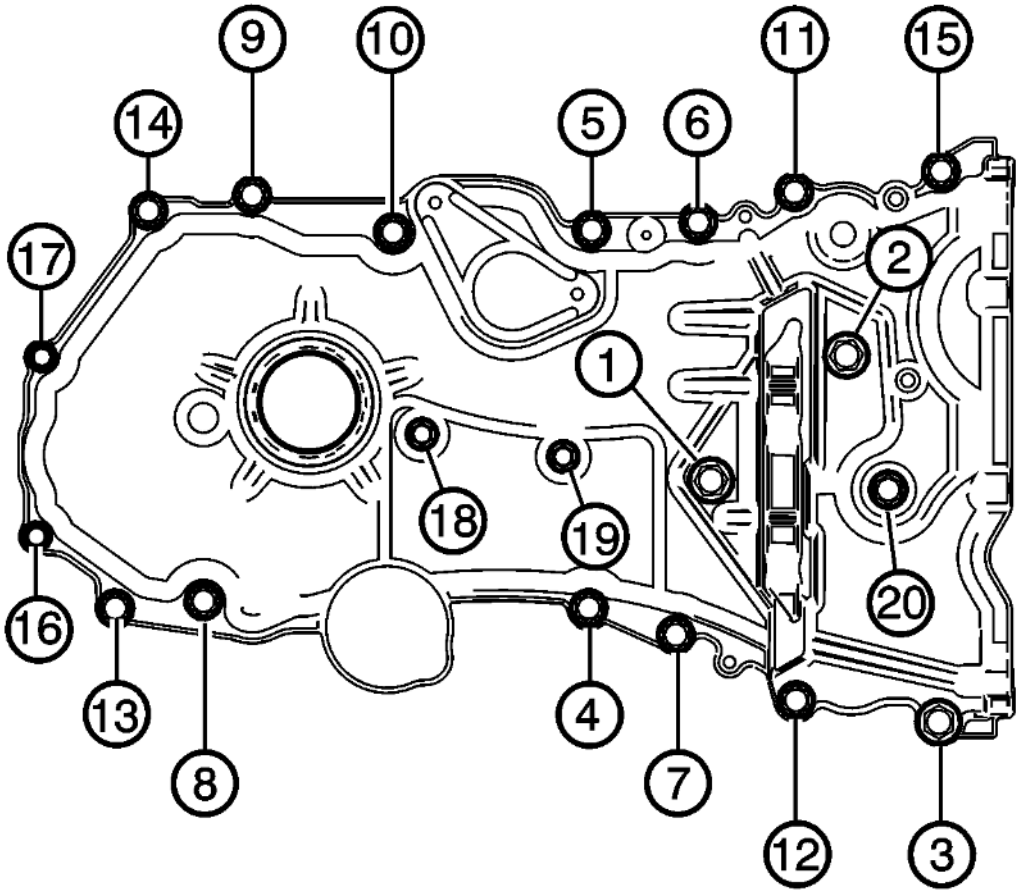

Fig. 47: Engine Front Cover
Courtesy of GENERAL MOTORS COMPANY

CAUTION: Refer to Fastener Caution .

5. Tighten the engine front cover bolts in sequence to final torque twice:
   1. Using **KM-470-B** Angular Torque Gauge tighten sequence 1-2 bolts to 15 (11 lb ft) + 130 degrees.
   2. Tighten sequence 3 bolt to 58 (43 lb ft).
   3. Tighten sequence 4-11 bolts to 25 (18 lb ft).
   4. Tighten sequence 12 bolt to 25 (18 lb ft).
   5. Tighten sequence 13-15 bolts to 25 (18 lb ft).
   6. Tighten sequence 16-17 bolts to 10 (89 lb in).
   7. Tighten sequence 18-19 bolts to 10 (89 lb in).
   8. Using **KM-470-B** Angular Torque Gauge tighten sequence 20 bolt to 15 (11 lb ft) + 130 degrees.
6. Install the drive belt tensioner. Refer to **Drive Belt Tensioner Replacement**.
7. Install the crankshaft balancer. Refer to **Crankshaft Balancer Replacement**.

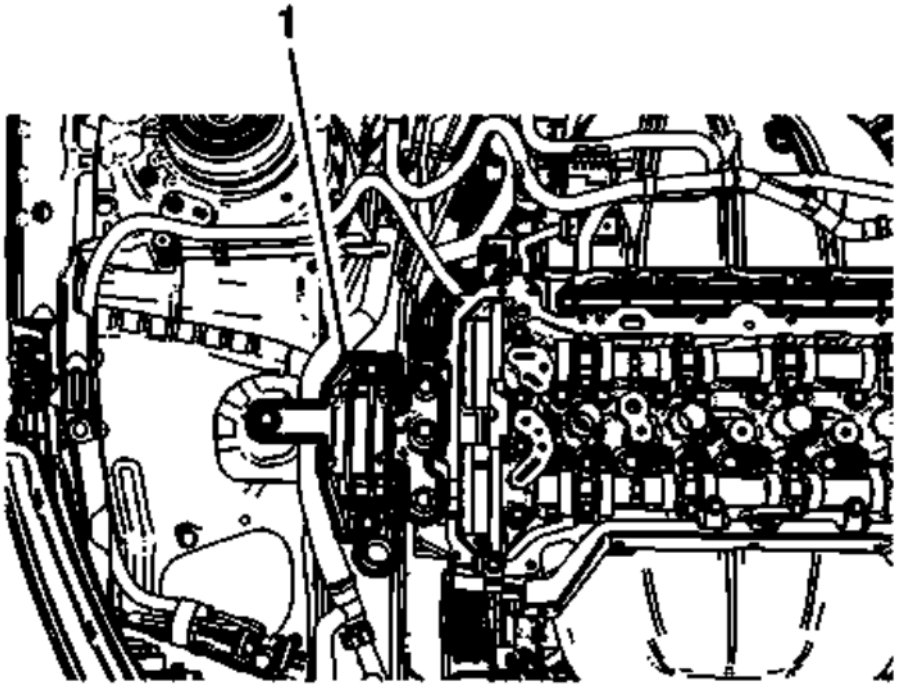

Fig. 48: Engine Mount
Courtesy of GENERAL MOTORS COMPANY

8. Install the engine mount (1). Refer to **Engine Mount Replacement**.
9. Install the camshaft cover. Refer to **Camshaft Cover Replacement**.

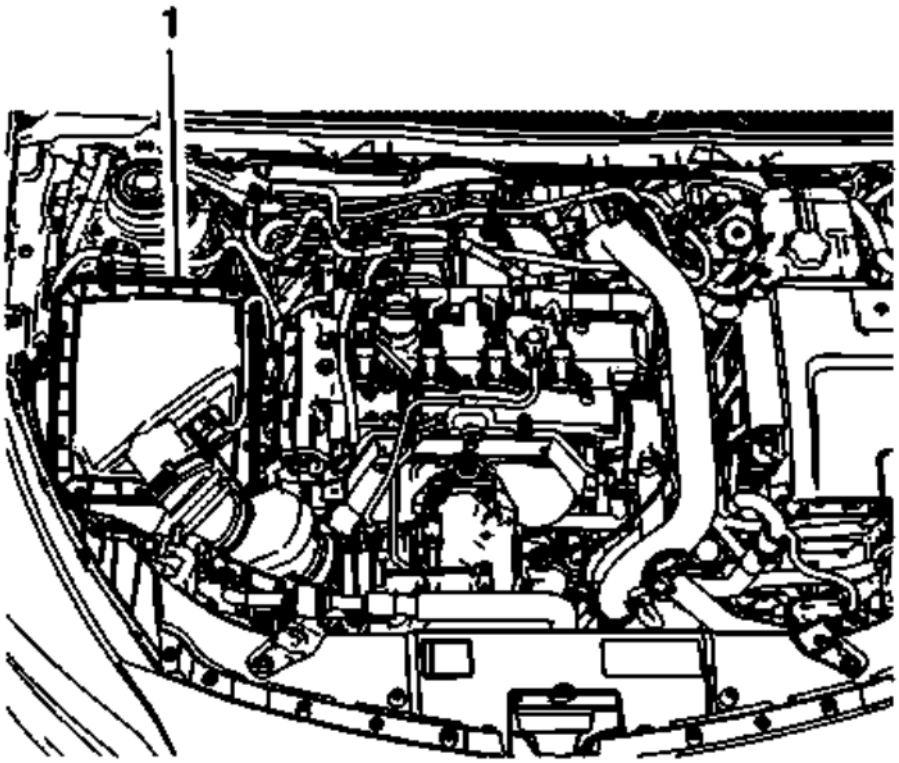

Fig. 49: Air Cleaner Assembly
Courtesy of GENERAL MOTORS COMPANY

10. Install the air cleaner assembly (1). Refer to **Air Cleaner Assembly Replacement** .

INTAKE VALVE ROCKER ARM REPLACEMENT

Removal Procedure

1. Remove the camshaft position actuator and camshaft - intake. Refer to **Camshaft Position Actuator and Camshaft Replacement - Intake**.

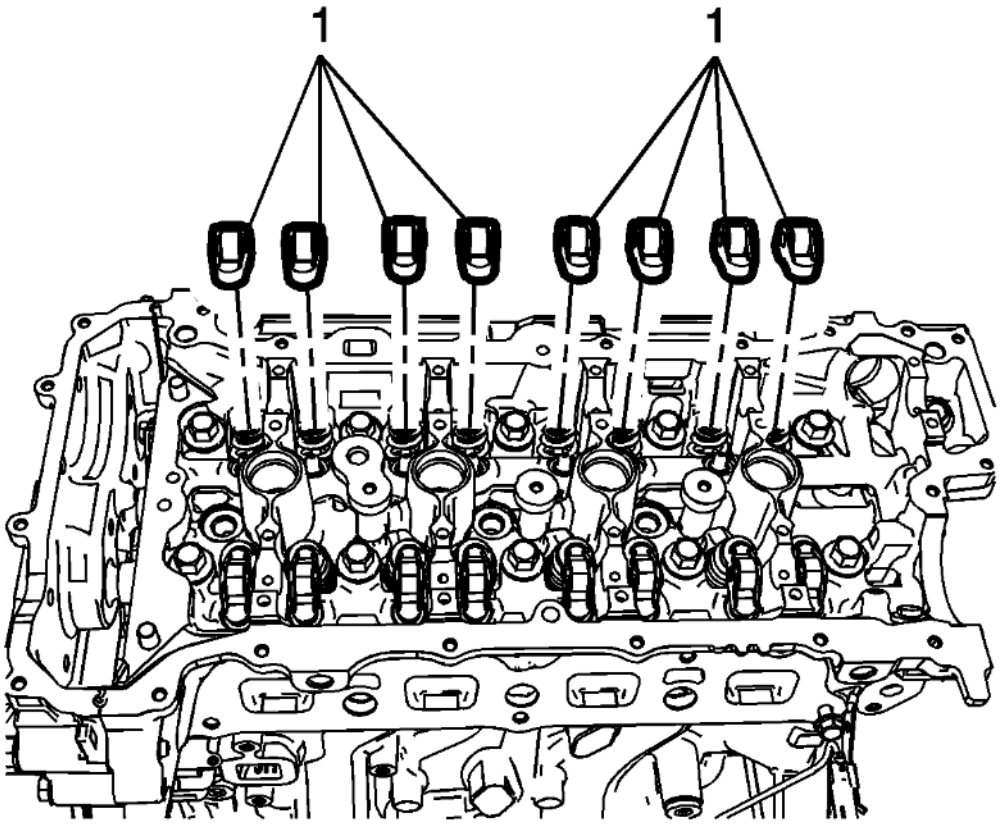

Fig. 50: Intake Rocker Arm
Courtesy of GENERAL MOTORS COMPANY

NOTE: **Keep all of the valve rocker arms and hydraulic lash adjusters in order so that they can be reinstalled in their respective locations.**

2. Remove the intake rocker arm (1).

Installation Procedure

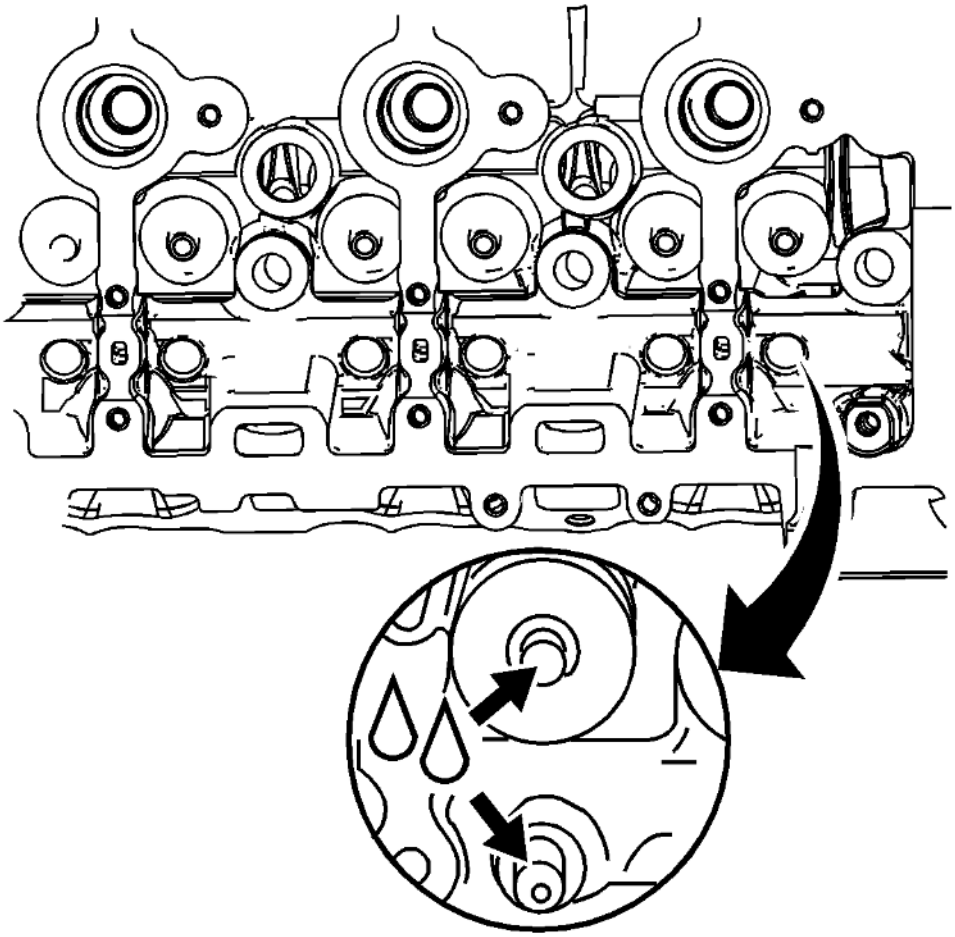

Fig. 51: Valve Tips
Courtesy of GENERAL MOTORS COMPANY

1. Lubricate the valve tips. Refer to **Adhesives, Fluids, Lubricants, and Sealers** .

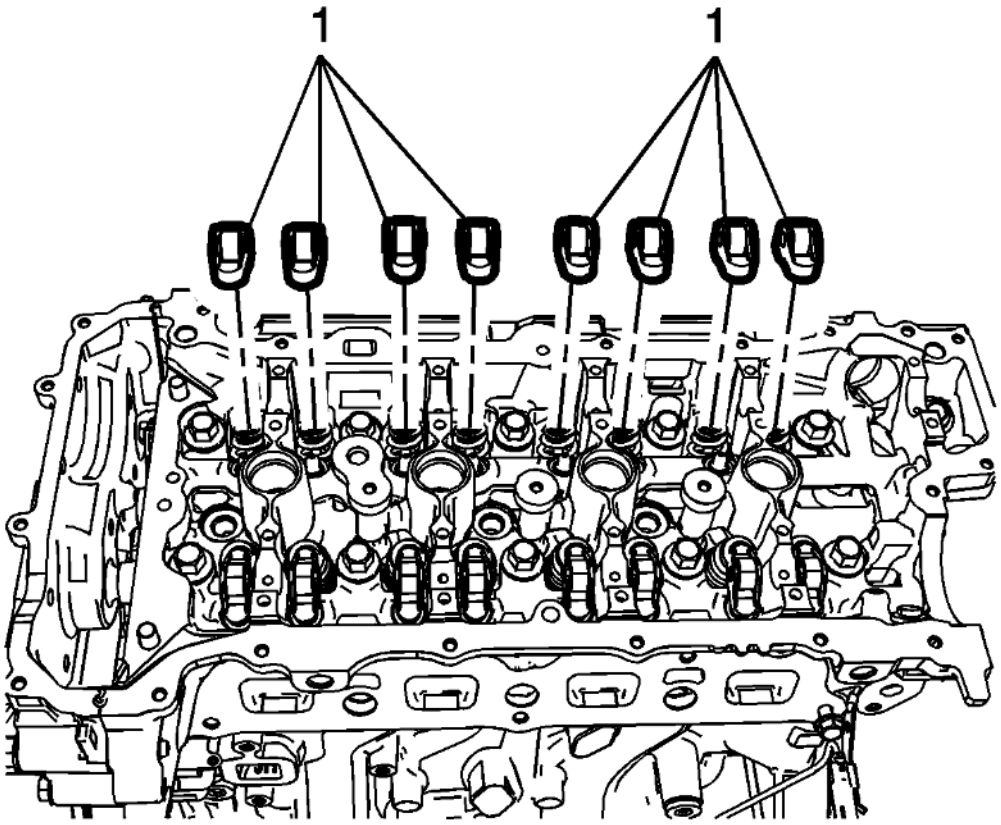

Fig. 52: Intake Rocker Arm
Courtesy of GENERAL MOTORS COMPANY

NOTE:

- **Used rocker arms must be returned to the original position on the camshaft. If the camshaft is being replaced, the rocker arms actuated by the camshaft must also be replaced.**
- **Pre-oil roller bearings before installation.**

2. Lubricate the roller bearings with valve rocker arm lubricant. Refer to **Adhesives, Fluids, Lubricants, and Sealers** .
3. Position the valve rocker arm (1) on the tip of the valve stem and on the lash adjuster and lubricate. Refer to **Adhesives, Fluids, Lubricants, and Sealers** .
4. Install the camshaft position actuator and camshaft - intake. Refer to **Camshaft Position Actuator and Camshaft Replacement - Intake**.

EXHAUST VALVE ROCKER ARM REPLACEMENT

Removal Procedure

1. Remove the camshaft position actuator and camshaft - exhaust. Refer to **Camshaft Position Actuator and Camshaft Replacement - Exhaust**.

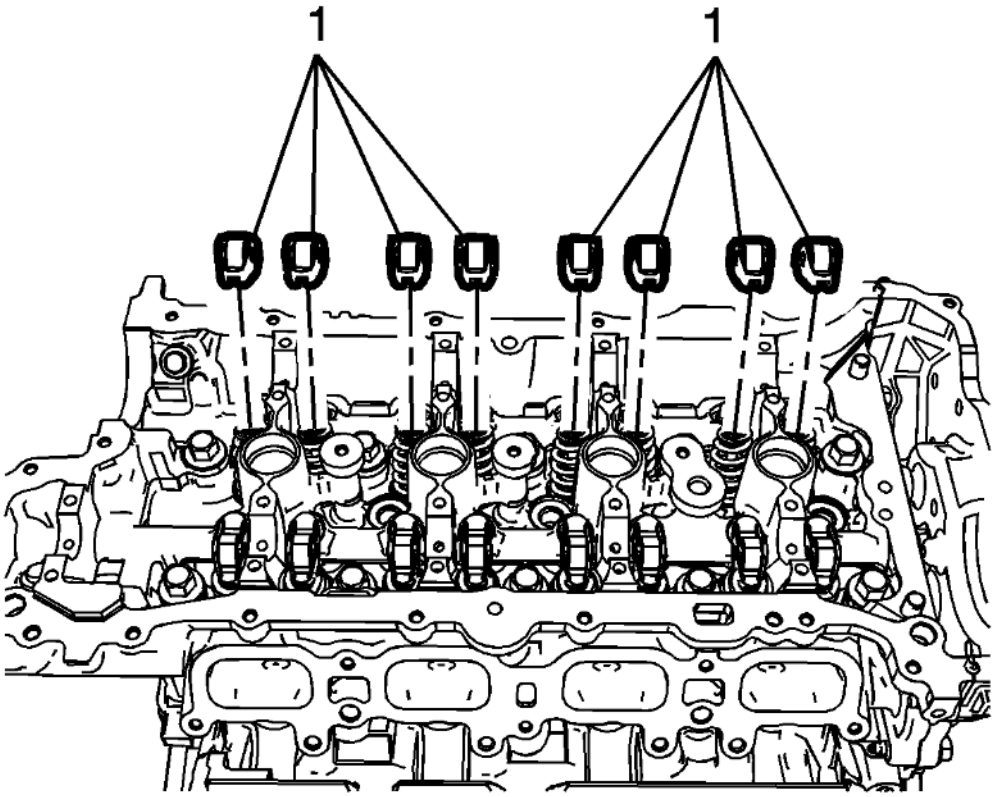

Fig. 53: Exhaust Rocker Arm
Courtesy of GENERAL MOTORS COMPANY

NOTE: **Keep all of the Valve Rocker Arms and hydraulic lash adjusters in order so that they can be reinstalled in their respective locations.**

2. Remove the exhaust rocker arm (1).

Installation Procedure

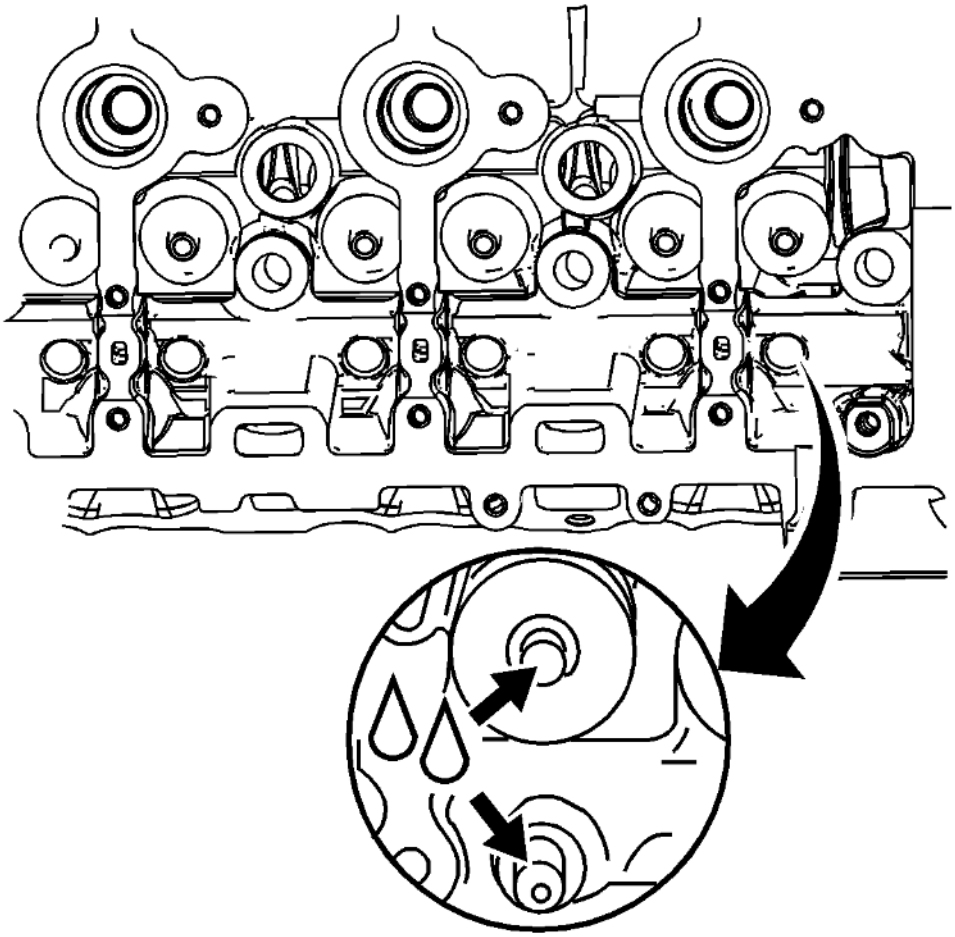

Fig. 54: Valve Tips
Courtesy of GENERAL MOTORS COMPANY

1. Lubricate the valve tips. Refer to **Adhesives, Fluids, Lubricants, and Sealers** .

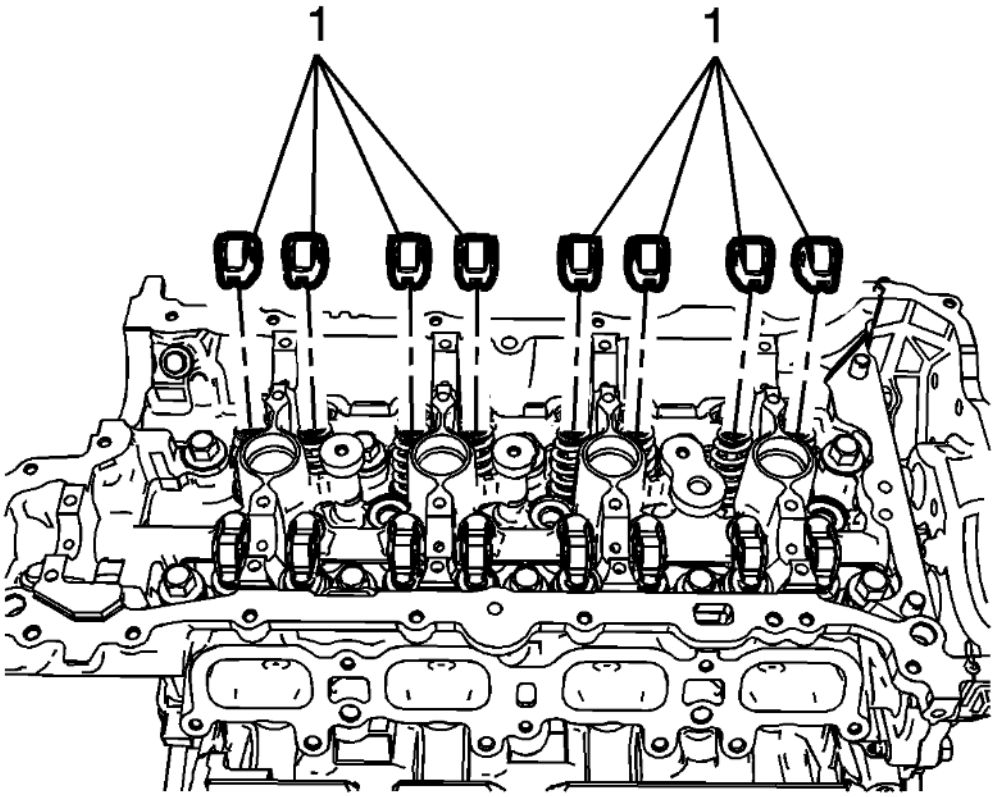

Fig. 55: Exhaust Rocker Arm
Courtesy of GENERAL MOTORS COMPANY

NOTE:

- **Used rocker arms must be returned to the original position on the camshaft. If the camshaft is being replaced, the rocker arms actuated by the camshaft must also be replaced.**
- **Pre-oil roller bearings before installation.**

2. Lubricate the roller bearings with valve rocker arm lubricant. Refer to **Adhesives, Fluids, Lubricants, and Sealers** .
3. Position the valve rocker arm (1) on the tip of the valve stem and on the lash adjuster and lubricate. Refer to **Adhesives, Fluids, Lubricants, and Sealers** .
4. Install the camshaft position actuator and camshaft - exhaust. Refer to **Camshaft Position Actuator and Camshaft Replacement - Exhaust**.

CAMSHAFT TIMING CHAIN, SPROCKET, AND TENSIONER REPLACEMENT

Removal Procedure

1. Remove the engine front cover. Refer to **Engine Front Cover Replacement**.

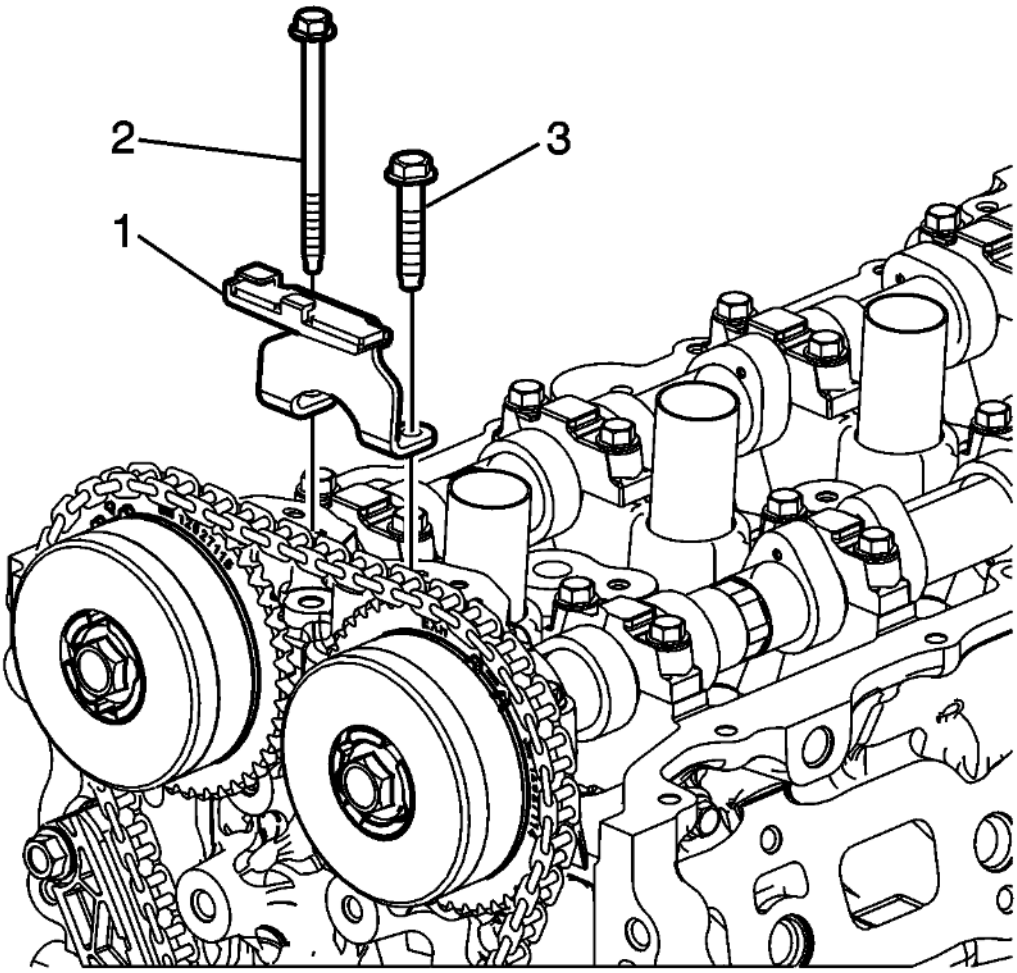

Fig. 56: Upper Timing Chain Guide Bolts
Courtesy of GENERAL MOTORS COMPANY

2. Remove the upper timing chain guide bolts (2, 3).
3. Remove the upper timing chain guide (1).

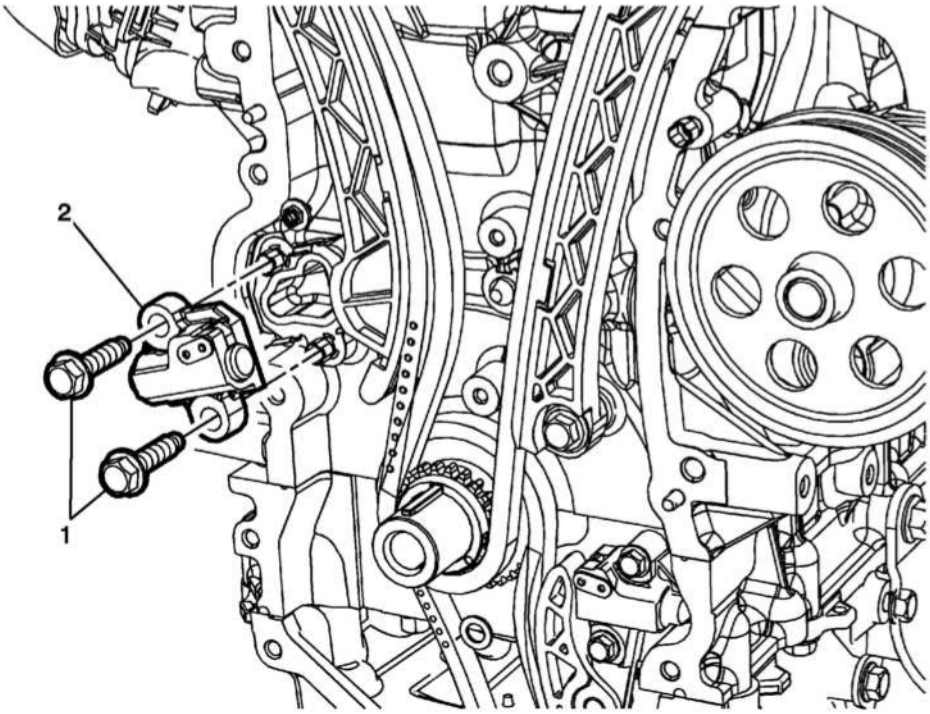

Fig. 57: Timing Chain Tensioner Bolts And Timing Chain Tensioner
Courtesy of GENERAL MOTORS COMPANY

4. Remove the timing chain tensioner bolts (1) and timing chain tensioner (2).

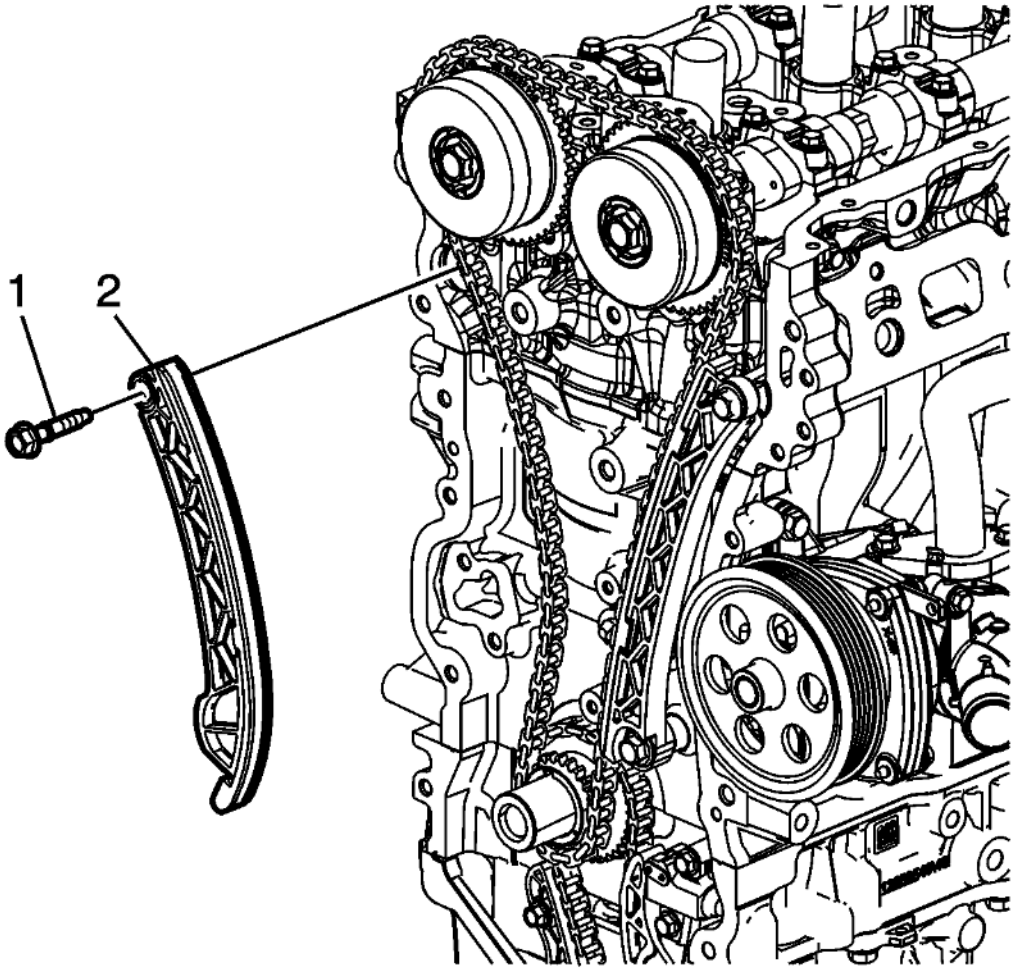

Fig. 58: Timing Chain Tensioner Pivot Arm Bolt
Courtesy of GENERAL MOTORS COMPANY

5. Remove the timing chain tensioner pivot arm bolt (1).
6. Remove the timing chain tensioner pivot arm (2).

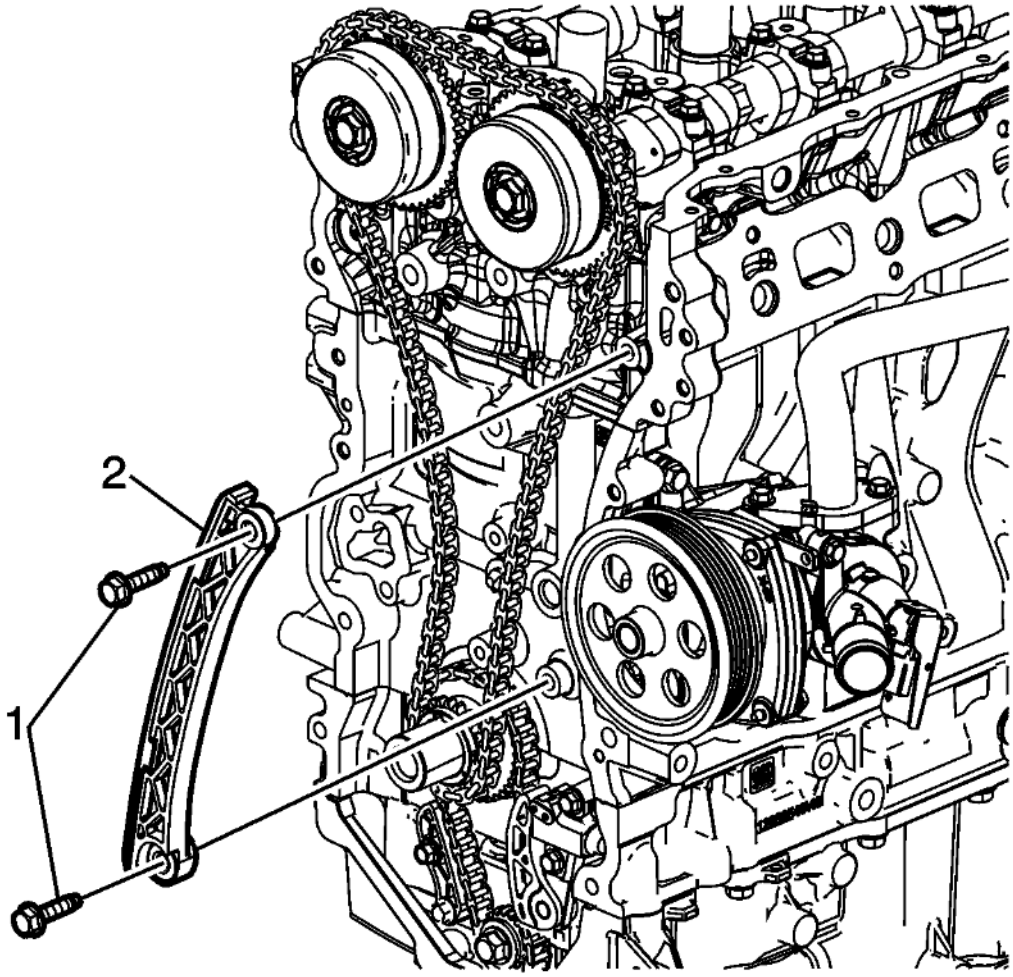

Fig. 59: Timing Chain Guide Bolts
Courtesy of GENERAL MOTORS COMPANY

7. Remove the timing chain guide bolts (1).
8. Remove the timing chain guide (2).

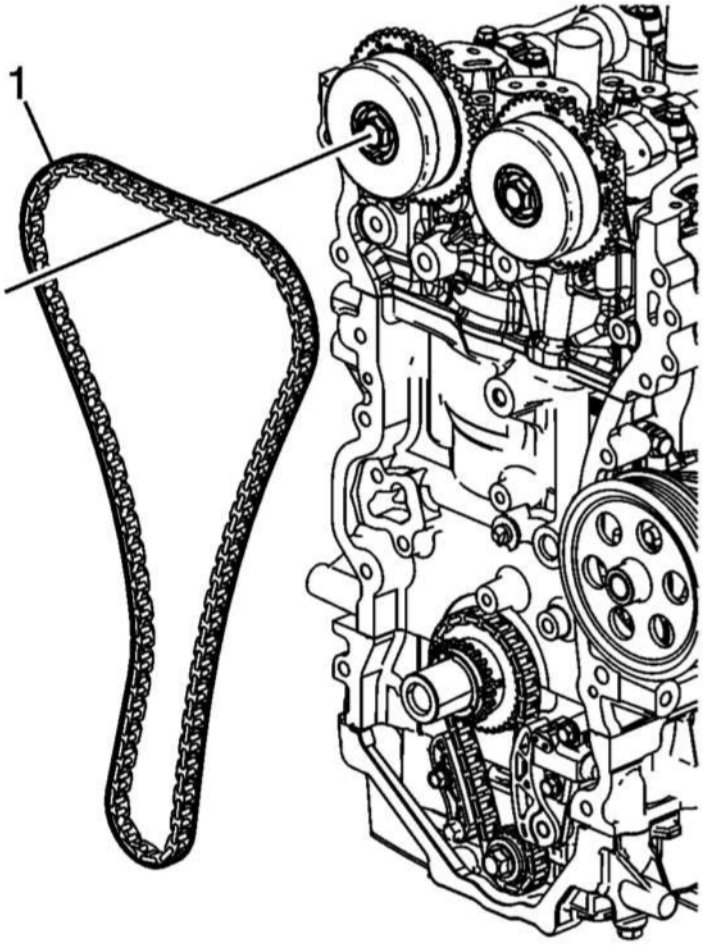

Fig. 60: Timing Chain
Courtesy of GENERAL MOTORS COMPANY

9. Remove the timing chain (1).

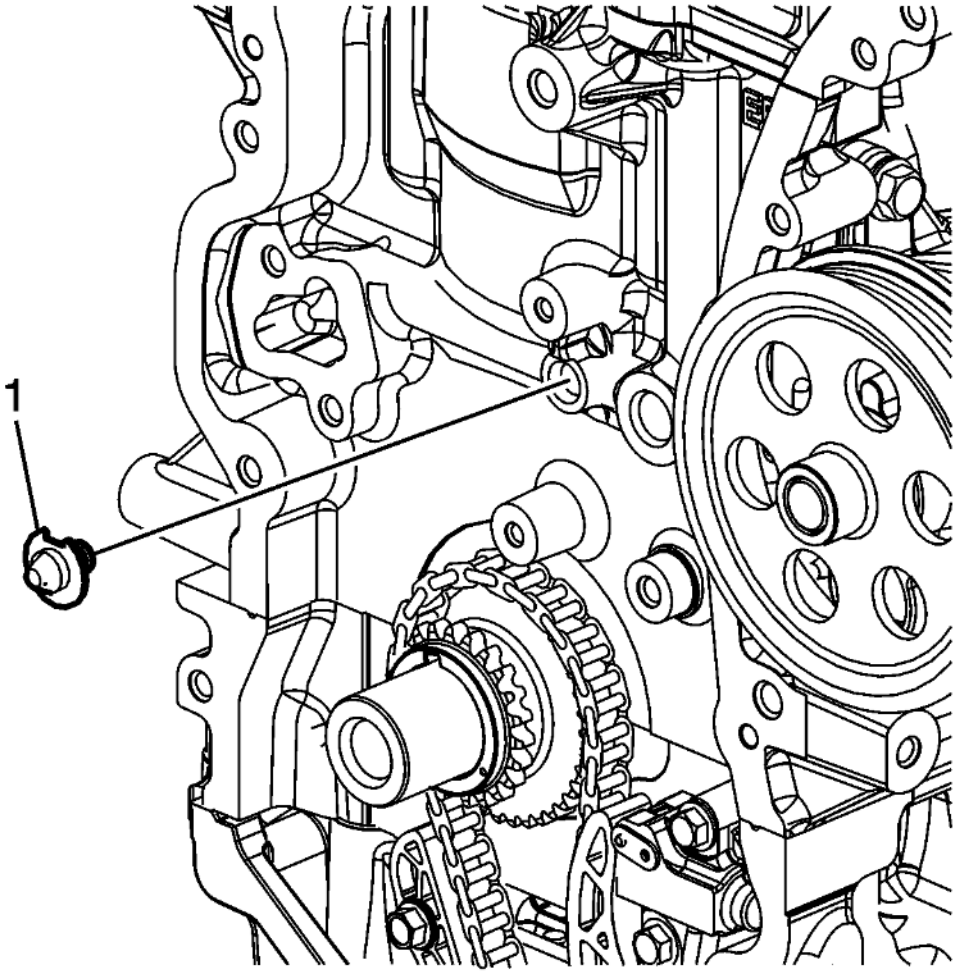

Fig. 61: Timing Chain Oil Nozzle
Courtesy of GENERAL MOTORS COMPANY

10. Remove the timing chain oil nozzle (1).
11. For camshaft timing chain, sprocket, and tensioner cleaning and inspection. Refer to **Camshaft Timing Chain, Sprocket, and Tensioner Cleaning and Inspection** .

Installation Procedure

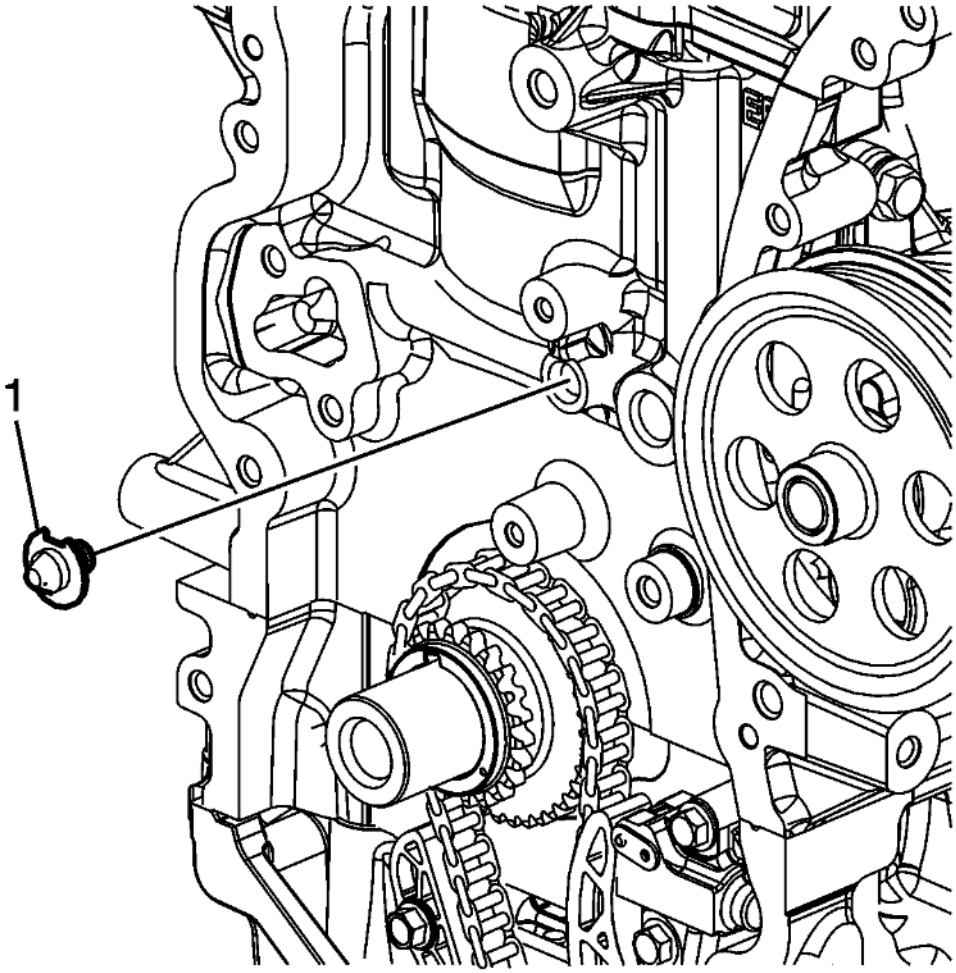

Fig. 62: Timing Chain Oil Nozzle
Courtesy of GENERAL MOTORS COMPANY

NOTE: **Ensure the timing chain oil nozzle is rotated with the notch facing upward, and aligned with the tab on the engine block.**

1. Install the timing chain oil nozzle (1).

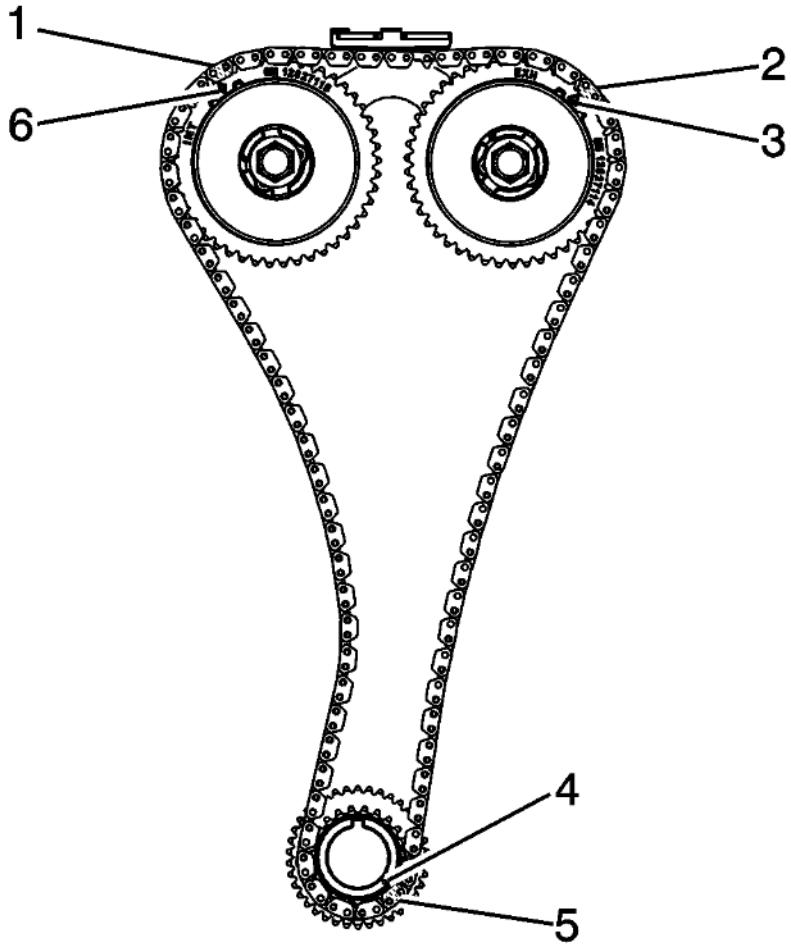

Fig. 63: Timing Chain Oil Nozzle
Courtesy of GENERAL MOTORS COMPANY

NOTE: **There are three colored links on the timing chain. The two links that align to the timing marks on the actuators are the same color. The timing link that aligns with the timing mark on the crankshaft sprocket is a unique color. Use the following procedure to line up the links with the actuators. Orient the chain so that the colored links are visible.**

2. Loop the timing chain over the intake and exhaust camshaft actuators, aligning the unique colored link (2) with the timing mark on the exhaust camshaft actuator (3).

NOTE: **The unique colored links will not initially align with the intake actuator timing mark or the crankshaft sprocket timing mark.**

3. Ensure the crankshaft key in the 12 O'clock position. Loop the timing chain onto the crankshaft sprocket.

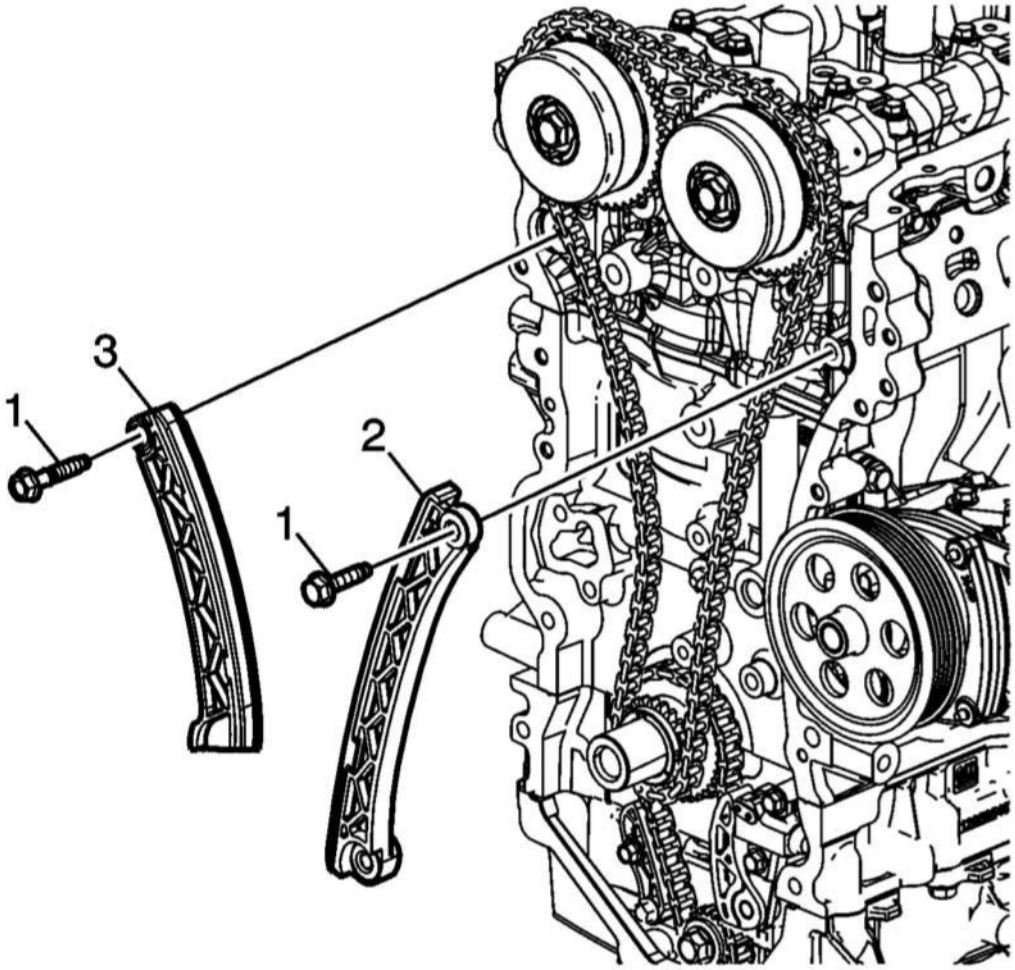

Fig. 64: Timing Chain Guide And Upper Bolt
Courtesy of GENERAL MOTORS COMPANY

NOTE: **Timing will be established before the final install and torque of the guide bolts.**

4. Install the timing chain guide (2) and upper bolt (1) only, finger tight.
5. Install the timing chain tensioner pivot arm (3).
6. Install the pivot arm bolt (1) finger tight.

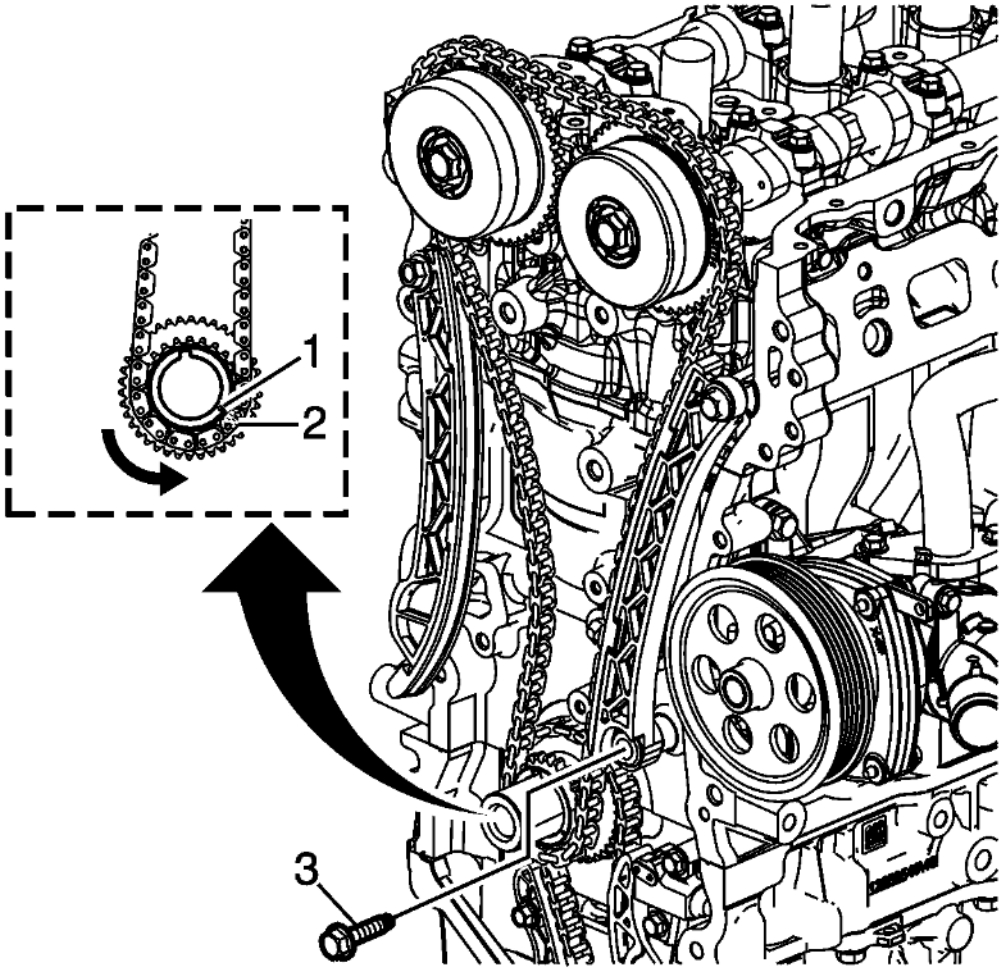

Fig. 65: Crankshaft Sprocket
Courtesy of GENERAL MOTORS COMPANY

7. With a suitable tool, rotate the crankshaft counterclockwise to align the timing mark on the crankshaft sprocket (1) with the timing link (2).

NOTE:

- **Continue to rotate the crankshaft counterclockwise as necessary to maintain timing alignment.**
- **Ensure that the alignment mark on the exhaust camshaft actuator remains aligned with the timing link.**

8. Rotate the lower end of the fixed timing chain guide into installation position and install the lower bolt (3).

CAUTION: Refer to Fastener Caution .

9. Tighten the timing chain guide upper and lower bolts to 25 N.m (18 lb ft).

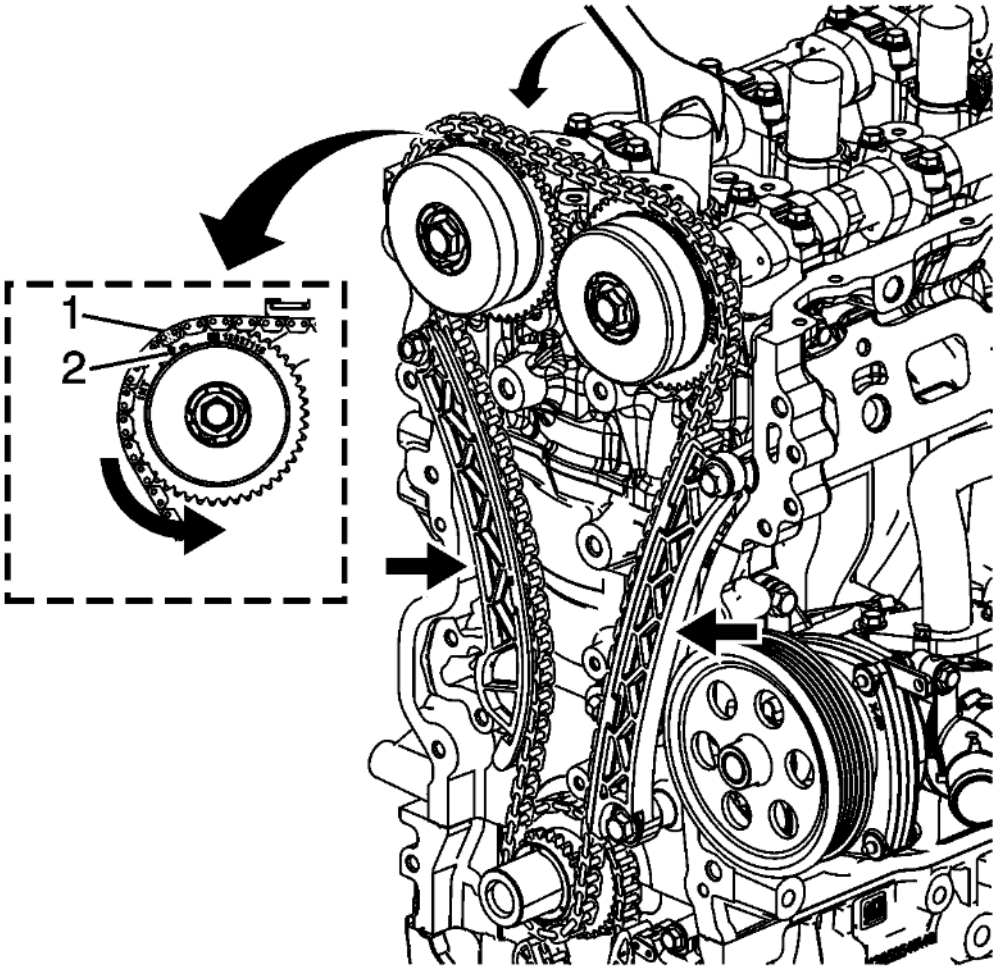

Fig. 66: Timing Mark On Intake Actuator
Courtesy of GENERAL MOTORS COMPANY

NOTE:

- **The timing for the exhaust camshaft actuator and the crankshaft sprocket has been established.**
- **Applying or loosening pressure by hand between the timing chain guides will allow the chain to slip or bind during counterclockwise rotation of the camshaft.**

10. Using a suitable tool, rotate the intake camshaft counterclockwise until the timing mark on the intake actuator (2) is aligned with the timing link (1). Maintain tension on intake camshaft until the timing chain tensioner can be installed and activated.

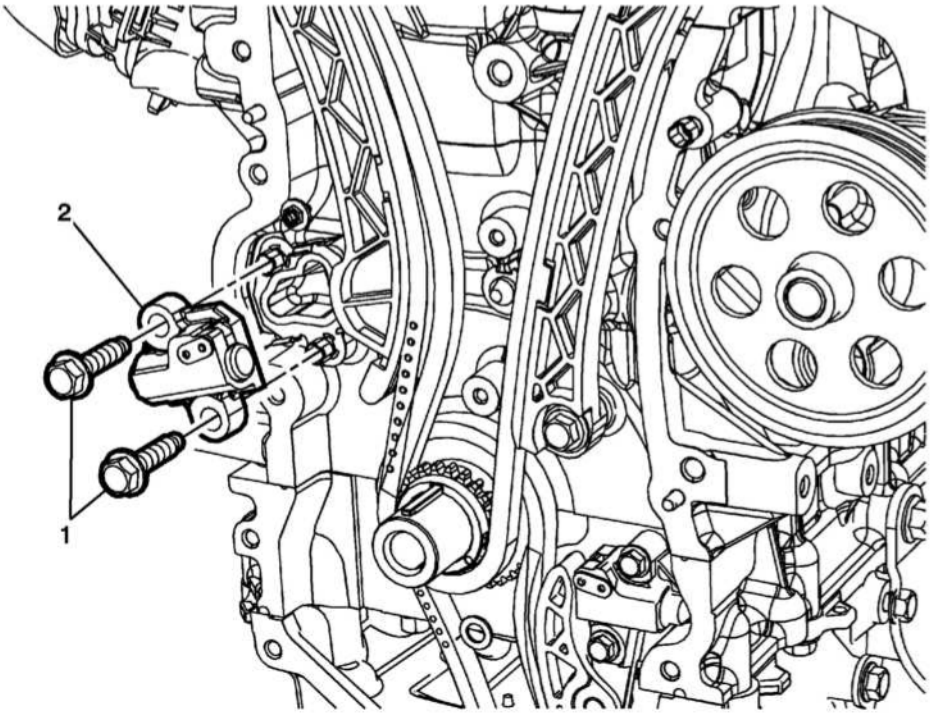

Fig. 67: Timing Chain Tensioner Bolts And Timing Chain Tensioner
Courtesy of GENERAL MOTORS COMPANY

11. Install the timing chain tensioner (2) and tighten timing chain tensioner bolts (1) to 25 (18 lb ft)

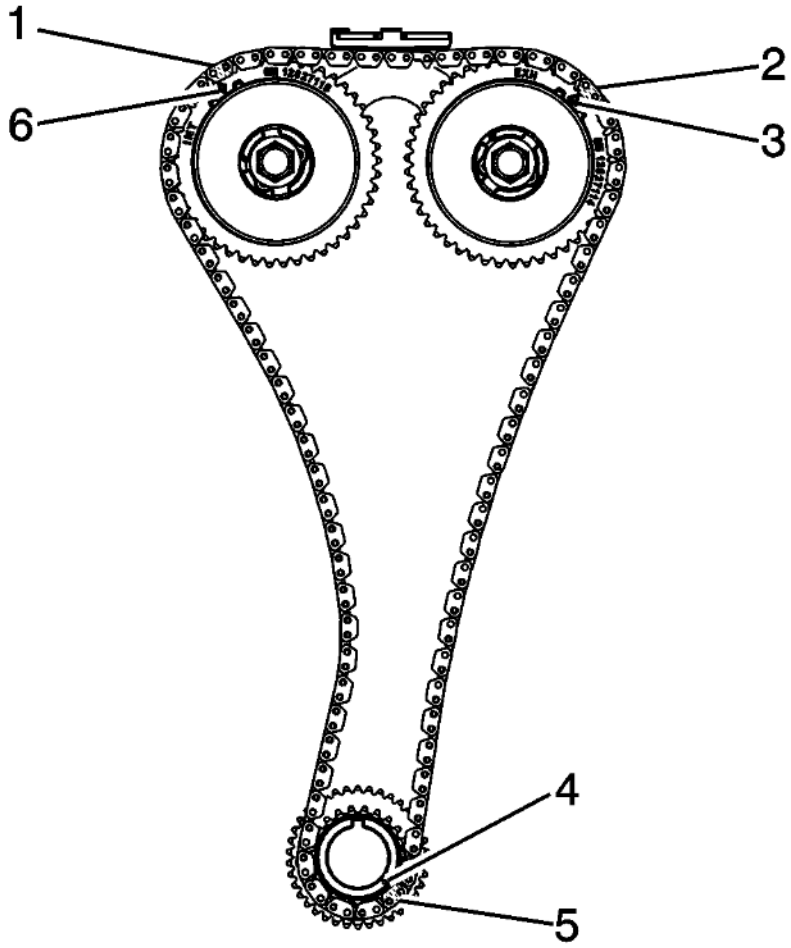

Fig. 68: Timing Chain Oil Nozzle
Courtesy of GENERAL MOTORS COMPANY

12. Verify the timing links on the timing chain are properly aligned to the timing marks:
    1. The timing links (1, 2) are aligned to the appropriate timing marks on the camshaft actuators (6, 3).
    2. The unique colored link (5) is aligned to the timing mark on the crankshaft sprocket (4).
13. If they are not, repeat the portion of the procedure necessary to align the timing marks.

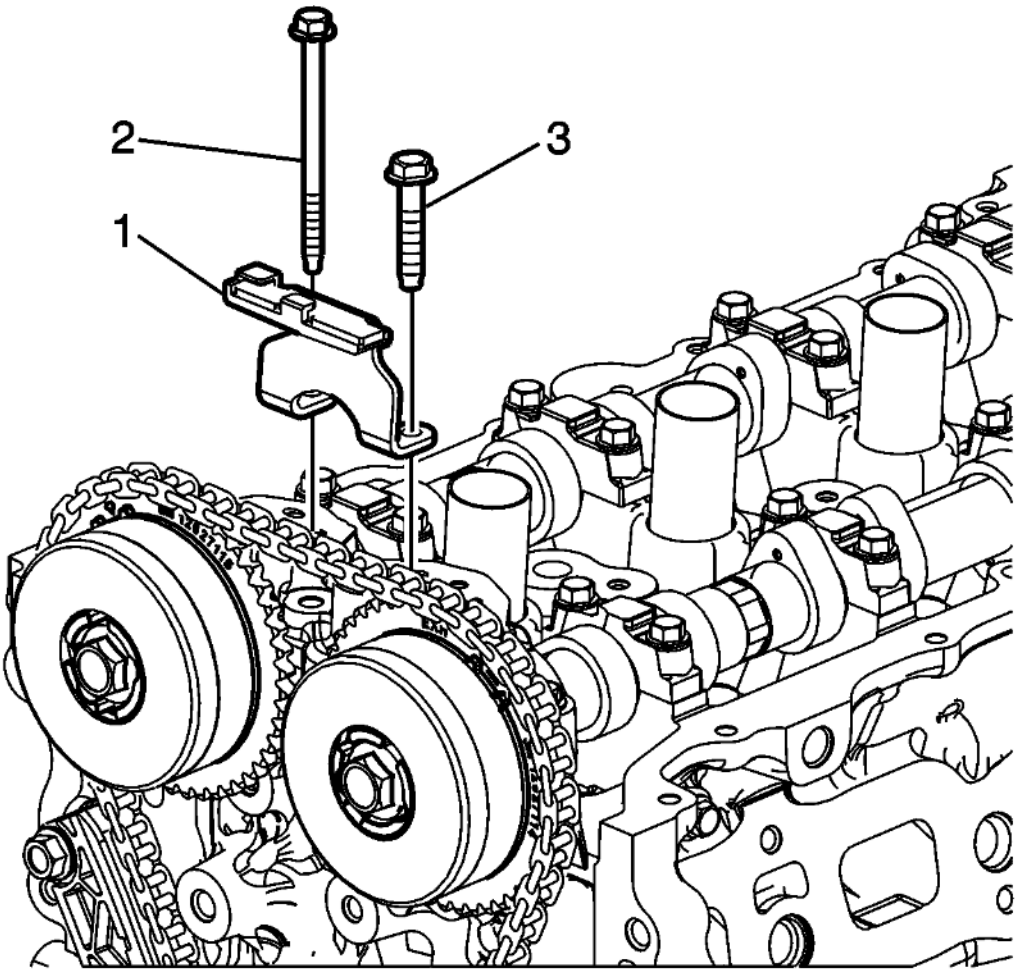

Fig. 69: Upper Timing Chain Guide Bolts
Courtesy of GENERAL MOTORS COMPANY

14. Install the timing chain guide (1) and bolts (2, 3) finger tight.

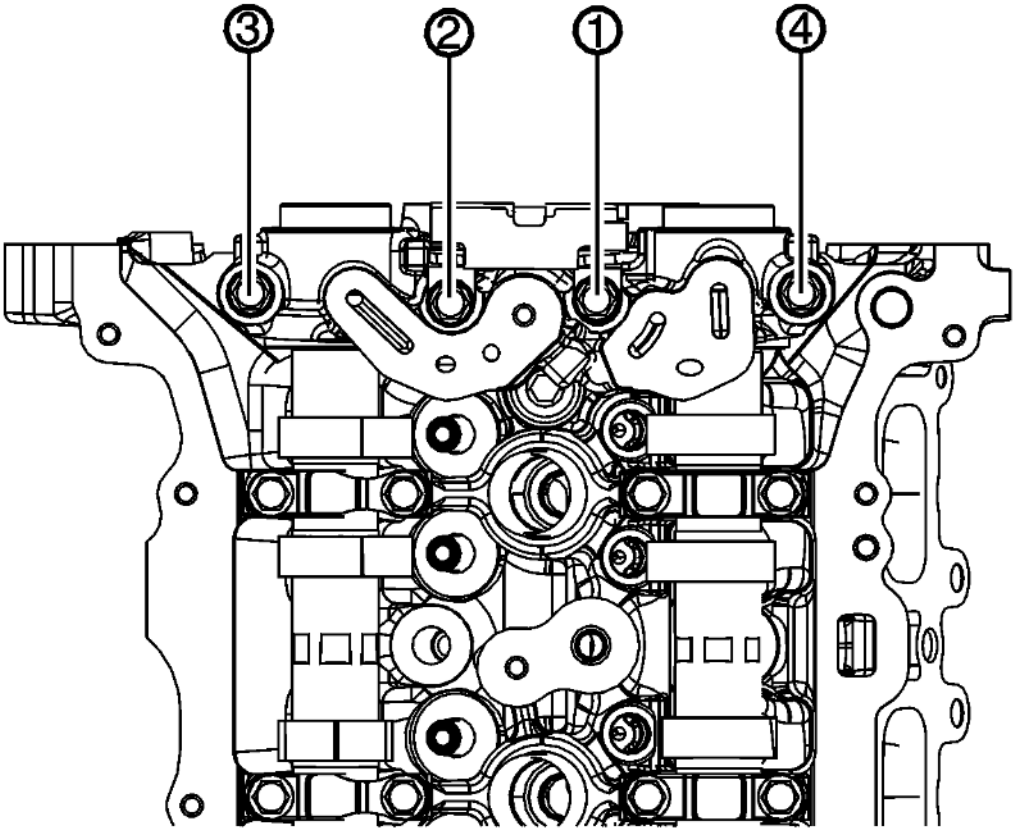

Fig. 70: Front Camshaft Cap Bolt Tightening Sequence
Courtesy of GENERAL MOTORS COMPANY

15. Tighten the front camshaft cap bolts in sequence to 10 N.m (89 lb in) twice.
16. Rotate the crankshaft clockwise to see if either of the actuators or the crankshaft sprocket jump timing chain teeth. If this occurs, repeat procedure to align the timing marks.

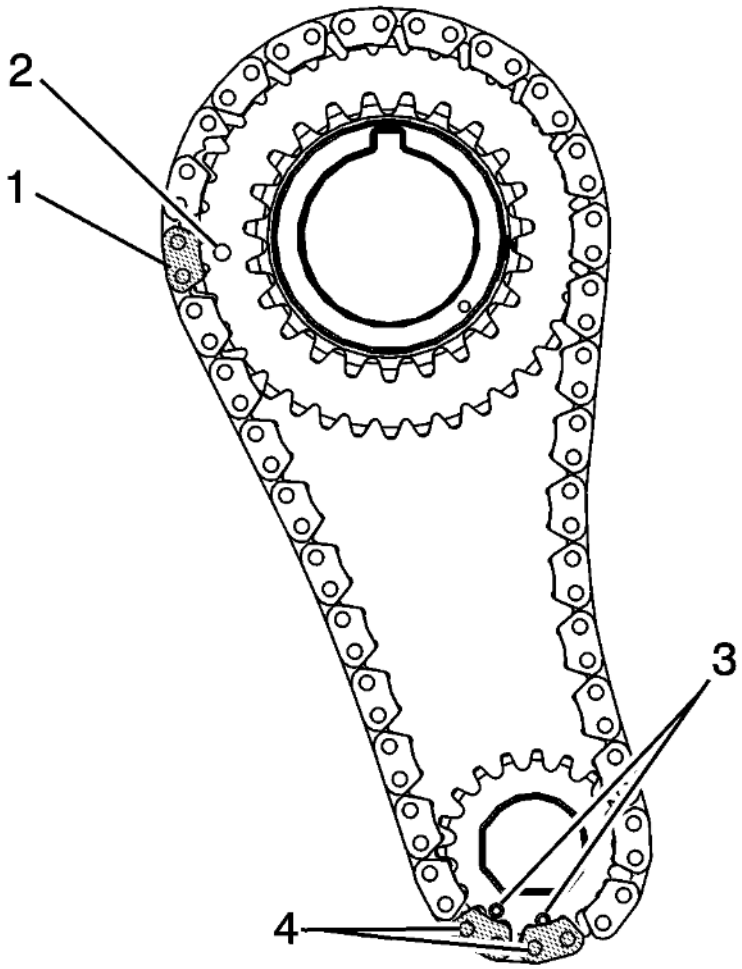

Fig. 71: Timing Link Lines Up And Timing Mark
Courtesy of GENERAL MOTORS COMPANY

17. Verify the timing links on the balance chain are properly aligned to the timing marks:
    1. The timing link (1) is aligned to the timing mark on the crankshaft sprocket (2).
    2. The adjacent timing links (4) are aligned with both timing marks (3) on the balancer shaft driven sprocket.
18. Install the engine front cover. Refer to **Engine Front Cover Replacement**.

CAMSHAFT TIMING CHAIN AND TENSIONER REPLACEMENT

Removal Procedure

1. Remove the engine front cover. Refer to **Engine Front Cover Replacement**.

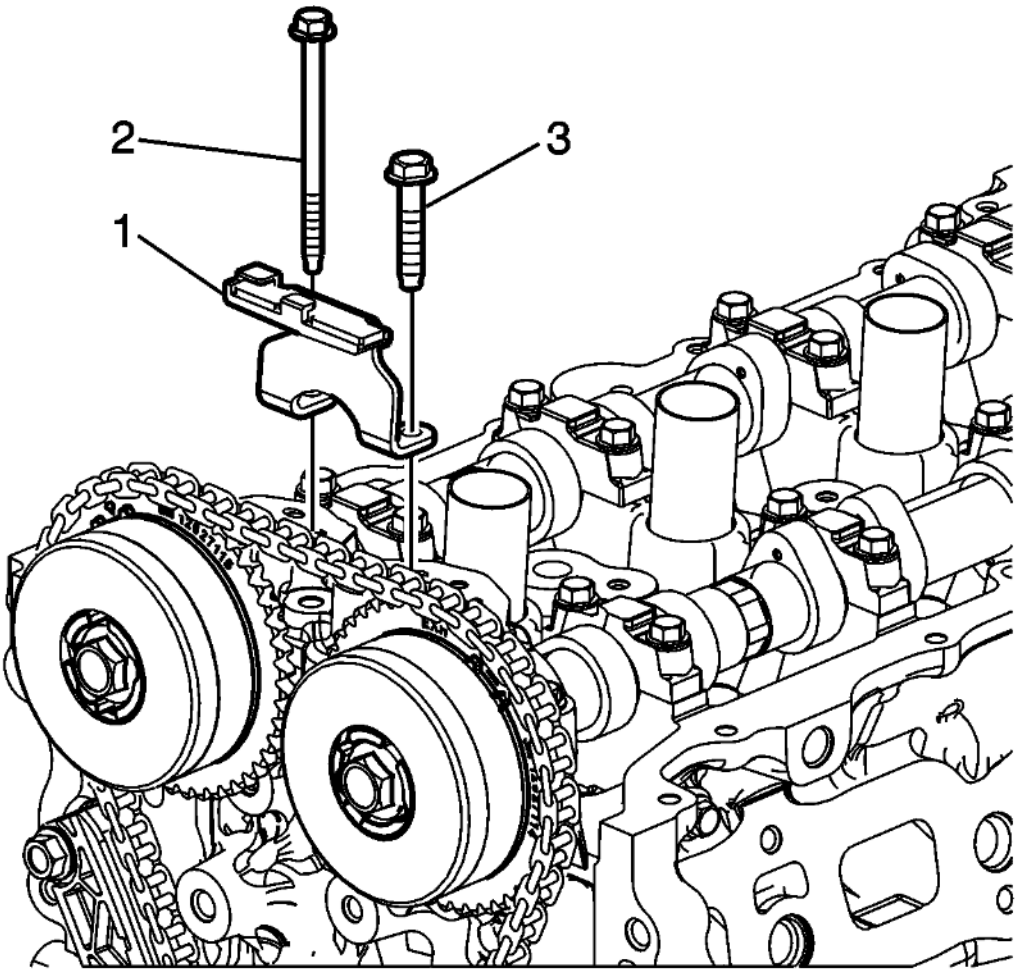

Fig. 72: Upper Timing Chain Guide Bolts
Courtesy of GENERAL MOTORS COMPANY

2. Remove the upper timing chain guide bolts (2, 3).
3. Remove the upper timing chain guide (1).

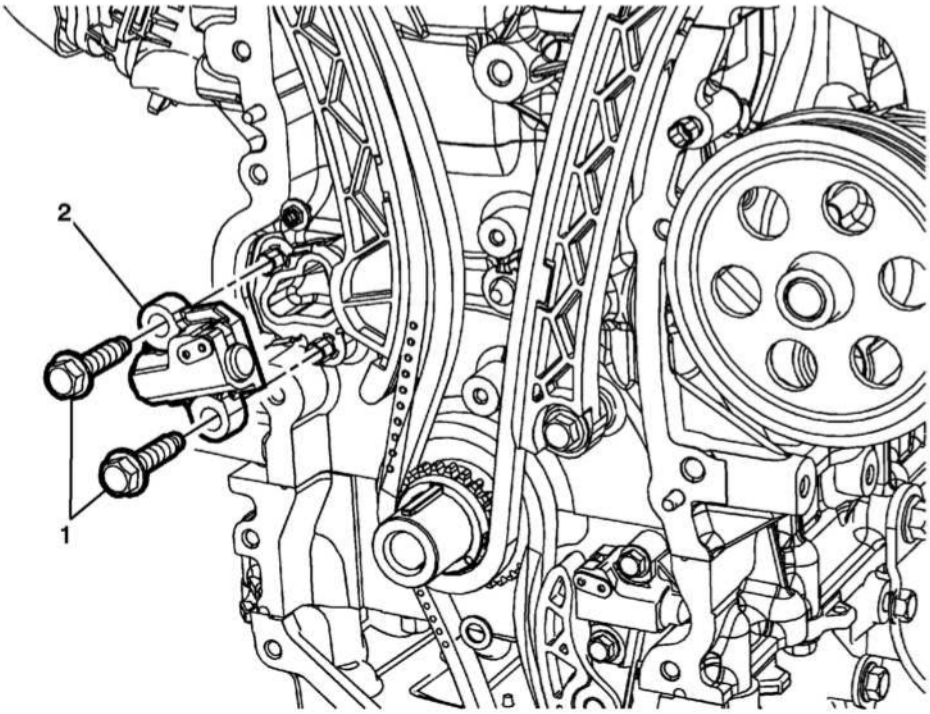

Fig. 73: Timing Chain Tensioner Bolts And Timing Chain Tensioner
Courtesy of GENERAL MOTORS COMPANY

4. Remove the timing chain tensioner bolts (1) and timing chain tensioner (2).

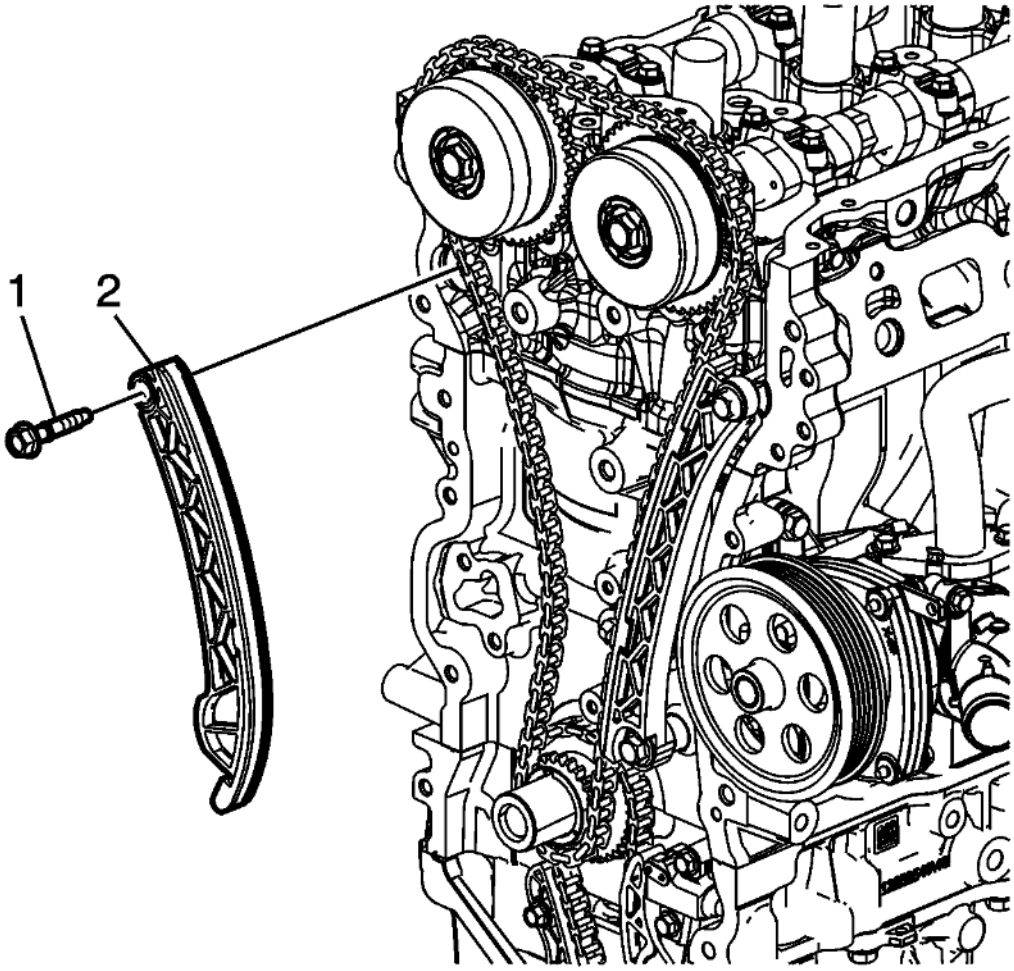

Fig. 74: Timing Chain Tensioner Pivot Arm Bolt
Courtesy of GENERAL MOTORS COMPANY

5. Remove the timing chain tensioner pivot arm bolt (1).
6. Remove the timing chain tensioner pivot arm (2).

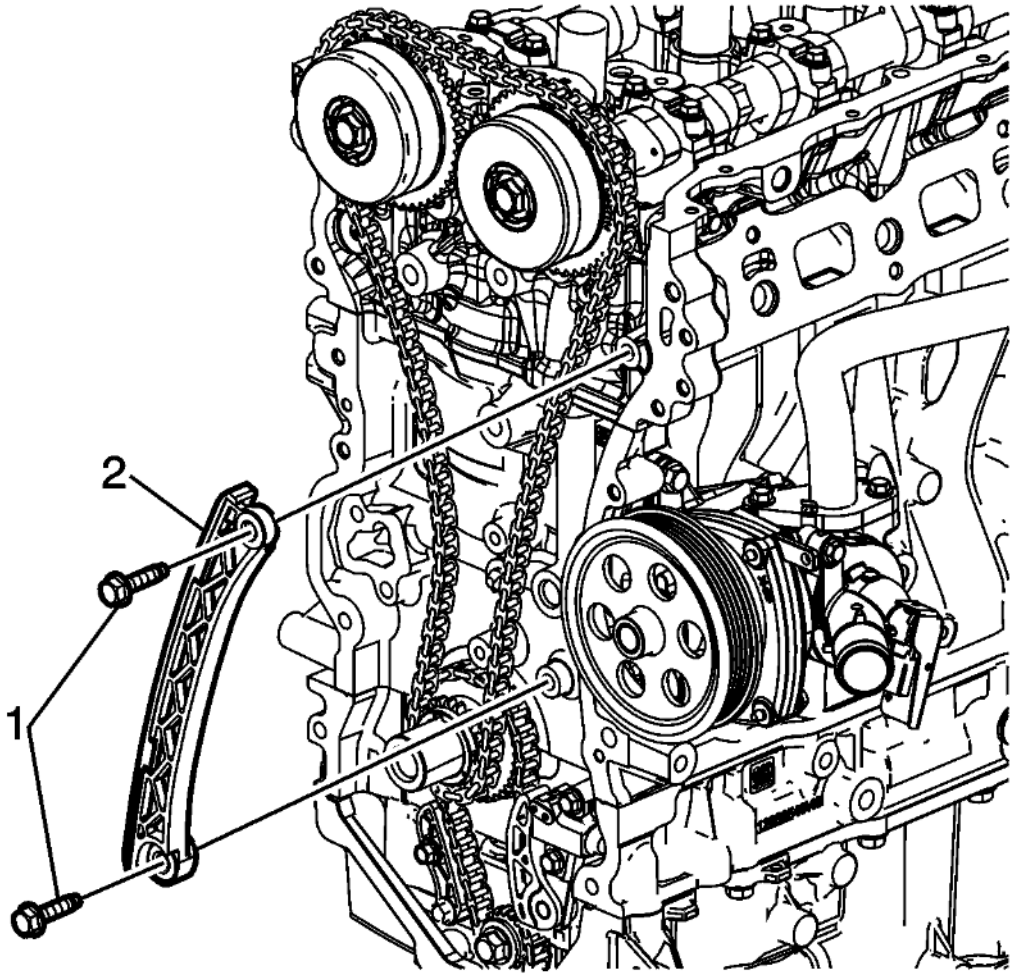

Fig. 75: Timing Chain Guide Bolts
Courtesy of GENERAL MOTORS COMPANY

7. Remove the timing chain guide bolts (1).
8. Remove the timing chain guide (2).

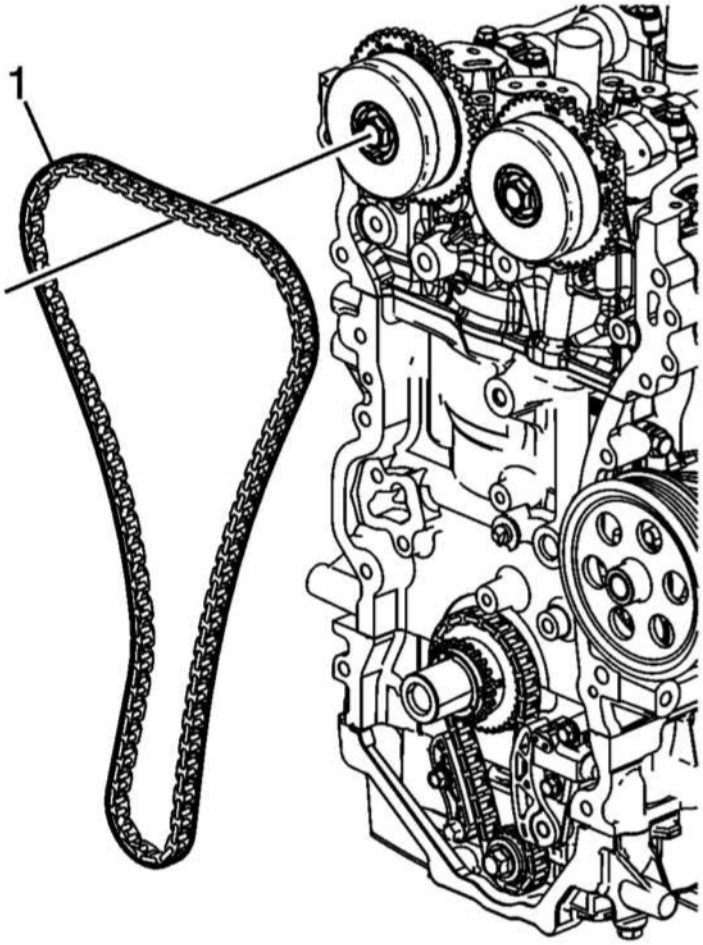

Fig. 76: Timing Chain
Courtesy of GENERAL MOTORS COMPANY

9. Remove the timing chain (1).

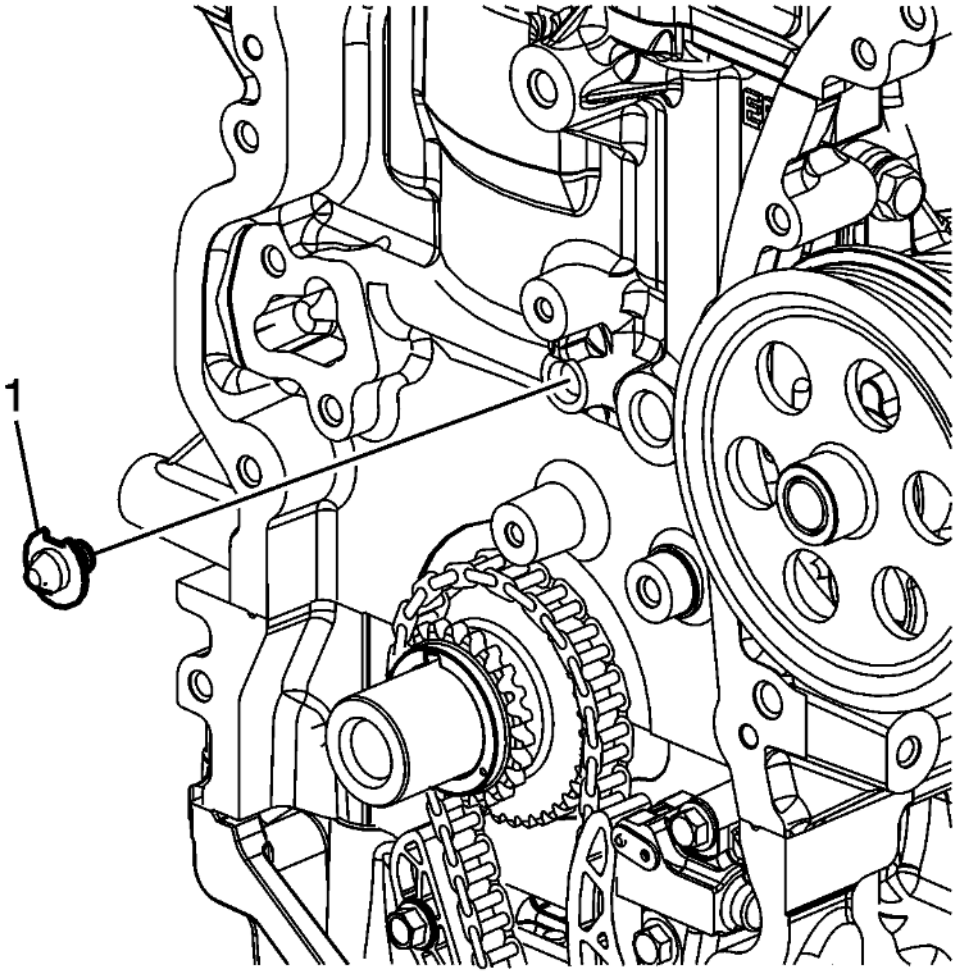

Fig. 77: Timing Chain Oil Nozzle
Courtesy of GENERAL MOTORS COMPANY

10. Remove the timing chain oil nozzle (1).
11. For camshaft timing chain, sprocket, and tensioner cleaning and inspection. Refer to **Camshaft Timing Chain, Sprocket, and Tensioner Cleaning and Inspection** .

Installation Procedure

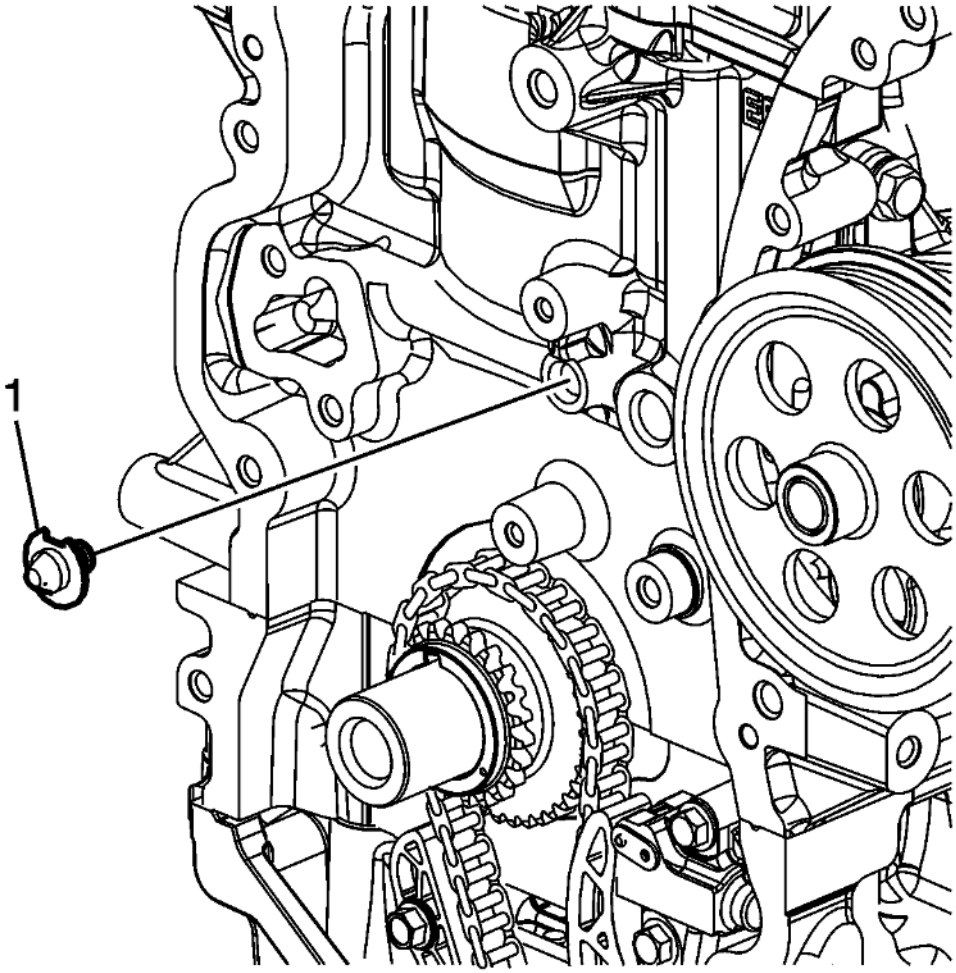

Fig. 78: Timing Chain Oil Nozzle
Courtesy of GENERAL MOTORS COMPANY

NOTE: **Ensure the timing chain oil nozzle is rotated with the notch facing upward, and aligned with the tab on the engine block.**

1. Install the timing chain oil nozzle (1).

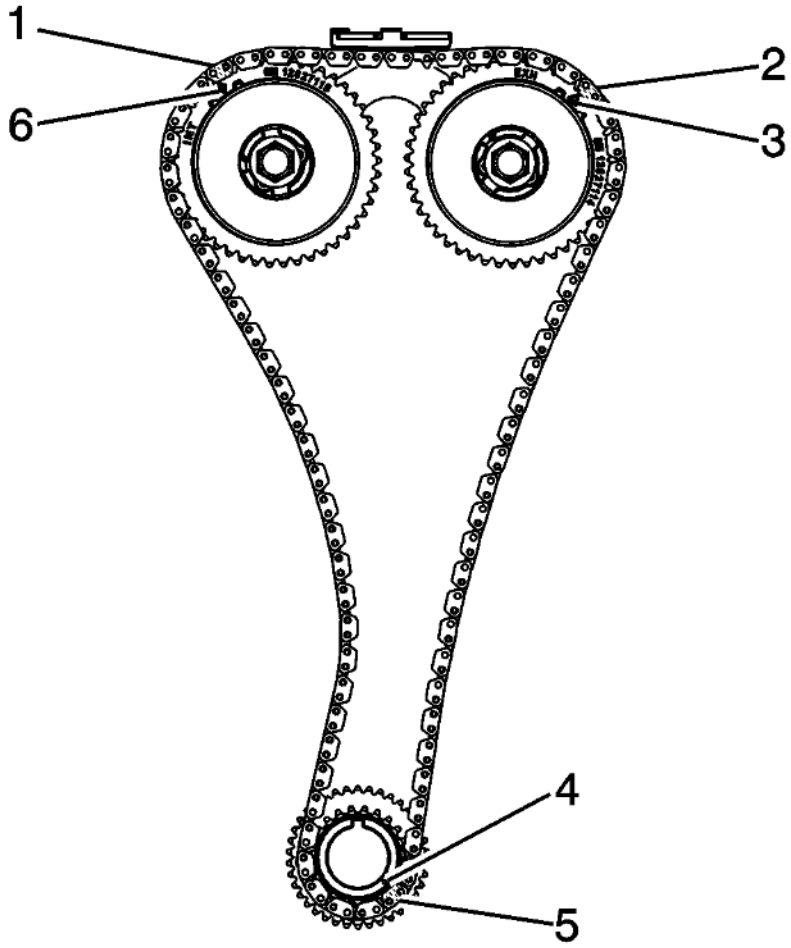

Fig. 79: Timing Chain Oil Nozzle
Courtesy of GENERAL MOTORS COMPANY

NOTE: **There are three colored links on the timing chain. The two links that align to the timing marks on the actuators are the same color. The timing link that aligns with the timing mark on the crankshaft sprocket is a unique color. Use the following procedure to line up the links with the actuators. Orient the chain so that the colored links are visible.**

2. Loop the timing chain over the intake and exhaust camshaft actuators, aligning the unique colored link (2) with the timing mark on the exhaust camshaft actuator (3).

NOTE: **The unique colored links will not initially align with the intake actuator timing mark or the crankshaft sprocket timing mark.**

3. Ensure the crankshaft key in the 12 O'clock position. Loop the timing chain onto the crankshaft sprocket.

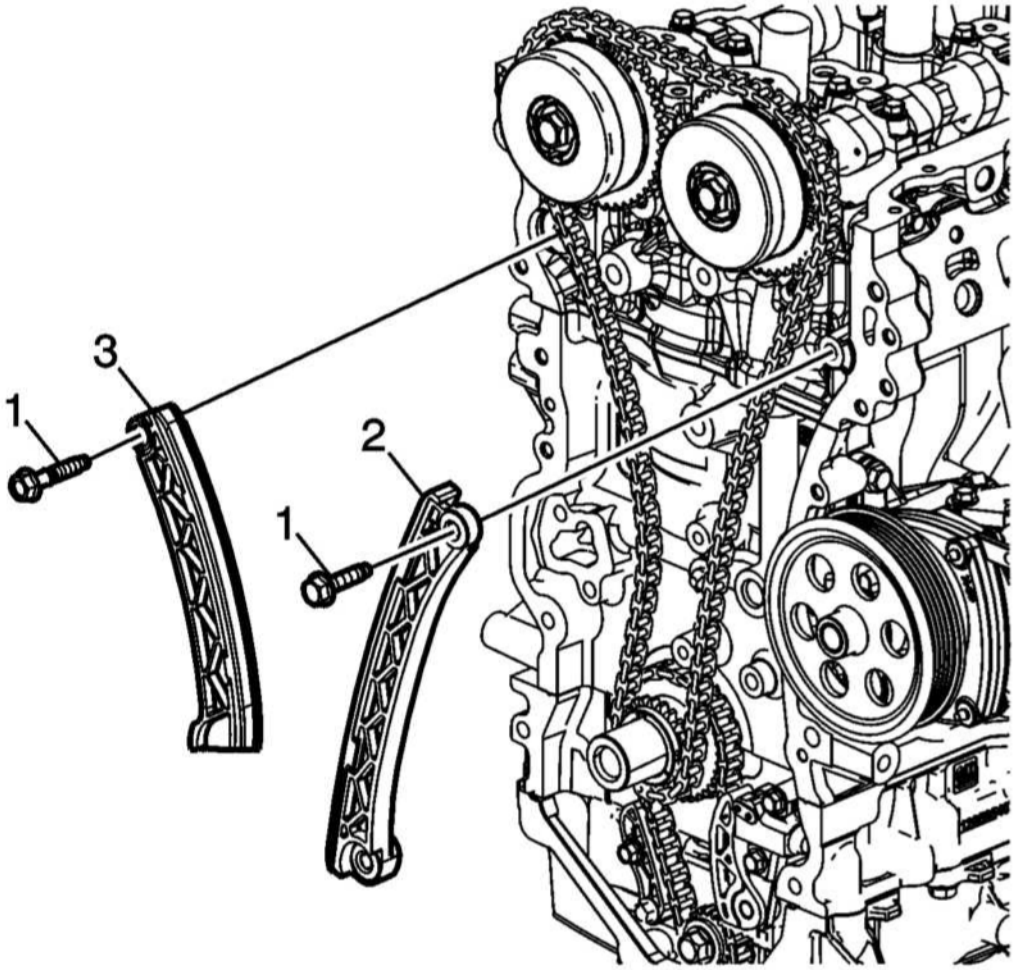

Fig. 80: Timing Chain Guide And Upper Bolt
Courtesy of GENERAL MOTORS COMPANY

NOTE: **Timing will be established before the final install and torque of the guide bolts.**

4. Install the timing chain guide (2) and upper bolt (1) only, finger tight.
5. Install the timing chain tensioner pivot arm (3).
6. Install the pivot arm bolt (1) finger tight.

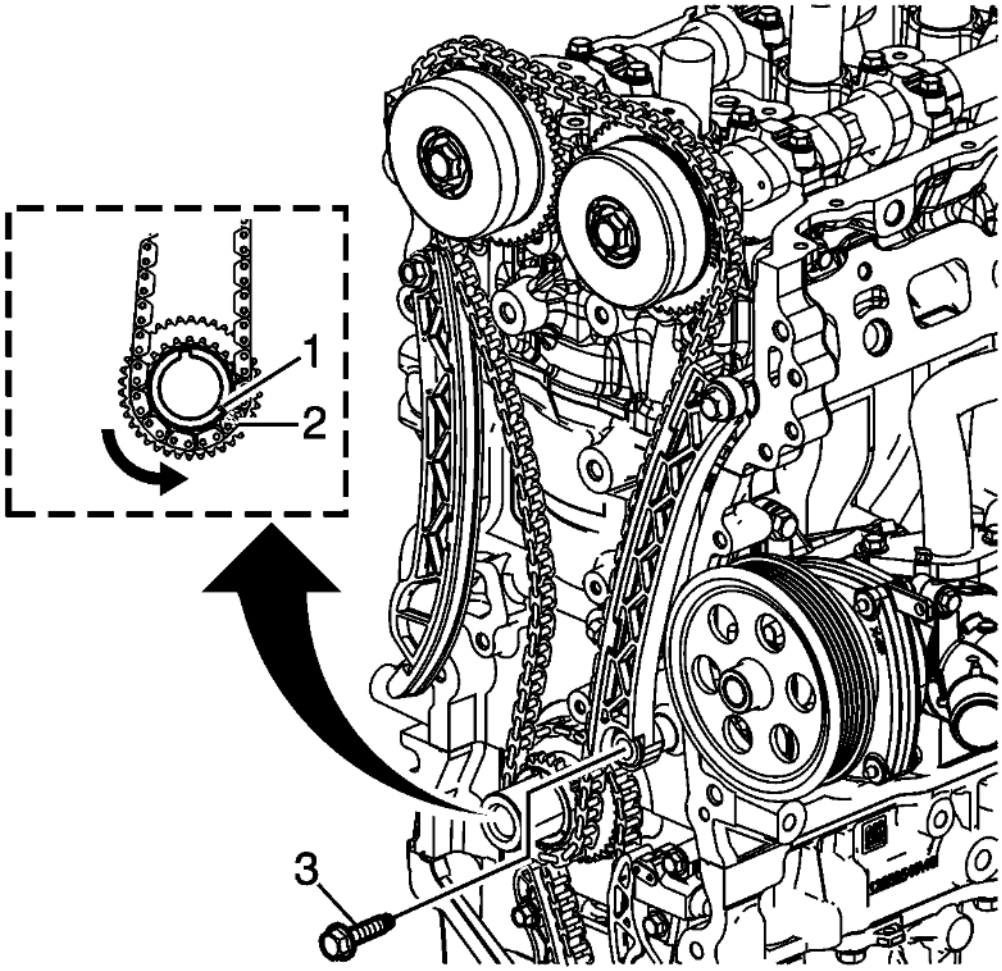

Fig. 81: Crankshaft Sprocket
Courtesy of GENERAL MOTORS COMPANY

7. With a suitable tool, rotate the crankshaft counterclockwise to align the timing mark on the crankshaft sprocket (1) with the timing link (2).

NOTE:

- **Continue to rotate the crankshaft counterclockwise as necessary to maintain timing alignment.**
- **Ensure that the alignment mark on the exhaust camshaft actuator remains aligned with the timing link.**

8. Rotate the lower end of the fixed timing chain guide into installation position and install the lower bolt (3).

CAUTION: Refer to Fastener Caution .

9. Tighten the timing chain guide upper and lower bolts to 25 N.m (18 lb ft).

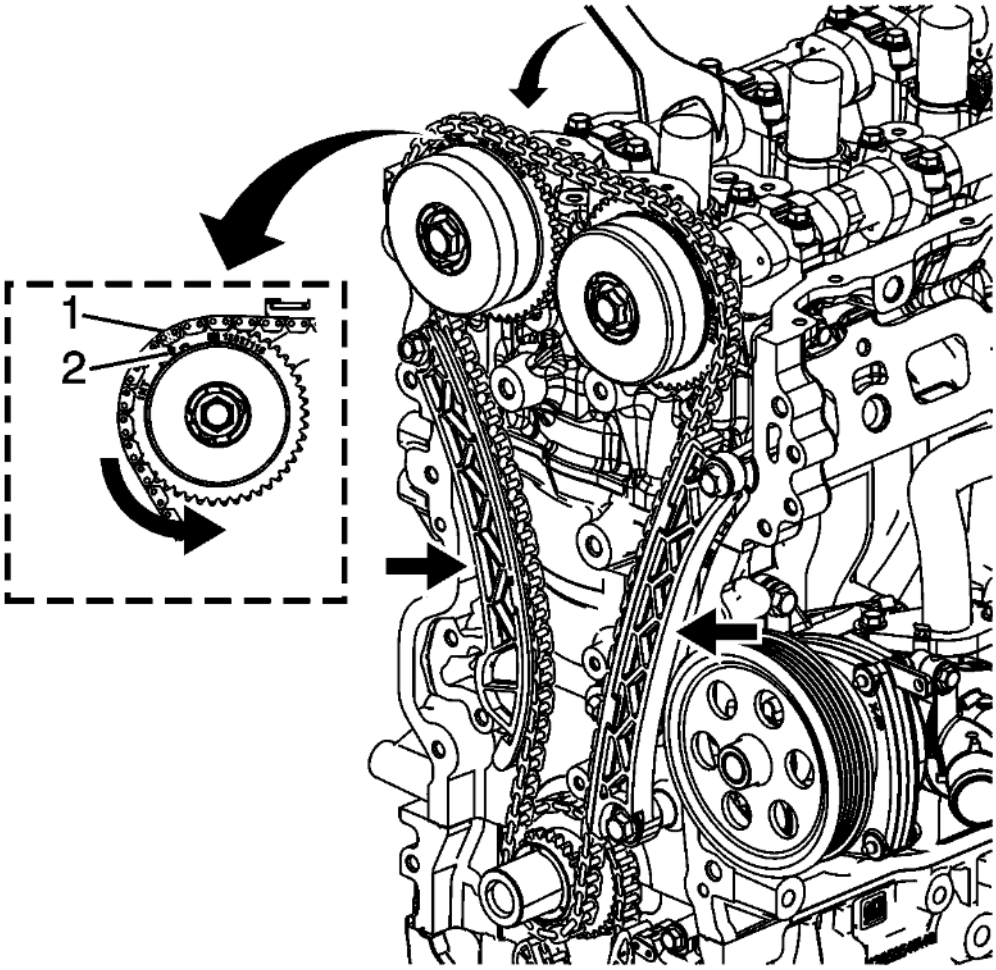

Fig. 82: Timing Mark On Intake Actuator
Courtesy of GENERAL MOTORS COMPANY

NOTE:

- **The timing for the exhaust camshaft actuator and the crankshaft sprocket has been established.**
- **Applying or loosening pressure by hand between the timing chain guides will allow the chain to slip or bind during counterclockwise rotation of the camshaft.**

10. Using a suitable tool, rotate the intake camshaft counterclockwise until the timing mark on the intake actuator (2) is aligned with the timing link (1). Maintain tension on intake camshaft until the timing chain tensioner can be installed and activated.

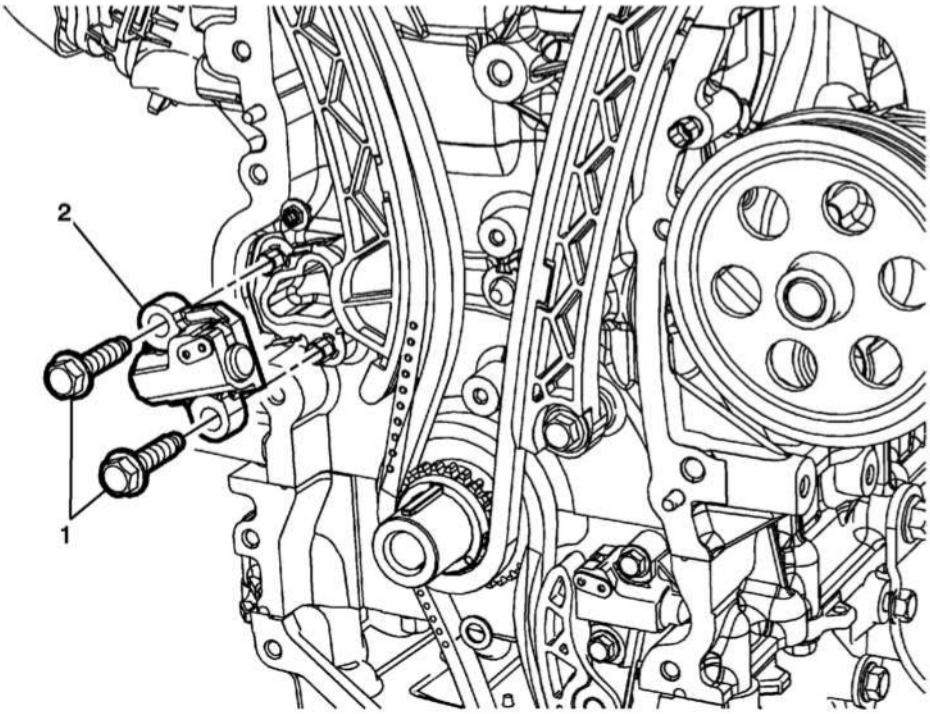

Fig. 83: Timing Chain Tensioner Bolts And Timing Chain Tensioner
Courtesy of GENERAL MOTORS COMPANY

11. Install the timing chain tensioner (2) and tighten timing chain tensioner bolts (1) to 25 (18 lb ft)

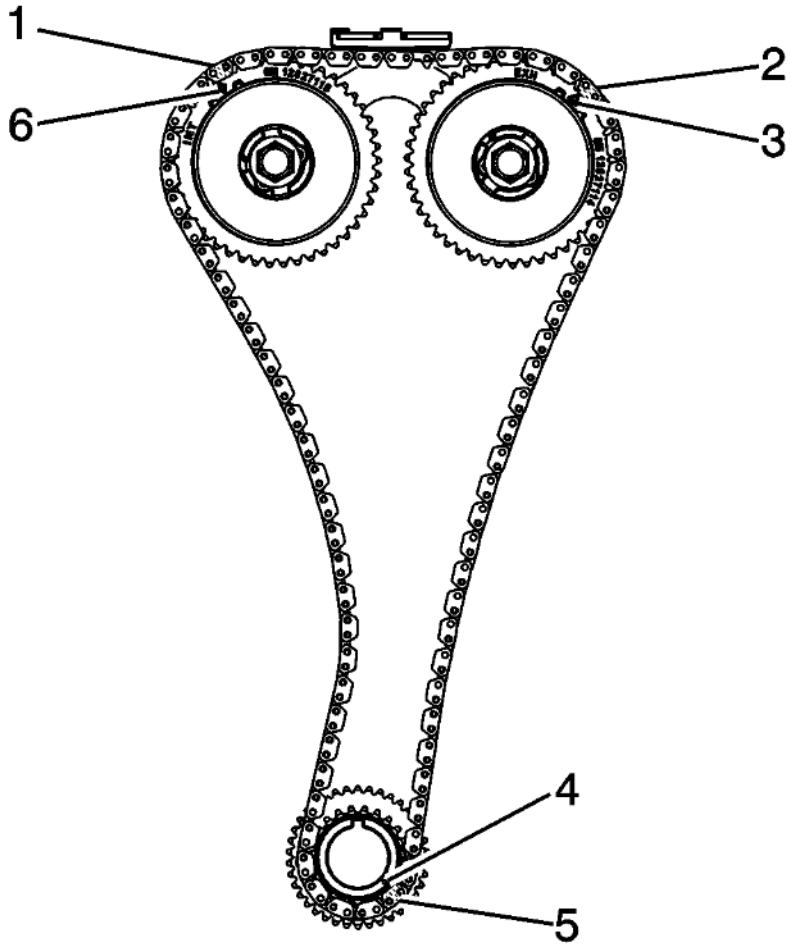

Fig. 84: Timing Chain Oil Nozzle
Courtesy of GENERAL MOTORS COMPANY

12. Verify the timing links on the timing chain are properly aligned to the timing marks:
    1. The timing links (1, 2) are aligned to the appropriate timing marks on the camshaft actuators (6, 3).
    2. The unique colored link (5) is aligned to the timing mark on the crankshaft sprocket (4).
13. If they are not, repeat the portion of the procedure necessary to align the timing marks.

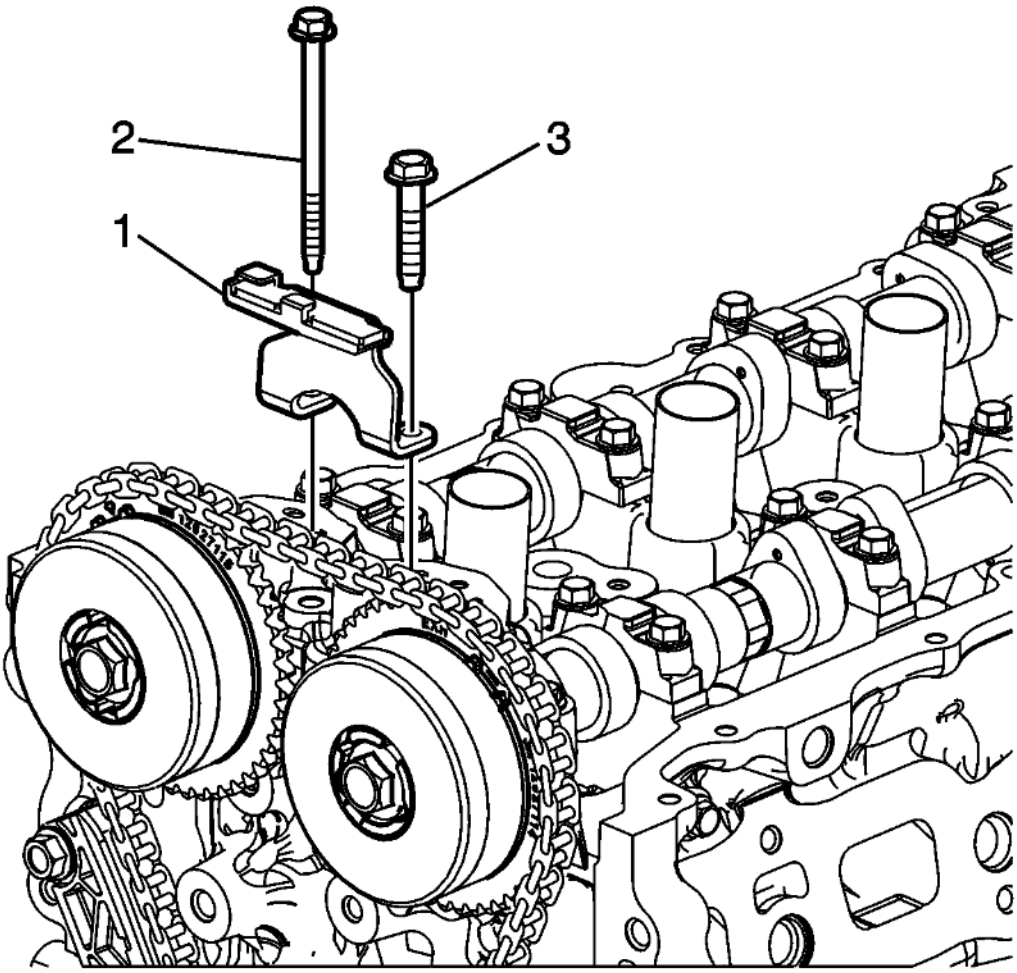

Fig. 85: Upper Timing Chain Guide Bolts
Courtesy of GENERAL MOTORS COMPANY

14. Install the timing chain guide (1) and bolts (2, 3) finger tight.

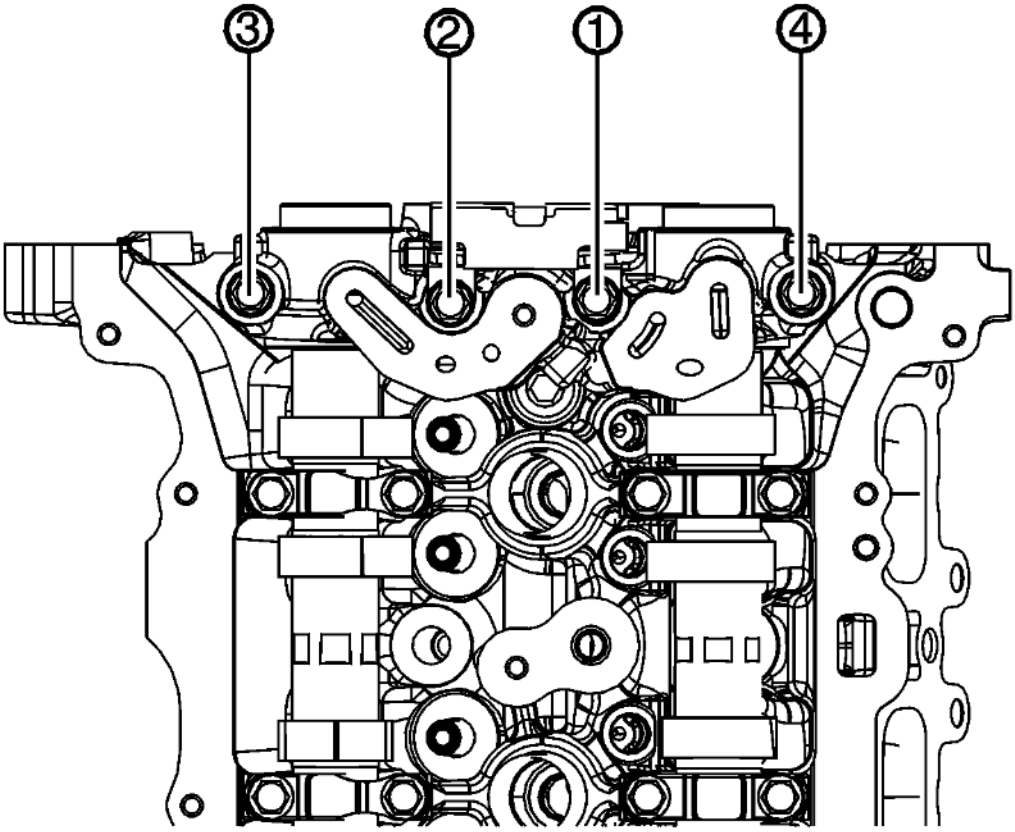

Fig. 86: Front Camshaft Cap Bolt Tightening Sequence
Courtesy of GENERAL MOTORS COMPANY

15. Tighten the front camshaft cap bolts in sequence to 10 N.m (89 lb in) twice.
16. Rotate the crankshaft clockwise to see if either of the actuators or the crankshaft sprocket jump timing chain teeth. If this occurs, repeat procedure to align the timing marks.

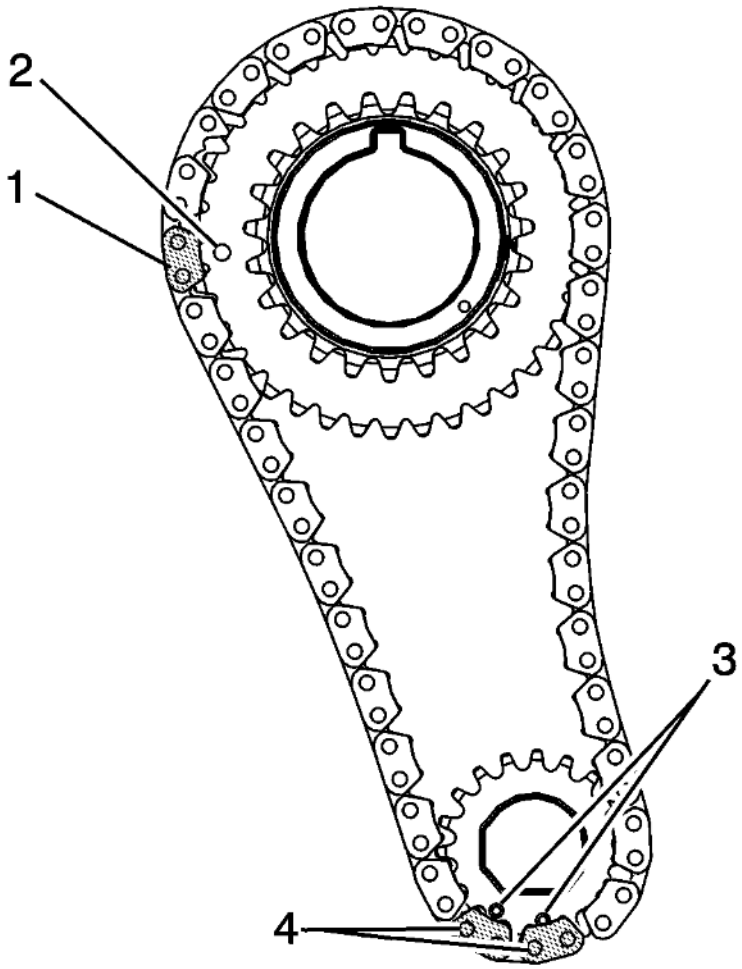

Fig. 87: Timing Link Lines Up And Timing Mark
Courtesy of GENERAL MOTORS COMPANY

17. Verify the timing links on the balance chain are properly aligned to the timing marks:
    1. The timing link (1) is aligned to the timing mark on the crankshaft sprocket (2).
    2. The adjacent timing links (4) are aligned with both timing marks (3) on the balancer shaft driven sprocket.
18. Install the engine front cover. Refer to **Engine Front Cover Replacement**.

CAMSHAFT COVER REPLACEMENT

Removal Procedure

1. Remove the positive crankcase ventilation hose/pipe/tube. Refer to **Positive Crankcase Ventilation Hose/Pipe/Tube Replacement (Camshaft Cover to Air Cleaner Resonator to Outlet Duct)**.

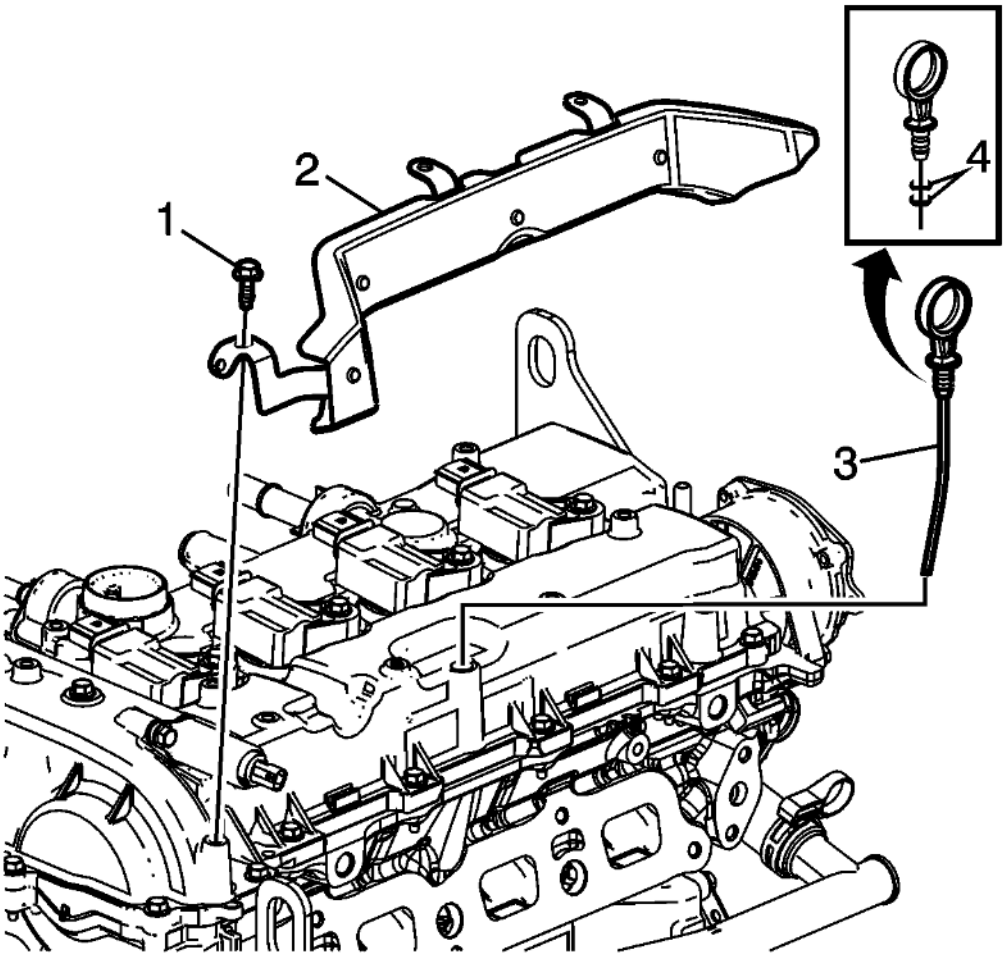

Fig. 88: Oil Level Indicator
Courtesy of GENERAL MOTORS COMPANY

2. Remove the oil level indicator (3). Inspect and replace the oil indicator O-ring seals (4), if necessary.
3. Remove the camshaft cover heat shield (2) and bolts (1).

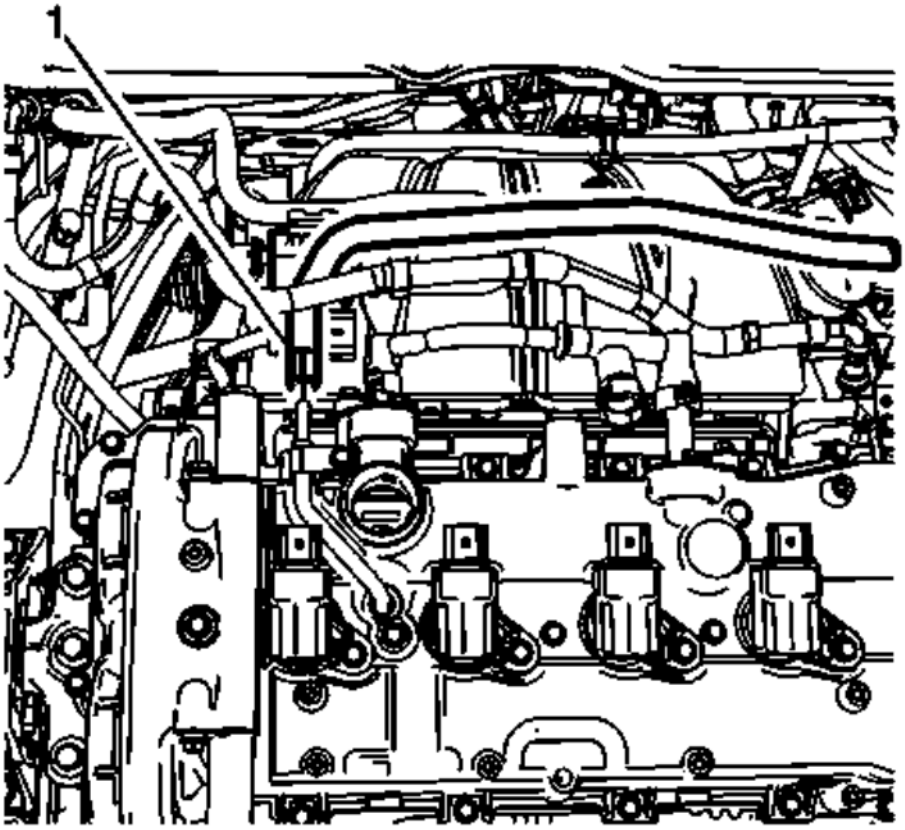

Fig. 89: Surge Tank Hose
Courtesy of GENERAL MOTORS COMPANY

4. Remove the surge tank hose (1).
5. Remove the engine coolant air bleed pipe. Refer to **Engine Coolant Air Bleed Pipe Replacement (LTG)** .

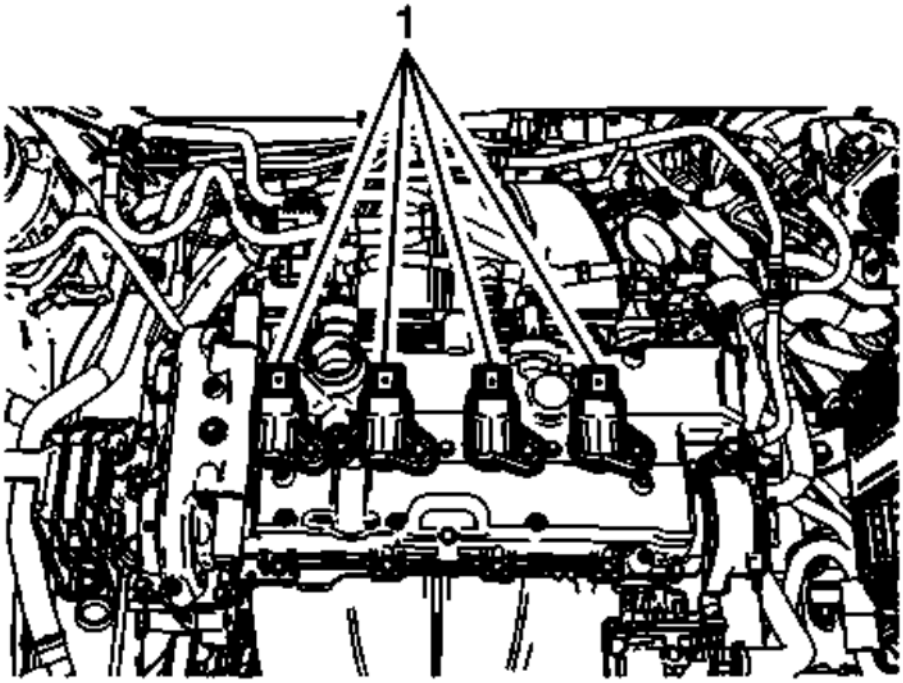

Fig. 90: Ignition Coils
Courtesy of GENERAL MOTORS COMPANY

6. Remove the ignition coils (1). Refer to **Ignition Coil Replacement** .

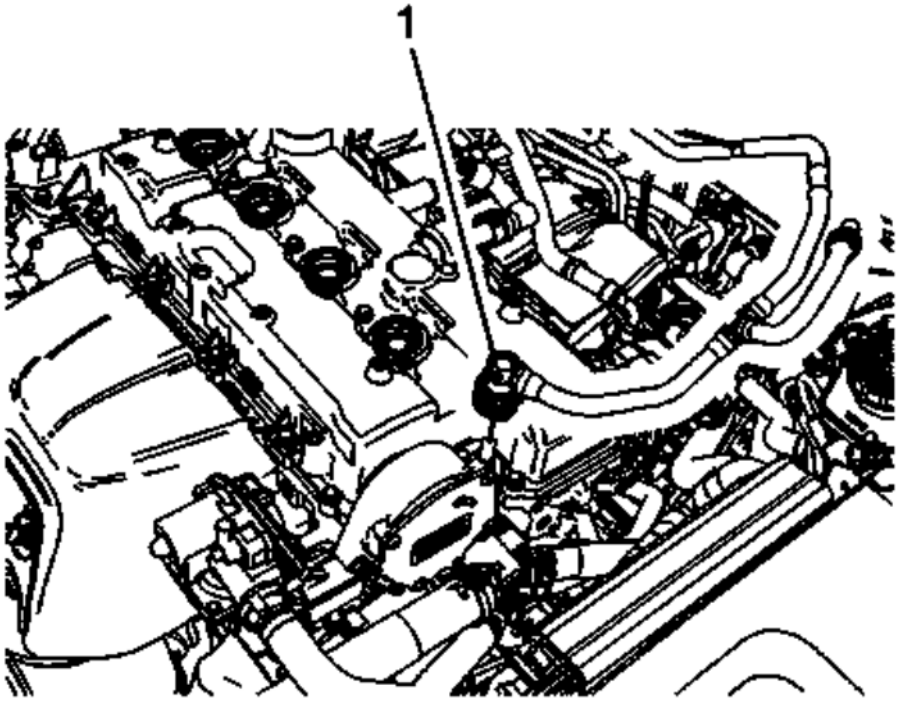

Fig. 91: Vacuum Booster Pipe
Courtesy of GENERAL MOTORS COMPANY

7. Disconnect vacuum booster pipe (1).

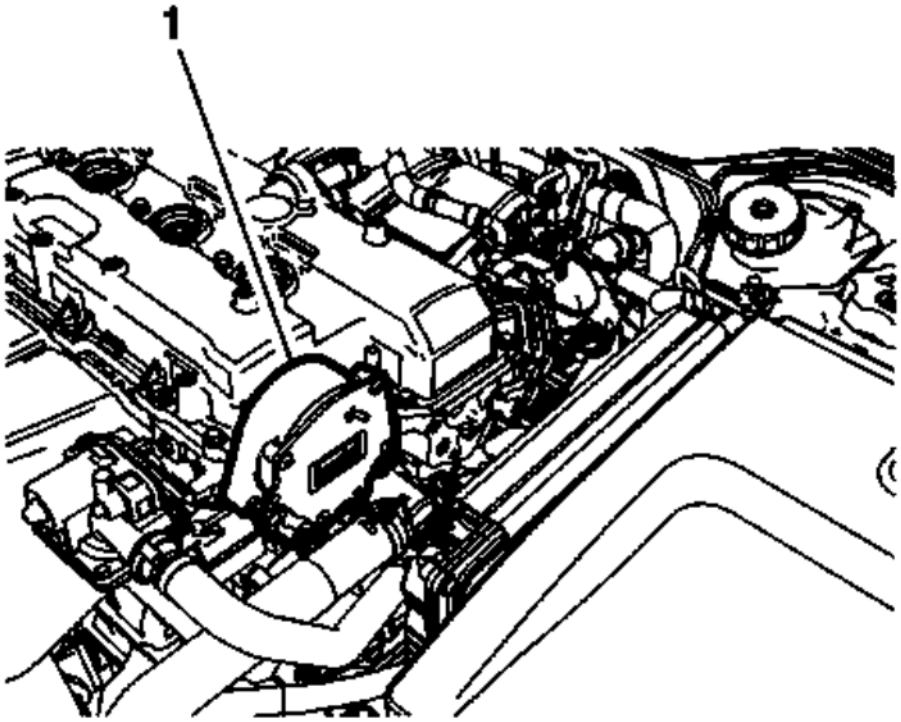

Fig. 92: Vacuum Assembly
Courtesy of GENERAL MOTORS COMPANY

8. Remove the vacuum assembly (1). Refer to **Vacuum Pump Replacement** .

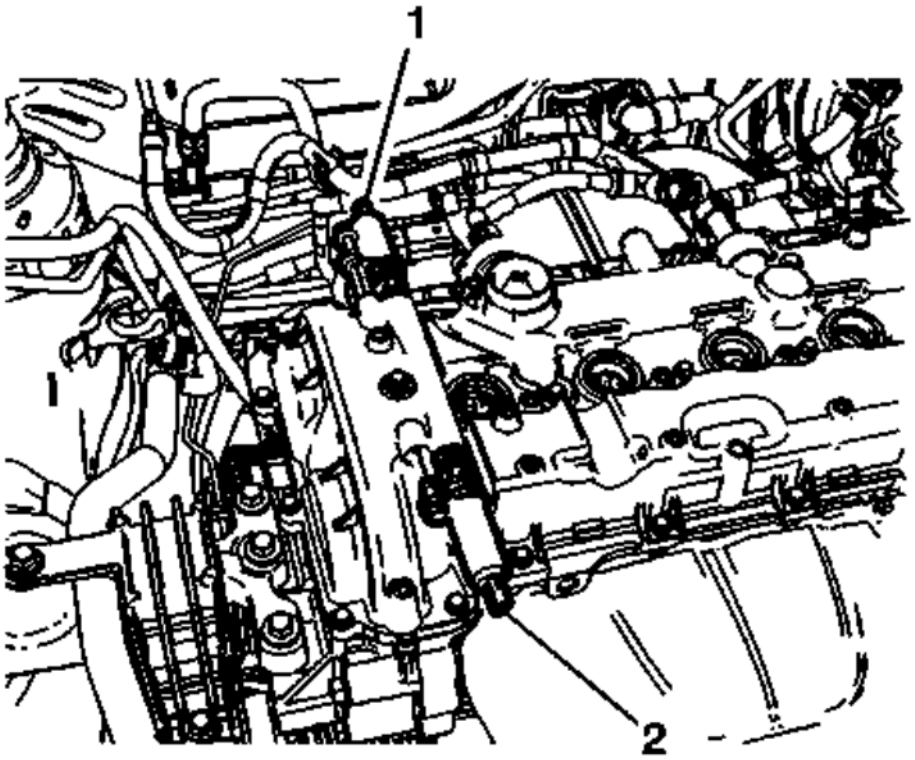

Fig. 93: Camshaft Position Actuator Intake Solenoid Valve
Courtesy of GENERAL MOTORS COMPANY

9. Remove the camshaft position actuator intake (1) solenoid valve. Refer to **Camshaft Position Actuator Intake Solenoid Valve Replacement**
10. Remove the camshaft position actuator exhaust (2) solenoid valve. Refer to **Camshaft Position Actuator Exhaust Solenoid Valve Replacement**

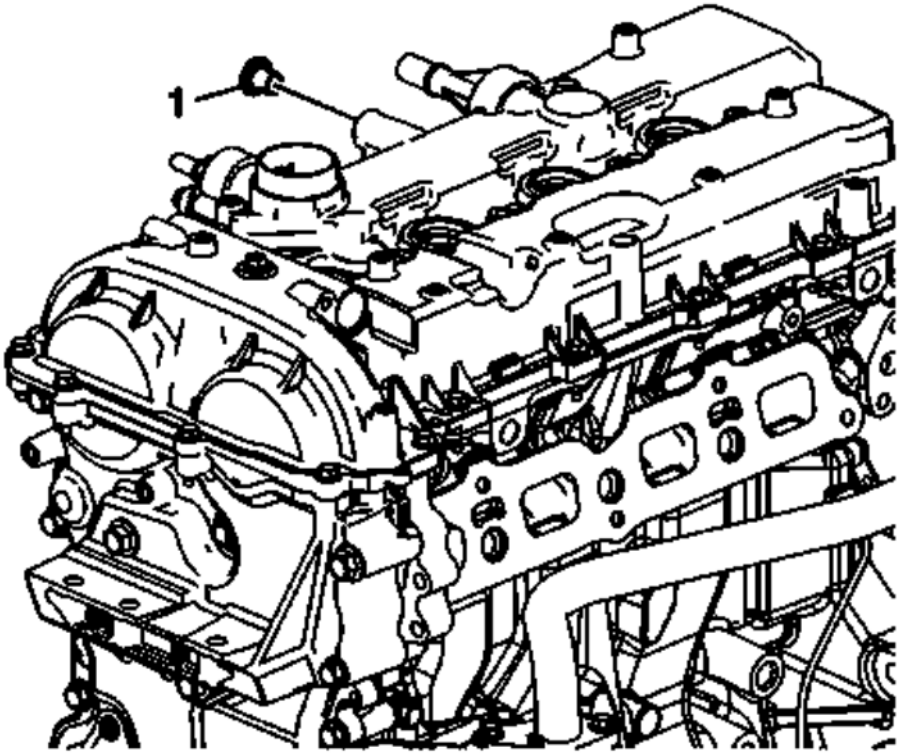

Fig. 94: Camshaft Cover Plug
Courtesy of GENERAL MOTORS COMPANY

11. Remove the camshaft cover plug (1).

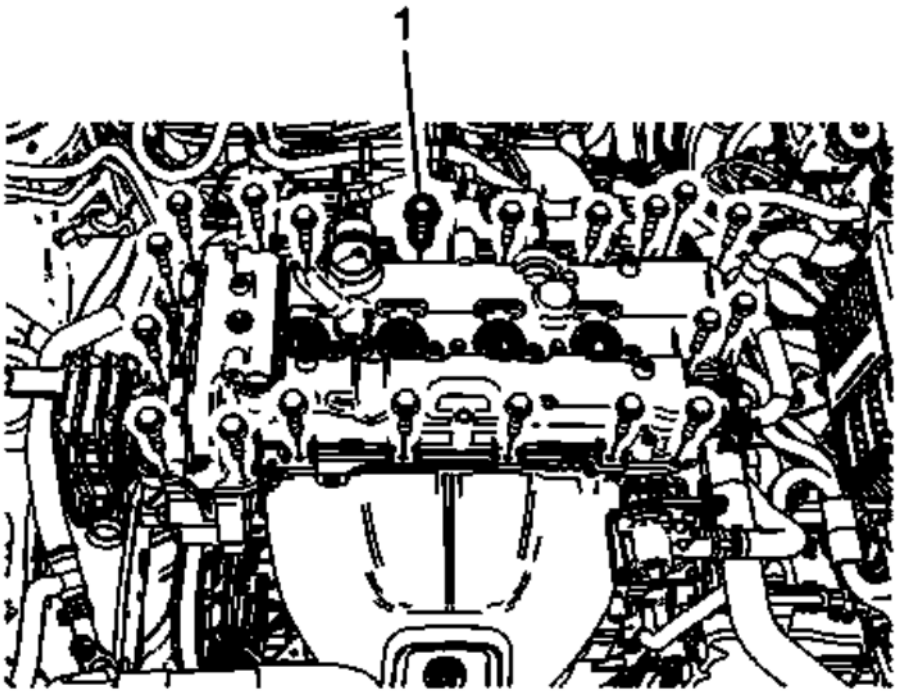

Fig. 95: Camshaft Cover Fasteners
Courtesy of GENERAL MOTORS COMPANY

12. Remove the camshaft cover fasteners (1).

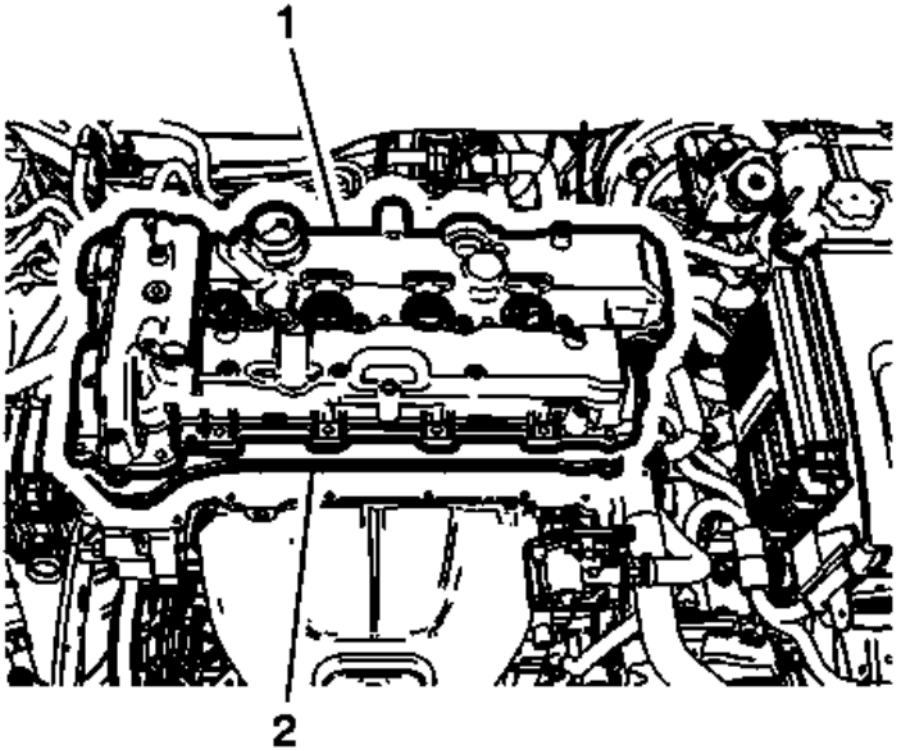

Fig. 96: Camshaft Cover And Gasket
Courtesy of GENERAL MOTORS COMPANY

13. Remove the camshaft cover (1) and gasket (2).
14. For cleaning and inspection. Refer to **Camshaft Cover Cleaning and Inspection** .

Installation Procedure

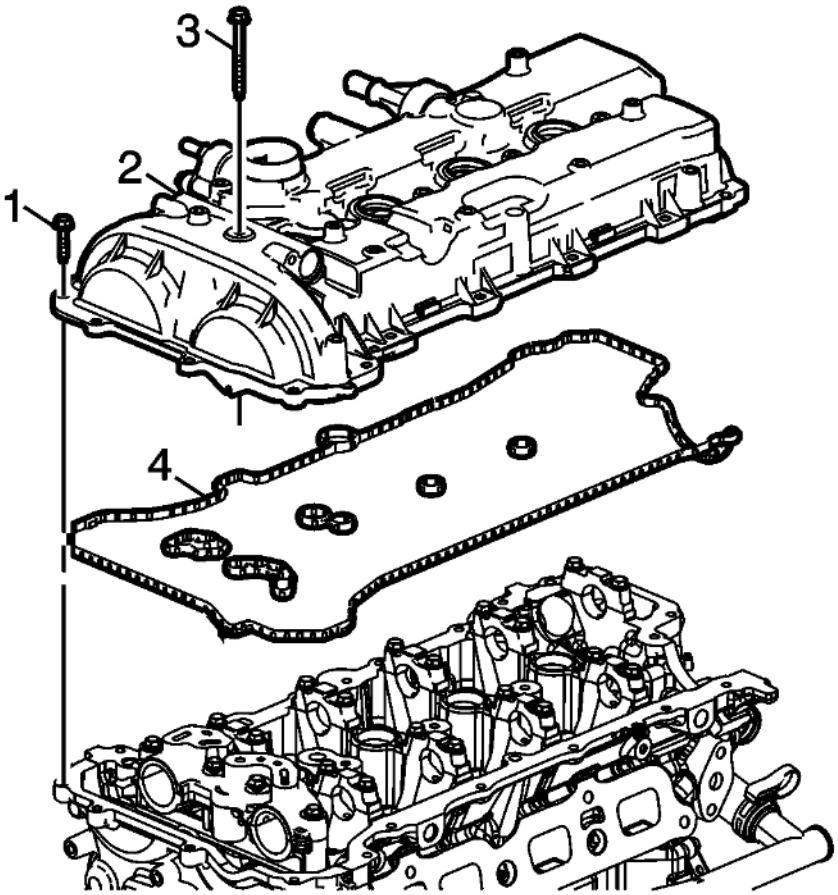

Fig. 97: Camshaft Cover Assembly
Courtesy of GENERAL MOTORS COMPANY

NOTE: **Add 14mm bead of sealant part # 12378521 at right and left T-Joint where front cover meets head and at rear of camshaft cover right and left T-Joint where vacuum pump bolts on.**

1. Assemble the camshaft cover (2) and a NEW gasket (4). Ensure that the gasket is located in the retaining groove in the camshaft cover.
2. Install the cover on the cylinder head and hand start the bolts (1, 3).

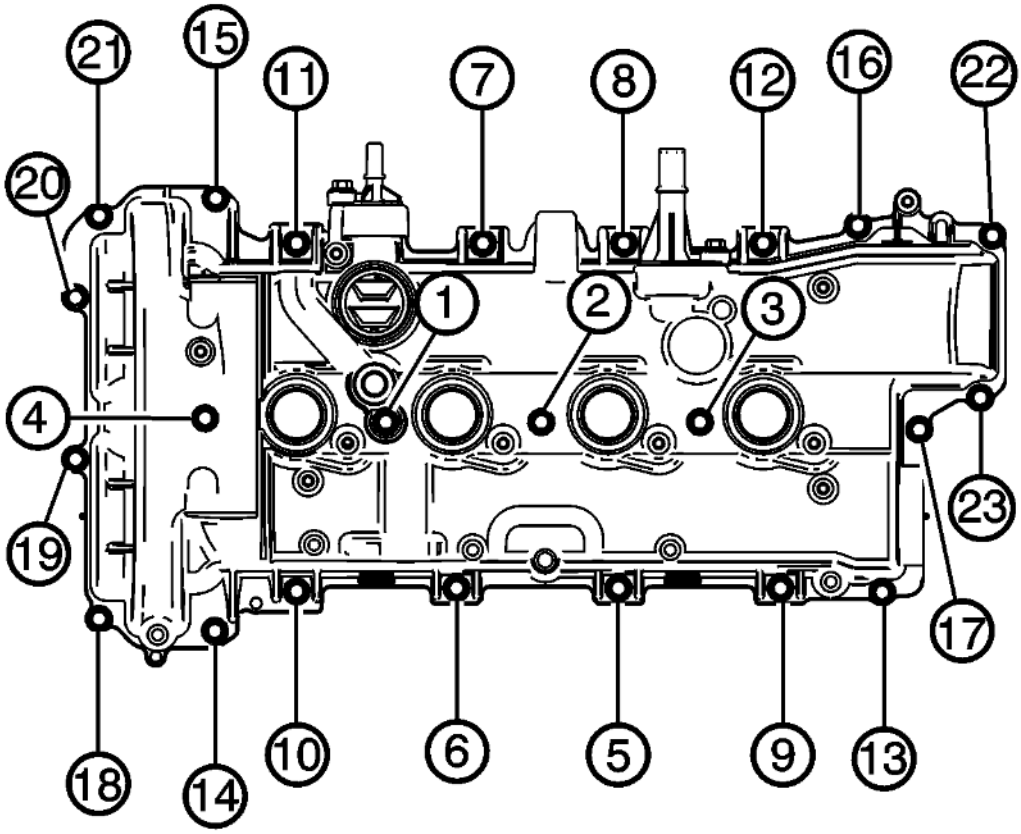

Fig. 98: Camshaft Cover Bolt Tightening Sequence
Courtesy of GENERAL MOTORS COMPANY

CAUTION: Refer to Fastener Caution .

3. Tighten the camshaft cover bolts in sequence to 10 (89 lb in).

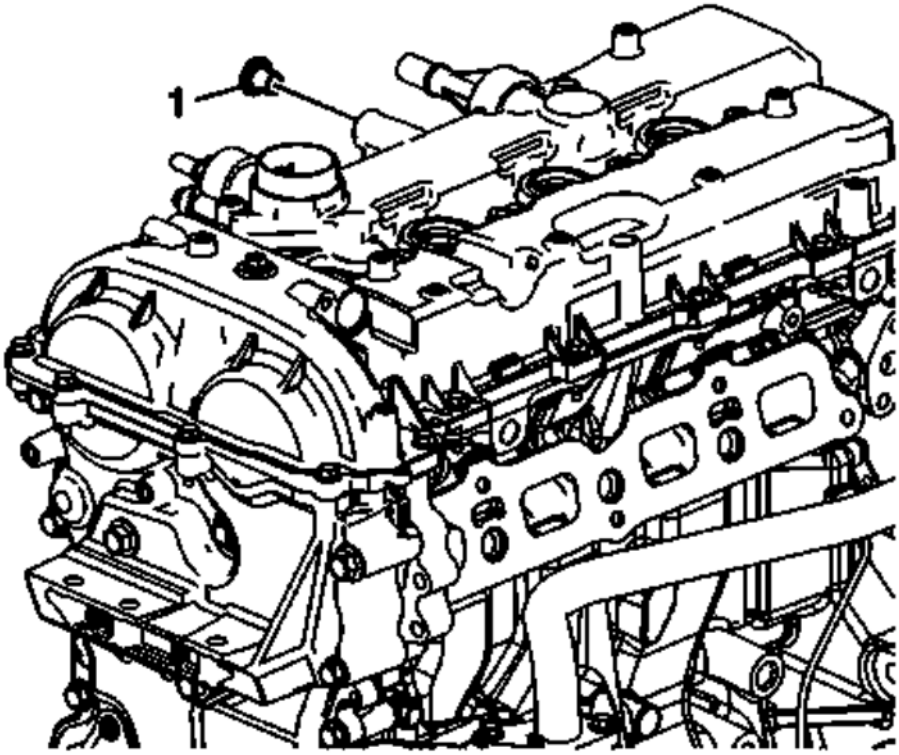

Fig. 99: Camshaft Cover Plug
Courtesy of GENERAL MOTORS COMPANY

4. Install the camshaft cover plug (1). Tighten the plug to 35 (26 lb ft).
5. Install the engine coolant air bleed pipe. Refer to **Engine Coolant Air Bleed Pipe Replacement (LTG)** .

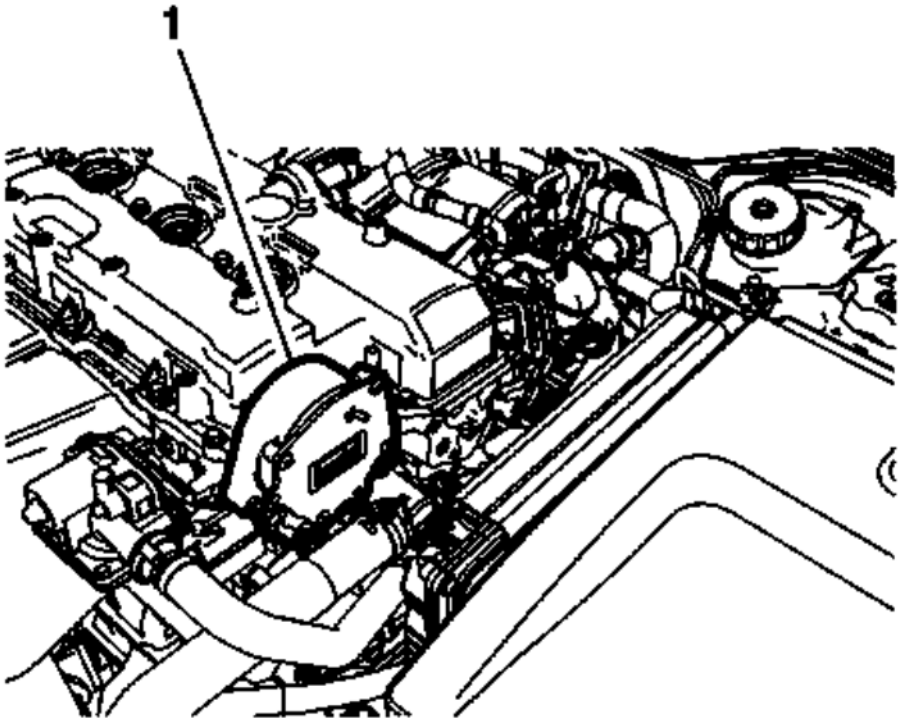

Fig. 100: Vacuum Assembly
Courtesy of GENERAL MOTORS COMPANY

6. Install the vacuum assembly (1). Refer to **Vacuum Pump Replacement** .

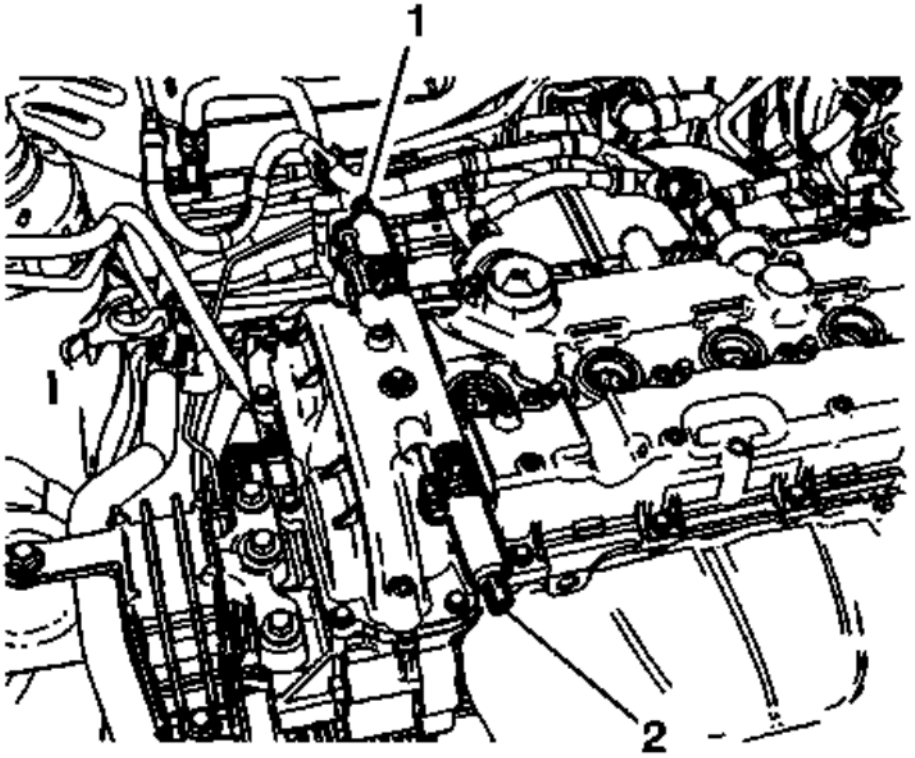

Fig. 101: Camshaft Position Actuator Intake Solenoid Valve
Courtesy of GENERAL MOTORS COMPANY

7. Install the camshaft position actuator intake (1) solenoid valve. Refer to **Camshaft Position Actuator Intake Solenoid Valve Replacement** .
8. Install the camshaft position actuator exhaust (2) solenoid valve. Refer to **Camshaft Position Actuator Exhaust Solenoid Valve Replacement** .

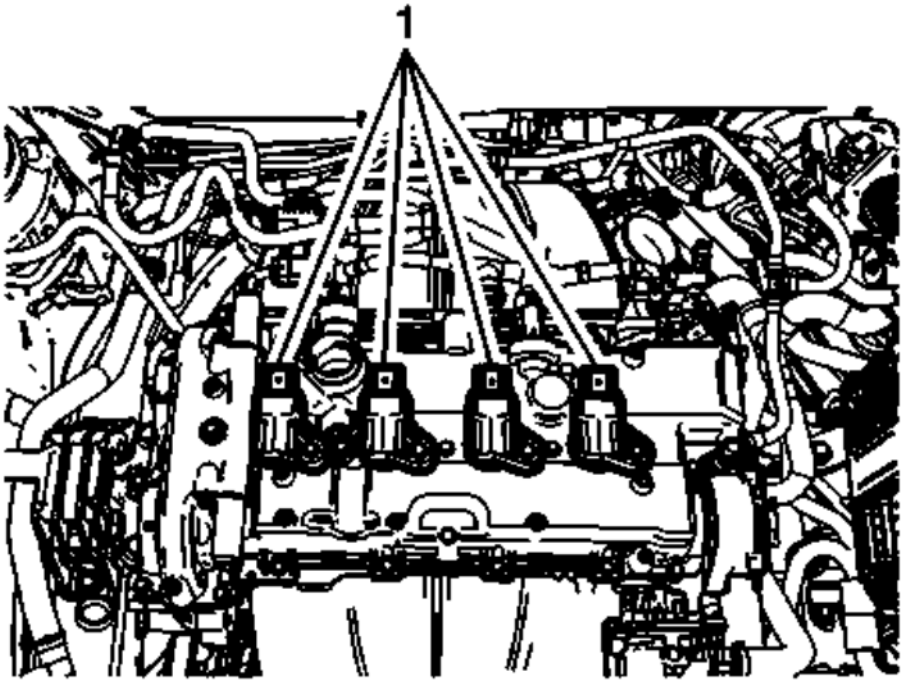

Fig. 102: Ignition Coils
Courtesy of GENERAL MOTORS COMPANY

9. Install the ignition coils (1). Refer to **Ignition Coil Replacement** .

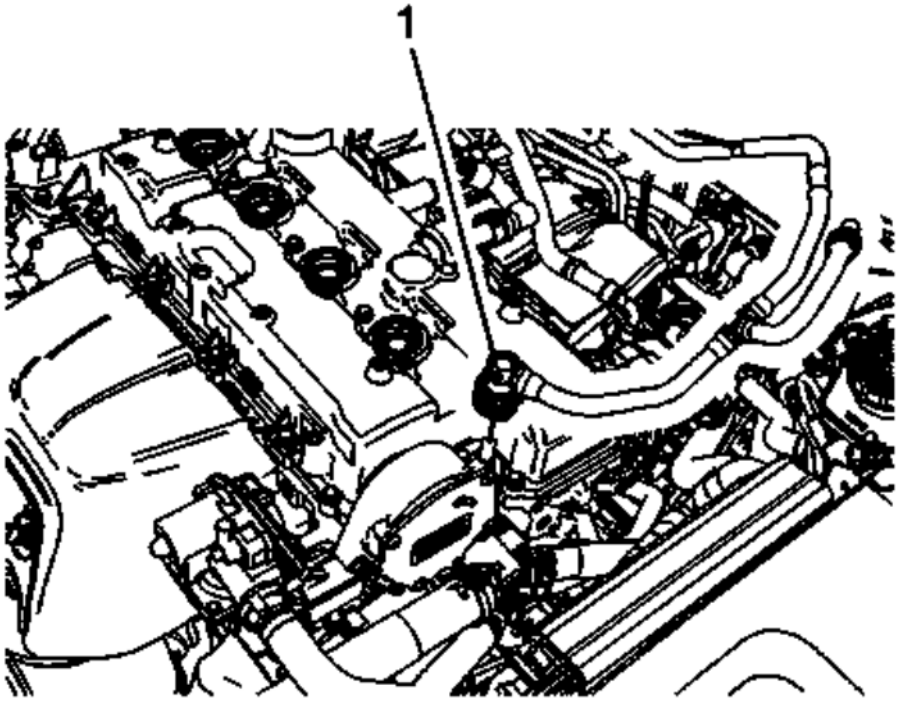

Fig. 103: Vacuum Booster Pipe
Courtesy of GENERAL MOTORS COMPANY

10. Connect vacuum booster pipe (1).

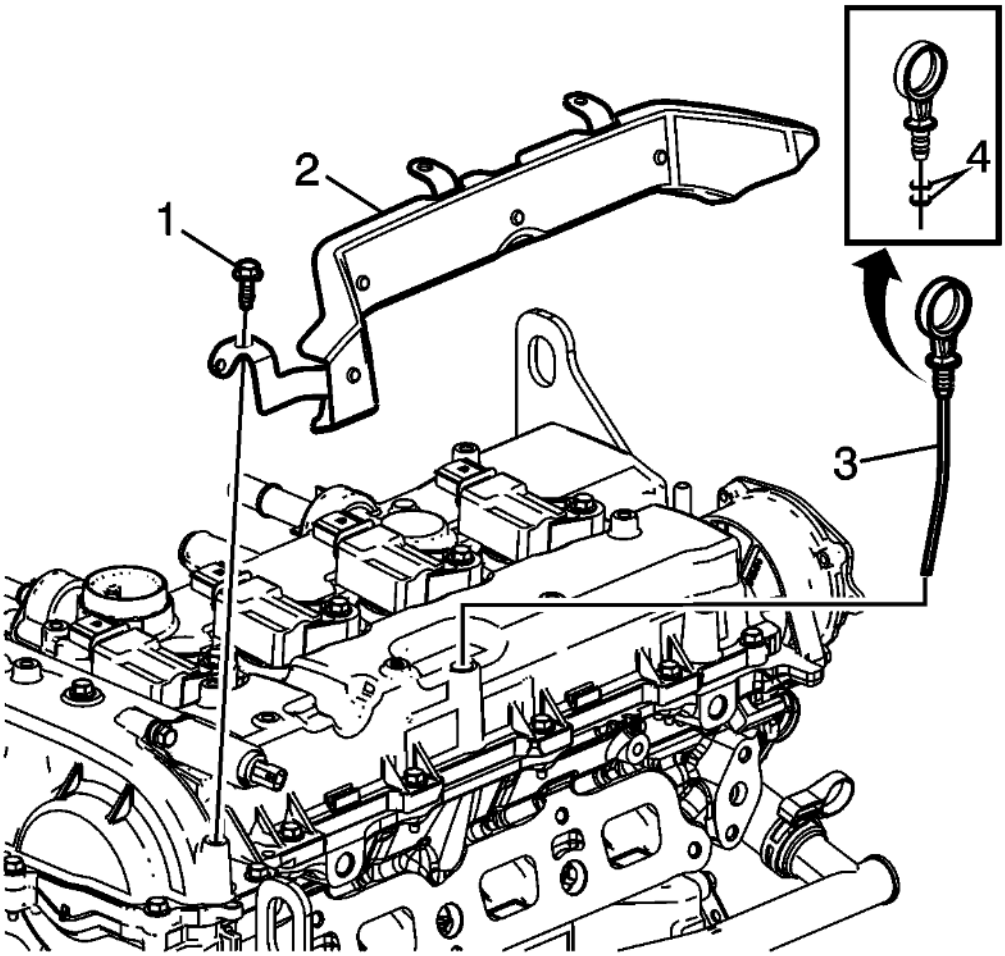

Fig. 104: Oil Level Indicator
Courtesy of GENERAL MOTORS COMPANY

11. Install the camshaft cover heat shield (2) and bolts (1). Tighten the bolts to 10 (89 lb in).
12. Inspect the oil level indicator O-ring seals (4) and replace if necessary. Install the oil level indicator (3).

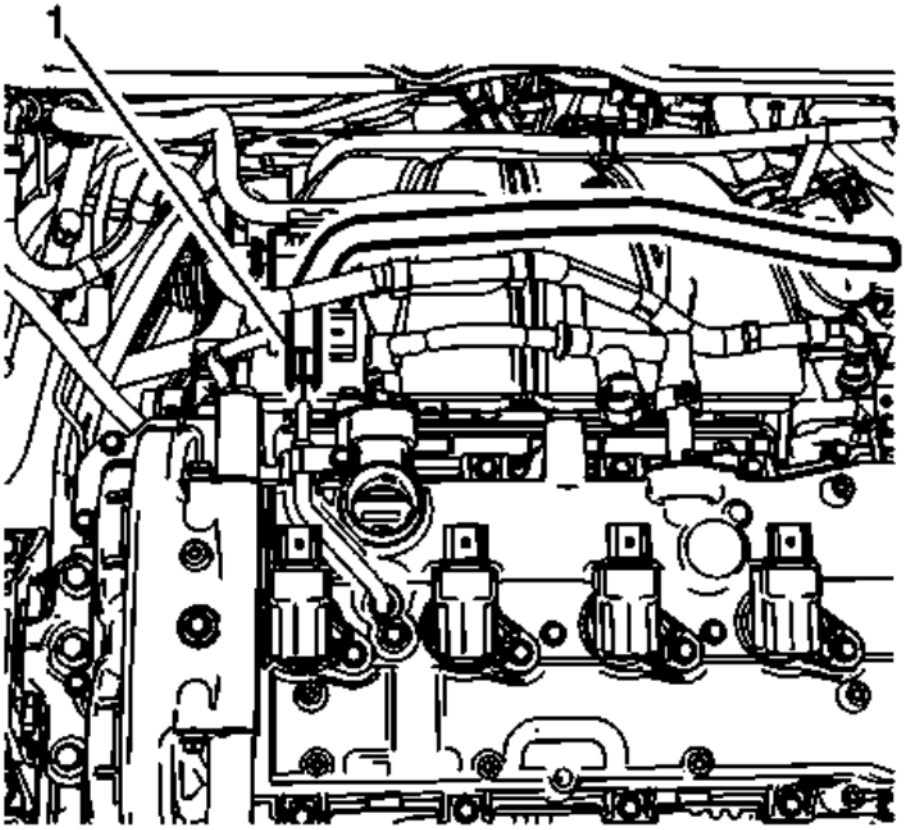

Fig. 105: Surge Tank Hose
Courtesy of GENERAL MOTORS COMPANY

13. Install the surge tank hose (1).
14. Install the positive crankcase ventilation hose/pipe/tube. Refer to **Positive Crankcase Ventilation Hose/Pipe/Tube Replacement (Camshaft Cover to Air Cleaner Resonator to Outlet Duct)**.

TIMING CHAIN TENSIONER REPLACEMENT

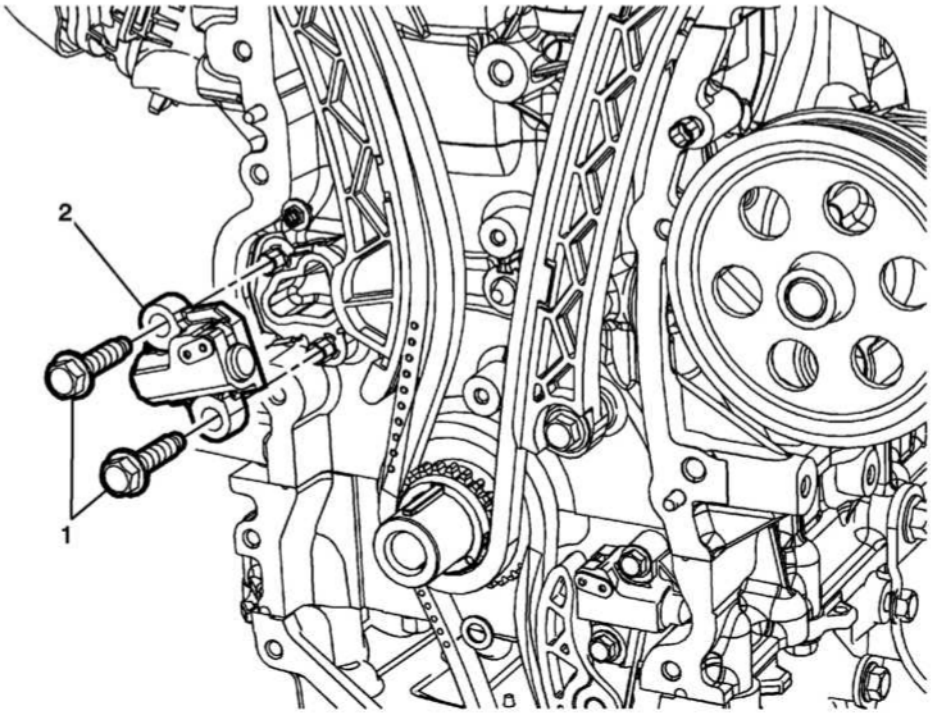

Fig. 106: Timing Chain Tensioner Bolts And Timing Chain Tensioner
Courtesy of GENERAL MOTORS COMPANY

Timing Chain Tensioner Replacement

Callout	Component Name
Preliminary Procedure Remove the engine front cover. Refer to **Engine Front Cover Replacement**.	
1	Timing Chain Tensioner Fastener (Qty: 2) **CAUTION:** **Refer to Fastener Caution .** **Tighten** 25 (18 lb ft) **Special Tool** **EN-50837** Timing Chain Tensioner Retraction Tool . For equivalent regional tools, refer to **Special Tools** .
2	Timing Chain Tensioner

HYDRAULIC VALVE LASH ADJUSTER REPLACEMENT - EXHAUST

Removal Procedure

1. Remove the exhaust valve rocker arm. Refer to **Exhaust Valve Rocker Arm Replacement**.

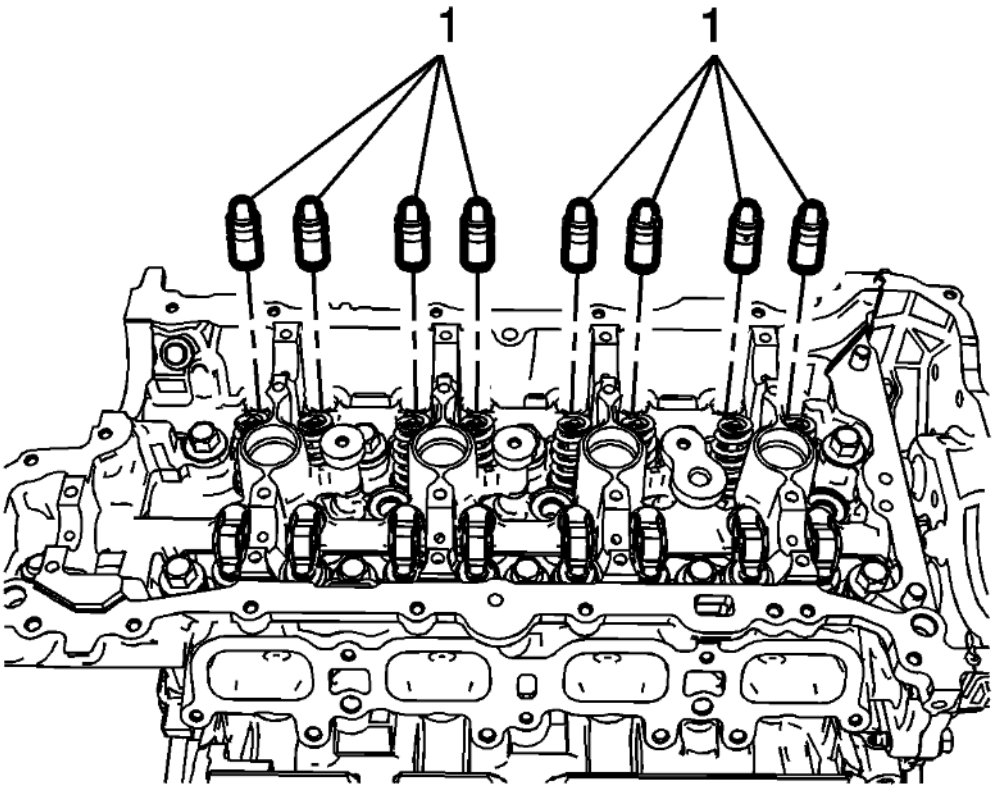

Fig. 107: Hydraulic Lash Adjusters - Exhaust
Courtesy of GENERAL MOTORS COMPANY

2. Remove the hydraulic lash adjusters (1).

Installation Procedure

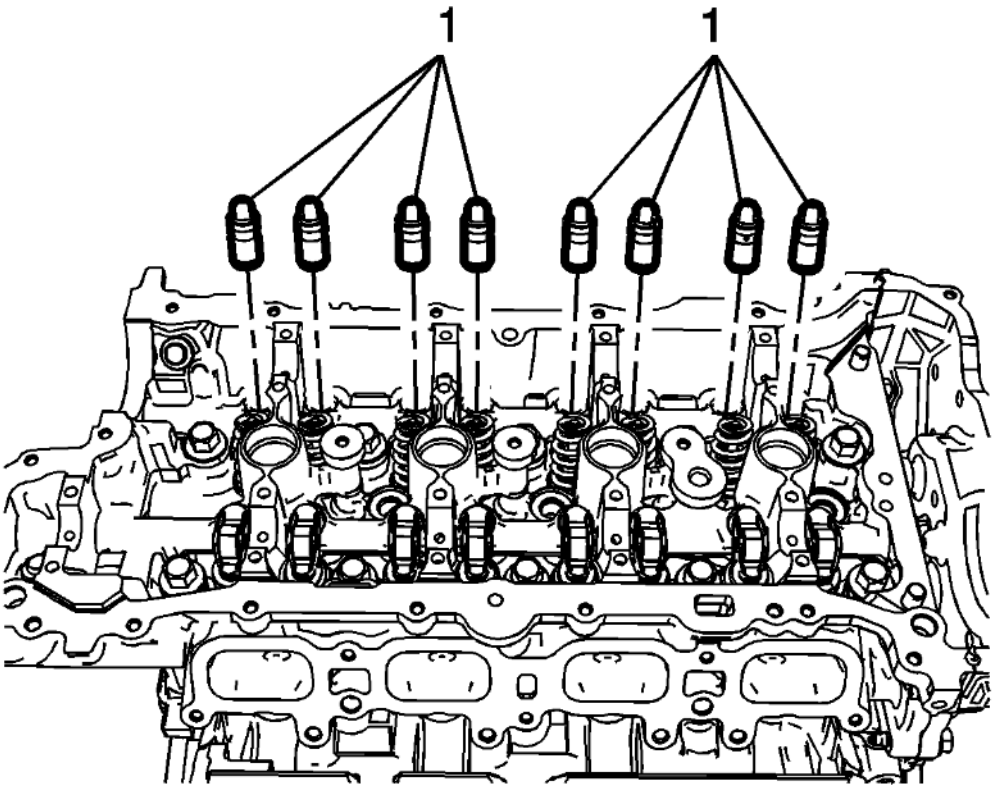

Fig. 108: Hydraulic Lash Adjusters - Exhaust
Courtesy of GENERAL MOTORS COMPANY

NOTE: **Pre-fill the low pressure chamber with engine oil. Maintain a vertical orientation of the assembly to retain the oil in the reservoir and high pressure chamber. Do not install the lash adjusters without pre-filling the low pressure chamber. Apply engine oil to the outer diameter surface of all adjusters.**

1. Lubricate and install the hydraulic valve lash adjusters (1) into their bores in the cylinder head. Refer to **Adhesives, Fluids, Lubricants, and Sealers** .
2. Install the exhaust valve rocker arm. Refer to **Exhaust Valve Rocker Arm Replacement**.

HYDRAULIC VALVE LASH ADJUSTER REPLACEMENT - INTAKE

Removal Procedure

1. Remove the intake valve rocker arm. Refer to **Intake Valve Rocker Arm Replacement**.

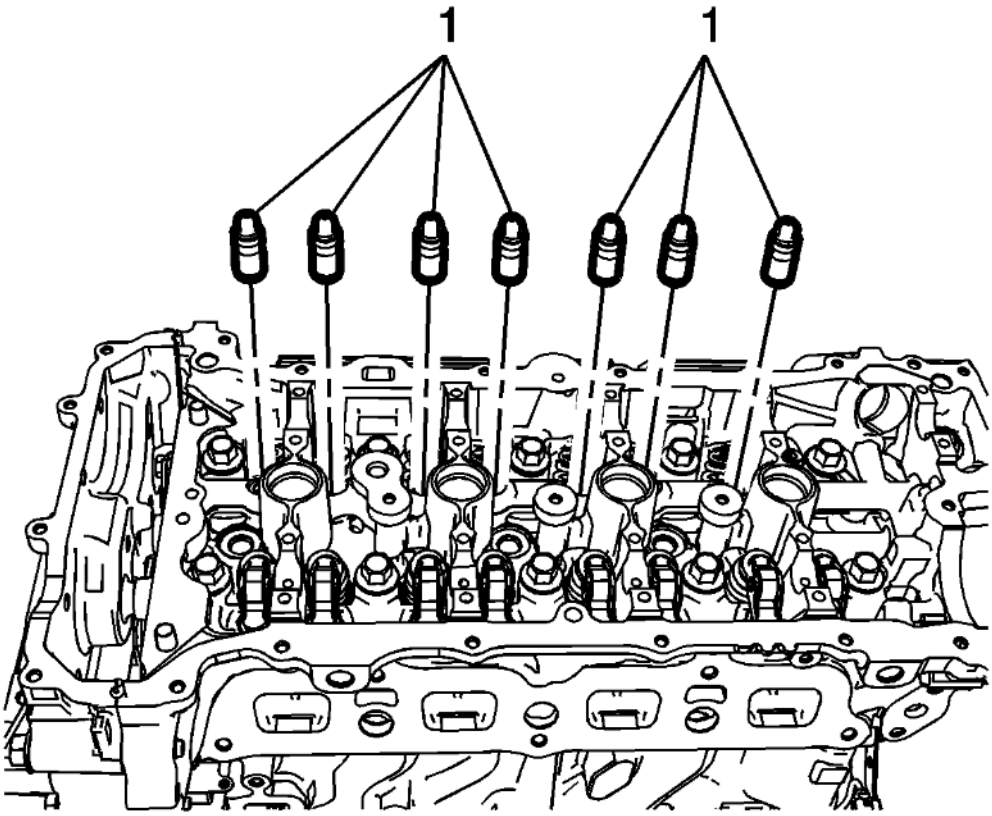

Fig. 109: Hydraulic Lash Adjusters - Intake
Courtesy of GENERAL MOTORS COMPANY

2. Remove the hydraulic lash adjusters (1).

Installation Procedure

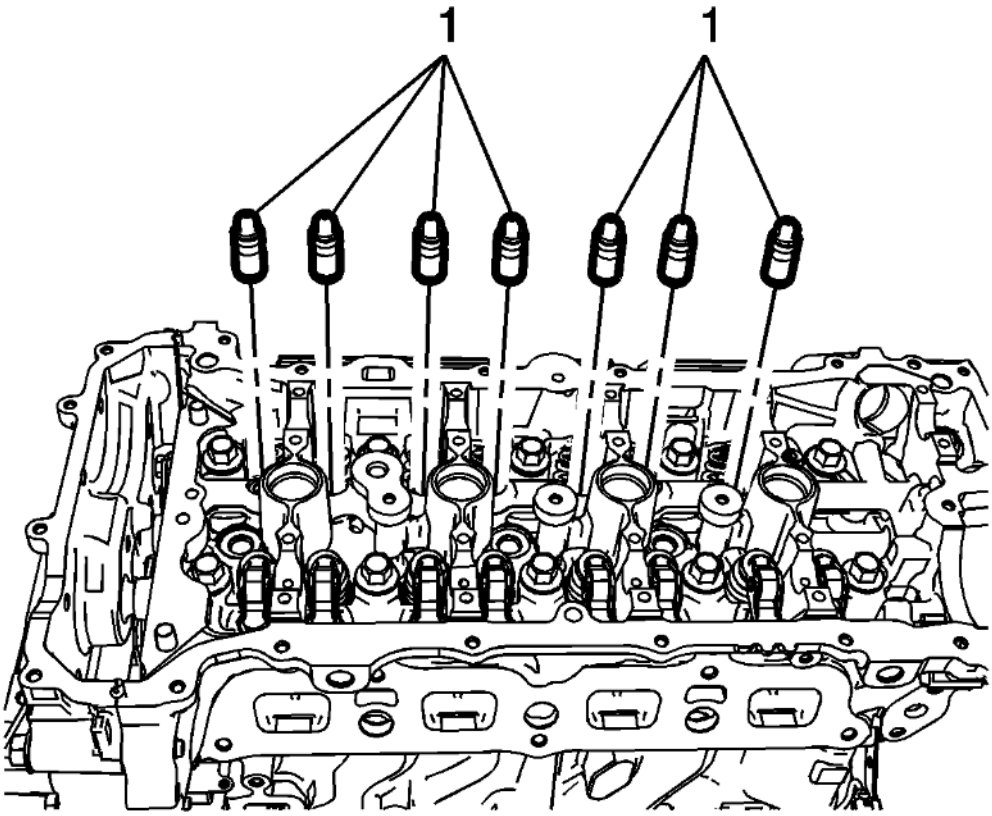

Fig. 110: Hydraulic Lash Adjusters - Intake
Courtesy of GENERAL MOTORS COMPANY

NOTE: **Pre-fill the low pressure chamber with engine oil. Maintain a vertical orientation of the assembly to retain the oil in the reservoir and high pressure chamber. Do not install the lash adjusters without pre-filling the low pressure chamber. Apply engine oil to the outer diameter surface of all adjusters.**

1. Lubricate and install the hydraulic valve lash adjusters (1) into their bores in the cylinder head. Refer to **Adhesives, Fluids, Lubricants, and Sealers** .
2. Install the intake valve rocker arm. Refer to **Intake Valve Rocker Arm Replacement**.

CAMSHAFT POSITION ACTUATOR AND CAMSHAFT REPLACEMENT - INTAKE

Special Tools

- **EN-50656** Holding Tool
- **EN 50793** Locking Tool

For equivalent regional tools, refer to **Special Tools** .

Removal Procedure

NOTE: **Ensure the engine is properly timed to Top Dead Center (TDC), prior to performing repairs.**

1. Remove the camshaft cover. Refer to **Camshaft Cover Replacement**.
2. Remove the high pressure fuel pump. Refer to **Fuel Pump Replacement** .

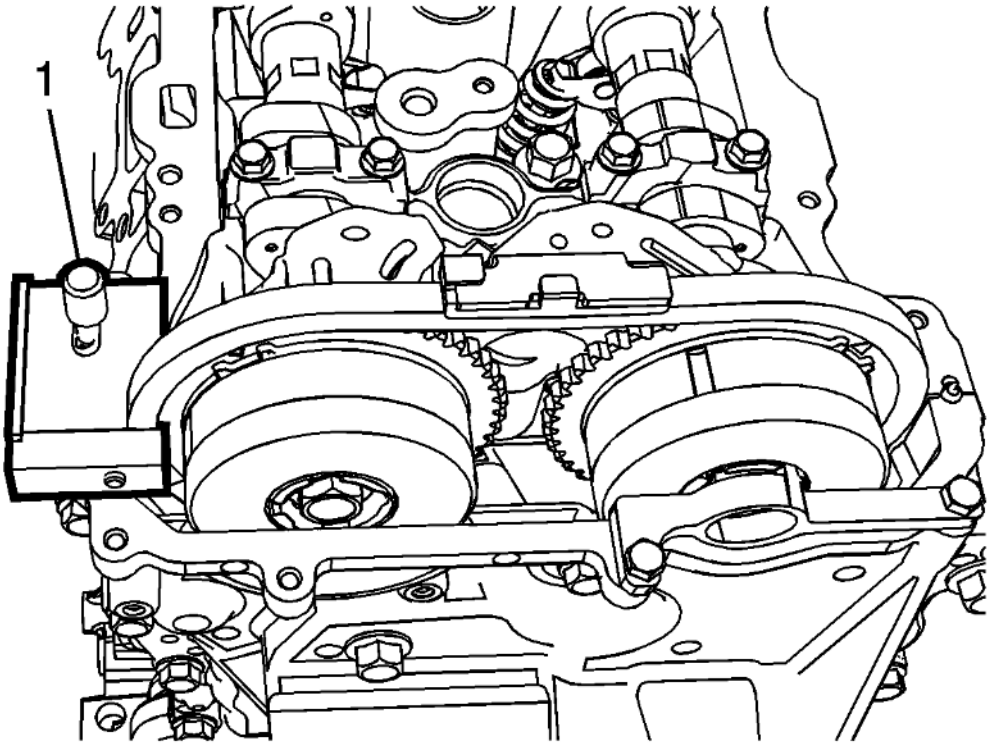

Fig. 111: Identifying Timing Chain Holding Tool
Courtesy of GENERAL MOTORS COMPANY

NOTE: **Ensure the EN-50656 holding tool is installed and securely tightened to prevent the camshaft chain from dropping into the front engine cover during camshaft actuator replacement.**

3. Install **EN-50656** timing chain holding tool (1) and tighten to 8 (71 lb in).

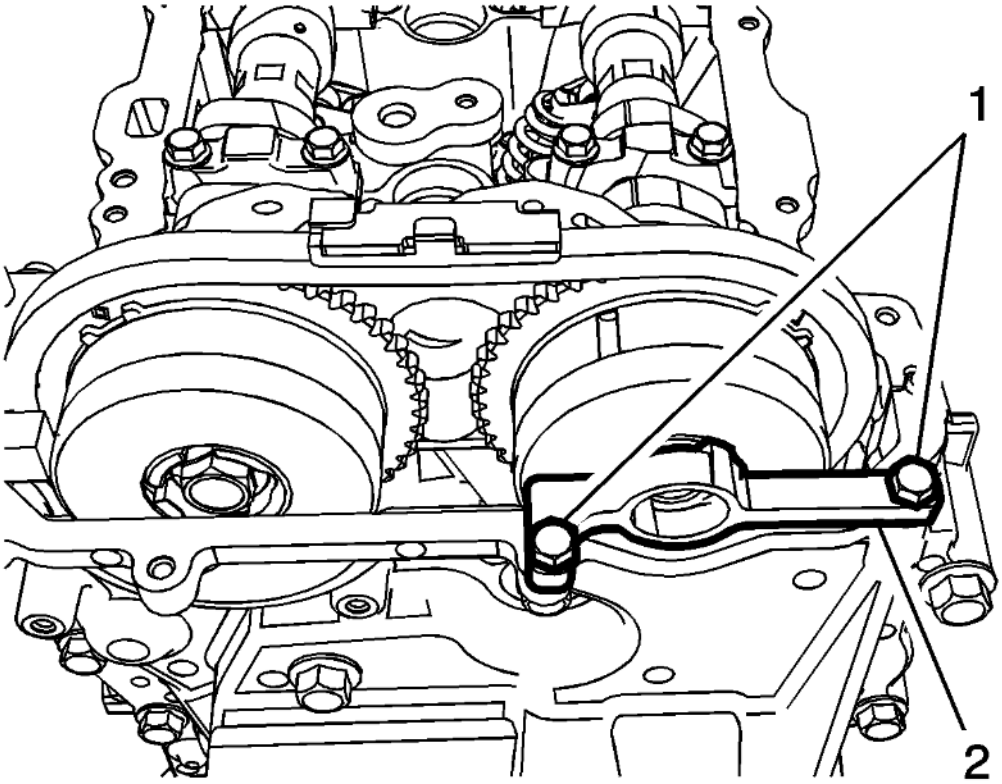

Fig. 112: Install Camshaft Actuator Locking Tool
Courtesy of GENERAL MOTORS COMPANY

CAUTION: Refer to Fastener Caution .

NOTE: Ensure to mark actuator sprocket and chain before removal.

4. Align and install camshaft actuator locking tool (2) **EN 50793** into the slots of the exhaust camshaft actuator and mount tool to engine front cover assembly and tighten the bolts (1) to 10 (89 lb in).

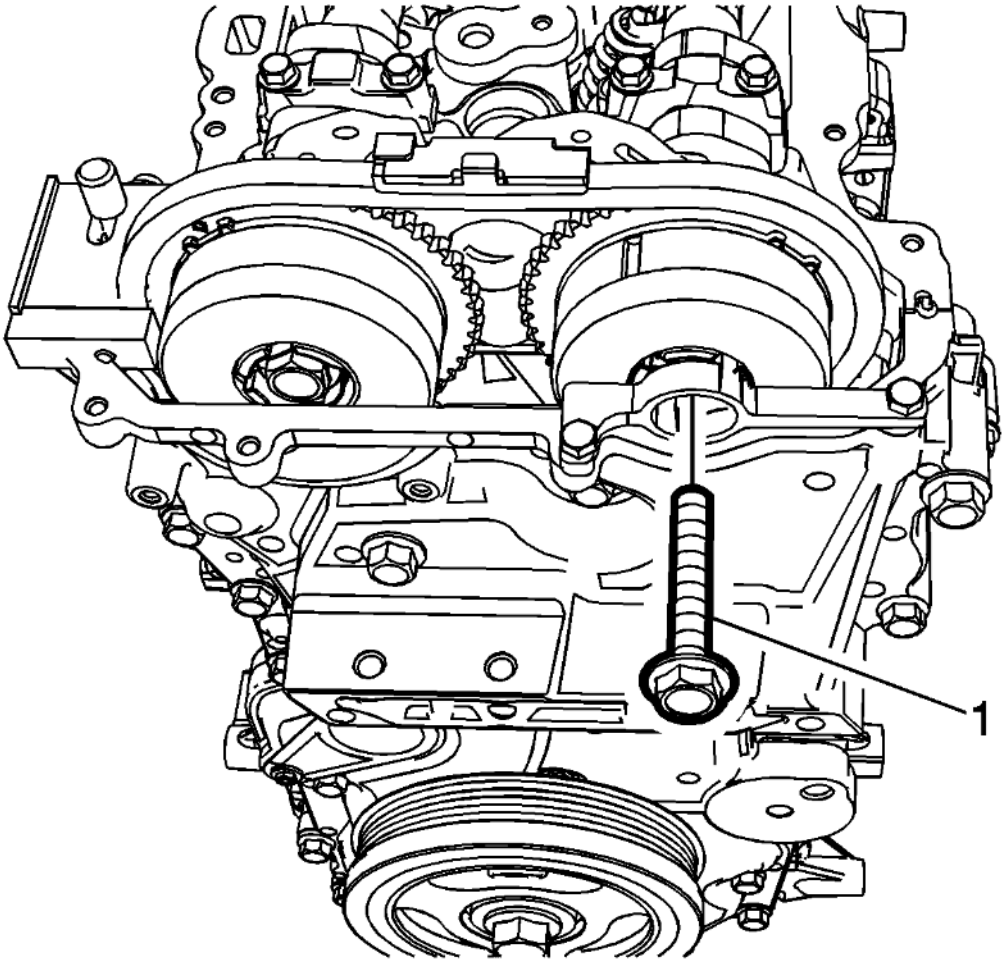

Fig. 113: Camshaft Actuator Bolt
Courtesy of GENERAL MOTORS COMPANY

5. Remove and DISCARD the camshaft actuator bolt (1).

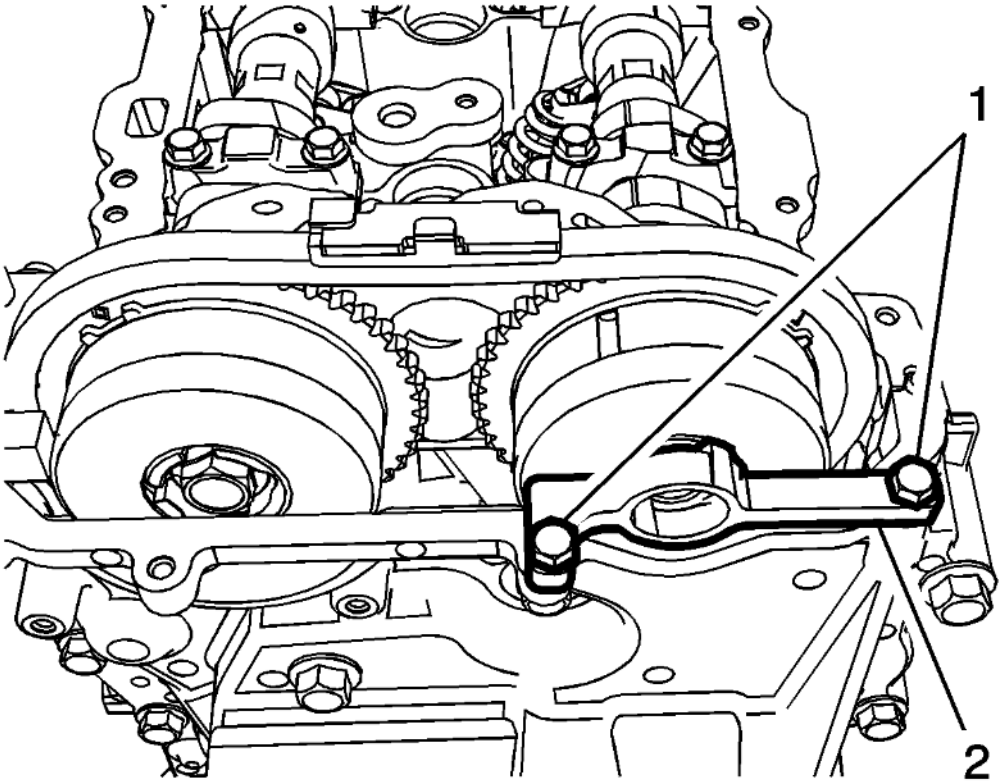

Fig. 114: Install Camshaft Actuator Locking Tool
Courtesy of GENERAL MOTORS COMPANY

6. Remove the **EN-50793** holding tool (2).

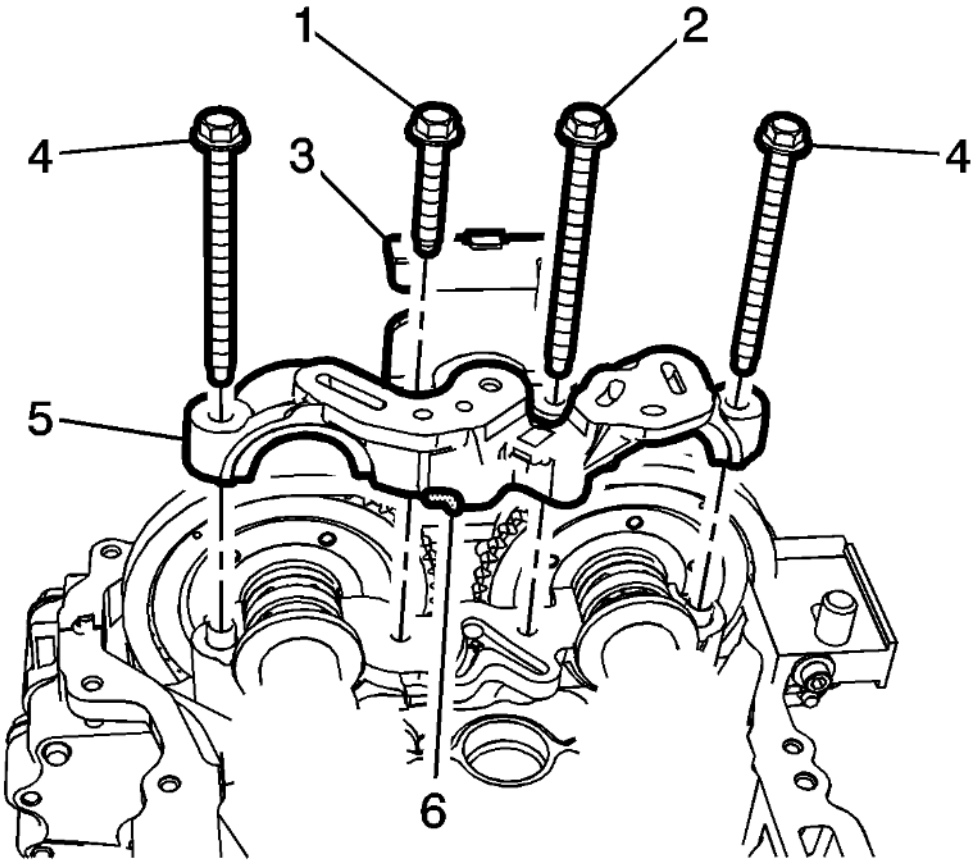

Fig. 115: Upper Timing Chain Guide Bolts
Courtesy of GENERAL MOTORS COMPANY

7. Remove the upper timing chain guide bolts (1, 2).
8. Remove the upper timing chain guide (3).
9. Remove the camshaft front bearing cap bolts (4).

NOTE: **Locate the pry points (6) in the camshaft front bearing cap. When using the 3 pry points to remove the front bearing cap evenly, use a protective material between the camshaft lobes, the cylinder head flange, and pry tool.**

10. Remove the camshaft front bearing cap (5).

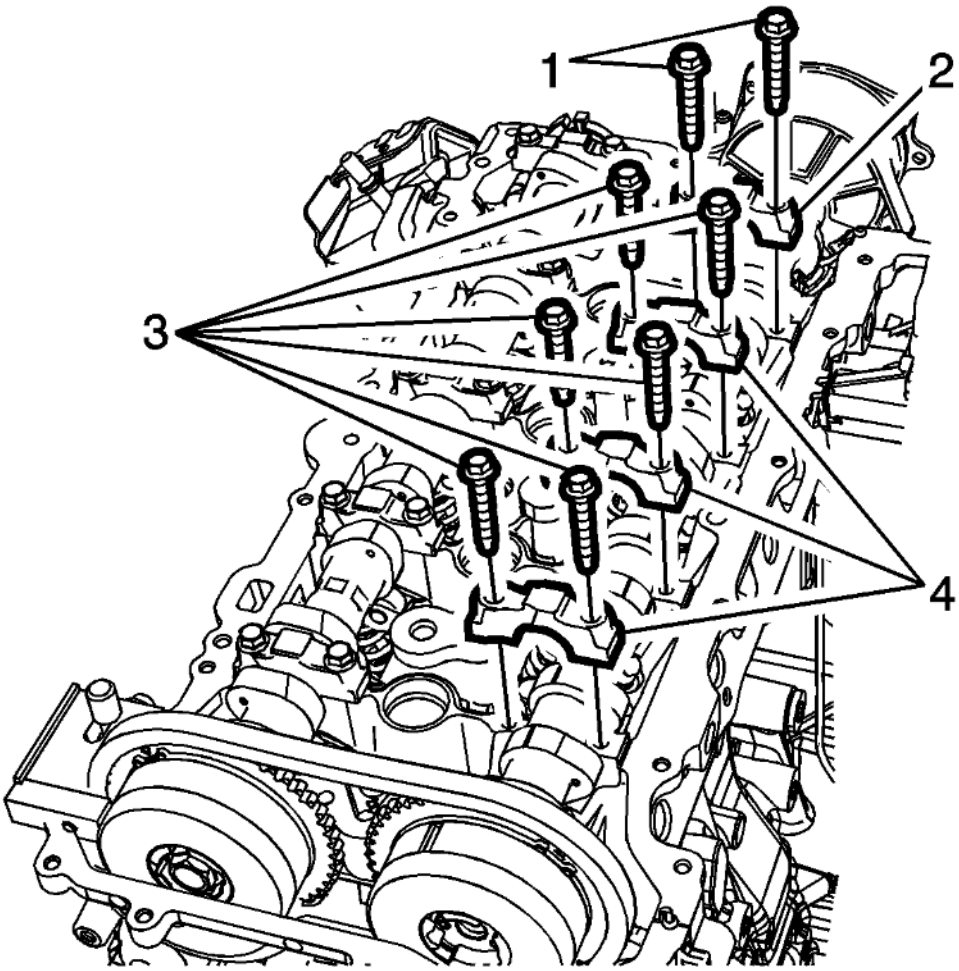

Fig. 116: Exhaust Camshaft Bearing Rear Cap Bolts And Cap
Courtesy of GENERAL MOTORS COMPANY

11. Mark the exhaust camshaft rear cap to ensure it is installed in the same position. Remove the exhaust camshaft bearing rear cap bolts (1) and cap (2).

NOTE: **Loosen each bolt on each cap one turn at a time until there is no spring tension pushing on the camshaft.**

12. Mark the camshaft caps (4) to ensure they are installed in the same position.
13. Remove the exhaust camshaft cap bolts (3).
14. Remove the camshaft caps (4).

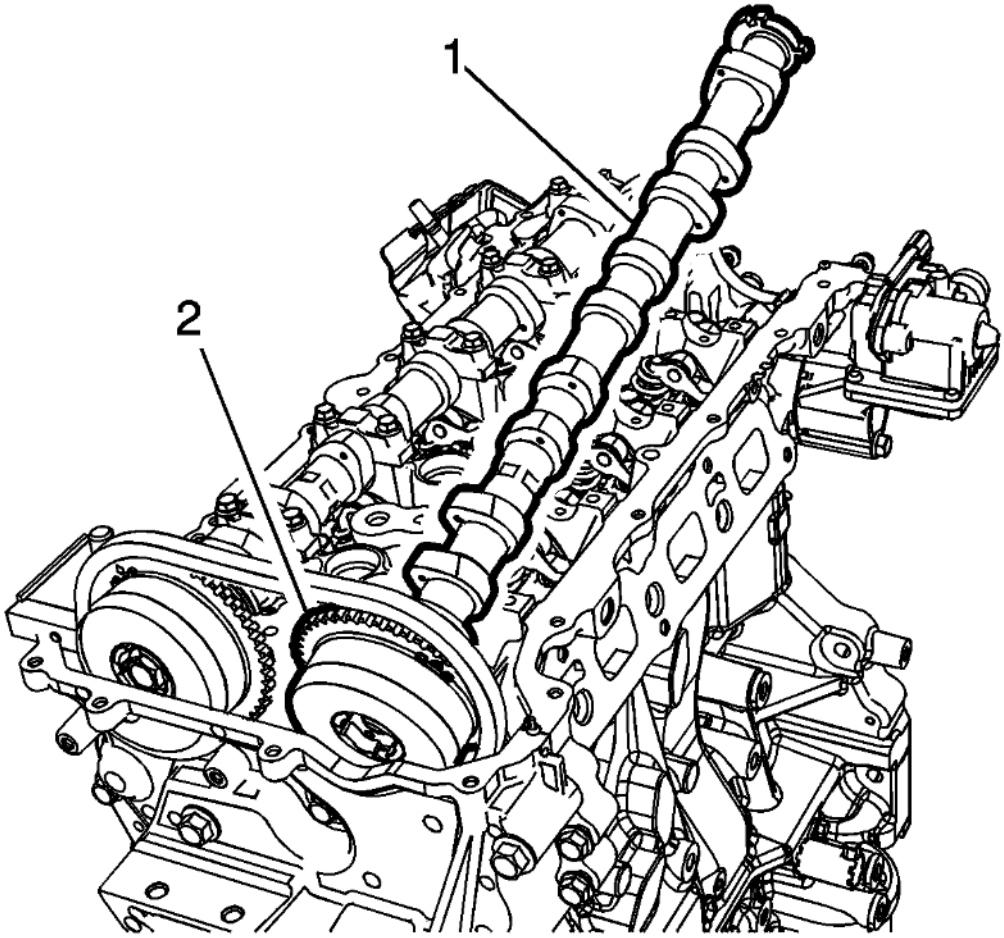

Fig. 117: Camshaft Assembly
Courtesy of GENERAL MOTORS COMPANY

15. Pull exhaust camshaft actuator assembly forward away from camshaft assembly (1), then lift rear of exhaust camshaft assembly to a tilt and pull free from exhaust camshaft actuator assembly (2).

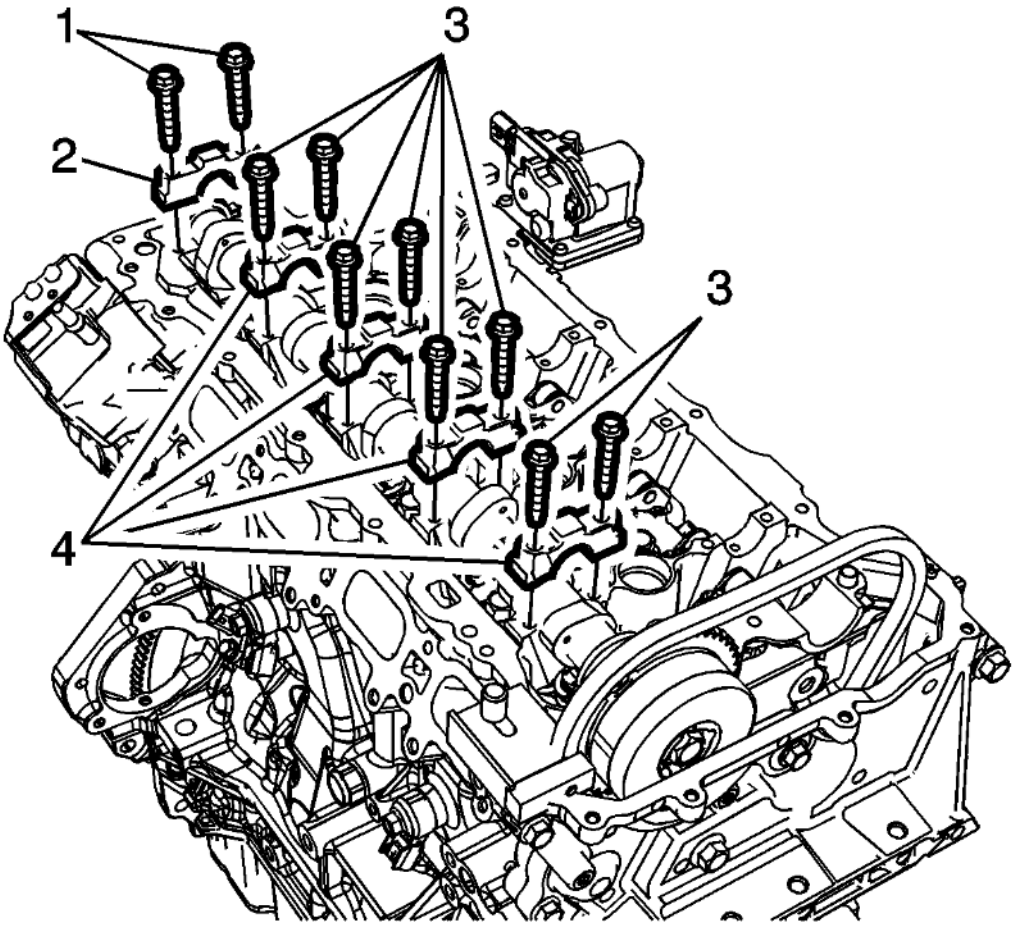

Fig. 118: Intake Camshaft Bearing Rear Cap Bolts And Cap
Courtesy of GENERAL MOTORS COMPANY

16. Mark the intake camshaft rear cap to ensure it is installed in the same position. Remove the intake camshaft bearing rear cap bolts (1) and cap (2).

NOTE: **Loosen each bolt on each cap one turn at a time until there is no spring tension pushing on the camshaft.**

17. Mark the camshaft caps (4) to ensure they are installed in the same position.
18. Remove the intake camshaft cap bolts (3).
19. Remove the camshaft caps (4).
20. Lift and roll intake camshaft assembly from original position over into exhaust camshaft position within engine head assembly.

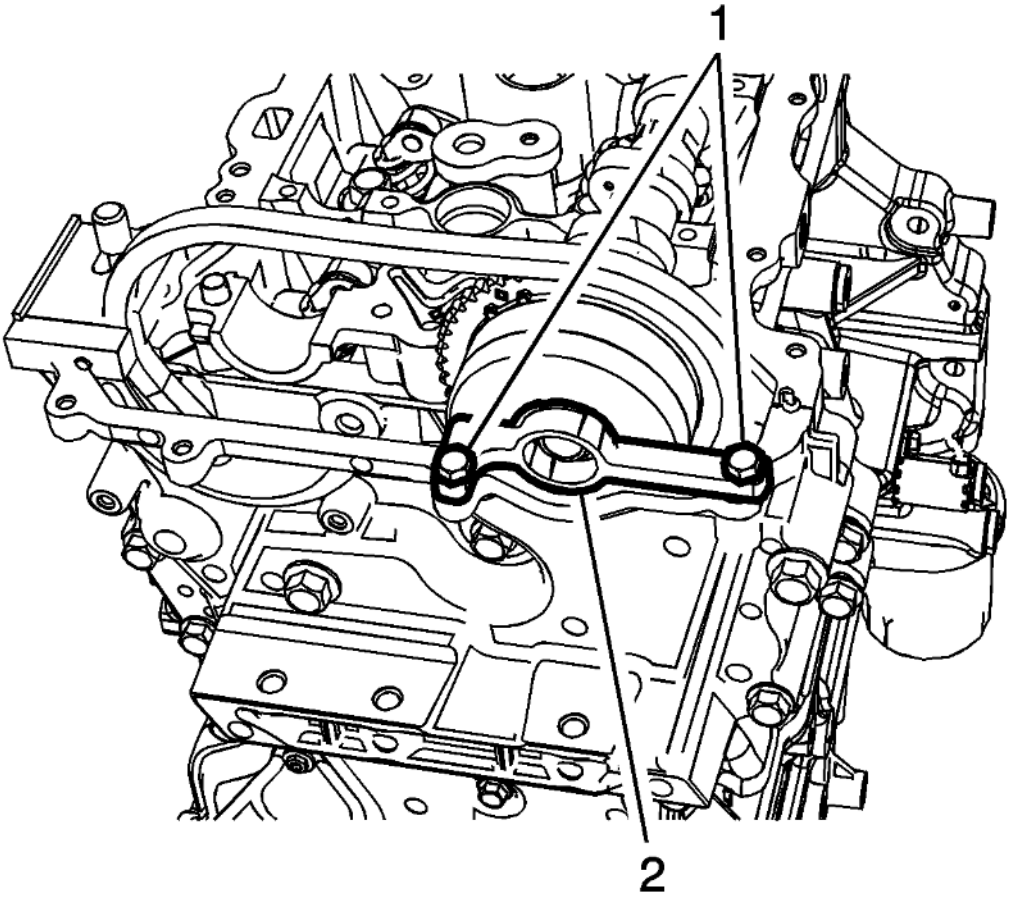

Fig. 119: Camshaft Actuator Locking Tool
Courtesy of GENERAL MOTORS COMPANY

21. Align and install camshaft actuator locking tool (2) **EN 50793** into the slots of the intake camshaft actuator and mount tool to engine front cover assembly and tighten the bolts (1) to 10 (89 lb in).

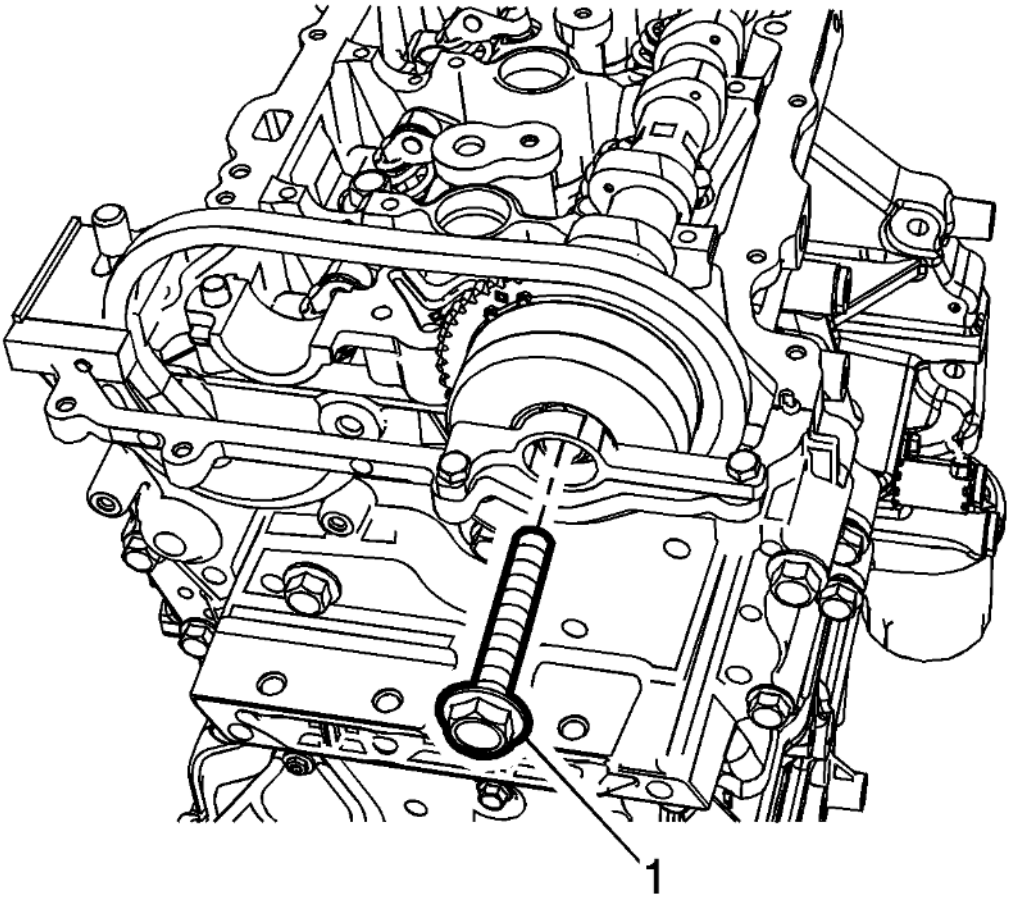

Fig. 120: Camshaft Actuator Bolt
Courtesy of GENERAL MOTORS COMPANY

22. Remove the camshaft actuator bolt (1).

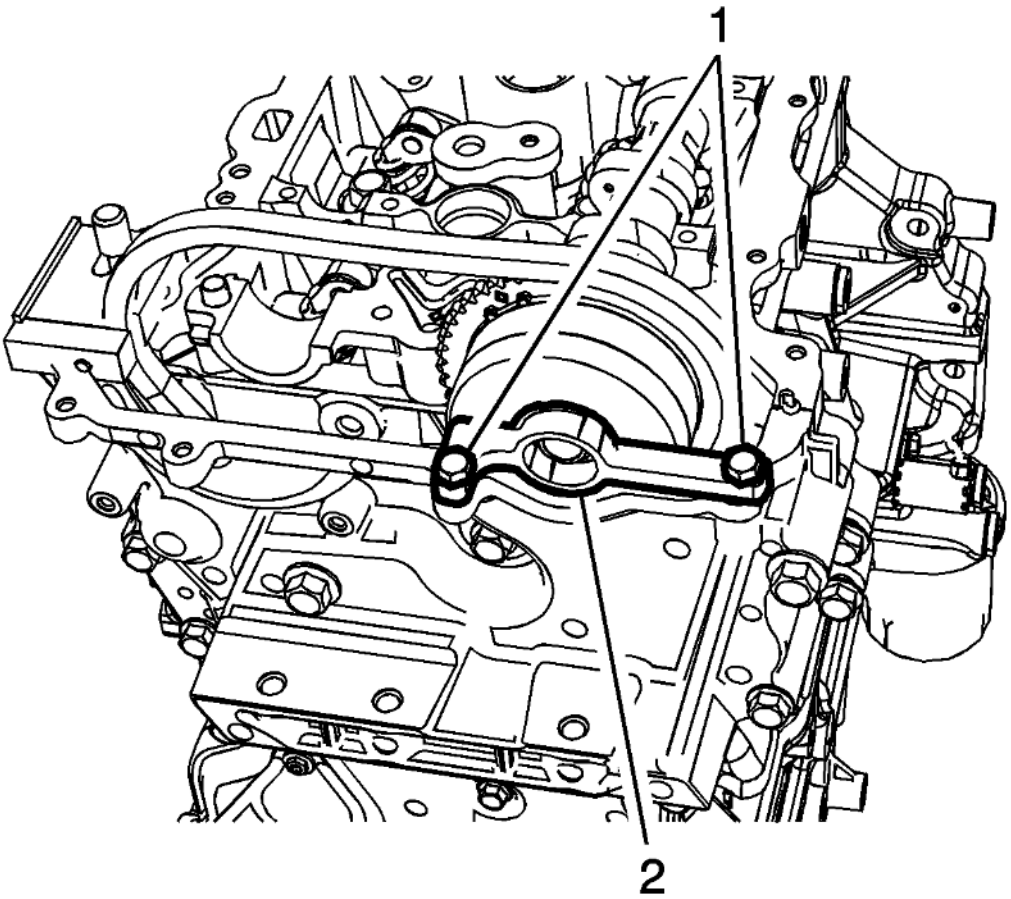

Fig. 121: Camshaft Actuator Locking Tool
Courtesy of GENERAL MOTORS COMPANY

23. Remove the **EN-50793** holding tool (2).

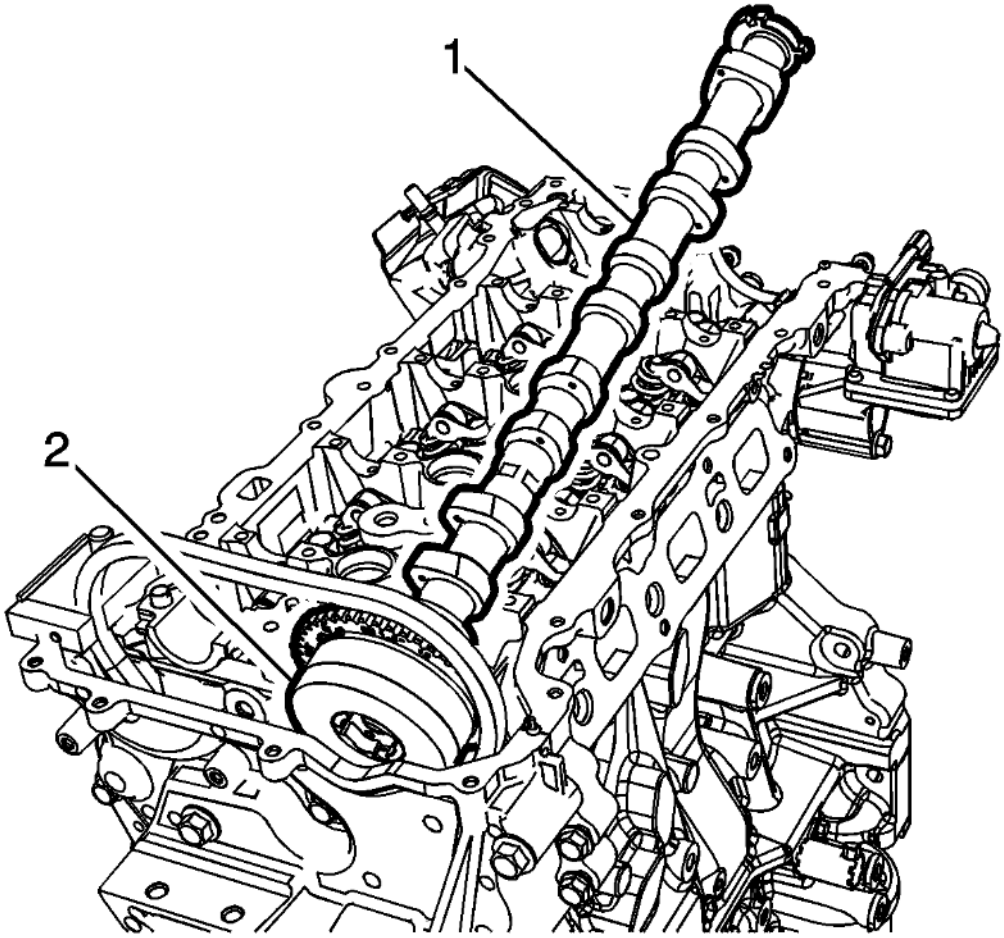

Fig. 122: Camshaft Assembly
Courtesy of GENERAL MOTORS COMPANY

24. Pull intake camshaft actuator assembly forward away from camshaft assembly (1), then lift rear of intake camshaft assembly to a tilt and pull free from intake camshaft actuator assembly (2).

NOTE: **If replacing the camshaft, ensure to transfer any marking from the old camshaft to the new one.**

25. Replace the camshaft if necessary.

Installation Procedure

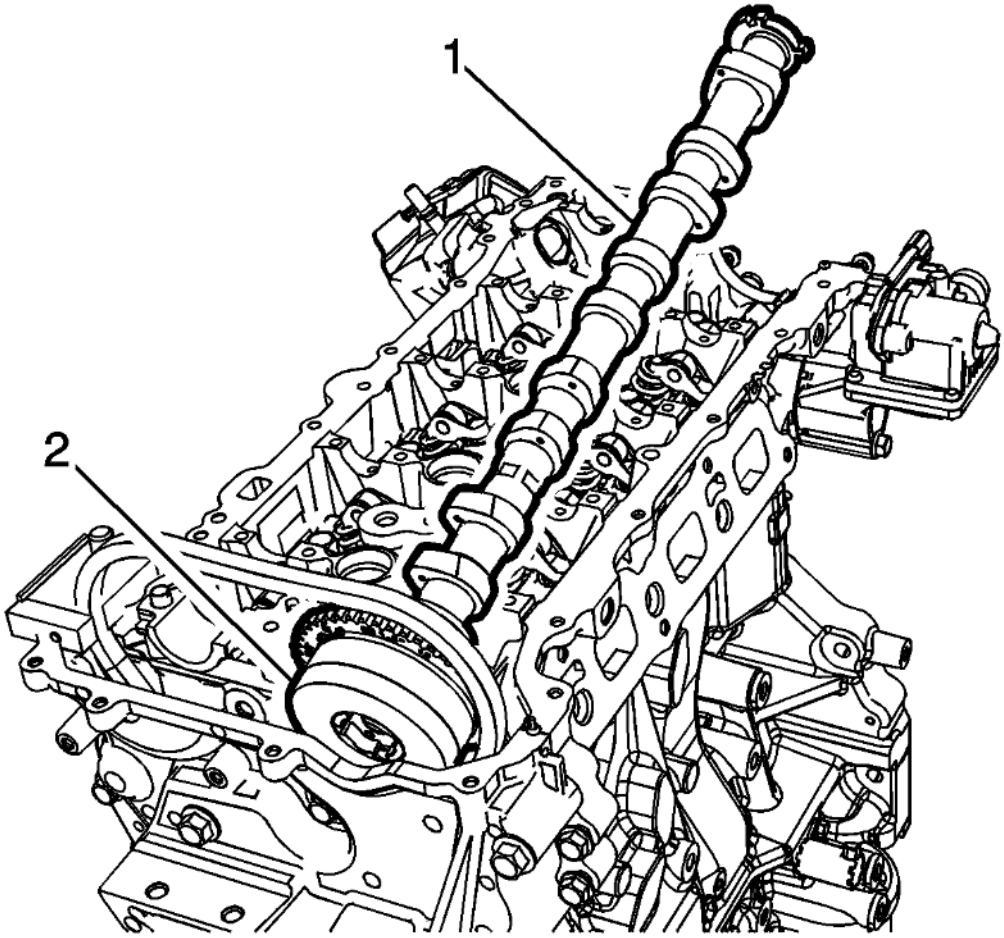

Fig. 123: Camshaft Assembly
Courtesy of GENERAL MOTORS COMPANY

1. Install the intake camshaft (1) and camshaft actuator (2).

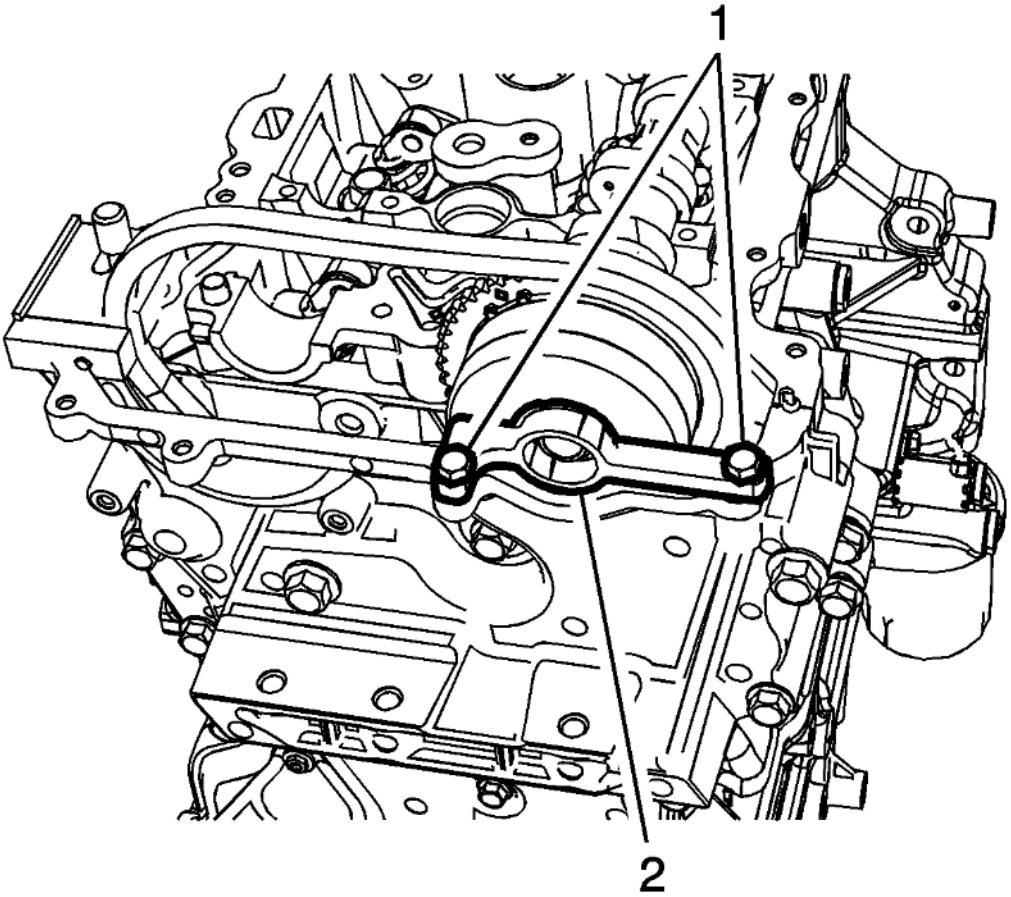

Fig. 124: Camshaft Actuator Locking Tool
Courtesy of GENERAL MOTORS COMPANY

CAUTION: Refer to Fastener Caution .

2. Align and install camshaft actuator locking tool (2) **EN 50793** into the slots of the intake camshaft actuator and mount tool to engine front cover assembly and tighten the bolts (1) to 10 (89 lb in).

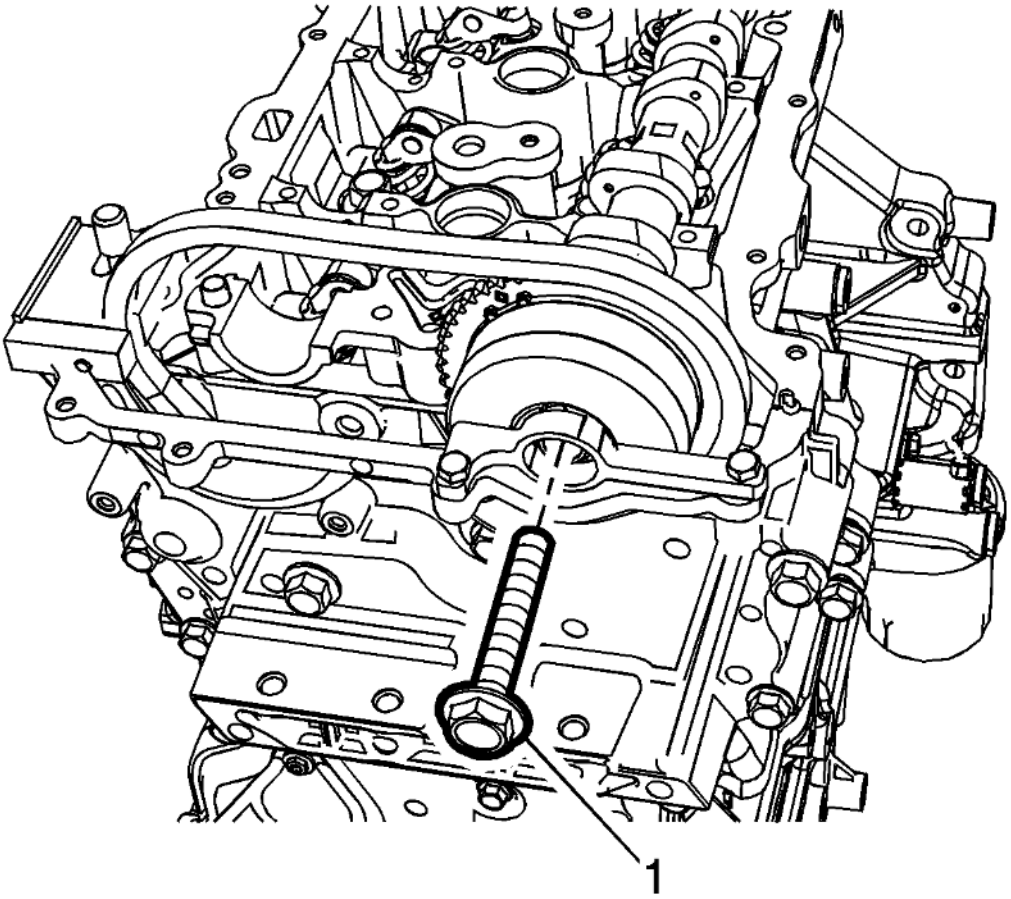

Fig. 125: Camshaft Actuator Bolt
Courtesy of GENERAL MOTORS COMPANY

3. Install a NEW camshaft actuator bolt (1) and tighten to 30 (22 lb ft) plus 100 degrees.
4. Lift and roll intake camshaft assembly from exhaust camshaft position over into original position.

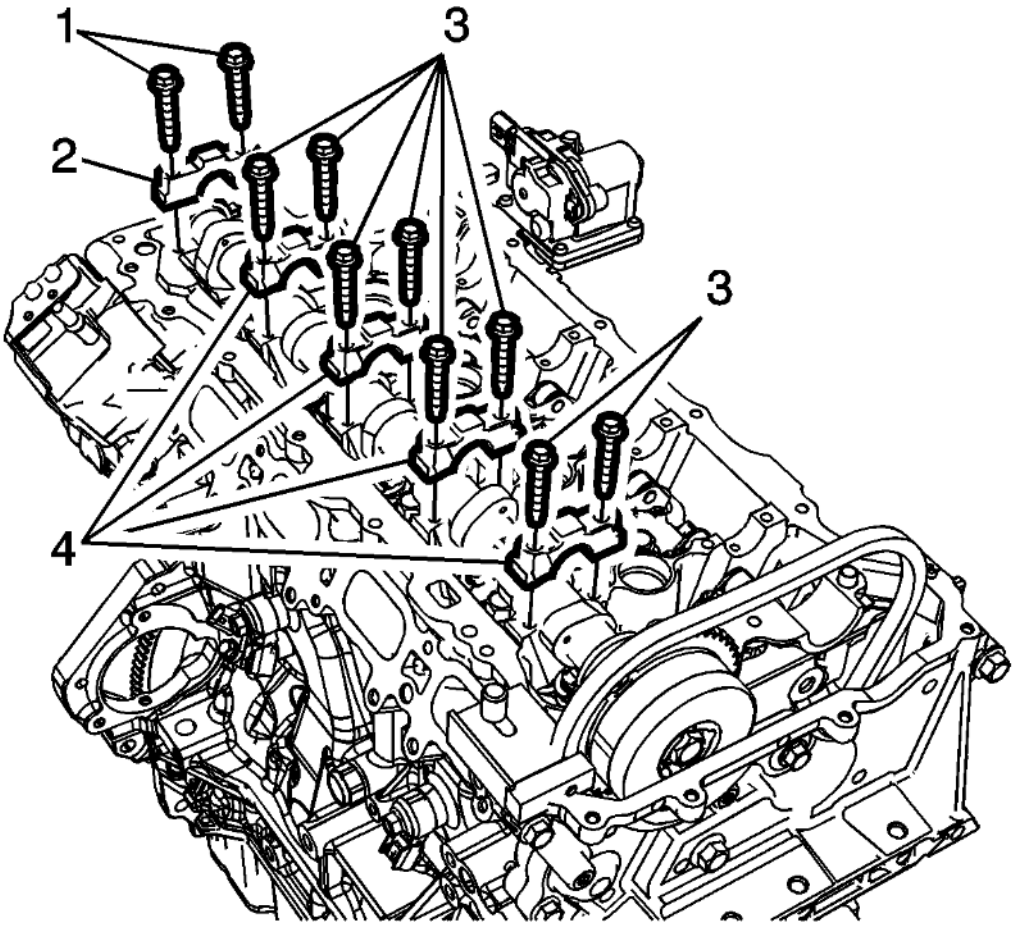

Fig. 126: Intake Camshaft Bearing Rear Cap Bolts And Cap
Courtesy of GENERAL MOTORS COMPANY

NOTE: **Apply lubricant to all lobes and journals prior to installing the camshafts.**

5. Set the intake camshaft on top of the roller followers in the camshaft bearing journals with the intake actuator timing mark at approximately the 11 O'clock position.

NOTE: **To properly position the camshaft caps, install the camshaft cap bolts into the camshaft caps prior to installing the camshaft caps on the camshafts.**

6. Install the camshaft cap bolts (1, 3) into the camshaft caps (2, 4).
7. Install the camshaft caps (2, 4) and hand start the camshaft cap bolts (1, 3).

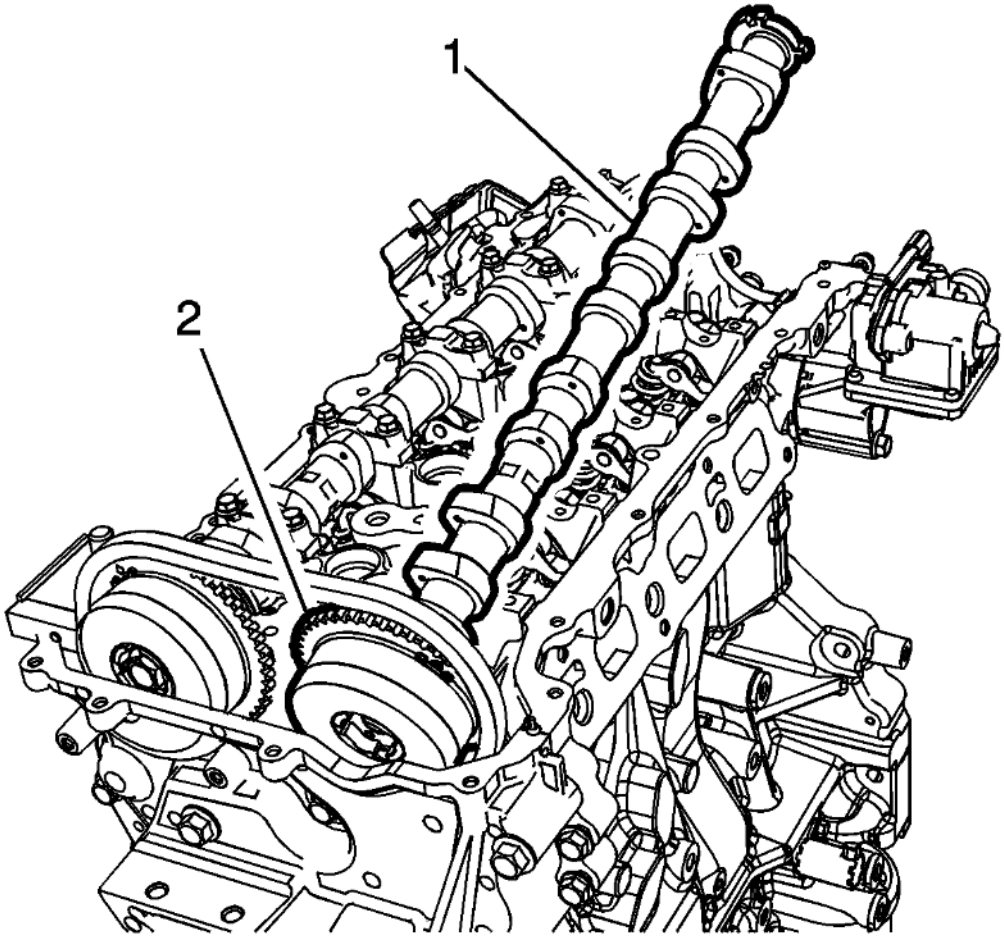

Fig. 127: Camshaft Assembly
Courtesy of GENERAL MOTORS COMPANY

8. Install the exhaust camshaft (1) and camshaft actuator (2).

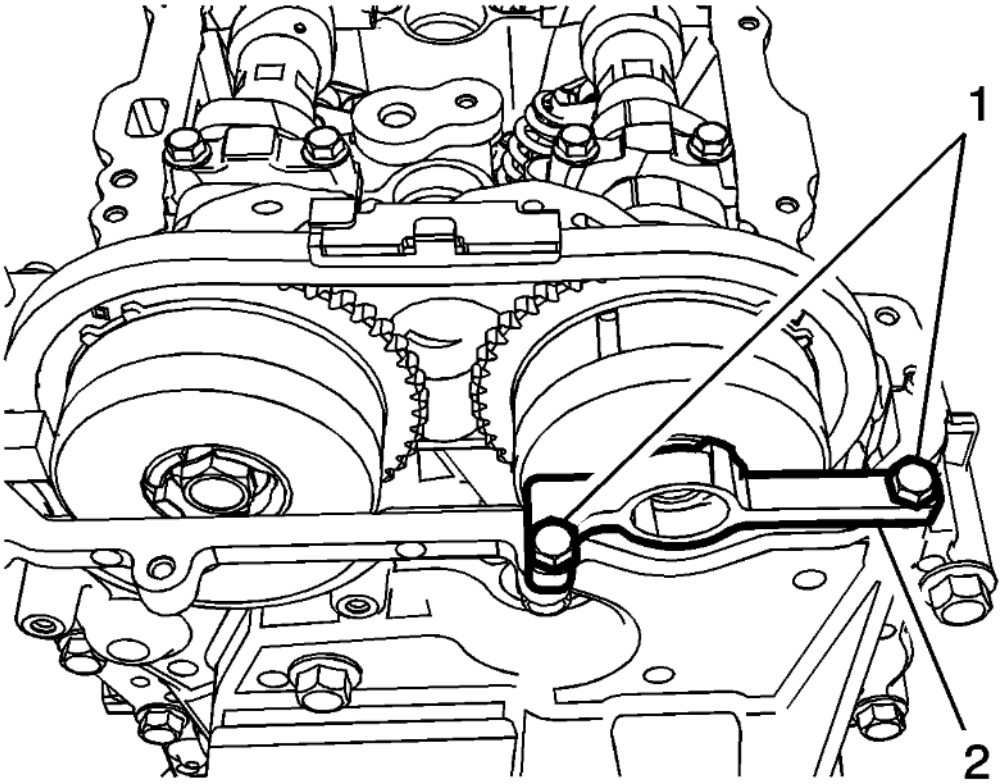

Fig. 128: Install Camshaft Actuator Locking Tool
Courtesy of GENERAL MOTORS COMPANY

9. Align and install camshaft actuator locking tool (2) **EN 50793** into the slots of the intake camshaft actuator and mount tool to engine front cover assembly and tighten the bolts (1) to 10 (89 lb in).

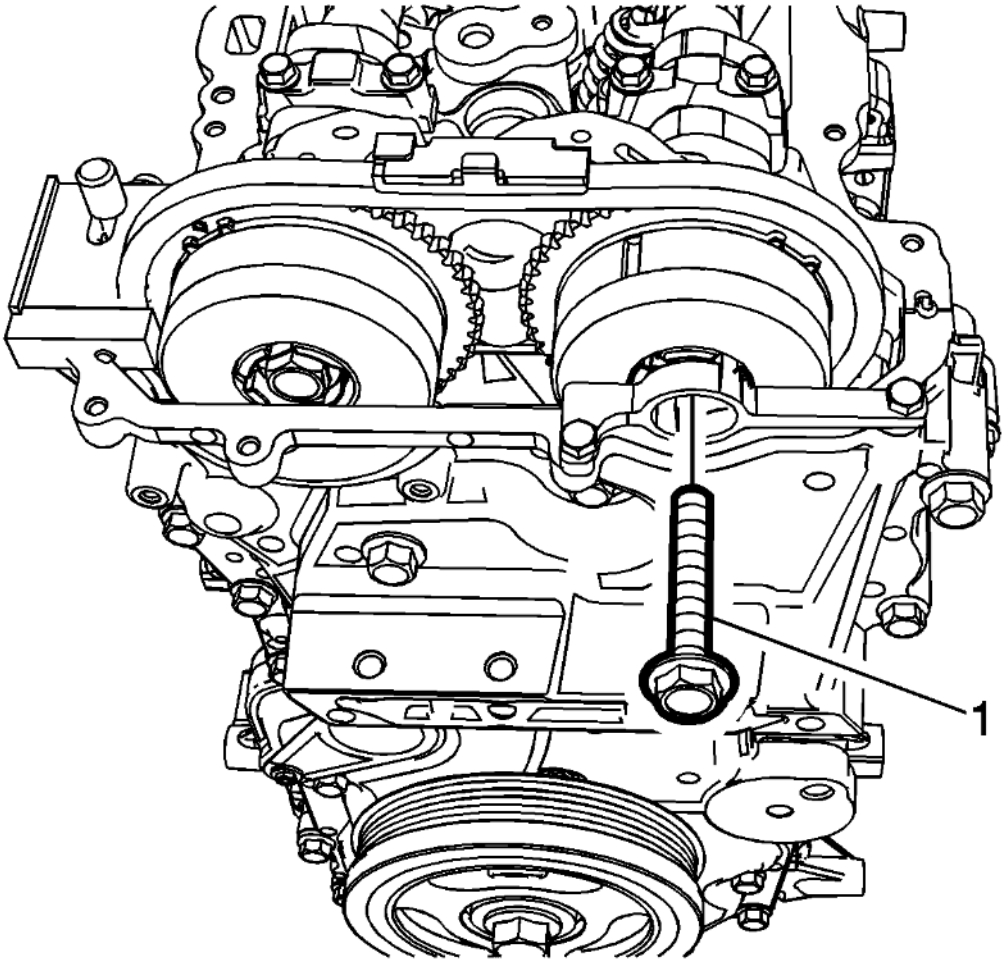

Fig. 129: Camshaft Actuator Bolt
Courtesy of GENERAL MOTORS COMPANY

10. Install a NEW camshaft actuator bolt (1) and tighten to 30 (22 lb ft) plus 100 degrees.

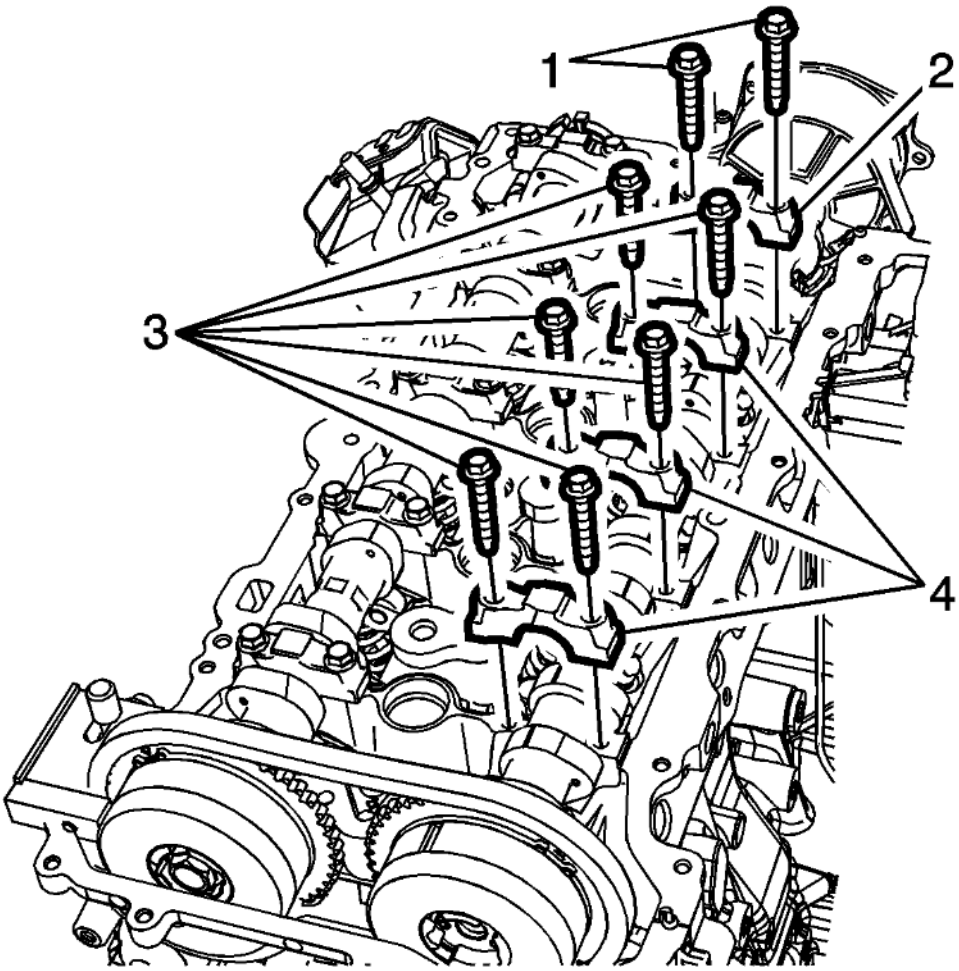

Fig. 130: Exhaust Camshaft Bearing Rear Cap Bolts And Cap
Courtesy of GENERAL MOTORS COMPANY

NOTE: **Apply lubricant to all lobes and journals prior to installing the camshafts.**

11. Set the exhaust camshaft on top of the roller followers in the camshaft bearing journals with the exhaust actuator timing mark at approximately the one O'clock position.

NOTE: **To properly position the camshaft caps, install the camshaft cap bolts into the camshaft caps prior to installing the camshaft caps on the camshafts.**

12. Install the camshaft cap bolts (1, 3) into the camshaft caps (2, 4).
13. Install the camshaft caps (2, 4) and hand start the camshaft cap bolts (1, 3).

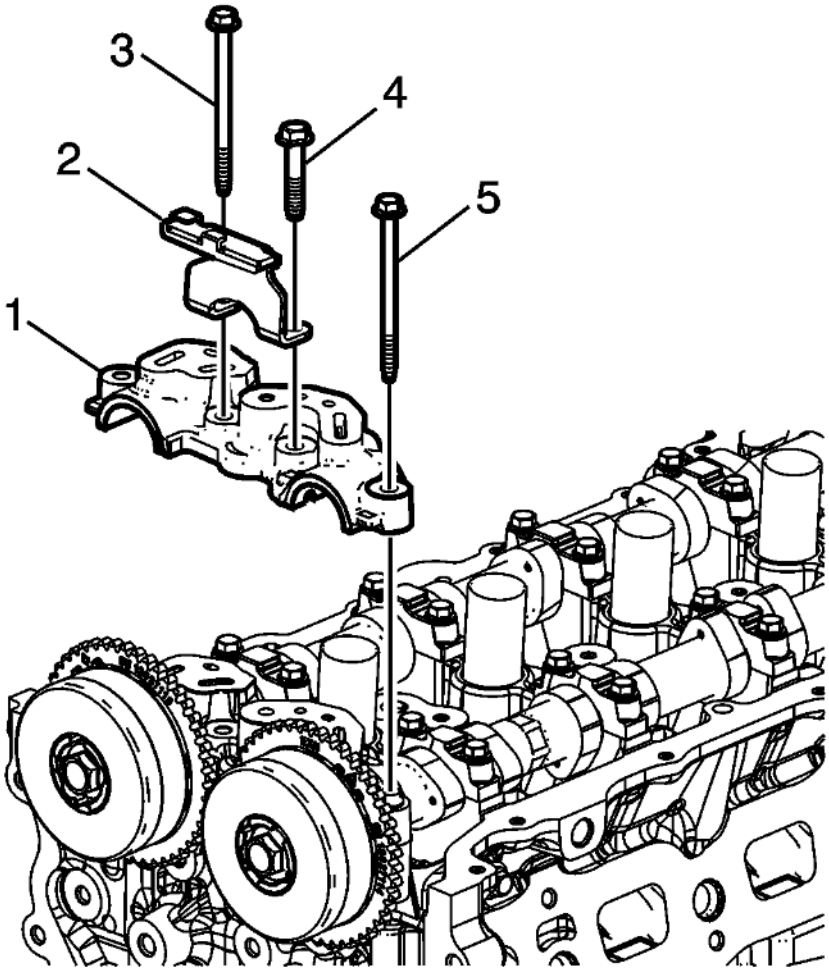

Fig. 131: Front Camshaft Bearing Cap
Courtesy of GENERAL MOTORS COMPANY

14. Install the front camshaft bearing cap (1). Install the timing chain guide (2) onto the front camshaft bearing cap, then hand start the camshaft cap bolts (3-5).

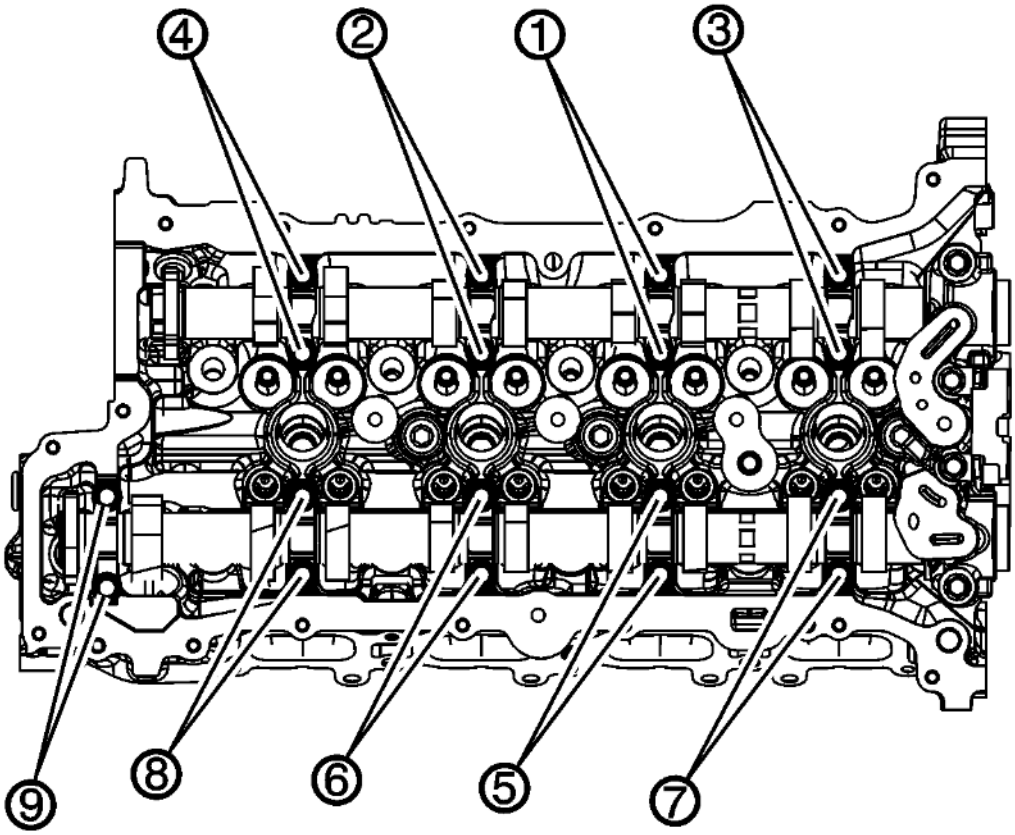

Fig. 132: Camshaft Cap Bolt Tightening Sequence
Courtesy of GENERAL MOTORS COMPANY

NOTE: **During the tightening sequence, locate and tighten each camshaft cap bolt installed into the circular hole first. Then, tighten the bolt installed into the slotted hole.**

15. Tighten the camshaft cap bolts in sequence using the following procedure:
    1. Tighten the camshaft cap bolts in sequence to 8 (71 lb in).
    2. Loosen both bolts in each cap in sequence to 180 degrees.
    3. Tighten the camshaft cap bolts in sequence to 10 (89 lb in) twice.

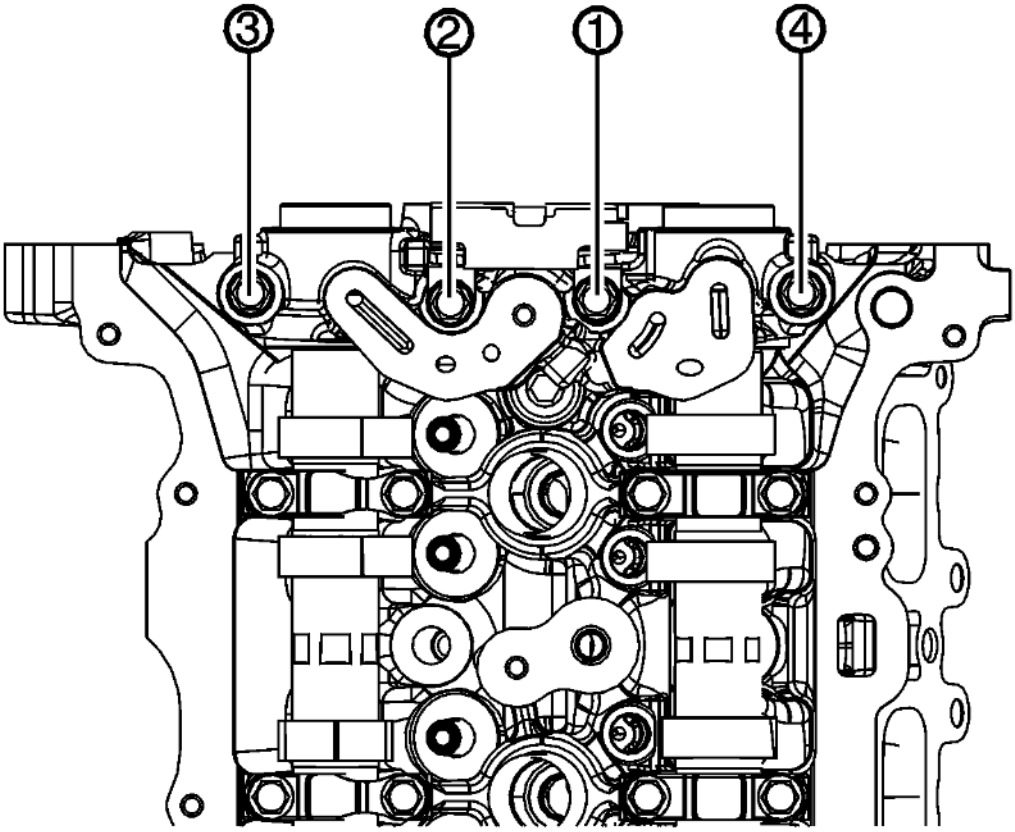

Fig. 133: Front Camshaft Cap Bolt Tightening Sequence
Courtesy of GENERAL MOTORS COMPANY

16. Tighten the front camshaft cap bolts in sequence to 10 (89 lb in) twice.

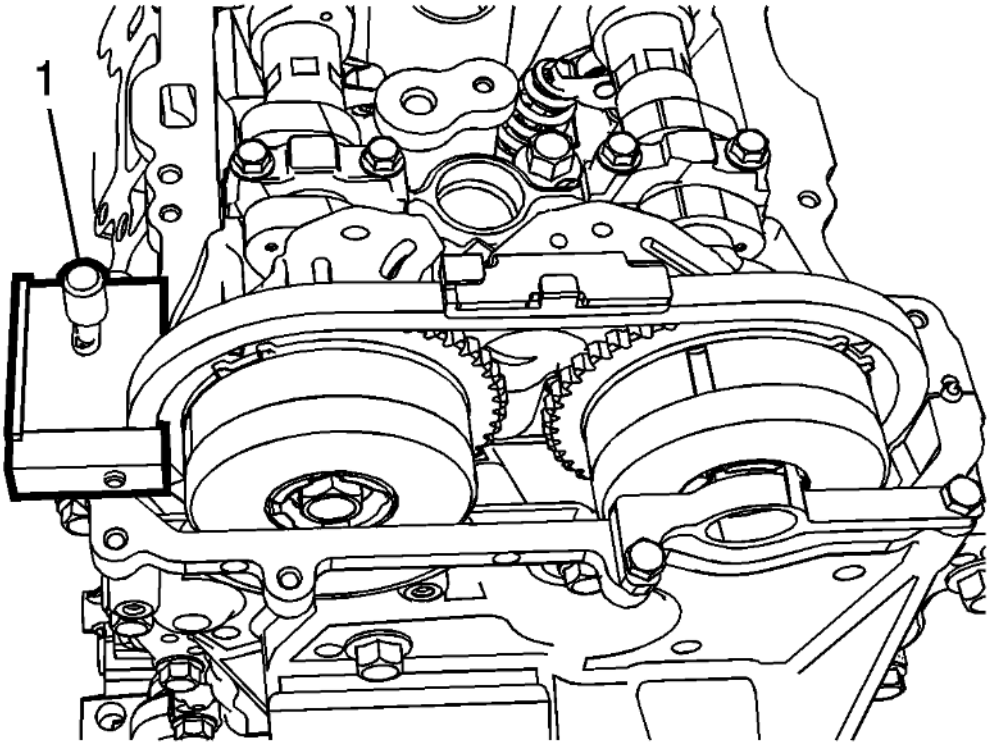

Fig. 134: Identifying Timing Chain Holding Tool
Courtesy of GENERAL MOTORS COMPANY

17. Remove **EN-50656** timing chain holding tool (1).
18. Install the camshaft cover. Refer to **Camshaft Cover Replacement**.
19. Install the high pressure fuel pump. Refer to **Fuel Pump Replacement** .

CAMSHAFT POSITION ACTUATOR AND CAMSHAFT REPLACEMENT - EXHAUST

Special Tools

- **EN-50656** Holding Tool
- **EN 50793** Locking Tool

For equivalent regional tools, refer to **Special Tools** .

Removal Procedure

NOTE: **Ensure the engine is properly timed to Top Dead Center (TDC), prior to performing repairs.**

1. Remove the camshaft cover. Refer to **Camshaft Cover Replacement**.

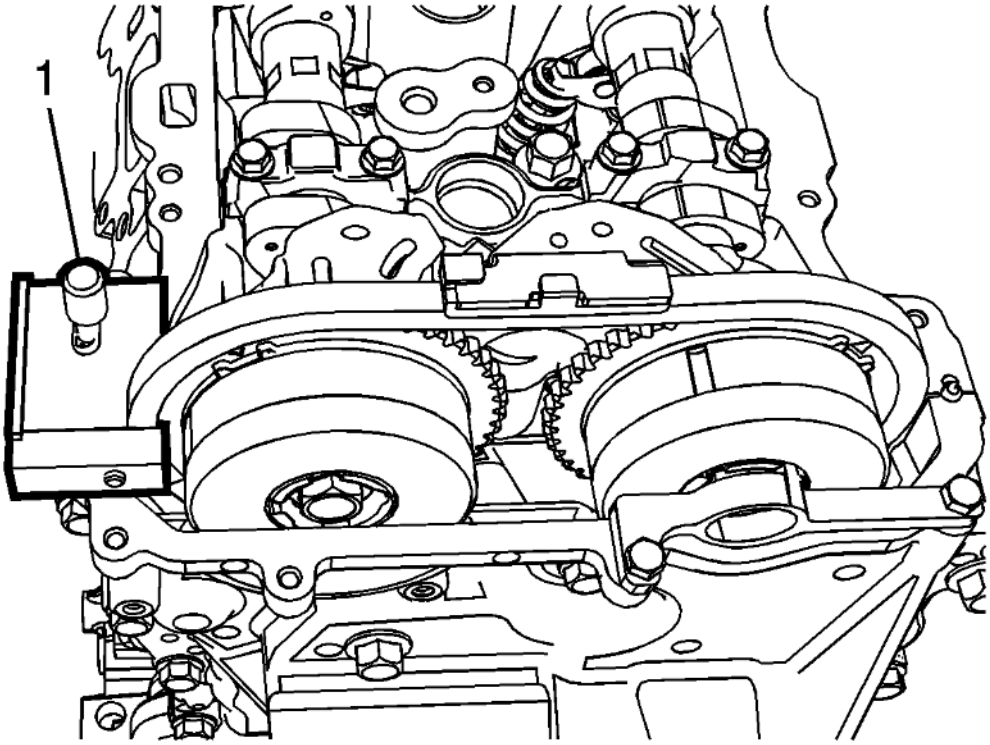

Fig. 135: Identifying Timing Chain Holding Tool
Courtesy of GENERAL MOTORS COMPANY

NOTE: **Ensure the EN-50656 Holding tool is installed and securely tightened to prevent the camshaft chain from dropping into the front engine cover during camshaft actuator replacement.**

2. Install **EN-50656** timing chain holding tool (1) and tighten to 8 (71 lb in).

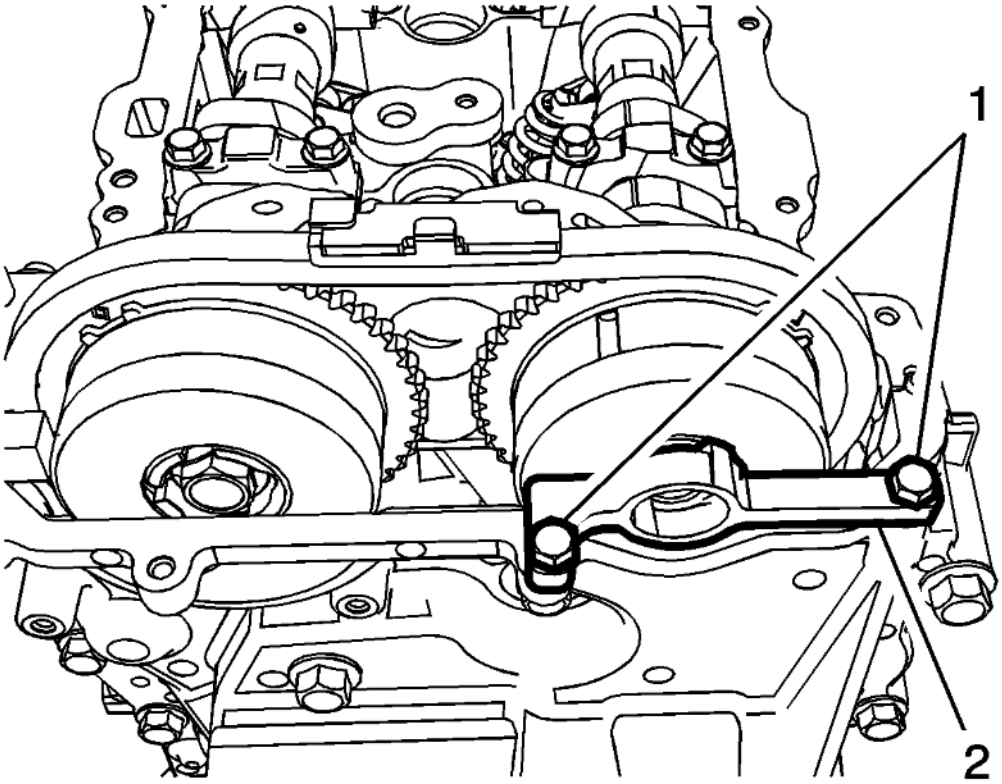

Fig. 136: Install Camshaft Actuator Locking Tool
Courtesy of GENERAL MOTORS COMPANY

CAUTION: Refer to Fastener Caution .

NOTE: Ensure to mark actuator sprocket and chain before removal.

3. Align and install camshaft actuator locking tool (2) **EN 50793** into the slots of the exhaust camshaft actuator and mount tool to engine front cover assembly and tighten the bolts (1) to 10 (89 lb in).

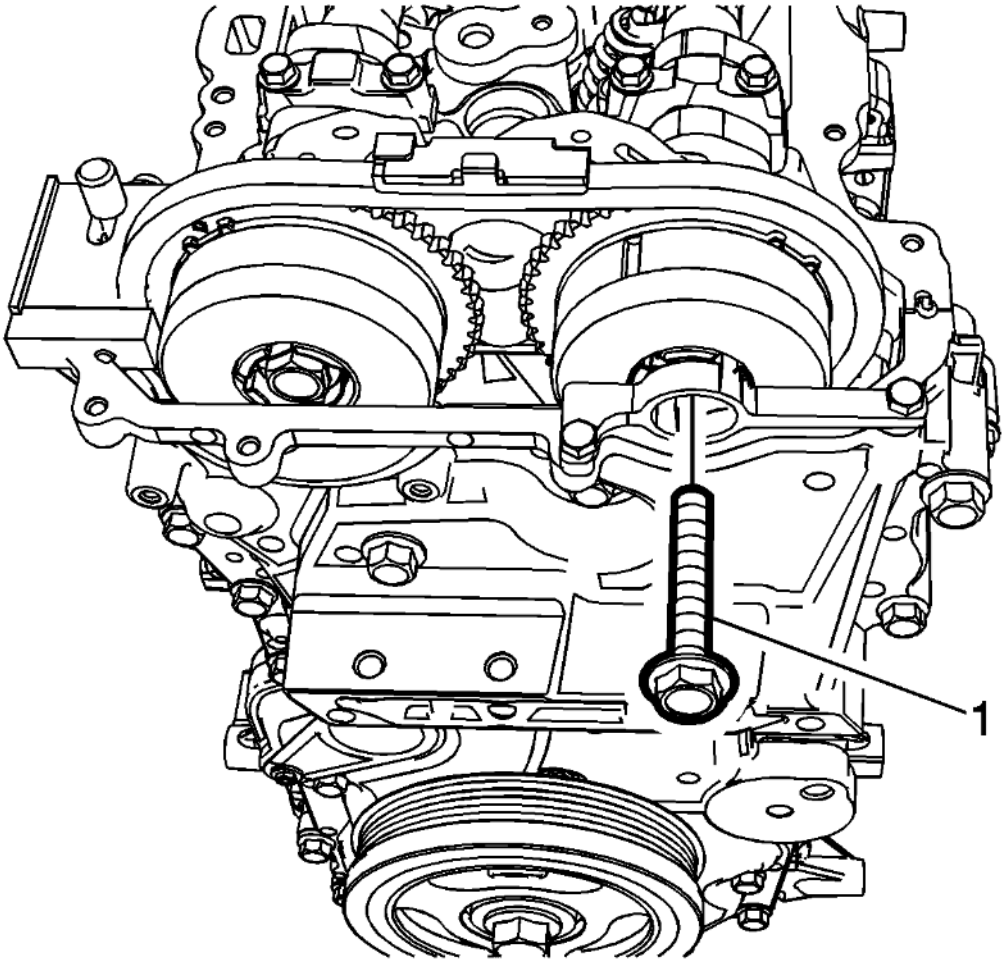

Fig. 137: Camshaft Actuator Bolt
Courtesy of GENERAL MOTORS COMPANY

4. Remove and DISCARD the camshaft actuator bolt (1).

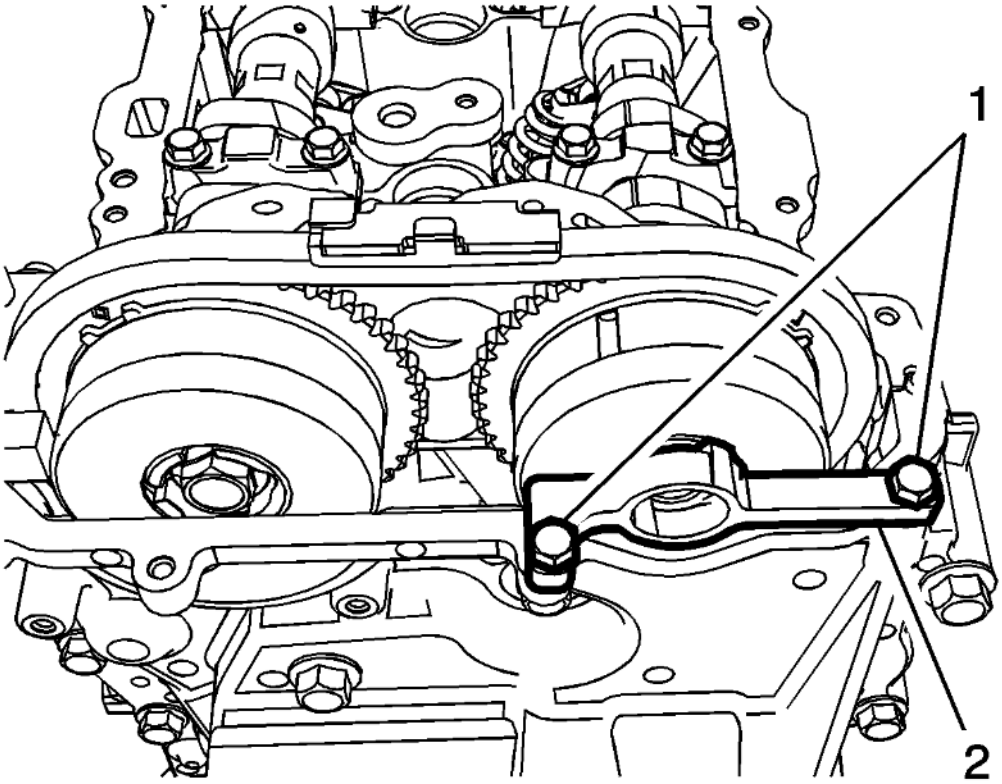

Fig. 138: Install Camshaft Actuator Locking Tool
Courtesy of GENERAL MOTORS COMPANY

5. Remove the **EN-50793** holding tool (2).

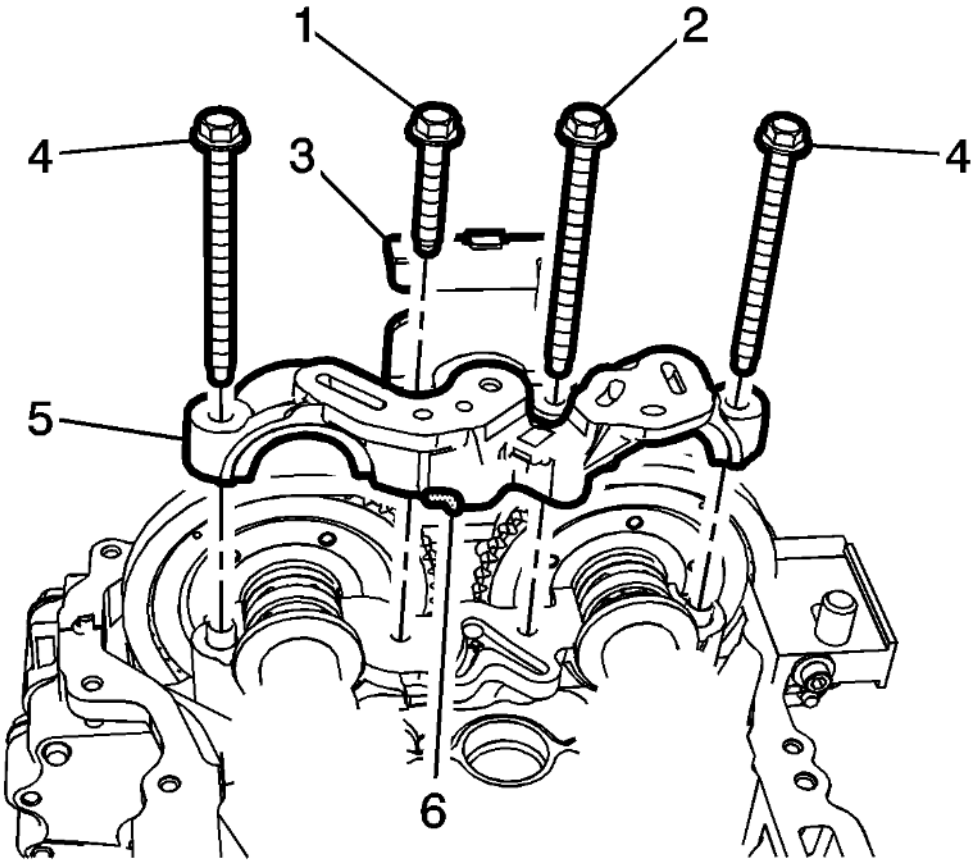

Fig. 139: Upper Timing Chain Guide Bolts
Courtesy of GENERAL MOTORS COMPANY

6. Remove the upper timing chain guide bolts (1, 2).
7. Remove the upper timing chain guide (3).
8. Remove the camshaft front bearing cap bolts (4).

NOTE: **Locate the pry points (6) in the camshaft front bearing cap. When using the 3 pry points to remove the front bearing cap evenly, use a protective material between the camshaft lobes, the cylinder head flange, and pry tool.**

9. Remove the camshaft front bearing cap (5).

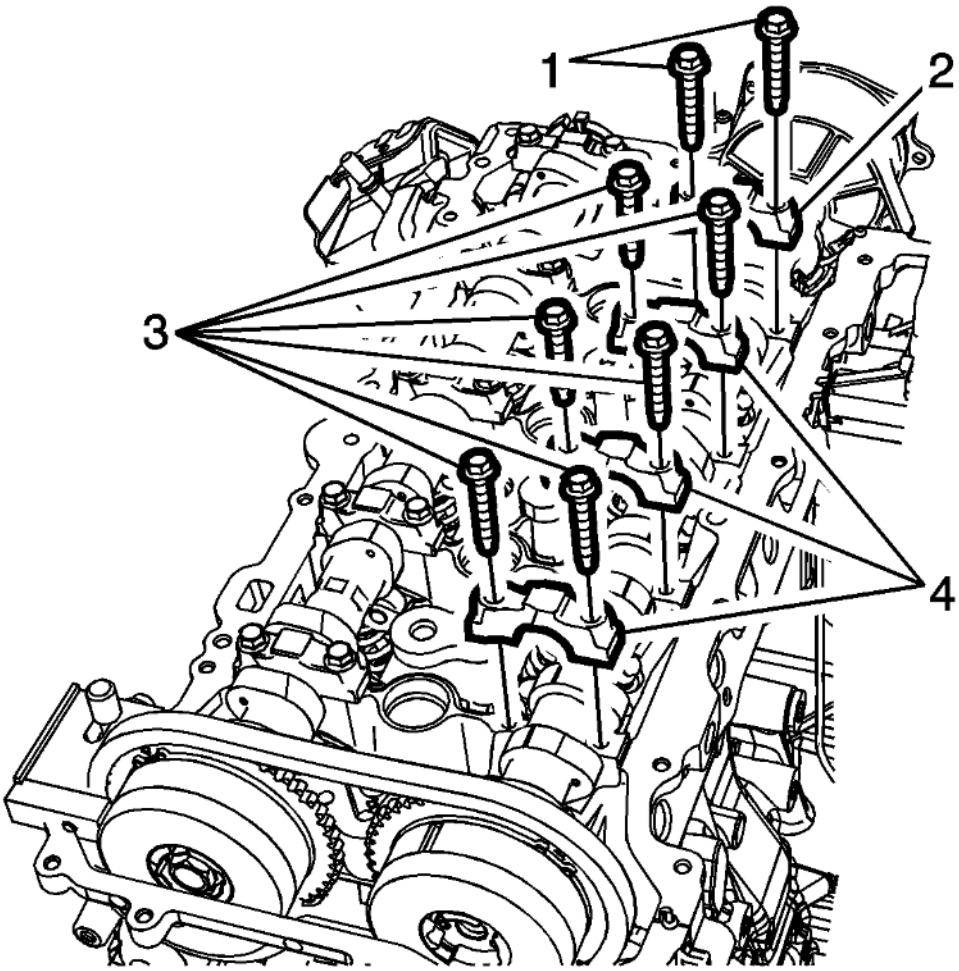

Fig. 140: Exhaust Camshaft Bearing Rear Cap Bolts And Cap
Courtesy of GENERAL MOTORS COMPANY

10. Mark the exhaust camshaft rear cap to ensure it is installed in the same position. Remove the exhaust camshaft bearing rear cap bolts (1) and cap (2).

NOTE: **Loosen each bolt on each cap one turn at a time until there is no spring tension pushing on the camshaft.**

11. Mark the camshaft caps (4) to ensure they are installed in the same position.
12. Remove the exhaust camshaft cap bolts (3).
13. Remove the camshaft caps (4).

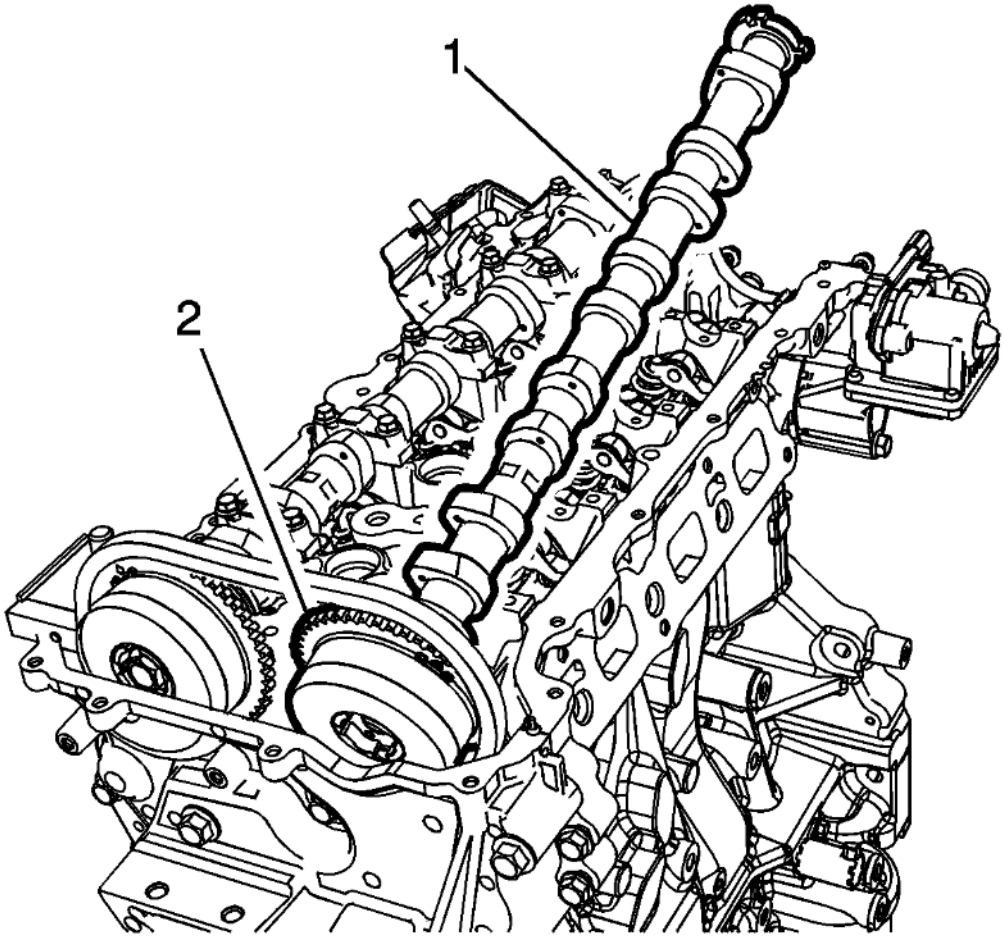

Fig. 141: Camshaft Assembly
Courtesy of GENERAL MOTORS COMPANY

14. Pull exhaust camshaft actuator assembly forward away from camshaft assembly (1), then lift rear of exhaust camshaft assembly to a tilt and pull free from exhaust camshaft actuator assembly (2).

NOTE: **If replacing the camshaft, ensure to transfer any marking from the old camshaft to the new one.**

15. Replace the camshaft if necessary.

Installation Procedure

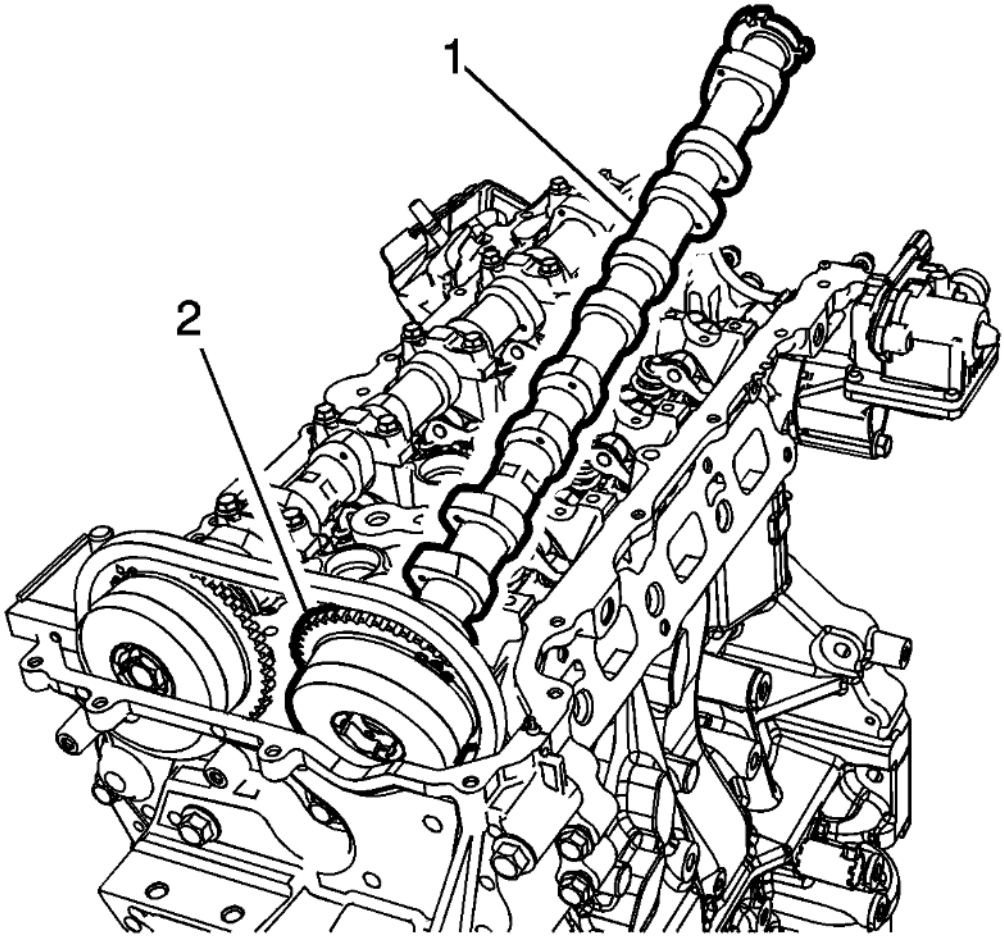

Fig. 142: Camshaft Assembly
Courtesy of GENERAL MOTORS COMPANY

1. Install the exhaust camshaft (1) and camshaft actuator (2).

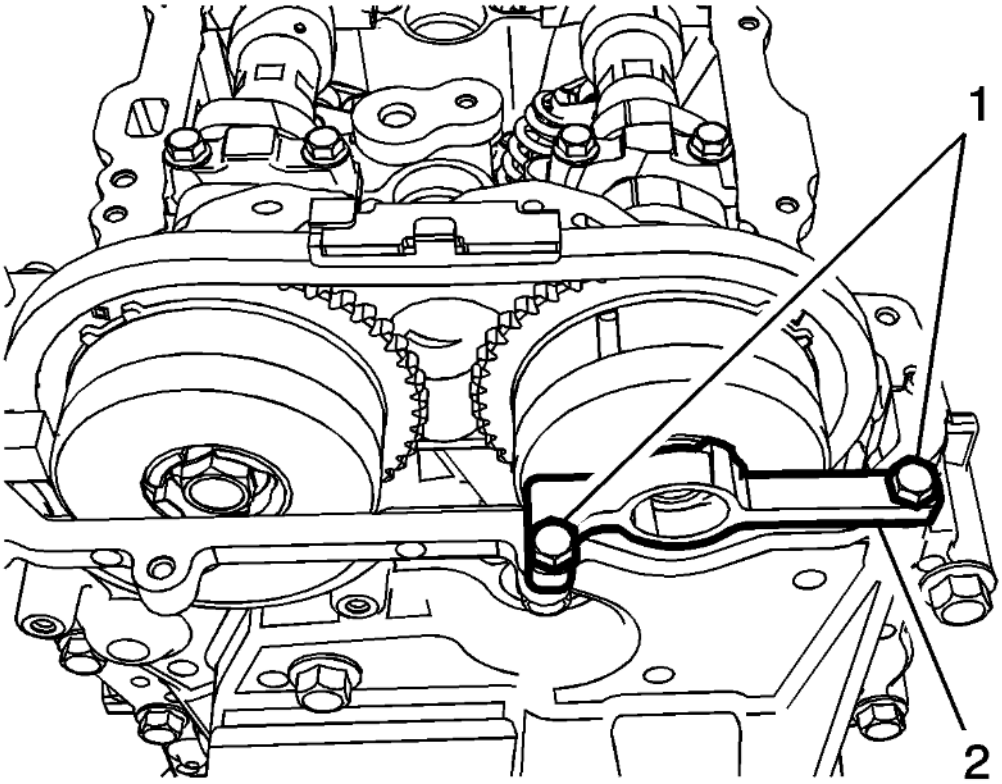

Fig. 143: Camshaft Actuator Locking Tool
Courtesy of GENERAL MOTORS COMPANY

CAUTION: Refer to Fastener Caution .

2. Align and install camshaft actuator locking tool (2) **EN 50793** into the slots of the intake camshaft actuator and mount tool to engine front cover assembly and tighten the bolts (1) to 10 (89 lb in).

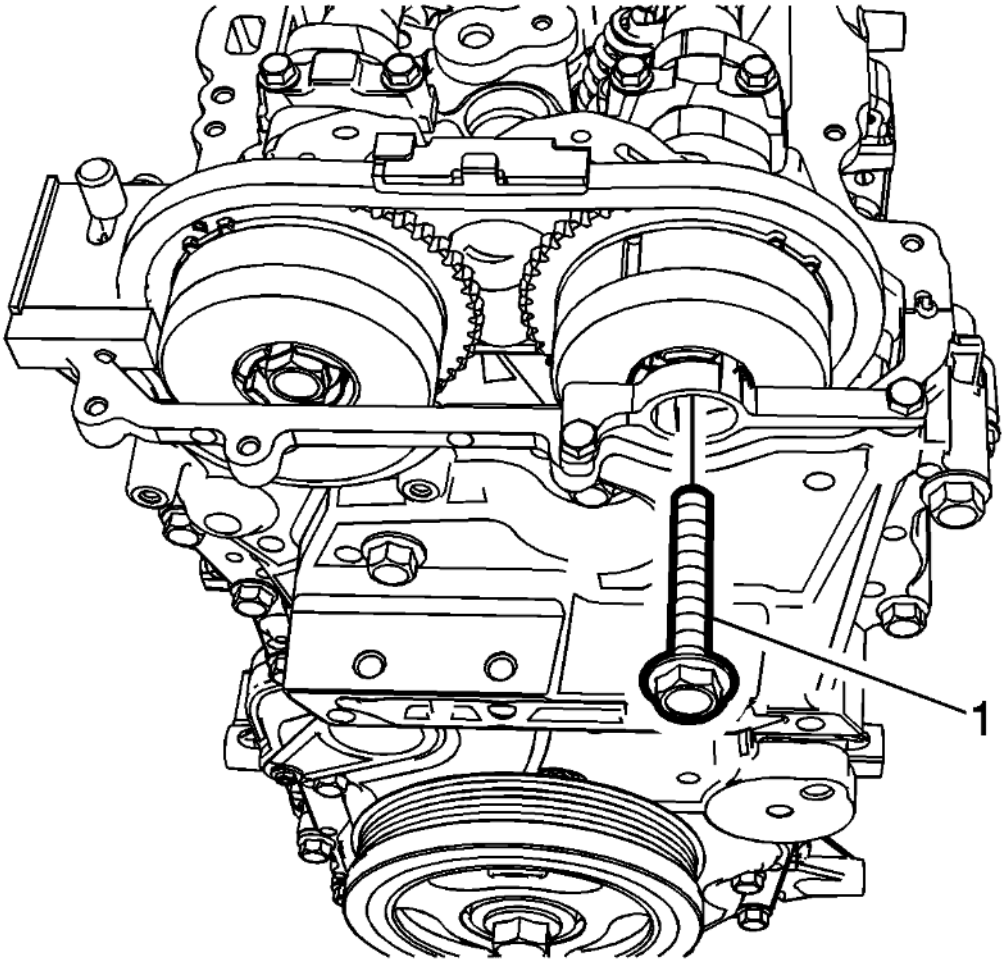

Fig. 144: Camshaft Actuator Bolt
Courtesy of GENERAL MOTORS COMPANY

3. Install a NEW camshaft actuator bolt (1) and tighten to 30 (22 lb ft) plus 100 degrees.

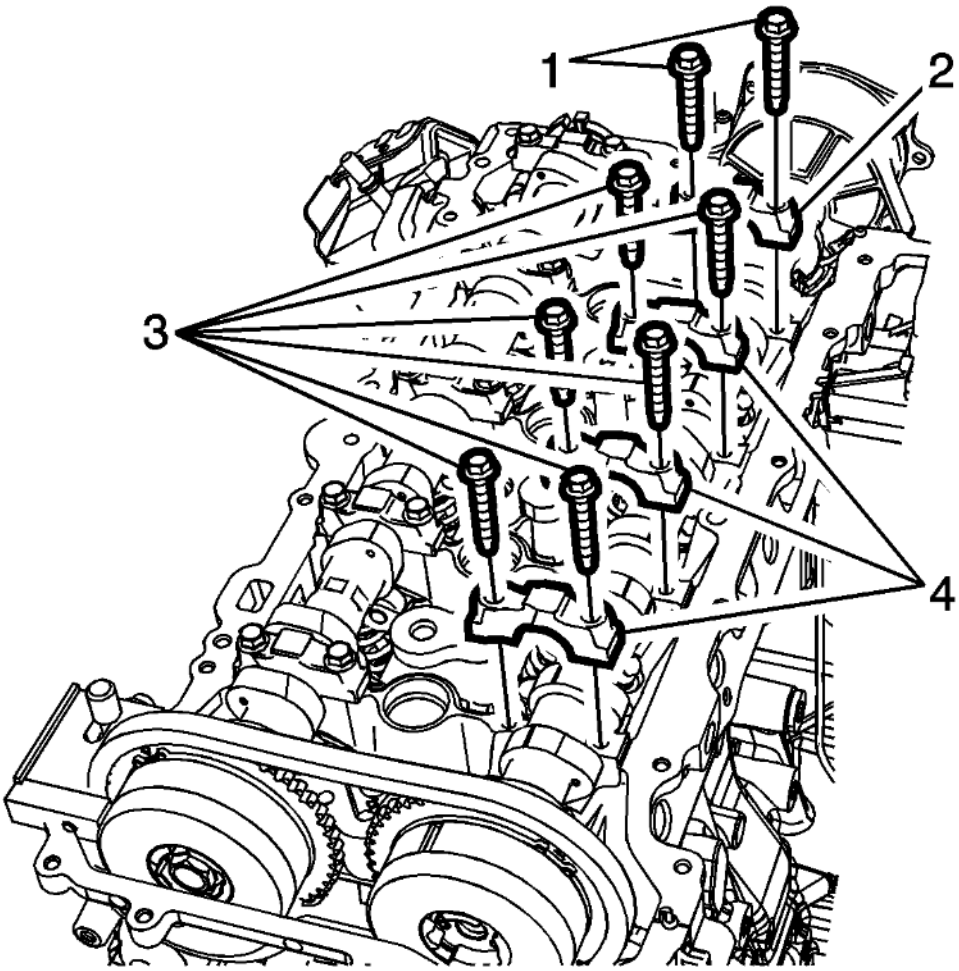

Fig. 145: Exhaust Camshaft Bearing Rear Cap Bolts And Cap
Courtesy of GENERAL MOTORS COMPANY

NOTE: **Apply lubricant to all lobes and journals prior to installing the camshafts.**

4. Set the exhaust camshaft on top of the roller followers in the camshaft bearing journals with the exhaust actuator timing mark at approximately the one O'clock position.

NOTE: **To properly position the camshaft caps, install the camshaft cap bolts into the camshaft caps prior to installing the camshaft caps on the camshafts.**

5. Install the camshaft cap bolts (1, 3) into the camshaft caps (2, 4).
6. Install the camshaft caps (2, 4) and hand start the camshaft cap bolts (1, 3).

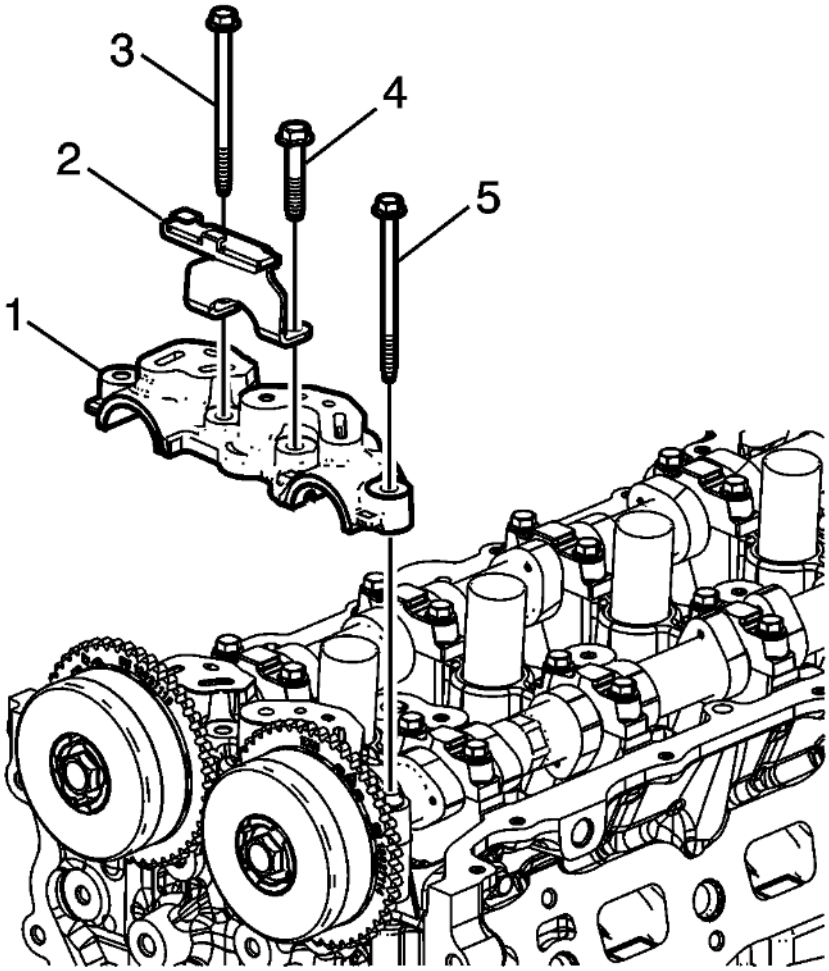

Fig. 146: Front Camshaft Bearing Cap
Courtesy of GENERAL MOTORS COMPANY

7. Install the front camshaft bearing cap (1). Install the timing chain guide (2) onto the front camshaft bearing cap, then hand start the camshaft cap bolts (3-5).

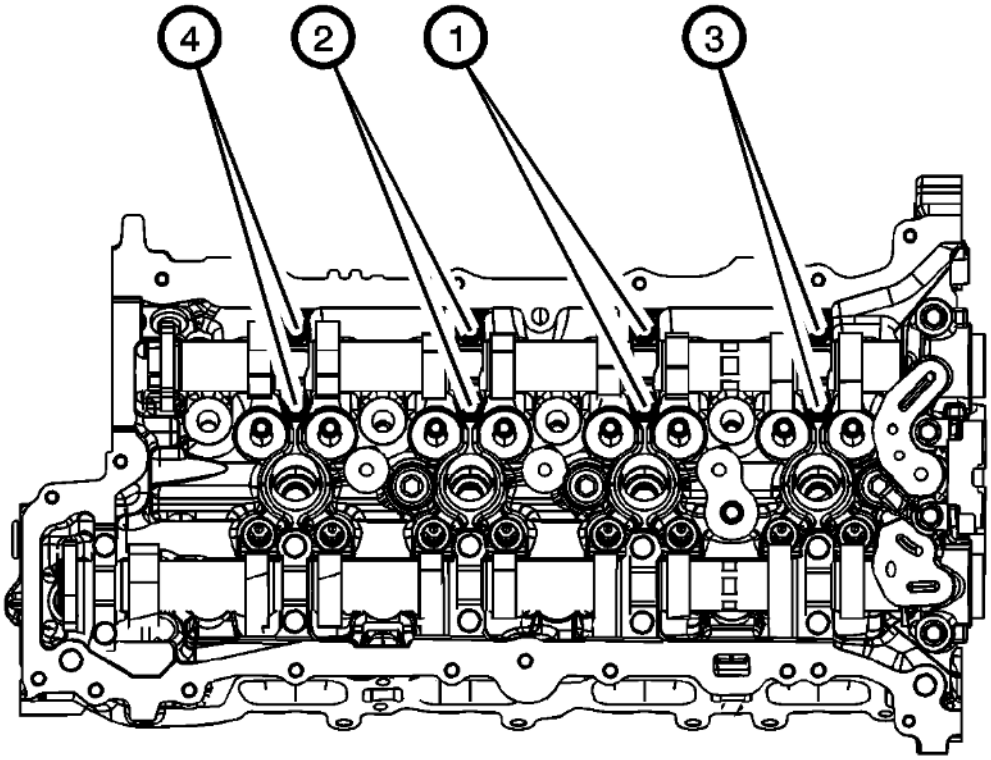

Fig. 147: Camshaft Cap Bolt Tightening Sequence
Courtesy of GENERAL MOTORS COMPANY

NOTE: **During the tightening sequence, locate and tighten each camshaft cap bolt installed into the circular hole first. Then, tighten the bolt installed into the slotted hole.**

8. Install the camshaft cap bolts in sequence using the following procedure:
    1. Tighten the camshaft cap bolts in sequence to 8 (71 lb in).
    2. Loosen both bolts in each cap in sequence to 180 degrees.
    3. Tighten the camshaft cap bolts in sequence to 10 (89 lb in) twice.

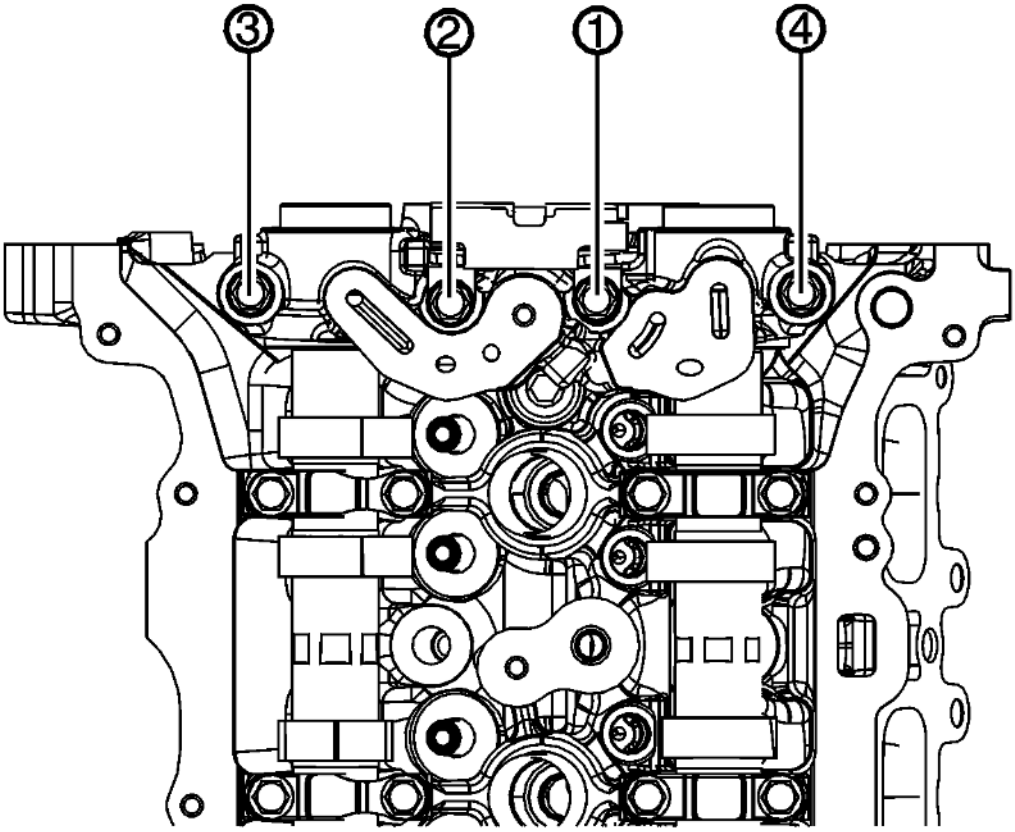

Fig. 148: Front Camshaft Cap Bolt Tightening Sequence
Courtesy of GENERAL MOTORS COMPANY

9. Tighten the front camshaft cap bolts in sequence to 10 (89 lb in) twice.

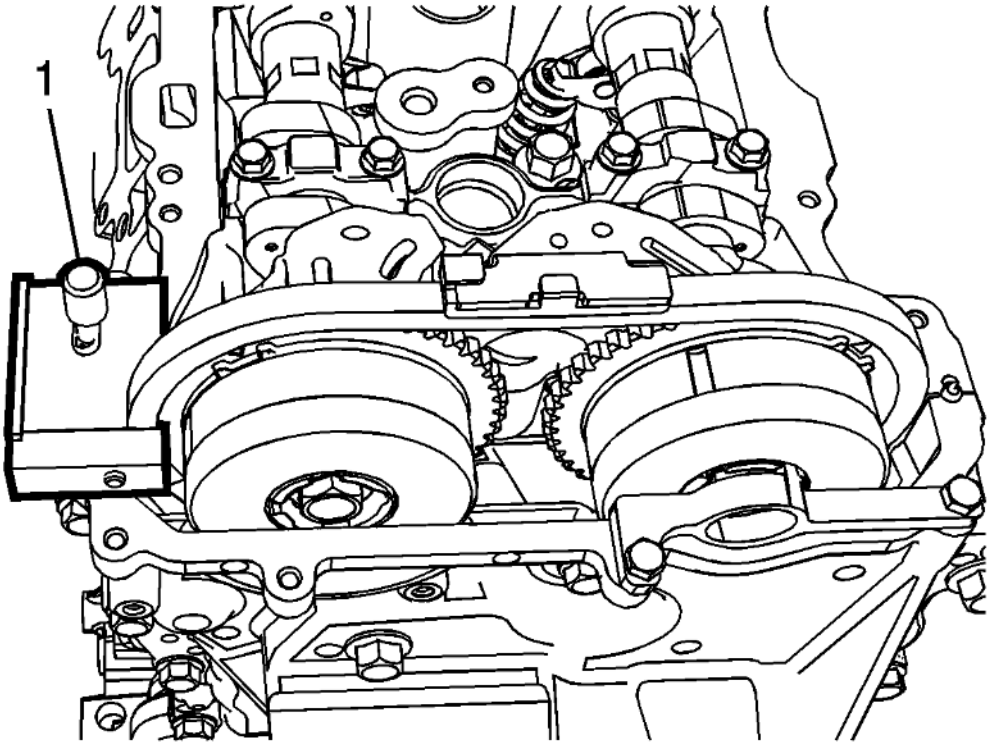

Fig. 149: Identifying Timing Chain Holding Tool
Courtesy of GENERAL MOTORS COMPANY

10. Remove **EN-50656** timing chain holding tool (1).
11. Install the camshaft cover. Refer to **Camshaft Cover Replacement**.

CAMSHAFT COVER HEAT SHIELD REPLACEMENT

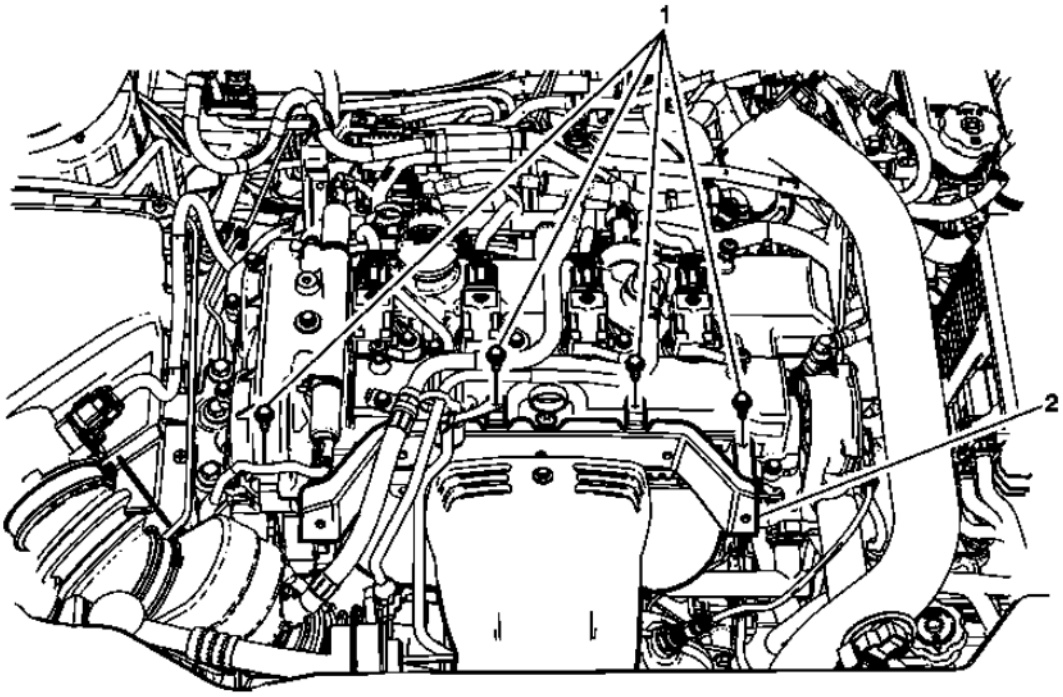

Fig. 150: Camshaft Cover Heat Shield
Courtesy of GENERAL MOTORS COMPANY

Camshaft Cover Heat Shield Replacement

Callout	Component Name
Preliminary Procedure Remove the intake manifold cover. Refer to **Intake Manifold Cover Replacement**.	
1	Camshaft Heat Shield Cover Fastener (Qty: 4) **CAUTION:** **Refer to Fastener Caution .** **Tighten** 10 (89 lb in)
2	Camshaft Heat Shield Cover

VALVE STEM OIL SEAL AND VALVE SPRING REPLACEMENT

Special Tools

- **EN-36017** Valve Guide Seal Remover
- **EN-43649** Valve Spring Compressor
- **EN-43649-10** Valve Spring Compressor Adaptor Set
- **EN-46106** Flywheel Holder

For equivalent regional tools refer to **Special Tools** .

Removal Procedure

NOTE: Prevent the crankshaft from rotating clockwise or counterclockwise before using compressed air in the cylinder. Rotation of the crankshaft may cause damage to EN-46106 flywheel holding.

1. If equipped with a manual transmission, leave the transmission in first gear with the vehicle on the ground and the parking brake set.
2. If equipped with an automatic transmission, remove the starter. Refer to **Starter Replacement (LTG)** .
3. Install **EN-46106** flywheel holding.
4. Remove the camshaft. Refer to **Camshaft Position Actuator and Camshaft Replacement - Intake**, or **Camshaft Position Actuator and Camshaft Replacement - Exhaust**.

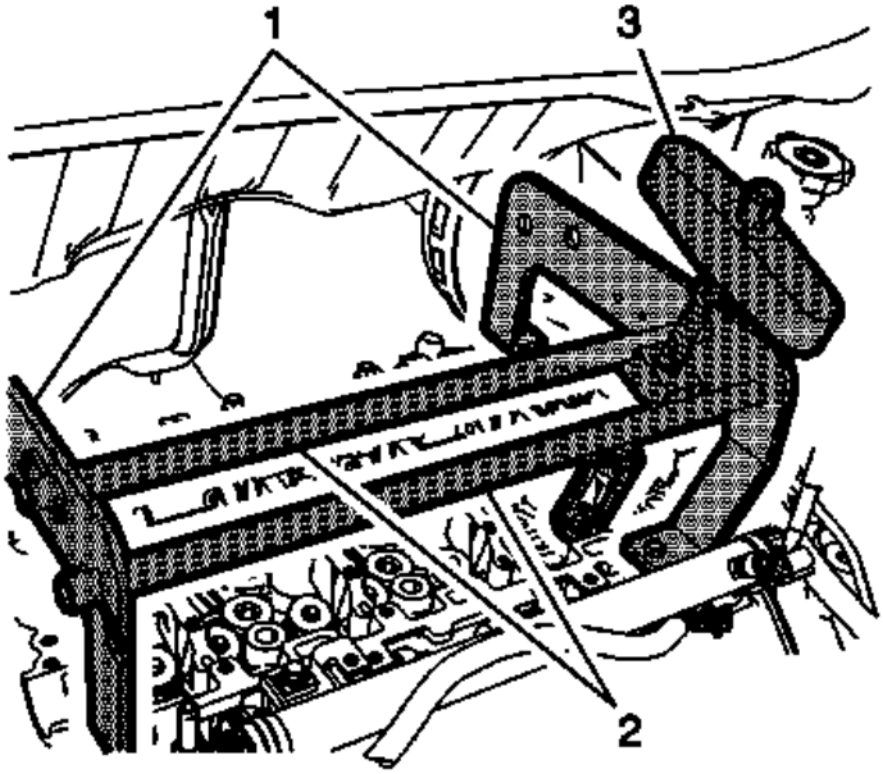

Fig. 151: View Of Valve Spring Compressor Adaptor Set
Courtesy of GENERAL MOTORS COMPANY

5. Install the **EN-43649-10** adaptor set (1) to the front and rear of the cylinder head.
6. Install the cross bars and locks (2) of the **EN-43649** compressor to the valve spring compressor adaptors.
7. Remove the spark plugs. Refer to **Spark Plug Replacement** .
8. Install an air hose adapter into the spark plug hole.
9. Attach an air hose to the adapter and pressurize the cylinder to 690 kPa (100 psi).

10. Compress the valve spring using the valve spring compressor (3).

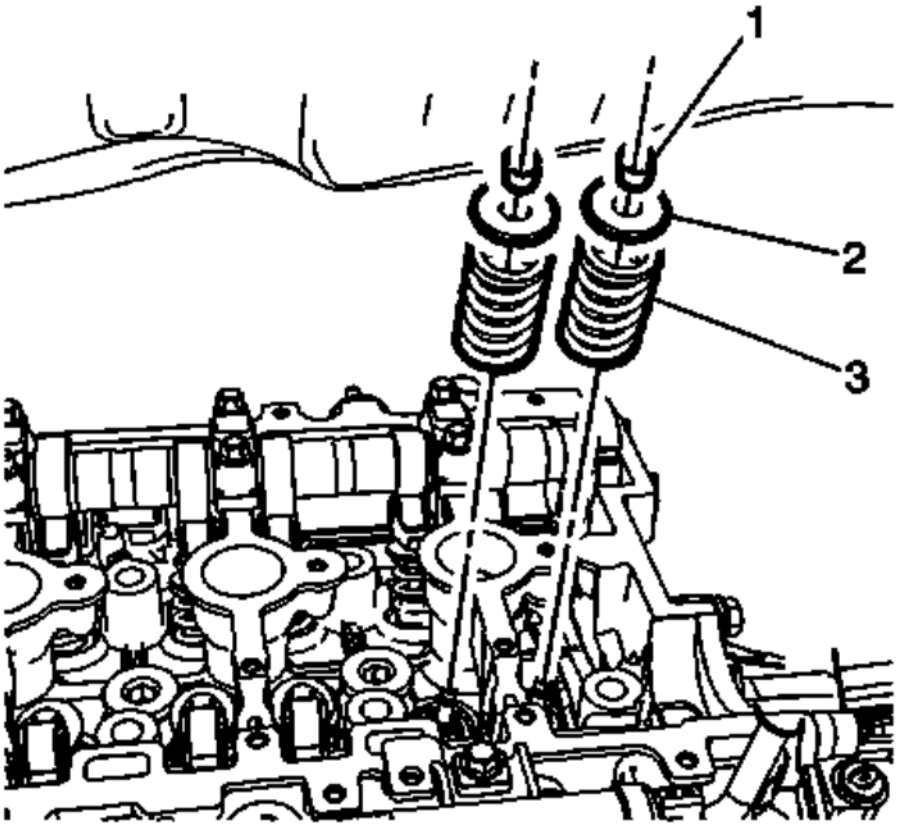

Fig. 152: View Of Valve Spring, Keepers & Retainer
Courtesy of GENERAL MOTORS COMPANY

11. Remove the valve spring keepers (1).
12. Remove the valve spring (3) and retainer (2).

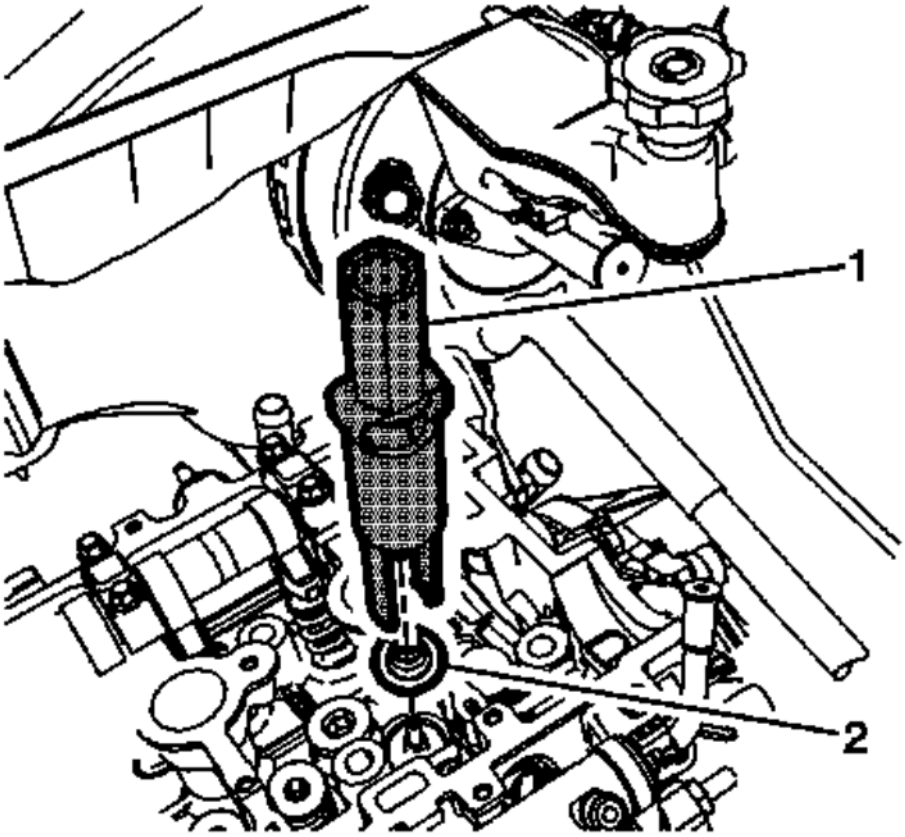

Fig. 153: View Of Valve Guide Seal Remover/Installer
Courtesy of GENERAL MOTORS COMPANY

13. Use the **EN-36017** seal remover (1) to remove the valve seal.

Installation Procedure

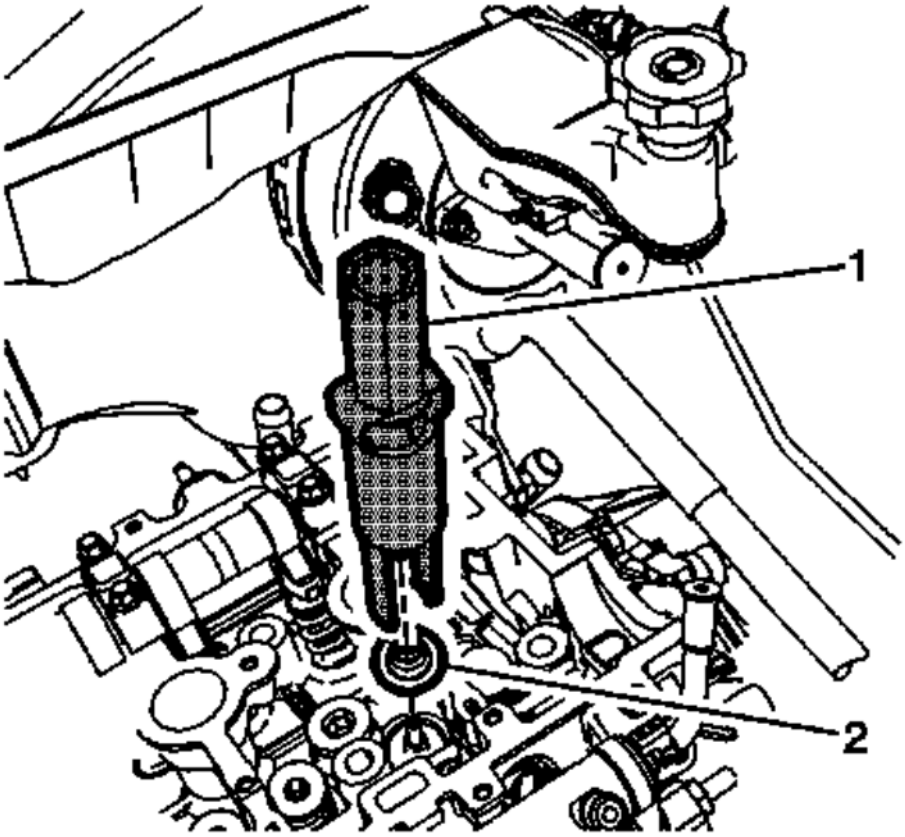

Fig. 154: View Of Valve Guide Seal Remover/Installer
Courtesy of GENERAL MOTORS COMPANY

1. Using the **EN-36017** seal remover (1) install the NEW valve seal. Fully seat the seal onto the valve guide.

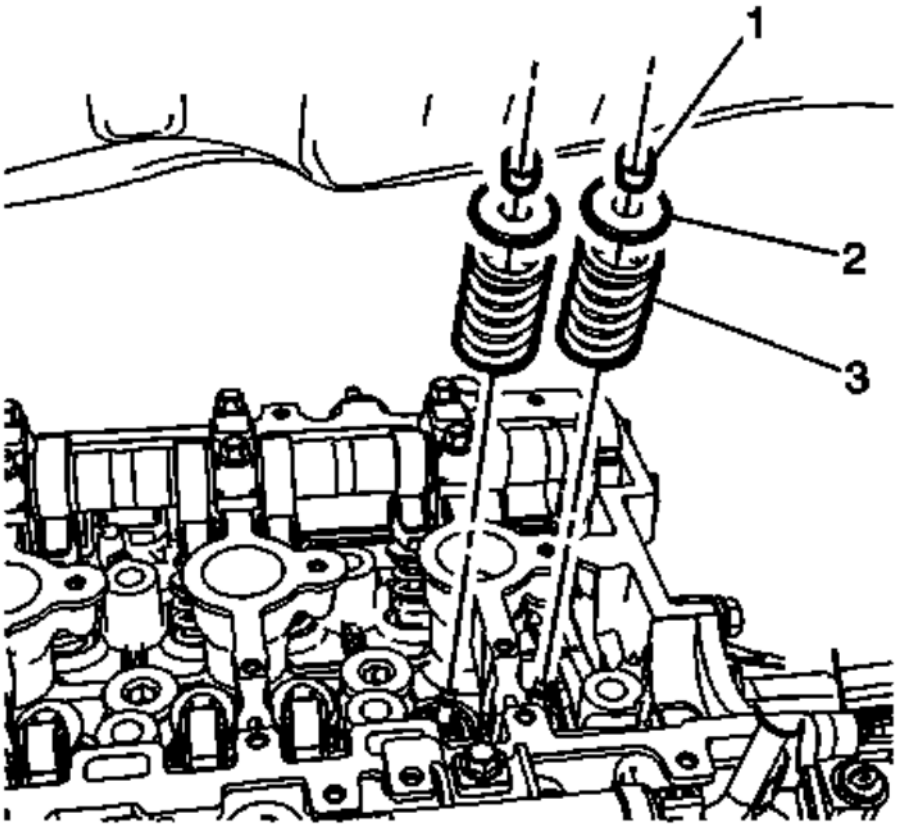

Fig. 155: View Of Valve Spring, Keepers & Retainer
Courtesy of GENERAL MOTORS COMPANY

2. Install the valve spring (3) and retainer (2).
3. Compress the valve spring using the valve spring compressor.
4. Install the valve spring keepers (1).
5. Disconnect the air hose and air hose adapter.

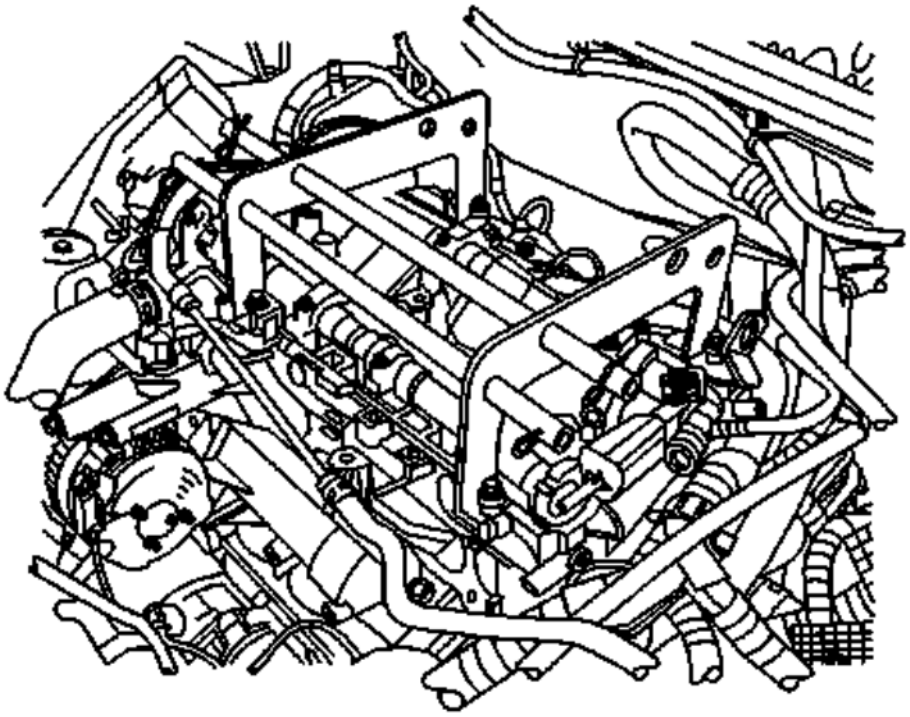

Fig. 156: Cylinder Head Valve Spring Compressor
Courtesy of GENERAL MOTORS COMPANY

6. Remove the **EN-43649** compressor and **EN-43649-10** adaptor set from the cylinder head.
7. Install the spark plugs. Refer to **Spark Plug Replacement** .
8. Install the camshaft. Refer to **Camshaft Position Actuator and Camshaft Replacement - Intake**, or **Camshaft Position Actuator and Camshaft Replacement - Exhaust**.
9. Remove the **EN-46106** flywheel holding.
10. If equipped with an automatic transmission, install the starter. Refer to **Spark Plug Replacement** .

CYLINDER HEAD REPLACEMENT

Removal Procedure

Special Tools

- **EN 38188** Cylinder Head Broken Bolt Extractor Kit
- **EN 45059** Angle Meter

For equivalent regional tools, refer to **Special Tools** .

1. Drain the coolant system. Refer to **Cooling System Draining and Filling (Static Fill)** , **Cooling System Draining and Filling (GE 47716)** .

2. Drain the engine oil. Refer to **Engine Oil and Oil Filter Replacement**.
3. Remove the camshaft cover. Refer to **Camshaft Cover Replacement**.
4. Remove the intake manifold. Refer to **Intake Manifold Replacement**.
5. Remove the exhaust manifold. Refer to **Exhaust Manifold Replacement (LTG)** .
6. Remove the engine front cover. Refer to **Engine Front Cover Replacement**.
7. Remove the camshaft position actuator and camshaft - Intake. Refer to **Camshaft Position Actuator and Camshaft Replacement - Intake**.

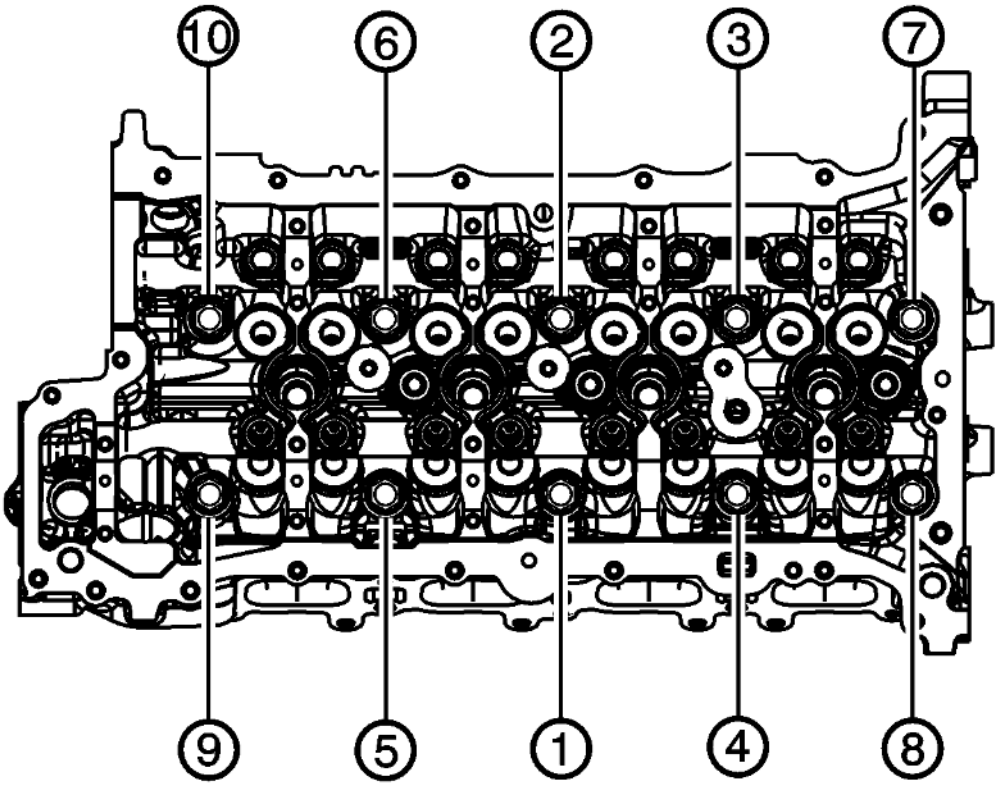

Fig. 157: Cylinder Head Bolt Tightening Sequence
Courtesy of GENERAL MOTORS COMPANY

8. Remove the cylinder head to the block bolts in sequence.

   Discard the bolts.

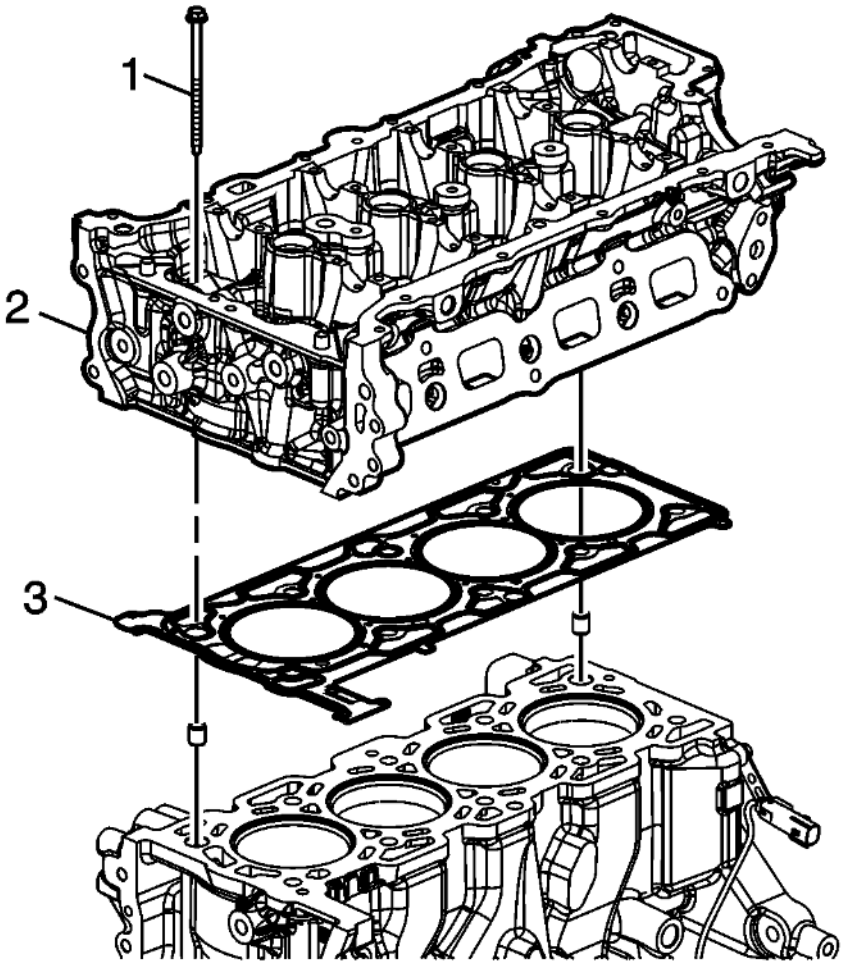

Fig. 158: Cylinder Head Gasket
Courtesy of GENERAL MOTORS COMPANY

CAUTION: In order to prevent damage to the valves and injectors during cylinder head removal, set the cylinder head on blocks.

9. Remove the cylinder head (2).
10. Remove the cylinder head gasket (3).
11. Clean all of the gasket surfaces.
12. Use the following procedures when cleaning the cylinder head and cylinder block surfaces:
    - Use a gasket scraper to clean the cylinder head and cylinder block gasket surfaces. Do not scratch or gouge any surface.

NOTE: Do not use any other method or technique to clean these gasket surfaces.

NOTE: Be careful not to gouge or scratch the gasket surfaces. Do not gouge or scrape the combustion chamber surfaces. The feel of the gasket surface is important, not the appearance. There will be indentations from the gasket left in the cylinder head after all of

the gasket material is removed. These small indentations will be filled in by the new gasket.

-

NOTE: Do not use a tap to clean the cylinder head bolt holes.

13. Clean the old sealer/lube and dirt from the bolt holes.
14. Clean the bolt holes with a nylon bristle brush.

WARNING: Wear safety glasses to avoid injury when using compressed air or any cleaning solvent. Bodily injury may occur if fumes are inhaled or if skin is exposed to chemicals.

15. When cleaning the cylinder head bolt holes use a suitable commercial spray liquid solvent and compressed air from an extended-tip blow gun to reach the bottom of the holes.
16. Remove any broken long cylinder head bolts using the **EN 38188** kit.
17. For cylinder head disassemble. Refer to **Cylinder Head Disassemble** .
18. For cylinder head cleaning and inspection. Refer to **Cylinder Head Cleaning and Inspection**

Installation Procedure

1. For cylinder head assemble. Refer to **Cylinder Head Assemble** .

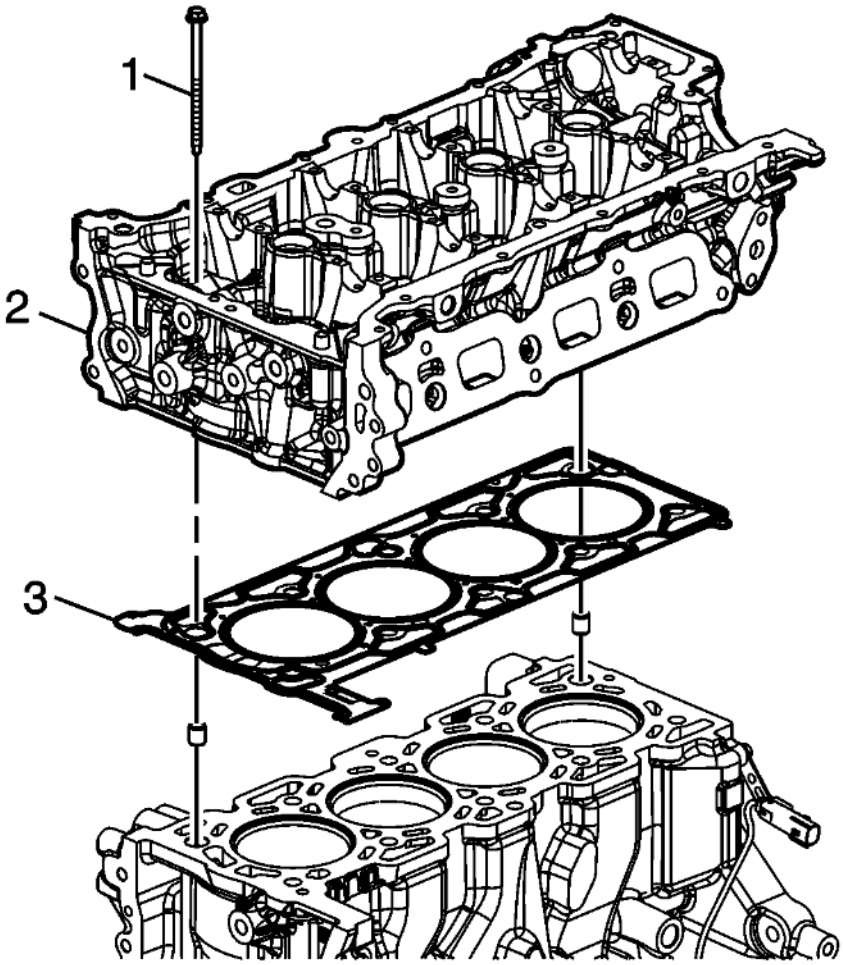

Fig. 159: Cylinder Head Gasket
Courtesy of GENERAL MOTORS COMPANY

NOTE: Do not use any sealing material.

2. Install the cylinder head gasket (3) to the block.
3. Install the cylinder head (2). Ensure the number 1 cylinder is at top dead center (TDC). The key on the crankshaft should be on top in the 12 o'clock position.

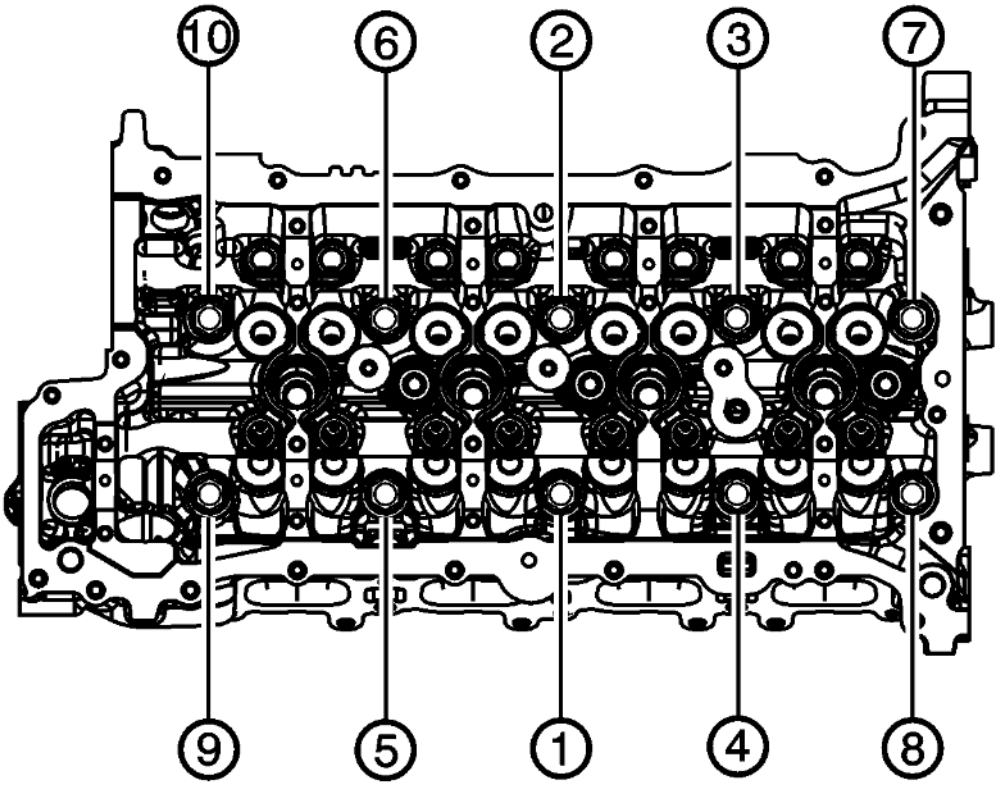

Fig. 160: Cylinder Head Bolt Tightening Sequence
Courtesy of GENERAL MOTORS COMPANY

CAUTION: Refer to Fastener Caution .

NOTE: Always use NEW cylinder head bolts.

4. Install the cylinder head bolts.
   1. Tighten the bolts in sequence to 30 N.m (22 lb ft).
   2. Tighten the bolts an additional 190 degrees in sequence using the **EN 45059** meter.
5. Install the camshaft position actuator and camshaft - Intake. Refer to **Camshaft Position Actuator and Camshaft Replacement - Intake**.
6. Install the engine front cover. Refer to **Engine Front Cover Replacement**.
7. Install the exhaust manifold. Refer to **Exhaust Manifold Replacement (LTG)** .
8. Install the intake manifold. Refer to **Intake Manifold Replacement**.
9. Install the camshaft cover. Refer to **Camshaft Cover Replacement**.
10. Refill the engine with NEW oil. Refer to **Engine Oil and Oil Filter Replacement**.
11. Refill the coolant system. Refer to **Cooling System Draining and Filling (Static Fill)** , **Cooling**

System Draining and Filling (GE 47716) .

ENGINE OIL COOLER REPLACEMENT (AWD)

Removal Procedure

1. Remove the engine oil filter. Refer to **Engine Oil and Oil Filter Replacement**.

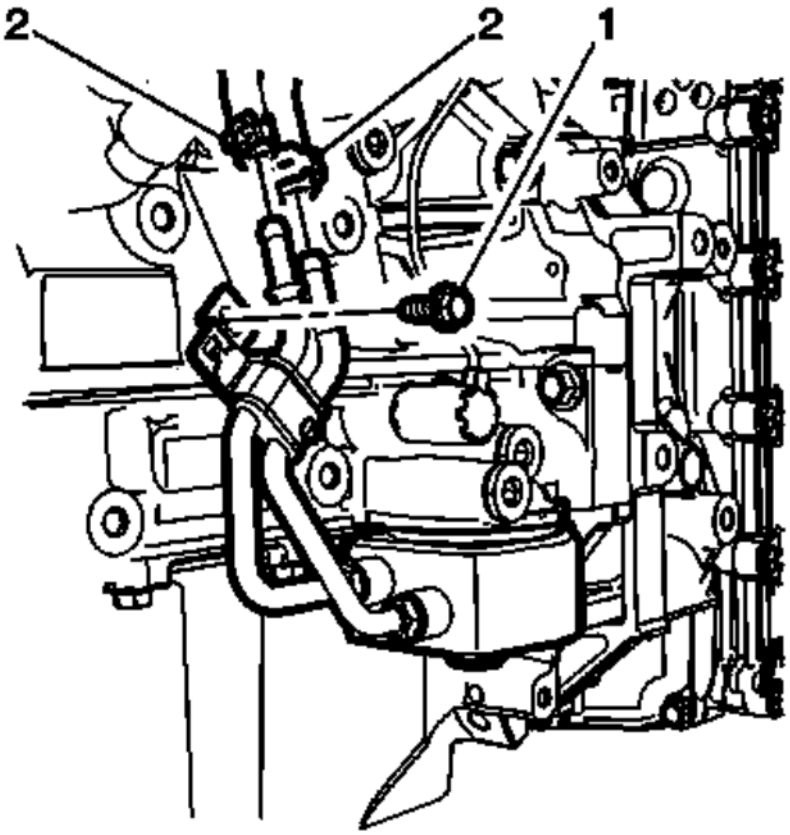

Fig. 161: Engine Oil Cooler Fastener
Courtesy of GENERAL MOTORS COMPANY

2. Remove the engine oil cooler fastener (1).
3. Remove the engine oil cooler hoses (2).

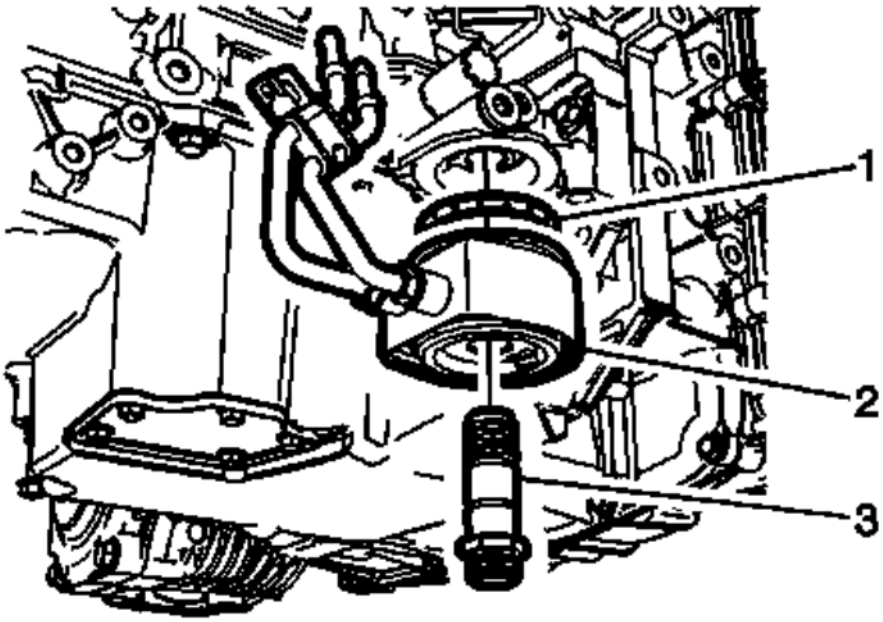

Fig. 162: Engine Oil Cooler Connector
Courtesy of GENERAL MOTORS COMPANY

4. Remove the engine oil cooler connector (3).

NOTE: DISCARD the old engine oil cooler seal (1).

5. Remove the engine oil cooler (2).

Installation Procedure

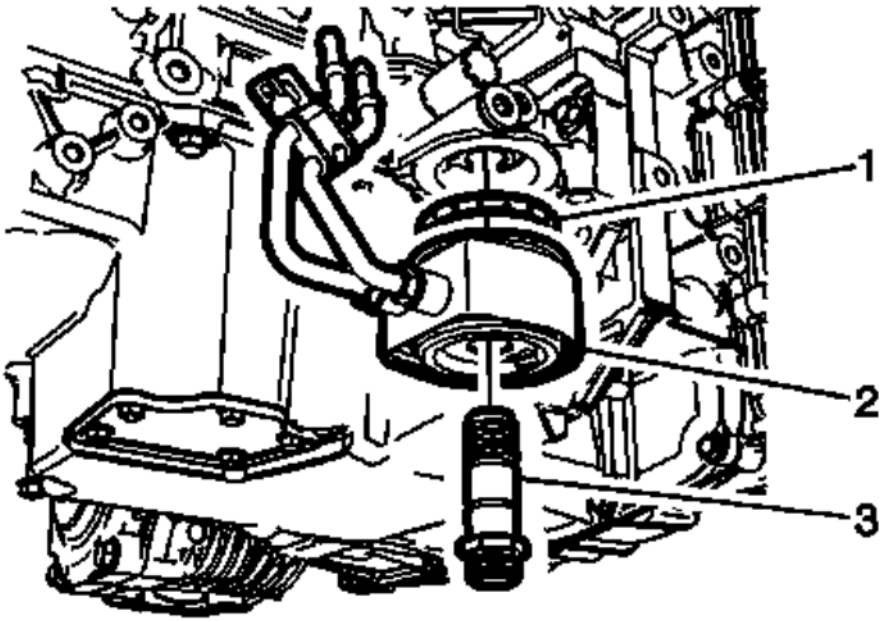

Fig. 163: Engine Oil Cooler
Courtesy of GENERAL MOTORS COMPANY

NOTE: A NEW engine oil cooler seal must be used whenever reinstalling the engine oil cooler.

1. Install the engine oil cooler (2) with a NEW seal.

CAUTION: Refer to Component Fastener Tightening Caution .

2. Install the engine oil cooler connector (3) and tighten to 50 (37 lb ft).

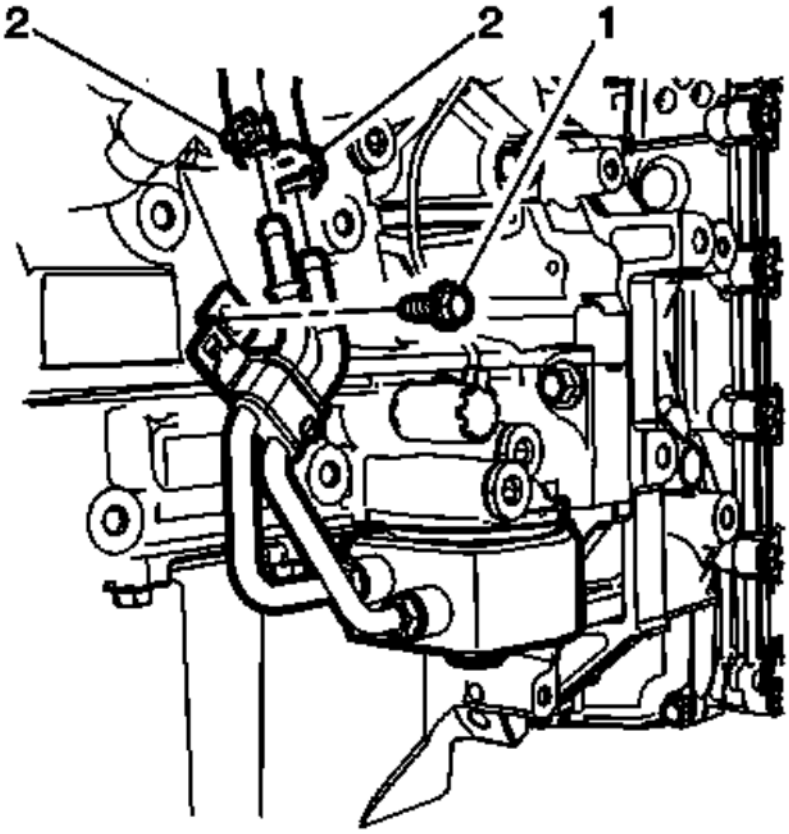

Fig. 164: Oil Cooler Hoses
Courtesy of GENERAL MOTORS COMPANY

3. Install the oil cooler hoses (2).

CAUTION: Refer to Fastener Caution .

4. Install the oil cooler fastener (1) and tighten to 10 (89 lb in)
5. Install the engine oil filter. Refer to **Engine Oil and Oil Filter Replacement**.

ENGINE OIL COOLER REPLACEMENT (FWD)

Removal Procedure

1. Remove the engine oil filter. Refer to **Engine Oil and Oil Filter Replacement**.

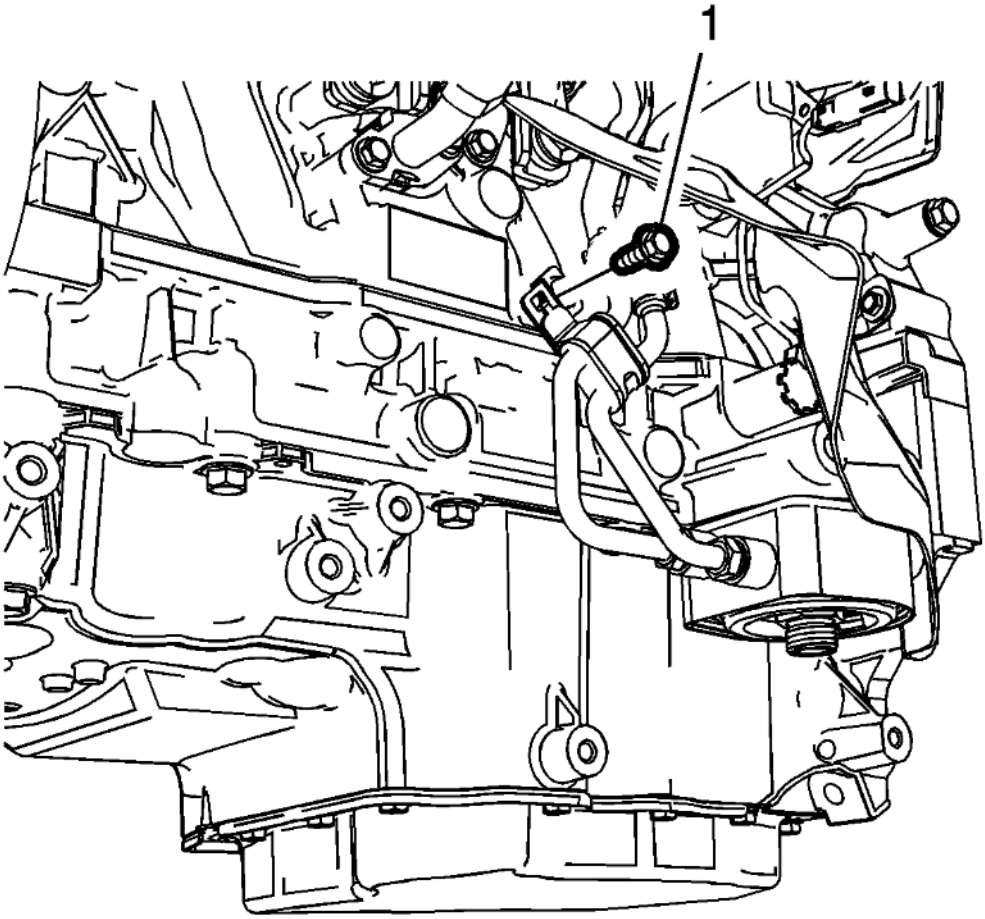

Fig. 165: Engine Oil Cooler Fastener
Courtesy of GENERAL MOTORS COMPANY

2. Remove the engine oil cooler fastener (1).

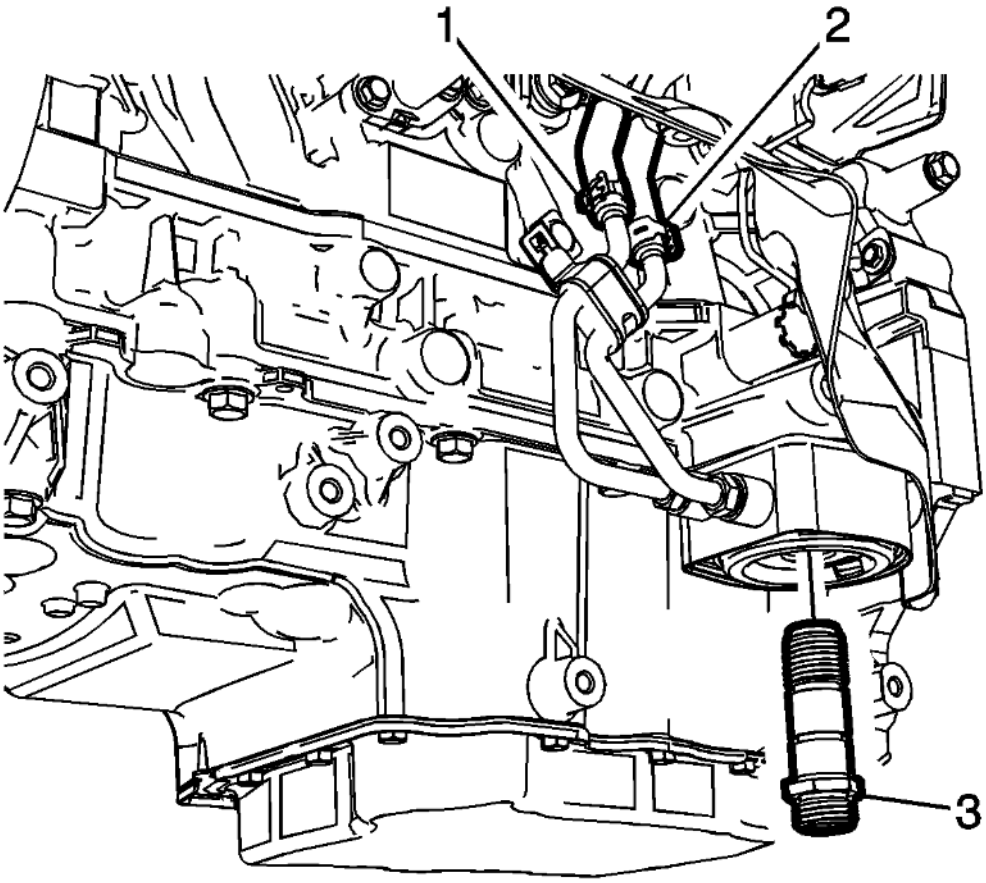

Fig. 166: Engine Oil Cooler Connector
Courtesy of GENERAL MOTORS COMPANY

3. Remove the engine oil cooler hose (1) and (2).
4. Remove the engine oil cooler connector (3).

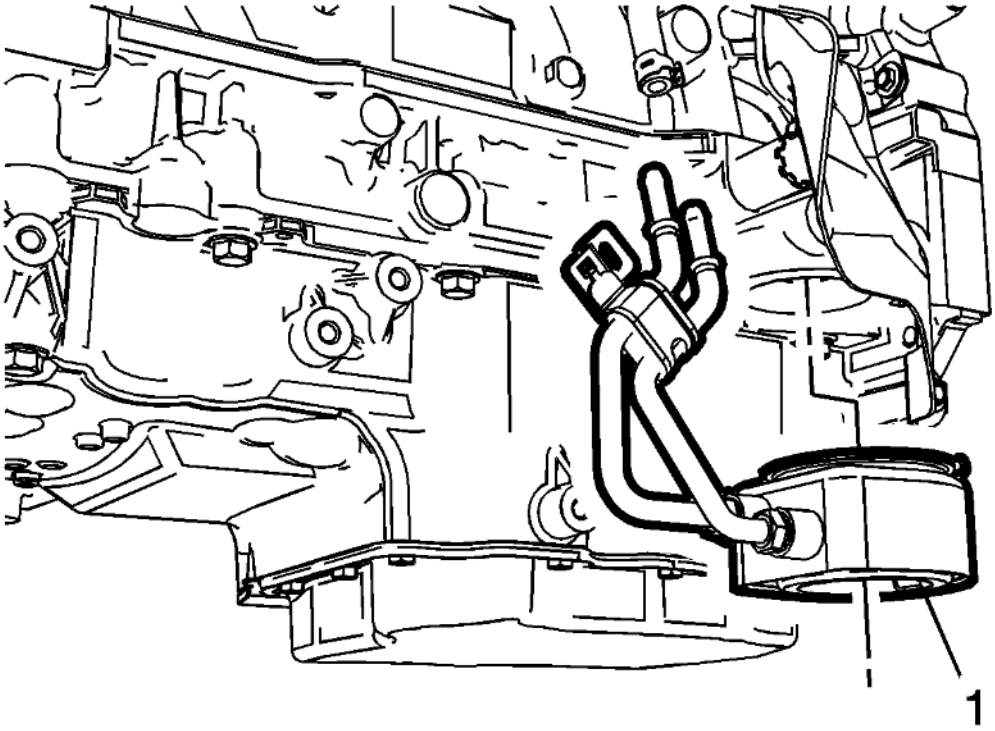

Fig. 167: Engine Oil Cooler
Courtesy of GENERAL MOTORS COMPANY

NOTE: DISCARD the old engine oil cooler seal.

5. Remove the engine oil cooler (1).

Installation Procedure

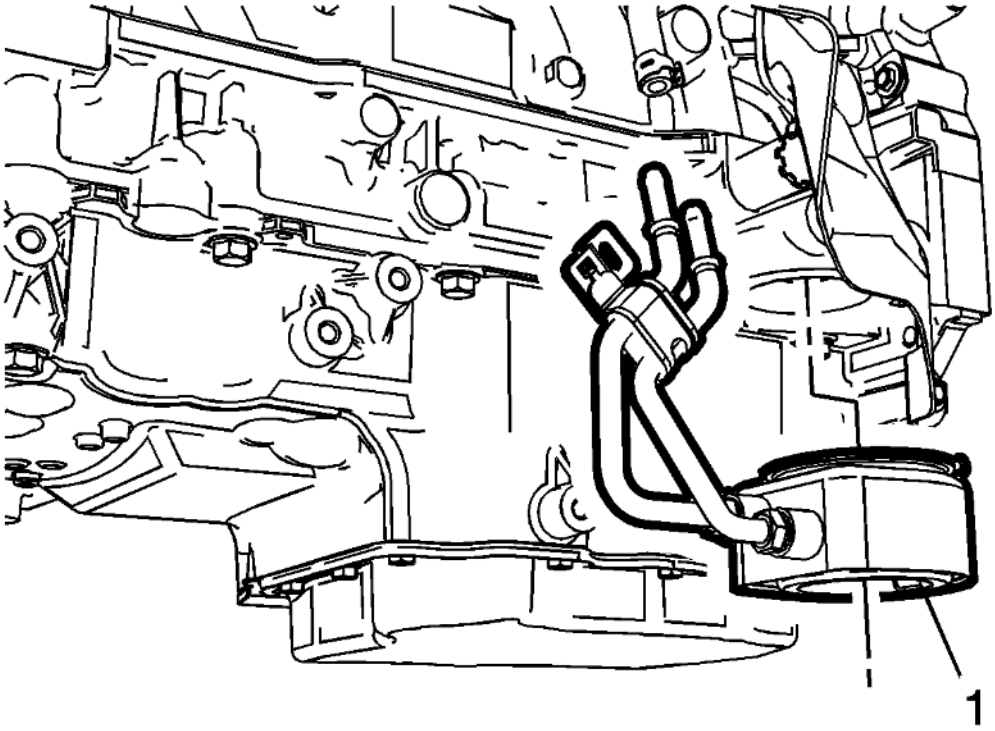

Fig. 168: Engine Oil Cooler
Courtesy of GENERAL MOTORS COMPANY

NOTE: **A NEW engine oil cooler seal must be used whenever reinstalling the engine oil cooler.**

1. Install the engine oil cooler (1).

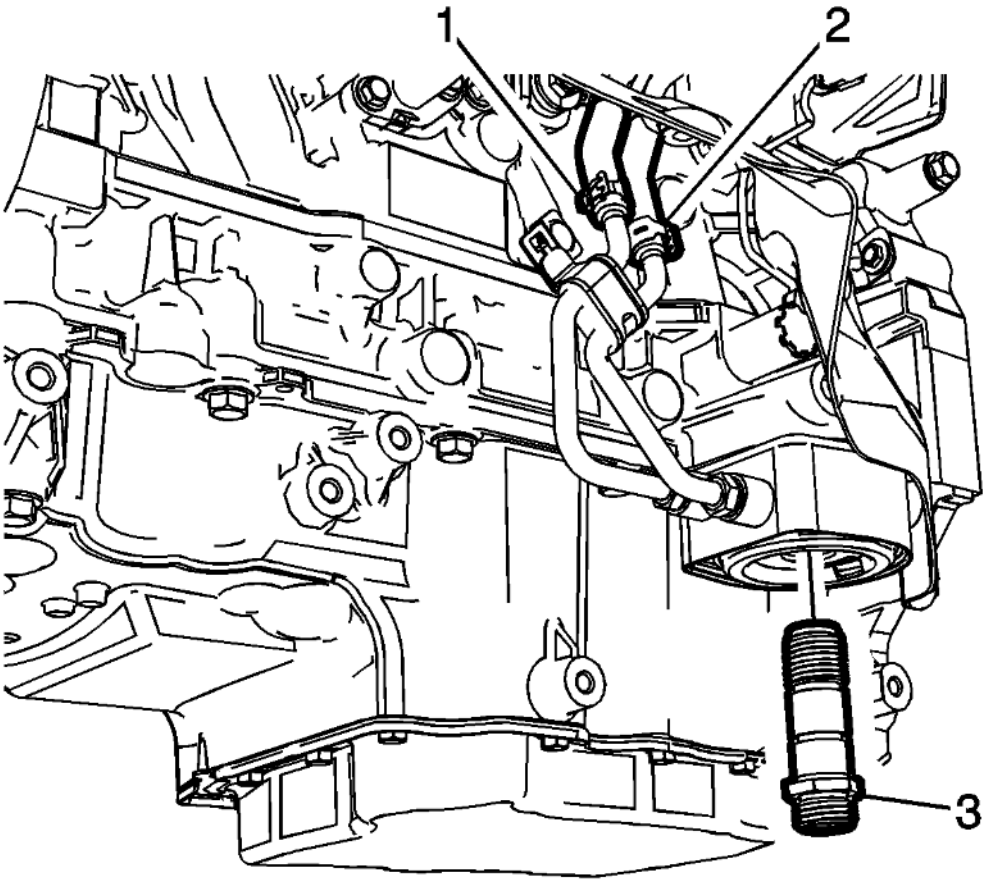

Fig. 169: Engine Oil Cooler Connector
Courtesy of GENERAL MOTORS COMPANY

CAUTION: Refer to Component Fastener Tightening Caution .

2. Install the engine oil cooler connector (3) and tighten to 50 (37 lb ft).
3. Install the oil cooler hose (1) and (2).

CAUTION: Refer to Fastener Caution .

4. Install the oil cooler fastener (1) and tighten to 10 (89 lb in)
5. Install the engine oil filter. Refer to **Engine Oil and Oil Filter Replacement**.

OIL PAN REPLACEMENT (AWD)

Removal Procedure

1. Drain the engine oil and remove the oil filter. Refer to **Engine Oil and Oil Filter Replacement**.

2. Support the engine using the engine support fixture. Refer to **Engine Support Fixture**.
3. Remove the drivetrain and front suspension frame front crossmember. Refer to **Drivetrain and Front Suspension Frame Replacement** .
4. Remove the transfer case. Refer **Transfer Case Replacement** .

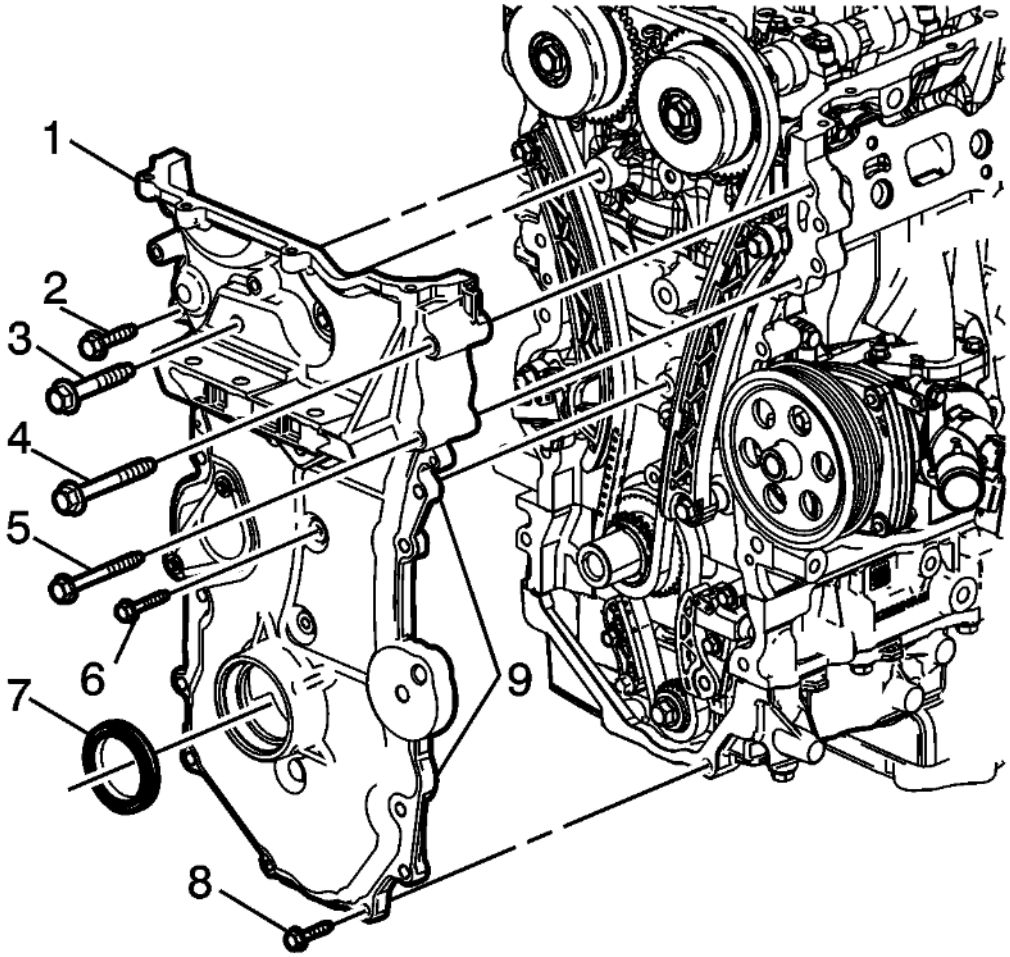

Fig. 170: Front Oil Seal
Courtesy of GENERAL MOTORS COMPANY

5. Remove the front engine cover. Refer to **Engine Front Cover Replacement**.
6. Remove the front exhaust pipe. Refer to **Exhaust Front Pipe Replacement (LTG AWD)** .

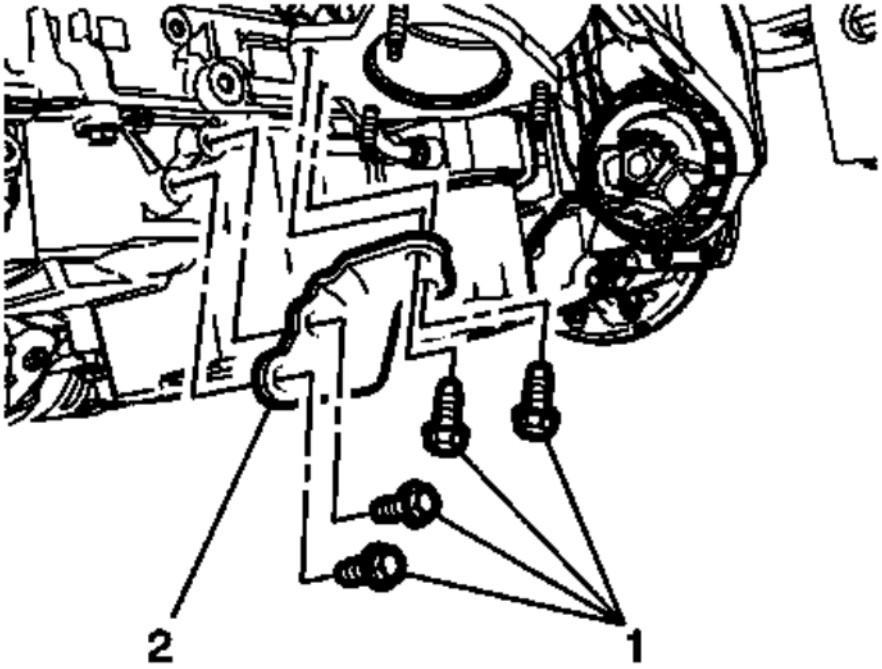

Fig. 171: Catalytic Converter Lower Brace & Fasteners
Courtesy of GENERAL MOTORS COMPANY

7. Remove the catalytic converter to oil pan brace fasteners (1).
8. Remove the catalytic lower brace (2).
9. Remove the catalytic converter. Refer to **Catalytic Converter Replacement (LTG)** .

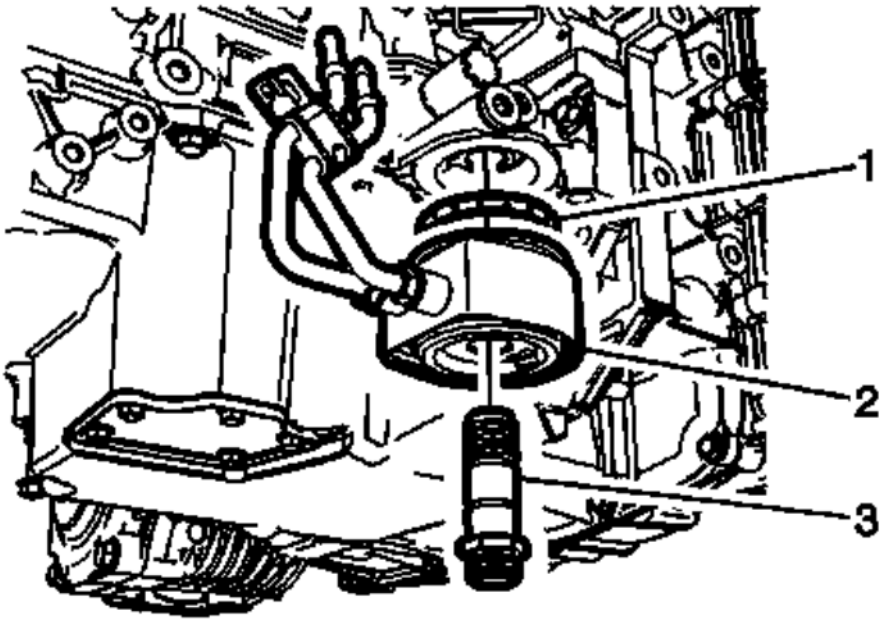

Fig. 172: Engine Oil Cooler
Courtesy of GENERAL MOTORS COMPANY

10. Remove the engine oil cooler (2). Refer to **Engine Oil Cooler Replacement (AWD)**.

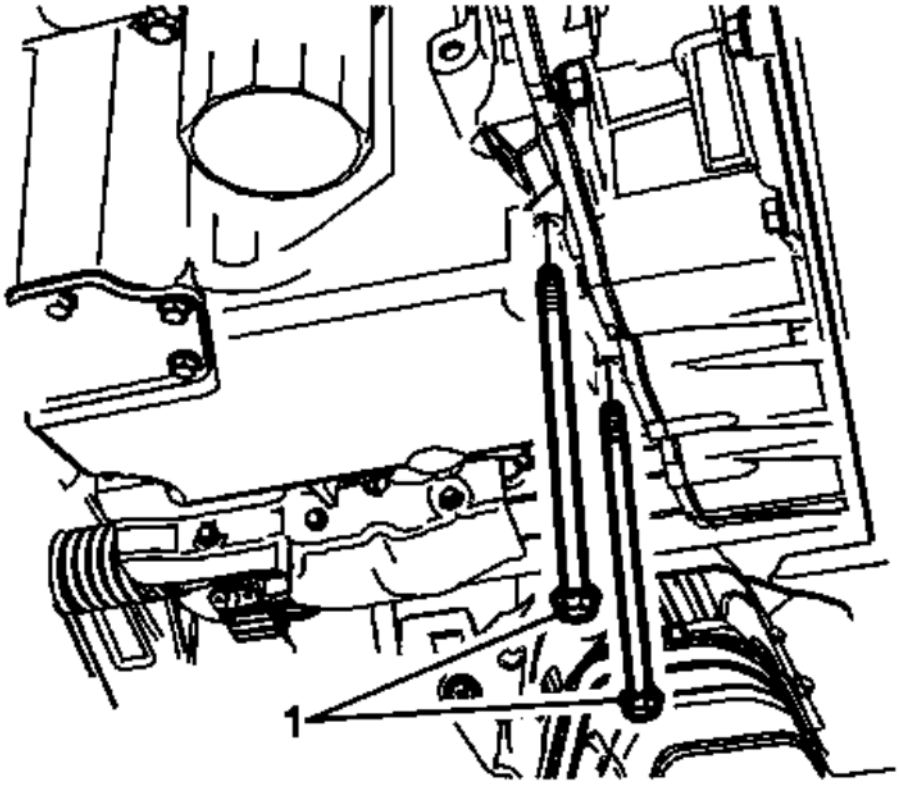

Fig. 173: Rear Oil Pan to Engine Block Fasteners
Courtesy of GENERAL MOTORS COMPANY

11. Remove the rear oil pan to engine block fasteners (1).

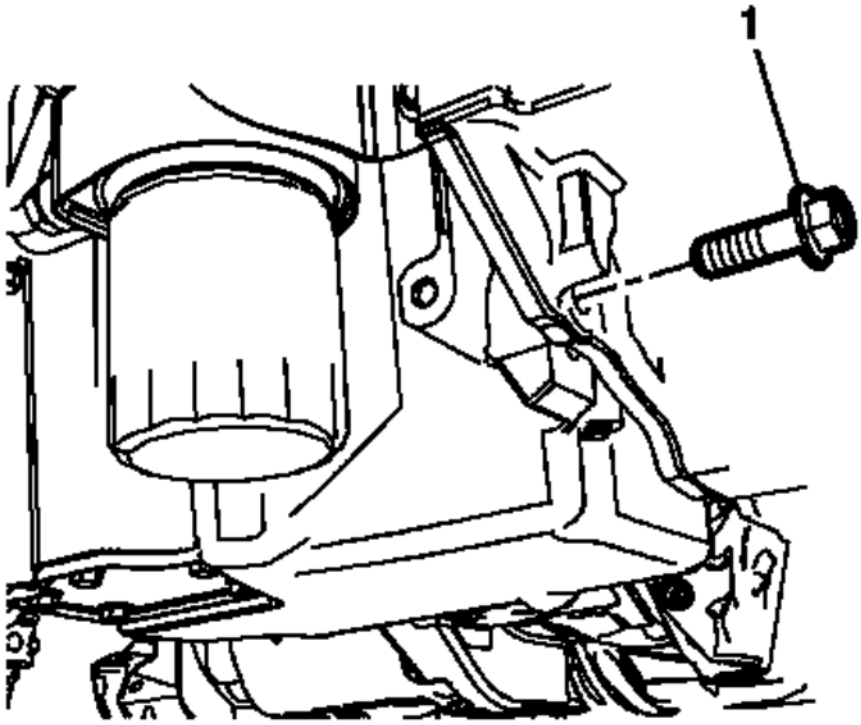

Fig. 174: Transmission To Oil Pan Fastener
Courtesy of GENERAL MOTORS COMPANY

12. Remove the transmission to oil pan fastener (1).

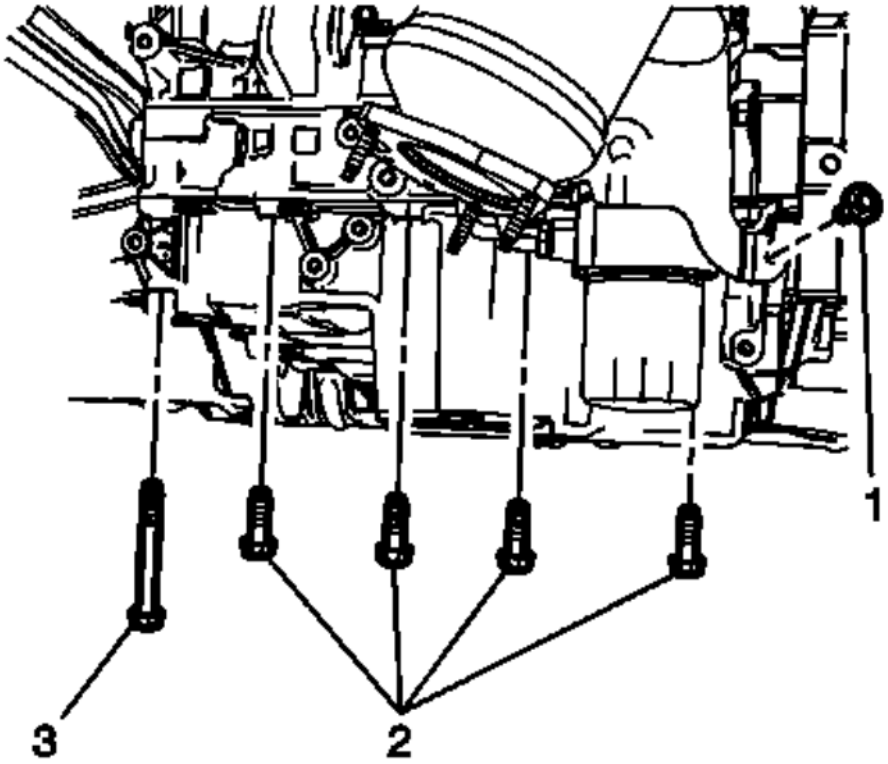

Fig. 175: Left Oil Pan To Engine Block Fasteners
Courtesy of GENERAL MOTORS COMPANY

13. Remove the left oil pan to engine block fasteners (2, 3).

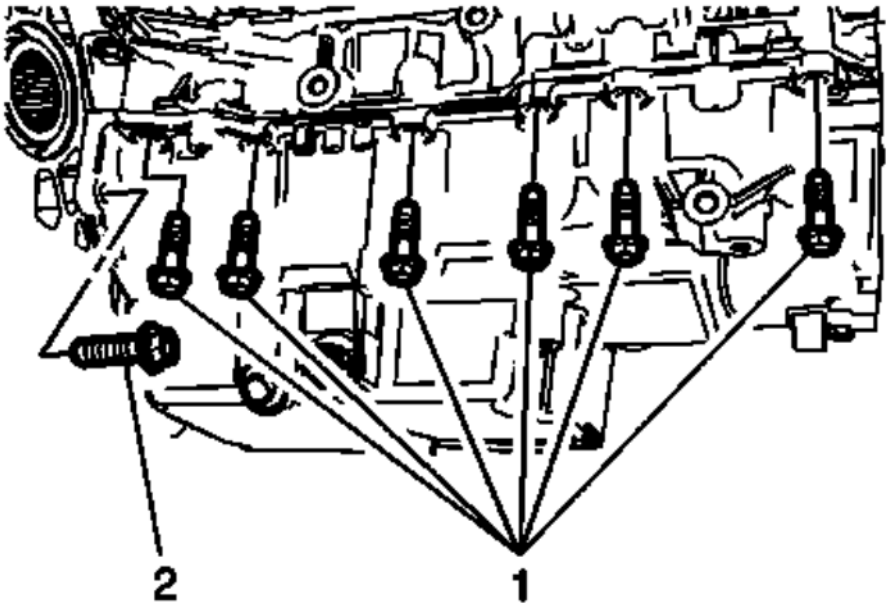

Fig. 176: Oil Pan To Transmission Fasteners
Courtesy of GENERAL MOTORS COMPANY

14. Disconnect the oil level sensor harness connector.
15. Remove the oil pan to transmission fastener (2).
16. Remove the right oil pan to engine block fasteners (1).

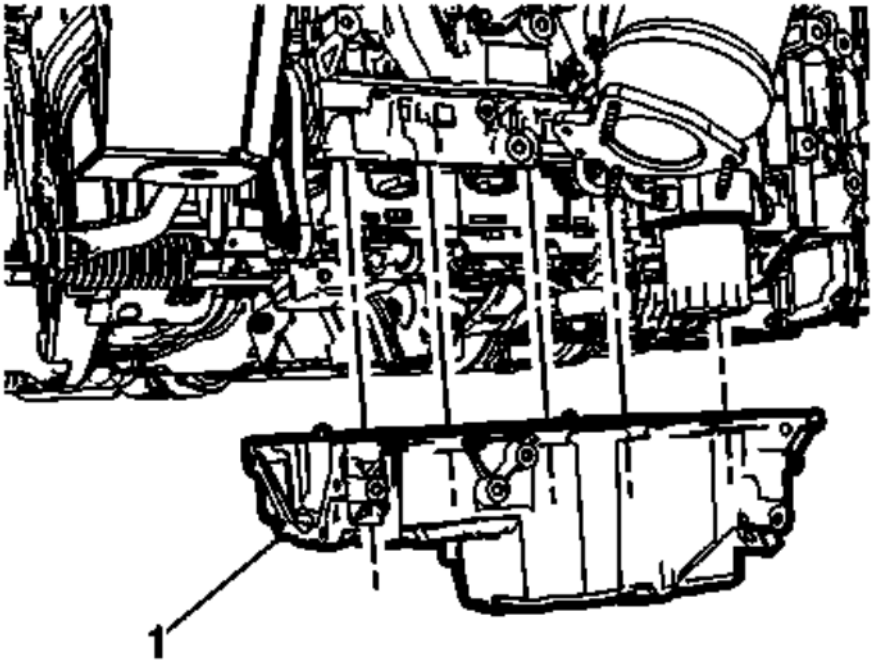

Fig. 177: Engine Oil Pan
Courtesy of GENERAL MOTORS COMPANY

17. Remove the oil pan (1) from the engine.

Installation Procedure

1. Clean and inspect the surfaces of the oil pan and engine block. Refer to **Oil Pan Cleaning and Inspection** .

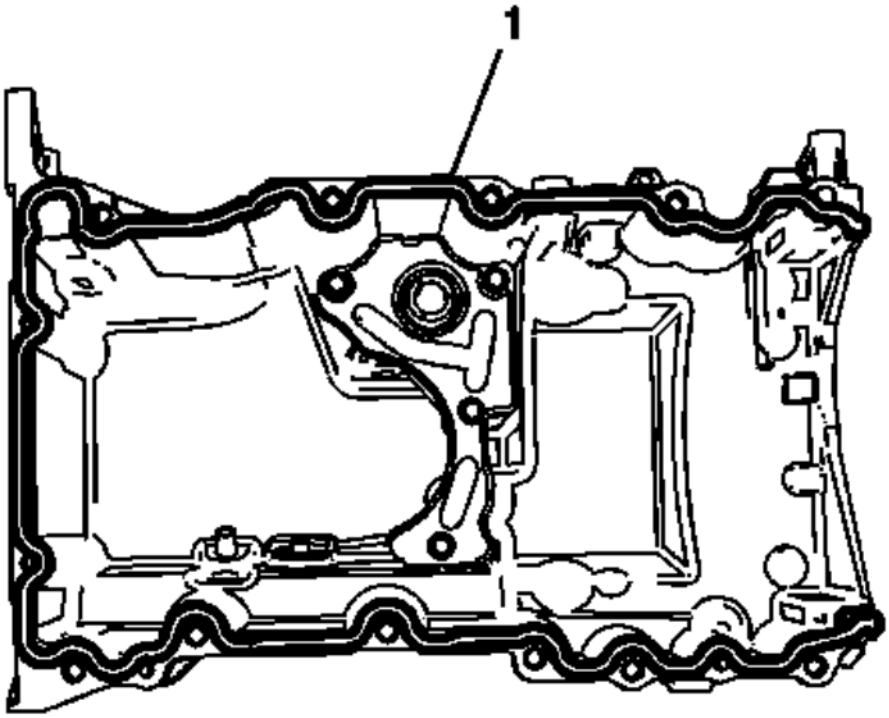

Fig. 178: Engine Oil Pan Sealing Surface
Courtesy of GENERAL MOTORS COMPANY

NOTE:

- **The oil pan sealing surfaces must be free of contamination prior to applying the sealer.**
- **Install and align the oil pans within 20 minutes of applying the sealer.**
- **The oil pan must be fastened to final torque specification within 60 minutes of applying the sealer.**

2. Apply a 4.25 mm bead of sealer (1) on the level part of the flange around the perimeter of the oil pan. Refer to **Adhesives, Fluids, Lubricants, and Sealers** .
3. Place the oil pan to the engine and loosely installing fasteners at the four corners of the oil pan.

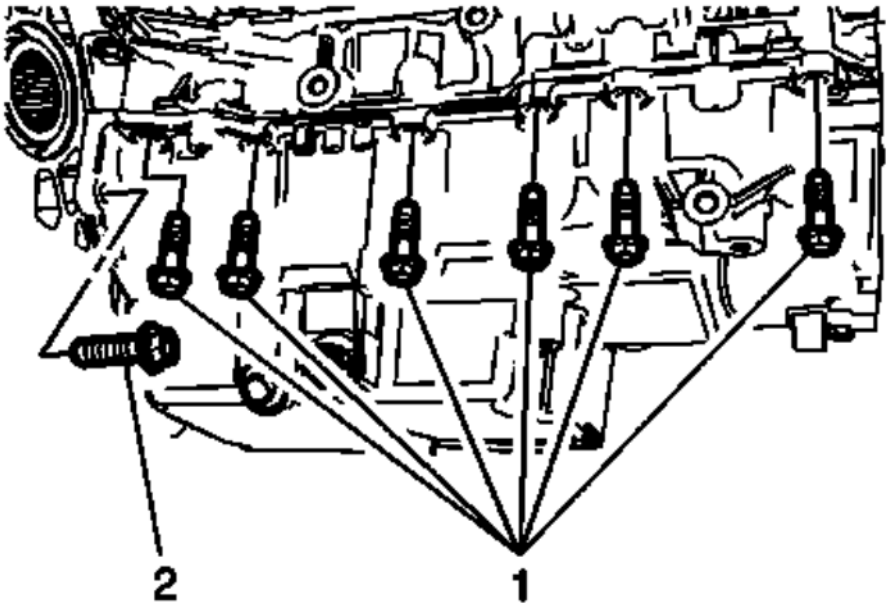

Fig. 179: Oil Pan To Transmission Fasteners
Courtesy of GENERAL MOTORS COMPANY

4. Install the right oil pan to engine block fasteners (1) hand tight.
5. Install the oil pan to transmission fastener (2) hand tight.
6. Connect the oil level sensor harness connector.

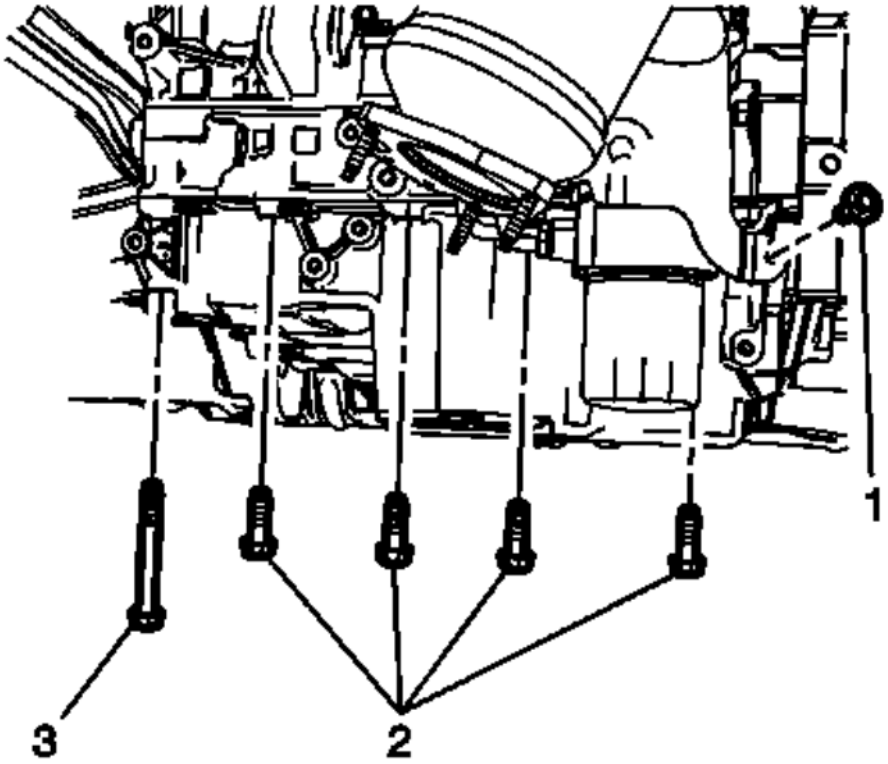

Fig. 180: Left Oil Pan To Engine Block Fasteners
Courtesy of GENERAL MOTORS COMPANY

7. Install the left oil pan to engine block fasteners (2, 3) hand tight.

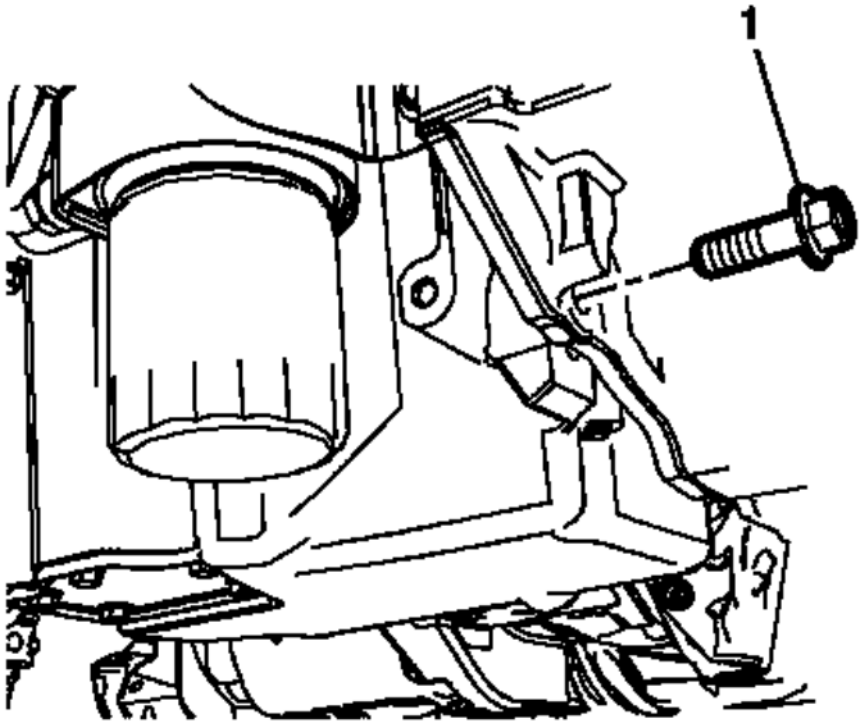

Fig. 181: Transmission To Oil Pan Fastener
Courtesy of GENERAL MOTORS COMPANY

8. Install the transmission to oil pan fastener (1) hand tight.

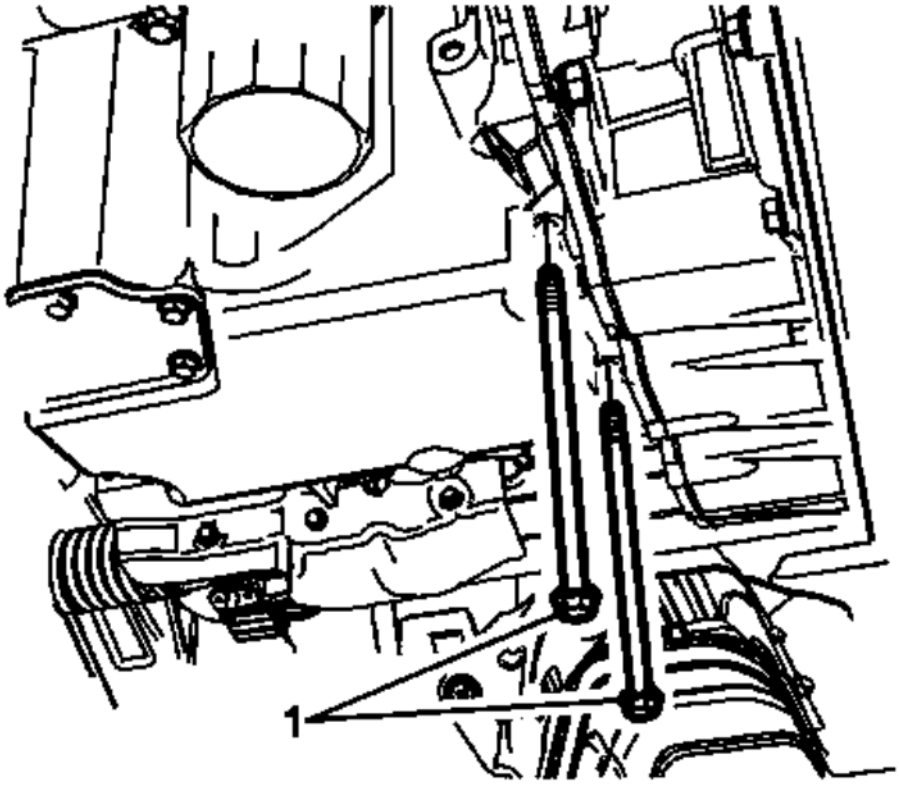

Fig. 182: Rear Oil Pan to Engine Block Fasteners
Courtesy of GENERAL MOTORS COMPANY

9. Install the rear oil pan to engine block fasteners (1) hand tight.

CAUTION: Refer to Fastener Caution .

10. Tighten the oil pan bolts in sequence to final torque twice using the following procedure:
    1. Tighten the fasteners in sequence (1-11) to 25 (18 lb ft).
    2. Tighten the fasteners in sequence (12-13) to 10 (89 lb in).
11. Tighten the oil pan to engine bolts to 60 (44 lb ft).

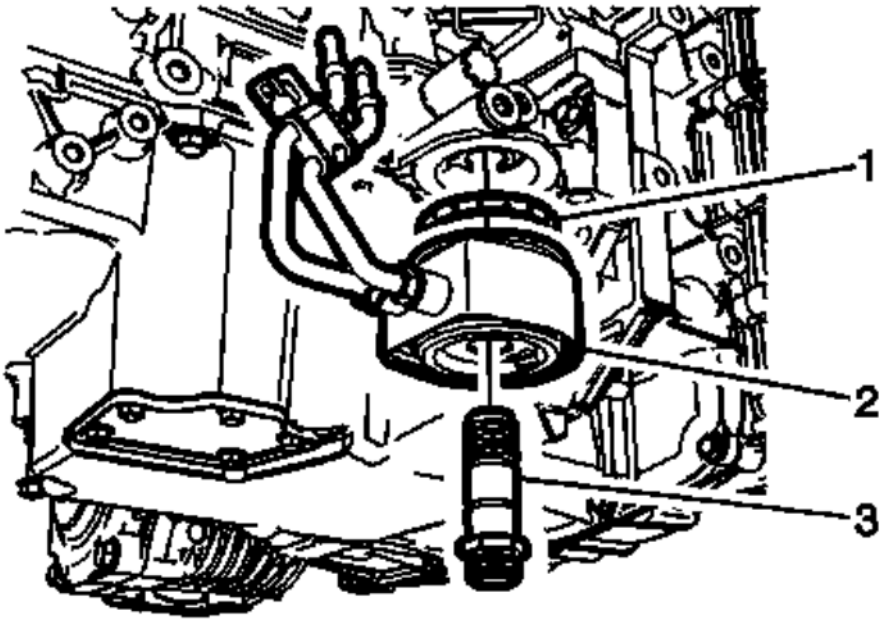

Fig. 183: Engine Oil Cooler
Courtesy of GENERAL MOTORS COMPANY

12. Install the engine oil cooler (2). Refer to **Engine Oil Cooler Replacement (AWD)**.
13. Install the catalytic converter. Refer to **Catalytic Converter Replacement (LTG)** .

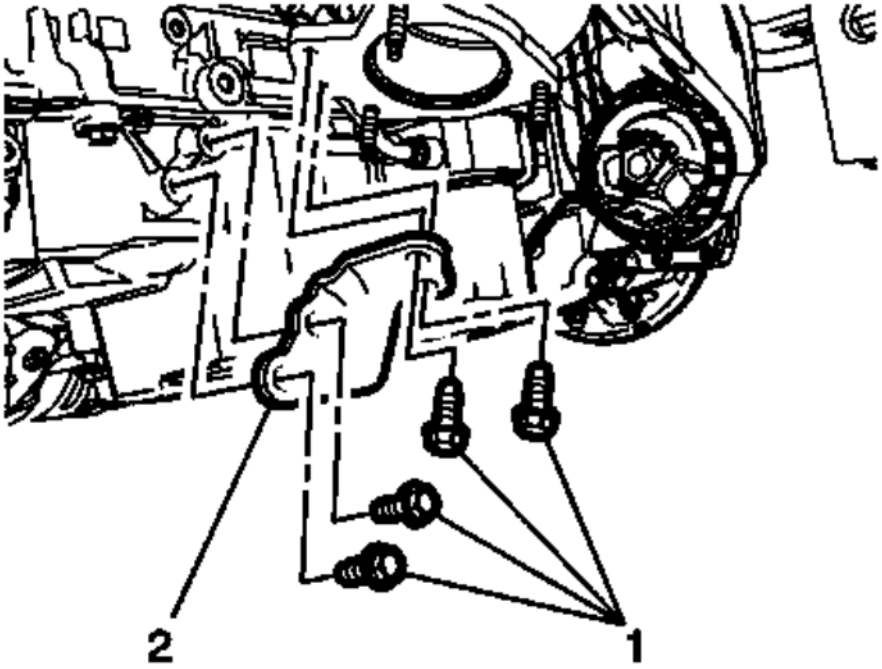

Fig. 184: Catalytic Converter Lower Brace & Fasteners
Courtesy of GENERAL MOTORS COMPANY

14. Position the catalytic lower brace (2).
15. Install the catalytic converter to oil pan brace fasteners (1) and tighten to 25 (18 lb ft).
16. Install the front exhaust pipe. Refer to **Exhaust Front Pipe Replacement (LTG AWD)** .

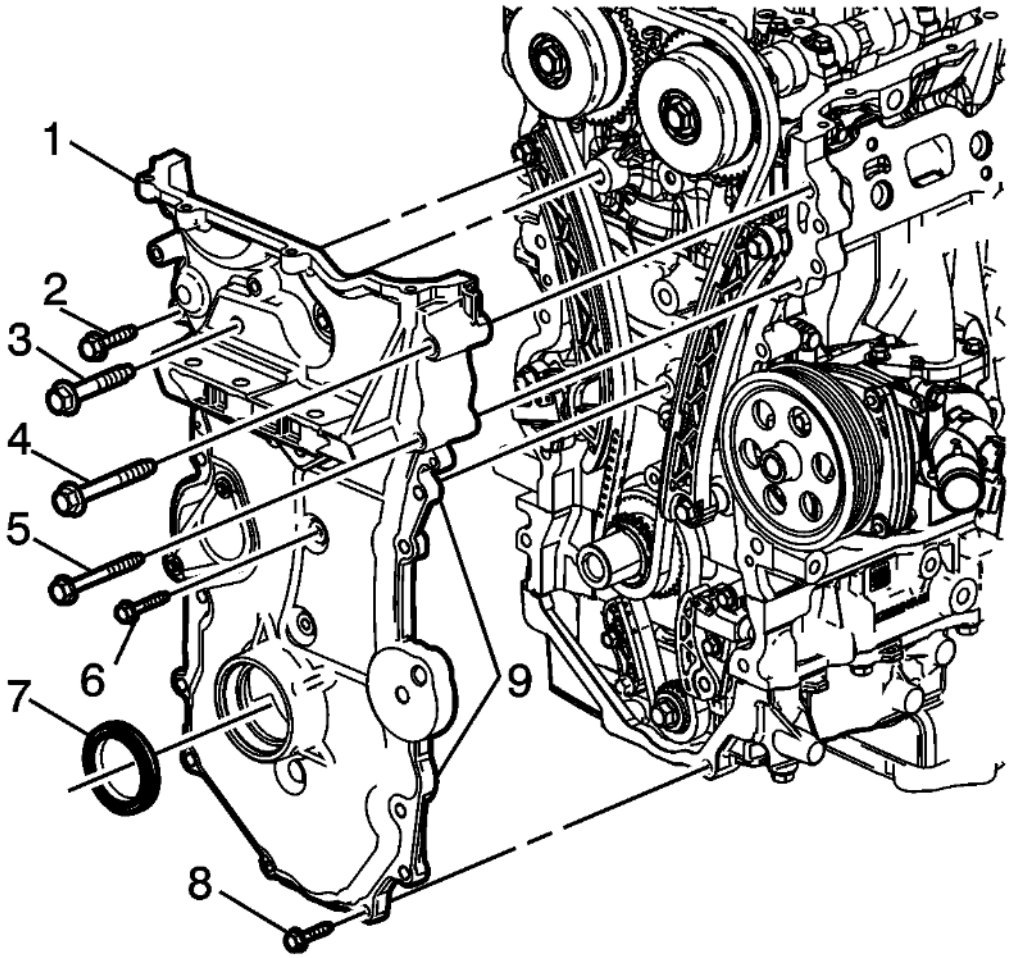

Fig. 185: Front Oil Seal
Courtesy of GENERAL MOTORS COMPANY

17. Install the front engine cover. Refer to **Engine Front Cover Replacement**.
18. Install the transfer case. Refer **Transfer Case Replacement** .
19. Install the drivetrain and front suspension frame front crossmember. Refer to **Drivetrain and Front Suspension Frame Replacement** .
20. Remove the engine support fixture. Refer to **Engine Support Fixture**.
21. Refill the engine oil and install a NEW oil filter. Refer to **Engine Oil and Oil Filter Replacement**.

OIL PAN REPLACEMENT (FWD)

Removal Procedure

1. Drain the engine oil and remove the oil filter. Refer to **Engine Oil and Oil Filter Replacement**.
2. Support the engine. Refer to **Engine Support Fixture**.
3. Remove the drivetrain and front suspension frame front crossmember. Refer to **Drivetrain and Front Suspension Frame Replacement** .

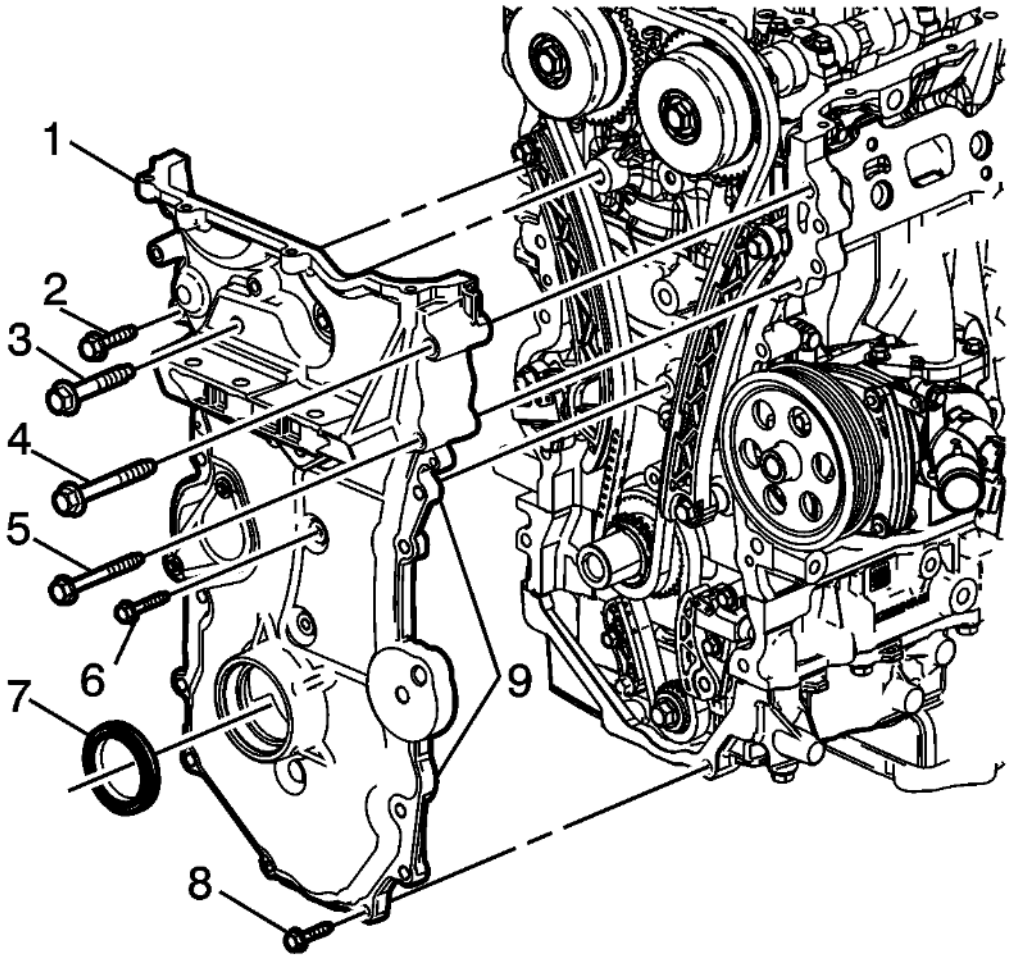

Fig. 186: Front Oil Seal
Courtesy of GENERAL MOTORS COMPANY

4. Remove the front engine cover (1). Refer to **Engine Front Cover Replacement**.
5. Remove the front exhaust pipe. Refer to **Exhaust Front Pipe Replacement (LTG)** .

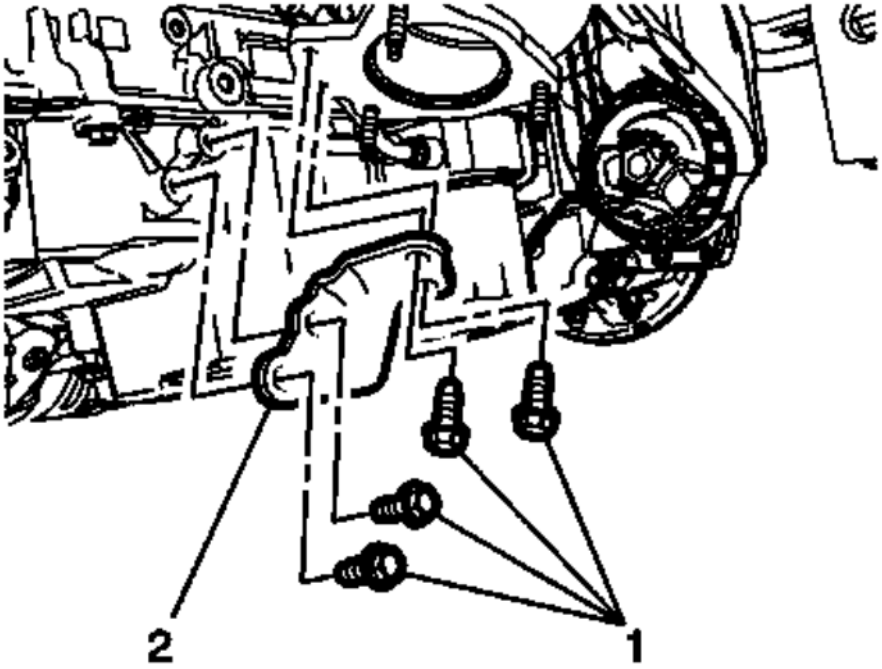

Fig. 187: Catalytic Converter Lower Brace & Fasteners
Courtesy of GENERAL MOTORS COMPANY

6. Remove the catalytic converter to oil pan brace fasteners (1).
7. Remove the catalytic lower brace (2).
8. Remove the catalytic converter. Refer to **Catalytic Converter Replacement (LTG)** .

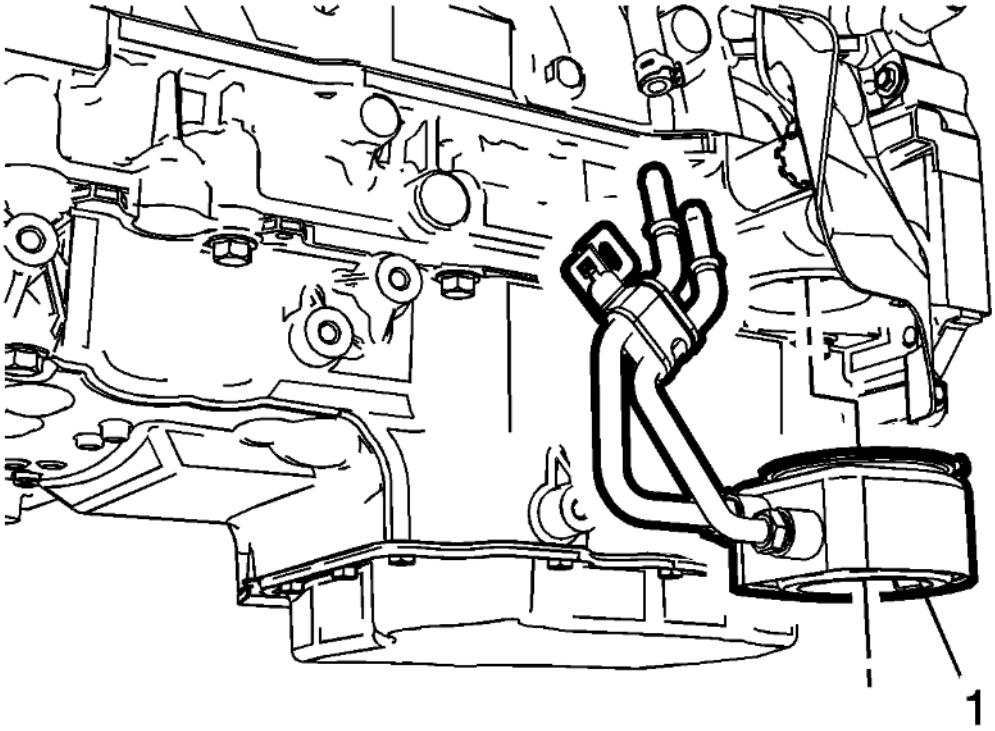

Fig. 188: Engine Oil Cooler
Courtesy of GENERAL MOTORS COMPANY

9. Remove the engine oil cooler (1). Refer to **Engine Oil Cooler Replacement (FWD)**.

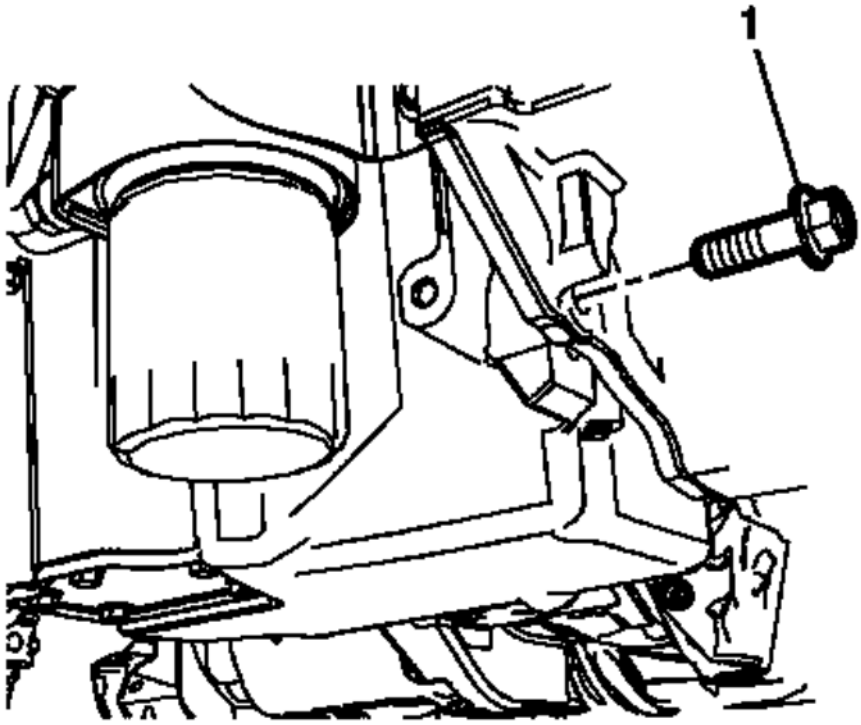

Fig. 189: Transmission To Oil Pan Fastener
Courtesy of GENERAL MOTORS COMPANY

10. Remove the transmission to oil pan fastener (1).

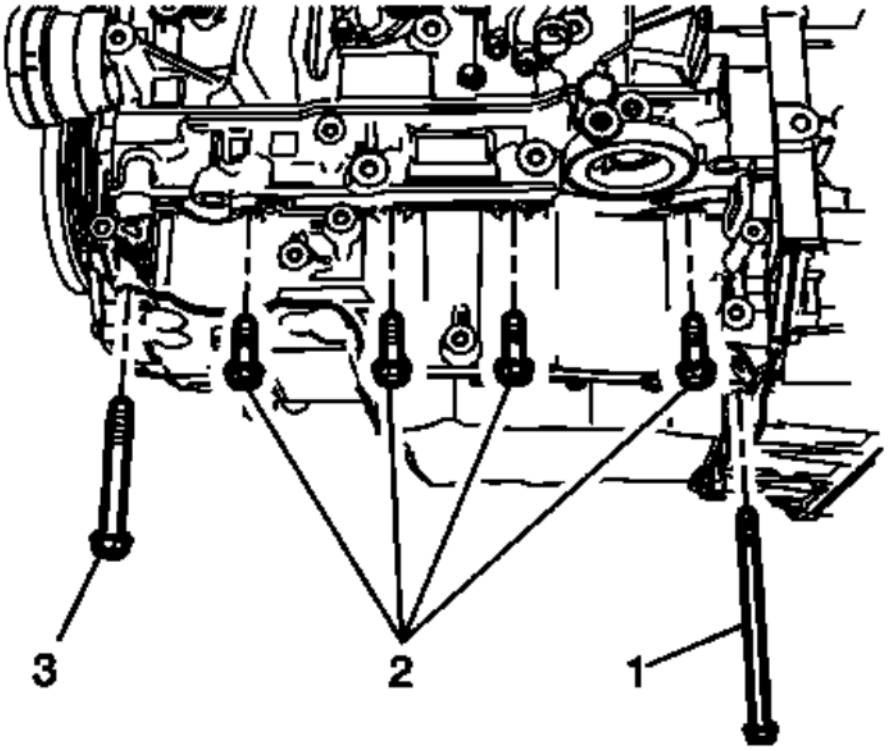

Fig. 190: Left Oil Pan to Engine Block Fasteners
Courtesy of GENERAL MOTORS COMPANY

11. Remove the left oil pan to engine block fasteners (1, 2, 3).

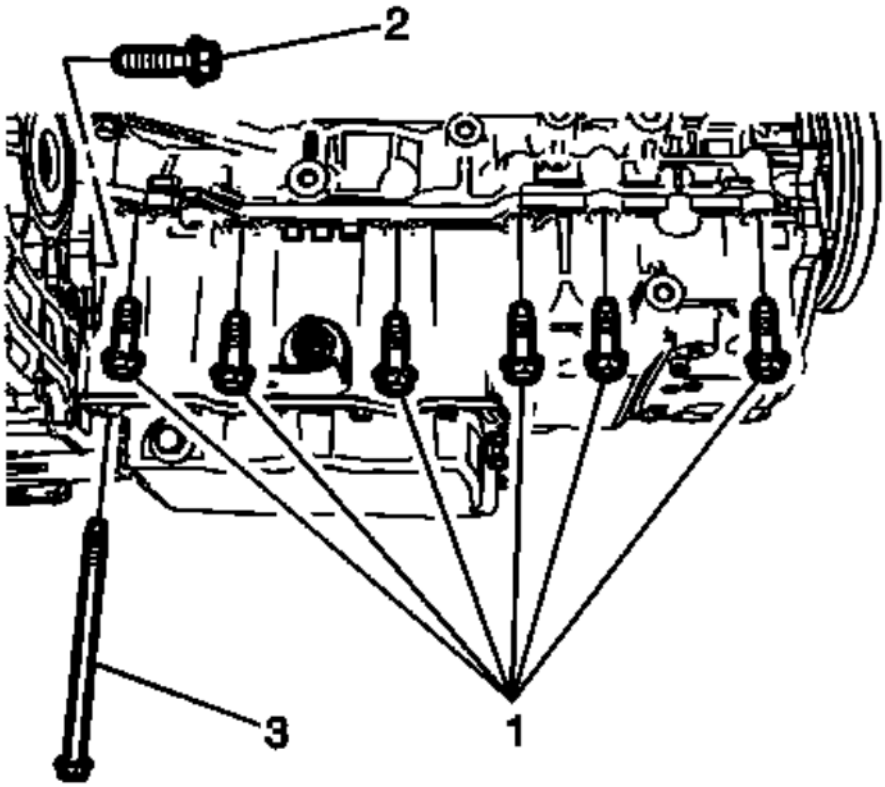

Fig. 191: Right Oil Pan to Transmission & Engine Block Fasteners
Courtesy of GENERAL MOTORS COMPANY

12. Disconnect the oil level sensor harness connector.
13. Remove the oil pan to transmission fastener (2).
14. Remove the right oil pan to engine block fasteners (1, 3).

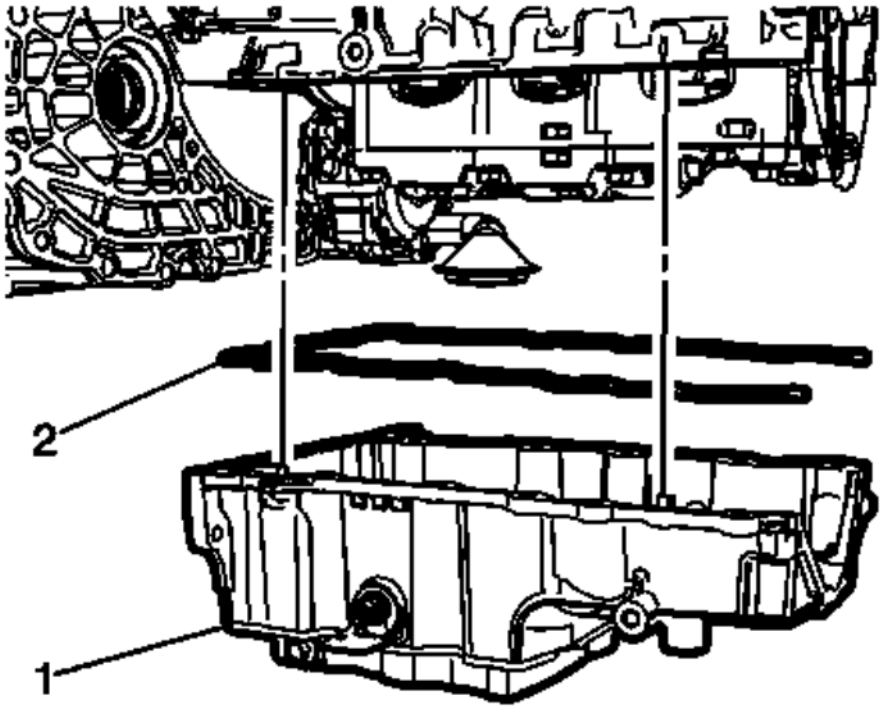

Fig. 192: Oil Pan & Gasket
Courtesy of GENERAL MOTORS COMPANY

15. Remove the oil pan (1) from the engine.

Installation Procedure

1. Clean and inspect the surfaces of the oil pan and engine block. Refer to **Oil Pan Cleaning and Inspection** .

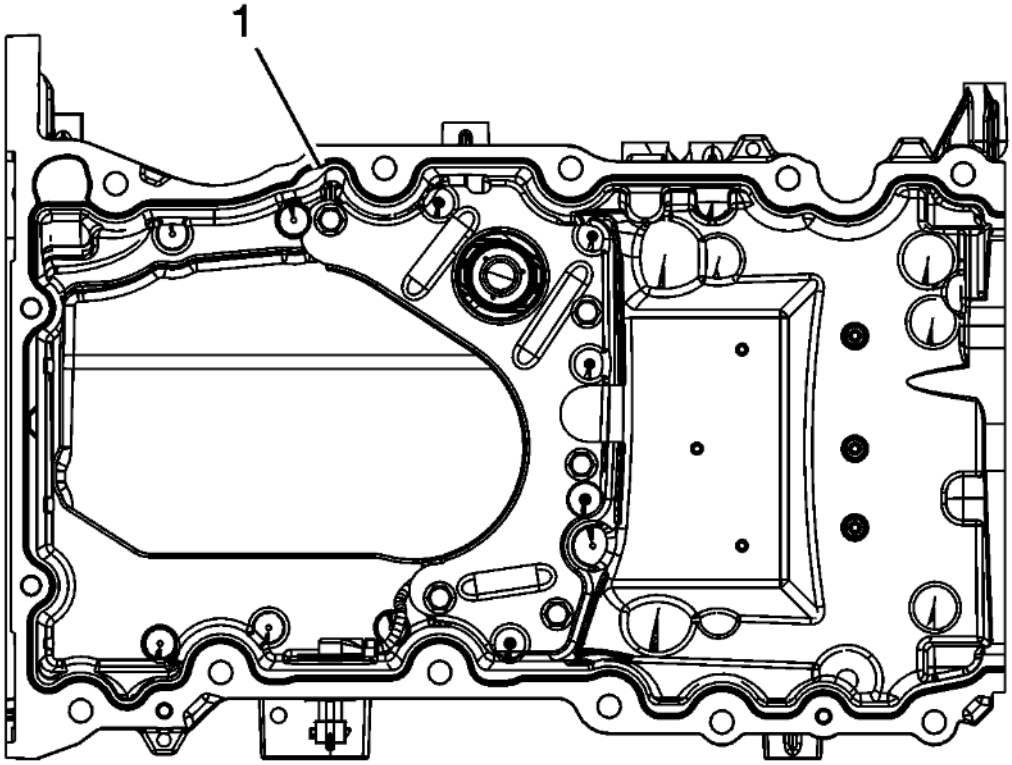

Fig. 193: Short Lower Oil Pan Bolts
Courtesy of GENERAL MOTORS COMPANY

NOTE:

- **The oil pan sealing surfaces must be free of contamination prior to applying the sealer.**
- **Install and align the oil pans within 20 minutes of applying the sealer.**
- **The oil pan must be fastened to final torque specification within 60 minutes of applying the sealer.**

2. Apply a 4.25 mm bead of sealer (1) on the level part of the flange around the perimeter of the oil pan. Refer to **Adhesives, Fluids, Lubricants, and Sealers** .
3. Place the oil pan to the engine and loosely installing fasteners at the four corners of the oil pan.

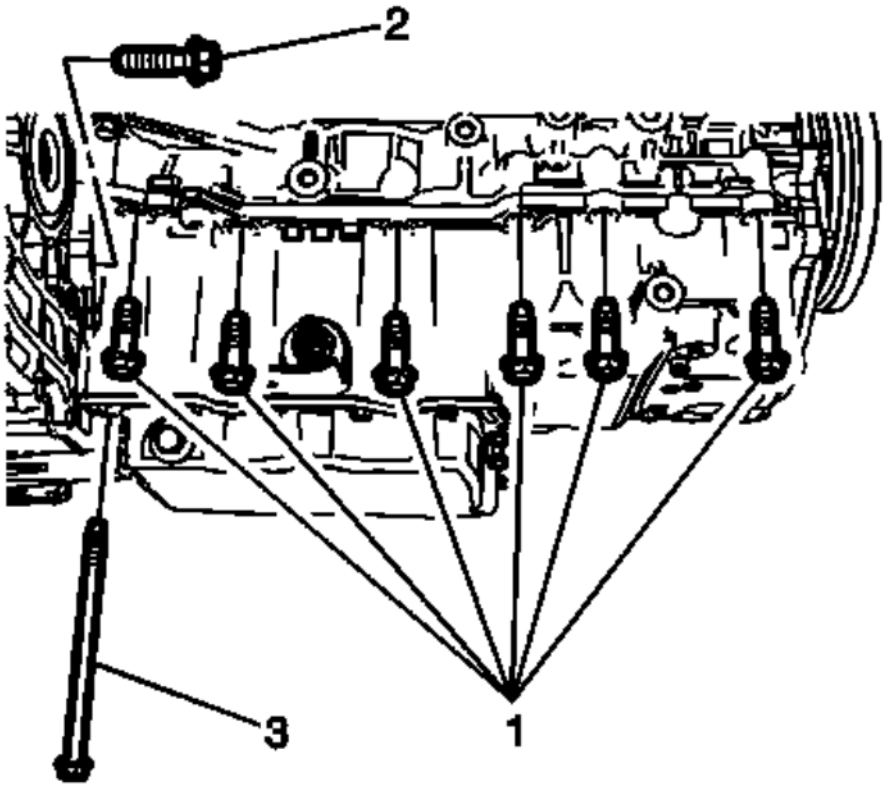

Fig. 194: Right Oil Pan to Transmission & Engine Block Fasteners
Courtesy of GENERAL MOTORS COMPANY

4. Install the right oil pan to engine block fasteners (1, 3) hand tight.
5. Install the oil pan to transmission fastener (2) hand tight.
6. Connect the oil level sensor harness connector.

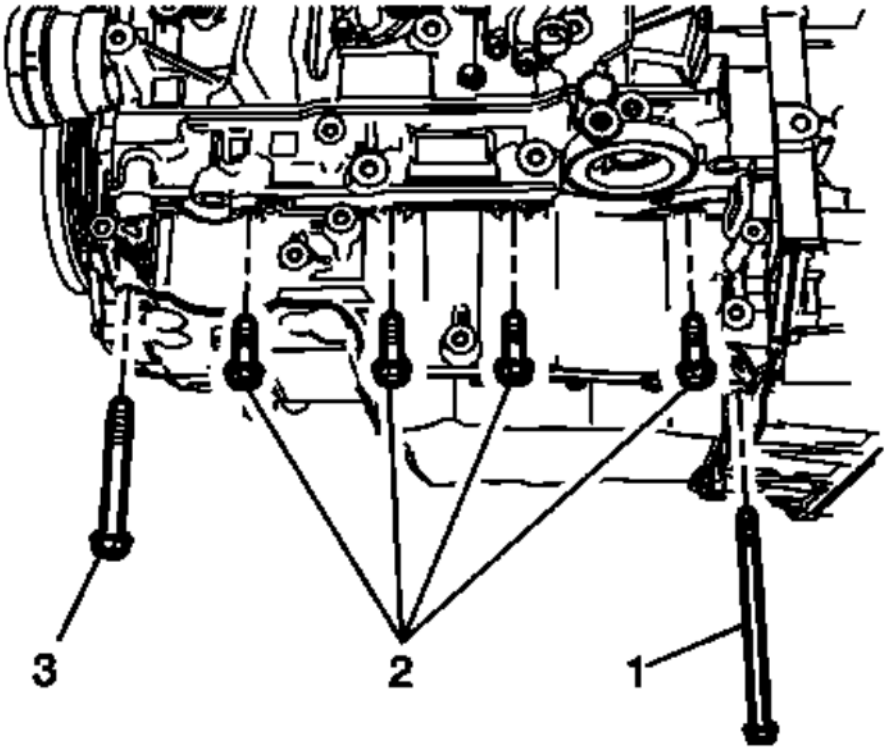

Fig. 195: Left Oil Pan to Engine Block Fasteners
Courtesy of GENERAL MOTORS COMPANY

7. Install the left oil pan to engine block fasteners (1, 2, 3) hand tight.

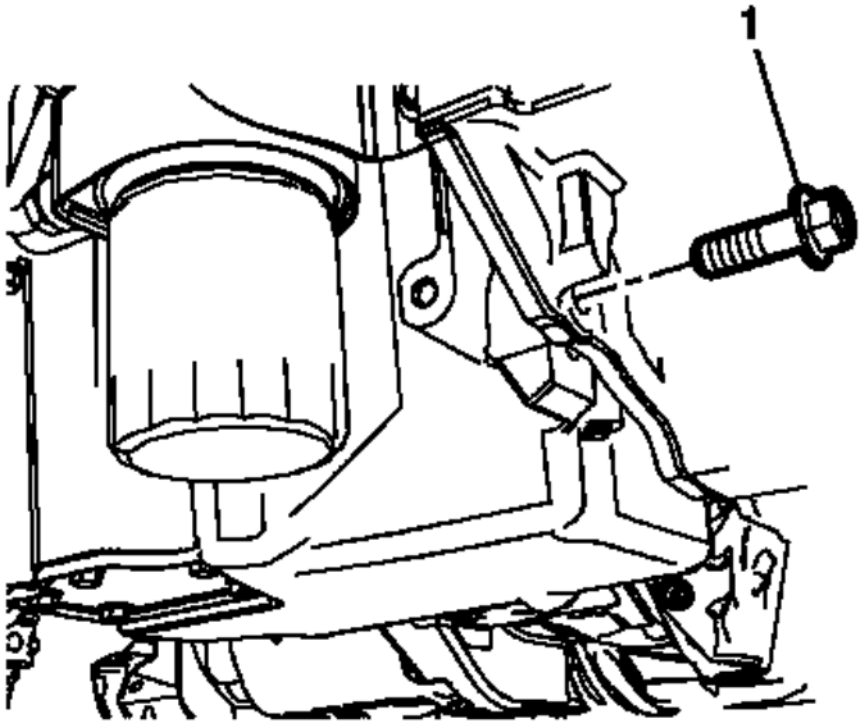

Fig. 196: Transmission To Oil Pan Fastener
Courtesy of GENERAL MOTORS COMPANY

8. Install the transmission to oil pan fastener (1) hand tight.

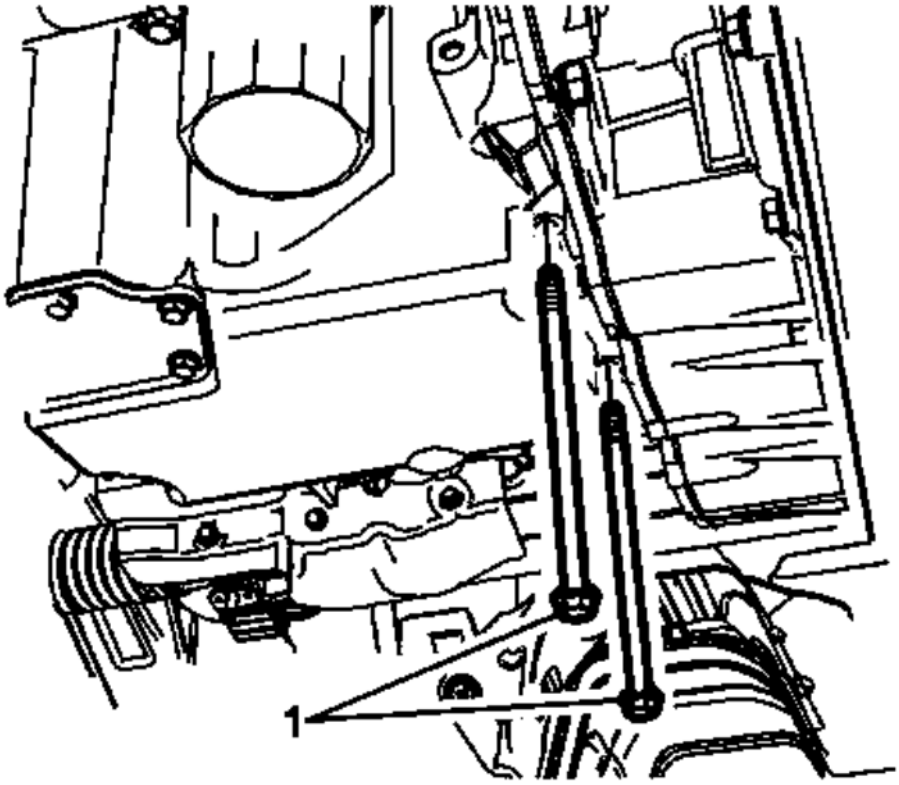

Fig. 197: Rear Oil Pan to Engine Block Fasteners
Courtesy of GENERAL MOTORS COMPANY

9. Install the rear oil pan to engine block fasteners (1) hand tight.

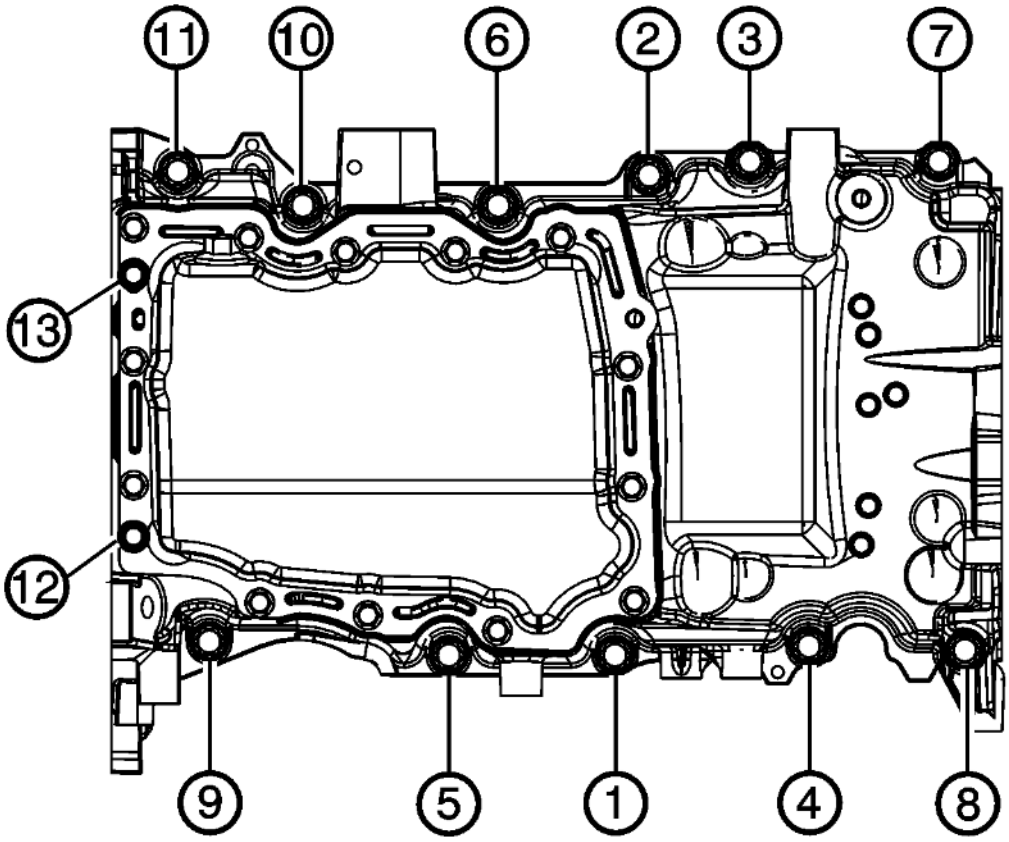

Fig. 198: Oil Pan Bolts In Sequence
Courtesy of GENERAL MOTORS COMPANY

CAUTION: Refer to Fastener Caution .

10. Tighten the oil pan bolts in sequence to final torque twice using the following procedure:
    1. Tighten the fasteners in sequence (1-11) to 25 (18 lb ft).
    2. Tighten the fasteners in sequence (12-13) to 10 (89 lb in).
11. Tighten the oil pan to transmission bolts to 60 (44 lb ft).

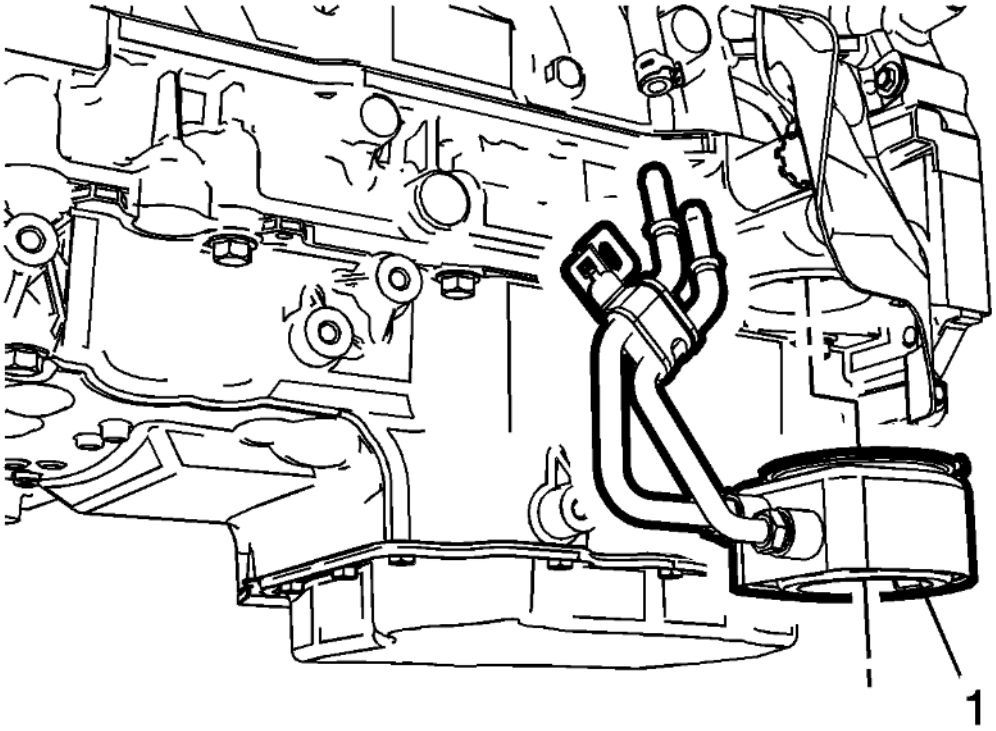

Fig. 199: Engine Oil Cooler
Courtesy of GENERAL MOTORS COMPANY

12. Install the engine oil cooler (1). Refer to **Engine Oil Cooler Replacement (FWD)**.
13. Install the catalytic converter. Refer to **Catalytic Converter Replacement (LTG)** .

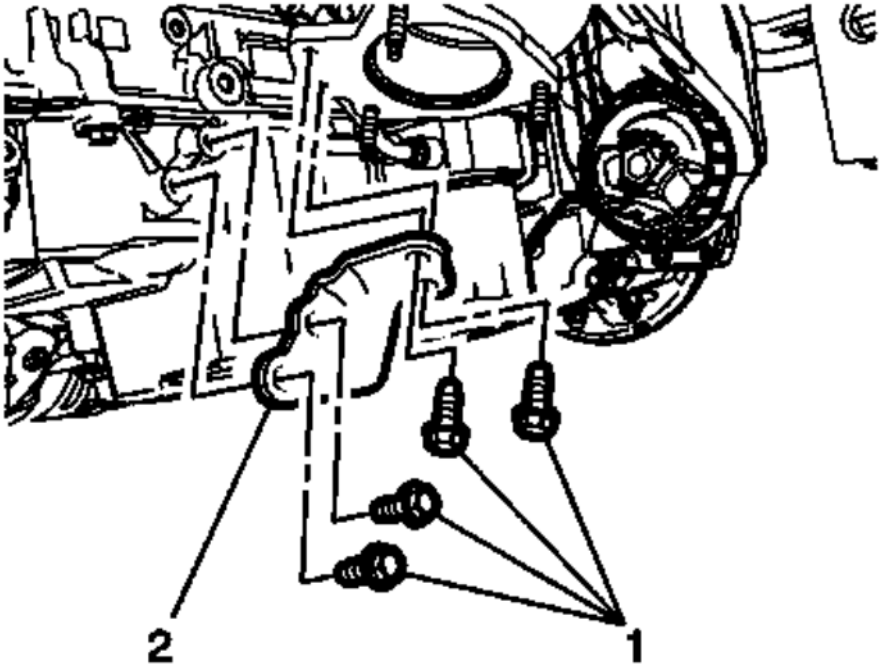

Fig. 200: Catalytic Converter Lower Brace & Fasteners
Courtesy of GENERAL MOTORS COMPANY

14. Position the catalytic lower brace (2).
15. Install the catalytic converter to oil pan brace fasteners (1) and tighten to 25 (18 lb ft).
16. Install the front exhaust pipe. Refer to **Exhaust Front Pipe Replacement (LTG)** .

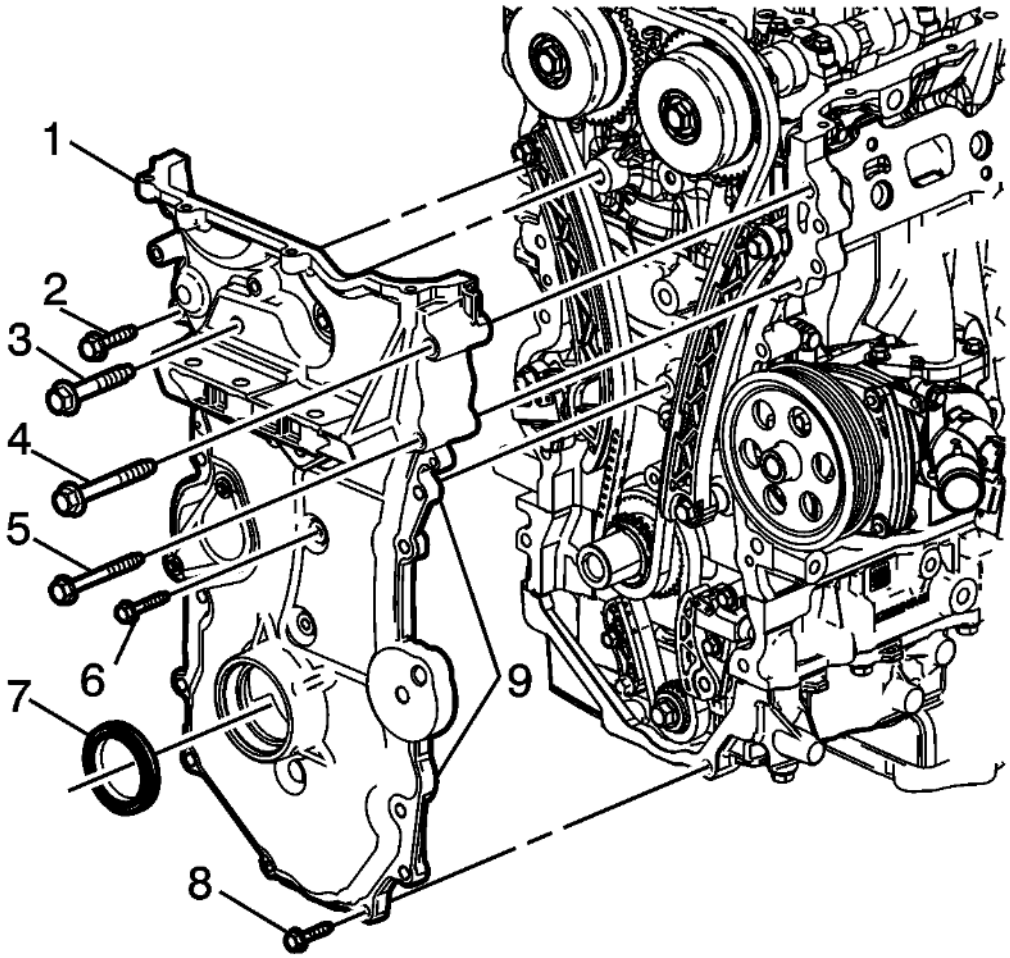

Fig. 201: Front Oil Seal
Courtesy of GENERAL MOTORS COMPANY

17. Install the front engine cover (1). Refer to **Engine Front Cover Replacement**.
18. Install the drivetrain and front suspension frame front crossmember. Refer to **Drivetrain and Front Suspension Frame Replacement** .
19. Remove the engine support fixture. Refer to **Engine Support Fixture**.
20. Refill the engine oil and install a NEW oil filter. Refer to **Engine Oil and Oil Filter Replacement**.

LOWER OIL PAN REPLACEMENT

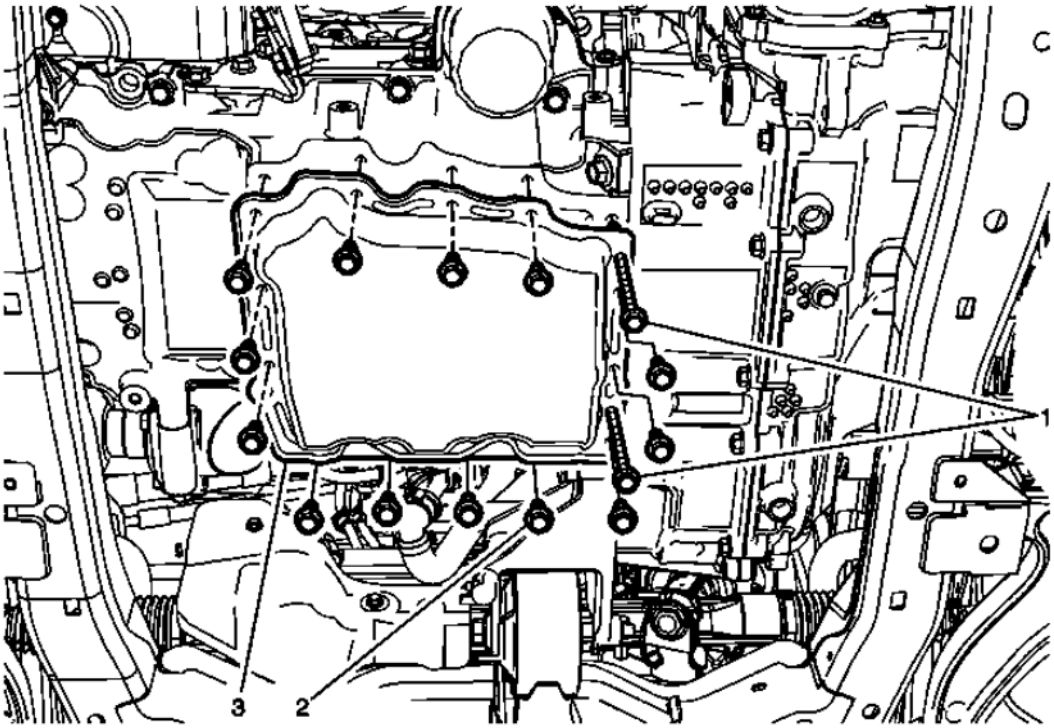

Fig. 202: Oil Pan & Fasteners
Courtesy of GENERAL MOTORS COMPANY

Lower Oil Pan Replacement

Callout	Component Name
Preliminary Procedures 1. Drain engine oil. Refer to **Engine Oil and Oil Filter Replacement** 2. Remove the exhaust front pipe. Refer to **Exhaust Front Pipe Replacement (LTG)** , **Exhaust Front Pipe Replacement (LTG AWD)** .	
1	Oil Pan Bolts (Qty 2) **CAUTION:** **Refer to Fastener Caution .** **Tighten** 10 (89 lb in)
2	Oil Pan Bolts (Qty; 13) **Tighten** 10 (89 lb in)
3	Oil Pan **Procedure** Apply a 2.25 mm bead of sealer on the level part of the flange around the perimeter of the oil pan. Refer to **Adhesives, Fluids, Lubricants, and Sealers** . **NOTE:**

	• **The lower crankcase surface must be free of contamination prior to applying the sealer.** • **Install and align the oil pan to block within 20 minutes of applying the sealer.** • **The oil pan must be fastened to final torque specification within 60 minutes of applying the sealer.**

ENGINE OIL LEVEL INDICATOR SWITCH REPLACEMENT (FWD)

Removal Procedure

1. Remove the lower oil pan. Refer to . **Lower Oil Pan Replacement**.
2. Disconnect the oil level sensor electrical connector.

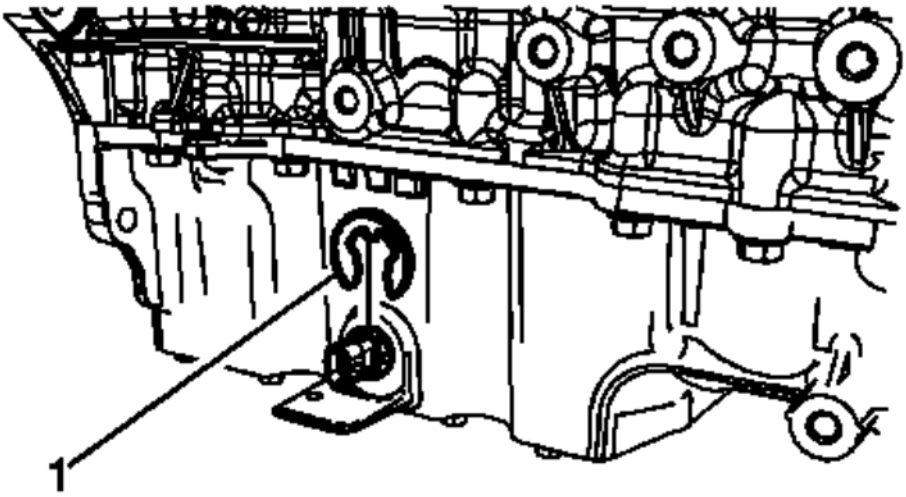

Fig. 203: Engine Oil Level Sensor C-clip
Courtesy of GENERAL MOTORS COMPANY

3. Remove the engine oil level sensor retainer (1).

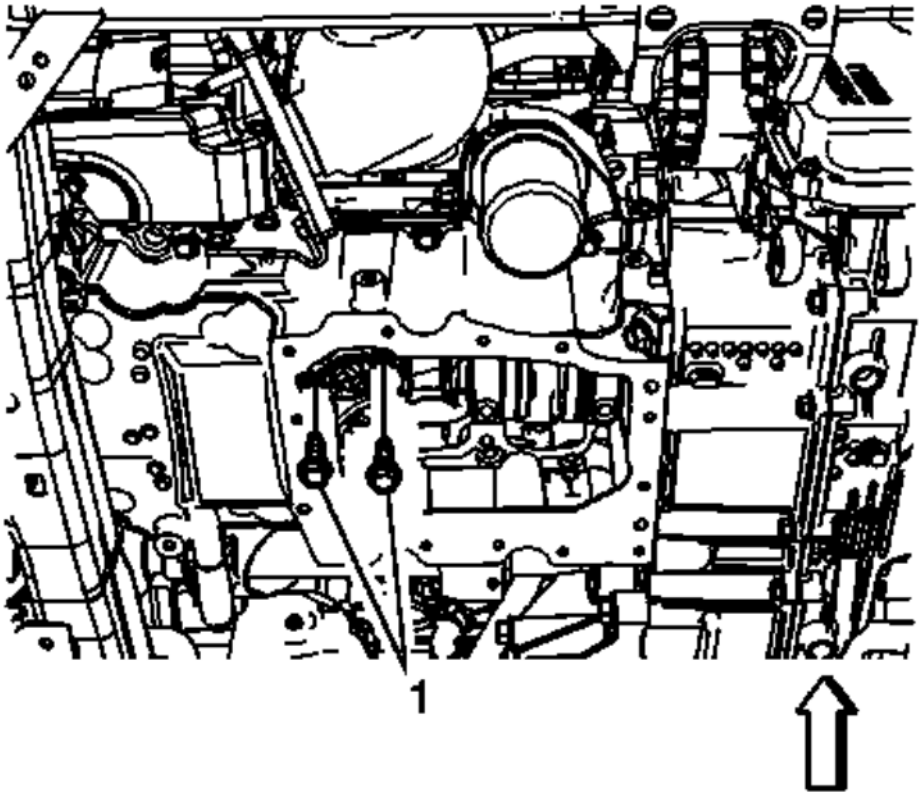

Fig. 204: Engine Oil Level Sensor Fasteners
Courtesy of GENERAL MOTORS COMPANY

4. Remove the engine oil level sensor fasteners (1).

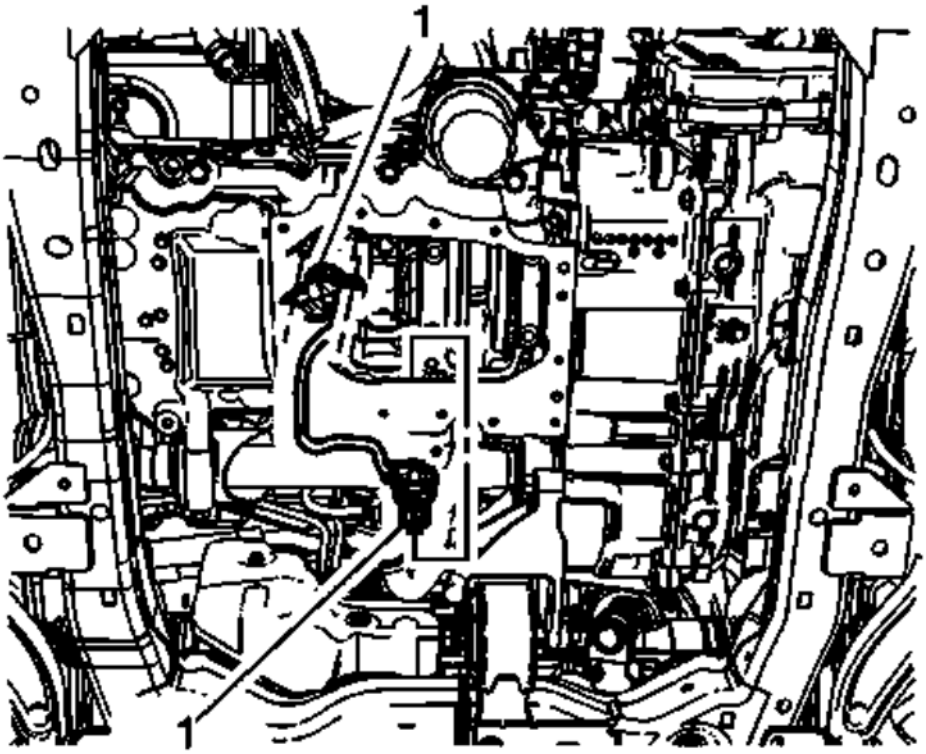

Fig. 205: O-ring Around Level Sensor
Courtesy of GENERAL MOTORS COMPANY

NOTE: Replace the O-ring around the level sensor.

5. Remove the engine oil level sensor (1) from the oil pan.

Installation Procedure

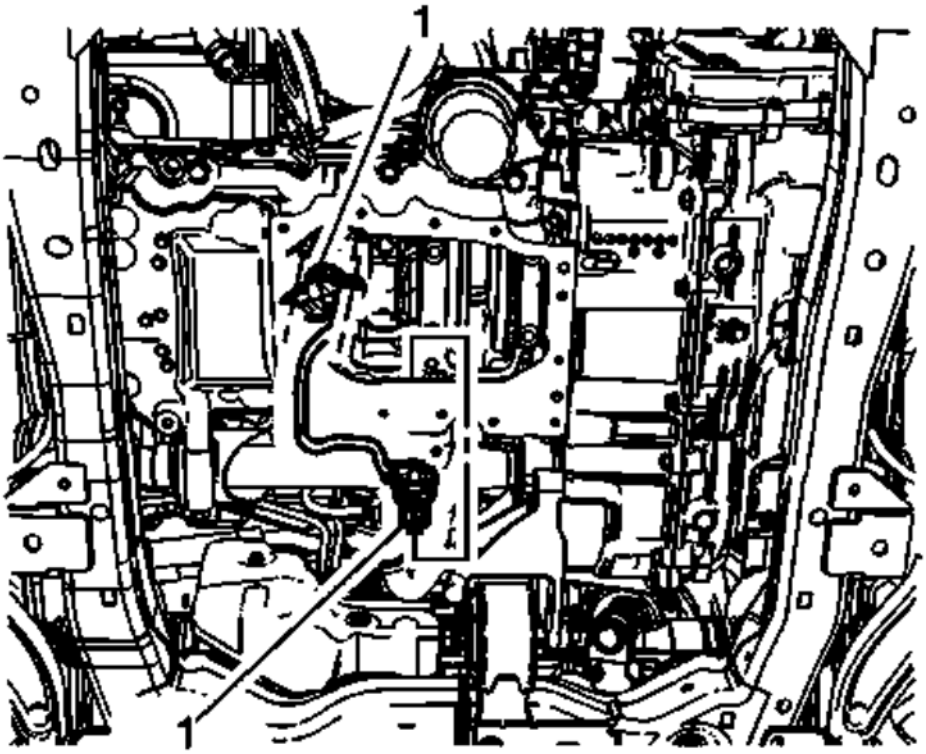

Fig. 206: O-ring Around Level Sensor
Courtesy of GENERAL MOTORS COMPANY

1. Install the engine oil level sensor (1).

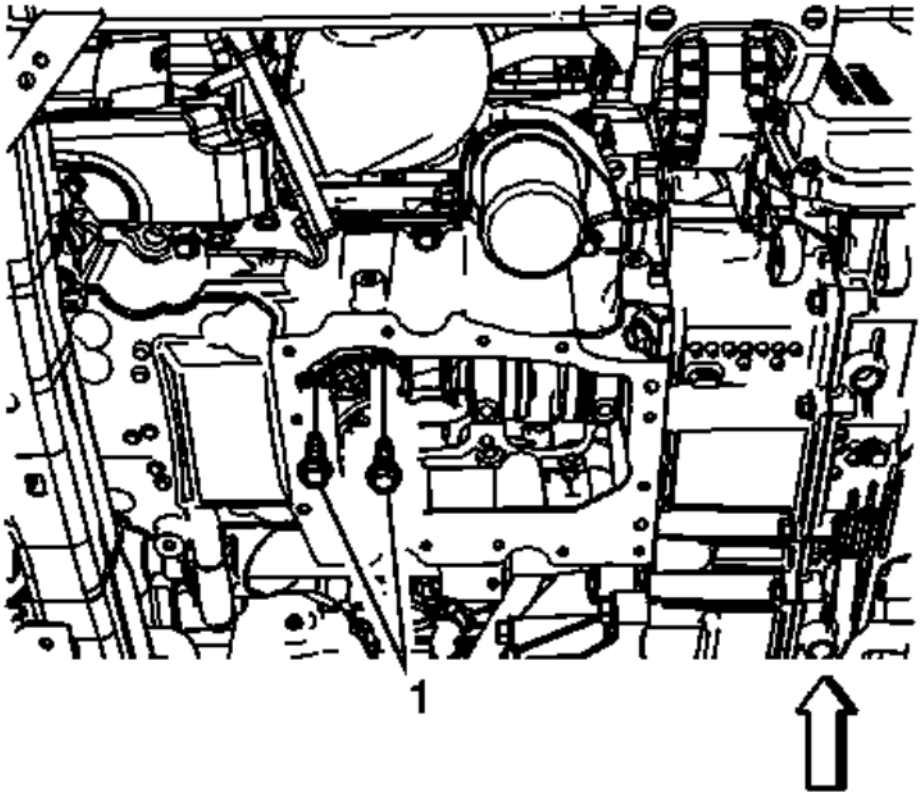

Fig. 207: Engine Oil Level Sensor Fasteners
Courtesy of GENERAL MOTORS COMPANY

CAUTION: Refer to Fastener Caution .

2. Install the engine oil level sensor fastener (1) and tight to 10 (89 lb in).

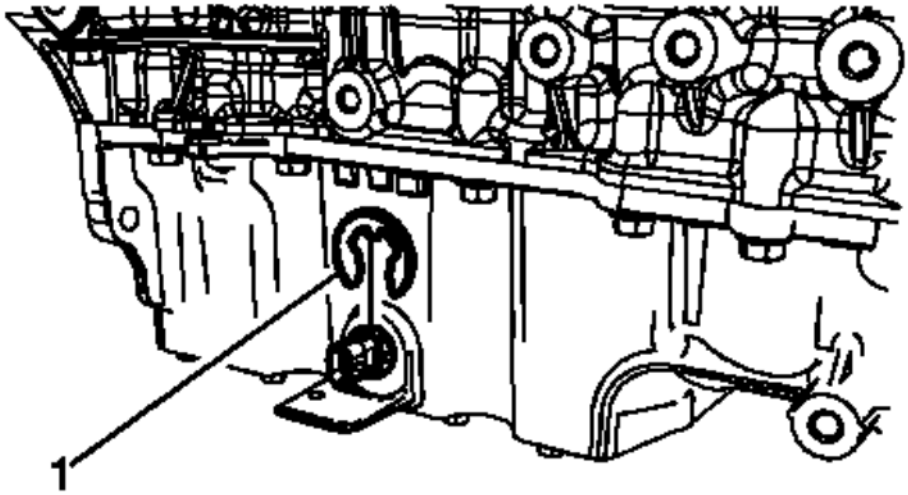

Fig. 208: Engine Oil Level Sensor C-clip
Courtesy of GENERAL MOTORS COMPANY

3. Install the engine oil level sensor retainer (1).
4. Connect the oil level sensor electrical connector.
5. Install the lower oil pan. Refer to **Lower Oil Pan Replacement**.

ENGINE OIL LEVEL INDICATOR SWITCH REPLACEMENT (AWD)

Removal Procedure

1. Remove the oil pan. Refer to . **Oil Pan Replacement (AWD)**.

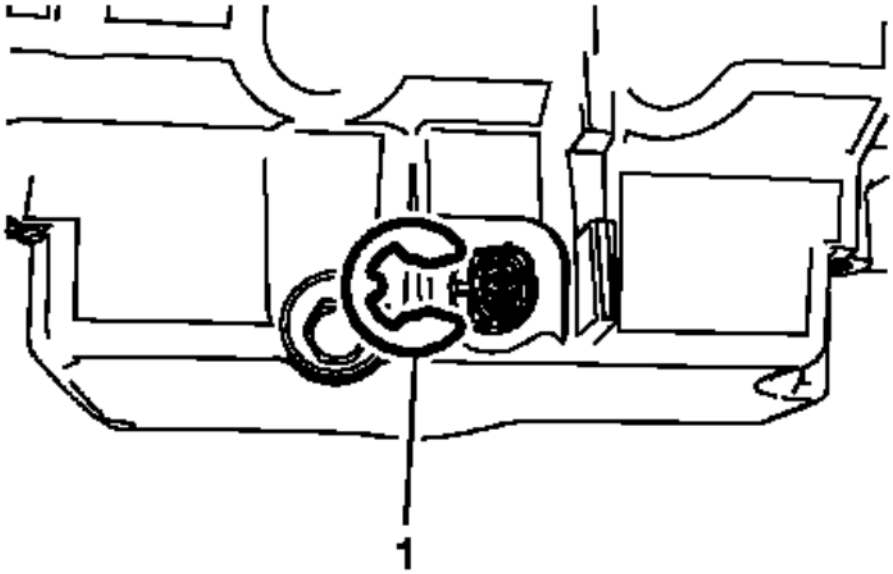

Fig. 209: Engine Oil Level Sensor
Courtesy of GENERAL MOTORS COMPANY

2. Remove the engine oil level sensor retainer (1).

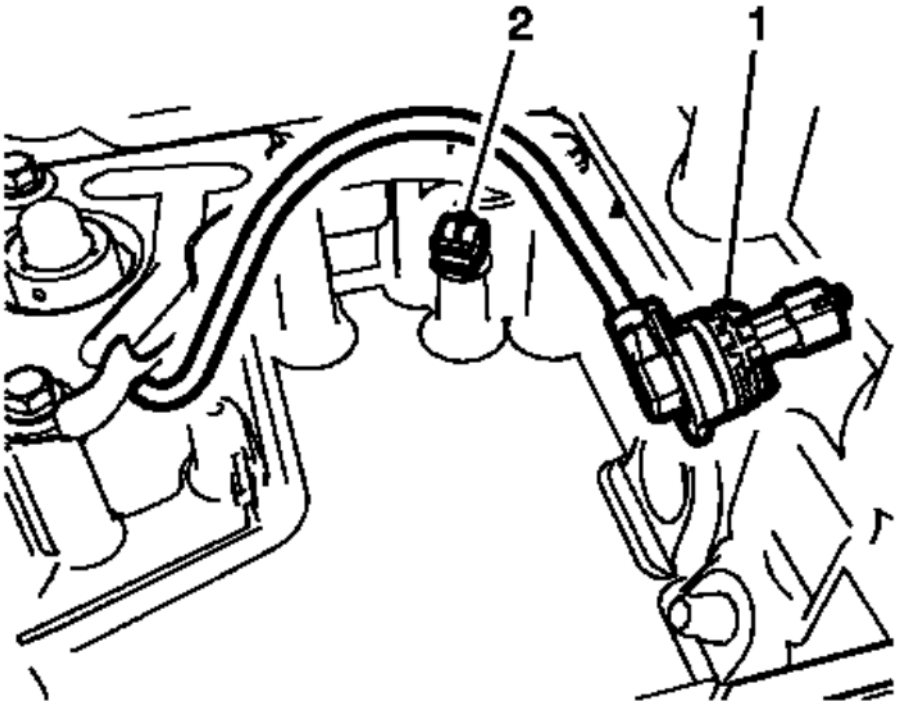

Fig. 210: Engine Oil Level Sensor Connector
Courtesy of GENERAL MOTORS COMPANY

3. Disconnect the engine oil level sensor connector (1) from the oil pan and the retainer (2). Discard the O-ring.

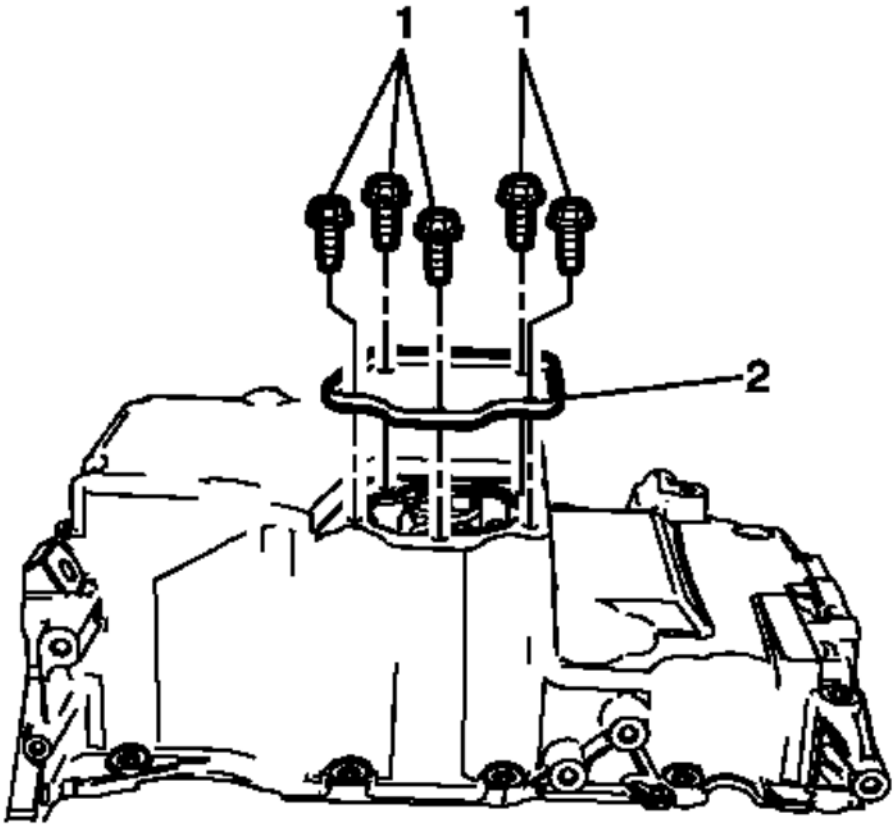

Fig. 211: Lower Oil Pan
Courtesy of GENERAL MOTORS COMPANY

4. Remove the lower oil pan (2) and fasteners (1).

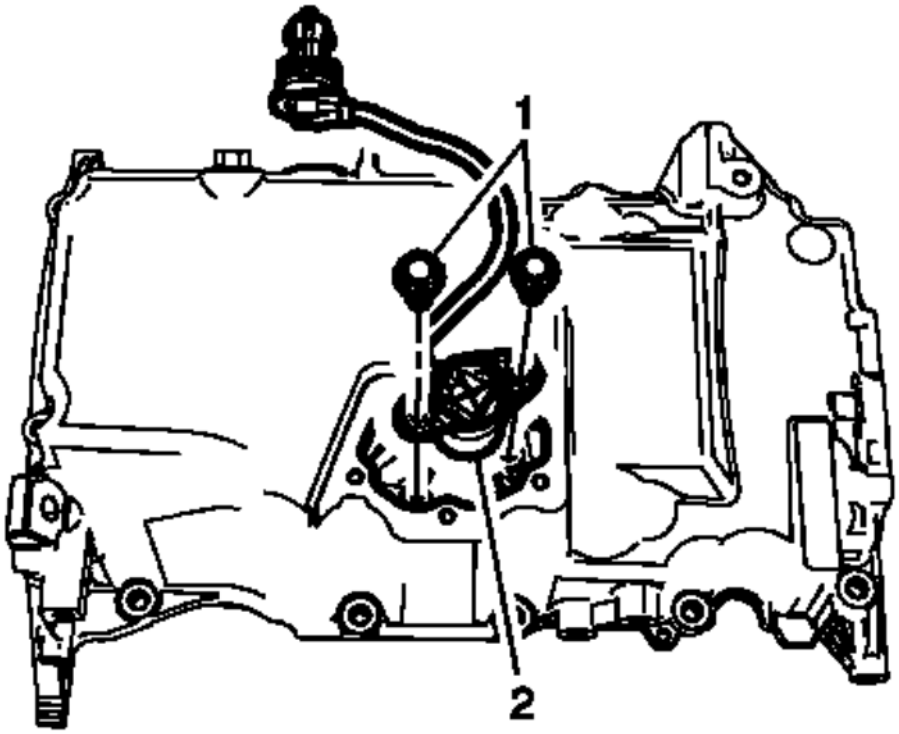

Fig. 212: Engine Oil Level Sensor
Courtesy of GENERAL MOTORS COMPANY

5. Remove the engine oil level sensor fasteners (1).
6. Remove the engine oil level sensor (2) from the oil pan.

Installation Procedure

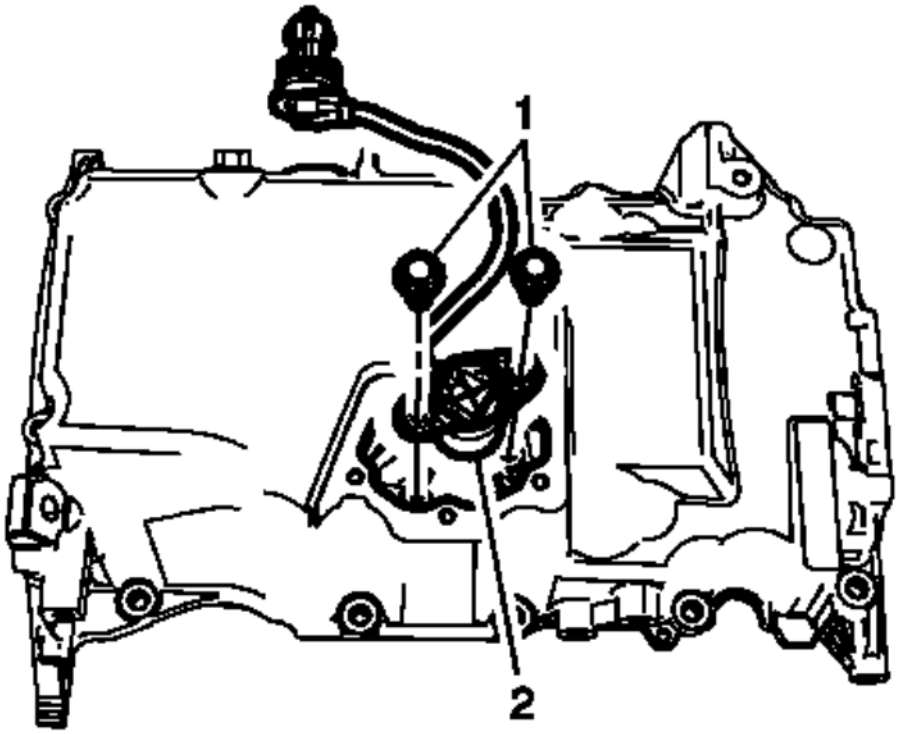

Fig. 213: Engine Oil Level Sensor
Courtesy of GENERAL MOTORS COMPANY

1. Install the engine oil level sensor (1) into the oil pan

   CAUTION: Refer to Fastener Caution .

2. Install the engine oil level sensor fastener (1) and tighten to 10 (89 lb in).

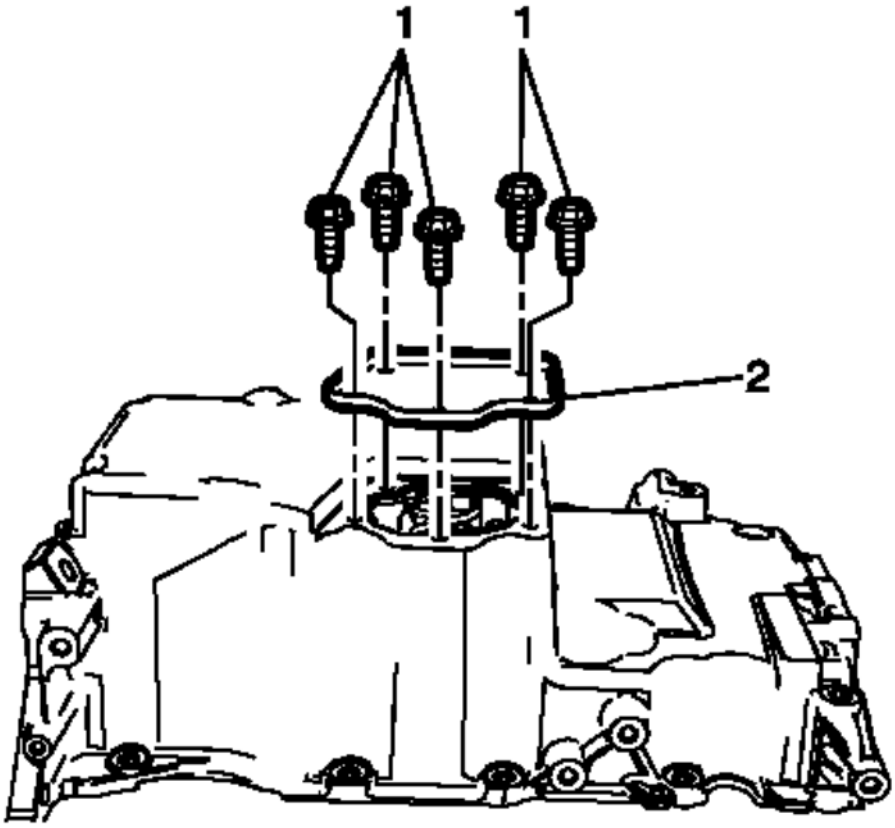

Fig. 214: Lower Oil Pan
Courtesy of GENERAL MOTORS COMPANY

NOTE: **Apply a 4.25 mm bead of sealer (1) on the level part of the flange around the perimeter of the lower oil pan. Refer to Adhesives, Fluids, Lubricants, and Sealers .**

3. Install the lower oil pan (2) and fasteners (1) and tighten to 10 (89 lb in).

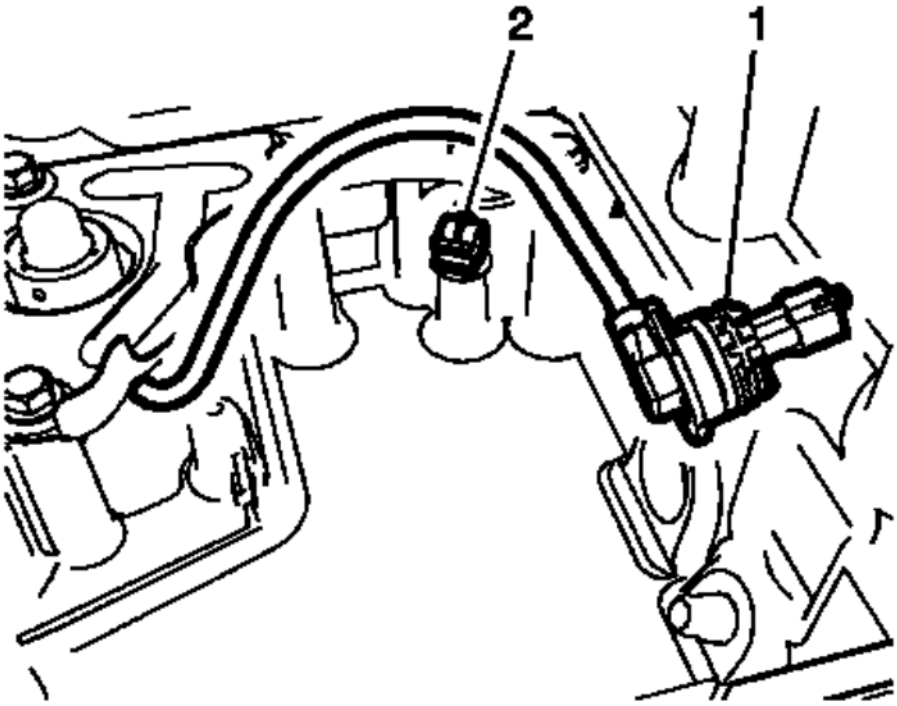

Fig. 215: Engine Oil Level Sensor Connector
Courtesy of GENERAL MOTORS COMPANY

NOTE: Always install a NEW O-ring when installing the engine oil level sensor.

4. Connect the engine oil level sensor connector (1) to the oil pan with a NEW O-ring.
5. Connect the engine oil level sensor pigtail wire to the retainer (2).

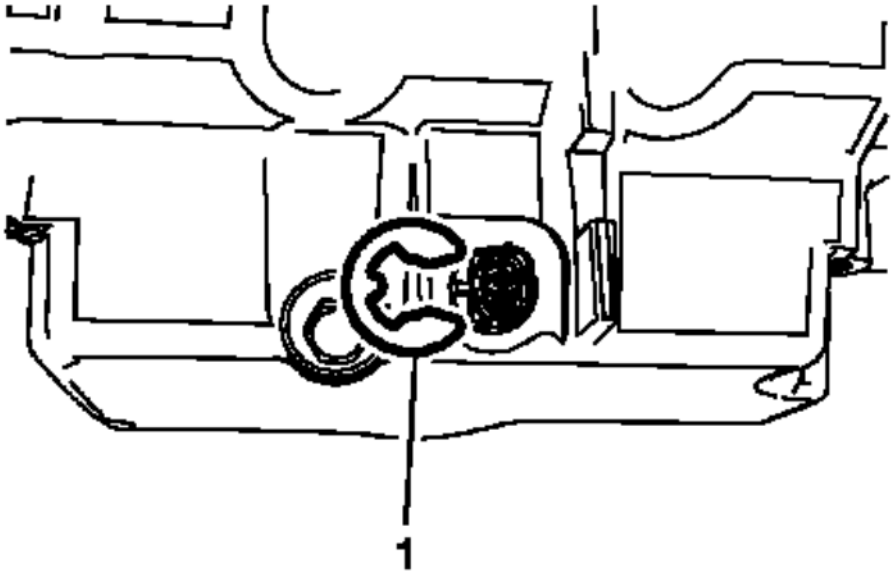

Fig. 216: Engine Oil Level Sensor
Courtesy of GENERAL MOTORS COMPANY

6. Install the engine oil level sensor retainer (1).
7. Install the oil pan. Refer to **Oil Pan Replacement (AWD)**, **Oil Pan Replacement (FWD)**.

ENGINE FLYWHEEL REPLACEMENT

Special Tools

- **EN 50792** Flywheel Holding Tool
- **EN-45059** Angle Meter

For equivalent regional tools, refer to **Special Tools** .

Removal Procedure

1. Remove the clutch assembly. Refer to **Clutch Assembly Replacement (With DT-6263)** .

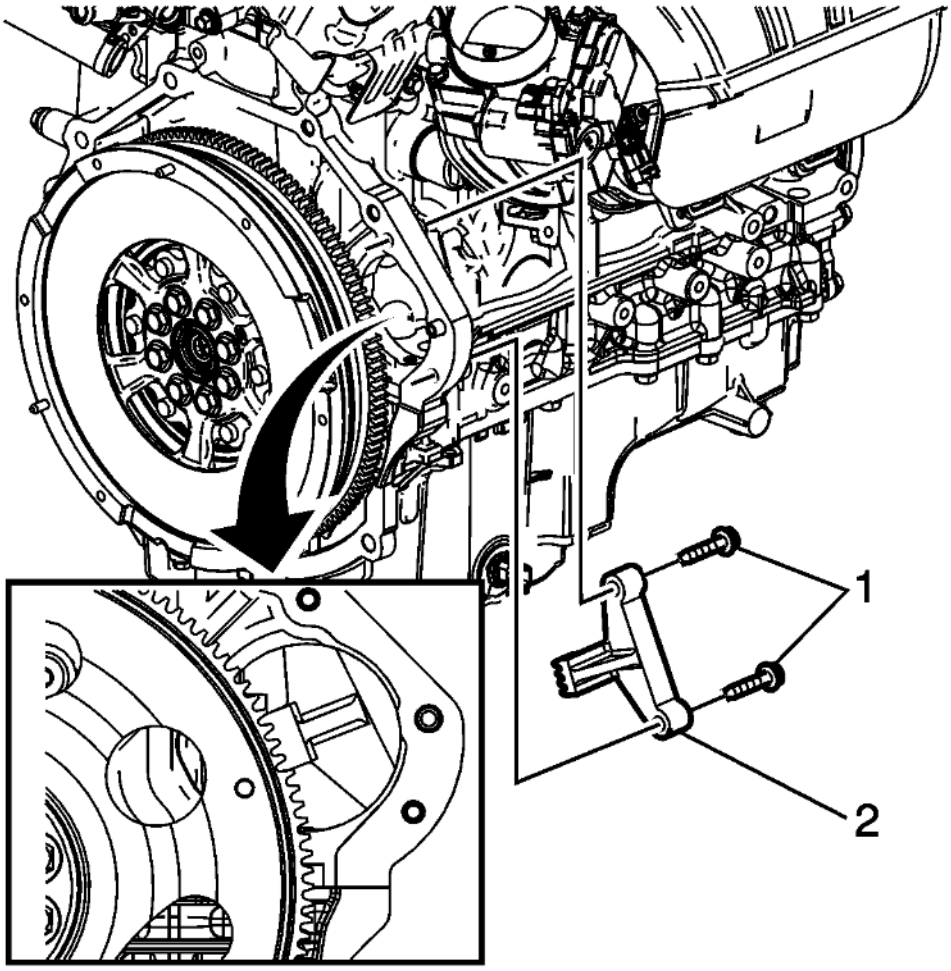

Fig. 217: Flywheel Holding Tool & Starter Motor Bolts
Courtesy of GENERAL MOTORS COMPANY

2. To prevent crankshaft rotation, install **EN-50792** holding tool (2) and starter motor bolts (1) at the starter motor location and engaging the flywheel.

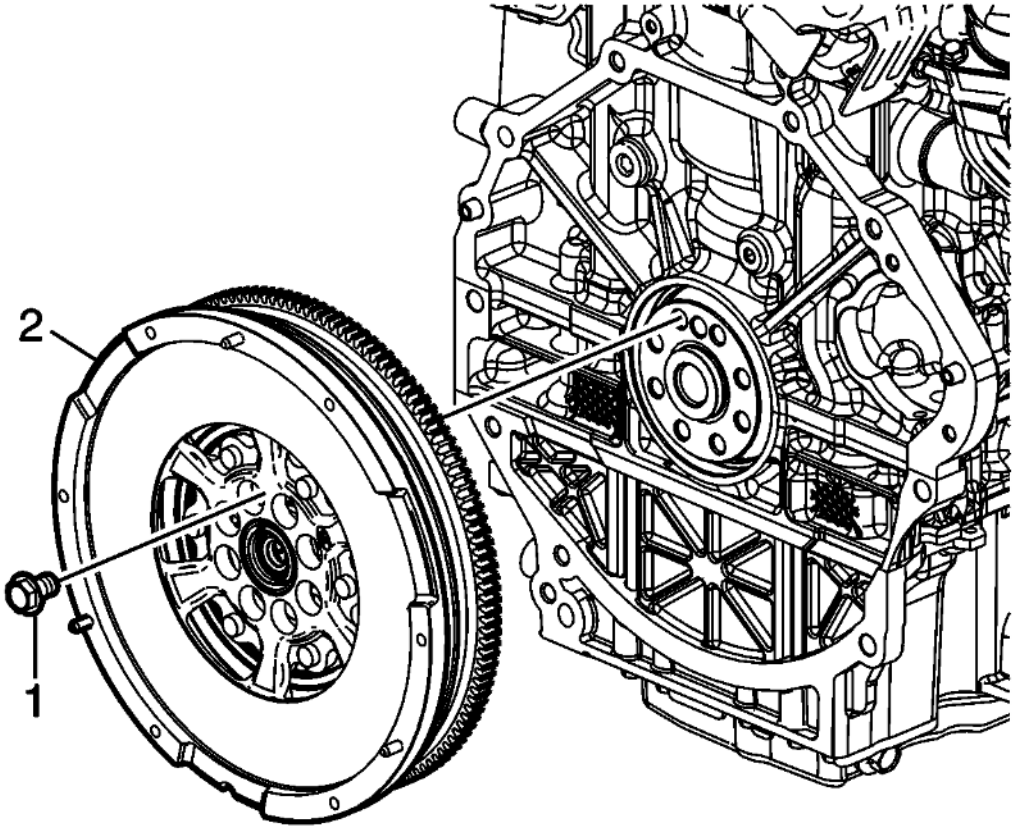

Fig. 218: Flywheel & Attaching Bolts
Courtesy of GENERAL MOTORS COMPANY

3. Remove and discard the flywheel attaching bolts (1).
4. Remove the flywheel (2).
5. Remove **EN 50792** holding tool.

Installation Procedure

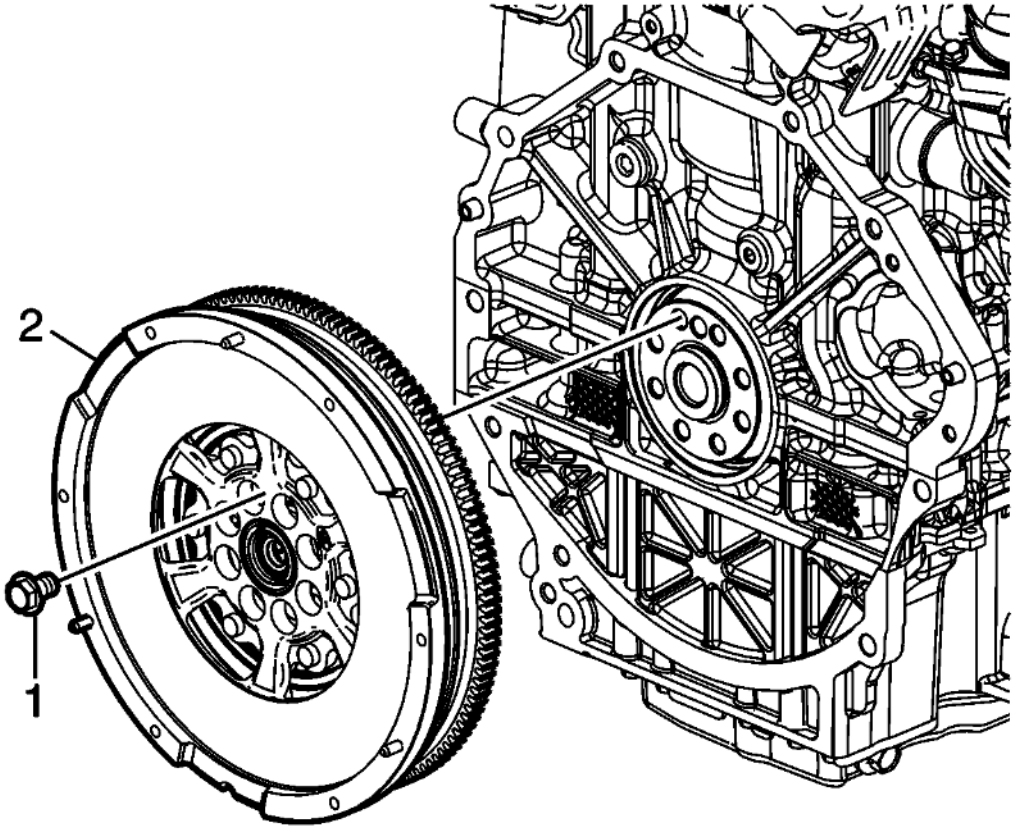

Fig. 219: Flywheel & Attaching Bolts
Courtesy of GENERAL MOTORS COMPANY

NOTE: **Fasteners have adhesive patch and must be tightened to final torque within 5 minutes.**

1. Install the flywheel (2) and hand start NEW bolts (1).

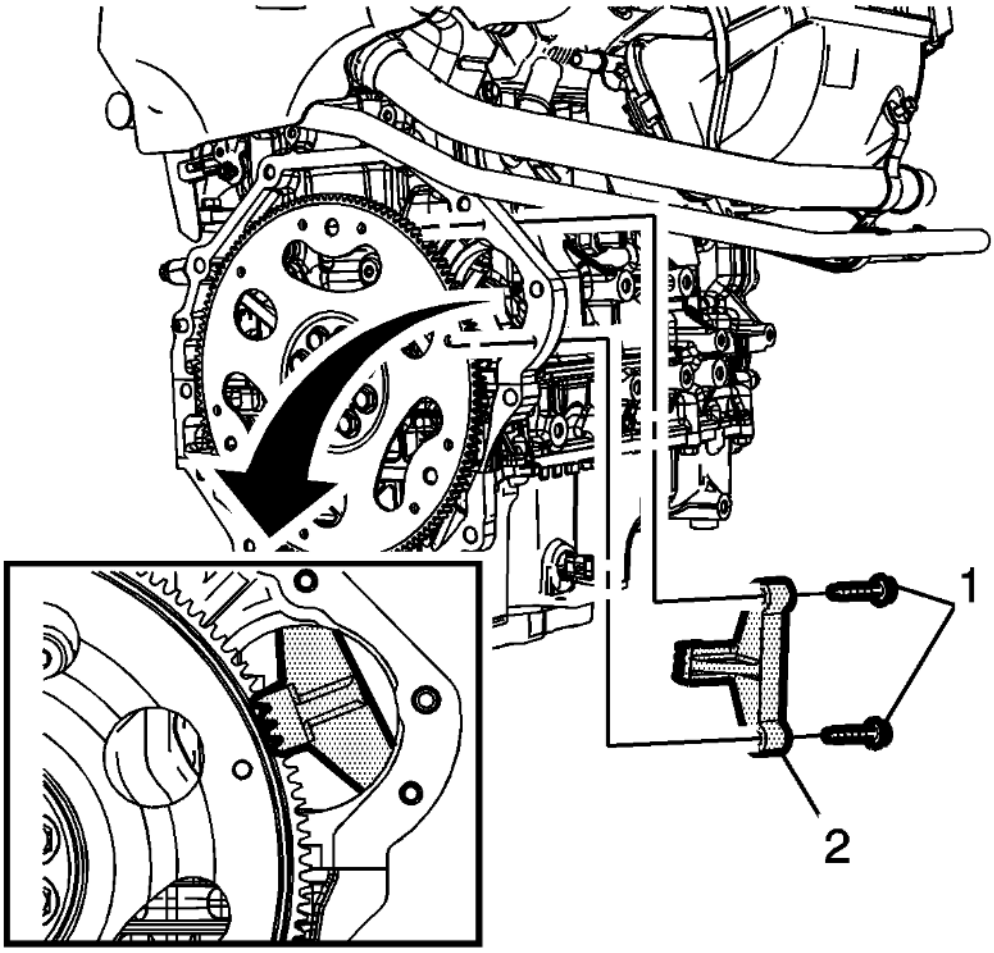

Fig. 220: Flywheel Holding Tool
Courtesy of GENERAL MOTORS COMPANY

2. To prevent crankshaft rotation, install **EN-50792** holding tool (2) and starter motor bolts (1) at the starter motor location and engaging the flywheel.

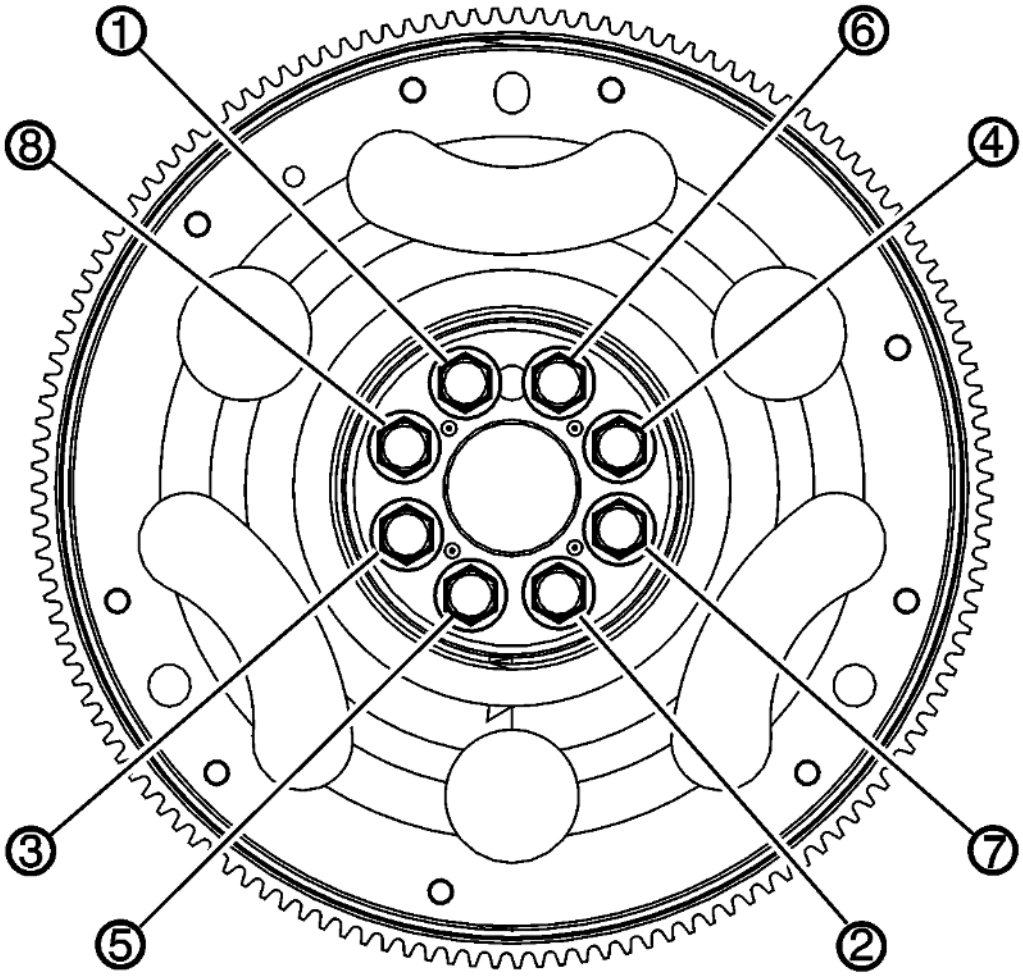

Fig. 221: Flywheel Bolt Tightening Sequence
Courtesy of GENERAL MOTORS COMPANY

CAUTION: Refer to Fastener Caution .

3. Tighten the bolts evenly using the following procedure:
   1. Tighten the bolts a first pass in sequence to 20 (15 lb ft).
   2. Tighten the bolts a second pass in sequence to 30 (22 lb ft).
   3. Tighten the bolts a final pass in sequence 40 degrees using the **EN-45059** angle meter.
4. Remove **EN-50792** holding tool.
5. Install the clutch assembly. Refer to **Clutch Assembly Replacement (With DT-6263)** .

AUTOMATIC TRANSMISSION FLEX PLATE REPLACEMENT

Removal Procedure

Special Tools

- **EN 45059** Angle Meter

- **EN 46106** Holding Tool

For equivalent regional tools, refer to **Special Tools** .

1. Remove the transmission. Refer to **Transmission Replacement** .

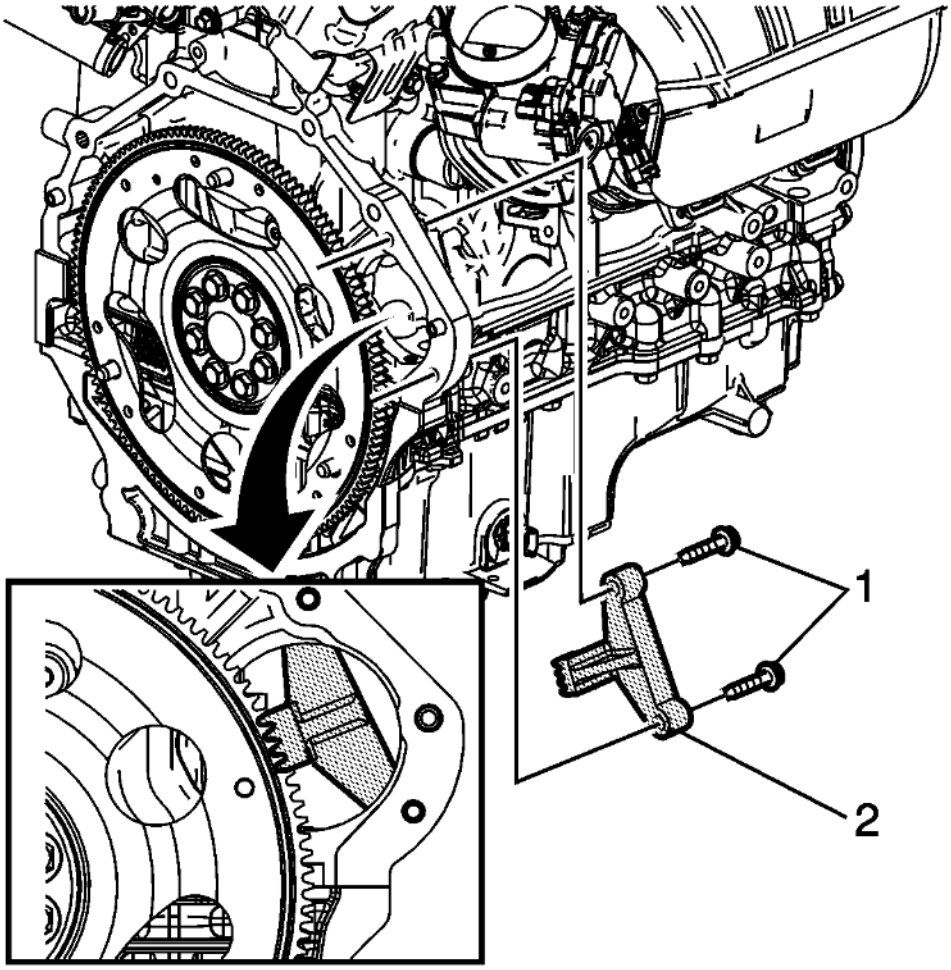

Fig. 222: Starter Motor Bolts
Courtesy of GENERAL MOTORS COMPANY

2. To prevent crankshaft rotation, install **EN 46106** holding tool (2) and starter motor bolts (1) at the starter motor location and engaging the automatic flex plate.

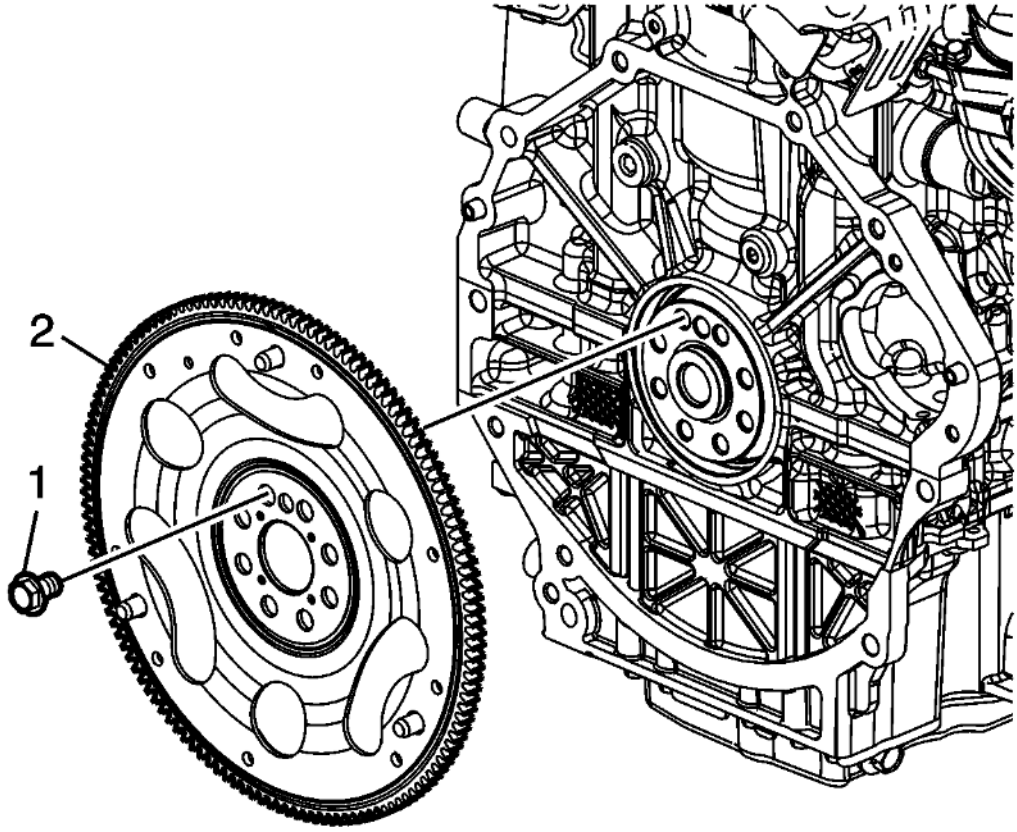

Fig. 223: Flywheel Attaching Bolts
Courtesy of GENERAL MOTORS COMPANY

3. Remove the automatic flex plate attaching bolts (1).
4. Remove the automatic flex plate (2).
5. Remove **EN 46106** holding tool.
6. For automatic flex plate cleaning and inspection, Refer to **Automatic Transmission Flex Plate Cleaning and Inspection** .

Installation Procedure

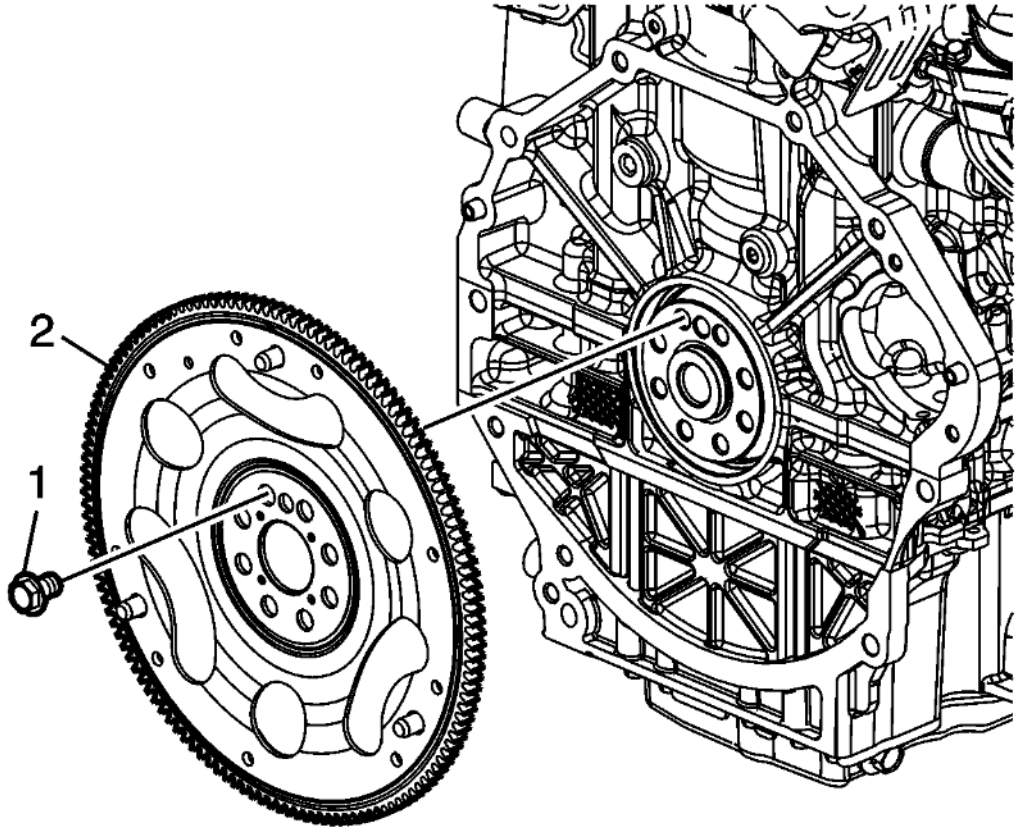

Fig. 224: Flywheel Attaching Bolts
Courtesy of GENERAL MOTORS COMPANY

NOTE: **Fasteners have adhesive patch and must be tightened to final torque within 5 minutes.**

1. Install the automatic flex plate (2) and hand start NEW bolts (1).

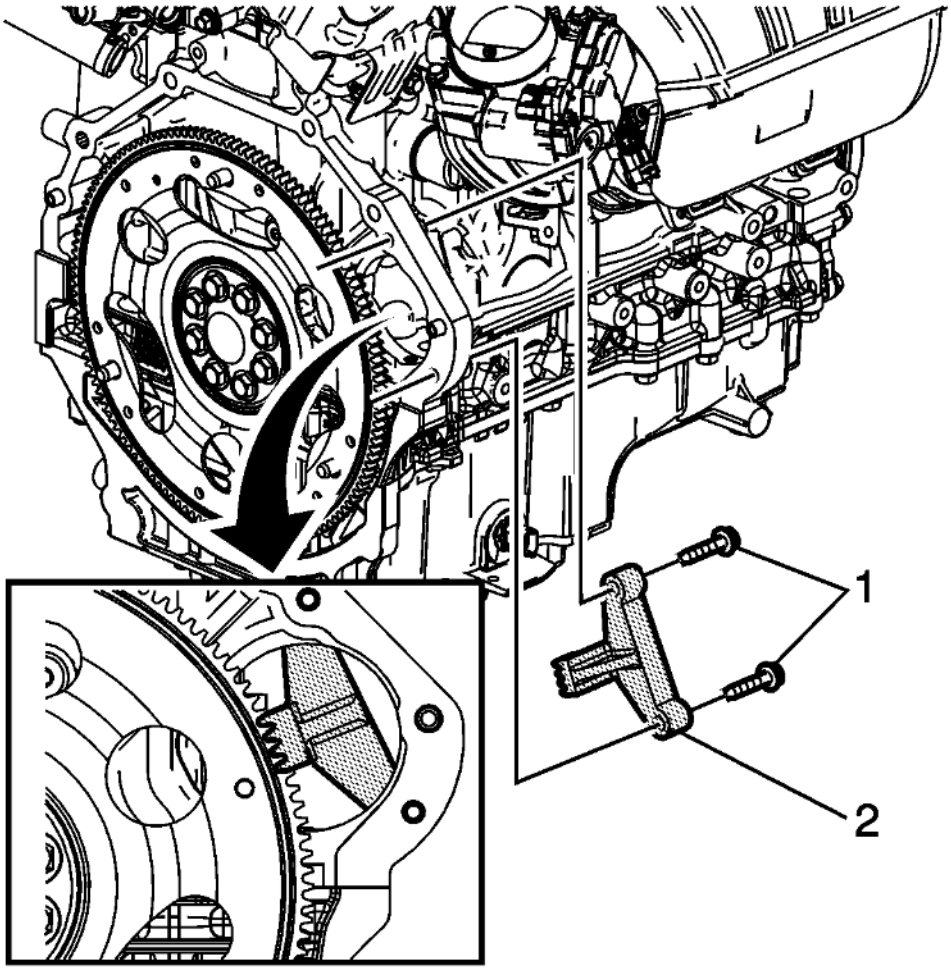

Fig. 225: Starter Motor Bolts
Courtesy of GENERAL MOTORS COMPANY

2. To prevent crankshaft rotation, install **EN 46106** holding tool (2) and starter motor bolts (1) at the starter motor location and engaging the flex plate.

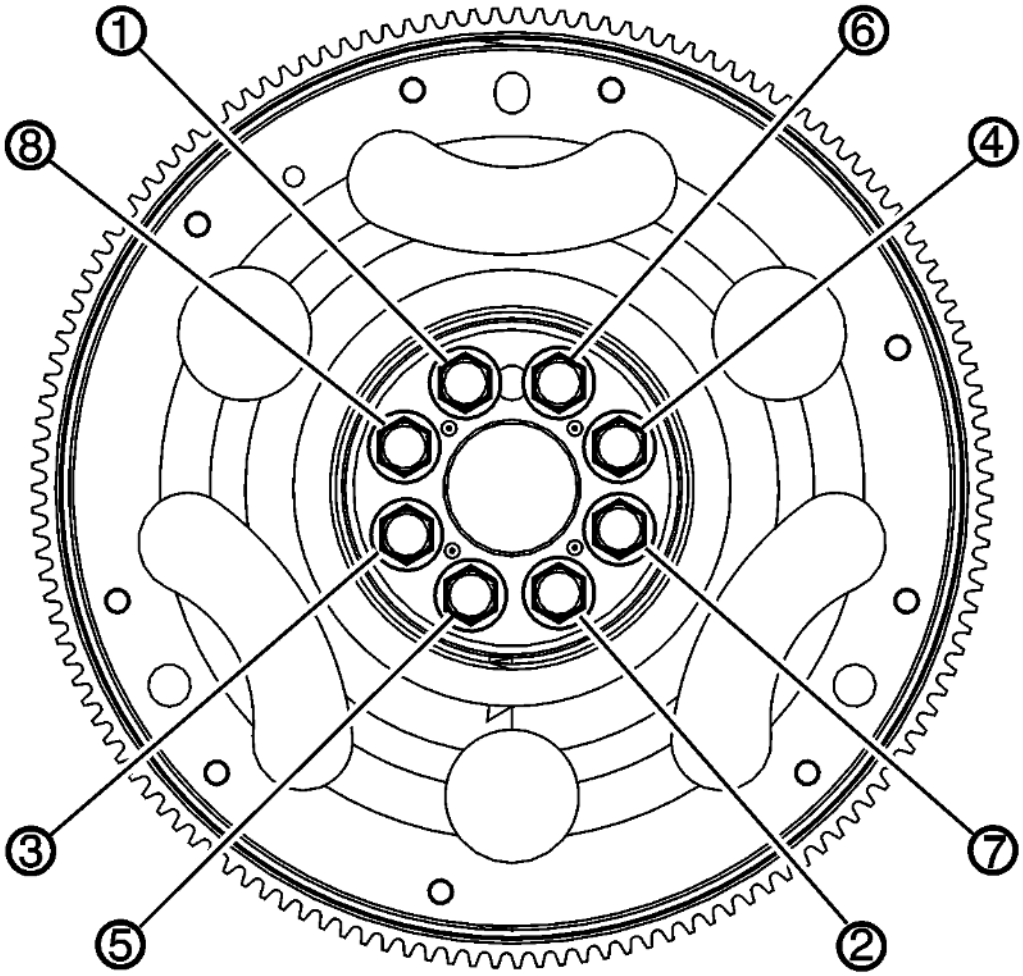

Fig. 226: Flywheel Bolt Tightening Sequence
Courtesy of GENERAL MOTORS COMPANY

CAUTION: Refer to Fastener Caution .

3. Tighten the bolts evenly using the following procedure:
   1. Tighten the bolts a first pass in sequence to 20 (15 lb ft).
   2. Tighten the bolts a second pass in sequence to 30 (22 lb ft).
   3. Tighten the bolts a final pass in sequence 40 degrees using the **EN 45059** meter.
4. Remove **EN 46106** holding tool.
5. Install the transmission. Refer to **Transmission Replacement** .

CRANKSHAFT REAR OIL SEAL REPLACEMENT

Special Tools

EN-51380 Rear Main Seal Installer

For equivalent regional tools, refer to **Special Tools** .

Removal Procedure

1. If equipped with an automatic transmission, remove the flex plate. Refer to **Automatic Transmission Flex Plate Replacement**.
2. If equipped with a manual transmission, remove the flywheel. Refer to **Engine Flywheel Replacement**.

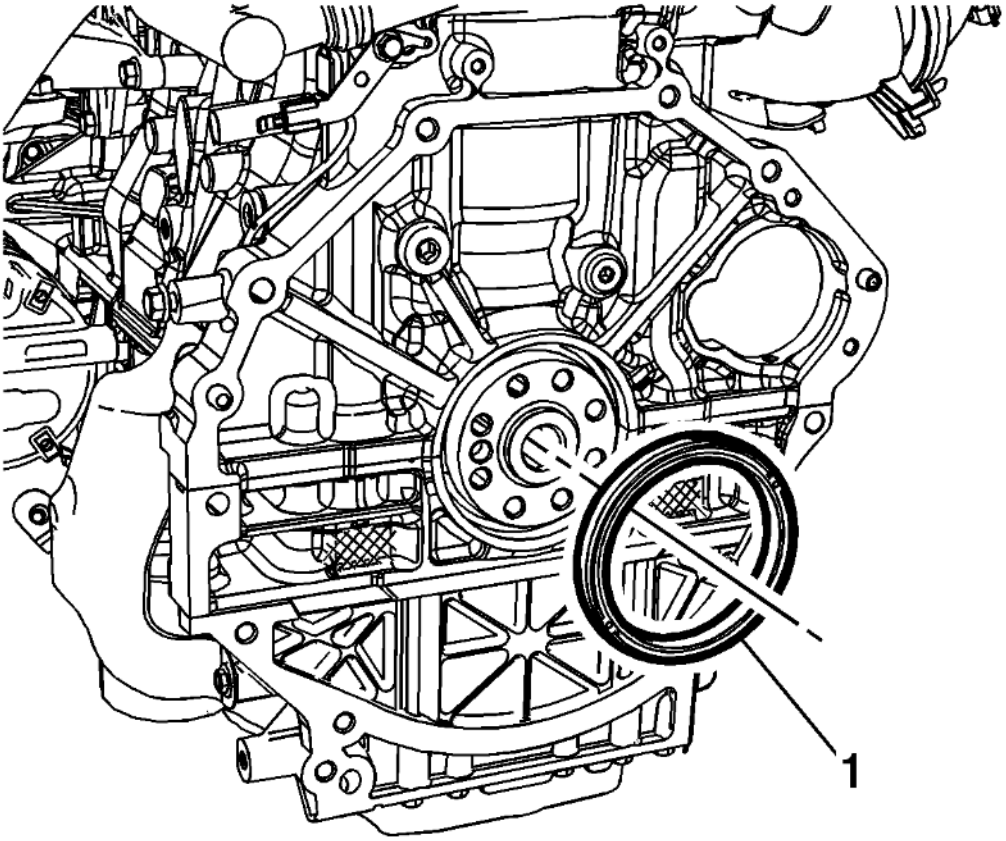

Fig. 227: Crankshaft Rear Oil Seal
Courtesy of GENERAL MOTORS COMPANY

NOTE: **Do not damage the outside diameter of the crankshaft or chamber with any tool.**

3. Use a suitable tool to remove the crankshaft rear oil seal (1).

Installation Procedure

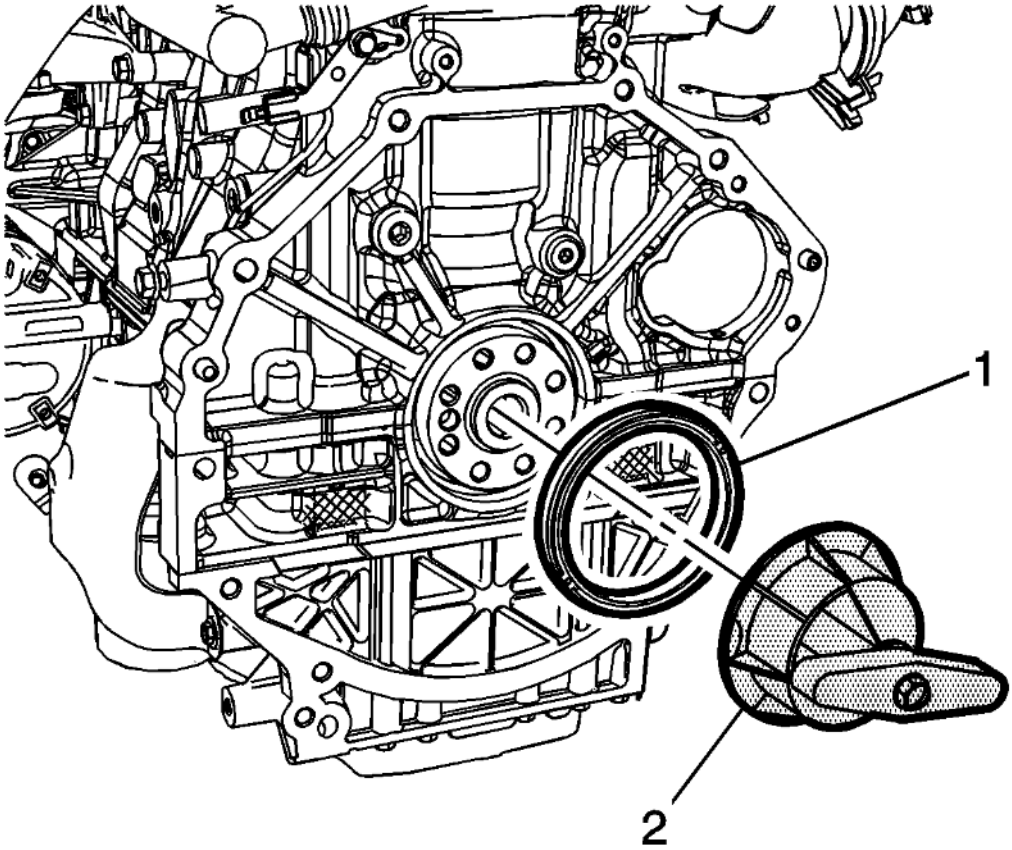

Fig. 228: Crankshaft Real Oil Seal
Courtesy of GENERAL MOTORS COMPANY

1. Using the (2) **EN-51380** seal installer , install a NEW crankshaft real oil seal (1).
2. If equipped with a manual transmission, install the flywheel and transmission. Refer to **Engine Flywheel Replacement**.
3. If equipped with an automatic transmission, install the automatic transmission flex plate and transmission. Refer to **Automatic Transmission Flex Plate Replacement**.

ENGINE REPLACEMENT (FWD)

Removal Procedure

1. Disconnect the negative battery cable. Refer to **Battery Negative Cable Disconnection and Connection** .
2. Drain the cooling system. Refer to **Cooling System Draining and Filling (Static Fill)** , **Cooling System Draining and Filling (GE 47716)** .
3. Drain the engine oil. Refer to **Engine Oil and Oil Filter Replacement**.
4. Evacuate the A/C system. Refer to **Refrigerant Recovery and Recharging** .
5. Remove the battery tray. Refer to **Battery Tray Replacement** .

6. Relieve the fuel system pressure. Refer to **Fuel Pressure Relief** .

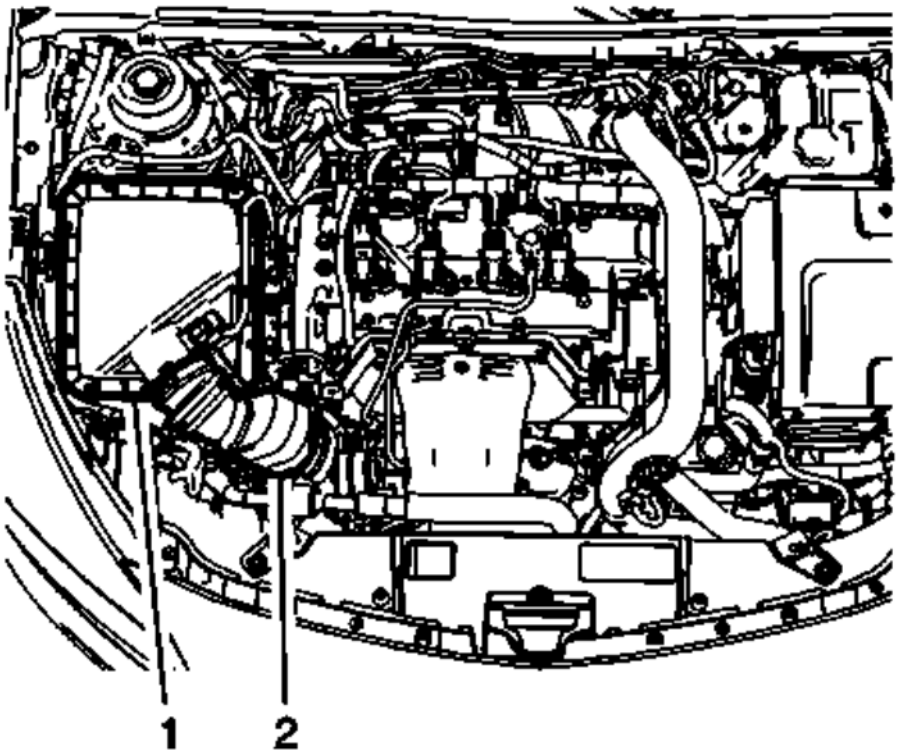

Fig. 229: Air Cleaner Assembly
Courtesy of GENERAL MOTORS COMPANY

7. Remove the air cleaner assembly (1). Refer to **Air Cleaner Assembly Replacement** .
8. Remove the air cleaner outlet duct (2). Refer to **Air Cleaner Outlet Duct Replacement** .

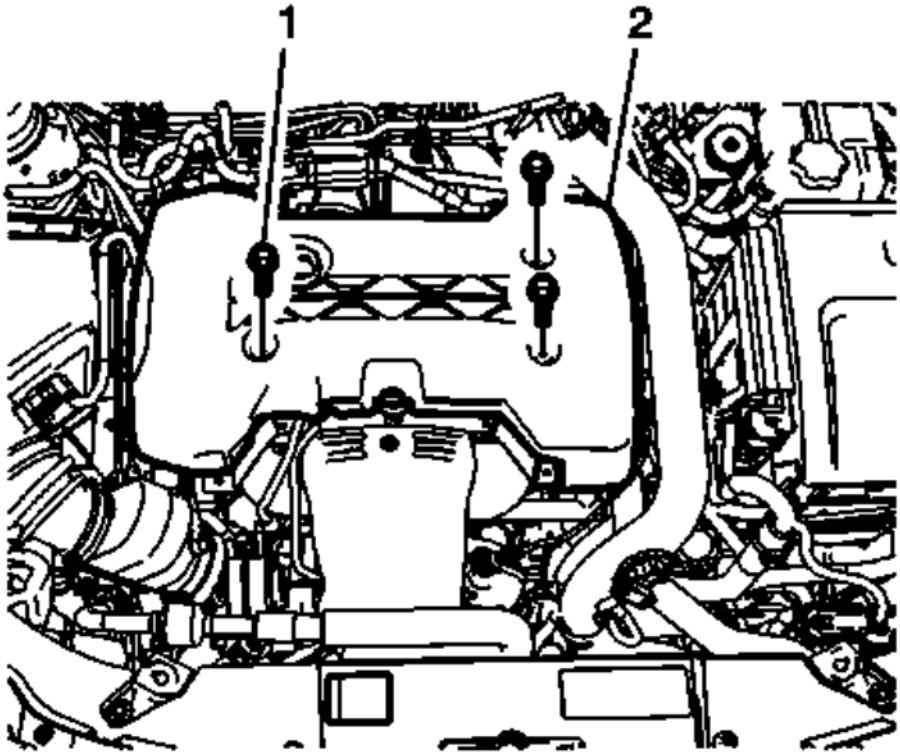

Fig. 230: Intake Manifold Cover
Courtesy of GENERAL MOTORS COMPANY

9. Remove the intake manifold cover (2). Refer to **Intake Manifold Cover Replacement**.

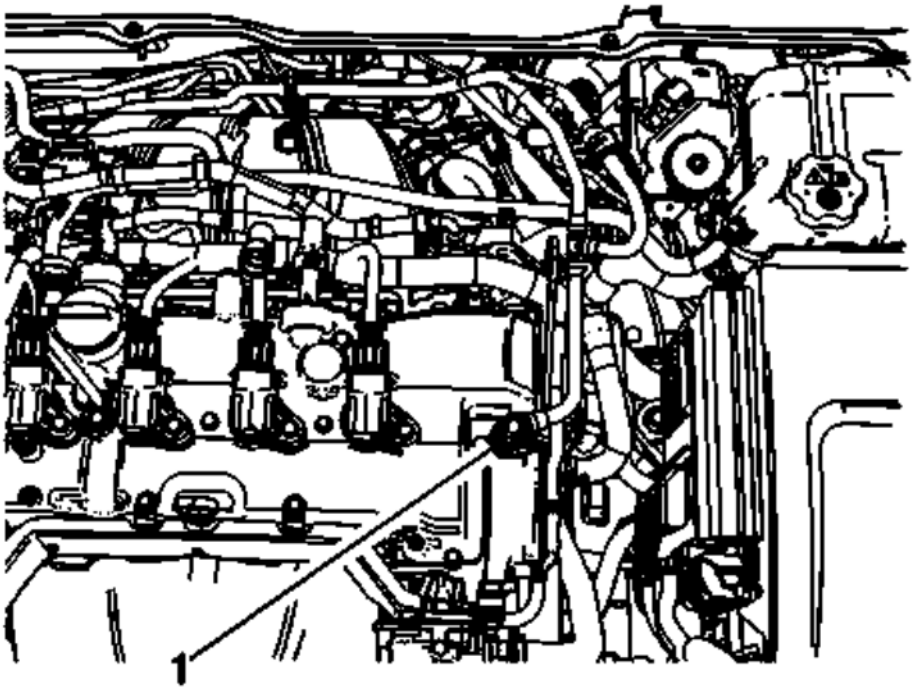

Fig. 231: Vacuum Hose
Courtesy of GENERAL MOTORS COMPANY

10. Disconnect the vacuum hose (1). Refer to **Plastic Collar Quick Connect Fitting Service** .
11. Disconnect the fuel line (1). Refer to **Metal Collar Quick Connect Fitting Service** .

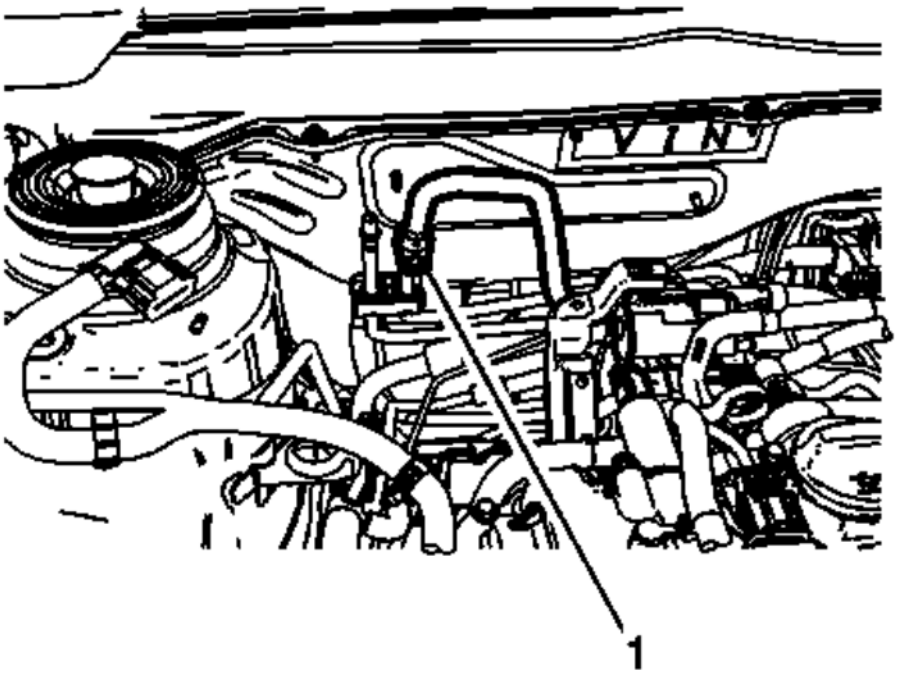

Fig. 232: EVAP Hose
Courtesy of GENERAL MOTORS COMPANY

12. Disconnect the EVAP hose (1). Refer to **Plastic Collar Quick Connect Fitting Service** .

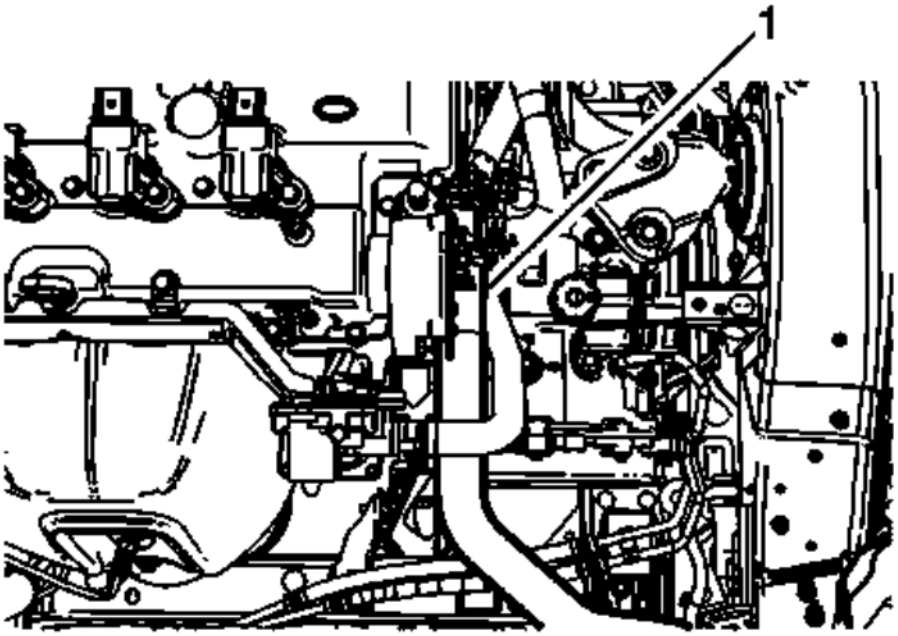

Fig. 233: Radiator Outlet Hose
Courtesy of GENERAL MOTORS COMPANY

13. Disconnect the radiator outlet hose (1). Refer to **Radiator Outlet Hose Replacement (LTG)** .

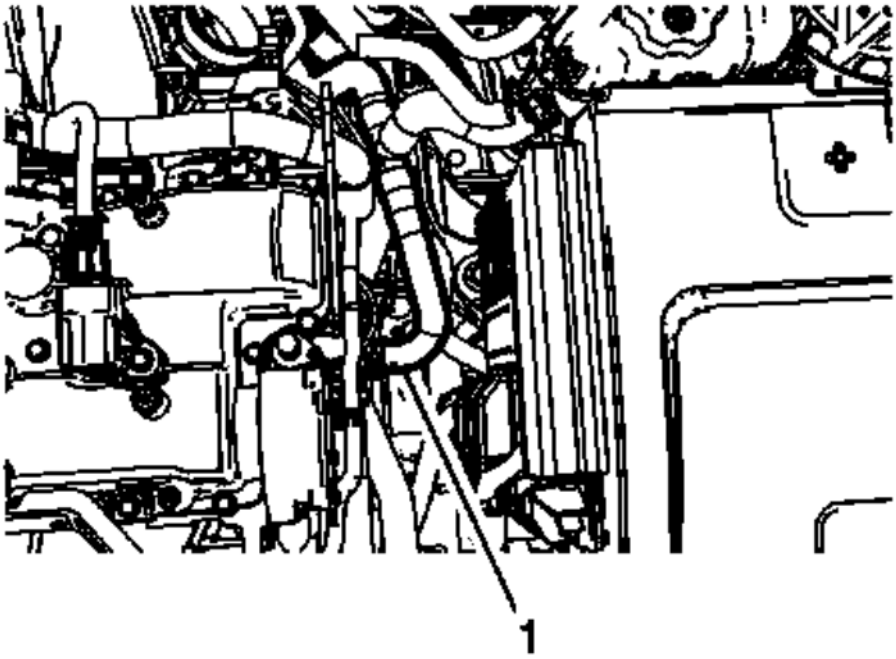

Fig. 234: Heater Inlet Hose
Courtesy of GENERAL MOTORS COMPANY

14. Remove the heater inlet hose (1). Refer to **Heater Inlet Hose Replacement (LTG)** .
15. Remove the heater outlet hose (2). Refer to **Heater Outlet Hose Replacement (LTG)** .

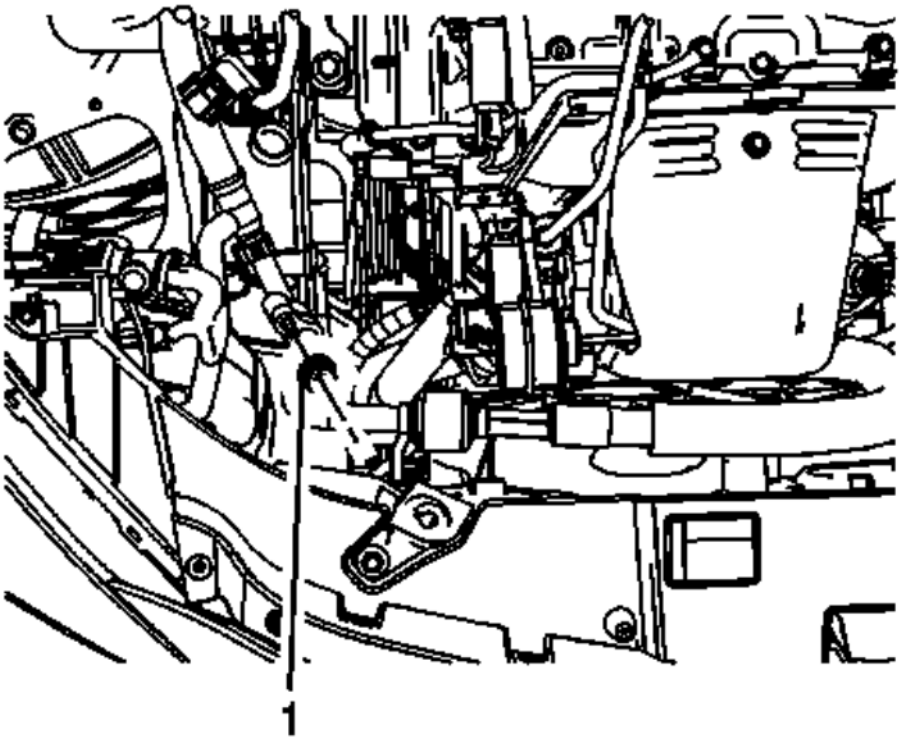

Fig. 235: Air Conditioning Compressor And Condenser Hose
Courtesy of GENERAL MOTORS COMPANY

16. Remove the air conditioning compressor and condenser hose (1). Refer to **Air Conditioning Compressor and Condenser Hose Replacement (LUK)** .

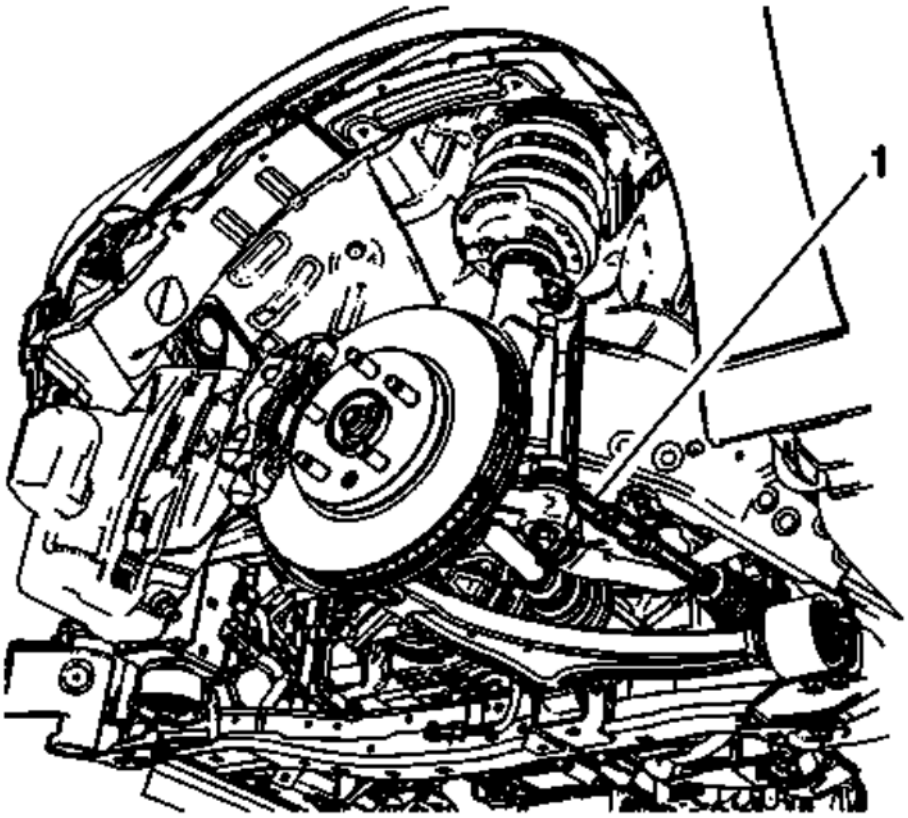

Fig. 236: Tie Rods And Steering Knuckles
Courtesy of GENERAL MOTORS COMPANY

17. Disconnect the tie rods (1) from the steering knuckles. Refer to **Steering Linkage Outer Tie Rod Replacement** .

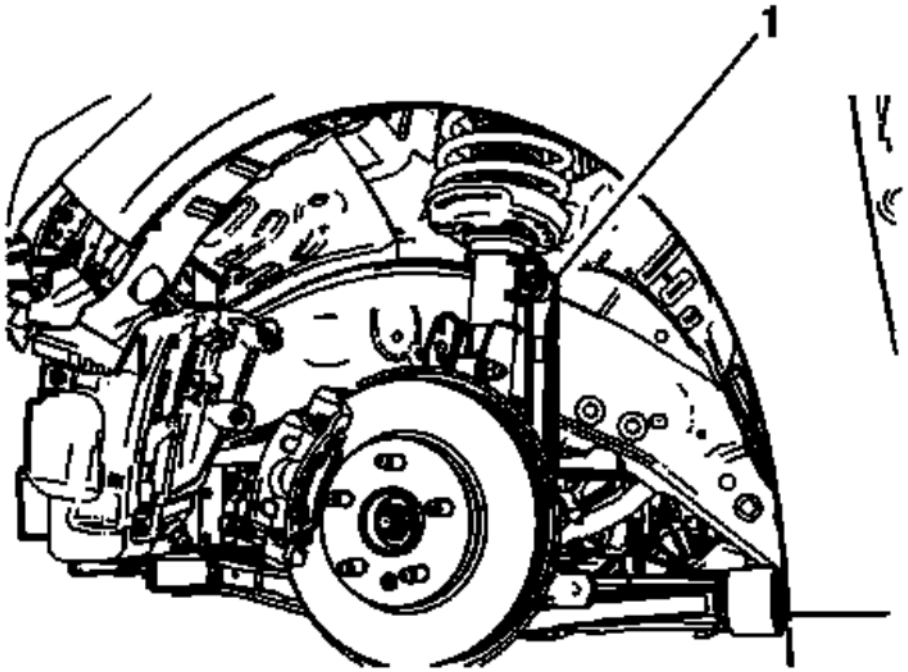

Fig. 237: Stabilizer Links
Courtesy of GENERAL MOTORS COMPANY

18. Disconnect the stabilizer links (1) from the stabilizer shaft. Refer to **Stabilizer Shaft Link Replacement (GNA, GNB)** .
19. Disconnect the intermediate shaft from the steering gear. Refer to **Intermediate Steering Shaft Replacement** .
20. Remove the exhaust system. Refer to **Exhaust Front Pipe Replacement (LTG)** .
21. Disconnect the lower control arms from the steering knuckles. Refer to **Lower Control Arm Replacement (GNA)** , **Lower Control Arm Replacement (GNB)** .
22. Remove the left wheel drive shaft. Refer to **Front Wheel Drive Shaft Replacement - Left Side** .
23. Remove the intermediate drive shaft. Refer to **Front Wheel Drive Intermediate Shaft Replacement (with MR6)** , **Front Wheel Drive Intermediate Shaft Replacement (with MHH, MHK or MDK)** .

NOTE: **During the powertrain removal support the vehicle body by placing a jack at the rear of the vehicle.**

24. Position an engine support table under the powertrain assembly.
25. Blocks of wood can be used between the front of the frame and the oil pan to table in order to level the powertrain during the removal.
26. With the table positioned, fully raise the table to contact with the powertrain assembly.

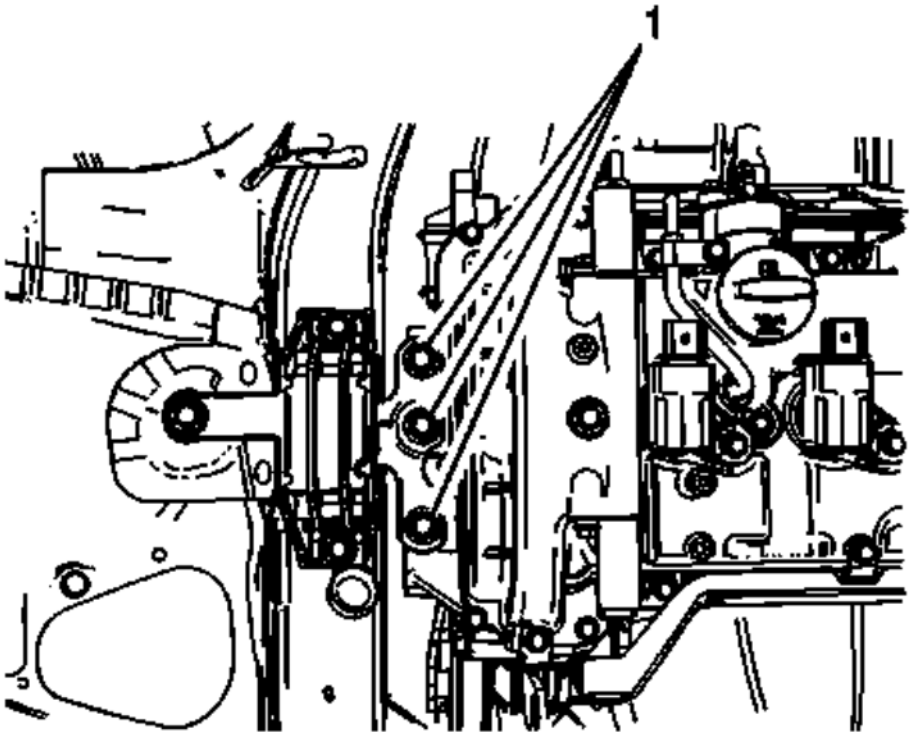

Fig. 238: Engine Mount
Courtesy of GENERAL MOTORS COMPANY

27. Remove the engine mount (1). Refer to **Engine Mount Replacement**.
28. Remove the transmission mount . Refer to **Transmission Mount Replacement - Left Side** .
29. Remove the frame to body bolts. Refer to **Drivetrain and Front Suspension Frame Replacement** .
30. Disconnect electrical connectors as necessary.
31. Carefully lower the engine table and raise the body on the hoist until the engine/transaxle and frame are separated from the vehicle.
32. Separate the engine from the transaxle. Refer to **Transmission Replacement** .
33. Install the engine to a suitable engine stand.

Installation Procedure

1. Install the engine and transaxle back together. Refer to **Transmission Replacement** .
2. Position the powertrain support table under the vehicle.
3. Raise the powertrain into position under the vehicle.
4. With the table positioned, if required, lower the vehicle over the powertrain.
5. Install the NEW frame to body bolts. Refer to **Drivetrain and Front Suspension Frame Replacement** .
6. Lower the vehicle.
7. Install the transmission mount. Refer to **Transmission Mount Replacement - Left Side** .

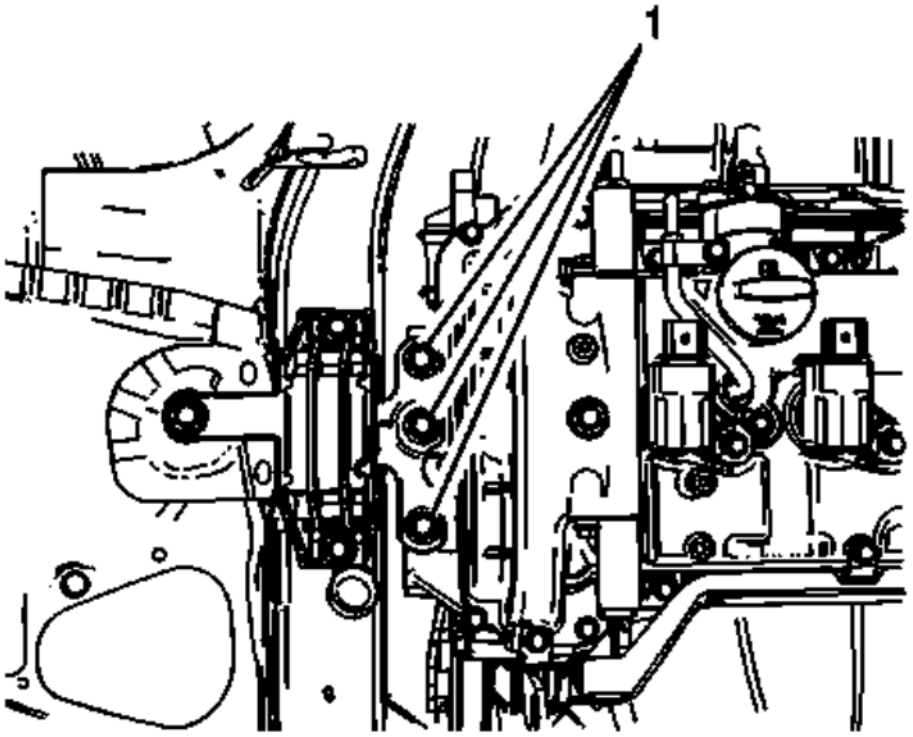

Fig. 239: Engine Mount
Courtesy of GENERAL MOTORS COMPANY

8. Install the engine mount (1). Refer to **Engine Mount Replacement**.
9. Install the intermediate drive shaft. Refer to **Front Wheel Drive Intermediate Shaft Replacement (with MR6)** , **Front Wheel Drive Intermediate Shaft Replacement (with MHH, MHK or MDK)** .
10. Install the left wheel drive shaft. Refer to **Front Wheel Drive Shaft Replacement - Left Side** .
11. Connect the lower control arms from the steering knuckles. Refer to **Lower Control Arm Replacement (GNA)** , **Lower Control Arm Replacement (GNB)** .
12. Install the exhaust system. Refer to **Exhaust Front Pipe Replacement (LTG)** .
13. Connect the intermediate shaft from the steering gear. Refer to **Intermediate Steering Shaft Replacement** .

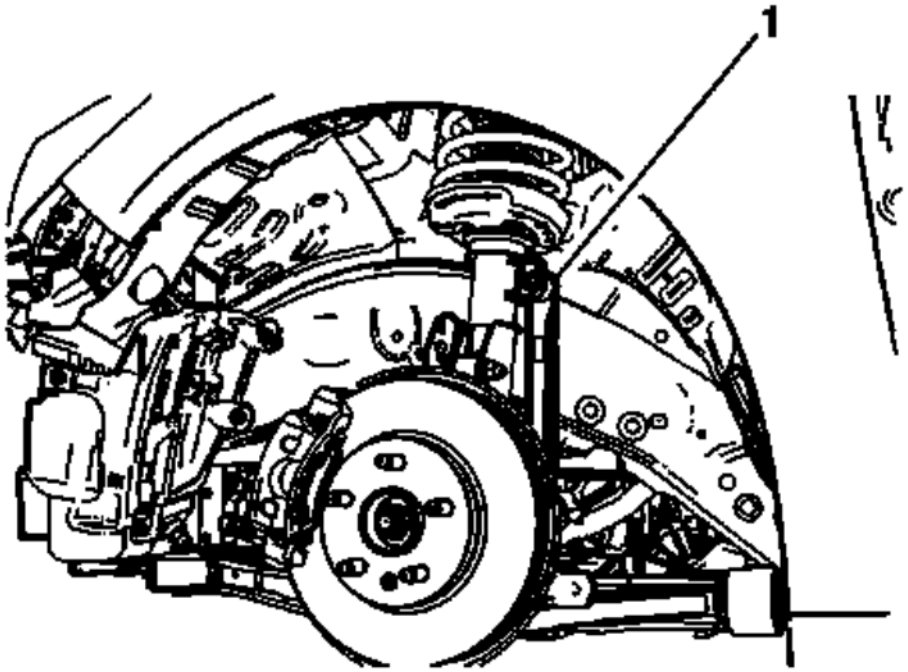

Fig. 240: Stabilizer Links
Courtesy of GENERAL MOTORS COMPANY

14. Connect the stabilizer links (1) from the stabilizer shaft. Refer to **Stabilizer Shaft Link Replacement (GNA, GNB)** .

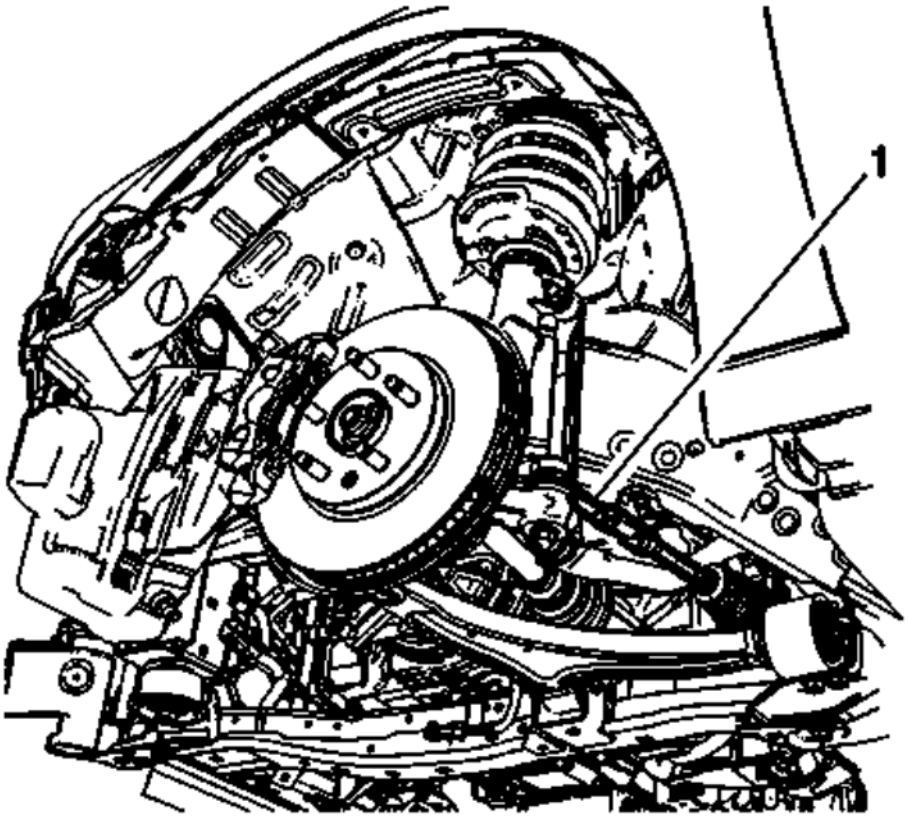

Fig. 241: Tie Rods And Steering Knuckles
Courtesy of GENERAL MOTORS COMPANY

15. Connect the tie rods (1) from the steering knuckles. Refer to **Steering Linkage Outer Tie Rod Replacement** .

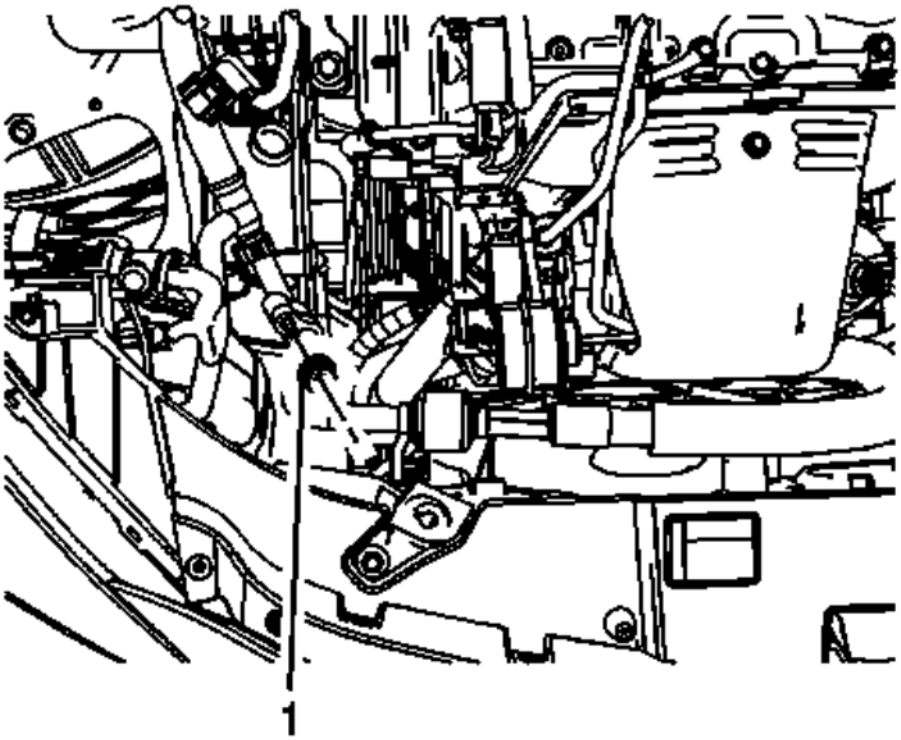

Fig. 242: Air Conditioning Compressor And Condenser Hose
Courtesy of GENERAL MOTORS COMPANY

16. Install the air conditioning compressor and condenser hose (1). Refer to **Air Conditioning Compressor and Condenser Hose Replacement (LUK)** .

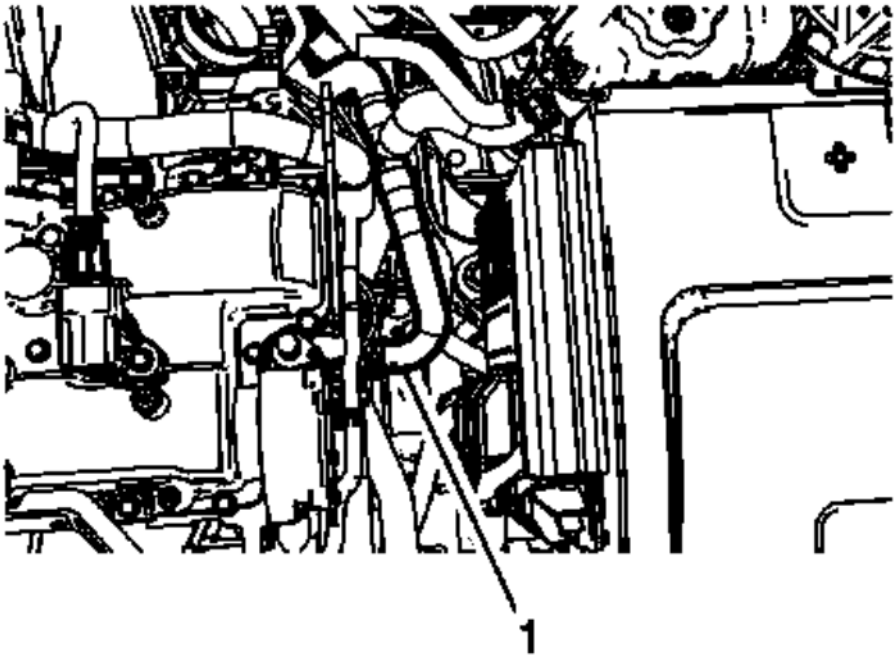

Fig. 243: Heater Inlet Hose
Courtesy of GENERAL MOTORS COMPANY

17. Install the heater outlet hose (2). Refer to **Heater Outlet Hose Replacement (LTG)** .
18. Install the heater inlet hose (1). Refer to **Heater Inlet Hose Replacement (LTG)** .

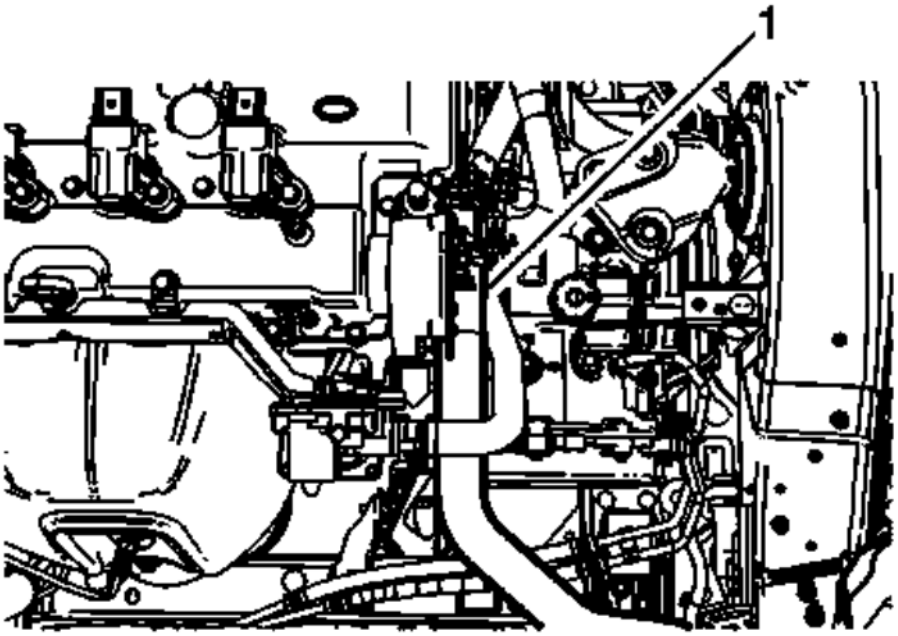

Fig. 244: Radiator Outlet Hose
Courtesy of GENERAL MOTORS COMPANY

19. Connect the radiator outlet hose (1). Refer to **Radiator Outlet Hose Replacement (LTG)** .

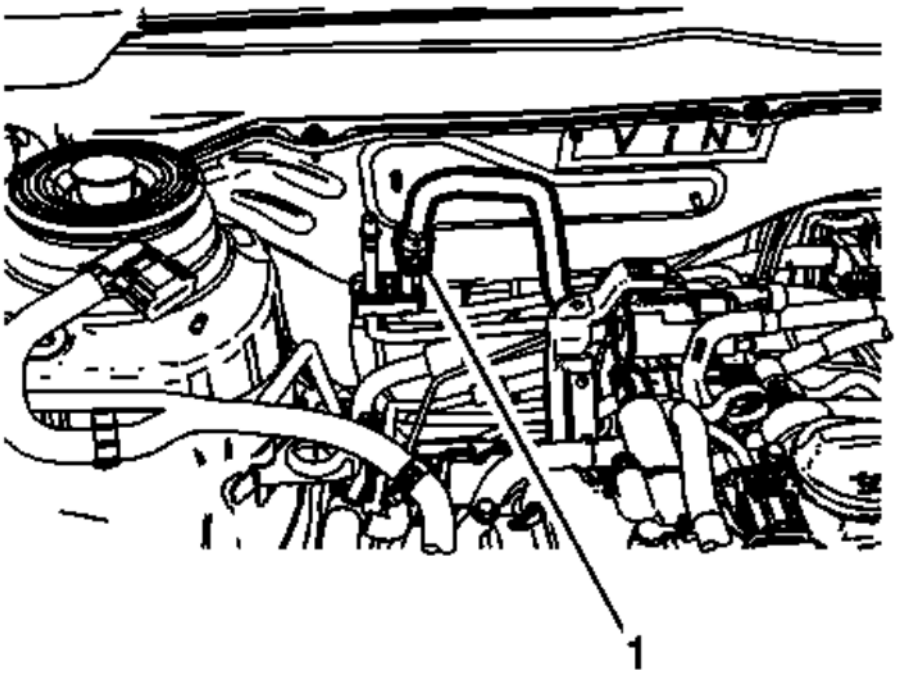

Fig. 245: EVAP Hose
Courtesy of GENERAL MOTORS COMPANY

20. Connect the EVAP hose (1). Refer to **Plastic Collar Quick Connect Fitting Service** .
21. Connect the fuel line (1). Refer to **Metal Collar Quick Connect Fitting Service** .

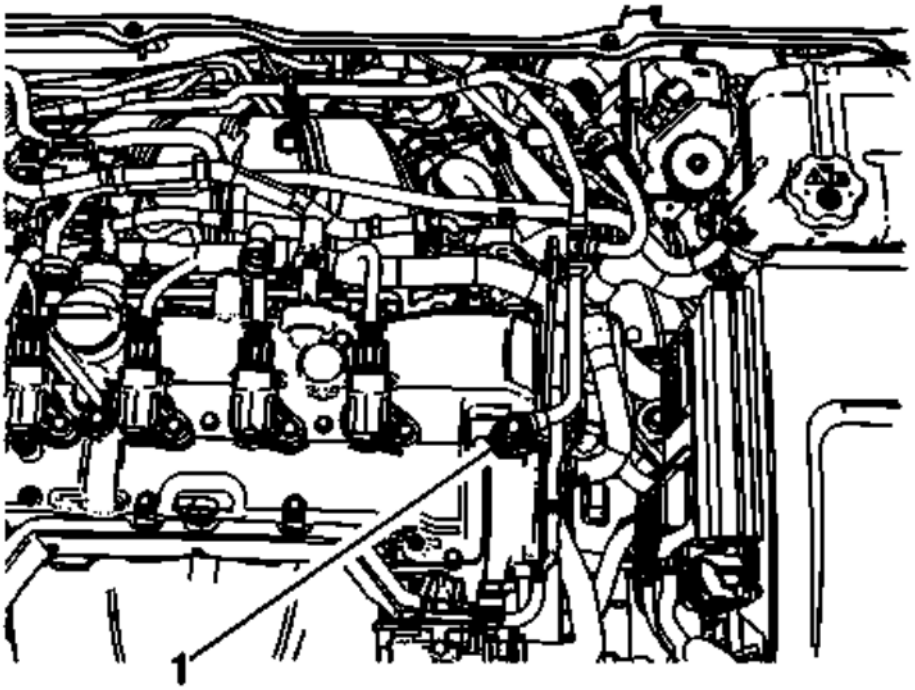

Fig. 246: Vacuum Hose
Courtesy of GENERAL MOTORS COMPANY

22. Connect the vacuum hose (1). Refer to **Plastic Collar Quick Connect Fitting Service** .

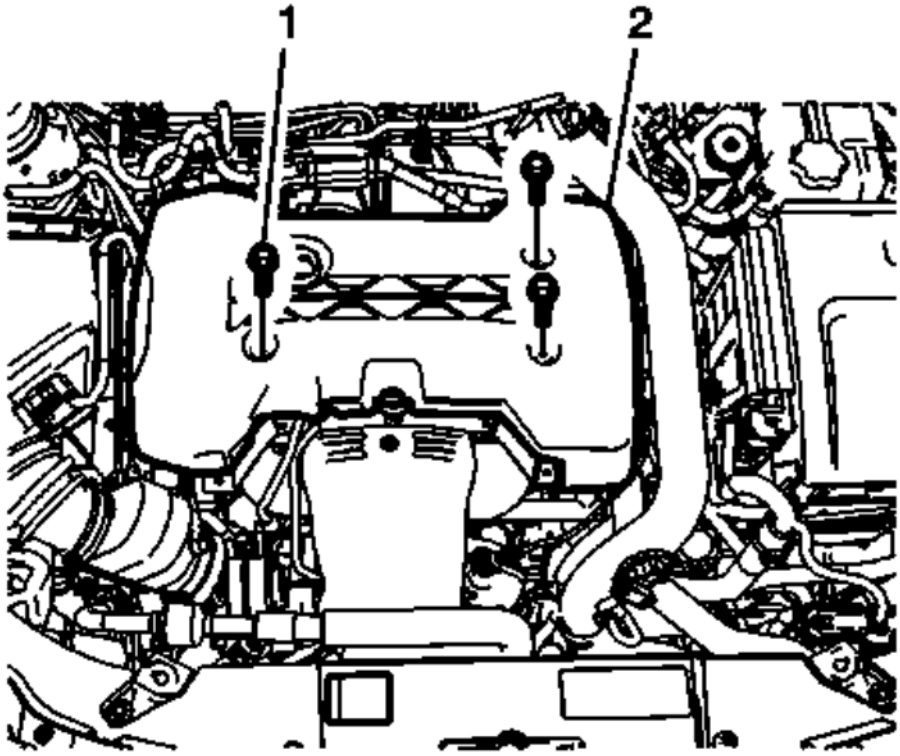

Fig. 247: Intake Manifold Cover
Courtesy of GENERAL MOTORS COMPANY

23. Install the intake manifold cover (2). Refer to **Intake Manifold Cover Replacement**.

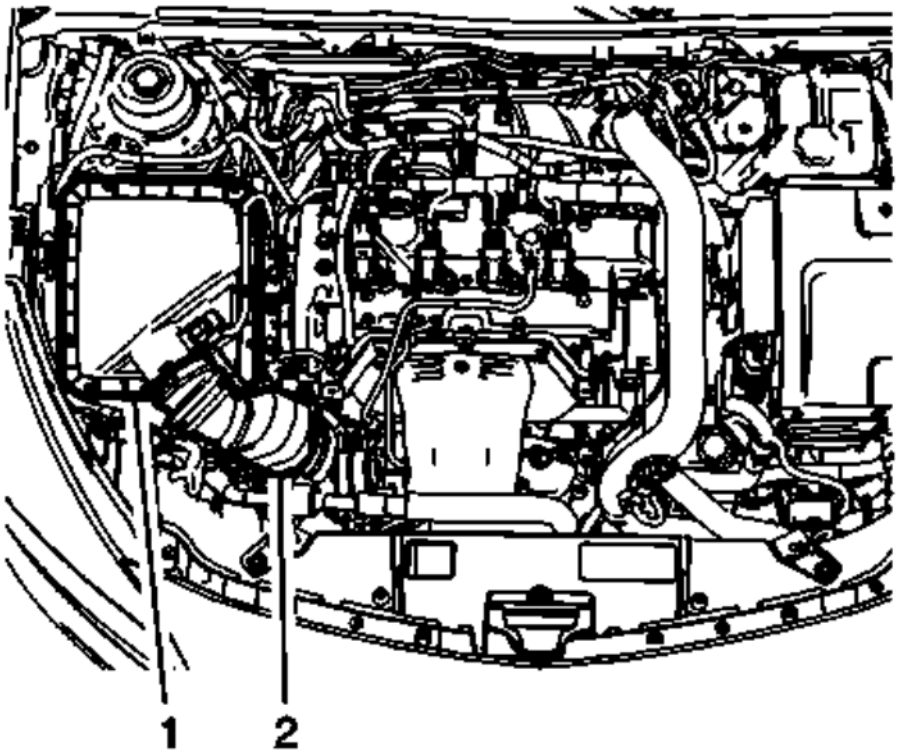

Fig. 248: Air Cleaner Assembly
Courtesy of GENERAL MOTORS COMPANY

24. Install the air cleaner assembly (1). Refer to **Air Cleaner Assembly Replacement** .
25. Install the air cleaner outlet duct (2). Refer to **Air Cleaner Outlet Duct Replacement** .
26. Install the battery tray. Refer to **Battery Tray Replacement** .
27. Recharge the A/C system. Refer to **Refrigerant Recovery and Recharging** .
28. Fill the cooling system. Refer to **Cooling System Draining and Filling (Static Fill)** , **Cooling System Draining and Filling (GE 47716)** .
29. Fill the engine oil. Refer to **Engine Oil and Oil Filter Replacement**.
30. Connect the negative battery cable. Refer to **Battery Negative Cable Disconnection and Connection** .

ENGINE REPLACEMENT (AWD)

Removal Procedure

1. Disconnect the negative battery cable. Refer to **Battery Negative Cable Disconnection and Connection** .
2. Drain the cooling system. Refer to **Cooling System Draining and Filling (Static Fill)** , **Cooling System Draining and Filling (GE 47716)** .
3. Drain the engine oil. Refer to **Engine Oil and Oil Filter Replacement**.
4. Evacuate the A/C system. Refer to **Refrigerant Recovery and Recharging** .

5. Remove the battery tray. Refer to **Battery Tray Replacement** .
6. Relieve the fuel system pressure. Refer to **Fuel Pressure Relief** .

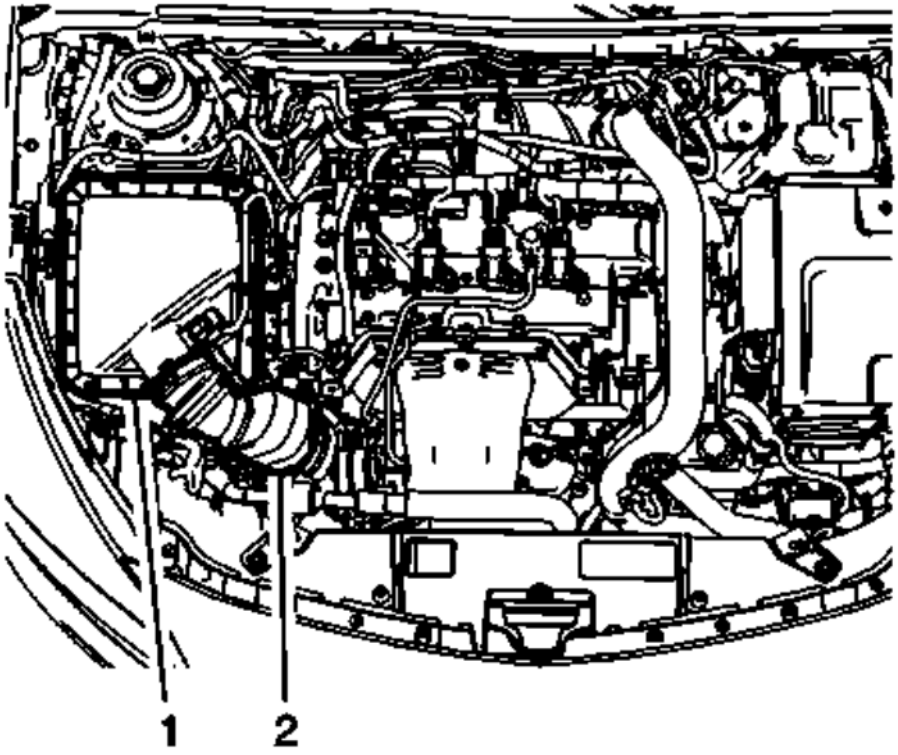

Fig. 249: Air Cleaner Assembly
Courtesy of GENERAL MOTORS COMPANY

7. Remove the air cleaner assembly (1). Refer to **Air Cleaner Assembly Replacement** .
8. Remove the air cleaner outlet duct (2). Refer to **Air Cleaner Outlet Duct Replacement** .

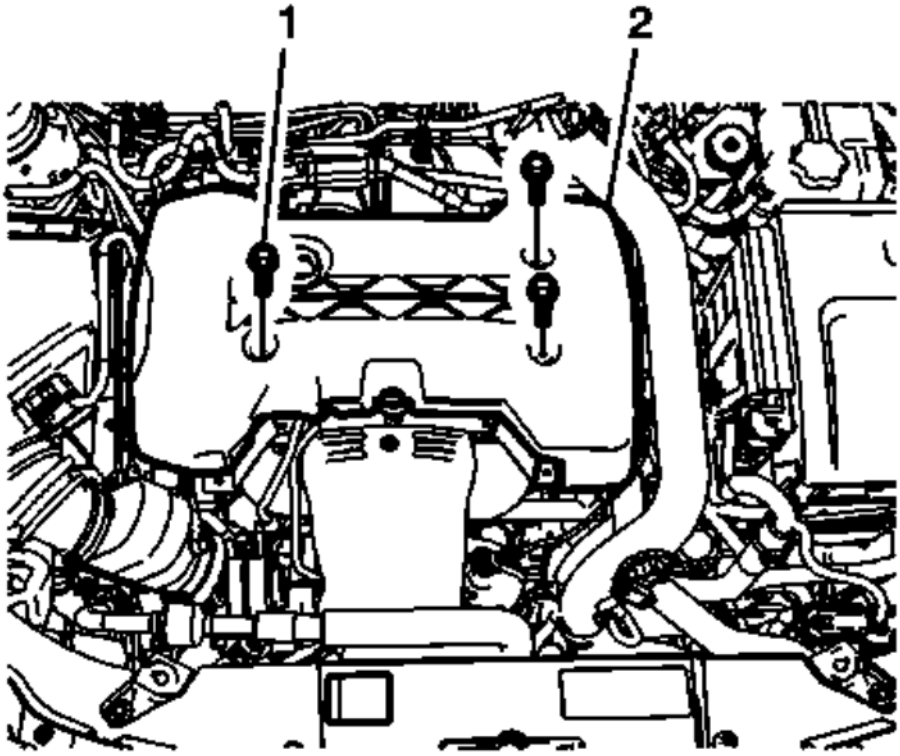

Fig. 250: Intake Manifold Cover
Courtesy of GENERAL MOTORS COMPANY

9. Remove the intake manifold cover (2). Refer to **Intake Manifold Cover Replacement**.

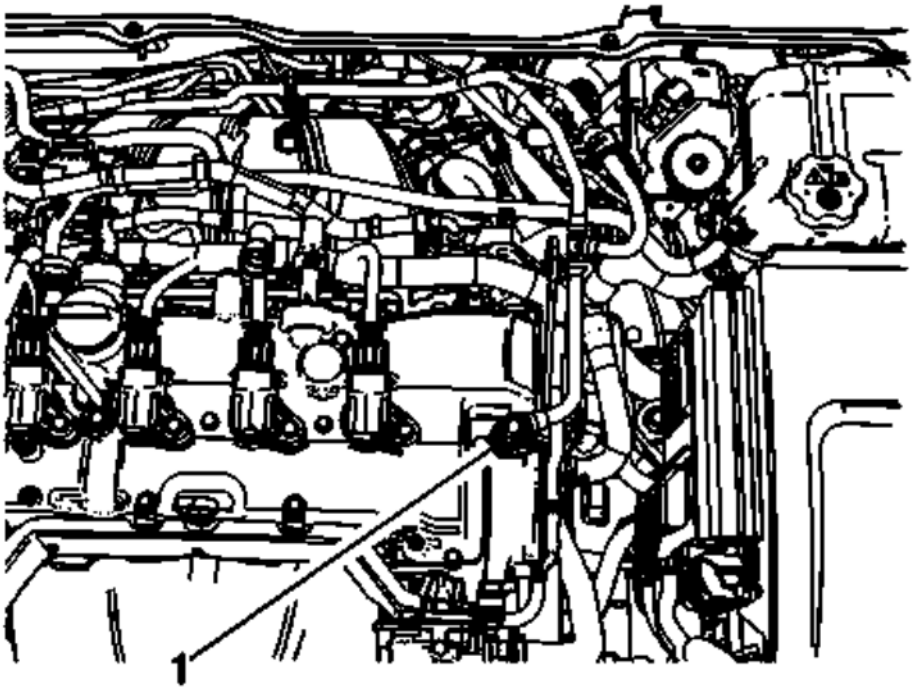

Fig. 251: Vacuum Hose
Courtesy of GENERAL MOTORS COMPANY

10. Disconnect the vacuum hose (1). Refer to **Plastic Collar Quick Connect Fitting Service** .
11. Disconnect the fuel line. Refer to **Metal Collar Quick Connect Fitting Service** .

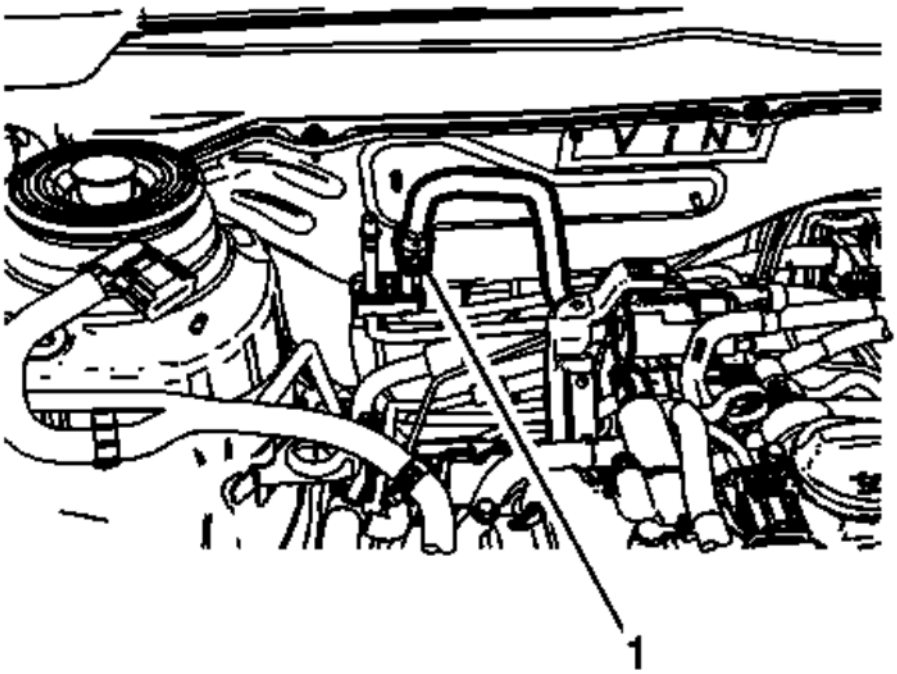

Fig. 252: EVAP Hose
Courtesy of GENERAL MOTORS COMPANY

12. Disconnect the EVAP hose (1). Refer to **Plastic Collar Quick Connect Fitting Service** .

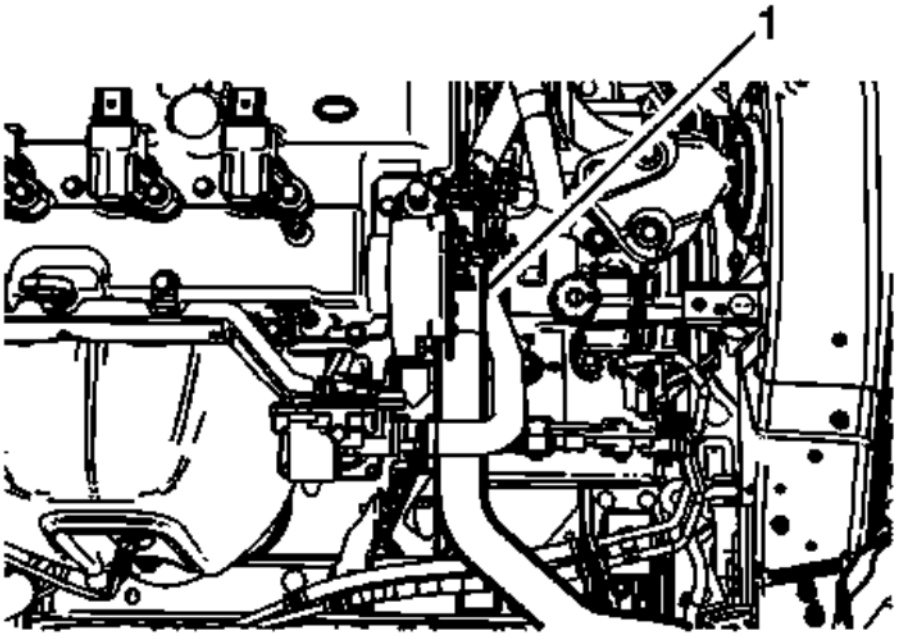

Fig. 253: Radiator Outlet Hose
Courtesy of GENERAL MOTORS COMPANY

13. Disconnect the radiator outlet hose (1). Refer to **Radiator Outlet Hose Replacement (LTG)** .

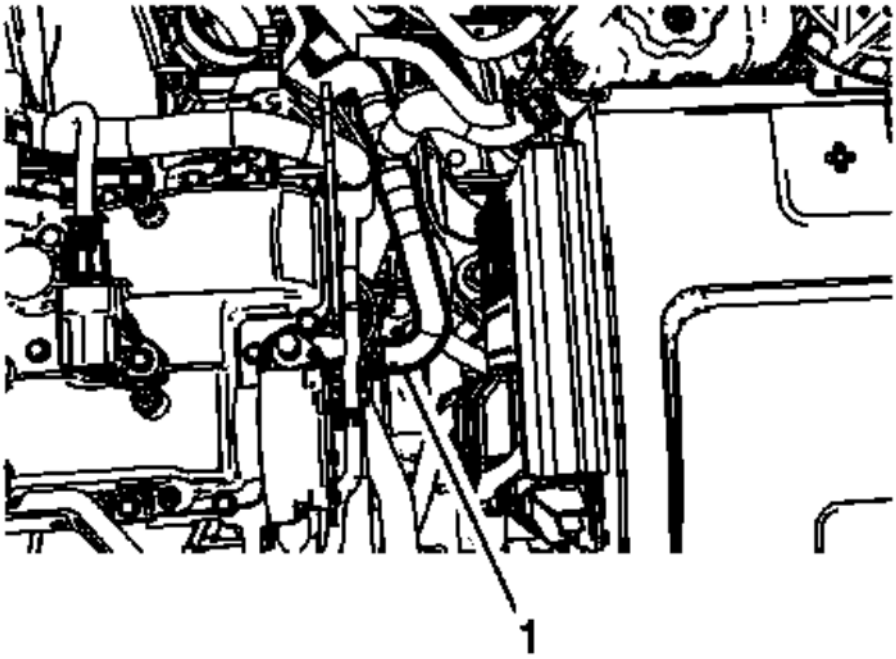

Fig. 254: Heater Inlet Hose
Courtesy of GENERAL MOTORS COMPANY

14. Remove the heater inlet hose (1). Refer to **Heater Inlet Hose Replacement (LTG)** .
15. Remove the heater outlet hose. Refer to **Heater Outlet Hose Replacement (LTG)** .

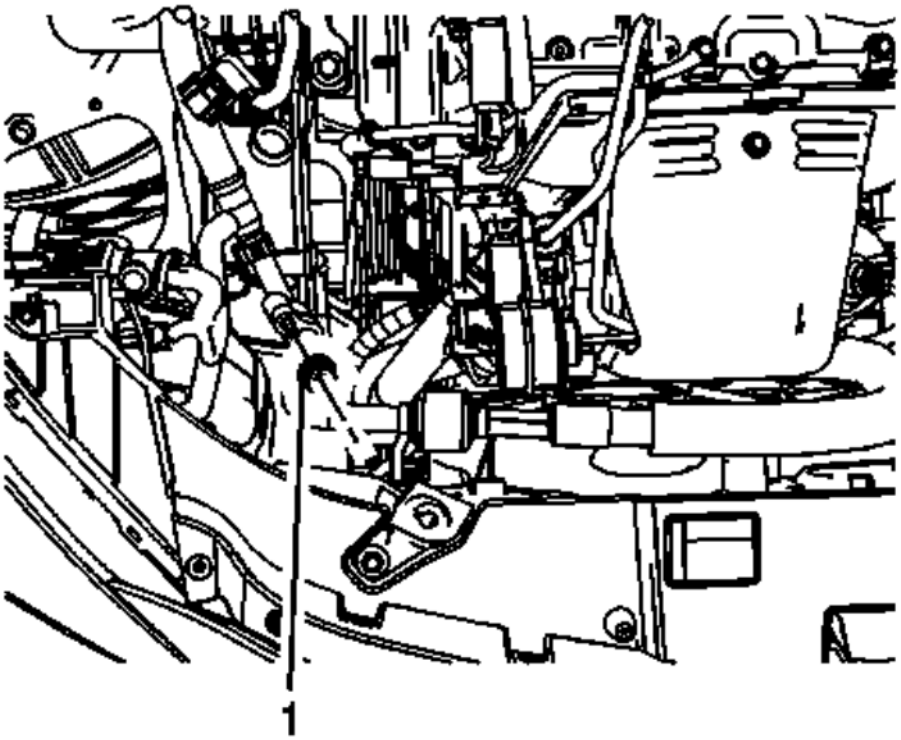

Fig. 255: Air Conditioning Compressor And Condenser Hose
Courtesy of GENERAL MOTORS COMPANY

16. Remove the air conditioning compressor and condenser hose (1).

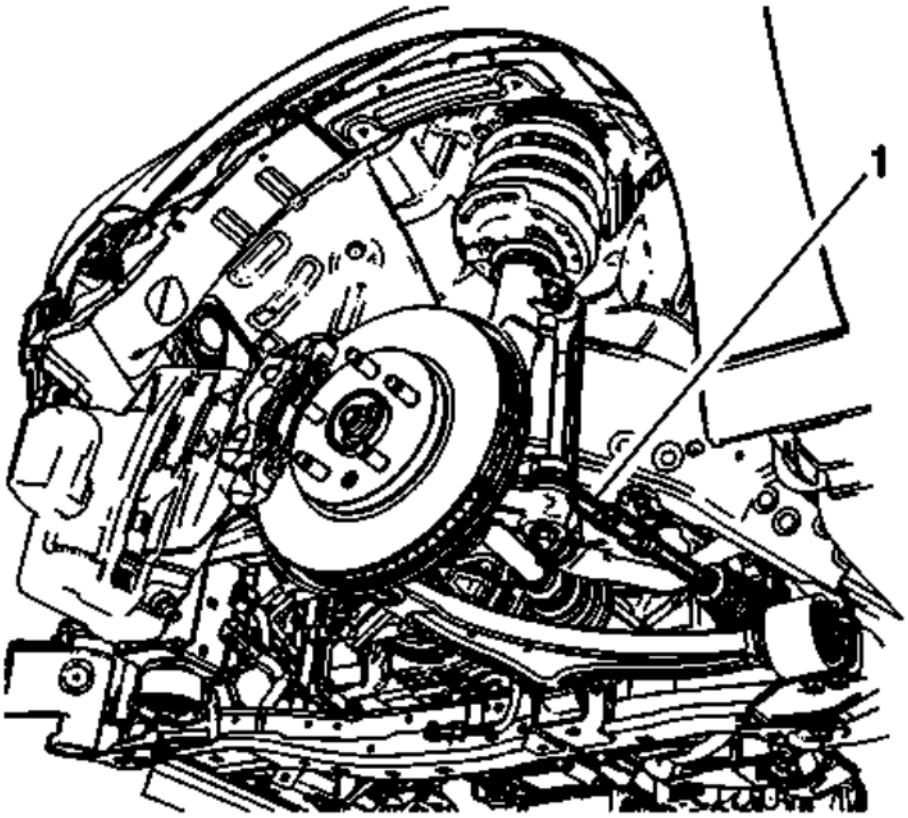

Fig. 256: Tie Rods And Steering Knuckles
Courtesy of GENERAL MOTORS COMPANY

17. Disconnect the tie rods (1) from the steering knuckles. Refer to **Steering Linkage Outer Tie Rod Replacement** .

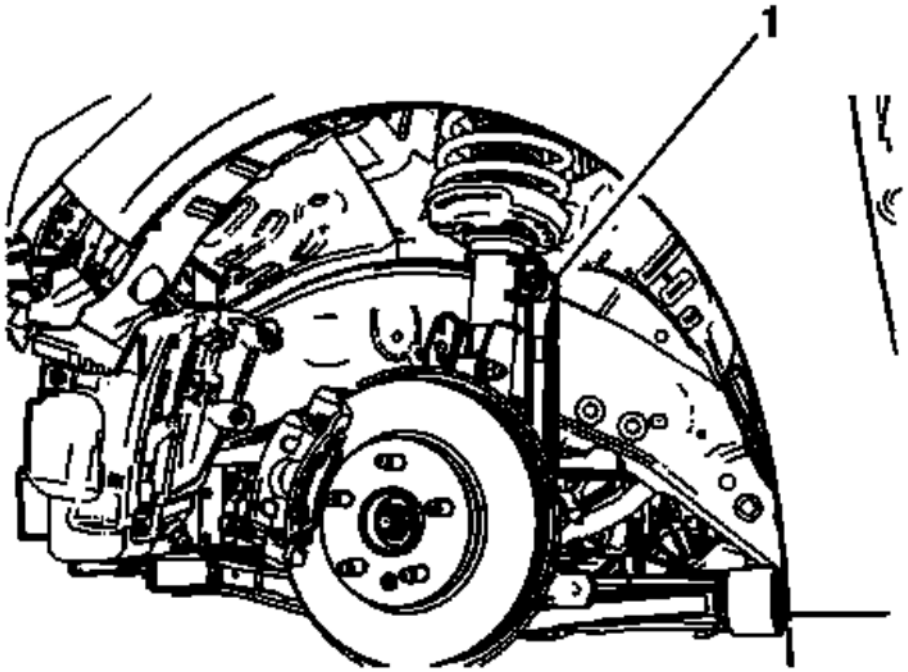

Fig. 257: Stabilizer Links
Courtesy of GENERAL MOTORS COMPANY

18. Disconnect the stabilizer links (1) from the stabilizer shaft. Refer to **Stabilizer Shaft Link Replacement (GNA, GNB)** .
19. Disconnect the intermediate shaft from the steering gear. Refer to **Intermediate Steering Shaft Replacement** .
20. Remove the exhaust system. Refer to **Exhaust Front Pipe Replacement (LTG AWD)** .
21. Disconnect the lower control arms from the steering knuckles. Refer to **Lower Control Arm Replacement (GNA)** , **Lower Control Arm Replacement (GNB)** .
22. Remove the left wheel drive shaft. Refer to **Front Wheel Drive Shaft Replacement - Left Side** .
23. Remove the transfer case. Refer to **Transfer Case Replacement** .

NOTE: **During the powertrain removal support the vehicle body by placing a jack at the rear of the vehicle.**

24. Position an engine support table under the powertrain assembly.
25. Blocks of wood can be used between the front of the frame and the oil pan to table in order to level the powertrain during the removal.
26. With the table positioned, fully raise the table to contact with the powertrain assembly.

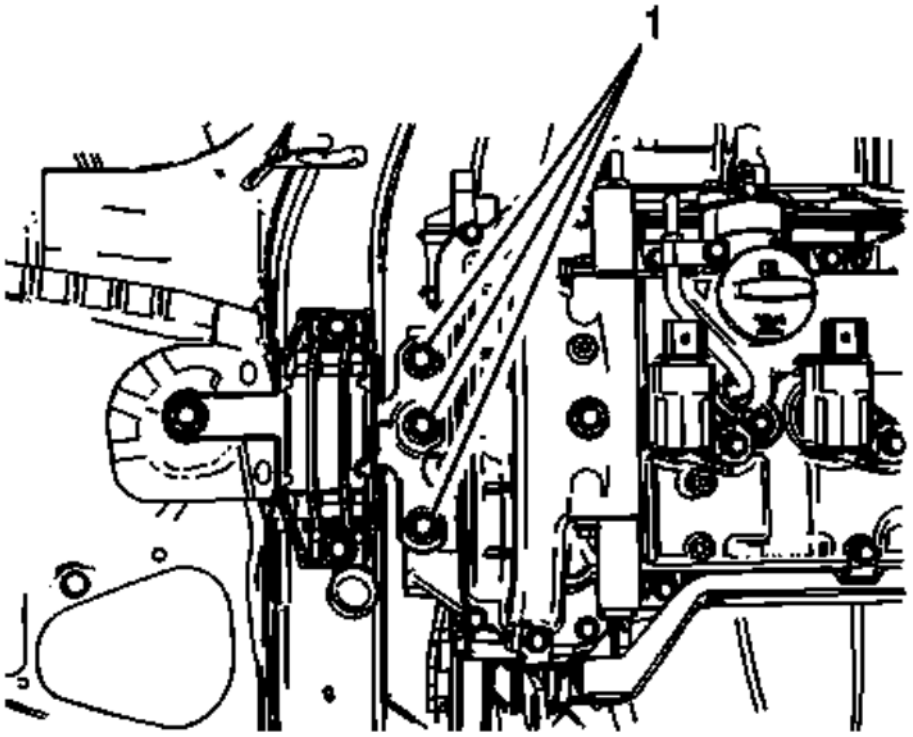

Fig. 258: Engine Mount
Courtesy of GENERAL MOTORS COMPANY

27. Remove the engine mount (1). Refer to **Engine Mount Replacement**.
28. Remove the transmission mount . Refer to **Transmission Mount Replacement - Left Side** .
29. Remove the frame to body bolts. Refer to **Drivetrain and Front Suspension Frame Replacement** .
30. Disconnect electrical connectors as necessary.
31. Carefully lower the engine table and raise the body on the hoist until the engine/transaxle and frame are separated from the vehicle.
32. Separate the engine from the transaxle. Refer to **Transmission Replacement** .
33. Install the engine to a suitable engine stand.

Installation Procedure

1. Install the engine and transaxle back together. Refer to **Transmission Replacement** .
2. Position the powertrain support table under the vehicle.
3. Raise the powertrain into position under the vehicle.
4. With the table positioned, if required, lower the vehicle over the powertrain.
5. Install the NEW frame to body bolts. Refer to **Drivetrain and Front Suspension Frame Replacement** .
6. Lower the vehicle.
7. Install the transmission mount. Refer to **Transmission Mount Replacement - Left Side** .

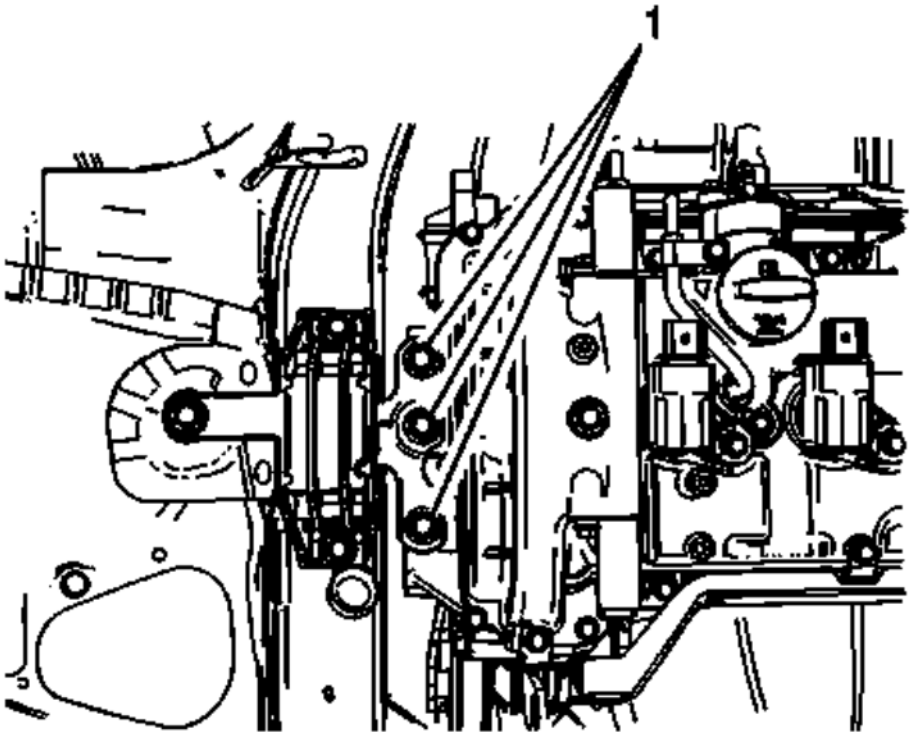

Fig. 259: Engine Mount
Courtesy of GENERAL MOTORS COMPANY

8. Install the engine mount (1). Refer to **Engine Mount Replacement**.
9. Install the transfer case. Refer to **Transfer Case Replacement** .
10. Install the left wheel drive shaft. Refer to **Front Wheel Drive Shaft Replacement - Left Side** .
11. Connect the lower control arms from the steering knuckles. Refer to **Lower Control Arm Replacement (GNA)** , **Lower Control Arm Replacement (GNB)** .
12. Install the exhaust system. Refer to **Exhaust Front Pipe Replacement (LTG AWD)** .
13. Connect the intermediate shaft to the steering gear. Refer to **Intermediate Steering Shaft Replacement** .

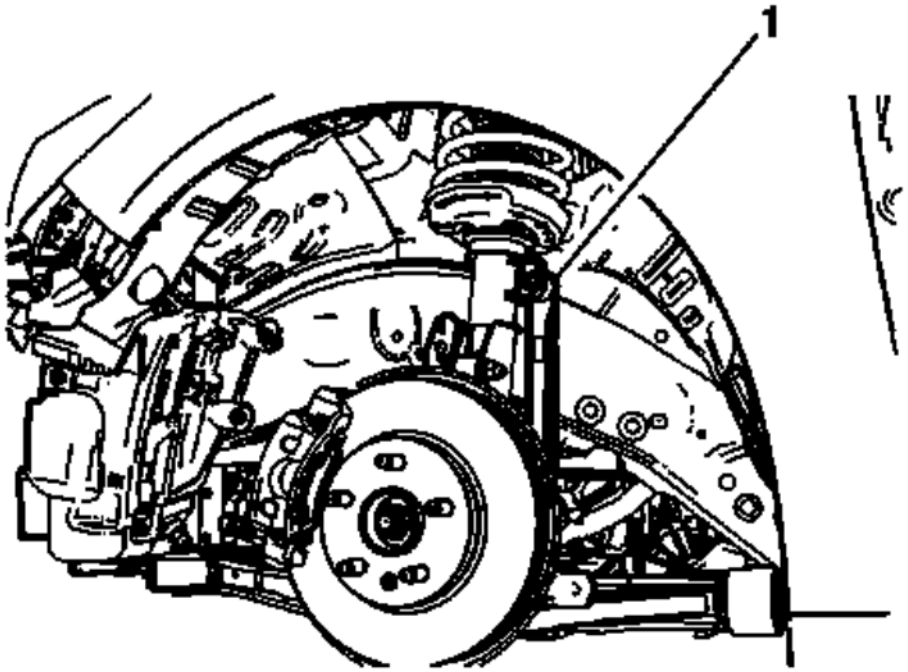

Fig. 260: Stabilizer Links
Courtesy of GENERAL MOTORS COMPANY

14. Connect the stabilizer links (1) from the stabilizer shaft. Refer to **Stabilizer Shaft Link Replacement (GNA, GNB)** .

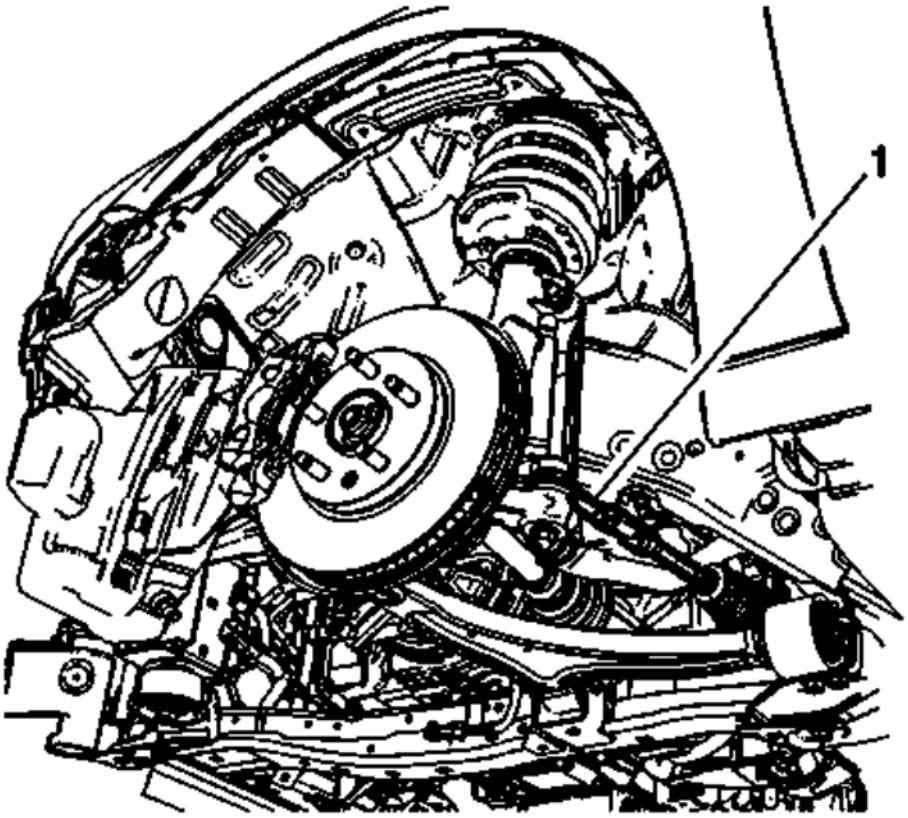

Fig. 261: Tie Rods And Steering Knuckles
Courtesy of GENERAL MOTORS COMPANY

15. Connect the tie rods (1) from the steering knuckles. Refer to **Steering Linkage Outer Tie Rod Replacement** .

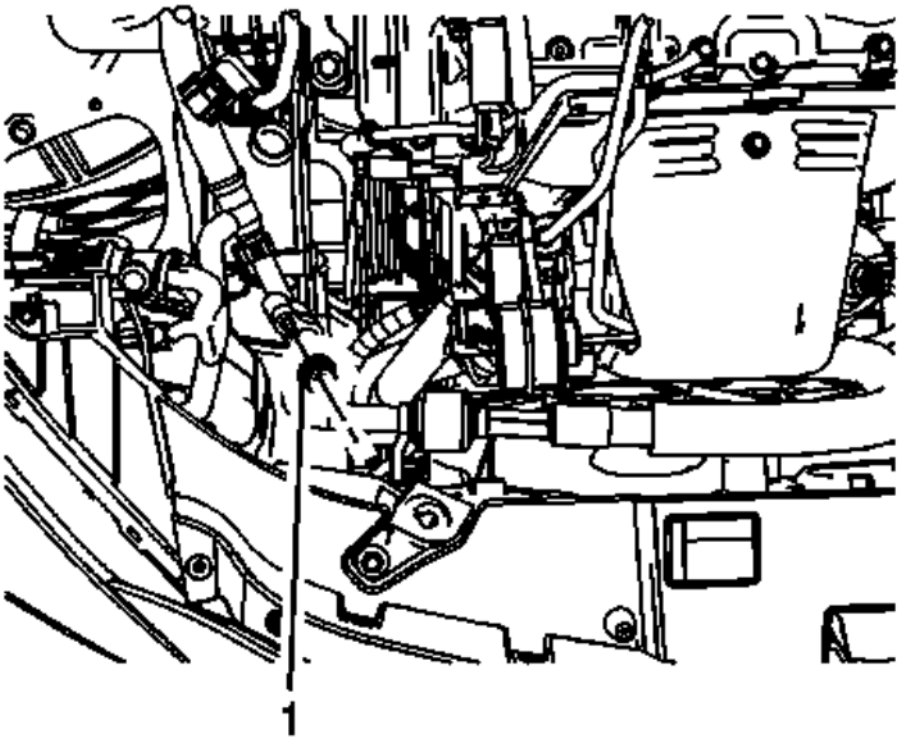

Fig. 262: Air Conditioning Compressor And Condenser Hose
Courtesy of GENERAL MOTORS COMPANY

16. Install the air conditioning compressor and condenser hose (1). Refer to **Air Conditioning Compressor and Condenser Hose Replacement (LUK)** .

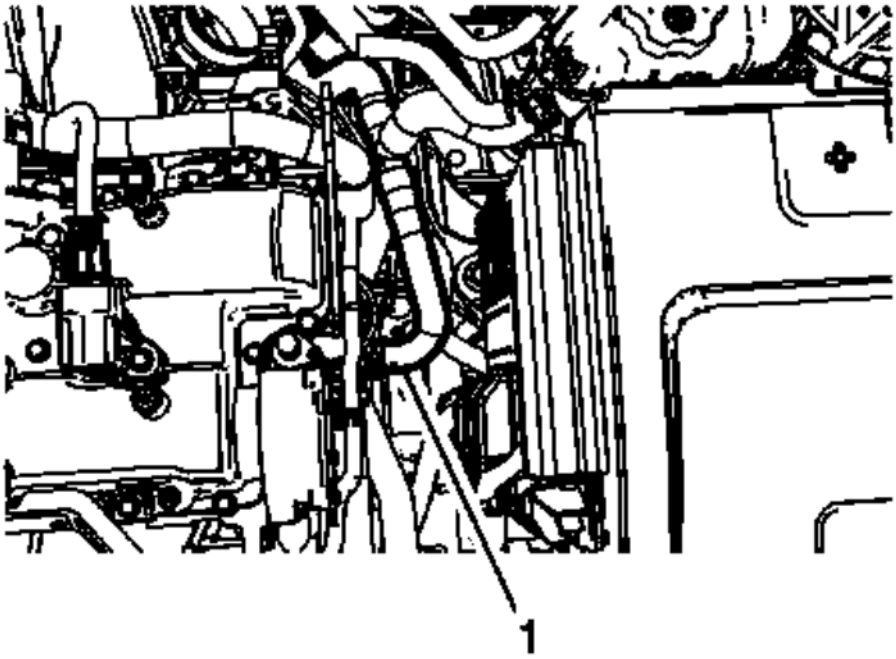

Fig. 263: Heater Inlet Hose
Courtesy of GENERAL MOTORS COMPANY

17. Install the heater outlet hose. Refer to **Heater Outlet Hose Replacement (LTG)** .
18. Install the heater inlet hose (1). Refer to **Heater Inlet Hose Replacement (LTG)** .

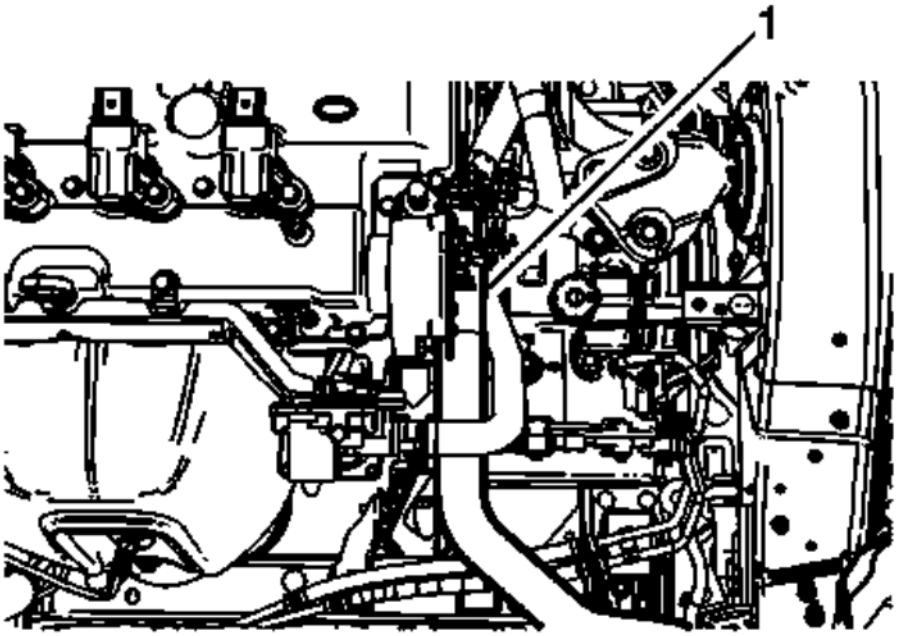

Fig. 264: Radiator Outlet Hose
Courtesy of GENERAL MOTORS COMPANY

19. Connect the radiator outlet hose (1). Refer to **Radiator Outlet Hose Replacement (LTG)** .

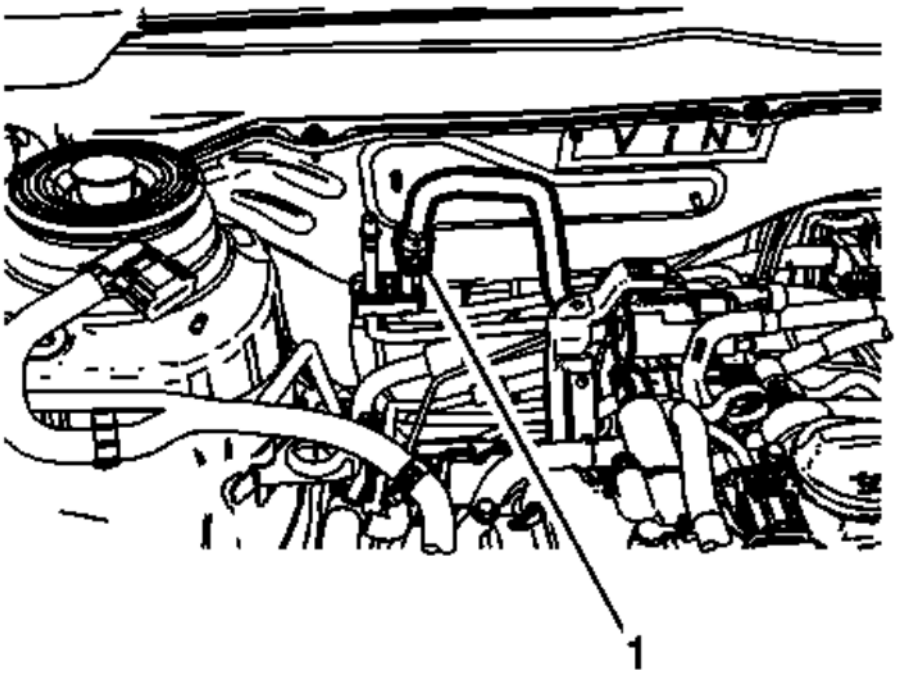

Fig. 265: EVAP Hose
Courtesy of GENERAL MOTORS COMPANY

20. Connect the EVAP hose (1). Refer to **Plastic Collar Quick Connect Fitting Service** .
21. Connect the fuel line. Refer to **Metal Collar Quick Connect Fitting Service** .

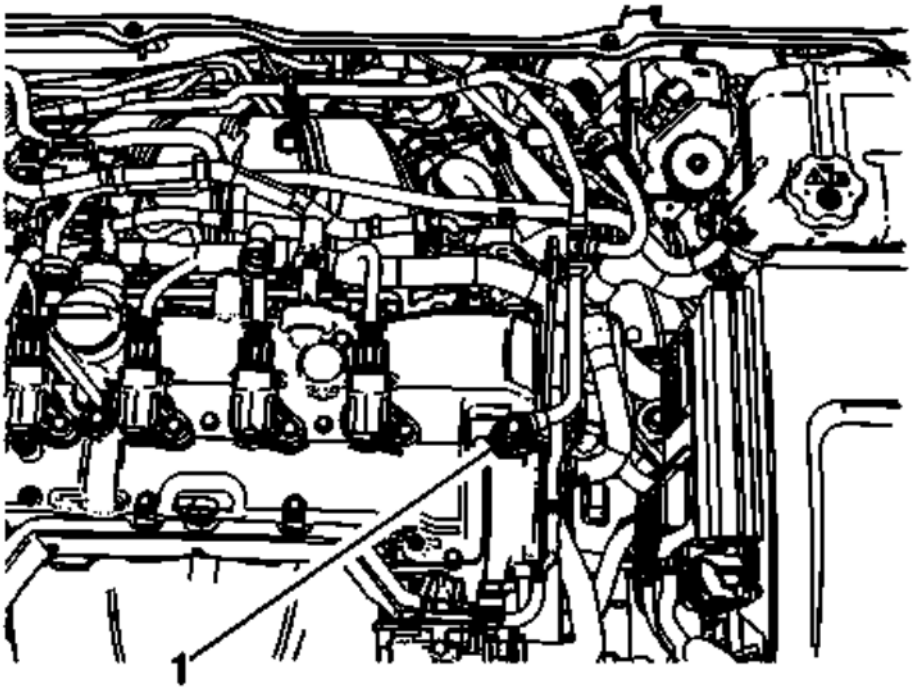

Fig. 266: Vacuum Hose
Courtesy of GENERAL MOTORS COMPANY

22. Connect the vacuum hose (1). Refer to **Plastic Collar Quick Connect Fitting Service** .

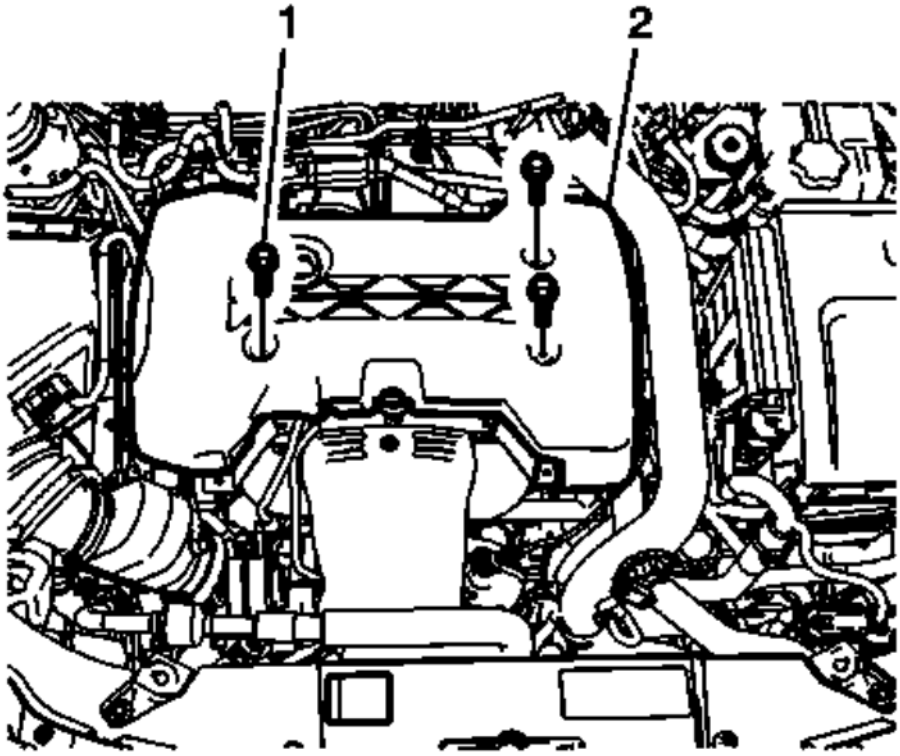

Fig. 267: Intake Manifold Cover
Courtesy of GENERAL MOTORS COMPANY

23. Install the intake manifold cover (2). Refer to **Intake Manifold Cover Replacement**.

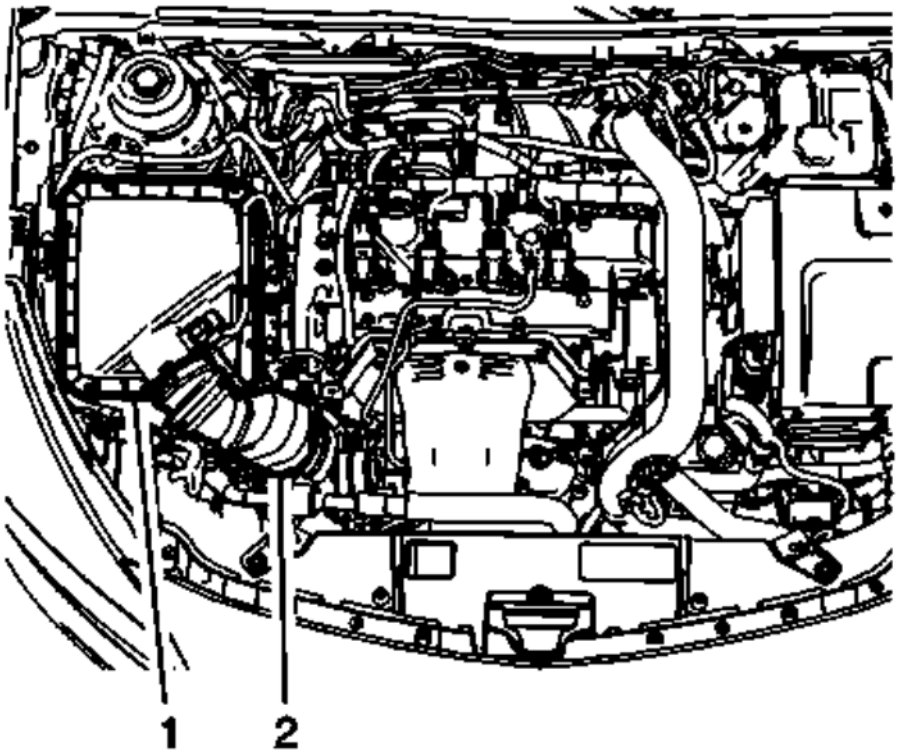

Fig. 268: Air Cleaner Assembly
Courtesy of GENERAL MOTORS COMPANY

24. Install the air cleaner assembly (1). Refer to **Air Cleaner Assembly Replacement** .
25. Install the air cleaner outlet duct (2). Refer to **Air Cleaner Outlet Duct Replacement** .
26. Install the battery tray. Refer to **Battery Tray Replacement** .
27. Recharge the A/C system. Refer to **Refrigerant Recovery and Recharging** .
28. Fill the cooling system. Refer to **Cooling System Draining and Filling (Static Fill)** , **Cooling System Draining and Filling (GE 47716)** .
29. Fill the engine oil. Refer to **Engine Oil and Oil Filter Replacement**.
30. Connect the negative battery cable. Refer to **Battery Negative Cable Disconnection and Connection** .

ENGINE OIL AND OIL FILTER REPLACEMENT

Removal Procedure

1. Raise the vehicle. Refer to **Lifting and Jacking the Vehicle**
2. Place a drain pan under the oil drain plug.

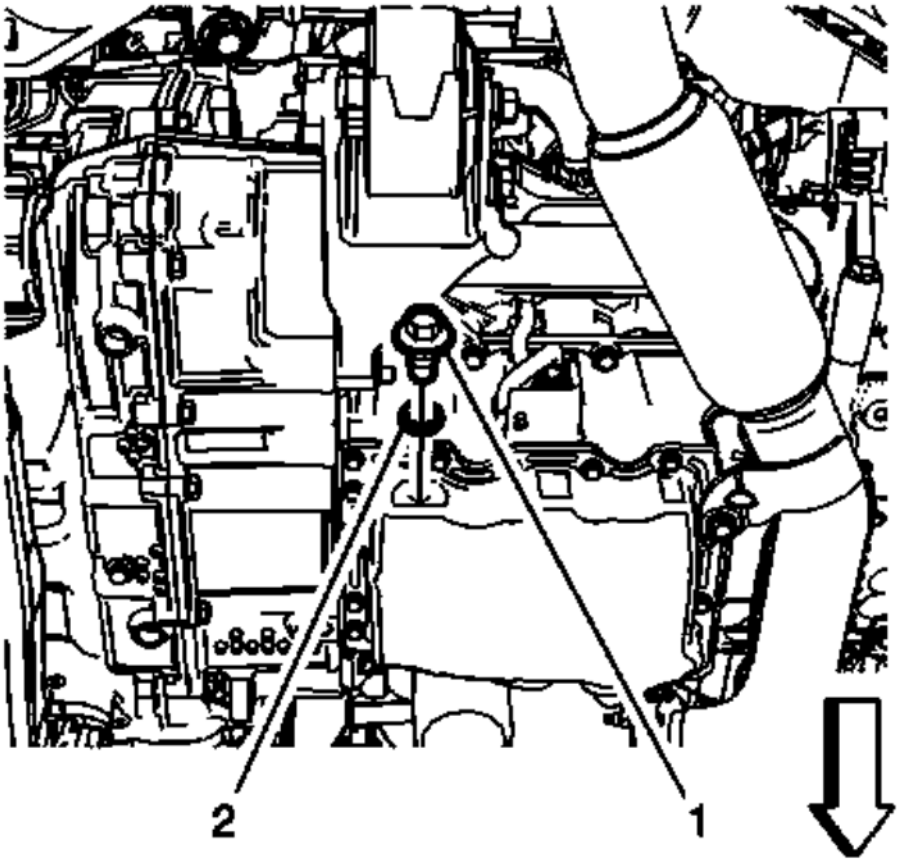

Fig. 269: Oil Pan Drain Plug
Courtesy of GENERAL MOTORS COMPANY

3. Remove the oil pan drain plug (1).
4. Allow the oil to drain completely.
5. Clean and inspect the oil pan drain plug, replace if necessary.
6. Clean and inspect the oil pan drain plug sealing surface (2), replace the oil pan drain plug sealing surface if necessary.

CAUTION: Refer to Component Fastener Tightening Caution .

7. Reinstall oil pan drain plug (1) and tighten to 25 (18 lb ft).

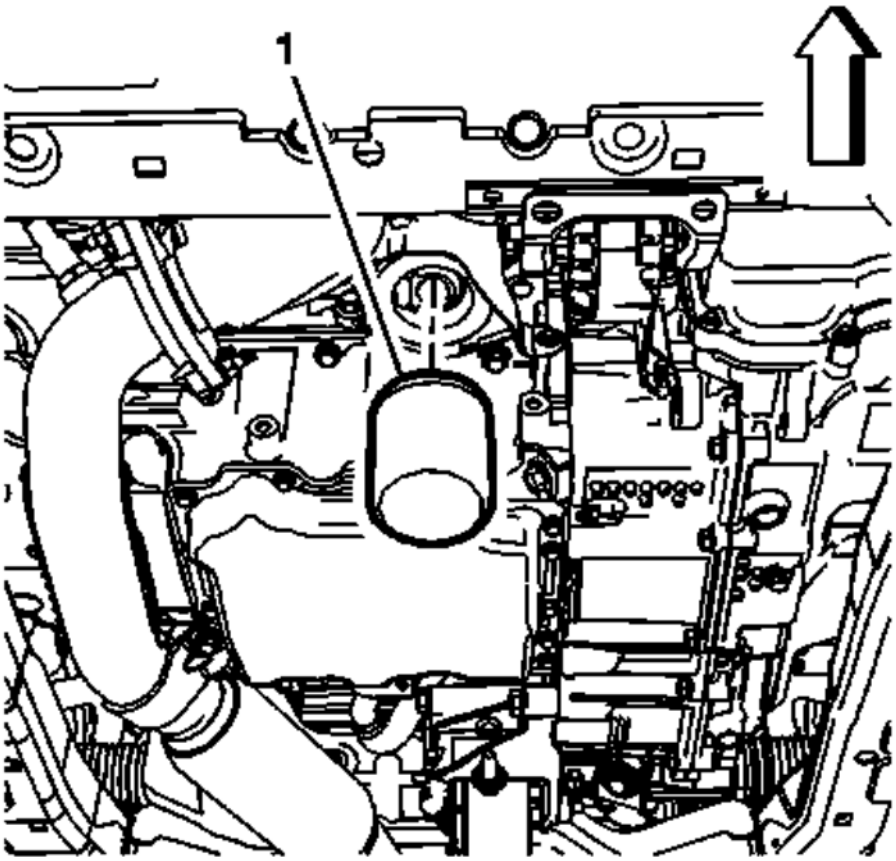

Fig. 270: Oil Filter
Courtesy of GENERAL MOTORS COMPANY

8. Position a suitable drain pan under the oil filter.
9. Remove the oil filter (1).
10. Ensure that the oil filter gasket is still on the old oil filter, if not remove the oil filter gasket from the adapter.

Installation Procedure

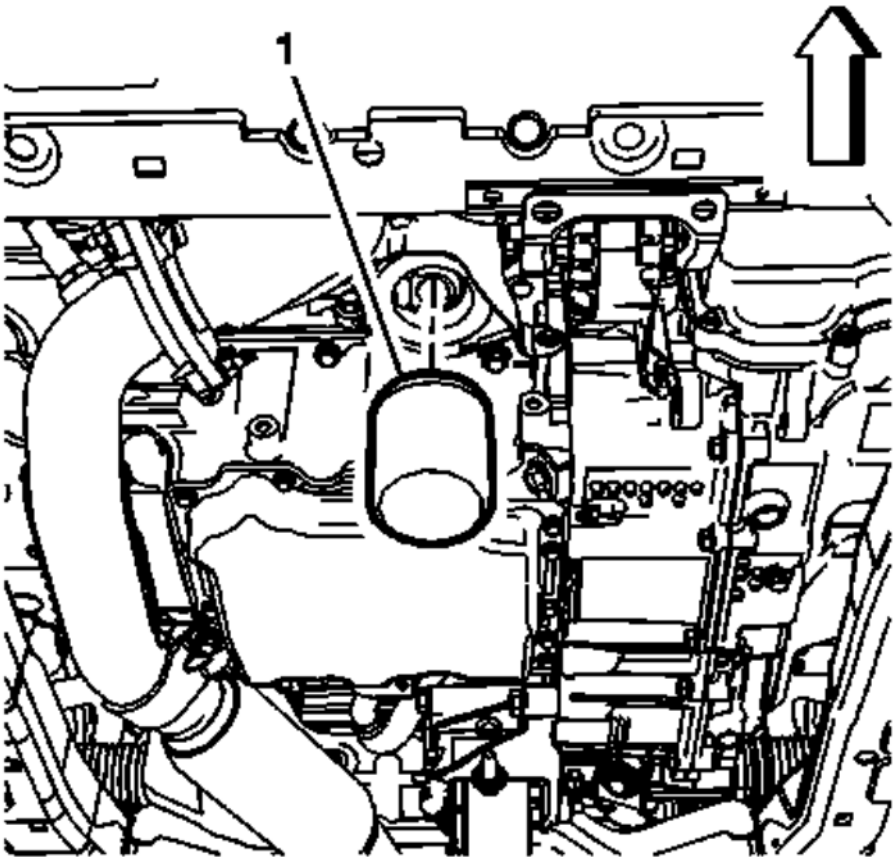

Fig. 271: Oil Filter
Courtesy of GENERAL MOTORS COMPANY

CAUTION: Refer to Component Fastener Tightening Caution .

1. Install the oil filter and tighten to 30 (22 lb ft)
2. Remove the oil drain pan from under the vehicle
3. Lower the vehicle.
4. Fill the engine with new engine oil.
5. Start the engine.
6. Inspect for oil leaks after engine start up.

2014 Engine

Engine Mechanical - 2.0L (LTG) - Schematic and Routing Diagrams - Regal

SCHEMATIC WIRING DIAGRAMS

ENGINE MECHANICAL WIRING SCHEMATICS

Engine Oil Level (LTG)

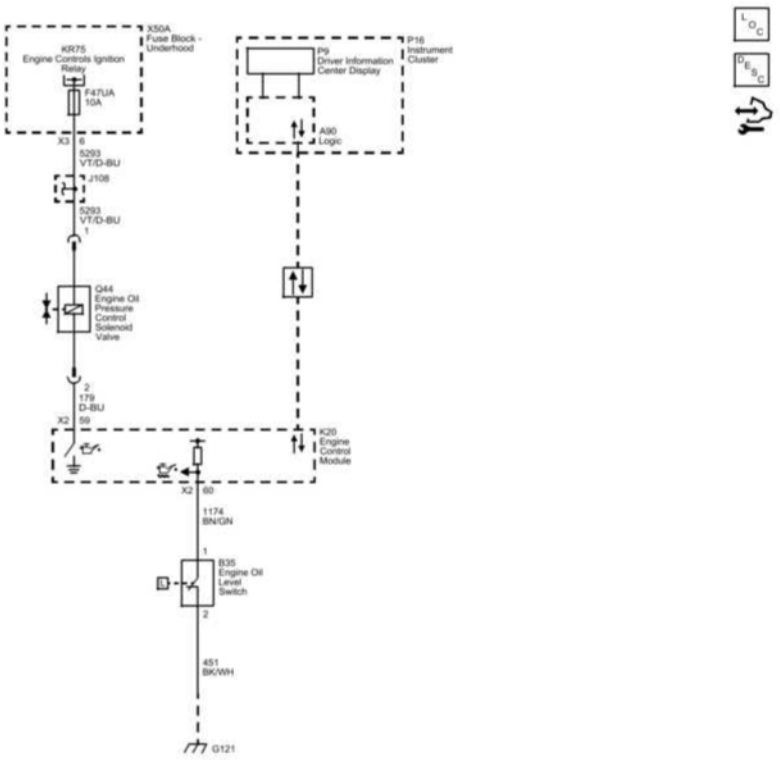

Fig. 1: Engine Oil Level (LTG)
Courtesy of GENERAL MOTORS COMPANY

2014 Engine

Engine Mechanical - 2.0L (LTG) - Special Tools and Equipment - Regal

SPECIAL TOOLS AND EQUIPMENT

SPECIAL TOOLS

Illustration	Tool Number/Desc
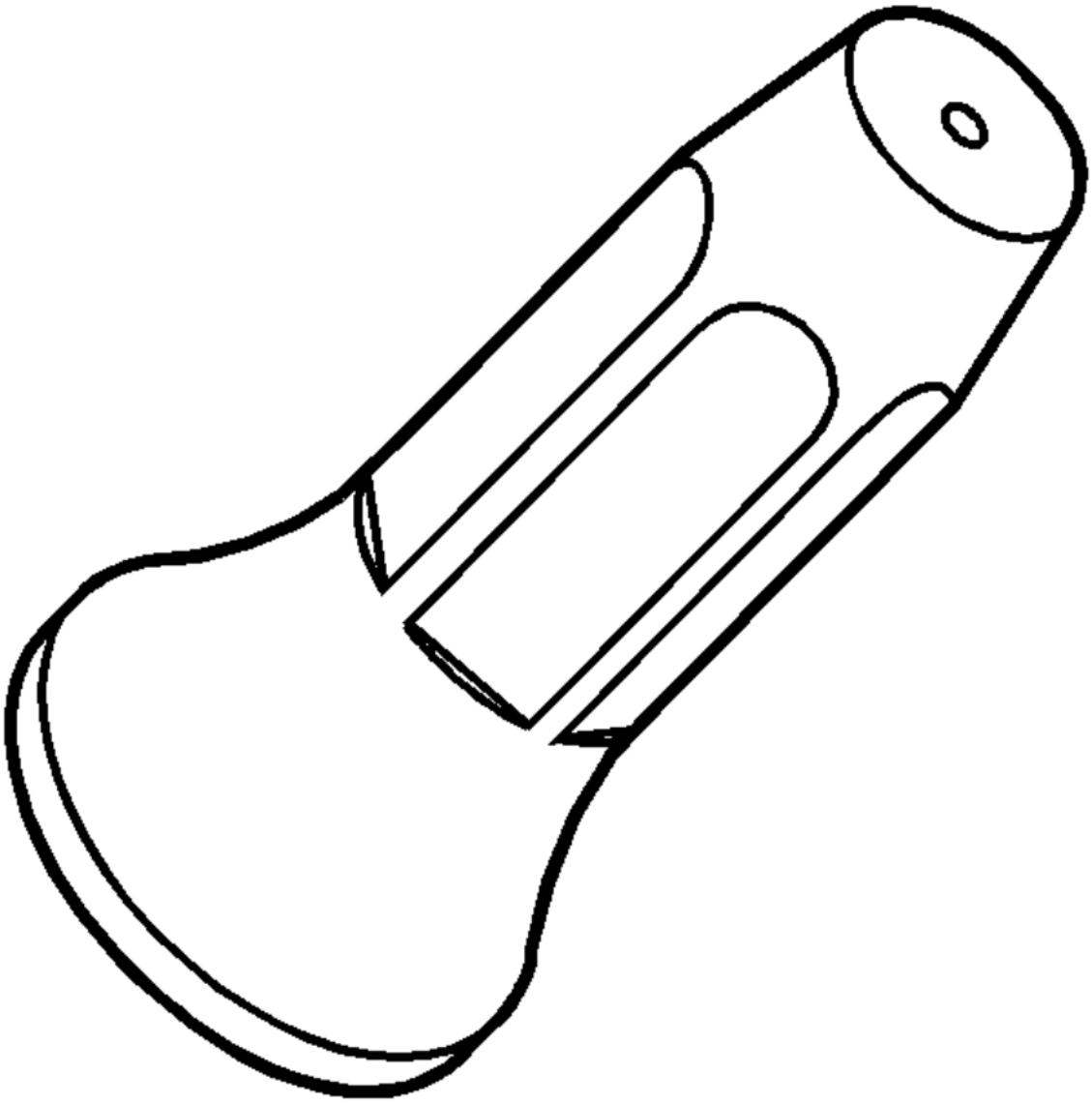	DT-458 J-4586 Input Shaft Installe

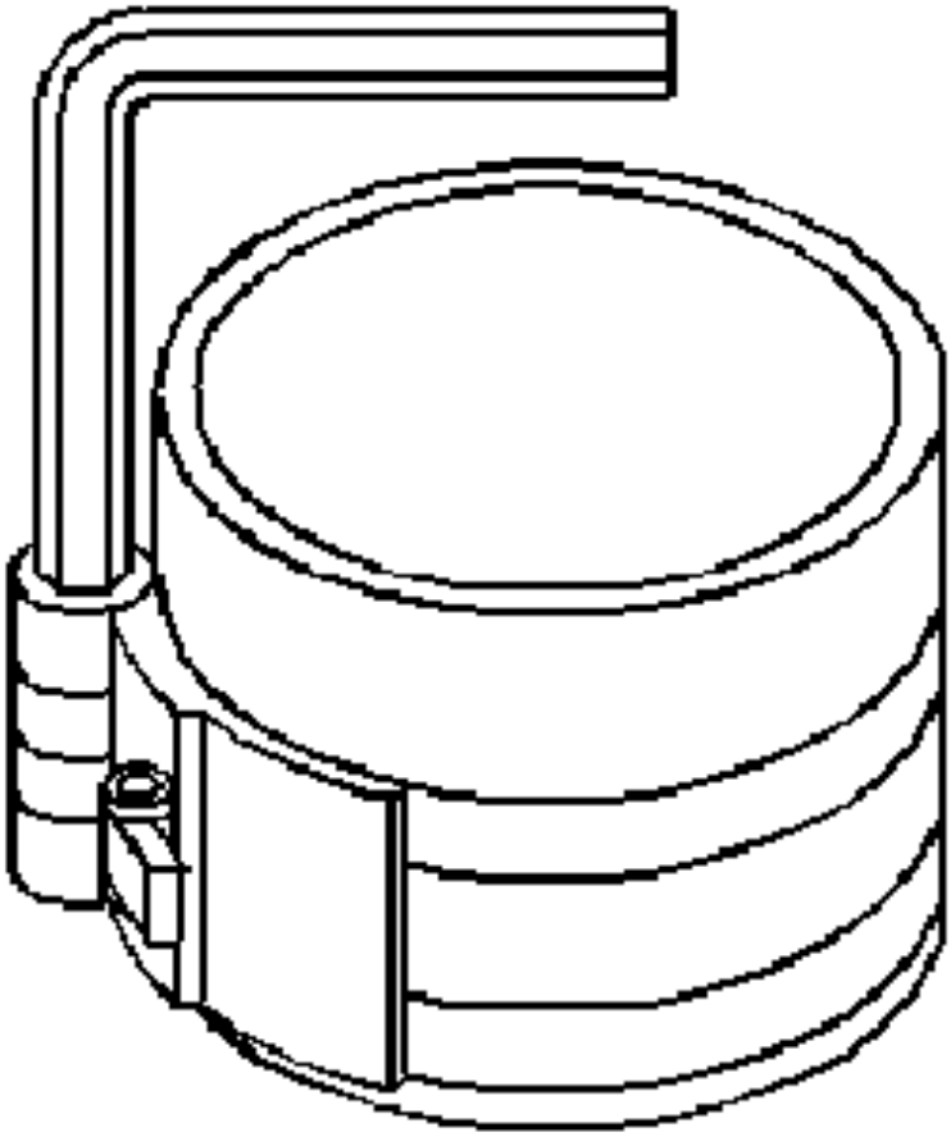

EN-803
J-8037
Ring Compı

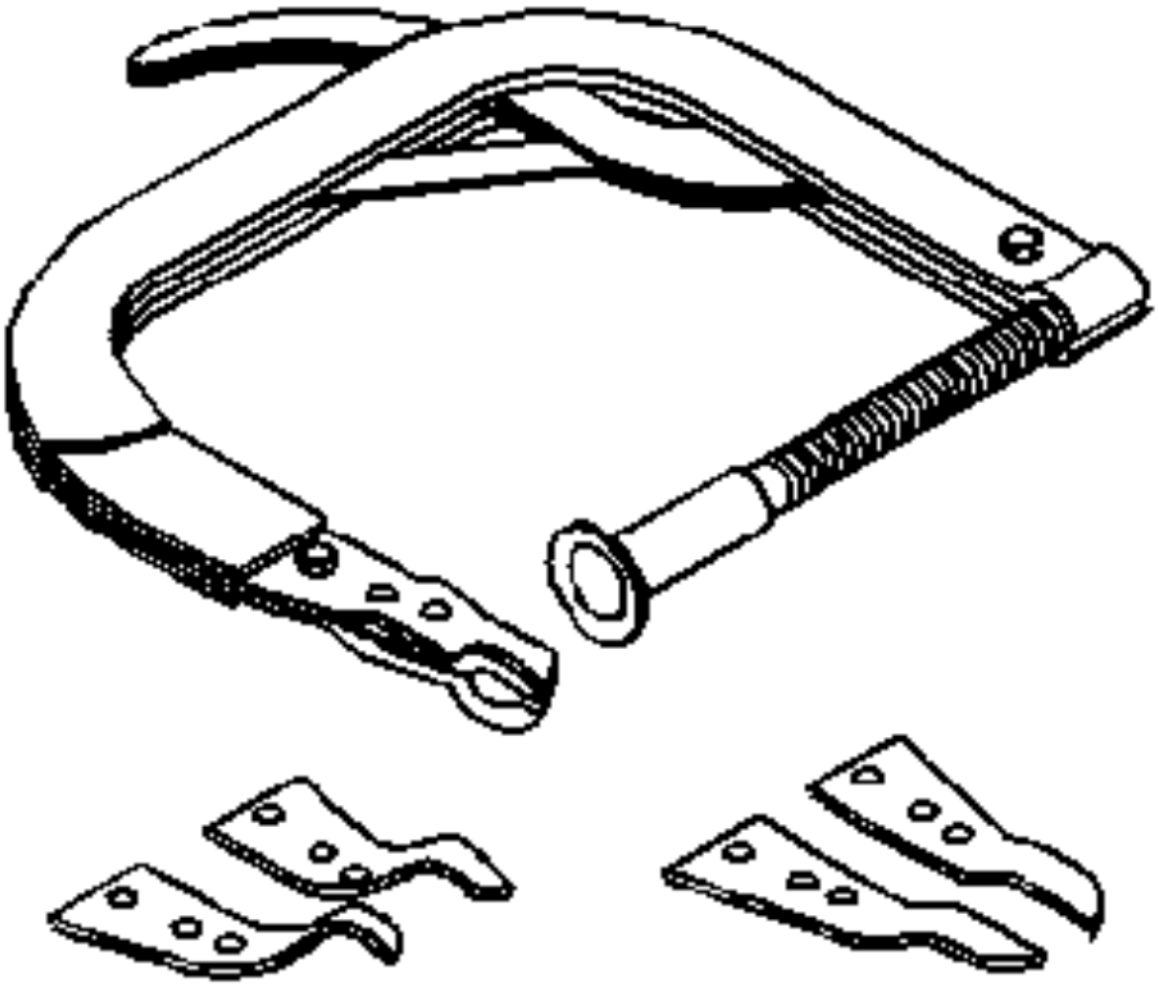

EN-806
J-8062
KM-34
Valve Spr
Compressor
Off

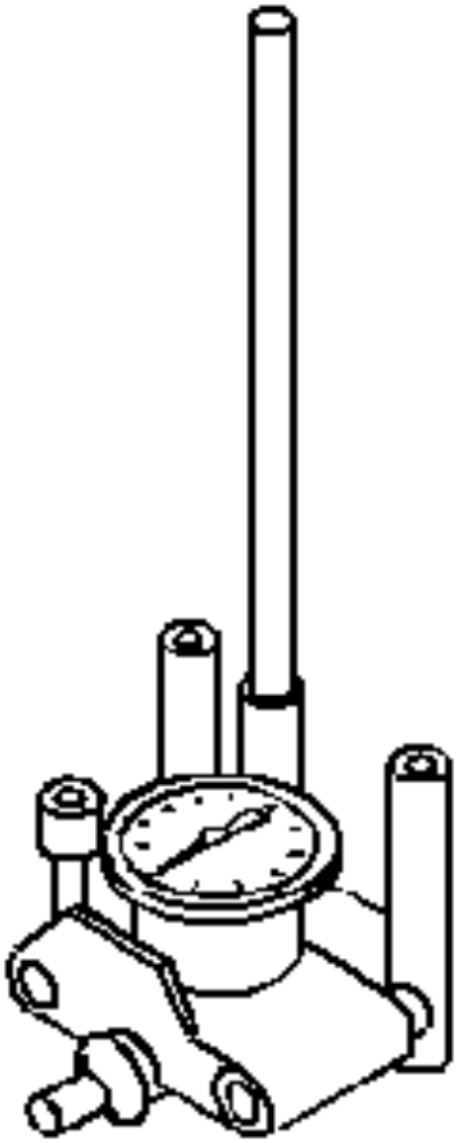

EN-808
J-8087
Cylinder Bore

EN-21867

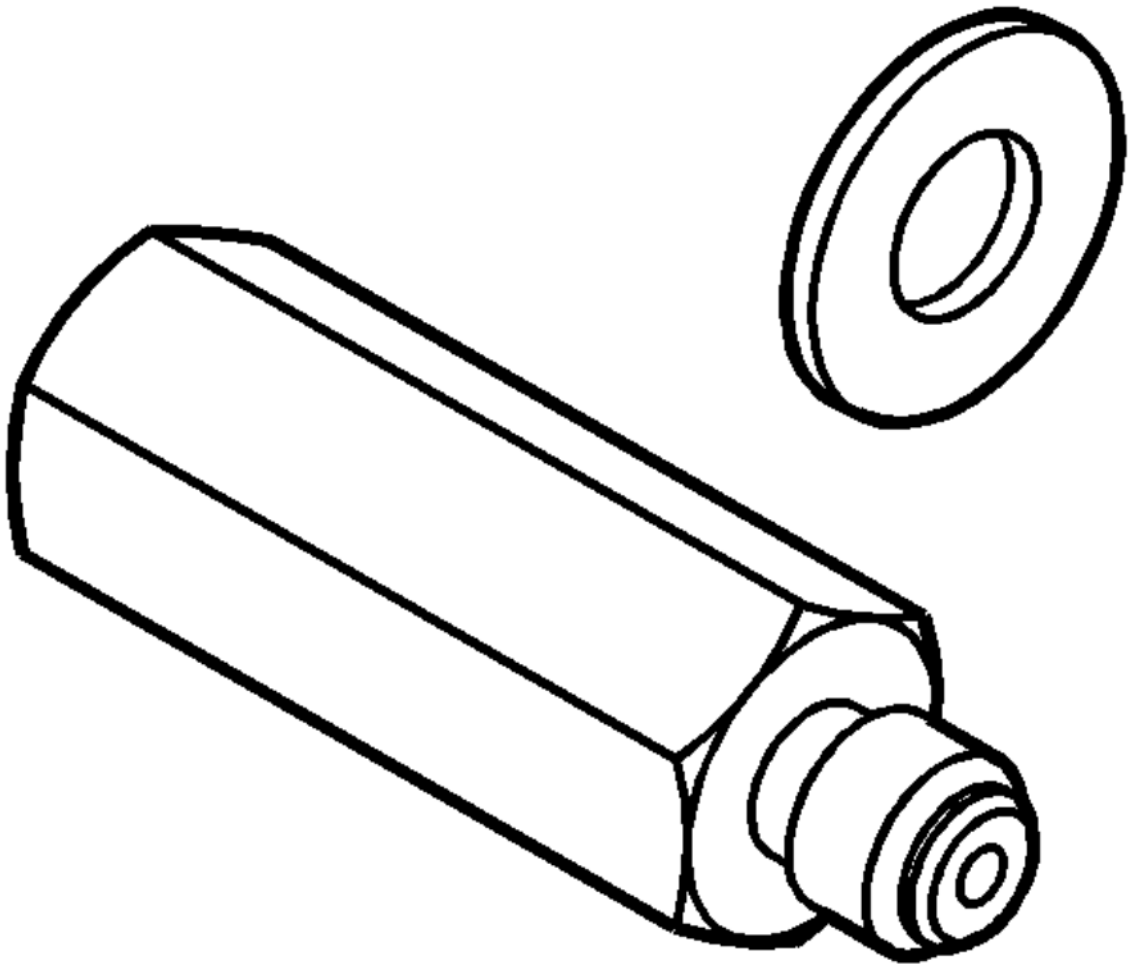

J-21867-8
KM-498
KM-610
83 93 85
Oil Pressure
Adapte

EN-22738

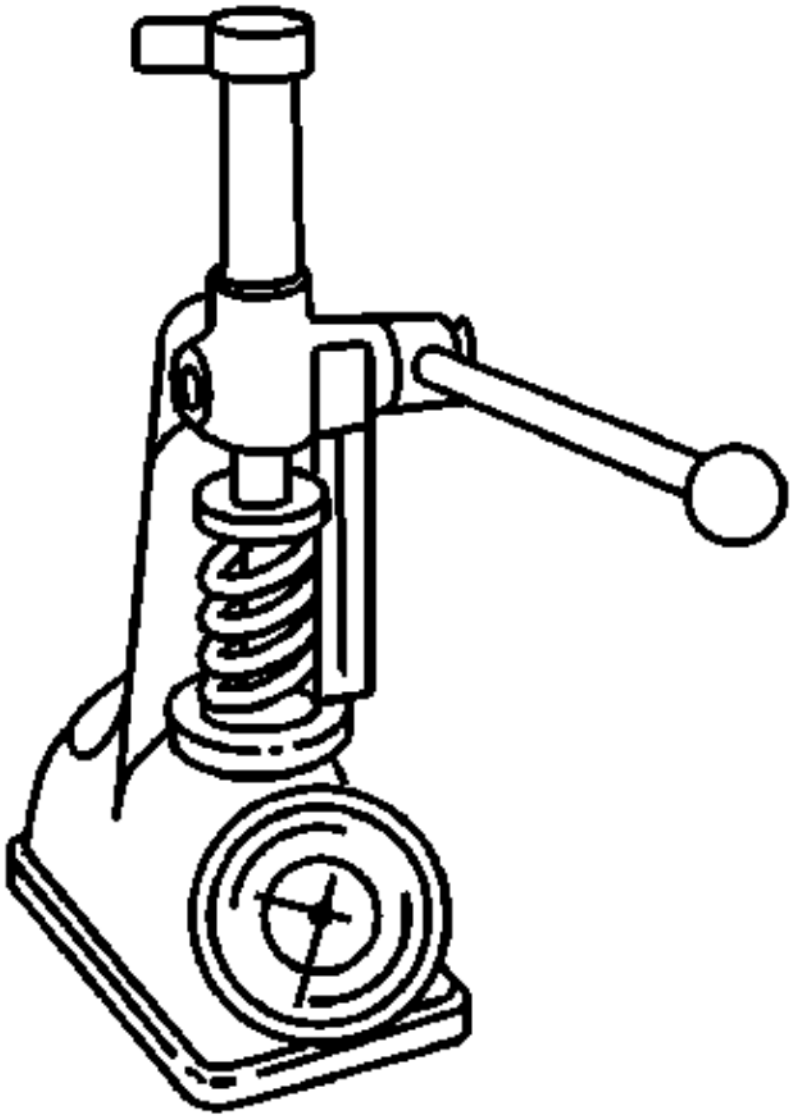

GE-22738
J-22738-
J-9666
Valve Spring

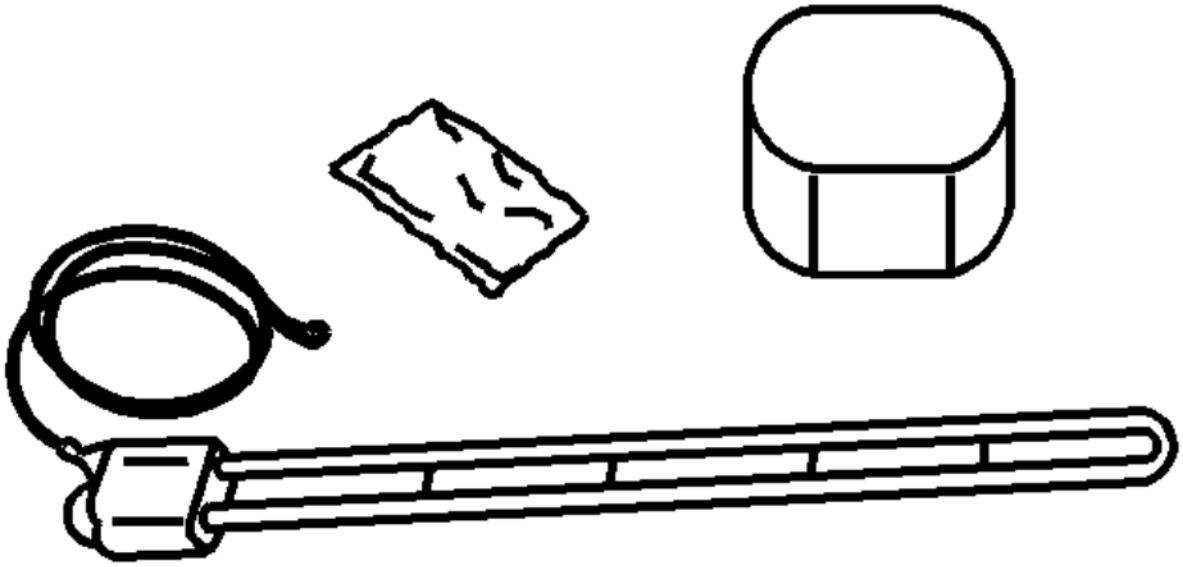

EN-239
J-2395
Valve Mano

EN-284
J-2841
Gasket Ren

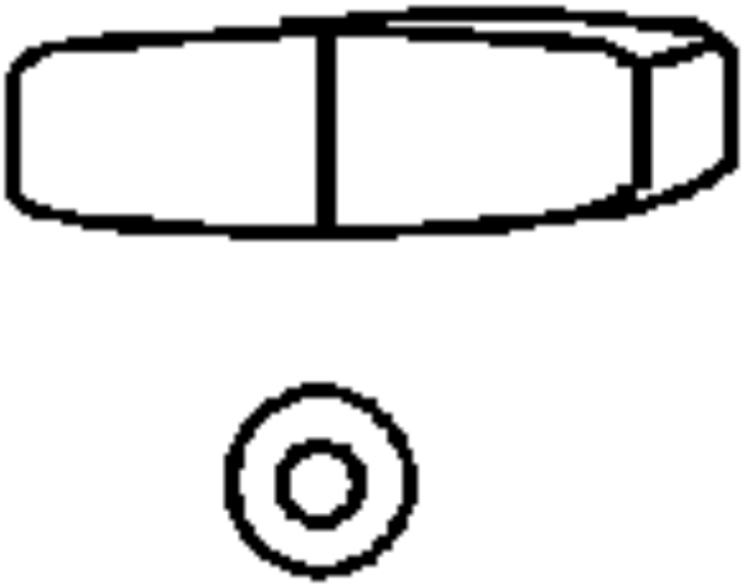

EN-28467
J-28467-
Lift Hook Wi
and Wasl

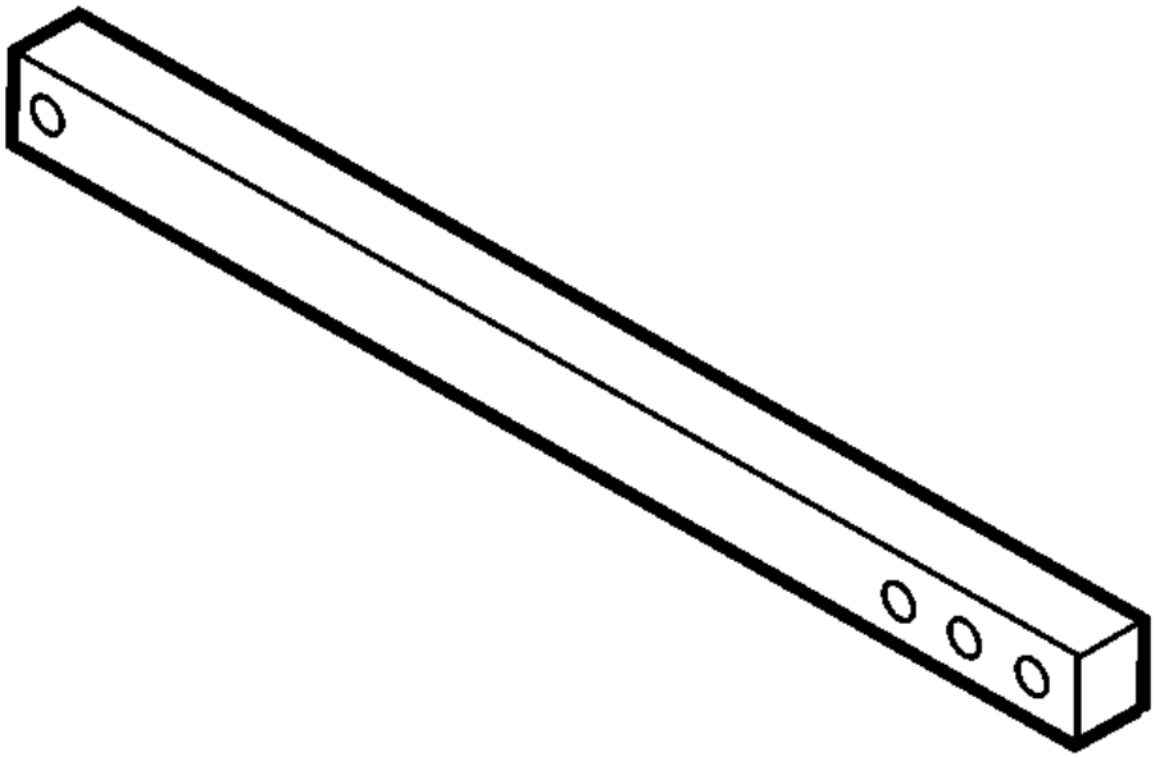

EN-28467-
J-28467-5
Engine Sup
Adapter - M
Support Be

EN-341

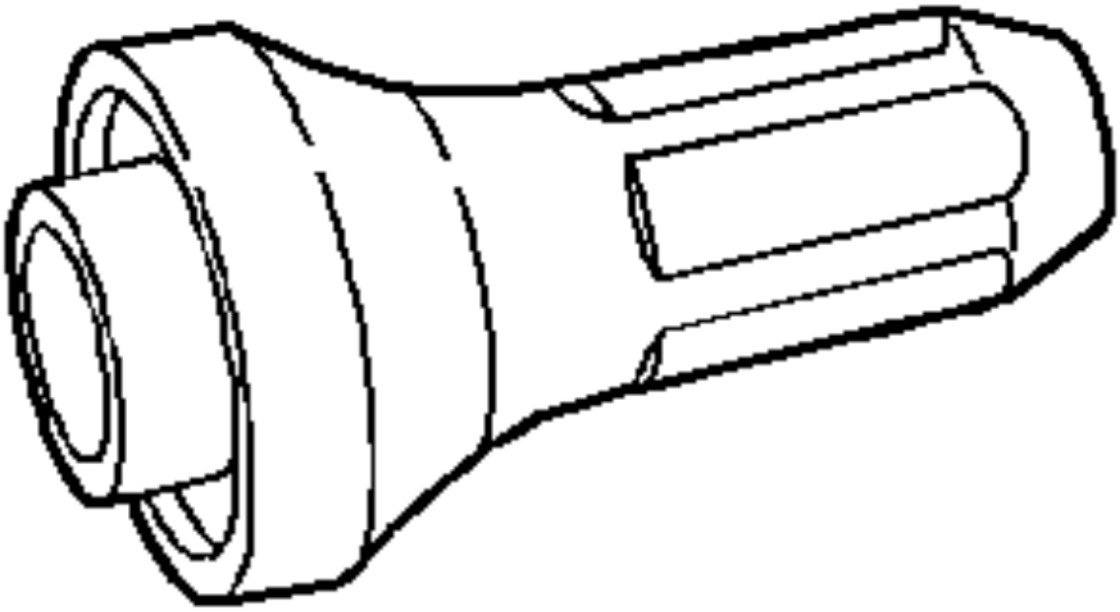

J-3411
Sprocket Be
Installe

EN-35667
J-35667-
Cylinder H
Leakdown T

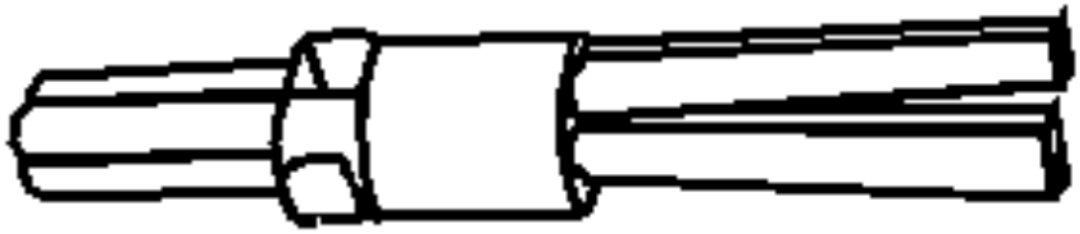

EN-360
J-3601
KM-840 - Re
KM-615
Installati
Valve Seal Re

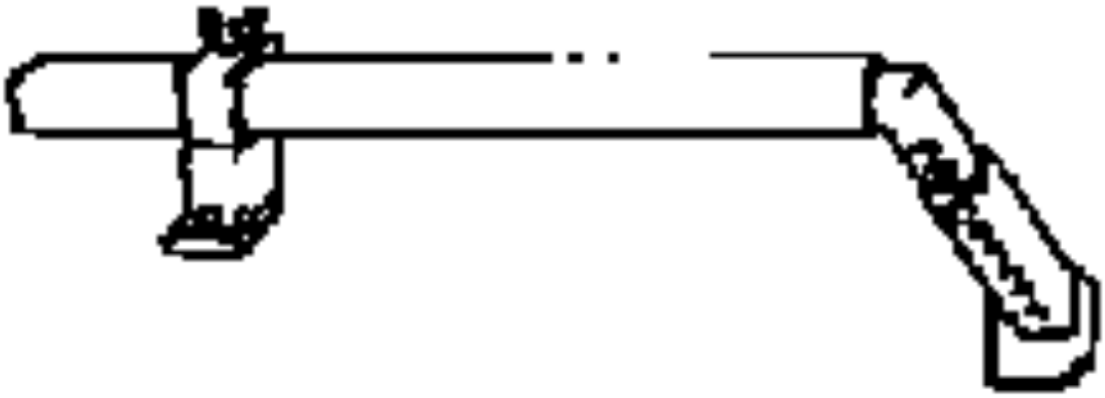

EN-36462
J-36462-
Engine Sup
Adapter Le

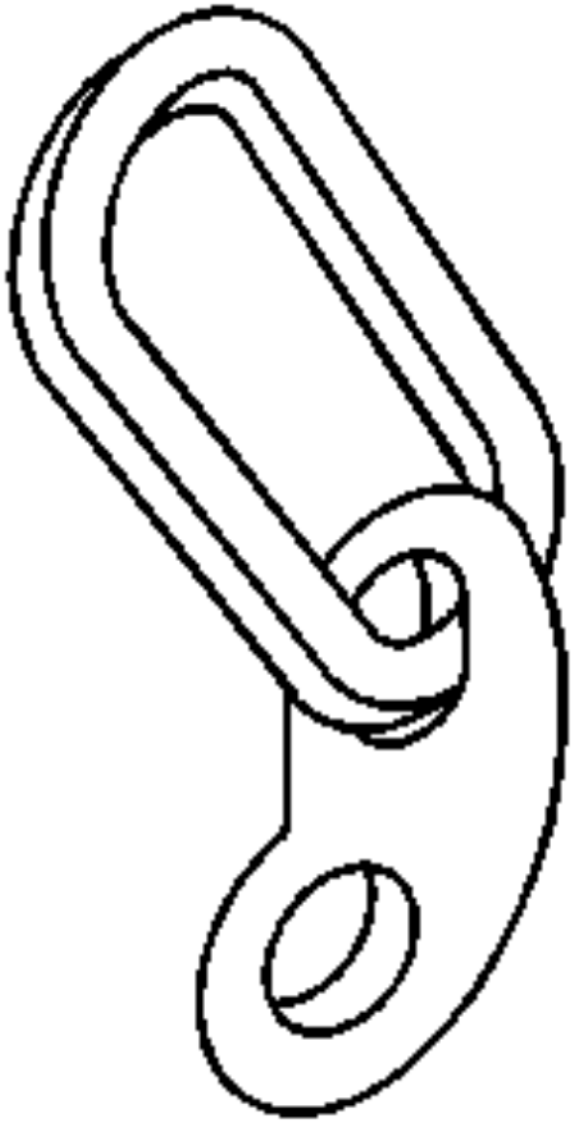

EN-3685
J-3685
Engine Lift E

EN-381
J-3818
Cylinder F
Broken B
Extractor

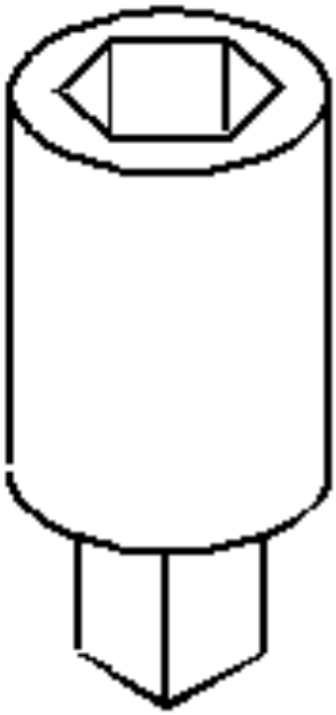

EN-393
J-39358
83 94 78
Spark Plug S

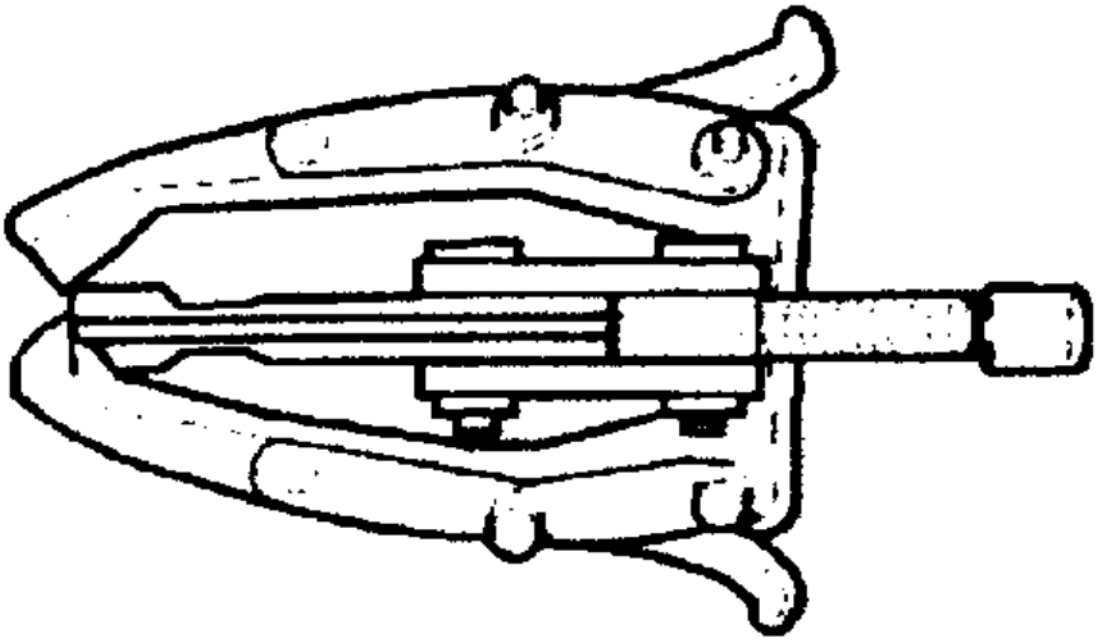

EN-418
J-4181
Crankshaft B
Remove

EN-4181

J-41816
Crankshaft
Protecto

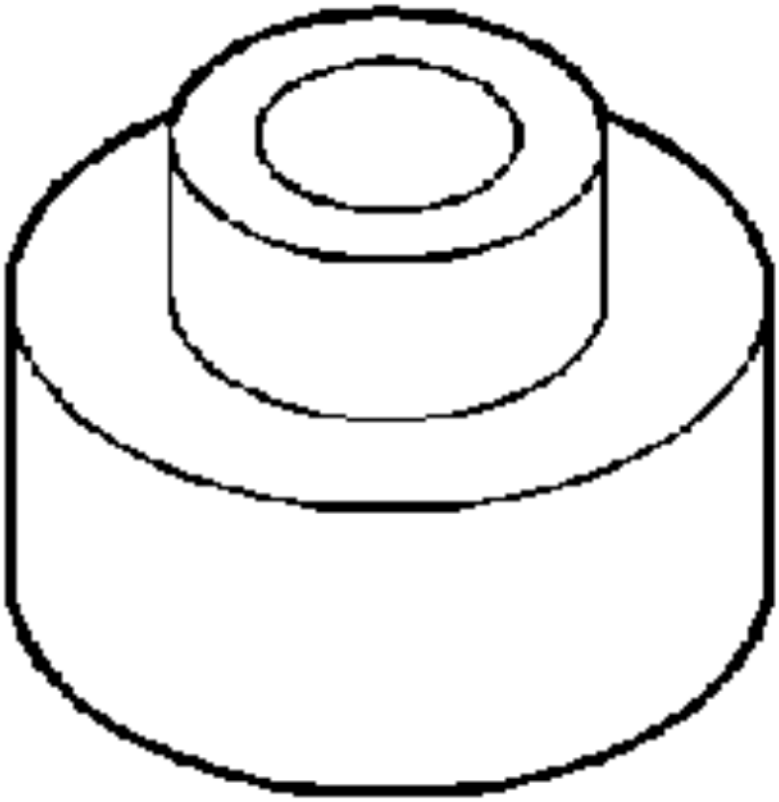

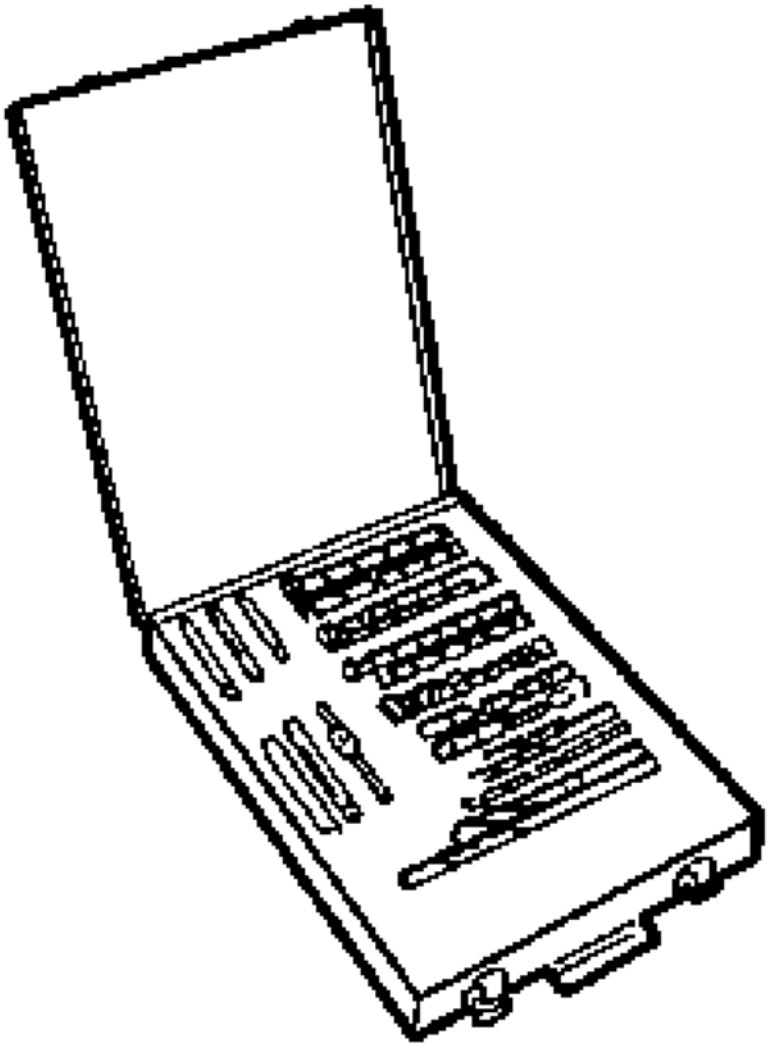

EN-42385-
J-42385-7
High Feature
Repair K

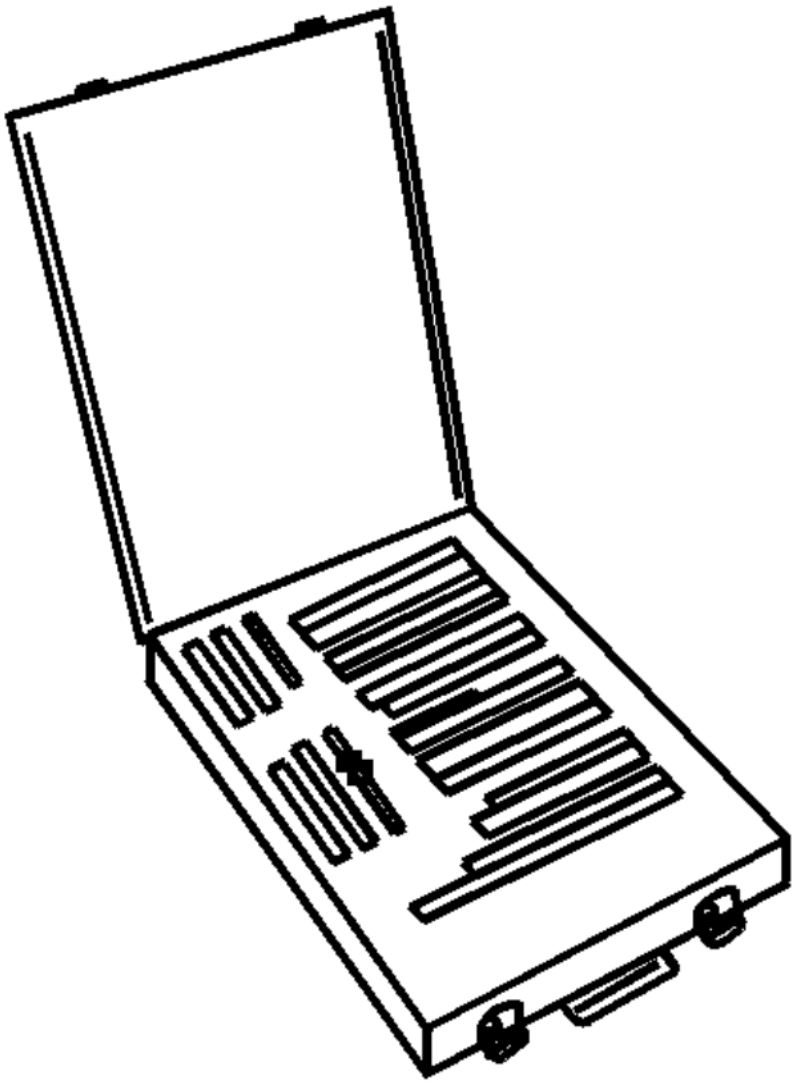

EN-42385-
J-42385-8
Thread Repa

EN-42385-
Head Bolt T

Repair Adap

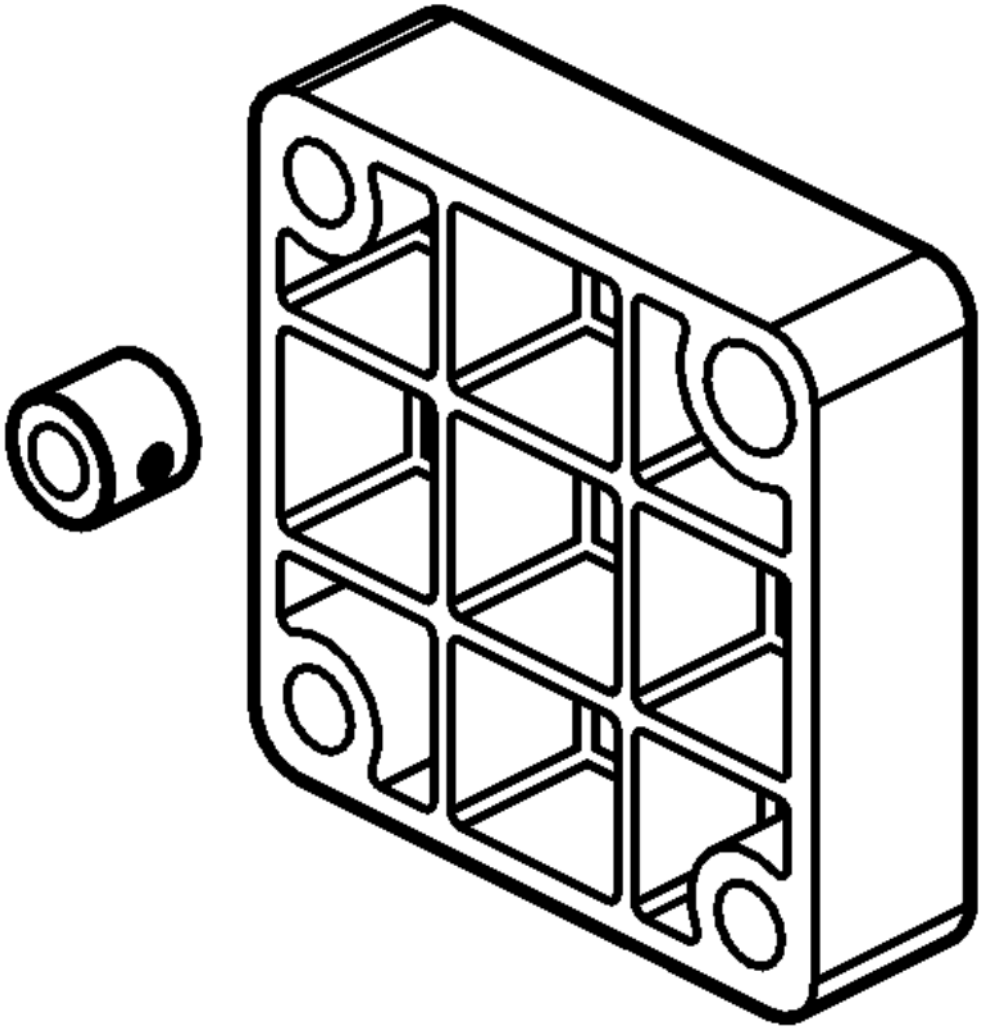

EN-4340:
J-43405·
Engine Sup

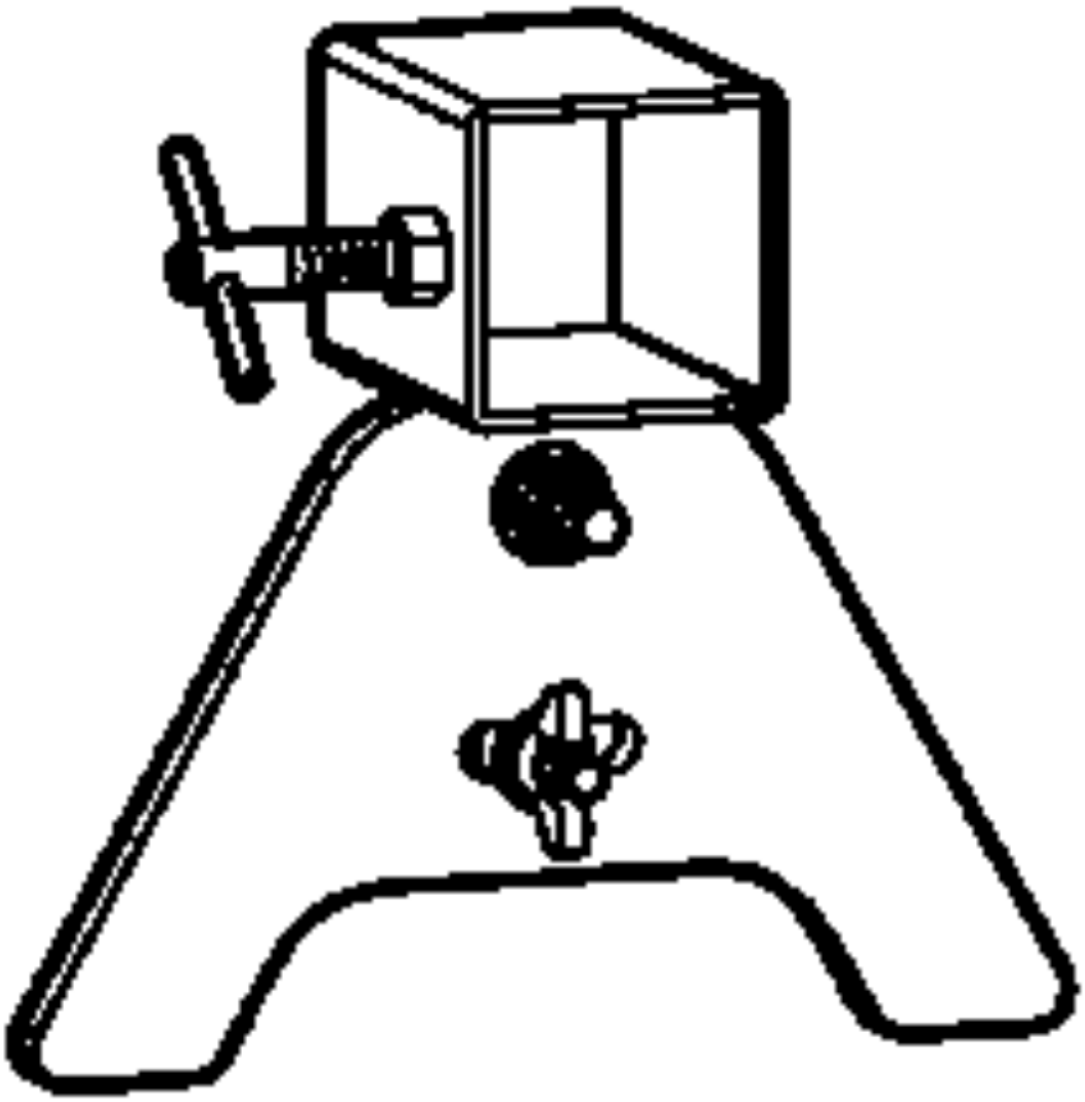

Fixture Ada
Passenger

EN-4340:
J-43405·
Engine Sup

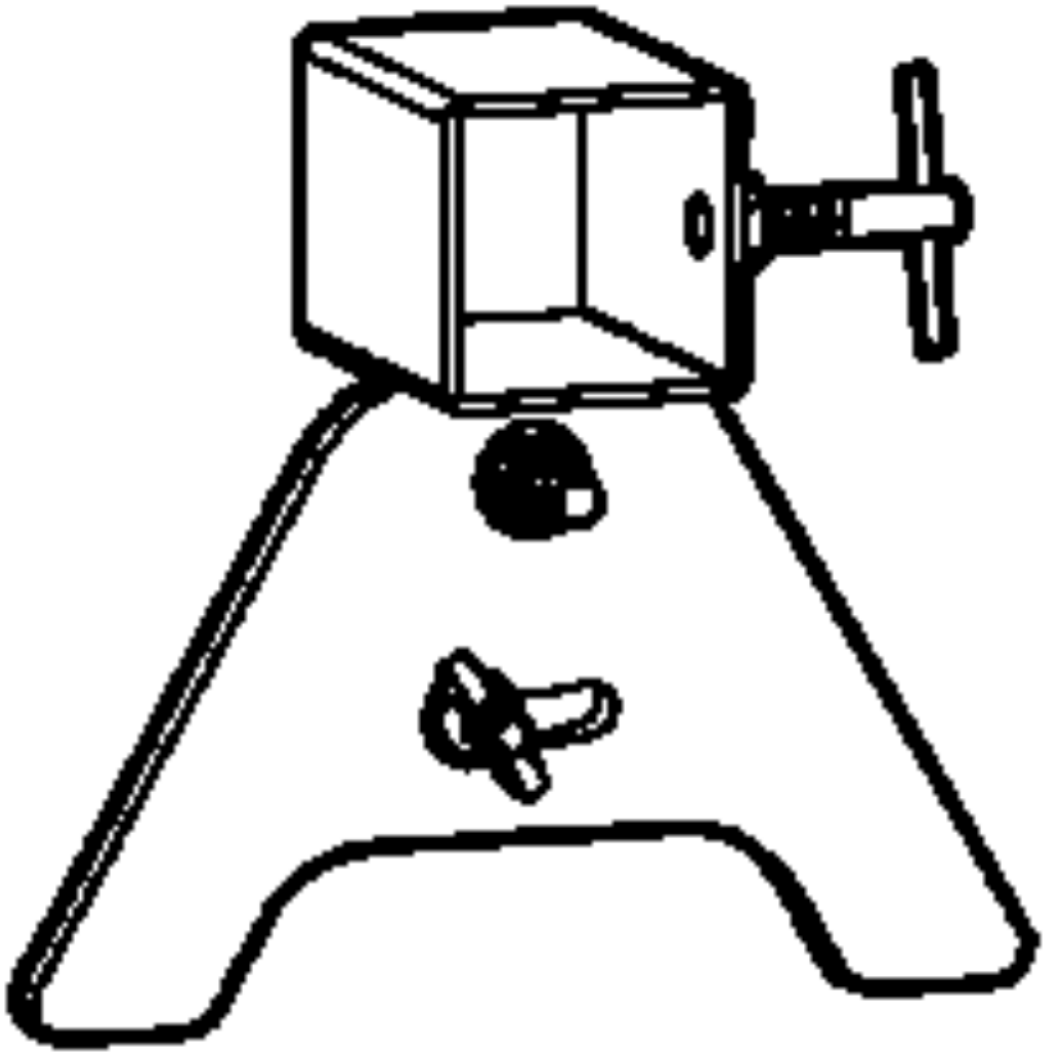

Fixture Ada
Driver Si

EN-439(

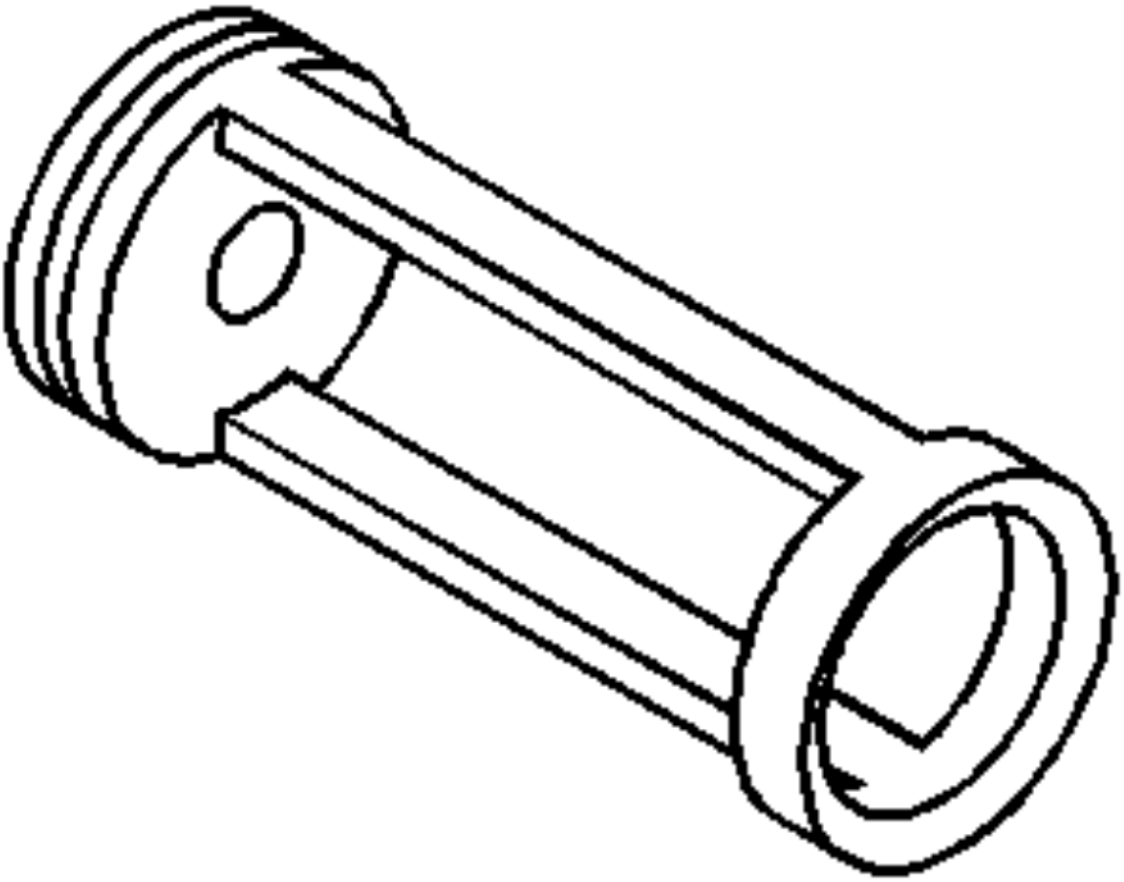

J-43963
KM-614
Valve Spr
Compressor (

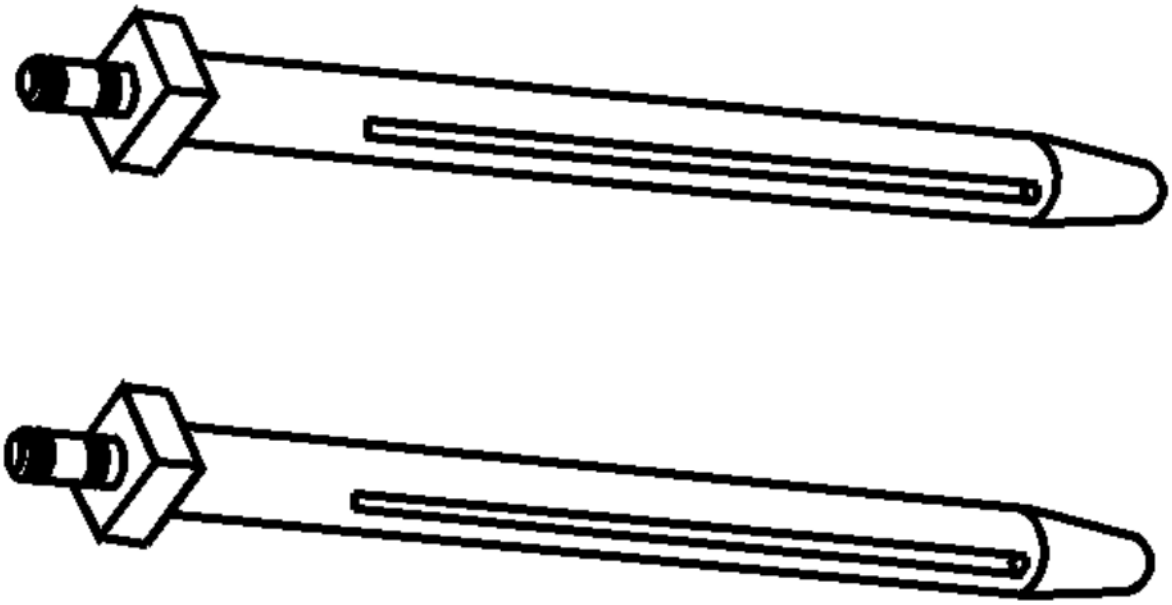

EN-4396
J-43966
Connecting
Guides

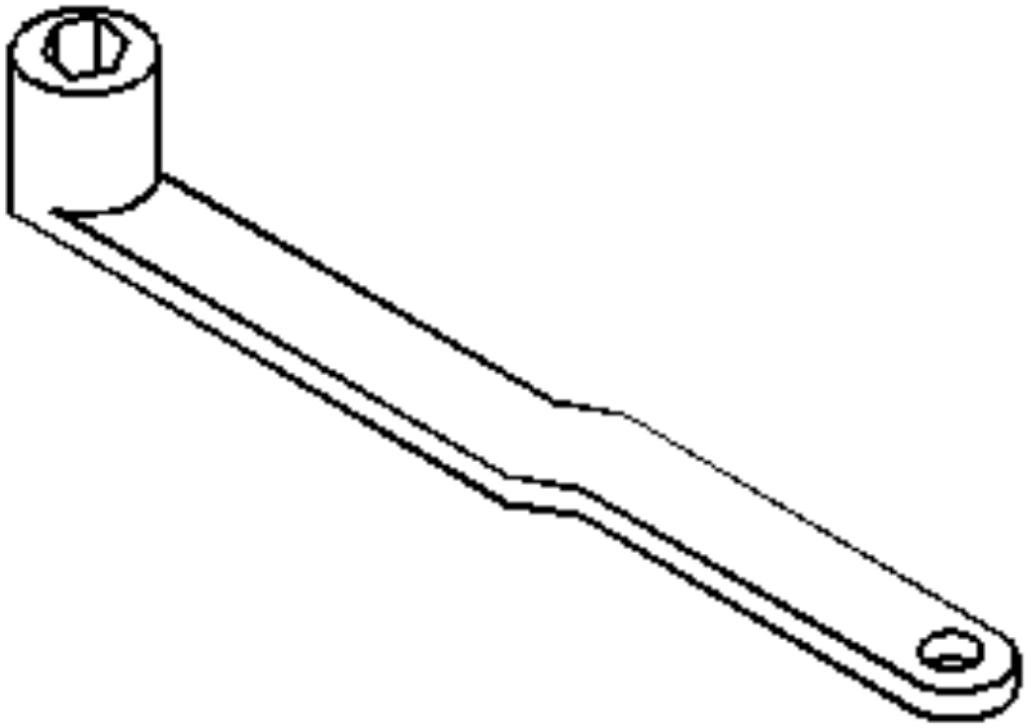

EN-450
J-4502
Belt Tensi
Wrencl

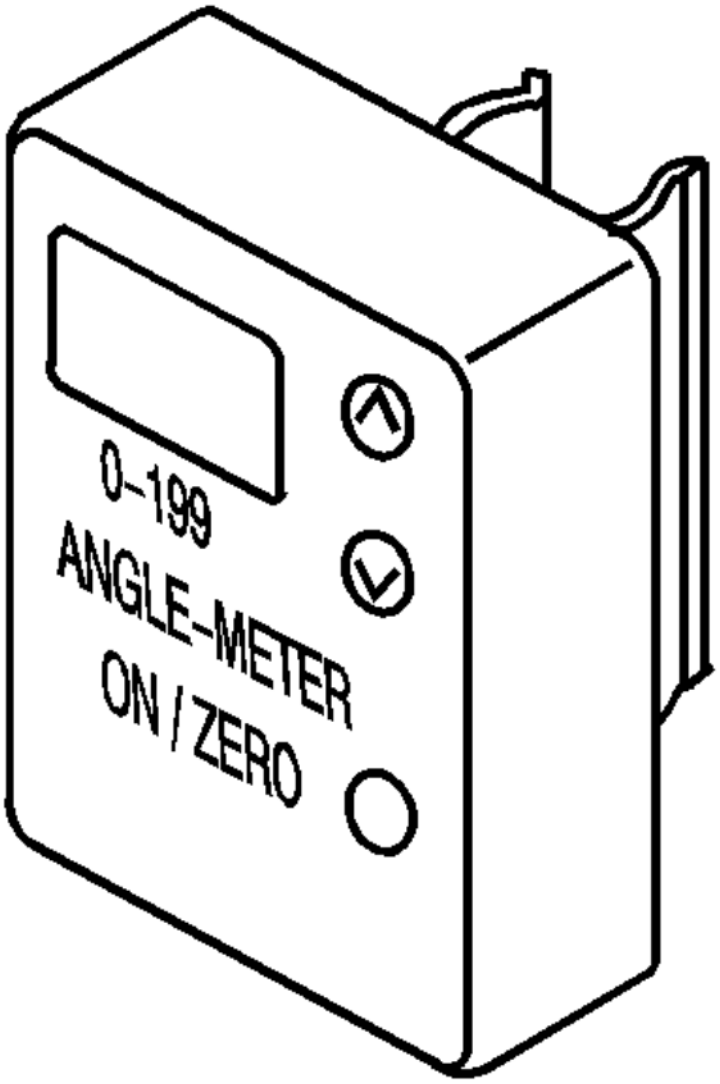

EN-450
J-4505
Angle Me

EN-452
J-4529

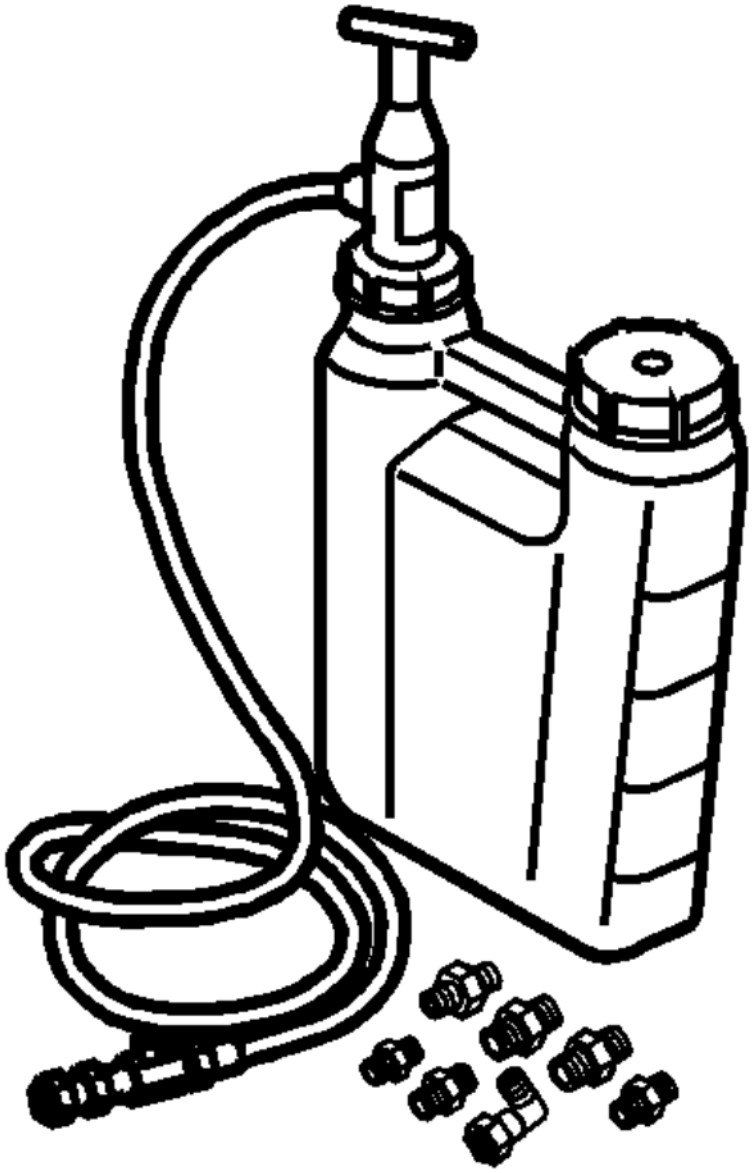

Engine Pre-

EN-461
Valve Stem

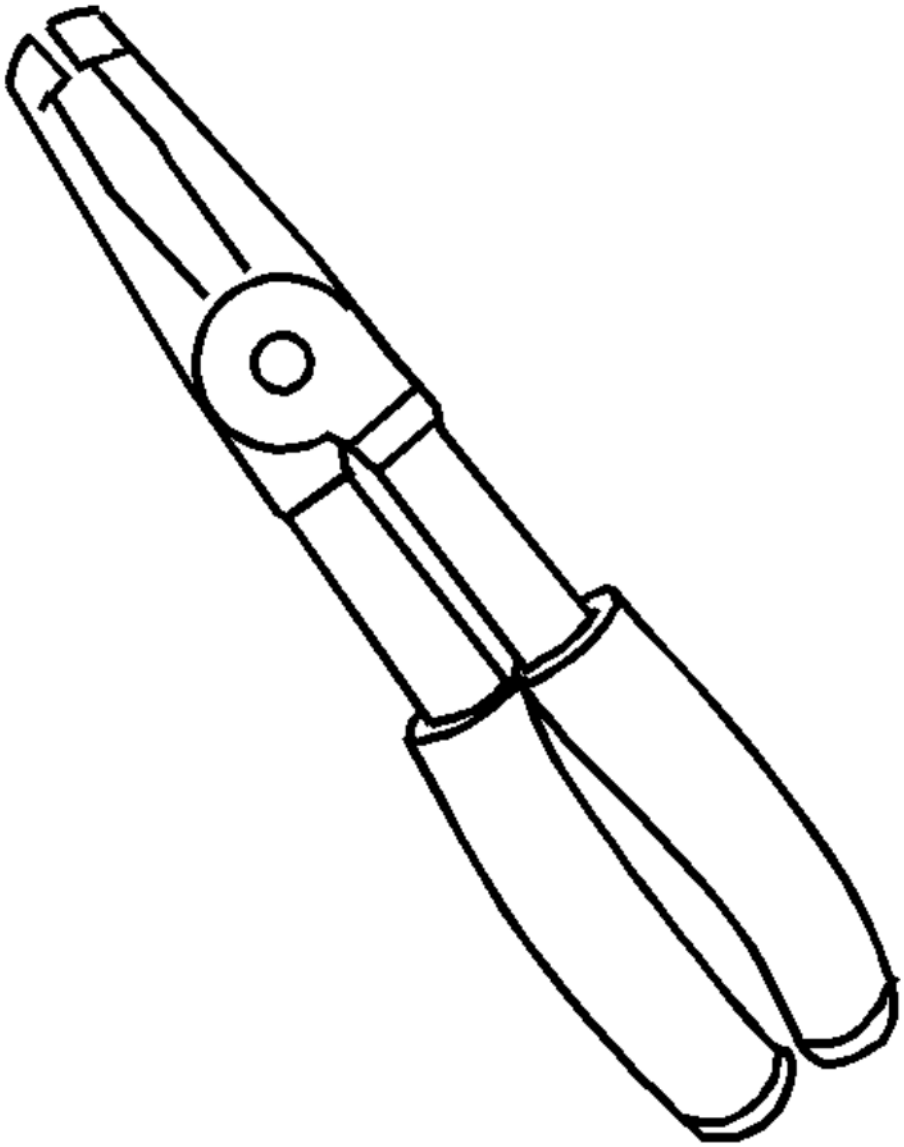

Remove

EN-467
J-4365

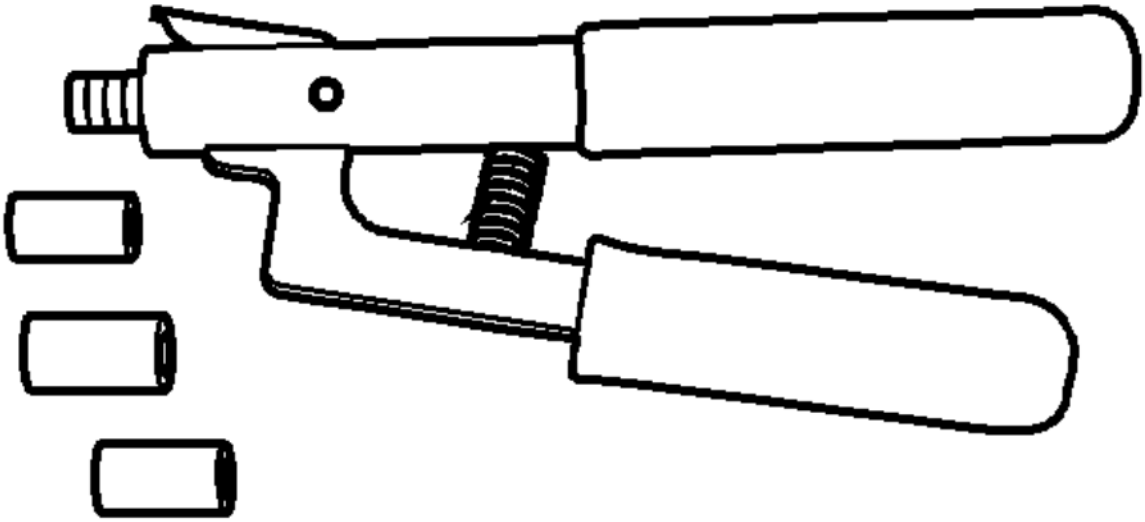

Piston Pin Remover/Ins

EN-4674:
Piston Pin

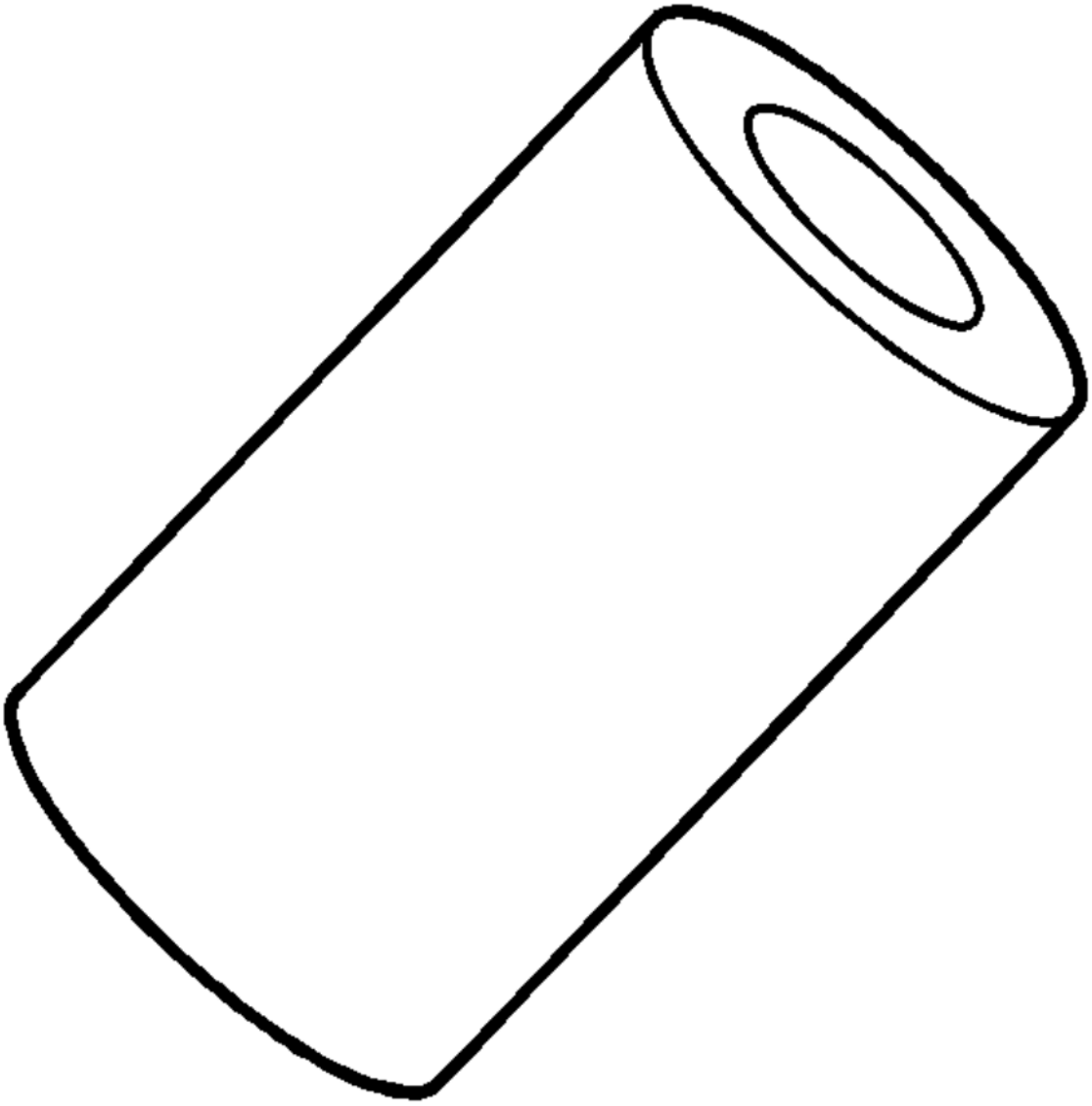

Remover/Ins
Adapte

EN-479(
Injector Bor

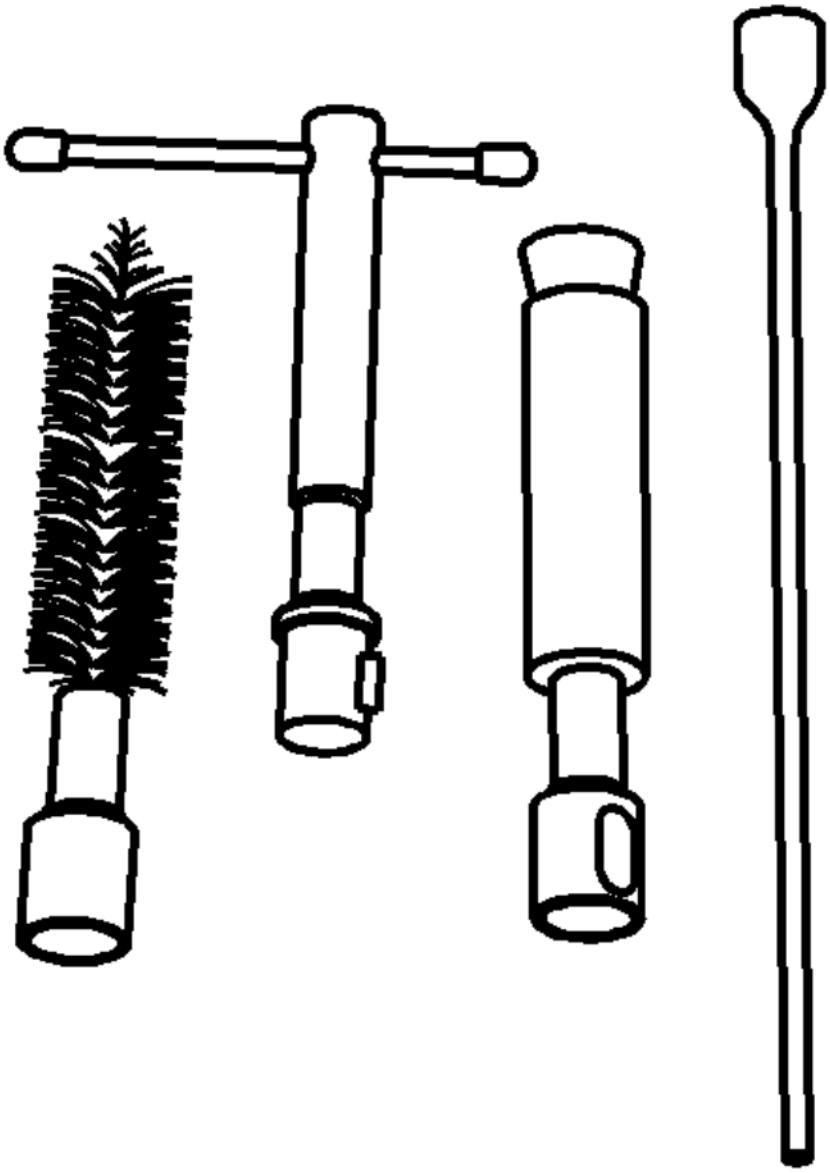

Sleeve Clean

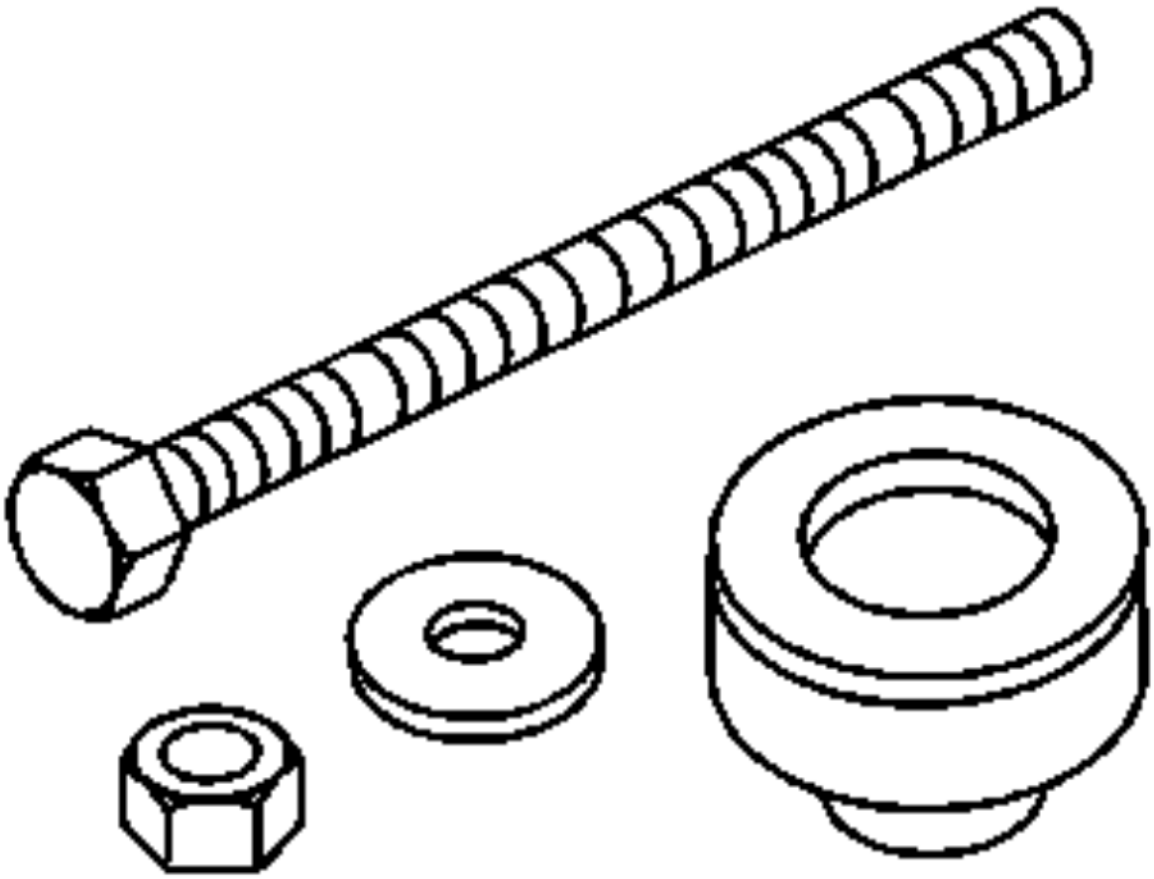

EN-480
Crankshaft B
Installe

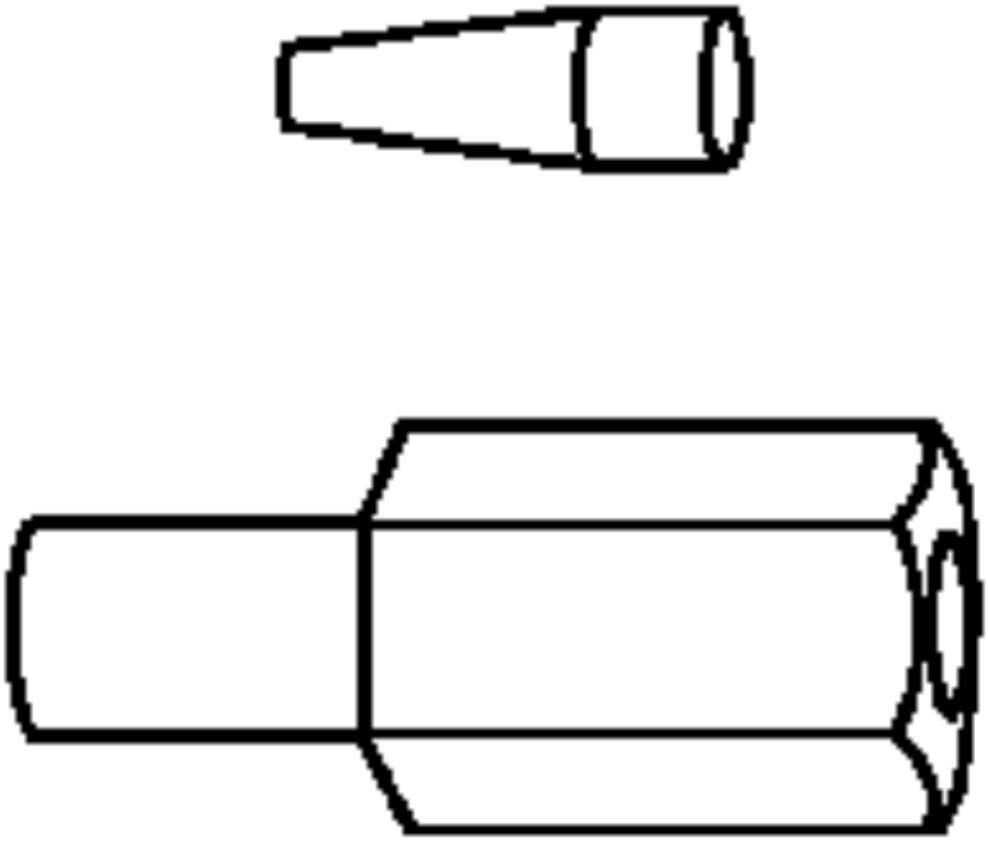

EN-482(
Injector Seal I
and Size

EN-492
Fuel Rail Ass

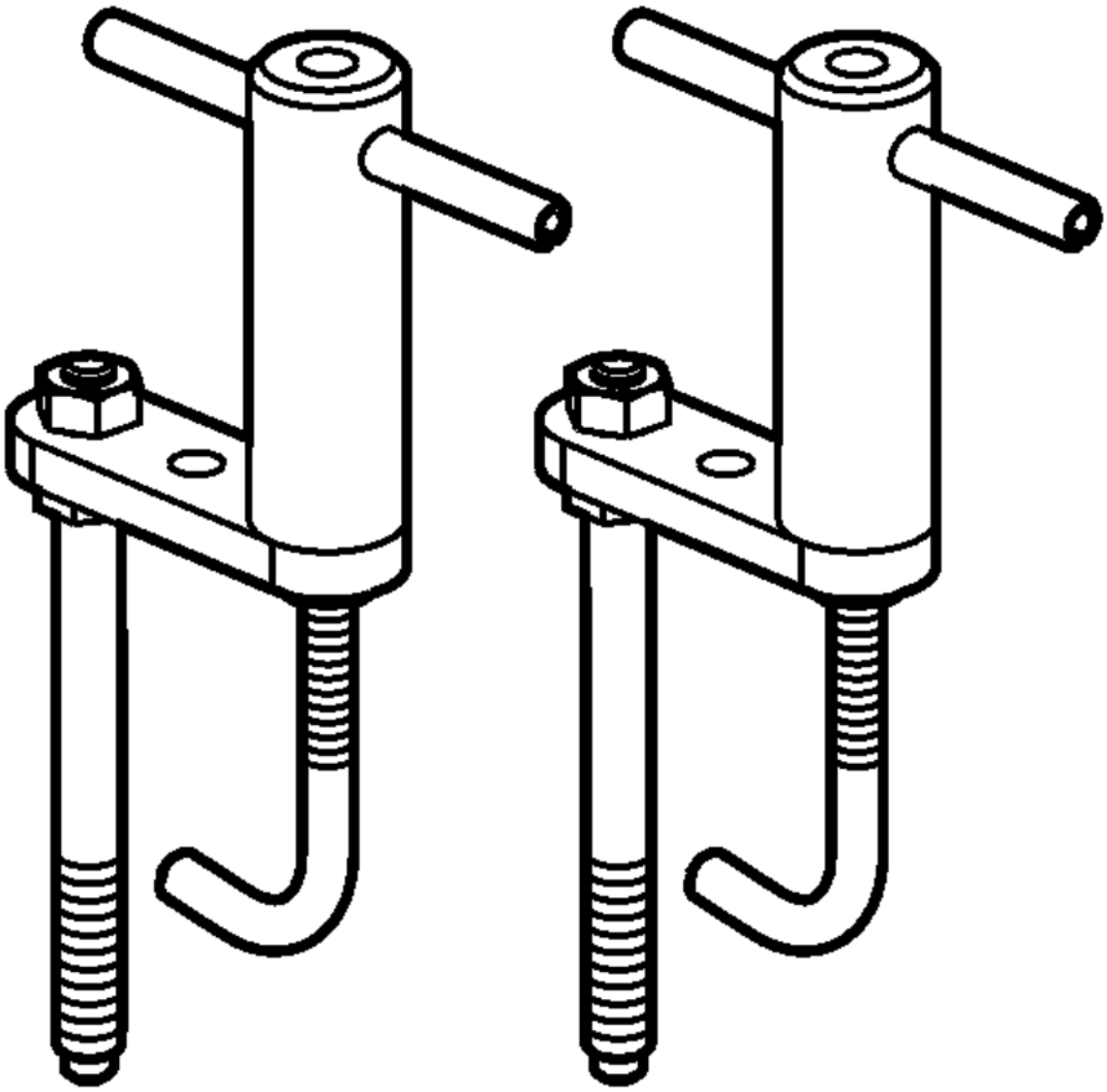

Remove

EN-506
Timing Cl

Retention To

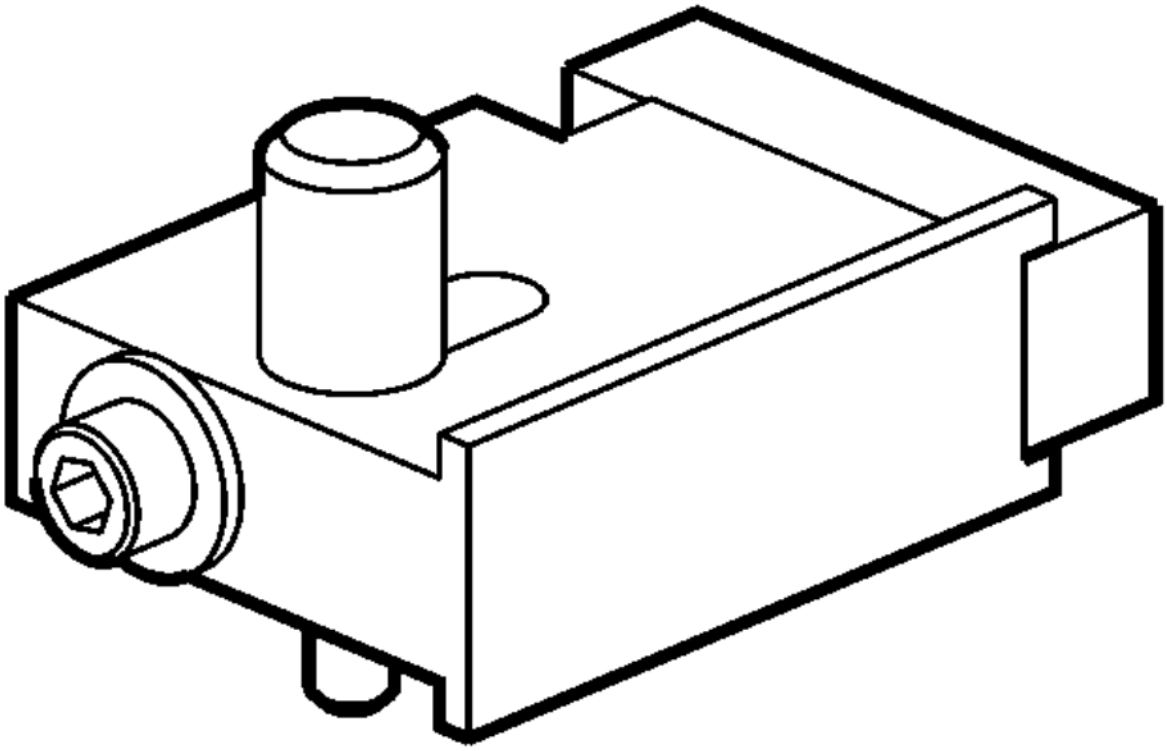

EN-507
Valve Spr

Compres

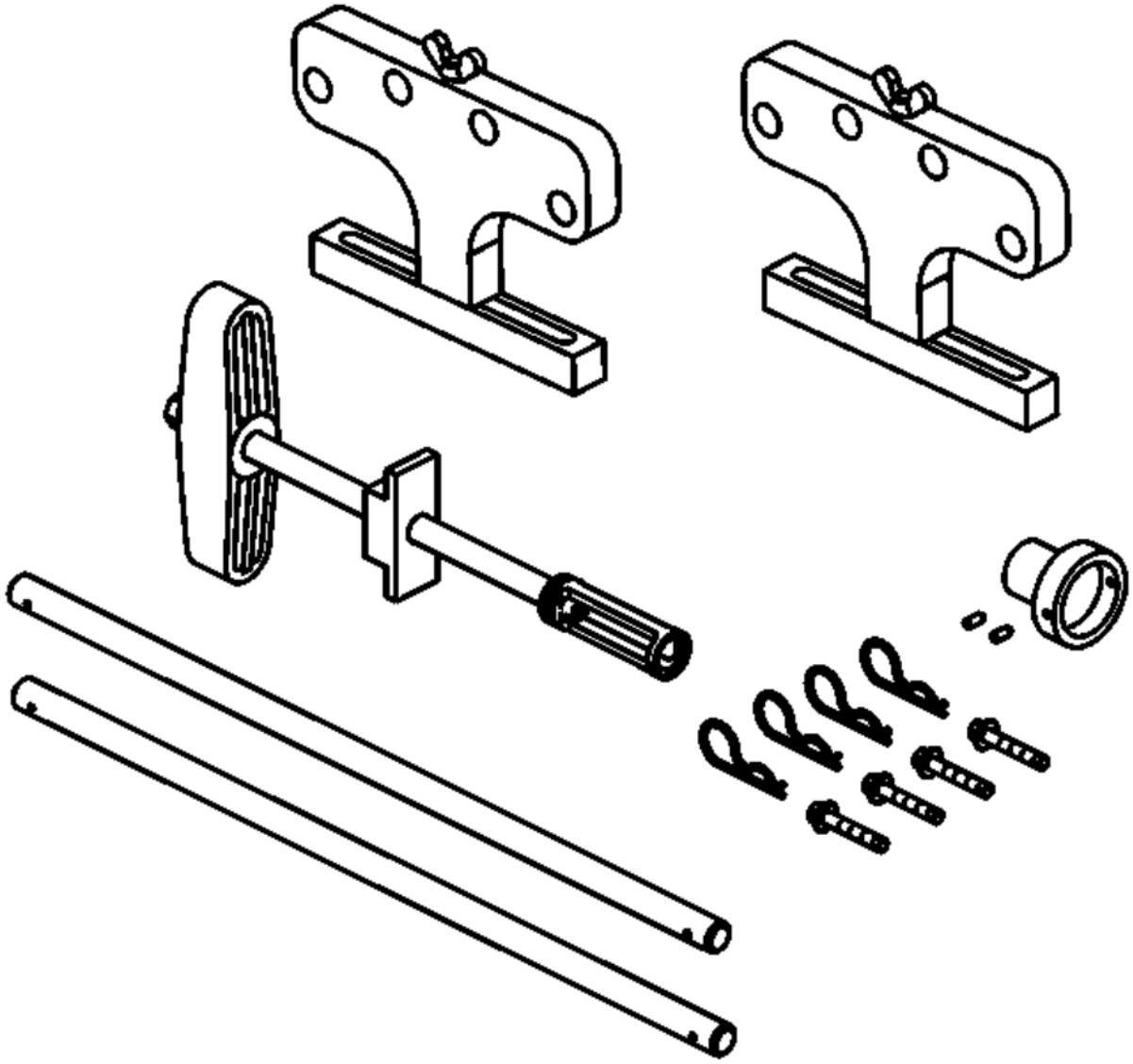

EN-50717
Valve Spr

Compressor A

EN-5079
High Pressur

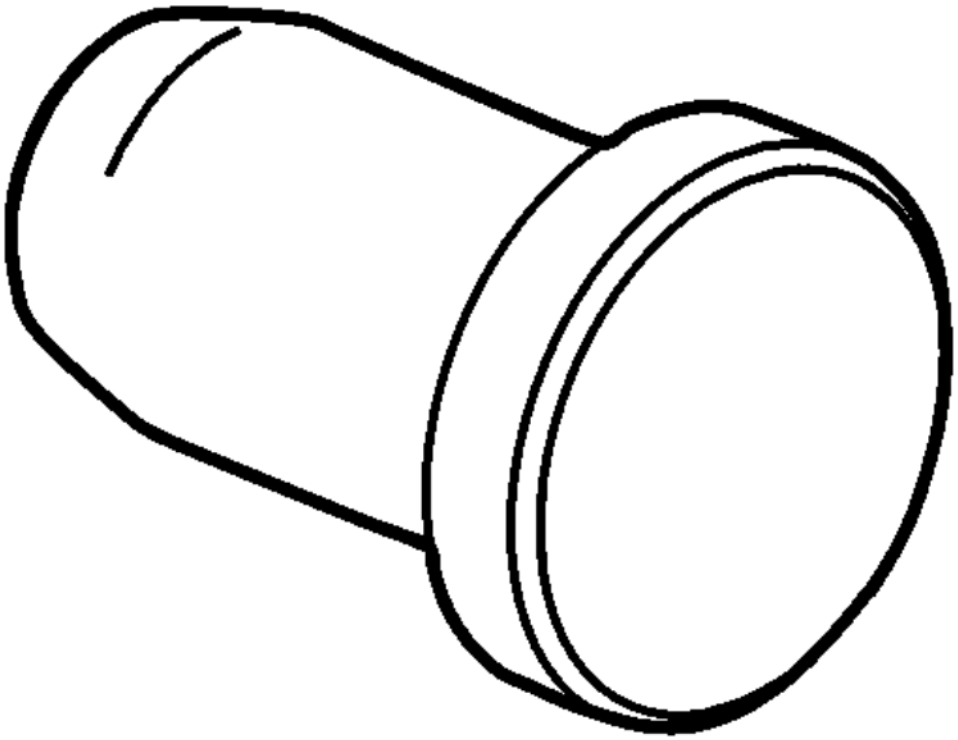

Pump Instal
Alignment C

EN-5079
Fuel Injector

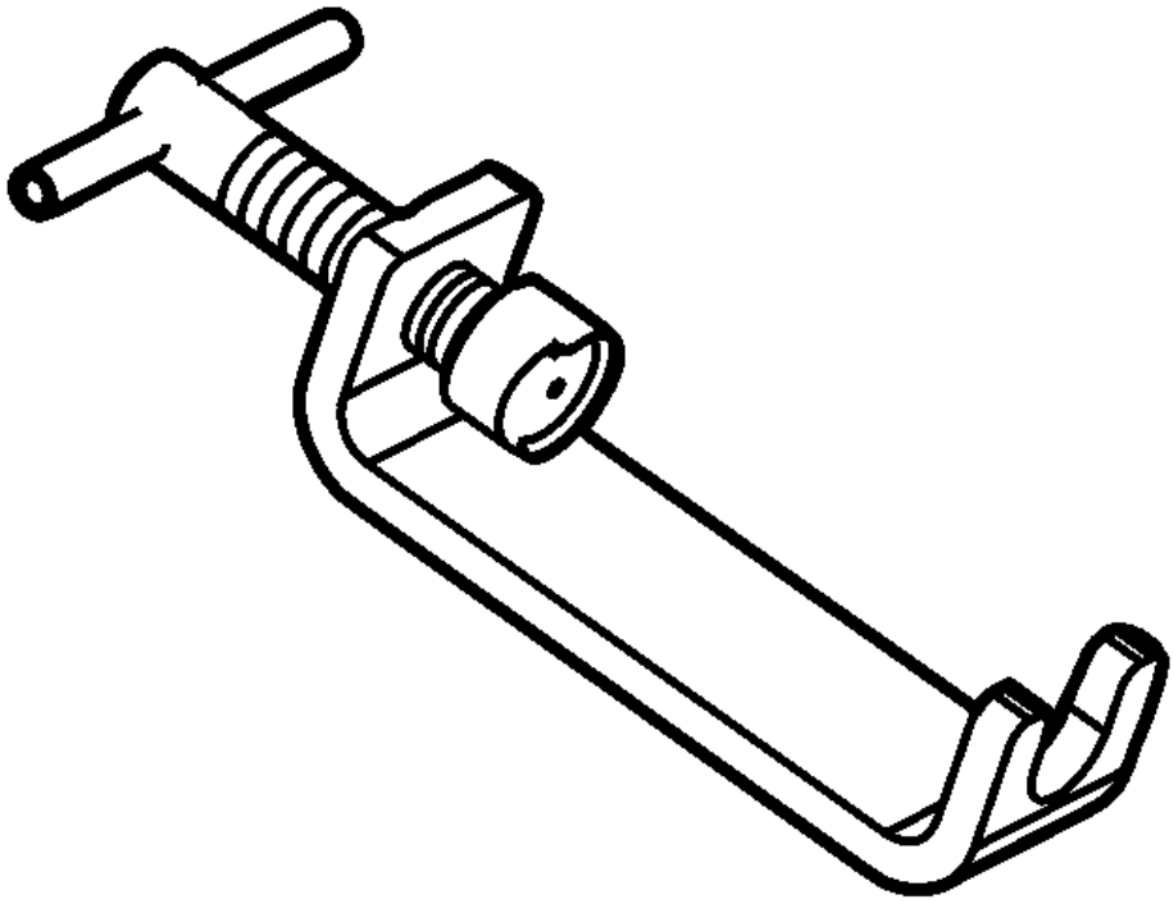

Installer - to

EN-5079
Flywheel Ho

Tool

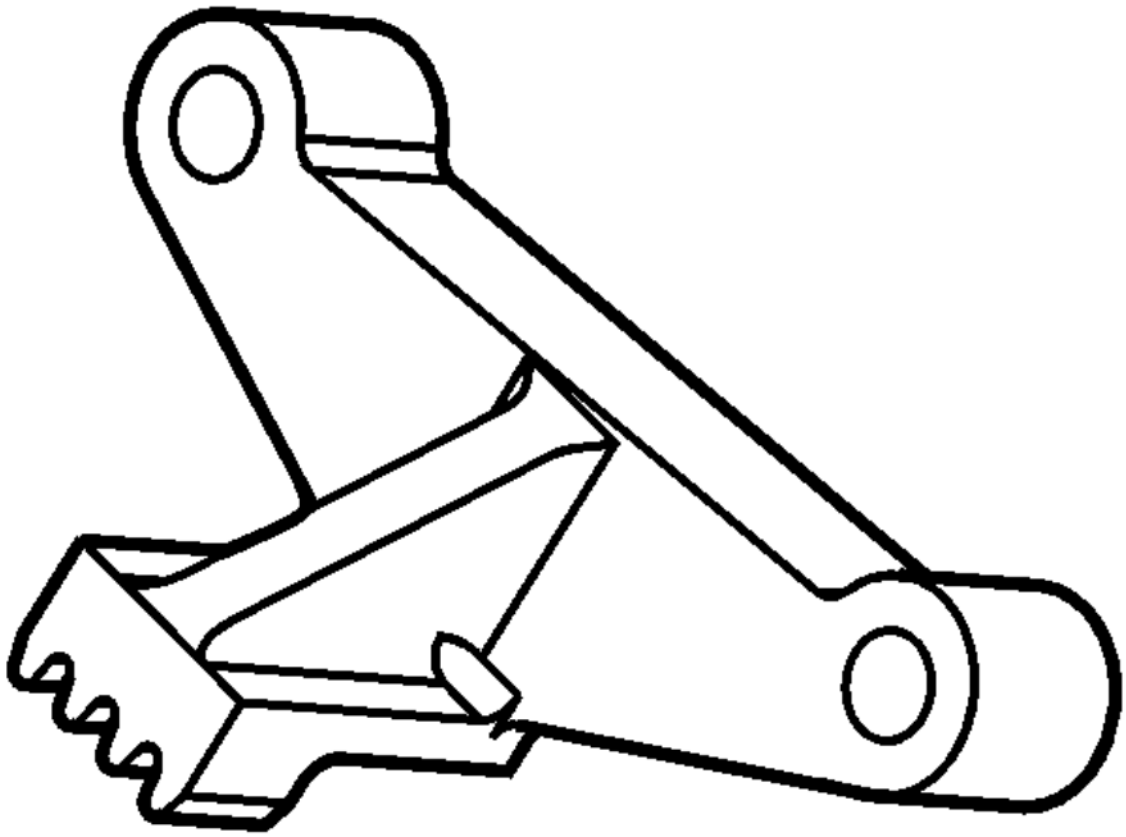

EN-5079
Camshaft Ac

Locking T

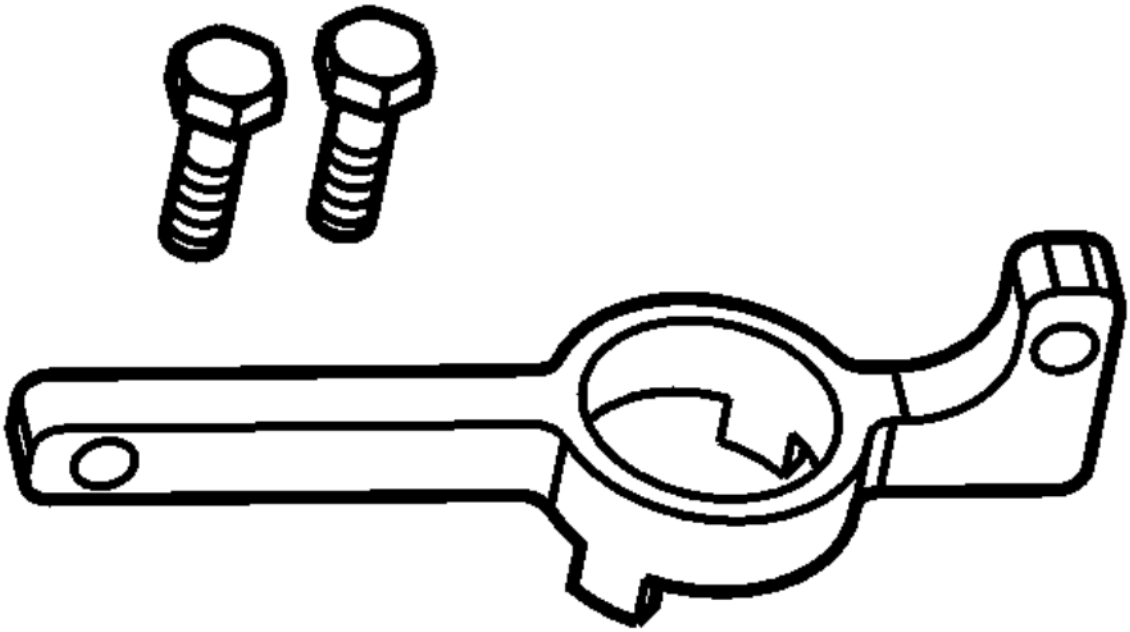

EN-508
Front Cranksh

Installe

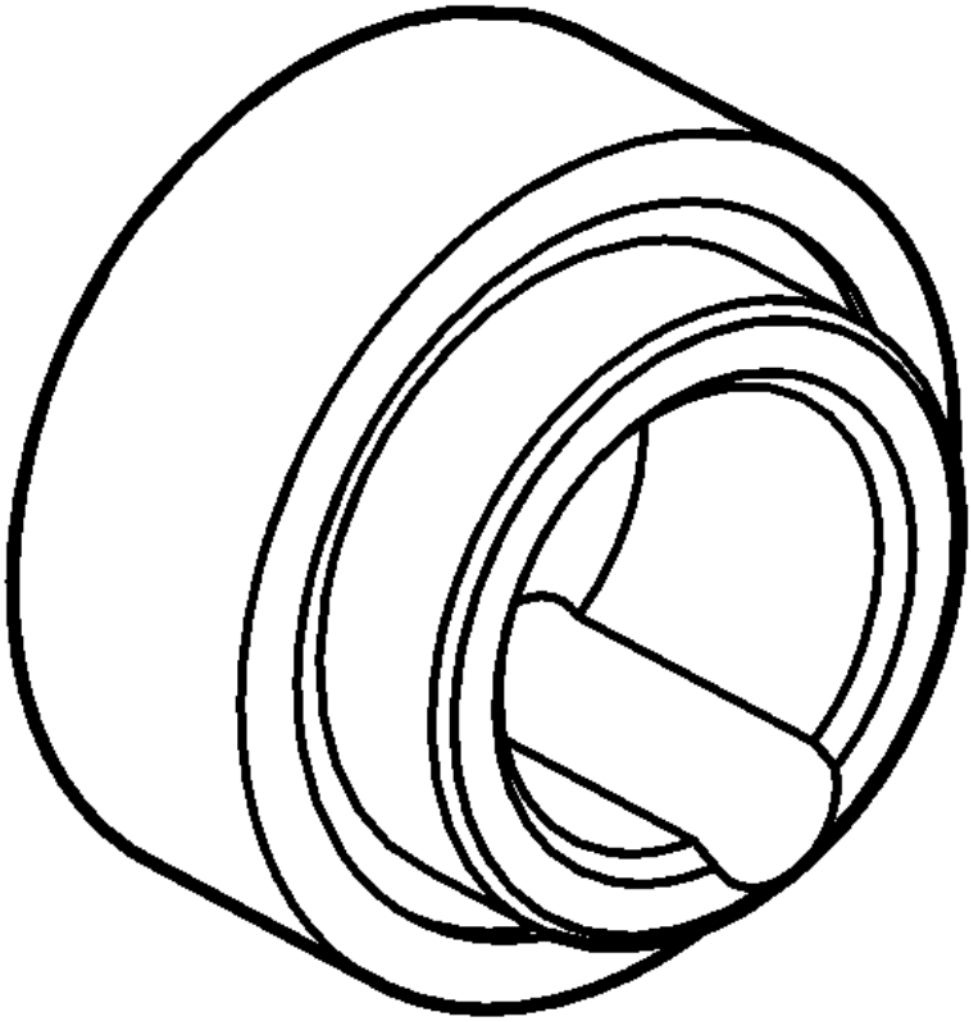

EN-508
Timing Cl

Tensioner Ret
Tool

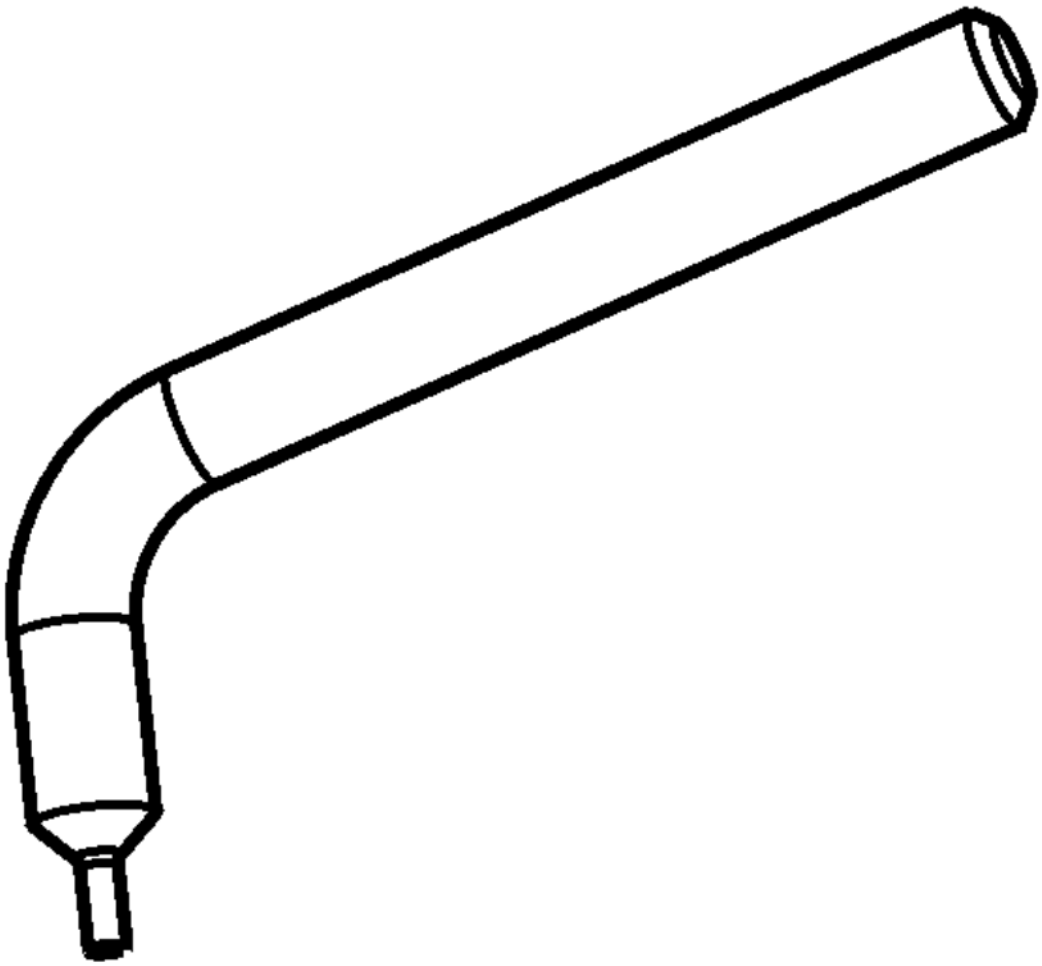

EN-513

Seal Insta

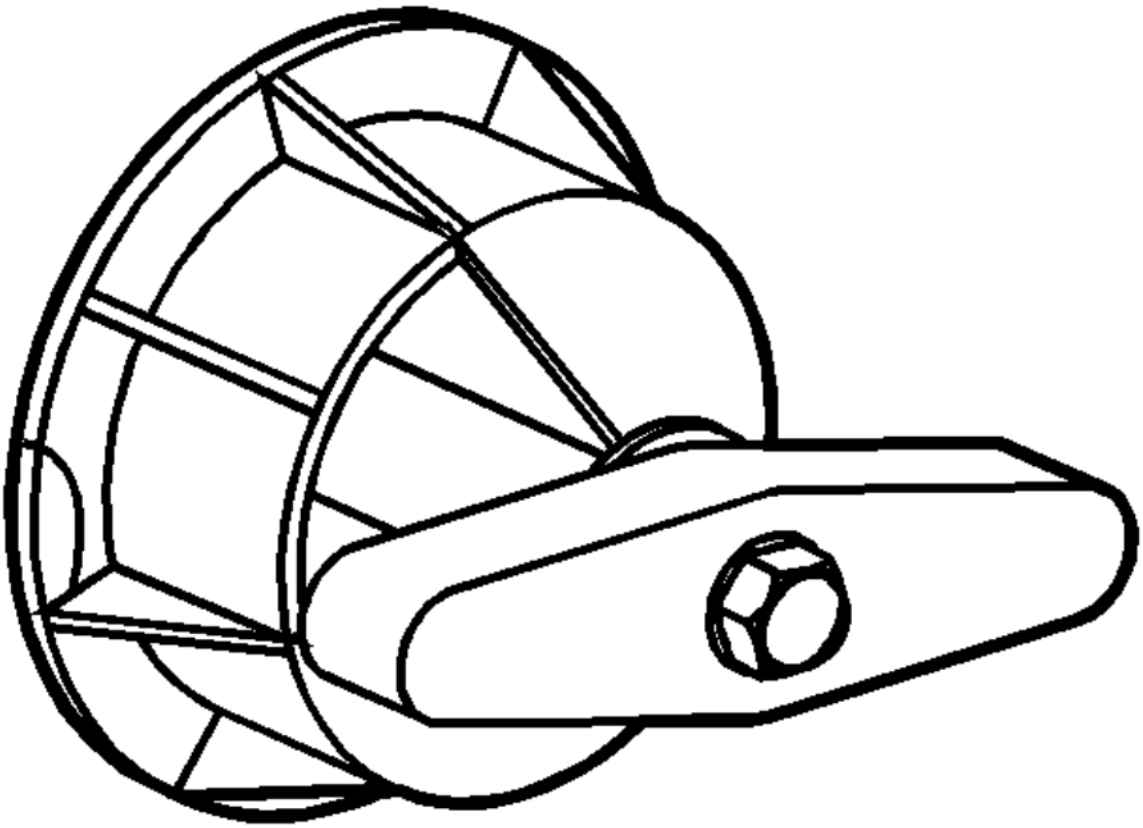

GE-787

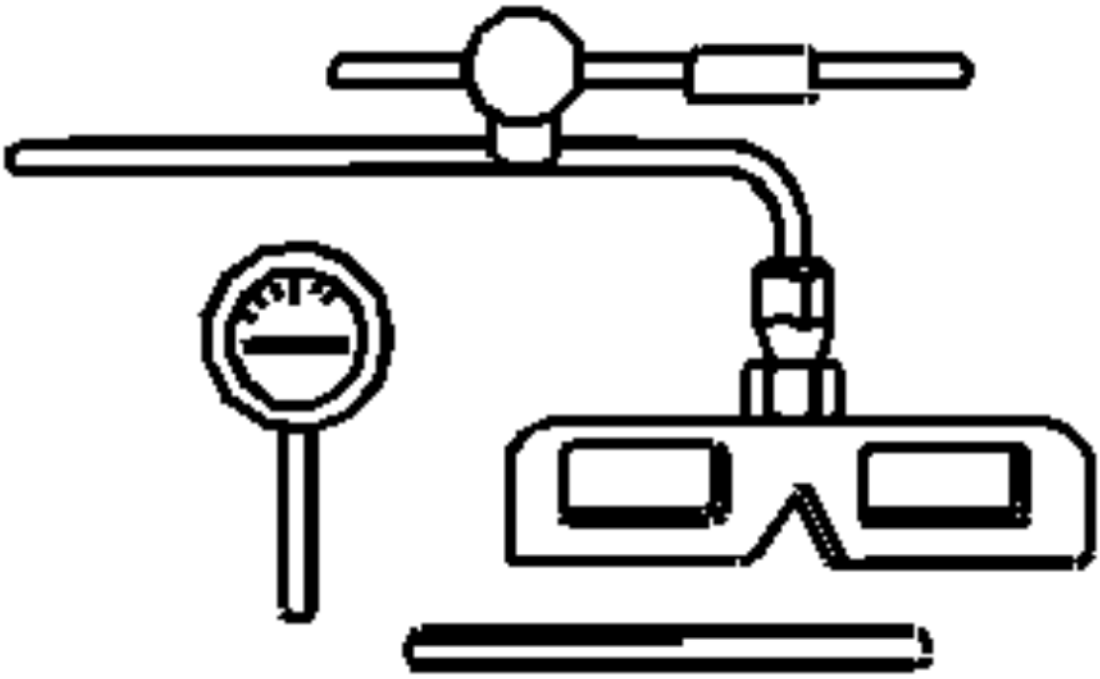

J-7872
Magnetic Bas
Indicator

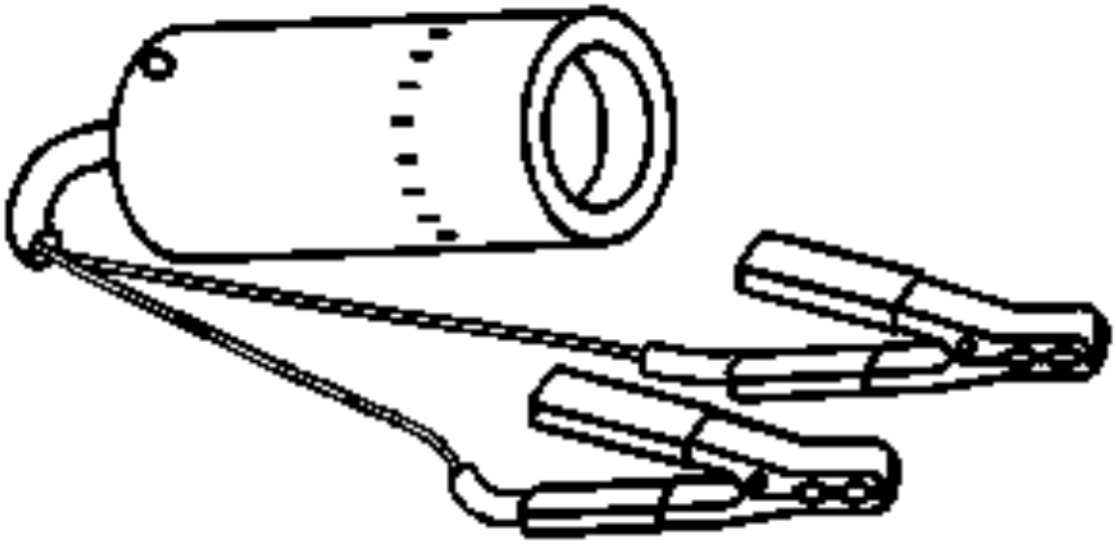

GE-422
J-28428-
J-4222
Universal 12
Detection I

2014 Engine

Engine Mechanical - 2.0L (LTG) - Specifications - Regal

SPECIFICATIONS

FASTENER TIGHTENING SPECIFICATIONS

Fastener Tightening Specifications

Application	Specification	
	Metric	English
Automatic Transmission Flexplate Bolt[1]		
• First Pass	30 N.m[1]	22 lb ft[1]
• Final Pass	40 Degrees[1]	
Balancer Chain Guide Bolt	10 N.m	89 lb in
Balancer Chain Tensioner Bolt	10 N.m	89 lb in
Balancer Shaft Driven Sprocket Bolt[1]		
• First Pass	40 N.m[1]	30 lb ft[1]
• Final Pass	50 Degrees[1]	
Balancer Shaft Housing Bolt	58 N.m	43 lb ft
Camshaft Bearing Cap Bolt	10 N.m	89 lb in
Camshaft Cover Bolt	10 N.m	89 lb in
Camshaft Cover Heat Shield Bolt	10 N.m	89 lb in
Camshaft Cover Opening Plug	35 N.m	26 lb ft
Camshaft Position Actuator Bolt[1]		
• First Pass	30 N.m[1]	22 lb ft[1]
• Final Pass	100 Degrees[1]	
Camshaft Position Actuator Solenoid Valve Bolt	10 N.m	89 lb in
Camshaft Position Sensor Bolt	10 N.m	89 lb in
Catalytic Converter Brace Bolt	22 N.m	16 lb ft
Catalytic Converter Brace Bracket Bolt	22 N.m	16 lb ft
Catalytic Converter Nut - Exhaust Manifold[1]	50 N.m[1]	37 lb ft[1]
Connecting Rod Bolt[1]		
• First Pass	25 N.m[1]	18 lb ft[1]
• Final Pass	110 Degrees[1]	
Crankshaft Position Sensor Reluctor Ring Bolt	15 N.m	11 lb ft
Crankshaft Balancer Bolt[1]		
• First Pass	150 N.m[1]	111 lb ft[1]
• Final Pass	180 Degrees[1]	
Crankshaft Position Sensor Bolt	10 N.m	89 lb in
Cylinder Head Bolt[1]		

• First Pass	30 N.m[1]	22 lb ft[1]
• Final Pass	190 Degrees[1]	
Cylinder Head Core Hole Plug	50 N.m	37 lb ft
Cylinder Head Oil Gallery Plug	40 N.m	30 lb ft
Drive Belt Tensioner Bolt	58 N.m	43 lb ft
Engine Block Oil Gallery Plug - Large, Left Side and Rear Engine Block	65 N.m	48 lb ft
Engine Block Oil Gallery Plug - Large, Left Side Lower Crankcase	65 N.m	48 lb ft
Engine Block Oil Gallery Plug - Small, Rear Engine Block	40 N.m	30 lb ft
Engine Coolant Air Bleed Pipe Bolt	10 N.m	89 lb in
Engine Coolant Heater Hole Plug	60 N.m	44 lb ft
Engine Coolant Thermostat Housing Bolt	10 N.m	89 lb in
Engine Front Cover Bolt - M6	10 N.m	89 lb in
Engine Front Cover Bolt - M10	58 N.m	43 lb ft
Engine Front Cover Bolt - M8	25 N.m	18 lb ft
Engine Lift Bracket Bolt - Front	25 N.m	18 lb ft
Engine Lift Bracket Bolt - Rear	25 N.m	18 lb ft
Engine Oil Cooler Bolt	10 N.m	89 lb in
Engine Oil Cooler Connector	50 N.m	37 lb ft
Engine Oil Level Indicator Switch Bolt	10 N.m	89 lb in
Engine Oil Pressure Sensor	27 N.m	20 lb ft
Exhaust Manifold Bolt[1]	20 N.m[1]	21 lb ft[1]
Exhaust Manifold Brace Bolt	25 N.m	18 lb ft
Exhaust Manifold Brace Nut[1]	25 N.m[1]	18 lb ft[1]
Exhaust Manifold Heat Shield Bolt	14 N.m	124 lb in
Exhaust Manifold Stud	20 N.m	21 lb ft
Flywheel Bolt[1]		
• First Pass	30 N.m[1]	22 lb ft[1]
• Final Pass	80 Degrees[1]	
Fuel Feed Intermediate Pipe Nut		
• First Pass - Fuel Feed Intermediate Pipe Nut to Fuel Rail	15 N.m	11 lb ft
• Second Pass - Fuel Feed Intermediate Pipe Nut to Fuel Pump	15 N.m	11 lb ft
• Third Pass - Fuel Feed Intermediate Pipe Nut to Fuel Rail	30 N.m	22 lb ft
• Final Pass - Fuel Feed Intermediate Pipe Nut to Fuel Pump	30 N.m	22 lb ft
Fuel Feed Pipe	30 N.m	22 lb ft
Fuel Feed Pipe Clip Stud	10 N.m	89 lb in

Fuel Injection Fuel Rail Bolt	25 N.m	18 lb ft
Fuel Injection Fuel Rail Fuel Pressure Sensor	33 N.m	24 lb ft
Fuel Pump Bolt	15 N.m	11 lb ft
Fuel Pump Shield Bolt	10 N.m	89 lb in
Ignition Coil Bolt	10 N.m	89 lb in
Intake Manifold Bolt	12 N.m	106 lb in
Intake Manifold Cover Bolt	9 N.m	80 lb in
Knock Sensor Bolt	25 N.m	18 lb ft
Lower Crankcase Bolt - Crankshaft Bearing[1]		
• First Pass	20 N.m[1]	15 lb ft[1]
• Final Pass	140 Degrees[1]	
Lower Crankcase Bolt - Perimeter[1]	25 N.m[1]	18 lb ft[1]
Manifold Absolute Pressure (MAP) Sensor Bolt	5 N.m	44 lb in
Oil Pan Baffle Bolt	10 N.m	89 lb in
Oil Pan Bolt, Long	10 N.m	89 lb in
Oil Pan Bolt, Perimeter	25 N.m	18 lb ft
Oil Pan Bolt, Lower	10 N.m	89 lb in
Oil Pan Drain Plug	25 N.m	18 lb ft
Oil Pump Suction Pipe Bolt	10 N.m	89 lb in
Oil Pump Flow Control Valve Bolt	10 N.m	89 lb in
Oil Filter	30 N.m	22 lb ft
Oxygen Sensor	42 N.m	31 lb ft
PCV Valve Bolt	10 N.m	89 lb in
Piston Oil Nozzle Bolt	10 N.m	89 lb in
Spark Plug	20 N.m	15 lb ft
Thermal Bypass Pipe Bolt	10 N.m	89 lb in
Throttle Body Bolt	10 N.m	89 lb in
Timing Chain Cover Bolt - Engine Front Cover	5 N.m	44 lb in
Timing Chain Guide Bolt	25 N.m	18 lb ft
Timing Chain Tensioner Pivot Arm Bolt	25 N.m	18 lb ft
Timing Chain Tensioner Shoe Bolt	25 N.m	18 lb ft
Turbocharger Coolant Feed and Return Pipe Bolt	35 N.m	26 lb ft
Turbocharger Coolant Feed Pipe Bolt	10 N.m	89 lb in
Turbocharger Coolant Return Pipe to Camshaft Cover Heat Shield Bolt	14 N.m	124 lb in
Turbocharger Exhaust Pipe Stud	25 N.m	18 lb ft
Turbocharger Nut[1]		
• First Pass	30 N.m[1]	22 lb ft[1]
• Final Pass	90 Degrees[1]	
Turbocharger Oil Feed Pipe Bolt	35 N.m	26 lb ft
Turbocharger Oil Feed and Return Pipe Bolt	10 N.m	89 lb in
Vacuum Pump Bolt	10 N.m	89 lb in

Water Outlet Bolt	10 N.m	89 lb in
Water Pump Bolt	25 N.m	18 lb ft
Water Pump Housing Bolt	10 N.m	89 lb in
[1] Use NEW fastener.		

ENGINE MECHANICAL SPECIFICATIONS

Engine Mechanical Specifications

Application	Specification	
	Metric	English
General Data		
• Engine Type	Inline 4 Cylinder	
• Displacement	2.0 L	122 CID
• RPO	LTG	
• Liter (VIN)	-	
• Bore	85.992-86.008 mm	3.3855-3.3861 in
• Stroke	86 mm	3.386 in
• Compression Ratio	9.50	
• Spark Plug Gap	0.95-1.10 mm	0.037-0.043 in
Block		
• Crankshaft Main Bearing Bore Diameter	60.862-60.876 mm	2.3961-2.3967 in
• Cylinder Bore Diameter	85.992-86.008 mm	3.3855-3.3861 in
• Cylinder Bore Out-of-Round - Maximum	0.013 mm	0.0005 in
• Cylinder Head Deck Surface Flatness - over 25 mm length	0.025 mm	0.001 in
• Cylinder Head Deck Surface Flatness - over 150 mm length	0.050 mm	0.002 in
Engine Block to Bedplate Flatness - overall	0.1 mm	0.0039 in
Engine Block to Bedplate Flatness - straightness	0.050 mm in 100 mm	0.002 in in 3.937 in
Piston Deck Height - Below Deck	1.155-1.725 mm	0.0455-0.0679 in
Camshaft		
• Camshaft End Play	0.040-0.307 mm	0.0016-0.0121 in
• Camshaft Journal Diameter - Journal 1	34.935-34.960 mm	1.3754-1.3764 in
• Camshaft Journal Diameter - Journal 2 thru 5	26.935-26.960 mm	1.0604-1.0614 in
• Camshaft Thrust Width - Camshaft with Phaser installed	30.025-30.175 mm	1.1821-1.1880 in
• Camshaft Thrust Width - Cylinder Head	29.868-29.890 mm	1.1759-1.1768 in
Connecting Rod		
• Connecting Rod Bearing to Crankpin Clearance	0.030-0.073 mm	0.0012-0.0029 in

• Connecting Rod Bore Diameter - Bearing End	52.118-52.134 mm	2.0519-2.05252 in
• Connecting Rod Bore Diameter - Pin End	24.007-24.017 mm	0.9452-0.9455 in
• Connecting Rod Side Clearance	0.070-0.370 mm	0.0028-0.0146 in
• Connecting Rod Straightness - Bend - Maximum	0.017 mm	0.0007 in
• Connecting Rod Straightness - Twist - Maximum	0.040 mm	0.0016 in
Crankshaft		
• Connecting Rod Pin Diameter	48.999-49.015 mm	1.9291-1.9297 in
• Crankshaft End Play	0.040-0.270 mm	0.0016-0.0106 in
• Crankshaft Main Bearing Clearance	0.020-0.048 mm	0.0008-0.0019 in
• Crankshaft Main Journal Diameter	55.993-56.009 mm	2.2044-2.2051 in
Cylinder Head		
• Surface Flatness - Block Deck - in 25 mm	0.025 mm	0.0001 in
• Surface Flatness - Block Deck - in 150 mm	0.050 mm	0.0019 in
• Surface Flatness - Block Deck - between bolts	0.030 mm	0.0012 in
• Surface Flatness - Block Deck - Overall	0.100 mm	0.0039 in
• Valve Guide Bore - Exhaust	6.000-6.020 mm	0.2362-0.2370 in
• Valve Guide Bore - Intake	6.000-6.020 mm	0.2362-0.2370 in
• Valve Lifter Bore Diameter - Stationary Lash Adjusters	12.008-12.030 mm	0.4728-0.4736 in
• Valve Seat Angle - Relief Surface	30 Degrees	
• Valve Seat Angle - Seating Surface	45 Degrees	
• Valve Seat Angle - Undercut Surface	60 Degrees	
• Valve Seat Runout - Maximum	0.080 mm	0.0031 in
Lubrication System		
• Oil Pressure - @700 RPM 100°C	140-200 kPa	20-29 psi
• Oil Capacity - 2WD	4.7L	5.0 quarts
• Oil Capacity - 4WD/AWD	5.7L	6.0 quarts
Piston Rings		
• Piston Ring End Gap - Top	0.20-0.35 mm	0.008-0.014 in
• Piston Ring End Gap - Second	0.35-0.55 mm	0.014-0.022 in
• Piston Ring End Gap - Oil Control	0.25-0.75 mm	0.010-0.030 in
• Piston Ring to Groove Clearance - Top	0.04-0.08 mm	0.0015-0.0031 in
• Piston Ring to Groove Clearance - Second	0.030-0.070 mm	0.0012-0.0030 in
• Piston Ring to Groove Clearance - Oil Control	0.024-0.176 mm	0.0009-0.0069 in
• Piston Ring Thickness - Top	1.170-1.190 mm	0.0461-0.0469 in
• Piston Ring Thickness - Second	1.470-1.490 mm	0.0579-0.0587 in

• Piston Ring Thickness - Oil Control - Rail	0.447-0.473 mm	0.0176-0.0186 in
• Piston Ring Thickness - Oil Control - Spacer	0.960-1.040 mm	0.0378-0.0409 in
Pistons and Pins		
• Pin - Piston Pin Clearance to Connecting Rod Bore	0.007-0.020 mm	0.0003-0.0008 in
• Pin - Piston Pin Clearance to Piston Pin Bore	0.005-0.013 mm	0.0002-0.0005 in
• Pin - Piston Pin Diameter	23.997-24.000 mm	0.9448-0.9449 in
• Pin - Piston Pin End Play	0.263-1.164 mm	0.0104-0.0458 in
• Piston - Piston Diameter - @14.8 mm up	85.968-85.982 mm	3.3846-3.3851 in
• Piston - Piston Pin Bore Diameter	24.005-24.010 mm	0.9451-0.9453 in
• Piston - Piston Ring Groove Width - Top	1.23-1.25 mm	0.0484-0.0492 in
• Piston - Piston Ring Groove Width - Second	1.52-1.54 mm	0.0598-0.0606 in
• Piston - Piston Ring Groove Width - Oil Control	2.01-2.03 mm	0.0791-0.0799 in
• Piston - Piston to Bore Clearance - w/polymer	-0.022 to +0.024 mm	-0.0009 to +0.0009 in
Valve System		
• Valves - Valve Face Angle	45 Degrees	
• Valves - Valve Face Runout - Maximum	0.040 mm	0.0016 in
• Valves - Valve Seat Runout - Maximum	0.080 mm	0.0031 in
• Valves - Valve Seat Gauge Ball Height - Exhaust	12.746-12.976 mm	0.4912-0.5038 in
• Valves - Valve Seat Gauge Ball Height - Intake	12.425-12.653 mm	0.4892-0.4981 in
• Valves - Valve Stem Diameter - Exhaust	5.945-5.965 mm	0.2341-0.2348 in
• Valves - Valve Stem Diameter - Intake	5.955-5.975 mm	0.2344-0.2352 in
• Valves - Valve Stem Installed Height	Check and Record	
• Valves - Valve Stem to Guide Clearance - Exhaust	0.038-0.082 mm	0.0015-0.0032 in
• Valves - Valve Stem to Guide Clearance - Intake	0.030-0.057 mm	0.0012-0.0022 in
• Valve Lash Adjusters - Valve Lash Adjuster Diameter - Stationary Lash Adjuster	11.986-12.000 mm	0.0005-0.0020 in
• Valve Lash Adjusters - Valve Lash-Adjuster-to-Bore Clearance - Stationary Lash Adjuster	0.013-0.051 mm	3.2210-3.2299 in
• Valve Springs - Valve Spring Installed Height	35.0 mm	1.3779 in
• Valve Springs - Valve Spring Load - Closed - @35 mm	247-273 N	56-61 lb
• Valve Springs - Valve Spring Load - Open - @24 mm	598-662 N	134-149 lb

ADHESIVES, FLUIDS, LUBRICANTS, AND SEALERS

Adhesives, Fluids, Lubricants, and Sealers

		GM Part Number

Application	Type of Material	United States	Canada
Balance Shaft Bearings	5W-30	19293000	19286321
Cam Lobes	5W-30	19293000	19286321
Camshaft Cover	Sealant	12378521	88901148
Crank Sensor O-ring	5W-30	19293000	19286321
Cylinder Bores	5W-30	19293000	19286321
Cylinder Head Plugs	Threadlocker	12345382	10953489
Engine Block Threaded Plugs	Sealant	12346004	10953480
Engine Block to Bedplate	Sealant	12378521	88901148
Engine Front Cover	Sealant	12378521	88901148
Engine Oil	5W-30	19293000	19286321
Fuel Injector O-rings	5W-30	19293000	19286321
Fuel Injector Tip Insulators, for Multiple Port Injection Only	5W-30	19293000	19286321
Hydraulic Lash Adjusters	5W-30	19293000	19286321
Ignition Coils	Lubricant	19260901	19260902
Intake and Exhaust Valve Stems	5W-30	19293000	19286321
Lower Oil Pan	Sealant	12378521	88901148
Main Bearings	5W-30	19293000	19286321
Oil Filter - Threads and O-ring Lead-in Chamfers	5W-30	19293000	19286321
Oil Level Indicator Tube O-ring	Lubricant	88862586	88862827
Oil Pan to Bedplate Joint	Sealant	12378521	88901148
Oil Pump- Pump Elements	5W-30	19293000	19286321
Oxygen Sensor Threads	Anti-seize	88862477	88862478
Piston Pin to Piston/Rod- Pin Bores of Piston and Rod	5W-30	19293000	19286321
Rod Bearings- Rod Pins of Crankshaft	5W-30	19293000	19286321
Thread Repair Cutting Oil	Lubricant	1052864	992881
Thread Repair	Cleaner	88862650	88901247
Timing Chain Tensioner Cover	Sealant	12378521	88901148
Valves	Parts Immersion Solvent	12345368	10953514
Valve Rocker Arm/Valve Tip	5W-30	19293000	19286321
Water Feed Tube O-rings	Lubricant	19260901	19260902

THREAD REPAIR SPECIFICATIONS

Engine Block - Front View

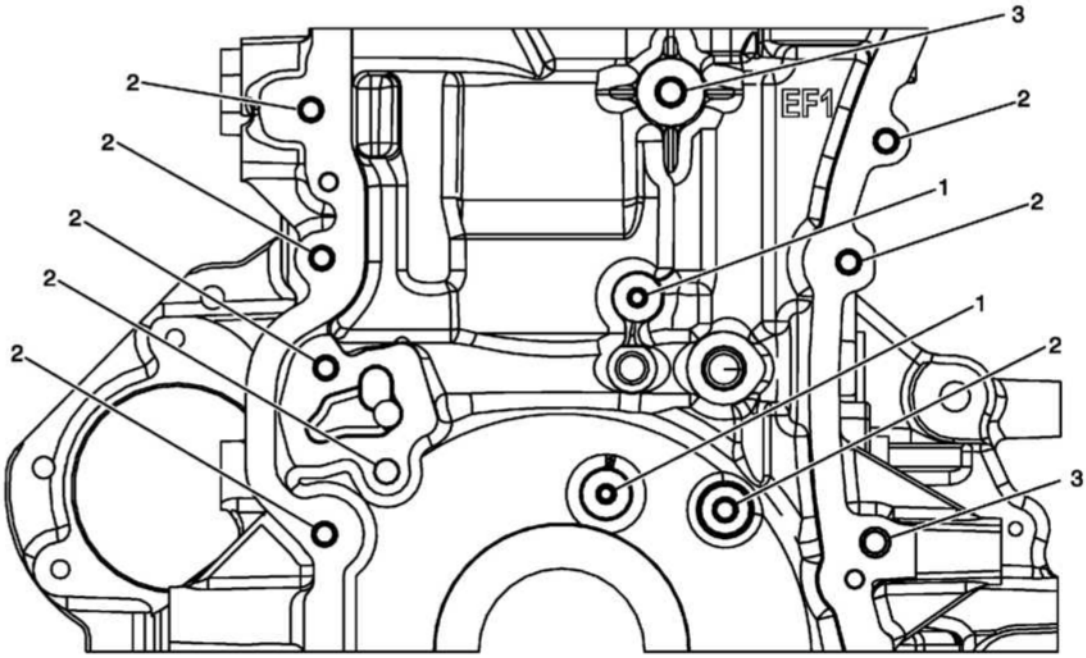

Fig. 1: Engine Block -- Front View
Courtesy of GENERAL MOTORS COMPANY

Engine Block - Front View

Service Call Out	Thread Size	Insert	Drill	Counterbore Tool	Tap	Driver	Drill Depth (Maximum)		Tap Depth (Maximum)	
EN 42385							MM	(IN)	MM	(IN)
1	M6x1.0	161031	201	202	203	204	23.0	0.907	23.0	0.907
2	M8x1.25	181213	206	207	208	209	29.0	1.14	29.0	1.14
3	M10x1.5	420	211	212	213	214	34.0	1.35	34.0	1.35

Engine Block - Back View

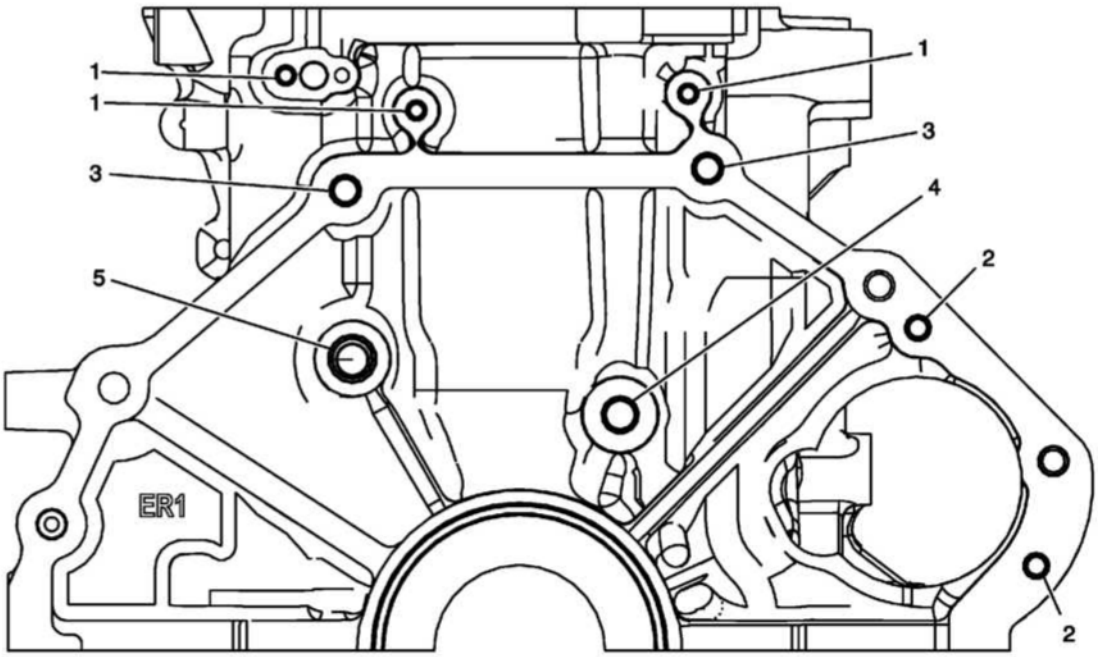

Fig. 2: Engine Block -- Back View
Courtesy of GENERAL MOTORS COMPANY

Engine Block - Back View

Service Call Out	Thread Size	Insert	Drill	Counterbore Tool	Tap	Driver	Drill Depth (Maximum)		Tap Depth (Maximum)	
EN 42385							MM	(IN)	MM	(IN)
1	M6x1.0	161031	201	202	203	204	23.0	0.907	23.0	0.907
2	M8x1.25	181213	206	207	208	209	29.0	1.14	29.0	1.14
3	M10x1.5	420	211	212	213	214	34.0	1.35	24.0	1.35
4	M12x1.75	865	856	857	858	859	27.5	1.08	27.5	1.08
5	M16x1.5	420	211	212	213	214	34.0	1.35	34.0	1.35

Engine Block - Right Side View

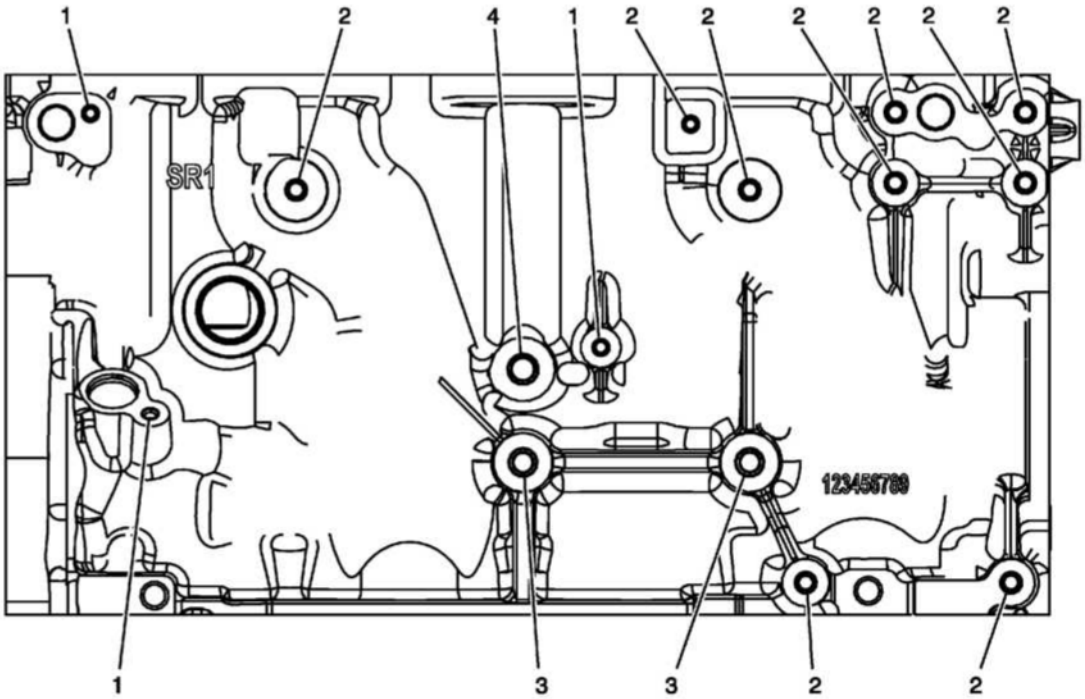

Fig. 3: Engine Block -- Right Side View
Courtesy of GENERAL MOTORS COMPANY

Engine Block - Right Side View

Service Call Out	Thread Size	Insert	Drill	Counterbore Tool	Tap	Driver	Drill Depth (Maximum)		Tap Depth (Maximum)	
EN 42385							MM	(IN)	MM	(IN)
1	M6x1.0	161031	201	202	203	204	23.0	0.907	23.0	0.907
2	M8x1.25	181213	206	207	208	209	29.0	1.14	29.0	1.14
3	m10x1.5	420	211	212	213	214	34.0	1.35	34.0	1.35
4	M12x1.75	865	856	857	858	859	27.5	1.08	27.5	1.08

Engine Block - Bottom View

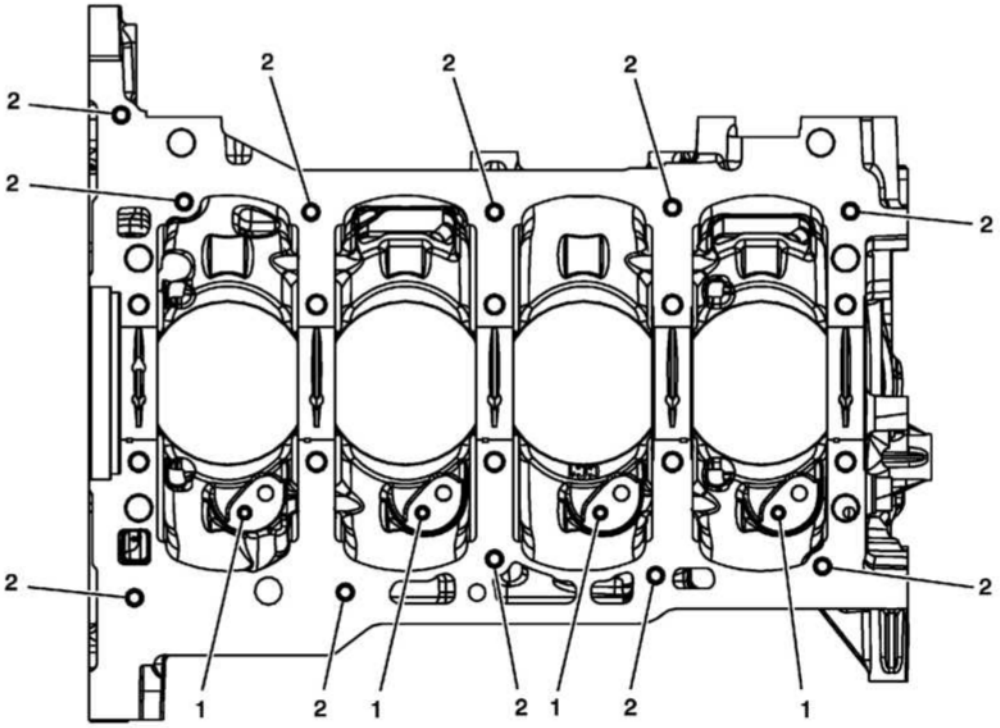

Fig. 4: Engine Block -- Bottom View
Courtesy of GENERAL MOTORS COMPANY

Engine Block - Bottom View

Service Call Out	Thread Size	Insert	Drill	Counterbore Tool	Tap	Driver	Drill Depth (Maximum)		Tap Depth (Maximum)	
EN 42385							MM	(IN)	MM	(IN)
1	M6x1.0	161031	201	202	203	204	23.0	0.907	23.0	0.907
2	M8x1.25	181213	206	207	208	209	29.0	1.14	29.0	1.14

Engine Block - Left Side View

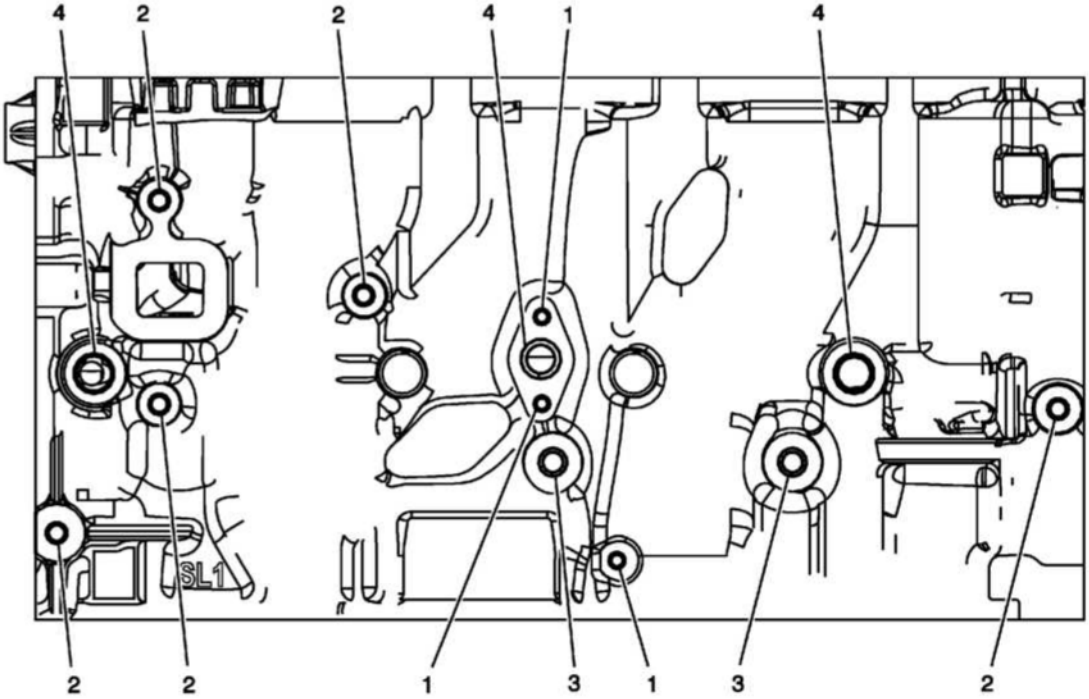

Fig. 5: Engine Block -- Left Side View
Courtesy of GENERAL MOTORS COMPANY

Engine Block - Left Side View

Service Call Out	Thread Size	Insert	Drill	Counterbore Tool	Tap	Driver	Drill Depth (Maximum)		Tap Depth (Maximum)	
EN 42385							MM	(IN)	MM	(IN)
1	M6x1.0	161031	201	202	203	204	23.0	0.907	23.0	0.907
2	M8x1.25	181213	206	207	208	209	29.0	1.14	29.0	1.14
3	M10x1.5	420	211	212	213	214	34.0	1.35	34.0	1.35
4	M16x1.5	420	211	212	213	214	22.0	0.866	22.0	0.866

Engine Block - Top View

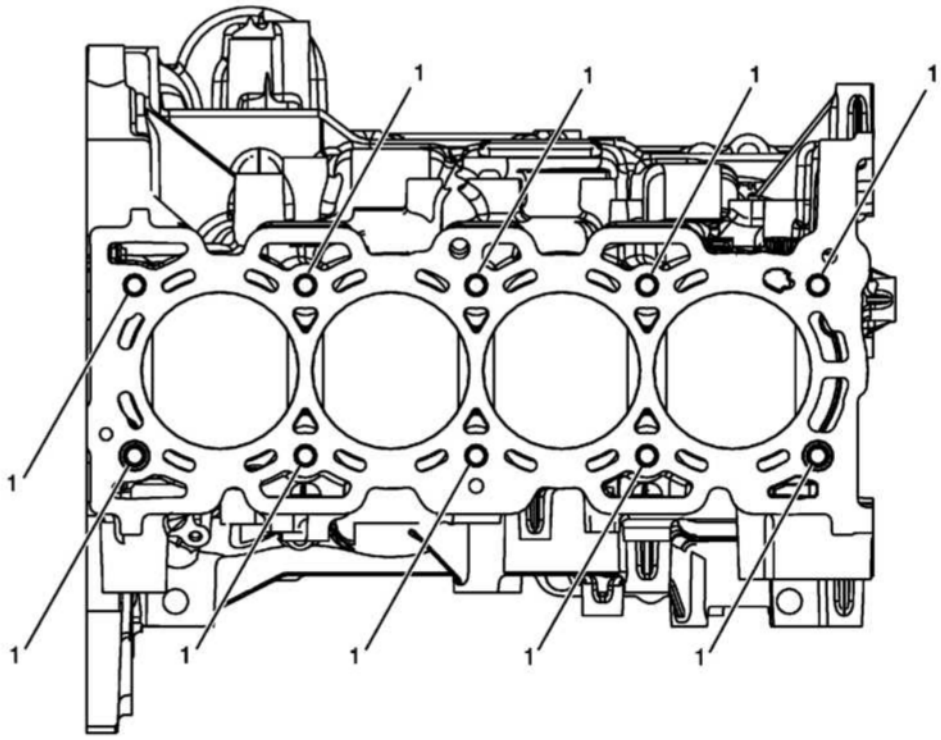

Fig. 6: Engine Block -- Top View
Courtesy of GENERAL MOTORS COMPANY

Engine Block - Top View

Service Call Out	Thread Size	Insert	Drill	Counterbore Tool	Tap	Driver	Drill Depth (Maximum)		Tap Depth (Maximum)	
EN 42385							MM	(IN)	MM	(IN)
1	M11x2.0	108	723	none	724	725	88.0	3.46	80.0	3.15

Lower Crankcase - Bottom View

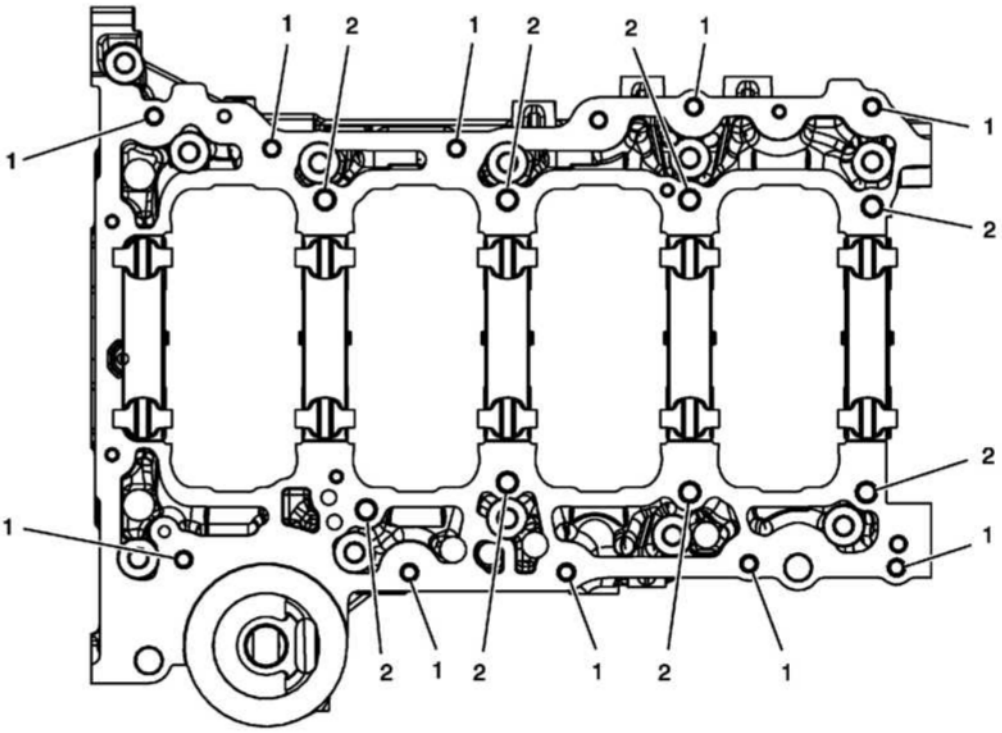

Fig. 7: Lower Crankcase -- Bottom View
Courtesy of GENERAL MOTORS COMPANY

Lower Crankcase - Bottom View

Service Call Out	Thread Size	Insert	Drill	Counterbore Tool	Tap	Driver	Drill Depth (Maximum)		Tap Depth (Maximum)	
EN 42385							MM	(IN)	MM	(IN)
1	M8x1.25	181213	206	207	208	209	29.0	1.14	29.0	1.14
2	M10x1.5	420	211	212	213	214	34.0	1.35	34.0	1.35

Lower Crankcase - Right Side View

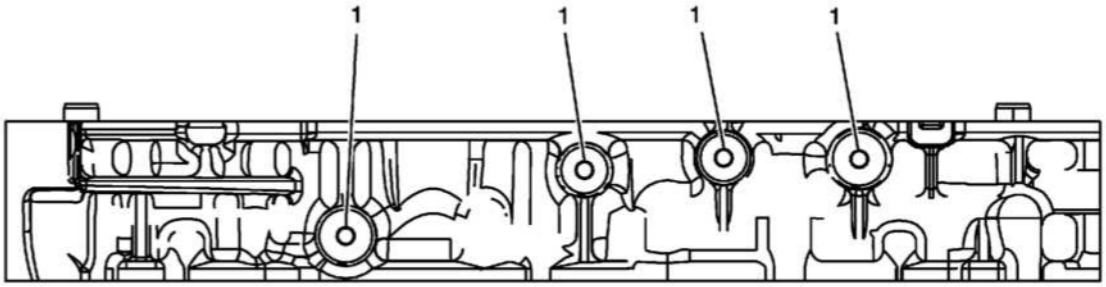

Fig. 8: Lower Crankcase -- Right Side View
Courtesy of GENERAL MOTORS COMPANY

Lower Crankcase - Right Side View

Service Call Out	Thread Size	Insert	Drill	Counterbore Tool	Tap	Driver	Drill Depth (Maximum)		Tap Depth (Maximum)	
EN 42385							MM	(IN)	MM	(IN)
1	M10x1.5	420	211	212	213	214	34.0	1.35	34.0	1.35

Lower Crankcase - Left Side View

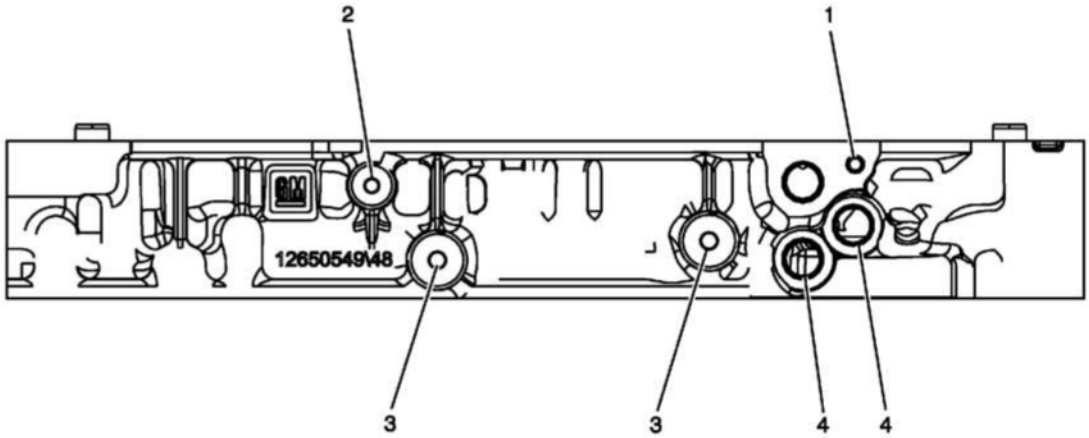

Fig. 9: Lower Crankcase -- Left Side View
Courtesy of GENERAL MOTORS COMPANY

Lower Crankcase - Left Side View

Service Call Out	Thread Size	Insert	Drill	Counterbore Tool	Tap	Driver	Drill Depth (Maximum)		Tap Depth (Maximum)	
EN 42385							MM	(IN)	MM	(IN)
1	M6x1.0	161031	201	202	203	204	23.0	0.907	23.0	0.907
2	M8x1.25	181213	206	207	208	209	29.0	1.14	29.0	1.14
3	M10x1.5	420	211	212	213	214	34.0	1.35	34.0	1.35
4	M16x1.5	420	211	212	213	214	22.0	0.866	22.0	0.866

Cylinder Head - Top View

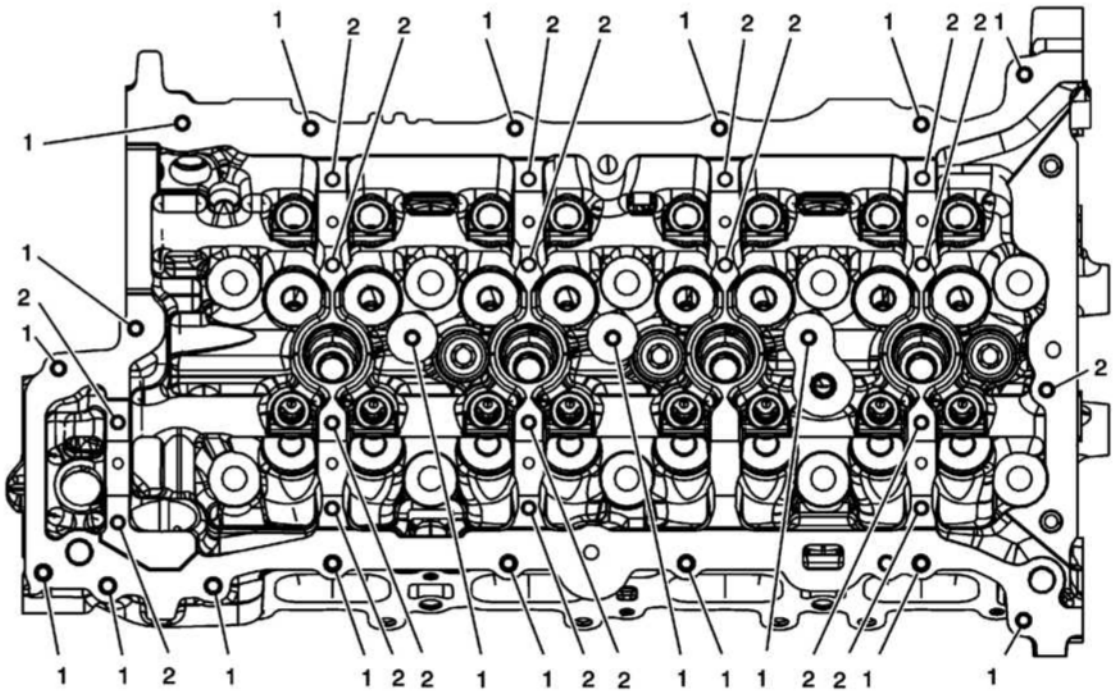

Fig. 10: Cylinder Head -- Top View
Courtesy of GENERAL MOTORS COMPANY

Cylinder Head - Top View

Service Call Out	Thread Size	Insert	Drill	Counterbore Tool	Tap	Driver	Drill Depth (Maximum)		Tap Depth (Maximum)	
EN 42385							MM	(IN)	MM	(IN)
1	M6x1.0	205	201	202	203	204	23.0	0.907	23.0	0.907
2	M6x1.0	205	701	none	203	204	23.0	0.907	23.0	0.907

Cylinder Head Right Side View - Intake Manifold Deck Face

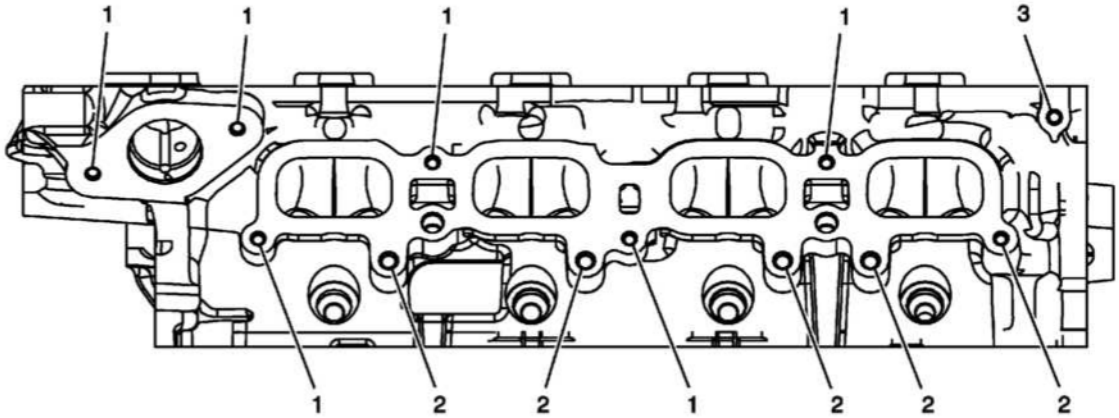

Fig. 11: Cylinder Head Right Side View -- Intake Manifold Deck Face
Courtesy of GENERAL MOTORS COMPANY

Cylinder Head Right Side View - Intake Manifold Deck Face

Service Call Out	Thread Size	Insert	Drill	Counterbore Tool	Tap	Driver	Drill Depth Maximum		Tap Depth Maximum	
EN 42385							MM	IN	MM	IN
1	M6x1.0	161031	201	202	203	204	23.0	0.907	23.0	0.907
2	M6x1.0	205	201	202	203	204	23.0	0.907	23.0	0.907
3	M6x1.0	205	701	none	203	204	23.0	0.907	23.0	0.907

Cylinder Head Left Side View - Exhaust Manifold Deck Face

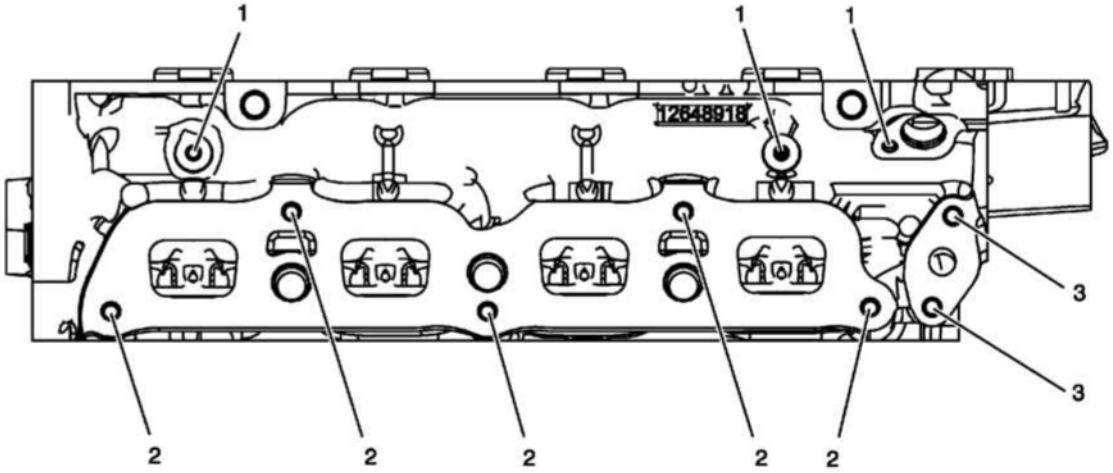

Fig. 12: Cylinder Head Left Side View -- Exhaust Manifold Deck Face
Courtesy of GENERAL MOTORS COMPANY

Cylinder Head Left Side View - Exhaust Manifold Deck Face

Service Call Out	Thread Size	Insert	Drill	Counterbore Tool	Tap	Driver	Drill Depth (Maximum)		Tap Depth (Maximum)	
EN 42385-850							MM	(IN)	MM	(IN)
1	M6x1.0	205	201	202	203	204	23.0	0.907	23.0	0.907
2	M8x1.25	181213	206	207	208	209	29.0	1.14	29.0	1.14
3	M8x1.25	210	206	207	208	209	29.0	1.14	29.0	1.14

Cylinder Head - Front View

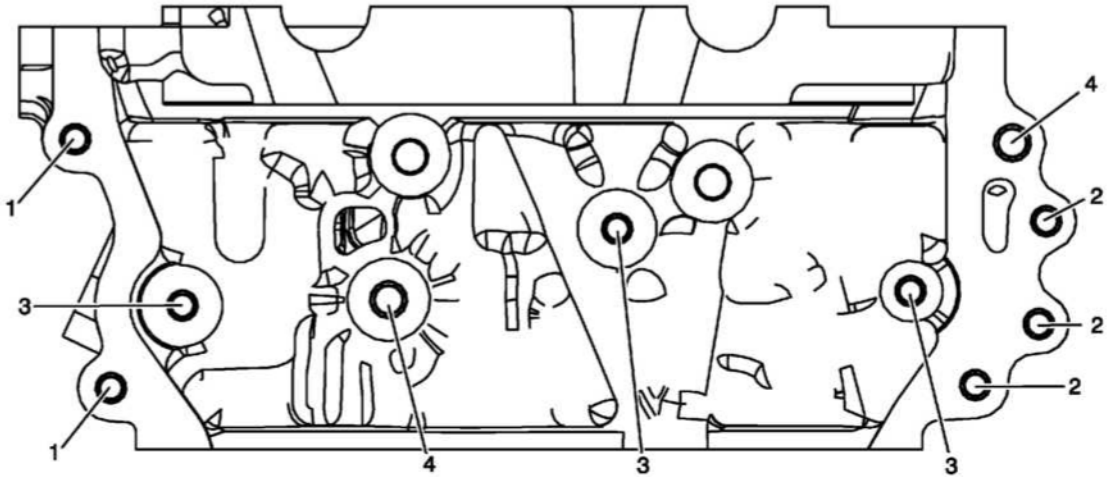

Fig. 13: Cylinder Head -- Front View
Courtesy of GENERAL MOTORS COMPANY

Cylinder Head - Front View

Service Call Out	Thread Size	Insert	Drill	Counterbore Tool	Tap	Driver	Drill Depth (Maximum)		Tap Depth (Maximum)	
EN 42385							MM	(IN)	MM	(IN)
1	M8x1.25	18129	206	207	208	209	29.0	1.14	29.0	1.14
2	M8x1.25	18127	206	207	208	209	29.0	1.14	29.0	1.14
3	M8x1.25	181213	206	207	208	209	29.0	1.14	29.0	1.14
4	M10x1.5	420	211	212	213	214	34.0	1.35	34.0	1.35

Cylinder Head - Back View

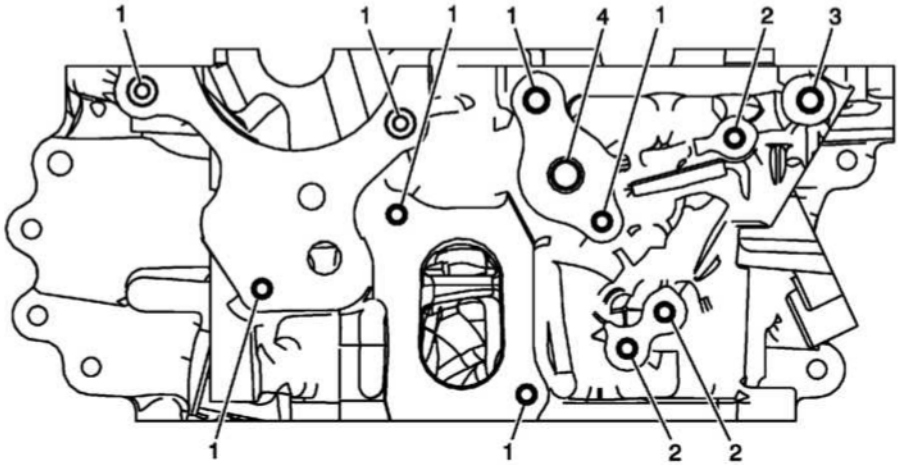

Fig. 14: Cylinder Head -- Back View
Courtesy of GENERAL MOTORS COMPANY

Cylinder Head - Back View

Service Call Out	Thread Size	Insert	Drill	Counterbore Tool	Tap	Driver	Drill Depth Maximum		Tap Depth Maximum	
EN 42385							MM	IN	MM	IN
1	M6X1	205	201	202	203	204	20	0.787	16	0.63
2	M6X1	205	701	none	203	204	20	0.787	16	0.63
3	M8x1.25	181213	206	207	208	209	29.0	1.14	29.0	1.14
4	M12x1.75	865	856	857	858	859	18	0.709	14	0.551

Upper Oil Pan - Top View

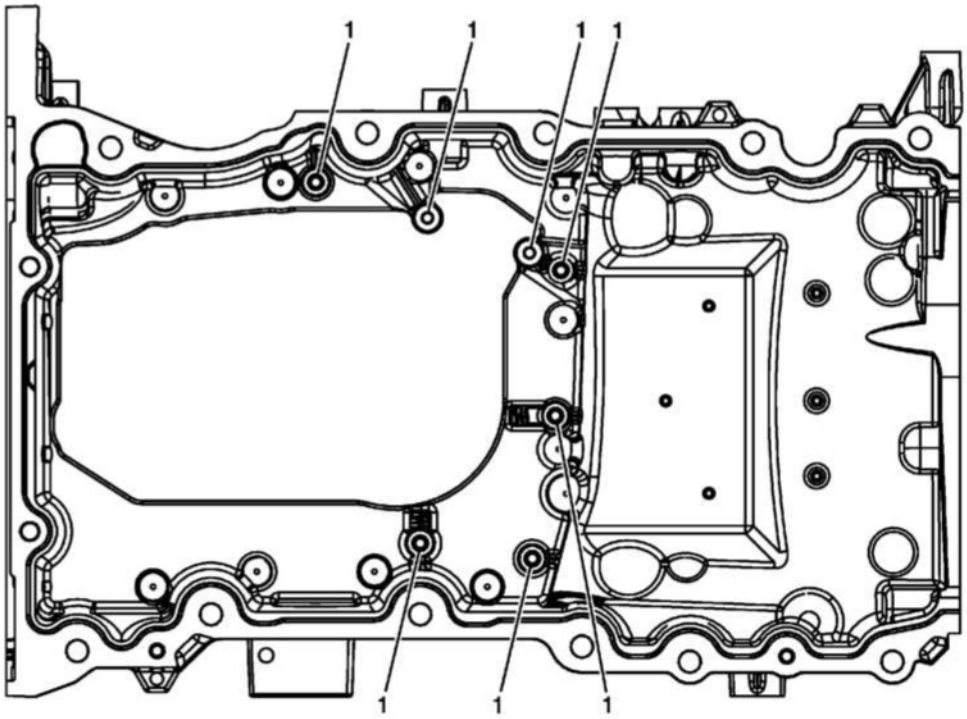

Fig. 15: Upper Oil Pan -- Top View
Courtesy of GENERAL MOTORS COMPANY

Upper Oil Pan - Top View

Service Call Out	Thread Size	Insert	Drill	Counterbore Tool	Tap	Driver	Drill Depth (Maximum)		Tap Depth (Maximum)	
EN 42385							MM	(IN)	MM	(IN)
1	M6x1.0	161031	201	202	203	204	23.0	0.907	23.0	0.907

Upper Oil Pan - Bottom View

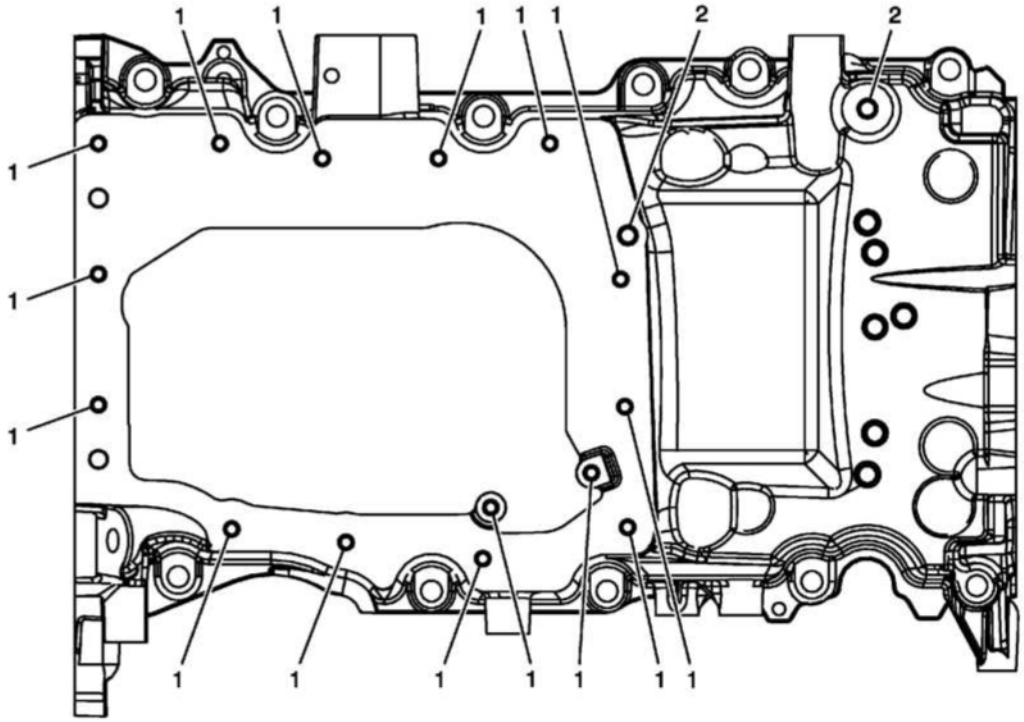

Fig. 16: Upper Oil Pan -- Bottom View
Courtesy of GENERAL MOTORS COMPANY

Upper Oil Pan - Bottom View

Service Call Out	Thread Size	Insert	Drill	Counterbore Tool	Tap	Driver	Drill Depth (Maximum)		Tap Depth (Maximum)	
EN 42385							MM	(IN)	MM	(IN)
1	M6x1.0	161031	201	202	203	204	23.0	0.907	23.0	0.907
2	M8x1.25	181213	206	207	208	209	29.0	1.14	29.0	1.14

Upper Oil Pan - Front View

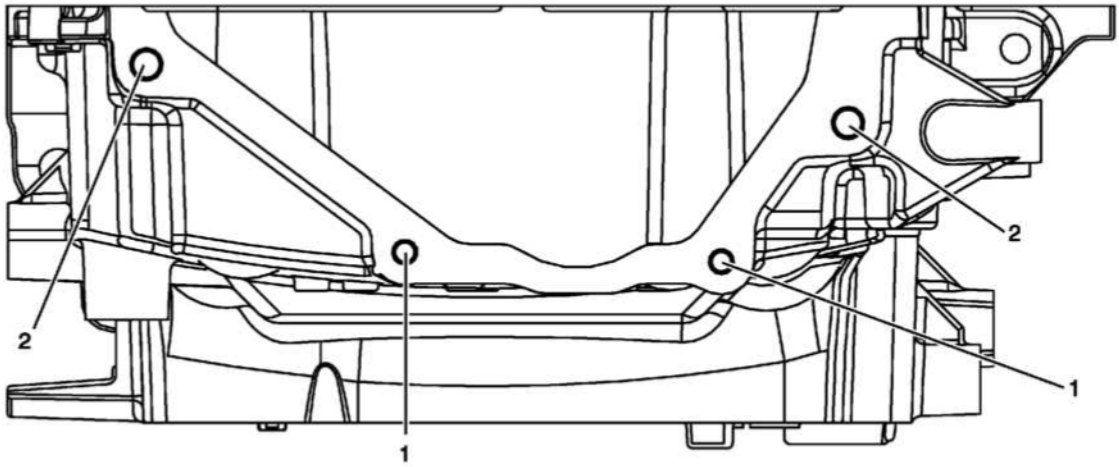

Fig. 17: Upper Oil Pan -- Front View
Courtesy of GENERAL MOTORS COMPANY

Upper Oil Pan - Front View

Service Call Out	Thread Size	Insert	Drill	Counterbore Tool	Tap	Driver	Drill Depth (Maximum)		Tap Depth (Maximum)	
EN 42385							MM	(IN)	MM	(IN)
1	M10x1.5	216	211	212	213	214	34.0	1.35	34.0	1.35
2	M8x1.25	181213	206	207	208	209	29.0	1.14	29.0	1.14

Upper Oil Pan - Back View

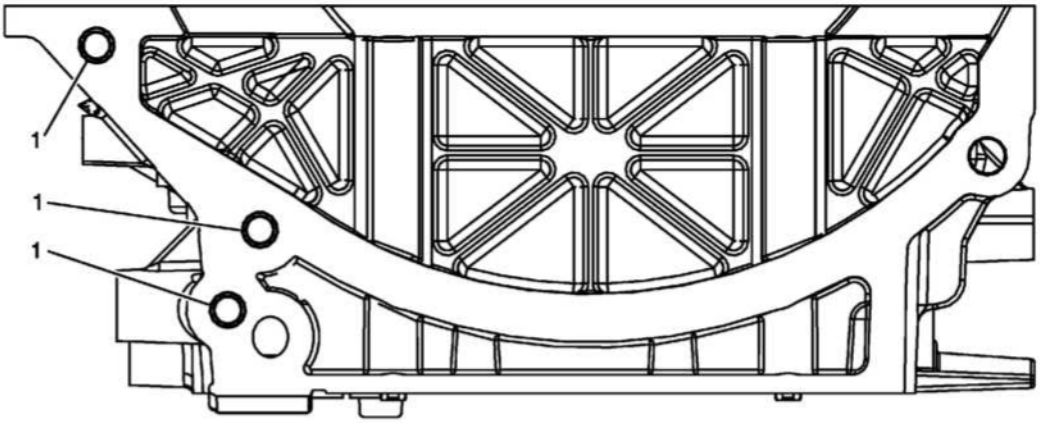

Fig. 18: Upper Oil Pan -- Back View
Courtesy of GENERAL MOTORS COMPANY

Upper Oil Pan - Back View

Service Call Out	Thread Size	Insert	Drill	Counterbore Tool	Tap	Driver	Drill Depth (Maximum)		Tap Depth (Maximum)	
EN 42385							MM	(IN)	MM	(IN)
1	M6x1.0	161031	201	202	203	204	23.0	0.907	23.0	0.907

Engine Front Cover - Top View

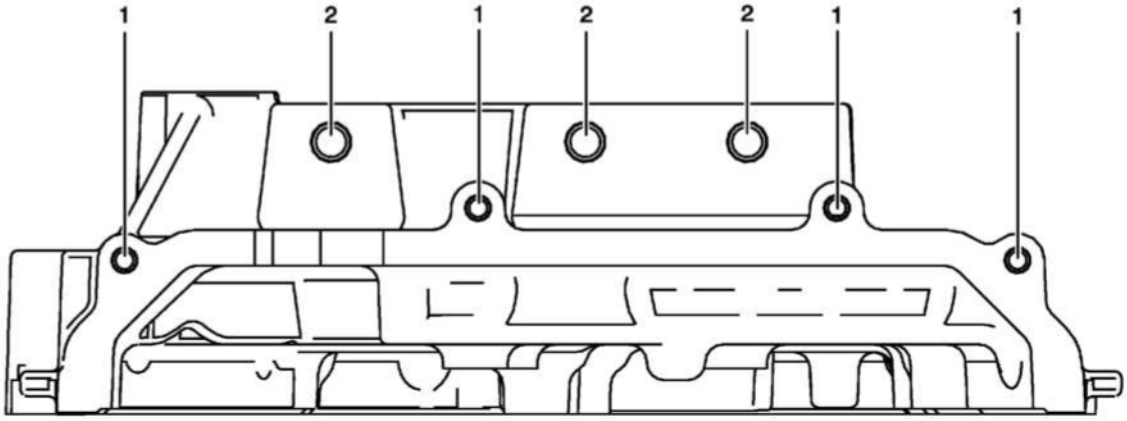

Fig. 19: Engine Front Cover -- Top View
Courtesy of GENERAL MOTORS COMPANY

Engine Front Cover - Top View

Service Call Out	Thread Size	Insert	Drill	Counterbore Tool	Tap	Driver	Drill Depth (Maximum)		Tap Depth (Maximum)	
EN 42385							MM	(IN)	MM	(IN)
1	M5x0.8	3005	3001	3002	3003	3004	23.0	0.907	23.0	0.907
2	M6x1.0	205	201	202	203	204	23.0	0.907	23.0	0.907

Engine Front Cover - Front View

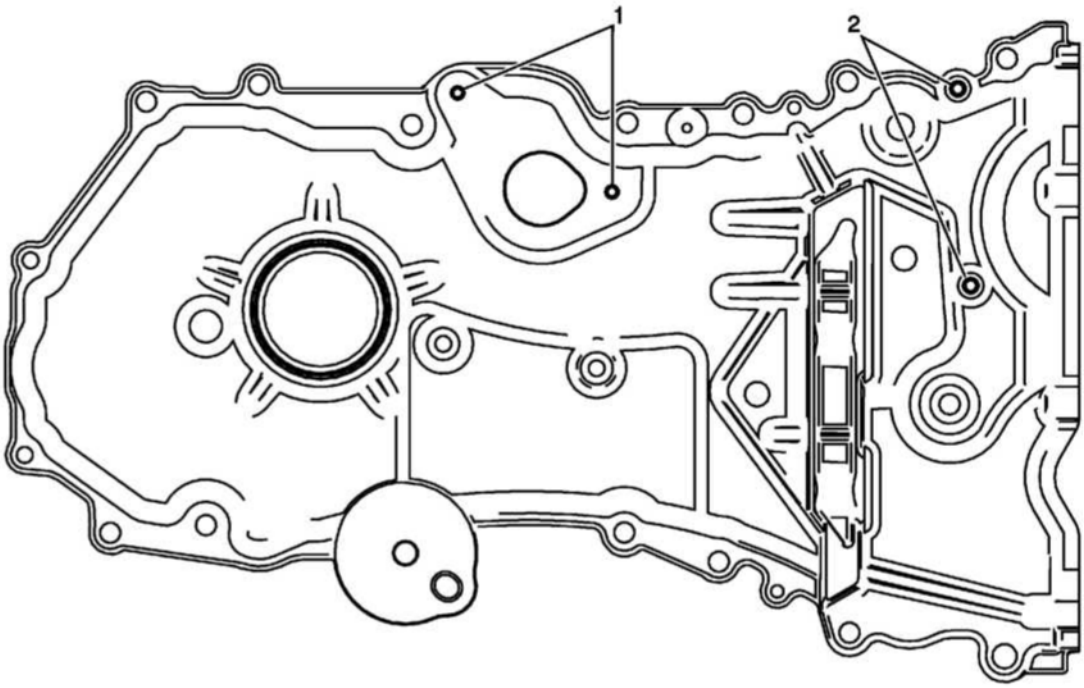

Fig. 20: Engine Front Cover -- Front View
Courtesy of GENERAL MOTORS COMPANY

Engine Front Cover - Front View

Service Call Out	Thread Size	Insert	Drill	Counterbore Tool	Tap	Driver	Drill Depth (Maximum)		Tap Depth (Maximum)	
EN 42385-850							MM	(IN)	MM	(IN)
1	M6x1.0	16105	201	202	203	204	23.0	0.907	23.0	0.907
2	M6x1.0	420	201	202	203	204	23.0	0.907	23.0	0.907