Workshop Manual

Audi A4 2008 ➤ , Audi A4 2015 ➤ ,
Audi A4 China 2016 ➤ , Audi A5 2016 ➤ ,
Audi A5 Cabriolet 2009 ➤ ,
Audi A5 Coupé 2008 ➤ , Audi A6 2011 ➤ ,
Audi A6 2019 ➤ , Audi A6 China 2012 ➤ ,
Audi A6 China 2019 ➤ ,
Audi A7 Sportback 2011 ➤ ,
Audi A7 Sportback 2018 ➤ ,
Audi A8 2010 ➤ , Audi Q5 2008 ➤ ,
Audi Q5 2017 ➤ , Audi Q5 China 2010 ➤ ,
Audi Q5 China 2019 ➤ , Audi Q7 2016 ➤ ,
Audi Q8 China 2018 ➤

Protected by copyright. Copying for private or commercial purposes, in part or in whole, is not permitted unless authorised by AUDI AG. AUDI AG does not guarantee or accept any liability with respect to the correctness of information in this document. Copyright by AUDI AG.

Servicing 4-cylinder engine, 2.0 ltr. 4-valve TFSI (EA 888, Gen. III)									
Engine ID	CYMC	CYRB	CYRC	CWPB	DAXB	DAXC	CJEB	CJED	CJEE
	CNCD	CNCE	CUHA	CUJA	CNCB	CUHB	DAYB	CYGA	CYNB
	CYPA	CYPB	CYYA	CVJA	DDWA	DJYA	DKWA	DNTA	DKNA
	DLHA	DLHB	DMFA	DKWB	DLGA	DPMA	DKWC	DDWB	DMFB

Edition 12.2019

List of Workshop Manual Repair Groups

Repair Group

00 - Technical data
10 - Removing and installing engine
13 - Crankshaft group
15 - Cylinder head, valve gear
17 - Lubrication
19 - Cooling
21 - Turbocharging/supercharging
24 - Mixture preparation - injection
26 - Exhaust system
28 - Ignition system

Protected by copyright. Copying for private or commercial purposes, in part or in whole, is not permitted unless authorised by AUDI AG. AUDI AG does not guarantee or accept any liability with respect to the correctness of information in this document. Copyright by AUDI AG.

Technical information should always be available to the foremen and mechanics, because their careful and constant adherence to the instructions is essential to ensure vehicle road-worthiness and safety. In addition, the normal basic safety precautions for working on motor vehicles must, as a matter of course, be observed.

All rights reserved.
No reproduction without prior agreement from publisher.

Copyright © 2019 Audi AG, Ingolstadt

Contents

00 - Technical data . . . 1
1 Identification . . . 1
1.1 Engine number/engine data . . . 1
2 Safety precautions . . . 2
2.1 Safety precautions when working on the high-voltage system . . . 2
2.2 Safety precautions when working in the vicinity of high-voltage components . . . 3
2.3 Safety precautions when working on the fuel supply system . . . 3
2.4 Safety precautions when working on vehicles with start/stop system . . . 4
2.5 Safety precautions when using testers and measuring instruments during a road test . . . 4
2.6 Safety precautions when working on the cooling system . . . 4
2.7 Safety precautions when working on the exhaust system . . . 4
2.8 Safety precautions when working on the ignition system . . . 5
2.9 Safety precautions when working on the subframe . . . 6
3 Repair instructions . . . 7
3.1 Identification plates . . . 7
3.2 Use of impact wrenches . . . 7
3.3 Rules for cleanliness . . . 8
3.4 General notes . . . 8
3.5 General repair instructions . . . 8
3.6 Foreign particles in engine . . . 9
3.7 Contact corrosion . . . 9
3.8 Routing and attachment of pipes, hoses and wiring . . . 9
3.9 Nuts, bolts . . . 9
3.10 Installing radiators and condensers . . . 10
3.11 Checking vacuum system . . . 10

10 - Removing and installing engine . . . 11
1 Safety precautions . . . 11
2 Removing and installing engine . . . 12
2.1 Removing engine . . . 12
2.2 Securing engine to engine and gearbox support . . . 12
2.3 Installing engine . . . 13
3 Assembly mountings . . . 14
4 Engine cover panel . . . 15
4.1 Removing and installing engine cover panel . . . 15

13 - Crankshaft group . . . 16
1 Safety precautions . . . 16
2 Cylinder block (pulley end) . . . 17
2.1 Exploded view - cylinder block (pulley end) . . . 17
2.2 Removing and installing poly V-belt . . . 22
2.3 Removing and installing poly V-belt tensioner . . . 24
2.4 Removing and installing vibration damper . . . 24
2.5 Removing and installing bracket for ancillaries . . . 38
2.6 Removing and installing engine support . . . 43
3 Cylinder block (gearbox end) . . . 44
3.1 Exploded view - cylinder block (gearbox end) . . . 44
3.2 Removing and installing drive plate . . . 46
3.3 Removing and installing dual-mass flywheel . . . 47
3.4 Removing and installing sealing flange (gearbox end) . . . 48
3.5 Renewing needle bearing in drive plate . . . 51
4 Crankshaft . . . 53

Protected by copyright. Copying for private or commercial purposes, in part or in whole, is not permitted unless authorised by AUDI AG. AUDI AG does not guarantee or accept any liability with respect to the correctness of information in this document. Copyright by AUDI AG.

4.1 Exploded view - crankshaft . . . 53
4.2 Crankshaft dimensions . . . 55
4.3 Allocation of main bearing shells . . . 55
4.4 Measuring axial clearance of crankshaft . . . 56
4.5 Measuring radial clearance of crankshaft . . . 57
4.6 Removing and installing sender wheel . . . 58
5 Balance shaft . . . 59
5.1 Exploded view - balance shaft . . . 59
5.2 Removing and installing balance shaft . . . 60
5.3 Renewing oil seal for balance shaft (inlet side) . . . 64
6 Pistons and conrods . . . 66
6.1 Exploded view - pistons and conrods . . . 66
6.2 Removing and installing pistons . . . 69
6.3 Removing and installing oil spray jets . . . 71
6.4 Checking pistons and cylinder bores . . . 72
6.5 Separating parts of new conrod . . . 74
6.6 Checking radial clearance of conrod bearings . . . 74

15 - Cylinder head, valve gear . . . 76
1 Safety precautions . . . 76
2 Timing chain cover . . . 77
2.1 Exploded view - timing chain cover . . . 77
2.2 Removing and installing timing chain cover . . . 79
2.3 Renewing oil seal for vibration damper . . . 84
3 Chain drive . . . 87
3.1 Exploded view - camshaft timing chains . . . 87
3.2 Exploded view - drive chain for balance shaft . . . 89
3.3 Removing and installing bearing saddle . . . 91
3.4 Removing and installing camshaft timing chain . . . 96
3.5 Checking timing chain . . . 109
3.6 Checking valve timing . . . 111
4 Cylinder head . . . 116
4.1 Exploded view - cylinder head . . . 116
4.2 Removing and installing cylinder head . . . 118
4.3 Checking compression . . . 125
5 Valve gear . . . 128
5.1 Exploded view - valve gear . . . 128
5.2 Removing and installing camshaft . . . 132
5.3 Installing ball for slider . . . 148
5.4 Removing and installing actuators for camshaft adjustment . . . 148
5.5 Removing and installing camshaft control valve 1 N205 . . . 149
5.6 Removing and installing valve stem oil seals . . . 150
6 Inlet and exhaust valves . . . 160
6.1 Checking valve guides . . . 160
6.2 Checking valves . . . 160
6.3 Valve dimensions . . . 161

17 - Lubrication . . . 162
1 Safety precautions . . . 162
2 Sump/oil pump . . . 163
2.1 Exploded view - sump/oil pump . . . 163
2.2 Engine oil . . . 169
2.3 Removing and installing sump (bottom section) . . . 169
2.4 Removing and installing oil pump . . . 172

Protected by copyright. Copying for private or commercial purposes, in part or in whole, is not permitted unless authorised by AUDI AG. AUDI AG does not guarantee or accept any liability with respect to the correctness of information in this document. Copyright by AUDI AG.

2.5 Removing and installing sump (top section) . . . 174
2.6 Removing and installing oil level and oil temperature sender G266 . . . 178
3 Engine oil cooler . . . 179
3.1 Exploded view - engine oil cooler . . . 179
3.2 Removing and installing engine oil cooler . . . 179
3.3 Removing and installing mechanical switching valve . . . 180
4 Crankcase breather . . . 181
4.1 Exploded view - crankcase breather system . . . 181
4.2 Removing and installing oil separator . . . 182
5 Oil filter/oil pressure switches . . . 184
5.1 Exploded view - oil filter . . . 184
5.2 Exploded view - oil pressure switches/oil pressure control . . . 185
5.3 Removing and installing oil pressure switch F22 . . . 187
5.4 Removing and installing oil pressure switch for reduced oil pressure F378 . . . 187
5.5 Removing and installing stage 3 oil pressure switch F447 . . . 188
5.6 Removing and installing valve for oil pressure control N428 . . . 191
5.7 Removing and installing piston cooling jet control valve N522 . . . 192
5.8 Checking oil pressure . . . 193
5.9 Checking oil pressure and oil pressure switch . . . 195

19 - Cooling . . . 196
1 Safety precautions . . . 196
2 Cooling system/coolant . . . 197
2.1 Connection diagram - coolant hoses . . . 197
2.2 Checking cooling system for leaks . . . 197
2.3 Draining and filling cooling system . . . 201
3 Coolant pump/thermostat assembly . . . 202
3.1 Exploded view - coolant pump/thermostat . . . 202
3.2 Exploded view - electric coolant pump . . . 203
3.3 Exploded view - coolant temperature senders . . . 204
3.4 Removing and installing electric coolant pump . . . 204
3.5 Removing and installing coolant pump . . . 205
3.6 Removing and installing toothed belt for coolant pump . . . 206
3.7 Removing and installing actuator for engine temperature regulation N493 . . . 209
3.8 Removing and installing coolant temperature sender G62 . . . 211
3.9 Removing and installing radiator outlet coolant temperature sender G83 . . . 212
3.10 Removing and installing coolant valves . . . 212
4 Coolant pipes . . . 213
5 Radiator/radiator fans . . . 214

21 - Turbocharging/supercharging . . . 215
1 Safety precautions . . . 215
2 Turbocharger . . . 216
2.1 Exploded view - turbocharger . . . 216
2.2 Removing and installing turbocharger . . . 220
2.3 Removing and installing turbocharger air recirculation valve N249 . . . 230
2.4 Removing and installing charge pressure positioner V465 . . . 231
3 Charge air system . . . 233
3.1 Exploded view - charge air system . . . 233
3.2 Exploded view - hose connections for charge air system . . . 233
3.3 Removing and installing charge air cooler . . . 234
3.4 Removing and installing charge pressure sender G31 . . . 234
3.5 Checking charge air system for leaks . . . 234

Protected by copyright. Copying for private or commercial purposes, in part or in whole, is not permitted unless authorised by AUDI AG. AUDI AG does not guarantee or accept any liability with respect to the correctness of information in this document. Copyright by AUDI AG.

24 - Mixture preparation - injection . . . 236

1 Safety precautions . . . 236

2 Injection system . . . 237

2.1 Overview of fitting locations - injection system . . . 237

2.2 Checking fuel system for leaks . . . 237

3 Air cleaner . . . 238

4 Intake manifold . . . 239

4.1 Exploded view - intake manifold . . . 239

4.2 Removing and installing intake manifold . . . 240

4.3 Removing and installing throttle valve module J338 . . . 241

4.4 Cleaning throttle valve module . . . 242

4.5 Checking intake manifold change-over function . . . 243

5 Injectors . . . 245

5.1 Exploded view - fuel rail with injectors . . . 245

5.2 Removing and installing fuel rail . . . 247

5.3 Removing and installing injectors . . . 248

5.4 Renewing seals on injector . . . 255

5.5 Cleaning injectors . . . 257

6 Senders and sensors . . . 259

6.1 Removing and installing intake air temperature sender G42 / intake manifold pressure sender G71 . . . 259

6.2 Removing and installing fuel pressure sender G247 . . . 259

6.3 Checking fuel pressure sender G247 . . . 261

6.4 Removing and installing fuel pressure sender for low pressure G410 . . . 263

6.5 Removing and installing pressure differential sender for particulate filter G1037 . . . 264

7 High-pressure pump . . . 266

7.1 Exploded view - high-pressure pump . . . 266

7.2 Removing and installing high-pressure pump . . . 267

7.3 Removing and installing high-pressure pipe . . . 270

8 Lambda probe . . . 273

8.1 Exploded view - Lambda probe . . . 273

8.2 Removing and installing Lambda probe . . . 275

9 Engine control unit . . . 278

26 - Exhaust system . . . 279

1 Safety precautions . . . 279

2 Exhaust pipes/silencers . . . 280

2.1 Exploded view - silencers . . . 280

2.2 Separating exhaust pipes/silencers . . . 280

2.3 Removing and installing front silencers . . . 280

2.4 Removing and installing silencers . . . 280

2.5 Stress-free alignment of exhaust system . . . 280

2.6 Checking exhaust system for leaks . . . 280

3 Emission control system . . . 281

3.1 Exploded view - emission control system . . . 281

3.2 Removing and installing catalytic converter . . . 284

3.3 Removing and installing particulate filter . . . 284

4 Exhaust gas temperature control . . . 285

5 Secondary air system . . . 286

5.1 Exploded view - secondary air system . . . 286

5.2 Removing and installing secondary air pump motor V101 . . . 287

5.3 Removing and installing secondary air inlet valve N112 . . . 288

5.4 Removing and installing sender 1 for secondary air pressure G609 . . . 288

Protected by copyright. Copying for private or commercial purposes, in part or in whole, is not permitted. Unauthorized distribution to third parties not guarantee or accept any liability with respect to the correctness of information in this document. Copyright by AUDI AG.

5.5 Removing and installing resonator for secondary air system 288

28 - Ignition system 290

1 Safety precautions 290

2 Ignition system 291

2.1 Exploded view - ignition system 291
2.2 Removing and installing ignition coils 292
2.3 Removing and installing knock sensor 1 G61 295
2.4 Removing and installing Hall senders 295
2.5 Removing and installing engine speed sender G28 297

Protected by copyright. Copying for private or commercial purposes, in part or in whole, is not permitted unless authorised by AUDI AG. AUDI AG does not guarantee or accept any liability with respect to the correctness of information in this document. Copyright by AUDI AG.

Protected by copyright. Copying for private or commercial purposes, in part or in whole, is not permitted unless authorised by AUDI AG. AUDI AG does not guarantee or accept any liability with respect to the correctness of information in this document. Copyright by AUDI AG.

00 – Technical data

1 Identification

(ARL006772; Edition 12.2019)

⇒ “1.1 Engine number/engine data”, page 1

1.1 Engine number/engine data

Engine number

- The engine number (“engine code” and “serial number”) can be found at the joint between engine and gearbox -arrow-.
- There is also a sticker on the timing chain cover (top) showing the engine code and the serial number.
- In addition, the engine code is listed on the vehicle data stickers.

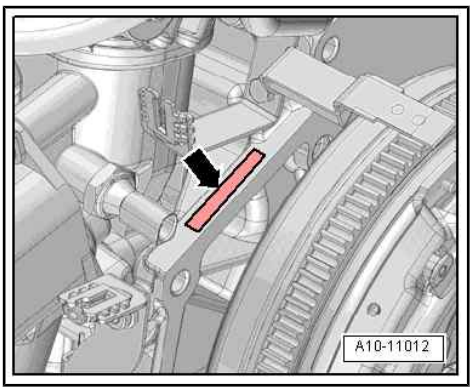

Engine data

- For allocation of engine code, refer to ⇒ Technical data for petrol engines; Rep. gr. 00 ; Overview of engines .

Protected by copyright. Copying for private or commercial purposes, in part or in whole, is not permitted unless authorised by AUDI AG. AUDI AG does not guarantee or accept any liability with respect to the correctness of information in this document. Copyright by AUDI AG.

2 Safety precautions

⇒ “2.1 Safety precautions when working on the high-voltage system”, page 2

⇒ “2.2 Safety precautions when working in the vicinity of high-voltage components”, page 3

⇒ “2.3 Safety precautions when working on the fuel supply system”, page 3

⇒ “2.4 Safety precautions when working on vehicles with start/stop system”, page 4

⇒ “2.5 Safety precautions when using testers and measuring instruments during a road test”, page 4

⇒ “2.6 Safety precautions when working on the cooling system”, page 4

⇒ “2.7 Safety precautions when working on the exhaust system”, page 4

⇒ “2.8 Safety precautions when working on the ignition system”, page 5

⇒ “2.9 Safety precautions when working on the subframe”, page 6

2.1 Safety precautions when working on the high-voltage system

High voltage can cause fatal injury.

The voltage levels in the high-voltage system constitute a safety hazard. Danger of severe or fatal injuries from electric shock or electric arcs.

- The high-voltage system must be de-energised before any work is performed on the high-voltage system.
- For work that does not affect the high-voltage system directly, the high-voltage system must also be de-energised in some cases.
- Please note the work for which the high-voltage system must be de-energised ⇒ Rep. gr. 00 ; Assessing high-voltage system risk level .
- Have an Audi high-voltage technician (HVT) or an Audi high-voltage expert (HVE) de-energise the high-voltage system.

Protected by copyright. Copying for private or commercial purposes, in part or in whole, is not permitted unless authorised by AUDI AG. AUDI AG does not guarantee or accept any liability with respect to the correctness of information in this document. Copyright by AUDI AG.

Risk of injury - engine may start unexpectedly

It is difficult to determine whether the drive system of an electric vehicle or hybrid vehicle is active. Moving parts can trap or draw in parts of the body.

- Switch off ignition.
- Deposit the ignition key outside of the vehicle.

Risk of damage to high-voltage wiring

Incorrect handling may result in damage to the insulation of high-voltage wires or high-voltage connectors.

- Never use high-voltage wiring or high-voltage connectors as a support.
- Never support tools or equipment on high-voltage wires and high-voltage connectors.
- High-voltage cables must not be excessively bent or kinked.
- Pay attention to coding when connecting high-voltage connections.

Risk of injury if auxiliary air conditioner is activated

On electric and hybrid vehicles, the auxiliary air conditioner can switch itself on if it has been activated. The radiator fans can start up automatically and trap or draw in parts of the body.

- Deactivate auxiliary air conditioner.

Protected by copyright. Copying for private or commercial purposes, in part or in whole, is not permitted unless authorised by AUDI AG. AUDI AG does not guarantee or accept any liability with respect to the correctness of information in this document. Copyright by AUDI AG.

2.2 Safety precautions when working in the vicinity of high-voltage components

High voltage can cause fatal injury.

The voltage levels in the high-voltage system constitute a safety hazard. Danger of severe or fatal injuries from electric shock or electric arcs if high-voltage components or high-voltage wiring are damaged.

- Carry out a visual check of high-voltage components and high-voltage wiring.
- Never use cutting/forming tools or other sharp-edged implements in the vicinity of high-voltage components and high-voltage wires.
- Never perform work using welding, brazing, thermal bonding or hot air in the vicinity of high-voltage components or high-voltage wires.

2.3 Safety precautions when working on the fuel supply system

Risk of injury - fuel system operates under high pressure

The fuel system is pressurised. There is a risk of injury as fuel may spray out.

Before opening the fuel system:

- Put on safety goggles.
- Put on protective gloves.
- Release pressure (wrap a clean cloth around connection and open connection carefully).

Risk of fire due to escaping fuel

If the battery is connected, the door contact switch activates the fuel pump when the driver's door is opened. Escaping fuel may ignite, causing a fire.

- Before opening the fuel system, disconnect power supply to fuel pump.

Protected by copyright. Copying for private or commercial purposes, in part or in whole, is not permitted unless authorised by AUDI AG. AUDI AG does not guarantee or accept any liability with respect to the correctness of information in this document. Copyright by AUDI AG.

2.4 Safety precautions when working on vehicles with start/stop system

Risk of injury - engine may start unexpectedly

The engine can start unexpectedly if the vehicle's start/stop system is activated. A message in the instrument cluster indicates whether the start/stop system is activated.

- To deactivate the start/stop system, switch off the ignition.

2.5 Safety precautions when using testers and measuring instruments during a road test

Risk of injury if test equipment is not secured

If an accident occurs and the front passenger's airbag is triggered, test equipment which is not secured adequately may be catapulted through the vehicle with potentially serious consequences.

- Secure test equipment on the rear seat with a strap.

Or:

- Have a second mechanic operate test equipment on the rear seat.

2.6 Safety precautions when working on the cooling system

Risk of scalding as hot coolant can escape

The cooling system is under pressure when the power unit is hot. Risk of scalding due to hot steam and hot coolant.

- Put on protective gloves.
- Put on safety goggles.
- Cover filler cap on expansion tank with a cloth and open carefully to release pressure.

2.7 Safety precautions when working on the exhaust system

Risk of damage to flexible joint

The flexible joint can be damaged or develop leaks if it is handled incorrectly.

– Do not bend flexible joint more than 10°.
– Install flexible joint so that it is not under tension.

Risk of injury when disconnecting the exhaust system

There is a risk of eye irritation caused by soot particles in the air.

– Put on safety goggles.

Risk of injury caused by components of the exhaust system

Danger of injury to hands and other parts of the body due to hot or sharp parts of the exhaust system.

– Allow exhaust system to cool down.
– Put on protective gloves.

Risk to health due to chemical substances in components of exhaust system

Risk to health if components of system for after-treatment of exhaust gases are dismantled.

– Do NOT cut, saw or open components of system for after-treatment of exhaust gases.

2.8 Safety precautions when working on the ignition system

Risk of injury due to electric shock

When the engine is running, there are high voltage levels in the ignition system. There is a risk of electric shock when touching the ignition system!

– Never touch or disconnect ignition wiring when the engine is running or being turned at cranking speed.

Protected by copyright. Copying for private or commercial purposes, in part or in whole, is not permitted unless authorised by AUDI AG. AUDI AG does not guarantee or accept any liability with respect to the correctness of information in this document. Copyright by AUDI AG.

Risk of damage to components

Washing the engine or connecting/disconnecting electrical wiring may result in components being damaged if the engine is running.

– Switch off ignition before connecting/disconnecting electrical wiring.
– Switch off ignition before cleaning engine.

2.9 Safety precautions when working on the subframe

Risk of damage to components

Lowering the vehicle onto its wheels can damage components if the assembly mountings, steering rack or subframe cross brace are not fitted as specified.

– Never lower vehicle onto its wheels with suspension components unfastened or detached.

– Never support weight of vehicle on subframe or subframe cross brace with suspension components unfastened or detached.

Protected by copyright. Copying for private or commercial purposes, in part or in whole, is not permitted unless authorised by AUDI AG. AUDI AG does not guarantee or accept any liability with respect to the correctness of information in this document. Copyright by AUDI AG.

3 Repair instructions

⇒ “3.1 Identification plates”, page 7

⇒ “3.2 Use of impact wrenches”, page 7

⇒ “3.3 Rules for cleanliness”, page 8

⇒ “3.4 General notes”, page 8

⇒ “3.5 General repair instructions”, page 8

⇒ “3.6 Foreign particles in engine”, page 9

⇒ “3.7 Contact corrosion”, page 9

⇒ “3.8 Routing and attachment of pipes, hoses and wiring”, page 9

⇒ “3.9 Nuts, bolts”, page 9

⇒ “3.10 Installing radiators and condensers”, page 10

⇒ “3.11 Checking vacuum system”, page 10

3.1 Identification plates

When renewing vehicle components, the identification plates on the old parts that have a replacement part number (see ⇒ Electronic parts catalogue) must be attached to the new parts due to approval regulations.

3.2 Use of impact wrenches

In general, it is permitted to use an impact wrench to unscrew bolts and nuts. An exception to this is when work is performed inside an open high-voltage battery. For this work, it is not permitted to use an impact wrench.

An impact wrench may be used to screw in bolts and nuts when performing repair work if the following requirements are observed. In general, electric and compressed-air impact wrenches should be used.

Requirements:

- Only screw in bolts with locking fluid or self-locking nuts at low speed.
- Use a suitable impact wrench with variable speed and adjustable torque range.
- Use suitable bits when working in the vicinity of sensitive surfaces, e.g. plastic-coated bits for aluminium rims.
- When working in the vicinity of natural gas systems, observe the information in the Workshop Manual “Natural gas engines - General information”.

Use:

- Fit bolts/nuts by hand.
- Only use an impact wrench to screw in bolts/nuts until the head of the bolt/nut makes contact and then continue tightening with a torque wrench.
- Clean threaded pins before unscrewing the bolt/nut.

Protected by copyright. Copying for private or commercial purposes, in part or in whole, is not permitted unless authorised by AUDI AG. AUDI AG does not guarantee or accept any liability with respect to the correctness of information in this document. Copyright by AUDI AG.

3.3 Rules for cleanliness

Even small quantities of dirt can lead to defects. For this reason, please observe the following rules when working on the fuel supply system, turbocharger and injection system:

- Carefully clean connection points and the surrounding area with engine cleaner or brake cleaner and dry thoroughly before opening.
- Seal off open pipes and connections immediately with clean plugs, e.g. from engine bung set - VAS 6122- .
- Place removed parts on a clean surface and cover them. Use only lint-free cloths.
- Carefully cover or seal open components if repairs cannot be carried out immediately.
- Only install clean components; replacement parts should only be unpacked immediately prior to installation. Do not use parts that have not been stored in their packing (e.g. in tool boxes etc.).
- When the system is open, do not work with compressed air and do not move the vehicle.
- Make sure that no fuel runs onto the fuel hoses. Should this occur, the fuel hoses must be cleaned again immediately.
- Protect unplugged electrical connectors against dirt and moisture and make sure connections are dry when attaching.

3.4 General notes

Protected by copyright. Copying for private or commercial purposes, in part or in whole, is not permitted unless authorised by AUDI AG. AUDI AG does not guarantee or accept any liability with respect to the correctness of information in this document. Copyright by AUDI AG.

- The engine control unit has a self-diagnosis capability. Before carrying out repairs and fault finding, the event memory must be interrogated. The vacuum hoses and connections must also be checked (unmetered air).
- A voltage of at least 11.5 V is required for proper operation of the electrical components.
- Do not use sealants containing silicone. Particles of silicone drawn into the engine will not be burnt in the engine and will damage the Lambda probe.
- The vehicles are fitted with a crash fuel shut-off system. This system is designed to reduce the risk of a vehicle fire after a crash by deactivating the fuel pump via the fuel pump relay.
- At the same time, this system also improves the engine's starting performance. When the driver's door is opened, the fuel pump is activated for 2 seconds in order to build up pressure in the fuel system
⇒ “2.3 Safety precautions when working on the fuel supply system”, page 3 .

3.5 General repair instructions

- Clean tools and workbench etc. before working on the injection system.
- If the high-pressure fuel lines are to be re-used, you must mark them before removal. High-pressure pipes must always be re-installed on the same cylinder.
- Position high-pressure pipes so they are free of stress. Tighten all unions lightly to start with before tightening to final torque.

- Never attempt to bend high-pressure fuel lines to shape.
- When working on any parts of the high-pressure fuel system, tools may only be used for loosening and tightening pipe unions. All other components must always be removed and installed by hand without using tools or other equipment.
- All cable ties which are released or cut open when removing must be refitted in the same position when installing.
- Fuel hoses in engine compartment must only be secured with spring-type clips. O-type clips or screw-type clips must not be used.

3.6 Foreign particles in engine

- When performing assembly work on the engine, all open passages in the intake and exhaust systems must be sealed with suitable plugs (e.g. from engine bung set - VAS 6122-) to prevent foreign particles from entering the engine.
- If the turbocharger has suffered mechanical damage ⇒ page 220

3.7 Contact corrosion

Contact corrosion can occur if unsuitable fasteners are used (e.g. bolts, nuts, washers, etc.).

For this reason, only fasteners with a special surface coating are fitted.

Additionally, all rubber and plastic parts and all adhesives are made of non-conductive materials.

Always install new parts if you are not sure whether used parts can be re-fitted ⇒ Electronic parts catalogue .

Please note:

- We recommend using only genuine replacement parts; these have been tested and are compatible with aluminium.
- We recommend using Audi Genuine Accessories.
- Damage caused by contact corrosion is not covered by warranty.

3.8 Routing and attachment of pipes, hoses and wiring

- Mark fuel lines, hydraulic lines, vacuum lines, lines for activated charcoal filter and electrical wiring etc. before removal so they can be re-installed in the original positions and correctly connected. Make sketches or take photographs if necessary.
- Because of the limited space in the engine compartment, it is important to ensure that there is adequate clearance to any moving or hot components to avoid damage to lines and wiring.

Protected by copyright. Copying for private or commercial purposes, in part or in whole, is not permitted unless authorised by AUDI AG. AUDI AG does not guarantee or accept any liability with respect to the correctness of information in this document. Copyright by AUDI AG.

3.9 Nuts, bolts

- Loosen bolts in reverse sequence to specified tightening sequence.
- Bolts and nuts used to secure covers and housings must be tightened in steps according to the specified tightening sequence and method.
- Bolts and nuts which secure covers and housings should be loosened and tightened in diagonal sequence and in stages if no tightening sequence is specified.

- Always renew self-locking bolts and nuts.
- Unless otherwise specified, use a wire brush to clean the threads of bolts which are secured with locking fluid. Then install bolts with locking fluid; for locking fluid refer to ⇒ Electronic parts catalogue .
- Threaded holes which take self-locking bolts or bolts coated with locking fluid must be cleaned using a thread tap or similar. Otherwise there is a danger of the bolts shearing off the next time they are removed.
- The tightening torques stated apply to non-oiled nuts and bolts.

3.10 Installing radiators and condensers

Even when the radiator, condenser and charge air cooler are correctly installed, slight impressions may be visible on the fins of these components. This does not mean that the components are damaged. If the fins are only very slightly distorted, this does not justify renewal of the radiator, condenser or charge air cooler.

3.11 Checking vacuum system

Special tools and workshop equipment required

- Hand vacuum pump - VAS 6213-

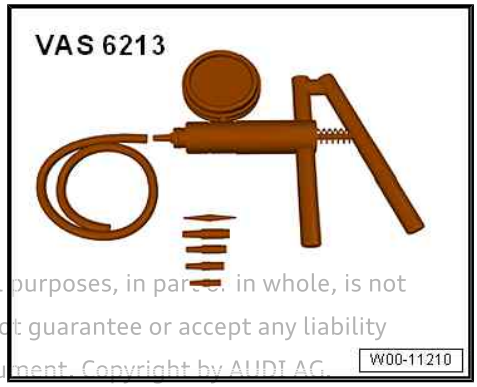

Protected by copyright. Copying for private or commercial purposes, in part or in whole, is not permitted unless authorised by AUDI AG. AUDI AG does not guarantee or accept any liability with respect to the correctness of information in this document. Copyright by AUDI AG.

Procedure

– Check all vacuum lines in the complete vacuum system for:
- Cracks
- Traces of animal bites
- Kinked or crushed lines
- Porous or leaking lines

– Check vacuum line to solenoid valve and from solenoid valve to corresponding component.

– If a fault is stored in the event memory, check the vacuum lines leading to the corresponding component and also check the remaining vacuum lines in the system.

– If it is not possible to build up pressure with the hand vacuum pump - VAS 6213- or if the pressure drops again immediately, check the hand vacuum pump and connecting hoses for leaks.

10 – Removing and installing engine

1 Safety precautions

Observe safety precautions ⇒ 4-cylinder direct injection engine (2.0 ltr. 4-valve TFSI, EA 888 Gen. III); Rep. gr. 00 ; Safety precautions .

Protected by copyright. Copying for private or commercial purposes, in part or in whole, is not permitted unless authorised by AUDI AG. AUDI AG does not guarantee or accept any liability with respect to the correctness of information in this document. Copyright by AUDI AG.

2 Removing and installing engine

⇒ “2.1 Removing engine”, page 12

⇒ “2.2 Securing engine to engine and gearbox support”, page 12

⇒ “2.3 Installing engine”, page 13

2.1 Removing engine

All procedures are described in ⇒ 4-cylinder direct injection engine (1.8, 2.0 ltr. 4-valve TFSI); Rep. gr. 10 ; Removing and installing engine; Removing engine .

2.2 Securing engine to engine and gearbox support

Protected by copyright. Copying for private or commercial purposes, in part or in whole, is not permitted unless authorised by AUDI AG. AUDI AG does not guarantee or accept any liability with respect to the correctness of information in this document. Copyright by AUDI AG.

Special tools and workshop equipment required

- ♦ Engine and gearbox support - VAS 6095A-

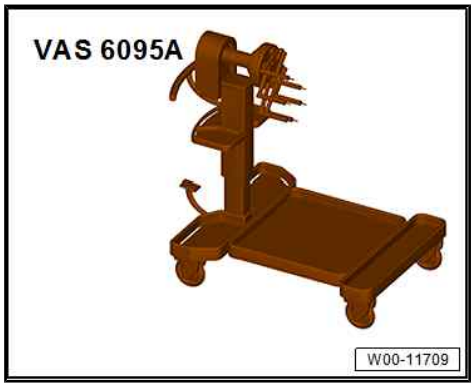

Procedure

- Engine attached to workshop hoist - VAS 6100- using lifting tackle - 2024A-
- To adjust to the centre of gravity of the assembly, the perforated rails of the support hooks must be positioned as shown.

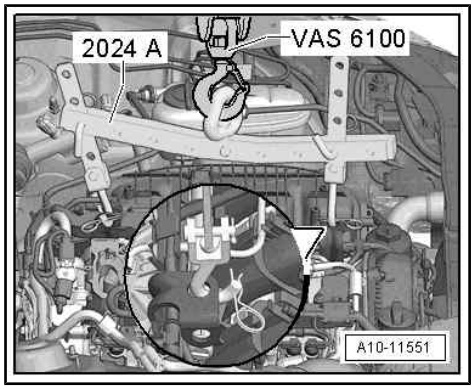

CAUTION

Risk of injury if engine drops when it is lifted.

Danger of trapping or crushing parts of the body.

– The support hooks and retaining pins on the lifting tackle must be secured with locking pins.

– Remove drive plate ⇒ page 46 .

– Secure engine to engine and gearbox support - VAS 6095A- using universal mounting - VAS 6095/1- .

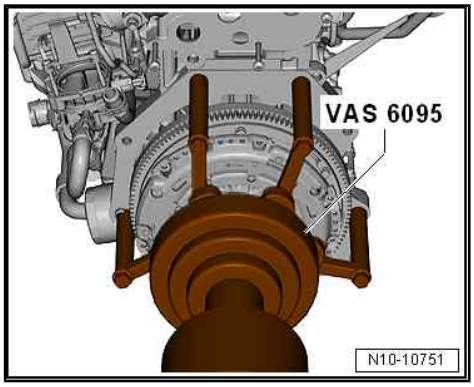

Tightening torque

Component		Nm
Bolts/nuts	M6	10
	M8	20
	M10	45
	M12	65

Assembling

Assembly is performed in reverse sequence; note the following:

– Install drive plate ⇒ page 46 .

2.3 Installing engine

All procedures are described in ⇒ 4-cylinder direct injection engine (1.8, 2.0 ltr. 4-valve TFSI); Rep. gr. 10 ; Removing and installing engine; Installing engine .

Protected by copyright. Copying for private or commercial purposes, in part or in whole, is not permitted unless authorised by AUDI AG. AUDI AG does not guarantee or accept any liability with respect to the correctness of information in this document. Copyright by AUDI AG.

3 Assembly mountings

All procedures and components are described in ⇒ 4-cylinder direct injection engine (1.8, 2.0 ltr. 4-valve TFSI); Rep. gr. 10 ; Assembly mountings .

Protected by copyright. Copying for private or commercial purposes, in part or in whole, is not permitted unless authorised by AUDI AG. AUDI AG does not guarantee or accept any liability with respect to the correctness of information in this document. Copyright by AUDI AG.

4 Engine cover panel

⇒ "4.1 Removing and installing engine cover panel", page 15

Protected by copyright. Copying for private or commercial purposes, in part or in whole, is not permitted unless authorised by AUDI AG. AUDI AG does not guarantee or accept any liability with respect to the correctness of information in this document. Copyright by AUDI AG.

4.1 Removing and installing engine cover panel

Some models are not fitted with an engine cover panel.

Removing

– Carefully pull engine cover panel off retaining pins one after the other -arrows- (do not jerk cover panel away, and do not try to pull on one side only).

Note:

There are variations depending on model and version.

Installing

– To avoid damage, do not strike the engine cover panel with your fist or with any kind of tool.

– Position engine cover panel, paying attention to oil filler neck and dipstick.

– Press engine cover panel into rubber grommets first on left side, then on right side.

13 – Crankshaft group

1 Safety precautions

Observe safety precautions ⇒ 4-cylinder direct injection engine (2.0 ltr. 4-valve TFSI, EA 888 Gen. III); Rep. gr. 00 ; Safety precautions .

Protected by copyright. Copying for private or commercial purposes, in part or in whole, is not permitted unless authorised by AUDI AG. AUDI AG does not guarantee or accept any liability with respect to the correctness of information in this document. Copyright by AUDI AG.

2 Cylinder block (pulley end)

⇒ “2.1 Exploded view - cylinder block (pulley end)”, page 17

⇒ “2.2 Removing and installing poly V-belt”, page 22

⇒ “2.3 Removing and installing poly V-belt tensioner”, page 24

⇒ “2.4 Removing and installing vibration damper”, page 24

⇒ “2.5 Removing and installing bracket for ancillaries”, page 38

⇒ “2.6 Removing and installing engine support”, page 43

2.1 Exploded view - cylinder block (pulley end)

⇒ “2.1.1 Exploded view - cylinder block (pulley end), vehicles with alternator”, page 17

⇒ “2.1.2 Exploded view - cylinder block (pulley end), vehicles with starter-alternator”, page 19

⇒ “2.1.3 Exploded view - cylinder block (pulley end), vehicles with high-voltage system”, page 21

Protected by copyright. Copying for private or commercial purposes, in part or in whole, is not permitted unless authorised by AUDI AG. AUDI AG does not guarantee or accept any liability with respect to the correctness of information in this document. Copyright by AUDI AG.

2.1.1 Exploded view - cylinder block (pulley end), vehicles with alternator

1 - Poly V-belt

- ❑ Check for wear
- ❑ Do not kink
- ❑ Before removing, mark direction of rotation with chalk or felt-tip pen
- ❑ Removing and installing ⇒ page 22
- ❑ Routing of poly V-belt ⇒ page 18
- ❑ When installing, make sure it is properly seated on pulleys.

2 - Tensioner for poly V-belt

- ❑ Pivot with wrench to slacken poly V-belt
- ❑ Lock in position with locking pin - T10060A- .
- ❑ Removing and installing ⇒ page 24

3 - Bolt

- ❑ Renew after removing
- ❑ 8 Nm +45°

4 - Bolt

- ❑ Renew after removing
- ❑ Use counterhold tool - T10355- when loosening and tightening
- ❑ Lubricate O-ring with engine oil
- ❑ Different versions
- ❑ Property class 8.8:

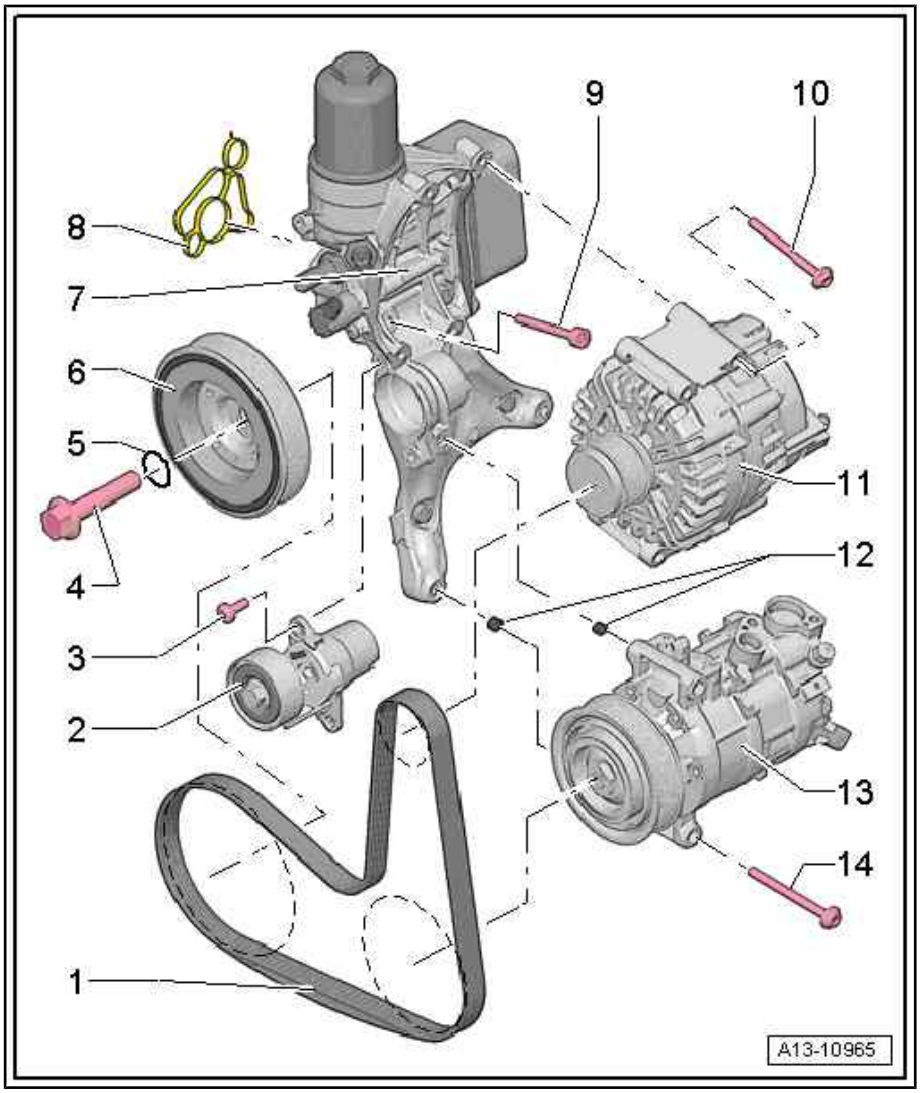

150 Nm + 90°

- ❑ Property class 10.9: 100 Nm + 180°
- ❑ The property class of the bolt is visible on the bolt head

5 - O-ring

- ❑ Not available separately; supplied with ⇒ Item 4 (page 17)

6 - Vibration damper

- ❑ With poly V-belt pulley
- ❑ Removing and installing ⇒ page 24

7 - Bracket for ancillaries

- ❑ With oil filter and engine oil cooler
- ❑ Removing and installing bracket for ancillaries ⇒ page 38
- ❑ Removing and installing engine oil cooler ⇒ page 179

8 - Gasket

- ❑ Renew after removing

9 - Bolt

- ❑ Renew after removing
- ❑ Tightening torques and sequence ⇒ page 19

10 - Bolt

- ❑ Tightening torques ⇒ Electrical system; Rep. gr. 27 ; Alternator; Exploded view - alternator

11 - Alternator

- ❑ Removing and installing ⇒ Electrical system; Rep. gr. 27 ; Alternator; Removing and installing alternator

12 - Dowel sleeves

- ❑ For air conditioner compressor

13 - Air conditioner compressor

- ❑ Do not unscrew or disconnect refrigerant hoses or pipes
- ❑ Removing and installing ⇒ Heating, air conditioning; Rep. gr. 87 ; Air conditioner compressor; Detaching and attaching air conditioner compressor at bracket

14 - Bolt

- ❑ Tightening torques ⇒ Heating, air conditioning; Rep. gr. 87 ; Air conditioner compressor; Exploded view - air conditioner compressor drive unit

Protected by copyright. Copying for private or commercial purposes, in part or in whole, is not permitted unless authorised by AUDI AG. AUDI AG does not guarantee or accept any liability with respect to the correctness of information in this document. Copyright by AUDI AG.

Routing of poly V-belt

1 - Vibration damper

2 - Tensioner for poly V-belt

3 - Alternator

4 - Air conditioner compressor

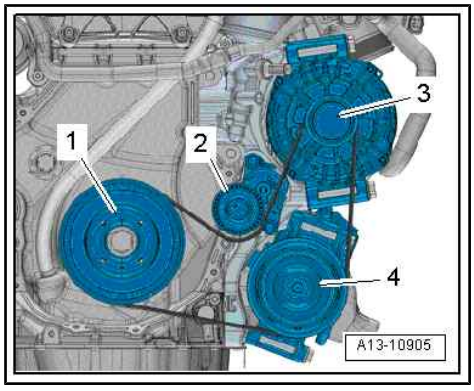

Bracket for ancillaries - tightening torques and tightening sequence

- After removing, renew bolts tightened with specified tightening angle.

– Fit bracket for ancillaries (first tighten bolt -4-).

– Tighten bolts in stages in the sequence shown:

Stage	Bolts	Tightening torques/angle specification
1.	-1 … 5-	Screw in by hand until contact is made
2.	-1 … 5-	20 Nm
3.	-1 … 5-	Turn 90° further

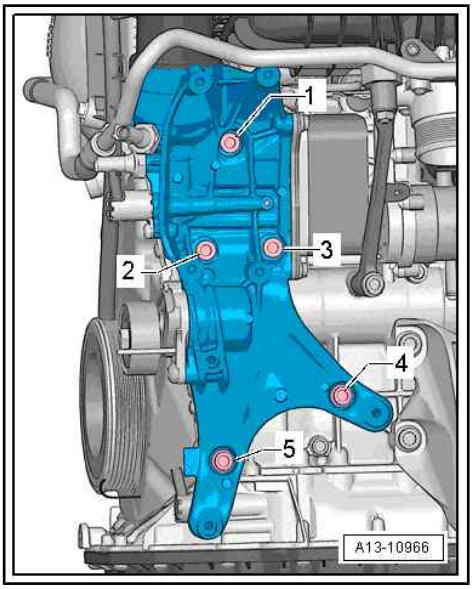

2.1.2 Exploded view - cylinder block (pulley end), vehicles with starter-alternator

1 - Poly V-belt

- ❑ Check for wear
- ❑ Do not kink
- ❑ Routing of poly V-belt ⇒ page 20
- ❑ Before removing, mark direction of rotation with chalk or felt-tip pen
- ❑ Removing and installing ⇒ page 22
- ❑ When installing, make sure it is properly seated on pulleys

2 - Bolt

- ❑ Renew after removing
- ❑ Lubricate O-ring with engine oil
- ❑ Different versions (depending on type of gearbox and property class of bolt)
- ❑ Vehicles with manual gearbox and property class 10.9: 240 Nm + 180°
- ❑ Vehicles with automatic gearbox and property class 8.8: 150 Nm + 90°
- ❑ Vehicles with automatic gearbox and property class 10.9: 100 Nm + 180°
- ❑ The property class of the bolt is visible on the bolt head

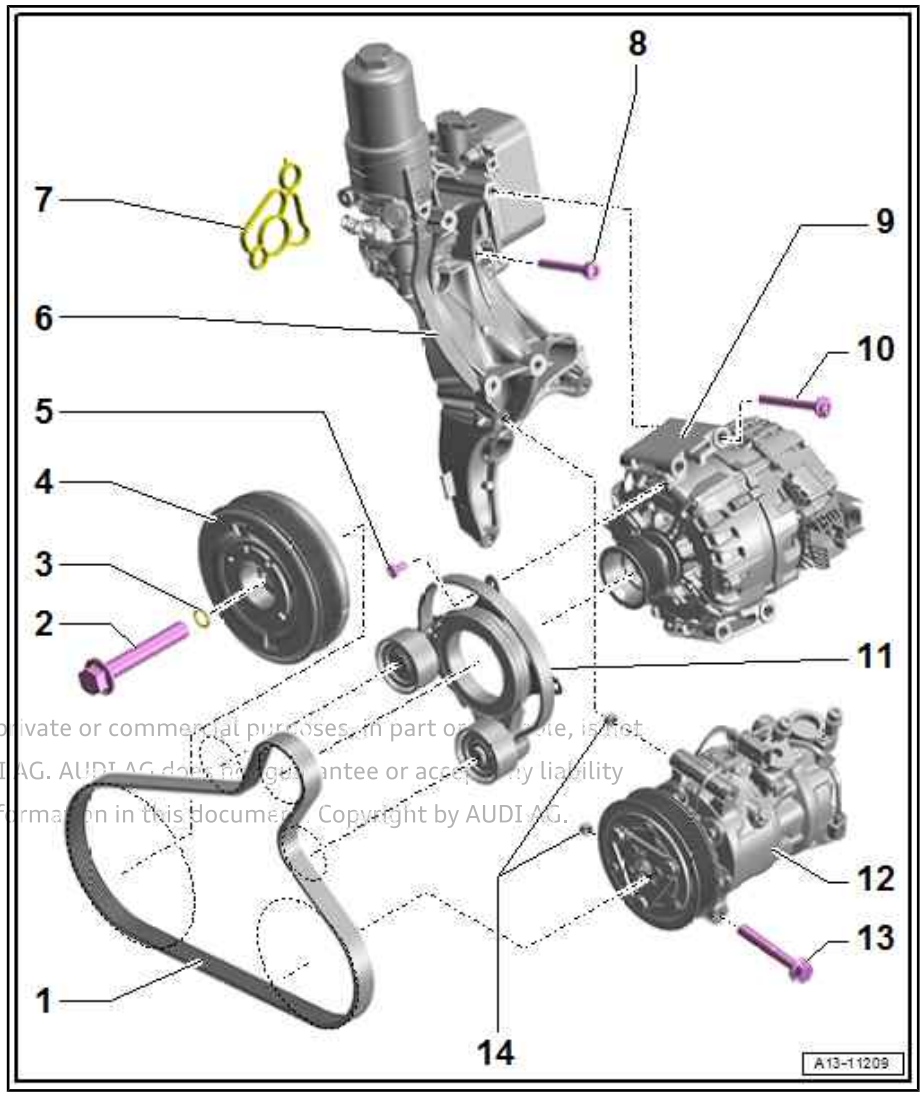

Protected by copyright. Copying for private or commercial purposes, in part or in whole, is not permitted unless authorised by AUDI AG. AUDI AG does not guarantee or accept any liability with respect to the correctness of information in this document. Copyright by AUDI AG.

3 - O-ring

- ❑ Not available separately; supplied with ⇒ Item 2 (page 19)

4 - Vibration damper

- ❑ With poly V-belt pulley
- ❑ Different versions available; for allocation refer to ⇒ Electronic parts catalogue
- ❑ Removing and installing
  ⇒ “2.4.2 Removing and installing vibration damper - vehicles with starter-alternator”, page 30

5 - Bolt

- ❑ Renew after removing
- ❑ 8 Nm +90° in diagonal sequence in stages

6 - Bracket for ancillaries

- ❑ With oil filter housing and engine oil cooler
- ❑ Removing and installing bracket for ancillaries
  ⇒ “2.5.2 Removing and installing bracket for ancillaries - vehicles with starter-alternator”, page 40
- ❑ Removing and installing engine oil cooler ⇒ page 179

7 - Gasket

- ❑ Renew after removing

8 - Bolt

- ❑ Renew after removing
- ❑ Tightening torques and sequence ⇒ page 21

9 - Starter-alternator - C29-

- ❑ Exploded view ⇒ Electrical system; Rep. gr. 27 ; Alternator; Exploded view - alternator

10 - Bolt

- ❑ Tightening torque ⇒ Electrical system; Rep. gr. 27 ; Alternator; Exploded view - alternator

11 - Tensioner

- ❑ For poly V-belt
- ❑ Exploded view ⇒ Electrical system; Rep. gr. 27 ; Alternator; Exploded view - alternator
- ❑ Removing and installing ⇒ Electrical system; Rep. gr. 27 ; Alternator; Removing and installing starter-alternator

12 - Air conditioner compressor

- ❑ Removing and installing ⇒ Heating, air conditioning; Rep. gr. 87 ; Air conditioner compressor; Detaching and attaching air conditioner compressor at bracket

13 - Bolt

- ❑ Tightening torque ⇒ Heating, air conditioning; Rep. gr. 87 ; Air conditioner compressor; Exploded view - air conditioner compressor drive unit

14 - Dowel sleeves

Routing of poly V-belt for starter-alternator - C29-

1 - Vibration damper
2 - Idler roller
3 - Starter-alternator - C29-
4 - Tensioner for poly V-belt
5 - Air conditioner compressor

Protected by copyright. Copying for private or commercial p
permitted unless authorised by AUDI AG. AUDI AG does not
with respect to the correctness of information in this docum

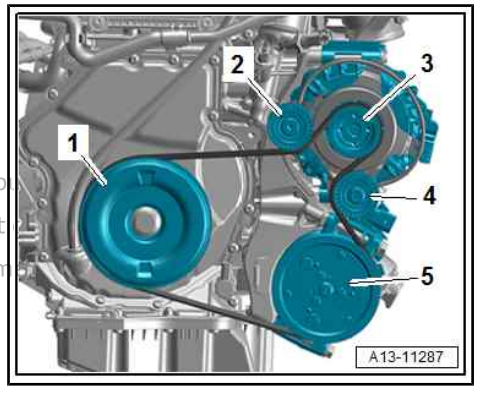

Bracket for ancillaries, vehicles with starter-alternator - tightening torques and tightening sequence

- After removing, renew bolts tightened with specified tightening angle.

– Fit bracket for ancillaries (first tighten bolt -4-).

– Tighten bolts in stages in the sequence shown:

Stage	Bolts	Tightening torques/angle specification
1.	-1 … 5-	Screw in by hand until contact is made
2.	-1 … 5-	20 Nm
3.	-1 … 5-	Turn 90° further

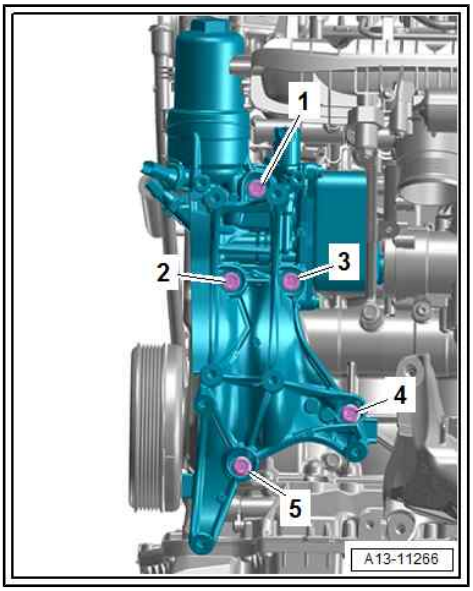

2.1.3 Exploded view - cylinder block (pulley end), vehicles with high-voltage system

Protected by copyright. Copying for private or commercial purposes, in part or in whole, is not permitted unless authorised by AUDI AG. AUDI AG does not guarantee or accept any liability with respect to the correctness of information in this document. Copyright by AUDI AG.

1 - Bolt

- ❑ Renew after removing
- ❑ Lubricate O-ring with engine oil
- ❑ Different versions
- ❑ Property class 8.8: 150 Nm + 90°
- ❑ Property class 10.9: 100 Nm + 180°
- ❑ The property class of the bolt is visible on the bolt head

2 - O-ring

- ❑ Not available separately; supplied with ⇒ Item 1 (page 21)

3 - Vibration damper

- ❑ With poly V-belt pulley
- ❑ Different versions available; for allocation refer to ⇒ Electronic parts catalogue
- ❑ Removing and installing ⇒ “2.4.2 Removing and installing vibration damper - vehicles with starter-alternator”, page 30

4 - Gasket

- ❑ Renew after removing

5 - Bracket for ancillaries

- ❑ With oil filter housing and engine oil cooler

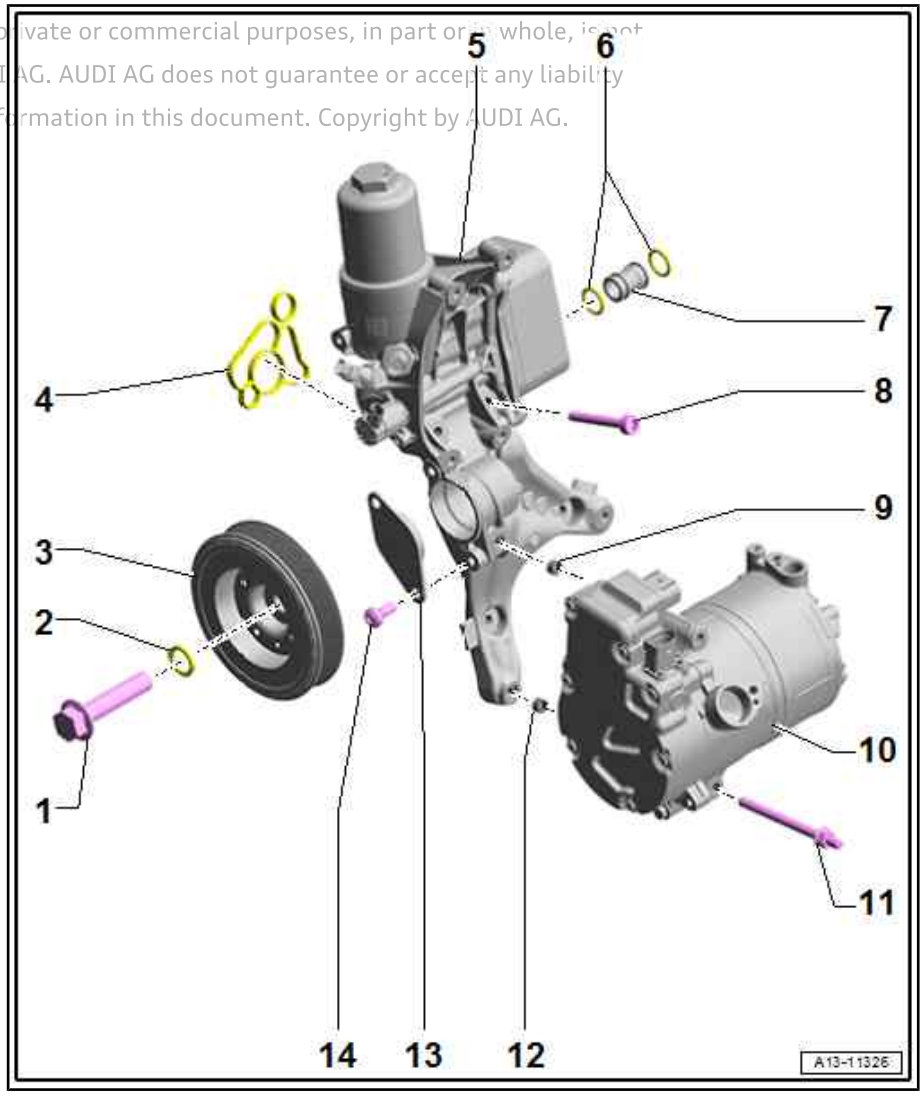

- ❑ Removing and installing bracket for ancillaries
  ⇒ “2.5.2 Removing and installing bracket for ancillaries - vehicles with starter-alternator”, page 40
- ❑ Removing and installing engine oil cooler ⇒ page 179

6 - O-rings

- ❑ Renew after removing

7 - Connection

8 - Bolt

- ❑ Renew after removing
- ❑ Tightening torques and sequence ⇒ page 21

9 - Dowel sleeve

10 - Air conditioner compressor

- ❑ Removing and installing ⇒ Heating, air conditioning; Rep. gr. 87 ; Air conditioner compressor; Detaching and attaching air conditioner compressor at bracket

11 - Bolt

- ❑ Tightening torque ⇒ Heating, air conditioning; Rep. gr. 87 ; Air conditioner compressor; Exploded view - air conditioner compressor drive unit

12 - Dowel sleeve

13 - Cover

14 - Bolt

- ❑ Renew after removing
- ❑ 8 Nm +45°

2.2 Removing and installing poly V-belt

Special tools and workshop equipment required

- ♦ Locking pin - T10060A-

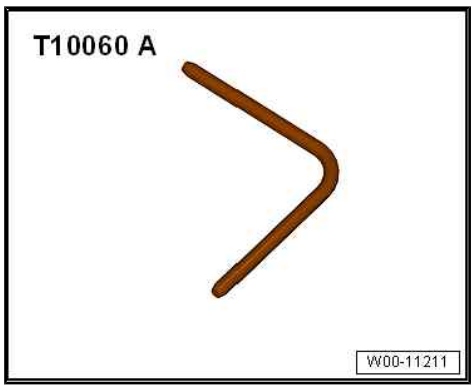

Removing

Preparatory work may be necessary depending on model ⇒ 4-cylinder direct injection engine (1.8, 2.0 ltr. 4-valve TFSI - generation III); Rep. gr. 13 ; Cylinder block (pulley end); Removing and installing poly V-belt .

CAUTION

Risk of injury as the radiator fan may start up automatically.

– When working in the vicinity of the radiator, keep a safe distance from the radiator fan.

Protected by copyright. Copying for private or commercial purposes, in part or in whole, is not permitted unless authorised by AUDI AG. AUDI AG does not guarantee or accept any liability with respect to the correctness of information in this document. Copyright by AUDI AG.

Vehicles with alternator:

NOTICE

Risk of irreparable damage due to running a used belt in the opposite direction when it is refitted.

- **Mark running direction before removing.**
- **Pay attention to running direction when reinstalling.**

– Turn tensioner clockwise -arrow- and lock in place with locking pin - T10060A- .

– Take off poly V-belt.

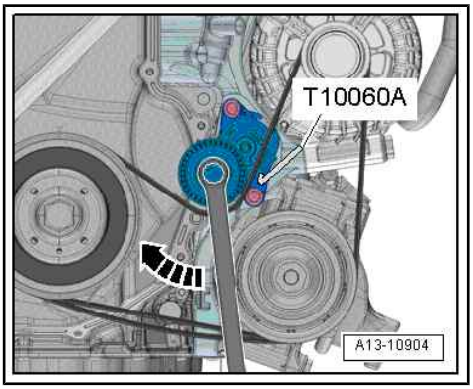

Vehicles with starter-alternator:

– To slacken poly V-belt turn tensioner in direction of -arrow-.

– Lock tensioner with locking pin - T10060A- .

– Take off poly V-belt.

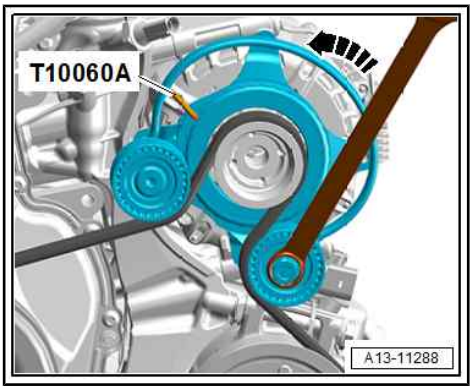

Installing

Installation is carried out in reverse order; note the following:

Vehicles with alternator:

– Fit poly V-belt ⇒ page 18 .

– Turn tensioner slightly in direction of -arrow- and remove locking pin - T10060A- .

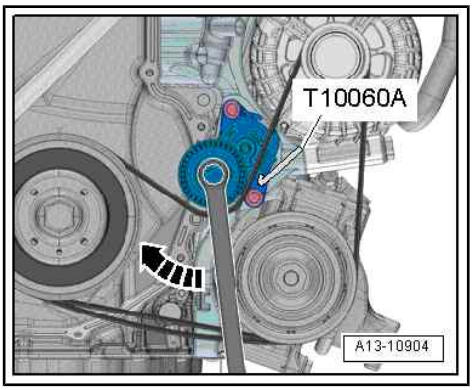

Vehicles with starter-alternator:

– Fit poly V-belt ⇒ page 20 .

– Turn tensioner slightly in direction of -arrow- and remove locking pin - T10060A- .

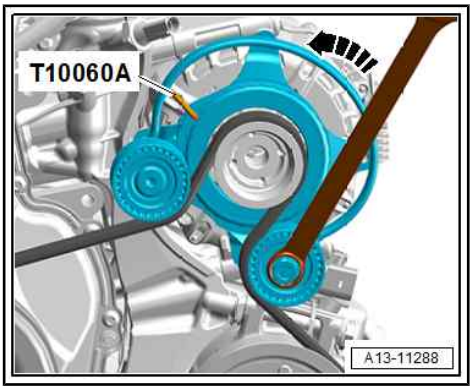

All vehicles (continued):

– Release tensioner.

– Check that poly V-belt is properly seated.

– Start engine and check that poly V-belt runs properly.

Protected by copyright. Copying for private or commercial purposes, in part or in whole, is not permitted unless authorised by AUDI AG. AUDI AG does not guarantee or accept any liability with respect to the correctness of information in this document. Copyright by AUDI AG.

2.3 Removing and installing poly V-belt tensioner

⇒ “2.3.1 Removing and installing poly V-belt tensioner - vehicles with alternator”, page 24

⇒ “2.3.2 Removing and installing poly V-belt tensioner - vehicles with starter-alternator”, page 24

2.3.1 Removing and installing poly V-belt tensioner - vehicles with alternator

Removing

– Detach poly V-belt from tensioner ⇒ page 22 .

– Remove bolts -arrows- and take off tensioner -1- for poly V-belt from bracket for ancillaries.

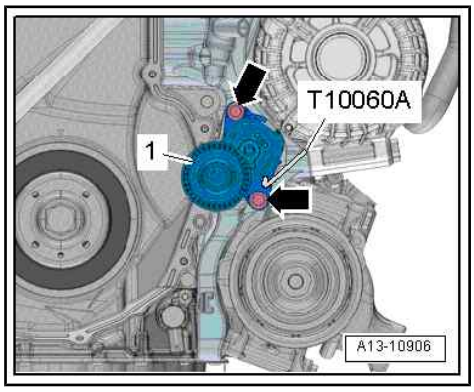

Installing

Installation is carried out in reverse order; note the following:

– Install poly V-belt ⇒ page 22 .

Tightening torques

♦ ⇒ “2.1 Exploded view - cylinder block (pulley end)”, page 17

2.3.2 Removing and installing poly V-belt tensioner - vehicles with starter-alternator

Removing

– Detach poly V-belt from tensioner ⇒ “2.2 Removing and installing poly V-belt”, page 22 .

– Remove bolts -arrows-.

– Remove tensioner -1-.

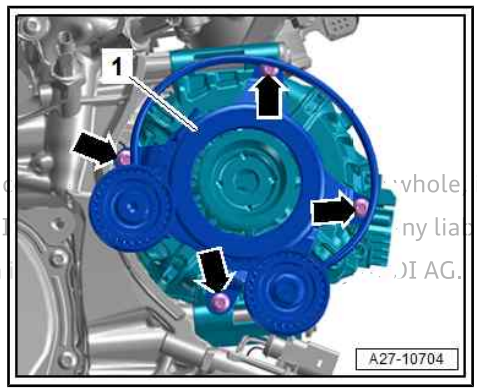

Installing

Installation is carried out in reverse order; note the following:

– Install poly V-belt ⇒ page 22 .

Protected by copyright. Copying for private or ... whole is not permitted unless authorised by AUDI AG. AUDI ... ny liability with respect to the correctness of information ...)I AG.

Tightening torques

♦ ⇒ “2.1.2 Exploded view - cylinder block (pulley end), vehicles with starter-alternator”, page 19

2.4 Removing and installing vibration damper

⇒ “2.4.1 Removing and installing vibration damper - vehicles with alternator/vehicles with high-voltage system”, page 24

⇒ “2.4.2 Removing and installing vibration damper - vehicles with starter-alternator”, page 30

2.4.1 Removing and installing vibration damper - vehicles with alternator/vehicles with high-voltage system

Special tools and workshop equipment required

- Counterhold tool - T10355-

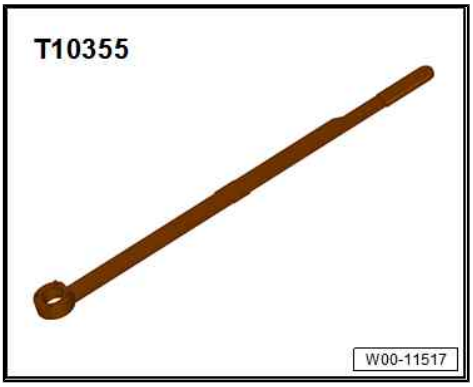

- Assembly tool - T10531-

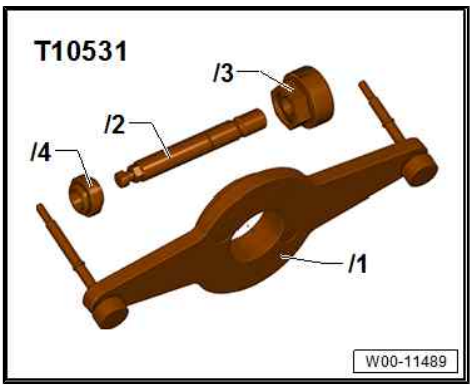

- Ratchet wrench (21 mm) - T40263-

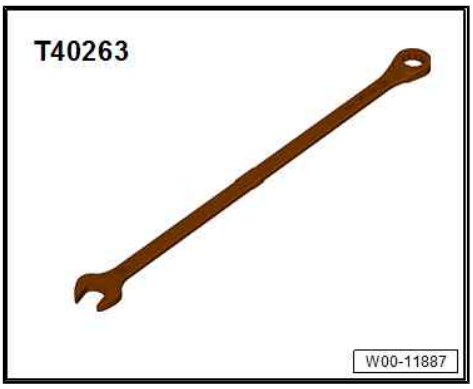

- Adapter - T40314-

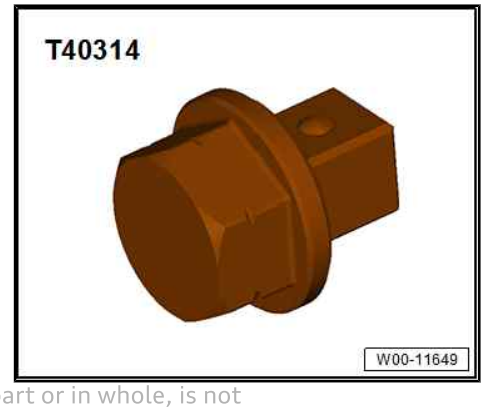

Protected by copyright. Copying for private or commercial purposes, in part or in whole, is not permitted unless authorised by AUDI AG. AUDI AG does not guarantee or accept any liability with respect to the correctness of information in this document. Copyright by AUDI AG.

- Open end spanner insert, AF 24

Components of assembly tool - T10531- :

- Support - T10531/1-
- Retaining bolt - T10531/2-
- Turning-over tool - T10531/3-

♦ Flange nut - T10531/4-

- The securing bolt for the vibration damper -A- secures the vibration damper -1-, timing chain sprocket -2- and crankshaft -3- to each other. Before removing the securing bolt, the timing chain sprocket must be secured to the crankshaft as described below.

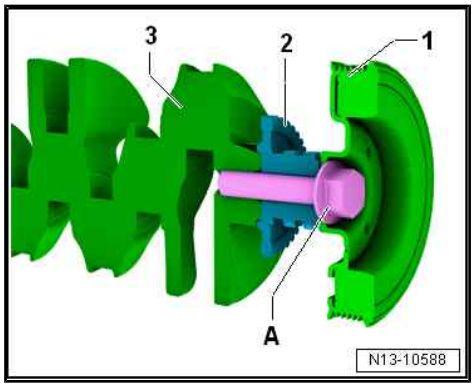

Removing

Preparatory work may be necessary depending on model ⇒ 4-cylinder direct injection engine (1.8, 2.0 ltr. 4-valve TFSI); Rep. gr. 13 ; Cylinder block (pulley end); Removing and installing vibration damper .

– Vehicles without high-voltage system: Remove pulley without locking tensioner in place ⇒ page 22 .

NOTICE

Risk of engine damage if valve gear drive slips

– Only turn engine in normal direction of rotation.

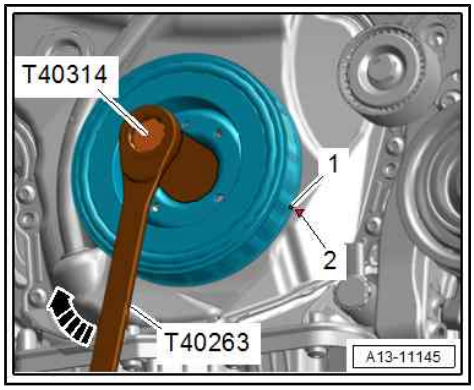

– Use ratchet wrench (21 mm) - T40263- , adapter - T40314- and socket (24 mm) to turn crankshaft in direction of engine rotation -arrow- until vibration damper is at “TDC” position.

- Notch -1- on vibration damper must align with arrow marking -2- on cover for timing chains (bottom).
- Marking on timing chain cover (bottom) must be in 4 o'clock position.
- Do not loosen securing bolt for vibration damper by more than a half turn at this stage.

– Apply counterhold tool - T10355- and loosen bolt for vibration damper by approx. $^1/_2$ turn.

– If vibration damper has been twisted out of position, correct TDC position.

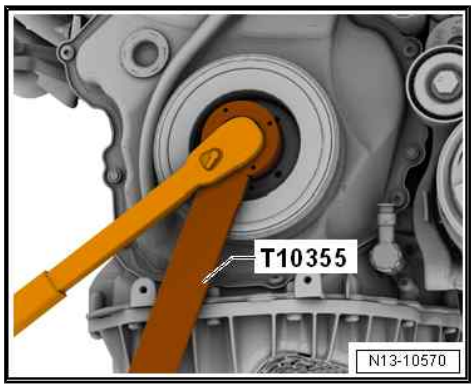

Protected by copyright. Copying for private or commercial purposes, in part or in whole, is not permitted unless authorised by AUDI AG. AUDI AG does not guarantee or accept any liability with respect to the correctness of information in this document. Copyright by AUDI AG.

– Remove bolts -arrows- for timing chain cover (bottom).

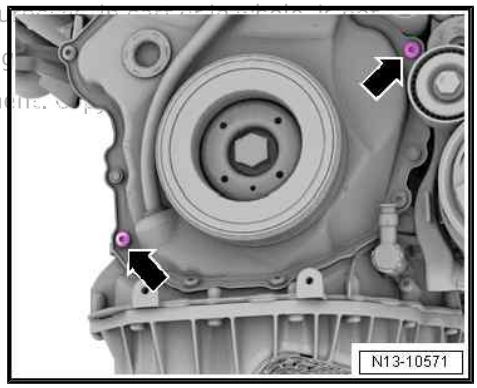

– Apply support - T10531/1- (as illustrated) to vibration damper and secure hand-tight with knurled screws -arrows-.

• Arrow marking on support - T10531/1- must point upwards.

– Remove bolt for vibration damper completely.

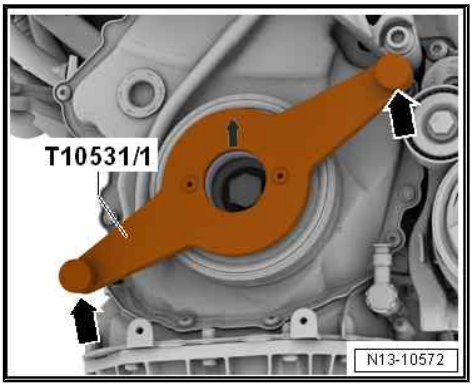

– Check whether turning-over tool -A- slides easily over clamps -B-. Turn tensioning bolt -arrow- if necessary.

• Do not turn the tensioning bolt from this stage onwards; otherwise the clamping pin - T10531/2- will get stuck when it is screwed into the crankshaft.

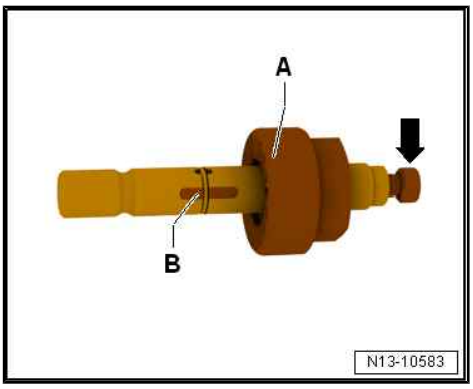

– Screw clamping pin - T10531/2- into crankshaft and hand-tighten with open-end spanner, 12 mm -A-.

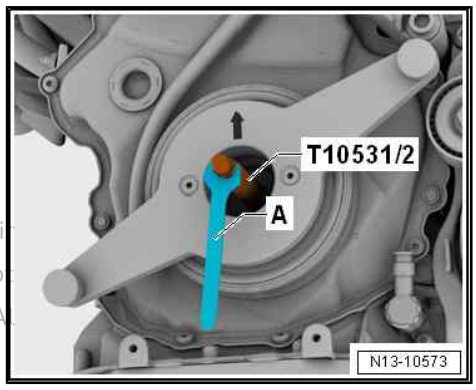

Protected by copyright. Copying for private or commercial purposes, in part or i
permitted unless authorised by AUDI AG. AUDI AG does not guarantee or accep
with respect to the correctness of information in this document. Copyright by A

– Hand-tighten tensioning bolt -A- to secure chain sprocket to crankshaft.

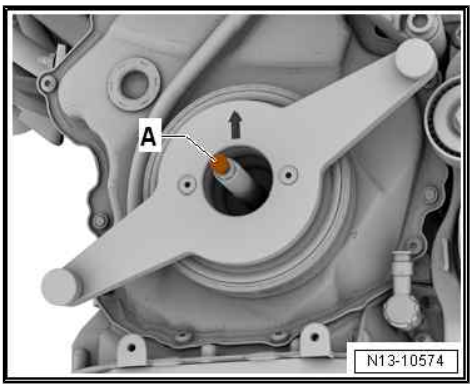

– Remove knurled screws -arrows-. Detach support - T10531/1- and vibration damper -A-.

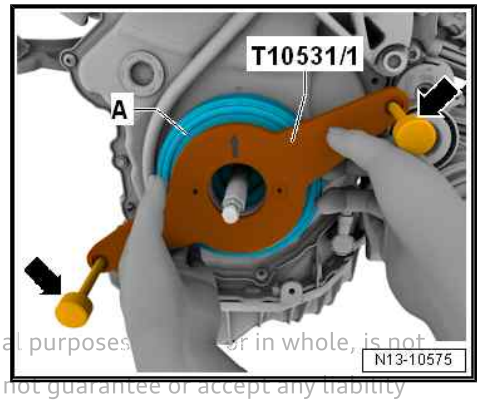

Protected by copyright. Copying for private or commercial purposes, in part or in whole, is not permitted unless authorised by AUDI AG. AUDI AG does not guarantee or accept any liability with respect to the correctness of information in this doc

If crankshaft needs to be rotated without vibration damper:

– Fit turning-over tool - T10531/3- -item A- onto clamping pin - T10531/2- (pay attention to tooth-shaped profile on chain sprocket).

• In TDC position, flat surface of tool faces upwards.

– Tighten turning-over tool with flange nut - T10531/4- -item B-.

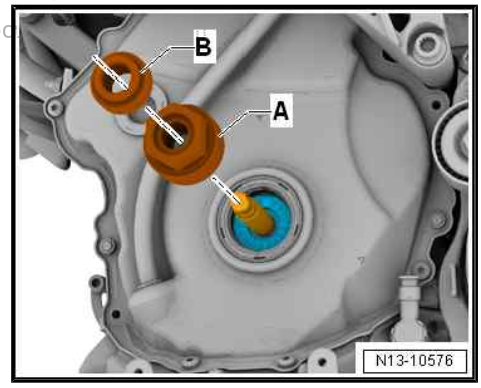

– Crankshaft can now be rotated at hexagon flats -arrow-.

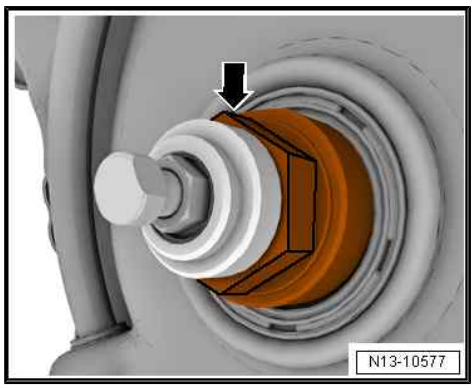

Installing

Installation is carried out in reverse order; note the following:

• Renew bolt with O-ring after removal.

– If necessary, detach flange nut - T10531/4- -item B- and turning-over tool - T10531/3- -item A- from clamping pin - T10531/2- .

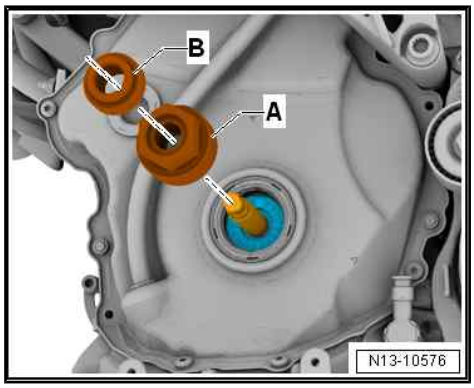

– Fit vibration damper in TDC position (pay attention to tooth-shaped profile -arrow- on chain sprocket).

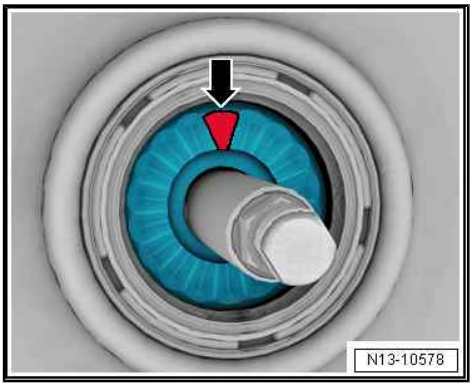

– Fit turning-over tool - T10531/3- -item A- onto clamping pin - T10531/2- .

• The hexagon flats should face the vibration damper.

– Screw flange nut - T10531/4- -item B- on while moving vibration damper back and forth slightly to check whether vibration damper is seated correctly in tooth-shaped profile.

– Tighten flange nut until vibration damper can no longer be rotated.

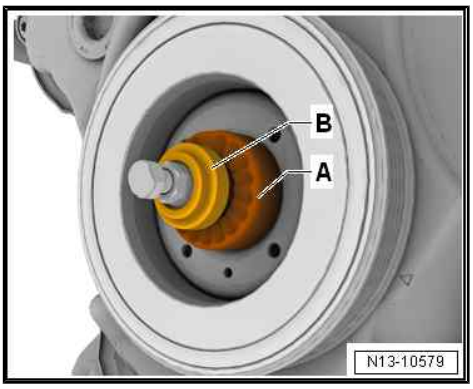

– Apply support - T10531/1- (as illustrated) to vibration damper and secure hand-tight with knurled screws -arrows-.

• Arrow marking on support - T10531/1- must point upwards.

Protected by copyright. Copying for private or commercial purposes, in part or in ... is not permitted unless authorised by AUDI AG. AUDI AG does not guarantee or accept ... with respect to the correctness of information in this document. Copyright by AUDI AG.

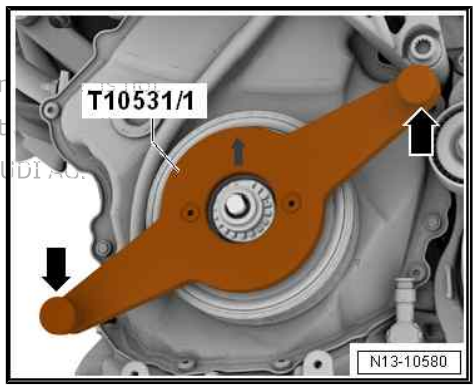

– Unscrew flange nut - T10531/4- -item A- and loosen tensioning bolt -B-.

– Unscrew clamping pin - T10531/2- and remove with turning-over tool - T10531/3- .

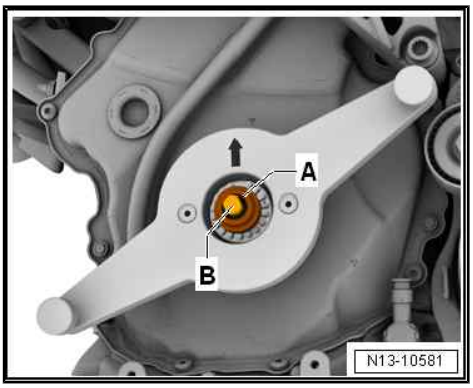

– Screw in new bolt for vibration damper with lubricated O-ring -1- hand-tight.

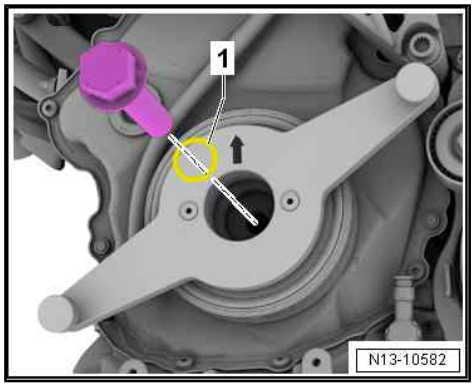

– Remove knurled screws -arrows- and detach support - T10531/1- .

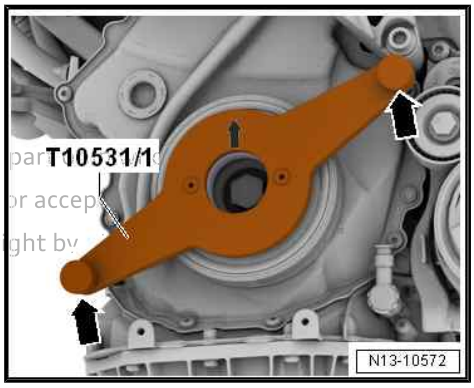

Protected by copyright. Copying for private or commercial purposes, in part, is not permitted unless authorised by AUDI AG. AUDI AG does not guarantee or accept any liability with respect to the correctness of information in this document. Copyright by AUDI AG.

– Apply counterhold tool - T10355- and tighten bolt for vibration damper.

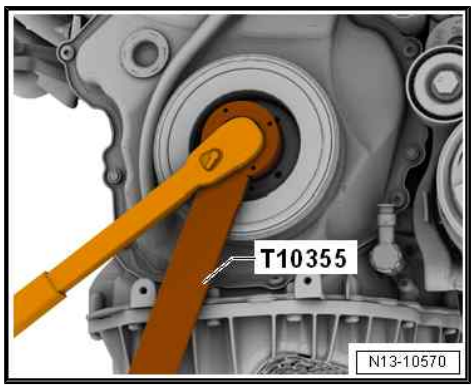

Remaining installation steps are carried out in reverse sequence; note the following:

- Renew bolts -arrows- for timing chain cover after removing.

– Install poly V-belt ⇒ page 22 .

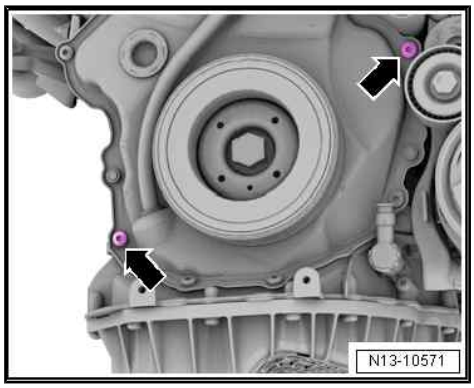

Additional work depending on model ⇒ 4-cylinder direct injection engine (1.8, 2.0 ltr. 4-valve TFSI); Rep. gr. 13 ; Cylinder block (pulley end); Removing and installing vibration damper

Tightening torques

- ⇒ “2.1 Exploded view - cylinder block (pulley end)”, page 17
- ⇒ Fig. ““Timing chain cover (bottom) with 15 bolts - tightening torques and tightening sequence”“ , page 79
- ⇒ Fig. ““Timing chain cover (bottom) with 8 bolts - tightening torques and tightening sequence”“ , page 79

2.4.2 Removing and installing vibration damper - vehicles with starter-alternator

Special tools and workshop equipment required

- Ratchet wrench (21 mm) - T40263-

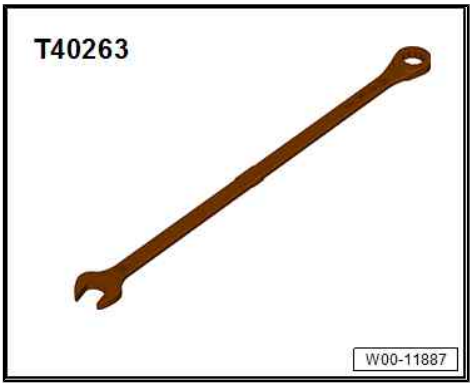

- Adapter - T40314-

Protected by copyright. Copying for private or commercial purposes, in part or in v t
permitted unless authorised by AUDI AG. AUDI AG does not guarantee or accept any liability
with respect to the correctness of information in this document. Copyright by AUDI AG.

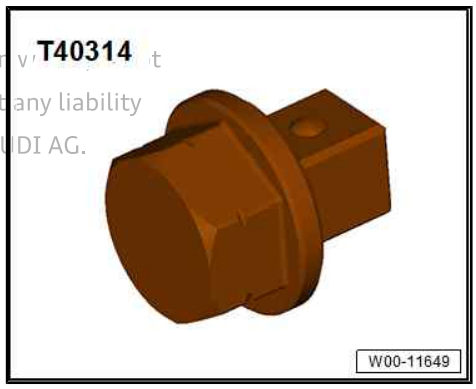

- Counterhold tool - T40378- or

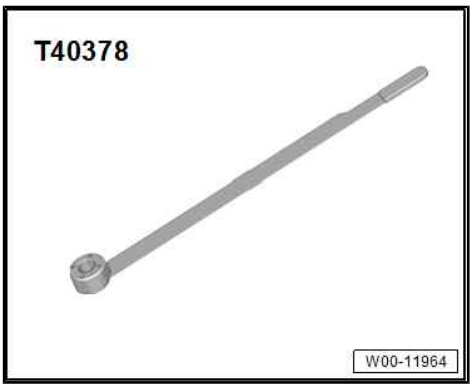

- Counterhold tool - T40379-

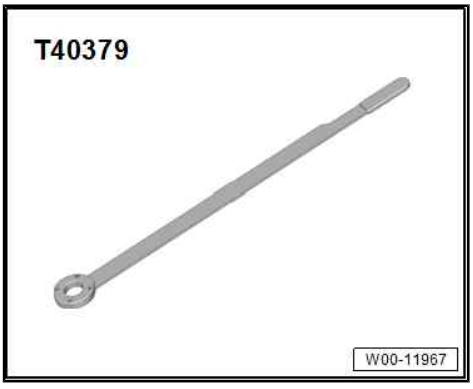

- Assembly tool - T10531-

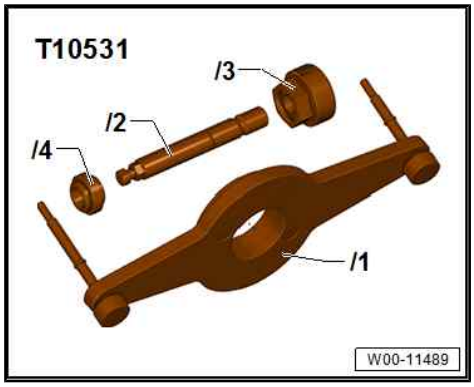

- Adapter - T10531/5- , clamping pin - T10531/6-

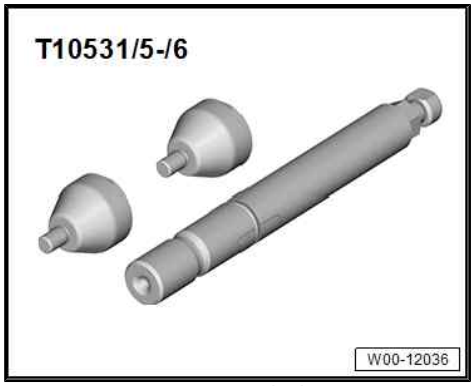

Protected by copyright. Copying for private or commercial purposes, in part or in whole, is not permitted unless authorised by AUDI AG. AUDI AG does not guarantee or accept any liability with respect to the correctness of information in this document. © AUDI AG.

- The securing bolt for the vibration damper -A- secures the vibration damper -1-, timing chain sprocket -2- and crankshaft -3- to each other. Before removing the securing bolt, the timing chain sprocket must be secured to the crankshaft as described below.

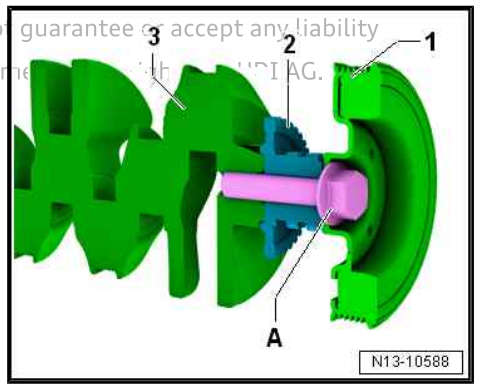

Removing

Preparatory work may be necessary depending on model ⇒ 4-cylinder direct injection engine (2.0 ltr. 4-valve TFSI); Rep. gr. 13 ; Cylinder block (pulley end); Removing and installing vibration damper .

– Remove poly V-belt ⇒ page 22 .

– Remove bolts -arrows- and press wiring duct downwards.

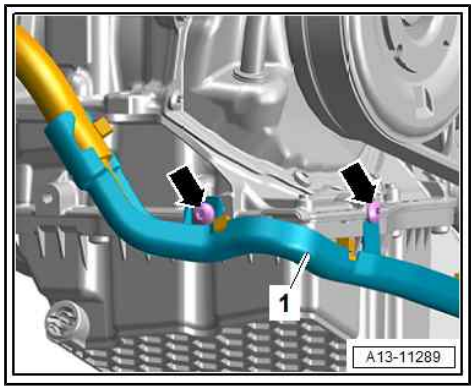

Note:

There are variations depending on model and version.

NOTICE

Risk of engine damage if valve gear drive slips

– Only turn engine in normal direction of rotation.

– Use ratchet wrench (21 mm) - T40263- , adapter - T40314- and socket (24 mm) to turn crankshaft until vibration damper is at “TDC” position.

- Notch -1- on vibration damper must align with arrow marking -2- on cover for timing chains (bottom).
- Marking on timing chain cover (bottom) must be in 4 o'clock position.
- Do not loosen securing bolt for vibration damper by more than a half turn at this stage.

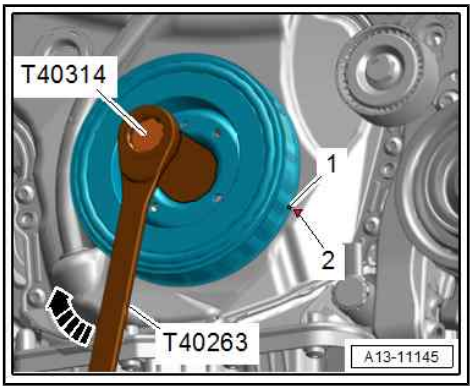

– Loosen bolt for vibration damper approx. $^1/_2$ a turn; depending on version, use counterhold tool - T40378- or counterhold tool - T40379- -1- to do so.

– If vibration damper has been twisted out of position, correct “TDC” position.

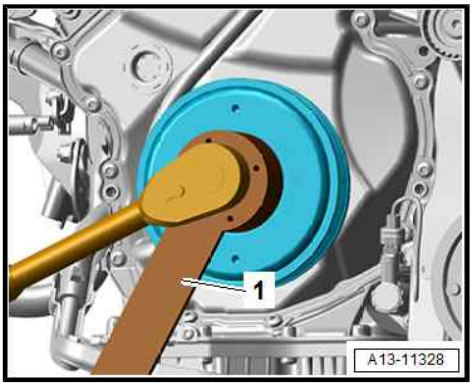

– Remove bolts -arrows- for timing chain cover (bottom).

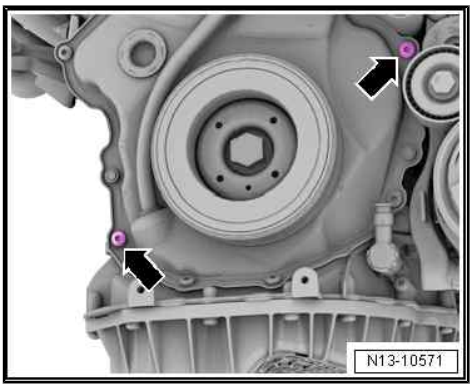

Protected by copyright. Copying for private or commercial purposes, in part or in whole, is not permitted unless authorised by AUDI AG. AUDI AG does not guarantee or accept any liability with respect to the correctness of information in this document. Copyright by AUDI AG.

– Screw adapter -T10531/5- into cylinder block hand-tight.
– Apply support - T10531/1- (as illustrated) to vibration damper and screw knurled screws -1, 3- hand-tight into adapters.
– If necessary, align and counterhold adapters on hexagon flats -2- using a hexagon socket (4 mm).
• Arrow marking on support - T10531/1- must point upwards.
– Remove bolt for vibration damper completely.

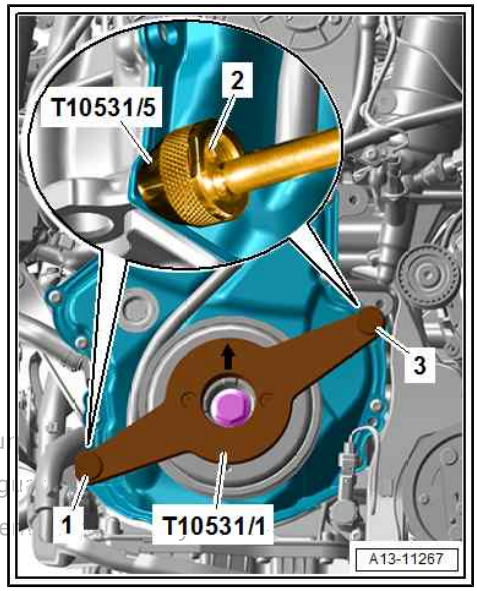

Protected by copyright. Copying for private or commercial pu
permitted unless authorised by AUDI AG. AUDI AG does not g
with respect to the correctness of information in this docume

– Check whether turning-over tool - T10531/3- -item A- slides easily over clamps -B-. Unscrew tensioning bolt -arrow- slightly if necessary.
• Do not turn the tensioning bolt from this stage onwards; otherwise the clamping pin - T10531/6- will get stuck when it is screwed into the crankshaft.

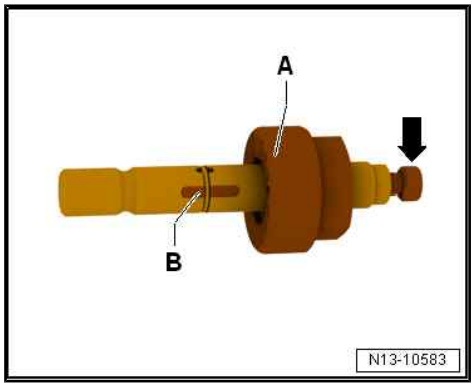

– Screw clamping pin - T10531/6- into crankshaft and hand-tighten with open-end spanner (12 mm) -item A-.

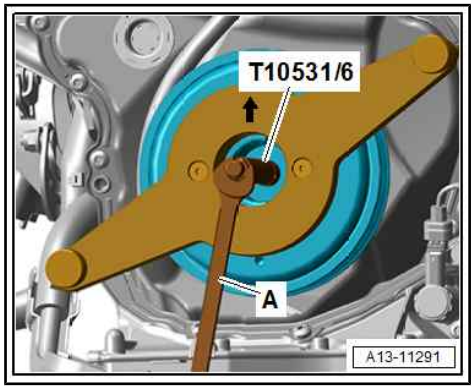

– Hand-tighten tensioning bolt -A- to secure chain sprocket to crankshaft.

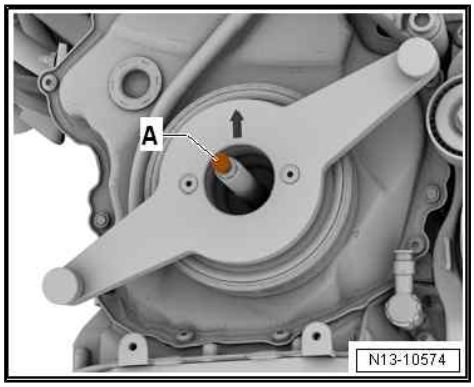

– Remove knurled screws -arrows-. Detach support - T10531/1- and vibration damper -A-.

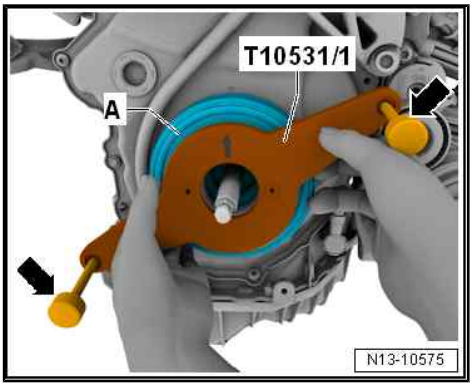

If crankshaft needs to be rotated without vibration damper:

– Fit turning-over tool - T10531/3- -item A- onto clamping pin - T10531/6- (pay attention to tooth-shaped profile on chain sprocket).

• In TDC position, flat surface of tool faces upwards.

– Tighten turning-over tool with flange nut - T10531/4- -item B-.

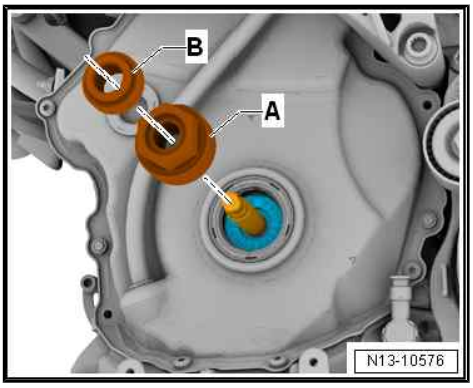

– Crankshaft can now be rotated at hexagon flats -arrow-.

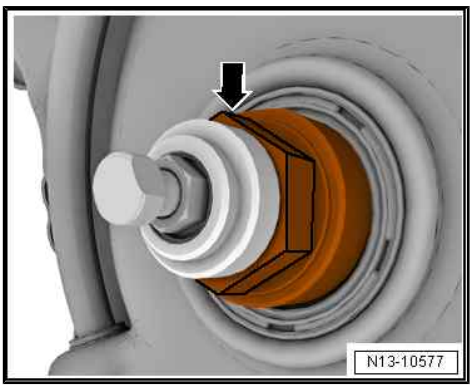

Installing

Installation is carried out in reverse order; note the following:

• Renew bolt with O-ring after removal.

– If necessary, detach flange nut - T10531/4- -item B- and turning-over tool - T10531/3- -item A- from clamping pin - T10531/6- .

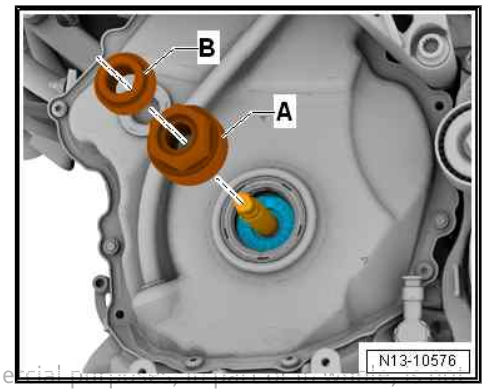

Protected by copyright. Copying for private or commercial purposes, in part, is not permitted unless authorised by AUDI AG. AUDI AG does not guarantee or accept any liability with respect to the correctness of information in this document. Copyright by AUDI AG.

– Fit vibration damper in TDC position (pay attention to tooth-shaped profile -arrow- on chain sprocket).

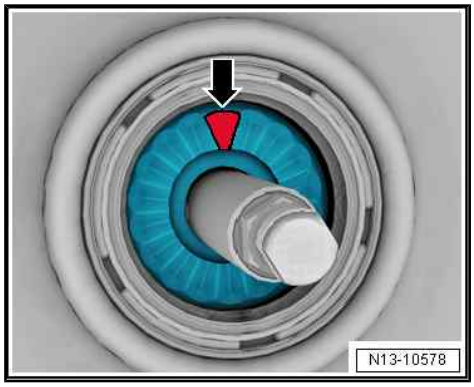

– Fit turning-over tool - T10531/3- -item A- onto clamping pin - T10531/6- .

• The hexagon flats should face the vibration damper.

– Screw flange nut - T10531/4- -item B- on while moving vibration damper back and forth slightly to check whether vibration damper is seated correctly in tooth-shaped profile.

– Tighten flange nut until vibration damper can no longer be rotated.

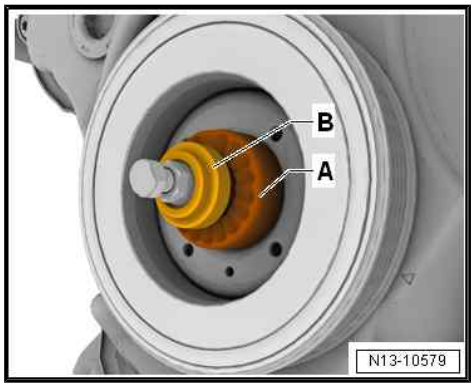

– Apply support - T10531/1- (as illustrated) to vibration damper and screw knurled screws -1, 3- hand-tight into adapters.

– If necessary, align and counterhold adapters on hexagon flats -2- using a hexagon socket (4 mm).

• Arrow marking on support - T10531/1- must point upwards.

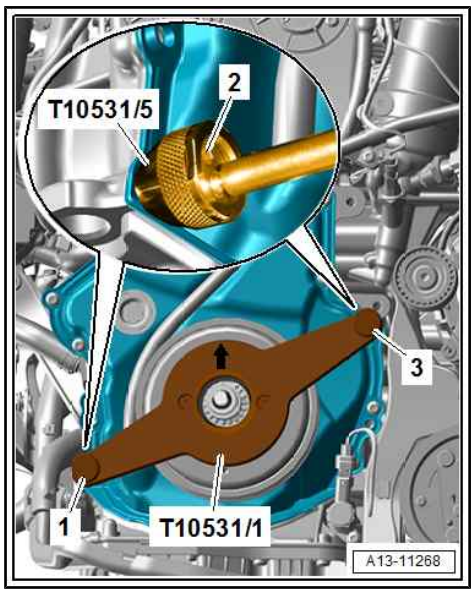

– Unscrew flange nut - T10531/4- -item A- and tensioning bolt -B-.

– Unscrew clamping pin - T10531/6- and remove with turning-over tool - T10531/3- .

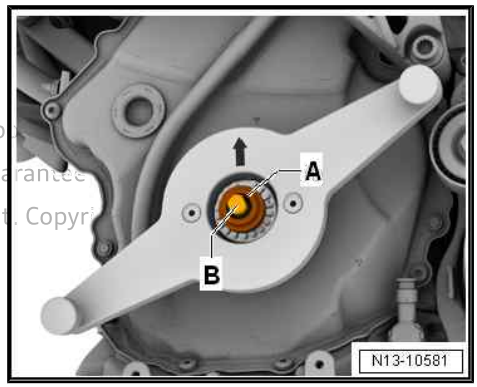

Protected by copyright. Copying for private or commercial purp
permitted unless authorised by AUDI AG. AUDI AG does not guarantee
with respect to the correctness of information in this document. Copyri

– Screw in new bolt for vibration damper with lubricated O-ring -1- hand-tight.

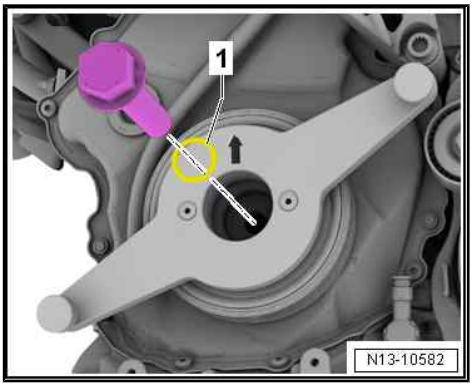

– Remove knurled screws -1, 3- and detach support - T10531/1- .
– Unscrew adapter - T10531/5- .

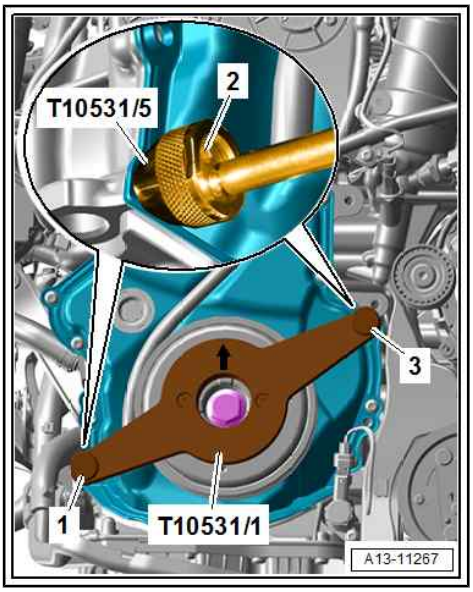

– Tighten bolt for vibration damper; depending on version, use counterhold tool - T40378- or counterhold tool - T40379- -1- to do so.

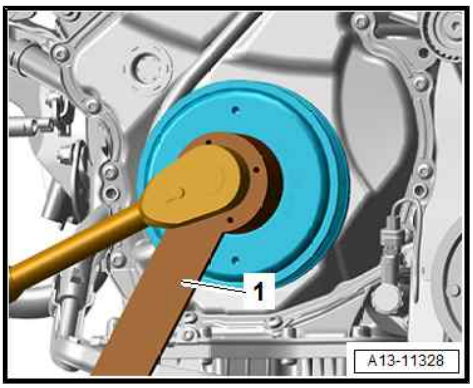

Protected by copyright. Copying for private or commercial purposes, in part or in whole, is not permitted unless authorised by AUDI AG. AUDI AG does not guarantee or accept any liability with respect to the correctness of information in this document. Copyright by AUDI AG.

Remaining installation steps are carried out in reverse sequence; note the following:

- Renew bolts -arrows- for timing chain cover after removing.

– Install poly V-belt ⇒ page 22 .

Additional work depending on model ⇒ 4-cylinder direct injection engine (2.0 ltr. 4-valve TFSI); Rep. gr. 13 ; Cylinder block (pulley end); Removing and installing vibration damper

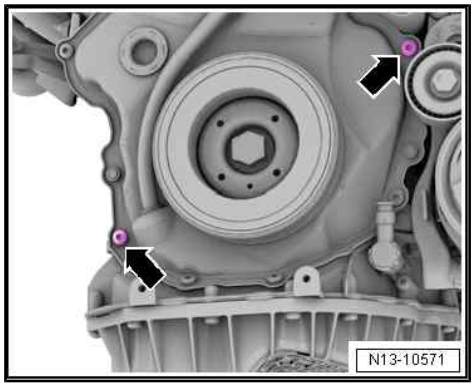

Tightening torques

- ⇒ "2.1.2 Exploded view - cylinder block (pulley end), vehicles with starter-alternator", page 19
- ⇒ Fig. ""Timing chain cover (bottom) with 15 bolts - tightening torques and tightening sequence"" , page 79
- ⇒ Fig. ""Timing chain cover (bottom) with 8 bolts - tightening torques and tightening sequence"" , page 79

2.5 Removing and installing bracket for ancillaries

⇒ "2.5.1 Removing and installing bracket for ancillaries - vehicles with alternator", page 38

⇒ "2.5.2 Removing and installing bracket for ancillaries - vehicles with starter-alternator", page 40

⇒ "2.5.3 Removing and installing bracket for ancillaries - vehicles with high-voltage system", page 41

2.5.1 Removing and installing bracket for ancillaries - vehicles with alternator

Protected by copyright. Copying for private or commercial purposes, in part or in whole, is not permitted unless authorised by AUDI AG. AUDI AG does not guarantee or accept any liability with respect to the correctness of information in this document. Copyright by AUDI AG.

Removing

Preparatory work may be necessary depending on model ⇒ 4-cylinder direct injection engine (1.8, 2.0 ltr. 4-valve TFSI); Rep. gr. 13 ; Cylinder block (pulley end); Removing and installing bracket for ancillaries .

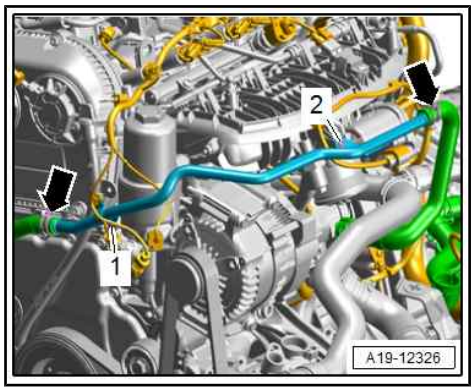

– Unscrew bolts -1, 2- and swivel coolant pipe (left-side) upwards.

– Drain coolant ⇒ 4-cylinder direct injection engine (1.8, 2.0 ltr. 4-valve TFSI); Rep. gr. 19 ; Cooling system/coolant; Draining and filling cooling system .

– Vehicles without high-voltage system: Detach poly V-belt from tensioner ⇒ page 22 .

– Remove air conditioner compressor from bracket with refrigerant lines still attached and tie up to longitudinal member ⇒ Heating, air conditioning; Rep. gr. 87 ; Air conditioner compressor; Detaching and attaching air conditioner compressor at bracket .

– Vehicles without high-voltage system: Remove alternator ⇒ Electrical system; Rep. gr. 27 ; Alternator; Removing and installing alternator .

– Remove oil filter element ⇒ page 169 .

– Unplug electrical connectors:

1 - For oil pressure switch - F22- -item 2-

3 - For oil pressure switch for reduced oil pressure - F378- -item 4-

5 - For piston cooling jet control valve - N522- -item 7-

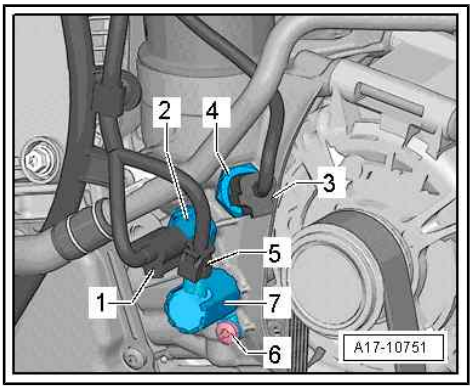

– Place a cloth underneath bracket for ancillaries to catch any escaping oil.

– Unscrew bolts -1 ... 5- and detach bracket for ancillaries from coolant pump housing.

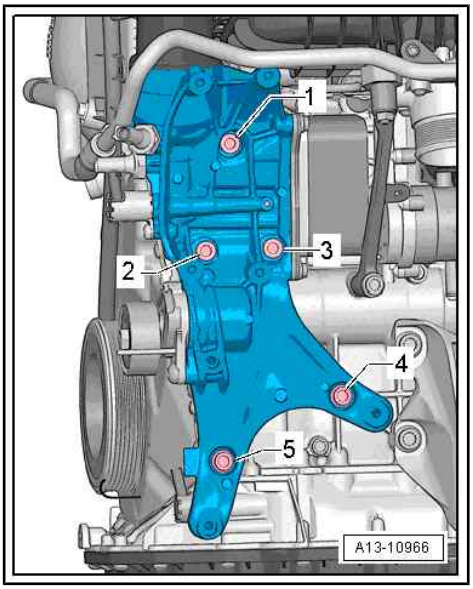

Installing

Installation is carried out in reverse order; note the following:

- After removing, renew bolts tightened with specified tightening angle.
- Renew seals and O-rings after removal.
- Do not reuse coolant.

– Coat new O-rings -4- with coolant additive.

– Insert connection -2- into coolant pump housing -3-.

– Push bracket for ancillaries -1- onto connection, fit bolts and tighten.

– Install alternator ⇒ Electrical system; Rep. gr. 27 ; Alternator; Removing and installing alternator .

– Install air conditioner compressor ⇒ Heating, air conditioning; Rep. gr. 87 ; Air conditioner compressor; Detaching and attaching air conditioner compressor at bracket .

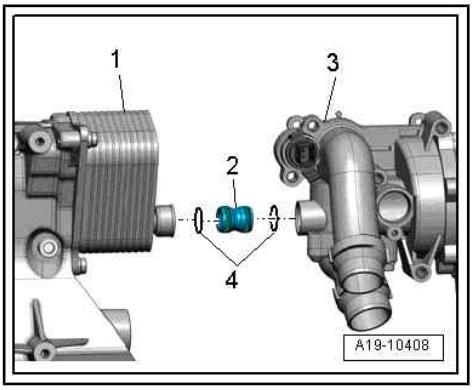

– Install poly V-belt ⇒ page 22 .

– Install oil filter element and check oil level ⇒ page 169 .

– Fill up coolant ⇒ 4-cylinder direct injection engine (1.8, 2.0 ltr. 4-valve TFSI); Rep. gr. 19 ; Cooling system; Coolant; Draining and filling cooling system .

Presented by copyright. Copying for private or commercial purposes, in part or in whole, is not permitted unless authorised by AUDI AG. AUDI AG does not guarantee or accept any liability with respect to the correctness of information in this document. Copyright by AUDI AG.

Additional work depending on model ⇒ 4-cylinder direct injection engine (1.8, 2.0 ltr. 4-valve TFSI); Rep. gr. 13 ; Cylinder block (pulley end); Removing and installing bracket for ancillaries

Tightening torques

- ⇒ Fig. ""Bracket for ancillaries - tightening torques and tightening sequence"" , page 19
- ⇒ "2.1 Exploded view - cylinder block (pulley end)", page 17
- ⇒ 4-cylinder direct injection engine (1.8, 2.0 ltr. 4-valve TFSI); Rep. gr. 19 ; Coolant pipes; Exploded view - coolant pipes

2.5.2 Removing and installing bracket for ancillaries - vehicles with starter-alternator

Removing

– Move electrical wiring clear.

– Unscrew bolts -1, 2- and swivel coolant pipe (left-side) upwards.

– Drain coolant ⇒ page 201 .

– Remove poly V-belt
⇒ “2.2 Removing and installing poly V-belt”, page 22 .

– Remove air conditioner compressor from bracket with refrigerant lines still attached and tie up to longitudinal member ⇒ Heating, air conditioning; Rep. gr. 87 ; Air conditioner compressor; Detaching and attaching air conditioner compressor at bracket .

– Remove starter-alternator ⇒ Electrical system; Rep. gr. 27 ; Alternator; Removing and installing alternator .

– Remove oil filter element ⇒ page 169 .

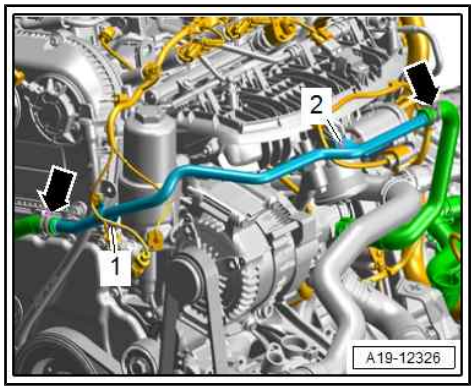

– Unplug electrical connectors:

1 - For oil pressure switch - F22-

2 - For oil pressure switch for reduced oil pressure - F378-

3 - For piston cooling jet control valve - N522-

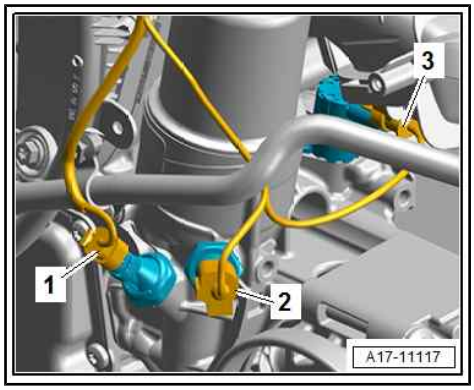

Note

Place a cloth underneath bracket for ancillaries to catch any escaping oil.

– Unscrew bolts -1 ... 5- and detach bracket for ancillaries from coolant pump housing.

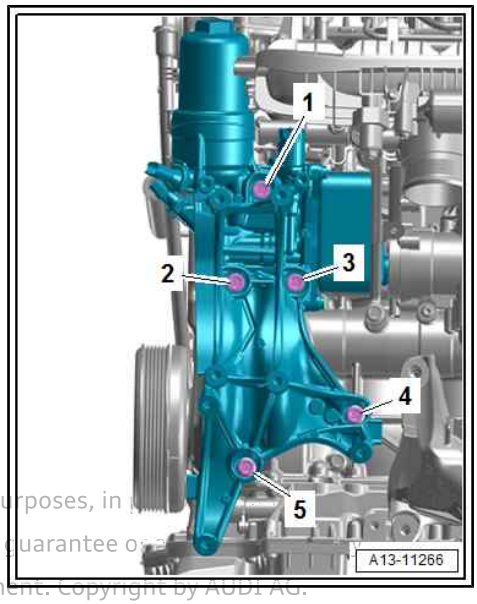

Installing

Installation is carried out in reverse order; note the following:

Note

- *After removing, renew bolts tightened with specified tightening angle.*
- *Renew seals and O-rings after removal.*

Protected by copyright. Copying for private or commercial purposes, in part, is not permitted unless authorized by AUDI AG. AUDI AG does not guarantee or assume any liability with respect to the correctness of information in this document. Copyright by AUDI AG.

– Moisten new O-rings -4- with coolant.

– Insert connection -2- into coolant pump housing -3-.

– Push bracket for ancillaries -1- onto connection, fit bolts and tighten; tightening sequence ⇒ page 19 .

– Install alternator ⇒ Electrical system; Rep. gr. 27 ; Alternator; Removing and installing alternator .

– Install air conditioner compressor ⇒ Heating, air conditioning; Rep. gr. 87 ; Air conditioner compressor; Detaching and attaching air conditioner compressor at bracket .

– Install poly V-belt ⇒ page 22 .

– Install oil filter element and check oil level ⇒ page 169 .

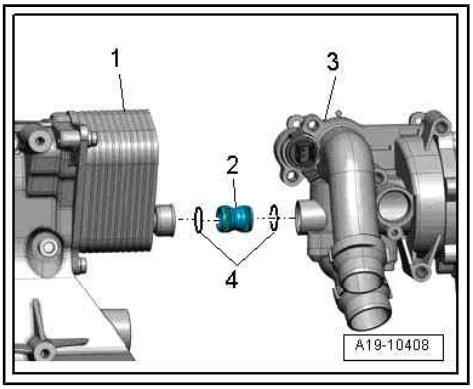

Protected by copyright. Copying for private or commercial purposes, in part or in whole, is not permitted unless authorised by AUDI AG. AUDI AG does not guarantee or accept any liability with respect to the correctness of information in this document. Copyright by AUDI AG.

Note

Do not reuse coolant.

– Fill up coolant ⇒ 4-cylinder direct injection engine (2.0 ltr. 4-valve TFSI); Rep. gr. 19 ; Cooling system/coolant; Draining and filling cooling system .

– Install engine cover panel ⇒ page 15 .

Tightening torques

- ⇒ Fig. ""Bracket for ancillaries - tightening torques and tightening sequence"" , page 19
- ⇒ "2.1 Exploded view - cylinder block (pulley end)", page 17
- ⇒ 4-cylinder direct injection engine (2.0 ltr. 4-valve TFSI); Rep. gr. 19 ; Coolant pipes; Exploded view - coolant pipes

2.5.3 Removing and installing bracket for ancillaries - vehicles with high-voltage system

Removing

– Unscrew bolts -1, 2- and swivel coolant pipe (left-side) upwards.

– Remove oil filter element ⇒ "2.2 Engine oil", page 169 .

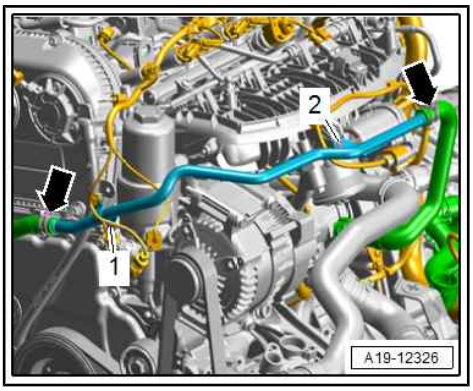

– Unplug electrical connectors:

1 - For oil pressure switch - F22-

2 - For oil pressure switch for reduced oil pressure - F378-

3 - For piston cooling jet control valve - N522-

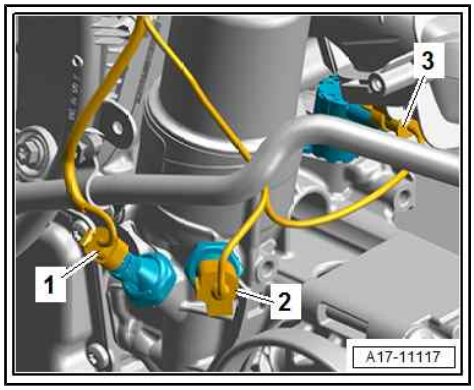

Note

Place a cloth underneath bracket for ancillaries to catch any escaping oil.

– Unscrew bolts -1 ... 5- and detach bracket for ancillaries from coolant pump housing.

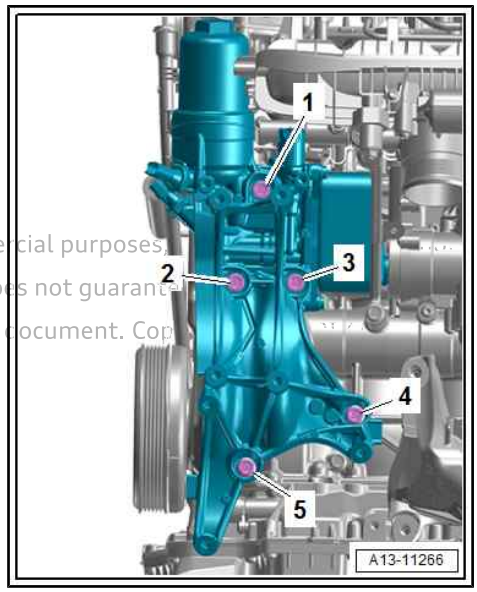

Protected by copyright. Copying for private or commercial purposes, permitted unless authorised by AUDI AG. AUDI AG does not guarantee the correctness of information in this document. Copyright by AUDI AG.

Installing

Installation is carried out in reverse order; note the following:

Note

- *After removing, renew bolts tightened with specified tightening angle.*
- *Renew seals and O-rings after removal.*

– Moisten new O-rings -4- with coolant.

– Insert connection -2- into coolant pump housing -3-.

– Push bracket for ancillaries -1- onto connection, fit bolts and tighten; tightening sequence ⇒ page 19 .

– Install alternator ⇒ Electrical system; Rep. gr. 27 ; Alternator; Removing and installing alternator .

– Install air conditioner compressor ⇒ Heating, air conditioning; Rep. gr. 87 ; Air conditioner compressor; Detaching and attaching air conditioner compressor at bracket .

– Install poly V-belt ⇒ page 22 .

– Install oil filter element and check oil level ⇒ page 169 .

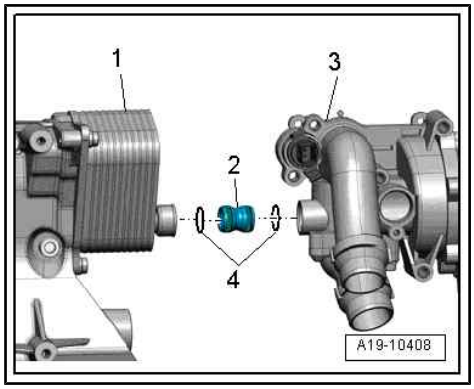

Additional work depending on model ⇒ 4-cylinder direct injection engine (2.0 ltr. 4-valve TFSI, EA 888 Gen. III); Rep. gr. 13 ; Cylinder block (pulley end); Removing and installing bracket for ancillaries

Tightening torques

- ⇒ Fig. ""Bracket for ancillaries - tightening torques and tightening sequence"" , page 19
- ⇒ "2.1 Exploded view - cylinder block (pulley end)", page 17
- ⇒ 4-cylinder direct injection engine (2.0 ltr. 4-valve TFSI); Rep. gr. 19 ; Coolant pipes; Exploded view - coolant pipes

2.6 Removing and installing engine support

All procedures are described in ⇒ 4-cylinder direct injection engine (1.8, 2.0 ltr. 4-valve TFSI); Rep. gr. 13 ; Cylinder block (pulley end); Removing and installing engine support .

Protected by copyright. Copying for private or commercial purposes, in part or in whole, is not permitted unless authorised by AUDI AG. AUDI AG does not guarantee or accept any liability with respect to the correctness of information in this document. Copyright by AUDI AG.

3 Cylinder block (gearbox end)

⇒ “3.1 Exploded view - cylinder block (gearbox end)”, page 44

⇒ “3.2 Removing and installing drive plate”, page 46

⇒ “3.3 Removing and installing dual-mass flywheel”, page 47

⇒ “3.4 Removing and installing sealing flange (gearbox end)”, page 48

⇒ “3.5 Renewing needle bearing in drive plate”, page 51

3.1 Exploded view - cylinder block (gearbox end)

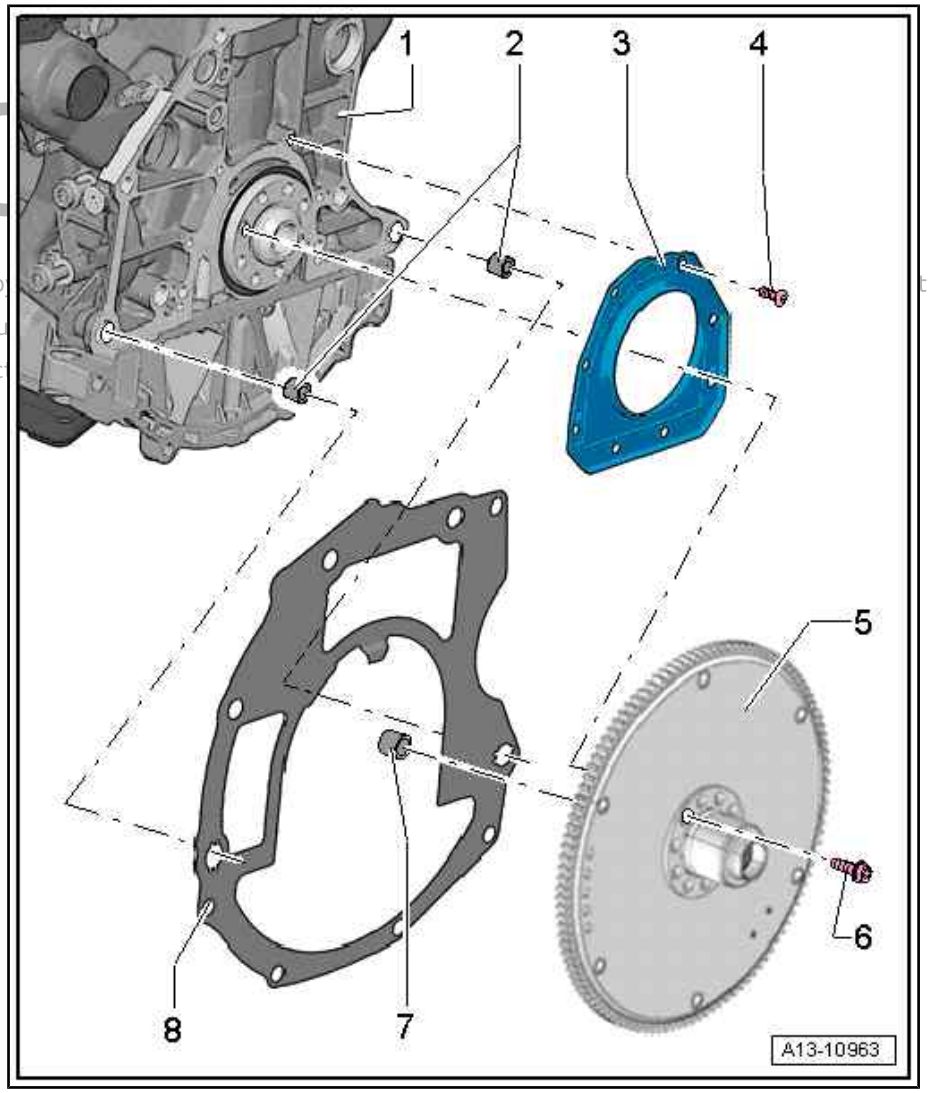

1 - Cylinder block

2 - Dowel sleeves

3 - Sealing flange (gearbox end)

- ❑ With oil seal
- ❑ Renew after removing
- ❑ Removing and installing ⇒ page 48
- ❑ Do not lubricate oil seal
- ❑ Before installing, remove oil residue from crankshaft journal with a clean cloth
- ❑ Guide sleeve is not to be removed until sealing flange has been slipped onto crankshaft journal

4 - Bolt

- ❑ Different versions

- ♦ Steel bolts can be reused
- ♦ Renew aluminium bolts after removing
  - ❑ Tightening torques and sequence
- ♦ Version with 6 bolts ⇒ page 45
- ♦ Version with 8 bolts ⇒ page 45

5 - Drive plate/dual-mass flywheel

Drive plate for vehicles without high-voltage system

- ❑ Removing and installing ⇒ page 46
- ❑ A needle bearing must be fitted in the drive plate on vehicles with manual gearbox; install needle bearing if not yet fitted ⇒ page 51
- ❑ There should be no needle bearing fitted in the drive plate on vehicles with a dual clutch/automatic gearbox; remove needle bearing if necessary ⇒ page 51

Dual-mass flywheel for vehicles with high-voltage system

- ❑ Removing and installing ⇒ page 47

6 - Bolt

- ❑ Renew after removing
- ❑ 60 Nm +90°

7 - Needle bearing

- ❑ For equipment version with manual gearbox
- ❑ Renewing ⇒ page 51

8 - Intermediate plate

- ❑ Installing ⇒ page 46

Sealing flange (gearbox end) with 6 bolts - tightening torques and sequence

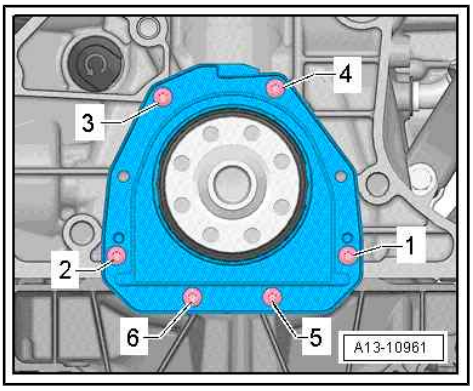

Note

After removing, renew bolts tightened with specified tightening angle.

– Tighten bolts in stages in the sequence shown:

Stage	Bolts	Tightening torques/angle specification
1.	-1 … 6-	Screw in by hand until contact is made
2.	-1 … 6-	Steel bolts: 9 Nm Aluminium bolts: 4 Nm
3.	-1 … 6-	Aluminium bolts: Turn 45° further

Note:

Only 6 bolts are fitted; 2 bolt holes remain free.

Sealing flange (gearbox end) with 8 bolts - tightening torques and sequence

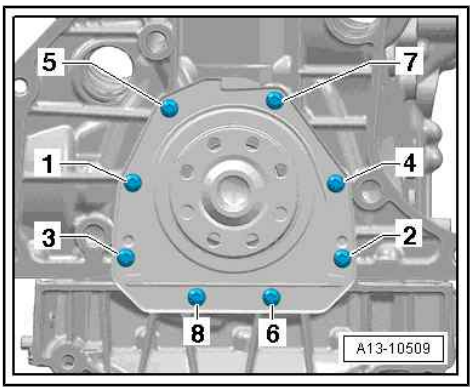

Note

After removing, renew bolts tightened with specified tightening angle.

– Tighten bolts in stages in the sequence shown:

Stage	Bolts	Tightening torques/angle specification
1.	-1 … 8-	Screw in by hand until contact is made
2.	-1 … 8-	Steel bolts: 9 Nm Aluminium bolts: 4 Nm
3.	-1 … 8-	Aluminium bolts: Turn 45° further

Protected by copyright. Copying for private or commercial purposes, in part or in whole, is not permitted unless authorised by AUDI AG. AUDI AG does not guarantee or accept any liability with respect to the correctness of information in this document. Copyright by AUDI AG.

Installing intermediate plate

– Engage intermediate plate on sealing flange -top arrow- and push onto dowel sleeves -bottom arrows-.

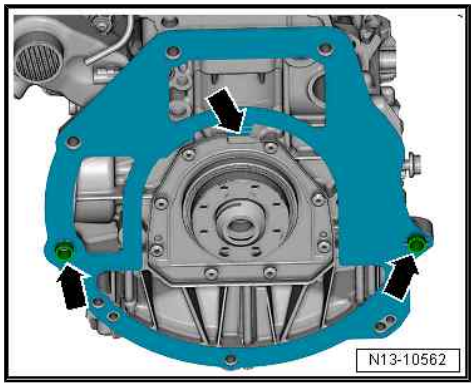

3.2 Removing and installing drive plate

Special tools and workshop equipment required

♦ Counterhold tool - 10-201-

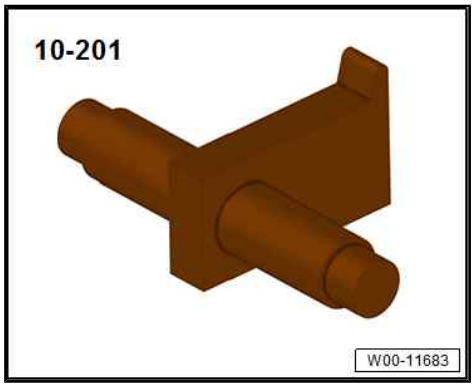

♦ Multi-point socket bit (length at least 40 mm)

Removing

• Gearbox removed ⇒ Gearbox; Rep. gr. 34 ; Removing and installing gearbox; Removing gearbox or ⇒ Gearbox; Rep. gr. 37 ; Removing and installing gearbox; Removing gearbox .

Protected by copyright. Copying for private or commercial purposes, in part or in whole, is not permitted unless authorised by AUDI AG. AUDI AG does not guarantee or accept any liability with respect to the correctness of information in this document. Copyright by AUDI AG.

– Insert counterhold tool - 10-201- to slacken bolts.

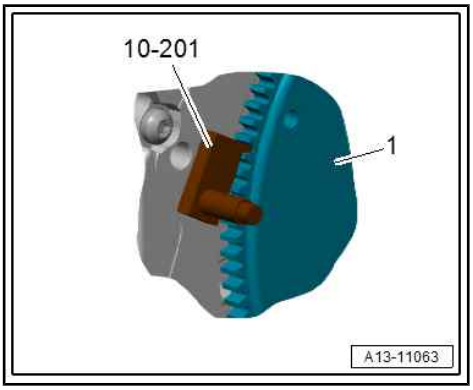

NOTICE

Risk of damage to drive plate if an unsuitable tool is used.

– **Take care not to damage centring flange of drive plate when loosening and tightening bolts.**

– Unscrew bolts for drive plate -1- using a multi-point socket bit with a length of at least 40 mm.

Installing

Installation is carried out in reverse order; note the following:

- After removing, renew bolts tightened with specified tightening angle.
- On vehicles with manual gearbox, a needle bearing is fitted in the drive plate. Before installing, check that the needle bearing is fitted. Removing and installing needle bearing in drive plate (pressing in and out) ⇒ page 51 .

– Fit counterhold tool - 10-201- the other way round to tighten bolts.

...tected by copyright. Copying for private or commercial purposes, in part or in whole, is not ...ess authorised by AUDI AG. AUDI AG does not guarantee or accept any liability ...document. Copyright by AUDI AG.

Tightening torques

◆ ⇒ "3.1 Exploded view - cylinder block (gearbox end)", page 44

3.3 Removing and installing dual-mass flywheel

Special tools and workshop equipment required

◆ Ratchet wrench (21 mm) - T40263-

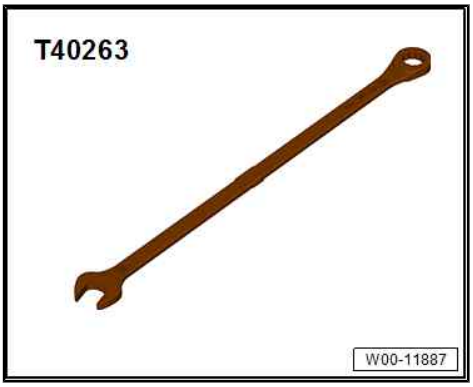

◆ Adapter - T40314-

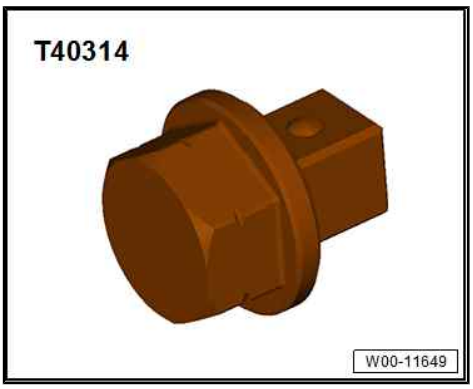

Protected by copyright. Copying for private or commercial purposes, in part or in whole, is not permitted unless authorised by AUDI AG. AUDI AG does not guarantee or accept any liability with respect to the correctness of information in this document. Copyright by AUDI AG.

Removing

- Gearbox removed ⇒ Gearbox; Rep. gr. 34 ; Removing and installing gearbox; Removing gearbox .

NOTICE

Risk of damage to dual-mass flywheel if handled incorrectly.

– Take care not to damage spline of dual-mass flywheel when loosening and tightening bolts.

– Unscrew bolts -arrows- and detach dual-mass flywheel -1-.

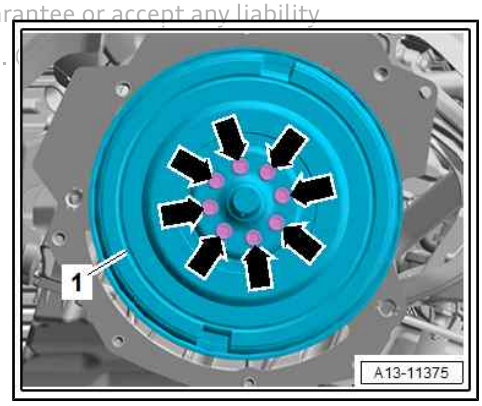

– To do so, counterhold vibration damper with ratchet wrench, 21 mm - T40263- , adapter - T40314- and socket, 24 mm.

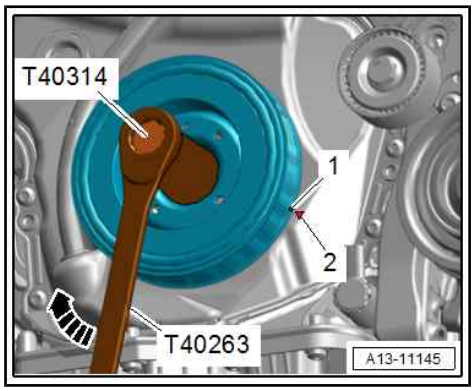

Installing

Installation is carried out in reverse order; note the following:

- After removing, renew bolts tightened with specified tightening angle.

Tightening torques

◆ ⇒ “3.1 Exploded view - cylinder block (gearbox end)”, page 44

3.4 Removing and installing sealing flange (gearbox end)

Special tools and workshop equipment required

◆ Guide piece - T10122/6- or -T10122/6A- from fitting tool - T10122B- or -T10122C-

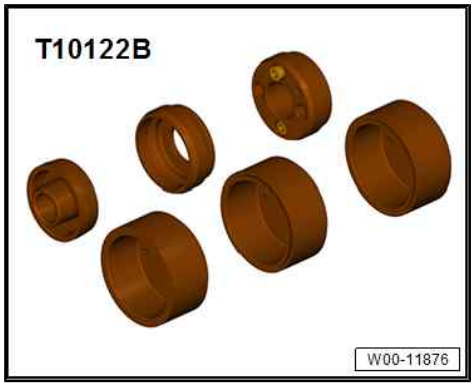

◆ Assembly aid - T10122/1- from fitting tool - T10122B- or - T10122C-

◆ Electric drill with plastic brush attachment

◆ Safety goggles

◆ Sealant ⇒ Electronic parts catalogue (ETKA)

Removing

- Vehicles without high-voltage system: Gearbox removed ⇒ Gearbox; Rep. gr. 34 ; Removing and installing gearbox; Removing gearbox , or ⇒ Gearbox; Rep. gr. 37 ; Removing and installing gearbox; Removing gearbox

- Vehicles with high-voltage system: Engine removed and secured to engine and gearbox support ⇒ page 12

– Vehicles without high-voltage system: Remove drive plate ⇒ page 46 .

– Remove bolts -1 ... 8-. (Some versions may only have six bolts.)

– Release sealing flange from bonded joint.

– Cover exposed parts of the engine.

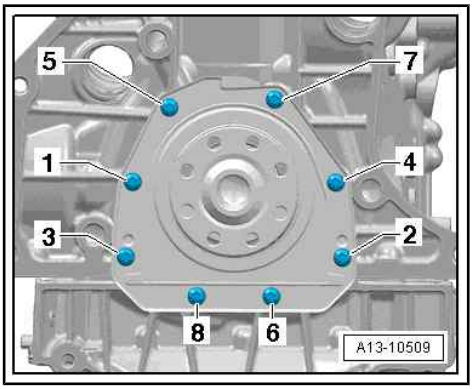

Installing

- Renew sealing flange after removing.

Place a clean cloth over the open section of the sump to prevent the lubrication system from being contaminated by sealant residue.

CAUTION

Risk of eye injury due to sealant residue.

– Put on safety goggles.

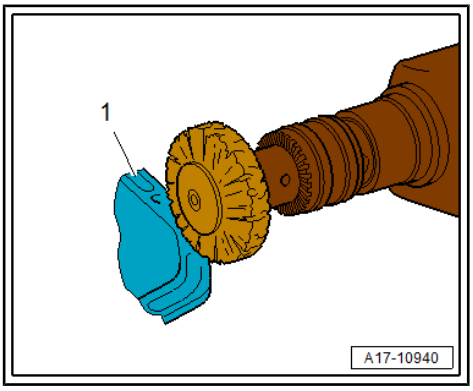

– Remove sealant residue on cylinder block -1- using rotating plastic brush or similar.

– Clean sealing surfaces and crankshaft journals; they must be free of oil and grease.

Note:

Note expiry date of sealant.

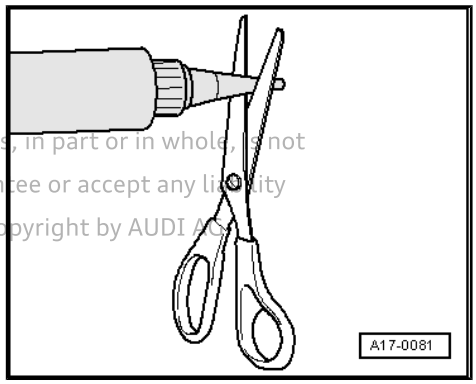

– Cut off nozzle of tube at front marking (nozzle ∅ approx. 2 mm).

otected by copyright. Copying for private or commercial purposes, in part or in whole, is not permitted unless authorised by AUDI AG. AUDI AG does not guarantee or accept any liability with respect to the correctness of information in this document. Copyright by AUDI AG.

NOTICE

Risk of engine damage due to excessive sealant in lubrication system.

– The sealant bead must not be thicker than specified.

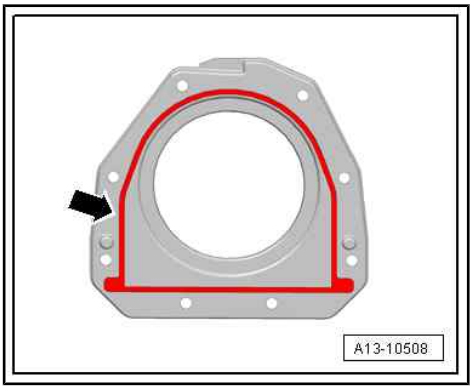

- Thickness of sealant bead: 2 ... 3 mm
- The sealing flange must be installed within 5 minutes after applying sealant.
- Check that sealing lip of sealing flange is not bent or damaged.
- Sealing lip must face engine after installation -top arrow-. If the sealing lip faces outwards after installation this will result in oil leakage.

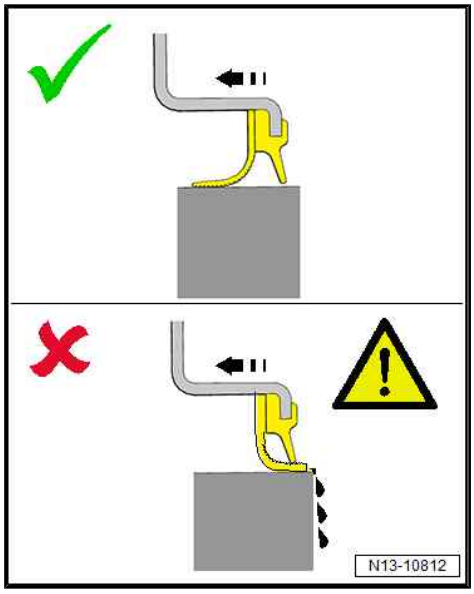

– Check guide piece - T10122/6A- -B-; it must not have sharp edges or be dirty.
– Fit assembly aid - T10122/1- -A- onto guide piece -B-.
– Push sealing flange -C- onto guide piece -B-, starting with outer edge.
– Detach assembly aid -A-.

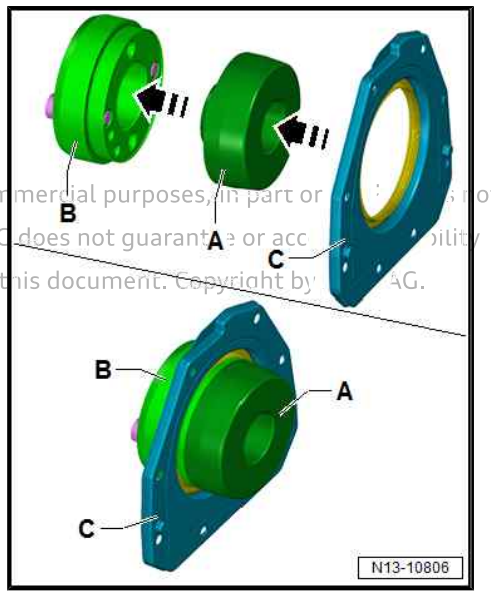

Protected by copyright. Copying for private or commercial purposes, in part or [illegible], not permitted unless authorised by AUDI AG. AUDI AG does not guarantee or accept [illegible] with respect to the correctness of information in this document. Copyright by [illegible] AG.

– Fit guide piece -A- with sealing flange -B- on crankshaft journal.

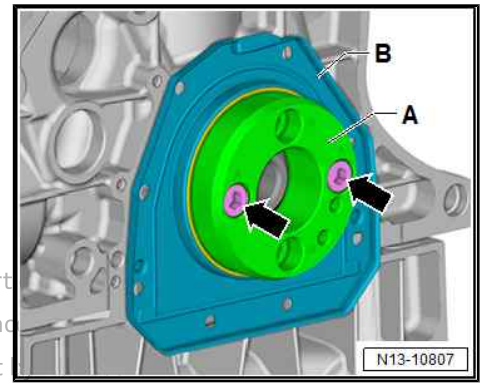

Note:

It is not necessary to tighten bolts -arrows-.

– Push sealing flange -B- over guide piece -A- onto crankshaft journal.

– Detach guide piece -A-.

Protected by copyright. Copying for private or commercial purposes, in part
permitted unless authorised by AUDI AG. AUDI AG does not guarantee or ac
with respect to the correctness of information in this document. Copyright

– Secure sealing flange with bolts.

• After installing sealing flange, wait about 30 minutes for sealant to dry. Then (and only then) fill the engine with engine oil.

Remaining installation steps are carried out in reverse sequence; note the following:

– Vehicles without high-voltage system: Install drive plate ⇒ page 46 .

– Check oil level ⇒ page 169 .

Tightening torques

♦ ⇒ Fig. ""Sealing flange (gearbox end) with 6 bolts - tightening torques and sequence"" , page 45

♦ ⇒ Fig. ""Sealing flange (gearbox end) with 8 bolts - tightening torques and sequence"" , page 45

♦ ⇒ "3.1 Exploded view - cylinder block (gearbox end)", page 44

3.5 Renewing needle bearing in drive plate

A needle bearing is fitted in the drive plate only on vehicles with manual gearbox.

Special tools and workshop equipment required

♦ Tube - VW 418A-

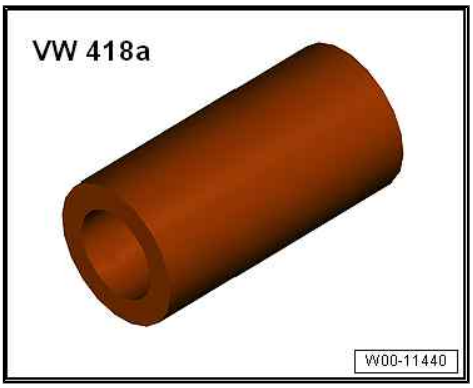

♦ Tube - VW 421-

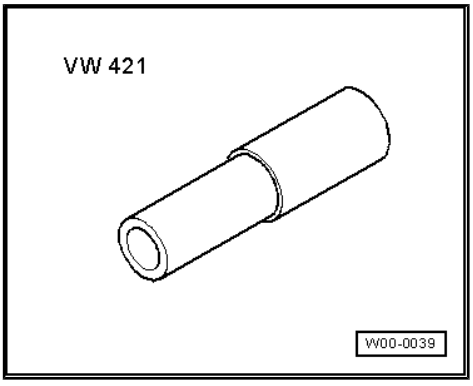

◆ Support - 40-103-

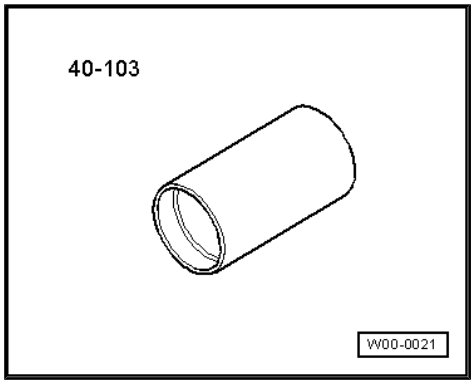

Procedure

- Gearbox removed ⇒ 6-speed manual gearbox; Rep. gr. 34 ; Removing and installing gearbox; Removing gearbox .

– Remove drive plate ⇒ page 46 .

– Place support - 40-103- under drive plate when pressing out and pressing in needle bearing.

– Use tube - VW 421- and workshop press and press out needle bearing.

- Smaller diameter of tube -VW 421- faces drive plate.

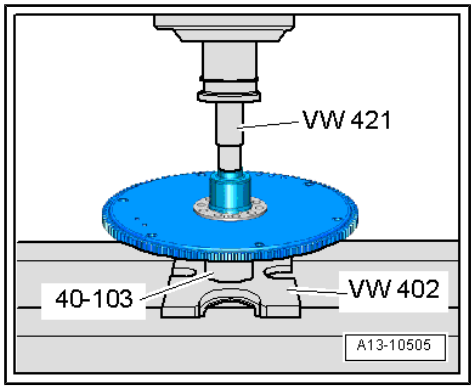

– Carefully press in needle bearing as far as stop, using tube - VW 418A- and workshop press.

- Installation position: closed side of needle bearing faces engine.

– Install drive plate ⇒ page 46 .

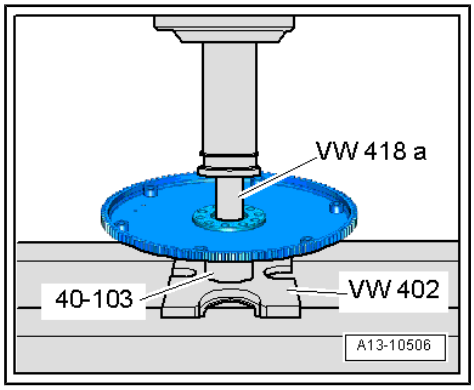

Protected by copyright. Copying for private or commercial purposes, in part or in whole, is not permitted unless authorised by AUDI AG. AUDI AG does not guarantee or accept any liability with respect to the correctness of information in this document. Copyright by AUDI AG.

4 Crankshaft

⇒ “4.1 Exploded view - crankshaft”, page 53
⇒ “4.2 Crankshaft dimensions”, page 55
⇒ “4.3 Allocation of main bearing shells”, page 55
⇒ “4.4 Measuring axial clearance of crankshaft”, page 56
⇒ “4.5 Measuring radial clearance of crankshaft”, page 57
⇒ “4.6 Removing and installing sender wheel”, page 58

Protected by copyright. Copying for private or commercial purposes, in part or in whole, is not permitted unless authorised by AUDI AG. AUDI AG does not guarantee or accept any liability with respect to the correctness of information in this document. Copyright by AUDI AG.

4.1 Exploded view - crankshaft

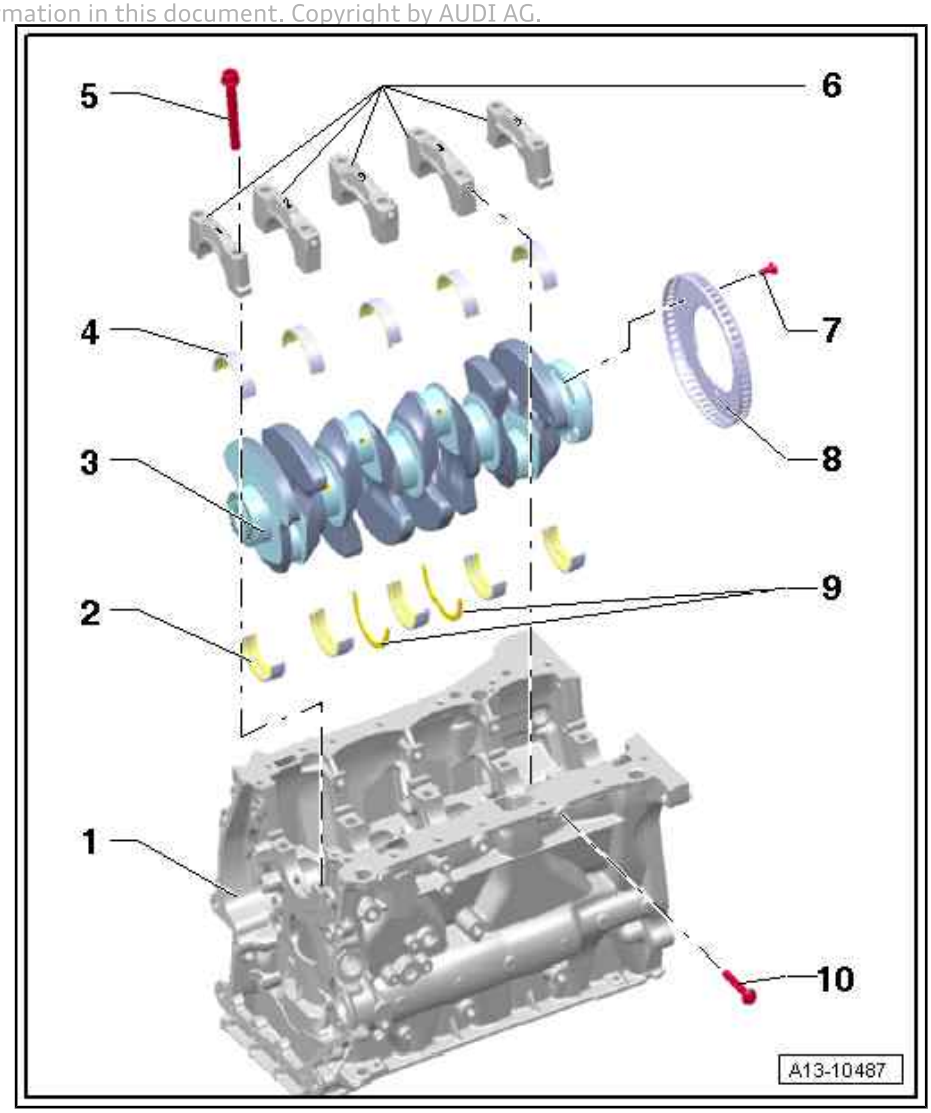

1 - Cylinder block

2 - Bearing shell for cylinder block

- ❑ With oil groove
- ❑ Renew used bearing shells
- ❑ Classification of crankshaft bearing shells ⇒ page 55
- ❑ Lubricate with engine oil

3 - Crankshaft

- ❑ Secure engine to engine and gearbox support when performing assembly work ⇒ page 12
- ❑ After removing, place it down so that the sender wheel ⇒ Item 8 (page 54) does not become damaged
- ❑ If crankshaft is renewed, new bearing shells must be assigned to bearing caps ⇒ page 55
- ❑ Measuring axial clearance ⇒ page 56
- ❑ Measuring radial clearance ⇒ page 57
- ❑ Crankshaft dimensions ⇒ page 55
- ❑ After removal or renewal, perform adaption ⇒ Vehicle diagnostic tester `01 - Engine electronics, functions`, `01 - Chain elongation adaption diagnosis`

4 - Bearing shell for bearing cap

- ❑ Without oil groove
- ❑ Renew used bearing shells
- ❑ Classification of crankshaft bearing shells ⇒ page 55
- ❑ Lubricate with engine oil

5 - Bolt

- ❑ Renew after removing

- ❑ Use old bolts when measuring radial clearance
- ❑ Tightening torques and sequence ⇒ page 54

6 - Bearing caps

- ❑ Bearing cap 1: Pulley end
- ❑ Bearing caps 2, 3 and 4 are secured additionally with bolts at side
- ❑ Bearing shell retaining lugs (cylinder block/bearing cap) must be on the same side
- ❑ Mark installation position for re-installation ⇒ page 55

7 - Bolt

- ❑ Renew after removing
- ❑ Sender wheel ⇒ Item 8 (page 54) must be renewed if bolts are loosened ⇒ page 58
- ❑ 10 Nm +90°

8 - Sender wheel

- ❑ For engine speed sender - G28-
- ❑ Can only be installed in one position. Holes are off-set
- ❑ Sender wheel must be renewed if bolts ⇒ Item 7 (page 54) are loosened
- ❑ Removing and installing ⇒ page 58
- ❑ After renewing, perform adaption ⇒ Vehicle diagnostic tester

9 - Thrust washers

- ❑ For bearing No. 3
- ❑ Lubricate with engine oil

10 - Bolt

- ❑ Renew after removing
- ❑ Tightening torques and sequence ⇒ page 54

Crankshaft - tightening torques and sequence

- After removing, renew bolts tightened with specified tightening angle.

– Tighten bolts in stages in the sequence shown:

Stage	Bolts	Tightening torques/angle specification
1.	-1 … 10- and -arrows A-	Screw in by hand until contact is made
2.	-1 … 10-	65 Nm
3.	-1 … 10-	Turn 90° further
4.	-Arrows A-	15 Nm
5.	-Arrows A-	Turn 90° further

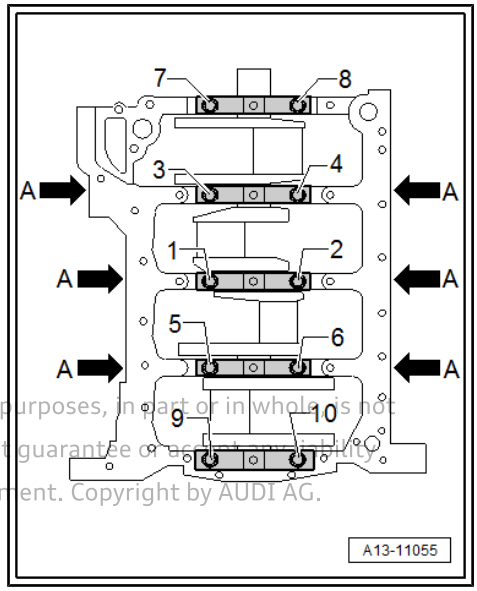

Protected by copyright. Copying for private or commercial purposes, in part or in whole, is not permitted unless authorised by AUDI AG. AUDI AG does not guarantee or accept any liability with respect to the correctness of information in this document. Copyright by AUDI AG.

Markings on crankshaft bearing caps

– Mark position of bearing caps -1 ... 5- for re-installation.

• Lugs -arrows- on bearing caps face crankshaft bearing 3 on inlet side.

...rotected by copyright. Copying for private or commercial purpos...
permitted unless authorised by AUDI AG. AUDI AG does not guara...
with respect to the correctness of information in this document. ...

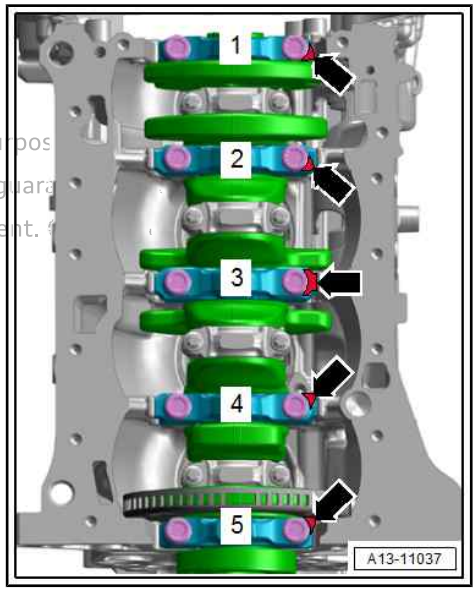

4.2 Crankshaft dimensions

Honing dimension 1)	Crankshaft main bearing journal Ø mm	Conrod journal Ø mm
Basic dimension	52.00	47.80

1) There is currently no provision for machining used crankshafts.

4.3 Allocation of main bearing shells

- Bearing shells of the correct thickness are allocated to the cylinder block at the factory. Coloured dots are used to identify the thickness of the bearing shells.
- Letter codes on lower sealing surface or end of cylinder block indicate which bearing shell is to be fitted in cylinder block (top bearing shell) at each location.
- Letter codes on crankshaft indicate which bearing shell is to be fitted in bearing cap (bottom bearing shell).
- The first letter stands for bearing cap 1, the second letter for bearing cap 2, etc.

Marking on bearing shell for cylinder block:

Markings on cylinder block are applied either onto sealing surface for sump or gearbox end of cylinder block.

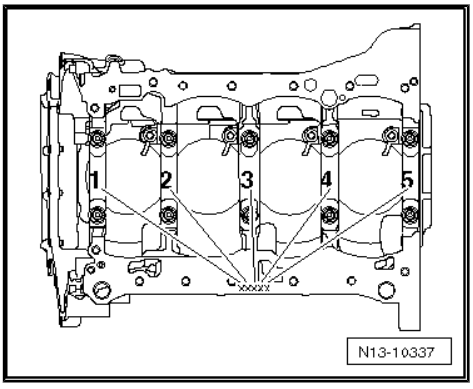

Marking on cylinder block refers to top bearing shell (bearing shell for cylinder block).

– Note down letters and select colour coding to be fitted from the table.

S	=	Black
R	=	Red
G	=	Yellow
B	=	Blue
V	=	Violet
W	=	White

Coloured marking depends on version; for correct type refer to ⇒ Electronic parts catalogue

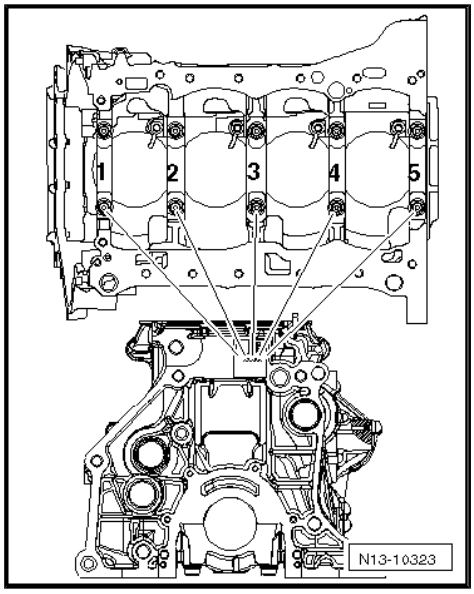

Marking on bearing shell for bearing cap:

Marking on crankshaft refers to bottom bearing shell (bearing shell for bearing cap).

– Note down letters and select colour coding to be fitted from the table.

R	=	Red
G	=	Yellow
B	=	Blue
W	=	White
V	=	Violet
S	=	Black

Coloured marking depends on version; for correct type refer to ⇒ Electronic parts catalogue

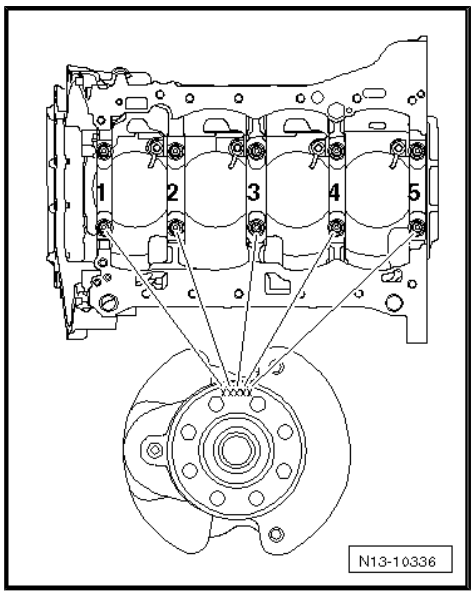

4.4 Measuring axial clearance of crankshaft

Special tools and workshop equipment required

♦ Universal dial gauge bracket - VW 387-

Protected by copyright. Copying for private or commercial purposes, in part or in whole, is not permitted unless authorised by AUDI AG. AUDI AG does not guarantee or accept any liability with respect to the correctness of information in this document. Copyright by AUDI AG.

♦ Dial gauge - VAS 6079-

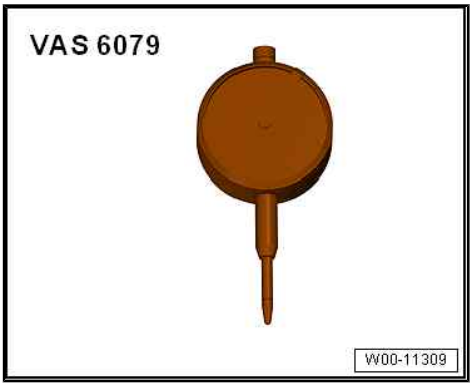

Procedure

– Bolt dial gauge - VAS 6079- with universal dial gauge bracket - VW 387- onto cylinder block and set it against crank web.

– Press crankshaft against dial gauge by hand and set gauge to “0”.

– Push crankshaft away from dial gauge and read off value.

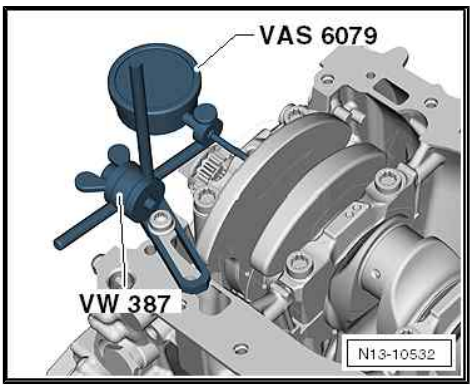

Axial clearance:

- New: 0.070 ... 0.231 mm.
- Wear limit: 0.30 mm.

4.5 Measuring radial clearance of crankshaft

Special tools and workshop equipment required

♦ Plastigauge

Procedure

- Use old bolts when measuring radial clearance.

– Remove crankshaft bearing caps and clean bearing caps and journals.

– Place a length of Plastigauge corresponding to the width of the bearing on the bearing journal or bearing shell.

- The Plastigauge must be positioned in the centre of the bearing shell.

Protected by copyright. Copying for private or commercial purposes, in part or in whole, is not permitted unless authorised by AUDI AG. AUDI AG does not guarantee or accept any liability with respect to the correctness of information in this document. Copyright by AUDI AG.

– Fit crankshaft bearing caps and secure with old bolts -1 ... 10- ⇒ page 54 without rotating crankshaft.
– Remove crankshaft bearing caps again.
– Compare width of Plastigauge with measurement scale.

Radial clearance:

- New: 0.017 ... 0.037 mm.
- Wear limit: 0.15 mm.

– When carrying out final assembly, renew bolts.

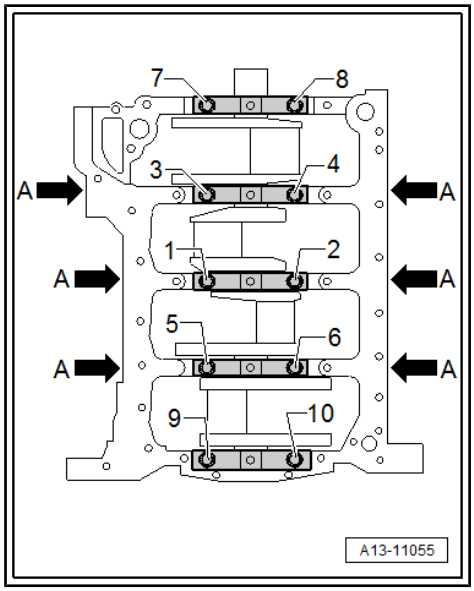

4.6 Removing and installing sender wheel

Removing

- Engine secured to engine and gearbox support ⇒ page 12
– Remove sealing flange (gearbox end) ⇒ page 48 .
– Remove sump (top section) ⇒ page 174 .
– Remove balance shaft timing chain ⇒ page 96 .
– Unbolt conrod bearing caps.
– Remove crankshaft bearing caps.
– Remove crankshaft and unbolt sender wheel.

Installing

Installation is carried out in reverse order; note the following:

– Sender wheel -2- must always be renewed after slackening off bolts -1-.

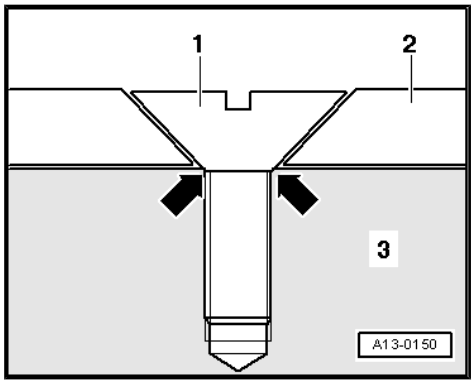

Note:

If the countersunk bolts are tightened a second time, the seats for the bolt heads in the sender wheel will be deformed to such an extent that the bolt heads make contact with the crankshaft -3- -arrows- and the sender wheel beneath the bolts will be loose.

- Sender wheel can only be fitted in one position because holes are offset.

– Adaption must be performed after renewing sender wheel ⇒ Vehicle diagnostic tester.

Tightening torques

◆ ⇒ “4.1 Exploded view - crankshaft”, page 53

Protected by copyright. Copying for private or commercial purposes, in part or in whole, is not permitted unless authorised by AUDI AG. AUDI AG does not guarantee or accept any liability with respect to the correctness of information in this document. Copyright by AUDI AG.

5 Balance shaft

⇒ “5.1 Exploded view - balance shaft”, page 59

⇒ “5.2 Removing and installing balance shaft”, page 60

⇒ “5.3 Renewing oil seal for balance shaft (inlet side)”, page 64

5.1 Exploded view - balance shaft

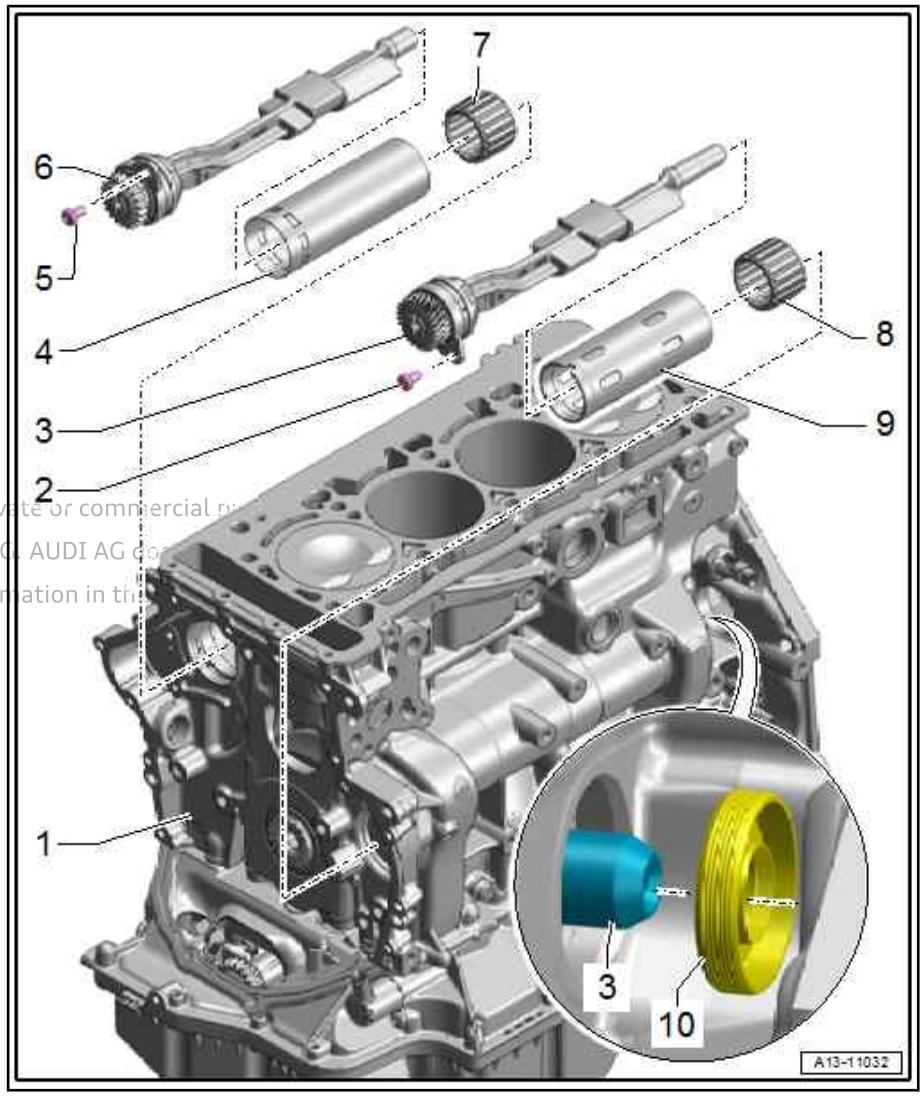

1 - Cylinder block

2 - Bolt

- ❑ 9 Nm

3 - Balance shaft (inlet side)

- ❑ Lubricate bearing with engine oil
- ❑ Always renew both sides together ⇒ page 60

4 - Pipe

- ❑ For balance shaft (exhaust side)
- ❑ Installation position ⇒ page 60

Protected by copyright. Copying for private or commercial purposes, in part or in whole, is not permitted unless authorised by AUDI AG. AUDI AG does not guarantee or accept any liability with respect to the correctness of information in this document.

5 - Bolt

- ❑ 9 Nm

6 - Balance shaft (exhaust side)

- ❑ Lubricate bearing with engine oil
- ❑ Always renew both sides together ⇒ page 63

7 - Needle bearing

- ❑ Renew after removing
- ❑ Needle bearing is colour-coded; a needle bearing with the same colour must be installed
- ❑ Lubricate bearing with engine oil

8 - Needle bearing

- ❑ Renew after removing
- ❑ Needle bearing is colour-coded; a needle bearing with the same colour must be installed
- ❑ Lubricate bearing with engine oil

9 - Pipe

- ❑ Depending on version
- ❑ For balance shaft (inlet side)
- ❑ Installation position ⇒ page 60

10 - Seal

- ❑ For balance shaft (inlet side)
- ❑ Renewing ⇒ page 64

Tube for balance shaft (inlet side) - installation position

- Lug -arrow A- on balance shaft must engage in notch -arrow B- on tube.

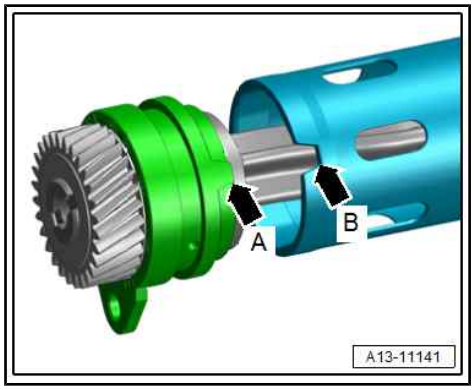

Tube for balance shaft (exhaust side) - installation position

- Openings -right arrow- must face chain side.

Protected by copyright. Copying for private or is not permitted unless authorised by AUDI AG. AUD bility with respect to the correctness of information

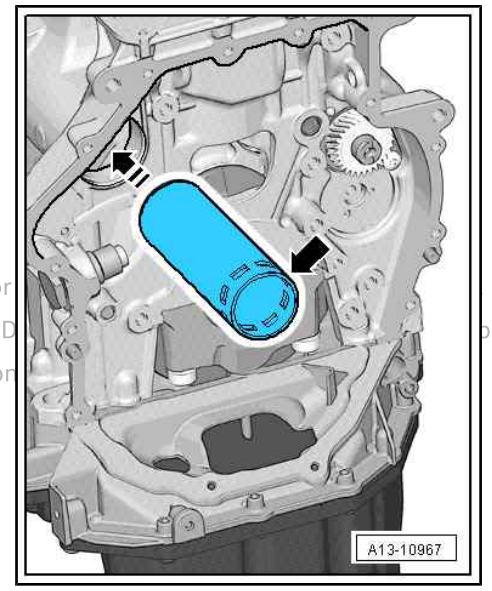

– Insert tube -2- for balance shaft into cylinder block -1-.

- Installation position is correct when dimension -a- = 21 mm.

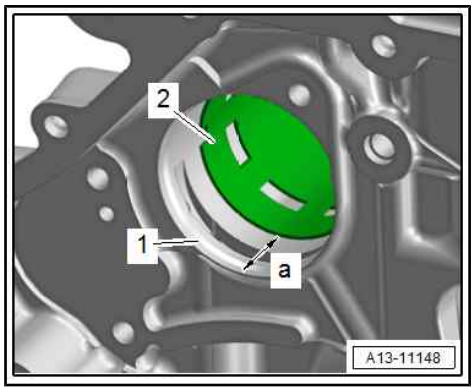

5.2 Removing and installing balance shaft

⇒ “5.2.1 Removing and installing balance shaft (inlet side)”, page 60

⇒ “5.2.2 Removing and installing balance shaft (exhaust side)”, page 63

5.2.1 Removing and installing balance shaft (inlet side)

Removing

– Remove radiator ⇒ 4-cylinder direct injection engine (1.8, 2.0 ltr. 4-valve TFSI); Rep. gr. 19 ; Radiator/radiator fans; Removing and installing radiator .

– Remove toothed belt for coolant pump ⇒ page 206 .
– Remove camshaft timing chain ⇒ page 96 .
– Remove bolt -2-.
– Detach drive sprocket -1- for toothed belt for coolant pump.

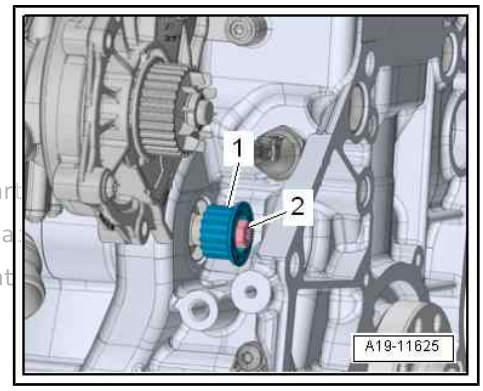

Protected by copyright. Copying for private or commercial purposes, in par
permitted unless authorised by AUDI AG. AUDI AG does not guarantee or a
with respect to the correctness of information in this document. Copyright

– Unscrew bolt -1- and remove idler gear.

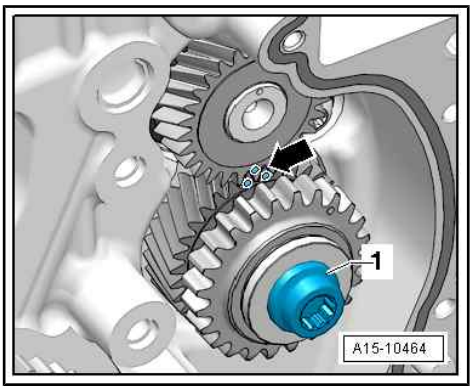

– Detach bearing mounting -1-.

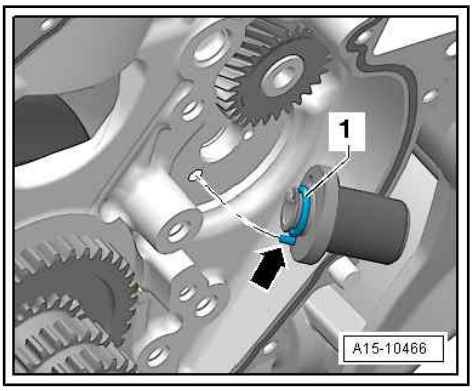

– Remove bolt -2- securing balance shaft (inlet side) and pull out balance shaft.

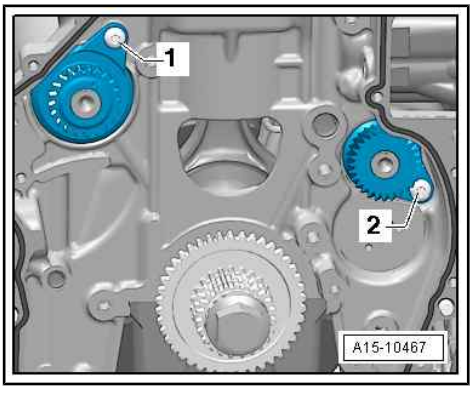

Installing

- Renew needle bearing after removing balance shaft.
- Needle bearing is colour-coded; a needle bearing with the same colour must be installed.

– Lubricate balance shaft bearings -arrows- with engine oil.

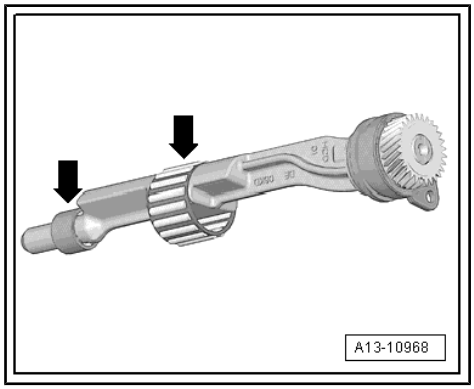

– Install balance shaft (inlet side) and tighten bolt -2-.

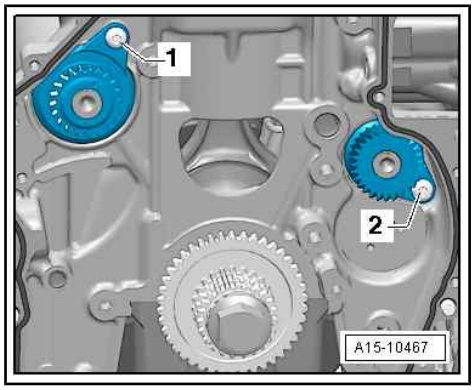

– Renew O-ring -1- and lubricate with engine oil.

– Lubricate bearing mounting with engine oil and install; dowel pin -arrow- for bearing mounting must engage in bore in cylinder block.

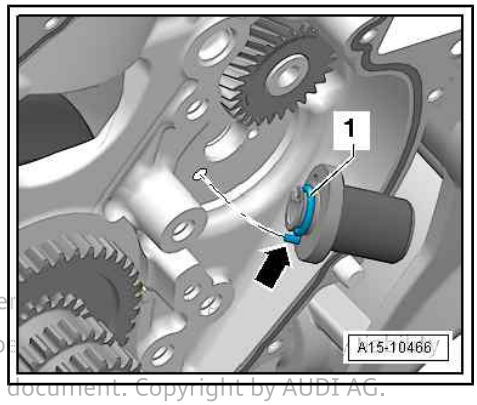

NOTICE

Risk of damage to engine due to incorrect backlash.

– Always renew idler gear; otherwise the backlash will be incorrect.

Protected by copyright. Copying for private or commercial purposes, in part, is not permitted unless authorised by AUDI AG. AUDI AG does not guarantee or accept any liability with respect to the correctness of information in this document. Copyright by AUDI AG.

The new idler gear has a special lubricant coating which wears off after a short running period and thus automatically creates the specified backlash.

– Mark faces of gear teeth of idler gear with paint marker -arrow-.

– Insert idler gear; marking on balance shaft must be positioned between markings on faces of gear teeth.

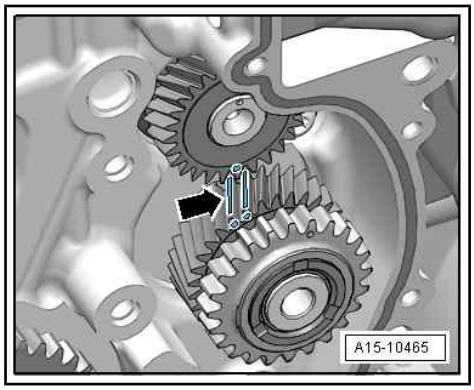

– Tighten bolt -1- for idler gear: tightening sequence ⇒ page 91 .

– Check markings on idler gear/balance shaft -arrow-.

Remaining installation steps are carried out in reverse sequence; note the following:

– Install camshaft timing chain ⇒ page 96 .

– Renew oil seal for balance shaft (inlet side) ⇒ page 64 .

– Install toothed belt for coolant pump ⇒ page 206 .

– Install radiator ⇒ 4-cylinder direct injection engine (1.8, 2.0 ltr. 4-valve TFSI); Rep. gr. 19 ; Radiator/radiator fans; Removing and installing radiator .

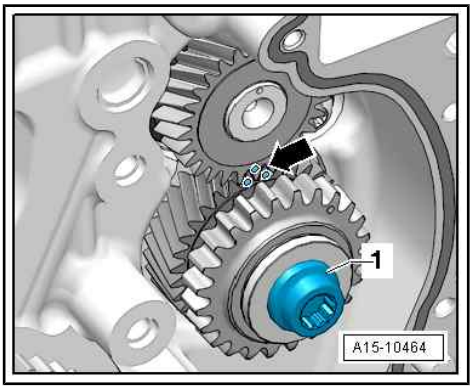

Tightening torques

♦ ⇒ “5.1 Exploded view - balance shaft”, page 59

5.2.2 Removing and installing balance shaft (exhaust side)

Removing

– Remove radiator ⇒ 4-cylinder direct injection engine (1.8, 2.0 ltr. 4-valve TFSI); Rep. gr. 19 ; Radiator/radiator fans; Removing and installing radiator .

– Remove camshaft timing chain ⇒ page 96 .

– Remove bolt -1- securing balance shaft (exhaust side) and pull out balance shaft.

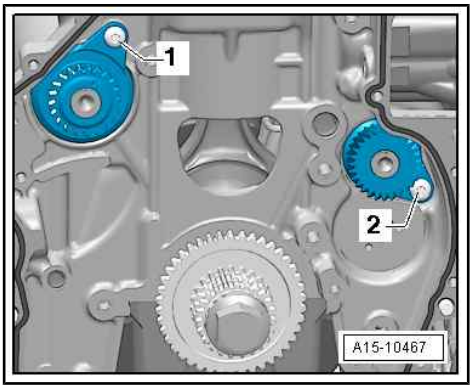

Installing

Protected by copyright. Copying for private or commercial purposes permitted unless authorised by AUDI AG. AUDI AG does not guaran... accuracy of information in this document. Co...

- Renew needle bearing after removing balance shaft.
- Needle bearing is colour-coded; a needle bearing with the same colour must be installed.

– Check installation position of tube for balance shaft; openings -arrow- must face chain side.

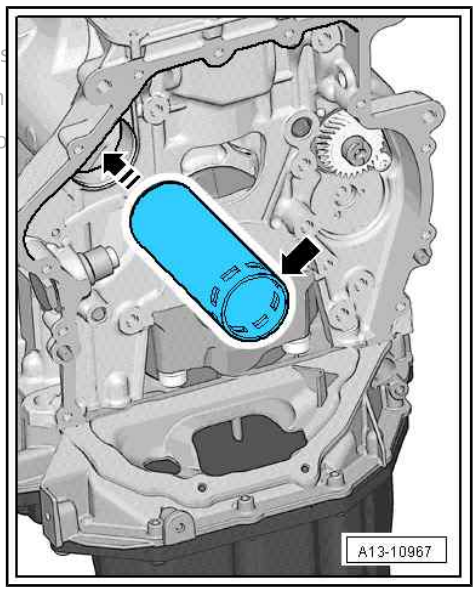

– Lubricate balance shaft bearings -arrows- with engine oil.

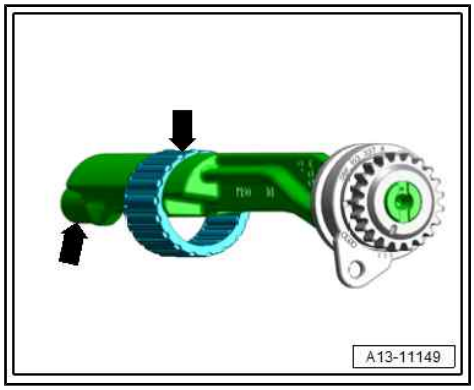

– Install balance shaft (exhaust side).
– Make sure that balance shaft is in full contact with crankcase before tightening bolt -1-.
• Insert tube for balance shaft again if balance shaft does not make full surface contact.

Remaining installation steps are carried out in reverse sequence; note the following:

– Install camshaft timing chain ⇒ page 96 .
– Install radiator ⇒ 4-cylinder direct injection engine (1.8, 2.0 ltr. 4-valve TFSI); Rep. gr. 19 ; Radiator/radiator fans; Removing and installing radiator .

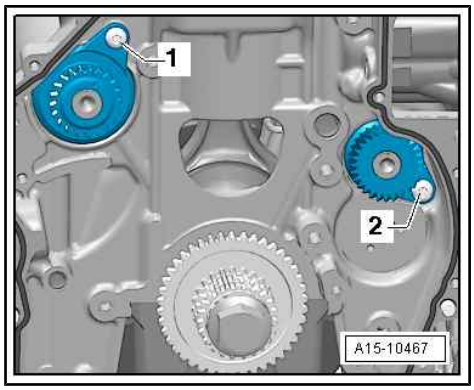

Tightening torques

♦ ⇒ “5.1 Exploded view - balance shaft”, page 59

5.3 Renewing oil seal for balance shaft (inlet side)

Special tools and workshop equipment required

♦ Thrust piece - T10353/1-

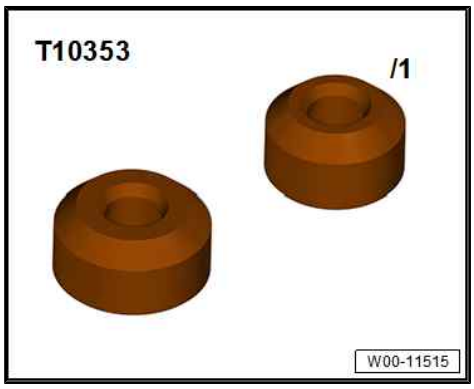

Procedure

– Remove toothed belt for coolant pump ⇒ page 206 .

Protected by copyright. Copying for private or commercial purposes, in part or in whole, is not permitted unless authorised by AUDI AG. AUDI AG does not guarantee or accept any liability with respect to the correctness of information in this document. Copyright by AUDI AG.

Note:

The drive sprocket bolt has a left-hand thread.

– Unscrew bolt -2- and detach drive sprocket -1- for toothed belt for coolant pump.

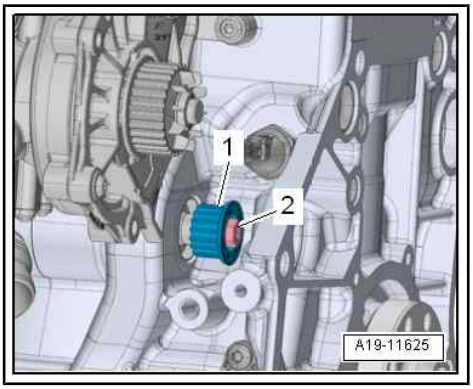

– Press screwdriver -1- firmly onto section -2- of oil seal -arrow B-.
– Lever out oil seal -arrow A-.
– Clean contact surface and sealing surface.

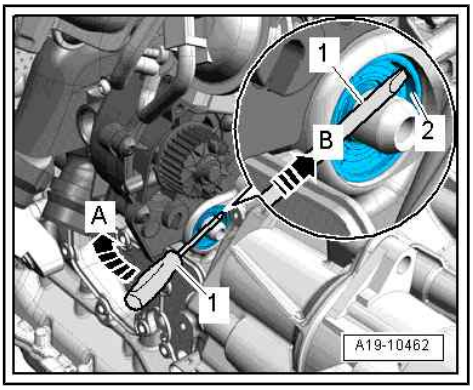

Protected by copyright. Copying for private or commercial purposes, in part or in whole, is not permitted unless authorised by AUDI AG. AUDI AG does not guarantee with respect to the correctness of information in this document.

– Lubricate sealing surface of balance shaft -2- with gear oil.
– Fit oil seal -1- onto balance shaft.

• Marking “Inside” -arrow- must face towards engine.

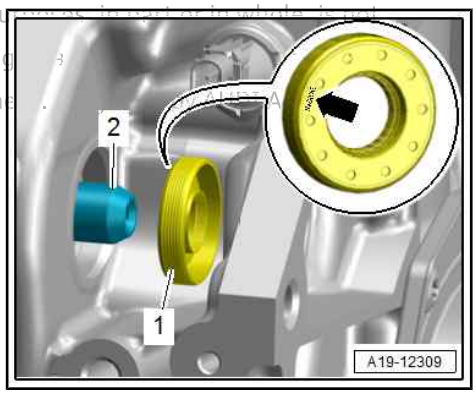

Note:

The drive sprocket bolt has a left-hand thread.

– Apply thrust piece - T10353/1- to oil seal -1- and press into cylinder block as far as stop using bolt -2- (take care not to tilt oil seal).
– Install toothed belt for coolant pump ⇒ page 206 .

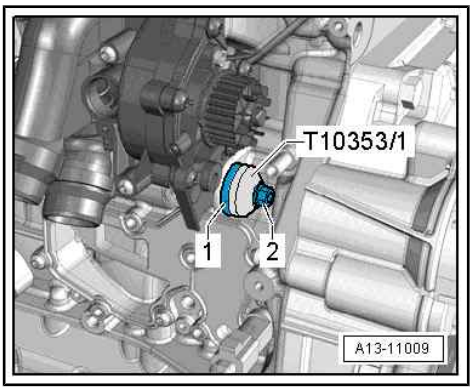

6 Pistons and conrods

⇒ “6.1 Exploded view - pistons and conrods”, page 66
⇒ “6.2 Removing and installing pistons”, page 69
⇒ “6.3 Removing and installing oil spray jets”, page 71
⇒ “6.4 Checking pistons and cylinder bores”, page 72
⇒ “6.5 Separating parts of new conrod”, page 74
⇒ “6.6 Checking radial clearance of conrod bearings”, page 74

Protected by copyright. Copying for private or commercial purposes, in part or in whole, is not permitted unless authorised by AUDI AG. AUDI AG does not guarantee or accept any liability with respect to the correctness of information in this document. Copyright by AUDI AG.

6.1 Exploded view - pistons and conrods

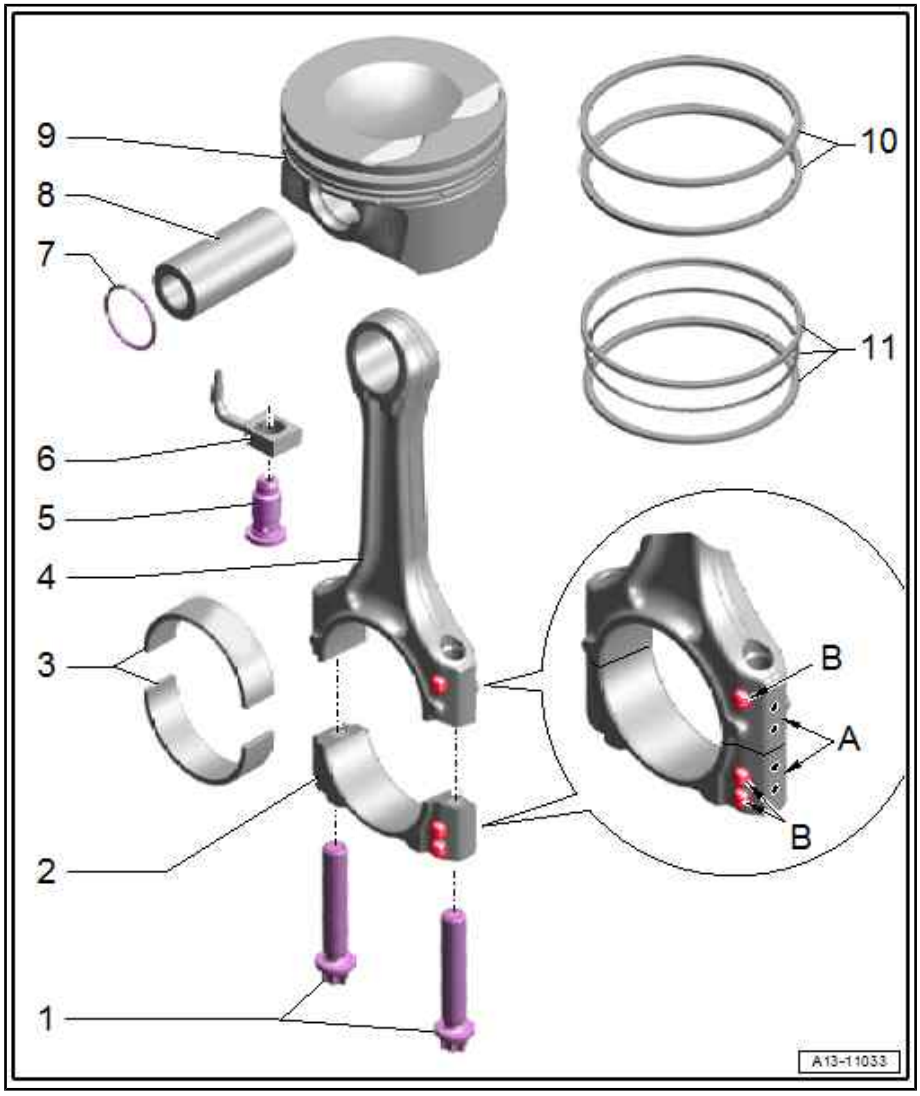

1 - Bolts

- ❑ Renew after removing
- ❑ Lubricate threads and contact surface
- ❑ Use old bolts when measuring radial clearance
- ❑ Tightening torques:

- ♦ 1.8 ltr. engine: 30 Nm +90°
- ♦ 2.0 ltr. engine: 45 Nm +90°

2 - Conrod bearing cap

- ❑ Note installation position
- ❑ Due to the cracking method used to separate the bearing cap from the conrod in manufacture, the caps only fit in one position and only on the appropriate conrod
- ❑ Mark cylinder and conrod allocation in colour -A-
- ❑ Installation position: Marking -B- faces towards pulley end
- ❑ Separating parts of new conrod ⇒ page 74

3 - Bearing shells

- ❑ Installation position ⇒ page 69
- ❑ Renew used bearing shells
- ❑ Lubricate with engine oil before installing
- ❑ Axial clearance

- ♦ New: 0.10 ... 0.35 mm
- ♦ Wear limit: 0.40 mm

- ❑ Measuring radial clearance ⇒ page 74

4 - Conrod

- ❑ Only renew as a complete set

- ❑ Mark cylinder and conrod bearing cap allocation
- ❑ Installation position: Marking -B- faces towards pulley end
- ❑ Separating parts of new conrod ⇒ page 74
- ❑ Measuring radial clearance ⇒ page 74

5 - Pressure relief valve

- ❑ 27 Nm

6 - Oil spray jet

- ❑ For piston cooling
- ❑ Installation position ⇒ page 69
- ❑ Removing and installing ⇒ page 71

7 - Circlip

- ❑ Renew after removing

8 - Piston pin

- ❑ Lubricate with engine oil before installing

9 - Piston

- ❑ Removing and installing ⇒ page 69
- ❑ Mark installation position and cylinder number
- ❑ Arrow on piston crown points to pulley end
- ❑ Checking pistons and cylinder bores ⇒ page 72

10 - Compression rings

- ❑ Install using piston ring pliers -VAS 211 003- ⇒ page 68
- ❑ Offset gaps by 120°
- ❑ Installation position in combination with two-part oil scraper ring: “TOP” or “R” must face towards piston crown
- ❑ Allocation and installation position in conjunction with three-part oil scraper ring ⇒ page 68
- ❑ Checking ring gap ⇒ page 73
- ❑ Check ring-to-groove clearance in combination with two-part oil scraper ring ⇒ page 73
- ❑ Ring-to-groove clearance cannot be measured in combination with three-part oil scraper ring.

Protected by copyright. Copying for private or commercial purposes, in part or in whole, is not permitted unless authorized by AUDI AG. AUDI AG does not guarantee or accept any liability with respect to the correctness of information in this document. Copyright by AUDI AG.

11 - Oil scraper ring

- ❑ Two-part or three-part, depending on version; allocation ⇒ Electronic parts catalogue
- ❑ Two-part oil scraper ring:

- ♦ Install with gap offset by 120° to next compression ring
- ♦ “TOP” or “R” must face towards piston crown
- ♦ Checking ring gap ⇒ page 73
- ♦ Ring-to-groove clearance cannot be checked

- ❑ Three-part oil scraper ring:

- ♦ Carefully remove and install by hand
- ♦ Installation position ⇒ page 68
- ♦ Allocation ⇒ page 68
- ♦ Gap cannot be measured
- ♦ Ring-to-groove clearance cannot be checked

Allocation of piston rings in conjunction with three-part oil scraper ring

1 - Compression ring with chamfer -arrow A- on inside at top. »TOP« marking or lettering faces upwards

2 - Compression ring with shoulder -arrow B- on outside at bottom. »TOP« marking or lettering faces upwards

3 - Three-part oil scraper ring

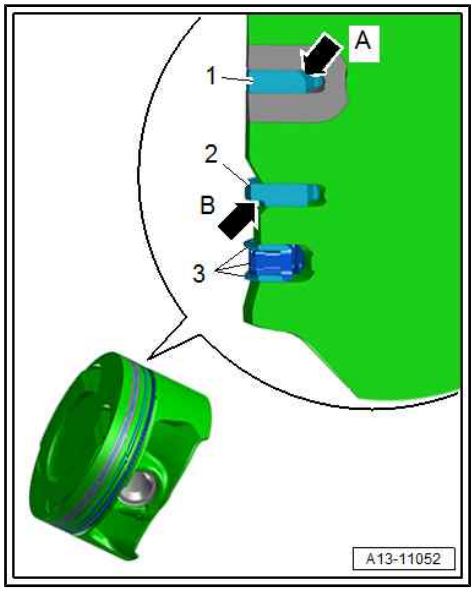

Installing compression rings

- »TOP« marking or lettering faces upwards.
- Open up compression ring -2- using piston ring pliers -VAS 211 003- just far enough to be able to slide it over piston -1-.

Protected by copyright. Copying for private or commercial purposes, in part or in w
permitted unless authorised by AUDI AG. AUDI AG does not guarantee or ac
with respect to the correctness of information in this document. Copyrigh

Installing three-part oil scraper ring

– Note installation position of spring:

- Ends of fins -2, 3- and spring -1- must be offset from one another by at least 90°.

– Install by hand.

Installation sequence:

1. Insert spring -1- in groove.
2. Insert bottom fin -3- in groove.
3. Insert top fin -2- in groove.

- Offset top gap of 3-part oil scraper ring by 120° to next compression ring.

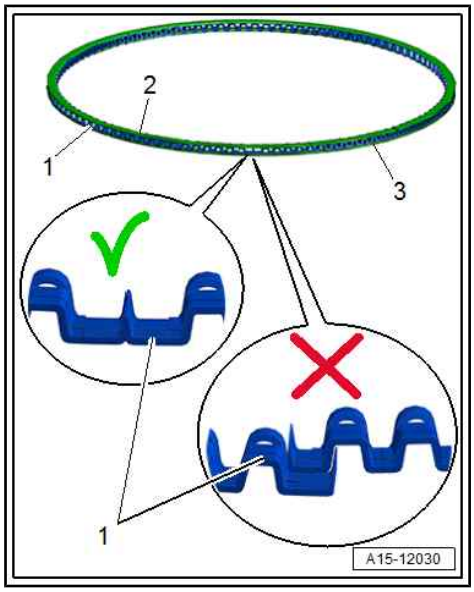

Installation position of bearing shell

– Position bearing shells in centre of conrod and conrod bearing cap when fitting.

- Dimension -a- = dimension -a-

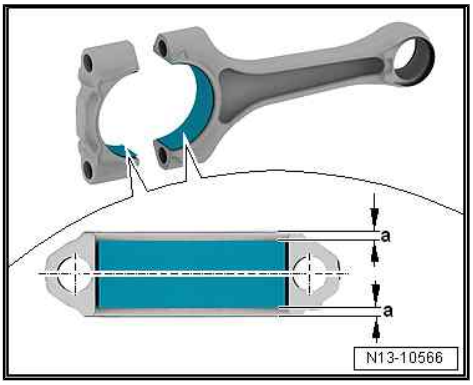

Oil spray jets - installation position

- Side surface of oil spray jet -1- must be parallel with adjacent crankshaft bearing -2-.
- Dimension -a- = dimension -a-

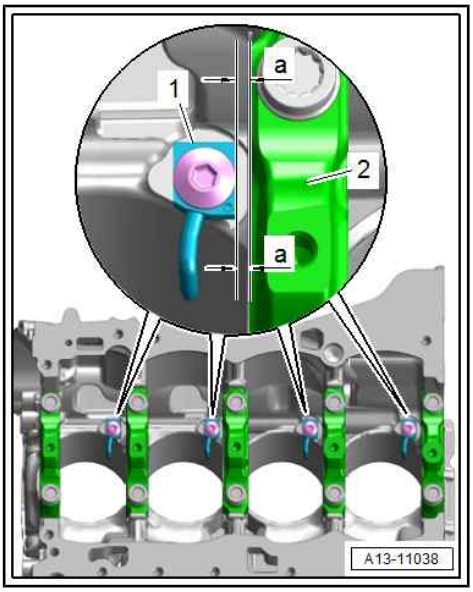

6.2 Removing and installing pistons

Special tools and workshop equipment required

♦ Pin - VW 222A-

Protected by copyright. Copying for private or commercial purposes, in part or in whole, is not permitted unless authorised by AUDI AG. AUDI AG does not guarantee or accept any liability with respect to the correctness of information in this document. Copyright by AUDI AG.

◆ Funnel - T40347-

Protected by copyright. Copying for private or commercial purposes, in part or in w
permitted unless authorised by AUDI AG. AUDI AG does not guarantee or accept a
with respect to the correctness of information in this document. Copyright by AUDI

Removing

- Engine secured to engine and gearbox support ⇒ page 12
- – Remove cylinder head ⇒ page 118 .
- – Remove sump (top section) ⇒ page 174 .
- – Mark installation position and cylinder number of piston.
- – Mark installation position and cylinder number of conrod ⇒ Item 4 (page 66) .
- – Remove conrod bearing cap and pull out piston and conrod upwards.
- – Take circlip -2- out of piston pin boss.
- – Use drift - VW 222A- to drive out piston pin -3-.

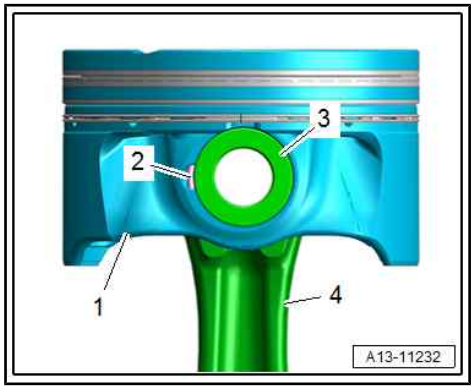

Note:

If piston pin is difficult to remove, heat piston to approx. 60 °C.

- – Detach piston -1- from conrod -4-.

Installing

Installation is carried out in reverse order; note the following:

- After removing, renew bolts tightened with specified tightening angle.
- Arrow on piston crown points to pulley end.
- – Install compression rings ⇒ Item 10 (page 67) .
- – Install oil scraper ring ⇒ Item 11 (page 67) .
- – Oil running surfaces of bearing shells.
- – Lubricate running surfaces of bearing shells and cylinder walls with engine oil.
- – Carefully push piston -1- into cylinder by hand -arrow- using funnel - T40347- .
- Arrow on piston crown points to pulley end.
- – Install conrod bearing cap; note installation position ⇒ Item 2 (page 66) .
- – Install cylinder head ⇒ page 118 .
- – Install sump (upper section) ⇒ page 174 .

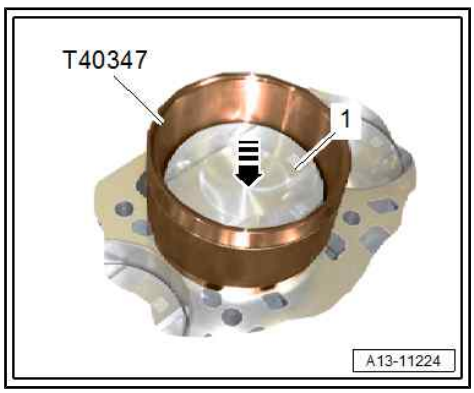

Tightening torques

◆ ⇒ “6.1 Exploded view - pistons and conrods”, page 66

6.3 Removing and installing oil spray jets

Removing

Special tools and workshop equipment required

- Socket - T10545-

- Ratchet wrench (21 mm) - T40263-

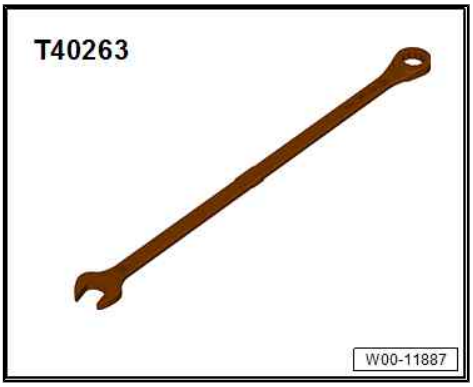

- Adapter - T40314-

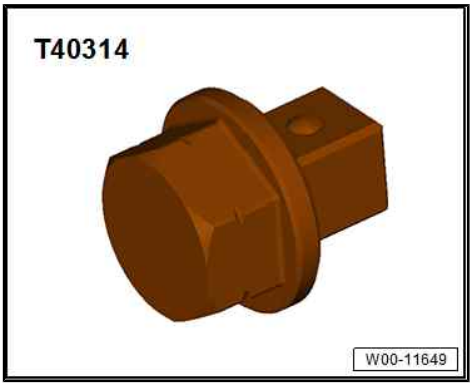

Removing cylinders 1 to 3:

- Gearbox removed ⇒ Gearbox; Rep. gr. 34 ; Removing and installing gearbox; Removing gearbox or ⇒ Gearbox; Rep. gr. 37 ; Removing and installing gearbox; Removing gearbox .

– Remove sump (top section) ⇒ page 174 .

Protected by copyright. Copying for private or commercial purposes, in part or in whole, is not permitted unless authorized by AUDI AG. AUDI AG does not guarantee or accept any liability with respect to the correctness of information in this document. Copyright by AUDI AG.

NOTICE

Risk of engine damage if valve gear drive slips

– Only turn engine in normal direction of rotation.

– Using ratchet wrench (21 mm) - T40263- , adapter - T40314- and socket (24 mm), turn crankshaft -arrow- until corresponding bolt is accessible.

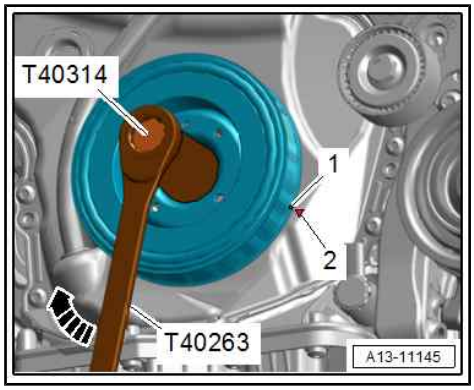

Removing cylinder 4:

- Engine removed and secured to engine and gearbox support ⇒ page 12

– Remove sump (top section) ⇒ page 174 .

– Remove balance shaft timing chain ⇒ page 96 .

– Unbolt conrod bearing caps.

– Remove crankshaft bearing caps.

– Remove crankshaft.

Continued for all cylinders:

– Unscrew pressure relief valve -1- using socket - T10545- .

– Remove oil spray jet -2-.

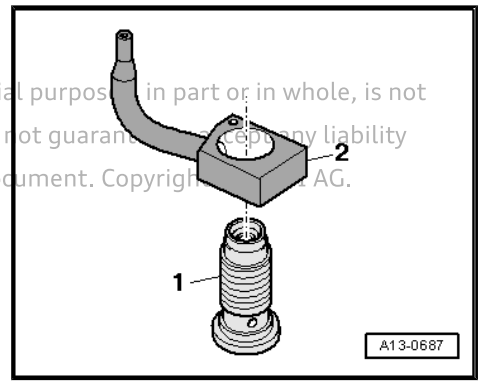

Protected by copyright. Copying for private or commercial purposes, in part or in whole, is not permitted unless authorised by AUDI AG. AUDI AG does not guarantee or accept any liability with respect to the correctness of information in this document. Copyright © AUDI AG.

Installing

Installation is carried out in reverse order; note the following:

- Installation position ⇒ page 69 .

NOTICE

Risk of damage to oil spray jets due to deformation.

– Never bend oil spray jets.

– Install balance shaft timing chain ⇒ page 96 .

– Install sump (upper section) ⇒ page 174 .

Tightening torques

- ⇒ “6.1 Exploded view - pistons and conrods”, page 66
- ⇒ “4.1 Exploded view - crankshaft”, page 53

6.4 Checking pistons and cylinder bores

Checking piston

– Using a micrometer (75 ... 100 mm), measure approx. 15 mm from the lower edge, perpendicular to the piston pin axis.

- Difference between actual and nominal diameter: not more than 0.04 mm.

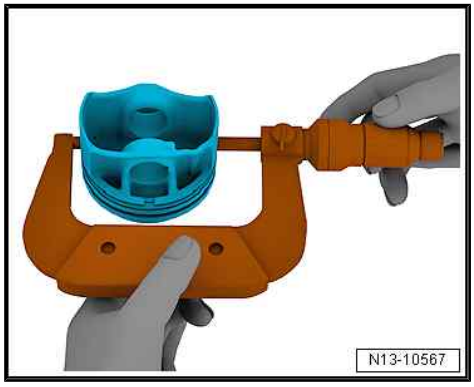

		Piston ∅
Basic dimension	mm	82.42[1)]

- [1)] Dimensions not including coating (thickness 0.02 mm). The coating will wear down in service.

Checking piston ring gap

– Insert piston ring at right angle to cylinder wall from above and push down into lower cylinder opening approx. 15 mm from bottom of cylinder. Use a piston without rings to push ring into bore.

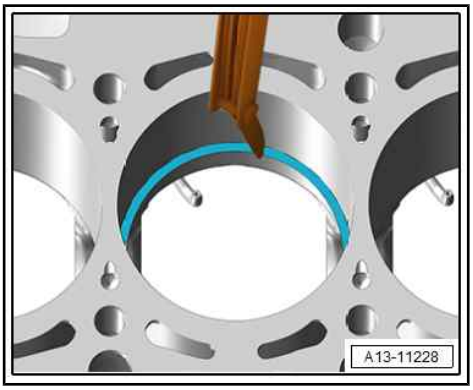

Piston ring (in mm)	New	Wear limit
1st compression ring	0.30 … 0.40	0.80
2nd compression ring	0.40 … 0.50	0.80
Two-part oil scraper rings	0.20 … 0.40	0.80
Three-part oil scraper rings	Cannot be measured	

Checking ring-to-groove clearance

– Clean groove in piston before checking clearance.

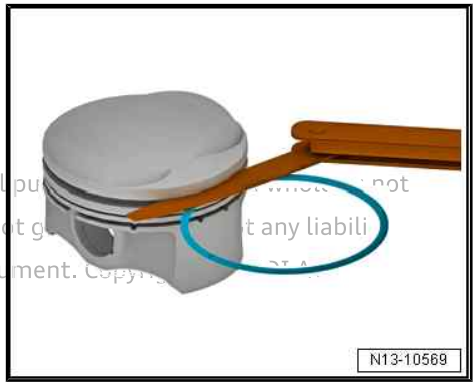

Piston ring in combination with two-part oil scraper ring	New	Wear limit
1st compression ring	0.06 … 0.09	0.20
2nd compression ring	0.03 … 0.06	0.15
Oil scraper rings	Cannot be measured	

Protected by copyright. Copying for private or commercial pu… whatsoever is not permitted unless authorised by AUDI AG. AUDI AG does not g… any liabili… with respect to the correctness of information in this document. Copyr…

Checking cylinder bore

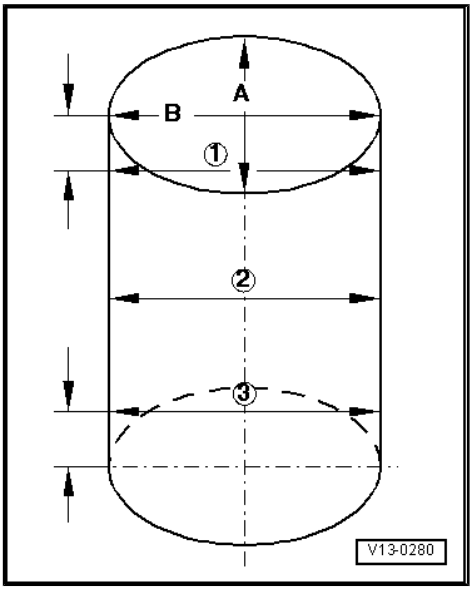

Special tools and workshop equipment required

♦ Cylinder gauge - VAS 6078-

NOTICE

Risk of damage to surface of cylinder bore through incorrect machining.

– Never machine the cylinder bore (reboring, honing, grinding) with workshop equipment.

– Use a cylinder gauge - VAS 6078- to take measurements at 3 points in transverse direction -A- and in longitudinal direction -B-.

Protected by copyright. Copying for private or commercial purposes, in part or in whole, is not permitted unless authorised by AUDI AG. AUDI AG does not guarantee or accept any liability with respect to the correctness of information in this document. Copyright by AUDI AG.

♦ Difference between actual and nominal diameter: not more than 0.08 mm.

		Cylinder bore Ø
Basic dimension	mm	82.51

- Measuring the cylinder bores must not be done when the cylinder block is mounted to the engine and gearbox support , as incorrect measurements may result.

6.5 Separating parts of new conrod

It is possible that the two parts of a new conrod are not completely separated as intended. If it is not possible to take off the conrod bearing cap by hand, proceed as follows:

– Mark cylinder number of conrod ⇒ Item 4 (page 66) .

– Clamp conrod -1- lightly in a vice using aluminium jaw covers as shown in illustration.

- To avoid any risk of damage, the conrod should only be clamped lightly.
- The conrod is clamped in a position below the dotted line.

– Loosen the two bolts -2- approx. 5 turns.

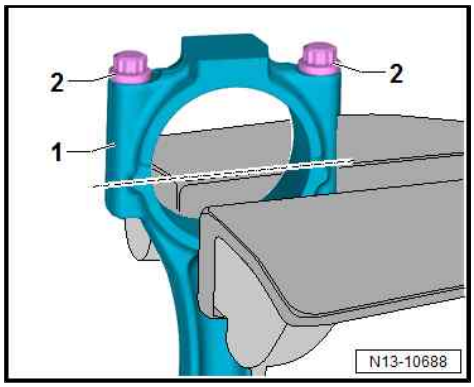

– Using a plastic hammer, carefully knock conrod bearing cap -1- loose in direction of -arrow-.

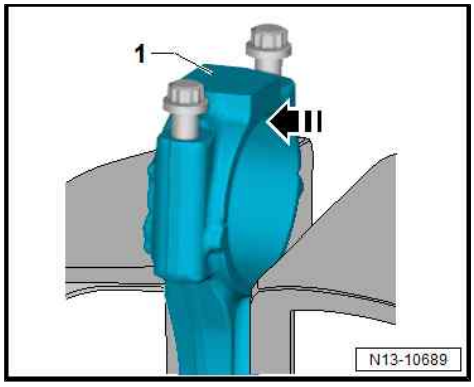

6.6 Checking radial clearance of conrod bearings

Special tools and workshop equipment required

♦ Plastigauge

Procedure

- Use old bolts when measuring radial clearance.

– Remove conrod bearing cap.

– Clean bearing cap and bearing journal.

– Place a length of Plastigauge corresponding to the width of the bearing on the bearing journal or in the bearing shell.

– Fit conrod bearing cap and secure with old bolts ⇒ Item 1 (page 66) without rotating crankshaft.

– Remove conrod bearing cap again.

– Compare width of Plastigauge with measurement scale.

Radial clearance:

- New: 0.02 ... 0.06 mm.
- Wear limit: 0.09 mm.

– When carrying out final assembly, renew bolts.

Protected by copyright. Copying for private or commercial purposes, in part or in whole, is not permitted unless authorised by AUDI AG. AUDI AG does not guarantee or accept any liability with respect to the correctness of information in this document. Copyright by AUDI AG.

15 – Cylinder head, valve gear

1 Safety precautions

Observe safety precautions ⇒ 4-cylinder direct injection engine (2.0 ltr. 4-valve TFSI, EA 888 Gen. III); Rep. gr. 00 ; Safety precautions .

Protected by copyright. Copying for private or commercial purposes, in part or in whole, is not permitted unless authorised by AUDI AG. AUDI AG does not guarantee or accept any liability with respect to the correctness of information in this document. Copyright by AUDI AG.

2 Timing chain cover

⇒ “2.1 Exploded view - timing chain cover”, page 77

⇒ “2.2 Removing and installing timing chain cover”, page 79

⇒ “2.3 Renewing oil seal for vibration damper”, page 84

2.1 Exploded view - timing chain cover

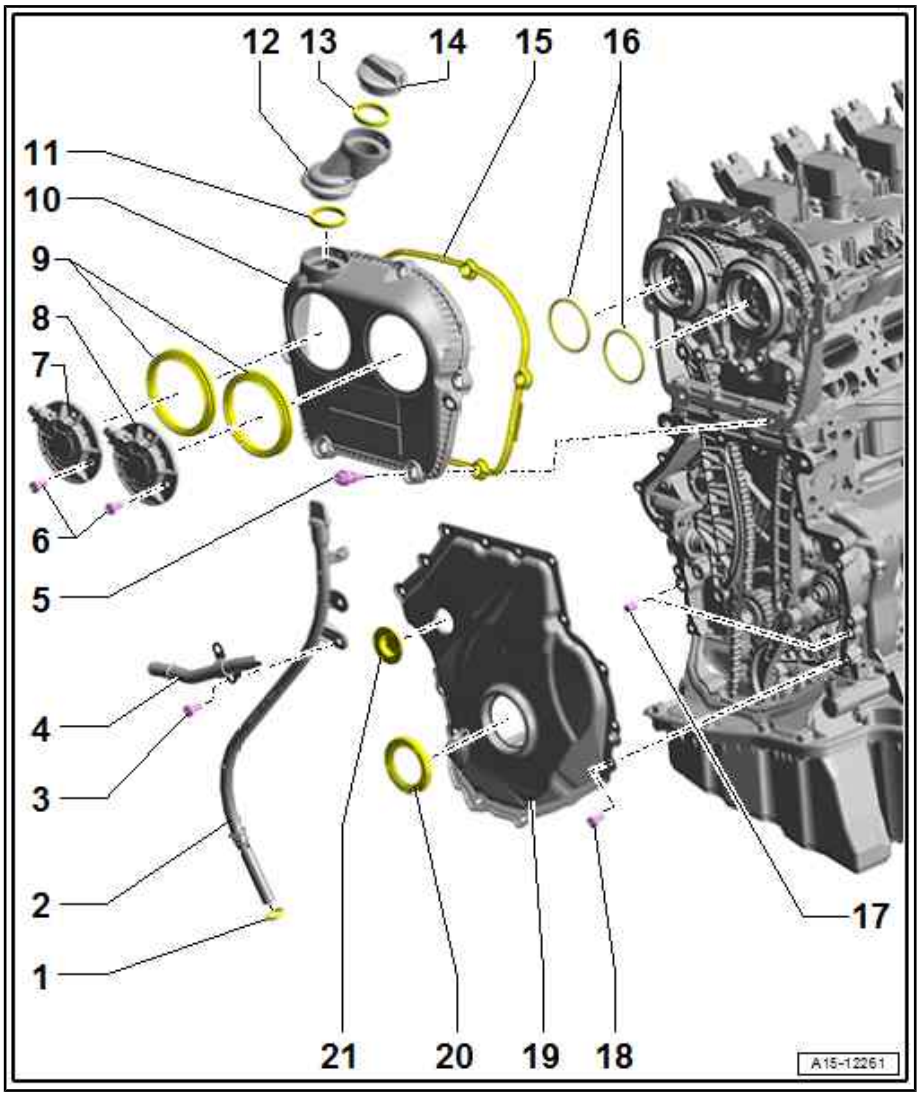

1 - O-ring

- ❑ Renew after removing
- ❑ Lubricate before installing

2 - Dipstick guide tube

- ❑ Clipped onto timing chain cover (top)

3 - Bolt

- ❑ 9 Nm

4 - Coolant pipe (left-side)

- ❑ Exploded view ⇒ 4-cylinder direct injection engine (1.8, 2.0 ltr. 4-valve TFSI); Rep. gr. 19 ; Coolant pipes; Exploded view - coolant pipes

5 - Bolt

- ❑ Tightening sequence ⇒ page 78

6 - Bolt

- ❑ Renew aluminium bolt after removal
- ❑ Tightening torques:

♦ Steel bolt: 9 Nm

♦ Aluminium bolt: 4 Nm +45°

7 - Exhaust camshaft control valve 1 - N318-

- ❑ Removing and installing ⇒ page 149
- ❑ Renew O-ring ⇒ Item 16 (page 78)

8 - Camshaft control valve 1 - N205-

- ❑ Removing and installing ⇒ page 149
- ❑ Renew O-ring ⇒ Item 16 (page 78)

Protected by copyright. Copying for private or commercial purposes, in part or in whole, is not permitted unless authorised by AUDI AG. AUDI AG does not guarantee or accept any liability with respect to the correctness of information in this document. Copyright by AUDI AG.

9 - Seals

- ❑ Renew after removing
- ❑ Installation position: side with small inner diameter faces outwards
- ❑ To renew, remove timing chain cover (top) ⇒ Item 10 (page 77)
- ❑ Lubricate before installing

10 - Timing chain cover (top)

- ❑ Removing and installing ⇒ “2.2.1 Removing and installing timing chain cover (top)”, page 79

11 - Seal

- ❑ Depending on version
- ❑ Renew if damaged

12 - Filler neck

- ❑ Depending on version

13 - Seal

- ❑ Renew if damaged

14 - Filler cap

15 - Gasket

- ❑ Renew if damaged

16 - O-rings

- ❑ Renew after removing
- ❑ Lubricate lightly with engine oil

17 - Dowel pin

- ❑ 2x
- ❑ For centring cover

18 - Bolt

- ❑ Renew after removing
- ❑ Tightening torques and sequence, with 15 bolts ⇒ page 79
- ❑ Tightening torques and sequence, with 8 bolts ⇒ page 79

19 - Timing chain cover (bottom)

- ❑ With oil seal
- ❑ Renew after removing
- ❑ Removing and installing ⇒ page 81

20 - Oil seal

- ❑ For vibration damper
- ❑ Renewing ⇒ page 84

21 - Sealing plug

- ❑ Renew after removing

Protected by copyright. Copying for private or commercial purposes, in part or in whole, is not permitted unless authorised by AUDI AG. AUDI AG does not guarantee or accept any liability with respect to the correctness of information in this document. Copyright by AUDI AG.

Timing chain cover (top) - tightening torques and tightening sequence

– Tighten bolts -1 ... 6- to 9 Nm in the sequence shown.

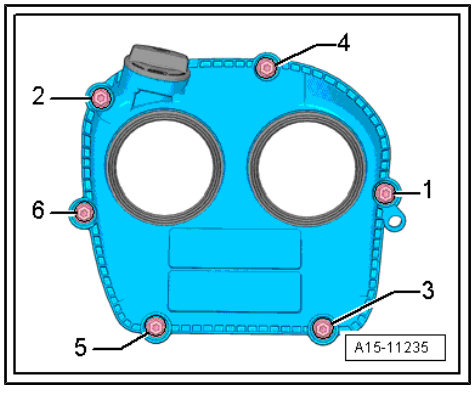

Timing chain cover (bottom) with 15 bolts - tightening torques and tightening sequence

- After removing, renew bolts tightened with specified tightening angle.

– Tighten bolts in stages in the sequence shown:

Stage	Bolts	Tightening torques/angle specification
1.	-1 … 15-	Screw in by hand until contact is made
2.	-1 … 15-	8 Nm
3.	-1, 2, 4, 5- and -7 … 15-	Turn 45° further
4.	-3, 6-	Turn 45° further after installing vibration damper

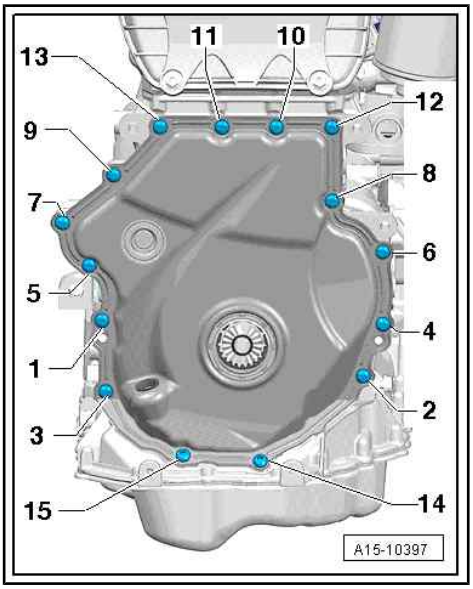

Timing chain cover (bottom) with 8 bolts - tightening torques and tightening sequence

- After removing, renew bolts tightened with specified tightening angle.

– Tighten bolts in stages in the sequence shown:

Stage	Bolts	Tightening torques/angle specification
1.	-1 … 8-	Screw in by hand until contact is made
2.	-1 … 8-	8 Nm
3.	-2, 3- and -5 … 8-	Turn 45° further
4.	-1, 4-	Turn 45° further after installing vibration damper

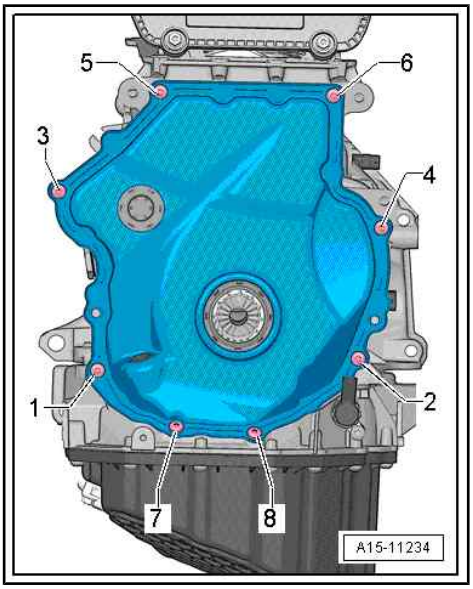

2.2 Removing and installing timing chain cover

⇒ “2.2.1 Removing and installing timing chain cover (top)”, page 79

⇒ “2.2.2 Renewing timing chain cover (bottom)”, page 81

2.2.1 Removing and installing timing chain cover (top)

Removing

Preparatory work may be necessary depending on model ⇒ 4-cylinder direct injection engine (1.8, 2.0 ltr. 4-valve TFSI); Rep. gr. 15 ; Timing chain cover; Removing and installing timing chain cover .

– Remove camshaft control valves ⇒ page 149 .

Protected by copyright. Copying for private or commercial purposes, in part or in whole, is not permitted unless authorised by AUDI AG. AUDI AG does not guarantee or accept any liability with respect to the correctness of information in this document. Copyright by AUDI AG.

– Version with particulate filter: Take electrical connector -2- for exhaust gas temperature sender 3 - G495- out of bracket and unplug.

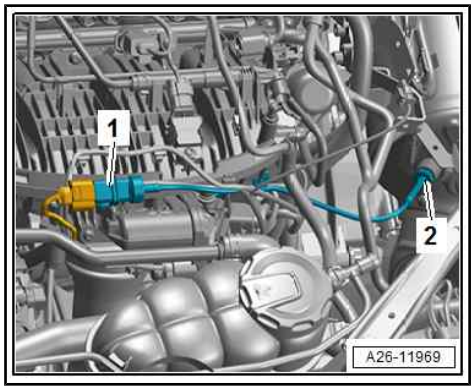

– Move electrical wiring clear.

– Unscrew bolts -1, 2- and swivel coolant pipe (left-side) upwards.

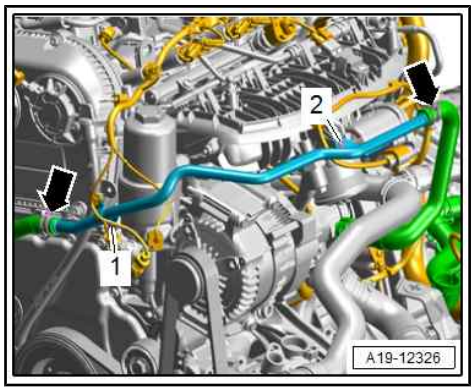

– Unclip guide tube -1- for oil dipstick from timing chain cover (top) -arrow- and pull it out of timing chain cover (bottom).

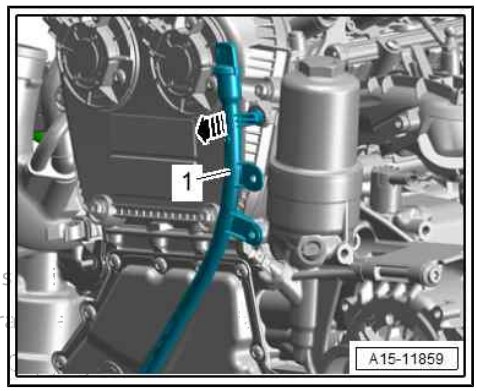

Protected by copyright. Copying for private or commercial purpos
permitted unless authorised by AUDI AG. AUDI AG does not guar
with respect to the correctness of information in this document.

– Unscrew bolts -1 ... 6- and remove timing chain cover (top).

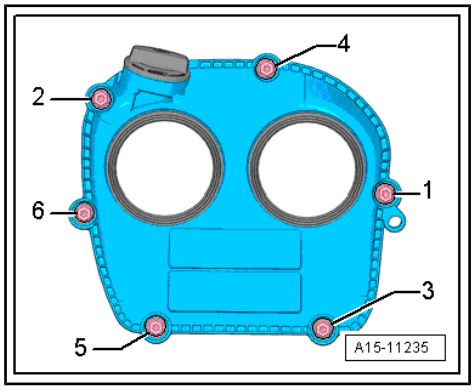

Installing

Installation is carried out in reverse order; note the following:

- Renew seals and O-rings after removing.
- Installation position of seals: side with small inner diameter faces outwards

– Install camshaft control valves ⇒ page 149 .

Additional work depending on model ⇒ 4-cylinder direct injection engine (1.8, 2.0 ltr. 4-valve TFSI); Rep. gr. 15 ; Timing chain cover; Removing and installing timing chain cover

Tightening torques

- ⇒ Fig. ""Timing chain cover (top) - tightening torques and tightening sequence"" , page 78
- ⇒ "2.1 Exploded view - timing chain cover", page 77
- ⇒ 4-cylinder direct injection engine (1.8, 2.0 ltr. 4-valve TFSI); Rep. gr. 19 ; Coolant pipes; Exploded view - coolant pipes

2.2.2 Renewing timing chain cover (bottom)

Special tools and workshop equipment required

♦ Sealant ⇒ Electronic parts catalogue

Removing

- Engine oil drained ⇒ page 169 .

– If fitted, remove engine cover panel ⇒ page 15 .

Vehicles with secondary air system:

– Remove secondary air pump motor - V101- ⇒ page 287 .

– Unplug electrical connector -3-.

– Unscrew nut -1-.

– Press release tabs on both sides and detach resonator -2-.

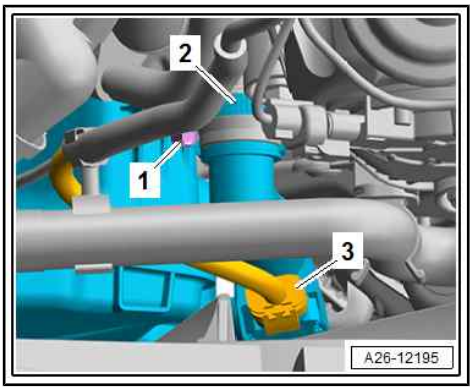

Vehicles with particulate filter:

– Take electrical connector -1- for exhaust gas temperature sender 3 - G495- out of bracket.

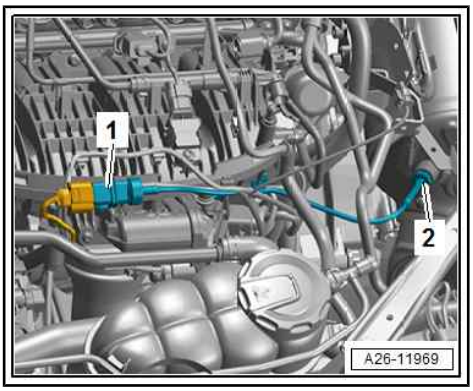

All vehicles (continued):

– Move electrical wiring clear.

– Unscrew bolts -1, 2- and swivel coolant pipe (left-side) upwards.

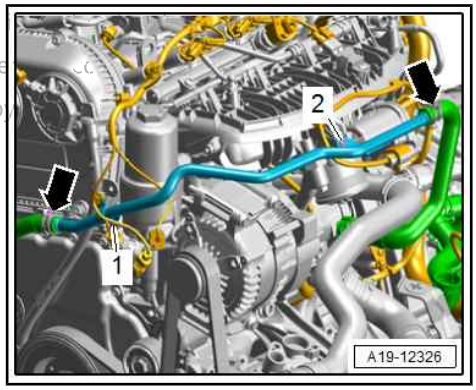

Protected by copyright. Copying for private or commercial purposes, in part or in whole, is not permitted by AUDI AG. AUDI AG does not guarantee the accuracy and completeness of information in this document. Copy

– Unclip guide tube -1- for oil dipstick from timing chain cover (top) -arrow- and pull it out of timing chain cover (bottom).
– Vehicles with alternator: Remove poly V-belt tensioner ⇒ page 24 .
– Remove vibration damper ⇒ page 24 .

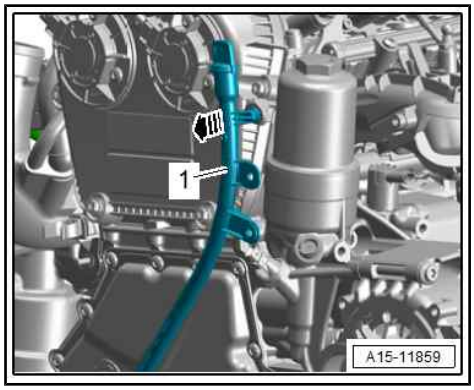

– Remove bolts -1 ... 15-.

Note

Some versions have only 8 bolts.

– Release timing chain cover (bottom) from bonded joint.

Installing

- After removing, renew bolts tightened with specified tightening angle.
- Renew timing chain cover (bottom) and seal after removal.

– Cover exposed parts of the engine.
– Remove sealant remaining on cylinder block with flat scraper.
– Clean sealing surfaces; they must be free of oil and grease.

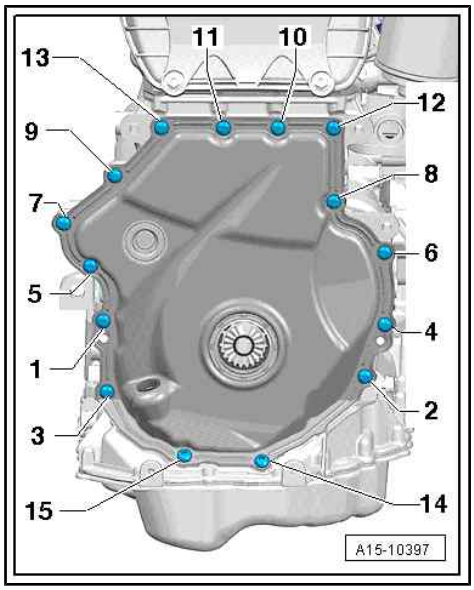

– Check that both dowel pins are fitted in cover -arrows-.

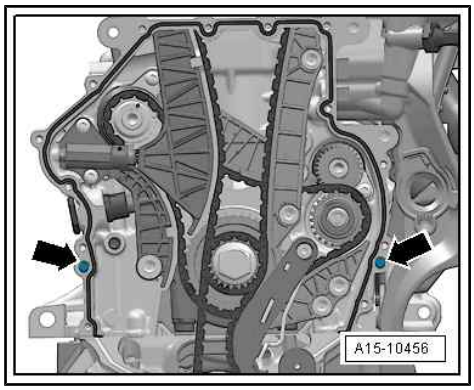

- Note expiry date of sealant.

– Cut off nozzle of tube at front marking (nozzle ∅ approx. 3 mm).

NOTICE

Risk of engine damage due to excessive sealant in lubrication system.

– The sealant bead must not be thicker than specified.

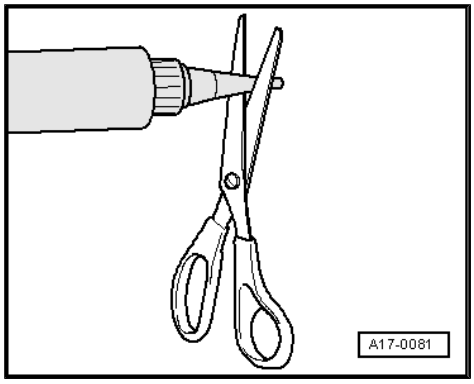

Protected by copyright. Copying for private or commercial purposes, in part or in whole, is not permitted unless authorised by AUDI AG. AUDI AG does not guarantee or accept any liability with respect to the correctness of information in this document. Copyright by AUDI AG.

Cover with 15 bolts

– Apply sealant as shown onto clean sealing surface -arrow 1- and onto edges -arrows 2- of new cover.

- Thickness of sealant bead: 2 ... 3 mm
- The cover must be installed within 5 minutes after applying sealant.

– Immediately fit cover and tighten bolts ⇒ page 79 .

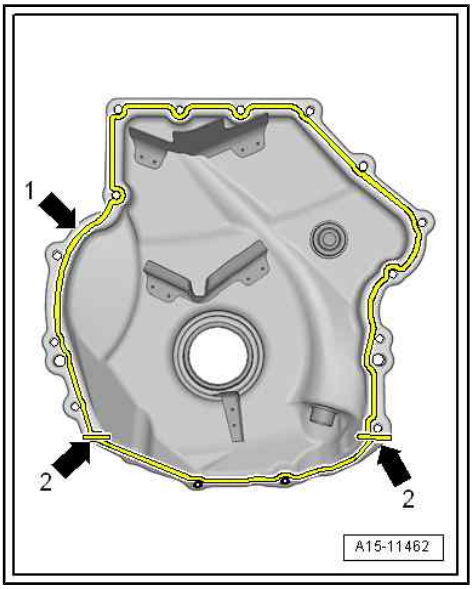

Cover with 8 bolts

– Apply sealant as shown onto clean sealing surface -arrow 1- and onto edges -arrows 2- of new cover.

- Thickness of sealant bead: 2 ... 3 mm
- The cover must be installed within 5 minutes after applying sealant.

– Immediately fit cover and tighten bolts ⇒ page 79 .

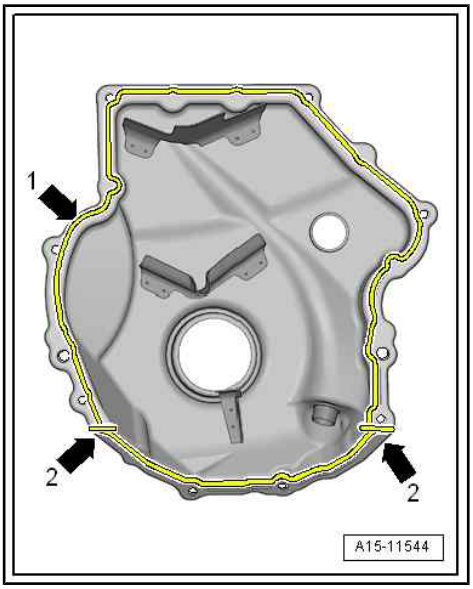

Protected by copyright. Copying for private or commercial purposes, in part or in whole, is not permitted unless authorised by AUDI AG. AUDI AG does not guarantee or accept any liability with respect to the correctness of information in this document. Copyright by AUDI AG.

Continued

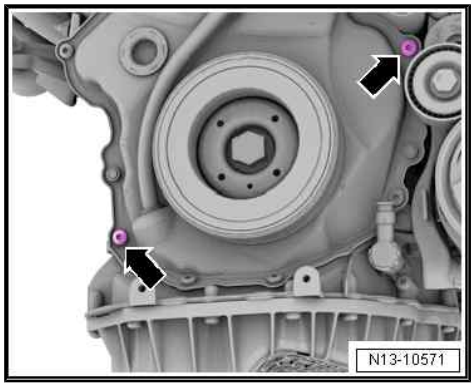

- Only tighten bolts -arrows- to final tightening angle after installing the vibration damper. The bolts must be unscrewed again to install the vibration damper.
- After fitting cover, the sealant must dry for approx. 30 minutes. Then (and only then) fill the engine with engine oil.

Remaining installation steps are carried out in reverse sequence; note the following:

– Install vibration damper ⇒ page 24 .

– Install poly V-belt tensioner ⇒ page 24 .

– Top up engine oil and check oil level ⇒ page 169 .

– If previously removed, install secondary air pump motor - V101- ⇒ page 287 .

– Install engine cover panel ⇒ page 15 .

Tightening torques

- ⇒ Fig. ""Timing chain cover (bottom) with 15 bolts - tightening torques and tightening sequence"" , page 79
- ⇒ Fig. ""Timing chain cover (bottom) with 8 bolts - tightening torques and tightening sequence"" , page 79
- ⇒ "2.1 Exploded view - timing chain cover", page 77
- ⇒ 4-cylinder direct injection engine (1.8, 2.0 ltr. 4-valve TFSI); Rep. gr. 19 ; Coolant pipes; Exploded view - coolant pipes

2.3 Renewing oil seal for vibration damper

Special tools and workshop equipment required

- Thrust piece - T10354-

Protected by copyright. Copying for private or commercial purpose permitted unless authorised by AUDI AG. AUDI AG does not guarantee with respect to the correctness of information in this document. Copyright by AUDI AG.

- Thrust pad - T10375-

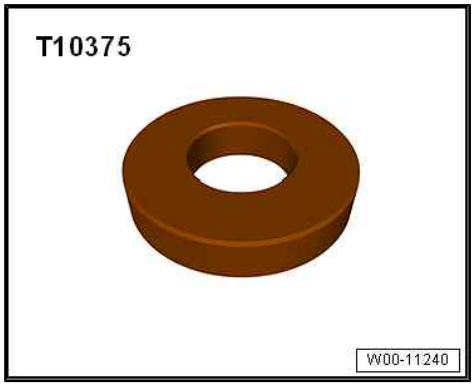

♦ Flange nut - 10531/4- from assembly tool - T10531-

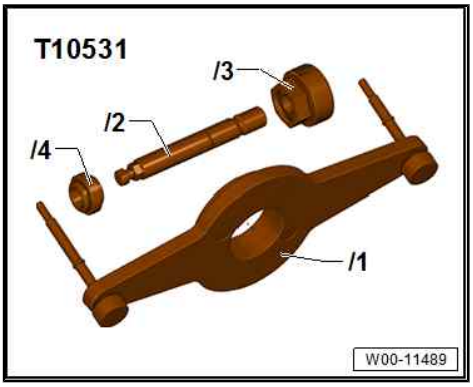

♦ Extractor hook - T40274-

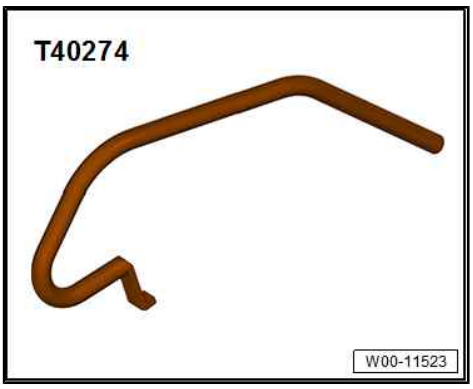

Procedure

Preparatory work may be necessary depending on model ⇒ 4-cylinder direct injection engine (1.8, 2.0 ltr. 4-valve TFSI); Rep. gr. 15 ; Timing chain cover; Renewing oil seal for vibration damper .

– Remove vibration damper ⇒ page 24 .
– Pry out oil seal -arrow- using extractor hook - T40274- .
– Clean contact surface and sealing surface.

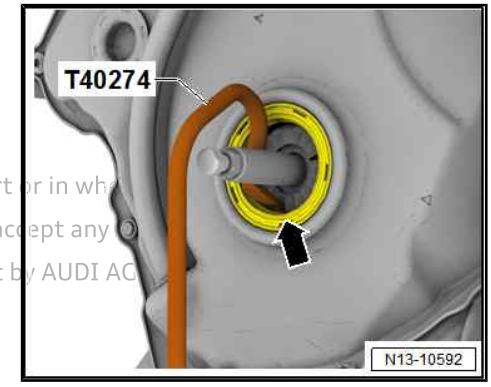

Protected by copyright. Copying for private or commercial purposes, in part or in wh
permitted unless authorised by AUDI AG. AUDI AG does not guarantee or accept any
with respect to the correctness of information in this document. Copyright by AUDI AG

– Fit oil seal -arrow- onto thrust piece - T10354- .
• Closed side of oil seal faces thrust piece - T10354- .

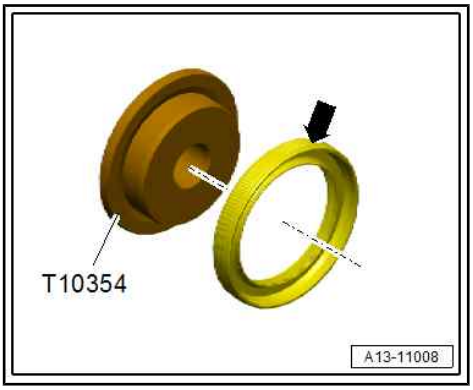

– Vehicles with alternator: Slide oil seal -arrow- with thrust piece - T10354- onto clamping pin - T10531/2- -item 1- and position it on timing chain cover (bottom).
– Vehicles with starter-alternator: Slide oil seal -arrow- with thrust piece - T10354- onto clamping pin - T10531/6- -item 1- and position it on timing chain cover (bottom).

Protected by copyright. Copying for private or commercial purposes, in part, is not permitted unless authorised by AUDI AG. AUDI AG does not guarantee or accept any liability with respect to the correctness of information in this document. Copyright by AUDI AG.

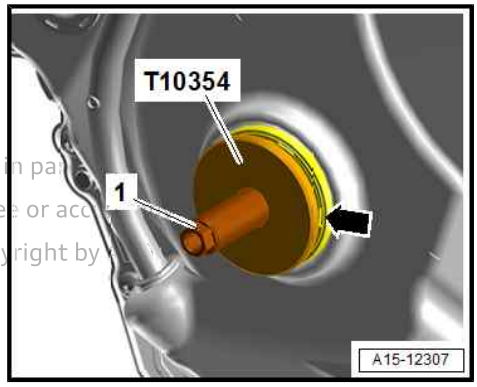

– Also fit thrust pad - T10375- and tighten flange nut - 10531/4- .
– Drive oil seal in as far as stop using thrust piece - T10354- .

Remaining installation steps are carried out in reverse sequence; note the following:

- Renew bolt with O-ring for vibration damper after removal.
- Renew oil seal for vibration damper.

– Install vibration damper ⇒ page 24 .

Additional work depending on model ⇒ 4-cylinder direct injection engine (1.8, 2.0 ltr. 4-valve TFSI); Rep. gr. 15 ; Timing chain cover

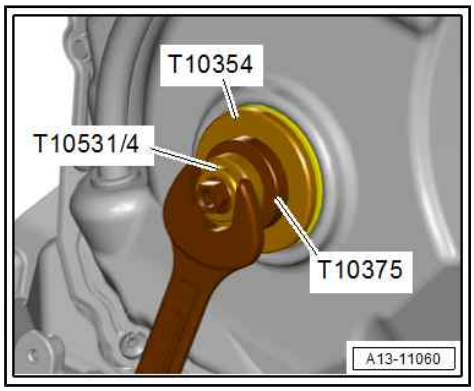

3 Chain drive

⇒ “3.1 Exploded view - camshaft timing chains”, page 87

⇒ “3.2 Exploded view - drive chain for balance shaft”, page 89

⇒ “3.3 Removing and installing bearing saddle”, page 91

⇒ “3.4 Removing and installing camshaft timing chain”, page 96

⇒ “3.5 Checking timing chain”, page 109

⇒ “3.6 Checking valve timing”, page 111

3.1 Exploded view - camshaft timing chains

Protected by copyright. Copying for private or commercial purposes, in part or in whole, is not permitted unless authorized by AUDI AG. AUDI AG does not guarantee or accept any liability with respect to the correctness of information in this document. Copyright by AUDI AG.

- Learnt values for chain elongation must be re-adapted after removing or renewing components of the chain drive ⇒ Vehicle diagnostic tester `01 - Engine electronics, functions`, `01 - Chain elongation adaption diagnosis`.

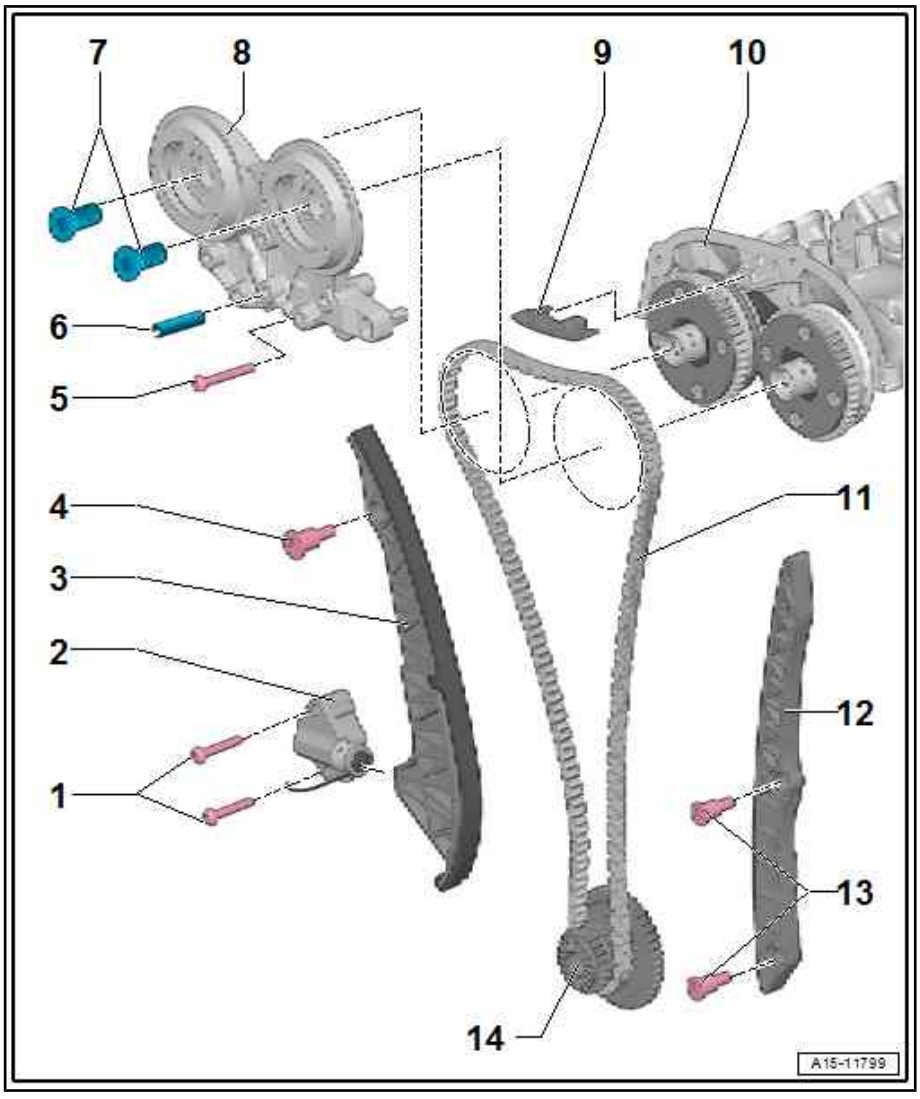

1 - Bolt

- ❑ Renew after removing
- ❑ For aluminium bolts: 4 Nm + 90°
- ❑ For steel bolts: 9 Nm

2 - Chain tensioner

- ❑ Exerts spring pressure
- ❑ Before removing, lock in place using locking tool - T40267-

3 - Tensioning rail for timing chain

4 - Guide pin

- ❑ 20 Nm

5 - Bolt

- ❑ Renew aluminium bolt after removal
- ❑ Tightening torques and sequence ⇒ page 89

6 - Clamping sleeve

- ❑ Not fitted on all bearing saddle versions

7 - Timing valves

- ❑ Left-hand thread
- ❑ Different types depending on production version
- ❑ Use a tool from assembly tool set - T10352A- to remove
- ❑ Checking ⇒ page 88
- ❑ 35 Nm

8 - Bearing saddle

- ❑ Fitting instructions ⇒ page 88
- ❑ Removing and installing ⇒ page 91

9 - Guide rail for camshaft timing chain

10 - Camshaft housing

11 - Camshaft timing chain

- ❑ Before removing, mark running direction with paint
- ❑ Removing and installing ⇒ page 96

12 - Guide rail for camshaft timing chain

13 - Guide pin

- ❑ 20 Nm

14 - Three-part chain sprocket assembly

- ❑ Crankshaft
- ❑ Installation position ⇒ page 89

Reproduction and distribution for private or commercial purposes, in part or in whole, is not permitted unless authorised by AUDI AG. AUDI AG does not guarantee or accept any liability with respect to the correctness of information in this document. Copyright by AUDI AG.

Checking control valve

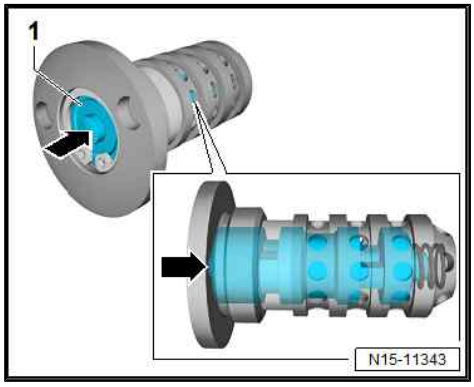

Bearing saddle - installation instructions

When installing a new bearing saddle -3- with spring pin -4-: Check hole -arrow- in cylinder head -1- before installing bearing saddle.

If hole -arrow- is not suitable for use of spring pin -4-, spring pin must be removed from bearing saddle. In this case, a shorter bolt -2- must be used for this hole. For correct type of bolt, refer to ⇒ Electronic parts catalogue (ETKA) .

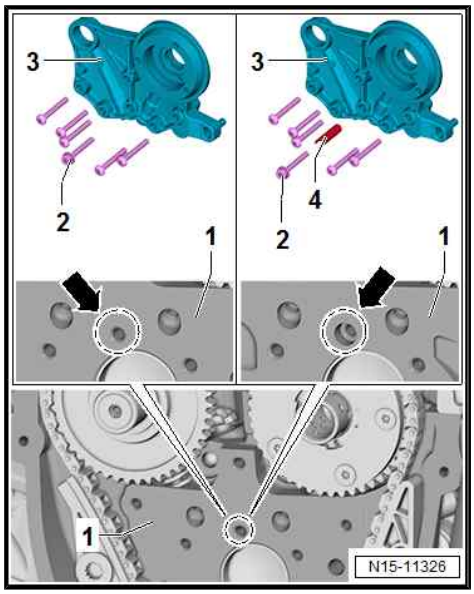

Bearing saddle - tightening torques and sequence

– Tighten bolts in stages in the sequence shown:

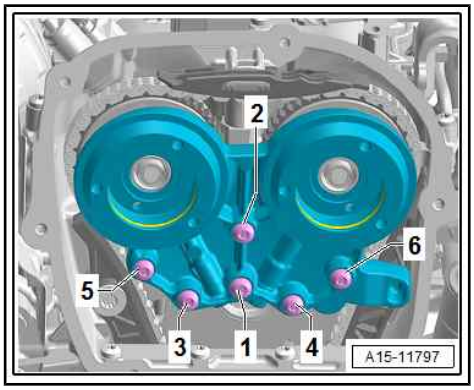

For steel bolts

Stage	Bolts	Tightening torques
1.	-1 … 6-	Screw in by hand until contact is made
2.	-1 … 6-	9 Nm

For aluminium bolts

- After removing, renew bolts tightened with specified tightening angle.

Stage	Bolts	Tightening torques/angle specification
1.	-1 … 6-	Screw in by hand until contact is made
2.	-1 … 6-	4 Nm
3.	-1 … 6-	Turn 180° further

Three-part chain sprocket assembly - installation position

- The two sections -arrows- must be aligned.

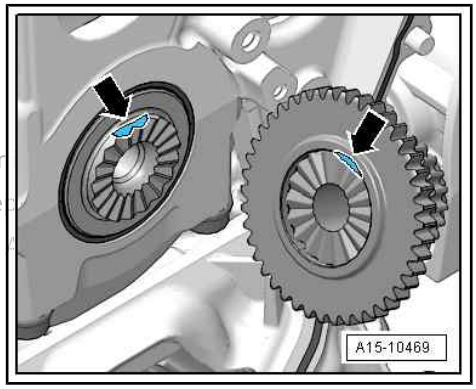

Protected by copyright. Copying for private or commercial purposes, in part or
permitted unless authorised by AUDI AG. AUDI AG does not guarantee or acce
with respect to the correctness of information in this document. Copyright by

3.2 Exploded view - drive chain for balance shaft

- Learnt values for chain elongation must be re-adapted after removing or renewing components of the chain drive ⇒ Vehicle diagnostic tester `01 - Engine electronics, functions`, `01 - Chain elongation adaption diagnosis`.

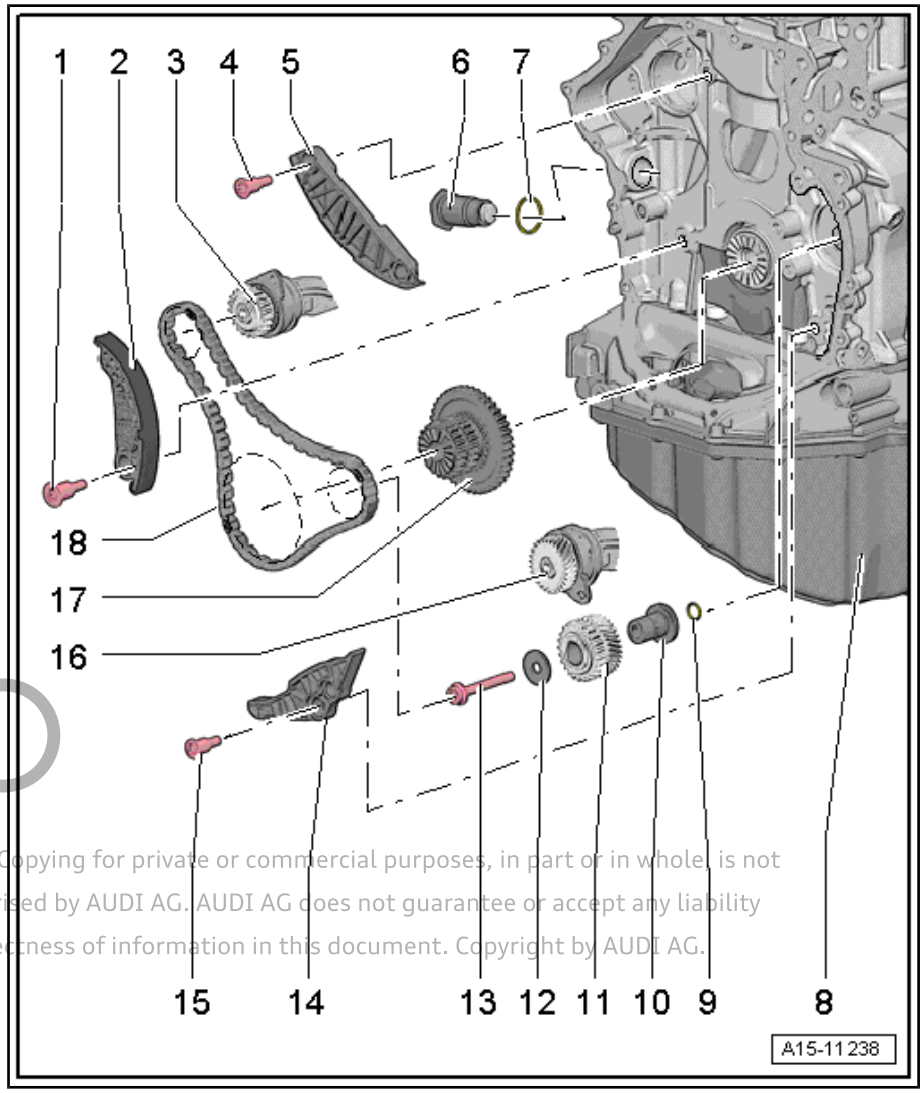

1 - Guide pin
- ❑ 20 Nm

2 - Tensioning rail
- ❑ For timing chain

3 - Balance shaft
- ❑ Exhaust side
- ❑ Lubricate bearing with engine oil
- ❑ Always renew both sides together ⇒ page 63

4 - Guide pin
- ❑ 20 Nm

5 - Guide rail
- ❑ For timing chain

6 - Chain tensioner
- ❑ Apply locking fluid when installing; refer to ⇒ Electronic parts catalogue
- ❑ 85 Nm

7 - Seal

8 - Cylinder block

9 - O-ring
- ❑ Lubricate with engine oil

10 - Bearing mounting
- ❑ Lubricate with engine oil
- ❑ Installation position ⇒ page 91

11 - Idler gear
- ❑ If bolt ⇒ Item 13 (page 90) has been loosened, idler gear must be renewed

12 - Thrust washer

13 - Bolt
- ❑ Renew after removing
- ❑ If bolt has been loosened, idler gear ⇒ Item 11 (page 90) must be renewed
- ❑ Tightening torques and sequence ⇒ page 91

14 - Guide rail
- ❑ For balance shaft timing chain

15 - Guide pin
- ❑ 20 Nm

16 - Balance shaft
- ❑ Inlet side
- ❑ Lubricate bearing with engine oil
- ❑ Always renew both sides together ⇒ page 63

17 - Three-part chain sprocket assembly
- ❑ Installation position ⇒ page 89

18 - Drive chain for balance shafts
- ❑ Removing and installing ⇒ “3.4 Removing and installing camshaft timing chain”, page 96

Protected by copyright. Copying for private or commercial purposes, in part or in whole, is not permitted unless authorised by AUDI AG. AUDI AG does not guarantee or accept any liability with respect to the correctness of information in this document. Copyright by AUDI AG.

Protected by copyright. Copying for private or commercial purpo
permitted unless authorised by AUDI AG. AUDI AG does not gua
with respect to the correctness of information in this document

Bearing mounting - installation position

- Renew O-ring -1- and lubricate with oil.
- Dowel pin -arrow- for bearing mounting must engage in bore in cylinder block.
- Lubricate bearing mounting.

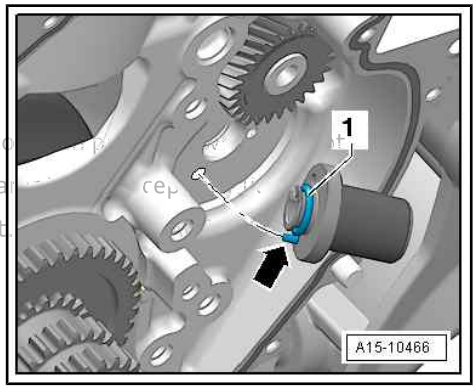

Idler gear - tightening torques and sequence

NOTICE

Risk of damage to engine due to incorrect backlash.

– Always renew idler gear; otherwise the backlash will be incorrect.

- After removing, renew bolts tightened with specified tightening angle.

– Tighten bolt -1- in stages:

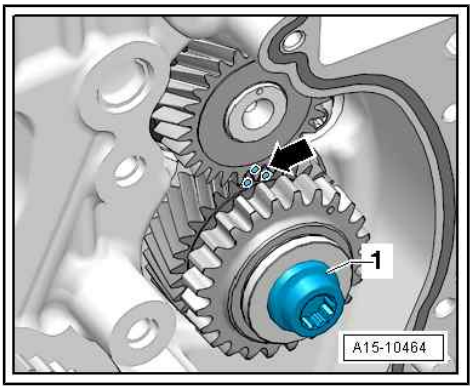

Stage	Tightening torques/angle specification
1.	10 Nm
2.	– Turn idler gear • Idler gear must be without play; otherwise loosen bolt and tighten again
3.	25 Nm
4.	Turn 90° further

3.3 Removing and installing bearing saddle

Special tools and workshop equipment required

♦ Assembly tool - T10352A-

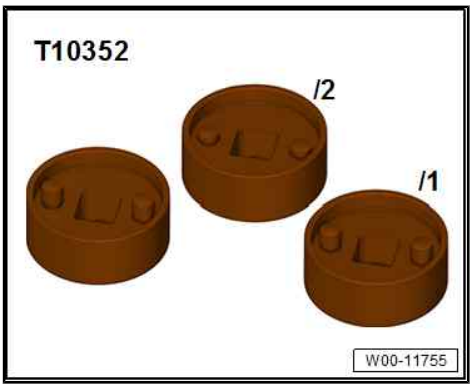

♦ Assembly tool - T10352/3-

♦ Assembly tool - T10352/4-

- Assembly lever - T40243-

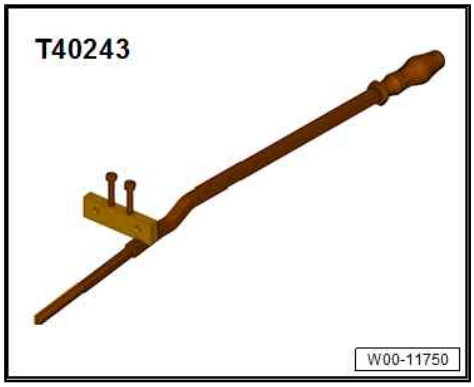

- Ratchet wrench (21 mm) - T40263-

Protected by copyright. Copying for private or commercial purposes, in part or whole, is not permitted unless authorised by AUDI AG. AUDI AG does not guarantee or accept any liability with respect to the correctness of information in this document. Copyright by AUDI AG.

- Locking tool - T40267-

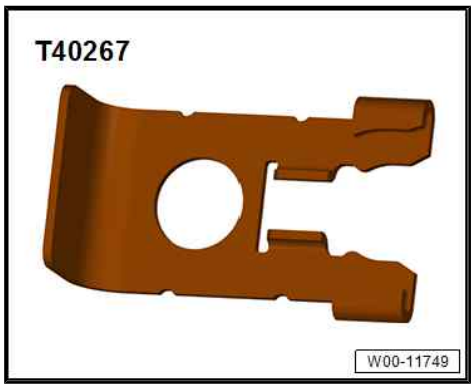

- Adapter - T40314-

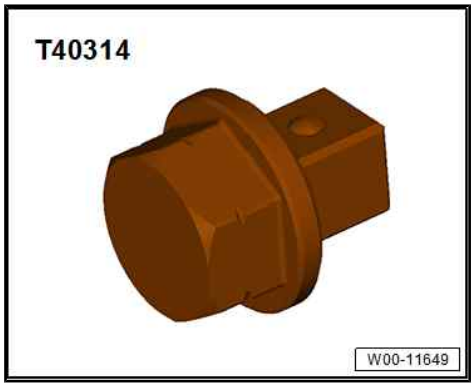

Removing

– Remove timing chain cover (top) ⇒ page 79 .

Note:

The timing valves have a left-hand thread.

– Turn assembly tool -1- in direction of -arrow- to remove timing valve (left and right).

Depending on version of timing valve, use one of the following tools:

- Assembly tool - T10352-
- Assembly tool - T10352/1-
- Assembly tool - T10352/2-
- Assembly tool - T10352/3-
- Assembly tool - T10352/4-

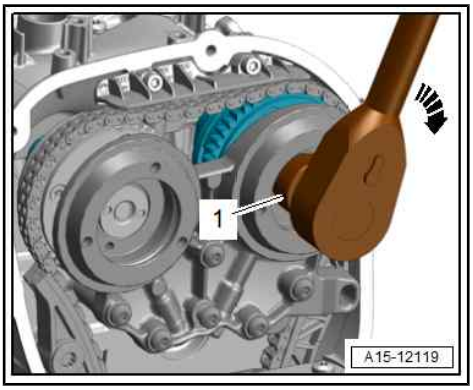

– When doing so, counterhold vibration damper with ratchet wrench (21 mm) - T40263- , adapter - T40314- and socket (24 mm).

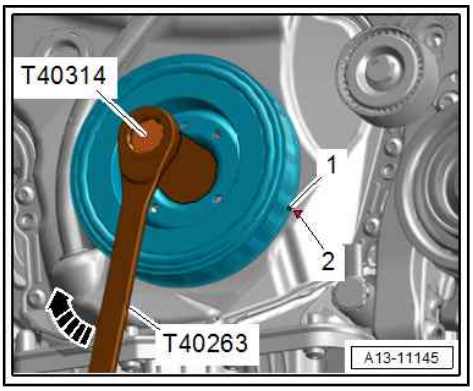

– Remove bolts -arrows-.

• Detach bearing saddle carefully without tilting it.

– Detach bearing saddle.

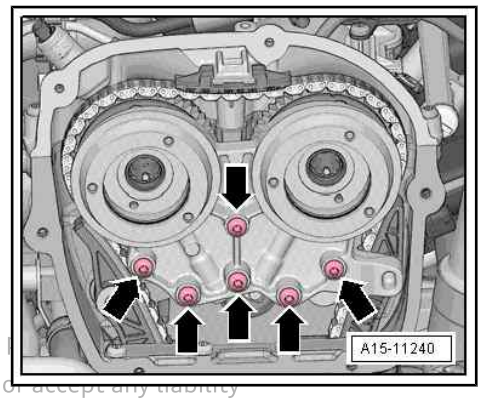

Protected by copyright. Copying for private or commercial purposes, in p
permitted unless authorised by AUDI AG. AUDI AG does not guarantee o accept any liability
with respect to the correctness of information in this document. Copyrig

– Remove sealing plug -arrow-.

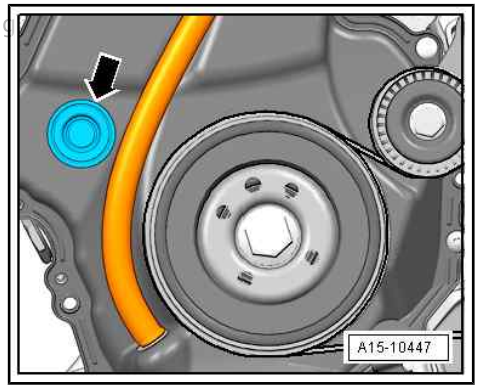

– Remove bolts -arrows-.

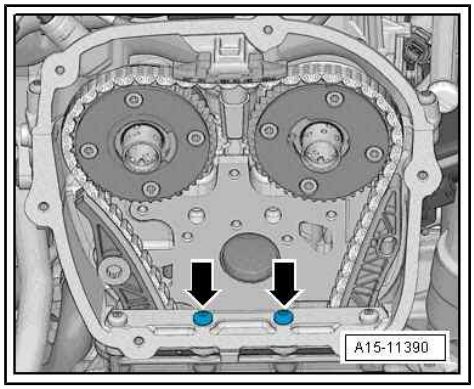

– Remove bolt -arrow-.

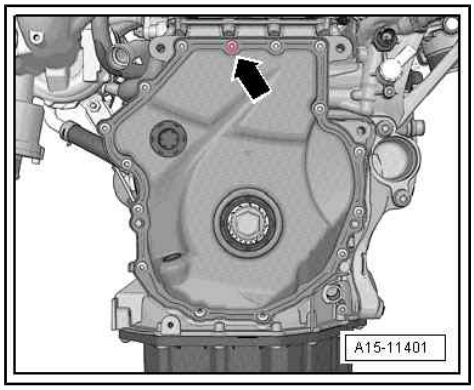

– Bolt assembly lever - T40243- onto cylinder head -bottom arrows-.

• A second mechanic is required for the following steps.

– Compress and hold circlip -1- for chain tensioner.

– Push assembly lever - T40243- slowly in direction of -arrow- and hold in place. This will press the chain tensioner back.

Protected by copyright. Copying for private or commercial purposes, in
permitted unless authorised by AUDI AG. AUDI AG does not guarantee
with regard to the correctness of information in this document. Copyri

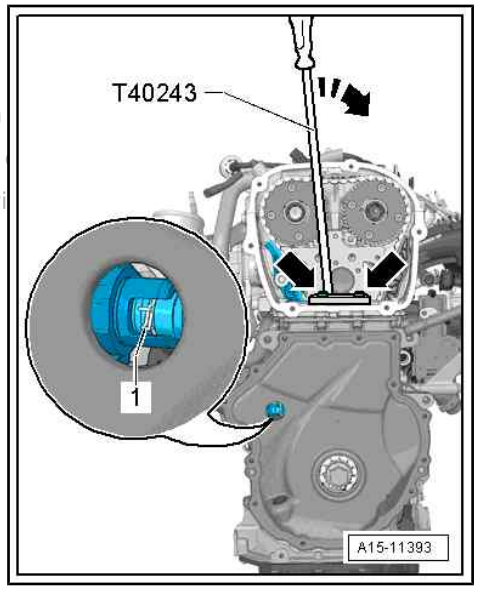

Note:

The chain tensioner is oil-damped and can therefore only be pressed back slowly by applying constant pressure.

– Lock chain tensioner with locking tool - T40267- .

– Remove assembly lever - T40243- .

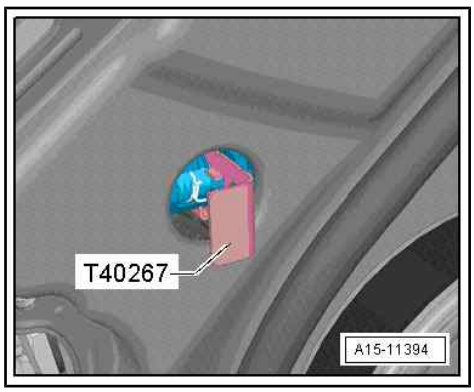

Installing

– Fit and tighten bolts -arrows-. Tightening torques
⇒ Item 4 (page 116)

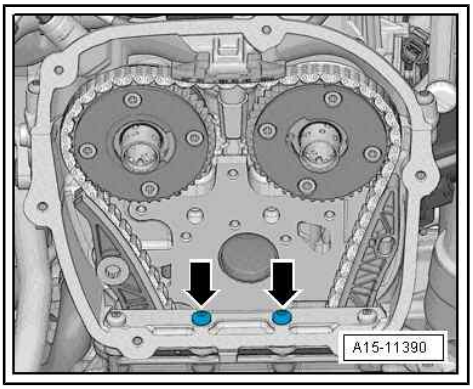

– Lubricate holes -arrows- with engine oil.
– Check whether spring pin -1- is fitted.

Protected by copyright. Copying for private or commercial purposes, in p
permitted unless authorised by AUDI AG. AUDI AG does not guarantee or a
with respect to the correctness of information in this document. Copyright by AUDI

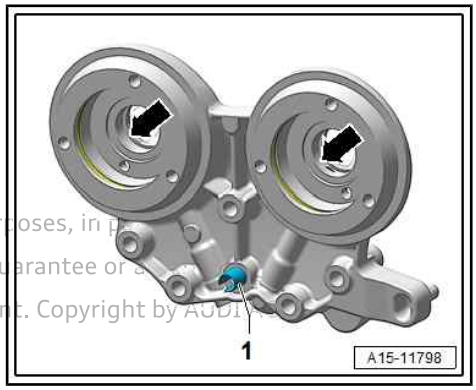

- When installing a new bearing saddle -3- with spring pin -4-: Check hole -arrow- in cylinder head -1- before installing bearing saddle.
- If hole -arrow- is not suitable for use of spring pin -4-, spring pin must be removed from bearing saddle. In this case, a shorter bolt -2- must be used for this hole. Bolt ⇒ Electronic parts catalogue (ETKA)

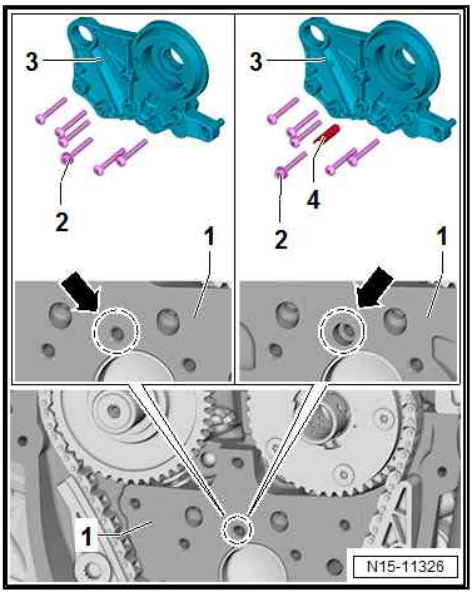

- Carefully attach bearing saddle without tilting it - risk of damage.

– Fit bearing saddle and screw in bolts -arrows- by hand until they make contact.

– Remove locking tool - T40267- .

– Tighten bolts for bearing saddle ⇒ page 89 .

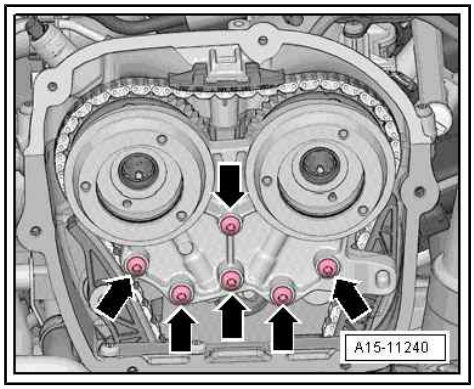

Remaining installation steps are carried out in reverse sequence; note the following:

– Install timing chain cover (top) ⇒ page 79 .

Learnt values for chain elongation must be re-adapted after removing or renewing components of the chain drive.

– Connect ⇒ Vehicle diagnostic tester.

– Select `Diagnosis` mode and then `Start diagnosis`.

– Choose `Select own test` tab and select following options one after the other:

- `Drive train`
- `Select engine code and engine`
- `01 - Self-diagnosis compatible systems`
- `01 - Engine electronics`
- `01 - Engine electronics, functions`
- `01 - Chain elongation adaption diagnosis`

Tightening torques

- ⇒ Fig. ""Bearing saddle - tightening torques and sequence"" , page 89
- ⇒ "3.1 Exploded view - camshaft timing chains", page 87
- ⇒ "4.1 Exploded view - cylinder head", page 116

Protected by copyright. Copying for private or commercial purposes, in part or in whole, is not permitted unless authorised by AUDI AG. AUDI AG does not guarantee or accept any liability with respect to the correctness of information in this document. Copyright by AUDI AG.

3.4 Removing and installing camshaft timing chain

Special tools and workshop equipment required

- Assembly tool - T10352A-

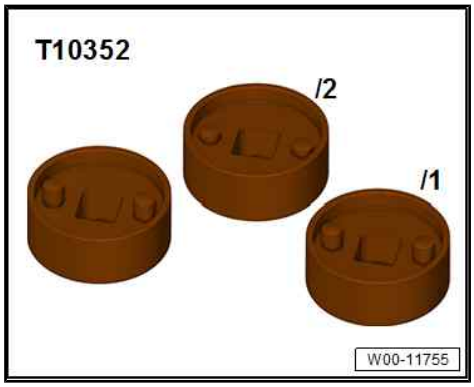

- Assembly tool - T10352/3-
- Assembly tool - T10352/4-

- Locking pin - T40011-

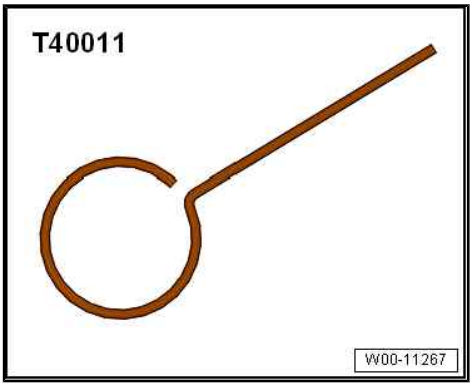

- Assembly lever - T40243-

Protected by copyright. Copying for private or commercial purposes, in part or in ... is not permitted unless authorised by AUDI AG. AUDI AG does not guara... any liability with respect to the correctness of information in this document. Copy... by AUDI AG.

- Ratchet wrench (21 mm) - T40263-

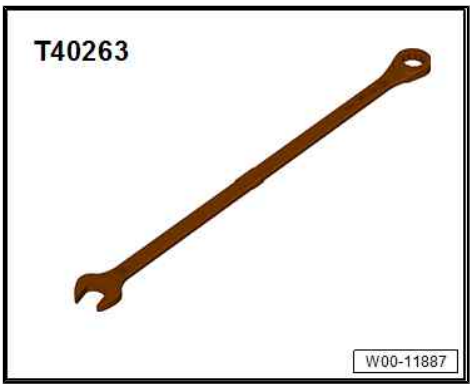

- Assembly tool - T40266-

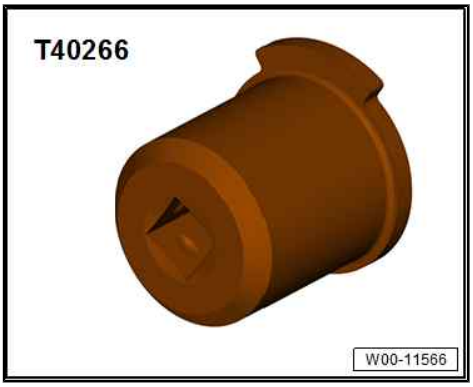

- Locking tool - T40267-

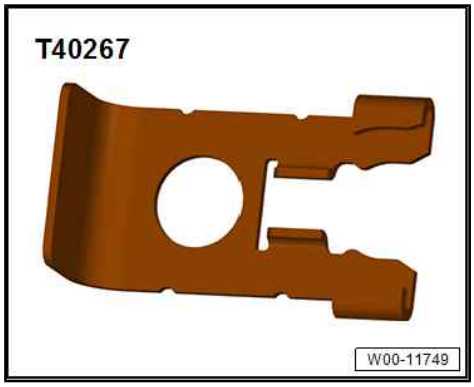

- Camshaft clamp - T40271-

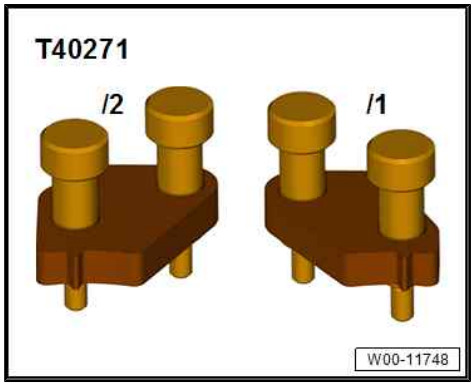

- Adapter - T40314-

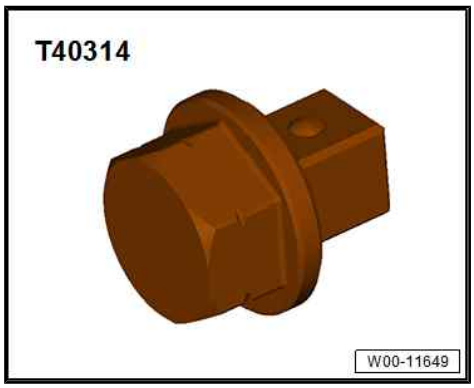

Removing

– Remove timing chain cover (top) ⇒ page 79 .

Note:

The timing valves have a left-hand thread.

– Turn assembly tool -1- in direction of -arrow- to remove timing valve (left and right).

Protected by copyright. Copying for private or commercial purposes, in part or in whole, is not permitted unless authorised by AUDI AG. AUDI AG does not guarantee or accept any liability with respect to the correctness of information in this document.

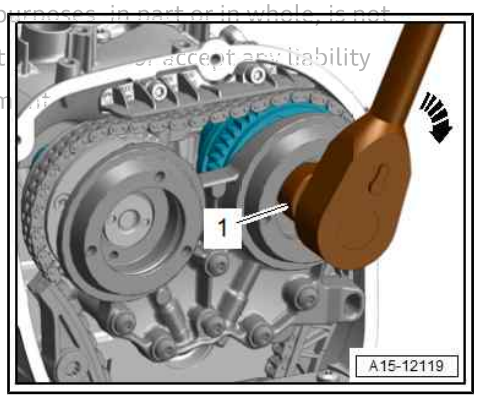

Depending on version of timing valve, use one of the following tools:

- Assembly tool - T10352-
- Assembly tool - T10352/1-
- Assembly tool - T10352/2-
- Assembly tool - T10352/3-
- Assembly tool - T10352/4-

– Remove bolts -arrows-.

• Detach bearing saddle carefully without tilting it.

– Detach bearing saddle.

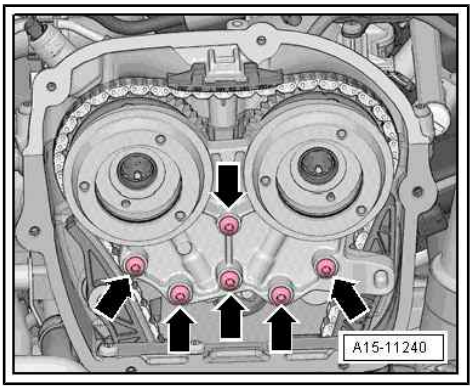

– Turn vibration damper to “TDC” position.

NOTICE

Risk of engine damage if valve gear drive slips

– Only turn engine in normal direction of rotation.

• Notch on vibration damper and marking on cover for timing chains (bottom) must be aligned -arrow-.

• The markings -1- on the camshaft chain sprockets must face upwards.

Note:

The combination of ratchet wrench (21 mm) - T40263- , adapter - T40314- and socket (24 mm) can be fitted onto the vibration damper better than the counterhold tool - T10355- .

– Remove timing chain cover (bottom) ⇒ page 81 .

– Check “TDC” position again.

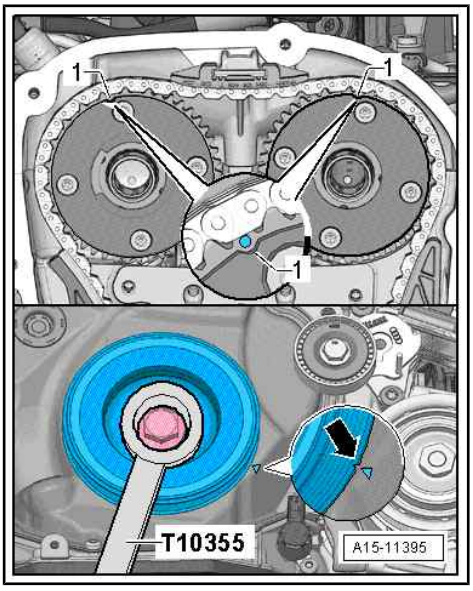

– Press retainer for oil pump chain tensioner in direction of -arrow- and lock in place using locking pin - T40011- .

– Remove bolt -1- and detach chain tensioner -2-.

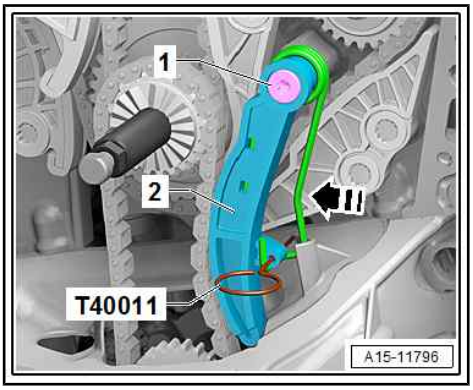

– Remove bolts -arrows-.

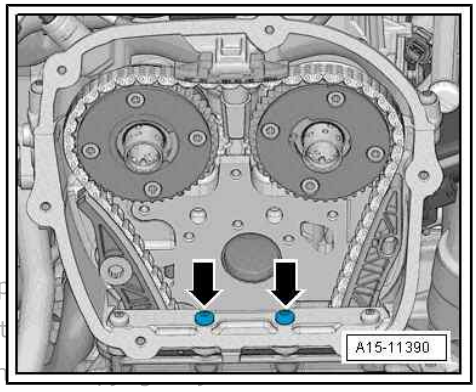

Protected by copyright. Copying for private or commercial p
permitted unless authorised by AUDI AG. AUDI AG does not
with respect to the correctness of information in this docun

– Remove bolt -arrow-.

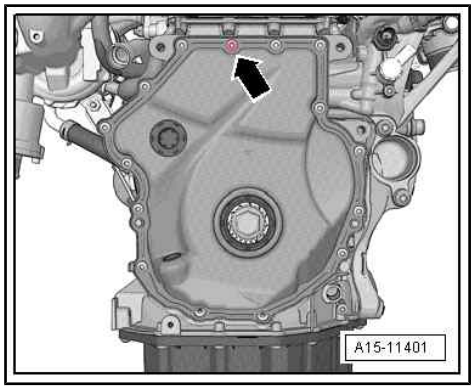

– Screw in assembly lever - T40243- -arrows-.
– Compress and hold circlip -1- for chain tensioner.
– Push assembly lever - T40243- slowly in direction of -arrow- and hold in place.

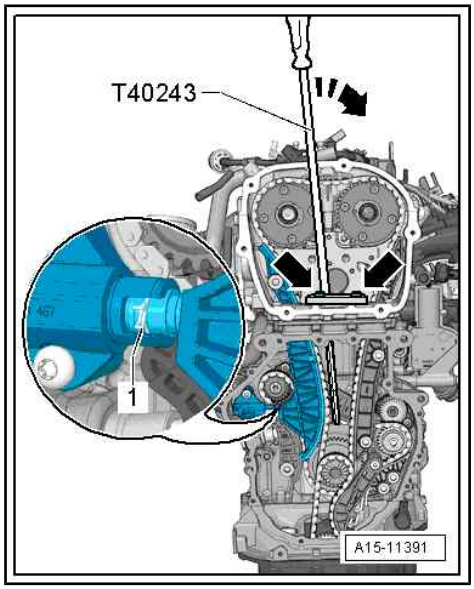

– Hold chain tensioner in position with locking tool - T40267- .
– Remove assembly lever - T40243- .

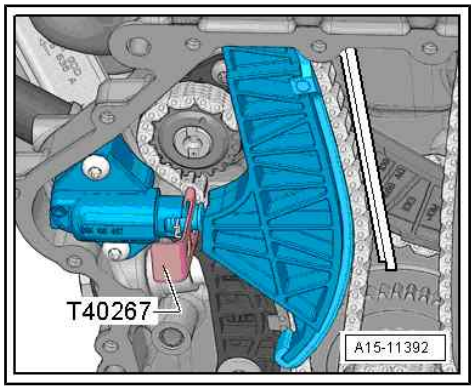

– Bolt camshaft clamp - T40271/2- onto cylinder head and slide into teeth on chain sprocket in direction of -arrow 2-; if necessary, use assembly tool - T40266- to turn inlet camshaft in direction of -arrow 1-.

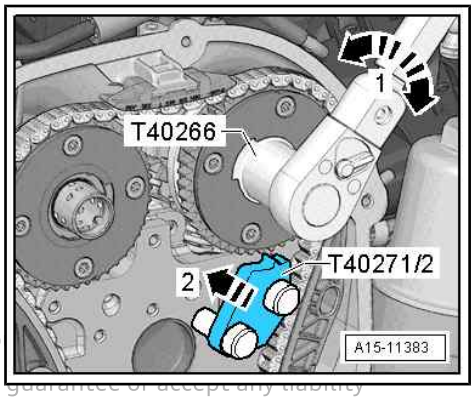

Protected by copyright. Copying for private or commercial p
permitted unless authorised by AUDI AG. AUDI AG does not guarantee or accept any liability
with respect to the correctness of information in this document. Copyright by AUDI AG.

– Bolt camshaft clamp - T40271/1- onto cylinder head.

• A second mechanic is required for the following step.

– Turn exhaust camshaft in direction of -arrow A- using assembly tool - T40266- and hold in place. Remove bolt -1- and guide tensioning rail -2- downwards.

– Continue turning exhaust camshaft clockwise -arrow A- until camshaft clamp - T40271/1- can be pressed into teeth -C- on chain sprocket in direction of -arrow B-.

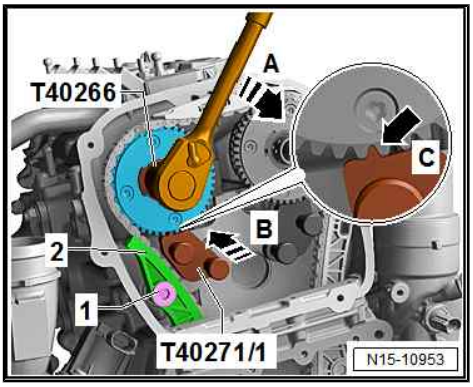

– Use screwdriver to release catch -arrow- and press off guide rail -1- towards front.

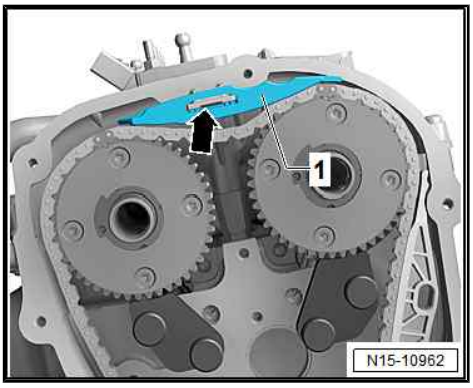

– Unscrew bolts -arrows- and remove chain tensioner -1-.

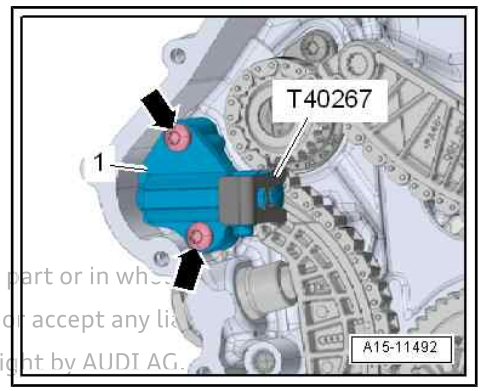

Protected by copyright. Copying for private or commercial purposes, in part or in whole, is not
permitted unless authorised by AUDI AG. AUDI AG does not guarantee or accept any liability
with respect to the correctness of information in this document. Copyright by AUDI AG.

– Unscrew bolts -1- and remove guide rail -2-.

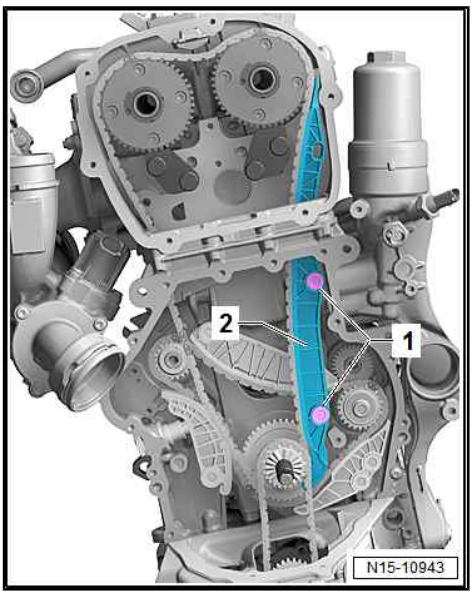

– Remove camshaft timing chain from camshaft sprockets and place onto camshaft journals -arrows-.

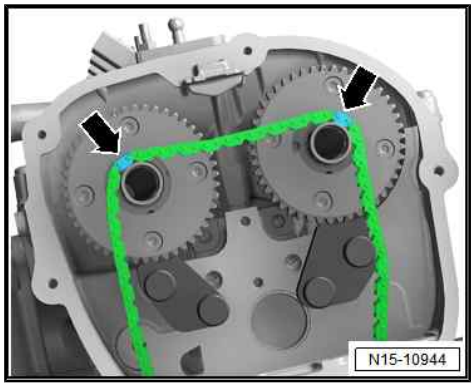

– Remove chain tensioner -1- for balance shaft timing chain.

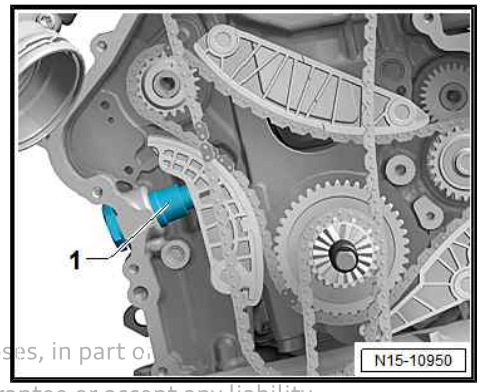

Protected by copyright. Copying for private or commercial purposes, in part o
permitted unless authorised by AUDI AG. AUDI AG does not guarantee or accept any liability
with respect to the correctness of information in this document. Copy

– Remove bolts -1-. Remove tensioning rail -2- and guide rails -3- and -4-.

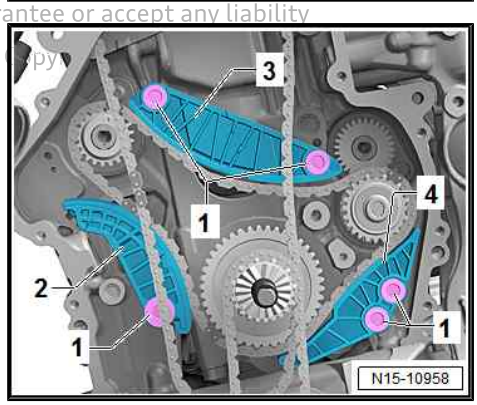

– Loosen tensioning bolt -A- and remove clamping pin -B-.
– Remove three-part chain sprocket assembly; to do so, remove oil pump chain (shown on a vehicle with alternator).
– Detach camshaft timing chain and drive chain for balance shaft.

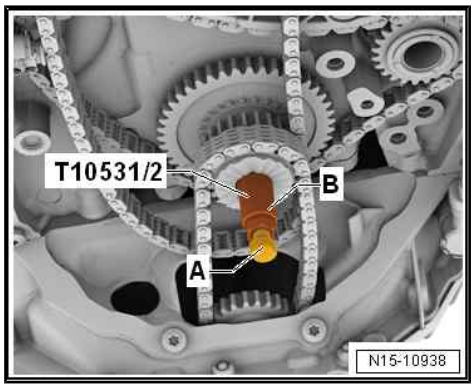

Installing

– Check TDC position of crankshaft; flat surface of crankshaft -arrow- must be horizontal.

– Use a waterproof pen to mark cylinder block -1-.

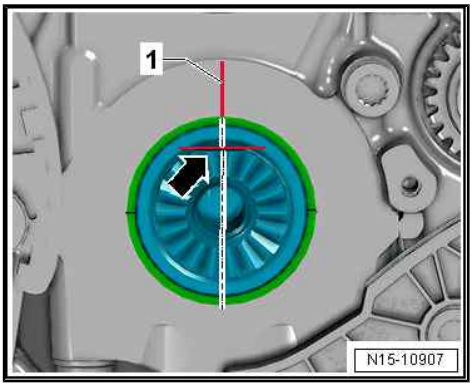

– Mark tooth -1- of three-part chain sprocket adjacent to marking -2- using waterproof pen.

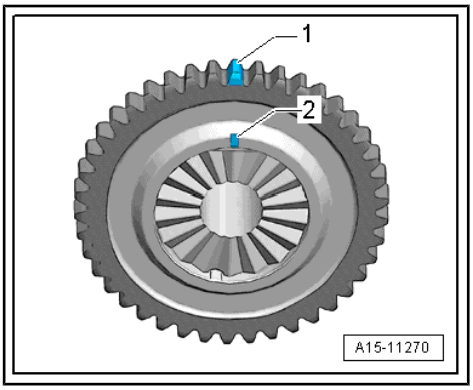

– Turn idler gear/balance shaft to markings -arrow- (do not slacken bolt -1-).

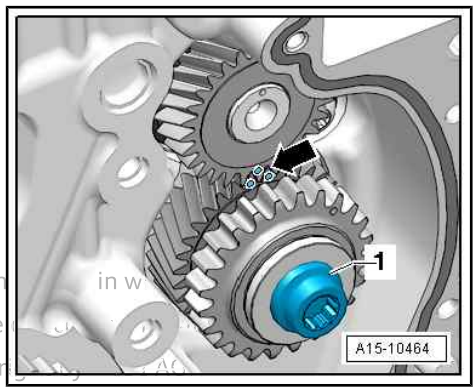

Protected by copyright. Copying for private or commercial purposes, in in w
permitted unless authorised by AUDI AG. AUDI AG does not guarantee
with respect to the correctness of information in this document. Copyr

- The links with coloured markings must be positioned at the markings on the chain sprockets.
- There is no need to note the position of any other coloured links.

– Fit drive chain for balance shafts; links with coloured markings -arrows- must be positioned at markings on chain sprockets.

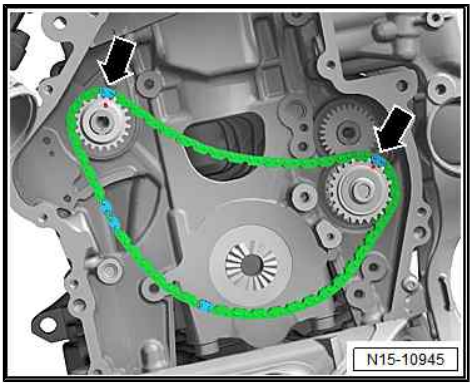

– Install guide rail -1- and tighten bolts -arrows-.

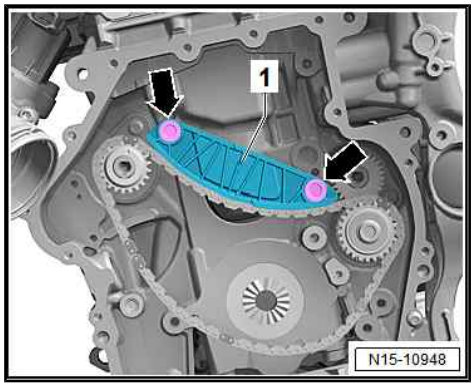

– Fit camshaft timing chain so that coloured markings -arrows- are positioned on camshaft journals.

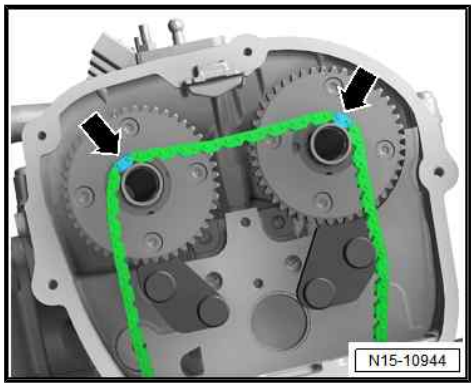

– Fit oil pump chain onto three-part chain sprocket assembly.
– Swivel three-part chain sprocket assembly towards engine in direction of -arrow- and secure on crankshaft. The marks -arrows- must align.

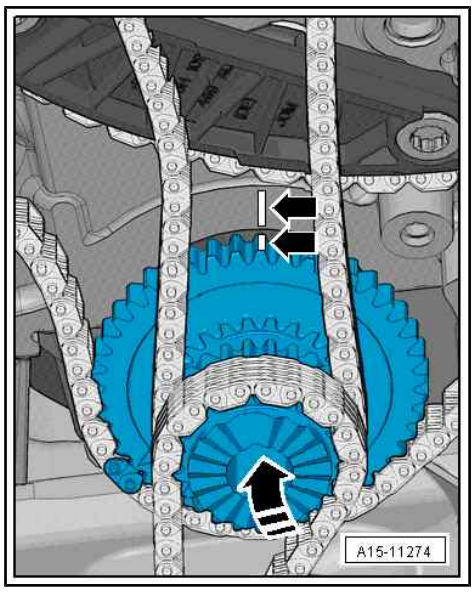

Protected by copyright. Copying for private or commercial purposes, in part or in whole, is not permitted unless authorised by AUDI AG. AUDI AG does not guarantee or accept any liability with respect to the correctness of information in this document. Copyright by AUDI AG.

1. Screw clamping pin - T10531/2- into crankshaft and hand-tighten. (Illustration shows vehicle with alternator.)
2. Attach turning-over tool - T10531/3- . Screw on flange nut - T10531/4- and hand-tighten. Move turning-over tool back and forth slightly using open-end spanner, 32 mm; at the same time, tighten flange nut until chain sprocket is firmly seated on teeth of crankshaft. Now (and not before) tighten tensioning bolt -A-.

Protected by copyright. Copying for private or commercial pu
permitted unless authorised by AUDI AG. AUDI AG does not g
with respect to the correctness of information in this docum

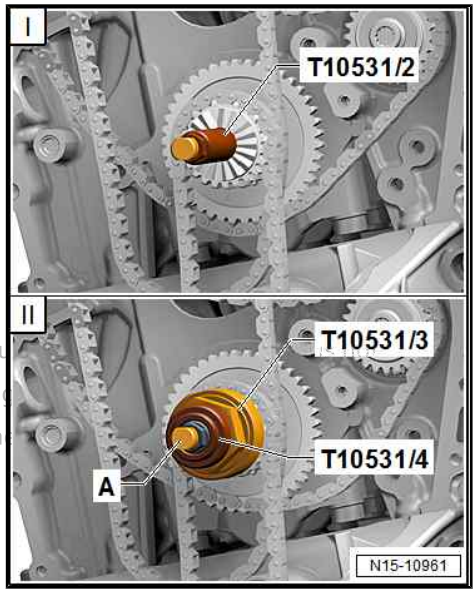

– Position link of drive chain for balance shafts with coloured marking -arrow- at marking on three-part chain sprocket assembly. Install tensioning rail -1- and guide rail -2-. Tighten bolts -3-.

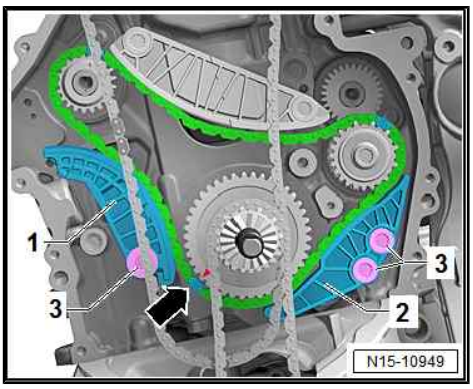

– Install chain tensioner -1-.

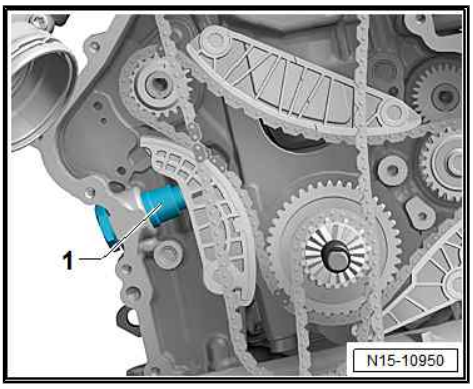

– Check setting again; links with coloured markings -arrows- must be positioned at markings on chain sprockets.

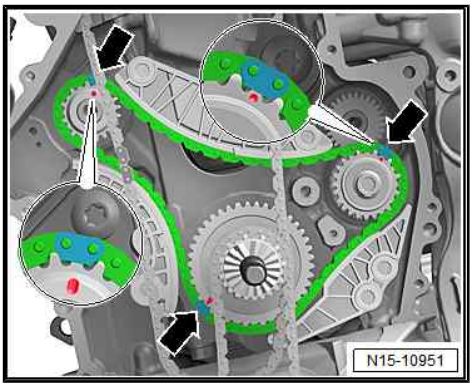

– Fit camshaft timing chain onto inlet camshaft, exhaust camshaft and crankshaft. Position links with coloured markings -arrows- at markings on chain sprockets.

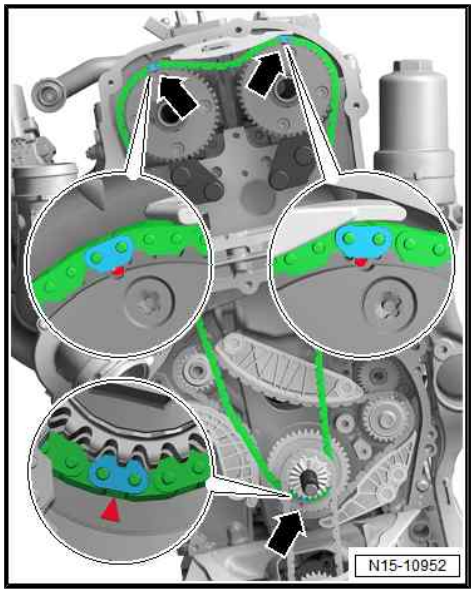

– Install guide rail -2- and tighten bolts -1-.

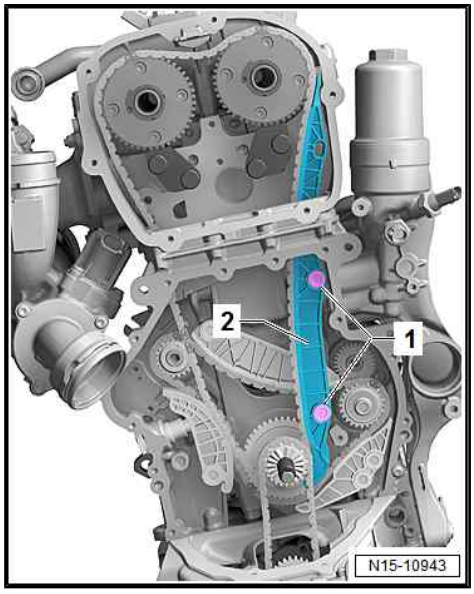

– Install top guide rail -1-.

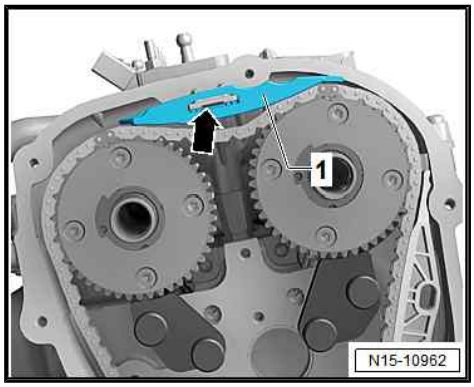

Protected by copyright. Copying for private or commercial purposes, in part or in whole, is not permitted unless authorised by AUDI AG. AUDI AG does not guarantee or accept any liability with respect to the correctness of information in this document. Copyright by AUDI AG.

- A second mechanic is required for the following step.

– Use assembly tool - T40266- to turn exhaust camshaft slightly in direction of -arrow A- and slide camshaft clamp - T40271/1- out of teeth on chain sprocket in direction of -arrow B-.

– Release camshaft in direction of -arrow C- until timing chain is in contact with guide rail -1-. Hold camshaft in this position, install tensioning rail -2- and tighten bolt -3-.

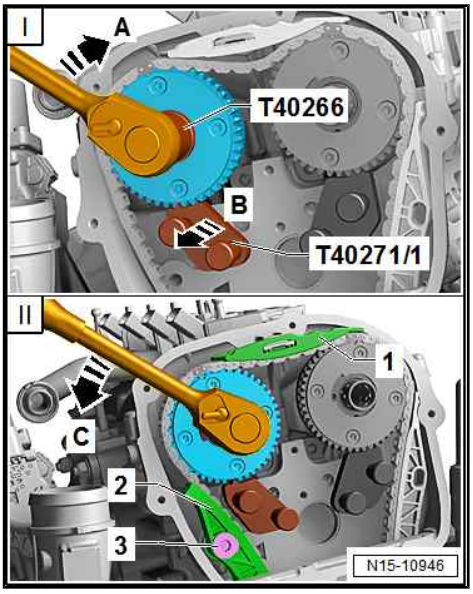

– Install chain tensioner -1- and tighten bolts -arrows-.

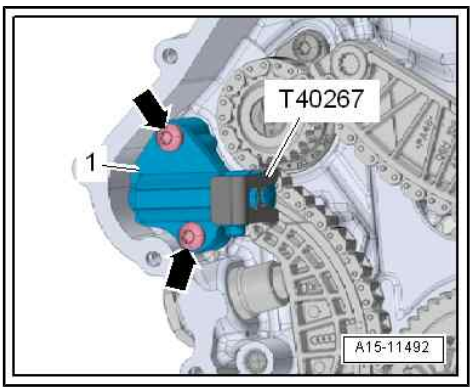

– Turn inlet camshaft in direction of -arrow 1- with assembly tool - T40266- , slide camshaft clamp - T40271/2- out of teeth on chain sprocket in direction of -arrow 2- and release camshaft.

– Remove camshaft clamp - T40271/2- .

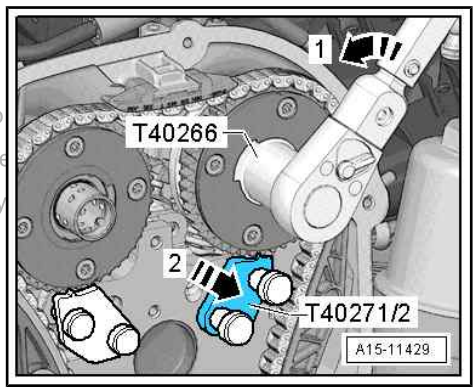

Protected by copyright. Copying for private or commercial purposes, in part or
permitted unless authorised by AUDI AG. AUDI AG does not guarantee or acce
with respect to the correctness of information in this document. Copyright by

– Check setting; links with coloured markings -arrows- must be positioned at markings on chain sprockets.

Protected by copyright. Copying for private or commercial
permitted unless authorised by AUDI AG. AUDI AG does no
with respect to the correctness of information in this docu

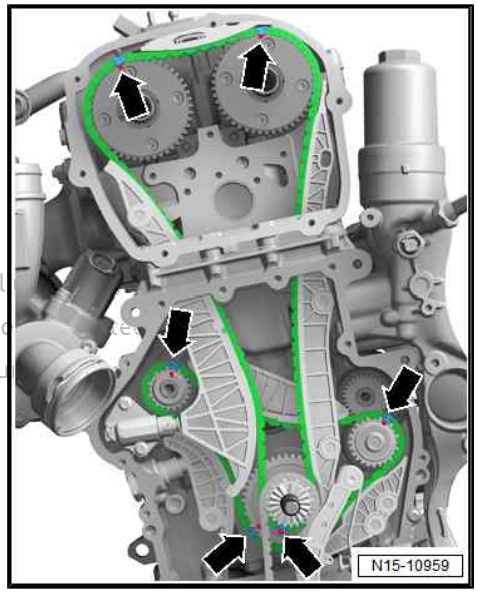

– Install chain tensioner -2- and tighten bolt -1-. Remove locking pin - T40011- ; support wire must come into contact with opening -arrow- on sump (top section).

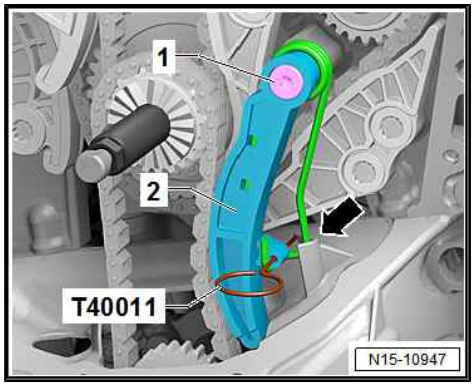

– Fit and tighten bolts -arrows-. Tightening torque
⇒ Item 4 (page 116)

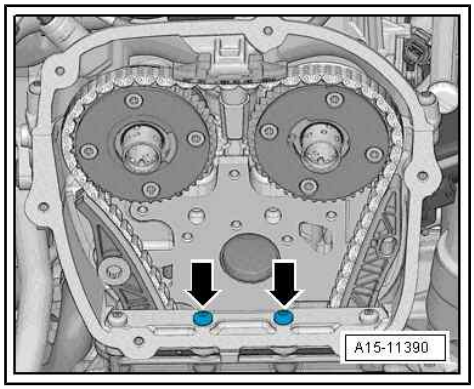

– Lubricate holes -arrows- with engine oil.

– Check whether spring pin -1- is fitted. (Not fitted on all bearing saddles.)

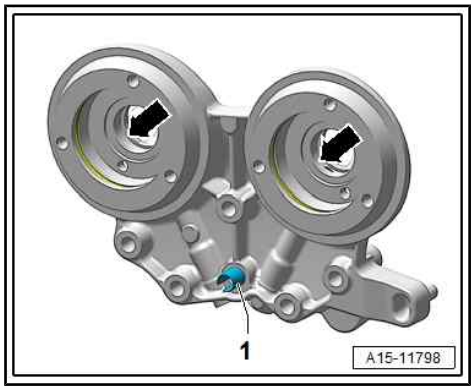

- Carefully attach bearing saddle without tilting it.

– Fit bearing saddle and screw in bolts -arrows- by hand until they make contact.

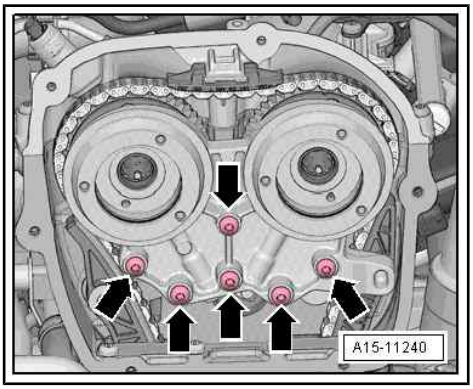

– Remove locking tool - T40267- .

– Tighten bolts for bearing saddle ⇒ page 89 .

– Install timing valves ⇒ Item 7 (page 87) .

– Turn the engine carefully at least 2 rotations to ensure that none of the valves make contact when the starter is operated.

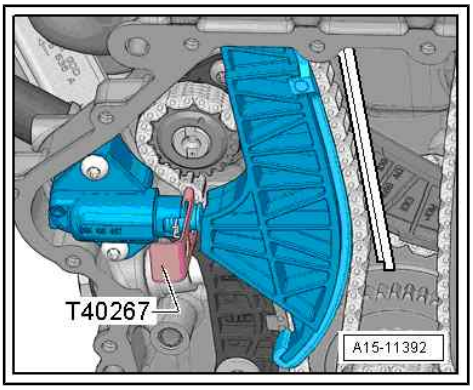

Note:

Due to the ratio, the timing chain links with coloured markings are no longer aligned after the engine has been turned.

Remaining installation steps are carried out in reverse sequence; note the following:

– Detach turning-over tool and install timing chain cover (bottom) ⇒ page 81 .

– Install timing chain cover (top) ⇒ page 79 .

Learnt values for chain elongation must be re-adapted after removing or renewing components of the chain drive.

– Connect ⇒ Vehicle diagnostic tester.

– Select `Diagnosis` mode and then `Start diagnosis`.

– Choose `Select own test` tab and select following options one after the other:

- `Drive train`
- `Select engine code and engine`
- `01 - Self-diagnosis compatible systems`
- `01 - Engine electronics`
- `01 - Engine electronics, functions`
- `01 - Chain elongation adaption diagnosis`

Tightening torques

- ⇒ “3.1 Exploded view - camshaft timing chains”, page 87
- ⇒ “3.2 Exploded view - drive chain for balance shaft”, page 89

3.5 Checking timing chain

Special tools and workshop equipment required

Protected by copyright. Copying for private or commercial purposes, in part or in whole, is not permitted unless authorised by AUDI AG. AUDI AG does not guarantee or accept any liability with respect to the correctness of information in this document. Copyright by AUDI AG.

- Ratchet wrench (21 mm) - T40263-

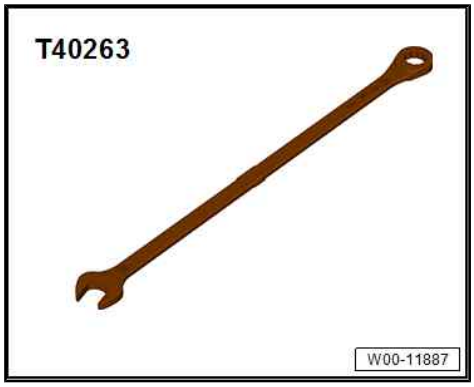

- Adapter - T40314-

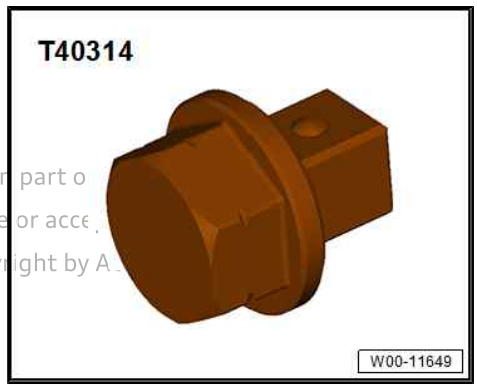

Protected by copyright. Copying for private or commercial purposes, in part o
permitted unless authorised by AUDI AG. AUDI AG does not guarantee or acce
with respect to the correctness of information in this document. Copyright by A

Procedure

– Remove noise insulation (front) ⇒ General body repairs, exterior; Rep. gr. 66 ; Noise insulation; Removing and installing noise insulation .

– If fitted, unscrew bolt -arrow-; to do so, unfasten closure plate for bumper cover at lock carrier ⇒ General body repairs, exterior; Rep. gr. 63 ; Bumper (front); Exploded view - bumper cover .

– Press coolant pipes to the side.

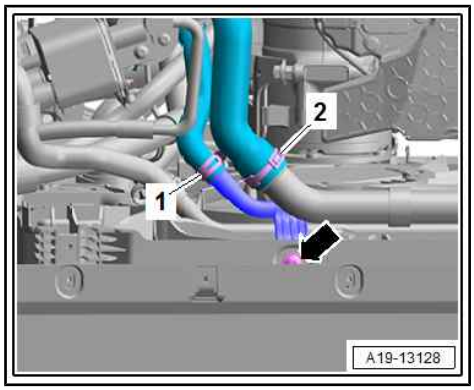

– Remove sealing plug -arrow-. Sealing plug must be renewed.

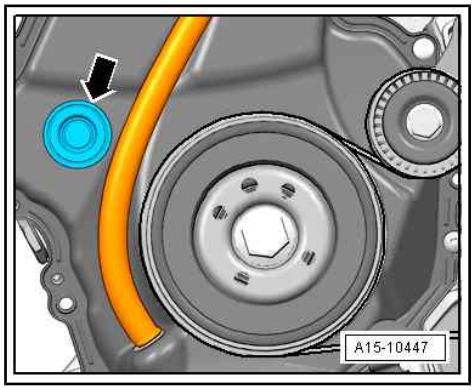

NOTICE

Risk of engine damage if valve gear drive slips

– Only turn engine in normal direction of rotation.

– Turn crankshaft only in direction of normal engine rotation -arrow- using ratchet wrench (21 mm) - T40263- , adapter - T40314- and socket (24 mm).

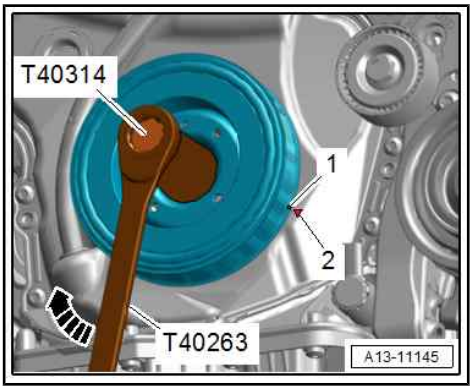

– Turn vibration damper in direction of engine rotation until piston of chain tensioner has extended as far as it will go in direction of -arrow-.

– Count visible teeth of piston.

Protected by copyright. Copying for private or commercial purposes, not permitted unless authorised by AUDI AG. AUDI AG does not guarantee with respect to the correctness of information in this document.

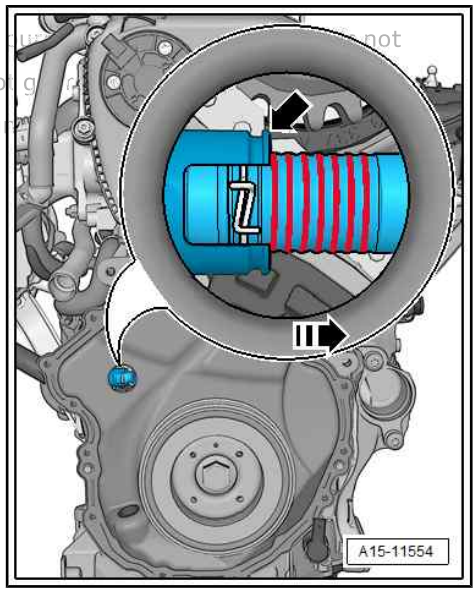

Note:

Visible teeth are all teeth to the right of the chain tensioner housing -arrow-.

- The timing chain must not be renewed if six or fewer teeth are visible.
- If six or fewer teeth are visible and there is an entry in the event memory: Adapt chain elongation (⇒ Vehicle diagnostic tester , `01 - Chain elongation adaption diagnosis`) and delete event memory.
- If seven or more teeth are visible: Renew camshaft timing chain ⇒ page 96 .

Tightening torques

- ⇒ General body repairs, exterior; Rep. gr. 66 ; Noise insulation; Exploded view - noise insulation
- ⇒ 4-cylinder direct injection engine (1.8, 2.0 ltr. 4-valve TFSI); Rep. gr. 19 ; Coolant pipes; Exploded view - coolant pipes

3.6 Checking valve timing

Special tools and workshop equipment required

- Spark plug spanner - 3122B-

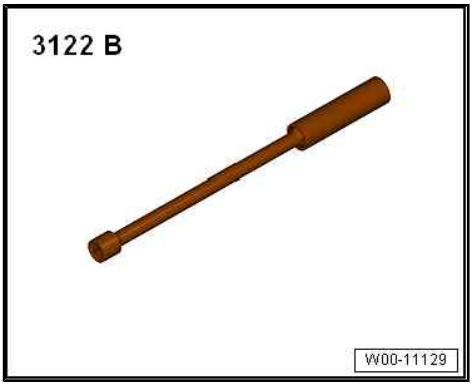

- Dial gauge set, 4-part - VAS 6341-

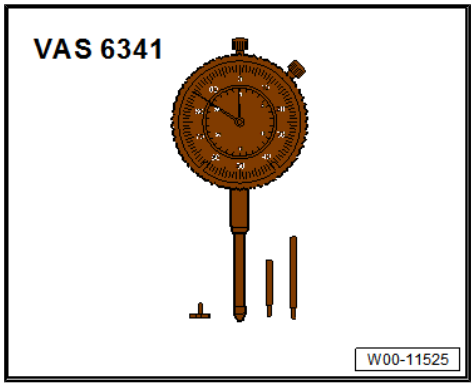

- Adapter for dial gauge - T10170 A-

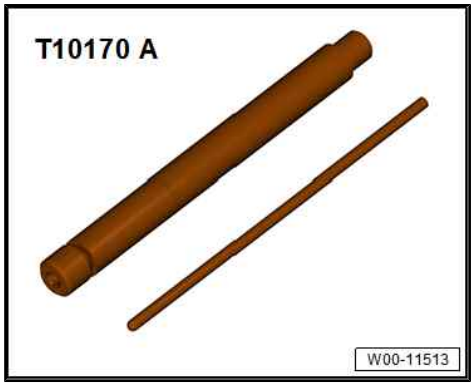

- Ratchet wrench (21 mm) - T40263-

Protected by copyright. Copying for private or commercial purposes, in part or in whole, is not permitted unless authorised by AUDI AG. AUDI AG does not guarantee or accept any liability with respect to the correctness of information in this document. Copyright by AUDI AG.

- Adapter - T40314-

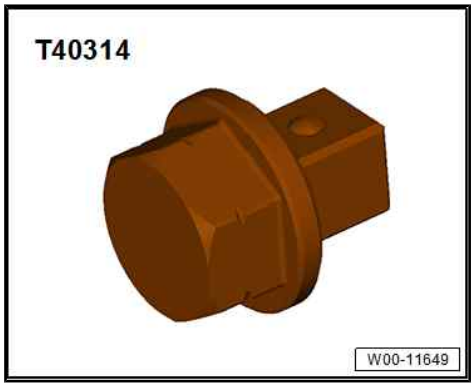

Procedure

– Remove timing chain cover (top) ⇒ page 79 .

– Remove noise insulation (front) ⇒ General body repairs, exterior; Rep. gr. 66 ; Noise insulation; Removing and installing noise insulation .

– If fitted, unscrew bolt -arrow-; to do so, unfasten closure plate for bumper cover at lock carrier ⇒ General body repairs, exterior; Rep. gr. 63 ; Bumper (front); Exploded view - bumper cover .

– Press coolant pipes to the side.

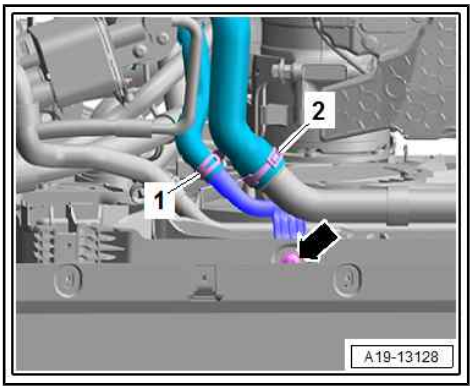

– Apply ratchet wrench (21 mm) - T40263- , adapter - T40314- and socket (24 mm) to vibration damper to turn crankshaft in direction of engine rotation until markings -arrows- are positioned almost at top.

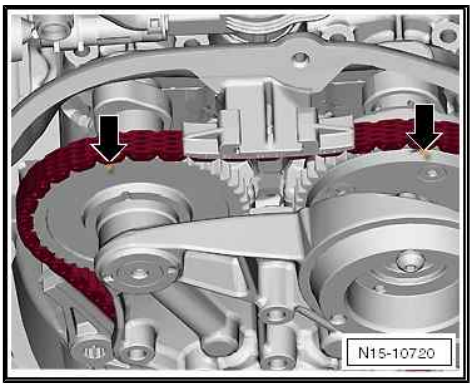

Protected by copyright. Copying for private or commercial purposes, in part or in whole, is not permitted unless authorised by AUDI AG. AUDI AG does not guarantee or accept any liability with respect to the correctness of information in this document. Copyright by AUDI AG.

– Remove spark plug for cylinder 1 with spark plug socket and extension - 3122B- .

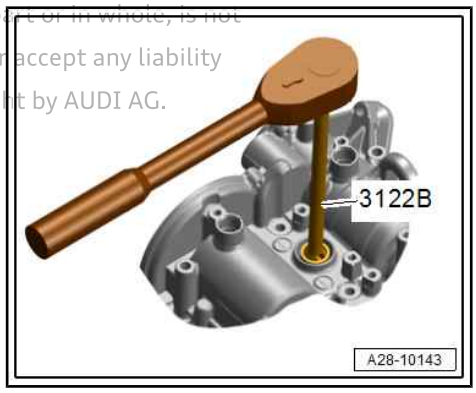

– Screw dial gauge adapter - T10170/A- into spark plug thread as far as stop.

– Insert dial gauge from dial gauge set, 4-part - VAS 6341- with extension - T10170A/1- as far as stop and secure with locking nut -arrow-.

– Turn crankshaft slowly in normal direction of engine rotation until needle in dial gauge has reached maximum position. When needle has reached maximum position (i.e. turning point in dial gauge), piston is at »TDC«.

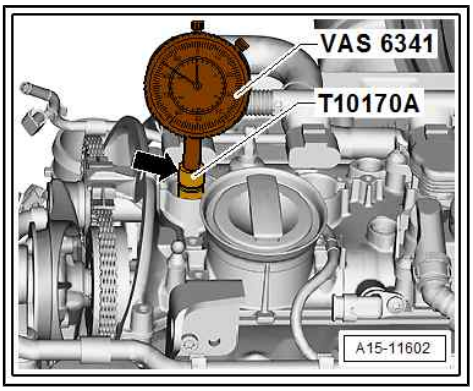

Note:

- If the crankshaft has been turned beyond the “TDC” position, it must be turned two rotations further in normal direction of engine rotation. Do not turn engine in opposite direction to normal rotation.
- The combination of ratchet wrench (21 mm) - T40263- , adapter - T40314- and socket (24 mm) can be fitted onto the vibration damper better than the counterhold tool - T10355- described below.

With markings on cylinder head cover

- Notch on vibration damper must align with arrow marking on timing chain cover (bottom) -arrow-.
- Markings -1- on camshaft chain sprockets must be positioned opposite markings -2 and 3- on cylinder head.

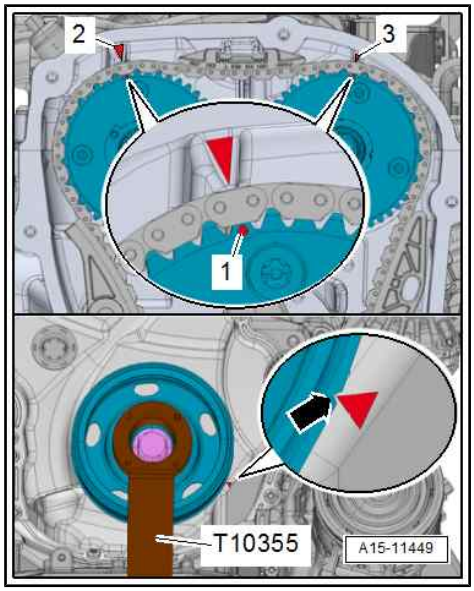

Without markings on cylinder head cover

- Notch on vibration damper and marking on cover for timing chains (bottom) must be aligned -arrow-.
- The markings -1- on the camshaft chain sprockets must face upwards.

Protected by copyright. Copying for private or commercial purposes, permitted unless authorised by AUDI AG. AUDI AG does not guarant with respect to the correctness of information in this document. Cop

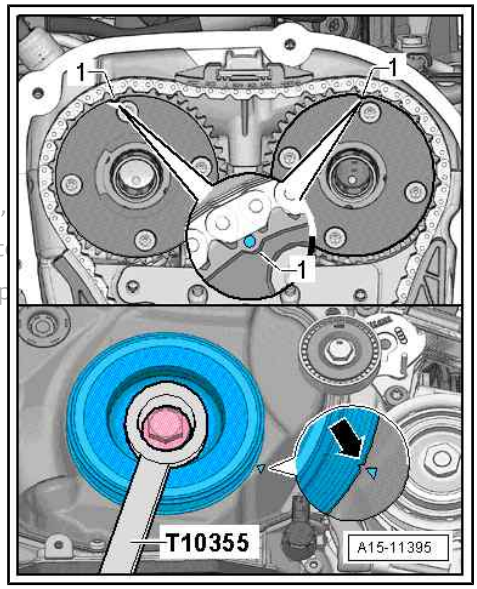

– Measure distance from edge -1- to marking -2- on exhaust camshaft chain sprocket.
- Specification: 74 ... 77 mm

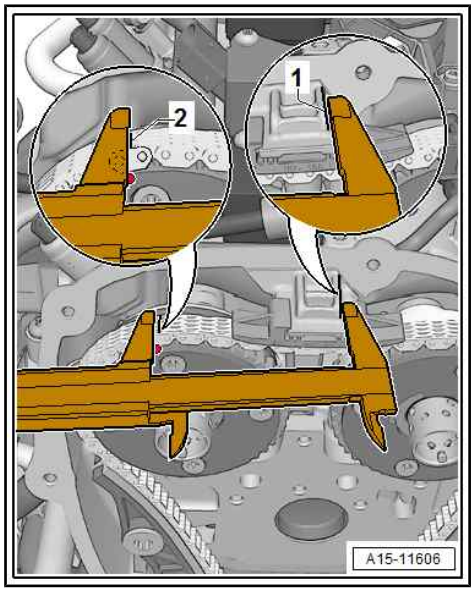

– If specification is obtained, measure distance between marking on exhaust camshaft chain sprocket -3- and marking on inlet camshaft chain sprocket -4-.

• Specification: 124 ... 127 mm

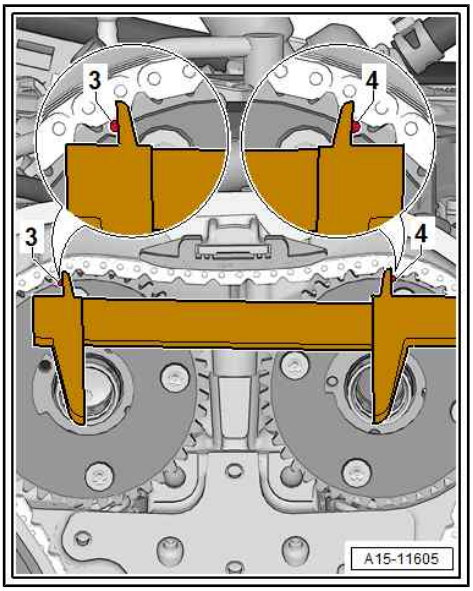

Note

If the timing chain is one tooth out of position, this results in a deviation of approx. 6 mm from specification. The timing chain must be refitted if it is not in the correct position.

Tightening torques

♦ ⇒ General body repairs, exterior; Rep. gr. 66 ; Noise insulation; Exploded view - noise insulation

♦ ⇒ 4-cylinder direct injection engine (1.8, 2.0 ltr. 4-valve TFSI); Rep. gr. 19 ; Coolant pipes; Exploded view - coolant pipes

Protected by copyright. Copying for private or commercial purposes, in part or in whole, is not permitted unless authorised by AUDI AG. AUDI AG does not guarantee or accept any liability with respect to the correctness of information in this document. Copyright by AUDI AG.

Protected by copyright. Copying for private or commercial purposes, in part or in whole, is not permitted unless authorized by AUDI AG. AUDI AG does not guarantee or accept any liability with respect to the correctness of information in this document. Copyright by AUDI AG.

4 Cylinder head

⇒ “4.1 Exploded view - cylinder head”, page 116
⇒ “4.2 Removing and installing cylinder head”, page 118
⇒ “4.3 Checking compression”, page 125

4.1 Exploded view - cylinder head

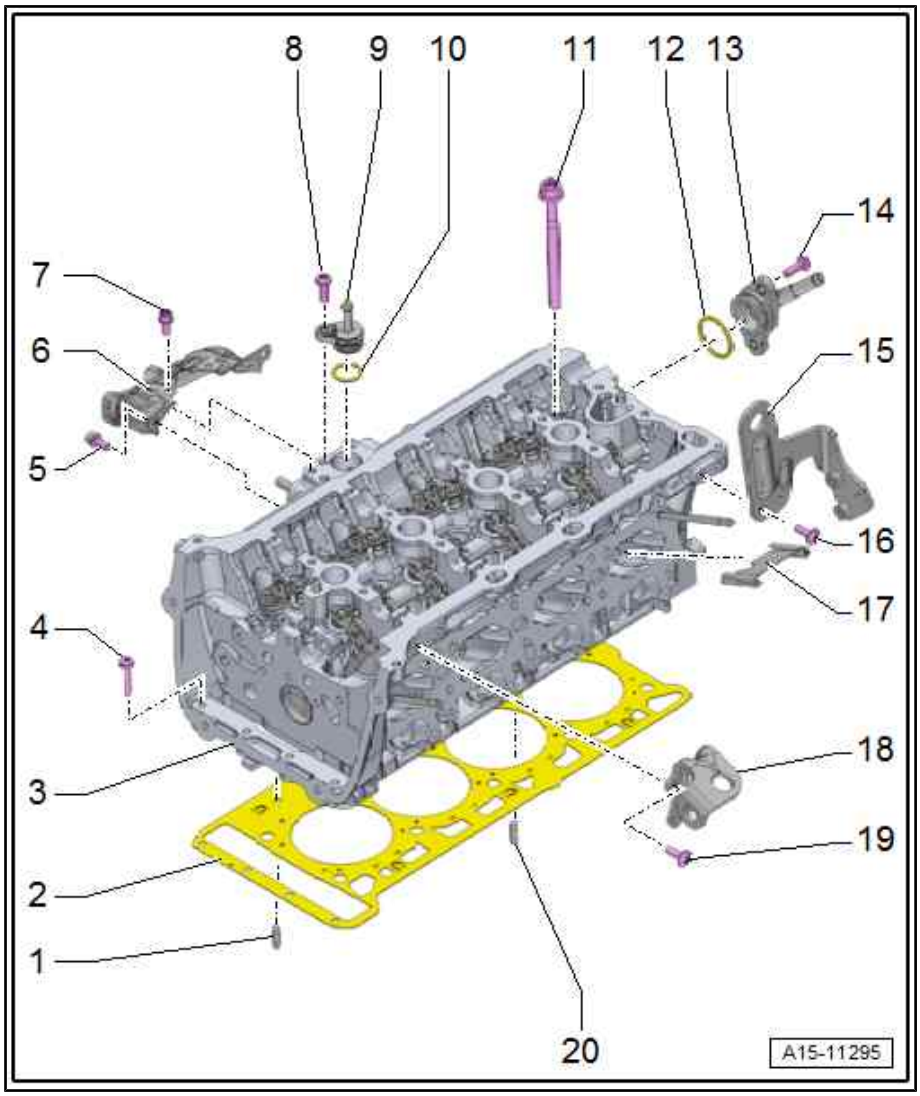

1 - Dowel pin

2 - Cylinder head gasket

- ❑ Renew after removing
- ❑ Note installation position: part number must face cylinder head
- ❑ If renewed, change coolant and engine oil
- ❑ After renewal, perform adaption ⇒ Vehicle diagnostic tester 01 - Engine electronics, functions, 01 - Chain elongation adaption diagnosis

3 - Cylinder head

- ❑ Removing and installing ⇒ page 118
- ❑ Checking for distortion ⇒ page 118
- ❑ Always renew cylinder head cover as well
- ❑ If renewed, change coolant and engine oil
- ❑ After removal or renewal, perform adaption ⇒ Vehicle diagnostic tester 01 - Engine electronics, functions, 01 - Chain elongation adaption diagnosis

4 - Bolt

- ❑ Renew after removing
- ❑ Slackening ⇒ page 117
- ❑ Tightening ⇒ page 118

5 - Bolt

- ❑ 9 Nm

6 - Heat shield

7 - Bolt

- ❑ 9 Nm

8 - Bolt

- ❑ 9 Nm

9 - Connection

- ❑ For coolant hose

10 - O-ring

- ❑ Renew after removing
- ❑ Lubricate with coolant

11 - Cylinder head bolt

- ❑ Renew after removing
- ❑ Slackening ⇒ page 117
- ❑ Tightening ⇒ page 118

12 - O-ring

- ❑ Renew after removing
- ❑ Lubricate with coolant

13 - Connection

- ❑ For coolant hose

14 - Bolt

- ❑ 9 Nm

15 - Engine lifting eye

16 - Bolt

- ❑ Renew after removing
- ❑ 10 Nm +90°

17 - Separating plate

18 - Engine lifting eye

19 - Bolt

- ❑ Renew after removing
- ❑ 10 Nm +90°

20 - Dowel pin

Protected by copyright. Copying for private or commercial purposes, in part or in whole, is not permitted unless authorised by AUDI AG. AUDI AG does not guarantee or accept any liability with respect to the correctness of information in this document. Copyright by AUDI AG.

Slackening cylinder head bolts

– Remove bolts -arrows-.

– Slacken cylinder head bolts in the sequence -1 ... 10-.

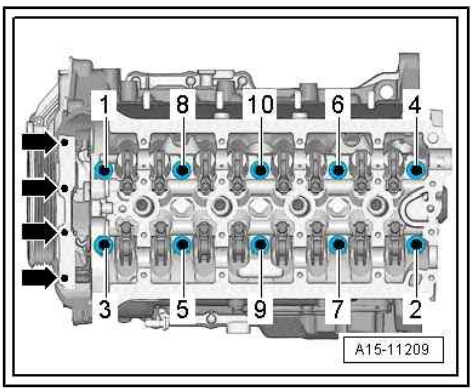

Tightening torques and sequence for cylinder head

- After removing, renew bolts tightened with specified tightening angle.
- Bolts - difference:
- Bolt without collar
- Bolt with collar -arrow-

Protected by copyright. Copying for private or commercial purposes, in part or in whole, is not permitted unless authorised by AUDI AG. AUDI AG does not guarantee or accept any liability with respect to the correctness of information in this document. Copyright AUDI AG.

– Tighten bolts in stages in the sequence shown:

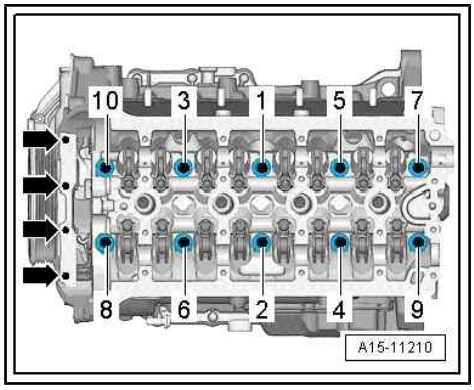

Stage	Bolts	Tightening torques/angle specification
1.	-1 … 10-	Screw in by hand until contact is made
2.	-1 … 10-	Without collar: 40 Nm; with collar: 50 Nm (difference ⇒ page 118)
3.	-1 … 10-	Turn 90° further
4.	-1 … 10-	Turn 90° further
5.	-Arrows-	10 Nm
6.	-Arrows-	Turn 90° further

Checking cylinder head for distortion

– Use straight edge 500 mm - VAS 6075- and feeler gauge to measure cylinder head for distortion at several points.

♦ Max. permissible distortion: 0.05 mm

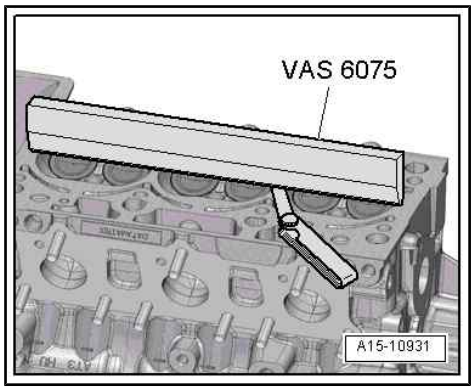

4.2 Removing and installing cylinder head

Special tools and workshop equipment required

- Spark plug spanner - 3122B-

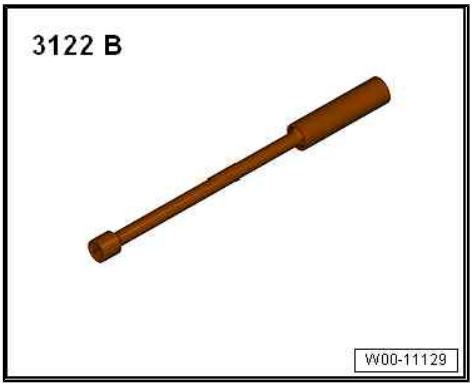

- Engine bung set - VAS 6122-

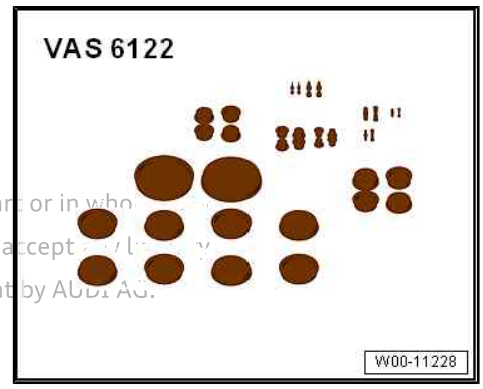

Protected by copyright. Copying for private or commercial purposes, in part or in whole, is not permitted unless authorised by AUDI AG. AUDI AG does not guarantee or accept any liability with respect to the correctness of information in this document. Copyright by AUDI AG.

- Hose clip pliers - VAS 6362-

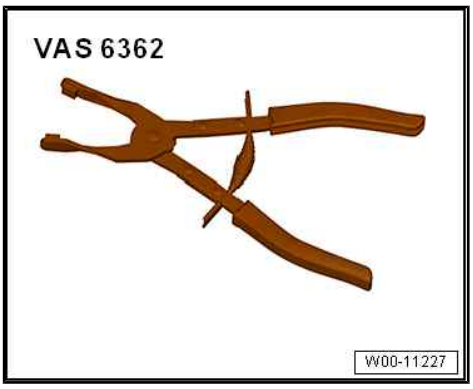

- Special wrench (Polydrive) - T10070-

- Ratchet wrench (21 mm) - T40263-

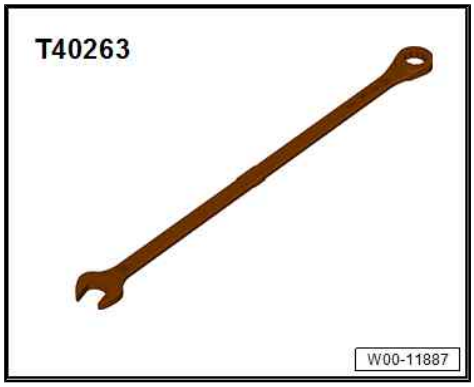

- Bit XZN 12 - T40270-

Protected by copyright. Copying for private or commercial purposes, in part or in whole, is not permitted unless authorised by AUDI AG. AUDI AG does not guarantee or accept any liability with respect to the correctness of information in this document. Copyright by AUDI AG.

- Adapter - T40314-

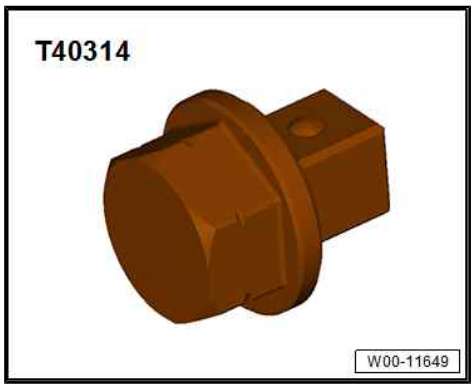

- Open end spanner insert, AF 24

Removing

Preparatory work may be necessary depending on model ⇒ 4-cylinder direct injection engine (1.8, 2.0 ltr. 4-valve TFSI); Rep. gr. 15 ; Cylinder head; Removing and installing cylinder head .

- Re-install all cable ties in original positions.
- All open inlet and exhaust ports must be sealed with suitable plugs (e.g. from engine bung set - VAS 6122-).

– If there is no B+ cover on the alternator, disconnect battery to avoid short circuits ⇒ Electrical system; Rep. gr. 27 ; Battery; Disconnecting and connecting battery .

– If necessary, move electrical wiring harness -4- clear.

– Unscrew nut -2- and bolt -1- and remove support for intake manifold.

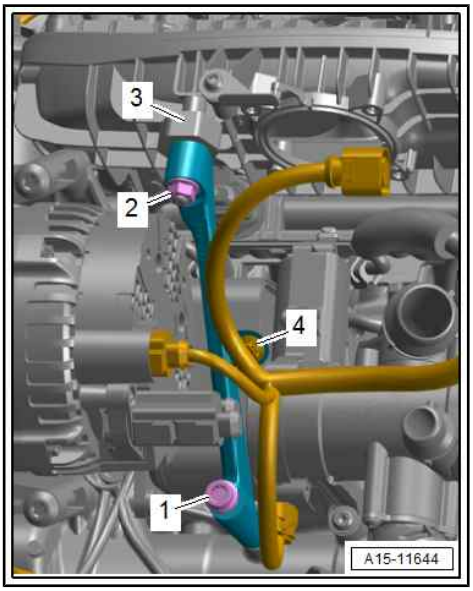

Bracket for ancillaries - version 1:

– Unplug electrical connectors:

1 - For oil pressure switch - F22- -item 2-

3 - For oil pressure switch for reduced oil pressure - F378- -item 4-

5 - For piston cooling jet control valve - N522- -item 7-

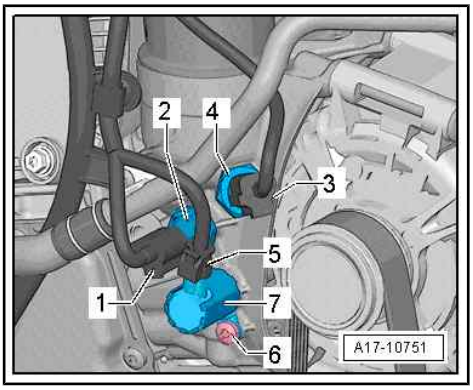

Bracket for ancillaries - version 2:

– Unplug electrical connectors:

1 - For oil pressure switch - F22-

2 - For oil pressure switch for reduced oil pressure - F378-

3 - For piston cooling jet control valve - N522-

Protected by copyright. Copying for private or commercia
permitted unless authorised by AUDI AG. AUDI AG does
with respect to the correctness of information in this do

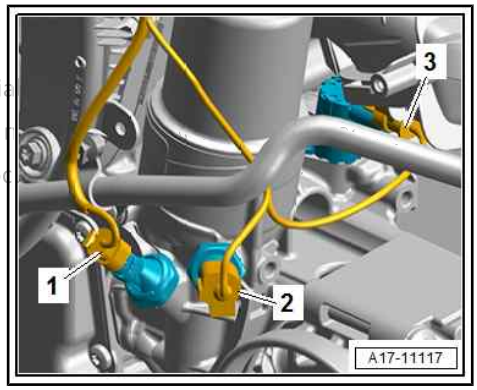

All versions (continued):

– Release hose clip -1- and detach coolant hose (rear).

– Unplug electrical connector -2- for coolant temperature sender - G62- .

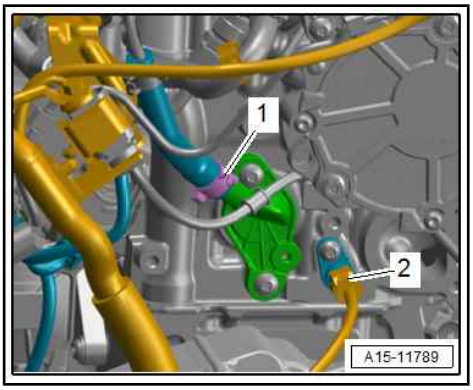

– Remove spark plugs with spark plug spanner - 3122B- .

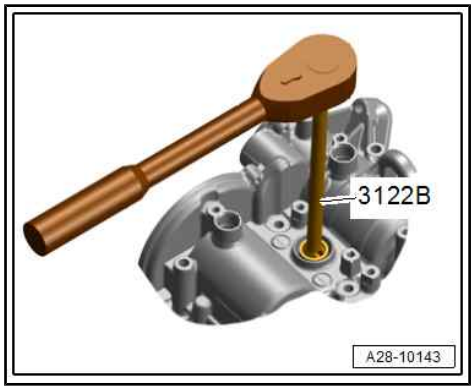

– Remove bolts -arrows-.
– Use special wrench, long reach - T10070- / bit XZN 12 - T40270- to remove cylinder head bolts in the sequence -1 ... 10-.
• Make sure all hoses/pipes and wiring on component are disconnected.
• Make sure tensioning rail and guide rail are not damaged when lifting off cylinder head.
– Take off cylinder head.
– Place cylinder head onto soft surface (foam plastic).
– Seal off all open passages in the intake and exhaust system with clean cloths or plugs (thoroughly cleaned) from engine bung set - VAS 6122- .

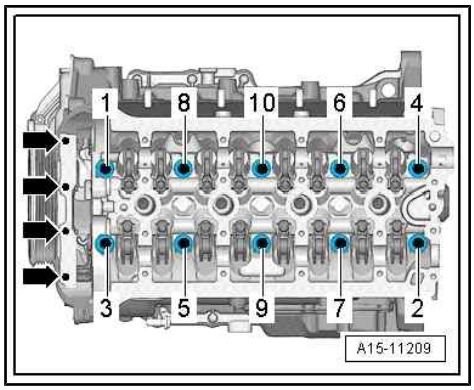

Installing

NOTICE

Risk of damage to sealing surfaces if handled incorrectly.

– Carefully remove sealant residue from cylinder head and cylinder block.

Protected by copyright. Copying for private or commercial purposes, in part or in whole, is not permitted unless authorised by AUDI AG. AUDI AG does not guarantee or accept any liability with respect to the correctness of information in this document. Copyright by AUDI AG.

- Do NOT use abrasive materials (sandpaper, sanding discs, sanding pads, abrasive web, wire wool, etc.).
- Sealing surface must not be raised.
- Dark discolouration does not have to be removed.
- When removing sealant residue, make sure none of the residue enters the open channels of the engine.
- Ensure that nearby workspaces are kept clean and that the abrasive materials listed above are not being used there.
- Use of non-approved abrasive materials can lead to subsequent damage to the turbocharger, conrod bearings, etc.

Protected by copyright. Copying for private or commercial purposes, in part or
permitted unless authorised by AUDI AG. AUDI AG does not guarantee or acce
with respect to the correctness of information in this document. Copyright by

CAUTION

Risk of eye injury due to sealant residue.

– Put on safety goggles.

– Sealant residue may only be removed from the cylinder head and cylinder block using a commercially available blade scraper (blade width at least 40 mm).

– Remove loose residue with a lint-free cloth.

- After removing, renew bolts tightened with specified tightening angle.
- Renew self-locking nuts, as well as seals, gaskets and O-rings after removing.
- Secure all hose connections with correct type of hose clips (as original equipment) ⇒ Electronic parts catalogue .
- Do not remove new cylinder head gasket from packaging until it is ready to be fitted.
- Handle the cylinder head gasket very carefully to prevent damage to the silicone coating or the indented area of the gasket.
- When installing an exchange cylinder head, the plastic protectors fitted to protect the open valves should not be removed until the cylinder head is ready to be fitted.
- When installing an exchange cylinder head, the contact surfaces between roller rocker finger and cam must be oiled before installing the cylinder head cover.
- After fitting a new cylinder head or cylinder head gasket, change engine oil and coolant in entire cooling system.

– Clean blind holes for cylinder head bolts in cylinder block so that they are free of oil and coolant residue.

Protected by copyright. Copying for private or commercial purposes, in part or in whole, is not permitted unless authorised by AUDI AG. AUDI AG does not guarantee or accept any liability with respect to the correctness of information in this document. Copyright by AUDI AG.

– Place cylinder head gasket in position.

♦ Note position of centring pins in cylinder block -arrows-.

♦ Note installation position of cylinder head gasket. Part No. should be legible from inlet side.

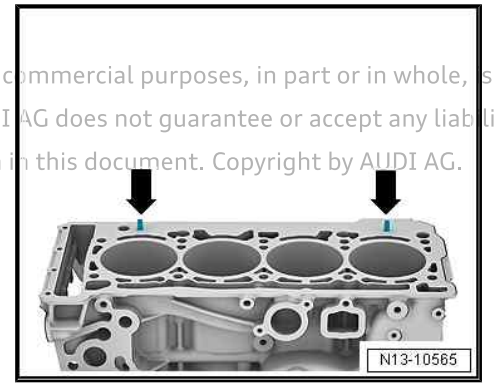

– If crankshaft has been rotated: Set piston of cylinder 1 to top dead centre and then turn crankshaft back slightly.

• Make sure that components are not damaged by timing chain when rotating crankshaft.

– Fit cylinder head.

– Fit and tighten cylinder head bolts.

Note:

Cylinder head bolts do not have to be torqued down again later after repair work.

Remaining installation steps are carried out in reverse sequence; note the following:

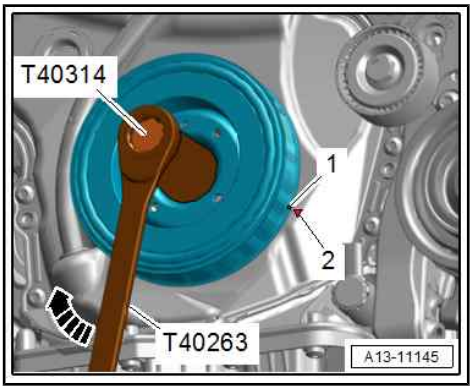

– Use ratchet wrench (21 mm) - T40263- , adapter - T40314- and socket (24 mm) to turn crankshaft until vibration damper is at “TDC” position.

• Notch -1- on vibration damper must align with arrow marking -2- on cover for timing chains (bottom).

• Marking on timing chain cover (bottom) must be in 4 o'clock position.

– Install throttle valve module - J338- ⇒ page 241 .

– Install camshafts ⇒ page 132 .

– Observe steps required after re-connecting battery ⇒ Electrical system; Rep. gr. 27 ; Battery; Disconnecting and connecting battery .

– Install spark plugs ⇒ page 291 .

– Change engine oil ⇒ page 169 .

– Fill cooling system with fresh coolant ⇒ page 201 .

Additional work depending on model ⇒ 4-cylinder direct injection engine (1.8, 2.0 ltr. 4-valve TFSI); Rep. gr. 15 ; Cylinder head; Removing and installing cylinder head

Learnt values for chain elongation must be re-adapted after removing or renewing cylinder head.

– Connect ⇒ Vehicle diagnostic tester.

– Select `Diagnosis` mode and then `Start diagnosis`.

– Choose `Select own test` tab and select following options one after the other:

◆ `Drive train`

◆ `Select engine code and engine`

◆ `01 - Self-diagnosis compatible systems`

◆ `01 - Engine electronics`

◆ `01 - Engine electronics, functions`

◆ `01 - Chain elongation adaption diagnosis`

Tightening torques

◆ ⇒ Fig. ““Tightening torques and sequence for cylinder head”“ , page 118

◆ ⇒ “4.1 Exploded view - cylinder head”, page 116

◆ ⇒ 4-cylinder direct injection engine (1.8, 2.0 ltr. 4-valve TFSI); Rep. gr. 19 ; Coolant pipes; Exploded view - coolant pipes

◆ ⇒ “4.1 Exploded view - intake manifold”, page 239

◆ ⇒ “2.1 Exploded view - turbocharger”, page 216

Protected by copyright. Copying for private or commercial purposes, in part or in whole, is not permitted unless authorised by AUDI AG. AUDI AG does not guarantee or accept any liability with respect to the correctness of information in this document. Copyright by AUDI AG.

4.3 Checking compression

Special tools and workshop equipment required

♦ Spark plug spanner - 3122B-

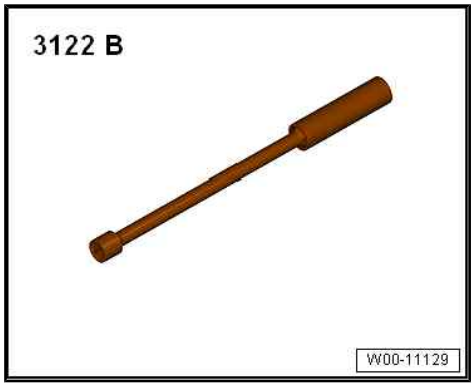

♦ Compression tester - V.A.G 1763-

Protected by copyright. Copying for private or commercial purposes, in part or in whole, is not permitted unless authorised by AUDI AG. AUDI AG does not guarantee or accept any liability with respect to the correctness of information in this document. Copyright by AUDI AG.

♦ Adapter - V.A.G 1763/13- (not illustrated)

Test sequence

- Engine oil temperature at least 30 °C
- Battery voltage at least 12.7 V

Preparatory work may be necessary depending on model ⇒ 4-cylinder direct injection engine (1.8, 2.0 ltr. 4-valve TFSI); Rep. gr. 15 ; Cylinder head; Checking compression .

– Remove ignition coils ⇒ page 292 .

– Unplug electrical connectors:

1 - For FSI injectors in cylinder head

2 - For MPI injectors in intake manifold (if fitted)

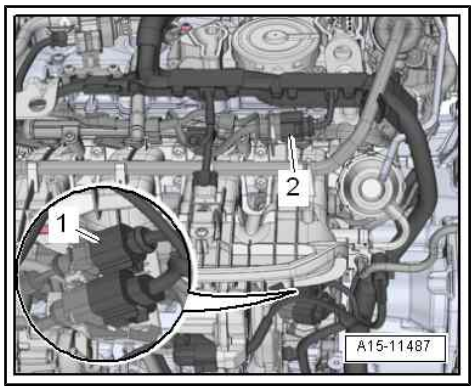

– Remove spark plugs with spark plug spanner - 3122B- .

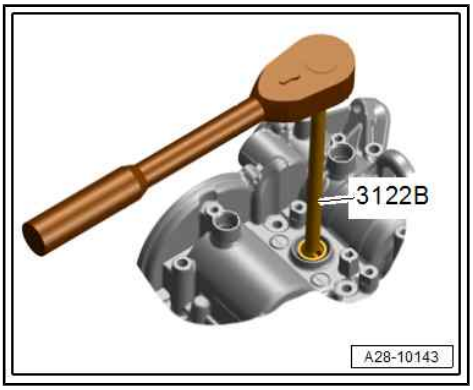

– Screw adapter - V.A.G 1381/13- into corresponding spark plug hole, as shown, and connect compression tester - V.A.G 1763- .
– Check compression pressure with compression tester - V.A.G 1763- (see ⇒ operating instructions for details of how to use tester).
– Press down accelerator pedal completely and simultaneously operate starter until pressure no longer increases on tester display.
– Repeat procedure on each cylinder.

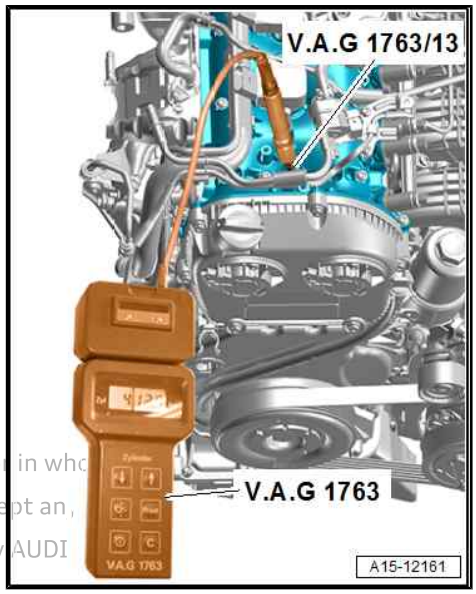

Compression pressure	bar
When new	11.0 … 14.0
Wear limit	7.0
Maximum difference between cylinders	3.0

Protected by copyright. Copying for private or commercial purposes, in part or in whole, is not permitted unless authorised by AUDI AG. AUDI AG does not guarantee or accept any liability with respect to the correctness of information in this document. Copyright by AUDI AG.

Assembling

– Install spark plugs ⇒ page 291 .
– Install ignition coils ⇒ page 292 .
– Erase any entries in engine control unit event memory resulting from testing ⇒ Vehicle diagnostic tester.

Additional work depending on model ⇒ 4-cylinder direct injection engine (1.8, 2.0 ltr. 4-valve TFSI); Rep. gr. 15 ; Cylinder head; Checking compression

5 Valve gear

⇒ “5.1 Exploded view - valve gear”, page 128

⇒ “5.2 Removing and installing camshaft”, page 132

⇒ “5.3 Installing ball for slider”, page 148

⇒ “5.4 Removing and installing actuators for camshaft adjustment”, page 148

⇒ “5.5 Removing and installing camshaft control valve 1 N205 ”, page 149

⇒ “5.6 Removing and installing valve stem oil seals”, page 150

5.1 Exploded view - valve gear

Part I

Part II ⇒ page 130

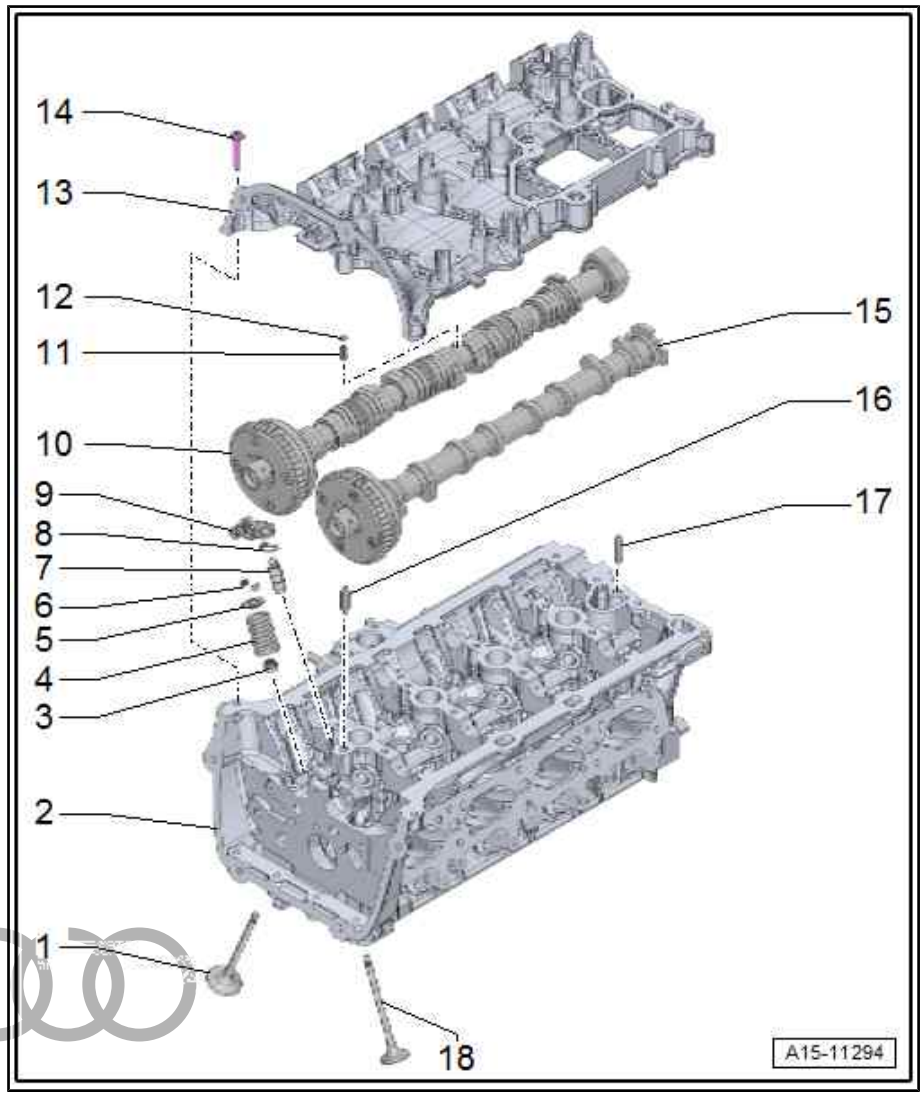

1 - Exhaust valve

- ❑ Do not machine, only grinding-in is permitted
- ❑ Valve dimensions ⇒ page 161
- ❑ Checking valve guides ⇒ page 160

2 - Cylinder head

- ❑ Always renew cylinder head cover as well

3 - Valve stem oil seal

- ❑ Renewing ⇒ page 150

4 - Valve spring

5 - Valve spring plate

6 - Valve cotters

7 - Hydraulic compensation element

- ❑ Do not interchange
- ❑ Lubricate contact surface

8 - Securing clip

- ❑ For hydraulic compensation element

9 - Roller rocker finger

- ❑ Removing and installing ⇒ “5.2 Removing and installing camshaft”, page 132
- ❑ Mark installation position for re-installation
- ❑ Check roller bearings for ease of movement
- ❑ Lubricate contact surfaces before installing

10 - Exhaust camshaft

- ❑ Removing and installing ⇒ page 132

Protected by copyright. Copying for private or commercial purposes, in part or in whole, is not permitted unless authorised by AUDI AG. AUDI AG does not guarantee or accept any liability with respect to the correctness of information in this document. Copyright by AUDI AG.

Protected by copyright. Copying for private or commercial purposes, in part or in whole, is not permitted unless authorised by AUDI AG. AUDI AG does not guarantee or accept any liability with respect to the correctness of information in this document. Copyright by AUDI AG.

- ❑ Check radial clearance with Plastigauge (roller rocker fingers removed)
- ❑ Radial clearance: 0.024 ... 0.066 mm
- ❑ Runout: max. 0.04 mm
- ❑ After removal or renewal, perform adaption ⇒ Vehicle diagnostic tester `01 - Engine electronics, functions`, `01 - Chain elongation adaption diagnosis`

11 - Spring

12 - Ball

- ❑ For slider
- ❑ Installing ⇒ page 148

13 - Cylinder head cover

- ❑ With integrated camshaft bearings
- ❑ Clean sealing surface; machining not permitted
- ❑ Remove old sealant residues
- ❑ Removing ⇒ “5.2 Removing and installing camshaft”, page 132
- ❑ Always renew cylinder head as well
- ❑ After removal or renewal, perform adaption ⇒ Vehicle diagnostic tester `01 - Engine electronics, functions`, `01 - Chain elongation adaption diagnosis`

14 - Bolt

- ❑ Renew after removing
- ❑ Slackening ⇒ page 129
- ❑ Tightening sequence ⇒ page 130

15 - Inlet camshaft

- ❑ Removing and installing ⇒ page 132
- ❑ Check radial clearance with Plastigauge (roller rocker fingers removed)
- ❑ Radial clearance: 0.024 ... 0.066 mm
- ❑ Runout: max. 0.04 mm
- ❑ After removal or renewal, perform adaption ⇒ Vehicle diagnostic tester `01 - Engine electronics, functions`, `01 - Chain elongation adaption diagnosis`

16 - Dowel pins

17 - Dowel pins

18 - Inlet valve

- ❑ Do not machine, only grinding-in is permitted
- ❑ Valve dimensions ⇒ page 161
- ❑ Checking valve guides ⇒ page 160

Loosening cylinder head cover

– Loosen cylinder head cover bolts in the sequence -1 ... 6-.

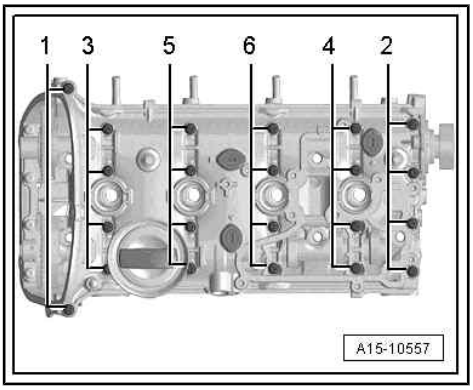

Tightening torques and sequence for cylinder head cover

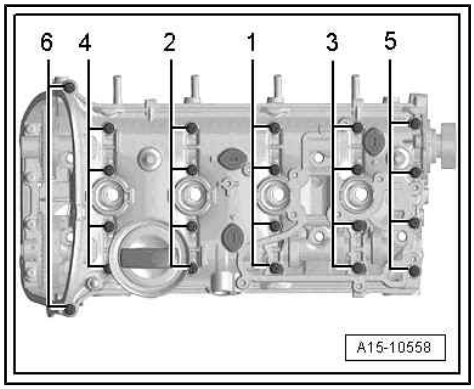

- After removing, renew bolts tightened with specified tightening angle.
- Take care to keep cylinder head cover straight.

– Tighten bolts in stages in the sequence shown:

Stage	Bolts	Tightening torques/angle specification
1.	-1 … 6-	Screw in by hand until contact is made
2.	-1 … 6-	8 Nm
3.	-1 … 6-	Turn 90° further

Different versions of valve stem oil seal

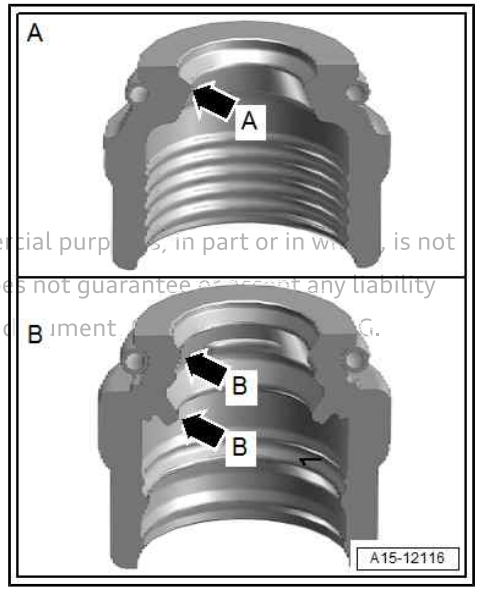

A - Valve stem oil seal with one sealing lip -A-

♦ For inlet and exhaust sides

B - Valve stem oil seal with two sealing lips -B-

♦ Only for exhaust side on some engines; for allocation refer to ⇒ Electronic parts catalogue

Protected by copyright. Copying for private or commercial purposes, in part or in whole, is not permitted unless authorised by AUDI AG. AUDI AG does not guarantee or accept any liability with respect to the correctness of information in this document. Copyright by AUDI AG.

Part II

Part I ⇒ page 128

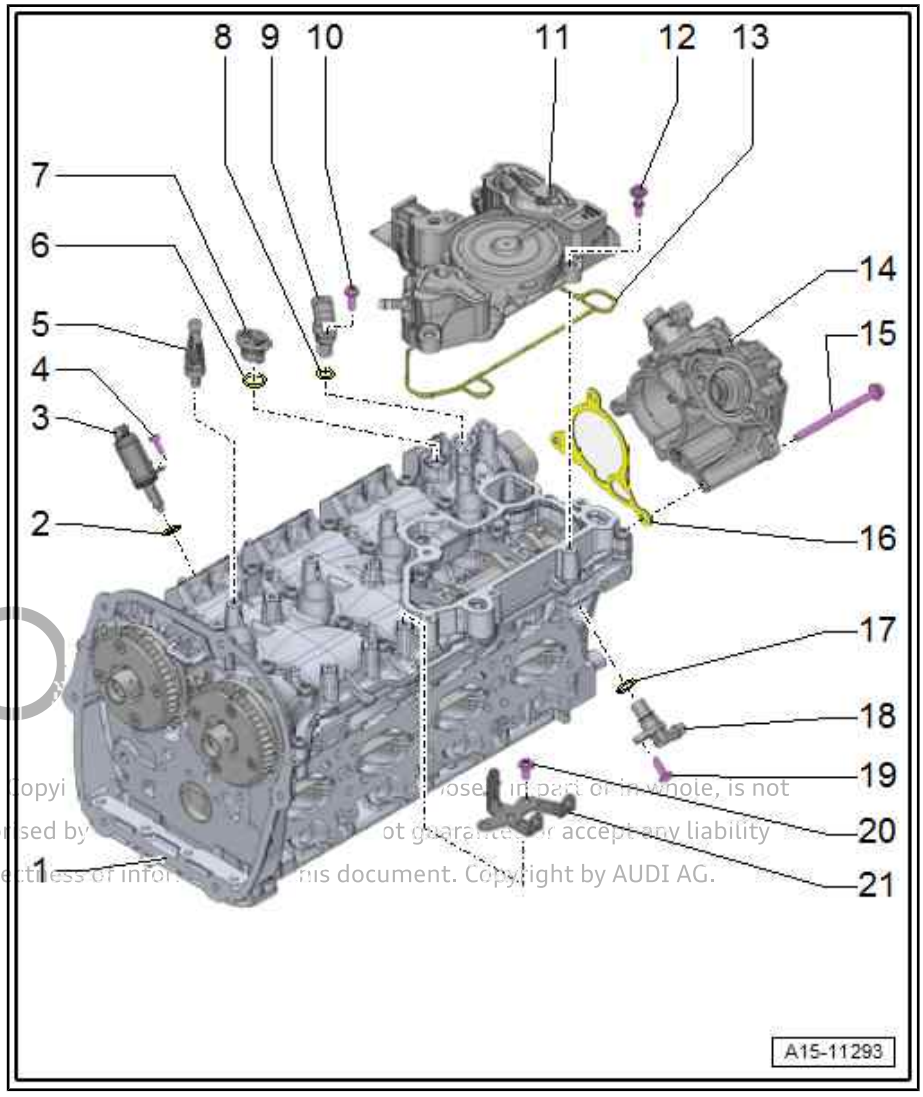

1 - Cylinder head

- ❑ Always renew cylinder head cover as well

2 - O-ring

- ❑ Check for damage
- ❑ Not available separately; supplied with ⇒ Item 3 (page 131)
- ❑ Lubricate lightly with engine oil

3 - Actuator for camshaft adjustment

- ♦ Actuator 1 for camshaft adjustment - F366-
- ♦ Actuator 2 for camshaft adjustment - F367-
- ♦ Actuator 3 for camshaft adjustment - F368-
- ♦ Actuator 4 for camshaft adjustment - F369-
- ♦ Actuator 5 for camshaft adjustment - F370-
- ♦ Actuator 6 for camshaft adjustment - F371-
- ♦ Actuator 7 for camshaft adjustment - F372-
- ♦ Actuator 8 for camshaft adjustment - F373-
  - ❑ Removing and installing ⇒ page 148
  - ❑ Bringing into installation position ⇒ page 149

4 - Bolt

- ❑ 5 Nm

5 - Ball stud

- ❑ For engine cover panel
- ❑ 9 Nm

6 - O-ring

- ❑ Renew after removing
- ❑ Lubricate lightly with engine oil

7 - Sealing plug

8 - O-ring

- ❑ Exploded view ⇒ page 291

9 - Hall sender 3 - G300-

- ❑ Exploded view ⇒ page 291

10 - Bolt

- ❑ Exploded view ⇒ page 291

11 - Oil separator

- ❑ Removing and installing ⇒ page 182

Protected by copyright. Copyi... ...ose, in part or in whole, is not permitted unless authorised by ... ot guarantee or accept any liability with respect to the correctness of infor... ...his document. Copyright by AUDI AG.

12 - Bolt

- ❑ Tightening torques and sequence ⇒ page 182

13 - Gasket

- ❑ Renew after removing

14 - Vacuum pump

- ❑ Removing and installing ⇒ Brake system; Rep. gr. 47 ; Vacuum system; Removing and installing vacuum pump

15 - Bolt

- ❑ Tightening torque ⇒ Brake system; Rep. gr. 47 ; Vacuum system; Exploded view - vacuum pump

16 - Gasket

- ❑ Renew after removing

17 - O-ring

- ❑ Exploded view ⇒ page 291

18 - Hall sender - G40-

- ❑ Exploded view ⇒ page 291

19 - Bolt

- ❑ Exploded view ⇒ page 291

20 - Bolt

- ❑ 9 Nm

21 - Bracket

- ❑ For activated charcoal filter solenoid valve 1 - N80-

5.2 Removing and installing camshaft

Special tools and workshop equipment required

- ♦ Assembly tool - T10352A-

Protected by copyright. Copying for private or commercial purposes, in part or in whole, is not permitted unless authorised by AUDI AG. AUDI AG does not guarantee or accept any liability with respect to the correctness of information in this document. © AUDI AG.

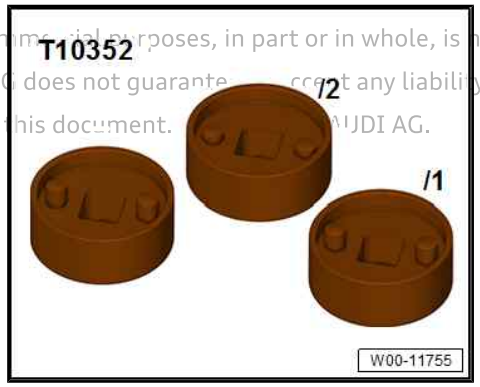

- ♦ Assembly tool - T10352/3-
- ♦ Assembly tool - T10352/4-

- Assembly lever - T40243-

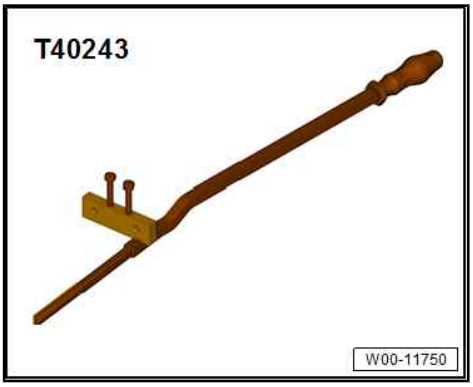

- Ratchet wrench (21 mm) - T40263-

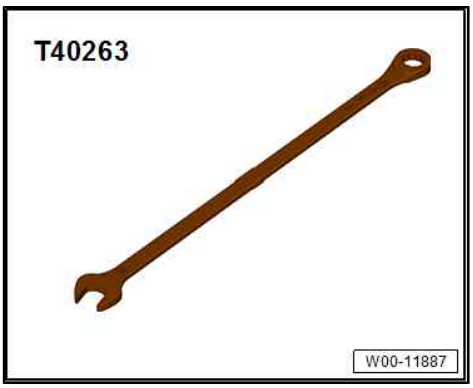

- Assembly tool - T40266-

Protected by copyright. Copying for private or commercial purposes, in
permitted unless authorised by AUDI AG. AUDI AG does not guarantee c
with respect to the correctness of information in this document. Copyright
AG.

- Locking tool - T40267-

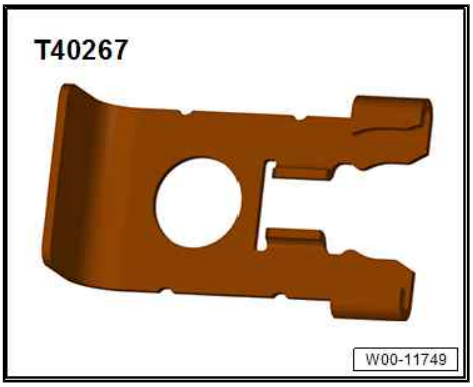

♦ Camshaft clamp - T40271-

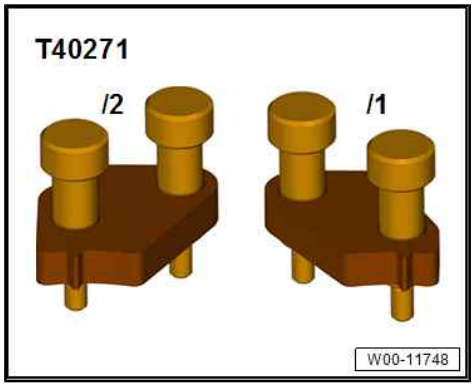

♦ Adapter - T40314-

Protected by copyright. Copying for private or commercial purposes, in part or in whole, is not permitted unless authorised by AUDI AG. AUDI AG does not guarantee [illegible] with respect to the correctness of information in this document. C[illegible]

♦ Sealant ⇒ Electronic parts catalogue

Removing

- Sealing surfaces at bottom of cylinder head cover and top of cylinder head must not be machined.
- The camshaft bearings are integrated into the cylinder head and cylinder head cover. The timing chain must be slackened before removing the cylinder head cover.
- Re-install all cable ties in original positions.

Preparatory work may be necessary depending on model ⇒ 4-cylinder direct injection engine (1.8, 2.0 ltr. 4-valve TFSI); Rep. gr. 15 ; Valve gear; Removing and installing camshaft .

– Remove oil separator ⇒ page 182 .

– Remove high-pressure pump ⇒ page 267 .

– Remove vacuum pump ⇒ Brake system; Rep. gr. 47 ; Vacuum system; Removing and installing vacuum pump .

NOTICE

Risk of engine damage if valve gear drive slips

– Only turn engine in normal direction of rotation.

– Use ratchet wrench (21 mm) - T40263- , adapter - T40314- and socket (24 mm) to turn crankshaft -arrow- until vibration damper is at “TDC” position.

- Notch -1- on vibration damper must align with arrow marking -2- on cover for timing chains (bottom).

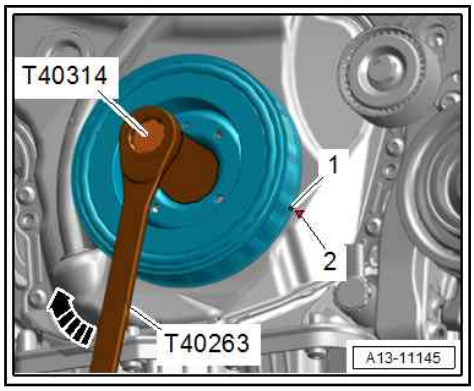

- The markings -arrows- on the camshafts must face upwards.

– If the markings do not face upwards, turn crankshaft one turn further.

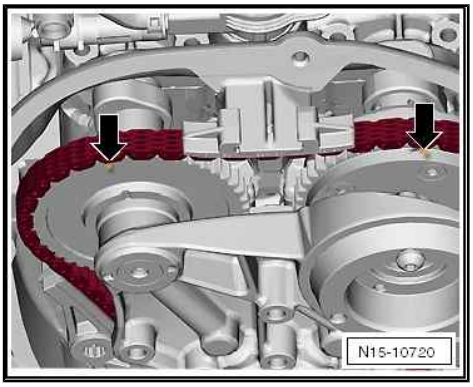

Without markings on cylinder head cover

– Use a waterproof pen to mark the position of the camshaft sprockets -1- on the cylinder head cover -arrows-, as shown in illustration.

All engine versions (continued)

– Remove timing chain cover (bottom) ⇒ page 81 .

Note:

The timing valves have a left-hand thread.

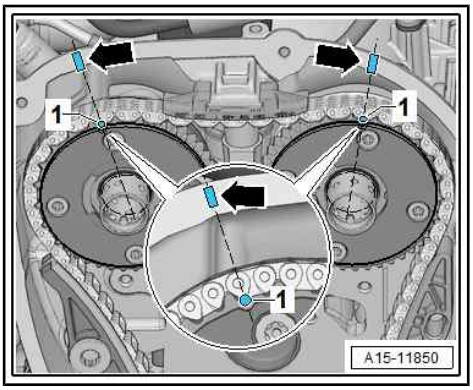

– Turn assembly tool -1- in direction of -arrow- to remove timing valve (left and right).

Depending on version of timing valve, use one of the following tools:

- Assembly tool - T10352-
- Assembly tool - T10352/1-
- Assembly tool - T10352/2-
- Assembly tool - T10352/3-
- Assembly tool - T10352/4-

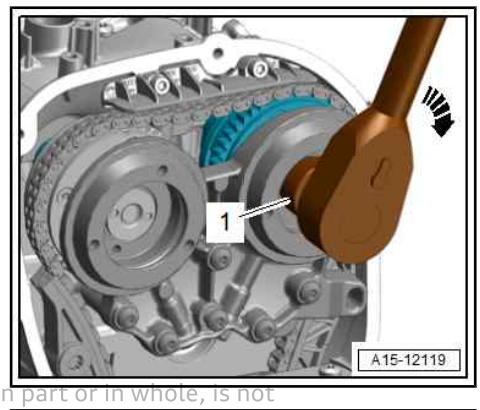

Protected by copyright. Copying for private or commercial purposes, in part or in whole, is not permitted unless authorised by AUDI AG. AUDI AG does not guarantee with respect to the correctness of information in this document. Copyr

– Remove bolts -arrows-.

• Detach bearing saddle carefully without tilting it.

– Detach bearing saddle.

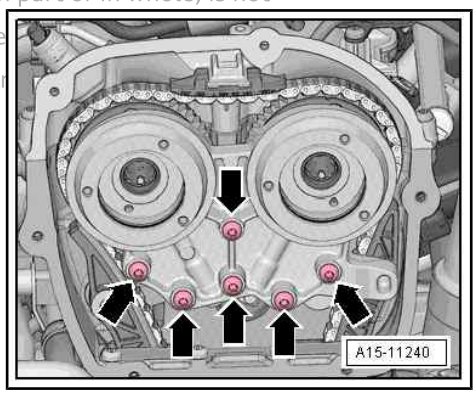

– Remove bolts -arrows-.

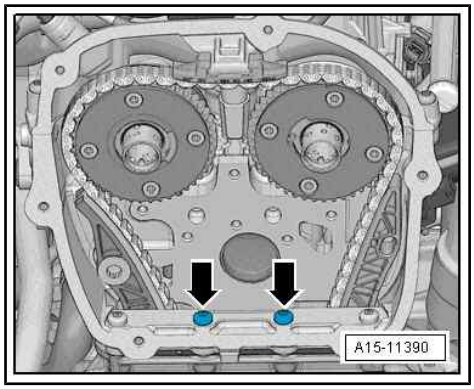

– Remove bolt -arrow-.

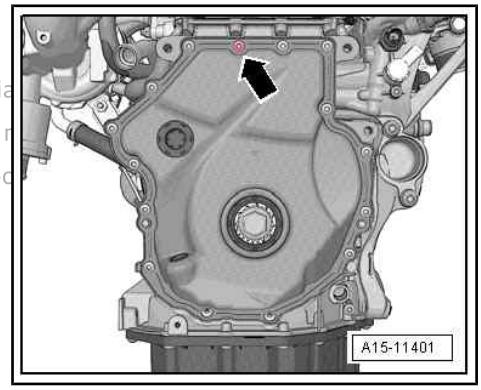

Protected by copyright. Copying for private or commercia
permitted unless authorised by AUDI AG. AUDI AG does r
with respect to the correctness of information in this doc

– Screw in assembly lever - T40243- -arrows-.
– Compress and hold circlip -1- for chain tensioner.
– Push assembly lever - T40243- slowly in direction of -arrow- and hold in place.

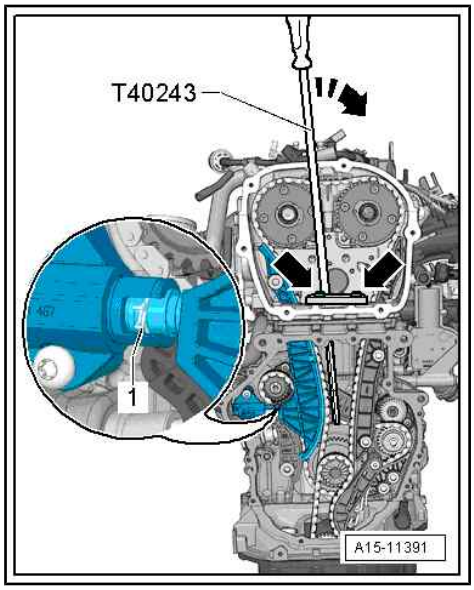

– Hold chain tensioner in position with locking tool - T40267- .
– Remove assembly lever - T40243- .

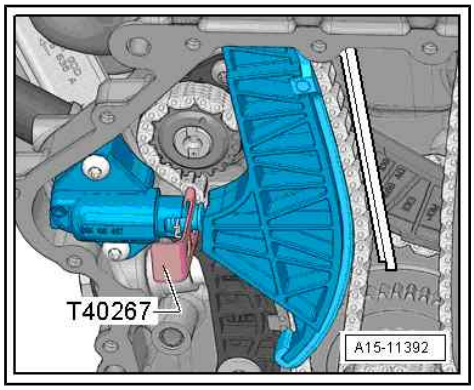

– Bolt camshaft clamp - T40271/2- onto cylinder head and slide it into teeth of chain sprocket in direction of -arrow 2-. If necessary, rotate inlet camshaft using assembly tool - T40266- -1-.

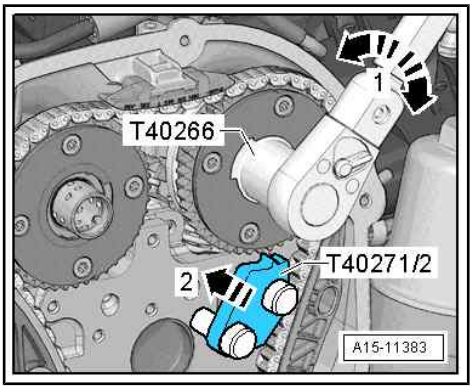

– Bolt camshaft clamp - T40271/1- onto cylinder head.

• A second mechanic is required for the following step.

– Turn exhaust camshaft in direction of -arrow A- using assembly tool - T40266- and hold in place. Remove bolt -1- and guide tensioning rail -2- downwards. Continue turning camshaft clockwise -arrow A- until camshaft clamp - T40271/1- can be pressed into teeth on chain sprocket -arrow B-.

– Check installation position -C- of camshaft clamp - T40271/1- .

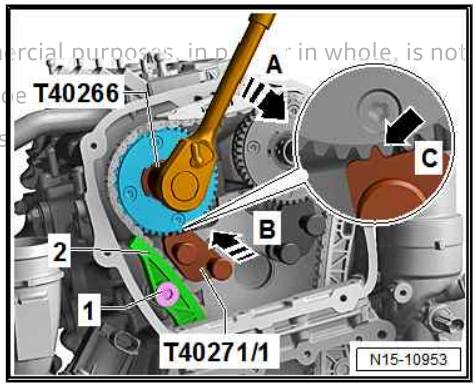

Protected by copyright. Copying for private or commercial purposes, in part or in whole, is not permitted unless authorised by AUDI AG. AUDI AG does not guarantee or accept any liability with respect to the correctness of information in this document. Copyright by AUDI AG.

– Use screwdriver to release catch -arrow- and press off guide rail -1- towards front.

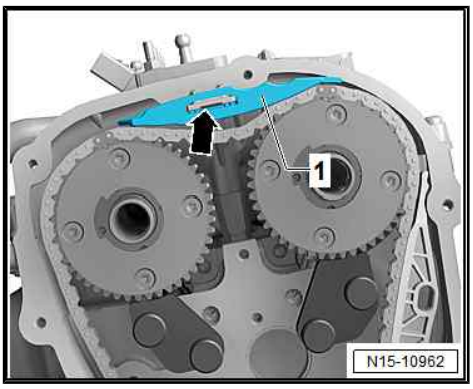

Without markings on cylinder head cover

– Mark camshaft chain sprockets relative to camshaft clamp - T40271/1- and camshaft clamp - T40271/2- -arrows-.

– If camshafts are renewed, markings must be transferred to new camshafts.

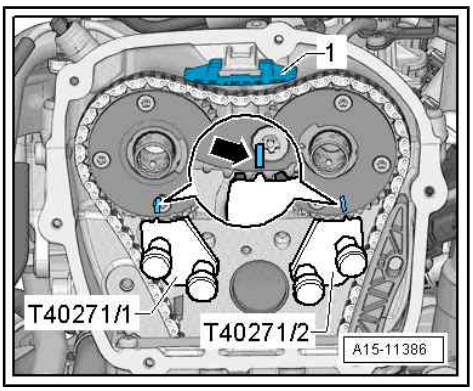

All engine versions (continued)

– Press retainer for oil pump chain tensioner in direction of -arrow- and lock in place using locking pin - T40011- .

– Unscrew bolt -1- and remove chain tensioner.

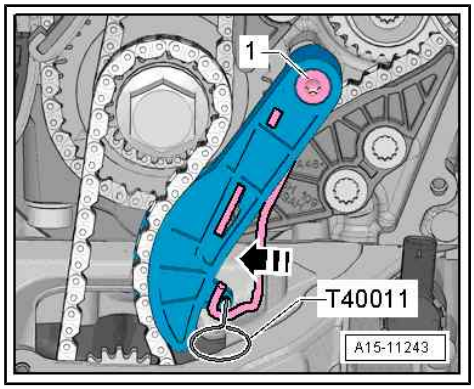

– Unscrew bolts -1- and remove guide rail -2-.

– Detach camshaft timing chain from sprockets and guide it downwards.

Protected by copyright. Copying for private or commercial purpo... is
permitted unless authorised by AUDI AG. AUDI AG does no...
with respect to the correctness of information in this docu...

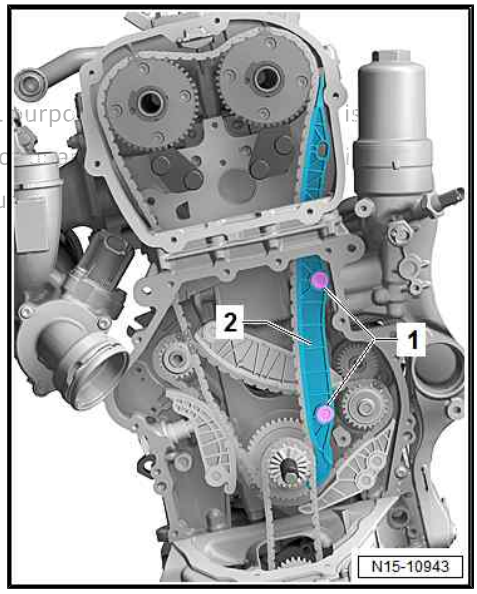

– Attach turning-over tool - T10531/3- . In “TDC” position, flat surface -1- is positioned at top (facing cylinder head).

– Screw on flange nut - T10531/4- . Turn crankshaft 90° anti-clockwise out of “TDC” position using open-end spanner, 32 mm.

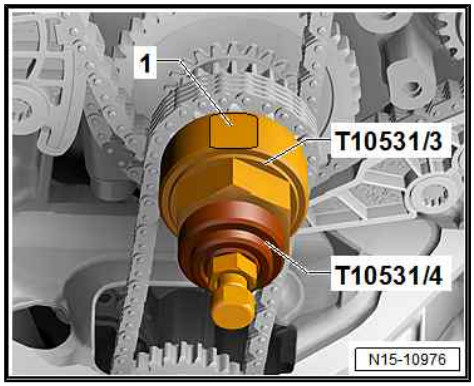

– Turn inlet camshaft in direction of -arrow 1- with assembly tool - T40266- , slide camshaft clamp - T40271/2- out of teeth on chain sprocket in direction of -arrow 2- and move camshaft into rest position.

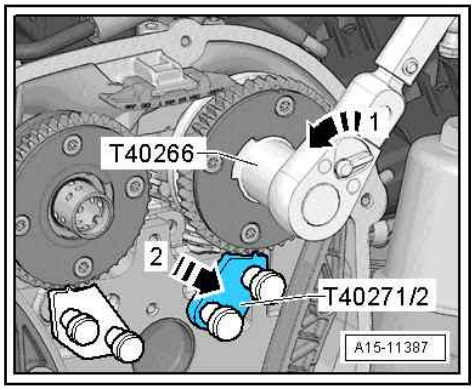

– Turn exhaust camshaft in direction of -arrow 1- with assembly tool - T40266- , slide camshaft clamp - T40271/1- out of teeth on chain sprocket in direction of -arrow 2- and move camshaft into rest position.

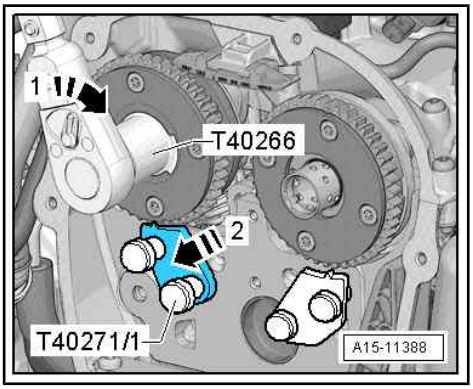

– Remove cylinder head cover bolts in the sequence -1 ... 6-.

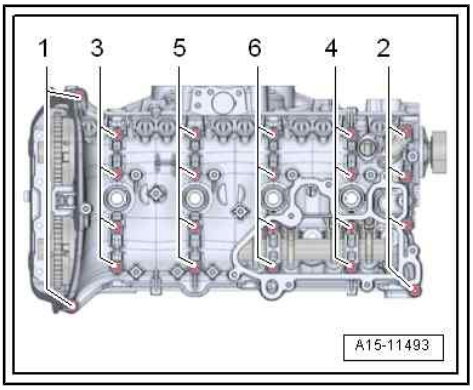

– Prise cylinder head cover -2- off using tool such as screwdriver -1-, starting from chain side.
– Detach cylinder head cover.
– Detach camshafts and cover exposed parts of engine.

Installing

- Sealing surfaces must be free of oil and grease.
- Ensure that all roller rocker fingers make contact with the ends of the valve stems correctly.

– Remove sealant residue from groove in cylinder head cover and from sealing surfaces.

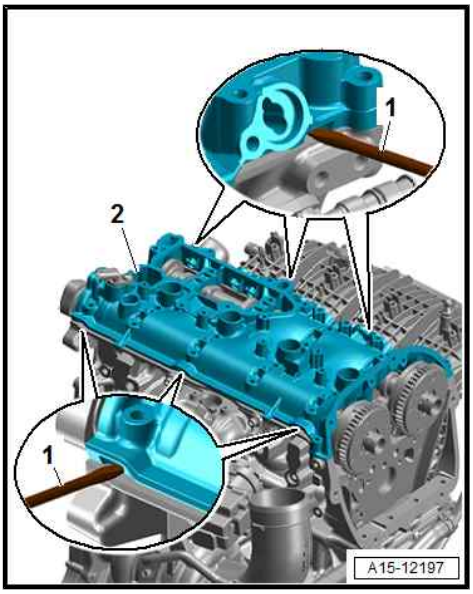

Protected by copyright. Copying for private or commercial purposes, in part or in whole, is not permitted unless authorised by AUDI AG. AUDI AG does not guarantee or accept any liability with respect to the correctness of information in this document. Copyright by AUDI AG.

If crankshaft has been rotated:

– Turn crankshaft at hexagon flats -2- into “TDC” position.

• In “TDC” position, the flat surface -1- is aligned with an imaginary vertical line between the camshaft chain sprockets.

– Then turn crankshaft 90° anti-clockwise again out of “TDC” position.

– Bring pins of actuators for camshaft adjustment into installation position ⇒ page 149 .

– Oil running surfaces of both camshafts.

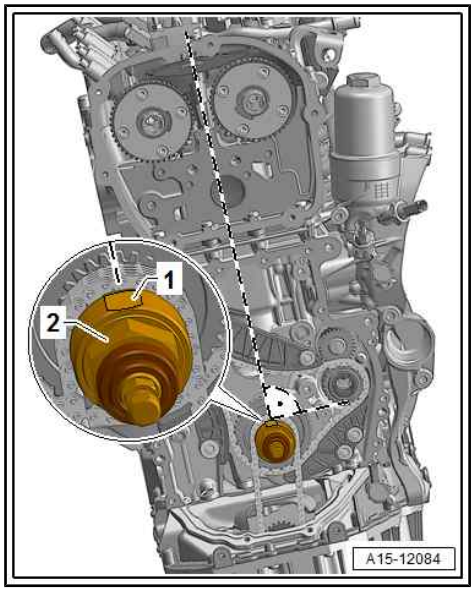

CAUTION

Ball for slider may spring out - risk of eye injury.

– Put on safety goggles.

– Fit inlet camshaft -A- in cylinder head. Rotate cams of cylinder 4 -arrows- so that they face upwards.

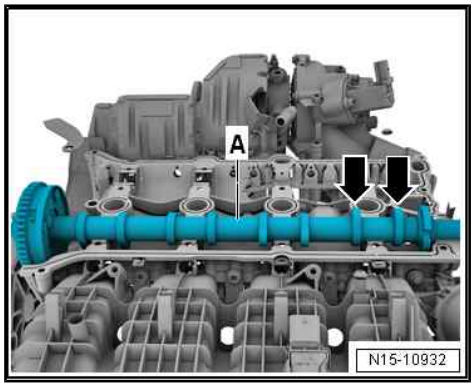

– Fit exhaust camshaft in cylinder head cover, as shown in illustration. Pairs of cams -A- and -B- must be pushed together.

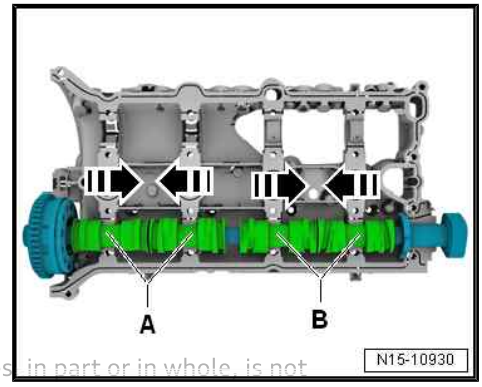

Protected by copyright. Copying for private or commercial purposes, in part or in whole, is not permitted unless authorised by AUDI AG. AUDI AG does not guarantee or accept any liability with respect to the correctness of information in this document. Copyright by AUDI AG.

– Rotate exhaust camshaft until markings -A- and -B- are aligned.

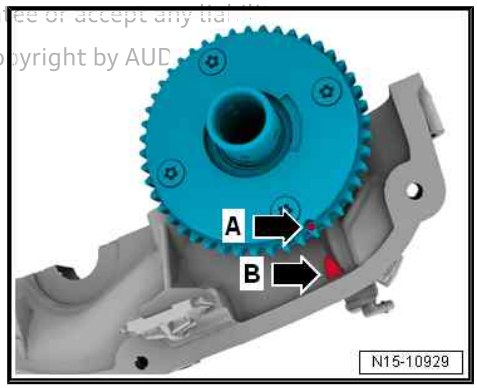

Note

♦ *Illustration shows version with marking -B- made at factory.*

♦ *If you are working on a version for which you had to make a marking, the marking -A- must be opposite the marking on the cylinder head that you made yourself.*

– Apply sealant onto clean sealing surface -arrows- of cylinder head cover, as shown in illustration.

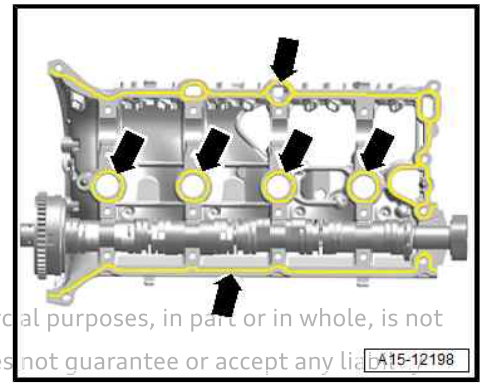

NOTICE

Risk of engine damage due to excessive sealant in lubrication system.

– The sealant bead must not be thicker than specified.

♦ Thickness of sealant bead: 1.5 ... 2.5 mm

Protected by copyright. Copying for private or commercial purposes, in part or in whole, is not permitted unless authorised by AUDI AG. AUDI AG does not guarantee or accept any liability with respect to the correctness of information in this document. Copyright by AUDI AG.

– Hold camshaft in position and place cylinder head cover on cylinder head with camshaft fitted.

– Press lightly on cylinder head cover with your hand and rotate camshafts slightly until cylinder head cover comes into contact with cylinder head such that it is free of tension.

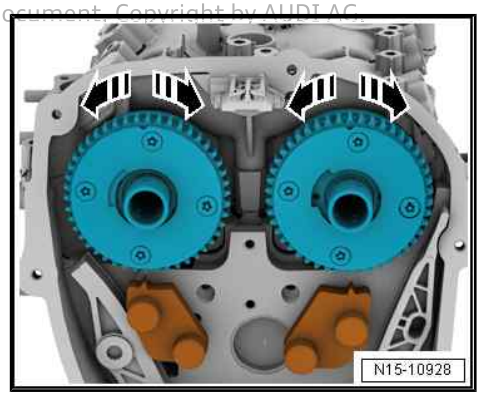

– Renew bolts for cylinder head cover after removal.

– Tighten bolts in several stages; tightening sequence ⇒ page 130 .

• Take care to keep cylinder head cover straight.

With markings on cylinder head cover

– Turn inlet camshaft in direction of -arrow A- using assembly tool - T40266- until markings -1- and -2- are aligned. Slide camshaft clamp - T40271/2- into teeth of chain sprocket in direction of -arrow B-.

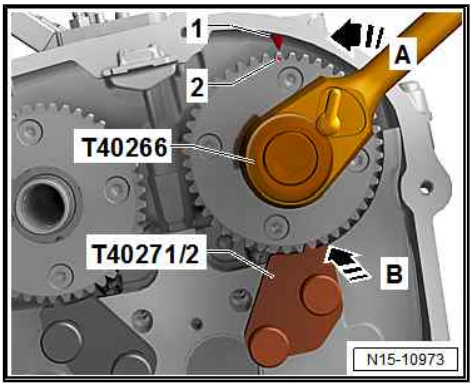

– Turn exhaust camshaft in direction of -arrow A- using assembly tool - T40266- until markings -1- and -2- are aligned. Slide camshaft clamp - T40271/1- into teeth of chain sprocket in direction of -arrow B-. Marking -2- is offset slightly to the right.

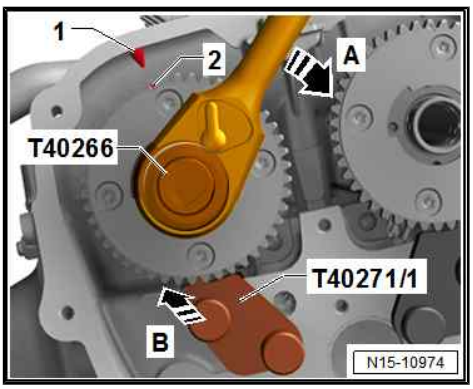

Without markings on cylinder head cover

– Turn inlet camshaft in direction of -arrow 1- until marking -3- aligns with camshaft clamp - T40271/2- .

– Slide camshaft clamp - T40271/2- into teeth of chain sprocket in direction of -arrow 2-.

Protected by copyright. Copying for private or commercial purposes, permitted unless authorised by AUDI AG. AUDI AG does not guarante with respect to the correctness of information in this document. Cop

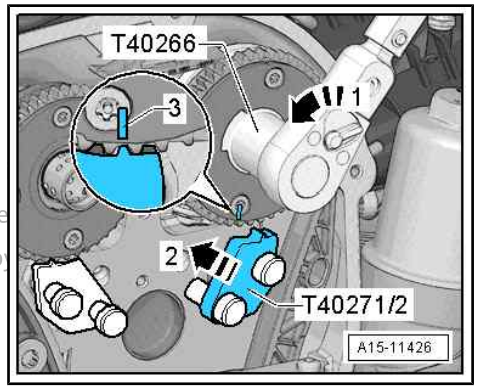

– Turn exhaust camshaft in direction of -arrow 1- until marking -3- aligns with camshaft clamp - T40271/1- .

– Slide camshaft clamp - T40271/1- into teeth of chain sprocket in direction of -arrow 2-.

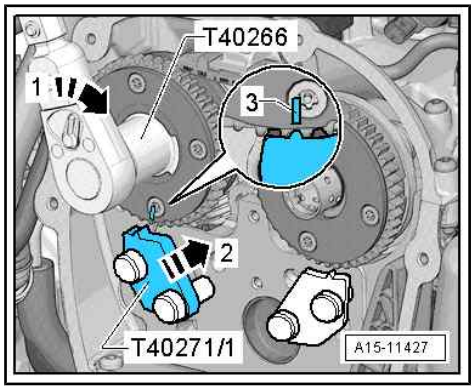

All engine versions (continued)

– Turn crankshaft at hexagon flats -2- into “TDC” position.

• In “TDC” position, the flat surface -1- is aligned with an imaginary vertical line between the camshaft chain sprockets.

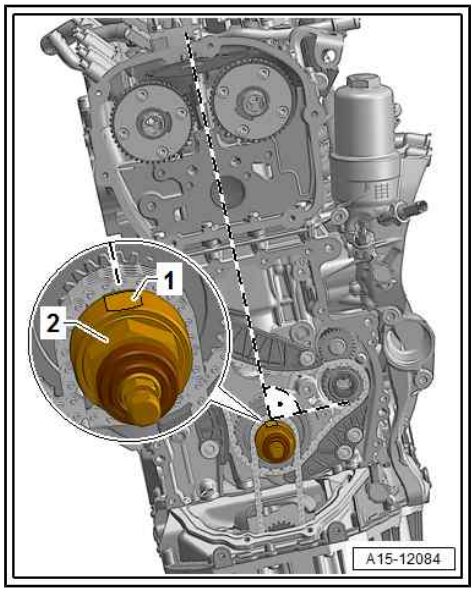

Installing camshaft timing chain

– Fit camshaft timing chain so that coloured markings -arrows- are positioned on camshaft journals.

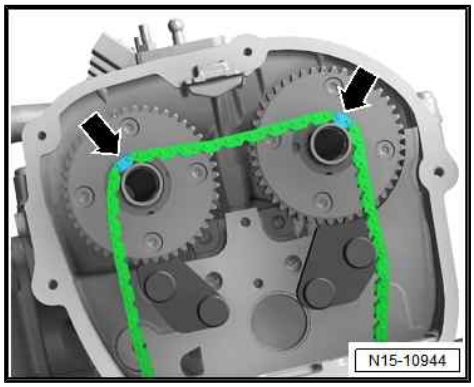

– Fit camshaft timing chain onto inlet camshaft, exhaust camshaft and crankshaft. Position links with coloured markings -arrows- at markings on chain sprockets.

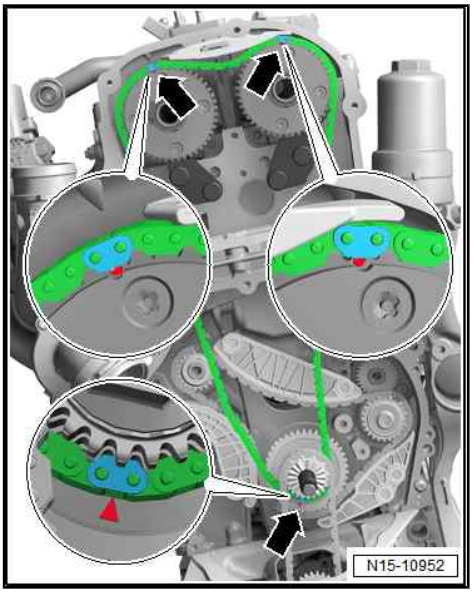

– Install guide rail -2- and tighten bolts -1-.

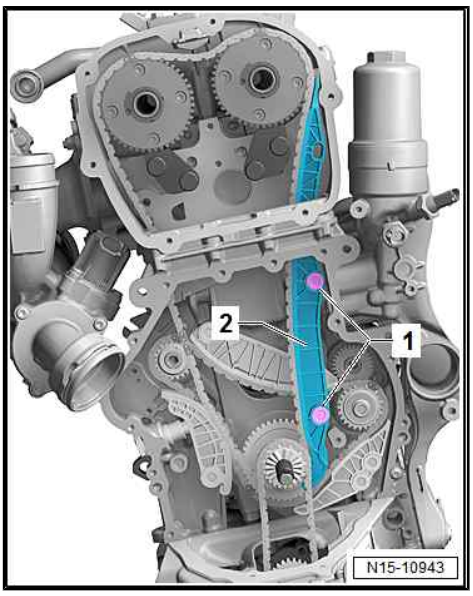

– Install top guide rail -1-.

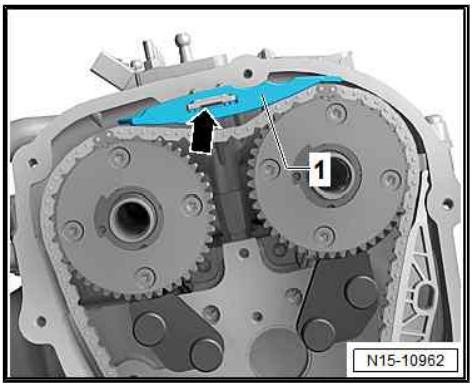

Protected by copyright. Copying for private or commercial purposes, in part or in whole, is not permitted unless authorised by AUDI AG. AUDI AG does not guarantee or accept any liability with respect to the correctness of information in this document. Copyright by AUDI AG.

- A second mechanic is required for the following step.

I - Use assembly tool - T40266- to turn exhaust camshaft slightly in direction of -arrow A- and slide camshaft clamp - T40271/1- out of teeth on chain sprocket in direction of -arrow B-.

II - Release camshaft in direction of -arrow C- until timing chain is in contact with guide rail -1-. Hold camshaft in this position, install tensioning rail -2- and tighten bolt -3-. Then release camshaft.

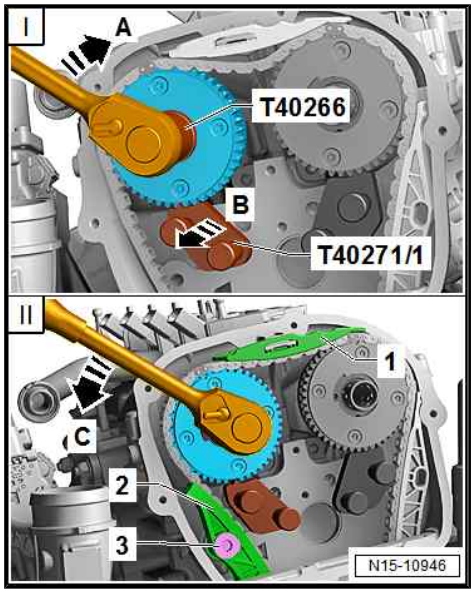

– Use assembly tool - T40266- to turn inlet camshaft in direction of -arrow 1- until it is possible to slide camshaft clamp - T40271/2- out of teeth on chain sprocket in direction of -arrow 2-. Then release camshaft.

– Remove camshaft clamps - T40271/1- and -T40271/2- .

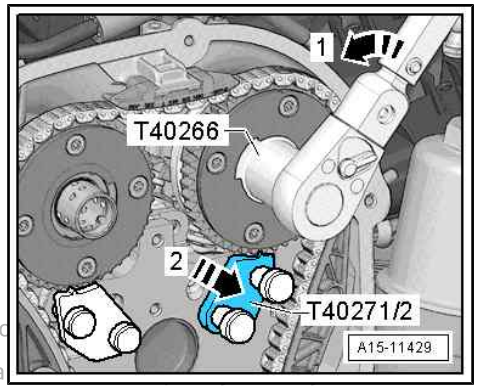

Protected by copyright. Copying for private or commercial purpo
permitted unless authorised by AUDI AG. AUDI AG does not gua
with respect to the correctness of information in this document

– Fit and tighten bolts -arrows-. Tightening torque ⇒ Item 4 (page 116)

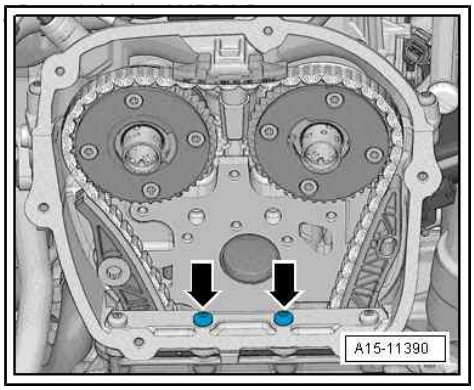

– Lubricate holes -arrows- with engine oil.

– Check whether spring pin -1- is fitted. (Not fitted on all bearing saddles.)

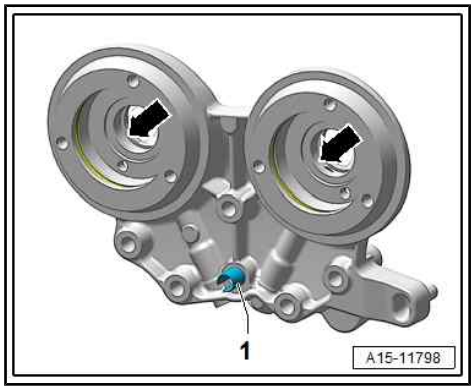

- Carefully attach bearing saddle without tilting it.

– Fit bearing saddle and screw in bolts -arrows- by hand until they make contact.

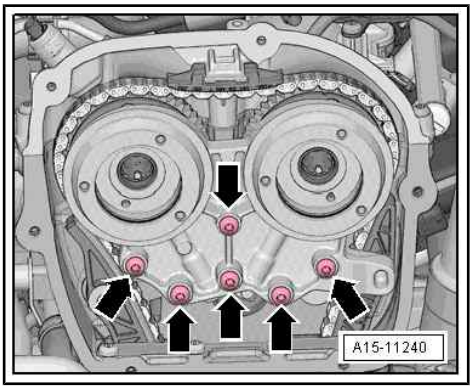

– Remove locking tool - T40267- .

– Tighten bolts for bearing saddle ⇒ page 89 .

Protected by copyright. Copying for private or commercial purposes, in part or in
permitted unless authorised by AUDI AG. AUDI AG does not guarantee or accept
with respect to the correctness of information in this document. Copyright by AU

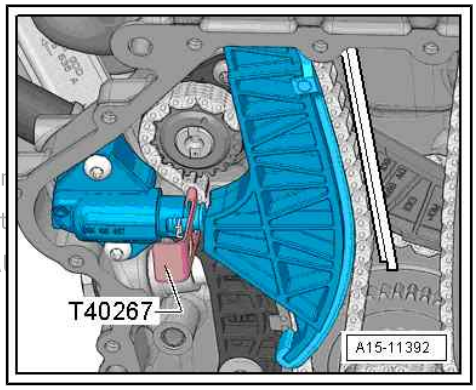

– Install chain tensioner -2-. Support wire must come into contact with opening -arrow- on sump (top section). Tighten bolt -1- and remove locking pin - T40011- .

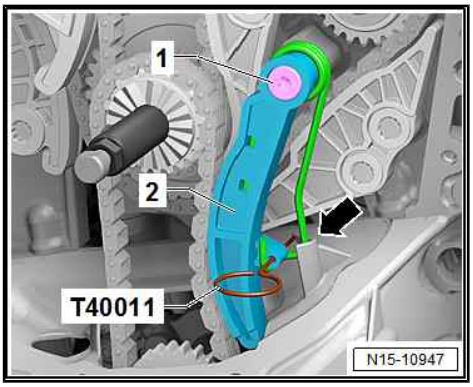

– Checking adjustment:

- Links with coloured markings must be positioned opposite markings -arrows- on chain sprockets.

– Install timing valves ⇒ Item 7 (page 87) .

– Turn engine two rotations in direction of engine rotation.

Note:

Due to the ratio, the timing chain links with coloured markings are no longer aligned after the engine has been turned.

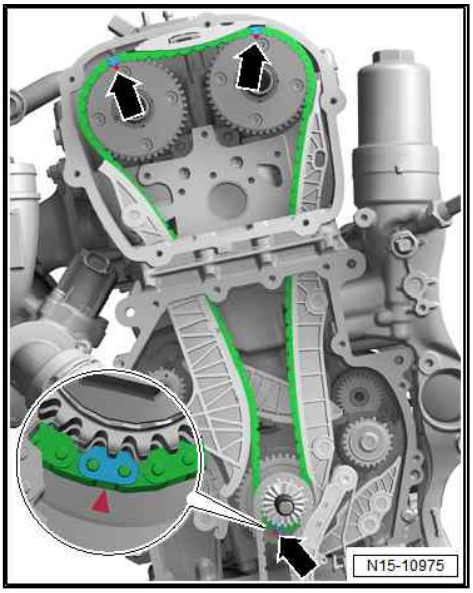

– Unscrew flange nut - T10531/4- and remove turning-over tool - T10531/3- .

– Install timing chain cover (bottom) ⇒ page 81 .

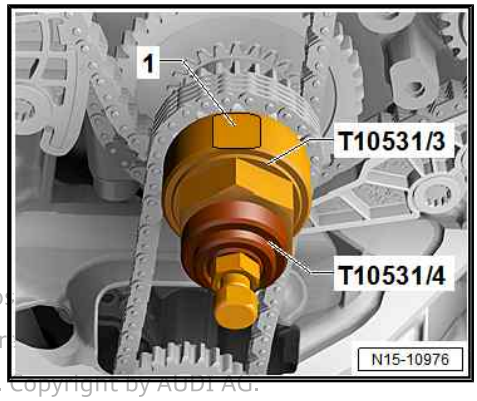

Protected by copyright. Copying for private or commercial purpo
permitted unless authorised by AUDI AG. AUDI AG does not guar
with respect to the correctness of information in this document. Copyright by AUDI AG.

Checking valve timing - with markings on cylinder head cover

Note:

The combination of ratchet wrench (21 mm) - T40263- , adapter - T40314- and socket (24 mm) can be fitted onto the vibration damper better than the counterhold tool - T10355- shown in the illustration.

– Turn vibration damper to “TDC” position.

- Notch on vibration damper must align with arrow marking on timing chain cover (bottom) -arrow-.
- Markings -1- on camshaft chain sprockets must be aligned with markings -2 and 3- on cylinder head cover.

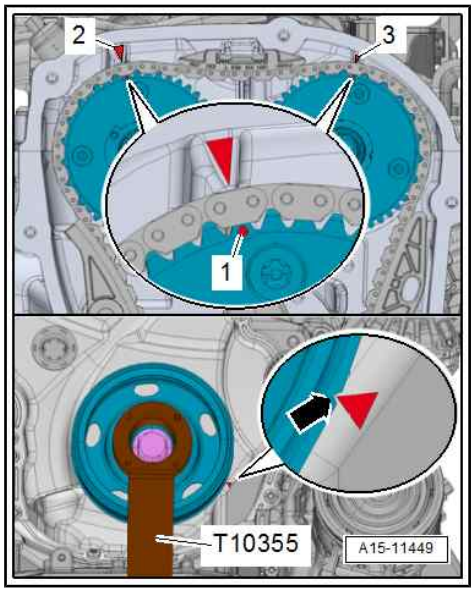

Checking valve timing - without markings on cylinder head cover

Note:

The combination of ratchet wrench (21 mm) - T40263- , adapter - T40314- and socket (24 mm) can be fitted onto the vibration damper better than the counterhold tool - T10355- shown in the illustration.

– Turn vibration damper to “TDC” position.

- The markings made on the cylinder head cover -arrows- must align with the markings on the chain sprockets -1-.
- Notch on vibration damper must align with marking on timing chain cover (bottom) -2-.

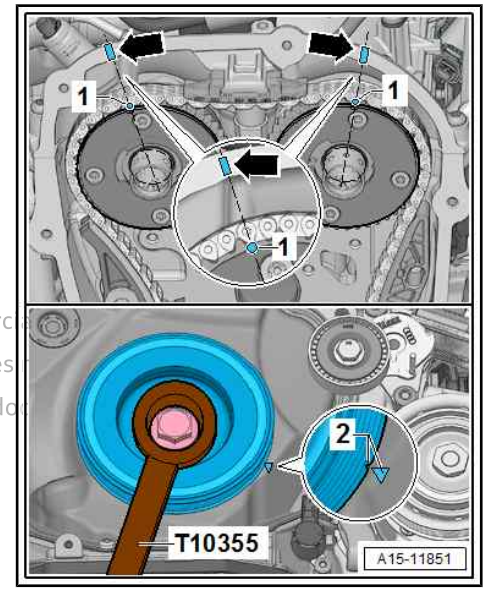

Protected by copyright. Copying for private or commercial purposes, in part, is not permitted unless authorised by AUDI AG. AUDI AG does not guarantee or accept any liability with respect to the correctness of information in this document.

Note

If the markings you have made are no longer visible, check the valve timing ⇒ page 111 .

All engine versions (continued)

– Install vacuum pump ⇒ Brake system; Rep. gr. 47 ; Vacuum system; Removing and installing vacuum pump .

– Install high-pressure pump ⇒ page 267 .

– Install oil separator ⇒ page 182

– Install timing chain cover (top) ⇒ page 79 .

NOTICE

Risk of damage to valves and piston crowns if work has been performed on valve gear.

- **After installing the camshaft, wait at least 30 minutes before starting the engine as the hydraulic compensation elements need time to settle.**
- **Turn the crankshaft carefully at least 2 rotations to ensure that none of the valves make contact when the starter is operated.**

Additional work depending on model ⇒ 4-cylinder direct injection engine (1.8, 2.0 ltr. 4-valve TFSI); Rep. gr. 15 ; Valve gear; Removing and installing camshaft

Learnt values for chain elongation must be re-adapted after removing or renewing components of the chain drive.

– Connect ⇒ Vehicle diagnostic tester.

– Select `Diagnosis` mode and then `Start diagnosis`.

– Choose `Select own test` tab and select following options one after the other:

- `Drive train`
- `Select engine code and engine`
- `01 - Self-diagnosis compatible systems`
- `01 - Engine electronics`
- `01 - Engine electronics, functions`
- `01 - Chain elongation adaption diagnosis`

Tightening torques

- ⇒ “5.1 Exploded view - valve gear”, page 128
- ⇒ General body repairs, exterior; Rep. gr. 66 ; Noise insulation; Exploded view - noise insulation

5.3 Installing ball for slider

Special tools and workshop equipment required

- Spacers - T40191-

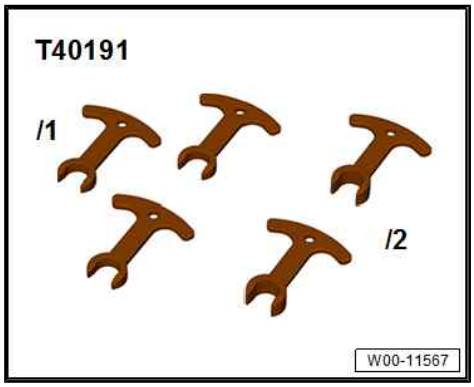

- Safety goggles

Installing

CAUTION

Ball for slider may spring out - risk of eye injury.
– Put on safety goggles.

– Insert spring -1- in camshaft.
– Place ball -2- on spring in camshaft.
– Push ball and spring downwards in direction of -arrow A- with spacer - T40191/1- and hold in place.
– Push slider -3- in direction of -arrow B-.

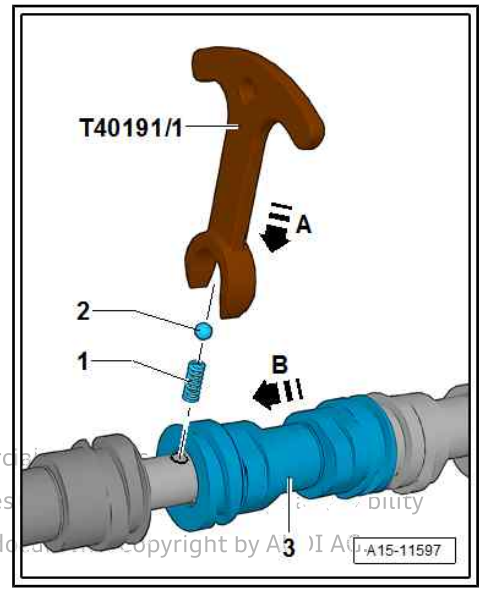

Protected by copyright. Copying for private or commercial purposes, in part, is not permitted unless authorised by AUDI AG. AUDI AG does not guarantee or accept any liability with respect to the correctness of information in this document. Copyright by AUDI AG.

5.4 Removing and installing actuators for camshaft adjustment

Removing

Preparatory work may be necessary depending on model ⇒ 4-cylinder direct injection engine (1.8, 2.0 ltr. 4-valve TFSI); Rep. gr. 15 ; Valve gear ; Removing and installing actuators for camshaft adjustment.

– If fitted, remove engine cover panel ⇒ page 15 .

– Unplug relevant electrical connector -2-.

– Unscrew bolt -1- and detach actuator for camshaft adjustment.

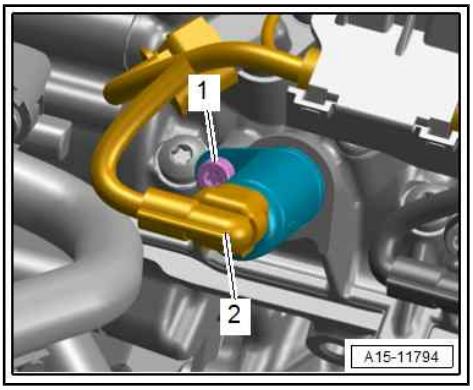

Installing

Installation is carried out in reverse order; note the following:

• Check O-rings for damage.

• Pin of actuator for camshaft adjustment must be brought into installation position.

– Press down pin of actuator for camshaft adjustment -arrow- by hand.

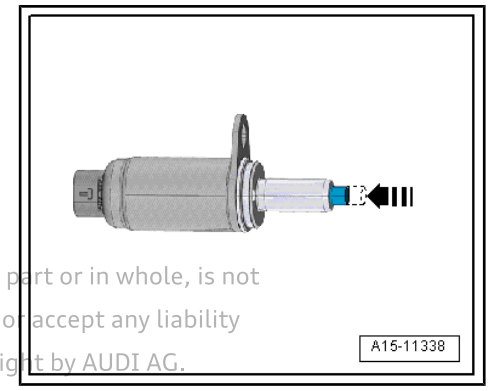

• Pin of actuator must not be in extended position.

– Lubricate O-rings with engine oil.

– Install engine cover panel ⇒ page 15 .

Additional work depending on model ⇒ 4-cylinder direct injection engine (1.8, 2.0 ltr. 4-valve TFSI); Rep. gr. 15 ; Valve gear; Removing and installing actuators for camshaft adjustment

Protected by copyright. Copying for private or commercial purposes, in part or in whole, is not permitted unless authorized by AUDI AG. AUDI AG does not guarantee or accept any liability with respect to the correctness of information in this document. Copyright by AUDI AG.

Tightening torques

◆ ⇒ “5.1 Exploded view - valve gear”, page 128

5.5 Removing and installing camshaft control valve 1 - N205-

The description applies to camshaft control valve 1 - N205- and exhaust camshaft control valve 1 - N318- .

Removing

Preparatory work may be necessary depending on model ⇒ 4-cylinder direct injection engine (1.8, 2.0 ltr. 4-valve TFSI); Rep. gr. 15 ; Valve gear; Removing and installing camshaft control valve 1 - N205- .

– Remove engine cover panel (if necessary) ⇒ page 15 .

Note:

There are variations depending on model and version.

– Unplug electrical connectors:

1 - For exhaust camshaft control valve 1 - N318-

3 - For camshaft control valve 1 - N205-

– Remove bolts -arrows- and detach camshaft control valves:

2 - Exhaust camshaft control valve 1 - N318-

4 - Camshaft control valve 1 - N205-

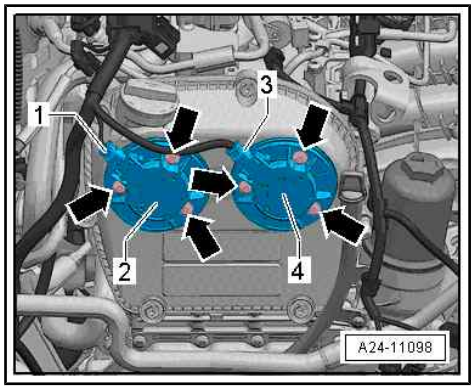

Installing

Installation is carried out in reverse order; note the following:

- Renew seals and O-rings after removing.

– Use engine oil to lubricate O-rings on sealing surface for camshaft control valve.

– Install engine cover panel ⇒ page 15 .

Additional work depending on model ⇒ 4-cylinder direct injection engine (1.8, 2.0 ltr. 4-valve TFSI); Rep. gr. 15 ; Valve gear; Removing and installing camshaft control valve 1 - N205- .

Tightening torques

♦ ⇒ “2.1 Exploded view - timing chain cover”, page 77

Protected by copyright. Copying for private or commercial purposes, in part or in whole, is not permitted unless authorised by AUDI AG. AUDI AG does not guarantee or accept any liability with respect to the correctness of information in this document. Copyright by AUDI AG.

5.6 Removing and installing valve stem oil seals

⇒ “5.6.1 Removing and installing valve stem oil seals (cylinder head installed)”, page 150

⇒ “5.6.2 Removing and installing valve stem oil seals (cylinder head removed)”, page 155

5.6.1 Removing and installing valve stem oil seals (cylinder head installed)

Special tools and workshop equipment required

♦ Spark plug spanner - 3122B-

- Valve stem seal puller - 3364-

- Valve stem oil seal fitting tool - 3365- for valve stem oil seal with one sealing lip ⇒ page 130

- Valve stem oil seal fitting tool - T40376/1- for valve stem oil seal with two sealing lips ⇒ page 130

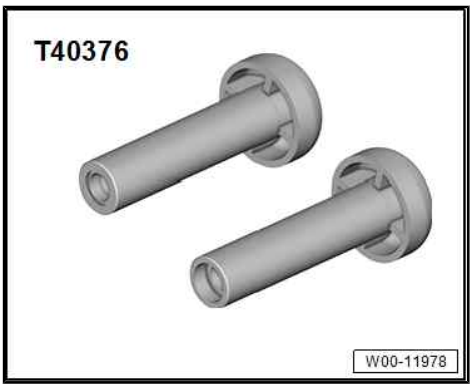

- Adapter - T40012-

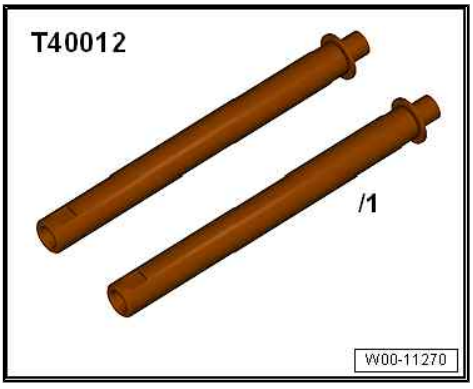

Protected by copyright. Copying for private or commercial purposes, in part or in whole, is not permitted unless authorised by AUDI AG. AUDI AG does not guarantee or accept any liability with respect to the correctness of information in this document. Copyright by AUDI AG.

- Removal and installation device for valve cotters - VAS 5161 A-

- Guide plate for 2.0 ltr. and 3.0 ltr. FSI engine - VAS 5161/19C-
- Assembly sleeve ⇒ Electronic parts catalogue

Procedure

– Remove camshafts ⇒ page 132 .

– Mark original positions of roller rocker fingers and hydraulic compensation elements for re-installation.

– Remove roller rocker fingers together with hydraulic compensation elements and put down on a clean surface.

– Remove spark plugs with spark plug spanner - 3122B- .

Protected by copyright. Copying for private or commercial purpo... whole is not permitted unless authorised by AUDI AG. AUDI AG does no... any liability with respect to the correctness of information in thi... G

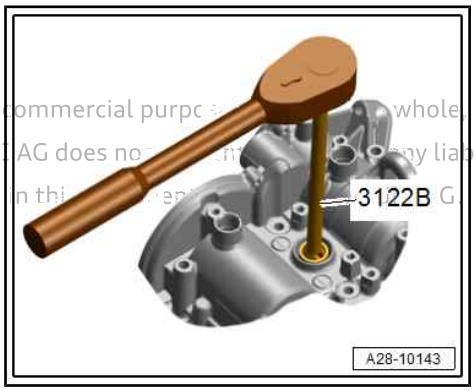

Machining guide plate:

– Check whether there is a recess -arrow-.

– If necessary, machine guide plate for 2.0 ltr. and 3.0 ltr. FSI engine - VAS 5161/19C- -arrow- so that guide plate rests on cylinder head and guide pin -1- does not make contact.

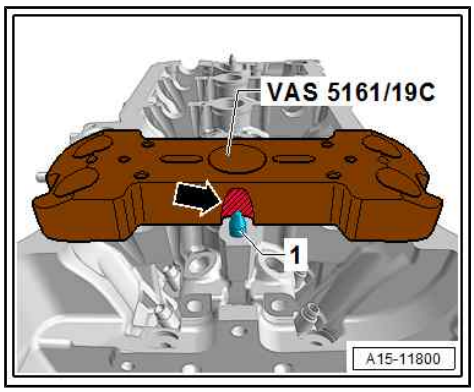

Continued:

– Secure guide plate for 2.0 ltr. and 3.0 ltr. FSI engine - VAS 5161/19C- to cylinder head with knurled screws - VAS 5161/12- as shown.

– Set piston of appropriate cylinder to “bottom dead centre”.

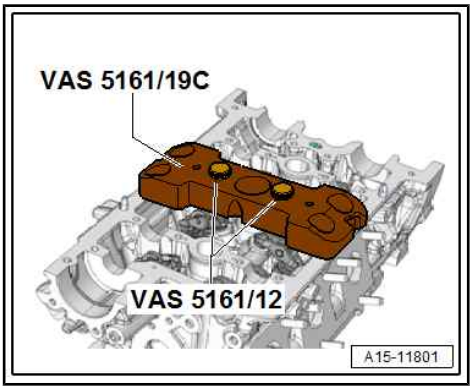

– Screw adapter - T40012- into spark plug thread.

– Connect to compressed air supply of at least 6 bar.

– Knock loose sticking valve cotters using punch - VAS 5161/3- and a plastic-headed hammer.

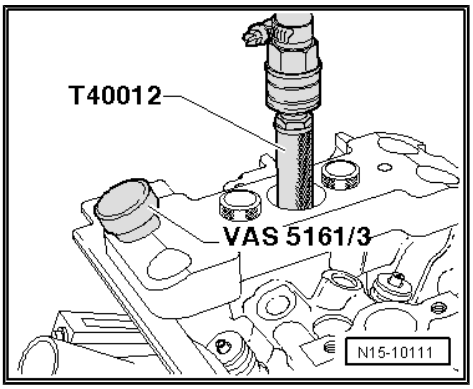

Inlet side:

– Screw snap-in device - VAS 5161/6- with engaging fork - VAS 5161/5- into centre thread on guide plate for 2.0 ltr. and 3.0 ltr. FSI engine - VAS 5161/19C- .

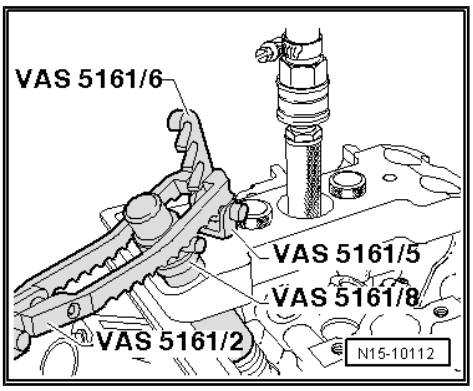

Exhaust side:

– Screw snap-in device - VAS 5161/6- with engaging fork - VAS 5161/5- into outer thread on guide plate for 2.0 ltr. and 3.0 ltr. FSI engine - VAS 5161/19C- .

Continued:

– Insert assembly cartridge - VAS 5161/8- into guide plate for 2.0 ltr. and 3.0 ltr. FSI engine - VAS 5161/19C- .

– Engage pressure fork - VAS 5161/2- on snap-in device - VAS 5161/6- .

– Press down assembly cartridge - VAS 5161/8- and at the same time, turn knurled screw of assembly cartridge - VAS 5161/8- clockwise until tips engage in valve cotters.

– Move knurled screw back and forth slightly; the valve cotters are thus forced apart and taken up by the assembly cartridge.

– Release pressure fork - VAS 5161/2- .

– Take out assembly cartridge - VAS 5161/8- .

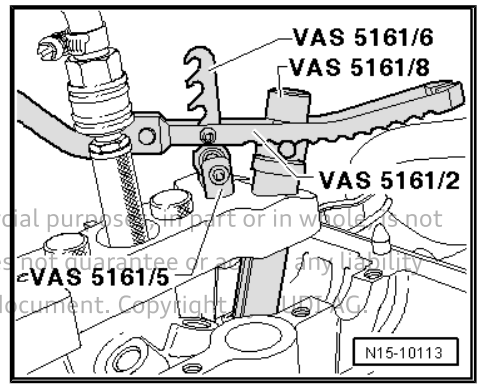

Protected by copyright. Copying for private or commercial purposes, in part or in whole, is not permitted unless authorised by AUDI AG. AUDI AG does not guarantee or assume any liability with respect to the correctness of information in this document. Copyright by AUDI AG.

– Pull off valve stem oil seal with valve stem seal puller - 3364- .

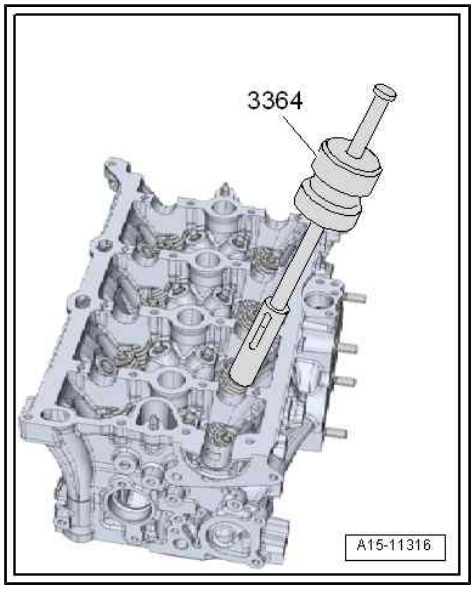

- To avoid damaging the new valve stem oil seal -4- during installation, fit the assembly sleeve -3- onto the valve stem -2-.

– Lightly oil sealing lip of valve stem oil seal.

- Use either pusher - 3365- or pusher -T40376/1- , depending on version/manufacturer of valve stem oil seal.

– Insert valve stem oil seal into valve stem oil seal fitting tool -5- and use assembly sleeve to press it carefully onto valve guide -1- as far as stop.

– Remove assembly sleeve .

– Insert valve spring and valve spring plate.

– Set up removal and installation device for valve cotters - VAS 5161 A- as shown.

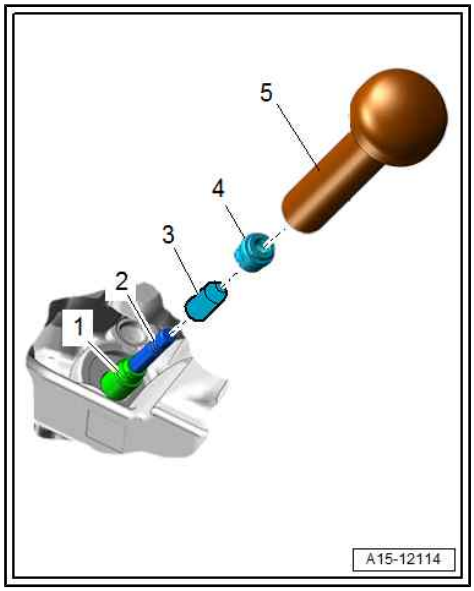

Inlet side:

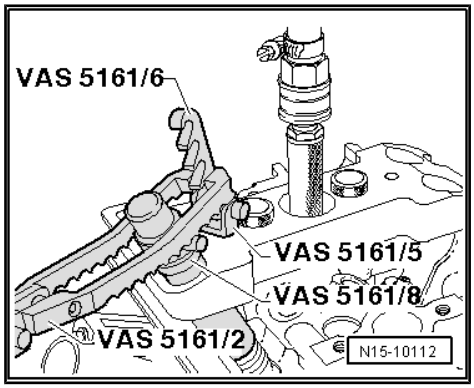

Protected by copyright. Copying for private or commercial purposes, in part or in whole, is not permitted unless authorised by AUDI AG. AUDI AG does not guarantee or accept any liability with respect to the correctness of information in this document. Copyright by AUDI AG.

Exhaust side:

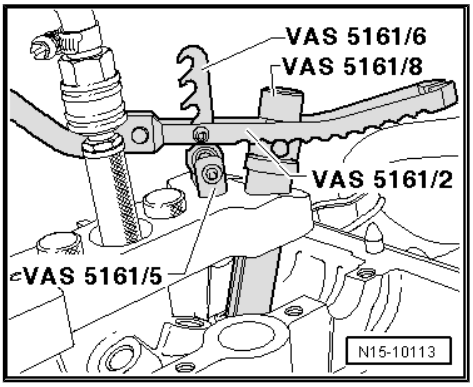

Continued:

- If valve cotters have been removed from assembly cartridge, they need to be put into insertion device - VAS 5161/18- first.
- Press assembly cartridge -VAS 5161/8- onto insertion device from above and pick up valve cotters.

– Use pressure fork - VAS 5161/8- to press down assembly cartridge - VAS 5161/2- , then turn knurled screw of assembly cartridge back and forth while pulling upwards.

– Release pressure fork - VAS 5161/2- with knurled screw in pulled position.

– Detach removal and installation device for valve cotters - VAS 5161A- .

– Repeat procedure for each valve.

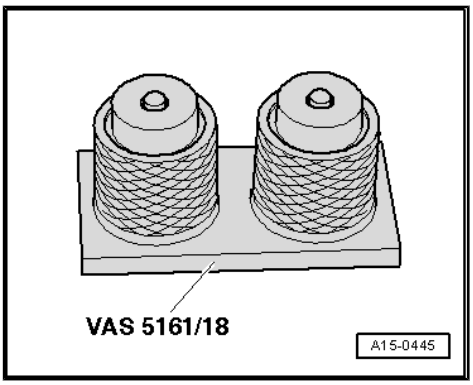

Protected by copyright. Copying for private or commercial purposes, in part or in whole, is not permitted unless authorised by AUDI AG. AUDI AG does not guarantee or accept any liability with respect to the correctness of information in this document. Copyright by AUDI AG.

Assembling

Assembly is performed in reverse sequence; note the following:

– Install camshafts ⇒ page 132 .

– Install spark plugs ⇒ page 291 .

5.6.2 Removing and installing valve stem oil seals (cylinder head removed)

Special tools and workshop equipment required

♦ Valve stem seal puller - 3364-

- Valve stem oil seal fitting tool - 3365- for valve stem oil seal with one sealing lip ⇒ page 130

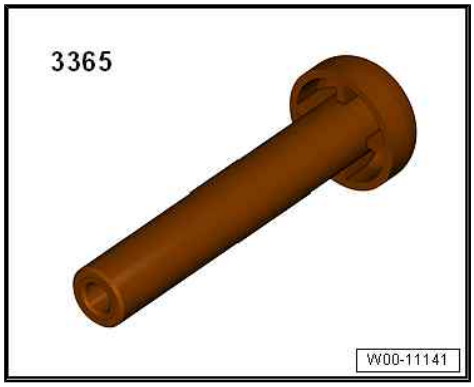

- Valve stem oil seal fitting tool - T40376/1- for valve stem oil seal with two sealing lips ⇒ page 130

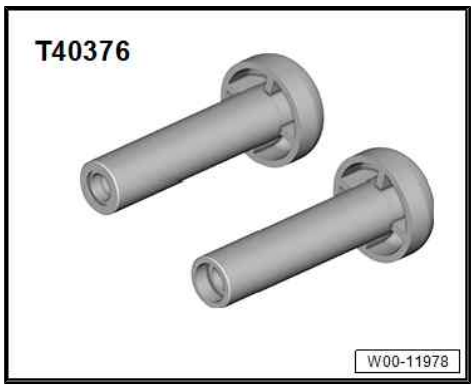

- Removal and installation device for valve cotters - VAS 5161 A-

Protected by copyright. Copying for private or commercial purposes, in part or in whole, is not permitted unless authorised by AUDI AG. AUDI AG does not guarantee or accept any liability with respect to the correctness of information in this document. Copyright by AUDI AG.

- Guide plate for 2.0 ltr. and 3.0 ltr. FSI engine - VAS 5161/19C-
- Engine and gearbox support - VAS 6095A-

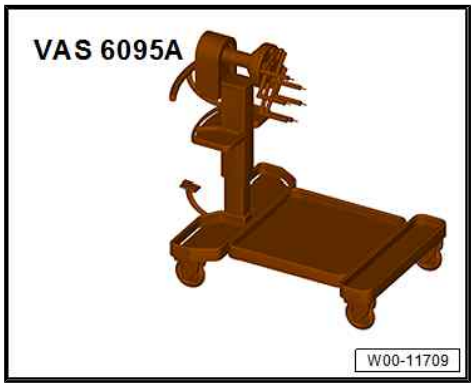

♦ Cylinder head tensioning device - VAS 6419-

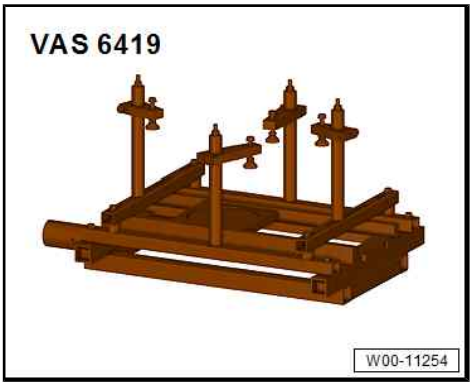

♦ Assembly sleeve ⇒ Electronic parts catalogue

Procedure

– Mark original positions of roller rocker fingers and hydraulic compensation elements for re-installation.

– Remove roller rocker fingers together with hydraulic compensation elements and put down on a clean surface.

– Insert cylinder head tensioning device - VAS 6419- into engine and gearbox support - VAS 6095A- .

– Secure cylinder head in cylinder head tensioning device, as shown in illustration.

– Connect cylinder head tensioning device to compressed air supply.

– Using lever -arrow-, slide air pad under combustion chamber where valve stem oil seal is to be removed.

– Apply just enough compressed air to bring air pad into contact with valve heads.

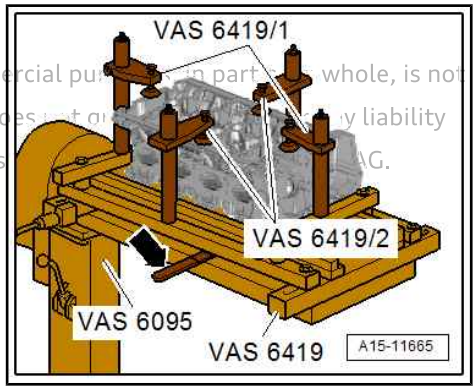

Protected by copyright. Copying for private or commercial purposes, in part or in whole, is not permitted unless authorised by AUDI AG. AUDI AG does not guarantee or accept any liability with respect to the correctness of information in this document. Copyright by AUDI AG.

Machining guide plate:

– Check whether there is a recess -arrow-.

– If necessary, machine guide plate for 2.0 ltr. and 3.0 ltr. FSI engine - VAS 5161/19C- -arrow- so that guide plate rests on cylinder head and guide pin -1- does not make contact.

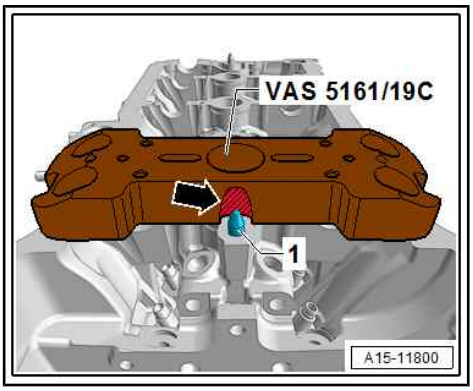

– Secure guide plate for 2.0 ltr. and 3.0 ltr. FSI engine - VAS 5161/19C- to cylinder head with knurled screws - VAS 5161/12- as shown.

– Insert drift -VAS 5161/3- into guide plate and use plastic-headed hammer to release sticking valve cotters.

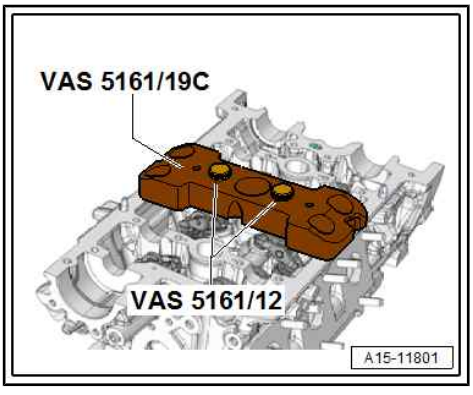

Inlet side:

– Screw snap-in device - VAS 5161/6- with engaging fork - VAS 5161/5- into centre thread on guide plate for 2.0 ltr. and 3.0 ltr. FSI engine - VAS 5161/19C- .

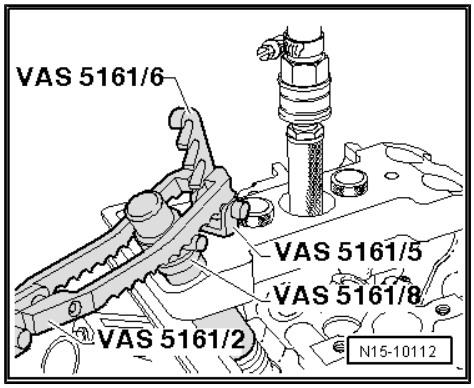

Exhaust side:

– Screw snap-in device - VAS 5161/6- with engaging fork - VAS 5161/5- into outer thread on guide plate for 2.0 ltr. and 3.0 ltr. FSI engine - VAS 5161/19C- .

Continued:

– Insert assembly cartridge - VAS 5161/8- into guide plate for 2.0 ltr. and 3.0 ltr. FSI engine - VAS 5161/19C- .

– Engage pressure fork - VAS 5161/2- on snap-in device - VAS 5161/6- .

– Press down assembly cartridge - VAS 5161/8- and at the same time, turn knurled screw of assembly cartridge - VAS 5161/8- clockwise until tips engage in valve cotters.

– Move knurled screw back and forth slightly; the valve cotters are thus forced apart and taken up by the assembly cartridge.

– Release pressure fork - VAS 5161/2- .

– Take out assembly cartridge - VAS 5161/8- .

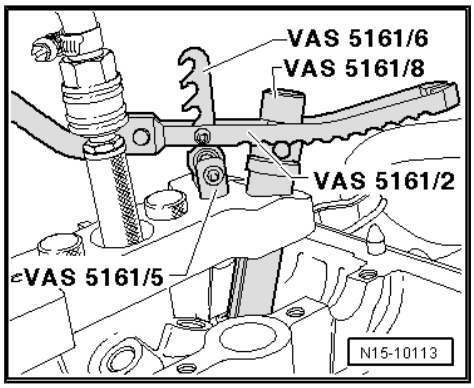

– Pull off valve stem oil seal with valve stem seal puller - 3364- .

Protected by copyright. Copying for private or commercial purposes, in part or in whole, is not permitted unless authorised by AUDI AG. AUDI AG does not guarantee or accept any liability with respect to the correctness of information in this document. Copyright by AUDI AG.

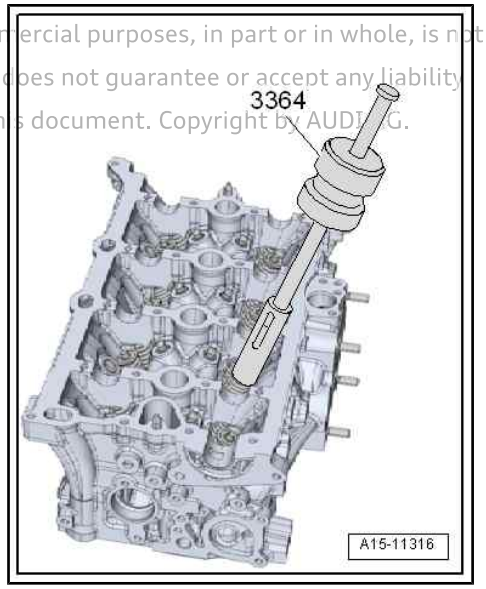

Protected by copyright. Copying for private or commercial purposes, in part or in whole, is not
permitted unless authorized by AUDI AG. AUDI AG does not guarantee or accept any liability
with respect to the correctness of information in this document. Copyright by AUDI AG.

- To avoid damaging the new valve stem oil seal -4- during installation, fit the assembly sleeve -3- onto the valve stem -2-.

– Lightly oil sealing lip of valve stem oil seal.

- Use either pusher - 3365- or pusher -T40376/1- , depending on version/manufacturer of valve stem oil seal.

– Insert valve stem oil seal into valve stem oil seal fitting tool -5- and use assembly sleeve to press it carefully onto valve guide -1- as far as stop.

– Remove assembly sleeve .

– Insert valve spring and valve spring plate.

– Set up removal and installation device for valve cotters - VAS 5161 A- as shown.

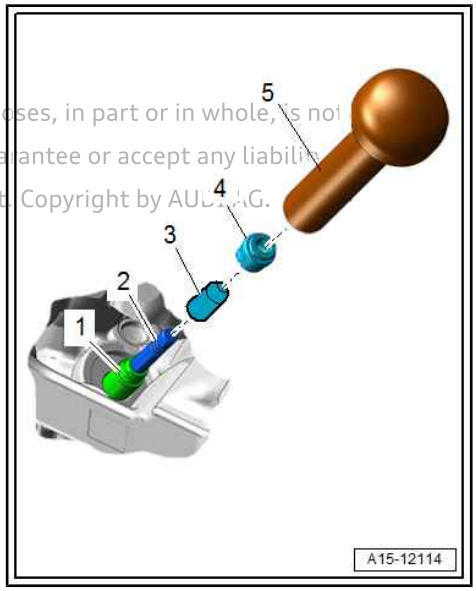

Inlet side:

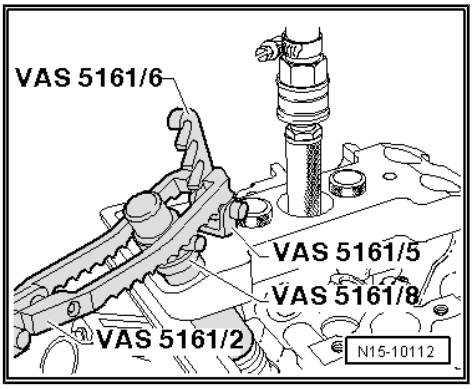

Exhaust side:

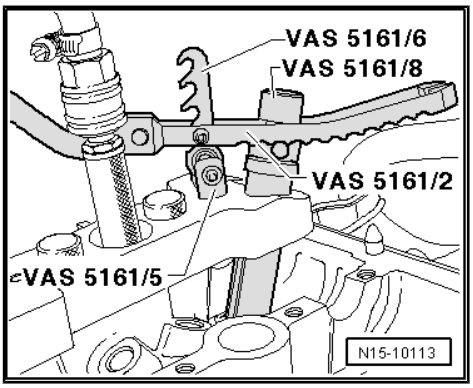

Continued:

- If valve cotters have been removed from assembly cartridge, they need to be put into insertion device - VAS 5161/18- first.

– Use pressure fork - VAS 5161/8- to press down assembly cartridge - VAS 5161/2- , then turn knurled screw of assembly cartridge back and forth while pulling upwards.

– Release pressure fork - VAS 5161/2- with knurled screw in pulled position.

– Detach removal and installation device for valve cotters - VAS 5161- .

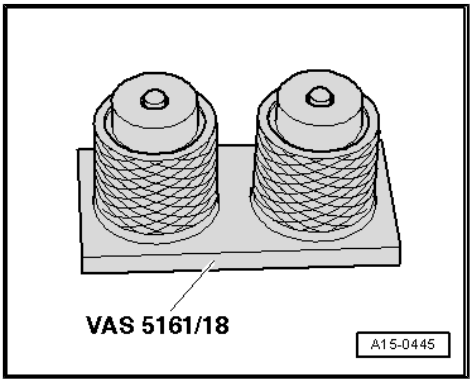

6 Inlet and exhaust valves

⇒ "6.1 Checking valve guides", page 160
⇒ "6.2 Checking valves", page 160
⇒ "6.3 Valve dimensions", page 161

Protected by copyright. Copying for private or commercial purposes, in part or in whole, is not permitted unless authorised by AUDI AG. AUDI AG does not guarantee or accept any liability with respect to the correctness of information in this document. Copyright by AUDI AG.

6.1 Checking valve guides

Special tools and workshop equipment required

- Universal dial gauge bracket - VW 387-

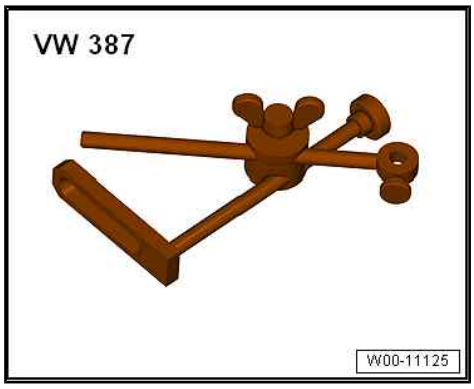

- Dial gauge - VAS 6079-

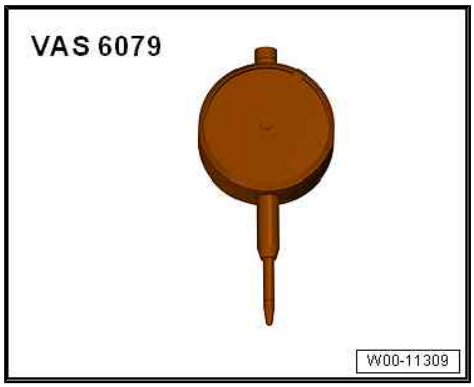

Test sequence

– Insert valve into guide. End of valve stem must be flush with guide. Only insert inlet valve into inlet valve guide and exhaust valve into exhaust valve guide, as the stem diameters are different.

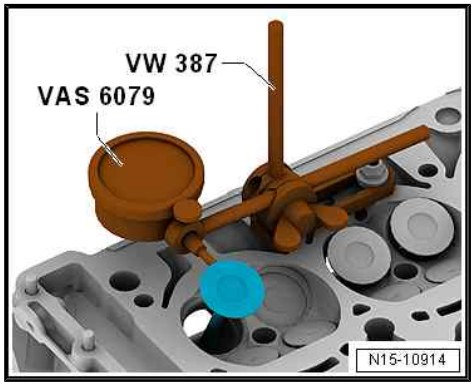

– Measure the amount of sideways play.

Wear limit

Inlet valve guide	Exhaust valve guide
0.60 mm	0.60 mm

- If the wear limit is exceeded, repeat the measurement with new valves. Renew cylinder head if wear limit is still exceeded.
- If the valve has to be renewed as part of a repair, use a new valve for the measurement.

6.2 Checking valves

– Visually inspect for scoring on valve stems and valve seat surfaces.

– Renew valve if scoring is clearly visible.

6.3 Valve dimensions

Valve dimensions

- Inlet and exhaust valves must not be machined. Only grinding-in is permitted.

Dimension		Inlet valve	Exhaust valve
∅ a	mm	33.85 ± 0.10	28.0 ± 0.1
∅ b	mm	5.98 ± 0.01	5.96 ± 0.01
c	mm	104.0 ± 0.2	101.9 ± 0.2
α	∠°	45	45

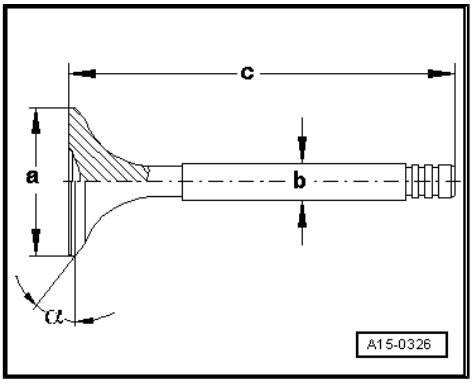

Protected by copyright. Copying for private or commercial purposes, in part or in whole, is not permitted unless authorised by AUDI AG. AUDI AG does not guarantee or accept any liability with respect to the correctness of information in this document. Copyright by AUDI AG.

17 – Lubrication

1 Safety precautions

Observe safety precautions ⇒ 4-cylinder direct injection engine (2.0 ltr. 4-valve TFSI, EA 888 Gen. III); Rep. gr. 00 ; Safety precautions .

Protected by copyright. Copying for private or commercial purposes, in part or in whole, is not permitted unless authorised by AUDI AG. AUDI AG does not guarantee or accept any liability with respect to the correctness of information in this document. Copyright by AUDI AG.

2 Sump/oil pump

⇒ “2.1 Exploded view - sump/oil pump”, page 163

⇒ “2.2 Engine oil”, page 169

⇒ “2.3 Removing and installing sump (bottom section)”, page 169

⇒ “2.4 Removing and installing oil pump”, page 172

⇒ “2.5 Removing and installing sump (top section)”, page 174

⇒ “2.6 Removing and installing oil level and oil temperature sender G266 ”, page 178

Protected by copyright. Copying for private or commercial purposes, in part or in whole, is not permitted unless authorised by AUDI AG. AUDI AG does not guarantee or accept any liability with respect to the correctness of information in this document. Copyright by AUDI AG.

2.1 Exploded view - sump/oil pump

⇒ “2.1.1 Exploded view - sump/oil pump, version 1”, page 163

⇒ “2.1.2 Exploded view - sump/oil pump, version 2”, page 166

2.1.1 Exploded view - sump/oil pump, version 1

- If large quantities of metal shavings or particles are found in the engine oil when repairing the engine, the oil passages must be cleaned carefully in order to prevent further damage occurring later. In addition, renew oil spray jets, engine oil cooler and oil filter.
- Oil spray jet and pressure relief valve ⇒ page 66

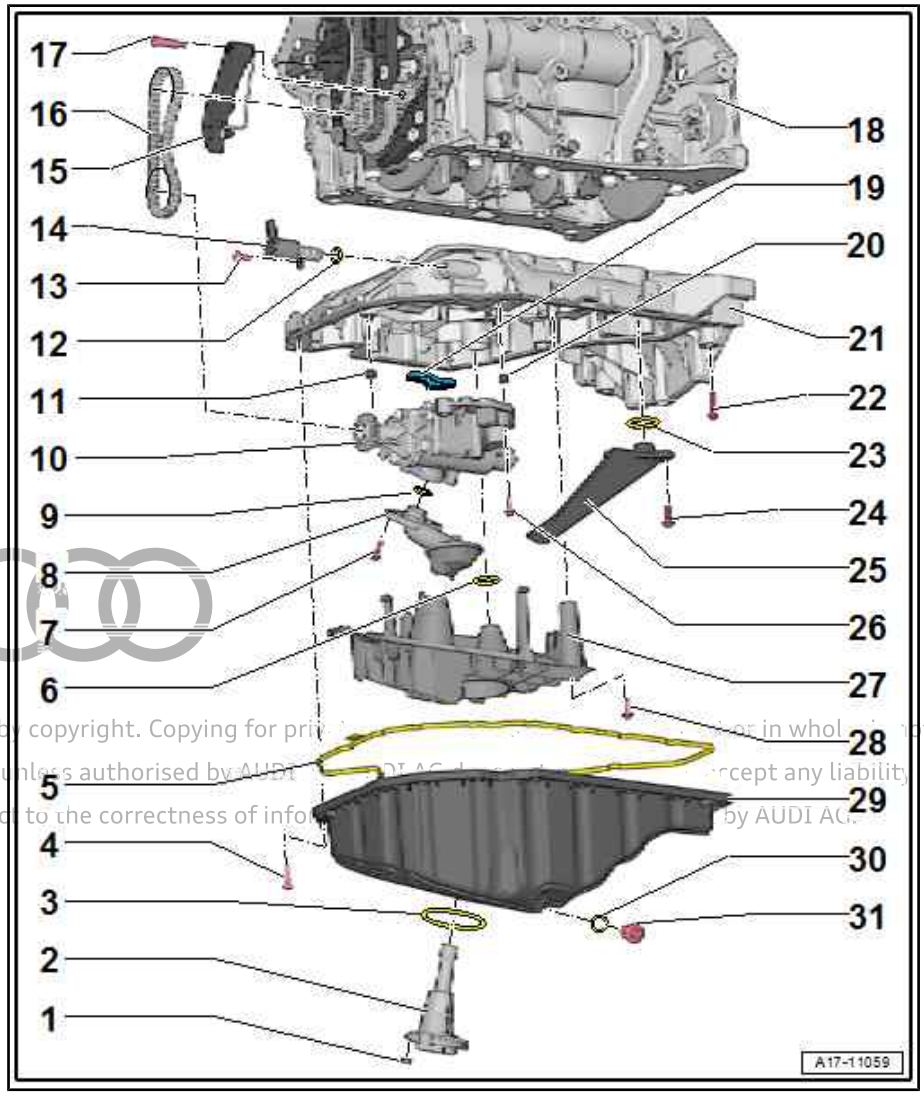

1 - Nut
- ❑ 9 Nm

2 - Oil level and oil temperature sender - G266-
- ❑ Removing and installing ⇒ page 178

3 - Seal
- ❑ Renew

4 - Bolt
- ❑ Renew after removing
- ❑ Tightening torques and sequence ⇒ Fig. ""Metal sump (bottom section) - tightening torque and sequence"" , page 166

5 - Gasket
- ❑ Only for sump (bottom section), plastic version
- ❑ Renew after removing

6 - O-ring
- ❑ Renew after removing
- ❑ Lubricate lightly with engine oil

7 - Bolt
- ❑ Renew after removing
- ❑ 4 Nm +45°

8 - Suction pipe
- ❑ Clean strainer if dirty

9 - O-ring
- ❑ Renew after removing
- ❑ Lubricate lightly with engine oil

10 - Oil pump
- ❑ Removing and installing ⇒ page 172

11 - Centring sleeve

12 - O-ring
- ❑ Renew
- ❑ Lubricate lightly with engine oil

13 - Bolt
- ❑ Renew after removing
- ❑ Tightening torque ⇒ Item 1 (page 185)

14 - Valve for oil pressure control - N428-
- ❑ Removing and installing ⇒ page 191

15 - Chain tensioner

16 - Drive chain for oil pump
- ❑ Mark direction of rotation before removing

17 - Bolt
- ❑ 9 Nm

Protected by copyright. Copying for private or commercial purposes, in whole or in part, is not permitted unless authorised by AUDI AG. AUDI AG does not guarantee or accept any liability with respect to the correctness of information in this document. Copyright by AUDI AG.

18 - Cylinder block

19 - Oil strainer

20 - Centring sleeve

21 - Sump (top section)

- ❑ Removing and installing ⇒ page 174

22 - Bolt

- ❑ Renew after removing
- ❑ Tightening torques and sequence
  ⇒ Fig. ""Sump (top section) - tightening torques and sequence"" , page 166

23 - O-ring

- ❑ Renew after removing
- ❑ Lubricate lightly with engine oil

24 - Bolt

- ❑ Renew after removing
- ❑ 4 Nm +45°

25 - Oil return pipe

26 - Bolt

- ❑ Renew after removing
- ❑ 8 Nm +90°

27 - Baffle plate

- ❑ Renew after removing

28 - Bolt

- ❑ Renew after removing
- ❑ 4 Nm +45°

29 - Sump (bottom section)

- ❑ Different versions available; for allocation refer to ⇒ Electronic parts catalogue
- ❑ Removing and installing ⇒ page 169

30 - O-ring

- ❑ Seal for sheet-metal version of sump (bottom section)
- ❑ O-ring for plastic version of sump (bottom section)
- ❑ Renew after removing
- ❑ Lubricate O-ring with engine oil

31 - Oil drain plug or sealing plug

- ❑ Oil drain plug for sheet-metal version of sump (bottom section)
- ❑ Oil drain plug: 30 Nm
- ❑ Sealing plug for plastic version of sump (bottom section)
- ❑ Tighten sealing plug as far as stop

Protected by copyright. Copying for private or commercial purposes, in part or in whole, is not permitted unless authorised by AUDI AG. AUDI AG does not guarantee or accept any liability with respect to the correctness of information in this document. Copyright by AUDI AG.

Metal sump (bottom section) - tightening torque and sequence

- After removing, renew bolts tightened with specified tightening angle.

– Tighten bolts in stages in the sequence shown:

Stage	Bolts	Tightening torques/angle specification
1.	-1 … 19-	Screw in by hand until contact is made
2.	-1 … 19-	8 Nm
3.	-1 … 19-	Turn 90° further

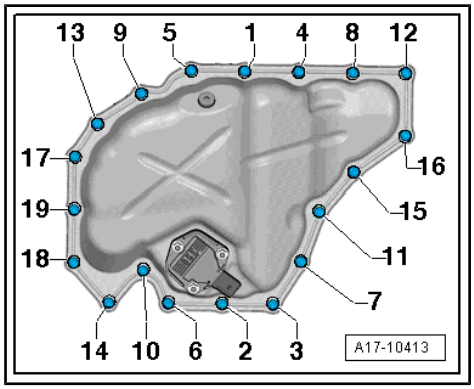

Plastic sump (bottom section) - tightening torques and sequence

- After removing, renew bolts tightened with specified tightening angle.

– Tighten bolts in stages in the sequence shown:

Stage	Bolts	Tightening torques/angle specification
1.	-1 … 19-	Screw in by hand until contact is made
2.	-1 … 19-	8 Nm
3.	-1 … 19-	Turn 90° further

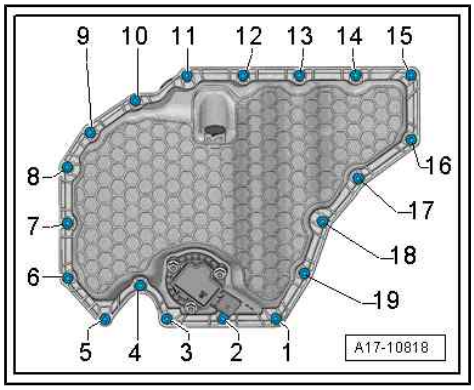

Sump (top section) - tightening torques and sequence

- After removing, renew bolts tightened with specified tightening angle.

– Tighten bolts in stages in the sequence shown:

Stage	Bolts	Tightening torques/angle specification
1.	-1 … 14-	8 Nm
2.	-1, 2-	Turn 180° further
3.	-3 … 9-	Turn 45° further
4.	-10-	Turn 180° further
5.	-11 … 14-	Turn 90° further

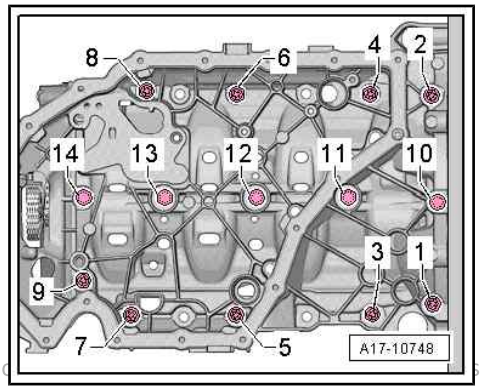

Protected by copyright. Copying for private or co… is not permitted unless authorised by AUDI AG. AUDI AG does not guarantee or accept any liability with respect to the correctness of information in this document. Copyright by AUDI AG.

2.1.2 Exploded view - sump/oil pump, version 2

- If large quantities of metal shavings or particles are found in the engine oil when repairing the engine, the oil passages must be cleaned carefully, and the oil spray jets, engine oil cooler and oil filter must be renewed in order to prevent further damage occurring later.
- Oil spray jet and pressure relief valve ⇒ page 66

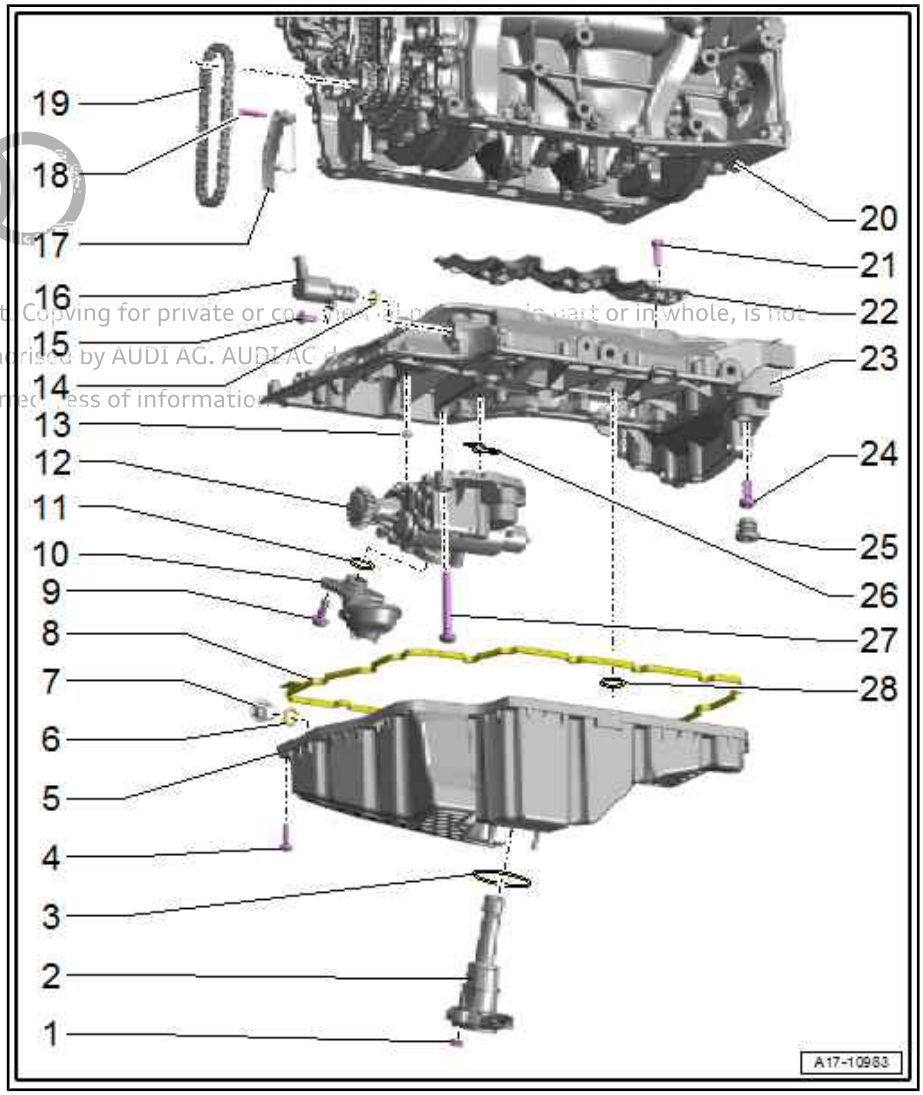

1 - Nut
- ❑ 9 Nm

2 - Oil level and oil temperature sender - G266-
- ❑ Removing and installing ⇒ page 178

3 - Seal
- ❑ Renew after removing

4 - Bolt
- ❑ Renew after removing
- ❑ Tightening sequence ⇒ page 168

5 - Sump (bottom section)
- ❑ Removing and installing ⇒ page 171

6 - O-ring
- ❑ Renew after removing
- ❑ Lubricate lightly with engine oil

7 - Sealing plug
- ❑ Tighten as far as stop

8 - Gasket
- ❑ Renew after removing

9 - Bolt
- ❑ Renew after removing
- ❑ 4 Nm +45°

10 - Suction pipe
- ❑ Clean strainer if dirty

11 - O-ring
- ❑ Renew after removing
- ❑ Lubricate lightly with engine oil

12 - Oil pump
- ❑ Removing and installing ⇒ page 172

13 - Centring sleeve
- ❑ 2x
- ❑ For oil pump

14 - O-ring
- ❑ Renew after removing
- ❑ Lubricate lightly with engine oil

15 - Bolt
- ❑ Renew after removing
- ❑ Tightening torque ⇒ Item 1 (page 185)

16 - Valve for oil pressure control - N428-
- ❑ Checking ⇒ Vehicle diagnostic tester
- ❑ Removing and installing ⇒ page 191

Protected by copyright. Copying for private or commercial purposes, in part or in whole, is not permitted unless authorised by AUDI AG. AUDI AG does not guarantee the correctness of information in this service manual.

17 - Chain tensioner

18 - Bolt

- ❑ 9 Nm

19 - Drive chain for oil pump

- ❑ Mark direction of rotation before removing

20 - Cylinder block

21 - Bolt

- ❑ Renew after removing
- ❑ 4 Nm +45°

22 - Baffle plate

23 - Sump (top section)

- ❑ Removing and installing ⇒ page 174

24 - Bolt

- ❑ Renew after removing
- ❑ Tightening torques and sequence ⇒ page 169

25 - Plug

- ❑ 3x

Protected by copyright. Copying for private or commercial purposes, in part or in whole, is not permitted unless authorised by AUDI AG. AUDI AG does not guarantee or accept any liability with respect to the correctness of information in this document. Copyright by AUDI AG.

26 - Oil strainer

27 - Bolt

- ❑ Renew after removing
- ❑ 8 Nm +90°

28 - O-ring

- ❑ Renew after removing
- ❑ Lubricate lightly with engine oil

Sump (bottom section) - tightening torques and sequence

- After removing, renew bolts tightened with specified tightening angle.

– Tighten bolts in stages in the sequence shown:

Stage	Bolts	Tightening torques/angle specification
1.	-1 … 17-	Screw in by hand until contact is made
2.	-1 … 17-	8 Nm
3.	-1 … 17-	Turn 90° further

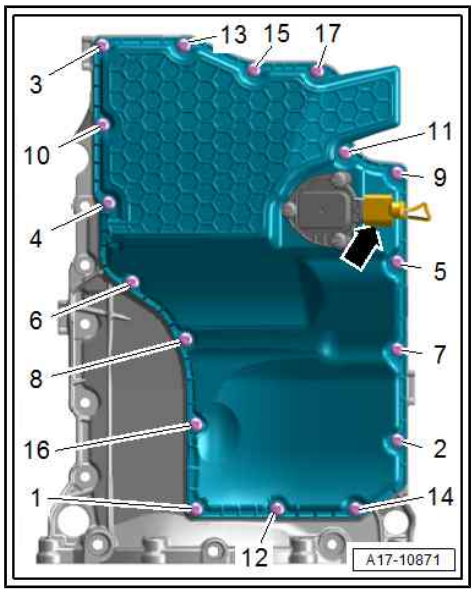

Sump (top section) - tightening torques and sequence

- After removing, renew bolts tightened with specified tightening angle.

Aluminium or steel bolts may be installed, depending on version.

A - aluminium bolts:

– Tighten bolts in stages in the sequence shown:

Stage	Bolts	Tightening torques/angle specification
1.	-1 … 18-	8 Nm
2.	-1 … 13-	Turn 45° further
3.	-14 … 18-	Turn 90° further

B - steel and aluminium bolts:

– In this case, bolts 1 ... 13 are steel bolts and 14 ... 18 are aluminium bolts.

– Tighten bolts in stages in the sequence shown:

Stage	Bolts	Tightening torques/angle specification
1.	-1 … 13-	15 Nm
2.	-14 … 18-	8 Nm
3.	-1 … 18-	Turn 90° further

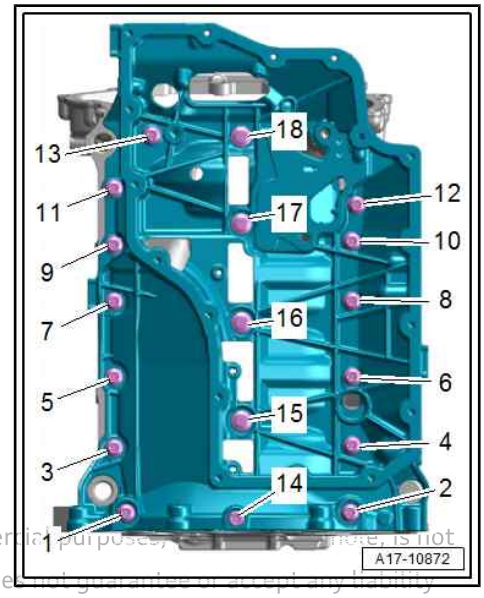

Protected by copyright. Copying for private or commercial purposes, in part or in whole, is not permitted unless authorised by AUDI AG. AUDI AG does not guarantee or accept any liability with respect to the correctness of information in this document. Copyright by AUDI AG.

2.2 Engine oil

- Draining and filling up engine oil, checking oil level, removing and installing oil filter element ⇒ 4-cylinder direct injection engine (1.8, 2.0 ltr. 4-valve TFSI); Rep. gr. 17 ; Sump/oil pump; Engine oil
- Oil capacities, oil specifications and viscosity grades ⇒ Maintenance tables .

2.3 Removing and installing sump (bottom section)

⇒ "2.3.1 Removing and installing sump (bottom section) - version 1", page 169

⇒ "2.3.2 Removing and installing sump (bottom section) - version 2", page 171

2.3.1 Removing and installing sump (bottom section) - version 1

Preparatory work may be necessary depending on model ⇒ 4-cylinder direct injection engine (1.8, 2.0 ltr. 4-valve TFSI); Rep. gr. 17 ; Sump/oil pump; Removing and installing sump (bottom section) .

- Engine oil drained ⇒ page 169 .

– Unplug connector from oil level and oil temperature sender - G266- -arrow-.

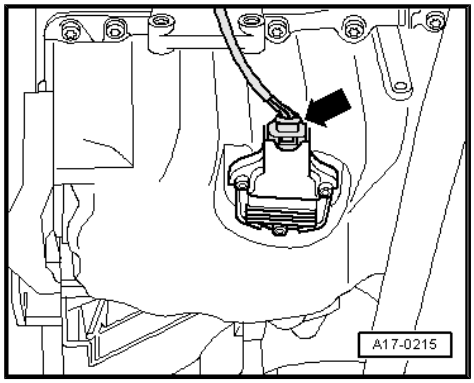

– Remove bolts -1 ... 19-.

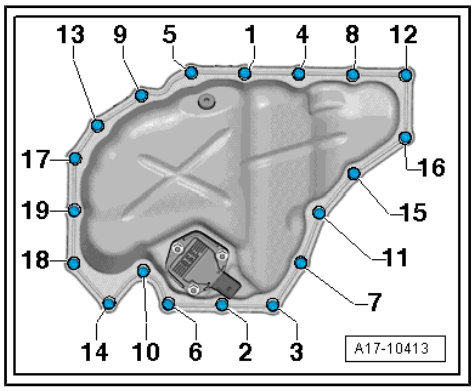

– Take off sump: if necessary loosen it by striking lightly with a rubber hammer.
– If renewing sump (bottom section), remove oil level and oil temperature sender - G266- ⇒ page 178 .

Installing

For vehicles with sump, sheet-metal version

Note

- *Note expiry date of silicone sealant.*
- *The sump must be installed within 5 minutes after applying the silicone sealant.*
- *Renew the bolts tightened with specified tightening angle.*
- *Renew seals, gaskets and self-locking nuts.*

Protected by copyright. Copying for private or commercial purposes, in part or in whole, is not permitted unless authorised by AUDI AG. AUDI AG does not guarantee or accept any liability with respect to the correctness of information in this document. Copyright by AUDI AG.

– Spray sealing surface with sealant remover and wait for it to take effect.
– Remove sealant remaining on sump (top section) with flat scraper.

CAUTION

Risk of eye injury due to sealant residue.
– Put on safety goggles.

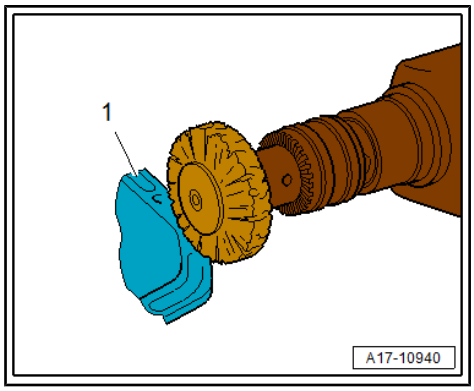

– Remove sealant residue on sump (bottom section) -1- using rotating plastic brush or similar.
– Clean sealing surfaces; they must be free of oil and grease.

– Cut off nozzle of tube at front marking (∅ of nozzle approx. 3 mm).

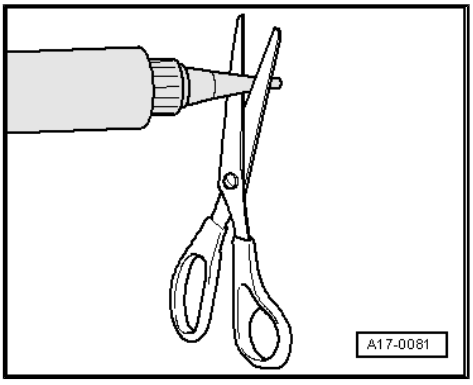

– Apply the bead of silicone sealant onto the clean sealing surface of the sump (bottom section), as illustrated.

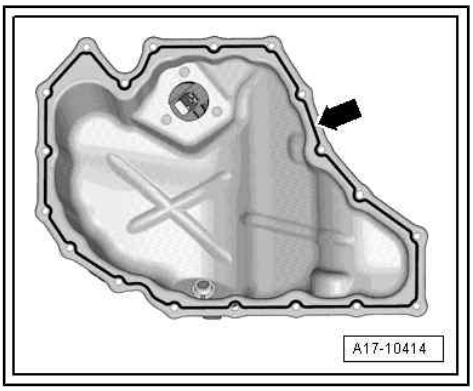

♦ Thickness of sealant bead: 2 ... 3 mm

Note

♦ *The sump must be installed within 5 minutes after applying the silicone sealant.*

♦ *The bead of sealant must not be thicker than specified, otherwise excess sealant can enter the sump and obstruct the strainer in the oil intake pipe.*

♦ *After fitting sump assembly, the sealant must dry for approx. 30 minutes. Then (and only then) fill the engine with engine oil.*

– Immediately fit sump (bottom section) and tighten bolts; tightening sequence ⇒ page 166 .

Vehicles with plastic version of sump (bottom section):

– Fit sump (bottom section) with new gasket and tighten bolts ⇒ page 166 .

For all vehicles

– Fill with engine oil and check oil level ⇒ page 169 .

Additional work depending on model ⇒ 4-cylinder direct injection engine (1.8, 2.0 ltr. 4-valve TFSI); Rep. gr. 17 ; Sump/oil pump; Removing and installing sump (bottom section)

Tightening torques

♦ ⇒ Fig. ""Metal sump (bottom section) - tightening torque and sequence"" , page 166

♦ ⇒ Fig. ""Plastic sump (bottom section) - tightening torques and sequence"" , page 166

♦ ⇒ "2.1 Exploded view - sump/oil pump", page 163

Protected by copyright. Copying for private or commercial purposes, in part or in whole, is not permitted unless authorised by AUDI AG. AUDI AG does not guarantee or accept any liability with respect to the correctness of information in this document. Copyright by AUDI AG.

2.3.2 Removing and installing sump (bottom section) - version 2

Removing

Preparatory work may be necessary depending on model ⇒ 4-cylinder direct injection engine (1.8, 2.0 ltr. 4-valve TFSI); Rep. gr. 17 ; Sump/oil pump; Removing and installing sump (bottom section) .

• Engine oil drained ⇒ page 169 .

– Unplug electrical connector -arrow- for oil level and oil temperature sender - G266- .

– Unscrew bolts -1 ... 17- and detach sump (bottom section).

– If renewing sump (bottom section), remove oil level and oil temperature sender - G266- ⇒ page 178 .

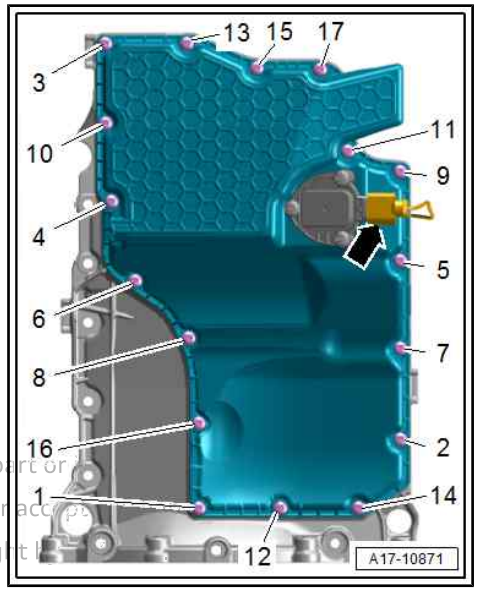

Installing

Installation is carried out in reverse order; note the following:

• Renew seal and O-ring after removal.

– Fill with engine oil and check oil level ⇒ page 169 .

Additional work depending on model ⇒ 4-cylinder direct injection engine (1.8, 2.0 ltr. 4-valve TFSI); Rep. gr. 17 ; Sump/oil pump; Removing and installing sump (bottom section)

Protected by copyright. Copying for private or commercial purposes, in part or in whole, is not permitted unless authorised by AUDI AG. AUDI AG does not guarantee or accept any liability with respect to the correctness of information in this document. Copyright by AUDI AG.

Tightening torques

♦ ⇒ Fig. ""Sump (bottom section) - tightening torques and sequence"", page 168

♦ ⇒ "2.1 Exploded view - sump/oil pump", page 163

2.4 Removing and installing oil pump

Special tools and workshop equipment required

♦ Assembly tool - T10118-

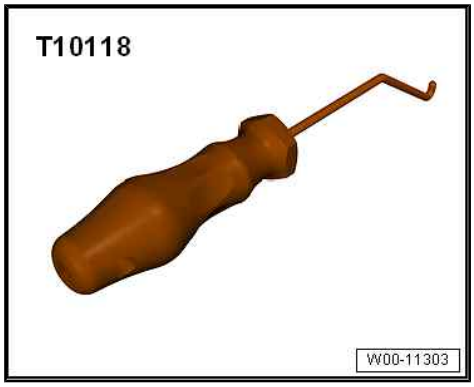

♦ Locking tool - T40265-

Removing

– Remove sump (bottom section) ⇒ page 169 .

– Sump (bottom section, version 1): Remove bolt -arrow- and detach baffle plate.

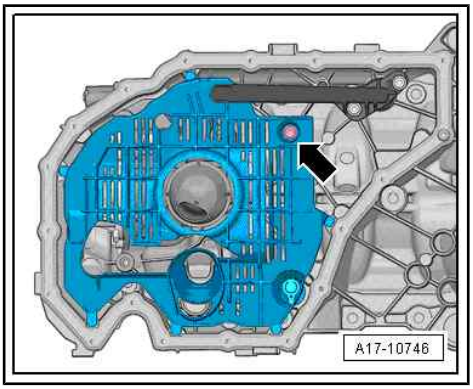

– Using assembly tool - T10118- , pull support wire of spring for chain tensioner in direction of -arrow- and secure in place with locking tool - T40265- .

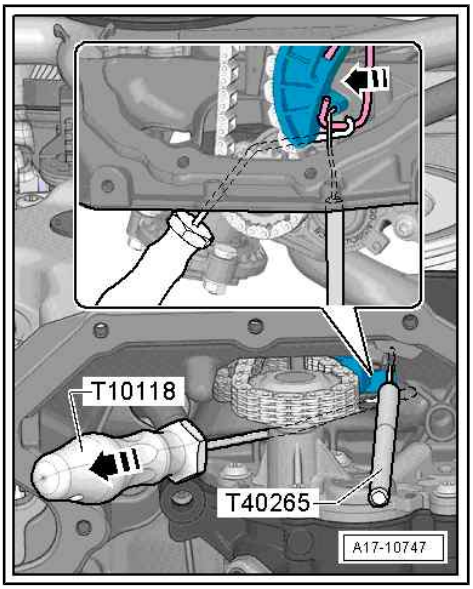

– Remove bolts -arrows- and remove oil pump.

Installing

Installation is carried out in reverse order; note the following:

- Sump (bottom section, version 1): Renew baffle plate ⇒ Item 27 (page 165) after removal.

– Check that both centring sleeves are fitted in oil pump.

– Before installing, check passages in sump (top section) and strainer ⇒ Item 26 (page 168) in oil pump for dirt.

– Guide oil pump sprocket into drive chain and install oil pump.

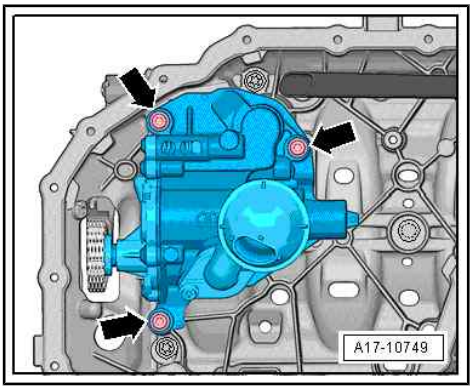

Protected by copyright. Copying for private or commercial purposes, in part or in whole, is not permitted unless authorised by AUDI AG. AUDI AG does not guarantee or accept any liability with respect to the correctness of information in this document. Copyright by AUDI AG.

NOTICE

Risk of damage to engine if drive chain for oil pump is not tensioned correctly.

– Ensure that support wire for spring engages correctly on cast projection on sump (top section).

– Using assembly tool - T10118- , pull support wire of spring for chain tensioner in direction of -arrow- and remove locking tool - T40265- .

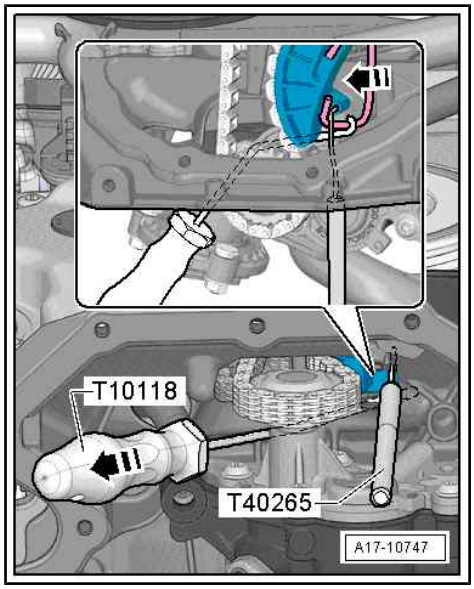

– Check position of chain tensioner support wire.

• The support wire -2- must rest on cast projection -1- on sump (top section), as shown -arrow-. (Shown with timing chain cover (bottom) removed.)

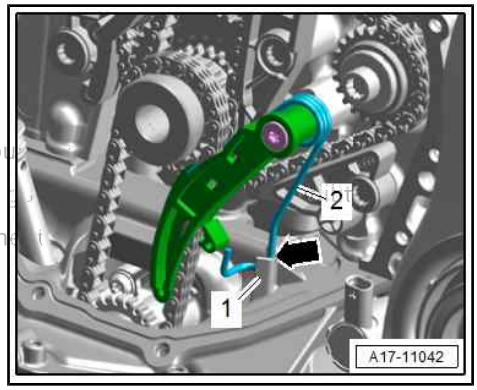

– Sump (bottom section, version 1): Fit and secure baffle plate ⇒ Item 27 (page 165) .

– Install sump (bottom section) ⇒ page 169 .

– Fill with engine oil and check oil level ⇒ page 169 .

Tightening torques

♦ ⇒ “2.1 Exploded view - sump/oil pump”, page 163

2.5 Removing and installing sump (top section)

Special tools and workshop equipment required

♦ Electric drill with plastic brush

♦ Safety goggles

♦ Sealant ⇒ Electronic parts catalogue

Removing

• Vehicles without high-voltage system: Gearbox removed ⇒ Gearbox; Rep. gr. 34 ; Removing and installing gearbox; Removing gearbox , or ⇒ Gearbox; Rep. gr. 37 ; Removing and installing gearbox; Removing gearbox

• Vehicles with high-voltage system: Engine removed and secured to engine and gearbox support ⇒ page 12

Preparatory work may be necessary depending on model ⇒ 4-cylinder direct injection engine (1.8, 2.0 ltr. 4-valve TFSI); Rep. gr. 17 ; Sump/oil pump; Removing and installing sump (top section) .

– Remove sealing flange (gearbox end) ⇒ page 48 .

– Remove oil pump ⇒ page 172 .

Protected by copyright. Copying for private or commercial purposes, in part, is not permitted unless authorised by AUDI AG. AUDI AG does not guarantee or accept any liability with respect to the correctness of information in this document.

– Unplug electrical connector -1- for valve for oil pressure control - N428- .

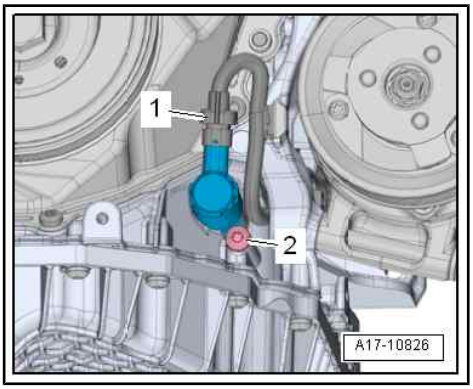

– Remove bolts -arrows-.

• Lever off sump (top section) at gearbox end first. Be careful when levering off.

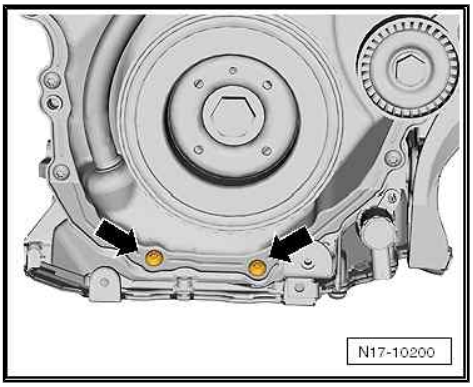

Sump (top section), version 1:

– Unscrew bolts -1 ... 14- and remove sump (top section).

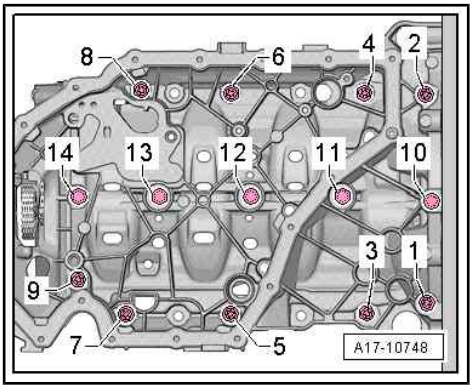

Sump (top section), version 2:

– Use the 3 bolts to pull out plugs.

– Unscrew bolts -1 ... 18- and remove sump (top section).

Installing

• After removing, renew bolts tightened with specified tightening angle.

• Renew O-rings after removing.

• Sump (top section, version 1): Renew baffle plate ⇒ Item 27 (page 165) after removal.

– Remove sealant remaining on cylinder block with flat scraper.

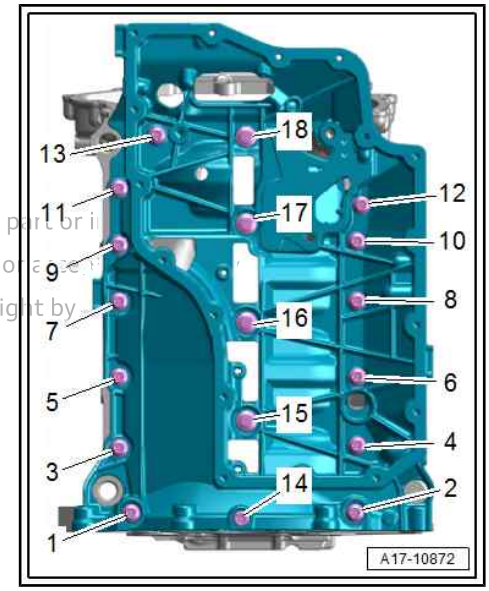

Protected by copyright. Copying for private or commercial purposes, in part or in whole, is not permitted unless authorised by AUDI AG. AUDI AG does not guarantee or accept any liability with respect to the correctness of information in this document. Copyright by AUDI AG.

CAUTION

Risk of eye injury due to sealant residue.

– Put on safety goggles.

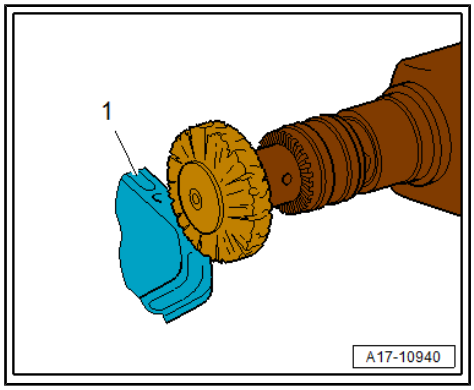

– Remove residual sealant on sump (top section) and timing chain cover (bottom) -1- using rotating plastic brush or similar.

• Check whether timing chain cover is deformed. For this purpose, first fit sump (top section) without sealant and determine gap between cover and sump (top section). If the cover is deformed and cannot be straightened, renew cover after installing sump (top section).

– Clean sealing surfaces; they must be free of oil and grease.

– Check oil passages in sump (top section) and in cylinder block for dirt.

• Note expiry date of sealant.

– Cut off nozzle of tube at front marking (nozzle ∅ approx. 2 mm).

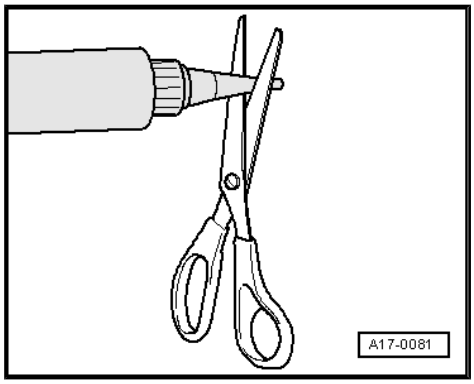

NOTICE

Risk of engine damage due to excessive sealant in lubrication system.

– The sealant bead must not be thicker than specified.

Sump (top section), version 1:

– Apply sealant as shown -arrow- onto clean sealing surface of sump (top section).

◆ Thickness of sealant bead: 2 ... 3 mm

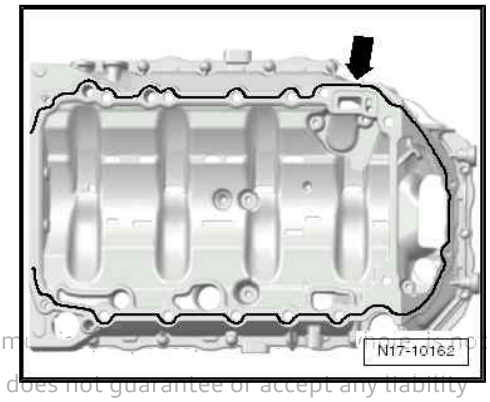

Protected by copyright. Copying for private or comm
permitted unless authorised by AUDI AG. AUDI AG does not guarantee or accept any liability
with respect to the correctness of information in this document. Copyright by AUDI AG.

Sump (top section), version 2:

– If previously removed, install baffle plate ⇒ Item 22 (page 168) .

– Apply sealant as shown -arrows- onto clean sealing surface of sump (top section).

• Thickness of sealant bead: 2 ... 3 mm

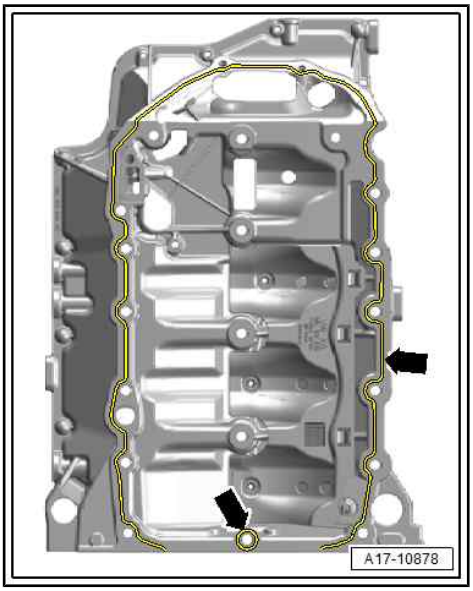

Continued:

– Apply sealant between cylinder block and timing chain cover (bottom) -arrows-.

• Sump (top section) and crankcase must be flush at gearbox end.

• The sump (top section) must be installed within 5 minutes after applying sealant.

– Immediately fit sump (top section) and tighten bolts.

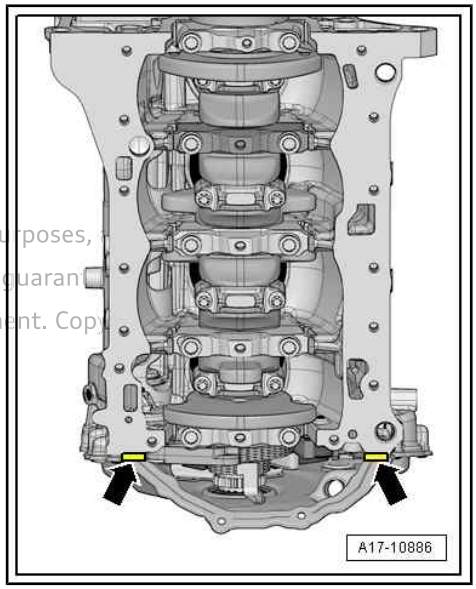

Protected by copyright. Copying for private or commercial purposes, is permitted unless authorized by AUDI AG. AUDI AG does not guarantee with respect to the correctness of information in this document. Copy

– Fit bolts -arrows-. Tightening torques ⇒ Item 18 (page 78)

Remaining installation steps are carried out in reverse sequence; note the following:

– Install oil pump ⇒ page 172 . On sump (top section, version 1), install baffle plate ⇒ Item 27 (page 165) to do so.

– Install sealing flange (gearbox end) ⇒ page 48 .

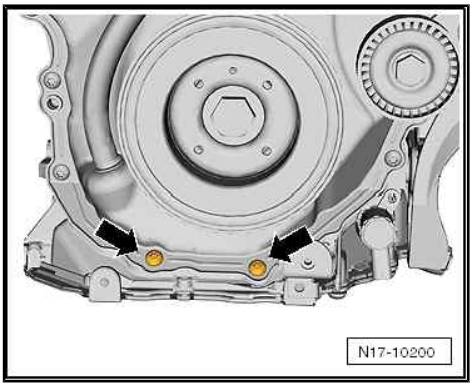

Additional work depending on model ⇒ 4-cylinder direct injection engine (1.8, 2.0 ltr. 4-valve TFSI); Rep. gr. 17 ; Sump/oil pump; Removing and installing sump (top section)

Tightening torques

♦ ⇒ Fig. ""Sump (top section) - tightening torques and sequence"" , page 166

♦ ⇒ Fig. ""Sump (top section) - tightening torques and sequence"" , page 169

♦ ⇒ "2.1 Exploded view - sump/oil pump", page 163

2.6 Removing and installing oil level and oil temperature sender - G266-

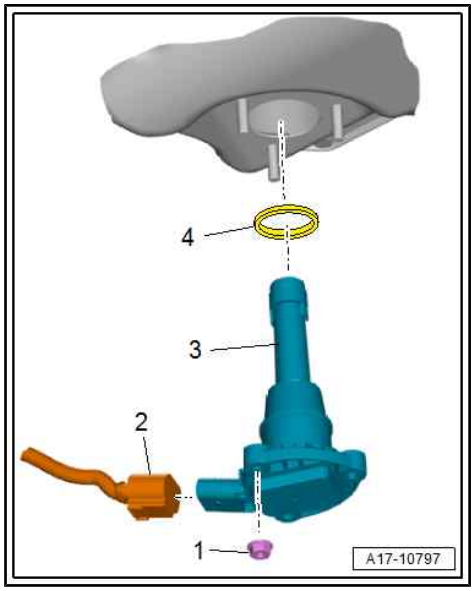

Removing

- Engine oil drained ⇒ page 169 .

– Unplug electrical connector -2-.

– Remove nuts -1- and detach oil level and oil temperature sender - G266- -3-.

Installing

Installation is carried out in reverse order; note the following:

- Renew seal -4- after removing.

– Fill with engine oil and check oil level ⇒ page 169 .

Tightening torques

◆ ⇒ “2.1 Exploded view - sump/oil pump”, page 163

Protected by copyright. Copying for private or commercial purposes, in part or in whole, is not permitted unless authorised by AUDI AG. AUDI AG does not guarantee or accept any liability with respect to the correctness of information in this document. Copyright by AUDI AG.

3 Engine oil cooler

⇒ “3.1 Exploded view - engine oil cooler”, page 179

⇒ “3.2 Removing and installing engine oil cooler”, page 179

⇒ “3.3 Removing and installing mechanical switching valve”, page 180

3.1 Exploded view - engine oil cooler

1 - Bracket for ancillaries
- ❑ Different versions available; for allocation refer to ⇒ Electronic parts catalogue
- ❑ Removing and installing ⇒ page 38

2 - Gasket
- ❑ Renew after removing

3 - O-rings
- ❑ Renew after removing
- ❑ Lubricate lightly with engine oil

4 - Mechanical switching valve
- ❑ Renewing ⇒ page 180

5 - Engine oil cooler
- ❑ See note ⇒ page 163
- ❑ Removing and installing ⇒ page 179

6 - Seal
- ❑ Renew after removing
- ❑ Lubricate with coolant

7 - Connection

8 - Bolt
- ❑ Renew after removing
- ❑ 8 Nm +45°

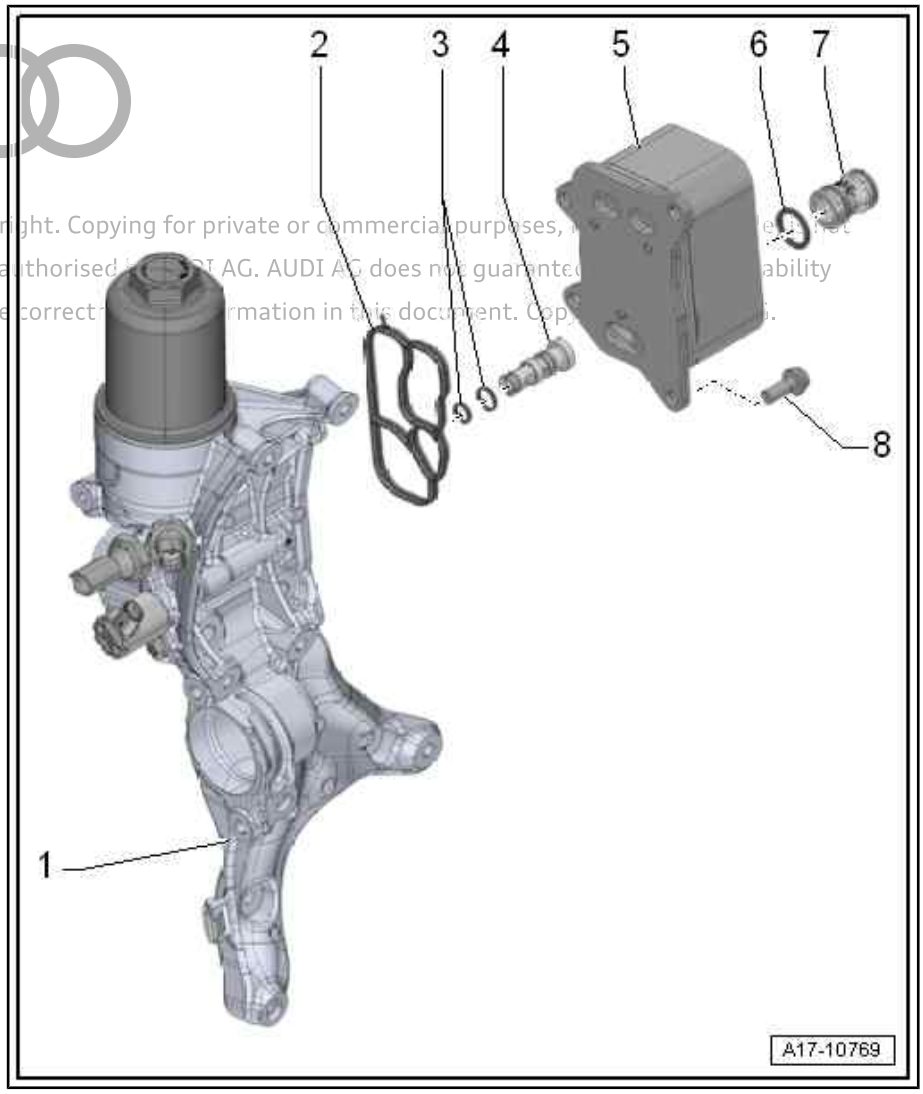

Protected by copyright. Copying for private or commercial purposes, ... permitted unless authorised ... AUDI AG. AUDI AG does not guarante... ability with respect to the correct ... rmation in this document. Copy...

3.2 Removing and installing engine oil cooler

Removing

– Remove bracket for ancillaries ⇒ page 38 .

– Remove bolts -4 and 5- and detach engine oil cooler -3- with gasket -2- from bracket -1- for ancillaries.

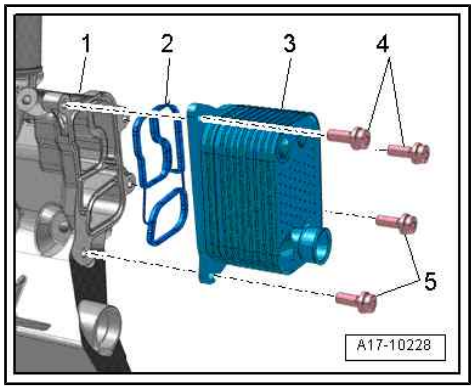

Installing

Installation is carried out in reverse order; note the following:

- Renew gasket after removing.
- Secure all hose connections with correct type of hose clips (as original equipment) ⇒ Electronic parts catalogue .

– Install engine oil cooler -3- with new seal -2-.

– Install bracket for ancillaries ⇒ page 38 .

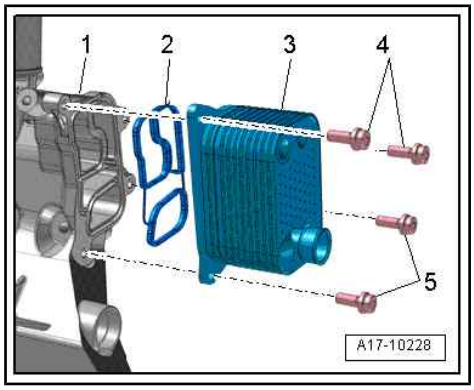

Tightening torques

◆ ⇒ “3.1 Exploded view - engine oil cooler”, page 179

3.3 Removing and installing mechanical switching valve

Removing

– Remove engine oil cooler ⇒ page 179 .

– Take mechanical switching valve -1- out of bracket for ancillaries -arrow-.

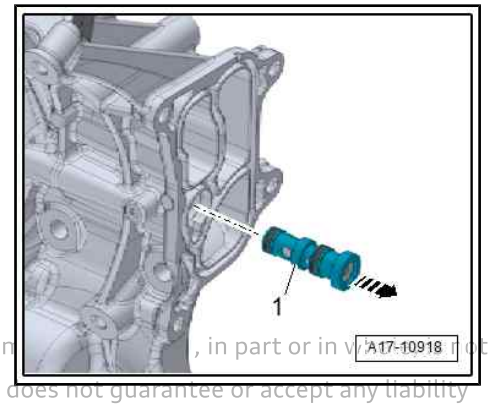

Installing

Installation is carried out in reverse order; note the following:

- Renew O-rings after removing.

– Lightly lubricate O-rings of mechanical switching valve with engine oil and install.

– Install engine oil cooler ⇒ page 179 .

Protected by copyright. Copying for private or commercial purposes, in part or in whole, is not permitted unless authorised by AUDI AG. AUDI AG does not guarantee or accept any liability with respect to the correctness of information in this document. Copyright by AUDI AG.

4 Crankcase breather

⇒ "4.1 Exploded view - crankcase breather system", page 181

⇒ "4.2 Removing and installing oil separator", page 182

4.1 Exploded view - crankcase breather system

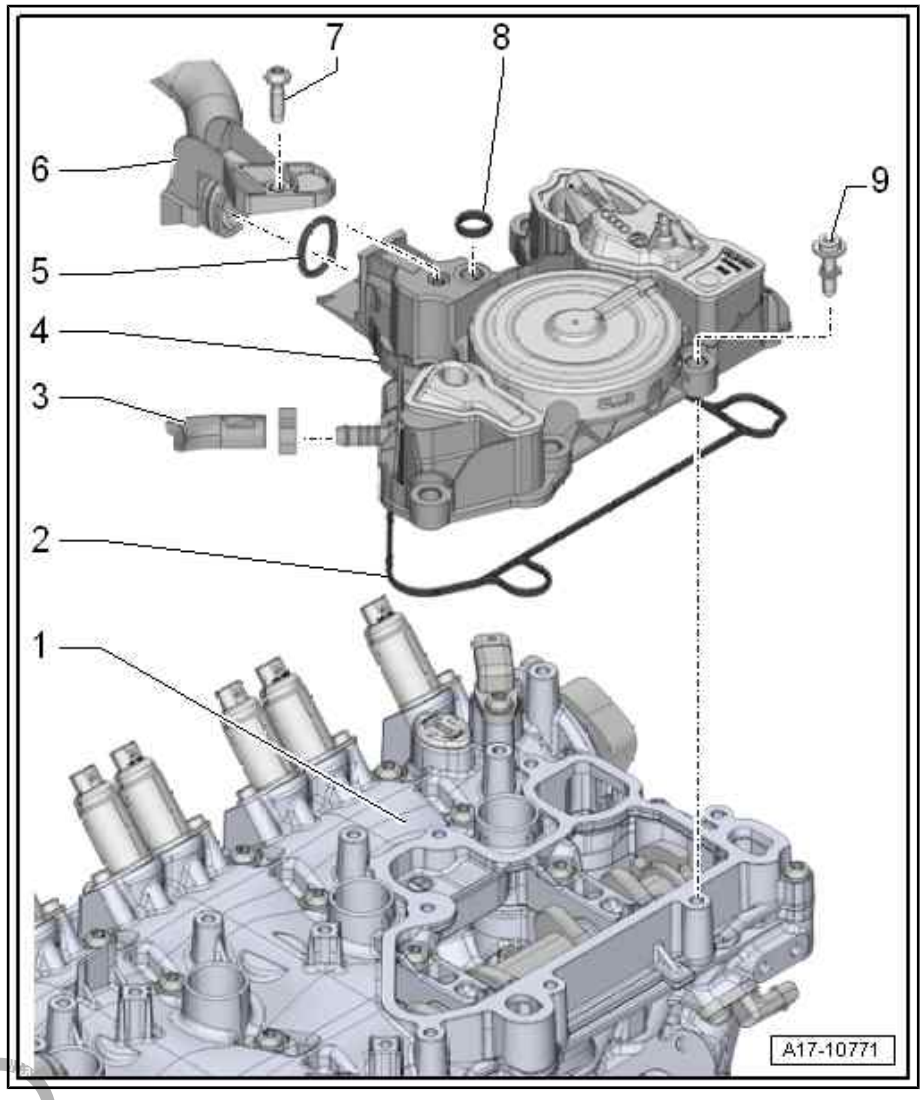

1 - Cylinder head cover

2 - Gasket

- ❑ Renew after removing

3 - Hose

- ❑ To activated charcoal filter solenoid valve 1 - N80-

4 - Oil separator

- ❑ Removing and installing ⇒ page 182

5 - Seal

- ❑ Renew after removing

6 - Hose

- ❑ For crankcase breather
- ❑ To turbocharger
- ❑ Different versions available; for allocation refer to ⇒ Electronic parts catalogue

7 - Bolt

- ❑ Thread-forming
- ❑ Fit and screw in bolt by hand so that it is screwed into old thread. Then tighten bolt to torque
- ❑ 4 Nm

8 - Seal

- ❑ Renew after removing

9 - Bolt

- ❑ Thread-forming
- ❑ Fit and screw in bolt by hand so that it is screwed into old thread. Then tighten bolt to torque
- ❑ Tightening torques and sequence

◆ Rest-of-world vehicles ⇒ page 182

◆ China version ⇒ page 182

Protected by copyright. Copying for private or commercial purposes, in part or in whole, is not permitted unless authorised by AUDI AG. AUDI AG does not guarantee or accept any liability with respect to the correctness of information in this document. Copyright by AUDI AG.

Oil separator - tightening torques and sequence (rest-of-world vehicles)

– Tighten bolts in the sequence -1 ... 7- to 9 Nm.

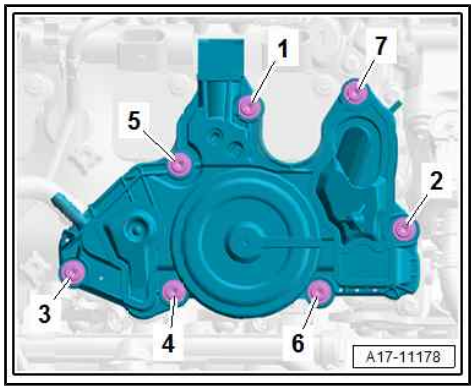

Oil separator - tightening torques and sequence (China version)

– Tighten bolts in the sequence -1 ... 7- to 9 Nm.

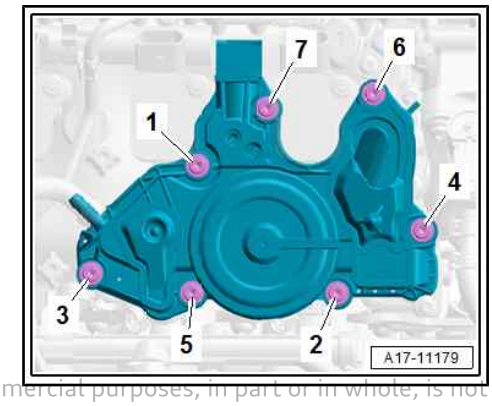

Protected by copyright. Copying for private or commercial purposes, in part or in whole, is not
permitted unless authorized by AUDI AG. AUDI AG does not guarantee or accept any liability
with respect to the correctness of information in this document. Copyright by AUDI AG.

4.2 Removing and installing oil separator

Special tools and workshop equipment required

♦ Hose clip pliers - VAS 6362-

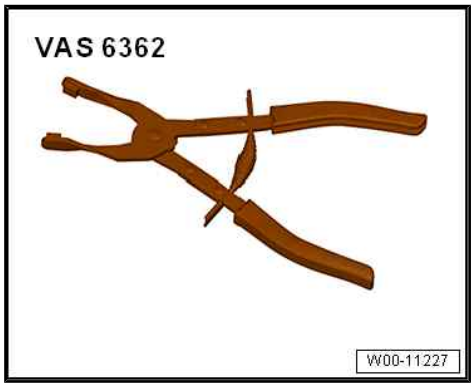

Removing

– Remove ignition coils for cylinders 3 and 4 ⇒ page 292 .

– Remove bolt -2-.

– Release fastener -arrow-, disconnect crankcase breather hose -1- and move it clear.

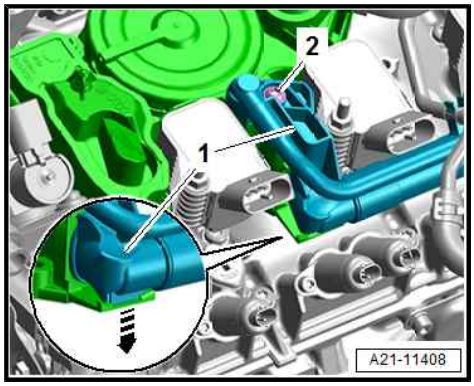

– Release hose clip -1- and detach hose from activated charcoal filter solenoid valve 1 - N80- .
– Remove bolts -arrows- and detach oil separator.

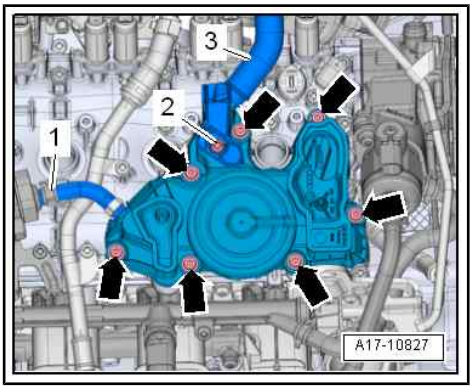

Installing

Installation is carried out in reverse order; note the following:

- Renew gasket and seals after removing.
- Secure all hose connections with correct type of hose clips (as original equipment) ⇒ Electronic parts catalogue .

Tightening torques

◆ ⇒ “4.1 Exploded view - crankcase breather system”, page 181

Protected by copyright. Copying for private or commercial purposes, in part or in whole, is not permitted unless authorised by AUDI AG. AUDI AG does not guarantee or accept any liability with respect to the correctness of information in this document. Copyright by AUDI AG.

5 Oil filter/oil pressure switches

⇒ “5.1 Exploded view - oil filter”, page 184

⇒ “5.2 Exploded view - oil pressure switches/oil pressure control”, page 185

⇒ “5.3 Removing and installing oil pressure switch F22 ”, page 187

⇒ “5.4 Removing and installing oil pressure switch for reduced oil pressure F378 ”, page 187

⇒ “5.5 Removing and installing stage 3 oil pressure switch F447 ”, page 188

⇒ “5.6 Removing and installing valve for oil pressure control N428 ”, page 191

⇒ “5.7 Removing and installing piston cooling jet control valve N522 ”, page 192

⇒ “5.8 Checking oil pressure”, page 193

⇒ “5.9 Checking oil pressure and oil pressure switch”, page 195

5.1 Exploded view - oil filter

1 - Bracket for ancillaries
- ❑ Removing and installing ⇒ page 38

2 - Gasket
- ❑ Renew after removing

3 - Oil filter element
- ❑ Removing and installing ⇒ page 169
- ❑ See note ⇒ page 163

4 - O-ring
- ❑ Renew after removing
- ❑ Lubricate lightly with engine oil

5 - Oil filter housing
- ❑ 25 Nm

6 - Oil drain connection

7 - O-rings
- ❑ Not available separately; supplied with ⇒ Item 6 (page 184)

8 - Bolt
- ❑ Tightening torques and sequence ⇒ page 19

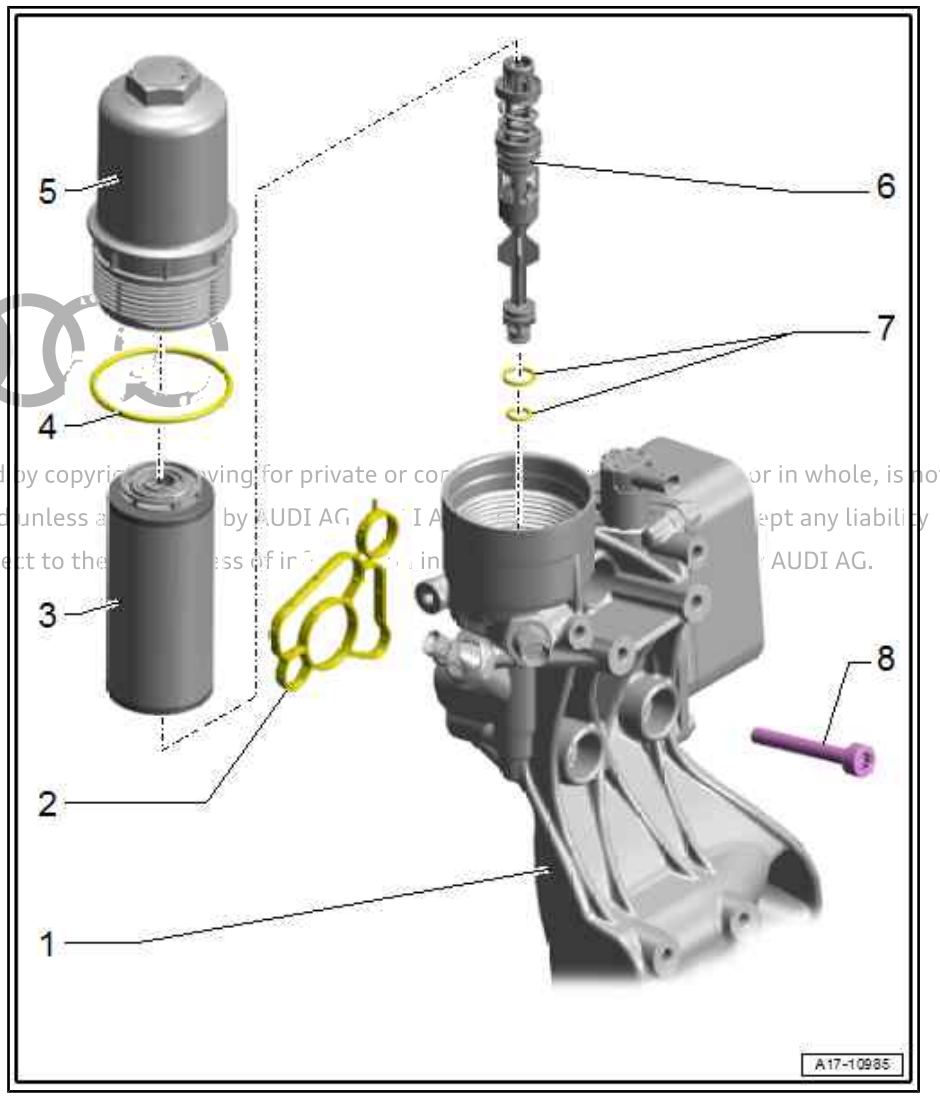

Protected by copyright. Copying for private or commercial purposes, in part or in whole, is not permitted unless authorised by AUDI AG. AUDI AG does not guarantee or accept any liability with respect to the correctness of information in this document. Copyright by AUDI AG.

5.2 Exploded view - oil pressure switches/oil pressure control

⇒ "5.2.1 Exploded view - oil pressure switches/oil pressure control, vehicles with alternator", page 185

⇒ "5.2.2 Exploded view - oil pressure switches/oil pressure control, vehicles with starter-alternator", page 186

5.2.1 Exploded view - oil pressure switches/oil pressure control, vehicles with alternator

Protected by copyright. Copying for private or commercial purposes, in part or in whole, is not permitted unless authorised by AUDI AG. AUDI AG does not guarantee or accept any liability with respect to the correctness of information in this document. Copyright by AUDI AG.

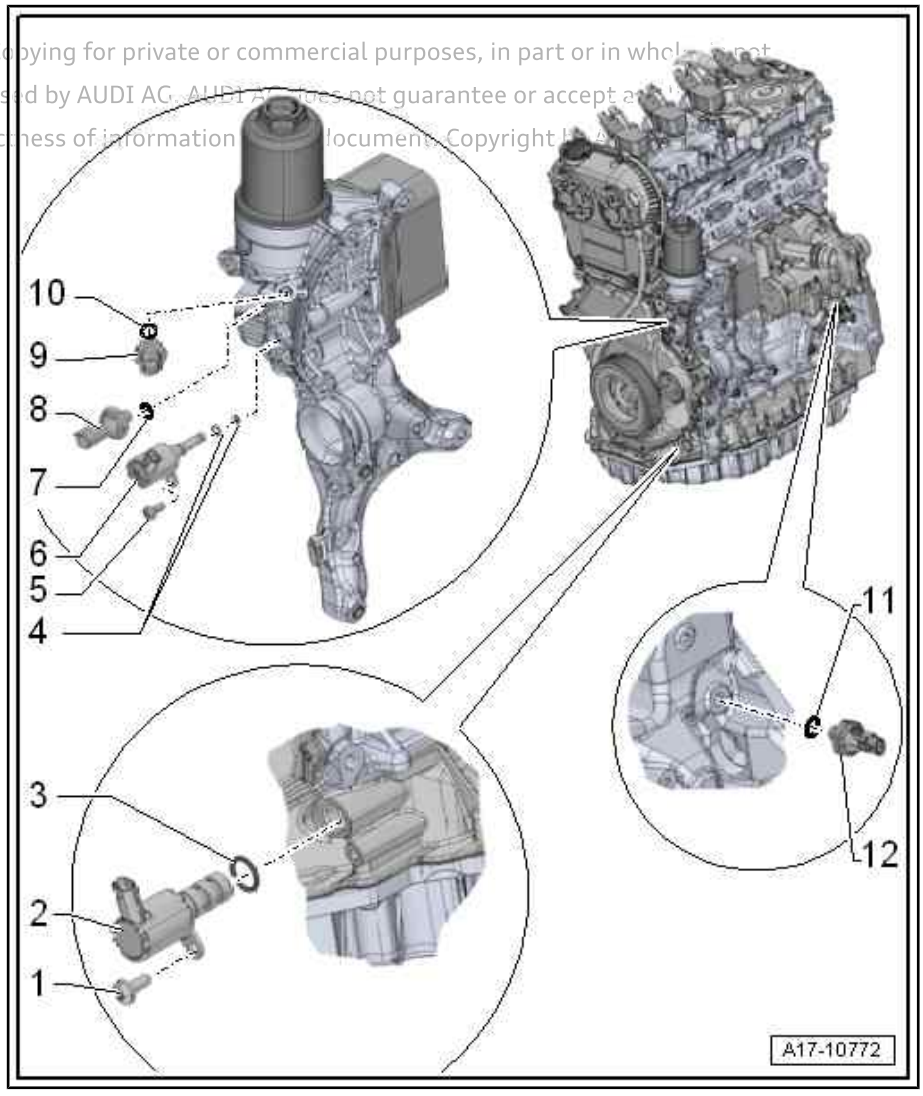

1 - Bolt

- ❑ Renew after removing
- ❑ 4 Nm +45°

2 - Valve for oil pressure control - N428-

- ❑ Checking ⇒ Vehicle diagnostic tester
- ❑ Removing and installing ⇒ page 191

3 - O-ring

- ❑ Renew after removing
- ❑ Lubricate lightly with engine oil

4 - O-rings

- ❑ Renew after removing
- ❑ Lubricate lightly with engine oil

5 - Bolt

- ❑ Renew aluminium bolt after removal
- ❑ Tightening torques:

- ♦ Steel bolt: 9 Nm
- ♦ Aluminium bolt: 4 Nm +45°

6 - Piston cooling jet control valve - N522-

- ❑ Removing and installing ⇒ page 192

7 - Seal

- ❑ Renew after removing

8 - Oil pressure switch - F22-

- ❑ Blue insulation
- ❑ Checking ⇒ Vehicle diagnostic tester
- ❑ Removing and installing ⇒ page 187
- ❑ 20 Nm

9 - Oil pressure switch for reduced oil pressure - F378-

- ❑ Brown insulation
- ❑ Checking ⇒ Vehicle diagnostic tester
- ❑ Removing and installing ⇒ page 187
- ❑ 20 Nm

10 - Seal

- ❑ Renew after removing

11 - Seal

- ❑ Renew after removing

12 - Stage 3 oil pressure switch - F447-

- ❑ Green insulation
- ❑ Checking ⇒ Vehicle diagnostic tester
- ❑ Removing and installing ⇒ “5.5.1 Removing and installing stage 3 oil pressure switch F447 - vehicles without particulate filter”, page 188
- ❑ 20 Nm

5.2.2 Exploded view - oil pressure switches/oil pressure control, vehicles with starter-alternator

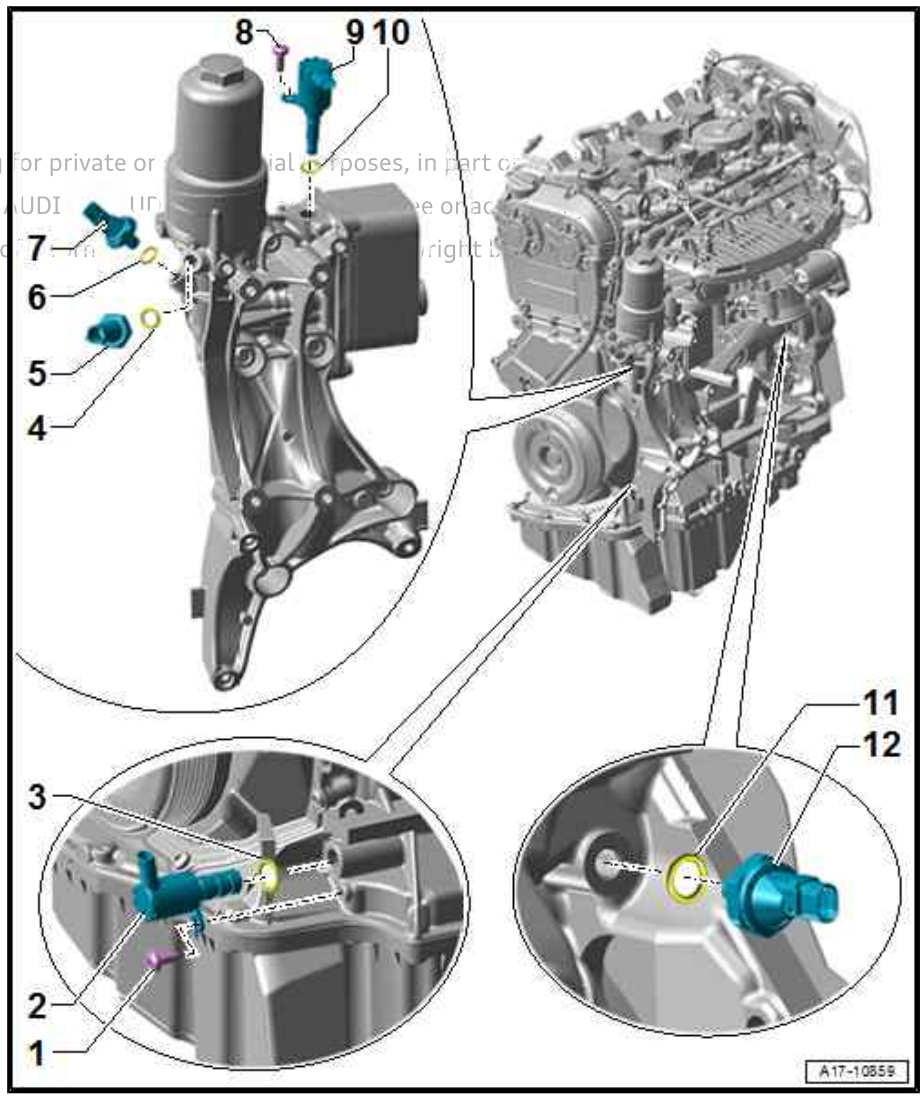

1 - Bolt

- ❑ Renew after removing
- ❑ 4 Nm +45°

2 - Valve for oil pressure control - N428-

- ❑ Checking ⇒ Vehicle diagnostic tester
- ❑ Removing and installing ⇒ page 191

3 - O-ring

- ❑ Renew after removing
- ❑ Lubricate lightly with engine oil

4 - O-ring

- ❑ Renew after removing
- ❑ Lubricate lightly with engine oil

5 - Oil pressure switch for reduced oil pressure - F378-

- ❑ Brown insulation
- ❑ Checking ⇒ Vehicle diagnostic tester
- ❑ Removing and installing ⇒ page 187
- ❑ 20 Nm

6 - O-ring

- ❑ Renew after removing
- ❑ Lubricate lightly with engine oil

7 - Oil pressure switch - F22-

- ❑ Blue insulation
- ❑ Checking ⇒ Vehicle diagnostic tester
- ❑ Removing and installing ⇒ page 187
- ❑ 20 Nm

Protected by copyright. Copying for private or commercial purposes, in part or in whole, is not permitted unless authorised by AUDI AG. AUDI AG does not guarantee or accept any liability with respect to the correctness of information in this document. Copyright by AUDI AG.

8 - Bolt

- ❑ 9 Nm

9 - Piston cooling jet control valve - N522-

- ❑ Removing and installing ⇒ page 192

10 - Seal

- ❑ Renew after removing

11 - Seal

- ❑ Renew after removing

12 - Stage 3 oil pressure switch - F447-

- ❑ Green insulation
- ❑ Checking ⇒ Vehicle diagnostic tester
- ❑ Removing and installing ⇒ "5.5.2 Removing and installing stage 3 oil pressure switch F447 - vehicles with particulate filter/cat-back system", page 189
- ❑ 20 Nm

Protected by copyright. Copying for private or commercial purposes, in part or in whole, is not permitted unless authorised by AUDI AG. AUDI AG does not guarantee or accept any liability with respect to the correctness of information in this document. Copyright by AUDI AG.

5.3 Removing and installing oil pressure switch - F22-

Procedure

Preparatory work may be necessary depending on model ⇒ 4-cylinder direct injection engine (1.8, 2.0 ltr. 4-valve TFSI); Rep. gr. 17 ; Oil filter/oil pressure switches; Removing and installing oil pressure switch - F22- .

– Unplug electrical connector -1-.

– Place a cloth underneath bracket for ancillaries to catch any escaping oil.

– Remove oil pressure switch - F22- -item 2-. (Illustration shows vehicle with alternator.)

• Renew seal after removing.

– Fit new oil pressure switch immediately to avoid loss of oil.

– Check oil level ⇒ page 169 .

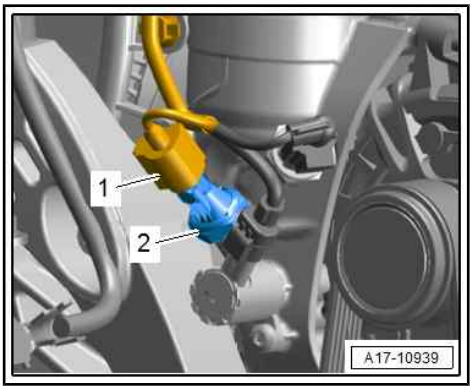

Tightening torques

◆ ⇒ "5.2 Exploded view - oil pressure switches/oil pressure control", page 185

5.4 Removing and installing oil pressure switch for reduced oil pressure - F378-

Procedure

Preparatory work may be necessary depending on model ⇒ 4-cylinder direct injection engine (1.8, 2.0 ltr. 4-valve TFSI); Rep. gr. 17 ; Oil filter/oil pressure switches; Removing and installing oil pressure switch for reduced oil pressure - F378- .

– Unplug electrical connector -2-.

– Place a cloth underneath bracket for ancillaries to catch any escaping oil.

– Unscrew oil pressure switch for reduced oil pressure - F378- -item 1-. (Illustration shows vehicle with alternator.)

• Renew seal after removing.

– Fit new oil pressure switch immediately to avoid loss of oil.

– Check oil level ⇒ page 169 .

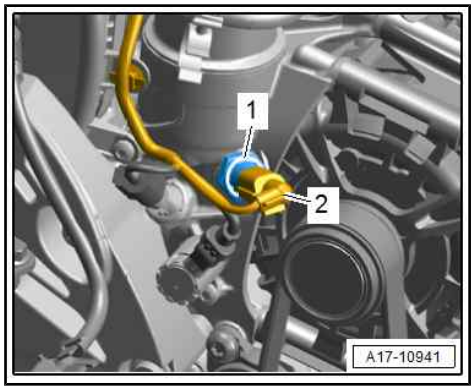

Tightening torques

◆ ⇒ “5.2 Exploded view - oil pressure switches/oil pressure control”, page 185

5.5 Removing and installing stage 3 oil pressure switch - F447-

⇒ “5.5.1 Removing and installing stage 3 oil pressure switch F447 - vehicles without particulate filter”, page 188

⇒ “5.5.2 Removing and installing stage 3 oil pressure switch F447 - vehicles with particulate filter/cat-back system”, page 189

5.5.1 Removing and installing stage 3 oil pressure switch - F447- - vehicles without particulate filter

Protected by copyright. Copying for private or commercial purposes, in part or in whole, is not permitted unless authorised by AUDI AG. AUDI AG does not guarantee or accept any liability with respect to the correctness of information in this document. Copyright by AUDI AG.

Special tools and workshop equipment required

◆ Articulated wrench, 24 mm - T40175-

Procedure

Preparatory work may be necessary depending on model ⇒ 4-cylinder direct injection engine (1.8, 2.0 ltr. 4-valve TFSI); Rep. gr. 17 ; Oil filter/oil pressure switches; Removing and installing stage 3 oil pressure switch - F447- .

– If fitted, remove engine cover panel ⇒ page 15 .

– If fitted, remove bolt -1- and push bracket -2- with engine wiring harness to one side.

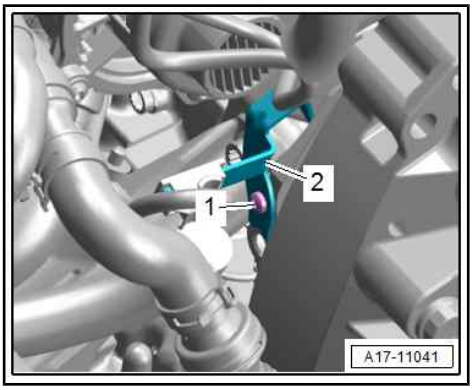

– Unplug electrical connector -1-.
– Remove bolts -arrows- and detach toothed belt cover.
– Lay a cloth under the oil pressure switch to catch escaping engine oil.
• Renew seal after removing.
– Use articulated wrench, 24 mm - T40175- to unscrew stage 3 oil pressure switch - F447- -item 2-.
– Fit new oil pressure switch immediately to avoid loss of oil.
– Check oil level ⇒ page 169 .
– Install engine cover panel ⇒ page 15 .

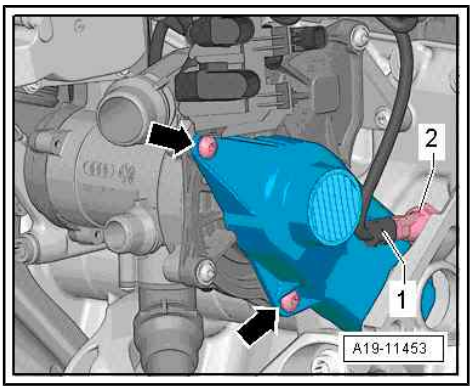

Additional work depending on model ⇒ 4-cylinder direct injection engine (1.8, 2.0 ltr. 4-valve TFSI); Rep. gr. 17 ; Oil filter/oil pressure switches ; Removing and installing stage 3 oil pressure switch - F447-

Tightening torques

- ⇒ “5.2.1 Exploded view - oil pressure switches/oil pressure control, vehicles with alternator”, page 185
- ⇒ “3.1 Exploded view - coolant pump/thermostat”, page 202

5.5.2 Removing and installing stage 3 oil pressure switch - F447- - vehicles with particulate filter/cat-back system

Special tools and workshop equipment required

- Socket - T10405-

Protected by copyright. Copying for private or commercial purposes, in part or in whole, is not permitted unless authorised by AUDI AG. AUDI AG does not guarantee or accept any liability with respect to the correctness of information in this document. Copyright by AUDI AG.

- Articulated wrench, 24 mm - T40175-

Protected by copyright. Copying for private or commercial purposes, in part or in whole, is not permitted unless authorised by AUDI AG. AUDI AG does not guarantee or accept any liability with respect to the correctness of information in this document. Copyright by AUDI AG.

Procedure

Preparatory work may be necessary depending on model ⇒ 4-cylinder direct injection engine (2.0 ltr. 4-valve TFSI); Rep. gr. 17 ; Oil filter/oil pressure switches; Removing and installing stage 3 oil pressure switch - F447- .

– If fitted, remove bolt -1- for bracket -2- for engine wiring harness.

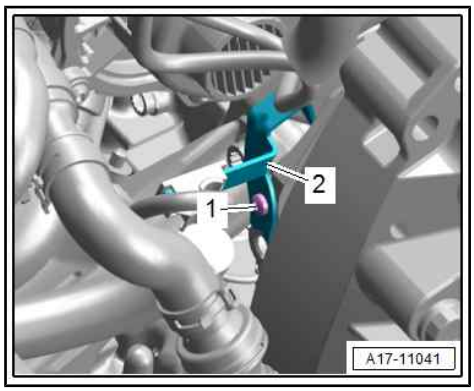

– Unplug electrical connector -2- for stage 3 oil pressure switch - F447- .
– Move electrical wiring harness -3- and engine wiring harness clear.
– Remove bolts -arrows- and detach toothed belt cover -1-.
– Lay a cloth under the oil pressure switch to catch escaping engine oil.

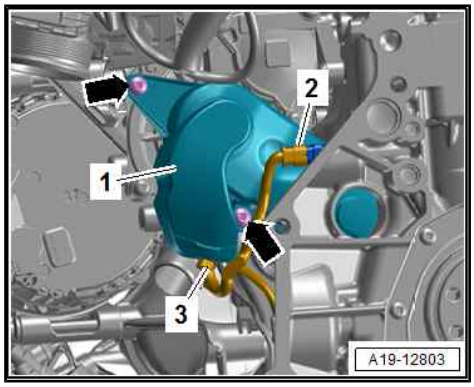

• Renew seal after removing.

– Use articulated wrench, 24 mm - T40175- to unscrew stage 3 oil pressure switch - F447- -item 2-.
– Fit new oil pressure switch immediately to avoid loss of oil.
– Check oil level ⇒ page 169 .

Additional work depending on model ⇒ 4-cylinder direct injection engine (2.0 ltr. 4-valve TFSI); Rep. gr. 17 ; Oil filter/oil pressure switches ; Removing and installing stage 3 oil pressure switch - F447-

Tightening torques

- ⇒ “5.2.2 Exploded view - oil pressure switches/oil pressure control, vehicles with starter-alternator”, page 186
- ⇒ “3.1 Exploded view - coolant pump/thermostat”, page 202

5.6 Removing and installing valve for oil pressure control - N428-

Special tools and workshop equipment required

- Used oil collection and extraction unit - VAS 6622A-

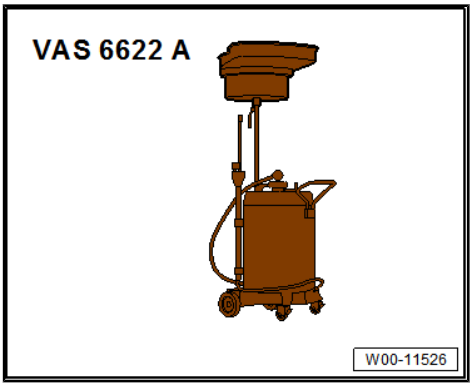

Removing

– Remove noise insulation (front) ⇒ General body repairs, exterior; Rep. gr. 66 ; Noise insulation; Removing and installing noise insulation .

– If necessary, remove bolts -arrows- and press wiring duct downwards.

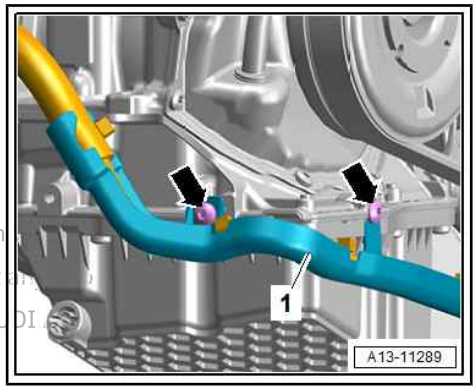

Protected by copyright. Copying for private or commercial purposes, in part or in
permitted unless authorised by AUDI AG. AUDI AG does not guarantee or accept
with respect to the correctness of information in this document. Copyright by AUDI

– Unplug electrical connector -1-.

– Position used oil collection and extraction unit - VAS 6622A- below engine.

– Remove bolt -2- and detach valve for oil pressure control - N428- (pull poly V-belt slightly downwards if necessary).

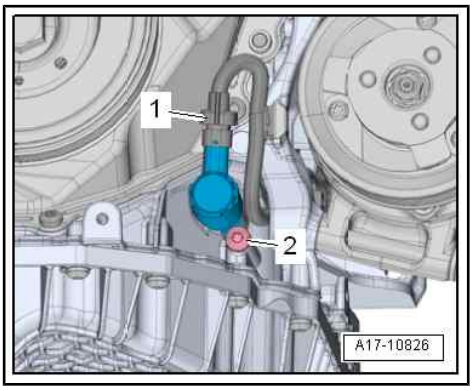

Installing

Installation is carried out in reverse order; note the following:

- Renew O-ring after removal.

– Check oil level ⇒ page 169 .

Tightening torques

- ⇒ “5.2 Exploded view - oil pressure switches/oil pressure control”, page 185
- ⇒ General body repairs, exterior; Rep. gr. 66 ; Noise insulation; Exploded view - noise insulation

5.7 Removing and installing piston cooling jet control valve - N522-

⇒ “5.7.1 Removing and installing piston cooling jet control valve N522 - vehicles with alternator”, page 192

⇒ “5.7.2 Removing and installing piston cooling jet control valve N522 - vehicles with starter-alternator”, page 192

5.7.1 Removing and installing piston cooling jet control valve - N522- - vehicles with alternator

Procedure

Preparatory work may be necessary depending on model ⇒ 4-cylinder direct injection engine (1.8, 2.0 ltr. 4-valve TFSI); Rep. gr. 17 ; Oil filter/oil pressure switches .

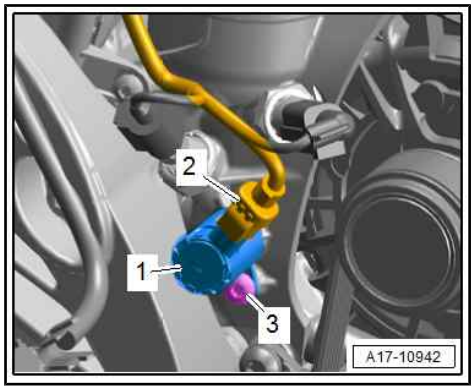

– Unplug electrical connector -2-.
– Place a cloth underneath bracket for ancillaries to catch any escaping oil.
– Remove bolt -3- and detach piston cooling jet control valve - N522- -item 1-.
• Renew O-rings after removing.
– Fit new piston cooling jet control valve - N522- immediately to avoid loss of oil.
– Check oil level ⇒ page 169 .

Tightening torques

◆ ⇒ “5.2.1 Exploded view - oil pressure switches/oil pressure control, vehicles with alternator”, page 185

5.7.2 Removing and installing piston cooling jet control valve - N522- - vehicles with starter-alternator

Protected by Copyright. Copying for private or commercial purposes, in part or in whole, is not permitted unless authorised by AUDI AG. AUDI AG does not guarantee or accept any liability with respect to the correctness of information in this document. Copyright by AUDI AG.

Procedure

Preparatory work may be necessary depending on model ⇒ 4-cylinder direct injection engine (1.8, 2.0 ltr. 4-valve TFSI); Rep. gr. 17 ; Oil filter/oil pressure switches .

– Remove intake manifold ⇒ page 240 .

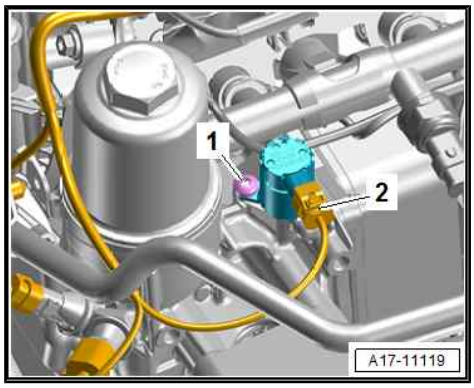

– Unplug electrical connector -2-.
– Place a cloth underneath bracket for ancillaries to catch any escaping oil.
– Remove bolt -1- and detach piston cooling jet control valve - N522- .
• Renew O-rings after removing.
– Fit new piston cooling jet control valve - N522- immediately to avoid loss of oil.
– Install intake manifold ⇒ page 240 .
– Check oil level ⇒ page 169 .

Tightening torques

◆ ⇒ “5.2.2 Exploded view - oil pressure switches/oil pressure control, vehicles with starter-alternator”, page 186

5.8 Checking oil pressure

⇒ “5.8.1 Checking engine oil pressure”, page 193

⇒ “5.8.2 Checking oil pressure for piston cavity oil jets”, page 194

5.8.1 Checking engine oil pressure

Special tools and workshop equipment required

- Oil pressure tester - V.A.G 1342-

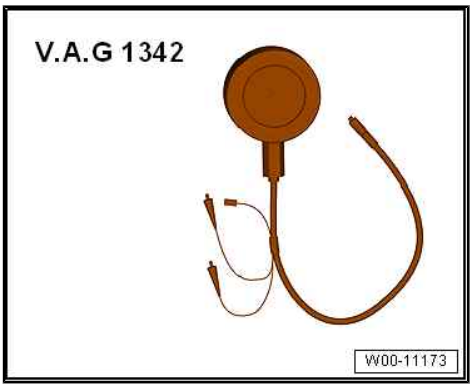

- Articulated wrench, 24 mm - T40175-

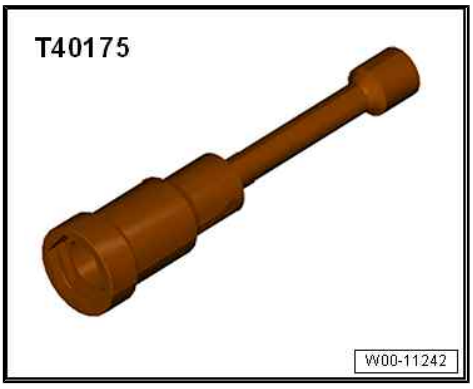

Test requirements

- Oil level OK
- Engine oil temperature at least 80 °C (radiator fan must have run once).
- The oil pump is regulated and has two pressure stages. The pressure stages are tested one after the other.
- During the running-in period or when the engine is in emergency running mode, the oil pump only operates in the higher pressure stage.
- The oil pressure is dependent on the engine oil temperature. The mean value should be reached at an engine oil temperature of around 80 °C.

Test sequence

– Remove oil pressure switch for reduced oil pressure - F378- ⇒ page 187 .

– Screw oil pressure tester - V.A.G 1342- into oil filter bracket in place of oil pressure switch.

– Screw oil pressure switch for reduced oil pressure - F378- into oil pressure tester - V.A.G 1342- and plug in electrical connector.

– Start engine.

Protected by copyright. Copying for private or commercial purposes, in part or in whole, is not permitted unless authorized by AUDI AG. AUDI AG does not guarantee or accept any liability with respect to the correctness of information in this document. Copyright by AUDI AG.

Protected by copyright. Copying for private or commercial purposes, in part or in whole, is not permitted unless authorised by AUDI AG. AUDI AG does not guarantee or accept any liability with respect to the correctness of information in this document. Copyright by AUDI AG.

- Oil pressure at idling speed: 0.85 ... 1.6 bar
- Oil pressure at 2000 rpm: 1.2 ... 1.6 bar
- Oil pressure at 3700 rpm: 3.0 ... 4.0 bar (second pressure stage active, valve for oil pressure control - N428- OK)

– Switch off engine.

– Remove noise insulation (front) ⇒ General body repairs, exterior; Rep. gr. 66 ; Noise insulation; Removing and installing noise insulation .

– Unplug electrical connector -1- for valve for oil pressure control - N428- . Unclip electrical wire and route downwards so that it does not come into contact with belt drive.

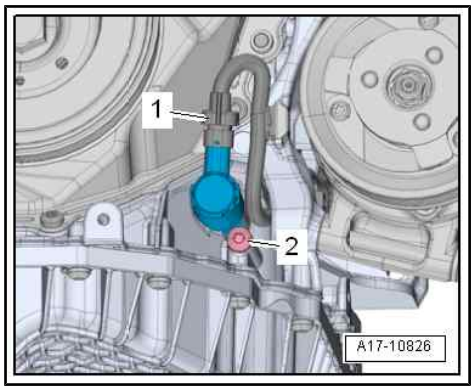

Note:

When connector is unplugged, oil pump operates in the higher pressure stage.

– Start engine and check oil pressure at specified engine speeds.

- Oil pressure at idling speed: 0.85 ... 4.0 bar
- Oil pressure at 2000 rpm: 2.0 ... 4.0 bar
- Oil pressure at 3700 rpm: 3.0 ... 4.0 bar

Assembling

– Install oil pressure switch ⇒ page 187 and route electrical wiring carefully.

– Erase any entries in engine control unit event memory resulting from testing ⇒ Vehicle diagnostic tester.

Tightening torques

- ⇒ “5.2 Exploded view - oil pressure switches/oil pressure control”, page 185
- ⇒ General body repairs, exterior; Rep. gr. 66 ; Noise insulation; Exploded view - noise insulation

5.8.2 Checking oil pressure for piston cavity oil jets

Special tools and workshop equipment required

- Oil pressure tester - V.A.G 1342-

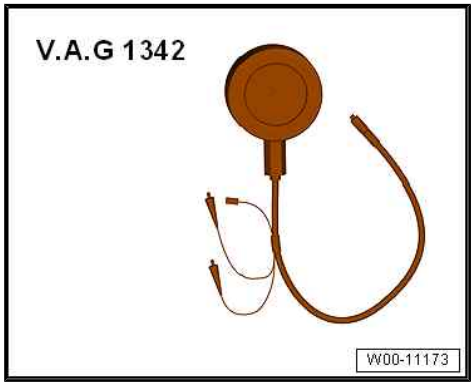

♦ Test instrument adapter - VAS 5571-

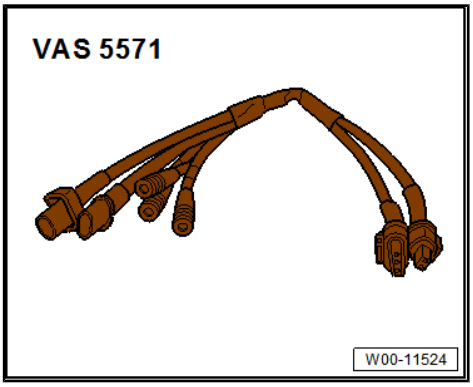

Test requirements

- Oil level OK
- Engine oil temperature at least 80 °C (radiator fan must have run once).

Test sequence

– Remove stage 3 oil pressure switch - F447- ⇒ page 188 .

– Screw stage 3 oil pressure switch - F447- into oil pressure tester - V.A.G 1342- .

– Screw in oil pressure tester - V.A.G 1342- in place of oil pressure switch.

– Connect test instrument adapter/DSO (2-pin) - VAS 5571- to oil pressure switch.

– Plug electrical connector for stage 3 oil pressure switch - F447- into test instrument adapter/DSO (2-pin) - VAS 5571- .

– Check oil pressure ⇒ Vehicle diagnostic tester, `Stage 3 oil pressure switch F447`.

Assembling

– Install stage 3 oil pressure switch - F447- ⇒ page 188 .

5.9 Checking oil pressure and oil pressure switch

– Check oil pressure ⇒ page 193 .

– Check oil pressure switch ⇒ Vehicle diagnostic tester.

Protected by copyright. Copying for private or commercial purposes, in part or in whole, is not permitted unless authorised by AUDI AG. AUDI AG does not guarantee or accept any liability with respect to the correctness of information in this document. Copyright by AUDI AG.

19 – Cooling

1 Safety precautions

Protected by copyright. Copying for private or commercial purposes, in part or in whole, is not permitted unless authorised by AUDI AG. AUDI AG does not guarantee or accept any liability with respect to the correctness of information in this document. Copyright by AUDI AG.

Observe safety precautions ⇒ 4-cylinder direct injection engine (2.0 ltr. 4-valve TFSI, EA 888 Gen. III); Rep. gr. 00 ; Safety precautions .

2 Cooling system/coolant

⇒ "2.1 Connection diagram - coolant hoses", page 197

⇒ "2.2 Checking cooling system for leaks", page 197

⇒ "2.3 Draining and filling cooling system", page 201

2.1 Connection diagram - coolant hoses

All components are described in ⇒ 4-cylinder direct injection engine (1.8, 2.0 ltr. 4-valve TFSI); Rep. gr. 19 ; Cooling system/ coolant; Connection diagram - coolant hoses .

2.2 Checking cooling system for leaks

Special tools and workshop equipment required

- Cooling system tester - V.A.G 1274 B-

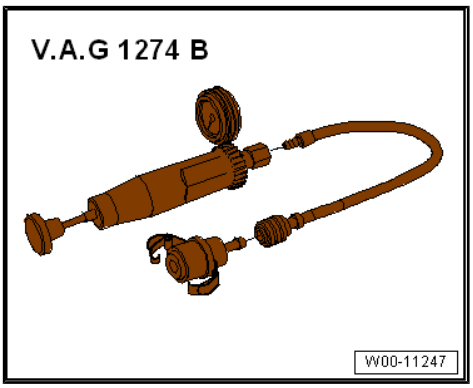

- Adapter for cooling system tester - V.A.G 1274/8-

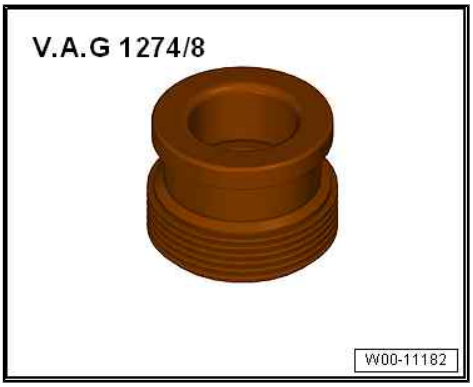

- Cooling system tester adapter - V.A.G 1274B/15- for filler cap (version 1)

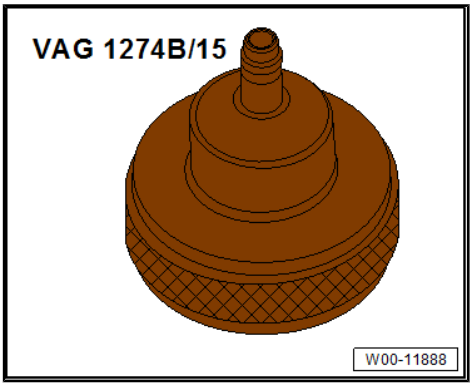

Protected by copyright. Copying for private or commercial purposes, in part or in whole, is not permitted unless authorised by AUDI AG. AUDI AG does not guarantee or accept any liability with respect to the correctness of information in this document. Copyright by AUDI AG.

- Cooling system tester adapter - V.A.G 1274/9- for filler cap (version 2)

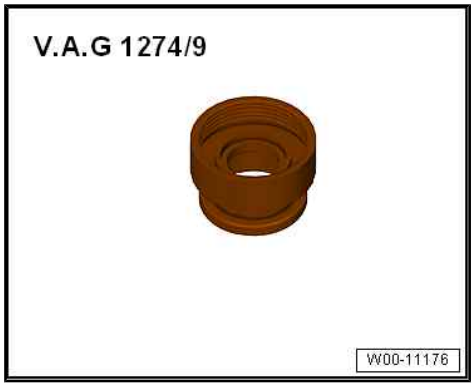

- Safety goggles
- Protective gloves

Test requirements

- Engine must be warm.
- Ignition off

Protected by copyright. Copying for private or commercial purposes, in part or in whole, is not permitted unless authorised by AUDI AG. AUDI AG does not guarantee or accept any liability with respect to the correctness of information in this document. Copyright by AUDI AG.

Procedure

CAUTION

The cooling system is under pressure when the power unit is hot. Risk of scalding due to hot steam and hot coolant.

Danger of scalding skin and other parts of the body.

– Put on protective gloves.
– Put on safety goggles.
– Cover filler cap on expansion tank with a cloth and open carefully to release pressure.

– Release fastener -arrow- (if necessary) and open filler cap -1- on coolant expansion tank.

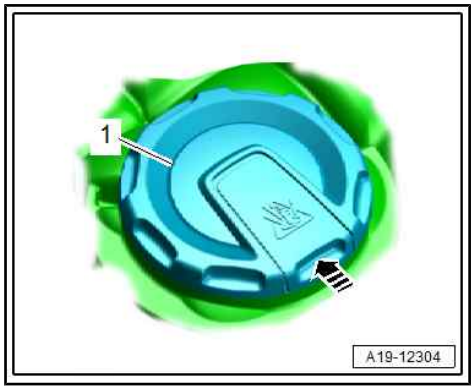

Note:

There are variations depending on model and version.

– Fit cooling system tester - V.A.G 1274 B- with adapter - V.A.G 1274/8- onto coolant expansion tank.
– Using hand pump on cooling system tester, build up a pressure of approx. 1.0 bar.
• The pressure should not drop more than 0.2 bar within 10 minutes.
– If the pressure drops more than 0.2 bar, locate leak and eliminate fault.

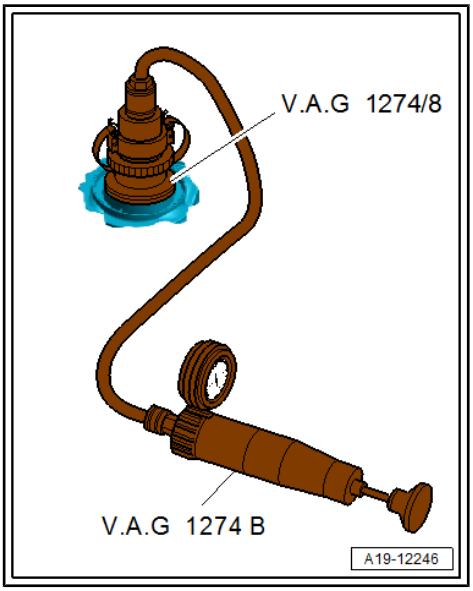

Note:

The drop in pressure of 0.2 bar within 10 minutes is caused by the decrease in coolant temperature. The colder the engine is, the less the pressure will fall. If necessary, check again when the engine is cold.

⚠ CAUTION

Risk of scalding due to hot steam and hot coolant.

Danger of scalding skin and other parts of the body.

– To release pressure, press pressure relief valve on cooling system tester until reading on pressure gauge is 0.

Checking pressure relief valve in filler cap, version 1

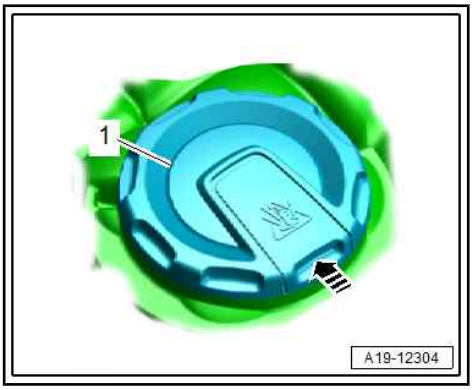

– Fit cooling system tester - V.A.G 1274 B- with adapter - V.A.G 1274 B/15- onto filler cap.
– Using hand pump on cooling system tester, build up a pressure of approx. 2 bar.

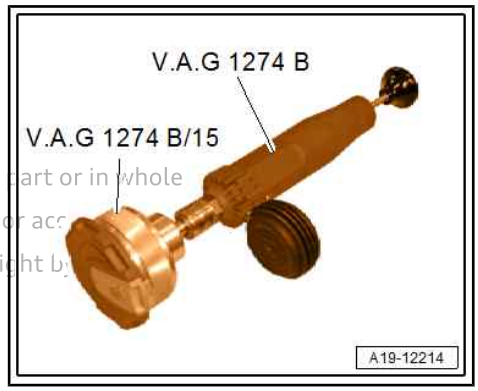

Blue filler cap:

• The pressure must be reduced to 1.6 ... 1.4 bar and kept at this level.

Black filler cap:

• The pressure must be reduced to 1.8 ... 1.6 bar and kept at this level.

All filler cap types:

– Renew filler cap if pressure relief valve does not react as described.

Protected by copyright. Copying for private or commercial purposes, in part or in whole is not permitted unless authorised by AUDI AG. AUDI AG does not guarantee or accept any liability with respect to the correctness of information in this document. Copyright by AUDI AG.

Checking pressure relief valve in filler cap, version 2

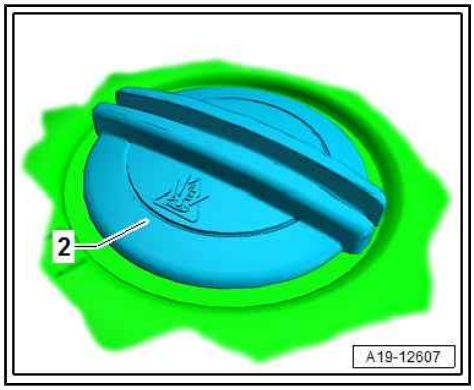

– Fit cooling system tester - V.A.G 1274 B- with adapter - V.A.G 1274/9- onto filler cap -1-.

– Using hand pump on cooling system tester, build up a pressure of approx. 2 bar.

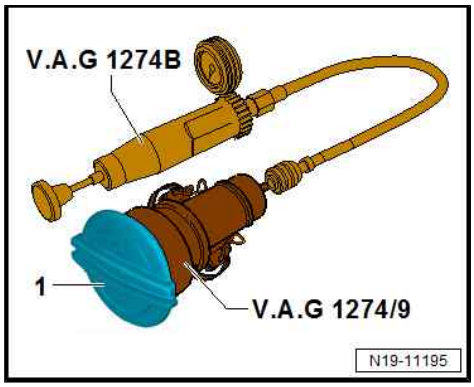

Blue filler cap:

- The pressure relief valve should open at a pressure of 1.4 ... 1.6 bar.

Black filler cap:

- The pressure relief valve should open at a pressure of 1.6 ... 1.8 bar.

All filler cap types:

– Renew filler cap if pressure relief valve does not react as described.

Protected by copyright. Copying for private or commercial purposes, in part or in whole, is not permitted unless authorised by AUDI AG. AUDI AG does not guarantee or accept any liability with respect to the correctness of information in this document. Copyright by AUDI AG.

2.3 Draining and filling cooling system

Coolant specifications

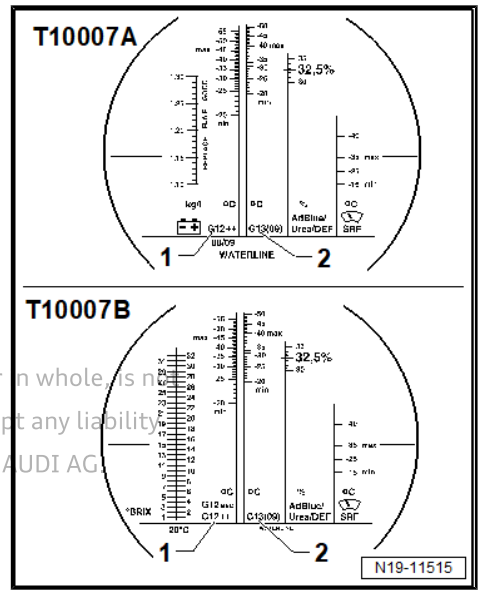

Note

- *The effectiveness of the coolant is greatly influenced by the quality of the water with which it is mixed. Because water may contain different substances depending on the country or even the region, the water quality to be used for cooling systems has been specified. Distilled water meets all the requirements and is therefore recommended for use when topping up or filling up with coolant.*
- *Use only coolant additives listed in the ⇒ Electronic parts catalogue (ETKA) . If you use other coolant additives, this can significantly impair in particular the corrosion protection effect. The resulting damage could lead to loss of coolant and consequently to serious damage to the power unit.*
- *Coolant with the recommended mixture ratio prevents frost and corrosion damage and stops scaling. At the same time it raises the boiling point of the fluid in the system. For this reason the cooling system must be filled all year round with the correct coolant additive.*
- *Because of its high boiling point, the coolant improves power unit reliability under heavy loads, particularly in countries with tropical climates.*
- *Refractometer - T10007A- or refractometer - T10007B- MUST be used to determine the current level of frost protection.*
- *Scale -1- on the refractometer applies to coolant additives G12 ++ and G12evo.*
- *Scale -2- on the refractometer applies to coolant additive G13.*
- *If more than one type of coolant additive has been used: Always use the scale for G13 to determine the anti-freeze protection.*
- *The mixture must guarantee frost protection down to at least -25 °C (in countries with arctic climate: down to -36 °C). The amount of antifreeze should only be increased if greater frost protection is required in very cold climates. This must only be down to -48 °C, however, as otherwise the cooling efficiency of the coolant is impaired.*
- *The coolant concentration must not be reduced by adding water even in warmer seasons and in warmer countries. Frost protection must be provided to at least -25 °C.*
- *The temperature indicated on the refractometer corresponds to the temperature at which the first ice crystals can form in the coolant.*
- *Do not reuse coolant.*
- *Only use water/coolant additive as a lubricant for coolant hoses.*

Draining and filling cooling system

All procedures are described in ⇒ 4-cylinder direct injection engine (1.8, 2.0 ltr. 4-valve TFSI); Rep. gr. 19 ; Cooling system/ coolant; Draining and filling cooling system .

Protected by copyright. Copying for private or commercial purposes, in part or in whole, is not permitted unless authorised by AUDI AG. AUDI AG does not guarantee or accept any liability with respect to the correctness of information in this document. Copyright by AUDI AG.

3 Coolant pump/thermostat assembly

⇒ “3.1 Exploded view - coolant pump/thermostat”, page 202

⇒ “3.2 Exploded view - electric coolant pump”, page 203

⇒ “3.3 Exploded view - coolant temperature senders”, page 204

⇒ “3.4 Removing and installing electric coolant pump”, page 204

⇒ “3.5 Removing and installing coolant pump”, page 205

⇒ “3.6 Removing and installing toothed belt for coolant pump”, page 206

⇒ “3.7 Removing and installing actuator for engine temperature regulation N493 ”, page 209

⇒ “3.8 Removing and installing coolant temperature sender G62 ”, page 211

⇒ “3.9 Removing and installing radiator outlet coolant temperature sender G83 ”, page 212

⇒ “3.10 Removing and installing coolant valves”, page 212

3.1 Exploded view - coolant pump/thermostat

1 - Connection

2 - O-ring
- ❑ Renew after removing
- ❑ Lubricate with coolant

3 - Centring pin

4 - Bolt
- ❑ Tightening torques and sequence ⇒ page 203

5 - Gasket
- ❑ Renew after removing

6 - Coolant pump
- ❑ Removing and installing ⇒ page 205
- ❑ New coolant pump: remove protective cap

7 - Bolt
- ❑ Tightening sequence ⇒ page 203

8 - Toothed belt
- ❑ For coolant pump
- ❑ Removing and installing ⇒ page 206

9 - Bolt
- ❑ 9 Nm

10 - Toothed belt cover

11 - Bolt
- ❑ Left-hand thread
- ❑ Renew after removing

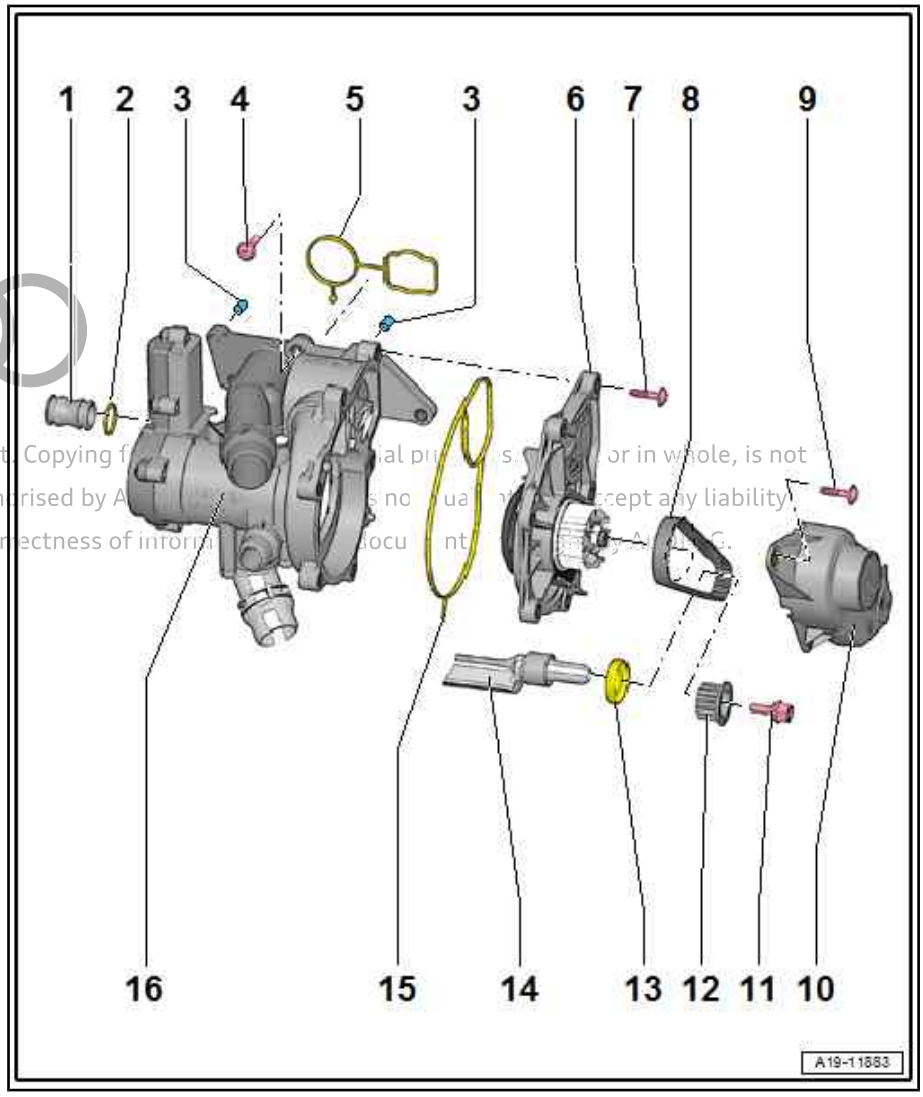

Protected by copyright. Copying for private or commercial purposes, in part or in whole, is not permitted unless authorised by Audi AG. Audi AG does not guarantee or accept any liability with respect to the correctness of information in this document. © Audi AG.

- ❑ 10 Nm +90°

12 - Toothed belt drive sprocket

- ❑ Note installation position

13 - Oil seal

- ❑ For balance shaft (inlet side)
- ❑ Renewing ⇒ page 64

14 - Balance shaft (inlet side)

15 - Gasket

- ❑ Renew after removing

16 - Actuator for engine temperature regulation - N493-

- ❑ Removing and installing ⇒ page 209
- ❑ After renewing, perform adaption ⇒ Vehicle diagnostic tester

Actuator for engine temperature regulation - N493- - tightening sequence

– Tighten bolts in the sequence -1 ... 5- to 9 Nm.

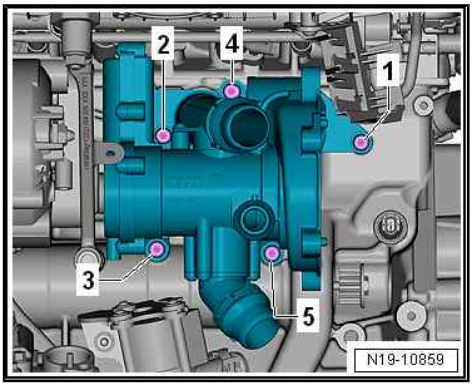

Coolant pump - tightening torques and sequence

– Tighten bolts for coolant pump in the sequence -1 ... 4- to 9 Nm.

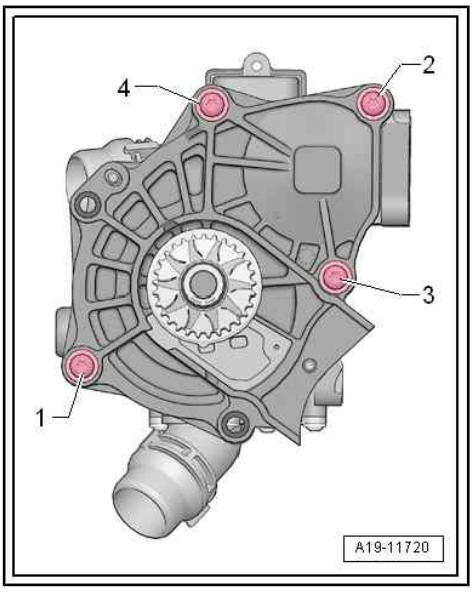

3.2 Exploded view - electric coolant pump

All components are described in ⇒ 4-cylinder direct injection engine (1.8, 2.0 ltr. 4-valve TFSI); Rep. gr. 19 ; Coolant pump/ thermostat assembly; Exploded view - electric coolant pump .

Protected by copyright. Copying for private or commercial purposes, in part or in whole, is not permitted unless authorised by AUDI AG. AUDI AG does not guarantee or accept any liability with respect to the correctness of information in this document. Copyright by AUDI AG.

3.3 Exploded view - coolant temperature senders

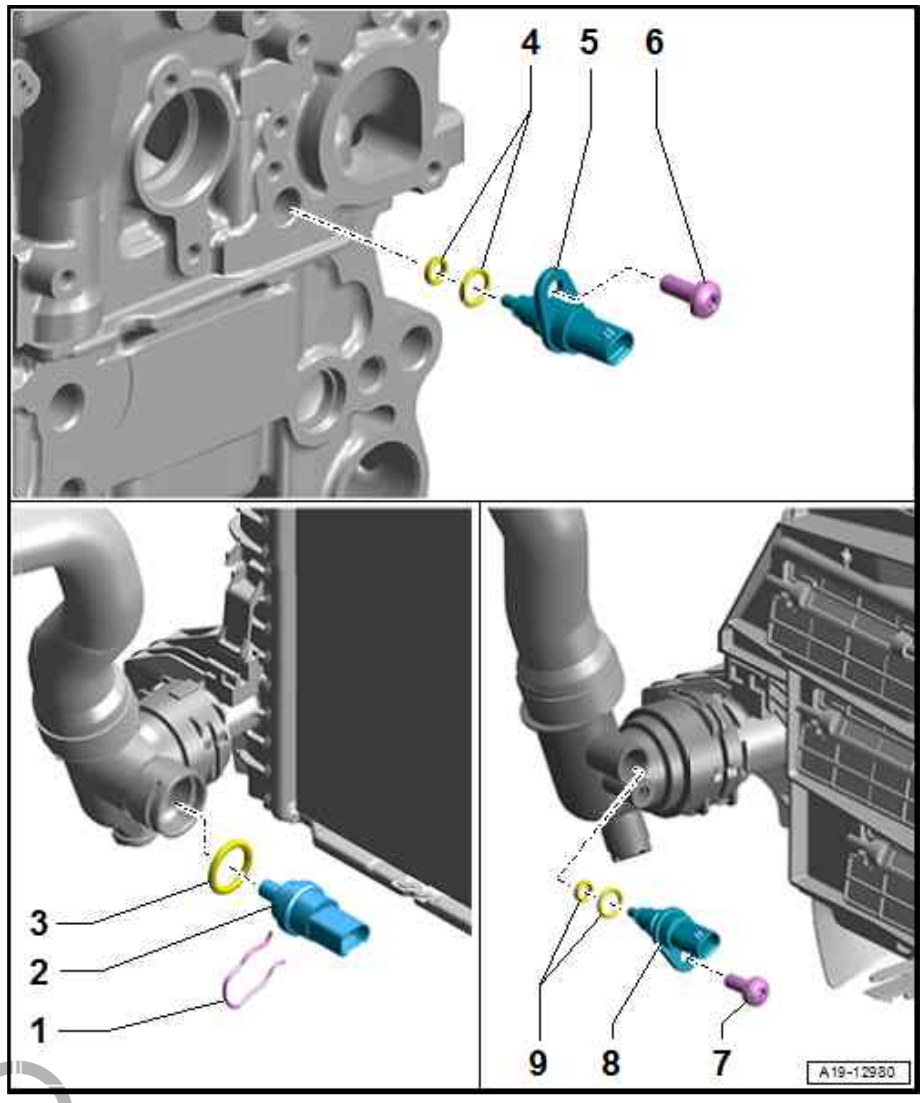

1 - Retaining clip

- ❑ Check for firm attachment

2 - Radiator outlet coolant temperature sender - G83-

- ❑ Push-fitted version
- ❑ Removing and installing ⇒ 4-cylinder direct injection engine, (1.8, 2.0 ltr. 4-valve TFSI); Rep. gr. 19 ; Coolant pump/ thermostat assembly; Removing and installing radiator outlet coolant temperature sender - G83-

3 - O-ring

- ❑ Renew after removing
- ❑ Lubricate with coolant

4 - O-rings

- ❑ Renew after removing
- ❑ Lubricate with coolant

5 - Coolant temperature sender - G62-

- ❑ On cylinder head (gearbox end)
- ❑ Removing and installing ⇒ page 211

6 - Bolt

- ❑ Renew after removing
- ❑ 4 Nm +45°

7 - Bolt

- ❑ 4.5 Nm

8 - Radiator outlet coolant temperature sender - G83-

- ❑ Bolted version
- ❑ Different fitting locations
- ❑ Removing and installing ⇒ page 212

9 - O-rings

- ❑ Renew after removing
- ❑ Lubricate with coolant

Protected by copyright. Copying for private or commercial purposes, in part or in whole, is not permitted unless authorised by AUDI AG. AUDI AG does not guarantee or accept any liability with respect to the correctness of information in this document. Copyright by AUDI AG.

3.4 Removing and installing electric coolant pump

All procedures are described in ⇒ 4-cylinder direct injection engine (1.8, 2.0 ltr. 4-valve TFSI); Rep. gr. 19 ; Coolant pump/ thermostat assembly; Removing and installing electric coolant pump .

3.5 Removing and installing coolant pump

Special tools and workshop equipment required

- Socket T30 - T10405-

Protected by copyright. Copying for private or commercial purposes, in part or in v... not permitted unless authorised by AUDI AG. AUDI AG does not guarantee or acce... liability with respect to the correctness of information in this document. Copyright ... AUDI AG.

Removing

Preparatory work may be necessary depending on model ⇒ 4-cylinder direct injection engine (1.8, 2.0 ltr. 4-valve TFSI); Rep. gr. 19 ; Coolant pump/thermostat assembly; Removing and installing coolant pump .

Toothed belt cover (version 1)

– Unplug electrical connector -1- for stage 3 oil pressure switch - F447- -item 2-.
– Remove bolts -arrows- and detach toothed belt cover.

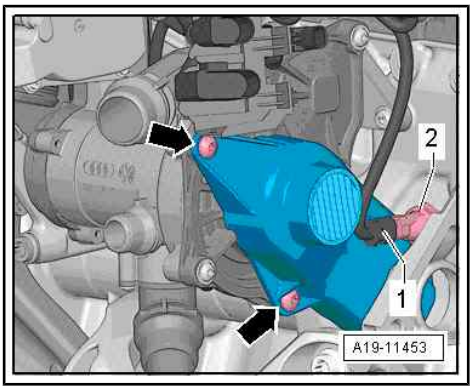

Toothed belt cover (version 2)

– Unplug electrical connector -1- for stage 3 oil pressure switch - F447- -item 2-.
– Move electrical wiring harness -3- clear.
– Remove bolts -arrows- and detach toothed belt cover -1-.

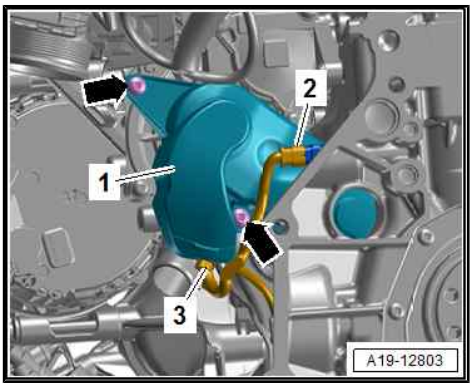

Continued:

– Remove bolts -1 … 4- and detach coolant pump from actuator for engine temperature regulation - N493- .

– Detach toothed belt from coolant pump.

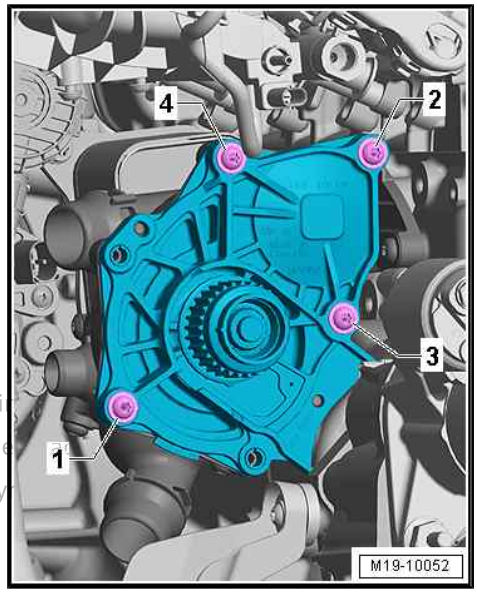

Protected by copyright. Copying for private or commercial purposes, i
permitted unless authorised by AUDI AG. AUDI AG does not guarantee
with respect to the correctness of information in this document. Copy

Installing

Installation is carried out in reverse order; note the following:

• Do not reuse coolant.

– Fit coolant pump -1- and toothed belt.

– Check that centring elements -arrows- and gasket -3- are seated correctly.

– Tighten coolant pump bolts ⇒ page 203 .

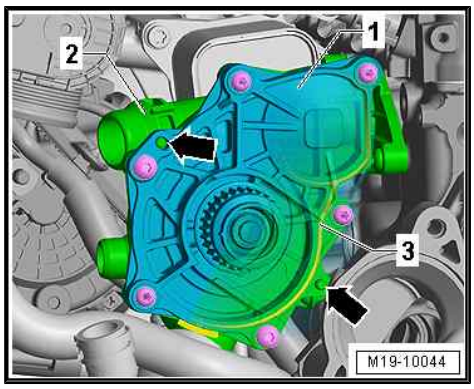

– After fitting new coolant pump -2-, remove protective cap -1- from drive sprocket.

– Fill up coolant ⇒ 4-cylinder direct injection engine (1.8, 2.0 ltr. 4-valve TFSI); Rep. gr. 19 ; Cooling system/coolant; Draining and filling cooling system .

Additional work depending on model ⇒ 4-cylinder direct injection engine (1.8, 2.0 ltr. 4-valve TFSI); Rep. gr. 19 ; Coolant pump/ thermostat assembly; Removing and installing coolant pump

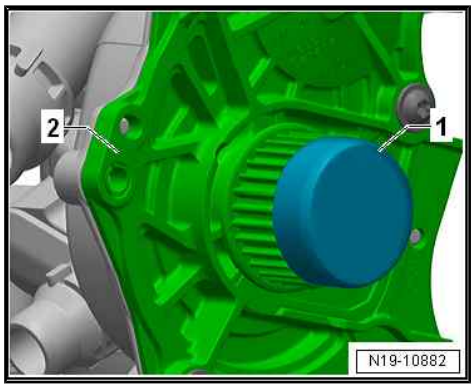

Tightening torques

♦ ⇒ “3.1 Exploded view - coolant pump/thermostat”, page 202

3.6 Removing and installing toothed belt for coolant pump

Special tools and workshop equipment required

- Tool insert - T10360-

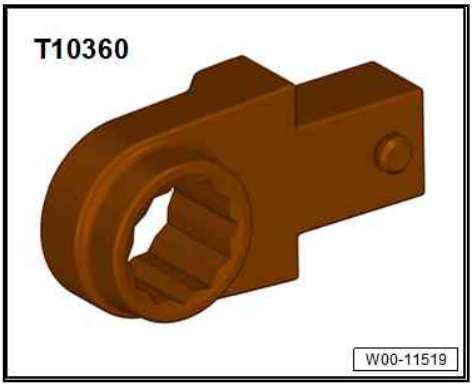

- Ratchet wrench (21 mm) - T40263-

Protected by copyright. Copying for private or commercial purposes, in part or in whole, is not permitted unless authorised by AUDI AG. AUDI AG does not guarantee or accept any liability with respect to the correctness of information in this document. Copyright by AUDI AG.

- Adapter - T40314-

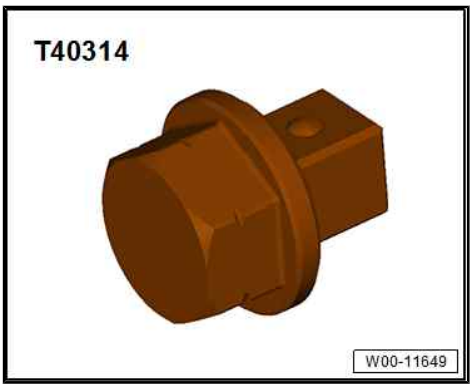

- Counterhold tool - T40378- or

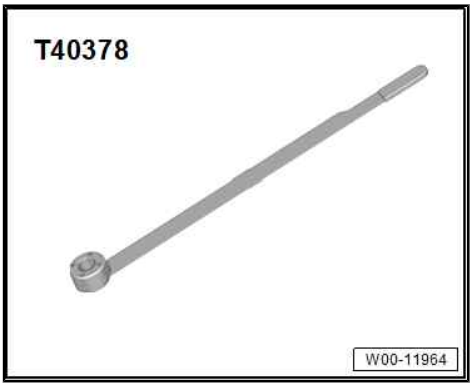

♦ Counterhold tool - T40379-

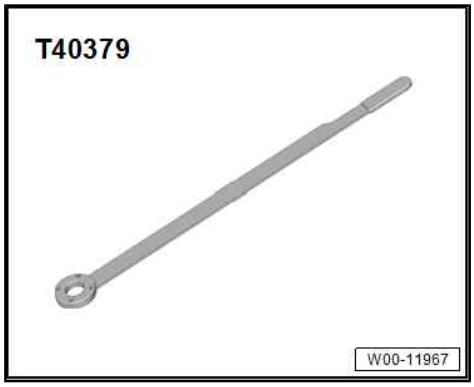

Removing

Preparatory work may be necessary depending on model ⇒ 4-cylinder direct injection engine (1.8, 2.0 ltr. 4-valve TFSI); Rep. gr. 19 ; Coolant pump/thermostat assembly; Removing and installing toothed belt for coolant pump .

– If fitted, remove engine cover panel ⇒ page 15 .

– Remove stage 3 oil pressure switch - F447- ⇒ page 188 .

Vibration damper - version 1:

– Counterhold crankshaft at vibration damper with ratchet wrench (21 mm) - T40263- , adapter - T40314- and socket (24 mm).

Vibration damper - version 2:

– Depending on version, counterhold crankshaft at vibration damper using counterhold tool - T40378- or counterhold tool - T40379- .

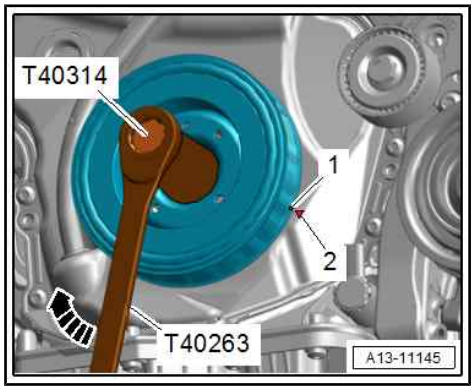

Protected by copyright. Copying for private or commercial purposes, in part or in whole, is not permitted unless authorised by AUDI AG. AUDI AG does not guarantee or accept any liability with respect to the correctness of information in this document. Copyright by AUDI AG.

All versions (continued):

Note:

The drive sprocket bolt has a left-hand thread.

– Use torque wrench - V.A.G 1410- and insert tool - T10360- to remove bolt on coolant pump drive sprocket -1- -arrow- (counterhold at vibration damper).

– Remove toothed belt -2-.

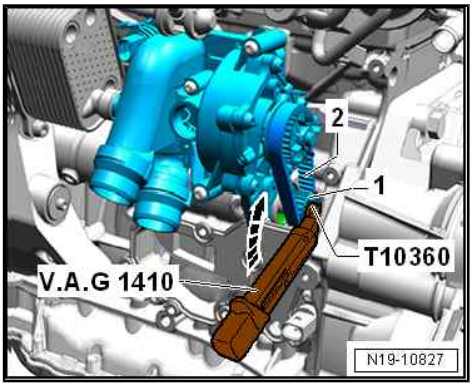

Installing

Installation is carried out in reverse order; note the following:

- After removing, renew bolts tightened with specified tightening angle.
- Note installation position of toothed belt sprocket ⇒ Item 12 (page 203) .

– Install stage 3 oil pressure switch - F447- ⇒ page 188 .

– Install engine cover panel ⇒ page 15 .

Additional work depending on model ⇒ 4-cylinder direct injection engine (1.8, 2.0 ltr. 4-valve TFSI); Rep. gr. 19 ; Coolant pump/thermostat assembly; Removing and installing toothed belt for coolant pump

Tightening torques

♦ ⇒ “3.1 Exploded view - coolant pump/thermostat”, page 202

3.7 Removing and installing actuator for engine temperature regulation - N493-

Removing

Preparatory work may be necessary depending on model ⇒ 4-cylinder direct injection engine (1.8, 2.0 ltr. 4-valve TFSI); Rep. gr. 19 ; Coolant pump/thermostat assembly; Removing and installing actuator for engine temperature regulation - N493- .

– Remove throttle valve module - J338- ⇒ page 241 .

– Remove coolant pump ⇒ page 205 .

– Lift retaining clips -1, 3- and disconnect coolant hoses (if still connected).

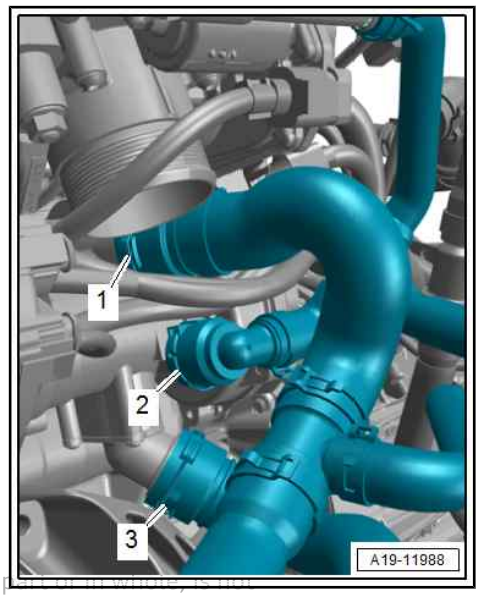

Protected by copyright. Copying for private or commercial purposes, in part or in whole, is not permitted unless authorised by AUDI AG. AUDI AG does not guarantee or accept any liability with respect to the correctness of information in this document. Copyright by AUDI AG.

– Unplug electrical connector -arrow- for actuator for engine temperature regulation - N493- .

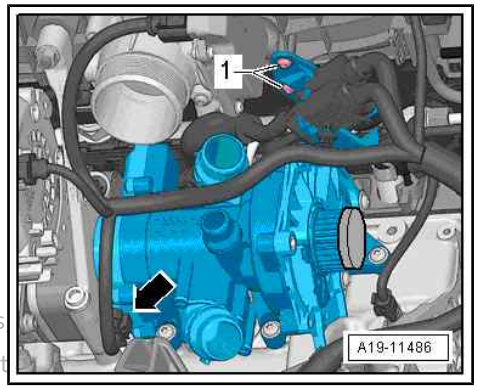

Protected by copyright. Copying for private or commercial purposes permitted unless authorised by AUDI AG. AUDI AG does not guarant with respect to the correctness of information in this document. Copyright by AUDI AG.

– Remove bolts -1 ... 5-.

– Detach actuator for engine temperature regulation - N493- from centring pins and pull actuator off engine oil cooler.

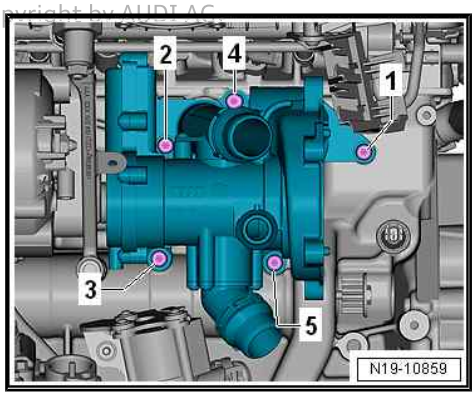

Installing

Installation is carried out in reverse order; note the following:

- Renew seals/gaskets and O-rings after removal.
- Do not reuse coolant.

– Lubricate new O-rings -4- lightly with coolant, for coolant refer to ⇒ Electronic parts catalogue .

– Check whether the two centring pins are fitted in the cylinder block; install if necessary.

– Fit connecting piece -2- into engine oil cooler -1-.

– Push actuator for engine temperature regulation - N493- -3- onto connecting piece and centring pins in cylinder block.

– Tighten bolts for actuator for engine temperature regulation - N493- ⇒ page 203 .

– Install coolant pump ⇒ “3.5 Removing and installing coolant pump”, page 205 .

– Install throttle valve module - J338- ⇒ page 241 .

– Connect coolant hoses with plug-in connectors ⇒ 4-cylinder direct injection engine (2.0 ltr. 4-valve TFSI); Rep. gr. 19 ; Radiator/radiator fans; Exploded view - radiator/radiator fans .

– Fill up coolant ⇒ 4-cylinder direct injection engine (1.8, 2.0 ltr. 4-valve TFSI); Rep. gr. 19 ; Cooling system/coolant; Draining and filling cooling system .

– Install engine cover panel ⇒ page 15 .

Additional work depending on model ⇒ 4-cylinder direct injection engine (1.8, 2.0 ltr. 4-valve TFSI); Rep. gr. 19 ; Coolant pump/thermostat assembly ; Removing and installing actuator for engine temperature regulation - N493-

– After renewing, perform “Adaption” for actuator for engine temperature regulation - N493- in `Guided Functions` mode of ⇒ Vehicle diagnostic tester.

Tightening torques

♦ ⇒ “3.1 Exploded view - coolant pump/thermostat”, page 202

3.8 Removing and installing coolant temperature sender - G62-

Procedure

- Engine cold.

Preparatory work may be necessary depending on model ⇒ 4-cylinder direct injection engine (1.8, 2.0 ltr. 4-valve TFSI); Rep. gr. 19 ; Coolant pump/thermostat assembly; Removing and installing coolant temperature sender - G62-.

– If fitted, remove engine cover panel ⇒ page 15 .

Reproduction or duplication for private or commercial purposes, in part or in whole, is not permitted unless authorized by AUDI AG. AUDI AG does not guarantee or accept any liability with respect to the correctness of information in this document. Copyright by AUDI AG.

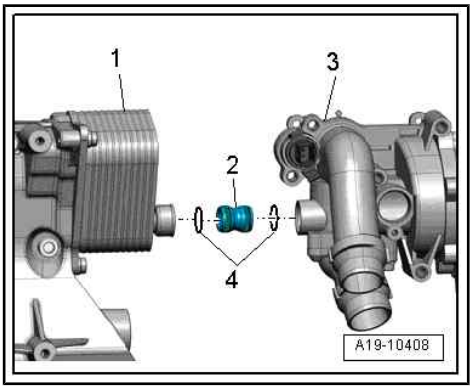

– Relieve residual pressure in cooling system by releasing fastener -arrow- (if necessary) and briefly opening filler cap -1- on coolant expansion tank.

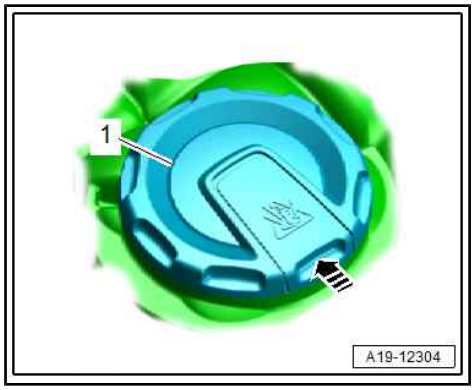

Note:

There are variations depending on model and version.

– Unplug electrical connector -1- at coolant temperature sender - G62- .

– Place a cloth underneath to catch escaping coolant.

– Remove bolt -arrow- and detach coolant temperature sender - G62- -3-.

• Renew O-rings after removing.

– To avoid loss of coolant, insert new coolant temperature sender immediately.

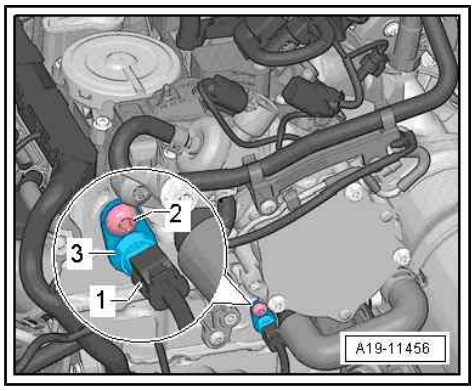

– Check coolant level ⇒ 4-cylinder direct injection engine (1.8, 2.0 ltr. 4-valve TFSI); Rep. gr. 19 ; Cooling system/coolant; Draining and filling cooling system .

– Install engine cover panel ⇒ page 15 .

Tightening torques

♦ ⇒ “3.3 Exploded view - coolant temperature senders”, page 204

3.9 Removing and installing radiator outlet coolant temperature sender - G83-

All procedures are described in ⇒ 4-cylinder direct injection engine (1.8, 2.0 ltr. 4-valve TFSI); Rep. gr. 19 ; Coolant pump/thermostat assembly; Removing and installing radiator outlet coolant temperature sender - G83- .

Protected by copyright. Copying for private or commercial purposes, in part or in whole, is not permitted unless authorised by AUDI AG. AUDI AG does not guarantee or accept any liability with respect to the correctness of information in this document. Copyright by AUDI AG.

3.10 Removing and installing coolant valves

Depending on model and version: All procedures are described in ⇒ 4-cyl. direct injection engine (1.8, 2.0 ltr. 4-valve TFSI); Rep. gr. 19 ; Coolant pump/thermostat assembly; Removing and installing coolant valves .

4 Coolant pipes

All procedures and components are described in ⇒ 4-cylinder direct injection engine (1.8, 2.0 ltr. 4-valve TFSI); Rep. gr. 19 ; Coolant pipes .

Protected by copyright. Copying for private or commercial purposes, in part or in whole, is not permitted unless authorised by AUDI AG. AUDI AG does not guarantee or accept any liability with respect to the correctness of information in this document. Copyright by AUDI AG.

5 Radiator/radiator fans

All procedures and components are described in ⇒ 4-cylinder direct injection engine (1.8, 2.0 ltr. 4-valve TFSI); Rep. gr. 19 ; Radiator/radiator fans .

Protected by copyright. Copying for private or commercial purposes, in part or in whole, is not permitted unless authorised by AUDI AG. AUDI AG does not guarantee or accept any liability with respect to the correctness of information in this document. Copyright by AUDI AG.

21 – Turbocharging/supercharging

1 Safety precautions

Observe safety precautions ⇒ 4-cylinder direct injection engine (2.0 ltr. 4-valve TFSI, EA 888 Gen. III); Rep. gr. 00 ; Safety precautions .

Protected by copyright. Copying for private or commercial purposes, in part or in whole, is not permitted unless authorised by AUDI AG. AUDI AG does not guarantee or accept any liability with respect to the correctness of information in this document. Copyright by AUDI AG.

2 Turbocharger

⇒ “2.1 Exploded view - turbocharger”, page 216

⇒ “2.2 Removing and installing turbocharger”, page 220

⇒ “2.3 Removing and installing turbocharger air recirculation valve N249 ”, page 230

⇒ “2.4 Removing and installing charge pressure positioner V465 ”, page 231

2.1 Exploded view - turbocharger

- Part I ⇒ page 216
- Part II ⇒ page 217
- Part III ⇒ page 219

Part I

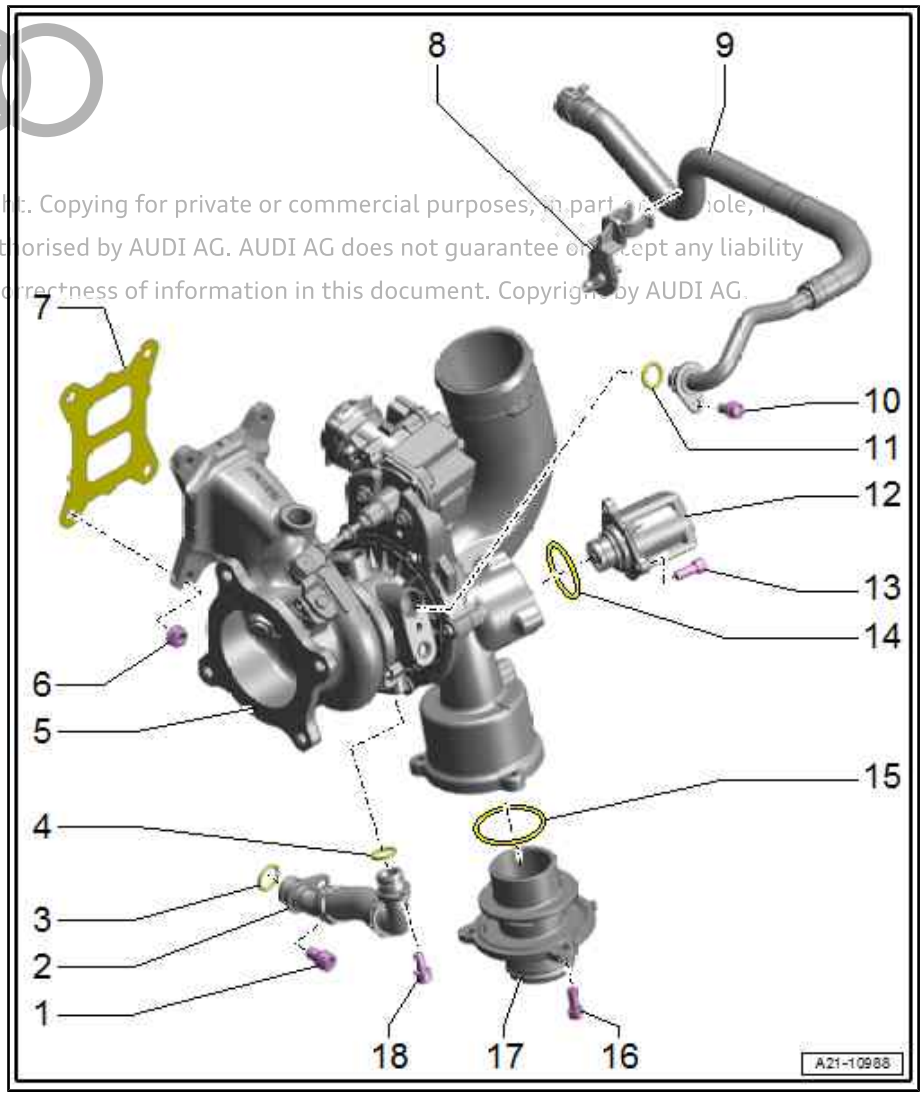

1 - Bolt
- ❑ 25 Nm

2 - Oil return line

3 - O-ring
- ❑ Renew after removing
- ❑ Lubricate lightly with engine oil

4 - O-ring
- ❑ Renew after removing
- ❑ Lubricate lightly with engine oil

5 - Turbocharger
- ❑ Removing and installing ⇒ “2.2 Removing and installing turbocharger”, page 220

6 - Nut
- ❑ Renew after removing
- ❑ Coat studs with high-temperature paste ⇒ Electronic parts catalogue
- ❑ 25 Nm

7 - Gasket
- ❑ Renew after removing

8 - Bracket

9 - Coolant return line

10 - Bolt
- ❑ 9 Nm

11 - O-ring
- ❑ Renew after removing
- ❑ Lubricate with coolant

12 - Turbocharger air recirculation valve - N249-
- ❑ Installation position ⇒ page 217

Protected by copyright. Copying for private or commercial purposes, in part or whole, is not permitted unless authorised by AUDI AG. AUDI AG does not guarantee or accept any liability with respect to the correctness of information in this document. Copyright by AUDI AG.

13 - Bolt

- ❑ 9 Nm

14 - O-ring

- ❑ Renew after removing

15 - O-ring

- ❑ Renew after removing

16 - Bolt

- ❑ 9 Nm

17 - Connection

18 - Bolt

- ❑ 9 Nm

Fitting location of turbocharger air recirculation valve - N249-

– Note installation position -arrows-.

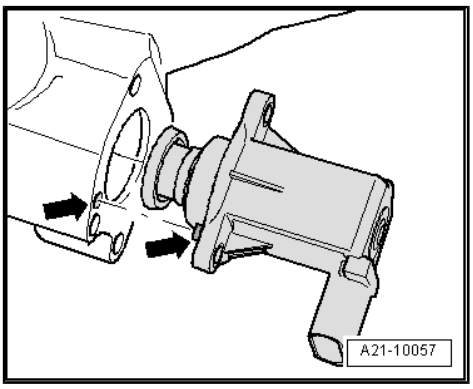

Part II

Protected by copyright. Copying for private or commercial purposes, in part or in whole, is not permitted unless authorised by AUDI AG. AUDI AG does not guarantee or accept any liability with respect to the correctness of information in this document. Copyright by AUDI AG.

Protected by copyright. Copying for private or commercial purposes, in part or in whole, is not permitted unless authorised by AUDI AG. AUDI AG does not guarantee or accept any liability with respect to the correctness of information in this document. Copyright by AUDI AG.

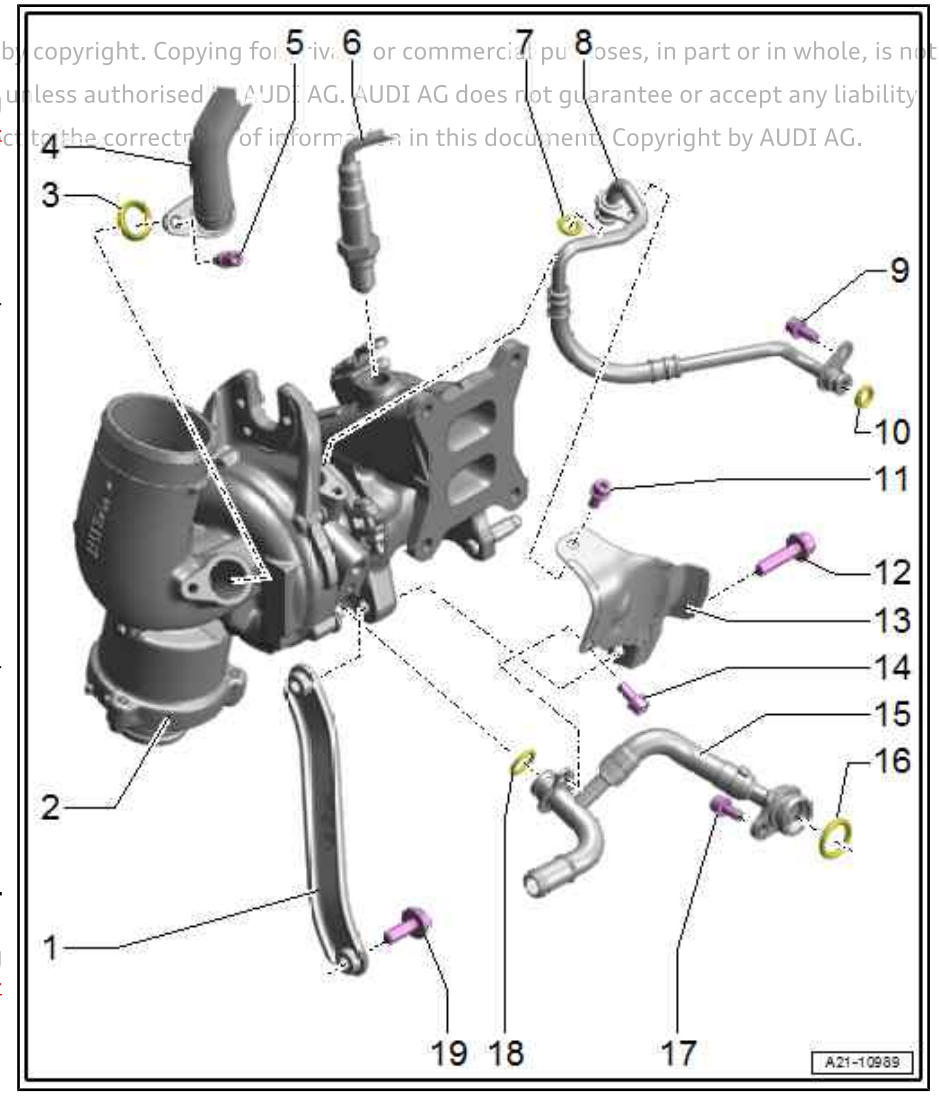

1 - Support

2 - Turbocharger

- ❑ Removing and installing ⇒ “2.2 Removing and installing turbocharger”, page 220

3 - O-ring

- ❑ Renew after removing
- ❑ Lubricate lightly with engine oil

4 - Line

- ❑ For crankcase breather
- ❑ Do not disconnect version with threaded connection ⇒ Item 5 (page 218) from turbocharger

5 - Bolt/threaded connection

- ❑ Depending on version, bolt or threaded connection with connected hose is fitted
- ❑ Do not disconnect threaded connection from turbocharger
- ❑ Bolt, 9 Nm

6 - Lambda probe 1 before catalytic converter - GX10-

- ❑ Removing and installing ⇒ “8.2 Removing and installing Lambda probe”, page 275

7 - O-ring

- ❑ Renew after removing
- ❑ Lubricate lightly with engine oil

8 - Oil supply line

9 - Bolt

- ❑ 9 Nm

10 - O-ring

- ❑ Renew after removing
- ❑ Lubricate lightly with engine oil

11 - Bolt

- ❑ 9 Nm

12 - Bolt

- ❑ 30 Nm
- ❑ Coat with high-temperature paste ⇒ Electronic parts catalogue

13 - Heat shield

14 - Bolt

- ❑ 9 Nm

15 - Coolant supply line

16 - O-ring

- ❑ Renew after removing
- ❑ Lubricate lightly with engine oil

17 - Bolt

- ❑ 9 Nm

18 - O-ring

- ❑ Renew after removing
- ❑ Lubricate with coolant

19 - Bolt

- ❑ Renew after removing
- ❑ 20 Nm +90°

Part III

1 - Ball socket

2 - Charge pressure positioner - V465-

- ❑ Before removing charge pressure positioner - V465- , check it is available in ⇒ Electronic parts catalogue (ETKA)
- ❑ Removing and installing ⇒ “2.4 Removing and installing charge pressure positioner V465 ”, page 231

3 - Turbocharger

- ❑ Removing and installing ⇒ “2.2 Removing and installing turbocharger”, page 220

4 - Bolt

- ❑ 9 Nm

5 - Nut

- ❑ 8 Nm

6 - Ball socket

7 - Retaining clip

- ❑ Renew after removing

8 - Control rod

9 - Nut

- ❑ 8 Nm

10 - Retaining clip

- ❑ Renew after removing

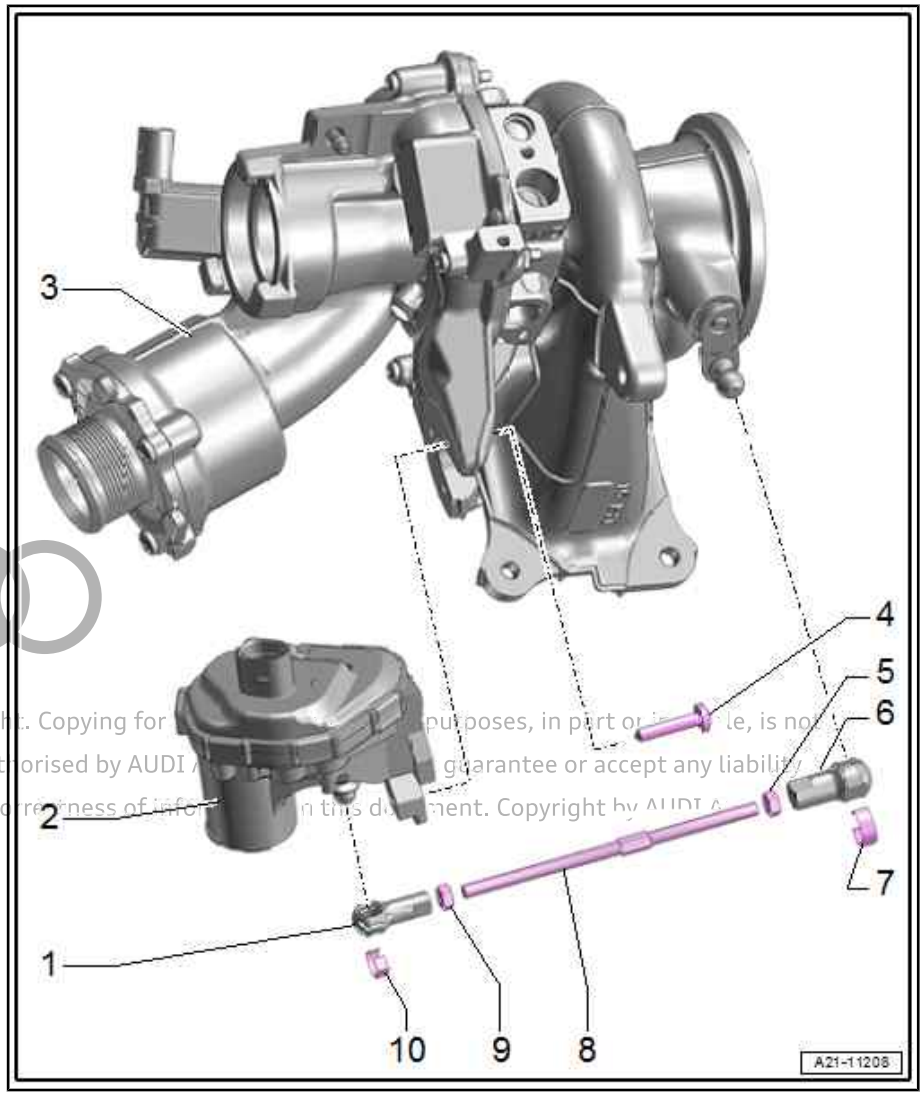

Protected by copyright. Copying for private or commercial purposes, in part or in whole, is not permitted unless authorised by AUDI AG. AUDI AG does not guarantee or accept any liability with respect to the correctness of information in this document. Copyright by AUDI AG.

2.2 Removing and installing turbocharger

⇒ “2.2.1 Notes on turbocharger”, page 220

⇒ “2.2.2 Removing turbocharger - vehicles without particulate filter”, page 220

⇒ “2.2.3 Removing turbocharger - vehicles with particulate filter and without high-voltage system”, page 224

⇒ “2.2.4 Removing turbocharger - vehicles with high-voltage system”, page 227

2.2.1 Notes on turbocharger

Mechanical damage to turbocharger

If the turbocharger has suffered mechanical damage (e.g. damaged compressor wheel), it is not sufficient merely to fit a new turbocharger. The following work must be performed in order to avoid further damage:

- Check air cleaner housing, air filter element and intake hoses for dirt and foreign particles.
- Check the entire charge air system (including the charge air cooler) for foreign matter.

If foreign matter is found in the charge air system, clean all relevant ducts and hoses and renew the charge air cooler if necessary.

2.2.2 Removing turbocharger - vehicles without particulate filter

Removing

– Observe notes ⇒ page 220 .

– Observe rules for cleanliness ⇒ page 8 .

Preparatory work may be necessary depending on model ⇒ 4-cylinder direct injection engine (1.8, 2.0 ltr. 4-valve TFSI); Rep. gr. 21 ; Turbocharger; Removing and installing turbocharger .

Vehicles with secondary air system:

– Remove secondary air pump motor - V101- ⇒ “5.2 Removing and installing secondary air pump motor V101 ”, page 287 .

All vehicles (continued):

– Remove nut -2- from underneath. (Nuts -1- do not have to be removed at this stage.)

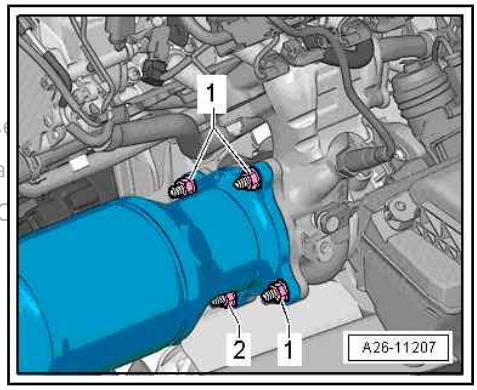

Protected by copyright. Copying for private or commercial purpose
permitted unless authorised by AUDI AG. AUDI AG does not guara
with respect to the correctness of information in this document. C

– Unscrew bolt -1- and detach oil return line.
– Remove bolt -2-.

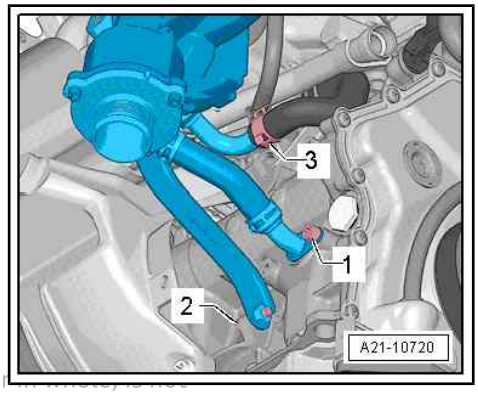

Protected by copyright. Copying for private or commercial purposes, in part or in whole, is not permitted unless authorized by AUDI AG. AUDI AG does not guarantee or accept any liability with respect to the correctness of information in this document. Copyright by AUDI AG.

– Remove electrical connector -1- for Lambda probe 1 before catalytic converter - GX10- -item 2- from bracket and unplug connector.

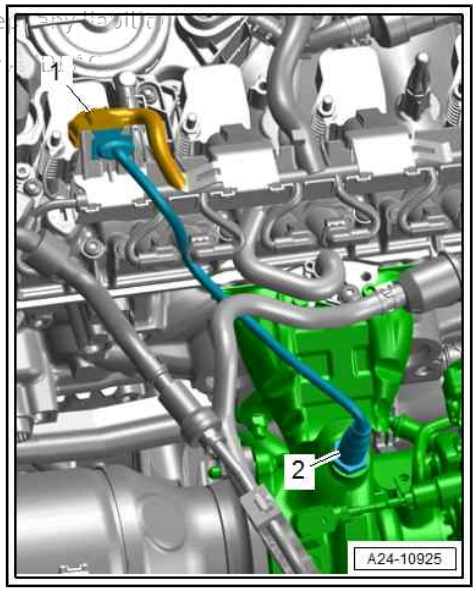

Equipment version with bolt:

– Remove bolt -arrow- and detach crankcase breather hose from turbocharger.

Note:

Depending on version, either a bolt or a threaded connection with connected hose and corresponding clamp is fitted.

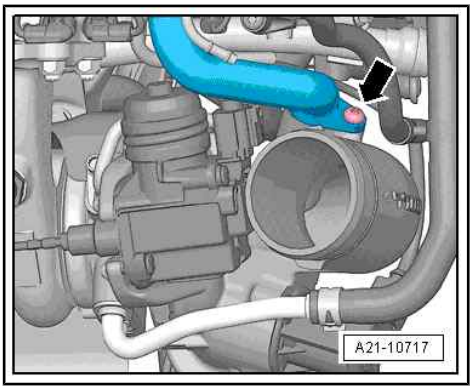

All versions (continued):

– Unplug electrical connector -2- at charge pressure positioner - V465- .

– Unplug electrical connector -1- for turbocharger air recirculation valve - N249- .

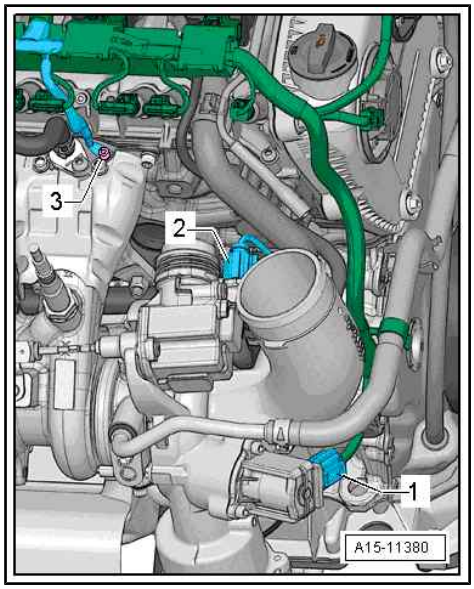

Equipment version with threaded connection:

– Unplug electrical connectors:

1 - For Hall sender - G40-

2 - For ignition coils

-Arrows- - For cam adjustment actuators - F366...F373-

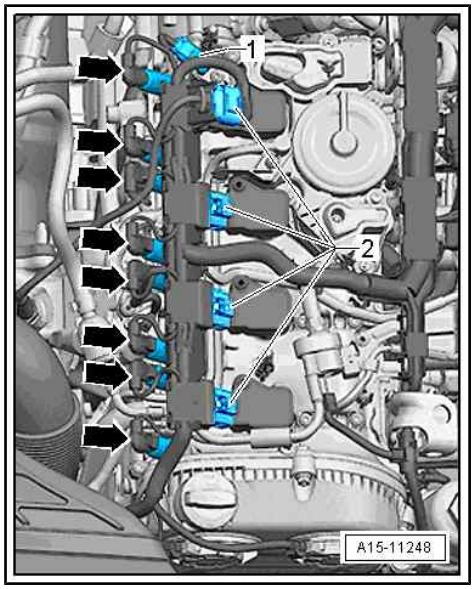

– Unplug electrical connectors:

2 - For charge pressure positioner - V465-

3 - For turbocharger air recirculation valve - N249-

– Release hose clip -1- and disconnect coolant hose.

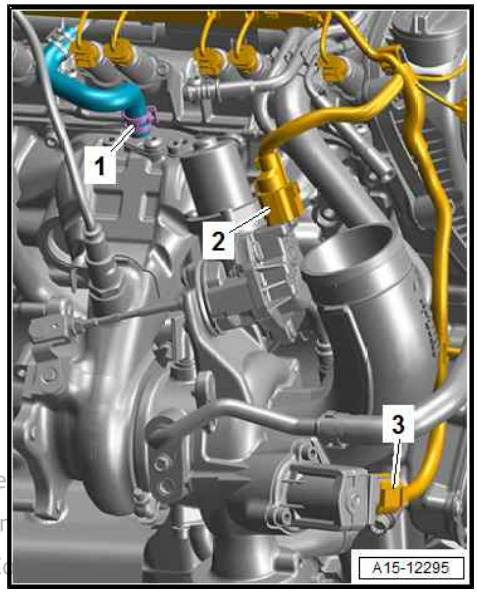

Protected by copyright. Copying for private or commercial purpose
permitted unless authorised by AUDI AG. AUDI AG does not guaran
with respect to the correctness of information in this document. C

– Remove bolt -2-.
– Release fasteners -arrow-, disconnect crankcase breather hose -1- and move it clear.

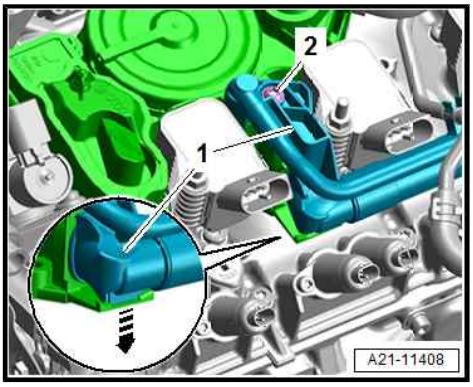

All versions (continued):

– Remove nuts -1- from above and push catalytic converter towards rear.

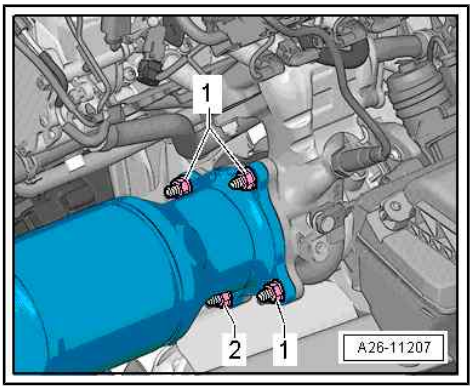

– Remove bolts -arrows- and detach heat shield -1-.

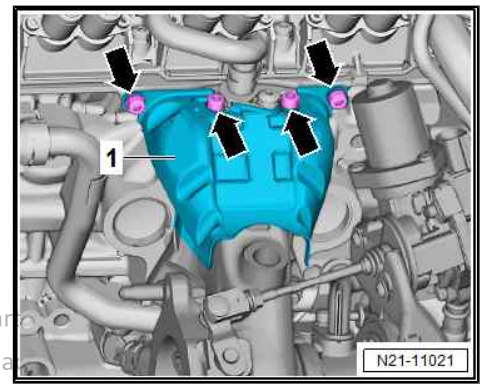

Protected by copyright. Copying for private or commercial purposes, in part, is not permitted unless authorised by AUDI AG. AUDI AG does not guarantee or accept any liability with respect to the correctness of information in this document. Copyright by AUDI AG.

– Unscrew bolt -1- and remove coolant return line.
– Remove bolt -2- and detach oil supply line.
– Remove nuts -arrows-.

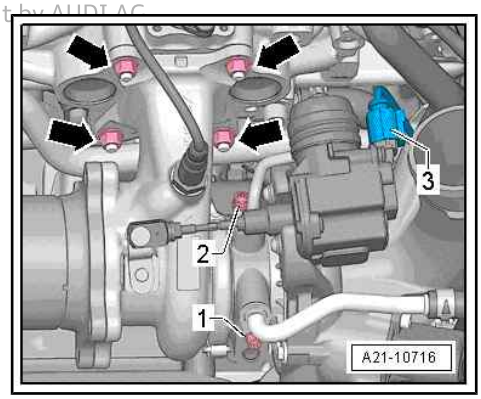

– Pull turbocharger off studs in direction of -arrow-.

• A second mechanic is required for the following step.

– Have a second mechanic hold turbocharger; remove bolt -1-, disconnect coolant supply line -2- and lift out turbocharger.

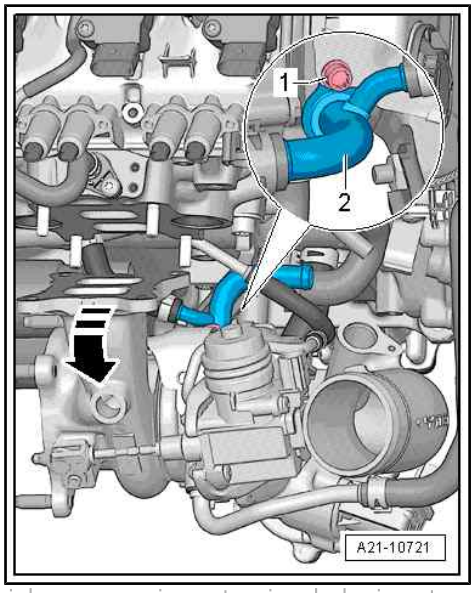

Protected by copyright. Copying for private or commercial purposes, in part or in whole, is not permitted unless authorised by AUDI AG. AUDI AG does not guarantee or accept any liability with respect to the correctness of information in this document. Copyright by AUDI AG.

2.2.3 Removing turbocharger - vehicles with particulate filter and without high-voltage system

Removing

– Observe notes ⇒ page 220 .

– Observe rules for cleanliness ⇒ page 8 .

Preparatory work may be necessary depending on model ⇒ 4-cylinder direct injection engine (1.8, 2.0 ltr. 4-valve TFSI); Rep. gr. 21 ; Turbocharger; Removing and installing turbocharger .

Vehicles with secondary air system:

– Remove secondary air pump motor - V101- ⇒ page 287 .

All vehicles (continued):

– Unscrew bolt -1- and detach oil return line.

– Remove bolt -2-.

– If fitted, remove engine cover panel ⇒ page 15 .

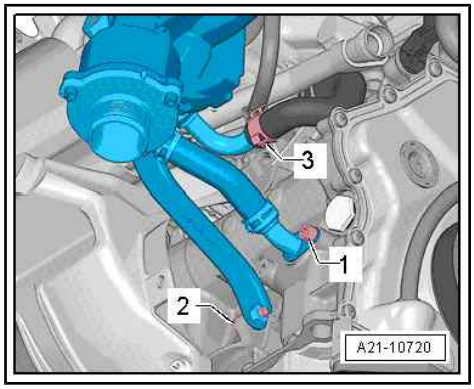

– Remove electrical connector -1- for Lambda probe 1 before catalytic converter - GX10- -item 2- from bracket and unplug connector.

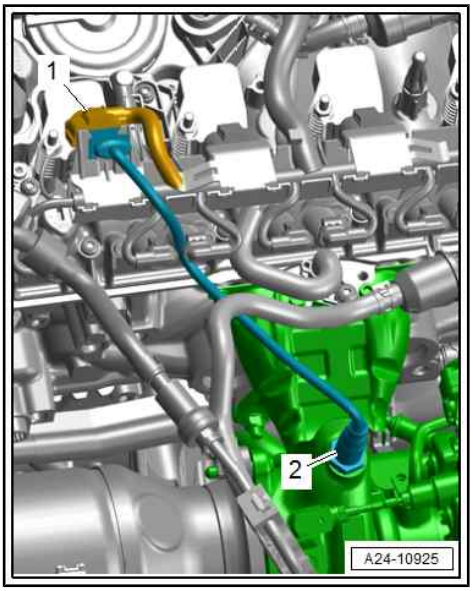

– Unplug electrical connectors:

1 - For Hall sender - G40-

2 - For ignition coils

Pfeile - For cam actuators

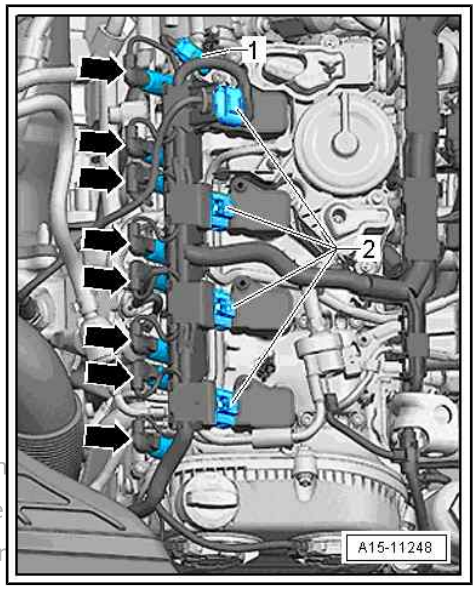

Protected by copyright. Copying for private or commercial purposes, in
permitted unless authorised by AUDI AG. AUDI AG does not guarantee
with respect to the correctness of information in this document. Copyr

– Unplug electrical connectors and move wiring clear:

2 - For charge pressure positioner - V465-

3 - For turbocharger air recirculation valve - N249-

– Release hose clip -1- and disconnect coolant hose.

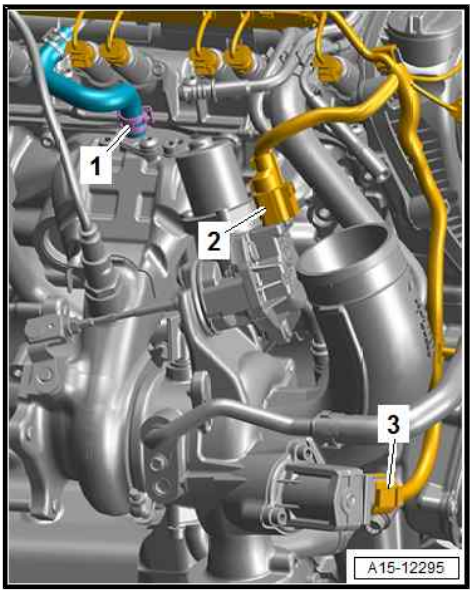

– Remove bolt -2-.
– Release fasteners -arrow-, disconnect crankcase breather hose -1- and move it clear.

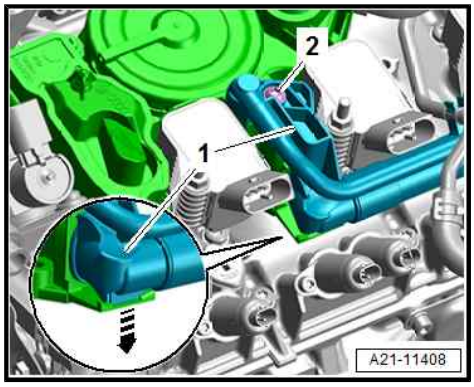

– Remove bolts -arrows- and detach heat shield -1-.

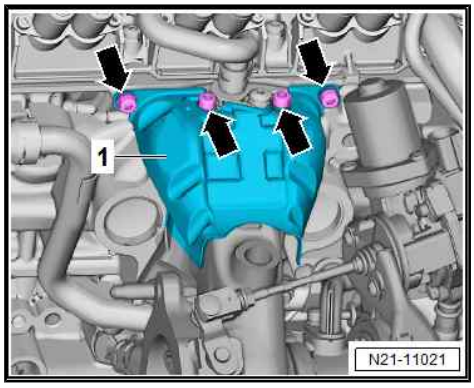

– Unscrew bolt -1- and remove coolant return line.
– Remove bolt -2- and detach oil supply line.
– Remove nuts -arrows-.

Protected by copyright. Copying for private or commercial purposes, in p
permitted unless authorised by AUDI AG. AUDI AG does not guarantee o
with respect to the correctness of information in this document. Copyrig

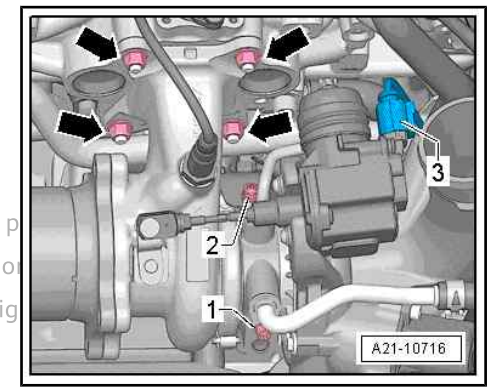

– Pull turbocharger off studs in direction of -arrow-.

• A second mechanic is required for the following step.

– Have a second mechanic hold turbocharger; remove bolt -1-, disconnect coolant supply line -2- and lift out turbocharger.

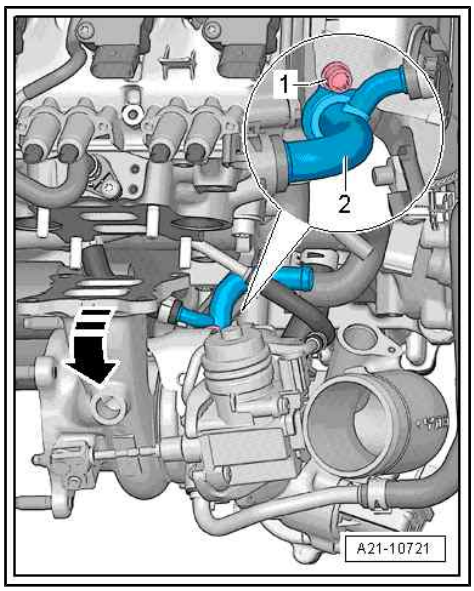

2.2.4 Removing turbocharger - vehicles with high-voltage system

Removing

– Observe notes ⇒ “2.2.1 Notes on turbocharger”, page 220 .

– Observe rules for cleanliness ⇒ “3.3 Rules for cleanliness”, page 8 .

Preparatory work may be necessary depending on model ⇒ 4-cylinder direct injection engine (1.8, 2.0 ltr. 4-valve TFSI); Rep. gr. 21 ; Turbocharger; Removing and installing turbocharger .

– Remove secondary air pump motor - V101- ⇒ “5.2 Removing and installing secondary air pump motor V101 ”, page 287 .

– Remove resonator ⇒ “5.5 Removing and installing resonator for secondary air system”, page 288 .

– Unscrew bolt -1- and detach oil return line.

– Remove bolt -2-.

– If fitted, remove engine cover panel ⇒ page 15 .

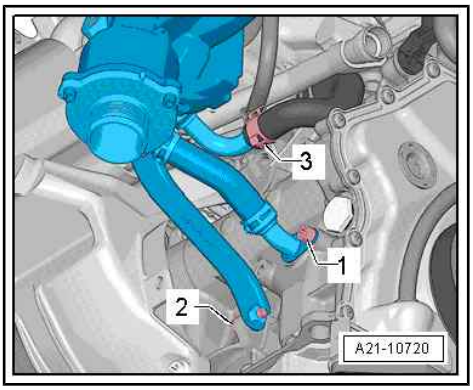

– Remove electrical connector -1- for Lambda probe 1 before catalytic converter - GX10- -item 2- from bracket and unplug connector.

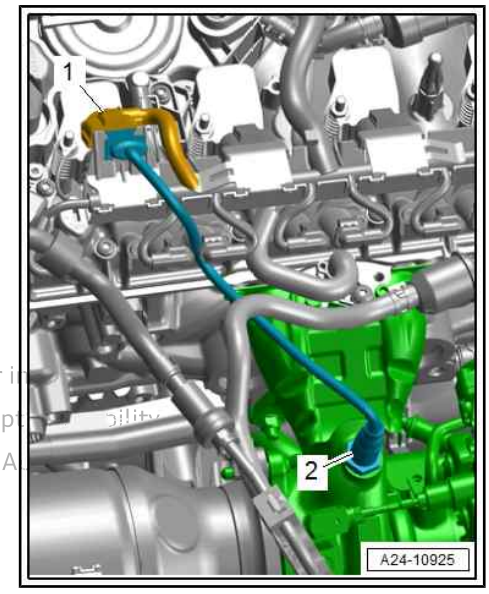

Protected by copyright. Copying for private or commercial purposes, in part or in
permitted unless authorised by AUDI AG. AUDI AG does not guarantee or accept
with respect to the correctness of information in this document. Copyright by A

– Unplug electrical connectors:

1 - For Hall sender - G40-

Pfeile - For cam actuators

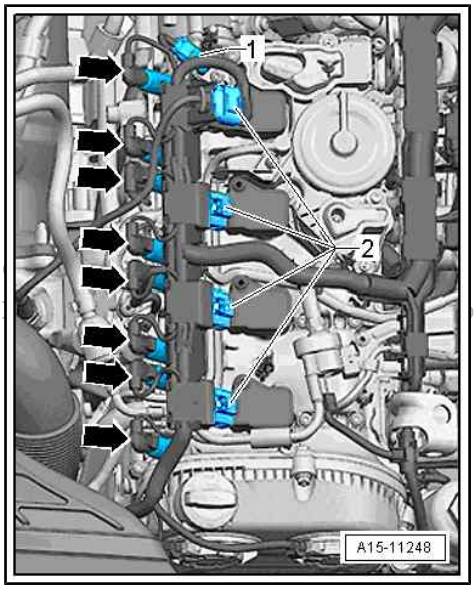

Protected by copyright. Copying for private or is not
permitted unless authorised by AUDI AG. AUD ility
with respect to the correctness of information

– If fitted, remove nut -2- and move earth wire -1- clear.

– Release electrical connectors and detach simultaneously from ignition coils in direction of -arrows-.

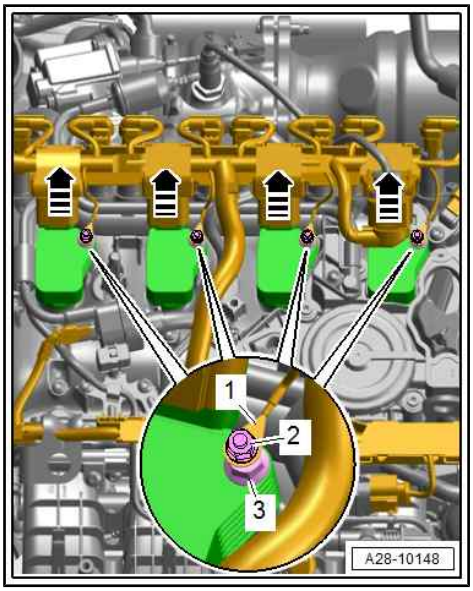

– Unplug electrical connectors and move wiring clear:

2 - For charge pressure positioner - V465- (different installation positions)

3 - For turbocharger air recirculation valve - N249-

– Release hose clip -1- and disconnect coolant hose.

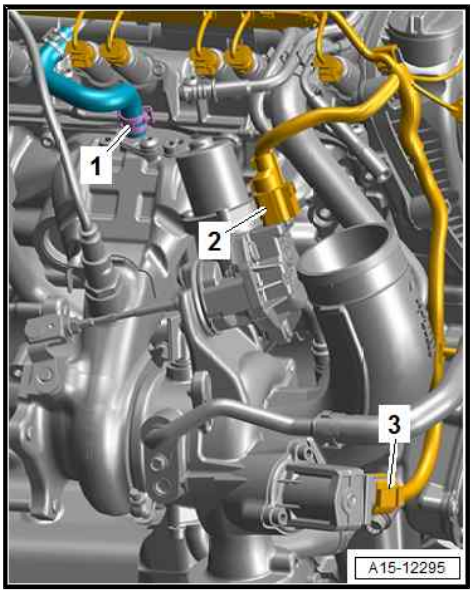

– Remove bolt -2-.

– Release fasteners -arrow-, disconnect crankcase breather hose -1- and move it clear.

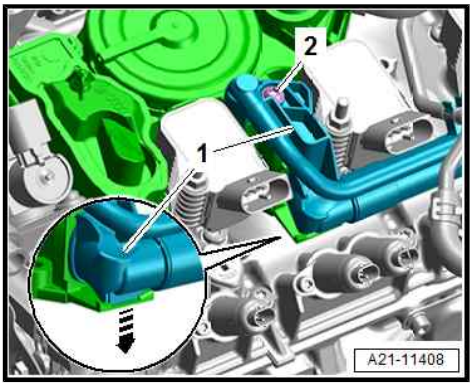

– Remove bolts -arrows- and detach heat shield -1-.

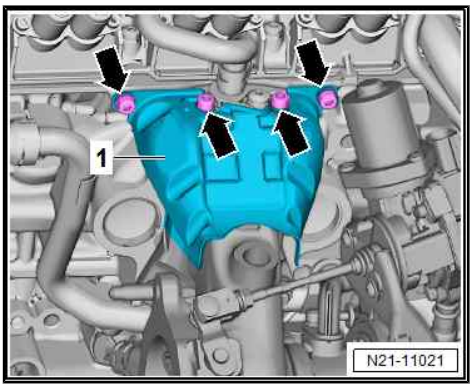

– Unscrew bolt -1- and remove coolant return line.

– Remove bolt -2- and detach oil supply line.

– Remove nuts -arrows-.

Protected by copyright. Copying for private or commercial purposes, in p
permitted unless authorised by AUDI AG. AUDI AG does not guarantee o
with respect to the correctness of information in this document. Copyrig

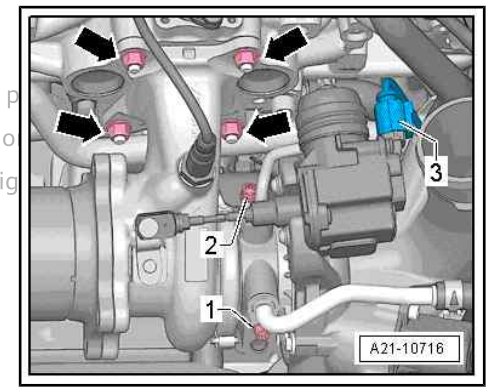

– Pull turbocharger off studs in direction of -arrow-.

• A second mechanic is required for the following step.

– Have a second mechanic hold turbocharger; remove bolt -1-, disconnect coolant supply line -2- and lift out turbocharger.

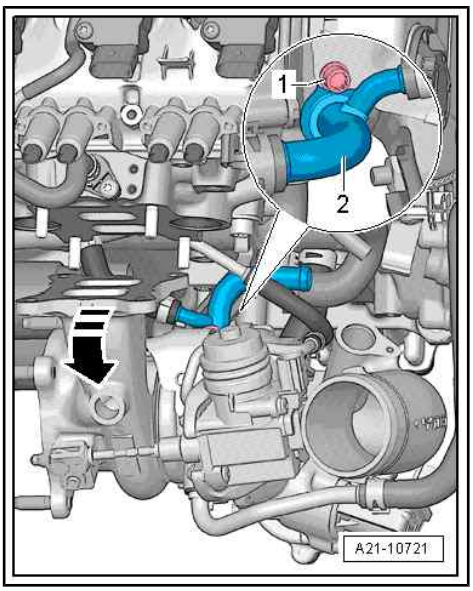

2.2.5 Installing turbocharger

Installing

Installation is carried out in reverse order; note the following:

- After removing, renew bolts tightened with specified tightening angle.
- Renew gaskets, seals, O-rings and self-locking nuts after removal.
- Lubricate studs for turbocharger with high-temperature paste ⇒ Electronic parts catalogue .
- Hose connections and charge air system hoses must be free of oil and grease prior to fitting.
- Secure all hose connections with correct type of hose clips (as original equipment) ⇒ Electronic parts catalogue .
- Fill turbocharger with engine oil at connection for oil supply line.
- Do not reuse coolant.
- If turbocharger was renewed together with charge pressure positioner - V465- learnt values must be adapted ⇒ Vehicle diagnostic tester, `Guided Functions`, `01 - Adjust charge pressure positioner V465`.

– Install catalytic converter ⇒ 4-cylinder direct injection engine (1.8, 2.0 ltr. 4-valve TFSI); Rep. gr. 26 ; Emission control system; Removing and installing catalytic converter .

– Check oil level ⇒ page 169 .

– Fill up coolant ⇒ 4-cylinder direct injection engine (1.8, 2.0 ltr. 4-valve TFSI); Rep. gr. 19 ; Cooling system/coolant; Draining and filling cooling system .

– Install engine cover panel ⇒ page 15 .

Additional work depending on model ⇒ 4-cylinder direct injection engine (1.8, 2.0 ltr. 4-valve TFSI); Rep. gr. 21 ; Turbocharger; Removing and installing turbocharger

- After installing turbocharger, allow engine to idle for approx. 1 minute and do not rev up immediately to ensure turbocharger is supplied with oil.

Tightening torques

- ⇒ “2.1 Exploded view - turbocharger”, page 216
- ⇒ “3.2 Exploded view - hose connections for charge air system”, page 233

2.3 Removing and installing turbocharger air recirculation valve - N249-

Removing

– Observe rules for cleanliness ⇒ page 8 .

Preparatory work may be necessary depending on model ⇒ 4-cylinder direct injection engine (1.8, 2.0 ltr. 4-valve TFSI); Rep. gr. 21 ; Turbocharger; Removing and installing turbocharger .

Protected by copyright. Copying for private or commercial purposes, in part or in whole, is not permitted unless authorised by AUDI AG. AUDI AG does not guarantee or accept any liability with respect to the correctness of information in this document. Copyright by AUDI AG.

– Unplug electrical connector -2-.

– Unscrew bolts -arrows- and carefully detach turbocharger air recirculation valve - N249- .

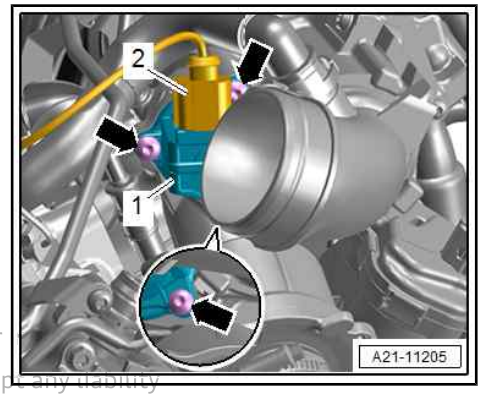

Installing

Installation is carried out in reverse order; note the following:

- Installation position ⇒ page 217 .

– Install engine cover panel ⇒ page 15 .

Tightening torques

♦ ⇒ “2.1 Exploded view - turbocharger”, page 216

Protected by copyright. Copying for private or commercial purposes, in part or permitted unless authorised by AUDI AG. AUDI AG does not guarantee or accept any liability with respect to the correctness of information in this document. Copyright by AUDI AG.

2.4 Removing and installing charge pressure positioner - V465-

Note

Before removing charge pressure positioner - V465- , check it is available in ⇒ Electronic parts catalogue (ETKA) .

Removing

– Observe rules for cleanliness ⇒ page 8 .

A4, A5, Q5, A6 and A7:

– Remove air cleaner housing ⇒ 4-cylinder direct injection engine (2.0 ltr. 4-valve TFSI); Rep. gr. 24 ; Air cleaner; Removing and installing air cleaner housing .

All vehicles:

– Unplug electrical connector -4-.

– Loosen lock nut -2- by a quarter turn (counterhold at hexagon flats -arrow- on control rod).

– Unscrew control rod from actuating lever -1-, taking care not to turn lock nut.

– Remove bolts -3- and detach charge pressure positioner - V465- .

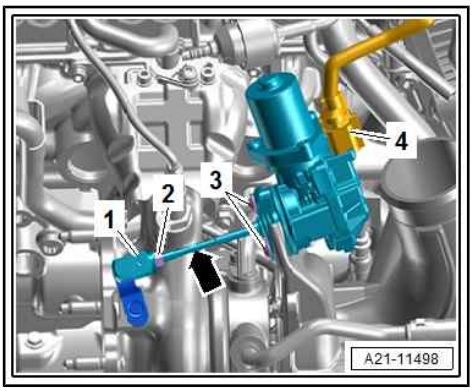

Installing

- If renewing charge pressure positioner, ensure installation position of lock nut is the same on new charge pressure positioner.

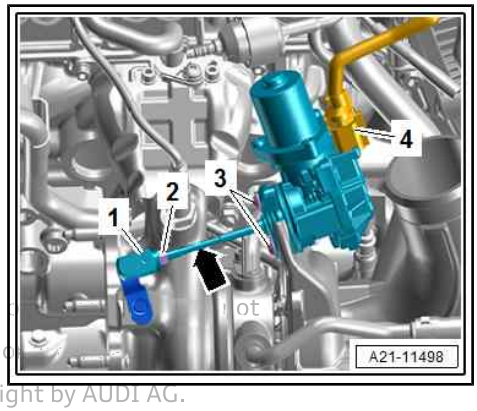

– Place charge pressure positioner - V465- in installation position and tighten bolts -3-.
– Screw control rod into actuating lever -1- until it makes contact with lock nut -2-.
– Plug in electrical connector -4-.
– Learnt values must be adapted after renewing charge pressure positioner - V465- .
– Connect ⇒ Vehicle diagnostic tester.
– Select `Diagnosis` mode and then `Start diagnosis`.
– Choose `Select own test` tab and select following options one after the other:

Protected by copyright. Copying for private or commercial purposes, in ... not permitted unless authorised by AUDI AG. AUDI AG does not guarantee ... with respect to the correctness of information in this document. Copyright by AUDI AG.

- `Drive train`
- `Select engine code and engine`
- `01 - Self-diagnosis compatible systems`
- `01 - Engine electronics`
- `01 - Engine electronics, functions`
- `01 - Set charge pressure adjuster -V465`

Tightening torques

- ⇒ page 219

3 Charge air system

⇒ “3.1 Exploded view - charge air system”, page 233

⇒ “3.2 Exploded view - hose connections for charge air system”, page 233

⇒ “3.3 Removing and installing charge air cooler”, page 234

⇒ “3.4 Removing and installing charge pressure sender G31”, page 234

⇒ “3.5 Checking charge air system for leaks”, page 234

Protected by copyright. Copying for private or commercial purposes, in part or in whole, is not permitted unless authorised by AUDI AG. AUDI AG does not guarantee or accept any liability with respect to the correctness of information in this document. Copyright by AUDI AG.

3.1 Exploded view - charge air system

All components are described in ⇒ 4-cylinder direct injection engine (1.8, 2.0 ltr. 4-valve TFSI); Rep. gr. 21 ; Charge air system; Exploded view - charge air system .

3.2 Exploded view - hose connections for charge air system

- Hose connections and air pipes/hoses must be free of oil and grease prior to fitting.
- Secure all hose connections with correct type of hose clips (as original equipment) ⇒ Electronic parts catalogue .
- If using used hose clips to secure the air hoses at their connections, spray rust remover onto the worm threads before installing.

Hose clips on pressure side are fitted with retaining hooks -arrows-.

- To disconnect air hose, hose clip must be loosened far enough.
- Hose clips which have been loosened can be re-used.

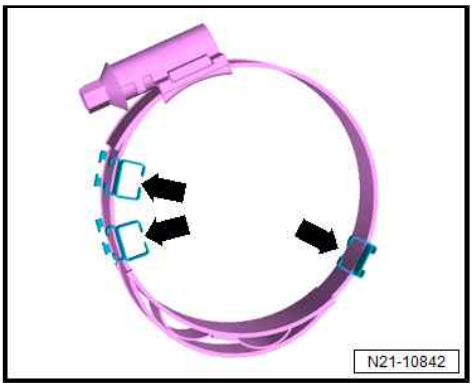

- Hose clip -1- with retaining hooks -arrows- must not be pulled off air hose.
- If a hose clip with retaining hooks is pulled off air hose, air hose must be renewed.
- New air hoses are supplied with hose clip fitted.

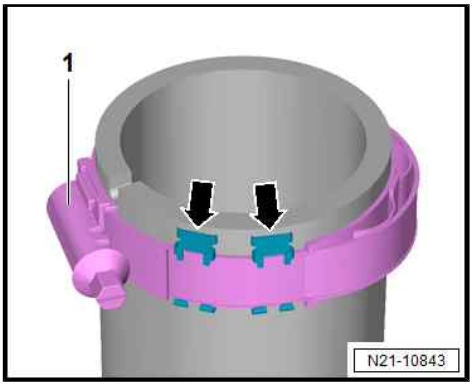

Tightening torque for

1 - Hose clip with width -a- = 12 mm: 5.5 Nm

2 - Hose clip with width -b- = 9 mm: 3.4 Nm

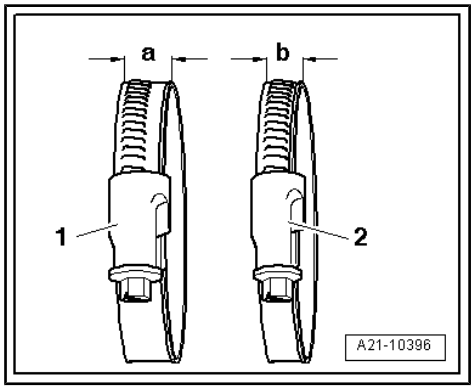

3.3 Removing and installing charge air cooler

All procedures are described in ⇒ 4-cylinder direct injection engine (1.8, 2.0 ltr. 4-valve TFSI); Rep. gr. 21 ; Charge air system; Removing and installing charge air cooler .

3.4 Removing and installing charge pressure sender - G31-

All procedures are described in ⇒ 4-cylinder direct injection engine (1.8, 2.0 ltr. 4-valve TFSI); Rep. gr. 21 ; Charge air system; Removing and installing charge pressure sender - G31- .

3.5 Checking charge air system for leaks

Procedure

Preparatory work may be necessary depending on model ⇒ 4-cylinder direct injection engine (1.8, 2.0 ltr. 4-valve TFSI); Rep. gr. 21 ; Charge air system; Checking charge air system for leaks .

– Observe rules for cleanliness ⇒ page 8 .

Protected by copyright. Copying for private or commercial purposes, in part or in whole, is not permitted unless authorised by AUDI AG. AUDI AG does not guarantee or accept any liability with respect to the correctness of information in this document. Copyright by AUDI AG.

Prepare charge air system tester - V.A.G 1687- as follows:

– Unscrew pressure control valve -2- completely and close valves -3- and -4-.

• Make sure knob is pulled out before turning pressure control valve.

– Using a commercially available connection piece, connect charge air system tester - V.A.G 1687- to compressed air -1-.

– If there is water in sight glass -6-, drain it off via drain plug.

– Open valve -3-.

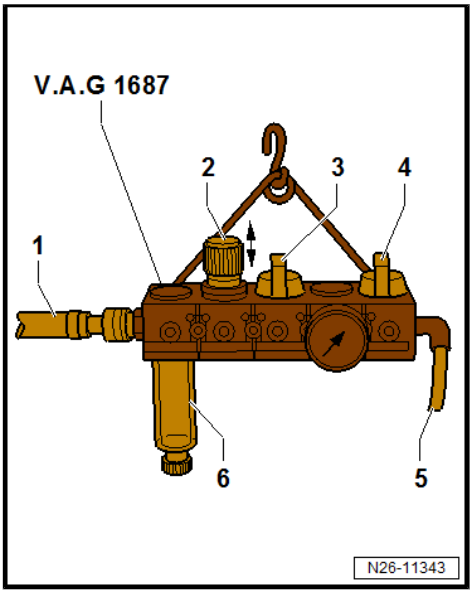

NOTICE

Risk of damage to components if test pressure is set too high

– Never set test pressure higher than specified.

– Adjust pressure to 0.2 bar via pressure control valve -2-.

– Open valve -4- and wait until test system is pressurised. If necessary, adjust pressure to 0.2 bar again.

– Check charge air system for audible leaks or leaks that can be felt with the hand; apply commercially available leak detection spray or use ultrasonic tester - V.A.G 1842- . (For operation of -V.A.G 1842- , refer to ⇒ Operating instructions .)

Note:

A small amount of air escapes through the valves and enters the engine. Therefore it is not possible to perform a pressure retention test.

Assembling

– Release pressure in test circuit by detaching hose coupling from adapter before removing adapter.

Additional work depending on model ⇒ 4-cylinder direct injection engine (1.8, 2.0 ltr. 4-valve TFSI); Rep. gr. 21 ; Charge air system; Checking charge air system for leaks

Protected by copyright. Copying for private or commercial purposes, in part or in whole, is not permitted unless authorised by AUDI AG. AUDI AG does not guarantee or accept any liability with respect to the correctness of information in this document. Copyright by AUDI AG.

24 – Mixture preparation - injection

1 Safety precautions

Observe safety precautions ⇒ 4-cylinder direct injection engine (2.0 ltr. 4-valve TFSI, EA 888 Gen. III); Rep. gr. 00 ; Safety precautions .

Protected by copyright. Copying for private or commercial purposes, in part or in whole, is not permitted unless authorised by AUDI AG. AUDI AG does not guarantee or accept any liability with respect to the correctness of information in this document. Copyright by AUDI AG.

2 Injection system

⇒ “2.1 Overview of fitting locations - injection system”, page 237

⇒ “2.2 Checking fuel system for leaks”, page 237

2.1 Overview of fitting locations - injection system

All components are described in ⇒ 4-cylinder direct injection engine (1.8, 2.0 ltr. 4-valve TFSI); Rep. gr. 24 ; Injection system; Overview of fitting locations - injection system .

2.2 Checking fuel system for leaks

– Allow engine to run for several minutes at moderate rpm.
– Switch off ignition.
– Check complete fuel system for leaks.
– If leaks are found although the connections have been tightened to the correct torque, the relevant component must be renewed.
– Road-test vehicle and accelerate with full throttle at least once.
– Then inspect high-pressure section of fuel system again for leaks.

Protected by copyright. Copying for private or commercial purposes, in part or in whole, is not permitted unless authorised by AUDI AG. AUDI AG does not guarantee or accept any liability with respect to the correctness of information in this document. Copyright by AUDI AG.

3 Air cleaner

All procedures and components are described in ⇒ 4-cylinder direct injection engine (1.8, 2.0 ltr. 4-valve TFSI); Rep. gr. 24 ; Air cleaner .

Protected by copyright. Copying for private or commercial purposes, in part or in whole, is not permitted unless authorised by AUDI AG. AUDI AG does not guarantee or accept any liability with respect to the correctness of information in this document. Copyright by AUDI AG.

4 Intake manifold

⇒ “4.1 Exploded view - intake manifold”, page 239

⇒ “4.2 Removing and installing intake manifold”, page 240

⇒ “4.3 Removing and installing throttle valve module J338 ”, page 241

⇒ “4.4 Cleaning throttle valve module”, page 242

⇒ “4.5 Checking intake manifold change-over function”, page 243

4.1 Exploded view - intake manifold

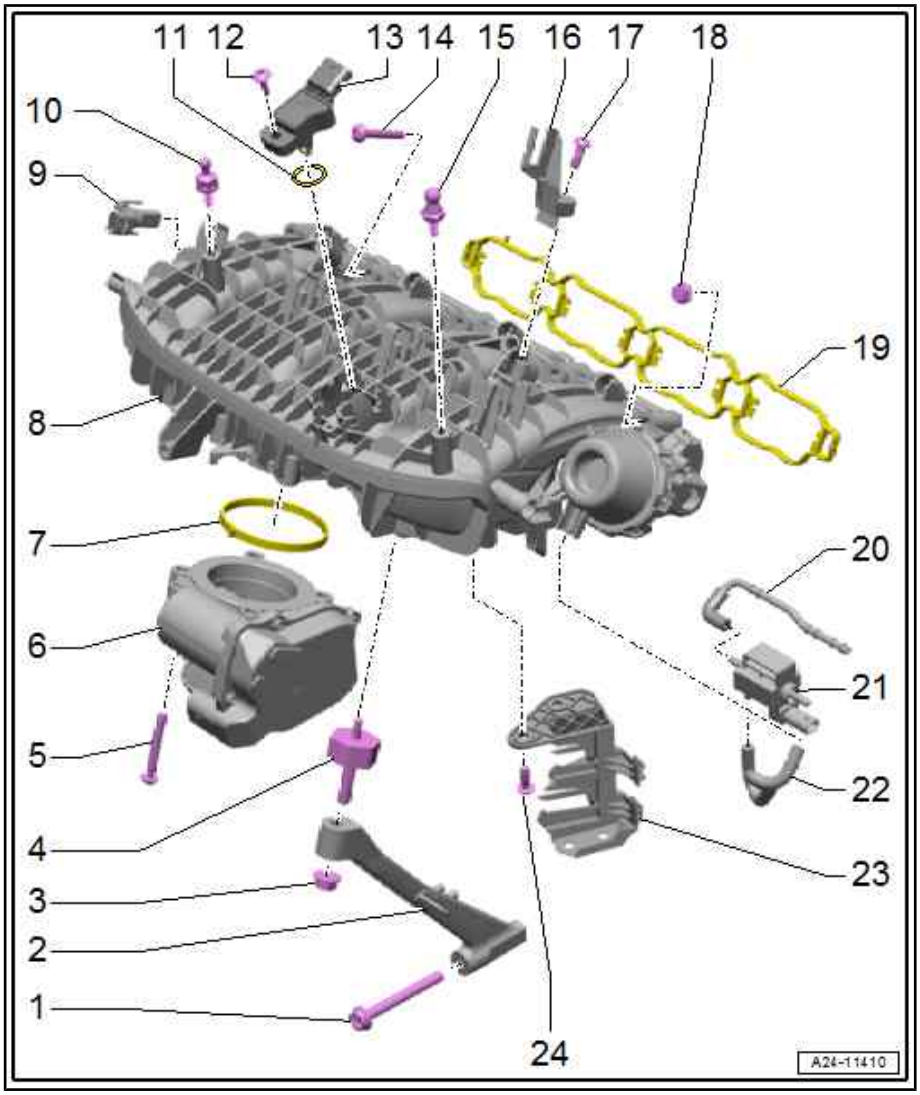

1 - Bolt

- ❑ 20 Nm

2 - Support for intake manifold

3 - Nut

- ❑ 10 Nm

4 - Bonded rubber bush

- ❑ 5 Nm

5 - Bolt

- ❑ 7 Nm

6 - Throttle valve module - J338-

- ❑ Including throttle valve drive for electric throttle - G186- , throttle valve drive angle sender 1 for electric throttle - G187- and throttle valve drive angle sender 2 for electric throttle - G188-
- ❑ Removing and installing ⇒ “4.3 Removing and installing throttle valve module J338 ”, page 241
- ❑ After installing, perform adaption ⇒ Vehicle diagnostic tester
- ❑ Cleaning ⇒ “4.4 Cleaning throttle valve module”, page 242

7 - Seal

- ❑ Renew after removing

8 - Intake manifold

- ❑ Removing and installing ⇒ page 240

9 - Intake manifold flap potentiometer - G336-

10 - Ball stud

- ❑ For engine cover panel
- ❑ 5 Nm

Protected by copyright. Copying for private or commercial purposes, in part or in whole, is not permitted unless authorised by AUDI AG. AUDI AG does not guarantee or accept any liability with respect to the correctness of information in this document. Copyright by AUDI AG.

11 - O-ring

- ❑ Renew if damaged

12 - Bolt

- ❑ 1.5 Nm

13 - Intake air temperature sender - G42- / intake manifold pressure sender - G71-

- ❑ For some models, designation in current flow diagram may only be intake manifold pressure sender - G71-
- ❑ Removing and installing ⇒ page 259

14 - Bolt

- ❑ Tighten in several stages and in diagonal sequence
- ❑ 9 Nm

15 - Ball stud

- ❑ For engine cover panel
- ❑ 5 Nm

16 - Bracket

- ❑ For electrical connector
- ❑ For vehicles with MPI engine

17 - Bolt

- ❑ 5 Nm

18 - Nut/bolt

- ❑ Tighten in several stages and in diagonal sequence
- ❑ 9 Nm

19 - Gasket

- ❑ Renew after removing

20 - Vacuum hose

21 - Intake manifold flap valve - N316-

22 - Vacuum hose

23 - Bracket

- ❑ For electrical connectors

24 - Bolt

- ❑ 5 Nm

4.2 Removing and installing intake manifold

Special tools and workshop equipment required

- ♦ Engine bung set - VAS 6122-

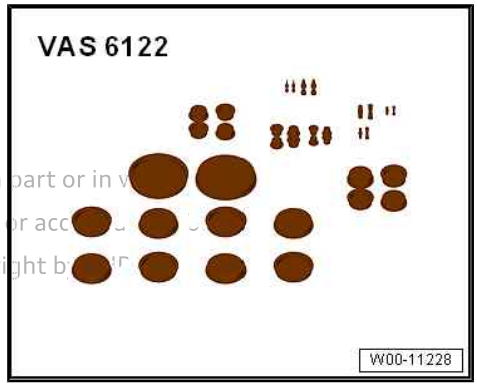

Protected by copyright. Copying for private or commercial purposes, in part or in whole, is not permitted unless authorised by AUDI AG. AUDI AG does not guarantee or accept any liability with respect to the correctness of information in this document. Copyright by AUDI AG

Removing

Preparatory work may be necessary depending on model ⇒ 4-cylinder direct injection engine (1.8, 2.0 ltr. 4-valve TFSI); Rep. gr. 24 ; Intake manifold; Removing and installing intake manifold .

– Unscrew bolts -1, 2- and -arrows-.

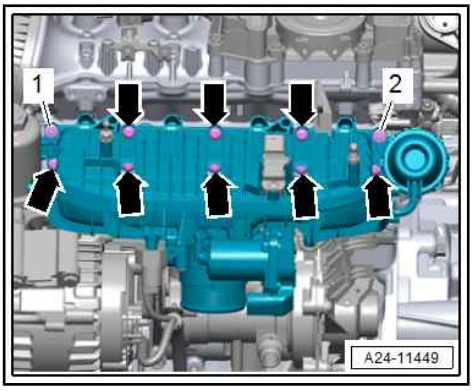

– Detach electrical connectors -1, 4- from bracket.

– Detach intake manifold and unclip electrical connector -2- from bracket. If necessary, unplug electrical connector.

– Seal off all open passages in the intake system with clean cloths or plugs (thoroughly cleaned) from engine bung set -VAS 6122- .

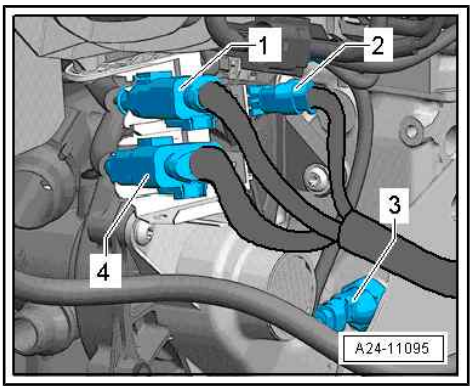

Installing

Installation is carried out in reverse order; note the following:

• Renew connection for high-pressure pipe.

– Fit intake manifold onto studs (bottom left and bottom right) on cylinder head.

– Install engine cover panel ⇒ page 15 .

– Observe steps required after re-connecting battery ⇒ Electrical system; Rep. gr. 27 ; Battery; Disconnecting and connecting battery .

Additional work depending on model ⇒ 4-cylinder direct injection engine (1.8, 2.0 ltr. 4-valve TFSI); Rep. gr. 24 ; Intake manifold; Removing and installing intake manifold

Tightening torques

◆ ⇒ “4.1 Exploded view - intake manifold”, page 239

◆ ⇒ “5.1.1 Exploded view - fuel rail with injectors, vehicles with FSI engine”, page 245

◆ ⇒ “3.2 Exploded view - hose connections for charge air system”, page 233

Protected by copyright. Copying for private or commercial purposes, in part or in whole, is not permitted unless authorised by AUDI AG. AUDI AG does not guarantee or accept any liability with respect to the correctness of information in this document. Copyright by AUDI AG.

4.3 Removing and installing throttle valve module - J338-

Removing

Preparatory work may be necessary depending on model ⇒ 4-cylinder direct injection engine (1.8, 2.0 ltr. 4-valve TFSI); Rep. gr. 24 ; Intake manifold; Removing and installing throttle valve module - J338- .

– Unplug electrical connector -1-.

– Remove bolts -arrows- and detach throttle valve module - J338- .

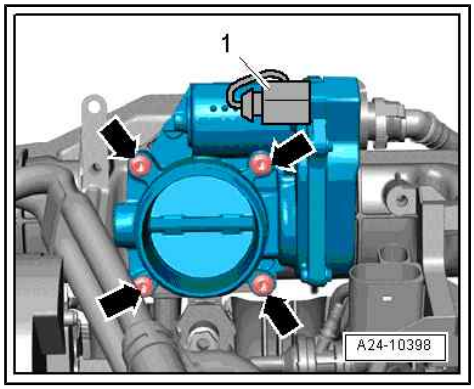

Installing

Installation is carried out in reverse order; note the following:

• Renew seal after removing.

– Clean sealing surface for seal.

Additional work depending on model ⇒ 4-cylinder direct injection engine (1.8, 2.0 ltr. 4-valve TFSI); Rep. gr. 24 ; Intake manifold; Removing and installing throttle valve module - J338-

Learnt values must be re-adapted after removing or renewing throttle valve module.

– Connect ⇒ Vehicle diagnostic tester.

– Select `Diagnosis` mode and then `Start diagnosis`.

– Choose `Select own test` tab and select following options one after the other:

Protected by copyright. Copying for private or commercial purposes, in part or in whole, is not permitted unless authorised by AUDI AG. AUDI AG does not guarantee or accept any liability with respect to the correctness of information in this document. Copyright by AUDI AG.

◆ `Drive train`

◆ `Select engine code and engine`

◆ `01 - Self-diagnosis compatible systems`

◆ `01 - Engine electronics`

◆ `01 - Engine electronics, functions`

◆ `01 - Adapt learnt values - after component replacement`

Tightening torques

◆ ⇒ “4.1 Exploded view - intake manifold”, page 239

4.4 Cleaning throttle valve module

Special tools and workshop equipment required

◆ Acetone (commercially available)

◆ Safety goggles

◆ Protective gloves

• Take care not to scratch the throttle valve housing when cleaning it.

– Remove throttle valve module - J338- ⇒ page 241 .

– Open throttle valve by hand and lock it in open position with a wedge (plastic or wood) -arrow-.

⚠ CAUTION

Risk of injury caused by acetone. Acetone is highly flammable and can cause irritation to the eyes and skin.

– Put on safety goggles.

– Put on protective gloves.

– Clean throttle valve housing thoroughly, especially around the points -arrows- where the throttle valve closes, using commercially available acetone and a small brush.
– Wipe out throttle valve housing with a lint-free cloth.
– Allow acetone to flash off completely.
– Install throttle valve module - J338- ⇒ page 241 .

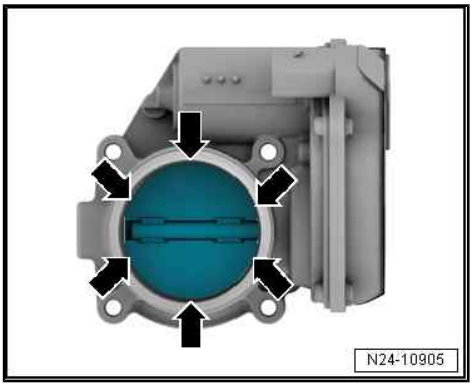

4.5 Checking intake manifold change-over function

Only perform this test if there is a loss of engine torque (poor flexibility or lack of pulling power).

Special tools and workshop equipment required

♦ Hand vacuum pump - VAS 6213-

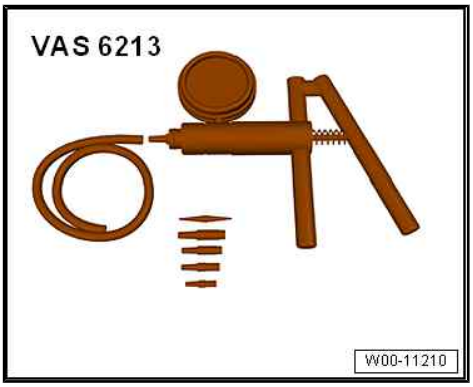

Protected by copyright. Copying for private or commercial purposes, in part or in whole, is not permitted unless authorised by AUDI AG. AUDI AG does not guarantee or accept any liability with respect to the correctness of information in this document. Copyright by AUDI AG.

Test condition

• Intake manifold flap valve - N316- has been checked with a vehicle diagnostic tester.

Perform the following steps if the intake manifold flap valve - N316- is OK.

Procedure

Preparatory work may be necessary depending on model ⇒ 4-cylinder direct injection engine (1.8, 2.0 ltr. 4-valve TFSI); Rep. gr. 24 ; Intake manifold; Checking intake manifold change-over function .

– If fitted, remove engine cover panel ⇒ page 15 .
– Start engine and run at idling speed.
– Have a second mechanic rev up engine quickly (short burst of throttle) and observe vacuum unit for intake manifold change-over.

Protected by copyright. Copying for private or commercial pu
permitted unless authorised by AUDI AG. AUDI AG does not
with respect to the correctness of information in this docum

- The linkage -1- of the vacuum unit for intake manifold flap should pick up -arrow-.

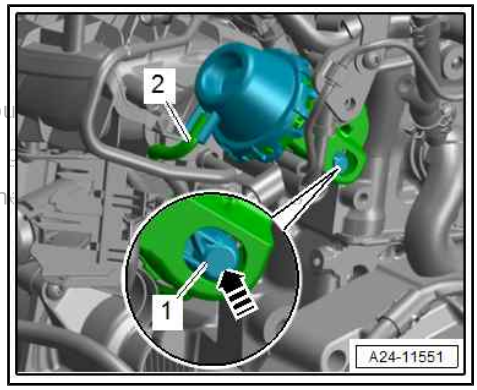

If the change-over does not operate as described:

– Check vacuum system for leaks.

– Check that vacuum lines are connected correctly.

– Check vacuum hoses for porosity.

– Move adjuster ring -1- on hand vacuum pump - VAS 6213- to position -A- to select "vacuum".

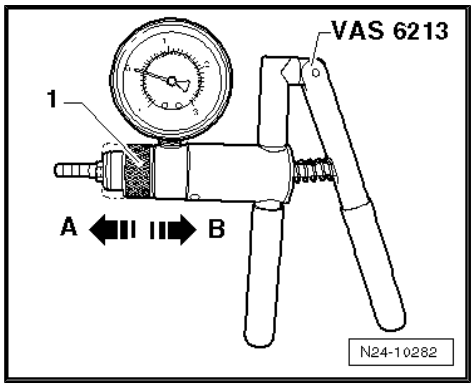

– Connect hand vacuum pump - VAS 6213- to vacuum unit for intake manifold flap valve - N316- .

– Operate hand vacuum pump - VAS 6213- several times.

- The linkage -1- of the vacuum unit for intake manifold flap should pick up.

– Vent vacuum.

- The linkage should return to the initial position.
- The linkage should move in both directions -arrows-.

– Renew intake manifold if linkage does not move.

– Install engine cover panel ⇒ page 15 .

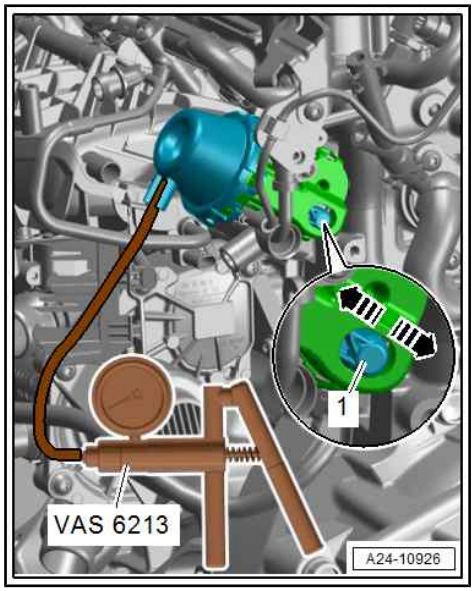

Additional work depending on model ⇒ 4-cylinder direct injection engine (1.8, 2.0 ltr. 4-valve TFSI); Rep. gr. 24 ; Intake manifold; Checking intake manifold change-over function

5 Injectors

⇒ “5.1 Exploded view - fuel rail with injectors”, page 245

⇒ “5.2 Removing and installing fuel rail”, page 247

⇒ “5.3 Removing and installing injectors”, page 248

⇒ “5.5 Cleaning injectors”, page 257

5.1 Exploded view - fuel rail with injectors

⇒ “5.1.1 Exploded view - fuel rail with injectors, vehicles with FSI engine”, page 245

⇒ “5.1.2 Exploded view - fuel rail with injectors, vehicles with MPI engine”, page 247

5.1.1 Exploded view - fuel rail with injectors, vehicles with FSI engine

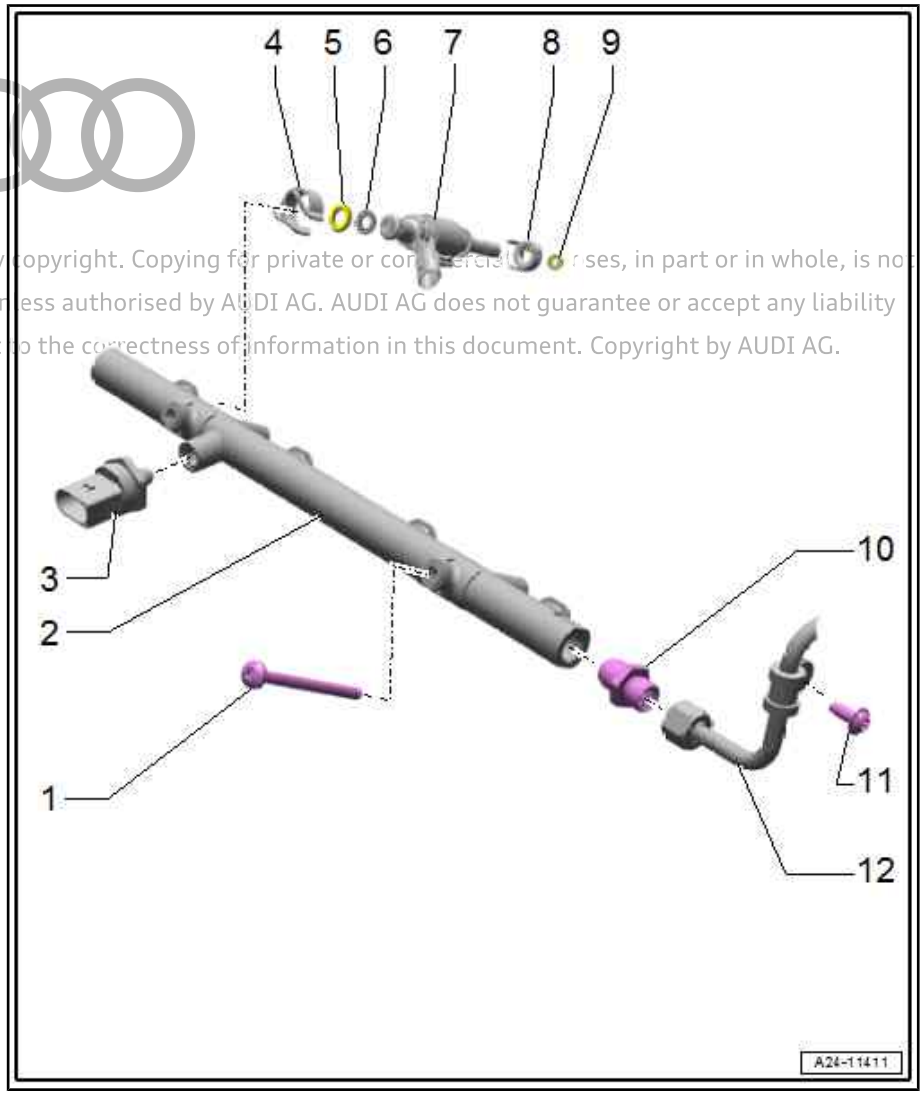

Protected by copyright. Copying for private or commercial purposes, in part or in whole, is not permitted unless authorised by AUDI AG. AUDI AG does not guarantee or accept any liability with respect to the correctness of information in this document. Copyright by AUDI AG.

1 - Bolt

- ❑ Renew M8 bolt after removing
- ❑ Tightening torques:
- ♦ M6: 9 Nm
- ♦ M8: 20 Nm +90°

2 - Fuel rail for FSI injectors

- ❑ Removing and installing ⇒ page 247

3 - Fuel pressure sender - G247-

- ❑ Lubricate taper lightly with clean engine oil; do not lubricate thread
- ❑ Removing and installing ⇒ page 259
- ❑ 27 Nm

4 - Support ring

- ❑ Renew after removing

5 - O-ring

- ❑ Renew after removing

6 - Spacer ring

- ❑ Renew after removing

7 - Injector

- ❑ Different versions available ⇒ page 246 ; for allocation refer to ⇒ Electronic parts catalogue
- ❑ Ensure correct installation position.
- ❑ Removing and installing ⇒ page 248
- ❑ Cleaning ⇒ page 257

8 - Sealing washer

9 - Combustion chamber ring seal

- ❑ Renewing after injector has been removed ⇒ page 248

10 - Connection

- ❑ For high-pressure pipe on fuel rail
- ❑ Renew after removing
- ❑ Lubricate threads lightly with clean engine oil
- ❑ 40 Nm

11 - Bolt

- ❑ 5 Nm

12 - High-pressure pipe

- ❑ Lubricate ball lightly with clean engine oil
- ❑ 27 Nm

Protected by copyright. Copying for private or commercial purposes, in part or in whole, is not permitted unless authorised by AUDI AG. AUDI AG does not guarantee or accept any liability with respect to the correctness of information in this document. Copyright by AUDI AG.

Different injectors

A - Version without ridge

- ♦ Removing ⇒ page 249

B - Version with ridge -arrow-

- ♦ Removing ⇒ page 250

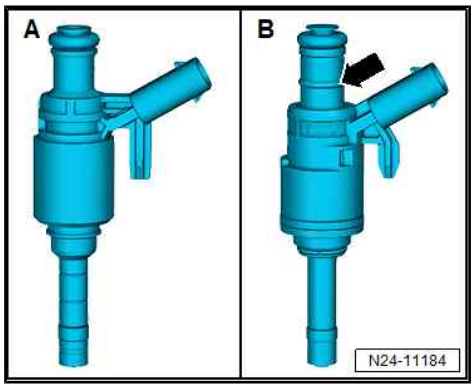

5.1.2 Exploded view - fuel rail with injectors, vehicles with MPI engine

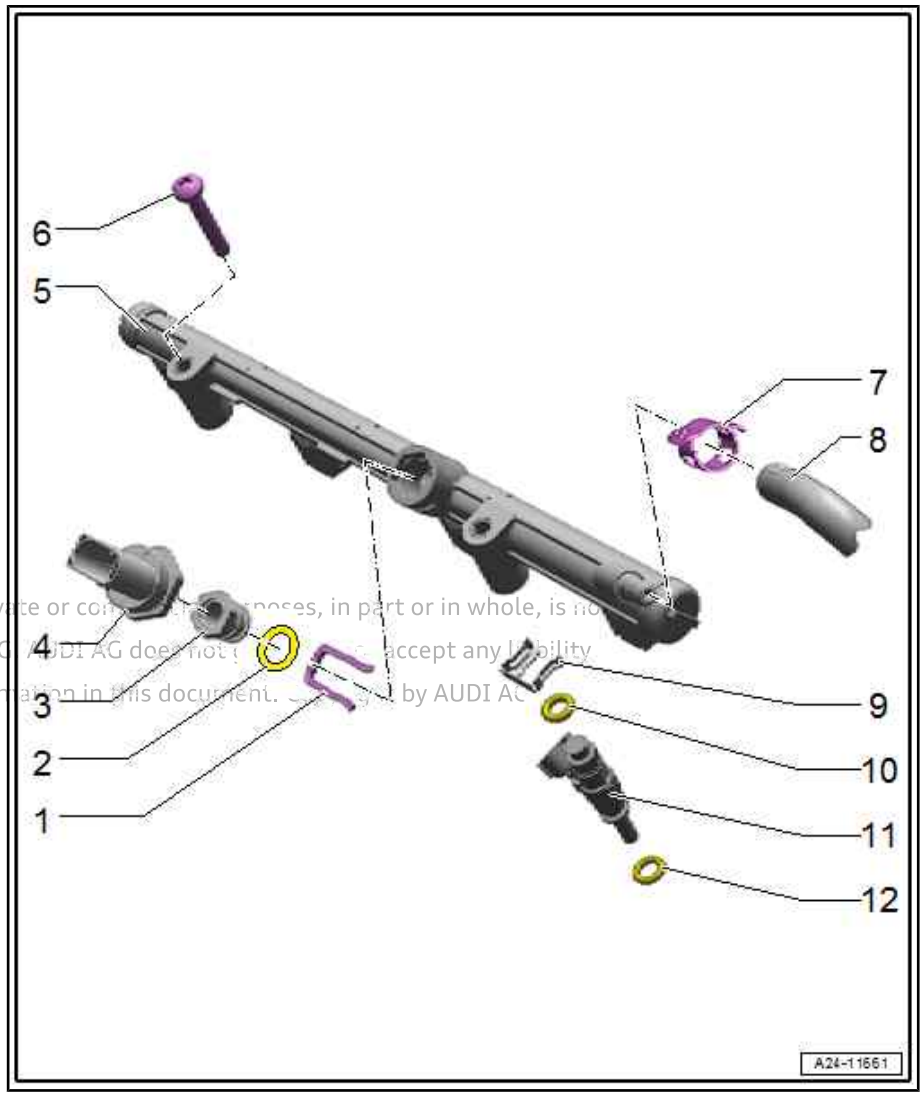

1 - Retaining clip
- ❑ For fuel pressure sender for low pressure - G410-

2 - O-ring
- ❑ Renew after removing

3 - Adapter
- ❑ Attach to fuel pressure sender for low pressure - G410- ⇒ Item 4 (page 247)
- ❑ 27 Nm

4 - Fuel pressure sender for low pressure - G410-
- ❑ Attach to adapter ⇒ Item 3 (page 247)
- ❑ Removing and installing ⇒ page 263
- ❑ 27 Nm

5 - Fuel rail for MPI injectors

6 - Bolt
- ❑ 9 Nm

7 - Spring-type clip
- ❑ Renew after removing

8 - Fuel supply line
- ❑ To fuel rail for MPI injectors
- ❑ Install so that parts are free of tension

9 - Retaining clip

10 - O-ring
- ❑ Renew after removing

11 - Injector
- ❑ Ensure correct installation position.
- ❑ Removing and installing ⇒ page 253

12 - O-ring
- ❑ Renew after removing

Protected by copyright. Copying for private or co... purposes, in part or in whole, is not permitted unless authorised by AUDI AG. AUDI AG does not ... accept any liability with respect to the correctness of information in this document. ... by AUDI AG.

5.2 Removing and installing fuel rail

The following procedure applies to the fuel rail for FSI injectors.

Removing

All procedures are described in ⇒ 4-cylinder direct injection engine (1.8, 2.0 ltr. 4-valve TFSI); Rep. gr. 24 ; Injectors; Removing and installing fuel rail .

Installing

– Installation is carried out in reverse order; note the following:

- Renew support rings for injectors after removing.
- If any injectors remain lodged in the cylinder head when the fuel rail is detached, it is only necessary to install the O-rings and spacers from the repair set.
- If the injectors are pulled out along with the fuel rail, install all the components of the repair set with a combustion chamber ring seal ⇒ page 248 .

– Install intake manifold ⇒ page 240 .

Tightening torques

♦ ⇒ "5.1.1 Exploded view - fuel rail with injectors, vehicles with FSI engine", page 245

5.3 Removing and installing injectors

⇒ "5.3.1 Removing and installing injectors - vehicles with FSI engine", page 248

⇒ "5.3.2 Removing and installing injectors - vehicles with MPI engine", page 253

Protected by copyright. Copying for private or commercial purposes, in part or in whole, is not permitted unless authorised by AUDI AG. AUDI AG does not guarantee or accept any liability with respect to the correctness of information in this document. Copyright by AUDI AG.

5.3.1 Removing and installing injectors - vehicles with FSI engine

- Injectors must only be installed when engine is cold.

Special tools and workshop equipment required

♦ Tool set for FSI engines - T10133 C-

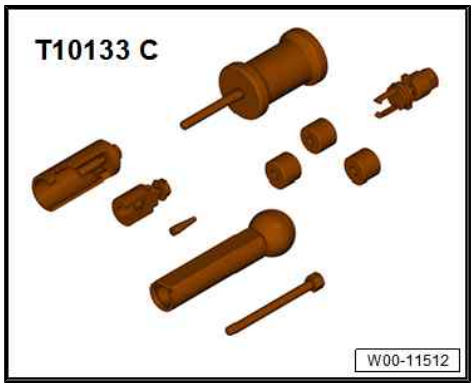

Removing

– Observe rules for cleanliness ⇒ page 8 .

– Remove fuel rail ⇒ page 247 .

- Carefully pull out any injectors that remain lodged in the fuel rail.

– Remove the injectors if they remain lodged in the cylinder head.

– Cover open inlet ports with a clean cloth.

– Detach support ring -4- from injector -1-.

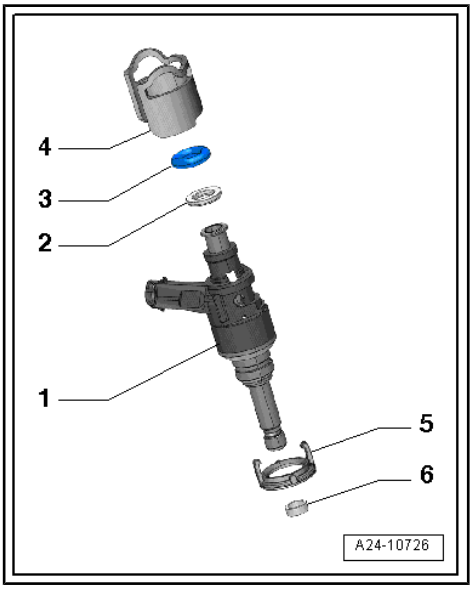

Removing injector version A ⇒ page 246

– Slide sleeve -T10133/18- over injector.

– Carefully knock against stop sleeve several times with a plastic hammer -1- to loosen injector.

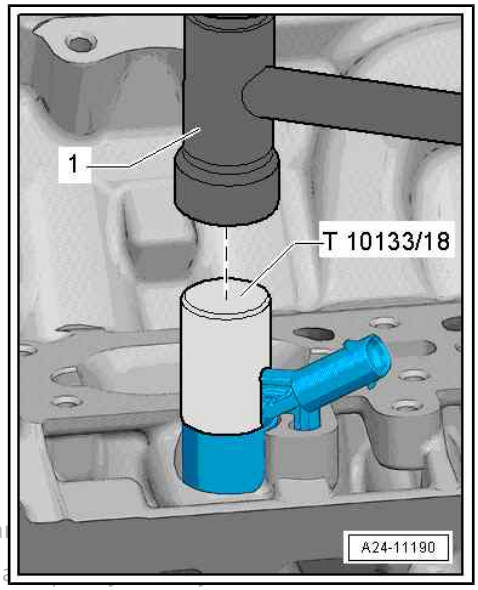

Protected by copyright. Copying for private or commercial purposes, in pa
permitted unless authorised by AUDI AG. AUDI AG does not guarantee or a
with respect to the correctness of information in this document. Copyright by AUDI AG.

- Use a torque wrench to pull out injector.

– Set torque wrench to 5 Nm.

– Fit puller -T10133/2A- to groove on injector.

– Then fit guide puller T10133/16A .

– Pull out injector by turning bolt with torque wrench -1-.

– If injector does not come loose after limit torque of 5 Nm is reached, remove puller and repeat procedure using stop sleeve to loosen injector.

– Repeat procedure for each injector.

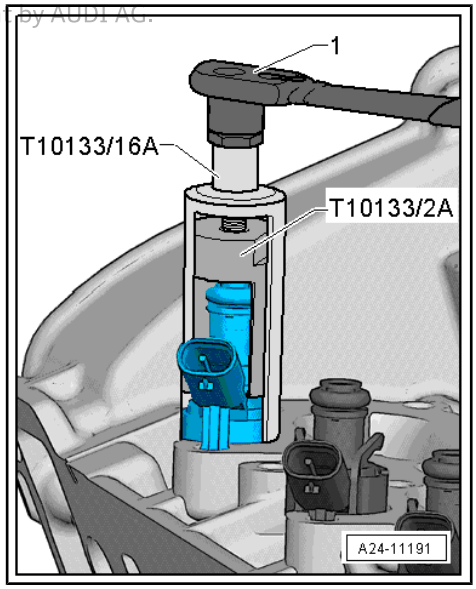

Removing injector version B ⇒ page 246

– Screw puller -T10133/20- -item A- onto striker -T10133/3- -item B-.

– Position puller behind ridge -arrow- on injector -1-.

– Pull injector out by striking it gently.

– Repeat procedure for each injector.

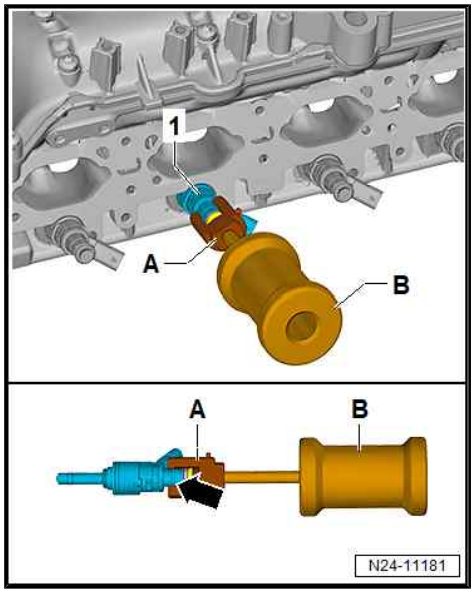

Dismantling injector

– Pull O-ring -3- and spacer ring -2- off injector -1-.

– Unclip sealing element -5-.

– Carefully remove old combustion chamber ring seal -6-. To do so, cut open combustion chamber ring seal using knife or prise open with small screwdriver and then pull off forwards.

4 - Support ring

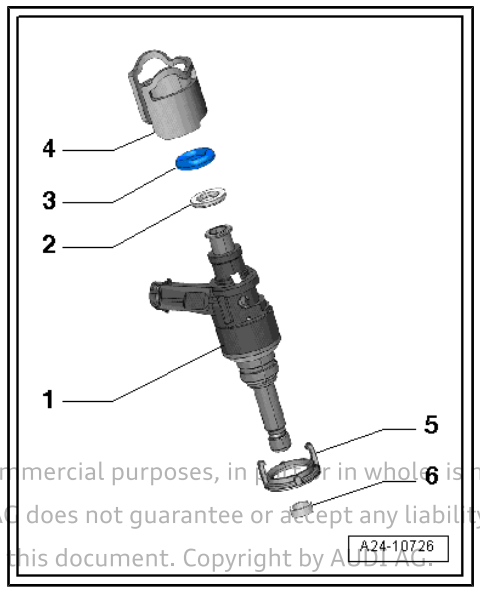

Protected by copyright. Copying for private or commercial purposes, in part or in whole, is not permitted unless authorised by AUDI AG. AUDI AG does not guarantee or accept any liability with respect to the correctness of information in this document. Copyright by AUDI AG.

– Clean ring groove in area of seal -arrow-. Remove carbon deposits with a brass wire brush.

- Take care not to damage groove on injector. Injector must be renewed if groove is damaged.

Installing

- Use complete repair set when installing.
- Renew support ring after removing.
- Renew combustion chamber ring seal before re-installing injector.

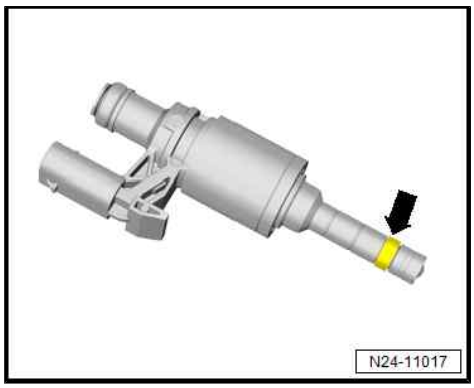

– Clean bore in cylinder head with nylon cylinder brush - T10133/4- -item A-.

– When re-installing an injector, clean any combustion residue off groove for combustion chamber ring seal and injector stem with a clean cloth.

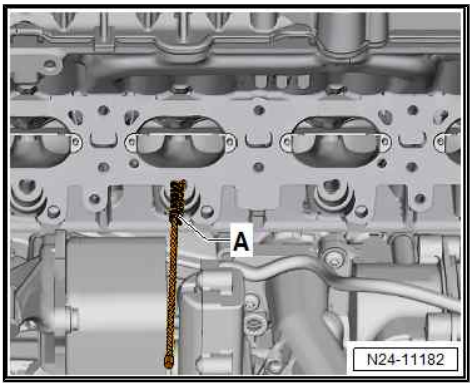

– Fit assembly cone -T10133/5- with new combustion chamber ring seal -1- onto injector -2-.

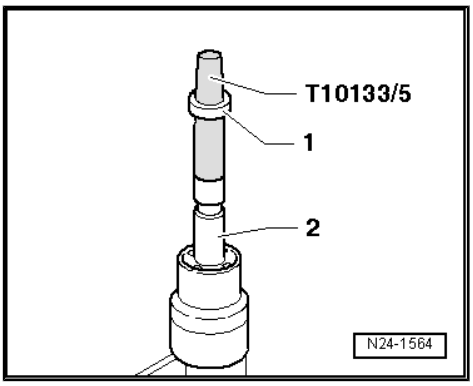

– Using assembly sleeve -T10133/6- , push combustion chamber ring seal -1- onto assembly cone -T10133/5- as far as it will go. (Knurled side of assembly sleeve faces towards combustion chamber ring seal.)

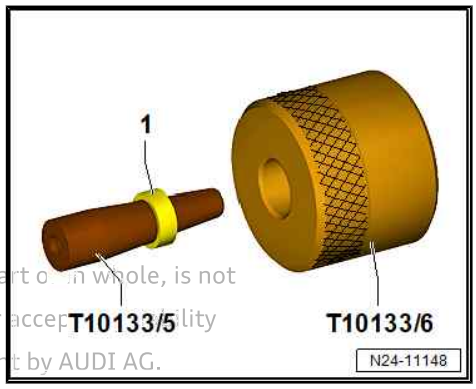

Protected by copyright. Copying for private or commercial purposes, in part or in whole, is not permitted unless authorised by AUDI AG. AUDI AG does not guarantee or accept liability with respect to the correctness of information in this document. Copyright by AUDI AG.

– Turn round assembly sleeve -T10133/6- and slide combustion chamber ring seal into groove. (Smooth side of assembly sleeve faces towards combustion chamber ring seal.)

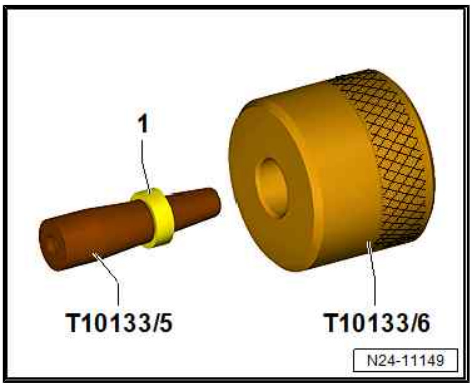

– Injector version B ⇒ page 246 : Place an M8 washer -item A- on injector.

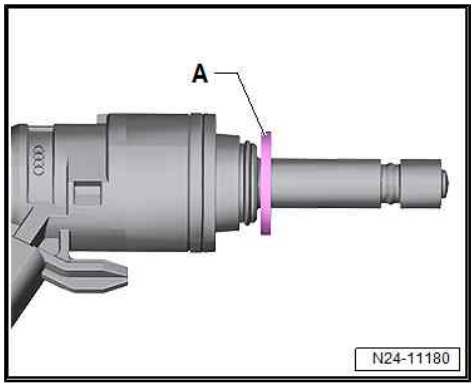

– Place assembly cone -T10133/5- with combustion chamber ring seal on injector.
– Slide combustion chamber ring seal onto injector with assembly sleeve -T10133/6- .
– Remove assembly cone -T10133/5- and push combustion chamber ring seal into sealing ring groove using assembly sleeve -T10133/6- -arrow-.

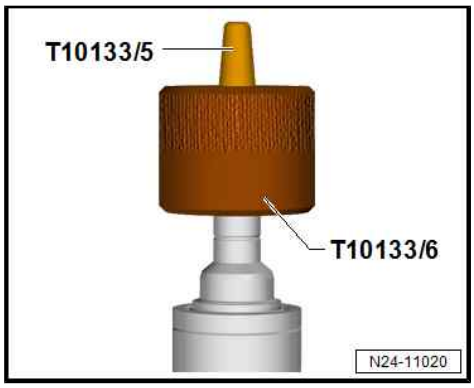

Note:

The combustion chamber ring seal is widened when it is pushed onto the injector. After pushing it on, it therefore has to be compressed again. This is done in two stages, as described below.

– Push calibration sleeve -T10133/7- onto injector as far as stop or up to washer -A- and simultaneously turn it slightly (approx. 180°).
– Pull calibration sleeve -T10133/7- off again by turning it in the opposite direction.

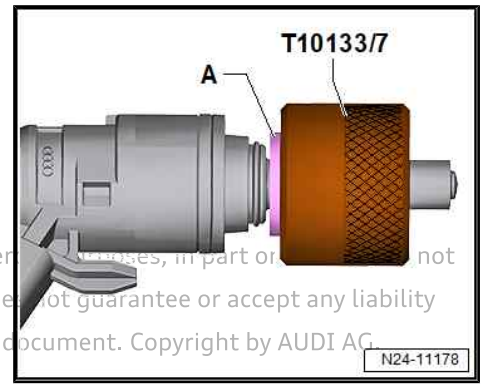

Protected by copyright. Copying for private or commer... not permitted unless authorised by AUDI AG. AUDI AG doe... not guarantee or accept any liability with respect to the correctness of information in this document. Copyright by AUDI AG.

– Push calibration sleeve -T10133/8- onto injector as far as stop or up to washer -A- and simultaneously turn it slightly (approx. 180°).
– Pull calibration sleeve -T10133/8- off again by turning it in the opposite direction.

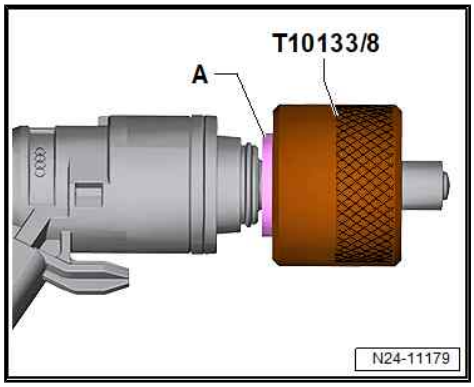

– Before installing new injector -1-, lubricate new O-ring -3- lightly with clean engine oil.

• The combustion chamber ring seal -6- must not be lubricated.

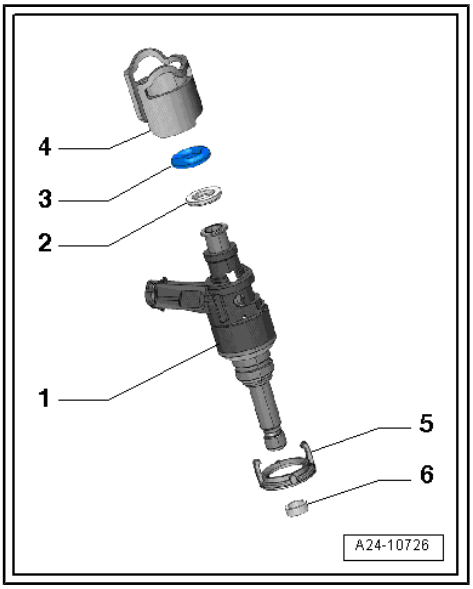

– Press injector by hand as far as it will go into aperture in cylinder head (aperture must be free of oil and grease). Ensure that the injector is properly seated -arrow- in the cylinder head.

• Lug -1- and hole -arrow- in cylinder head must face each other.

• It should be possible to insert the injector easily. If necessary wait until the combustion chamber ring seal has contracted sufficiently.

– Fit support ring onto injector.

– Install fuel rail ⇒ page 247 .

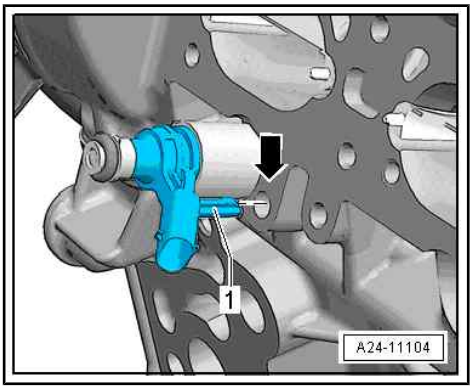

5.3.2 Removing and installing injectors - vehicles with MPI engine

Special tools and workshop equipment required

♦ Socket T30 - T10405-

Protected by copyright. Copying for private or commercial purposes, in part or in whole, is not permitted unless authorised by AUDI AG. AUDI AG does not guarantee or accept any liability with respect to the correctness of information in this document. Copyright by AUDI AG.

Removing

– Observe rules for cleanliness ⇒ page 8 .

Preparatory work may be necessary depending on model ⇒ 4-cylinder direct injection engine (1.8, 2.0 ltr. 4-valve TFSI); Rep. gr. 24 ; Injectors; Removing and installing injectors .

– If fitted, remove engine cover panel ⇒ page 15 .

– Detach vacuum line -1- and coolant line -2- from intake manifold.
– Detach electrical connector -3- from bracket and unplug.
– Unplug electrical connectors -4, 5-.

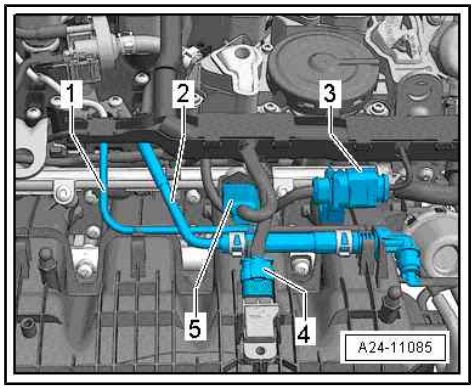

– Unscrew bolt -arrow- using socket Torx T30 - T10405- and detach bracket -1- for electrical connectors.

Protected by copyright. Copying for private or commercial purposes, in
permitted unless authorised by AUDI AG. AUDI AG does not guarantee
with respect to the correctness of information in this document. Copyr

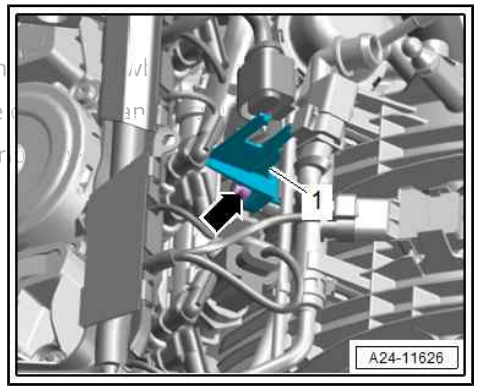

– Detach fuel supply line -2- from fuel rail.
– Move electrical wiring harness -1- clear at engine lifting eye.
– Remove bolts -arrows- from MPI fuel rail.
– Carefully lift out fuel rail with injectors.

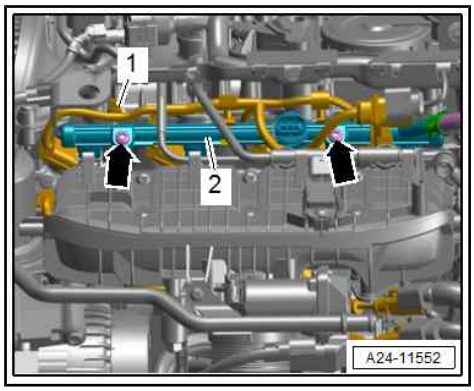

– Unplug electrical connector -4-.
– Release retaining clip -2- and detach injector -3- from fuel rail -1-.

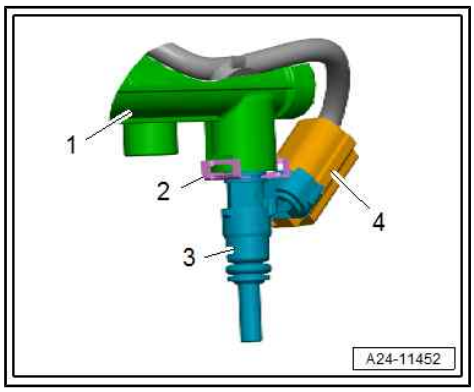

Dismantling injector

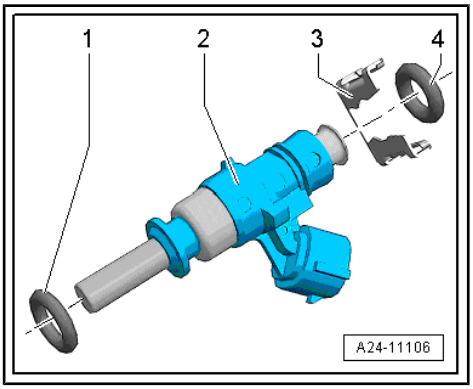

1 - Renew O-ring after removal (apply thin coating of clean engine oil prior to installation)

2 - Injector

3 - Retaining clip

4 - Renew O-ring after removal (apply thin coating of clean engine oil prior to installation)

Installing

Installation is carried out in reverse order; note the following:

- Renew O-rings after removing.
- Lubricate O-rings with clean engine oil prior to installation.
- Press fuel rail with injectors by hand as far as it will go into aperture of intake manifold (injectors must be free of oil and grease).
- Install engine cover panel ⇒ page 15

Protected by copyright. Copying for private or commercial purposes, in part or in whole, is not permitted unless authorised by AUDI AG. AUDI AG does not guarantee or accept any liability with respect to the correctness of information in this document. Copyright by AUDI AG.

Additional work depending on model ⇒ 4-cylinder direct injection engine (1.8, 2.0 ltr. 4-valve TFSI); Rep. gr. 24 ; Injectors; Removing and installing injectors

Tightening torques

- ⇒ “5.1.2 Exploded view - fuel rail with injectors, vehicles with MPI engine”, page 247

5.4 Renewing seals on injector

Special tools and workshop equipment required

- Tool set for FSI engines - T10133C-

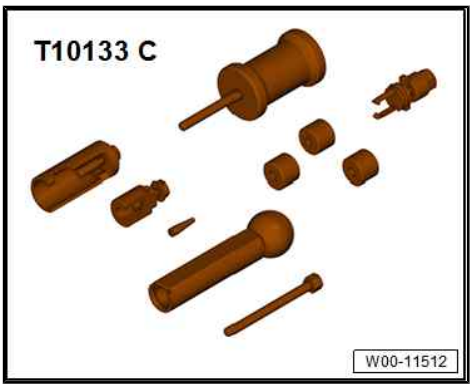

- Washer M8

Note

- *The following procedure is for the combustion chamber ring seal (teflon seal)*
- *The combustion chamber ring seal must always be renewed before the injector is re-installed.*
- *The M8 washer must be positioned on the injector before the seal is installed. This ensures it is not possible for the calibration sleeve to be pushed behind the seal.*

- Injectors removed ⇒ page 248

– Clean injector carefully.
– Carefully cut seal open with a knife -arrow-. When doing so, knife blade must not come into contact with valve body.
– Remove old seal and clean ring groove where seal was located -arrow-. Remove any carbon deposits with a brass wire brush.

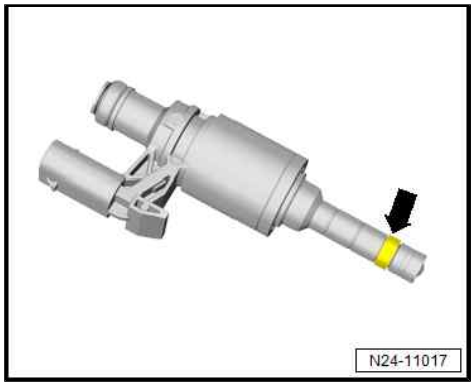

– Fit a new seal -1- onto assembly cone - T10133/5- .
– Push seal -1- onto assembly cone as far as it will go using assembly sleeve - T10133/6- (knurled side faces towards seal).

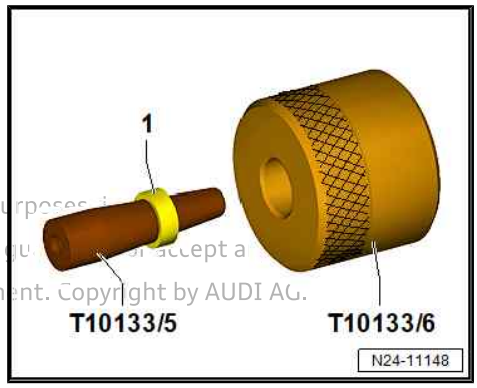

Protected by copyright. Copying for private or commercial purposes, in part, is not permitted unless authorised by AUDI AG. AUDI AG does not guarantee or accept any liability with respect to the correctness of information in this document. Copyright by AUDI AG.

– Turn assembly sleeve - T10133/6- around (knurled side no longer faces towards seal).
– Now push seal to end of assembly cone .

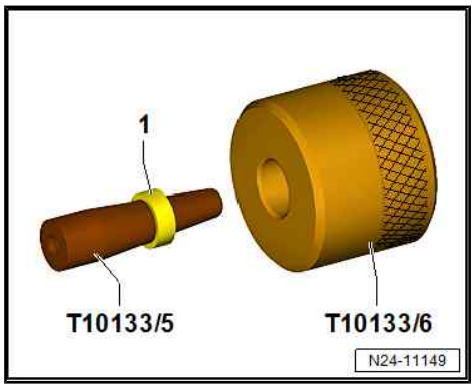

– Position M8 washer -A- on injector.

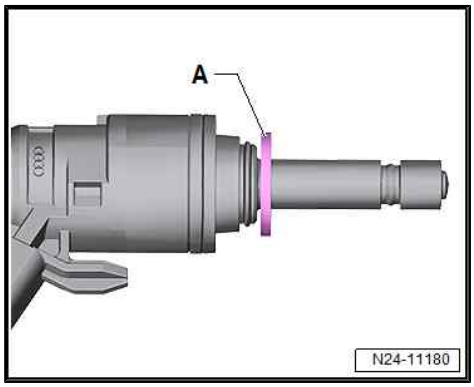

– Fit assembly cone - T10133/5- with seal onto injector from the front.
– Push seal onto injector using assembly sleeve - T10133/6- .

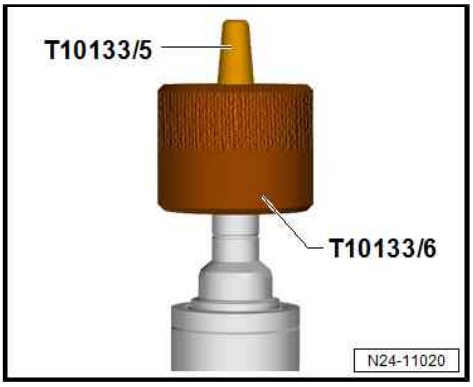

– Remove assembly cone - T10133/5- and push combustion chamber ring seal into ring groove using assembly sleeve - T10133/6- -arrow-.

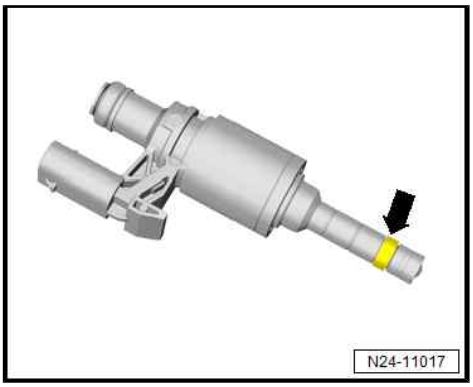

– Push calibration sleeve - T10133/7- onto injector as far as washer -A- and simultaneously turn it slightly (approx. 180°).
– Pull calibration sleeve - T10133/7- off again by turning it in opposite direction.

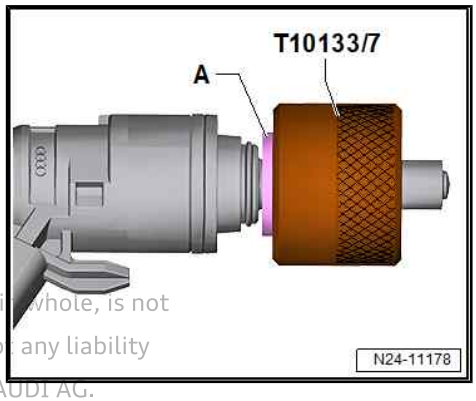

Protected by copyright. Copying for private or commercial purposes, in part or in whole, is not permitted unless authorised by AUDI AG. AUDI AG does not guarantee or accept any liability with respect to the correctness of information in this document. Copyright by AUDI AG.

– Push calibration sleeve - T10133/8- onto injector as far as washer -A- and simultaneously turn it slightly (approx. 180°).
– Pull calibration sleeve - T10133/8- off again by turning it in opposite direction.
– Remove washer -A-.
– Renew O-ring on injector (apply thin coating of clean engine oil prior to installation).

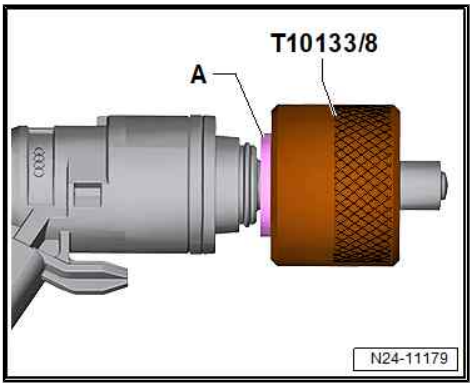

5.5 Cleaning injectors

The following procedure applies to FSI injectors.

Special tools and workshop equipment required

- Ultrasonic cleaning unit - VAS 6418-
- Mounting plate for injectors - VAS 6418/1-
- Cleaning fluid - VAS 6418/2-

Procedure

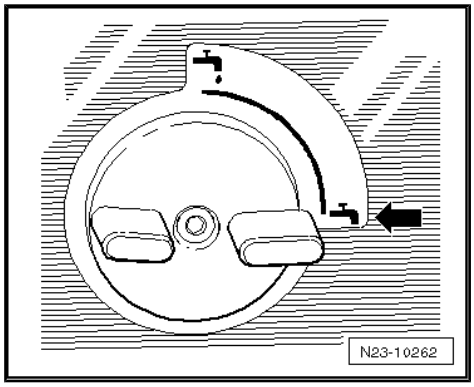

– Close drain tap -arrow- on ultrasonic cleaning unit - VAS 6418- (located on right side of housing).

– Fill up ultrasonic unit.

• Ratio of cleaning fluid: 2,100 ml of tap water which has been allowed to settle for a few minutes and 20 ml of cleaning fluid - VAS 6418/2-

• The ideal fluid level is approx. 1 ... 4 mm above the base of the mounting plate. The ultrasonic cleaning unit - VAS 6418- can be damaged if the fluid level is too low.

– Remove injectors ⇒ page 248 .

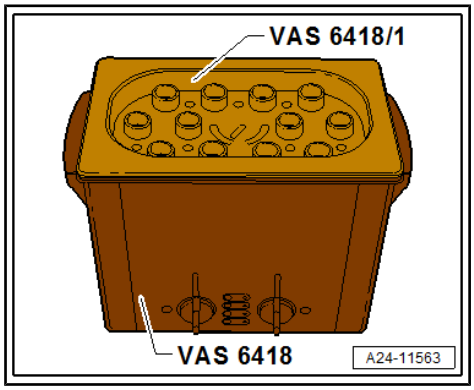

– Place mounting plate for injectors - VAS 6418/1- on top of cleaning unit.

• It is important to read the safety notes in the operating instructions before switching on the ultrasonic cleaning unit - VAS 6418- .

– Insert FSI injectors all the way into guides of mounting plate for injectors - VAS 6418/1- .

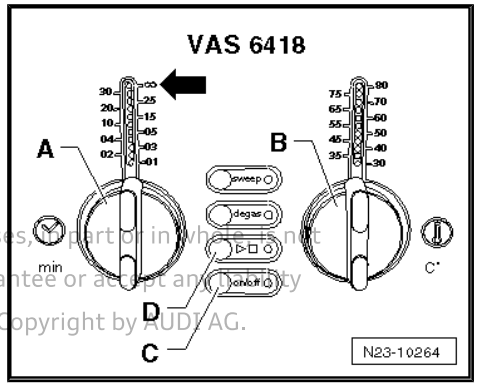

– Switch on cleaning unit by pressing on/off button -C-.

– Select a cleaning time of 30 minutes with rotary control -A-.

– Set rotary control -B- to a temperature of 50°C.

– Press ▶ button -D- to start cleaning procedure.

• The actual cleaning process commences when the temperature reaches at least 50 °C and must last for at least 30 minutes.

– Install injectors with new combustion chamber seal ⇒ page 248 .

Protected by copyright. Copying for private or commercial purposes, in part or in whole, is not permitted unless authorised by AUDI AG. AUDI AG does not guarantee or accept any liability with respect to the correctness of information in this document. Copyright by AUDI AG.

6 Senders and sensors

⇒ “6.1 Removing and installing intake air temperature sender G42 / intake manifold pressure sender G71 ”, page 259

⇒ “6.2 Removing and installing fuel pressure sender G247 ”, page 259

⇒ “6.3 Checking fuel pressure sender G247 ”, page 261

⇒ “6.4 Removing and installing fuel pressure sender for low pressure G410 ”, page 263

⇒ “6.5 Removing and installing pressure differential sender for particulate filter G1037 ”, page 264

Protected by copyright. Copying for private or commercial purposes, in part or in whole, is not permitted unless authorised by AUDI AG. AUDI AG does not guarantee or accept any liability with respect to the correctness of information in this document. Copyright by AUDI AG.

6.1 Removing and installing intake air temperature sender - G42- / intake manifold pressure sender - G71-

For some models, designation in current flow diagram may also be intake manifold sender - GX9- or intake manifold pressure sender - G71-

Removing

Preparatory work may be necessary depending on model ⇒ 4-cylinder direct injection engine (1.8, 2.0 ltr. 4-valve TFSI); Rep. gr. 24 ; Senders and sensors; Removing and installing intake air temperature sender - G42- / intake manifold pressure sender - G71- .

– If fitted, remove engine cover panel ⇒ page 15 .

– Unplug electrical connector -2-.

– Remove bolt -1-.

– Release catches -arrows- and detach intake air temperature sender - G42- / intake manifold pressure sender - G71- from intake manifold.

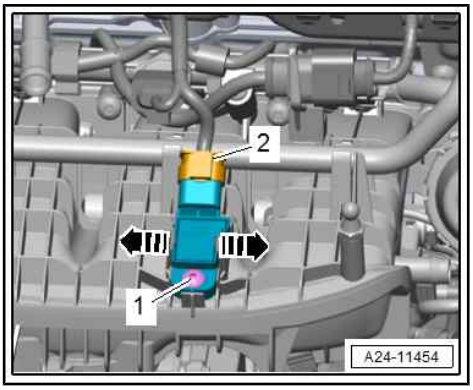

Installing

– Install engine cover panel ⇒ page 15 .

Additional work depending on model ⇒ 4-cylinder direct injection engine (1.8, 2.0 ltr. 4-valve TFSI); Rep. gr. 24 ; Senders and sensors; Removing and installing intake air temperature sender - G42- / intake manifold pressure sender - G71-

Tightening torques

◆ ⇒ “4.1 Exploded view - intake manifold”, page 239

6.2 Removing and installing fuel pressure sender - G247-

Special tools and workshop equipment required

- Assembly tool - T10118-

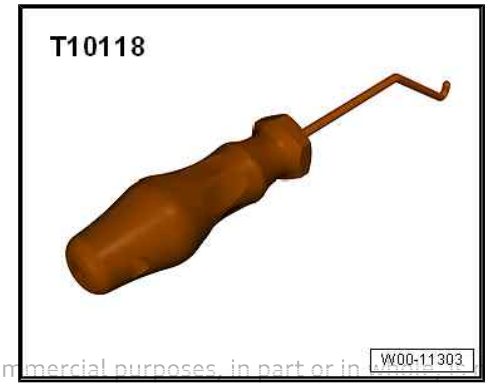

Protected by copyright. Copying for private or commercial purposes, in part or in whole, is not permitted unless authorised by AUDI AG. AUDI AG does not guarantee or accept any liability with respect to the correctness of information in this document. Copyright by AUDI AG.

- Socket (27 mm) - T40218- or commercially available socket (27 mm) for fuel pressure sender - G247- , version 1

- Socket (24 mm) - T40363- (not illustrated) for fuel pressure sender - G247- , version 2
- Crow-foot wrench (24 mm), commercially available for fuel pressure sender - G247- , version 3
- Safety goggles
- Protective gloves

Removing

Preparatory work may be necessary depending on model ⇒ 4-cylinder direct injection engine (1.8, 2.0 ltr. 4-valve TFSI); Rep. gr. 24 ; Senders and sensors; Removing and installing fuel pressure sender - G247- .

– Use assembly tool - T10118- to release electrical connector -1- and unplug it.

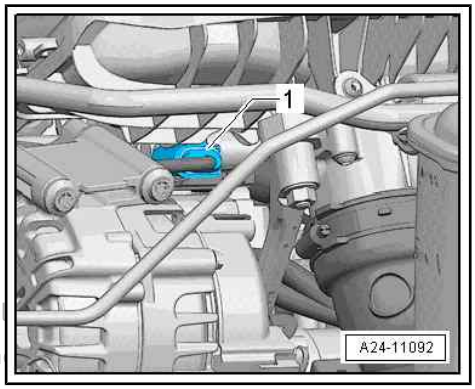

CAUTION

The fuel system is pressurised.

Risk of injury as fuel may spray out.

– Put on safety goggles.

– Put on protective gloves.

– Release pressure (wrap a clean cloth around connection and open connection carefully).

Protected by copyright. Copying for private or commercial purposes, in part or in whole, is not permitted unless authorised by AUDI AG. AUDI AG does not guarantee or accept any liability with respect to the correctness of information in this document. Copyright by AUDI AG.

– Catch escaping fuel with a cloth.

– Unscrew fuel pressure sender - G247- .

Installing

Installation is carried out in reverse order; note the following:

Additional work depending on model ⇒ 4-cylinder direct injection engine (1.8, 2.0 ltr. 4-valve TFSI); Rep. gr. 24 ; Senders and sensors; Removing and installing fuel pressure sender - G247-

Tightening torques

- ⇒ “5.1.1 Exploded view - fuel rail with injectors, vehicles with FSI engine”, page 245
- ⇒ “4.1 Exploded view - intake manifold”, page 239

6.3 Checking fuel pressure sender - G247-

Special tools and workshop equipment required

- Test instrument adapter - VAS 5570-

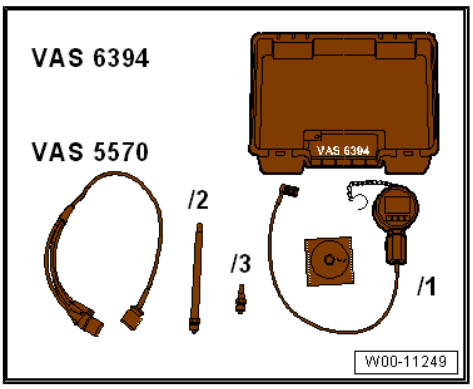

- Pressure sensor tester - VAS 6394-
- Vehicle diagnostic tester

Procedure:

Preparatory work may be necessary depending on model ⇒ 4-cylinder direct injection engine (1.8, 2.0 ltr. 4-valve TFSI); Rep. gr. 24 ; Senders and sensors; Checking fuel pressure sender - G247- .

– Observe rules for cleanliness ⇒ page 8 .

– Remove fuel pressure sender - G247- ⇒ page 259 .

– Screw in adapter - VAS 6394/2- in place of fuel pressure sender - G247- and tighten adapter with same torque as specified for -G247- .

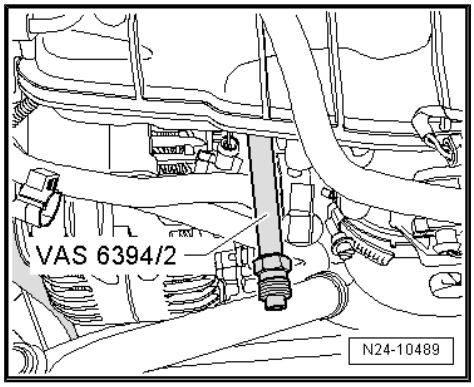

– Unscrew plug -2- on digital pressure gauge - VAS 6394/1- and screw in fuel pressure sender - G247- in its place (tighten to specified torque).

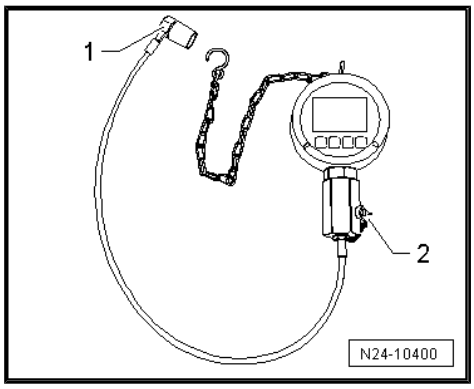

– Use test instrument adapter - VAS 5570- to make electrical connection between vehicle and fuel pressure sender - G247- .

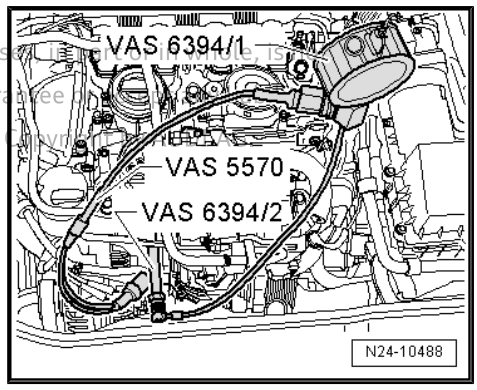

Copyright by AUDI AG. Copying for private or commercial purposes, in part or in whole, is not permitted unless authorised by AUDI AG. AUDI AG does not guarantee or accept any liability with respect to the correctness of information in this document. Copyright by AUDI AG.

– Connect vehicle diagnostic tester .
– Switch on ignition.
– Select “Engine electronics” in vehicle self-diagnosis.
– Select “Measured values”.
– Select “Fuel pressure” from list.
• The display zone shows the actual pressure value being transmitted to the engine control unit by the fuel pressure sender - G247- .

– Switch on pressure gauge - VAS 6394/1- by pressing button -A- once briefly.
• The digital pressure gauge - VAS 6394/1- should indicate 0 bar.
– If different value is shown, zero the tester by pressing button -C- briefly.

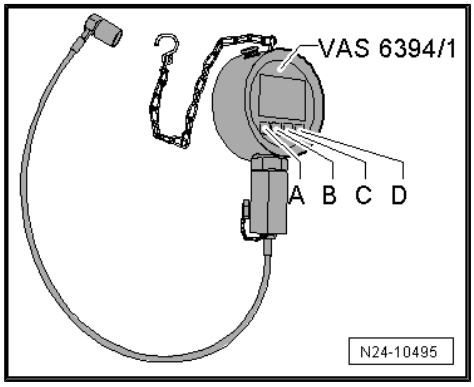

– Connect pressure gauge - VAS 6394/1- to adapter - VAS 6394/2- .

– Start engine.

– Compare pressure indicated by pressure gauge - VAS 6394/1- with actual pressure value on vehicle diagnostic tester .

• The pressure readings must not deviate by more than 5 bar.

– If the deviation is more than 5 bar, fit a new fuel pressure sender - G247- to test it.

– Place a cloth underneath to catch escaping fuel.

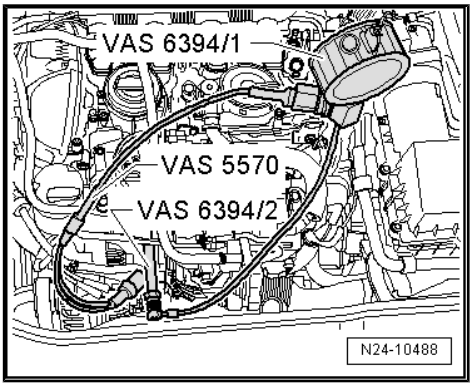

CAUTION

The fuel system is pressurised.

Risk of injury as fuel may spray out.

– Put on safety goggles.

– Put on protective gloves.

– Release pressure (wrap a clean cloth around connection and open connection carefully).

– Screw a new fuel pressure sender - G247- into pressure gauge - VAS 6394/1- .

– Repeat the test with the new fuel pressure sender - G247- and compare the two pressure values.

– If measured values are still not the same, check electrical connection between fuel pressure sender - G247- and engine control unit ⇒ Current flow diagrams, Electrical fault finding and Fitting locations.

– If measured values are now the same, install new fuel pressure sender - G247- ⇒ page 259 .

Tightening torques

◆ ⇒ “5.1.1 Exploded view - fuel rail with injectors, vehicles with FSI engine”, page 245

Protected by copyright. Copying for private or commercial purposes, in part or in whole, is not permitted unless authorised by AUDI AG. AUDI AG does not guarantee or accept any liability with respect to the correctness of information in this document. Copyright by AUDI AG.

6.4 Removing and installing fuel pressure sender for low pressure - G410-

The following procedure applies to MPI engines.

Removing

Preparatory work may be necessary depending on model ⇒ 4-cylinder direct injection engine (2.0 ltr. 4-valve TFSI); Rep. gr. 24 ; Senders and sensors ; Removing and installing fuel pressure sender for low pressure - G410- .

– If fitted, remove engine cover panel ⇒ page 15 .

– Unplug electrical connector -3-.
– Place a cloth underneath to catch escaping fuel.
– Pull off retaining clip -1-.
– Pull fuel pressure sender for low pressure - G410- -item 2- out of fuel rail.

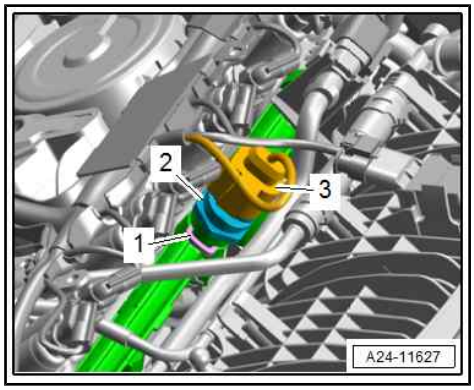

– If necessary, unscrew fuel pressure sender for low pressure -1- from adapter -2-.

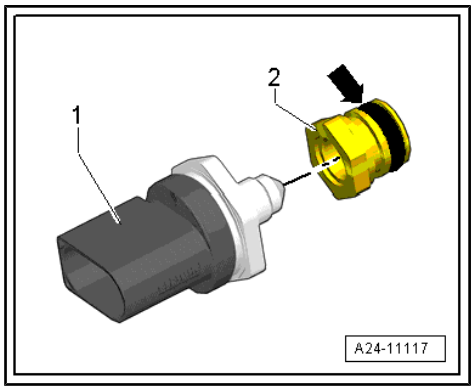

Installing

Installation is carried out in reverse order; note the following:

- Renew O-ring -arrow- after removal.

– Install engine cover panel ⇒ page 15 .

Additional work depending on model ⇒ 4-cylinder direct injection engine (2.0 ltr. 4-valve TFSI); Rep. gr. 24 ; Senders and sensors ; Removing and installing fuel pressure sender for low pressure - G410-

Tightening torques

♦ ⇒ “5.1.2 Exploded view - fuel rail with injectors, vehicles with MPI engine”, page 247

6.5 Removing and installing pressure differential sender for particulate filter - G1037-

Special tools and workshop equipment required

♦ Vehicle diagnostic tester
♦ Hose clip pliers - VAS 6362-

Protected by copyright. Copying for private or commercial purposes, in part or in whole, is not permitted unless authorised by AUDI AG. AUDI AG does not guarantee or accept any liability with respect to the correctness of information in this document. Copyright by AUDI AG.

Removing

– Remove engine cover panel ⇒ page 15 .

Pressure differential sender - version 1:

– Unplug electrical connector -1- for pressure differential sender .

– Unclip bracket with pressure differential sender from intake manifold -arrow- and move clear.

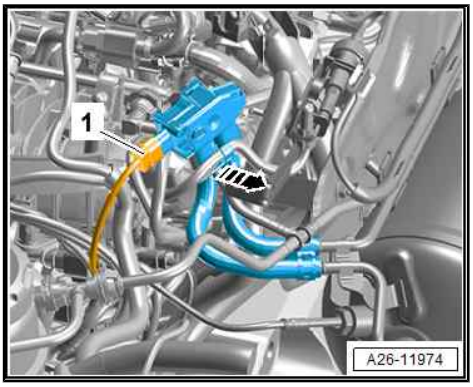

– Release catches -arrows- and detach bracket for pressure differential sender -item 2-.

– Release hose clips -3-.

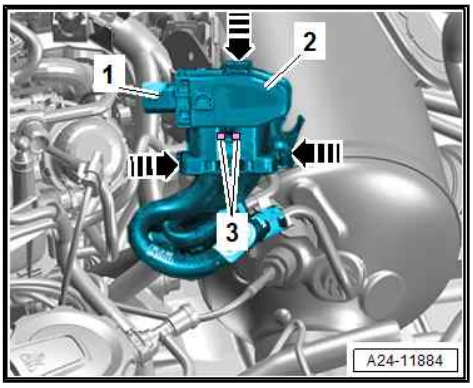

Pressure differential sender - version 2

– Unplug electrical connector -3-.

– Remove bolt -1- and release hose clips -2-.

– Detach pressure differential sender .

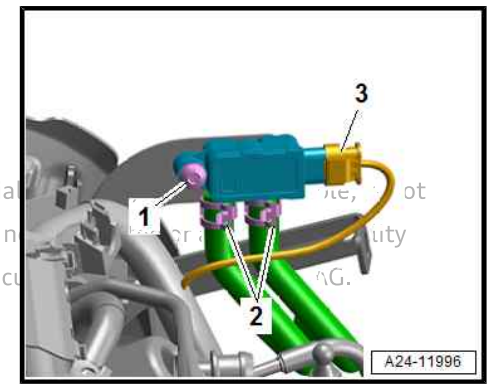

Protected by copyright. Copying for private or commercial
permitted unless authorised by AUDI AG. AUDI AG does n
with respect to the correctness of information in this docu

All versions (continued):

– Spray hoses on pressure differential sender with silicone-free lubricant.

– To prevent hose connections from breaking off, carefully disconnect hoses and keep them straight when pulling them off.

Installing

Installation is carried out in reverse order; note the following:

- Blow through hose (towards emission control module) with compressed air to remove dirt or ice (frozen condensation).
- Make sure that hoses are securely fitted and seal properly.
- If pressure pipes have been detached from emission control module, tighten them to specified torque.
- Secure all hose connections with correct type of hose clips (as original equipment) ⇒ Electronic parts catalogue .

– Install engine cover panel ⇒ page 15 .

Tightening torques

◆ ⇒ “8.1 Exploded view - Lambda probe”, page 273

7 High-pressure pump

⇒ “7.1 Exploded view - high-pressure pump”, page 266

⇒ “7.2 Removing and installing high-pressure pump”, page 267

⇒ “7.3 Removing and installing high-pressure pipe”, page 270

7.1 Exploded view - high-pressure pump

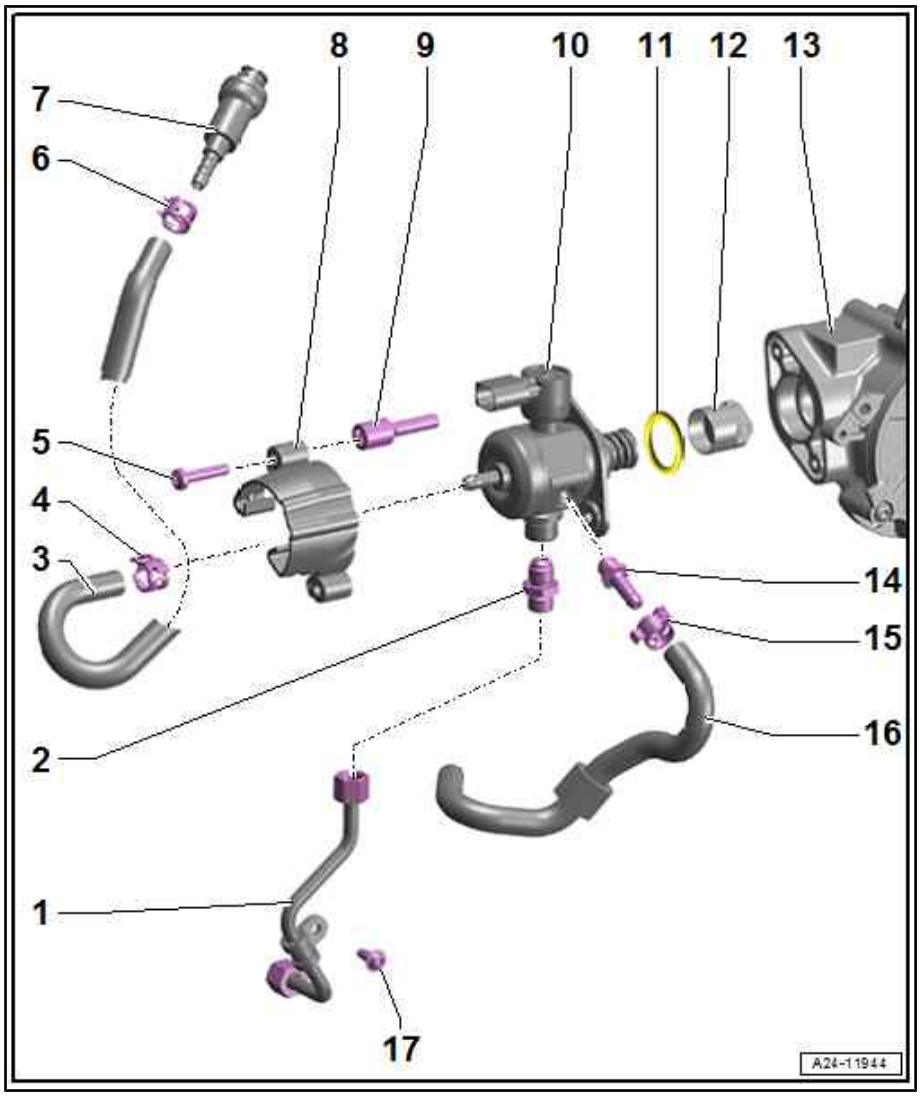

1 - High-pressure pipe

- To fuel rail for FSI injectors
- Lightly lubricate ball of fuel supply line with engine oil
- Install so that parts are free of tension
- Tightening torque for union nut: 27 Nm
- Removing and installing ⇒ page 270

2 - Connection

- Must always be renewed once loosened
- Counterhold when loosening union nut
- 40 Nm

3 - Fuel supply hose

- From fuel tank

4 - Spring-type clip

- Renew after removing

5 - Bolt

- Only with protective plate ⇒ Item 8 (page 266)
- 9 Nm

6 - Spring-type clip

- Renew after removing

7 - Quick release coupling

- With cut-off valve
- Fitted on some versions only

8 - Guard plate

- Different versions

9 - Bolt

- M6; renew after removing
- Tightening torques and sequence ⇒ page 267
- Without protective plate ⇒ Item 8 (page 266) : socket head bolt
- With protective plate ⇒ Item 8 (page 266) : centre hex stud

10 - High-pressure pump

- With integrated fuel pressure regulating valve or fuel metering valve
- Different versions of regulating valve depending on version of high-pressure pump:

Protected by copyright. Copying for private or commercial purposes, in part or in whole, is not permitted unless authorised by AUDI AG. AUDI AG does not guarantee or accept any liability with respect to the correctness of information in this document. Copyright by AUDI AG.

- Fuel pressure regulating valve - N276- or
- Fuel metering valve - N290-
  - ❑ Take care not to tilt when installing
  - ❑ Removing and installing ⇒ page 267

11 - O-ring
- ❑ Renew if damaged
- ❑ Lubricate lightly with engine oil

12 - Roller tappet
- ❑ May remain lodged in vacuum pump when high-pressure pump is removed

13 - Vacuum pump

14 - Connection/plug
- ❑ For fuel supply line
- ❑ For MPI engines
- ❑ Must always be renewed once loosened

Tightening torques:
- M10: 15 Nm
- M12: 20 Nm

15 - Spring-type clip
- ❑ For MPI engines
- ❑ Renew after removing

16 - Fuel supply hose
- ❑ To fuel rail (for vehicles with MPI engine)

17 - Bolt
- ❑ 9 Nm

High-pressure pump - tightening torques and sequence

- After removing, renew bolts tightened with specified tightening angle.

– To prevent flange of high-pressure pump from being deformed during installation, tighten bolts -arrows- in stages as follows:

Stage	Bolts	Tightening torque
1.		Screw in by hand until contact is made
2.		Tighten one turn alternately until flange of high-pressure pump makes contact with vacuum pump
3.	M6	8 Nm +90° further
	M8	20 Nm

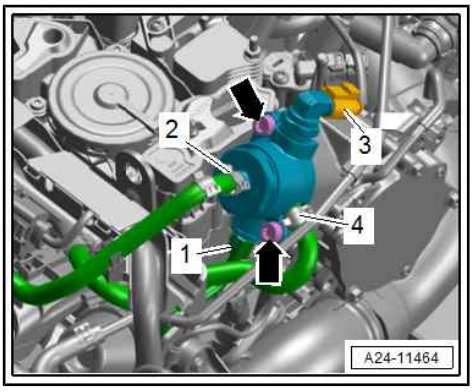

7.2 Removing and installing high-pressure pump

Special tools and workshop equipment required

Protected by copyright. Copying for private or commercial purposes, in part or in whole, is not permitted unless authorised by AUDI AG. AUDI AG does not guarantee or accept any liability with respect to the correctness of information in this document. Copyright by AUDI AG.

- Ratchet wrench (21 mm) - T40263-

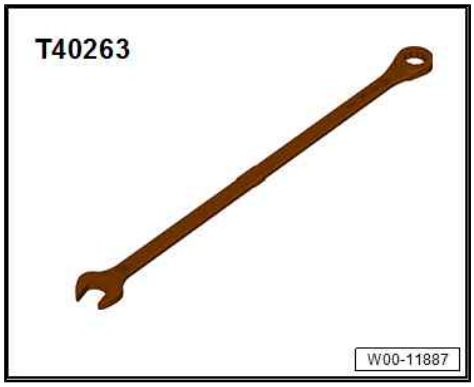

- Adapter - T40314-

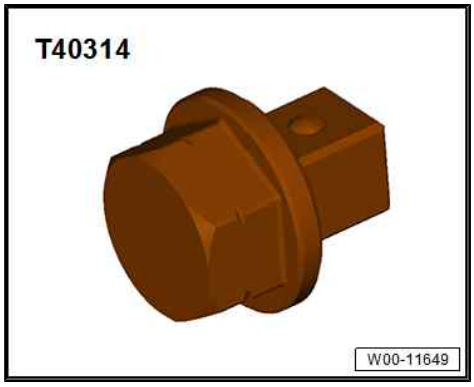

- Safety goggles
- Protective gloves

Removing

Preparatory work may be necessary depending on model ⇒ 4-cylinder direct injection engine (1.8, 2.0 ltr. 4-valve TFSI); Rep. gr. 24 ; High-pressure pump; Removing and installing high-pressure pump .

- Remove the high-pressure pump only when the engine is cold.

– Observe rules for cleanliness ⇒ page 8 .

– Remove bolt -arrow- for retaining clip.

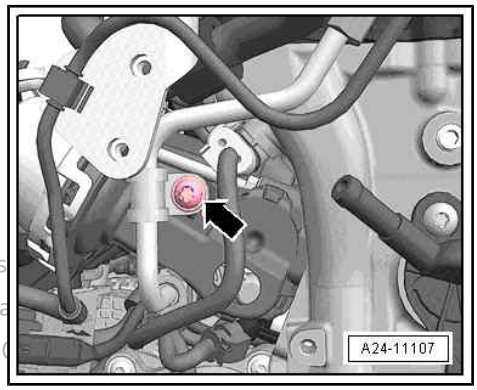

Protected by copyright. Copying for private or commercial purpos
permitted unless authorised by AUDI AG. AUDI AG does not guara
with respect to the correctness of information in this document.

Vehicles with protective plate

– Unscrew bolts -arrows- and remove guard plate -1-.

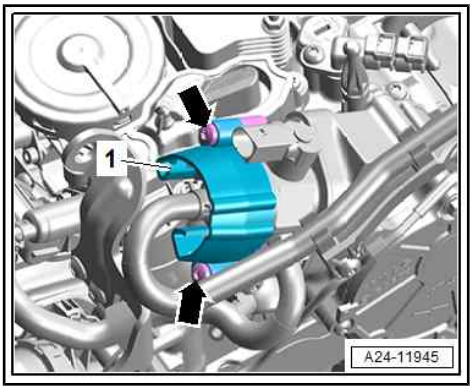

All vehicles (continued):

– Unplug electrical connector -3-.

CAUTION

The fuel system is pressurised.

Risk of injury as fuel may spray out.

- **Put on safety goggles.**
- **Put on protective gloves.**
- **Release pressure (wrap a clean cloth around connection and open connection carefully).**

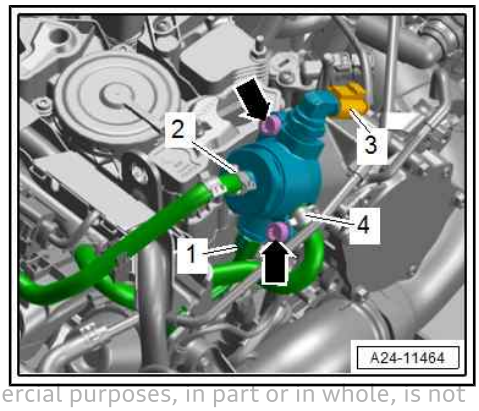

Protected by copyright. Copying for private or commercial purposes, in part or in whole, is not permitted unless authorised by AUDI AG. AUDI AG does not guarantee or accept any liability with respect to the correctness of information in this document. Copyright by AUDI AG.

– Place a cloth underneath to catch escaping fuel.
– Release hose clip -2- and detach fuel hose.
– Vehicles with MPI engine: Release hose clip -4- and detach fuel hose.
– Unscrew union nut -1- (counterhold at connection).
– Remove bolts -arrows-.
– Carefully pull out high-pressure pump. It is possible that the roller tappet may remain lodged in the vacuum pump.

Installing

Installation is carried out in reverse order; note the following:

- Renew O-ring and spring-type clips after removal.
- Renew connecting piece of high-pressure pump every time it is unscrewed.
- After removing, renew bolts tightened with specified tightening angle.

– Check roller tappet -1- for damage and renew if necessary.
– Lightly lubricate roller tappet with oil and insert it so that lug -arrow A- slides into guide notch -arrow B-.

- A second mechanic is required for the following step.

NOTICE

Risk of engine damage if valve gear drive slips

– **Only turn engine in normal direction of rotation.**

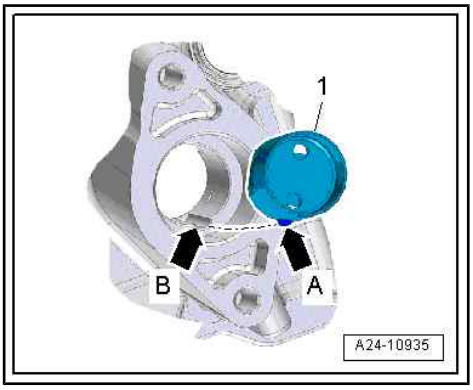

Vehicles with alternator:

– Have a second mechanic turn crankshaft with ratchet wrench (21 mm) - T40263- , adapter - T40314- and socket (24 mm) in direction of normal engine rotation -arrow- until roller tappet in vacuum pump reaches its lowest point.

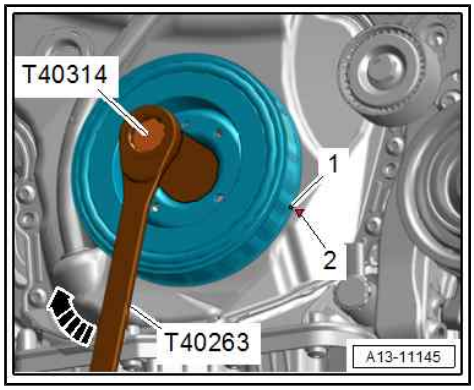

Vehicles with starter-alternator:

– Have a second mechanic turn crankshaft in direction of normal engine rotation at nut for starter-alternator pulley until roller tappet in vacuum pump reaches its lowest point.

All vehicles (continued):

– Insert high-pressure pump with new O-ring into vacuum pump and tighten bolts in stages.

– Secure fuel hoses with spring-type clips.

– Tighten union nut on high-pressure pipe hand-tight, align pipe so that it is free of stress and tighten nut to specified torque.

– Check fuel system for leaks.

– Install engine cover panel ⇒ page 15 .

Protected by copyright. Copying for private or commercial purposes, in part or in whole, is not permitted unless authorised by AUDI AG. AUDI AG does not guarantee or accept any liability with respect to the correctness of information in this document. Copyright by AUDI AG.

Additional work depending on model ⇒ 4-cylinder direct injection engine (1.8, 2.0 ltr. 4-valve TFSI); Rep. gr. 24 ; High-pressure pump; Removing and installing high-pressure pump

Tightening torques

- ⇒ “7.1 Exploded view - high-pressure pump”, page 266
- ⇒ Fig. ““High-pressure pump - tightening torques and sequence”“ , page 267
- ⇒ 4-cylinder direct injection engine (1.8, 2.0 ltr. 4-valve TFSI); Rep. gr. 21 ; Charge air system; Exploded view - charge air system

7.3 Removing and installing high-pressure pipe

Special tools and workshop equipment required

- Insert tool, 17 mm - V.A.G 1331/6-

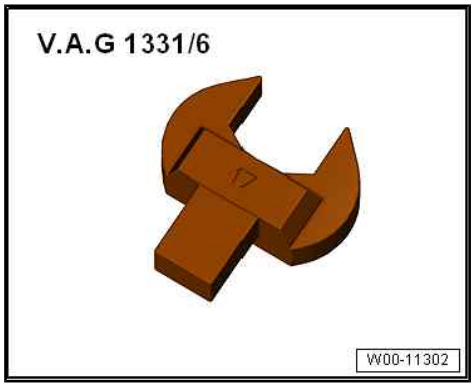

♦ Socket, AF 17 mm - T10456-

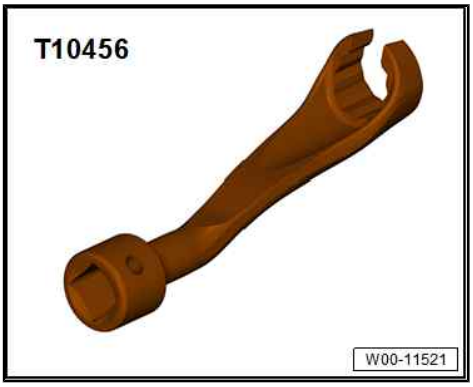

♦ Socket - T40055-

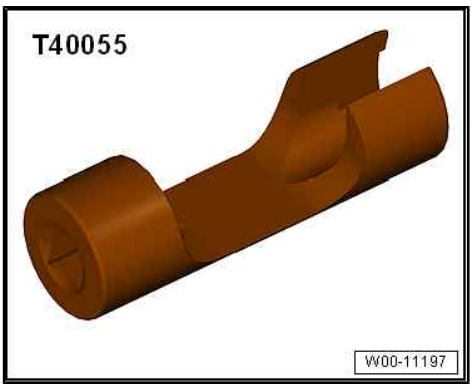

Removing

Preparatory work may be necessary depending on model ⇒ 4-cylinder direct injection engine (1.8, 2.0 ltr. 4-valve TFSI); Rep. gr. 24 ; High-pressure pump; Removing and installing high-pressure pump .

– Unbolt clamp -arrow-.

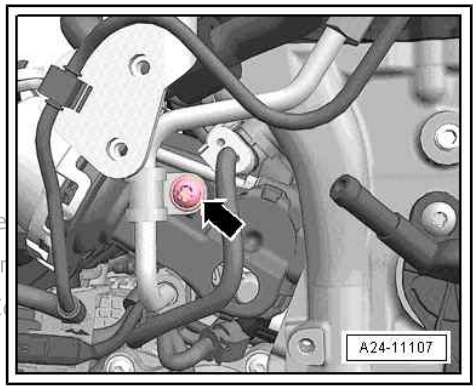

Protected by copyright. Copying for private or commercial purpose
permitted unless authorised by AUDI AG. AUDI AG does not guara
with respect to the correctness of information in this document. C

CAUTION

The fuel system is pressurised.

Risk of injury as fuel may spray out.

- **Put on safety goggles.**
- **Put on protective gloves.**
- **Release pressure (wrap a clean cloth around connection and open connection carefully).**

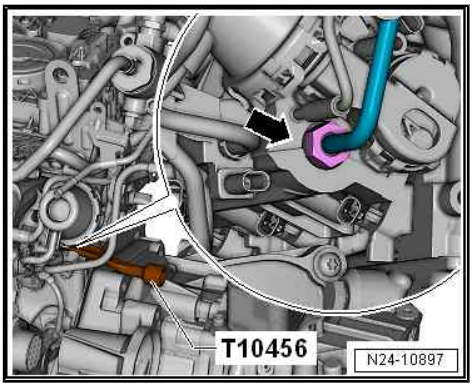

– Loosen union nut on fuel rail -arrow- using socket, AF 17 mm - T10456- or socket - T40055- .

– Counterhold at hexagon flats -A- and loosen union nut -arrow-. Detach high-pressure pipe.

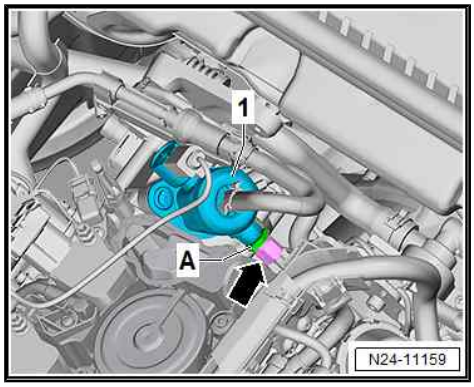

Installing

– Lubricate balls of high-pressure pipe with engine oil and install high-pressure pipe.

– Tighten union nuts hand-tight and align high-pressure pipe so that it is free of stress.

– Install clamp -arrow- and tighten to 5 Nm.

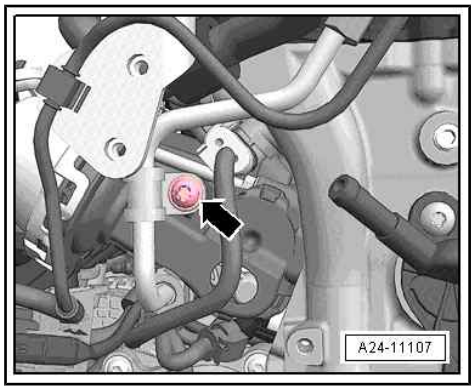

– Tighten union nut on fuel rail -arrow- using socket, AF 17 mm - T10456- or socket - T40055- .

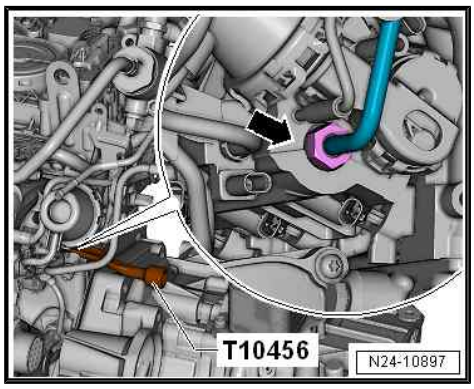

– Counterhold at hexagon flats -A- and tighten union nut -arrow- using insert tool, 17 mm - V.A.G 1331/6- .

– Wait at least one minute, then check tightening torque of union nuts.

Further assembly is basically carried out in reverse order of dismantling.

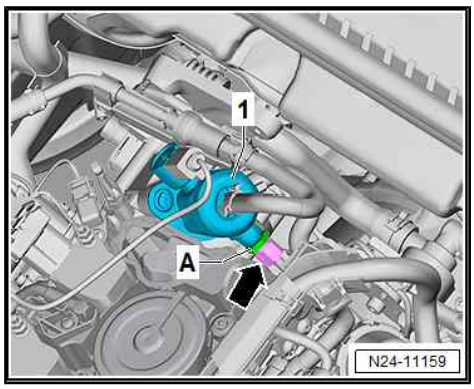

Note

After completing all work steps, start engine and check fuel system for leaks.

Tightening torques

◆ ⇒ “7.1 Exploded view - high-pressure pump”, page 266

Protected by copyright. Copying for private or commercial purposes, in part or in whole, is not permitted unless authorised by AUDI AG. AUDI AG does not guarantee or accept any liability with respect to the correctness of information in this document. Copyright by AUDI AG.

8 Lambda probe

⇒ “8.1 Exploded view - Lambda probe”, page 273

⇒ “8.2 Removing and installing Lambda probe”, page 275

8.1 Exploded view - Lambda probe

⇒ “8.1.1 Exploded view - Lambda probes, vehicles without particulate filter”, page 273

⇒ “8.1.2 Exploded view - Lambda probes, vehicles with particulate filter/cat-back system”, page 274

8.1.1 Exploded view - Lambda probes, vehicles without particulate filter

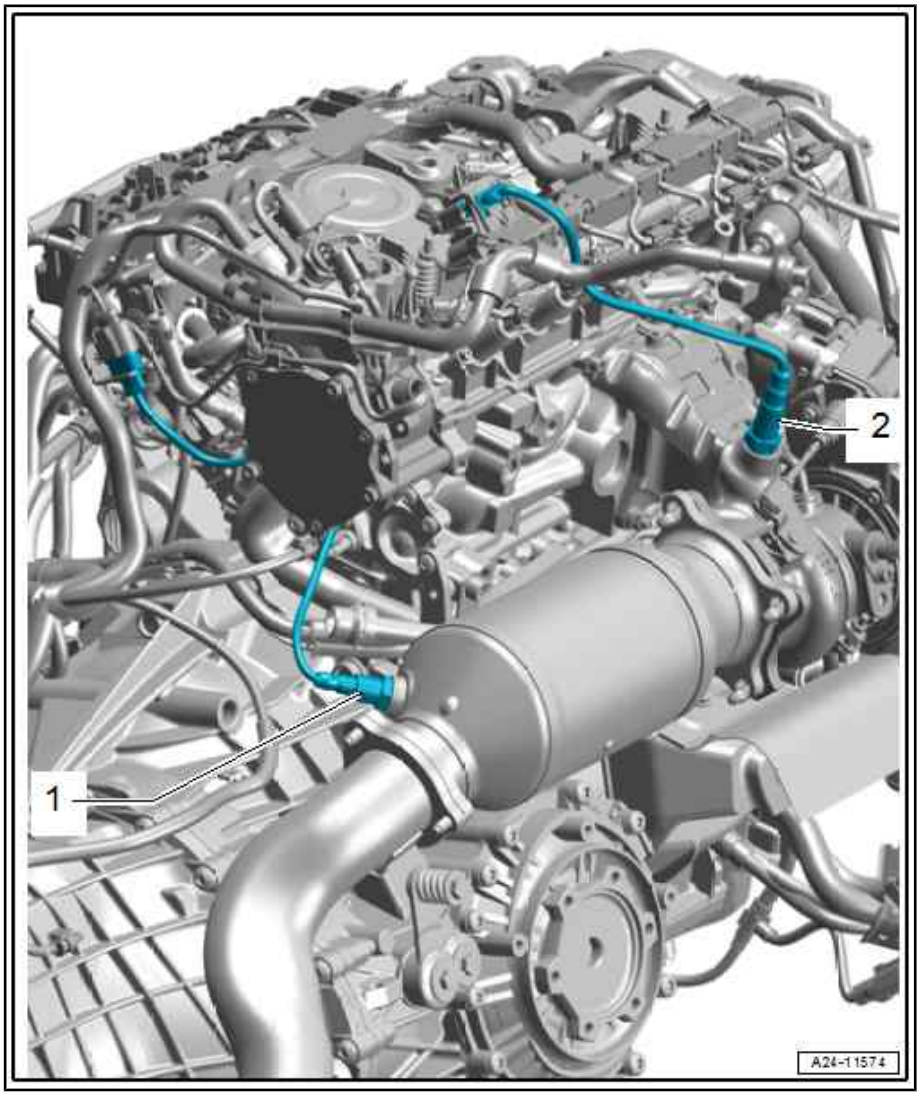

1 - Lambda probe 1 after catalytic converter - GX7-

- ❑ Comprises:
- ♦ Lambda probe after catalytic converter - G130-
- ♦ Lambda probe 1 heater after catalytic converter - Z29-
  - ❑ Installation position varies
  - ❑ The threads on the new Lambda probes are coated with a special assembly paste.
  - ❑ If re-installing old Lambda probe, coat thread with high-temperature paste: Refer to ⇒ Electronic parts catalogue for high-temperature paste
  - ❑ The assembly paste/high-temperature paste must not get into the slots on the Lambda probe body
  - ❑ Removing and installing ⇒ “8.2 Removing and installing Lambda probe”, page 275
  - ❑ 60 Nm

2 - Lambda probe 1 before catalytic converter - GX10-

- ❑ Comprises:
- ♦ Lambda probe - G39-
- ♦ Lambda probe heater - Z19-
  - ❑ The threads on the new Lambda probes are coated with a special assembly paste.
  - ❑ If re-installing old Lambda probe, coat thread with high-temperature paste: Refer to ⇒ Electronic parts catalogue for high-temperature paste
  - ❑ The assembly paste/high-temperature paste must not get into the slots on the Lambda probe body
  - ❑ Removing and installing ⇒ “8.2 Removing and installing Lambda probe”, page 275
  - ❑ 60 Nm

Protected by copyright. Copying for private or commercial purposes, in part or in whole, is not permitted unless authorised by AUDI AG. AUDI AG does not guarantee or accept any liability with respect to the correctness of information in this document. Copyright by AUDI AG.

8.1.2 Exploded view - Lambda probes, vehicles with particulate filter/cat-back system

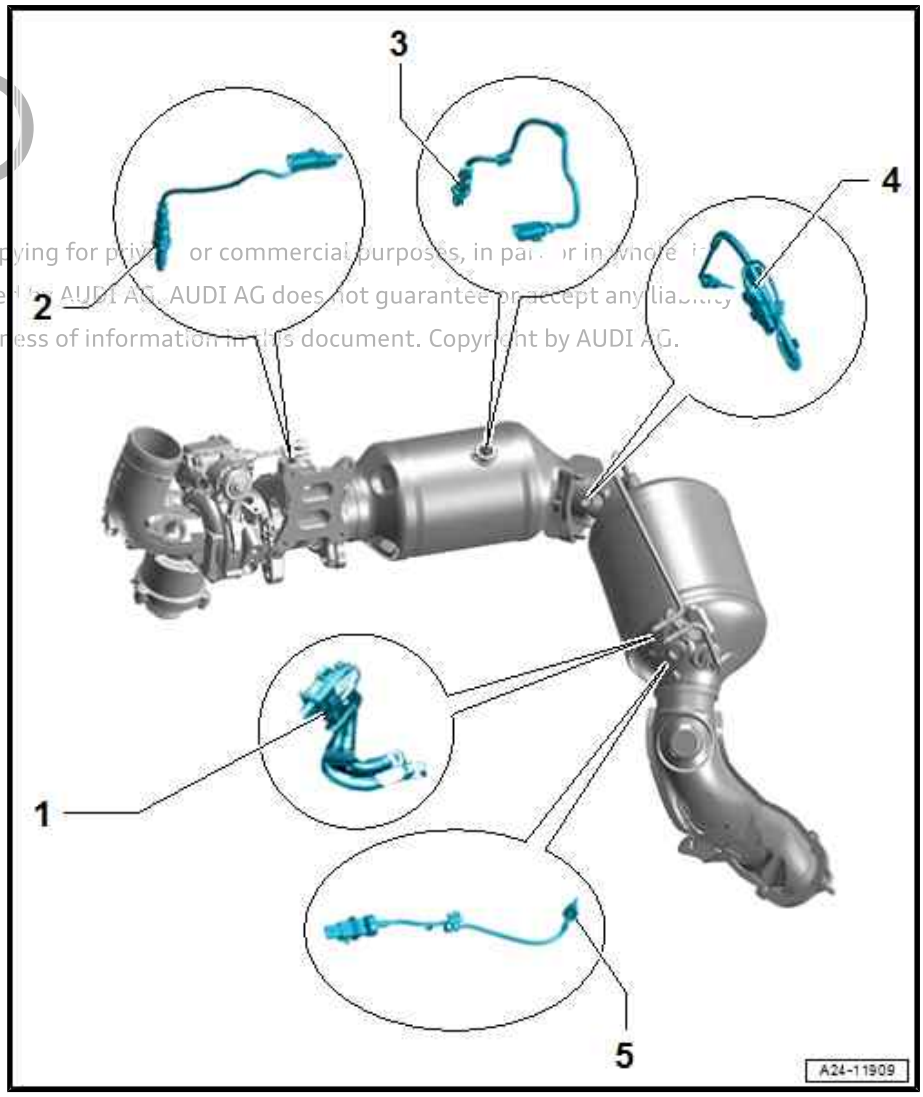

1 - Pressure differential sender for particulate filter - G1037-

- ❑ Removing and installing ⇒ page 264
- ❑ Tighten pressure line to 45 Nm
- ❑ Tightening torque for pressure differential sender for particulate filter - G1037- ⇒ page 275

2 - Lambda probe 1 before catalytic converter - GX10-

- ❑ Comprises:

- ♦ Lambda probe - G39-
- ♦ Lambda probe heater - Z19-
  - ❑ The threads on the new Lambda probes are coated with a special assembly paste.
  - ❑ If re-installing old Lambda probe, coat thread with high-temperature paste: Refer to ⇒ Electronic parts catalogue for high-temperature paste
  - ❑ The assembly paste/high-temperature paste must not get into the slots on the Lambda probe body
  - ❑ Removing and installing ⇒ “8.2 Removing and installing Lambda probe”, page 275
  - ❑ 60 Nm

3 - Lambda probe 1 after catalytic converter - GX7-

- ❑ Comprises:

- ♦ Lambda probe after catalytic converter - G130-
- ♦ Lambda probe 1 heater after catalytic converter - Z29-
  - ❑ Installation position varies
  - ❑ The threads on the new Lambda probes are coated with a special assembly paste.
  - ❑ If re-installing old Lambda probe, coat thread with high-temperature paste: Refer to ⇒ Electronic parts catalogue for high-temperature paste
  - ❑ The assembly paste/high-temperature paste must not get into the slots on the Lambda probe body
  - ❑ Removing and installing ⇒ “8.2 Removing and installing Lambda probe”, page 275
  - ❑ 60 Nm

4 - Exhaust gas temperature sender 3 - G495-

- ❑ Only for vehicles with particulate filter

Protected by copyright. Copying for private or commercial purposes, in part or in whole is not permitted unless authorised by AUDI AG. AUDI AG does not guarantee or accept any liability with respect to the correctness of information in this document. Copyright by AUDI AG.

- ❑ ⇒ 4-cylinder direct injection engine (1.8, 2.0 ltr. 4-valve TFSI); Rep. gr. 26 ; Exhaust gas temperature control; Exploded view - exhaust gas temperature control

5 - Exhaust gas temperature sender 4 - G648-

- ❑ Only for vehicles with particulate filter
- ❑ ⇒ 4-cylinder direct injection engine (1.8, 2.0 ltr. 4-valve TFSI); Rep. gr. 26 ; Exhaust gas temperature control; Exploded view - exhaust gas temperature control

Pressure differential sender for particulate filter - G1037- - tightening torque

– Tighten bolt -1- to 9 Nm.

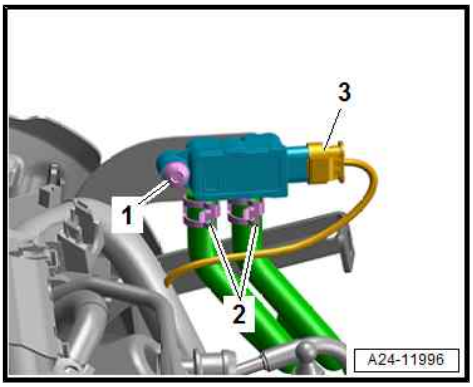

8.2 Removing and installing Lambda probe

⇒ "8.1.1 Exploded view - Lambda probes, vehicles without particulate filter", page 273

⇒ "8.1.2 Exploded view - Lambda probes, vehicles with particulate filter/cat-back system", page 274

8.2.1 Removing and installing Lambda probe 1 before catalytic converter - GX10-

Special tools and workshop equipment required

- ♦ Lambda probe open ring spanner set - 3337-

Protected by copyright. Copying for private or commercial purposes, in part or in whole, is not permitted unless authorised by AUDI AG. AUDI AG does not guarantee or accept any liability with respect to the correctness of information in this document. Copyright by AUDI AG.

Removing

Preparatory work may be necessary depending on model ⇒ 4-cylinder direct injection engine (1.8, 2.0 ltr. 4-valve TFSI); Rep. gr. 24 ; Lambda probe; Removing and installing Lambda probe .

Lambda probe 1 before catalytic converter - GX10- :

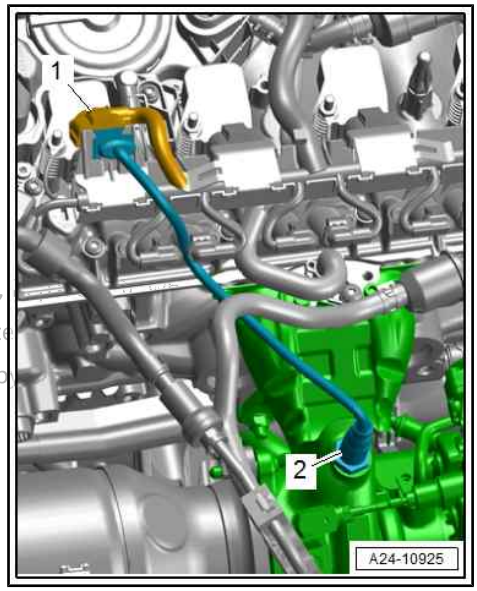

– Detach electrical connector -1- from bracket and unplug.

– Unscrew Lambda probe 1 before catalytic converter - GX10- -item 2- using a tool from Lambda probe open ring spanner set - 3337- .

Installing

Installation is carried out in reverse order; note the following:

Protected by copyright. Copying for private or commercial purposes, permitted unless authorised by AUDI AG. AUDI AG does not guarante with respect to the correctness of information in this document. Cop

- New Lambda probes are coated with an assembly paste. The paste must not get into the slots on the Lambda probe body.
- In the case of a used Lambda probe grease only the thread with high-temperature paste. The paste must not get into the slots on the Lambda probe body. High-temperature paste ⇒ Electronic parts catalogue
- The electrical wiring of the lambda probe must be secured at the original locations when installing. The wiring must NOT come into contact with the exhaust pipe.

Additional work depending on model ⇒ 4-cylinder direct injection engine (1.8, 2.0 ltr. 4-valve TFSI); Rep. gr. 24 ; Lambda probe; Removing and installing Lambda probe

Tightening torques

♦ ⇒ “8.1 Exploded view - Lambda probe”, page 273

8.2.2 Removing and installing Lambda probe 1 after catalytic converter - GX7-

Special tools and workshop equipment required

♦ Lambda probe open ring spanner set - 3337-

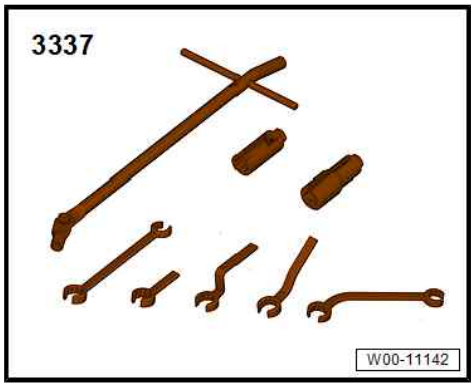

Removing

Preparatory work may be necessary depending on model ⇒ 4-cylinder direct injection engine (1.8, 2.0 ltr. 4-valve TFSI); Rep. gr. 24 ; Lambda probe; Removing and installing Lambda probe .

Note:

Installation position varies depending on model and version.

Lambda probe 1 after catalytic converter - GX7- (version 1):

– Unplug electrical connector -1-.

– Unscrew Lambda probe 1 after catalytic converter - GX7- -item 2- using a tool from Lambda probe open ring spanner set - 3337- .

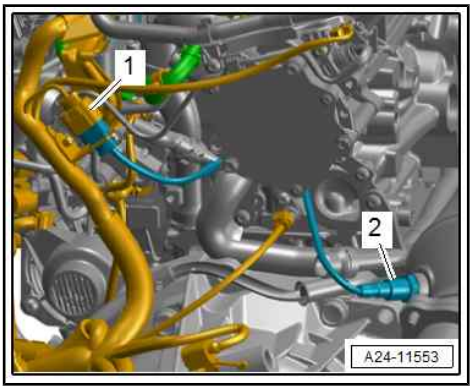

Lambda probe 1 after catalytic converter - GX7- (version 2):

– Unplug electrical connector -2-.

– Unscrew Lambda probe 1 after catalytic converter - GX7- -item 1- using a tool from Lambda probe open ring spanner set - 3337- .

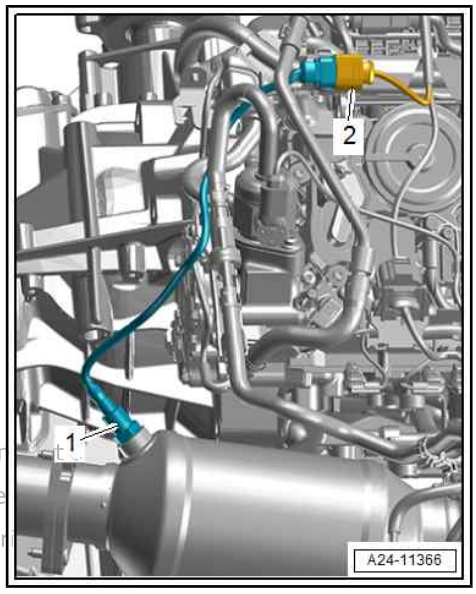

Protected by copyright. Copying for private or commercial purposes, in
permitted unless authorised by AUDI AG. AUDI AG does not guarantee
with respect to the correctness of information in this document. Copyr

Lambda probe 1 after catalytic converter - GX7- (version 3):

– Unplug electrical connector -2-.

– Unscrew Lambda probe 1 after catalytic converter - GX7- -item 1- using a tool from Lambda probe open ring spanner set - 3337- .

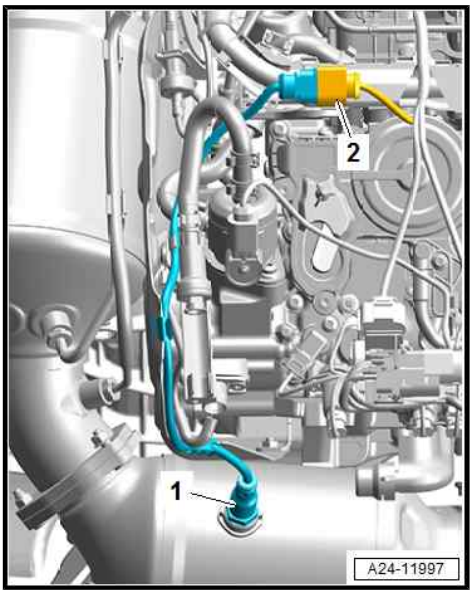

Installing

Installation is carried out in reverse order; note the following:

- New Lambda probes are coated with an assembly paste. The paste must not get into the slots on the Lambda probe body.
- In the case of a used Lambda probe grease only the thread with high-temperature paste. The paste must not get into the slots on the Lambda probe body. High-temperature paste ⇒ Electronic parts catalogue
- The electrical wiring of the lambda probe must be secured at the original locations when installing. The wiring must NOT come into contact with the exhaust pipe.

Additional work depending on model ⇒ 4-cylinder direct injection engine (1.8, 2.0 ltr. 4-valve TFSI); Rep. gr. 24 ; Lambda probe; Removing and installing Lambda probe

Tightening torques

◆ ⇒ “8.1 Exploded view - Lambda probe”, page 273

9 Engine control unit

Protected by copyright. Copying for private or commercial purposes, in part or in whole, is not permitted unless authorised by AUDI AG. AUDI AG does not guarantee or accept any liability with respect to the correctness of information in this document. Copyright by AUDI AG.

All procedures and components are described in ⇒ 4-cylinder direct injection engine (1.8, 2.0 ltr. 4-valve TFSI); Rep. gr. 24 ; Engine control unit .

26 – Exhaust system

1 Safety precautions

Observe safety precautions ⇒ 4-cylinder direct injection engine (2.0 ltr. 4-valve TFSI, EA 888 Gen. III); Rep. gr. 00 ; Safety precautions .

Protected by copyright. Copying for private or commercial purposes, in part or in whole, is not permitted unless authorised by AUDI AG. AUDI AG does not guarantee or accept any liability with respect to the correctness of information in this document. Copyright by AUDI AG.

2 Exhaust pipes/silencers

⇒ “2.1 Exploded view - silencers”, page 280

⇒ “2.2 Separating exhaust pipes/silencers”, page 280

⇒ “2.3 Removing and installing front silencers”, page 280

⇒ “2.4 Removing and installing silencers”, page 280

⇒ “2.5 Stress-free alignment of exhaust system”, page 280

⇒ “2.6 Checking exhaust system for leaks”, page 280

Protected by copyright. Copying for private or commercial purposes, in part or in whole, is not permitted unless authorised by AUDI AG. AUDI AG does not guarantee or accept any liability with respect to the correctness of information in this document. Copyright by AUDI AG.

2.1 Exploded view - silencers

All components are described in ⇒ 4-cylinder direct injection engine (1.8, 2.0 ltr. 4-valve TFSI); Rep. gr. 26 ; Exhaust pipes/ silencers; Exploded view - silencers .

2.2 Separating exhaust pipes/silencers

All procedures are described in ⇒ 4-cylinder direct injection engine (1.8, 2.0 ltr. 4-valve TFSI); Rep. gr. 26 ; Exhaust pipes/ silencers; Separating exhaust pipes/silencers .

2.3 Removing and installing front silencers

All procedures are described in ⇒ 4-cylinder direct injection engine (1.8, 2.0 ltr. 4-valve TFSI); Rep. gr. 26 ; Exhaust pipes/ silencers; Removing and installing front silencer .

2.4 Removing and installing silencers

All procedures are described in ⇒ 4-cylinder direct injection engine (1.8, 2.0 ltr. 4-valve TFSI); Rep. gr. 26 ; Exhaust pipes/ silencers; Removing and installing silencers .

2.5 Stress-free alignment of exhaust system

All procedures are described in ⇒ 4-cylinder direct injection engine (1.8, 2.0 ltr. 4-valve TFSI); Rep. gr. 26 ; Exhaust pipes/ silencers; Stress-free alignment of exhaust system .

2.6 Checking exhaust system for leaks

Procedure

– Start engine and run at idling speed.

– Plug tailpipes (e. g. with rags or stopper) and leave plugged until the check is complete.

– Listen for noise at connection points (cylinder head/turbocharger, turbocharger/front exhaust pipe etc.) to locate any leaks.

– Rectify any leaks that are found.

3 Emission control system

⇒ “3.1 Exploded view - emission control system”, page 281

⇒ “3.2 Removing and installing catalytic converter”, page 284

⇒ “3.3 Removing and installing particulate filter”, page 284

3.1 Exploded view - emission control system

⇒ “3.1.1 Exploded view - emission control system, vehicles without particulate filter”, page 281

⇒ “3.1.2 Exploded view - emission control system, vehicles with particulate filter/cat-back system”, page 282

3.1.1 Exploded view - emission control system, vehicles without particulate filter

Protected by copyright. Copying for private or commercial purposes, in part or in whole, is not permitted unless authorised by AUDI AG. AUDI AG does not guarantee or accept any liability with respect to the correctness of information in this document. Copyright by AUDI AG.

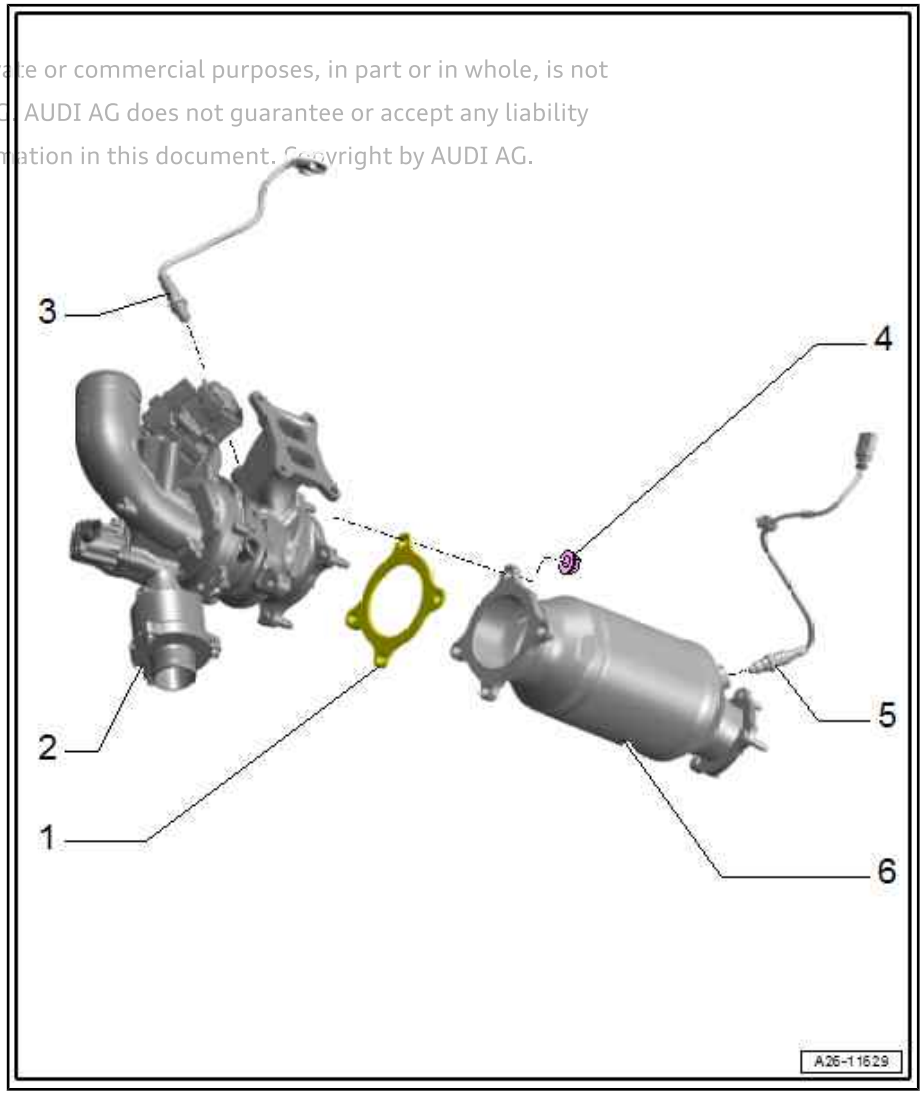

1 - Gasket

- ❑ Renew after removing

2 - Turbocharger

- ❑ Exploded view ⇒ page 216

3 - Lambda probe 1 before catalytic converter - GX10-

- ❑ Comprises:
- ♦ Lambda probe - G39-
- ♦ Lambda probe heater - Z19-
  - ❑ Exploded view ⇒ page 273

4 - Nut

- ❑ Renew after removing
- ❑ Lubricate studs for turbocharger with high-temperature paste ⇒ Electronic parts catalogue .
- ❑ 40 Nm

5 - Lambda probe 1 after catalytic converter - GX7-

- ❑ Comprises:
- ♦ Lambda probe after catalytic converter - G130-
- ♦ Lambda probe 1 heater after catalytic converter - Z29-
  - ❑ Installation position varies
  - ❑ Exploded view ⇒ page 273

6 - Catalytic converter

- ❑ Protect against knocks and impact
- ❑ Removing and installing ⇒ page 284
- ❑ Align exhaust system so it is free of stress ⇒ page 280

3.1.2 Exploded view - emission control system, vehicles with particulate filter/cat-back system

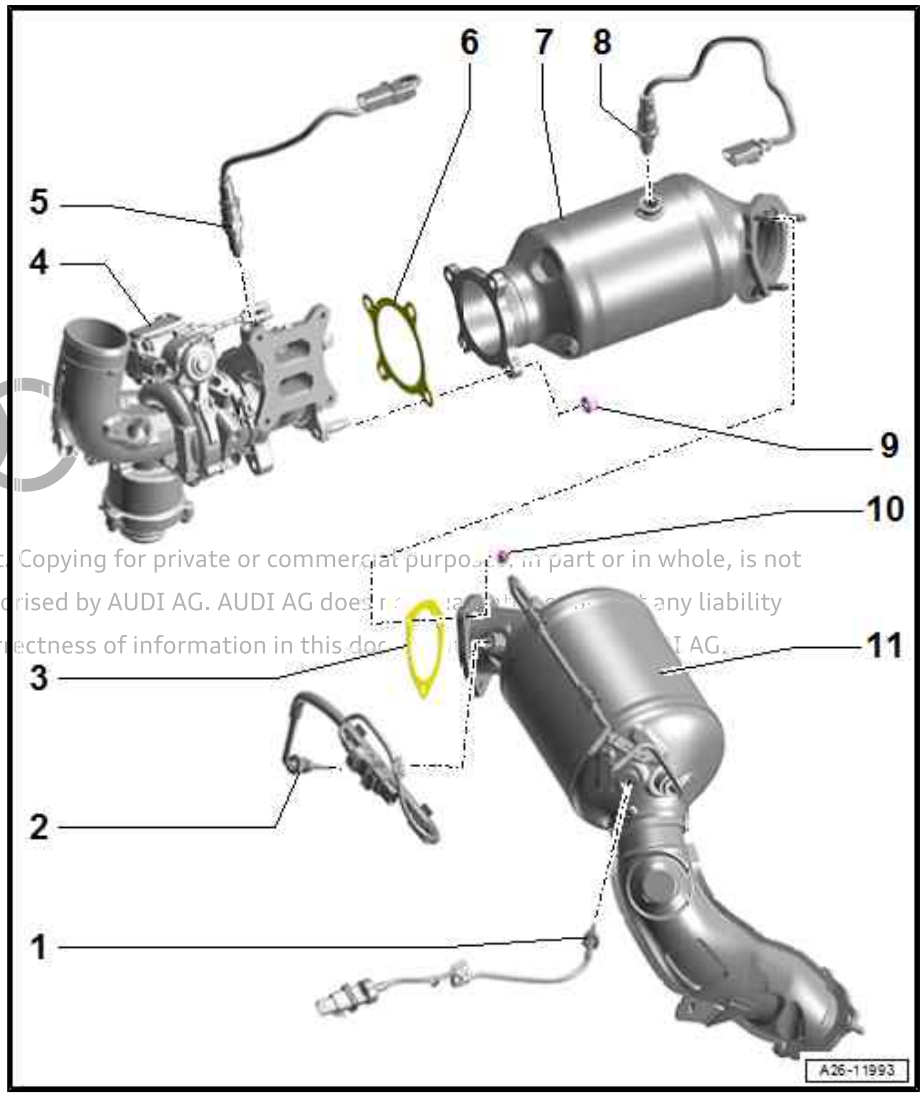

1 - Exhaust gas temperature sender 4 - G648-

- ❑ Only for vehicles with particulate filter
- ❑ ⇒ 4-cylinder direct injection engine (1.8, 2.0 ltr. 4-valve TFSI); Rep. gr. 26 ; Exhaust gas temperature control; Exploded view - exhaust gas temperature control

2 - Exhaust gas temperature sender 3 - G495-

- ❑ Only for vehicles with particulate filter
- ❑ ⇒ 4-cylinder direct injection engine (1.8, 2.0 ltr. 4-valve TFSI); Rep. gr. 26 ; Exhaust gas temperature control; Exploded view - exhaust gas temperature control

3 - Gasket

- ❑ Renew after removing

4 - Turbocharger

- ❑ Exploded view ⇒ page 216

5 - Lambda probe 1 before catalytic converter - GX10-

- ❑ Comprises:

- ♦ Lambda probe - G39-
- ♦ Lambda probe heater - Z19-
  - ❑ Exploded view ⇒ page 273

6 - Gasket

- ❑ Renew after removing

7 - Catalytic converter

- ❑ Protect against knocks and impact
- ❑ Mounting components on gearbox ⇒ page 283
- ❑ Removing and installing ⇒ page 284
- ❑ Align exhaust system so it is free of stress ⇒ page 280

8 - Lambda probe 1 after catalytic converter - GX7-

- ❑ Comprises:

- ♦ Lambda probe after catalytic converter - G130-
- ♦ Lambda probe 1 heater after catalytic converter - Z29-
  - ❑ Exploded view ⇒ page 273

9 - Nut

- ❑ Renew after removing

Protected by copyright. Copying for private or commercial purposes, in part or in whole, is not permitted unless authorised by AUDI AG. AUDI AG does not guarantee or accept any liability whatsoever for the accuracy and correctness of information in this document. © AUDI AG.

- ❑ Lubricate studs for turbocharger with high-temperature paste ⇒ Electronic parts catalogue .
- ❑ 40 Nm

10 - Nut

- ❑ Renew after removing
- ❑ Lubricate studs for turbocharger with high-temperature paste ⇒ Electronic parts catalogue .
- ❑ 23 Nm

11 - Particulate filter/cat-back system

- ❑ Different versions available; for allocation refer to ⇒ Electronic parts catalogue

- ♦ Particulate filter - distinguishing features: with exhaust gas temperature senders and exhaust gas pressure sensor
- ♦ Cat-back system - distinguishing features: without exhaust gas temperature sender and exhaust gas pressure sensor
  - ❑ Mounting components on gearbox ⇒ page 283
  - ❑ Removing and installing ⇒ page 284

Mounting components for particulate filter/cat-back system on gearbox

1 - Spacer sleeve
2 - Spacer sleeve
3 - Compression spring
4 - Washer
5 - Bolt, 23 Nm
6 - Bolt, 23 Nm
7 - Spacer sleeve
8 - Buffer
9 - Bracket

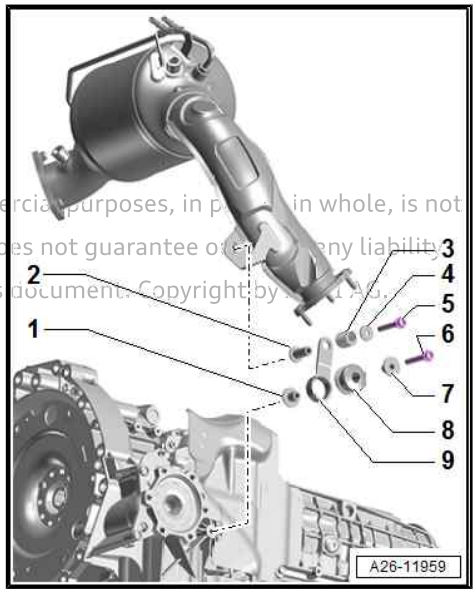

Protected by copyright. Copying for private or commercial purposes, in part or in whole, is not permitted unless authorised by AUDI AG. AUDI AG does not guarantee or accept any liability with respect to the correctness of information in this document. Copyright by AUDI AG.

Mounting components for catalytic converter on gearbox

1 - Spacer sleeve
2 - Compression spring
3 - Washer
4 - Bolt, 23 Nm
5 - Spacer sleeve
6 - Bolt, 23 Nm
7 - Buffer
8 - Bracket
9 - Spacer sleeve

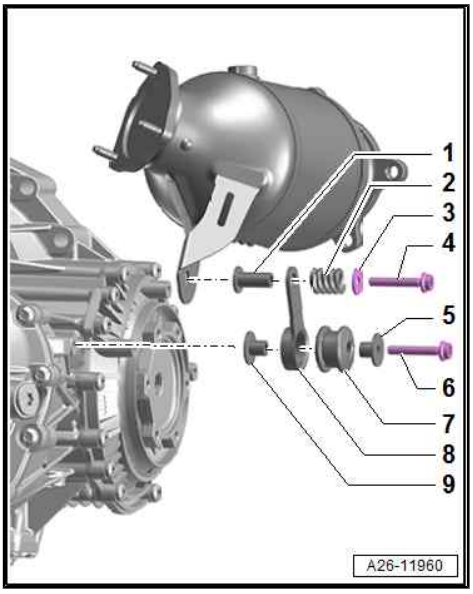

3.2 Removing and installing catalytic converter

All procedures are described in ⇒ 4-cylinder direct injection engine (1.8, 2.0 ltr. 4-valve TFSI); Rep. gr. 26 ; Emission control system; Removing and installing catalytic converter .

3.3 Removing and installing particulate filter

On some models and versions, a particulate filter or cat-back system may be fitted. All procedures are described in ⇒ 4-cylinder direct injection engine (1.8, 2.0 ltr. 4-valve TFSI); Rep. gr. 26 ; Emission control system; Removing and installing particulate filter .

Protected by copyright. Copying for private or commercial purposes, in part or in whole, is not permitted unless authorised by AUDI AG. AUDI AG does not guarantee or accept any liability with respect to the correctness of information in this document. Copyright by AUDI AG.

4 Exhaust gas temperature control

Depending on model and version: All procedures and components are described in ⇒ 4-cylinder direct injection engine (1.8, 2.0 ltr. 4-valve TFSI); Rep. gr. 26 ; Exhaust gas temperature control .

Protected by copyright. Copying for private or commercial purposes, in part or in whole, is not permitted unless authorised by AUDI AG. AUDI AG does not guarantee or accept any liability with respect to the correctness of information in this document. Copyright by AUDI AG.

5 Secondary air system

⇒ “5.1 Exploded view - secondary air system”, page 286

⇒ “5.2 Removing and installing secondary air pump motor V101 ”, page 287

⇒ “5.3 Removing and installing secondary air inlet valve N112 ”, page 288

⇒ “5.4 Removing and installing sender 1 for secondary air pressure G609 ”, page 288

⇒ “5.5 Removing and installing resonator for secondary air system”, page 288

5.1 Exploded view - secondary air system

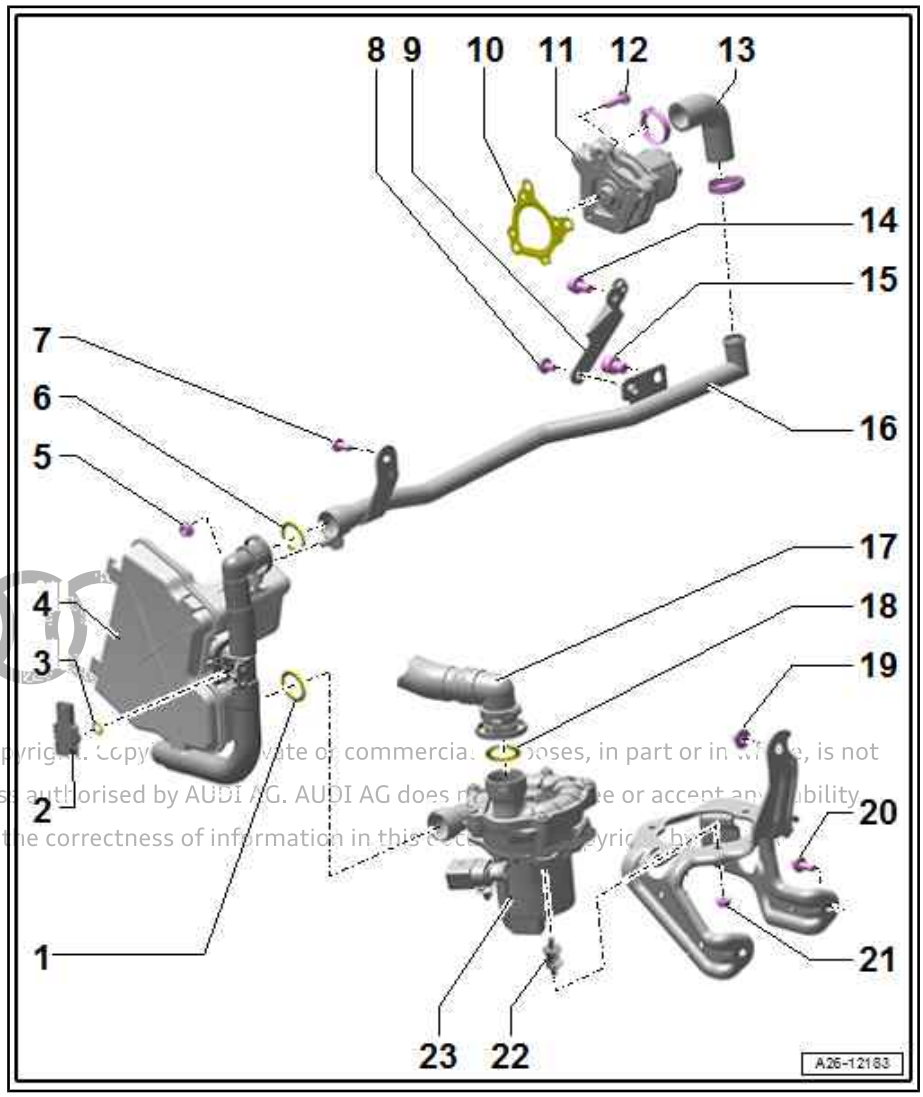

1 - O-ring
- ❑ Check for damage
- ❑ Not available separately; supplied with ⇒ Item 4 (page 286)
- ❑ Lubricate lightly with engine oil

2 - Sender 1 for secondary air pressure - G609-
- ❑ Removing and installing ⇒ page 288

3 - O-ring
- ❑ Check for damage
- ❑ Not available separately; supplied with ⇒ Item 2 (page 286)
- ❑ Lubricate lightly with engine oil

4 - Resonator

5 - Nut
- ❑ 8 Nm

6 - O-ring
- ❑ Check for damage
- ❑ Not available separately; supplied with ⇒ Item 4 (page 286)
- ❑ Lubricate lightly with engine oil

7 - Bolt
- ❑ 9 Nm

8 - Bolt
- ❑ 9 Nm

9 - Bracket

10 - Gasket
- ❑ Renew after removing

11 - Secondary air inlet valve - N112-
- ❑ Removing and installing ⇒ page 288

Protected by copyright. Copying for private or commercial purposes, in part or in whole, is not permitted unless authorised by AUDI AG. AUDI AG does not guarantee or accept any liability with respect to the correctness of information in this document. Copyright by AUDI AG.

12 - Bolt
- ❑ 9 Nm

13 - Hose

14 - Bolt
- ❑ 20 Nm

15 - Bolt
- ❑ 20 Nm

16 - Pipe
- ❑ For secondary air

17 - Secondary air pipe
- ❑ From air cleaner housing to secondary air pump motor - V101-

18 - O-ring
- ❑ Check for damage
- ❑ Not available separately; supplied with ⇒ Item 17 (page 287)
- ❑ Lubricate lightly with engine oil

19 - Nut
- ❑ 9 Nm

20 - Bolt
- ❑ 9 Nm

21 - Nut
- ❑ 8 Nm

22 - Rubber bush

23 - Secondary air pump motor - V101-
- ❑ Removing and installing ⇒ page 287

Protected by copyright. Copying for private or commercial purposes, in part or in whole, is not permitted unless authorised by AUDI AG. AUDI AG does not guarantee or accept any liability with respect to the correctness of information in this document. Copyright by AUDI AG.

5.2 Removing and installing secondary air pump motor - V101-

Removing

Preparatory work may be necessary depending on model ⇒ 4-cylinder direct injection engine (1.8, 2.0 ltr. 4-valve TFSI); Rep. gr. 26 ; Secondary air system; Removing and installing secondary air pump motor - V101- .

– Unplug electrical connector -4-.
– Press release tabs on both sides and disconnect secondary air hose -3-.
– Unscrew bolts -5- and nut -2- and detach secondary air pump motor - V101- -item 1-.

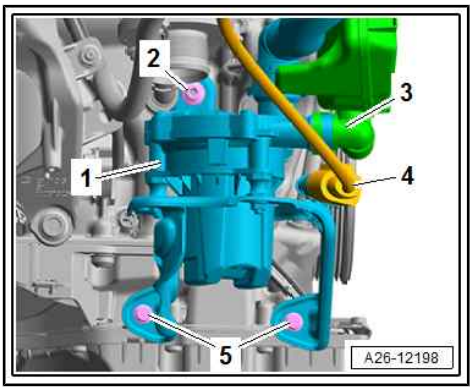

Installing

Installation is carried out in reverse sequence.

Additional work depending on model ⇒ 4-cylinder direct injection engine (1.8, 2.0 ltr. 4-valve TFSI); Rep. gr. 26 ; Secondary air system; Removing and installing secondary air pump motor - V101-

Tightening torques

◆ ⇒ “5.1 Exploded view - secondary air system”, page 286

5.3 Removing and installing secondary air inlet valve - N112-

Removing

Preparatory work may be necessary depending on model ⇒ 4-cylinder direct injection engine (1.8, 2.0 ltr. 4-valve TFSI); Rep. gr. 26 ; Secondary air system; Removing and installing secondary air inlet valve - N112- .

– Unplug electrical connector -2-.

– Remove bolts -arrows-.

– Release hose clip -3- and detach secondary air inlet valve - N112- .

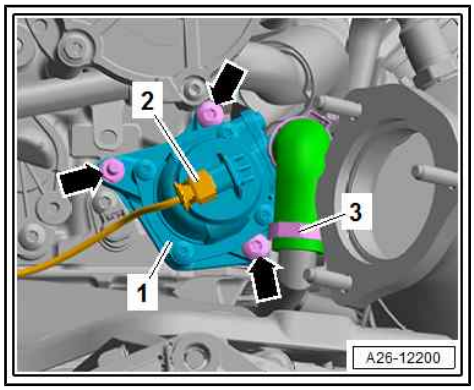

Installing

Installation is carried out in reverse order; note the following:

- Renew gasket after removing.

Additional work depending on model ⇒ 4-cylinder direct injection engine (1.8, 2.0 ltr. 4-valve TFSI); Rep. gr. 26 ; Secondary air system; Removing and installing secondary air inlet valve - N112-

Tightening torques

◆ ⇒ “5.1 Exploded view - secondary air system”, page 286

Protected by copyright. Copying for private or commercial purposes, in part or in whole, is not permitted unless authorized by AUDI AG. AUDI AG does not guarantee or accept any liability with respect to the correctness of information in this document. Copyright by AUDI AG.

5.4 Removing and installing sender 1 for secondary air pressure - G609-

Removing

Preparatory work may be necessary depending on model ⇒ 4-cylinder direct injection engine (1.8, 2.0 ltr. 4-valve TFSI); Rep. gr. 26 ; Secondary air system; Removing and installing sender 1 for secondary air pressure - G609- .

– Unplug electrical connector -1-.

– Release catches -arrows- and detach sender 1 for secondary air pressure - G609- -item 2-.

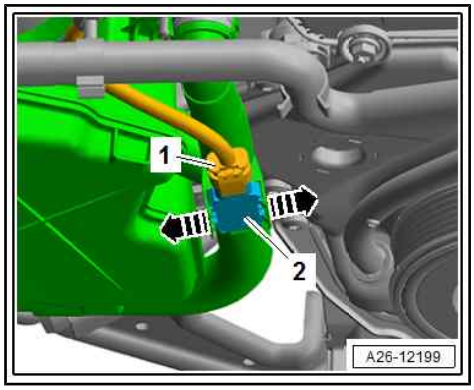

Installing

Installation is carried out in reverse sequence.

Additional work depending on model ⇒ 4-cylinder direct injection engine (1.8, 2.0 ltr. 4-valve TFSI); Rep. gr. 26 ; Secondary air system; Removing and installing sender 1 for secondary air pressure - G609-

5.5 Removing and installing resonator for secondary air system

Removing

Preparatory work may be necessary depending on model ⇒ 4-cylinder direct injection engine (1.8, 2.0 ltr. 4-valve TFSI - generation III); Rep. gr. 26 ; Secondary air system; Removing and installing secondary air pump motor - V101- .

– Unclip line -1-.
– Unplug electrical connector -2-.
– Remove nut -3-.
– Press release tabs -arrows- together and disconnect line.
– Detach resonator -4- from bracket.

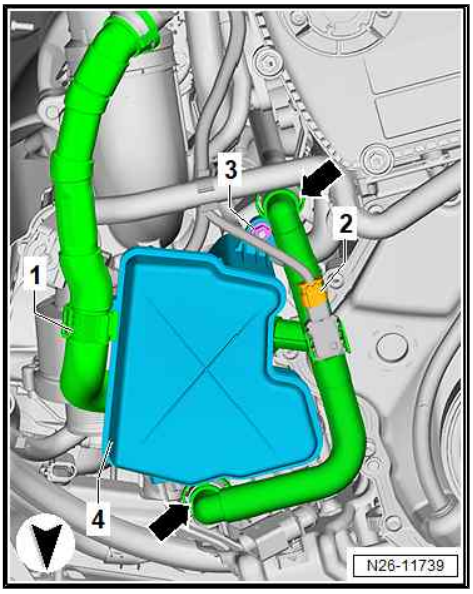

Installing

Installation is carried out in reverse sequence.

Additional work depending on model ⇒ 4-cylinder direct injection engine (2.0 ltr. 4-valve TFSI, EA 888 Gen. III); Rep. gr. 26 ; Secondary air system; Removing and installing resonator for secondary air system

Protected by copyright. Copying for private or commercial purposes, in part or in whole, is not permitted unless authorised by AUDI AG. AUDI AG does not guarantee or accept any liability with respect to the correctness of information in this document. Copyright by AUDI AG.

28 – Ignition system

1 Safety precautions

Observe safety precautions ⇒ 4-cylinder direct injection engine (2.0 ltr. 4-valve TFSI, EA 888 Gen. III); Rep. gr. 00 ; Safety precautions .

Protected by copyright. Copying for private or commercial purposes, in part or in whole, is not permitted unless authorised by AUDI AG. AUDI AG does not guarantee or accept any liability with respect to the correctness of information in this document. Copyright by AUDI AG.

2 Ignition system

⇒ "2.1 Exploded view - ignition system", page 291

⇒ "2.2 Removing and installing ignition coils", page 292

⇒ "2.3 Removing and installing knock sensor 1 G61 ", page 295

⇒ "2.4 Removing and installing Hall senders", page 295

⇒ "2.5 Removing and installing engine speed sender G28 ", page 297

2.1 Exploded view - ignition system

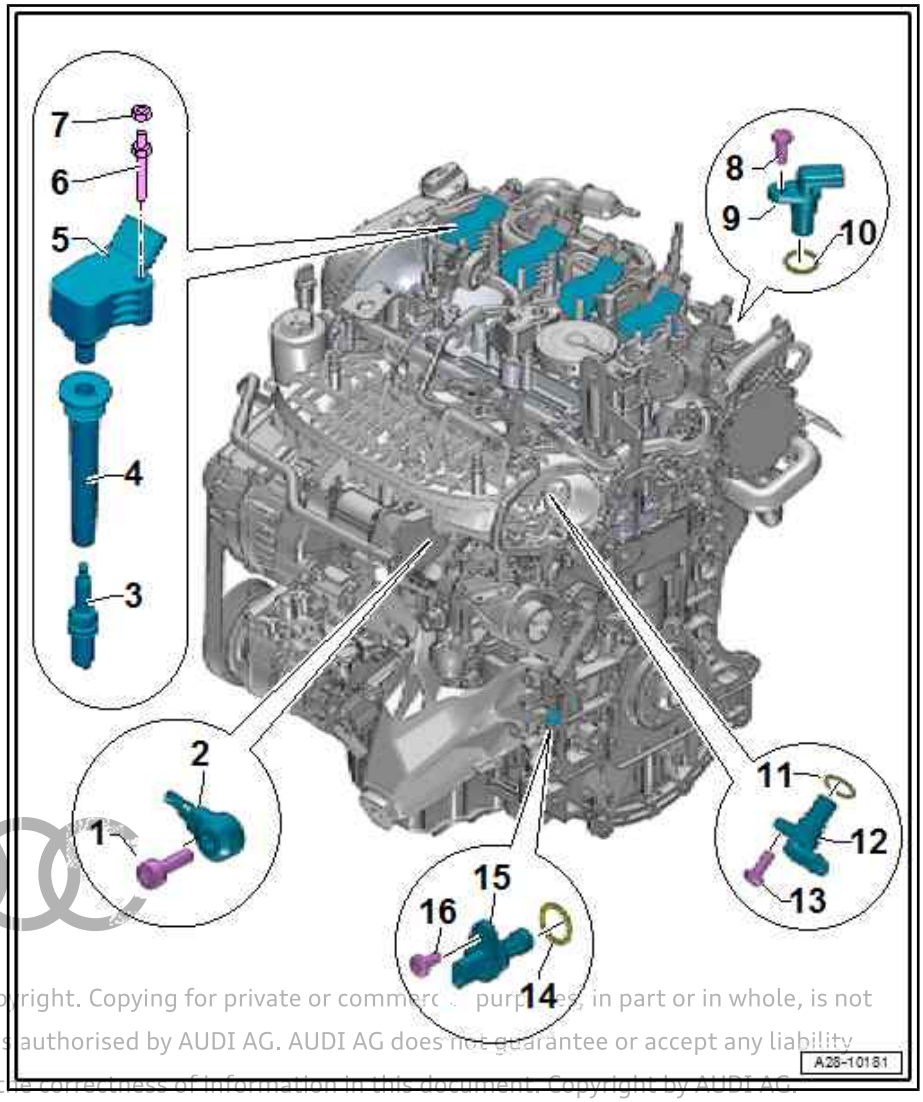

1 - Bolt

- ❑ Renew after removing
- ❑ Tightening torque influences the function of the knock sensor
- ❑ 8 Nm + 90°

2 - Knock sensor 1 - G61-

- ❑ Removing and installing ⇒ page 295

3 - Spark plug

- ❑ 30 Nm

4 - Spark plug connectors

5 - Ignition coil

- ❑ Ignition coil 1 with output stage - N70-
- ❑ Ignition coil 2 with output stage - N127-
- ❑ Ignition coil 3 with output stage - N291-
- ❑ Ignition coil 4 with output stage - N292-
- ❑ Removing and installing ⇒ page 292

6 - Bolt

- ❑ 10 Nm

7 - Nut

- ❑ 9 Nm

8 - Bolt

- ❑ 9 Nm

9 - Hall sender 3 - G300-

- ❑ Check O-ring for damage
- ❑ Removing and installing ⇒ page 296
- ❑ After removal or renewal, perform adaption ⇒ Vehicle diagnostic tester `01 - Engine electronics, functions`, `01 - Chain elongation adaption diagnosis`

10 - O-ring

- ❑ Check for damage
- ❑ Not available separately; supplied with ⇒ Item 9 (page 291)

Protected by copyright. Copying for private or commercial purposes, in part or in whole, is not permitted unless authorised by AUDI AG. AUDI AG does not guarantee or accept any liability with respect to the correctness of information in this document. Copyright by AUDI AG.

11 - O-ring

- ❑ Check for damage
- ❑ Not available separately; supplied with ⇒ Item 12 (page 292)

12 - Hall sender - G40-

- ❑ Removing and installing ⇒ page 295
- ❑ Check O-ring for damage
- ❑ After removal or renewal, perform adaption ⇒ Vehicle diagnostic tester `01 - Engine electronics, functions`, `01 - Chain elongation adaption diagnosis`

13 - Bolt

- ❑ 9 Nm

14 - O-ring

- ❑ Check for damage
- ❑ Not available separately; supplied with ⇒ Item 15 (page 292)

15 - Engine speed sender - G28-

- ❑ Removing and installing ⇒ page 297
- ❑ Check O-ring for damage
- ❑ After removal or renewal, perform adaption ⇒ Vehicle diagnostic tester `01 - Engine electronics, functions`, `01 - Chain elongation adaption diagnosis`

16 - Bolt

- ❑ Renew after removing
- ❑ 4 Nm +45°

Protected by copyright. Copying for private or commercial purposes, in part or in whole, is not permitted unless authorised by AUDI AG. AUDI AG does not guarantee or accept any liability with respect to the correctness of information in this document. Copyright by AUDI AG.

2.2 Removing and installing ignition coils

Special tools and workshop equipment required

- ♦ Puller - T10530-

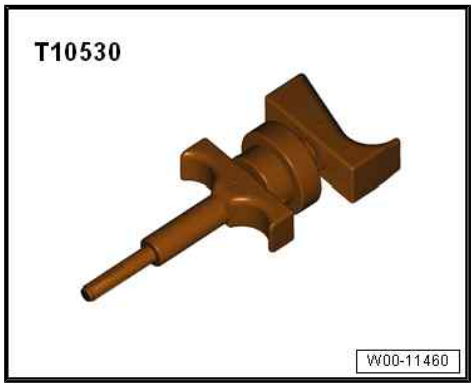

- ♦ For silicone paste, refer to ⇒ Electronic parts catalogue .

Removing

Preparatory work may be necessary depending on model ⇒ 4-cylinder direct injection engine (1.8, 2.0 ltr. 4-valve TFSI); Rep. gr. 28 ; Ignition system; Removing and installing ignition coils .

– If fitted, remove engine cover panel ⇒ page 15 .

– Remove electrical connector -1- for Lambda probe 1 before catalytic converter - GX10- -item 2- from bracket.

Note:

Installation position varies depending on model and version.

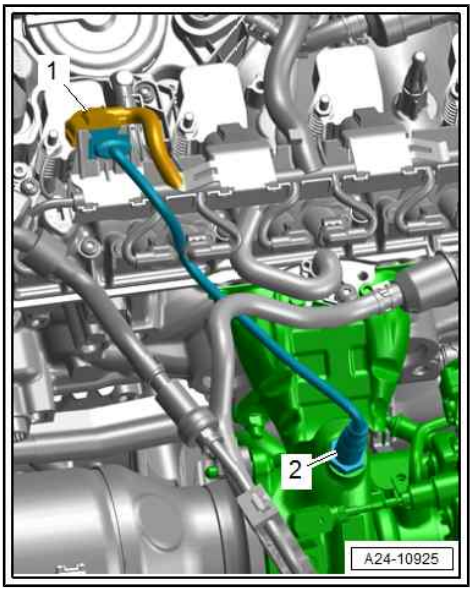

– If fitted, remove nut -2- and move earth wire -1- clear.
– Release electrical connectors and detach simultaneously from ignition coils in direction of -arrows-.
– Remove corresponding centre hex stud -3-.

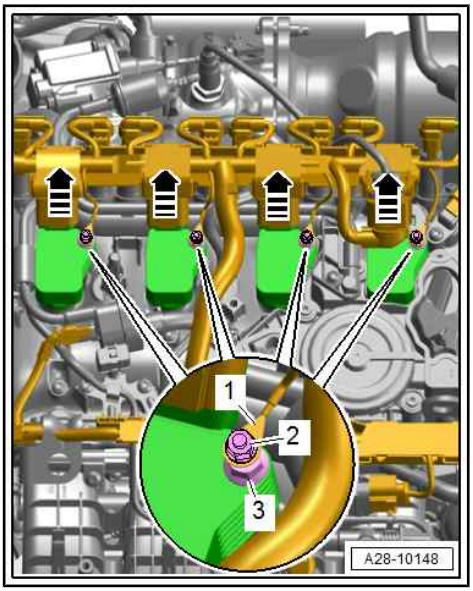

– Insert puller - T10530- into hole -1- in ignition coil.
– Turn knurled nut -2- clockwise -arrow- until puller is secured in place.

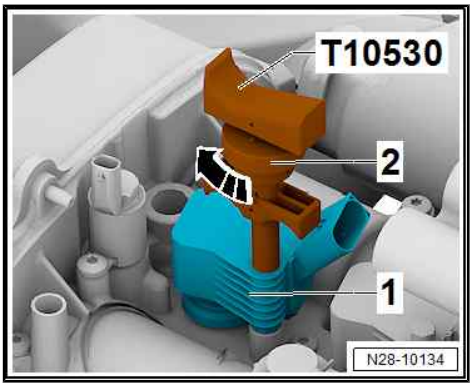

Protected by copyright. Copying for private or commercial purposes, in part or in whole, is not permitted unless authorised by AUDI AG. AUDI AG does not guarantee or accept any liability with respect to the correctness of information in this document. Copyright by AUDI AG.

– Carefully pull ignition coil out vertically -arrow- with puller -T10530- .

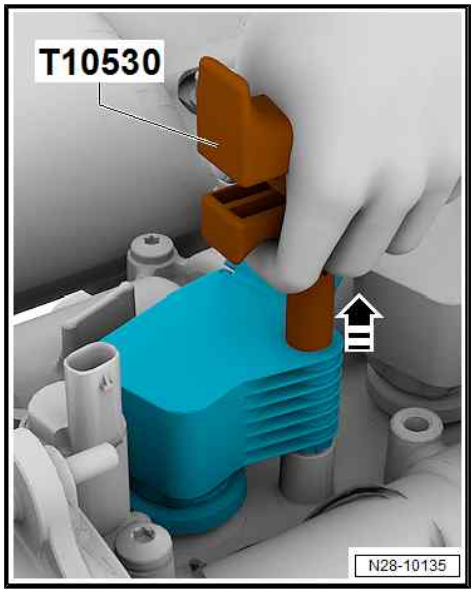

Installing

Installation is carried out in the reverse order; note the following:

– Apply a thin bead of silicone paste all around end of sealing hose of ignition coil -arrow-.

Note

- *Use only the silicone paste approved for this purpose ⇒ ETKA .*
- *Using any other paste could damage the ignition coil irreparably.*

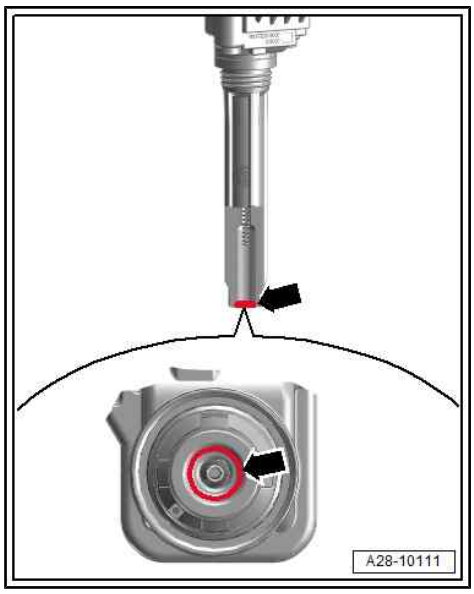

– Push spark plug connector -2- onto ignition coil -1- by hand as far as stop.

• The arrow markings on the spark plug connector and the ignition coil must be aligned, as shown.

– Press ignition coils onto spark plugs by hand evenly (do not use tools).

– Install engine cover panel ⇒ page 15 .

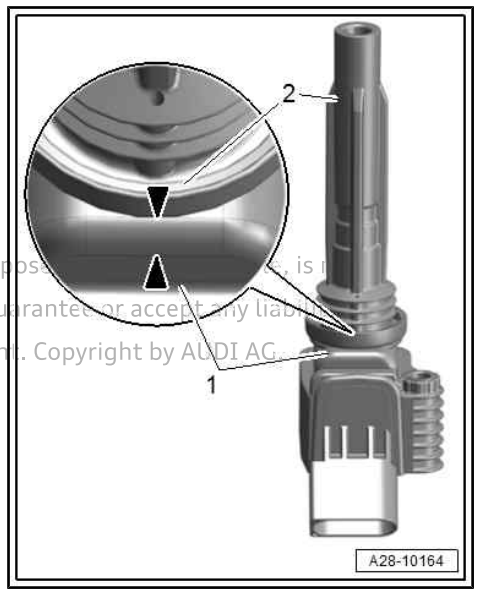

Additional work depending on model ⇒ 4-cylinder direct injection engine (1.8, 2.0 ltr. 4-valve TFSI); Rep. gr. 28 ; Ignition system; Removing and installing ignition coils

Tightening torques

- ⇒ “2.1 Exploded view - ignition system”, page 291

Protected by copyright. Copying for private or commercial purposes, in part or in whole, is not permitted unless authorized by AUDI AG. AUDI AG does not guarantee or accept any liability with respect to the correctness of information in this document. Copyright by AUDI AG.

2.3 Removing and installing knock sensor 1 - G61-

Fitting location: below intake manifold behind actuator for engine temperature regulation - N493-

Removing

– Remove actuator for engine temperature regulation - N493- ⇒ page 209 .

– Unplug electrical connector -3-.

– Release fastener -arrow-, detach electrical wire -1- for knock sensor 1 - G61- from bracket -2- and move wire clear.

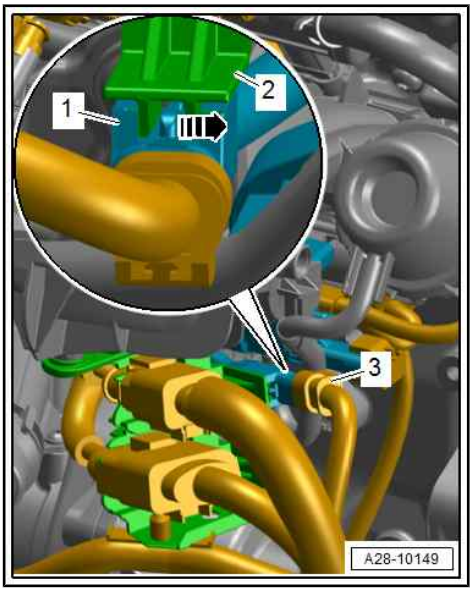

– Unscrew knock sensor 1 - G61- -arrow-.

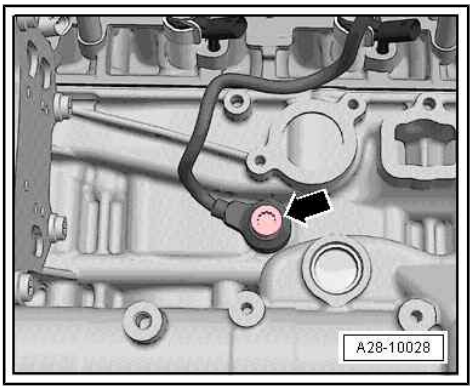

Installing

Installation is carried out in reverse order; note the following:

– Install actuator for engine temperature regulation - N493- ⇒ page 209 .

Tightening torques

◆ ⇒ “2.1 Exploded view - ignition system”, page 291

2.4 Removing and installing Hall senders

⇒ “2.4.1 Removing and installing Hall sender G40 ”, page 295

⇒ “2.4.2 Removing and installing Hall sender 3 G300 ”, page 296

2.4.1 Removing and installing Hall sender - G40-

Special tools and workshop equipment required

Protected by copyright. Copying for private or commercial purposes, in part or in whole, is not permitted unless authorised by AUDI AG. AUDI AG does not guarantee or accept any liability with respect to the correctness of information in this document. Copyright by AUDI AG.

- Bit - T10573-

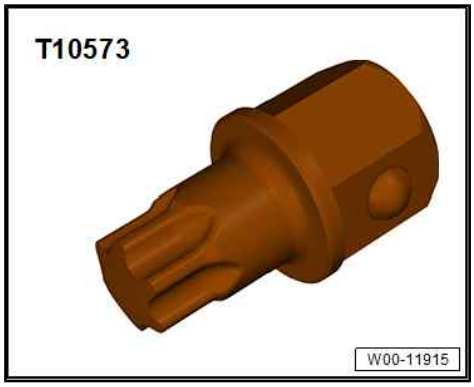

Removing

– If fitted, remove engine cover panel ⇒ page 15 .

– Depending on version: Detach MPI injectors with fuel rail and move to one side ⇒ page 253 .

– Unscrew bolt -1- and remove Hall sender - G40- -item 2-.

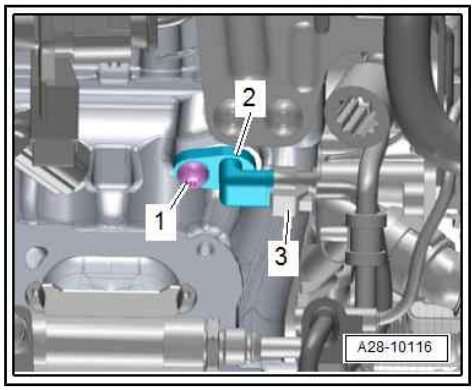

Installing

Installation is carried out in reverse order; note the following:

- Check O-ring for damage.

– Install MPI injectors with fuel rail ⇒ page 253 .

– Install engine cover panel ⇒ page 15 .

Learnt values for chain elongation must be re-adapted after removing or renewing Hall senders.

– Connect ⇒ Vehicle diagnostic tester.

– Select `Diagnosis` mode and then `Start diagnosis`.

– Choose `Select own test` tab and select following options one after the other:

- `Drive train`
- `Select engine code and engine`
- `01 - Self-diagnosis compatible systems`
- `01 - Engine electronics`
- `01 - Engine electronics, functions`
- `01 - Chain elongation adaption diagnosis`

Tightening torques

- ⇒"2.1 Exploded view - ignition system", page 291

Protected by copyright. Copying for private or commercial purposes, in part or in whole, is not permitted unless authorised by AUDI AG. AUDI AG does not guarantee or accept any liability with respect to the correctness of information in this document. Copyright by AUDI AG.

2.4.2 Removing and installing Hall sender 3 - G300-

Removing

Preparatory work may be necessary depending on model ⇒ 4-cylinder direct injection engine (1.8, 2.0 ltr. 4-valve TFSI); Rep. gr. 28 ; Ignition system; Removing and installing Hall senders .

– If fitted, remove engine cover panel ⇒ page 15 .

– Unplug electrical connector -3- at Hall sender 3 - G300- -item 2-.
– Unscrew bolt -1- and detach Hall sender.

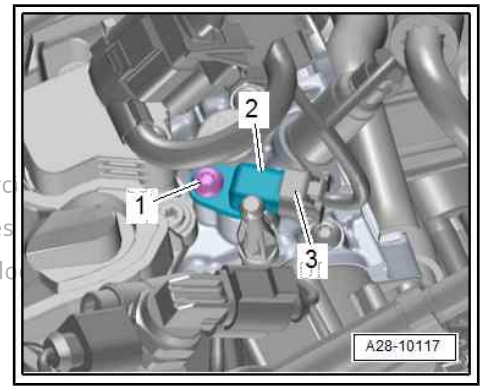

Installing

Installation is carried out in reverse order; note the following:

- Check O-ring for damage.

– Install engine cover panel ⇒ page 15 .

Additional work depending on model ⇒ 4-cylinder direct injection engine (1.8, 2.0 ltr. 4-valve TFSI); Rep. gr. 28 ; Ignition system; Removing and installing Hall senders

Learnt values for chain elongation must be re-adapted after removing or renewing Hall senders.

– Connect ⇒ Vehicle diagnostic tester.
– Select `Diagnosis` mode and then `Start diagnosis`.
– Choose `Select own test` tab and select following options one after the other:

- `Drive train`
- `Select engine code and engine`
- `01 - Self-diagnosis compatible systems`
- `01 - Engine electronics`
- `01 - Engine electronics, functions`
- `01 - Chain elongation adaption diagnosis`

Tightening torques

- ⇒ “2.1 Exploded view - ignition system”, page 291

2.5 Removing and installing engine speed sender - G28-

Removing

Preparatory work may be necessary depending on model ⇒ 4-cylinder direct injection engine (1.8, 2.0 ltr. 4-valve TFSI); Rep. gr. 28 ; Ignition system; Removing and installing engine speed sender - G28- .

– Unplug electrical connector -1-.

– Remove bolt -arrow- and detach engine speed sender - G28- -item 2-.

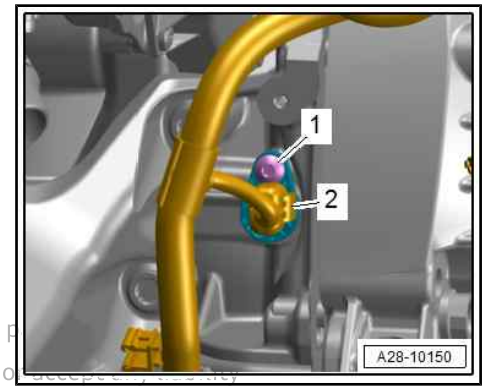

Installing

Installation is carried out in reverse order; note the following:

• Check O-ring for damage.

Additional work depending on model ⇒ 4-cylinder direct injection engine (1.8, 2.0 ltr. 4-valve TFSI); Rep. gr. 28 ; Ignition system; Removing and installing engine speed sender - G28-

Learnt values for chain elongation must be re-adapted after removing or renewing engine speed sender.

– Connect ⇒ Vehicle diagnostic tester.

– Select `Diagnosis` mode and then `Start diagnosis`.

– Choose `Select own test` tab and select following options one after the other:

◆ `Drive train`

◆ `Select engine code and engine`

◆ `01 - Self-diagnosis compatible systems`

◆ `01 - Engine electronics`

◆ `01 - Engine electronics, functions`

◆ `01 - Chain elongation adaption diagnosis`

Tightening torques

◆ ⇒ “2.1 Exploded view - ignition system”, page 291

with respect to the correctness of information in this document. Copyright by AUDI AG.