Service Training

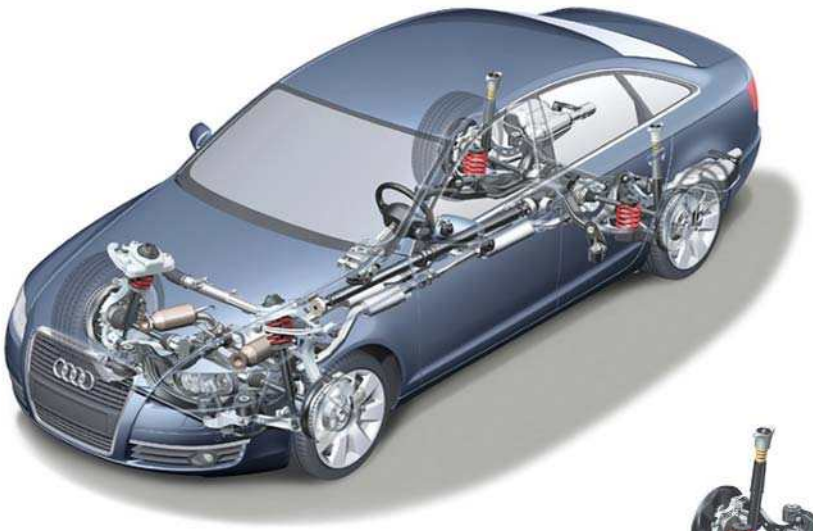

Audi A6'05 - Running Gear

Self-Study Programme 324

General information

The basic version of the Audi A6'05 is equipped with a steel spring chassis. There are three different types of running gear:

Normal running gear:	Designation: 1BA
Sports-style running gear:	Designation: 1BE, vehicle trim is positioned 20 mm lower than on the normal running gear
Rough-terrain running gear:	Designation: 1BR, vehicle trim is positioned 13 mm higher than on the normal running gear

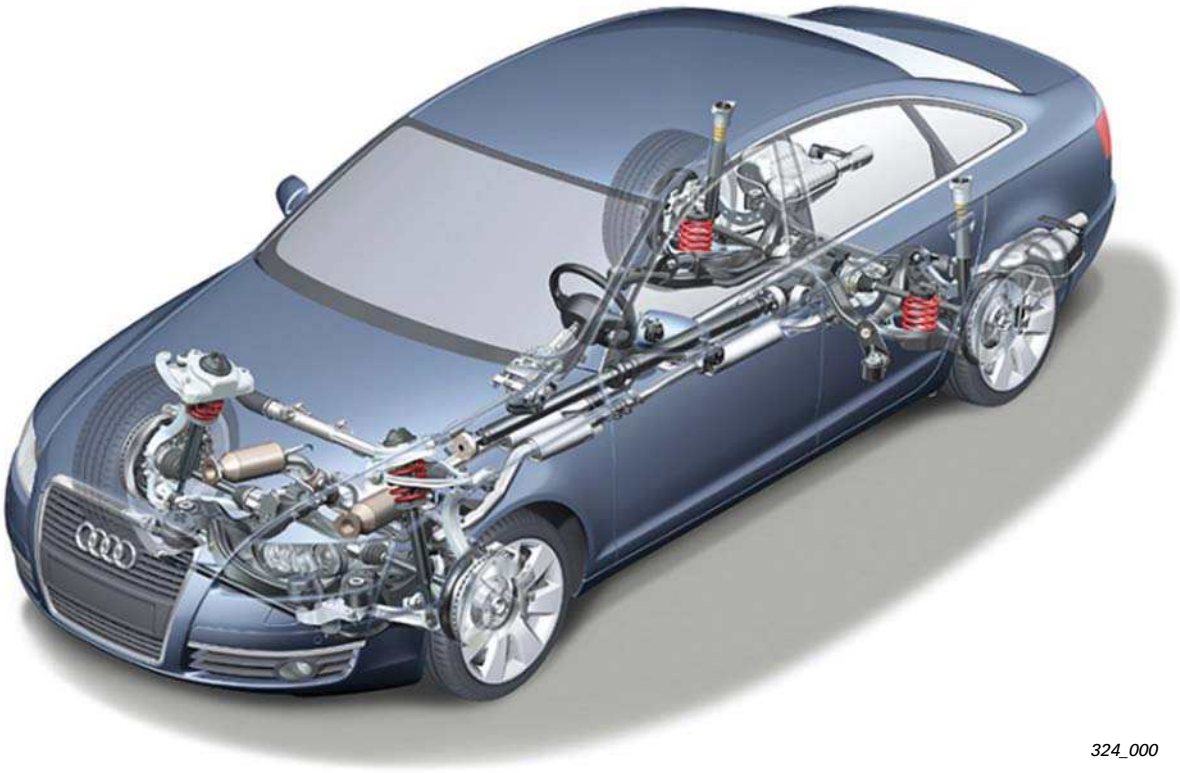

324_000

Contents

Front axle

Overview 4
System components 5

Rear axle

Overview 10
System components 11

Running gear alignment/adjustment

Adjusting the front axle 15
Adjusting the rear axle 16

Brake system

Wheel brake. 17
Electromechanical parking brake – EPB. 20
ESP 28

Steering system

Overview 38
System components 39

Wheels/tyres

Wheel programme 46
Tyre pressure monitoring 47
Tyre pressure monitoring system for USA 50

The Self-Study Programme provides information on the fundamentals of the design and function of new vehicle models, new vehicle components or new technologies.

The Self-Study Programme is not a Workshop Manual!
Specified values serve only to make the information easier to understand and relate to the software version that was valid at the time the Self-Study Programme (SSP) was created.

For maintenance and repair work, please make sure to use the current technical documentation.

Reference

Note

Overview

The well-known four-link front axle is also used in the new Audi A6'05 (see SSP 161).
Given the geometric and kinematic changes compared to the predecessor vehicle, all axle components except for the top-level axle control arms and the wheel hubs (adopted from the Audi A8) are new parts.

In addition to improved spring and shock absorber settings, spring travel has been increased by 30 mm. This results in a significant improvement in driving comfort and driving stability. With regard to the passenger compartment, the axle was moved forward by 83 mm. This provides better axle load distribution and has advantages from the point of view of driving dynamics.

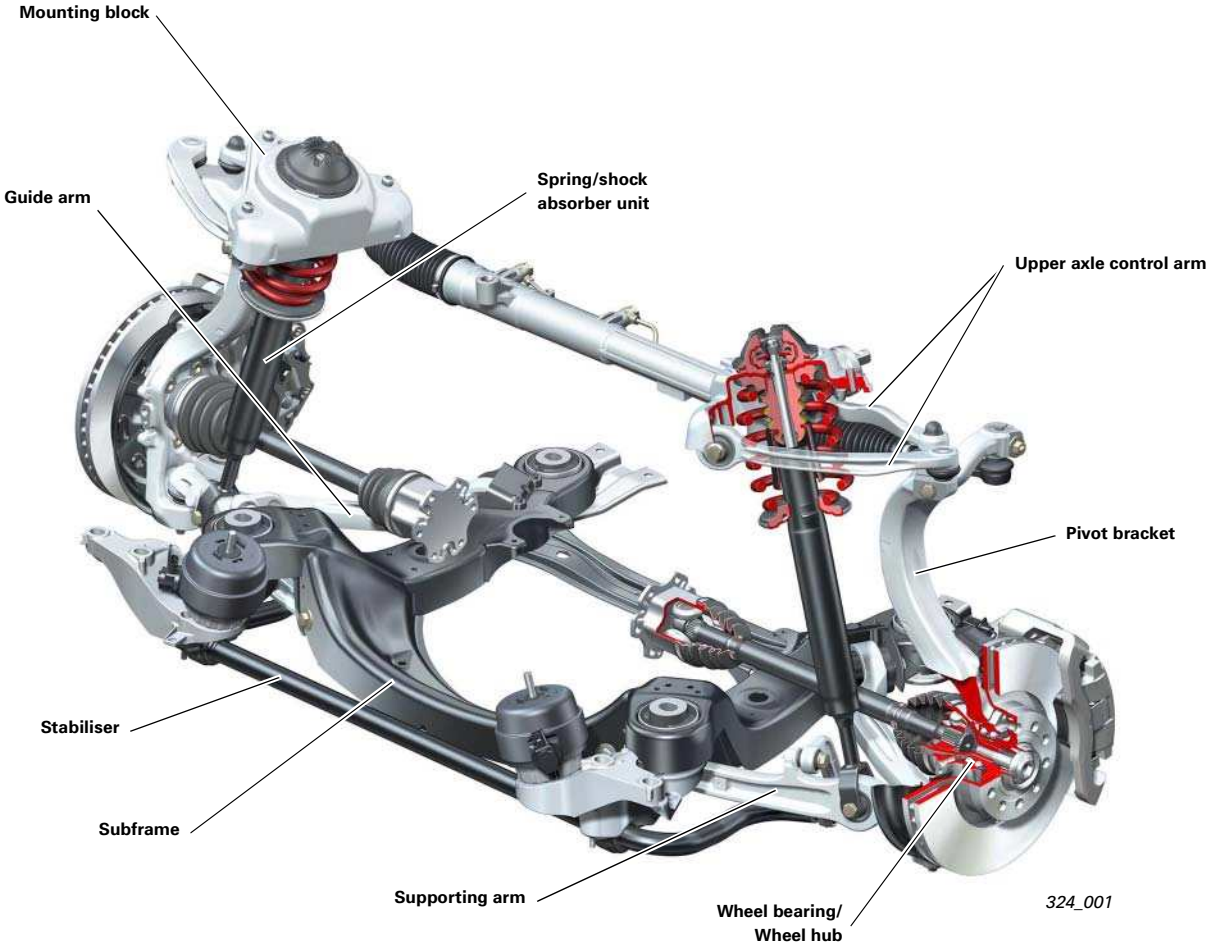

System components

Pivot bracket

The pivot bracket is an aluminium forged part, while the support for the trailing arm mount for the guide and supporting joints is formed from pressed zinc/iron-coated bushings. Because of the different wheel bearing dimensions, there are two types of pivot brackets.

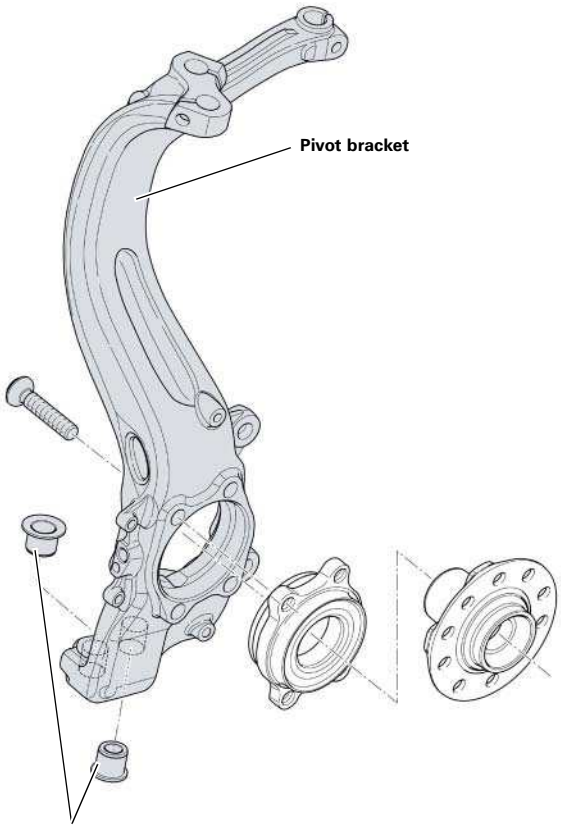

324_002

Wheel bearing

A 2nd generation wheel bearing (double-flange bearing) is used. Because of the different axle loads, an 85-mm Ø bearing is used for all 4-cylinder engines and for 6-cylinder petrol engines.
All other engines (higher axle loads) have a bearing Ø of 92 mm. The ring for wheel speed sensing is part of the wheel bearing.

Wheel hub

The wheel hub for the 85 mm Ø wheel bearing is the same part that is used in the Audi A8'02.
The larger wheel hub (Ø = 92 mm) is adopted from the Audi A8'03).

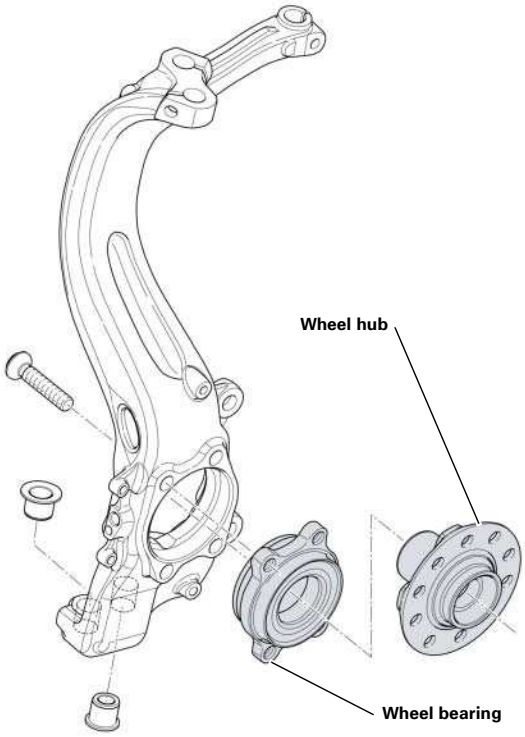

324_003

Mounting block

The mounting block is made of aluminium poral casting. It is bolted to the body and is used to support the top control arms and the spring/shock absorber unit.

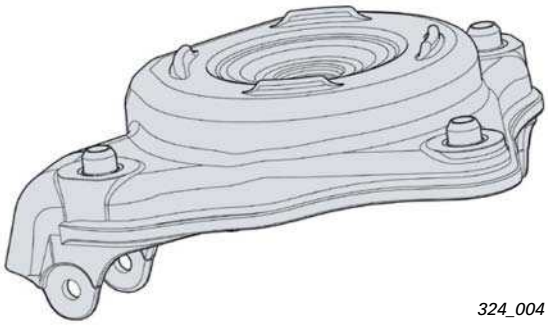

324_004

Note

Observe the tightening sequence for securing the bolts to the body, see Workshop Manual.

Control arm

The top- and bottom-level control arms are aluminium forged parts. The top-level control arms are the same parts that are used in the Audi A8'03. Unlike the predecessor model, however, the bottom control arms are larger because of the higher maximum axle load.

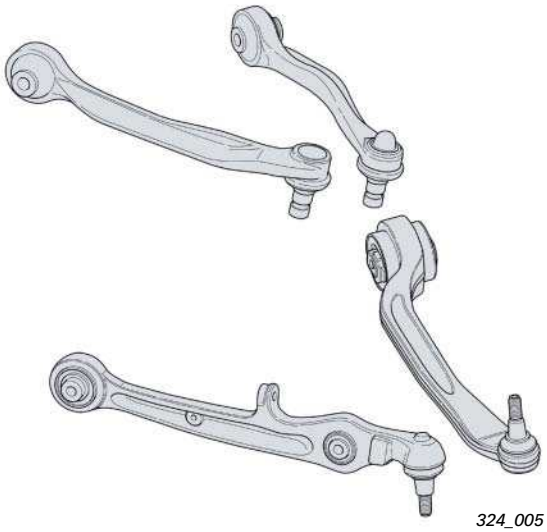

324_005

Note

The new product T 40067 is used to secure the top control arms to the pivot bracket.

Spring/shock absorber unit

Twin-tube shock absorbers with linear steel springs are used.
The more direct spring strut setting compared to the predecessor vehicle as well as the increased spring travel results in a significantly better response.

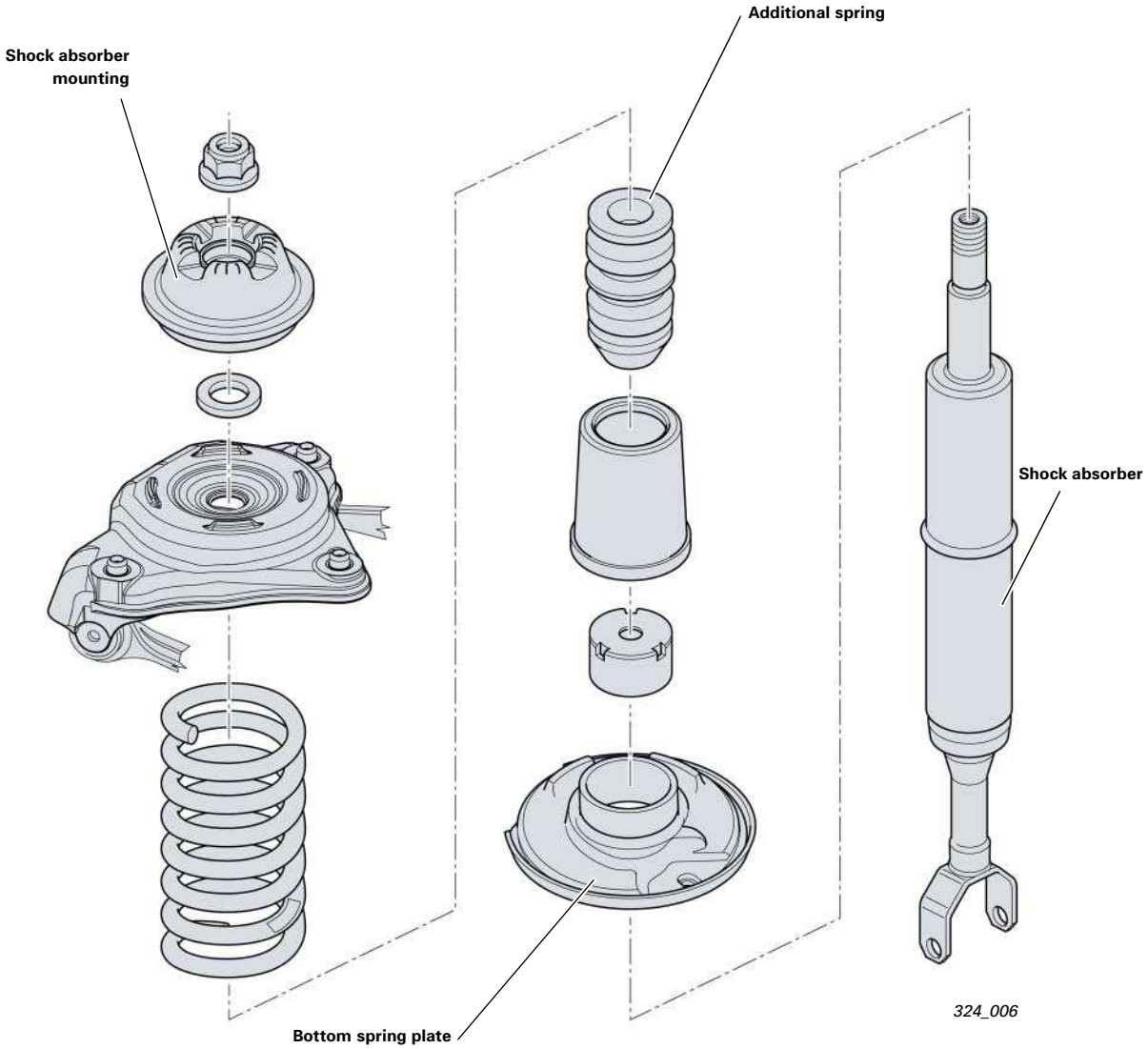

Subframe

The subframe is a monocoque-constructed, welded part made of high-strength steel. To make it more rigid, the U shape is closed using a transverse bar bolted at the back.
A modified subframe is used for all vehicles with the 09L gearbox. This gearbox is mounted on two additional subframe brackets.

The rubber-metal mounts, which are larger than in the predecessor model, ensure improved passenger compartment comfort in all road conditions.

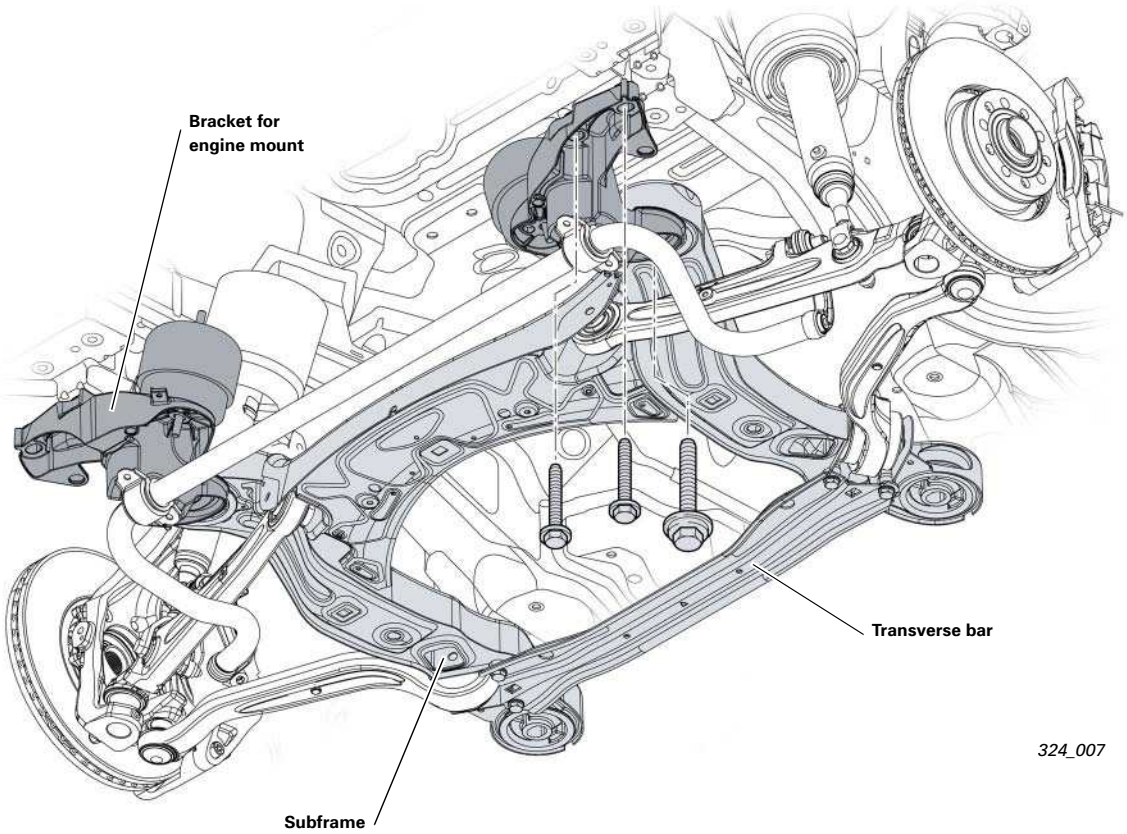

Stabiliser

Two tubular stabilisers are used to reduce the weight. Vehicles with a quattro sports-style running gear have a stabiliser with a higher spring constant.

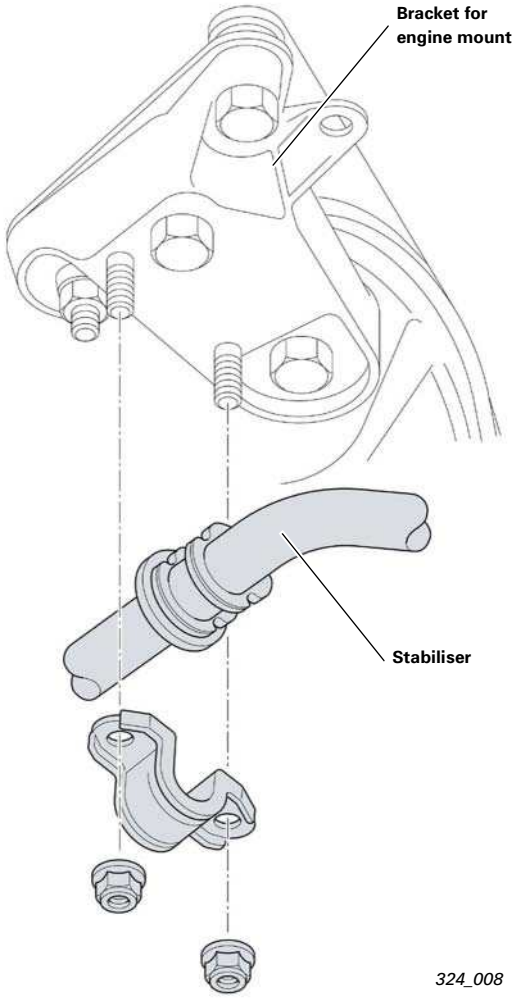

324_008

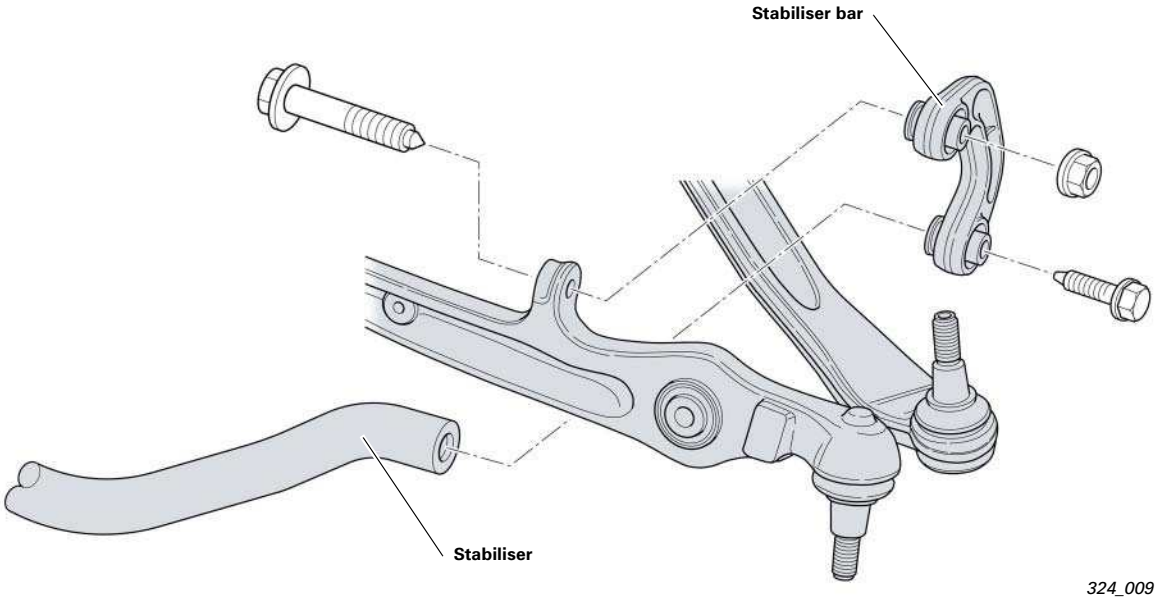

324_009

Overview

The rear axle represents a further development of the trapezoid link axle, with which you may be familiar from the A4'00. Because of the geometric and kinematic changes compared with the predecessor vehicle and the use of the trapezoid link axle, all axle components are new parts.

The axle struts are now longer compared with the A4'00 in order to guarantee a larger toe width. For vehicles with V8 TDI engines with quattro dirve, the toe width on the rear axle is reduced so that wider tyres can be used. This is achieved using modified wheel hubs.

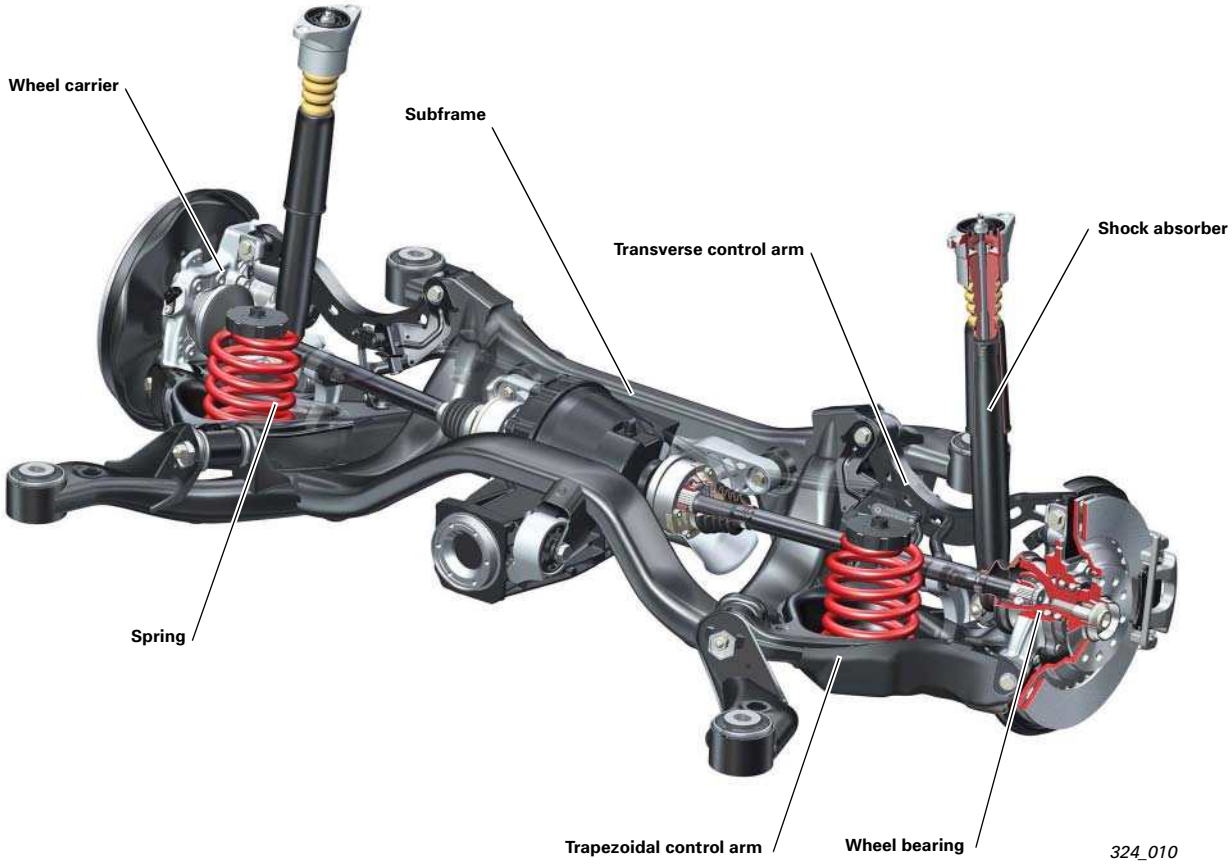

System components

Wheel carrier

The wheel carrier is made of cast aluminium.
It is manufactured using the Cobapress method.
A subsequent forging procedure is then performed while it is still hot. This achieves a very homogeneous material structure with high component strength.

Wheel bearings and wheel hubs

Front wheel drive:
3rd generation wheel bearings are used. The wheel bearing and wheel hub thus form one structural unit.

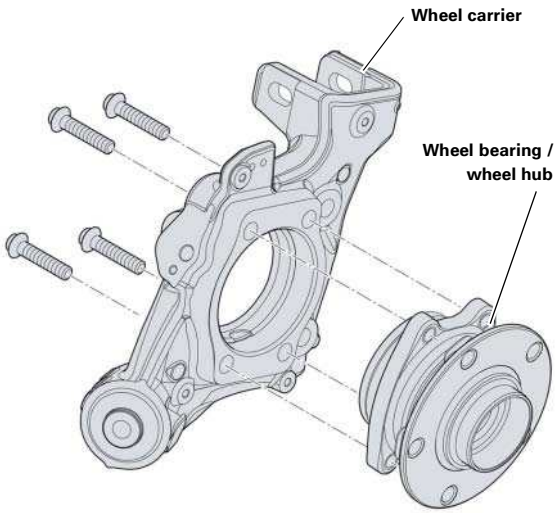

324_011

quattro:

The same wheel bearings, which are installed on the front axle of the Audi A8'03, are used here (2nd generation, diameter = 92 mm).

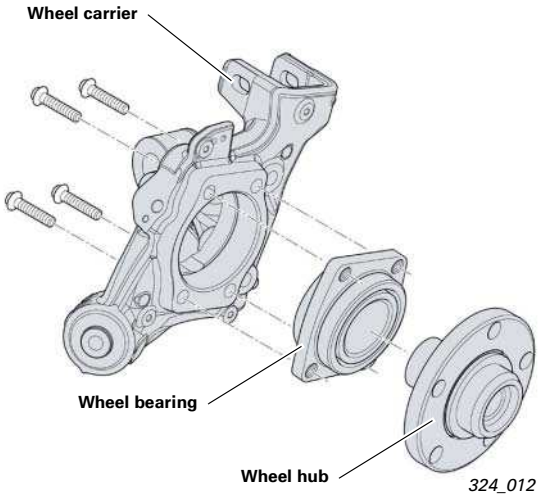

324_012

Trapezoidal control arm

The trapezoid control arm is made of high-strength steel. It is the connecting element between the wheel carrier and the subframe on the bottom level. The control arm also has a plastic cover to protect it against stone/chipping damage.

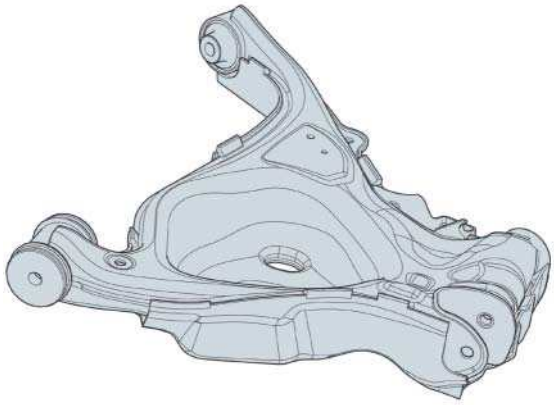

324_013

Transverse control arm

The top control arm is a steel welded part. The same parts are now used on the right and left axle side.

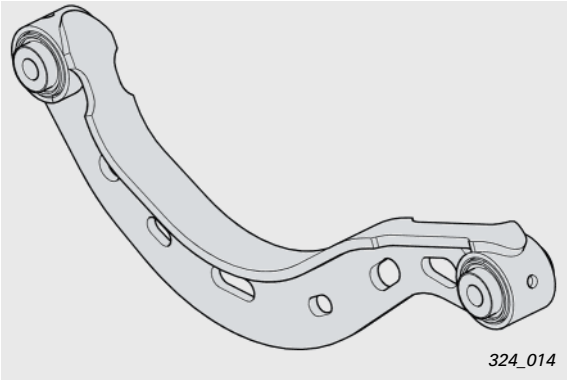

324_014

Toe control arm

The toe control arm is a steel part. An additional plastic cover is fitted as chipping protection on the rough-terrain running gear.

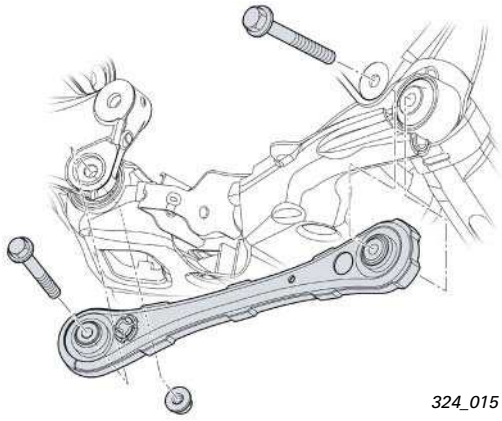

324_015

Spring

The spring has a linear characteristic. For the rough-terrain running gear, additional washers are fitted between the springs and the body in order to raise the position of the trim when the vehicle is empty (+13 mm compared with the normal running gear).

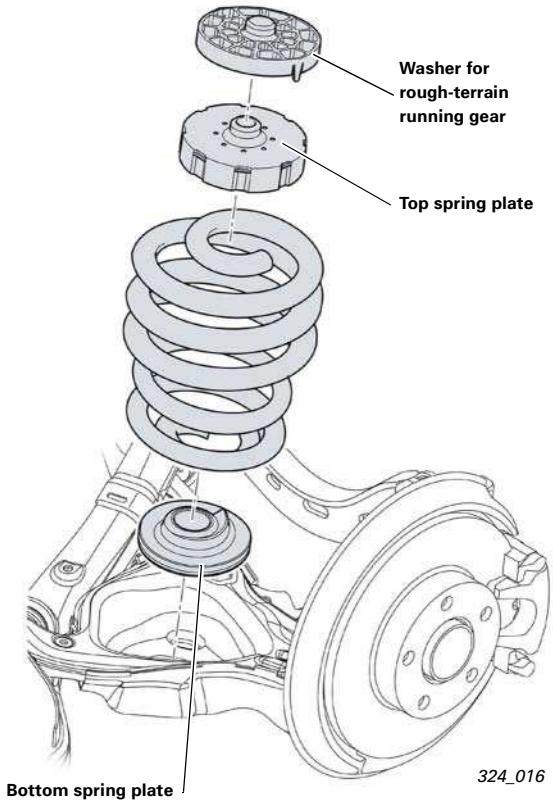

Note
Due to the installation position of the spring, the new special tool VAS 6274 is used to tension the spring.
Please observe correct installation position for spring.
See current Workshop Manual.

Shock absorber

A conventional twin-tube shock absorber is used.

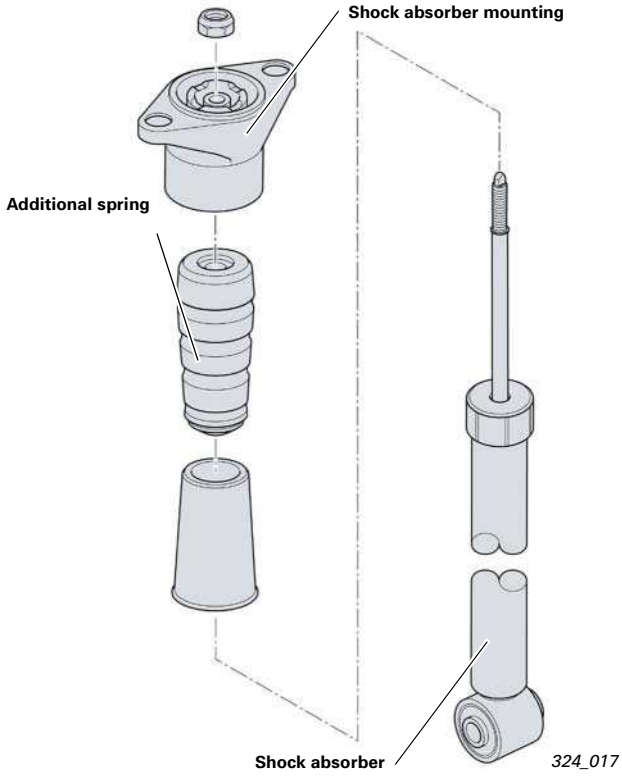

Subframe

The subframe is a welded construction made of internal high-pressure recast (IHU) parts.
The quattro subframe is fundamentally different to the front-wheel-drive variant in that it has a front cross tube, which is used for mounting the rear axle transmission.

Four hydraulic mounts are used for mounting on the body. The mounts are not the same – the front and rear mounts have different spring properties (spring stiffness). The same mounts are used for front-wheel-drive and quattro vehicles.

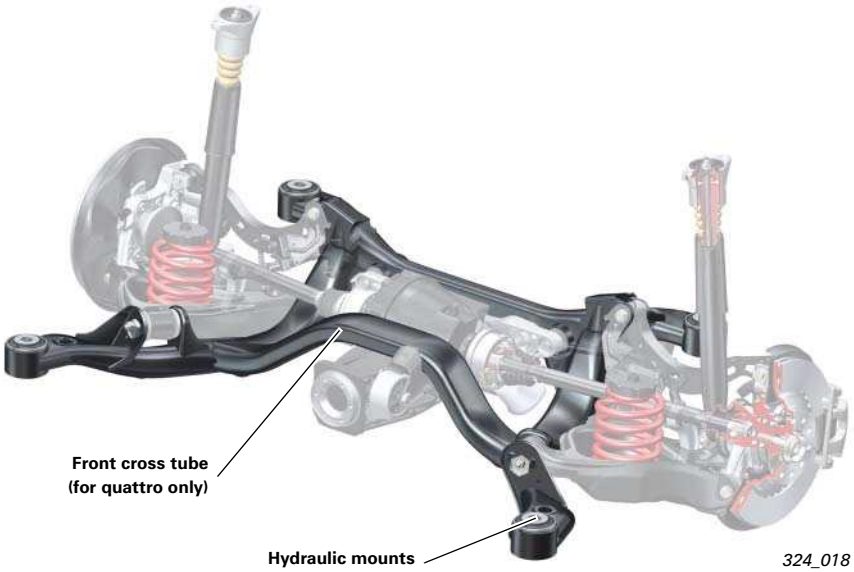

324_018

Note

The installation position of the mounts in the subframe is predefined, see current Workshop Manual.

Stabiliser

The stabiliser is mounted on the subframe in rubber mounts and is secured to the trapezoid control arms with rubber-cushioned connecting rods.

Two different stabilisers are used. The stabiliser for the sports vehicle has a higher torsion resistance.

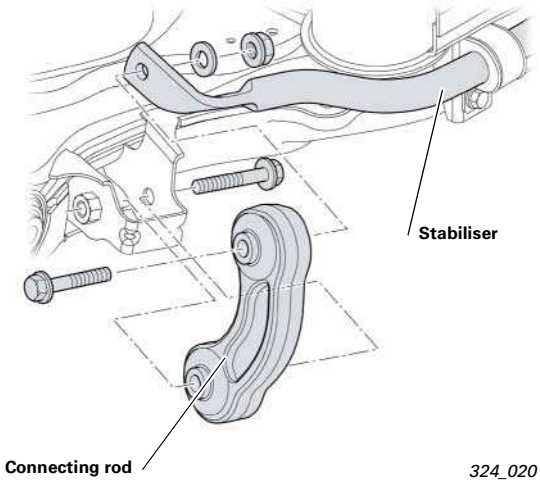

324_020

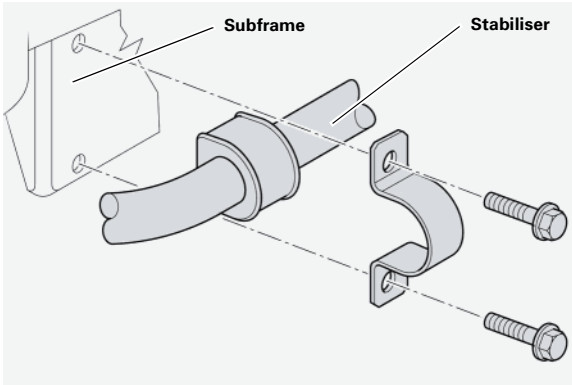

324_021

Adjusting the front axle

The basic procedure for aligning and adjusting the front axle is still the same.

Individual toe values and the toe change pattern during spring tensioning/release (= "toe-in curve") can be adjusted as before on the four-link front axle. The procedure for this remains unchanged.

The camber values can be centred between the right and left axle side. This is done by shifting the subframe together with the engine mounting bracket sideways.
(see current Workshop Manual)

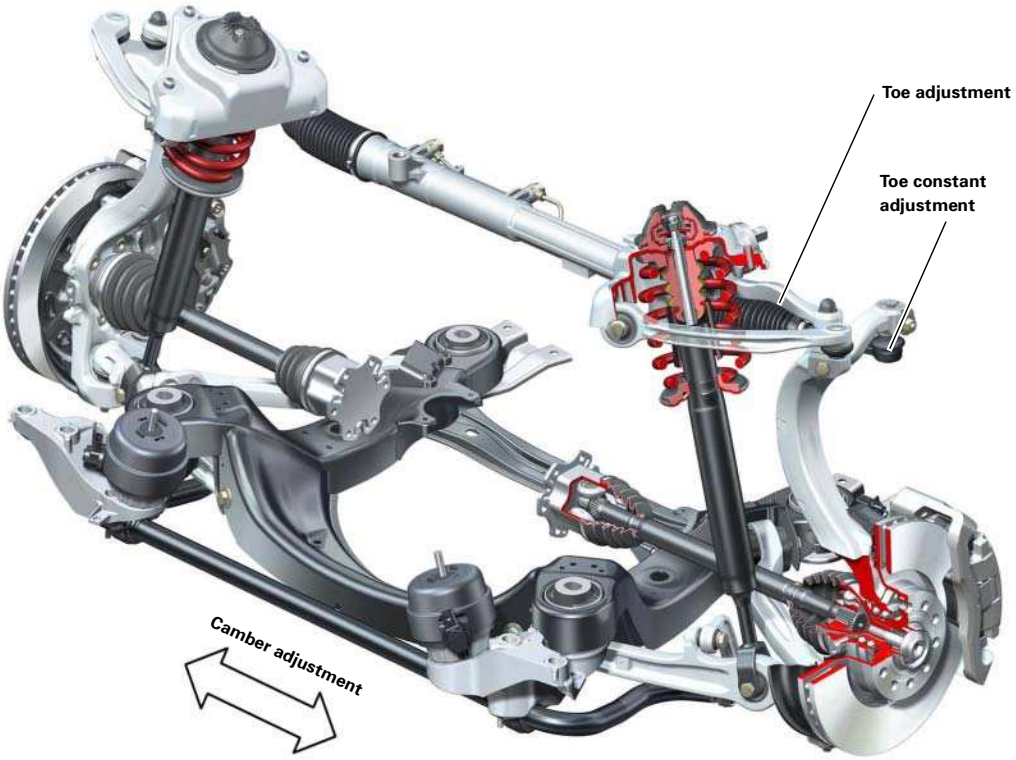

324_022

Adjusting the rear axle

The camber adjustment is performed with an eccentric screw at the position at which the control arm is bolted to the wheel carrier.
Toe adjustment is performed at the front bolt securing the trapezium control arm to the subframe.
(For further details, see current Workshop Manual)

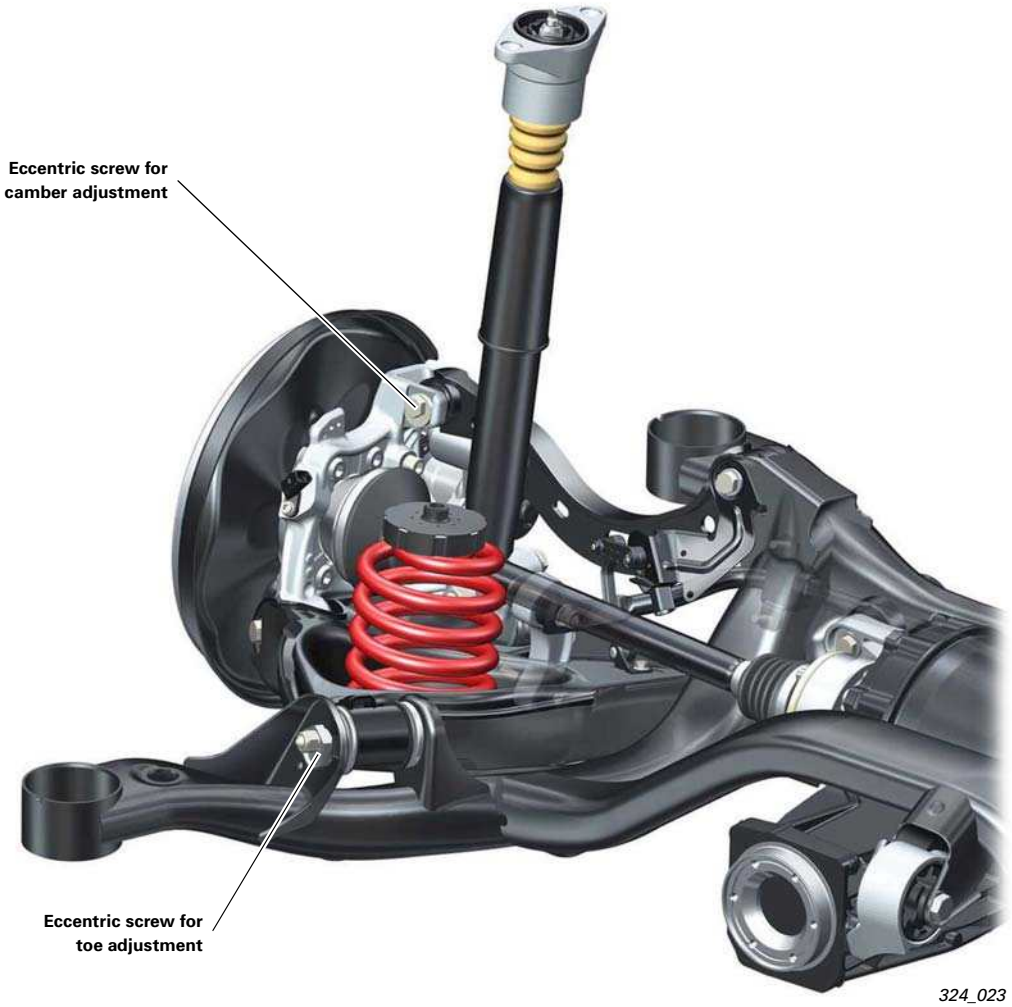

324_023

Wheel brake

Front-axle overview

Engine	3.0 litre V6 TDI	3.2 litre V6 FSI	4.2 litre V8 MPI
Minimum wheel size	16″	16″	17″
Brake type	FNR-G 60 16″	FNR-G 60 16″	FNR-G 60 17″
Number of pistons	1	1	1
Piston diameter (mm)	60	60	60
Brake disc diameter (mm) x thickness (mm)	321 x 30 Ventilated	321 x 30 Ventilated	347 x 30 Ventilated

324_024a

Wheel brake

Rear-axle overview

Engine	3.0 litre V6 TDI	3.2 litre V6 FSI	4.2 litre V8 MPI
Minimum wheel size	16″	16″	17″
Brake type	Colette II C41	Colette II C41	Colette II C43
Number of pistons	1	1	1
Piston diameter (mm)	41	41	43
Brake disc diameter (mm) x thickness (mm)	302 x 12 Not ventilated	302 x 12 Not ventilated	330 x 22 Ventilated

324_025c

System components

Brake master cylinder

An 8/9-inch tandem brake master cylinder is used. The piston diameter has been increased. The brake master cylinder is the same design as S4 and RS6.

By optimising the internal design, it was possible to improve brake pressure metering and the reporting of the current braking pressure to the driver.

324_025a

Brake servo unit

The brake servo unit operates according to the dual-rate principle.
(For a description of how it works, see SSP 313.)
The vacuum is supplied by the intake pipe vacuum.

The well-known electric vacuum pump UP-28 is used for the V8 engine with automatic transmission to improve the vacuum supply during engine warm-up. A mechanical vacuum pump is used for the V6 and diesel engines.

Brake fluid reservoir

The brake fluid reservoir was adopted from the A4.

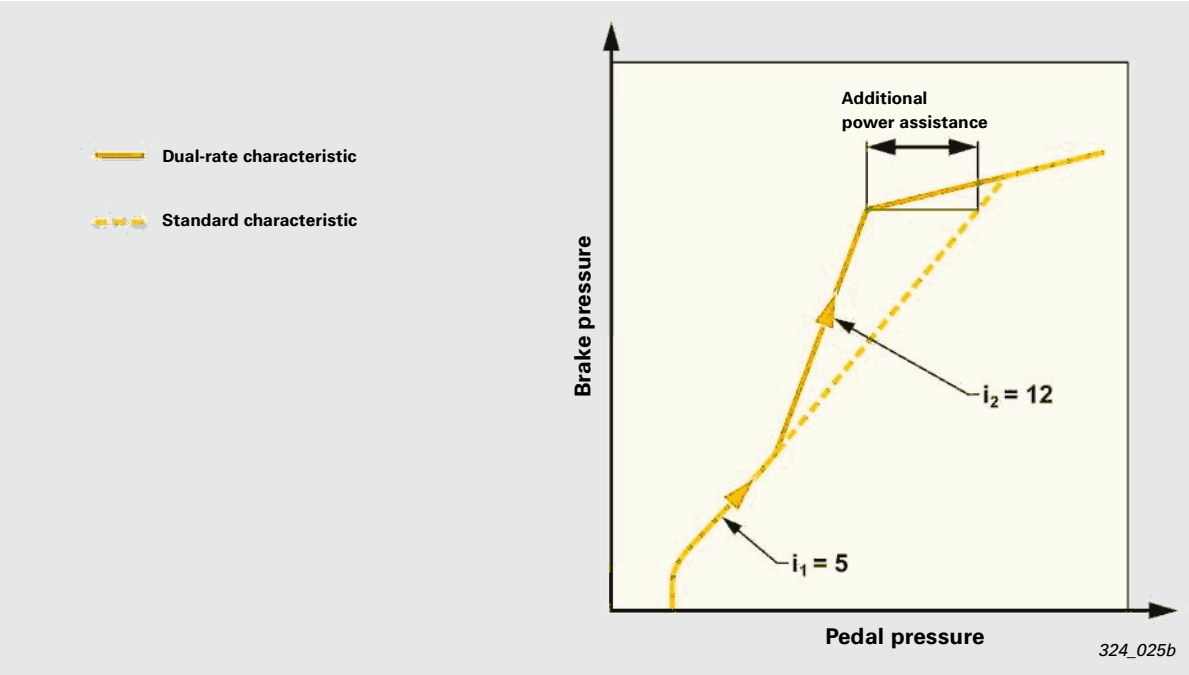

324_025b

Electromechanical parking brake - EPB

General information

Following its initial introduction in the Audi A8, the electrical parking brake EPB is now also used in the Audi A6'05. The basic mechanical design, the boost factor levels and the general functionality are still the same (see SSP 285). The adaptation of the EPB to suit the A6'05 has resulted in the new features described below.

324_025c

324_025d

System components

Parking brake motor V282/V283

The engine and gearbox are now mounted separately in two damping elements and thus separated from the housing. The engine and gearbox are positioned exactly in the damping elements using a positioning plate.

The toothed belt for the gearbox drive is now helical-cut at a 2° angle. These measures significantly improve the noise characteristic when the engine and gear mechanism are running.

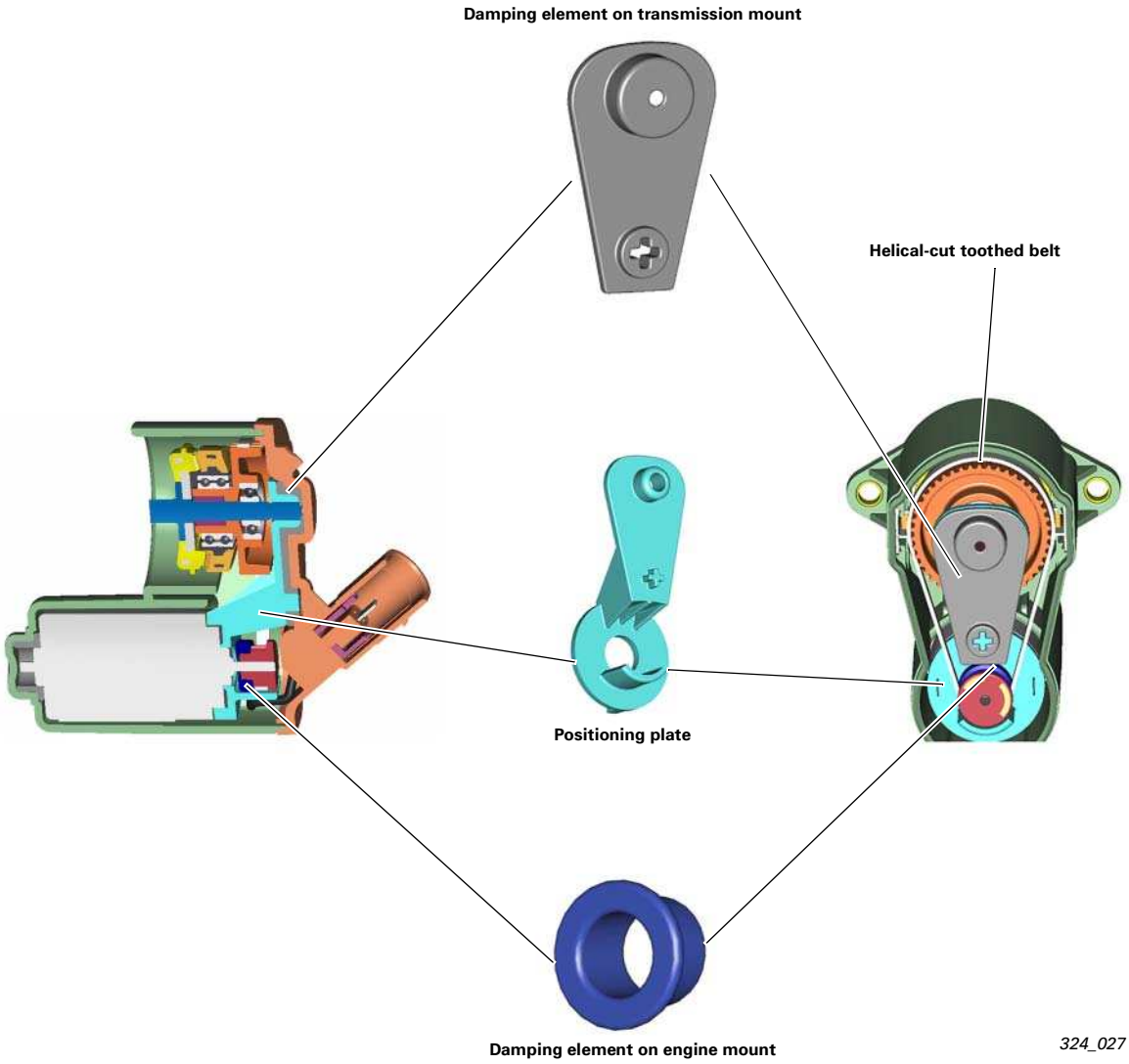

The electric line connection is now plugged in directly at the parking brake motor. This makes assembly easier through improved handling.

The number of revolutions and the current rotor position of the electric motor is no longer recorded. The control unit essentially determines the motor cut-off point when the brakes are closed by evaluating the power consumption of the motor.

The correct amount of free play between the brake pad and the disc is set by evaluating the power and voltage pattern when the motor is activated. Complex control algorithms are stored in the control unit for this purpose.

Note

Rear brake pad wear is no longer measured. As a result, the brake pad quality is not specified in Customer Service when the brake pads are replaced.

If the EPB is not actuated for a long time, the free play increases as a result of brake pad wear through operational braking.
The EPB control unit performs an automatic adjustment approx. every 1,000 kilometres. To do this, the ignition must be switched off, the steering locked, the parking brake must not be actuated and the selector lever must be in position ”P” for vehicles with automatic transmission.

System components

EPB fault displays

The EPB fault displays in the dashboard insert and the audible signal (gong) are now activated by the CAN Instrument Cluster. Without the discrete activation function, the driver in the control unit with display unit in the dashboard insert J285 is no longer needed.

The operating and display concept corresponds to that used in the Audi A8 (see SSP 285).

324_029

Functionalities

DriveAssist

The DriveAssist function can now be used on all vehicles with manual gearbox. The brake opening time depends on the vehicle tilt, accelerator pedal position, clutch pedal position and clutching speed. The EPB control unit calculates the clutching speed by evaluating the change in the position of the clutch pedal over time. A newly developed contact-free pedal sensor is used to record the clutch pedal position.
The EPB control unit must also consider whether the vehicle, which is positioned on a slope, is taking off forwards or backwards.

By evaluating a CAN message from the control unit for central convenience electronics J393, the EPB control unit determines whether the reversing light is on.
While detecting the intended forward or reverse travel down a slope, the brake is opened for driving off, even with a considerably reduced engine torque.
Generally, the function can only be activated when the safety belt is fastened.
The DriveAssist function can no longer be deactivated in Customer Service.

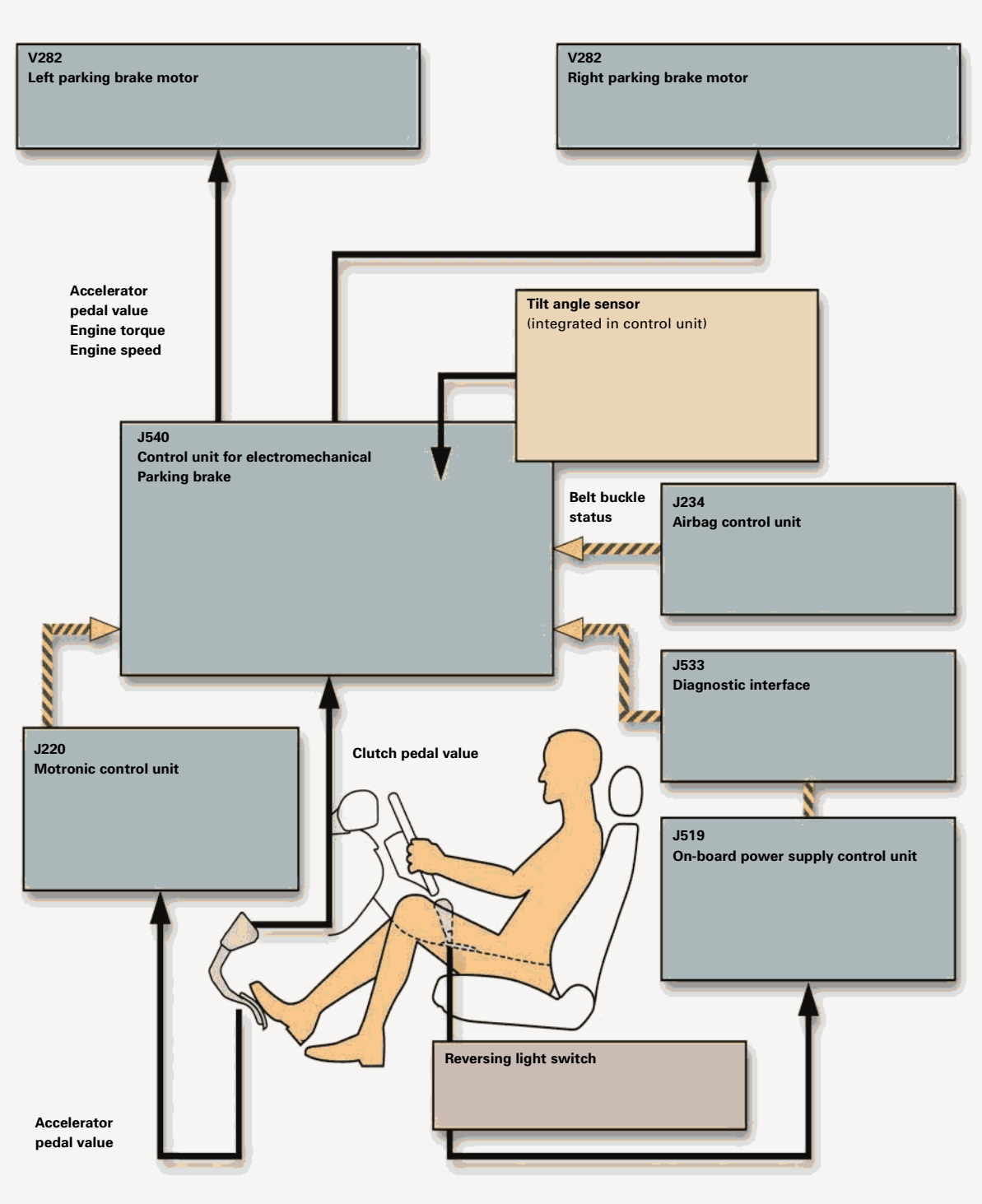

CAN Drive

CAN Convenience

324_030

Function diagram

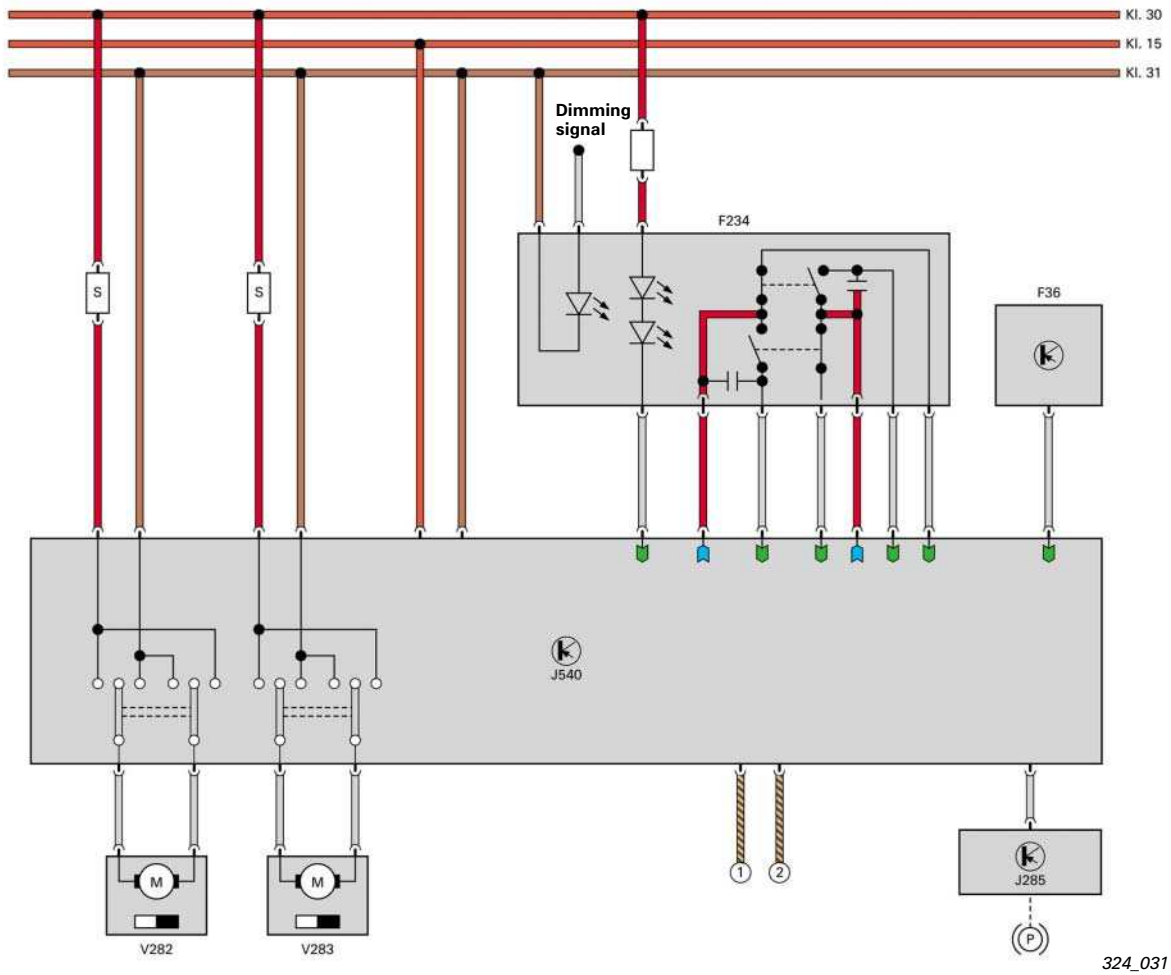

F234	Pressure switch for parking brake		Input signal
F36	Clutch pedal switch		Output signal
J540	Control unit for electromechanical parking brake		Positive
J285	Control unit with display unit in dashboard insert		Ground
V282	Left parking brake motor		CAN Drive
V283	Right parking brake motor		

CAN Data Exchange

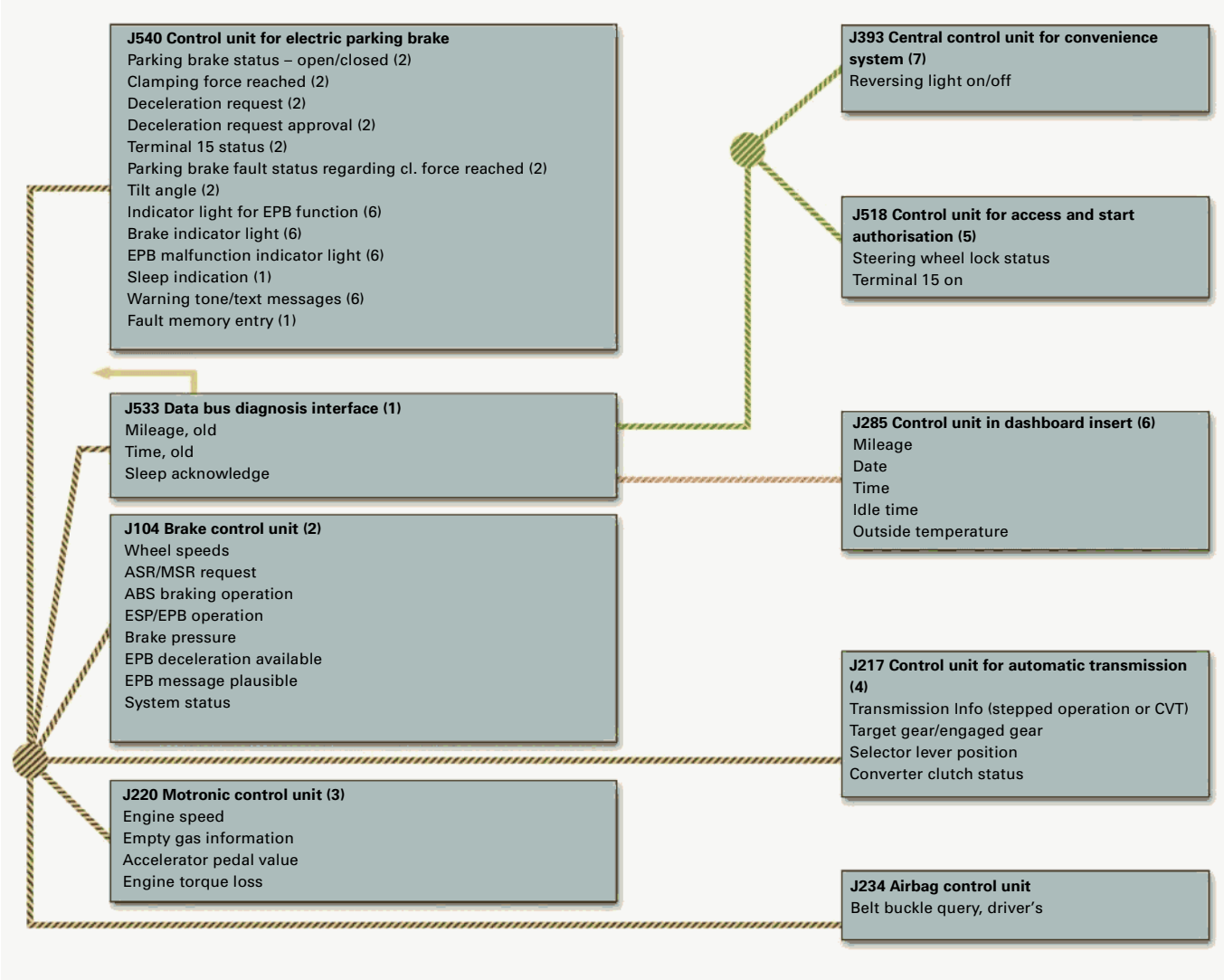

Information sent by control unit J540

Information received and evaluated by control unit J540

CAN Drive

CAN Convenience

CAN Instrument Cluster

CAN Diagnosis

324_032

ESP

General information

A new ESP generation from Bosch in the form of ESP 8.0 is used in the Audi A6'05.
The familiar basic functions already available in the other Audi models have been adapted to the conditions in the A6'05.

The basic functionalities of the subfunctions EBD, ABS, TCS, EDTC, EDL, ESP and ECD are the same as in the predecessor version 5.7.
The control unit and hydraulic unit cannot be separated in Customer Service. There are two different parts for front-wheel-drive and quattro drive.

Design and function

Changes compared with ESP 5.7

– The hydraulic unit and control unit are now lighter (1.6 kg) and smaller as a result of further miniaturisation of the electronics. At the same time, the hydraulic efficiency has been improved significantly.

The computing power has been increased significantly through the use of a new micro-controller family and a more efficient processor. The control unit can now be flashed.

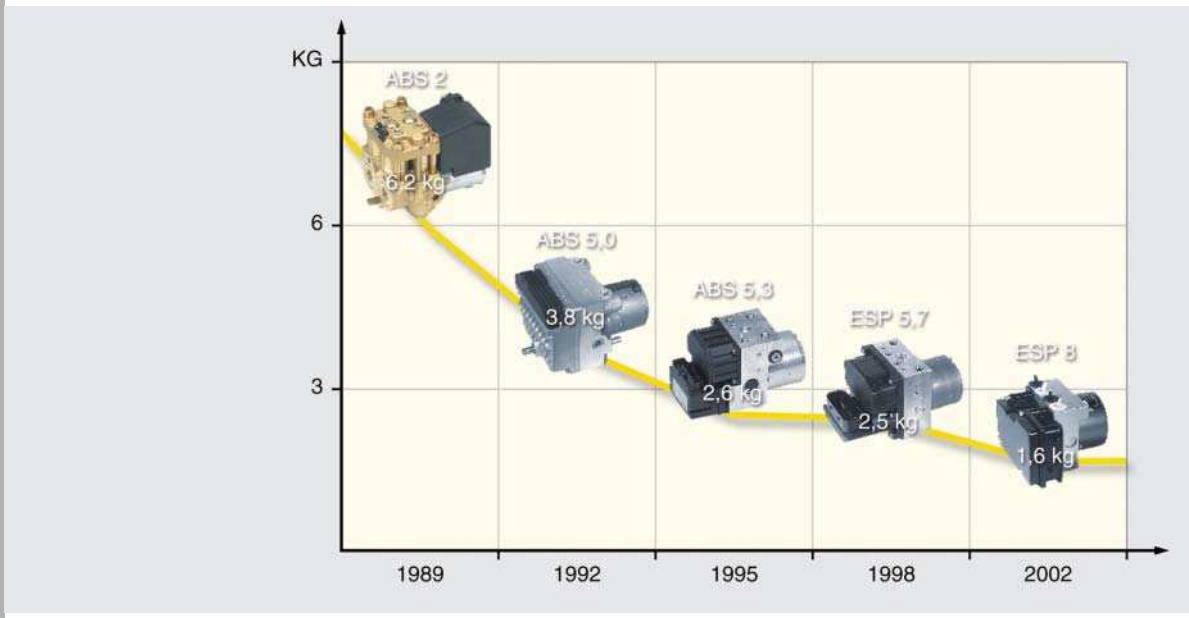

324_034

– The ESP pressure sensor is integrated into the hydraulic unit. This integration offers particular advantages with regard to reducing the amount of cables required and increasing functional safety.

The sensor measures the brake pressure at the input of the hydraulic control unit in the primary circuit.

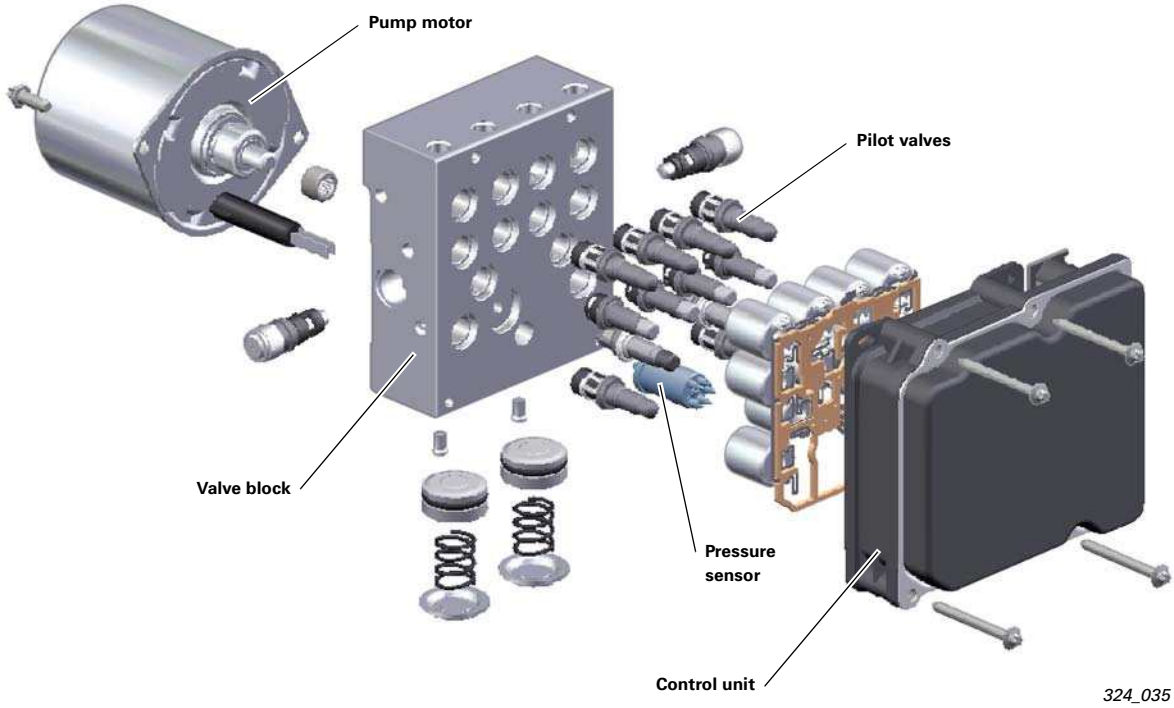

324_035

– The sensor unit G-419 still contains the sensors G200 – Transverse acceleration sensor – and G202 – Rotation rate sensor. It is installed on the tunnel in the centre console. The sensor unit now communicates with the control unit through the Private CAN.
The Private CAN is a high-speed CAN, which supports real time. In spite of nominally similar data transfer rates to those on the CAN Drive, the Private CAN assures very fast data transmission between the sensor unit and the ESP control unit at a virtually constant speed.

324_036

- While travelling in rain or snow, the front brake pads are applied periodically (every 185 seconds) to the brake discs at a minimum pressure (0.5 - 1.5 bar) for a short time (approx. 2.5 seconds). This cleans the brake pads and discs, thereby improving braking response. To do this, the windscreen wiper must be switched on and the vehicle speed must be > 70 km/h.

- The so-called "hill holder" function is used for vehicles with Multitronic transmission. If the driver takes his/her foot off the brake pedal after stopping on a slope, the momentary braking pressure is kept constant by closing the ABS outlet valves. If the driver puts his/her foot on to the accelerator pedal within a time period of max. one second, the brake is then opened if the available engine torque is sufficient to prevent the vehicle from rolling back.
  If the accelerator pedal is not pressed immediately after letting off the brake pedal, the brake is opened again after one second. This function helps the driver to take off again after stopping for a short time on a slope.
  Unlike "traditional" automatic gearboxes, Multitronic gearboxes do not have a creep function for when the vehicle is stationary and in gear.

- The opening cross-section of the ESP switch-over valves can now be varied by changing the activating signal as required. (For details of how this works, see SSP285, page 49.)
  As a result, the brake pressure can be regulated more specifically, the acoustics are improved and pulsations on the brake pedal are significantly reduced.

– The functionality of the button E256 for ESP and ASR has been enhanced as follows:
  Pressing the button quickly (<3 seconds) at a driving speed of less than 50 km/h deactivates ASR. TCS will be automatically activated again if the vehicle speed increases to in excess of 70 km/h. Switching off TCS improves traction when driving on a loose surface (e.g. snow).

324_037

If the button is pressed for longer than 3 seconds, the ESP function is deactivated. ESP remains deactivated, even with subsequent braking. The deactivation of these functions is also indicated in the central display of the dashboard insert.

324_038

If the button is pressed for longer than 10 seconds, ESP is automatically activated again and can only be deactivated by switching the ignition off and then back on.

Function diagram

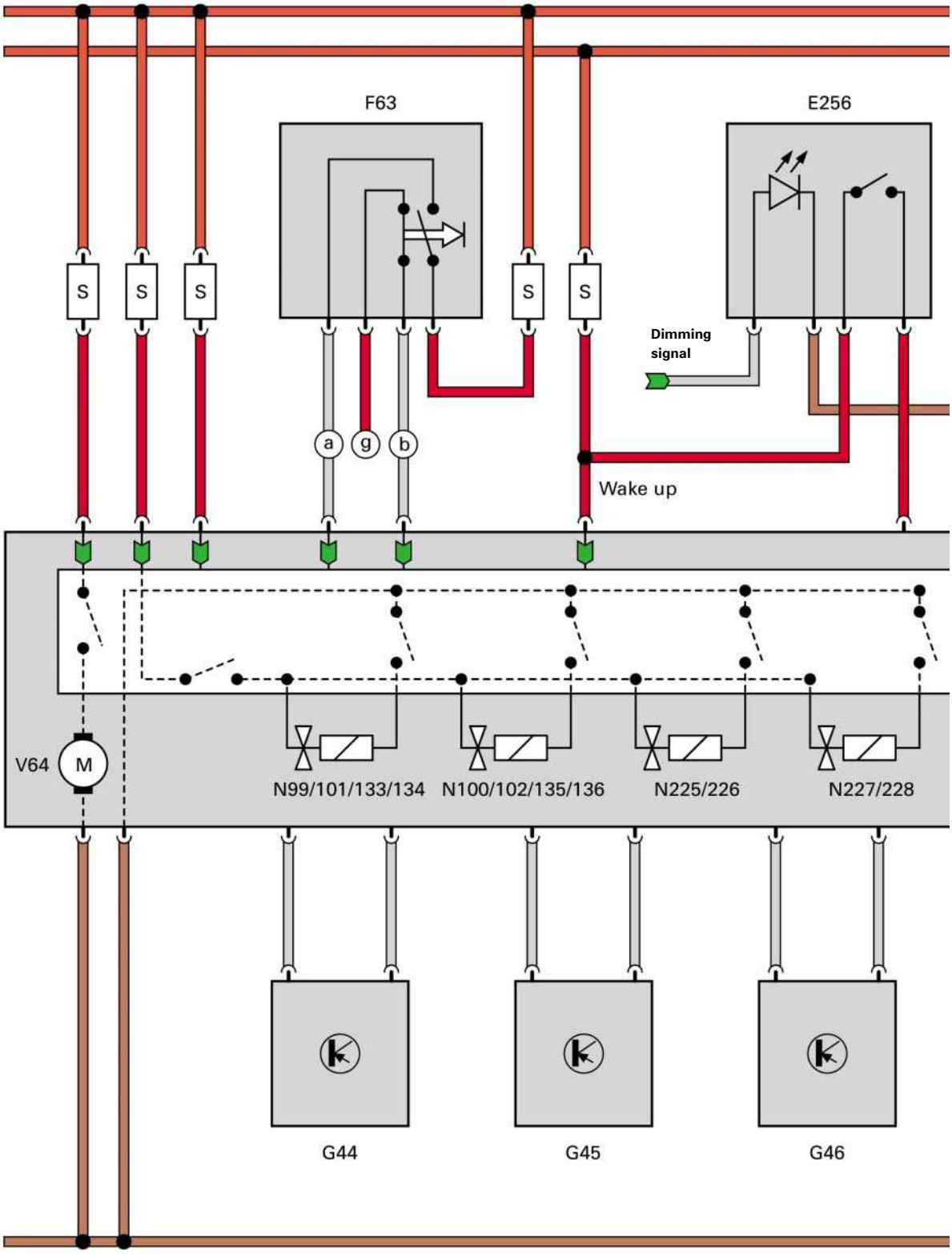

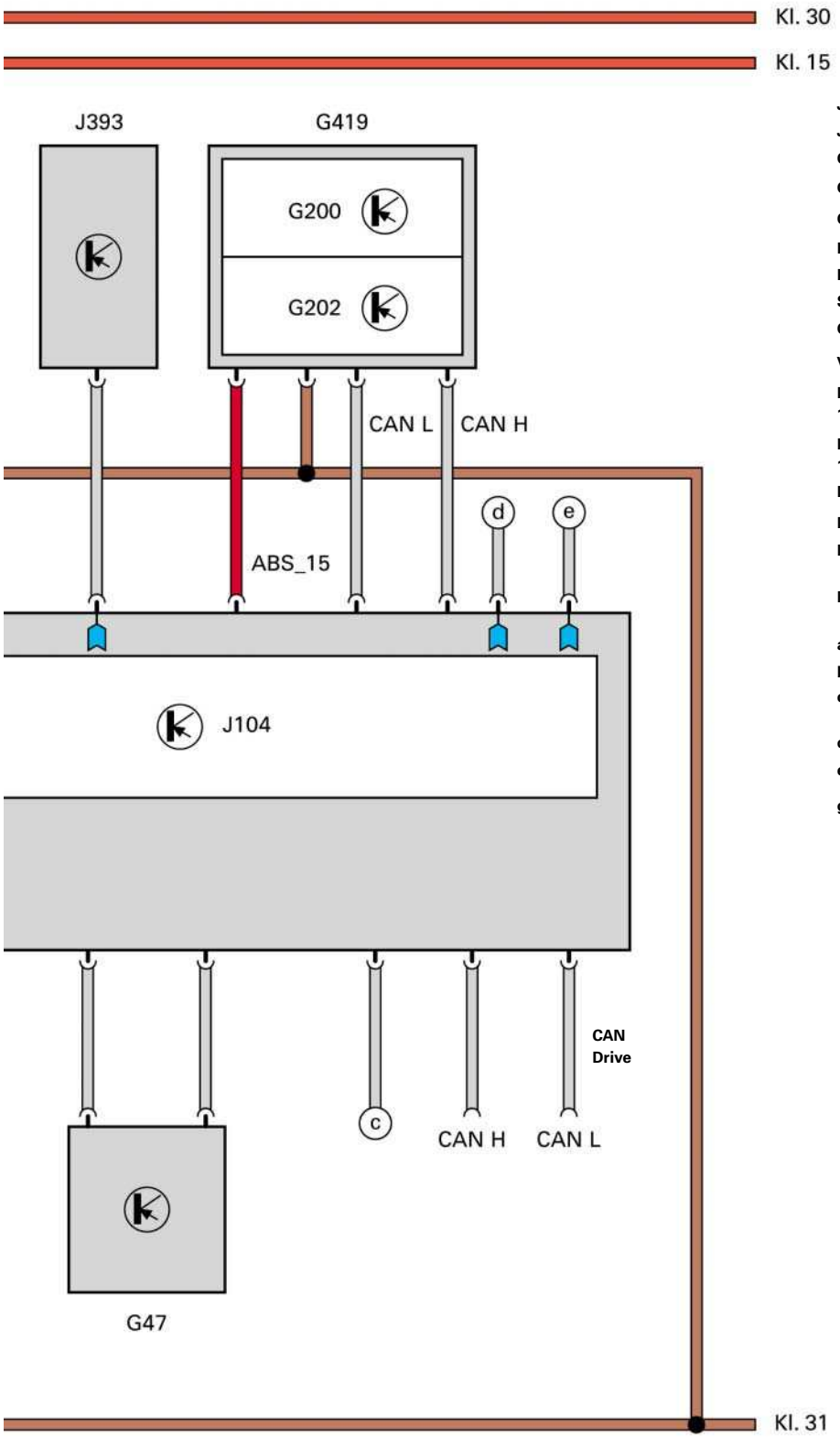

J104	Control unit for ABS with EDL/TCS/ESP
J393	Central contr. unit for convenience system
G419	ESP sensor unit
G200	Transverse acceleration sensor
G202	Rotation rate sensor
E256	TCS/ESP button
F63	Brake pedal switch
S	Fuse
G44-47	Engine speed sensor
V64	ABS hydraulic pump
N99/101/ 133/134	ABS inlet valves
N100/102/ 135/136	ABS outlet valves
N225	Pilot valve -1- for driving dynamics contr.
N226	Pilot valve -2- for driving dynamics contr.
N227	High-pressure switch-over valve -1- for driving dynamics control
N228	High-pressure switch-over valve -2- for driving dynamics control
a	Brake light switch signal
b	Brake test switch signal
c	Plug coupling for retrofitting, wheel speed gauge signal
d	Signal from rear right speed sensor
e	Signal from rear left speed sensor
g	Motronic power supply relay

Input signal

Output signal

Positive

Ground

CAN Drive

324_039

CAN Data Exchange

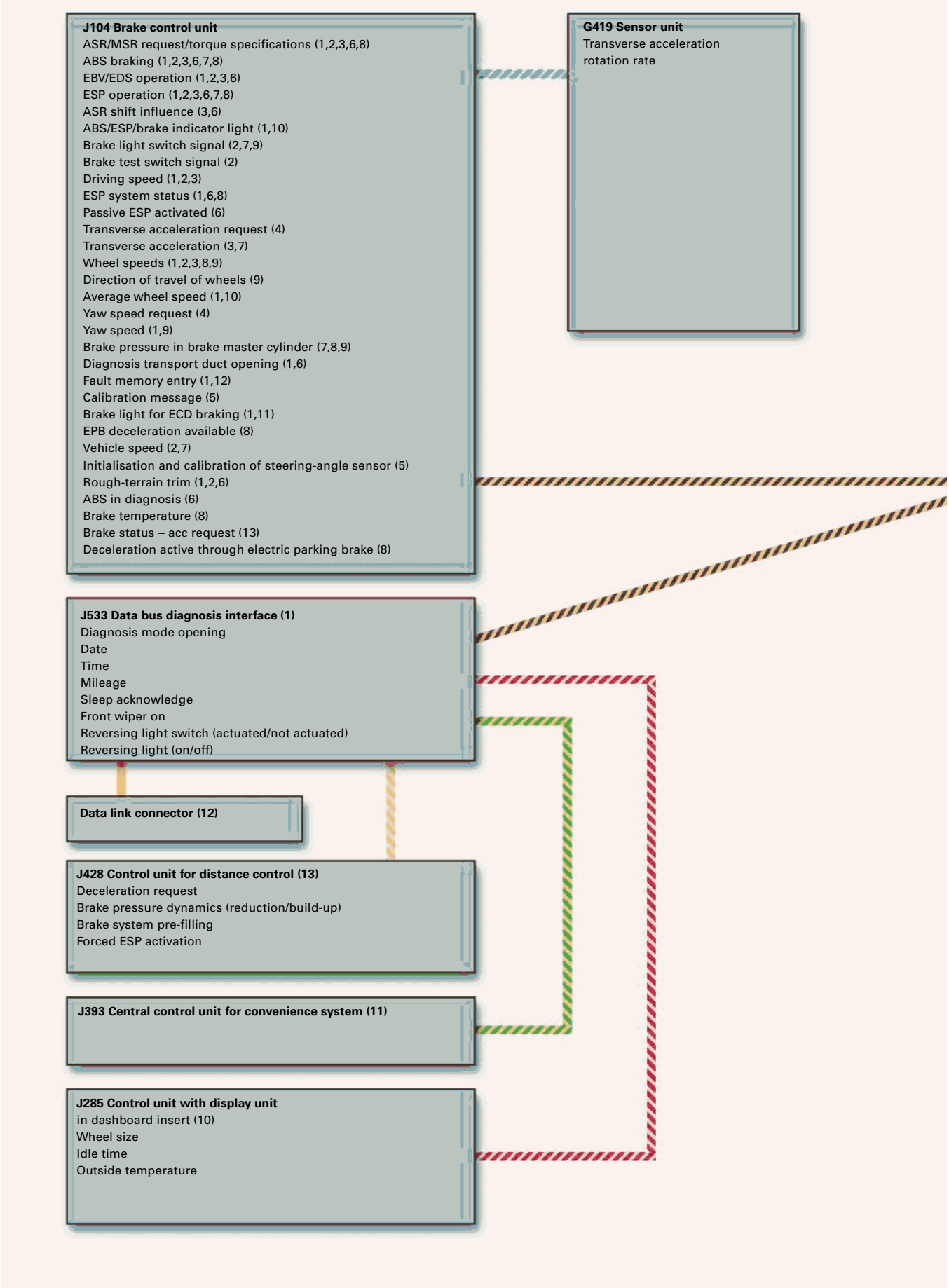

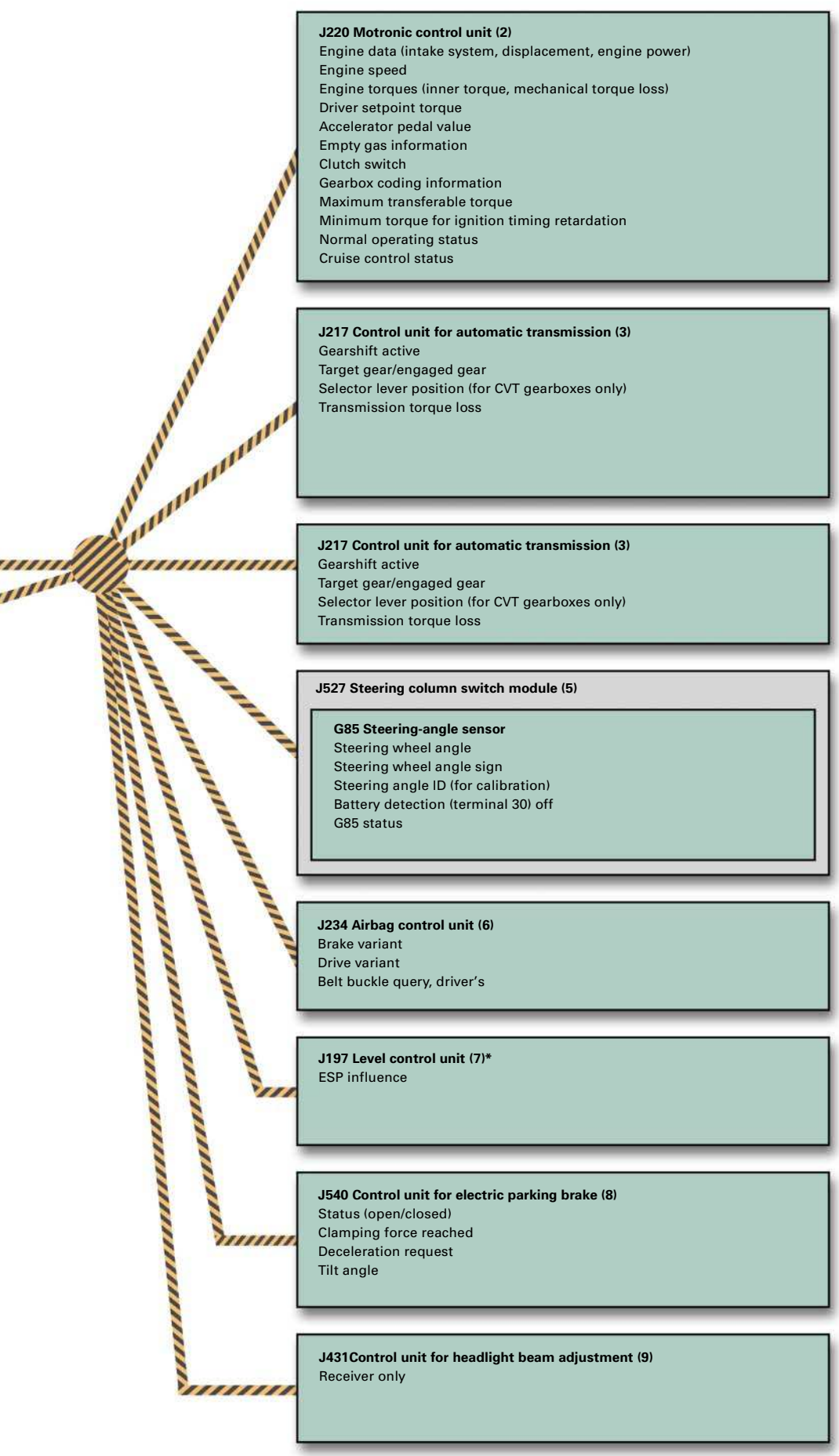

*** Not used at start of production (SOP)**

324_040

Information sent by the power steering control unit

Information received and evaluated by the power steering control unit

CAN Convenience

CAN Distance Control

CAN Instrument Cluster

CAN Diagnosis

CAN Drive

Private CAN

A new feature here is the incorporation of the airbag control unit J234 in data exchange. Information about the drive and brake variants installed on the vehicle is stored in the airbag control unit and is read in by the ESP control unit J104. The ESP control unit J104 compares this information with its own coding. If the information does not correspond, ESP operation is not permitted and an entry is recorded in the fault memory.

The number shown in brackets after the message contents indicates the control unit responsible for processing the corresponding information: e.g. "ASR/MSR request" is processed by control units no. 2 and 3 (J220 and J217).

Service

Significant changes compared with ESP 5.7

The following service topics have been changed significantly compared with ESP 5.7:

- Calibration of the steering-angle sensor G85 is no longer tied in with coding the ESP control unit J104.
- The login code is no longer entered for coding the ESP control unit J104 in on-board diagnosis. Before coding the ESP control unit, the drive and brake variants must be coded in the airbag control unit.
- Measured-value blocks with extended scope.

Reference

For a detailed description of the range of services available, see current Workshop Manual.

Notes

Overview

A conventional, hydraulic rack-and-pinion servo steering system is used.
A high degree of sporty steering precision has been achieved through the consistent further development of the steering used in the predecessor model. The speed-dependent Servotronic servo-support is available as standard.

Servotronic II, which was used before in the Audi A8, is also used here. (For details of design and function, see SSP 285.)
A mechanically adjustable steering column is used in the basic model. Electrical adjustment is optional.

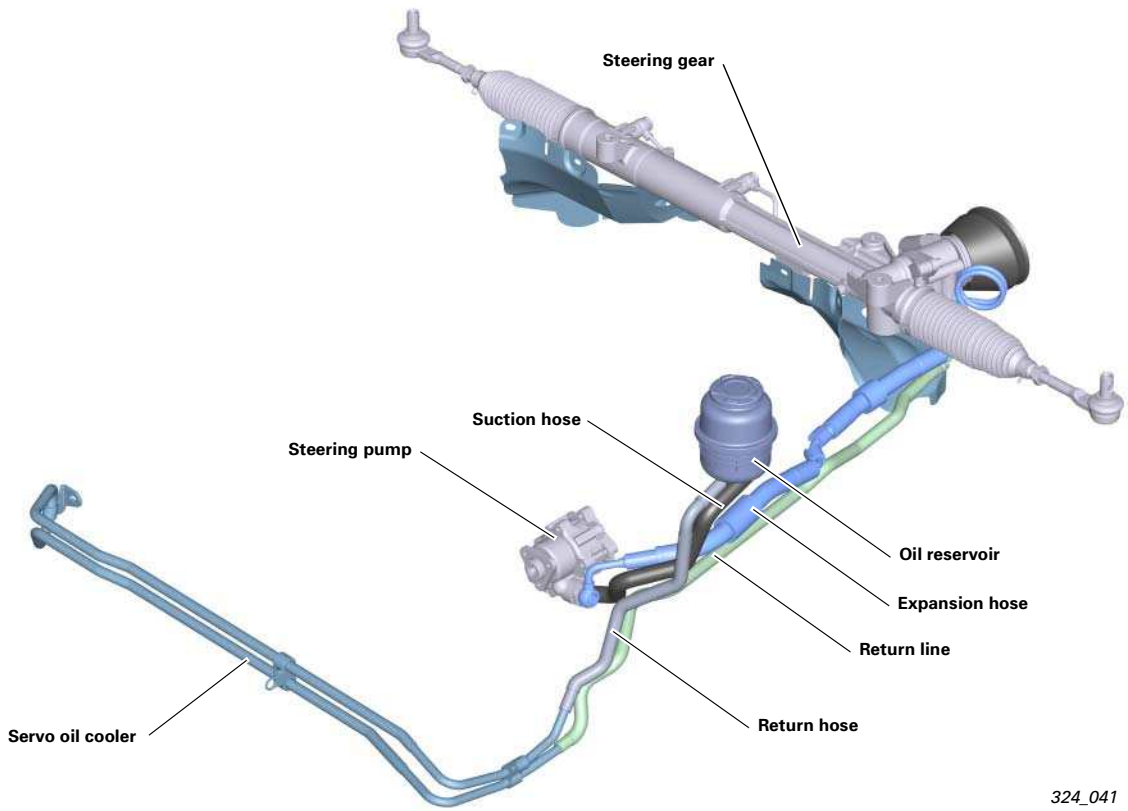

System components

Steering pump

The vane-type pumps FP4 and FP6, which you may already know, are used here.

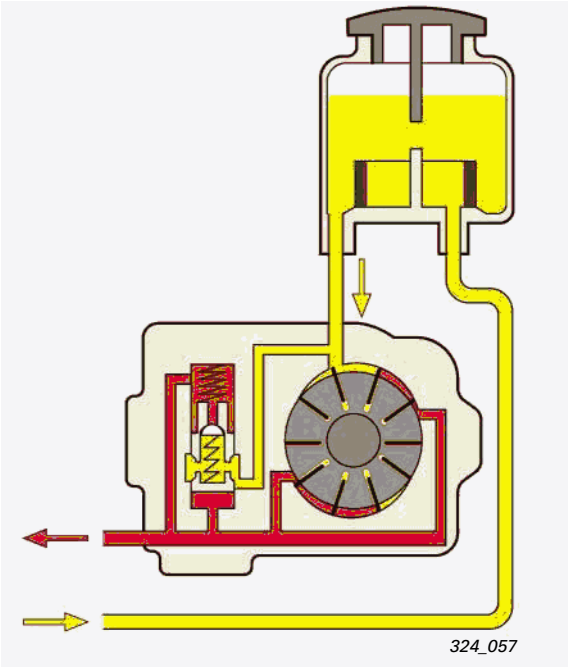

Engine	Pump type	Maximum pump pressure (bar)	Feed volumes (cm^3/rev)	Direction of rotation
3.0 litre V6 TDI	FP4	123	11	Right
3.2 litre V6 FSIFP6	FP4	120	12,5	Right
4.2 litre V8 MPI	FP6 chain drive	123	13	Left

System components

Steering gear

Four different types of steering gear are used. There are geometric differences between right- and left-hand drive vehicles.
In addition, steering gears with more direct transmission ratios and bigger track rod joints are used for the powerful eight-cylinder engines.

Generally, a constant conversion of steering wheel movement into track rod stroke movement is achieved.

The piston diameter of the steering gear is 44 mm.

The rotary valve is bolted to the aluminium-cast steering gear housing as a separate component. The steering gear is connected to the bottom of the radiator tank with three bolts.

Note

If repairs are needed, the entire steering gear/rotary valve unit must be replaced (see current Workshop Manual).

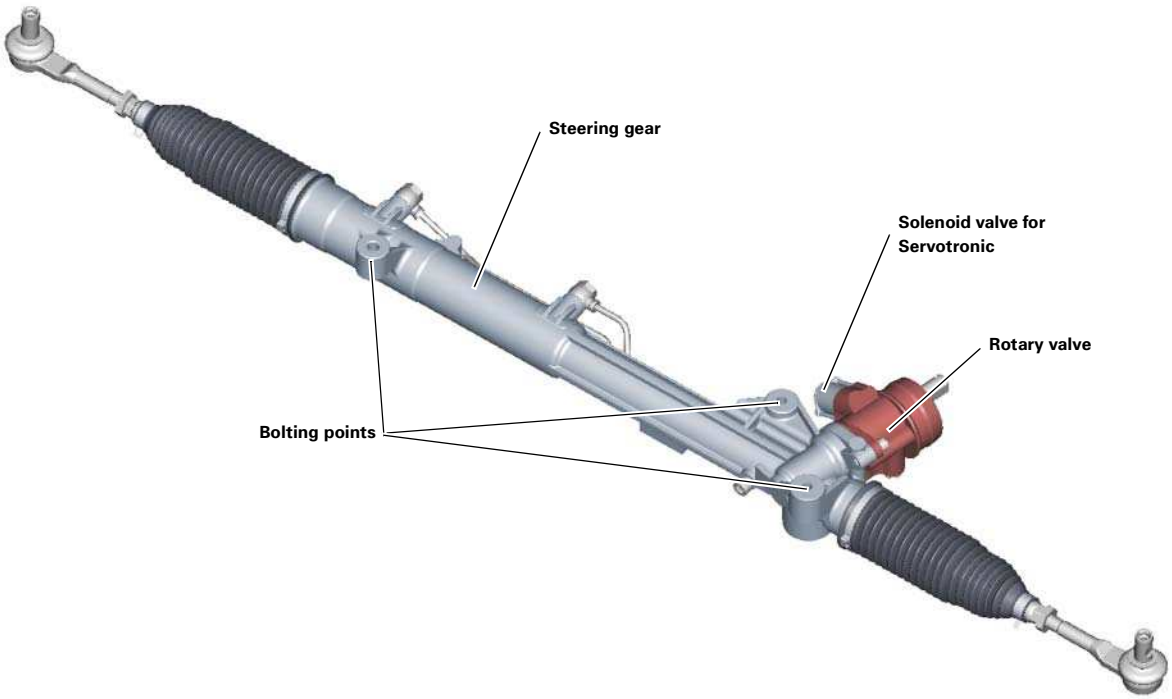

324_044

System components

Servotronic

The control unit -2- for on-board power supply J520 activates the solenoid valve for Servotronic. The input signal for the control unit is the speed signal from the ESP control unit J104.

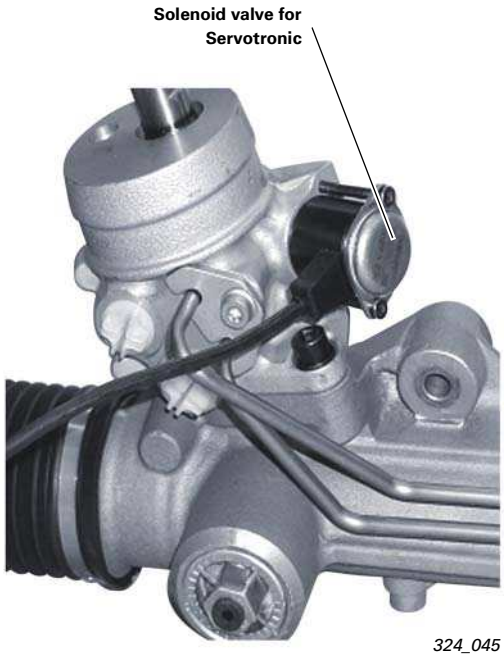

324_045

The functionality of the solenoid valve for Servotronic is also used in the A6'05 for the first time to reduce the thermal load on the steering pump.
The highest thermal load on the pump occurs when the steering is held at the limit position. The end position of the piston in the steering gear is then reached, but the pump continues to supply oil.

This increases the pressure until the pressure-control valve in the pump opens. The pump then feeds via short circuit. This means that the supplied oil travels back to the intake side of the pump the short way via the pressure-control valve. This increases the oil temperature significantly in a short space of time.

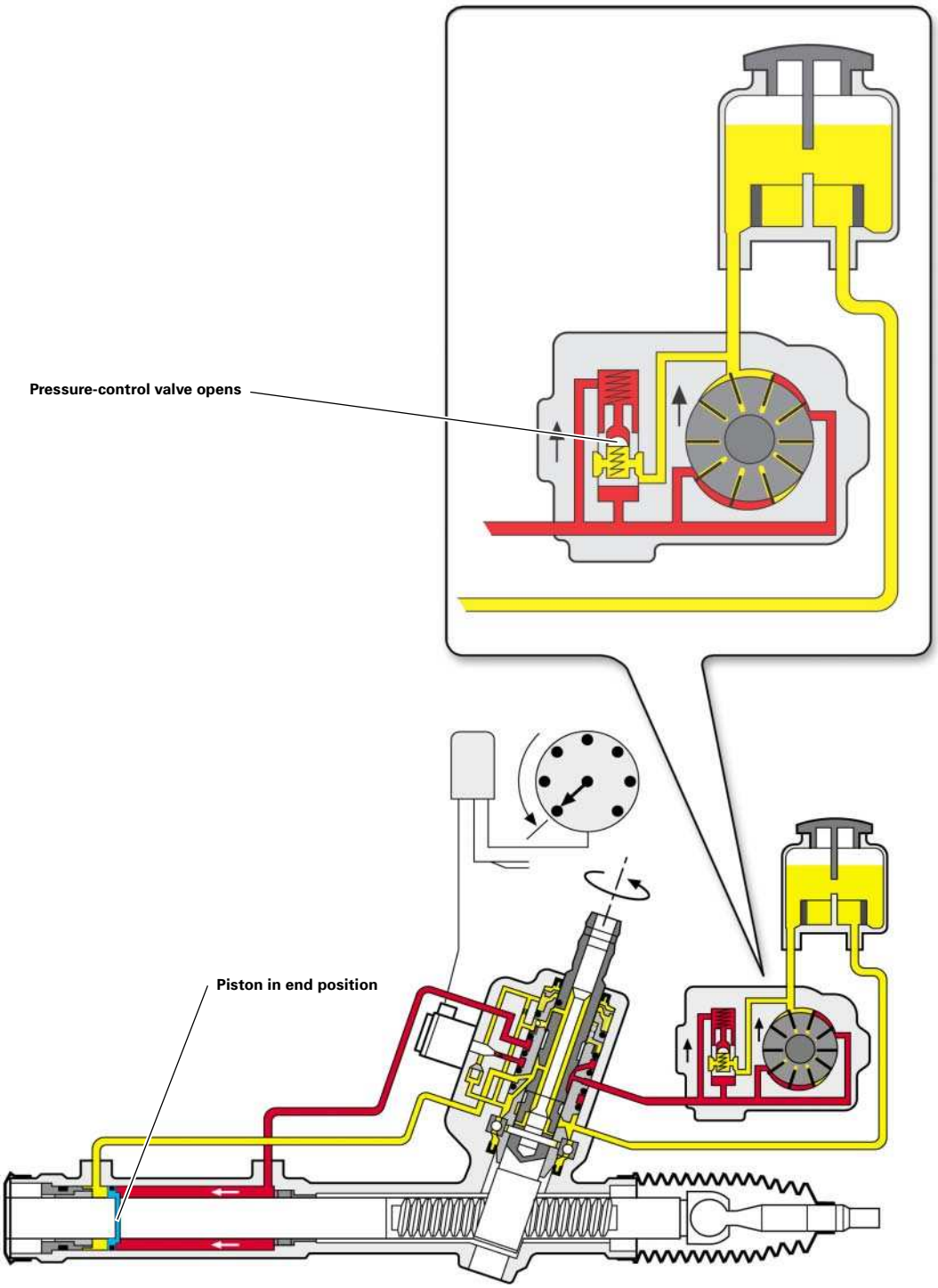

324_046

In this situation, the control unit supplies more power to the solenoid valve. The opening cross-section of the valve becomes larger than the actual driven speed requires. As a result, an additional oil stream flows to the tank via the open valve. On its way, the oil gives off temperature to the environment.

This reduces the oil temperature. The control unit determines the time and amperage for activating the solenoid valve based on the steering-angle CAN message from the steering-angle sensor G85. Control is only active at speeds of up to 10 km/h.

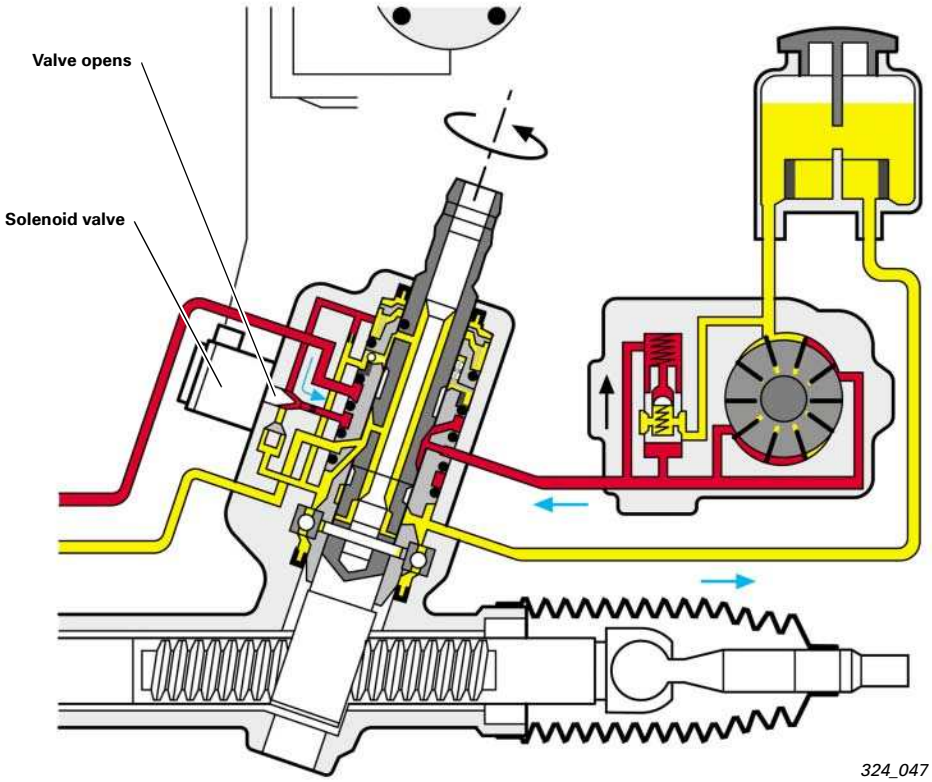

Additional oil stream through the open solenoid valve for Servotronic

System components

Oil reservoir

The oil reservoir is equipped with a fine filter. Dirt and wear particles are thus effectively kept out of the hydraulic system. This keeps wear-and-tear to a minimum, especially on the pump, steering valve and piston seals.

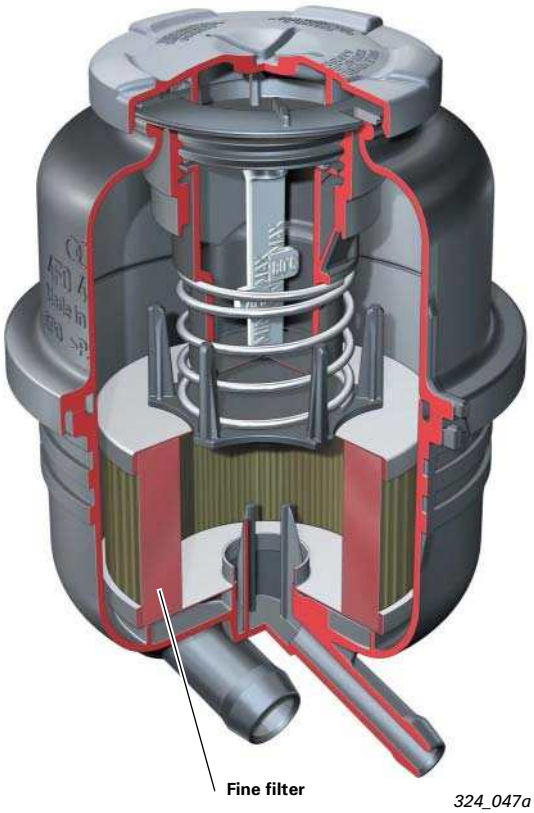

324_047a

System components

Mechanically adjustable steering column

The steering column can be adjusted smoothly in both length and height.
The adjustment range is 50 mm length-wise and 40 mm height-wise.
The steering column is locked by multi-plate packets. When the steering column is locked, the plates are tensioned together by an eccentric screw. (For details of how this works, see SSP 285.)
The actuating lever for adjustment is located outside of the critical area for knee impact in the event of a front crash. The opening kinematics were adapted in order to implement this position. The lock is now opened by pulling the lever towards the driver.

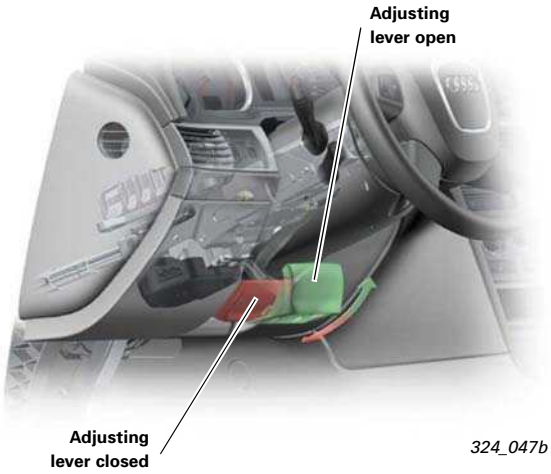

324_047b

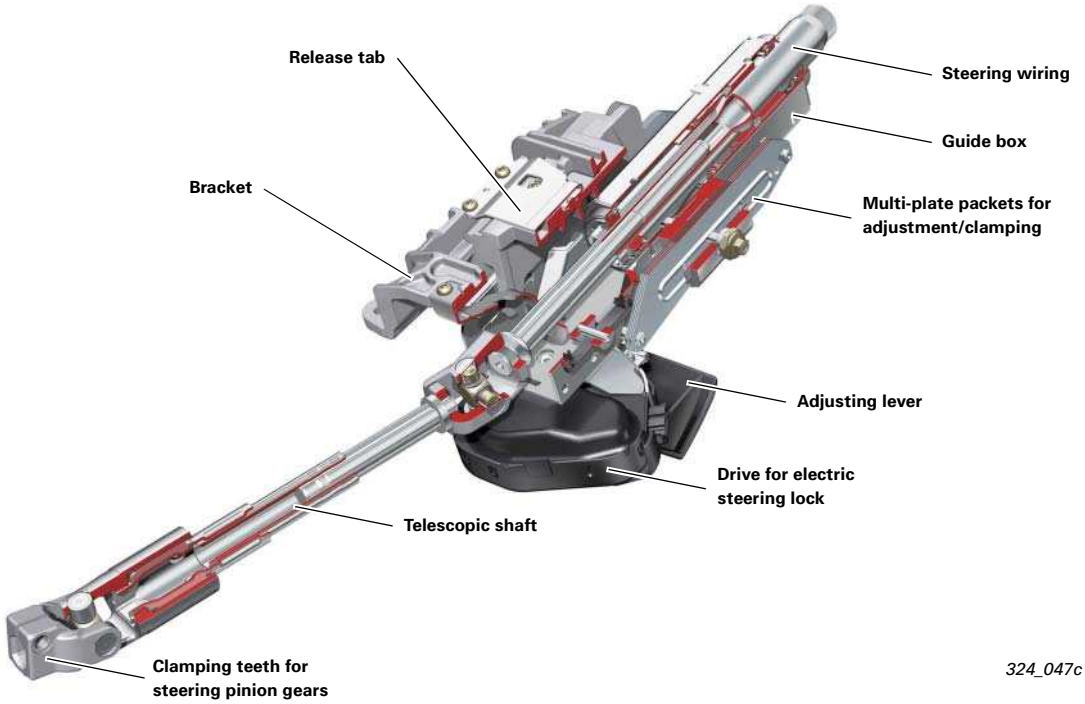

324_047c

Electrically adjustable steering column

The basic design is the same as the mechanically adjustable steering column.
The same adjusting elements and drive motors that are used in the A8'03 are used here. (For details of design and function, see SSP 285.)

324_047d

Electric steering lock

Like the A8'03, the A6'05 also has an an electric steering lock.
It is required for the keyless driver access system, which is available as an optional extra.
The mechanical design and function are the same as the locking unit used in the A8'03 (see SSP 285).
The electric drive for the lock has been modified.

The control unit for the lock drive now also performs all the functions for vehicle access and start authorisation. (For details, see SSP 326.) The entire structural unit, comprising drive, locking unit and control unit, cannot be separated from the steering column.

Steering wheel

A newly developed three/four-spoke steering-wheel generation is used.
The technical design of the steering wheel, airbag and operating concept of the multi-function steering wheel corresponds to that of the A8'03.

324_047e

324_047f

Wheel programme

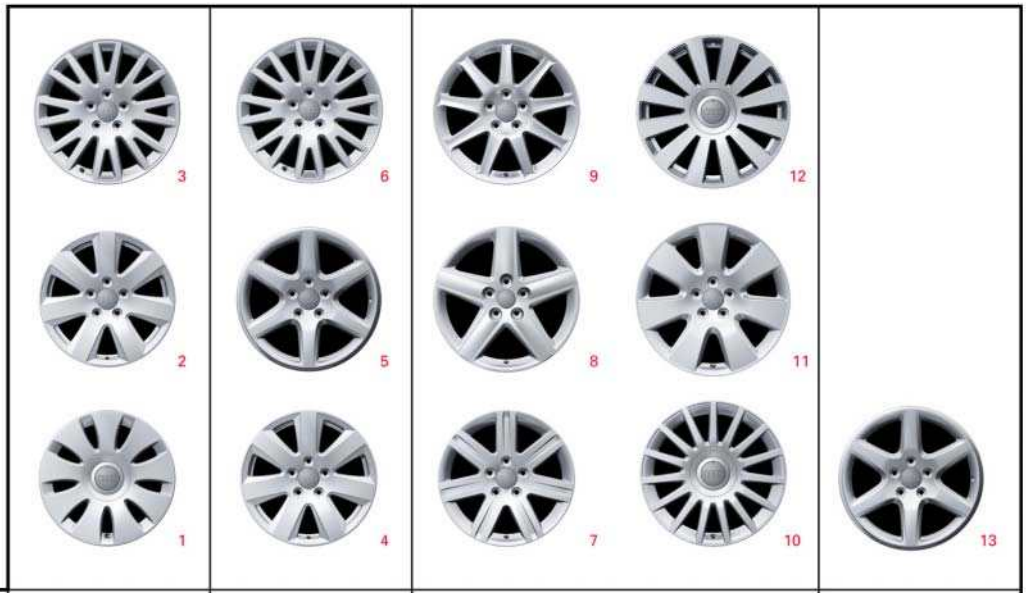

Engine	Basic wheels	Winter wheels	Optional wheels		Run flat system PAX
4 and 6-cylinder	7J x 16 ET 35 (1) Cast alum. wheel 205/60 R16	7J x 16 ET 42 (4) Forged alum. wheel 205/60 R16 or 225/55 R16	7.5J x 16 ET 45 (7) Cast alum. wheel 225/55 R16	8J x 17 ET 48 (10) Cast alum. wheel 245/45 R17	225 x 460 ET 46 (13) Cast alum. wheel (PAX) 235/660 - R460
	7.5J x 16 ET 45 (2) Forged alum. wheel 225/55 R16	225 x 460 ET 46 (5) Cast alum. wh. (PAX) 225/650 - 460	7.5J x 17 ET 45 (8) Cast alum. wheel 225/50 R17	8J x 18 ET 48 (11) Cast alum. wheel 245/40 R18	
8-cylinder	7.5J x 17 ET 45 (3) Cast alum. wheel 225/50 R17	7J x 17 ET 42 (6) Cast alum. wheel 225/50 R17 98 M+S	7.5J x 17 ET 45 (9) Cast alum. wheel 225/50 R17	8J x 18 ET 48 (12) Forged alum. wheel 245/40 R18	

324_048

As in the A8'03, the PAX emergency-run system in conjunction with summer and winter tyres is now also available as an optional extra for the A6'05. The A6'05 is thus the first vehicle in its class with this innovative system.

The PAX system always comes hand-in-hand with the tyre pressure monitoring system in the A6'05. (For details of design and function, see SSP 285.)

Tyre pressure monitoring

General information

A new generation of the tyre pressure monitoring system is available for the Audi A6'05.
It is modular in design and is significantly different from the systems used up to now at Audi from the point of view of functionality and design.

A modified system, adapted according to the national legislation in force in the USA, is used exclusively for the US market.

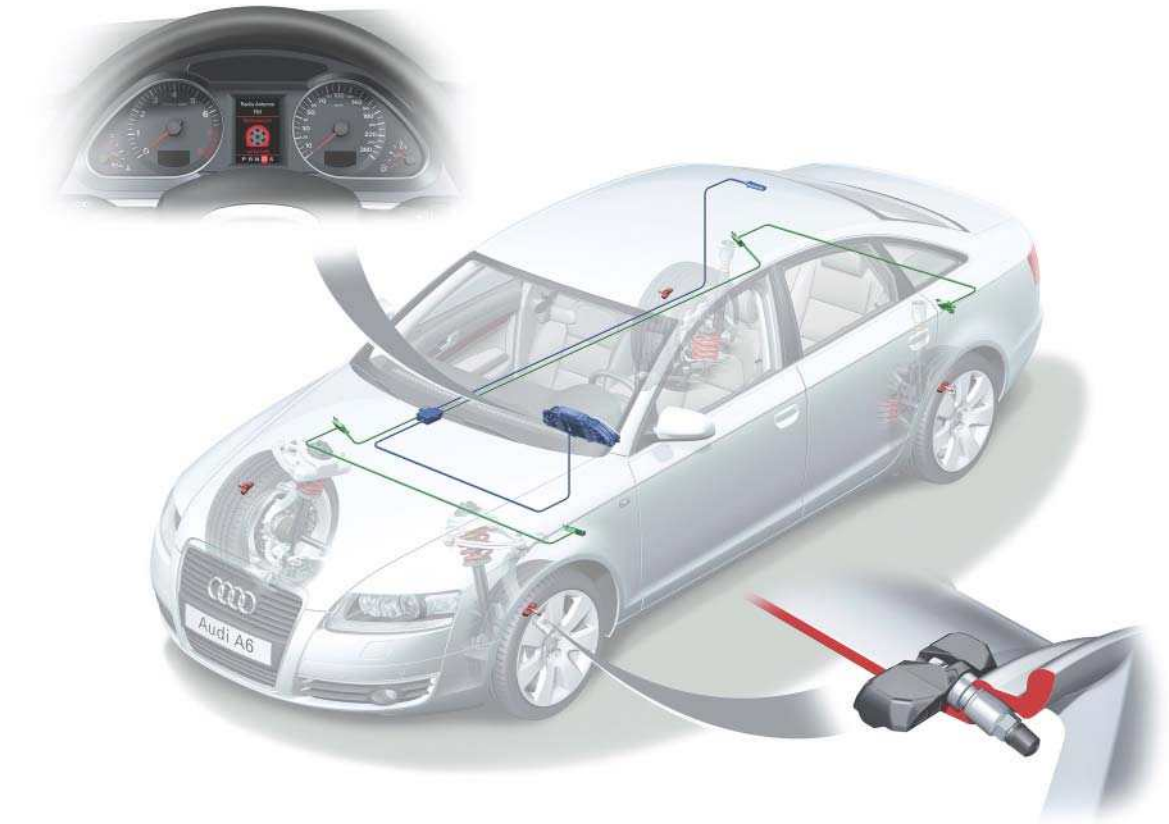

324_058

Tyre pressure monitoring system (designed for all markets except USA)

Design

The control unit for tyre pressure monitoring J502 is connected to CAN Convenience. A transmitter for tyre pressure monitoring G431....G434 is installed in each wheel housing.
The antenna for rear tyre pressure monitoring R96 is located between the interior light and the sliding roof module in the roof area.

The transmitters and the antenna are linked to the control unit via LIN bus. A tyre-pressure sensor G222....G226 is installed in each wheel.
As before, there are two country variants for the sensors and the antenna (433 and 315 MHz).

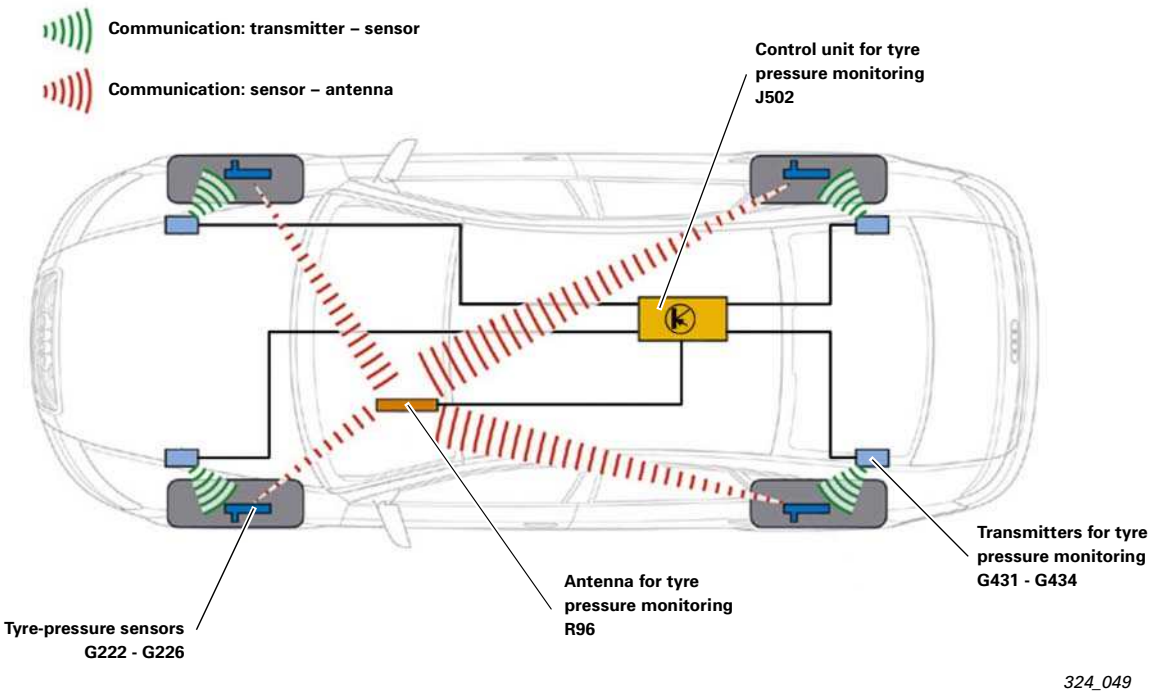

How it works

The system's initialisation phase begins on opening the driver's door or when terminal 15 is on. The control unit then sends a special LIN address at offset times to each transmitter for tyre pressure monitoring G431...G434 and to the antenna R96. Following initialisation, each transmitter in turn receives a message from the control unit. The currently addressed transmitter then sends a once-off radio signal at a frequency of 125 kHz. Given the limited range of this radio signal, it is only received by the related tyre-pressure sensor. The signal prompts the sensor to send the current measured values for pressure and temperature. This signal is recorded by the antenna and transmitted to the control unit via LIN bus.

Following this, no further communication takes place as long as the vehicle is stationary. The tyre-pressure sensors are fitted with centrifugal sensors for the detection of rotary movement for this purpose.
The possibility of immediately displaying a warning as soon as terminal 15 comes on and the increased service life of the transmitters are distinct advantages compared to earlier systems. At the start of a journey, the sensors are allocated to wheel positions in approx. 2 minutes. Once a driving speed of around 20 km/h is reached, each sensor automatically sends its current measured values without having to wait for a signal from the related transmitter. The radio signal that is sent also contains the ID of the relevant sensor. This allows the control unit to differentiate between the individual sensors and their positions in the vehicle.
In normal operation, each transmitter sends a signal periodically approx. every 30 seconds.
If the sensor measures a fast change in pressure (>0.2 bar/min), it automatically switches to fast-send mode and sends the current measured values once per second.

Operation and displays

The system is operated in the MMI (see operating instructions).
The relevant tyre pressures must always be released as nominal values when the air-pressure levels in the tyres/wheels fitted on the vehicle have been changed.
If wheel positions on the vehicle are interchanged, or if wheels are changed, the position-based nominal pressure values must be re-learned.
The MMI includes a new menu item for this purpose. As is already the case in the A8'03, the pressure and temperature values are only displayed in the MMI.
The driver can no longer deactivate the tyre pressure monitoring system.

324_050

As before, we differentiate between a "hard warning" (red display) for a large loss of pressure (0.5 bar or more below the nominal pressure when the cold-fill pressure is adjusted in accordance with the specification in the filler flap as nominal pressure levels) and a "soft warning" (yellow display) for a lower loss of pressure (0.3 bar or more below the nominal pressure). If the difference from the nominal value is at least 0.3 bar, the control unit "observes" the difference for a while without immediately issuing a warning.
If the difference of at least 0.3 bar remains unchanged, a "soft warning" is issued after 17 minutes.

324_051

If the control unit detects a difference from the nominal pressure of at least 0.5 bar for two directly consecutive measured values, a "hard warning" is issued.
In addition to the optical display, an audible warning is also issued in the form of gongs.

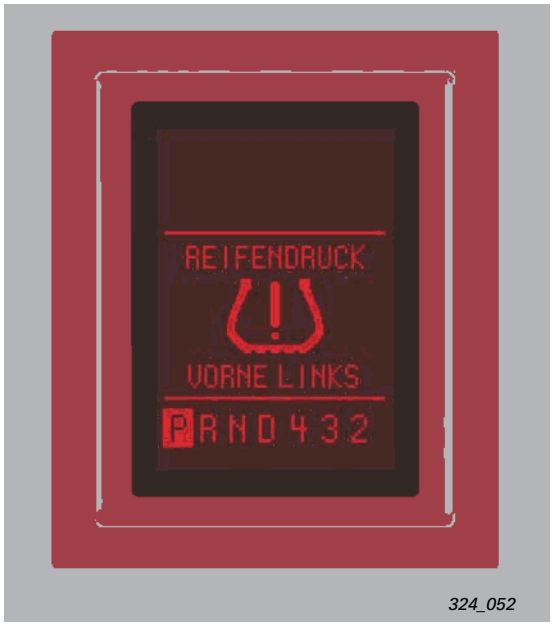

324_052

Tyre pressure monitoring system for USA

Design

The transmitters for tyre pressure monitoring G431 - G434 are not used. The tyre-pressure sensors G222....G225 and the antenna R96 are the same parts that are used in the system for all other markets. The control unit for tyre pressure monitoring J502 has a different software part number due to the modified software.

How it works

This system essentially works in the same way as the known systems that are already in use: The tyre-pressure sensors G222....G225 send regular radio signals containing their individual IDs and the current tyre pressure levels and tyre temperatures. These signals are then received by the shared antenna R96 and transmitted to the control unit via the LIN bus.

No position detection is performed. The control unit merely assigns the sensors to the vehicle. A driving time of up to 20 minutes is required for this following ”wheel change” confirmation in the MMI. The vehicle speed must be more than 40 km/h. The current measured values are compared with the nominal values released by the driver. If defined limit values are exceeded, a warning is issued to the driver.

Operation and display

The current tyre pressure levels are released as nominal values in the MMI. Warnings are indicated by the legally required yellow indicator light for tyre pressure monitoring in the dashboard insert.

In the US, a warning is issued in the event of a loss in pressure of more than 75 % of the pressure placard (nominal pressure in the filler flap: = coded value) or if the loss in pressure is more than 0.4 bar at vehicle speeds of more than 160 km/h or if the loss in pressure is greater than 0.5 bar, depending on which condition applies.

324_054

Function diagram

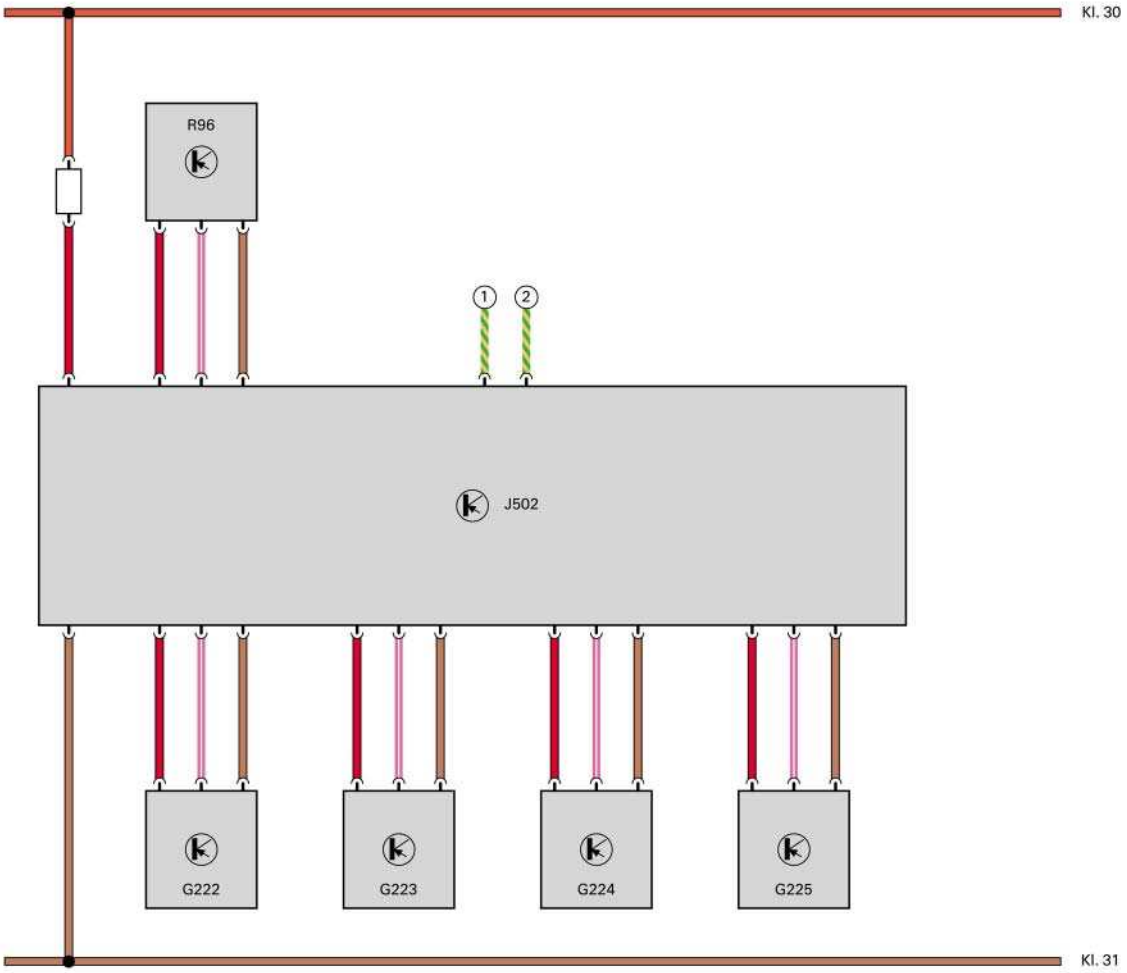

324_055

J502	**Control unit for tyre pressure monitoring**
R96	**Antenna for tyre pressure monitoring, rear**
G222 - G225	**Tyre-pressure sensors**

LIN bus

CAN Convenience

Positive

Ground

CAN Data Exchange

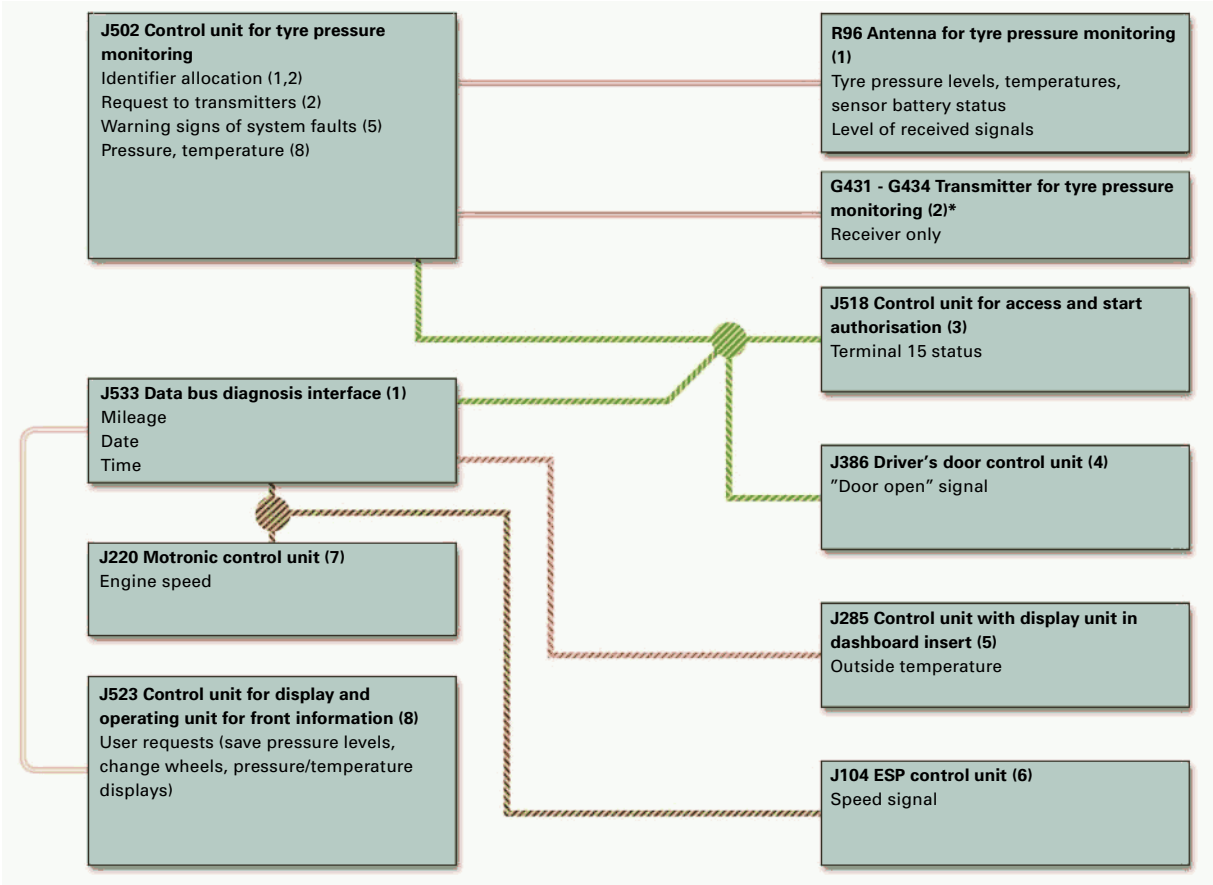

324_056

Information sent by control unit J502

Information received and evaluated by control unit J502

CAN Drive

CAN Convenience

CAN Instrument Cluster

MOST bus

LIN bus

*** not for USA version**

Notes

Notes

Vorsprung durch Technik **www.audi.co.uk**

324

All rights reserved.
Subject to
technical change.

Copyright
AUDI AG
I/VK-35
Service.training@audi.de
Fax +49-841/89-36367

AUDI AG
D-85045 Ingolstadt
Technical release 01/04

Printed in Germany
A04.5S00.07.20