GROUP 9

BASE OF BODY REPAIR

CONTENTS

GENERAL 9-2

SUPPLEMENTAL RESTRAINT SYSTEM (SRS) 9-2

WELDING. 9-3

- WELDING 9-3
- ELECTRIC RESISTANCE SPOT WELDING 9-3
- GAS SHIELD ARC WELDING 9-9
- OTHER TYPES OF WELDING. 9-13

BODY REPAIR. 9-15

- STANDARD BODY REPAIR PROCEDURES. 9-15
- THEFT PROTECTION 9-24
- ATTACHMENT OF SILENCERS 9-25
- POSITIONING DIMENSIONS FOR OPENINGS. 9-26
- STANDARD PROCEDURES FOR SHEET METAL WORK 9-27
- USING A FRAME STRAIGHTENER 9-28
- FRAME REPAIR PROCEDURES 9-29
- NOTES REGARDING REPAIR WORK. . . . 9-32
- HEAT-WITHSTAND TEMPERATURES OF RESIN-PLASTIC PARTS 9-35
- HOW TO DISTINGUISH TYPES OF PLASTICS 9-37

CORROSION PROTECTION 9-38

- ANTICORROSION TREATMENT AT THE FACTORY 9-38
- ANTICORROSION TREATMENT AT THE TIME OF BODY REPAIR WORK 9-41

REPAIR OF SYNTHETIC-RESIN PARTS 9-45

- SYNTHETIC-RESIN PARTS REPAIR PROCEDURES 9-45

GENERAL

M4090000100018

Group 9 is applicable for all models.

SUPPLEMENTAL RESTRAINT SYSTEM (SRS)

M4090000500016

⚠ ***WARNING***

- ***Improper service or maintenance of any component of the SRS and any SRS-related component, can lead to personal injury or death to service personnel (from inadvertent firing of the air bag) or to the driver and passenger (from rendering the SRS inoperative).***
- ***The SRS components and seat belt with pre-tensioner should not be subjected to heat, so remove the SRS-ECU, air bag modules, clock spring, front seats, impact sensor and seat belt with pre-tensioner before drying or baking the vehicle after painting.***
  - ***SRS-ECU, air bag modules, clock spring, front seats, impact sensor: 93°C (199°F) or more***
  - ***Seat belt with pre-tensioner 90°C (194°F) or more***
- ***Service or maintenance of any SRS component and SRS-related component must be performed only at an authorized MITSUBISHI dealer.***
- ***MITSUBISHI dealer personnel must thoroughly review workshop manual, and especially its GROUP 52B - Supplemental Restraint System (SRS), before beginning any service or maintenance of any component of the SRS and any SRS-related component.***

WELDING

WELDING

M4090001000058

Welding is the partial joining of two or more metals by deposition; the welding methods used for body maintenance and repair can be classified into the following methods.

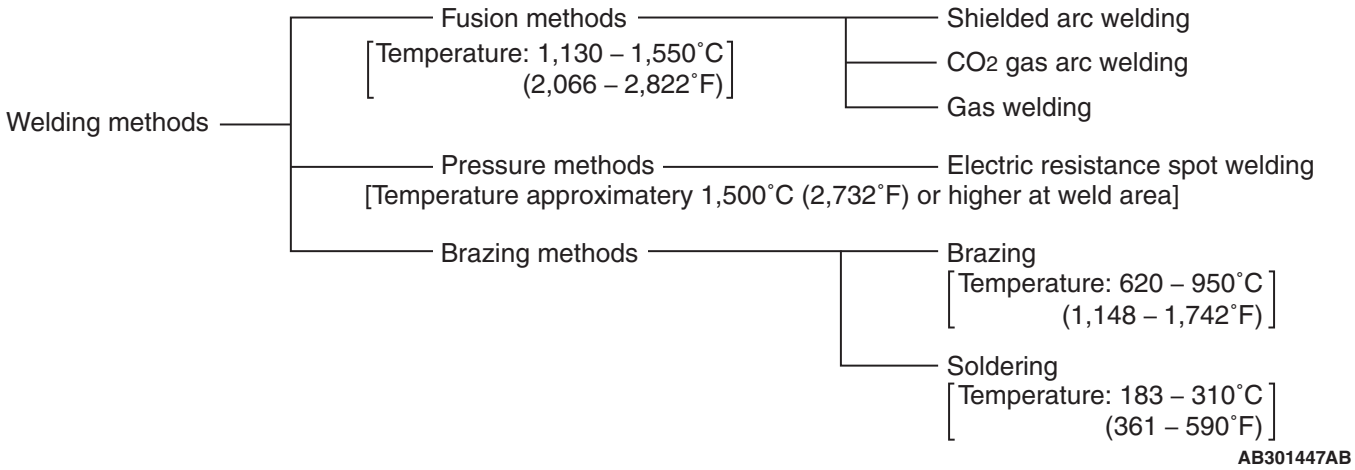

FUSION WELDING

Fusion welding is a method of welding in which the weld connection is made by forming or supplying the weld metal at the part where the weld is to be made.

PRESSURE WELDING

Pressure welding is a method of welding in which the weld connection is made by applying external pressure while the part where the weld is to be made is in a molten or semi-molten condition.

ELECTRIC RESISTANCE SPOT WELDING

Electric resistance spot welding is a method for fusing metal parts together. Two or three metal sheets are positioned between two copper-alloy electrode tips, and pressure and a large current are then applied, thus causing the contacting surfaces to heat up and fuse together because of the electric contact resistance.

BRAZING

Brazing is a method of welding in which the weld connection is made by supplying a filler metal (which is molten at a temperature lower than the melting temperature of the base metal) at the place where the joining is to be made without melting the base metal itself.

M4090002000040

ADVANTAGES OF ELECTRIC RESISTANCE SPOT WELDING

- Because the time required for welding at each point is brief, the work can be done quickly and at reduced cost.
- Because both metals are fused and pressure applied to make the weld, the strength and reliability are both high.
- Because the time required to make the welds is short, there is little occurrence of distortion of the panel due to heat.

PROCEDURE

There are three basic stages in electric resistance spot welding.

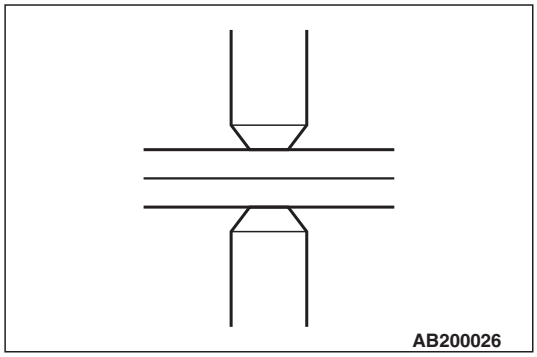

1. Initial pressure application stage
   This stage precedes the current application. Applying pressure to the steel panels through the electrode tips ensures a uniform contact resistance and a smoother current flow.

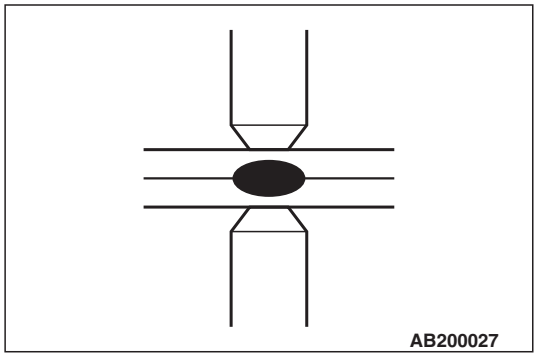

2. Current application stage
   While an ample amount of pressure is being applied, the current is sent through the electrode tips. The contact resistance causes the contact surfaces of the steel panels to heat up and fuse together.

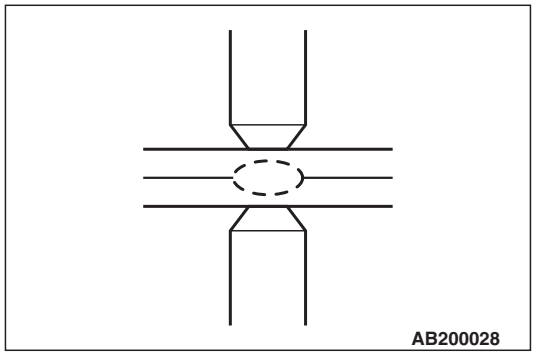

3. Holding stage
   When the current application is finished and a nugget (a solidified piece of molten metal) forms at the weld, the pressure application is continued in order to strengthen the weld. This is the most important stage of electric resistance spot welding in ensuring the strength of the weld.

NUGGET FORMATION

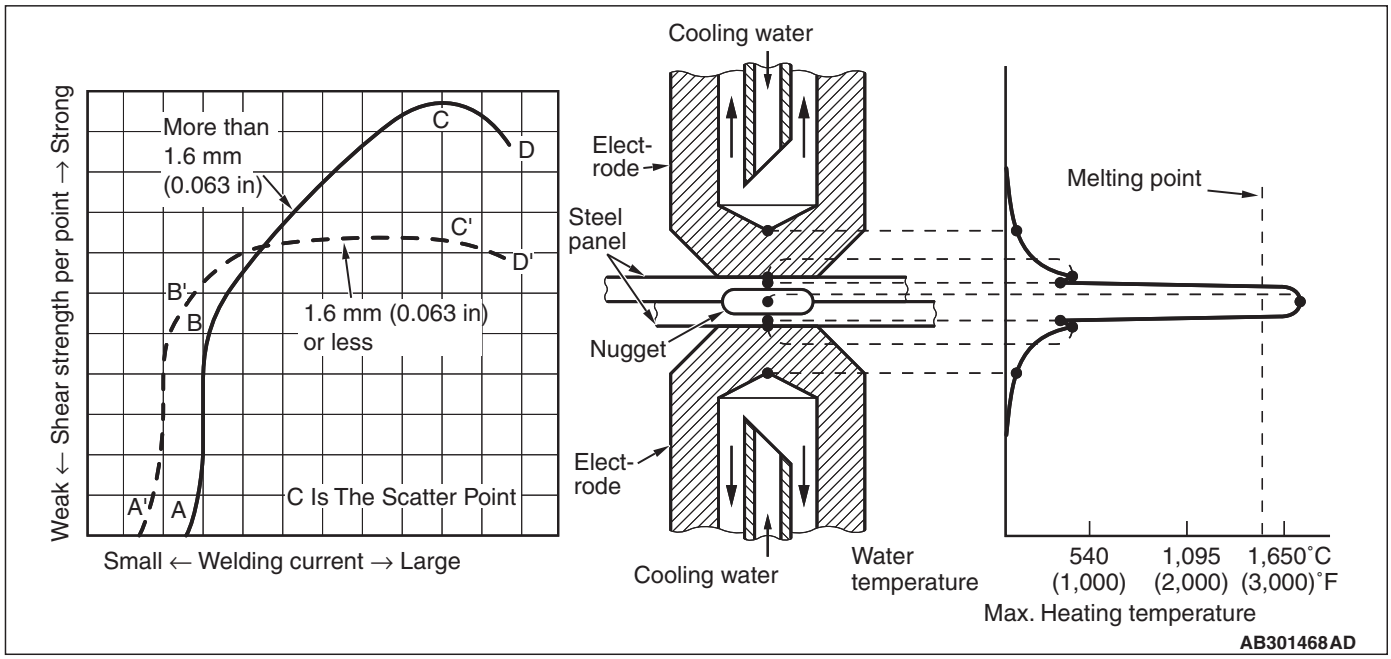

Generally speaking, the size of the nugget will increase as the welding current increases, and as the size of the nugget increases, the strength of the weld will also increase.

Nugget formation will not begin until the current level reaches a certain point; however, once this welding current level is passed, the strength will increase rapidly (between points A and B).

As the current level increases further, the weld strength for thick panels [more than 1.6 mm (0.063 inch)] continues to increase proportionately (between points B and C); however, for thin panels [1.6 mm (0.063 inch) or less], the weld strength reaches a peak very quickly and will increase only slightly, even if the current level increases (between points B' and C').

Then, for both thick panels and thin panels, the molten metal will scatter if the current level increases past a certain point.

NOTES REGARDING WELDING

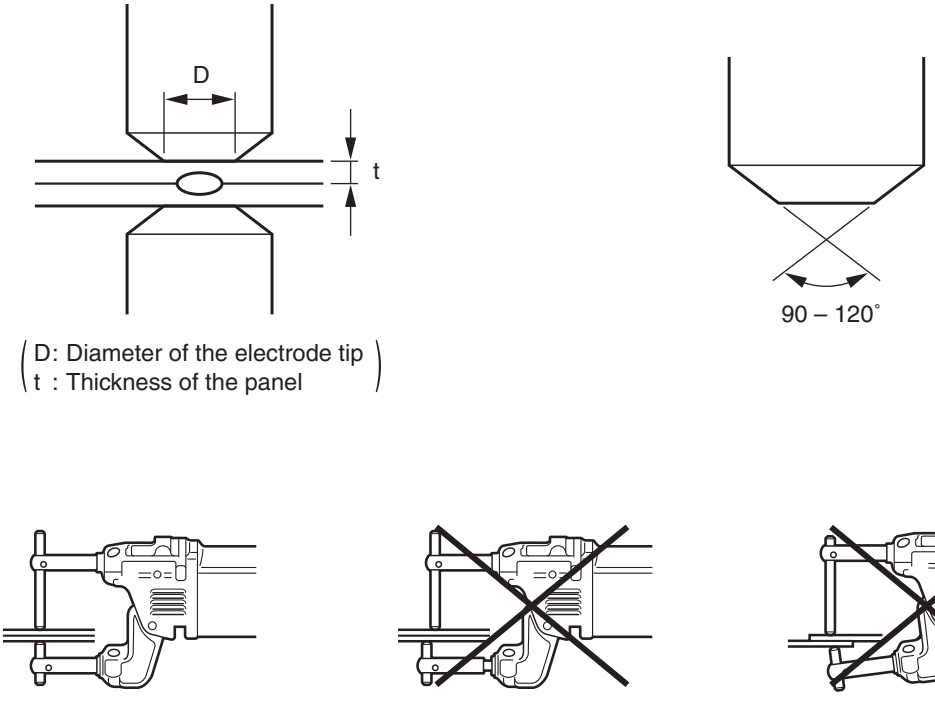

(D: Diameter of the electrode tip
t : Thickness of the panel)

1. Selection of the electrode tips
   - Select the electrode tips according to the thickness of the panels to be welded.
     D = 2t + 3 mm (D = 2t + 0.1 inch)
   - The angle of the tip should be between 90 degree angle and 120 degree angle.
   - To always keep the end of tip in the correct shape, use a tip cutter, file or similar tool to shape it if it becomes worn.
2. Alignment of the electrode tips
   - Adjust the arms so that the upper and lower electrode tips are in a straight line.
3. Alignment and length of the arms
   - Adjust the electrode tips so that the upper and lower arms are parallel.
   - Select an appropriate arm length. Note, however, that the arm length should not be more than 350 mm (13.8 inches) in order to ensure nugget strength.
4. The weld points
   - The overall strength will increase as the pitch decreases; however, if the pitch decreases too much, the current will be short-circuit diverted to the previous weld point and the strength of the individual nuggets will be insufficient.
   - Make the spot welds at the center of the flanges to provide sufficient adhesion. When welding at an edge, make the spot welds at least 5 mm (0.2 inch) from the edge of the flange.
   - The number of spot weld points should be the same as, or slightly more than the number of original repair welds.
   - When spot welding three or more panels together, if painted surfaces cause a loss of conductivity, make the welds at the same places as the factory welds. If this is done, extra welds will not be necessary, but if extra welds are necessary, switch to plug welding.

WELDING REQUIREMENTS

Standard steel plate (SPCC, etc.)

⚠ CAUTION

If the total thickness of the plates at the weld places is 3 mm (0.12 inch) or more, use plug welding, because spot welding will not provide sufficient welded strength.

Example

- Center pillar (outer): plate thickness 1.4 mm (0.055 inch), material SPCC
- Center pillar (inner): plate thickness 1.5 mm (0.059 inch), material SPCC

The number of weld points are as below when the outer and inner center pillars are repaired by welding.

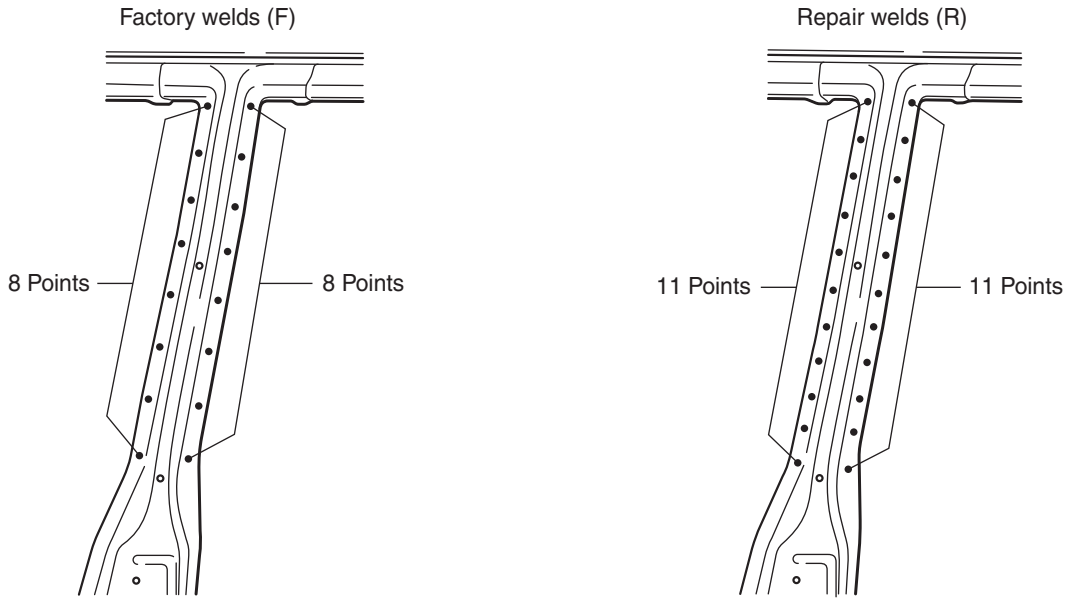

As shown by the Welding Requirements table, the number of repair welds is as follows.
8 (points) × 130 (%) = 10.4 (points)
The number of weld points should, therefore, be ten or eleven.
If, however, a pitch of 26 mm (1.02 inch) or more cannot be maintained, the plug welding method (eight weld points) should be used.

AB200031AE

	Panel thickness* [mm (in)]	Number of repair weld (percentage of factory weld)
Safety equipment area	1.0 (0.04) or less	100% Same number as factory welds
	1.2 (0.047)	150% Maintain pitch of at least 22 mm (0.87 inch); if not possible, plug weld.
	1.4 (0.055) or more	100% Same number as factory welds; plug welding
Other area	1.2 (0.047) or less	100% Same number as factory welds
	1.4 (0.055)	130% Maintain pitch of at least 26 mm (1.02 inch); if not possible, plug weld.
	1.6 (0.063) or more	100% Same number as factory welds; plug welding

*NOTE: *: For welding steel plates of different thickness, conform to the welding conditions for the thinner plate.*

GALVANIZED STEEL PLATE (SECC)

⚠ CAUTION

If the total thickness of the plates at the weld places is 3 mm (0.12 inch) or more, use plug welding, because spot welding will not provide sufficient welded strength.

	Panel thickness* [mm (in)]	Number of repair weld (percentage of factory weld)
Safety equipment area	0.9 (0.035 or less	100% Same number as factory welds
	1.0 (0.04)	200% Maintain pitch of at least 18 mm (0.71 inch); if not possible, plug weld.
	1.2 (0.047) or more	100% Same number as factory welds; plug welding
Other area	0.9 (0.035) or less	100% Same number as factory welds
	1.0 (0.04)	140% Maintain pitch of at least 18 mm (0.71 inch); if not possible, plug weld.
	1.2 (0.047) or more	100% Same number as factory welds; plug welding

*NOTE: *: For welding steel plates of different thicknesses, conform to the welding conditions for the thinner plate.*

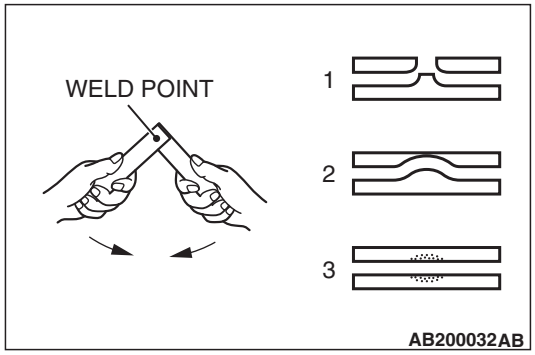

USING A TEST PIECE TO CHECK NUGGET FORMATION

Weld a test piece of the same type of steel plate as the panels to be welded. Try to twist the piece, and also check the nugget diameter.

Using the weld point as an axis, apply force in the direction indicated by the arrows in the illustration, and determine the strength of the weld.

1. Good (The welded part remains at one side).
2. and 3.
   The weld conditions are unsatisfactory; adjust the welding current, the current application time, and/or the applied pressure.

CHECKING NUGGET STRENGTH FOLLOWING SPOT WELDING

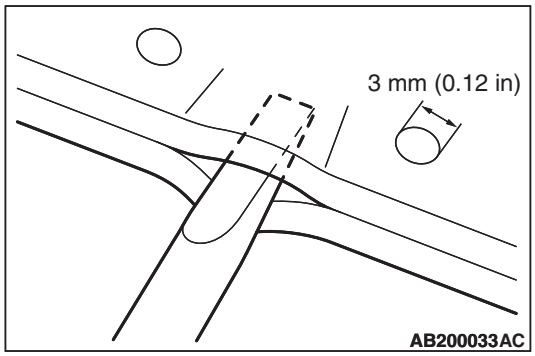

⚠ CAUTION

- **Stop wedging the tip or the chisel or flat-tipped screwdriver as soon as the size of the nuggets can be determined; do not wedge it in more than 30 mm (1.18 inches).**
- **After checking the nugget diameter, correct the place where the checking was done.**

Wedge the tip of a chisel or flat-tipped (-) screwdriver into the space between two weld points.

- The nuggets should not break apart.
- The nugget diameter should be 3 mm (0.12 inch) or more.

GAS SHIELD ARC WELDING

M4090003000043

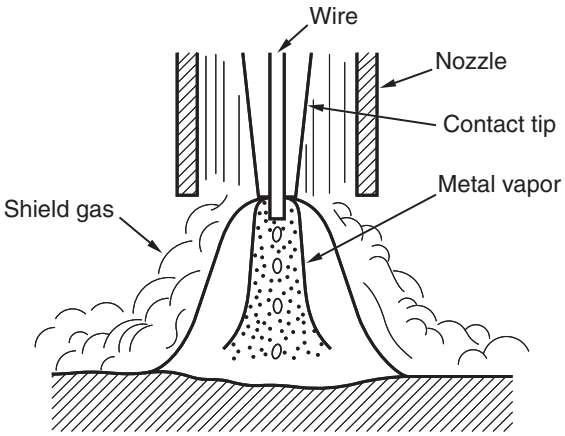

Gas shielded arc welding is one method of arc welding. In this method, while the area to be welded is shielded from the air by a layer of inert gas (such as argon) or carbon dioxide gas, the filler metal (wire) is fed from the torch nozzle at a constant rate and an electric arc is generated between the tip of the wire and the area being welded, thus generating heat to fuse the area. There are two types of gas shielded arc welding, classified according to the gas they use as the shield gas: carbon dioxide (CO_2) gas shielded arc welding, and MIG welding, which uses an inert gas (such as argon).
However, herein we will refer to all gas shielded arc welding as MIG welding.

MIG SPOT WELDING

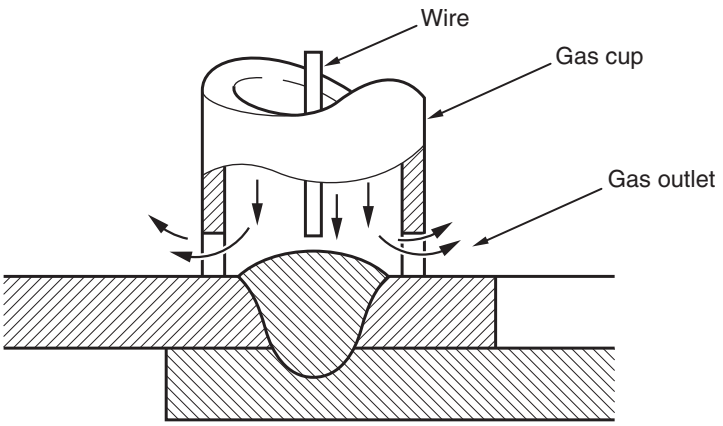

AB200036AE

This welding method is used in areas where regular spot welding cannot be done. The two panels are stacked together, the tip of the torch (one designed for use in MIG spot welding) is positioned on one side, an arc is generated for a short time, and a partial melting is done to obtain a spot weld.

Procedure

⚠ CAUTION

- **Make sure that the area to be welded is perfectly clean; remove oxidation film, scales, rust, dirt, etc.**
- **The two panels to be welded must be in perfect contact with each other.**
- **The number and pitch of the weld points should be approximately the same as for the factory welds.**

1. Position the tip of the nozzle at a right angle to the surface to be welded.
2. Being sure that the two prongs are not leaning to either side, set them in direct contact with the panel to the welded.
3. Welding will begin when the torch trigger is squeezed, and will stop automatically when the weld is complete.

FEATURES OF MIG SPOT WELDING

In comparison to resistance spot welding, MIG spot welding has the following advantages and disadvantages.

Item	Mig spot welding	Electric resistance spot welding
Working characteristics	• Light weight • Welding possible at various positions (no limit upon welding positions)	• Although the torch with separate transformer is lightweight, the torch combined with transformer type is heavy. • The arm must be exchanged to conform to the weld location.
Weld time/point	Slow (0.5 second or more)	Fast (0.5 second or less)
Treatment after welding	Necessary (grinding by grinder, etc.)	Unnecessary
Power	High voltage, low current (15 – 30 V, 50 – 200 A)	Low voltage, high current (2 – 4 V, 4 – 10 kA)
Flux material	• CO_2 (carbonic acid gas) • Weld wire	Unnecessary

Item	Mig spot welding	Electric resistance spot welding
Weld points/10 minutes (rate of use)	• 25 points or less • Arc instability and contact tip burn if rate of use is exceeded.	• 50 – 60 points • Welding rod deformation and transformer overheating if rate of use is exceeded.
Distortion caused by welding	Occurs easily	Rare
Welding strength	Depends on strength of welding wire itself.	• Same as base material • Little oxidation • Uniform welding quality
Weld traces	Button head (slightly convex)	Slight concave (Almost no indentation if swivel tip used.) 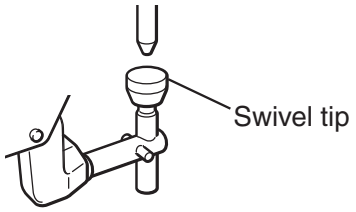 AB200037AD
Re-repairability (cutting away welded area)	Difficult (Much welding trace High hardness of weld points)	Easy (Can be separated by spot cutter.)

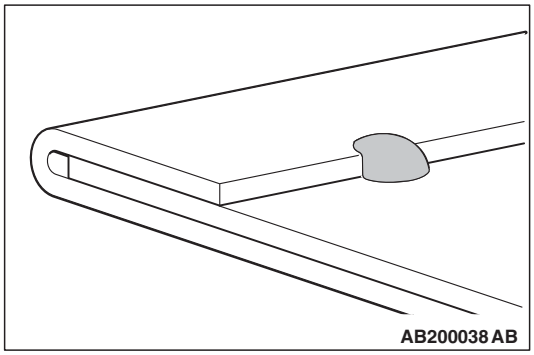

The MIG welding done around the doors, wheelhouse arches, etc., to prevent the flanges from coming undone after hemming work is also called MIG spot welding.

PLUG WELDING

⚠ CAUTION

In order to prevent the formation of blowholes, fill in each hole completely in one pass.Be sure that the two panels are in perfect contact.Be sure that the penetration goes all the way to the bottom panel.

Plug welding is done by making holes 5 – 6 mm (0.2–0.24 inch) in diameter in one of the panels to be welded together, positioning the torch at a right angle to the holes and then filling in the holes one at a time.

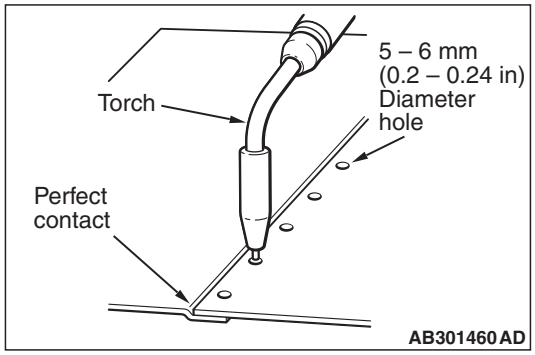

CONTINUOUS WELDING

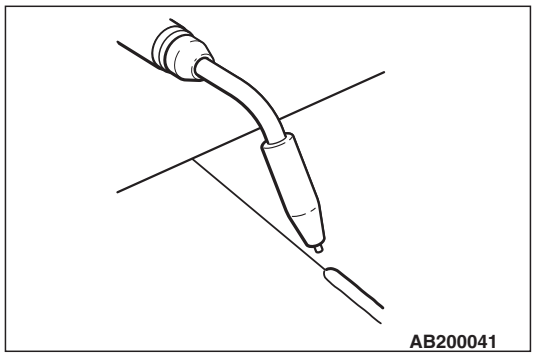

There are several types of continuous welding: fillet (lap joint) welding, butt welding, T joint welding, gap welding, etc.; these are called short-circuit arc welding, and provide a stable arc at a relatively low current.

Torch angle and welding technique

There are two welding techniques: forehand welding and backhand welding.

Forehand welding: Penetration is shallow and the bead is flat.

Backhand welding: Penetration is deep and the bead has a convex shape.

The angle of the torch should be 15 – 30 degree angle for either technique, and the tip should be maintained at a distance of 6 – 10 mm (0.24 – 0.39 inch) from the surface being welded.

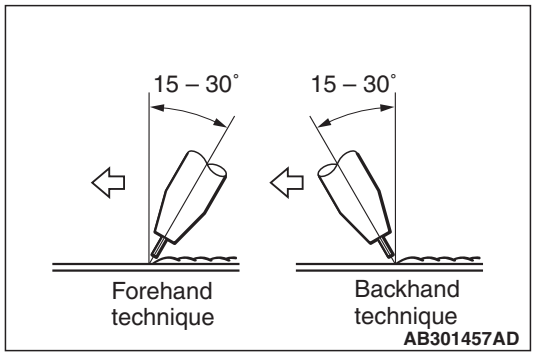

Preventing warping

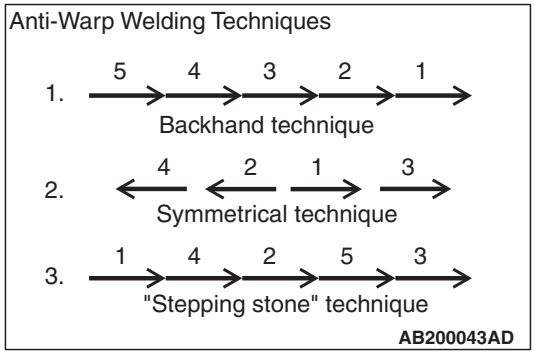

1. Backhand technique
   Because the direction for each weld pass and that for the fusion progression are opposite, the residual stress is evenly distributed.
2. Symmetrical technique
   Because the welds are made in symmetrical positions in relation to the center of the joint, the residual stress is also symmetrical.
3. "Stepping stone" technique
   Because the welds are made at random positions, the residual stress is the most evenly distributed; however, the possibility of flaws at the starting and stopping points is relatively high.

NOTES REGARDING MIG WELDING

Note the following notes regarding MIG welding.

1. The surface to be welded must be perfectly clean; be sure to remove any non-conductive paint.
2. If the end of the wire forms into a ball, it will adversely affect the formation of the arc; cut the end off with a pair of wire snips or a similar tool.
3. Select a welding current to match the thickness of the panels being welded.
4. For continuous welding, maintain a constant weld speed and keep both the height and the width of the bead constant.
   In addition, the tack welding pitch and the welding bead should be shorter as the thickness of the panels being welded decreases.

OTHER TYPES OF WELDING

M4090004000046

BRAZING

In brazing, a filler metal is melted into the joint of the panels to be welded at a comparatively low temperature to fuse them together without melting the panels themselves. In other words, through the aid of a flux and because of the capillarity phenomenon, the molten filler metal will flow into the joint between the two panels which are in contact with each other and spread along the metal surfaces. When this molten filler metal cools and solidifies, it will from a strong joint of the two panels. Note that, if two panels of different kinds of metal are brazed, the electrolysis generated between the two metals will cause moisture to from, which will result in corrosion.
Panels should not be connected together by brazing at any place except those places indicated. The following materials (filler metals) are usually used for brazing.

1. **Brass filler metal (brass solder)**
   Brass filler metal is an alloy consisting of 60% copper and 40% zinc with a melting temperature of approximately 850 – 1,050°C (1,562 – 1,922°F), and it is the most commonly used brazing filler metal used for body repair.
   The filler metal itself is coated with flux to facilitate penetration between the panels to be joined.
2. **Silver alloy filler metal (silver solder)**
   Silver alloy filler metal consists of silver, copper, zinc or cadmium, nickel, and tin, or other metals. This filler metal is most applicable for the brazing of steel and non-ferrous alloy other than aluminum, magnesium, and others with low melting points.

Notes with regard to brazing work

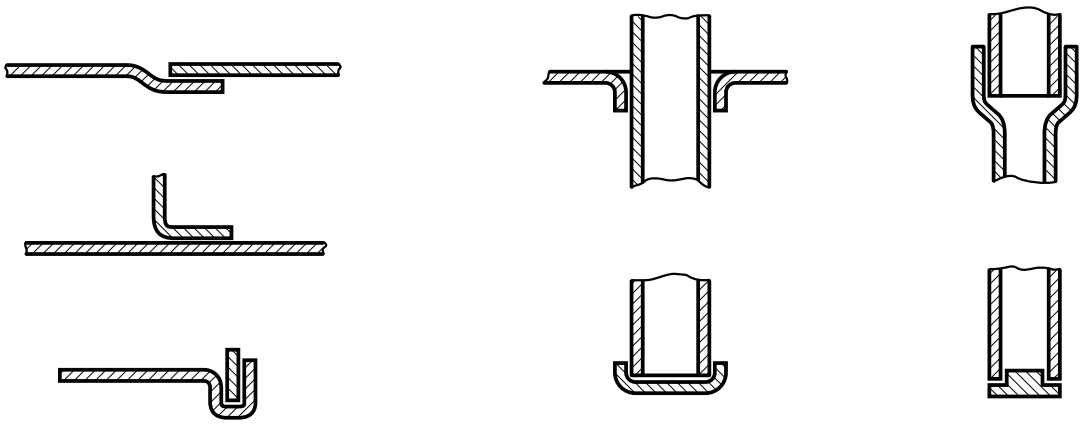

Examples of brazed joints

AB200044AF

- Use a wire brush, sandpaper, file etc., to remove any oxide film grease, dirt, etc., from the surfaces of the panels to be brazed.
- When doing brass brazing, if the panels and the filler metal are heated excessively, a weak iron-copper alloy will form, which could crack easily. Be careful not to apply excessive heat.
- The joint of the panels must overlap as indicated in the illustration.

GAS WELDING

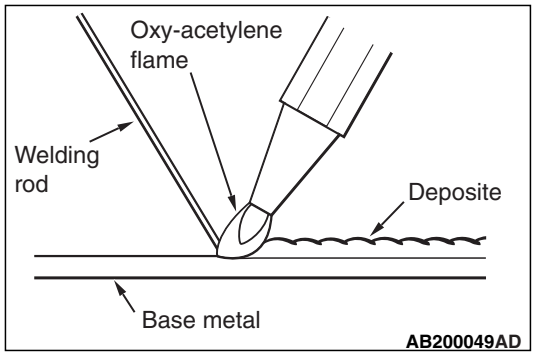

Gas welding is a method in which a high temperature flame is used to melt both a welding rod and the base metal (panels) to make a fused joint. Oxy-acetylene is the most common type of gas welding. However, because of the extremely high temperature of the fused joint, the strength of the steel plate deteriorates, and there is a higher possibility of warping. This method, therefore, is not very suitable for body repair.

The flame in gas welding can be classified according to the ratio of acetylene and oxygen.

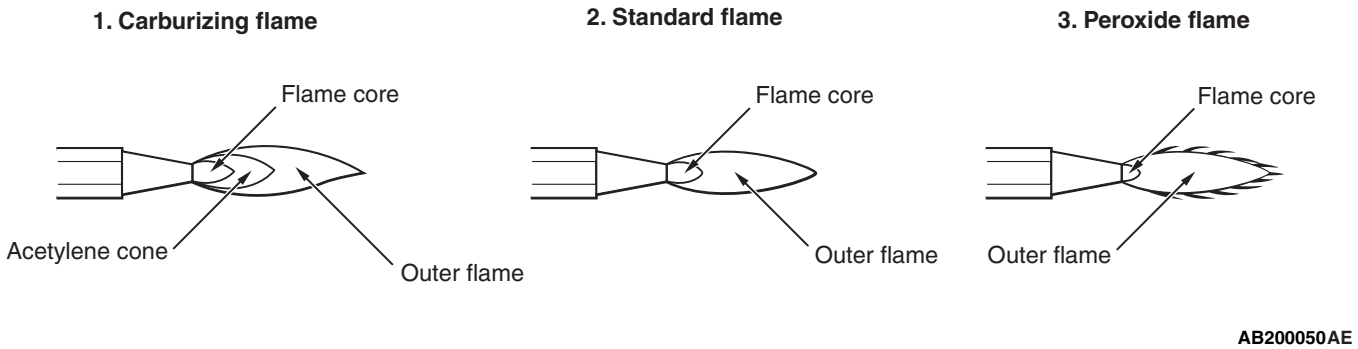

1. **Carburizing flame (acetylene-rich flame)**
   This flame has an excess of acetylene or a deficiency of oxygen. The incomplete combustion gives off a black smoke, and two flame cores can be seen inside the deformed yellow flame. The flame itself is large, but the temperature is relatively low, making this flame unsuitable for welding.
2. **Standard flame (neutral-mixture flame)**
   This flame has approximately equal amounts of acetylene and oxygen. The length is shorter than that of the carburizing flame; the flame core is rounded; and it is clear and bright.
   The carbon in the acetylene is burned completely, resulting in the maximum obtainable temperature. This is the flame most commonly used for welding.
3. **Peroxide flame (oxygen-rich flame)**
   This flame has an excess of oxygen or a deficiency of acetylene. The flame core is shorter and sharper, and the entire flame has a blackish-purplish color. The combustion is unstable, and the flame flickers continuously.

Notes with regard to gas welding

1. Handle the oxygen and acetylene tanks carefully.
2. Adjust the flame in accordance with the type of metal being welded.
3. Select a nozzle to match the work to be done. Avoid overheating and adhesion of foreign matter (dirt, etc.)
4. The following points are particularly important when welding mild steel plate.
   - Melt a sufficient amount of welding rod, but be careful not to melt the base metal. Use the same amount of welding rod on both sides.
   - Use the correct amount of welding rod in accordance with the melting point of the base metal.
   - Avoid welding over places which have been welded before.
   - In order to avoid warping, do only the amount of tack welding that is absolutely required.

BODY REPAIR

STANDARD BODY REPAIR PROCEDURES

M4090006000075

The following is an explanation of the standard repair procedures for the monocoque body and the frame-type body. Furthermore, please refer to the replacement of welded panels for the applicable model for information concerning the procedures for replacement of panels (as classified by position) for the various models.

NOTE: That reference should be made to page P.9-28 concerning repair procedures for the frame of frame-type vehicles.

STANDARD PROCEDURES FOR REPLACEMENT OF WELDED PANELS

In order to maintain the proper levels of strength, rigidity, and precision when making welded panel replacements, it is essential to first gain a thorough understanding of the body structure, and then to perform all repair operations carefully and correctly. In addition, when performing the operations, be sure to use the proper protective equipment for each operation.

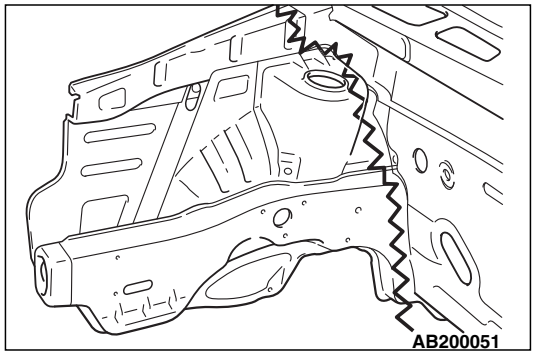

⚠ CAUTION

- **Select an appropriate location for the cutting operation, and perform the work carefully, so as not to cut into the reinforcements located inside the pillars, panels which are not be replaced, or any other such parts.**
- **There are harnesses, hoses, and other such parts routed inside the front pillar, the rear pillar, the fender shield, the side sill, etc.; perform the repair work only after any such material has been removed.**
- **For overlap cutting, allow an overlap of approximately 30 – 50 mm (1.18 – 1.97 inches) when performing the cutting operation.**

1. **Rough cutting of panels**
   First make a rough cutting of a portion of the panel to be replaced, and then remove that portion, thus making it easier to break the spot welds.

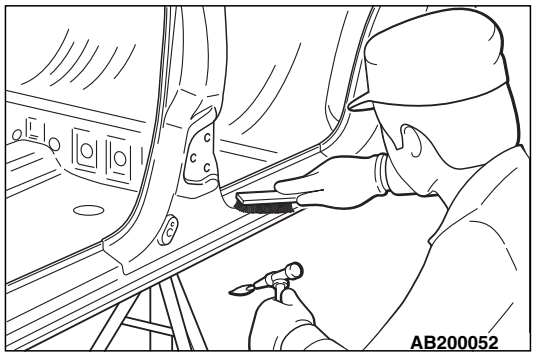

2. **Removal of the paint coat from spot-welded points**
   In order to clearly identify the spot-welded points, remove the paint coat from areas where it is difficult to determine the spot welds.

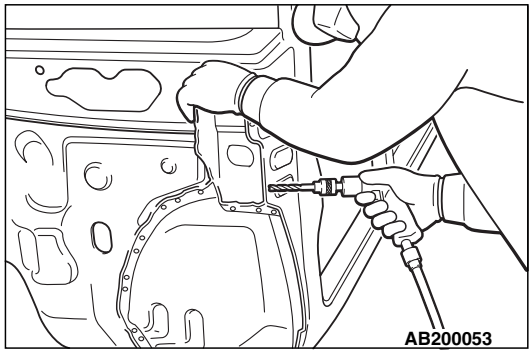

3. **Cutting and separation of spot-welded points**
   In order to perform cutting and separation of spot-welded points, use a spot weld cutter which is larger than the size of the nugget to make a hole only in the panels to be replaced.
   When cutting and separating spot-welded points in places where the surrounding panel or other parts interfere with the spot weld cutter, or if the operation is hampered by a lack of space, bend back the flanges in order to make the work easier.
   If a spot-weld cutter cannot be used at all, cut and separate the spot welds by using a chisel or similar tool.

NOTE: If a replacement panel is to be mounted by doing plug welding from the side of the panel remaining on the body, either a hole can be made in the panel on the body, or a hole can be made right through both the panel which is to remain on the body and the panel to be replaced.

⚠ CAUTION

When performing this operation, warping of the surrounding panels may occur if an excessive amount of heat is applied; therefore, be careful to avoid doing this.

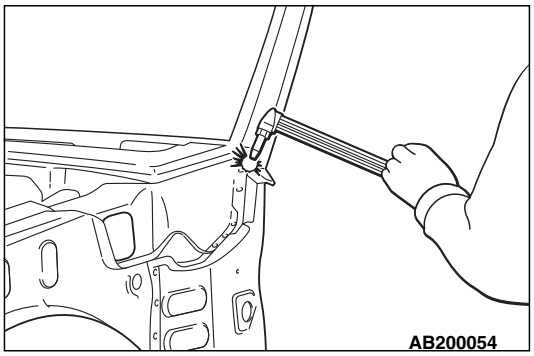

4. **Breaking of brazing and arc welds**
   Heat only the brazed or arc welded portion (such as the upper portion of pillars, etc.), and then separate by using a screwdriver while melting occurs.

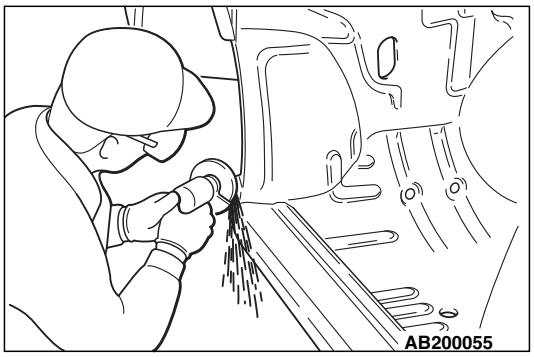

5. **Finishing work of spot welding**
   Grind and smooth any weld traces which might be left on the body surface by using an air grinder or similar tool, being careful not to damage any of the panels which is not to be replaced. When performing this operation, be sure to wear safety goggles (dust proof glasses).

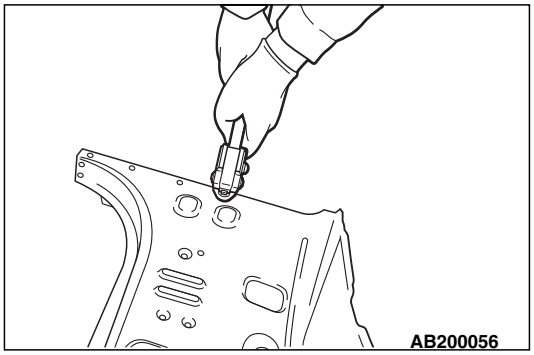

6. **Making of holes in new parts for MIG plug welding**
   Make holes approximately 5 – 6 mm (0.2 – 0.24 inch) in diameter at points where plug welding is to be performed because spot welding is not possible.

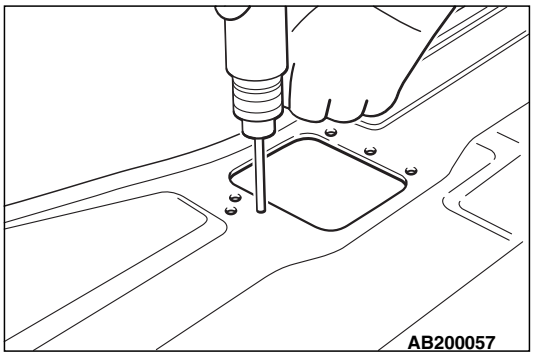

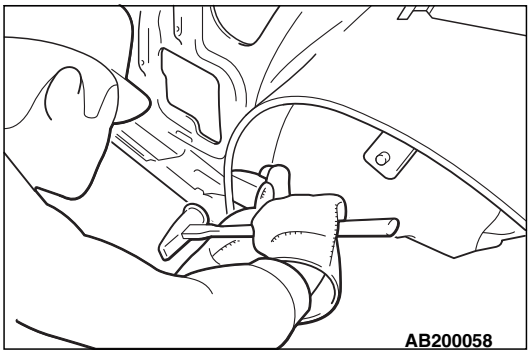

7. **Flange correction for spot weld traces**
   Correct any flanges that become bent or deformed when spot welds are broken or during other work.

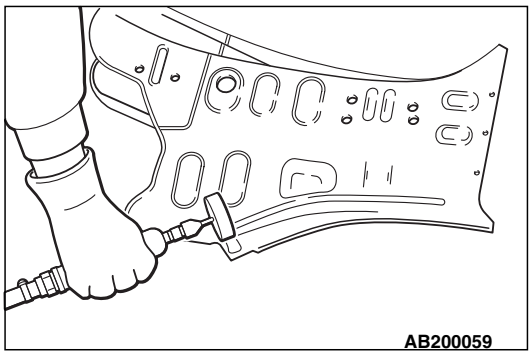

⚠ CAUTION
Do not use a flame for paint coat removal because doing so might damage the paint coat of panels which are not to be replaced, thus causing corrosion.

8. **Removal of the paint coat from new parts and from the vehicle body**
   In order to provide for the proper flow of electric current during spot welding operations, remove the paint coat from both sides of the new part and the body by using a polisher wheel or similar tool.

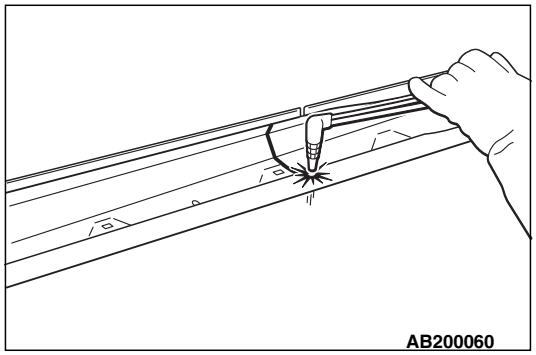

9. **Rough cutting of new parts**
   Cut off the unnecessary portions of new parts. Allow an overlap of approximately 30 – 50 mm (1.18 – 1.97 inches) when performing overlap cutting of the pillars, side sills, or other locations.

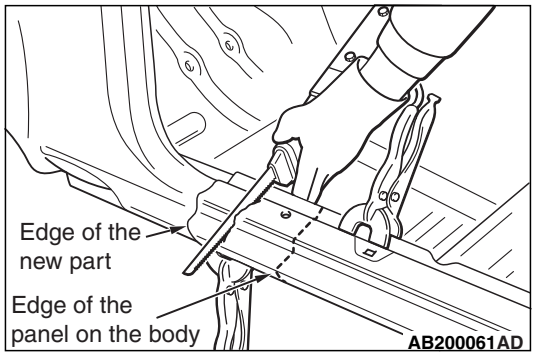

⚠ CAUTION
Carefully select the location for cutting, taking care not to cut a reinforcement at the inner side of a pillar, etc. or a panel that is not to be replaced.

10. **Overlap cutting of new parts**
    For locations in which butt welding is to be done, first temporarily attach the new parts to the body, and then cut the two panels simultaneously.
    NOTE: If a reinforcement or a panel which is not to be replaced is cut accidentally, first repair the mistake by welding before proceeding with the rest of the work.

⚠ CAUTION

Perform the operations carefully so that the cut ends fit together properly.

11. **Cutting of new parts by using a measurement marking**

If overlap cutting is not possible in a place where butt welding is to be done, make a measurement marking on the new part at the exact same measurement which was used for the cutting of the body panel, and then cut the new part by using this measurement marking.

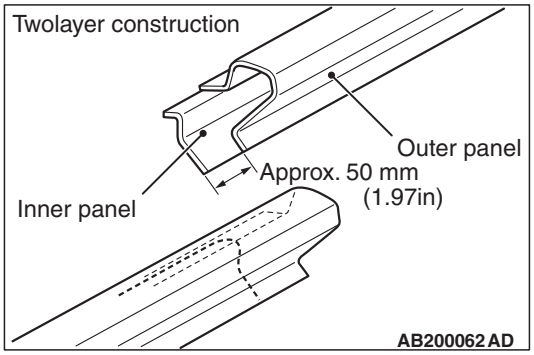

- Two-layer construction
  When cutting a front pillar or center pillar which has a two-layer construction but no reinforcement, make the cutting of the inner panel and that of the outer panel approximately 50 mm (1.97 inches) apart in order to obtain maximum strength.

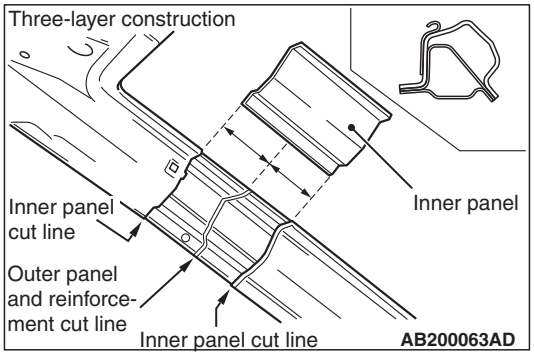

- Three-layer construction
  When cutting a front pillar or center pillar which has a three-layer (including a reinforcement) construction (double-box construction), cut the outer panel and the reinforcement at the same position, and don't forget to butt weld the reinforcement. If the inner panel is an assembly replacement part, cut it at two places in order to provide ample working space for the butt welding of the reinforcement.

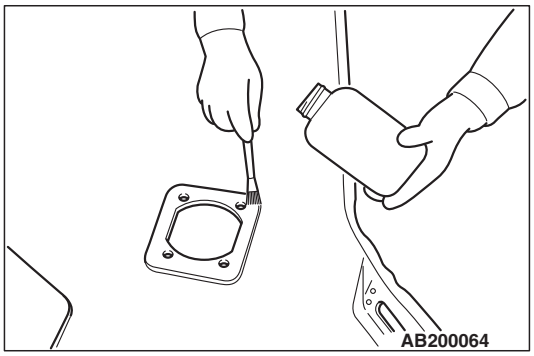

12. **Application of spot sealer to spot-welded points**

Apply an electro-conductive spot sealer to the connecting surfaces of both the new parts and the vehicle body in order to provide corrosion protection.

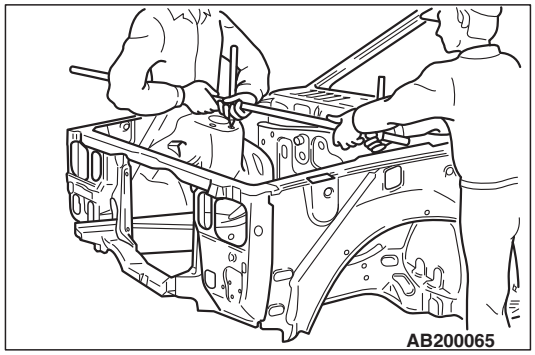

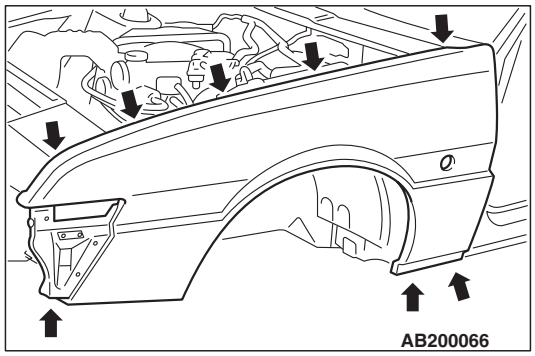

⚠ CAUTION

During temporary mounting, it is extremely important to obtain accurate measurements for each component. The mounting positions for the front and rear suspensions are especially crucial with regard to safety; therefore, it is necessary that all work concerning these areas be done carefully and correctly.

13. **Temporary mounting of new parts**
    (1) In order to bring the new parts into the proper mounting position, measure each part carefully and make any corrections necessary in order to obtain agreement with the measurements.
    (2) In addition, make temporary welds, and then check to confirm that the closing and fit of the doors, fenders, etc., are correct.
    For parts which should be symmetrical to the body center, measure the distances from the body center point to both the left part and the right part, and confirm that the distances are the same.

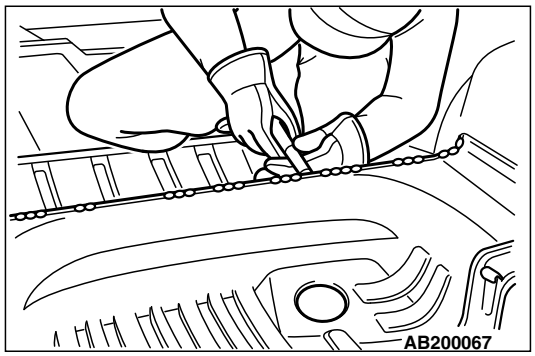

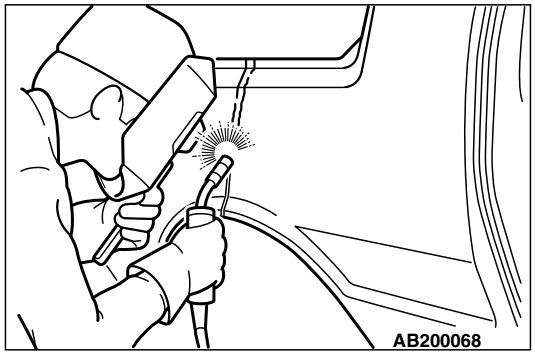

⚠ CAUTION

Weld completely so that there are no pinholes.

14. **Butt welding**
    For butt welding, make a 10 – 15 mm (0.39 – 0.59 inch) MIG spot weld, and then, in order to prevent warping which might be caused by the welding heat, complete the welding by making welds of the specified width at alternate positions.

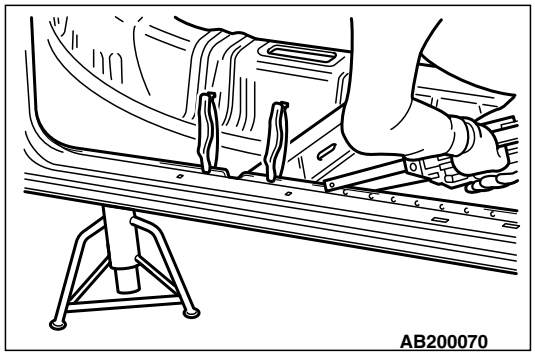

15. **Spot welding**

When doing spot welding, it is not only important to correctly position the electrode tips, but also to hold the two panels securely together with vise-grip pliers or some other type of clamps, being sure that they are in perfect contact with each other.

- Be sure that the force applied by the arm is sufficient.
- Use a test piece to check the secondary current and the current application time of the spot welder, and adjust the values as appropriate.

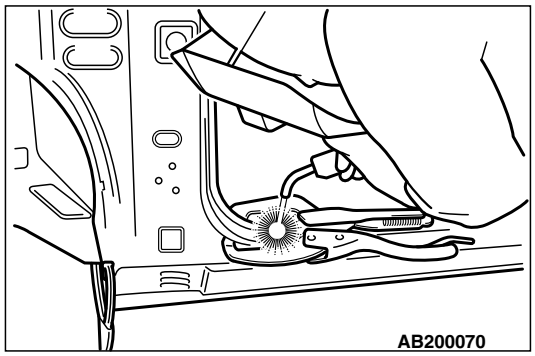

16. **Plug welding**

If spot welds cannot be made, make holes for plug welding in the new parts, and then MIG weld. Because the quality of the fusion varies according to the size of the holes, they should be about 5 – 6 mm (0.2 – 0.24 inch) in diameter. In addition, be sure the two surfaces are in complete contact with each other by using vise-grip pliers to securely hold them.

NOTE: Depending on the working conditions, it might also be necessary to make holes in the panel remaining on the body

17. **Hemming (Adhesion type)**

(1) Apply an adhesive to the area to be hemmed of the door outer panel.

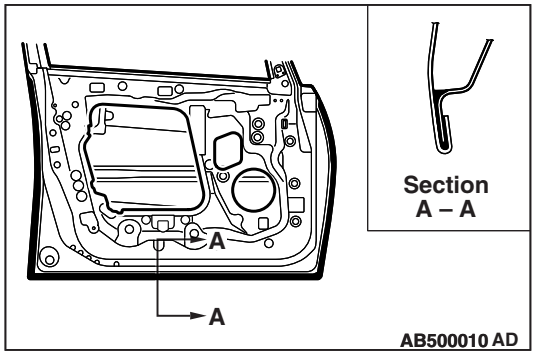

(2) For the area to be hemmed of the door outer panel, apply an adhesive and smooth the panel with a hammer and a dolly. Then, hem the panel with a hemming tool.

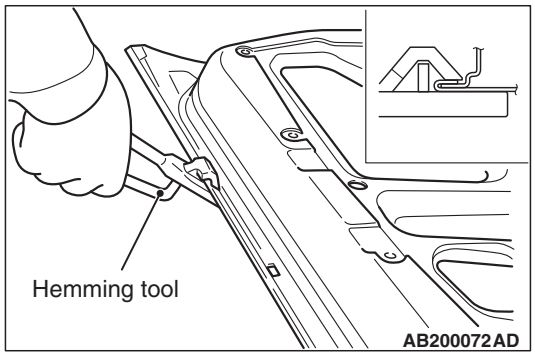

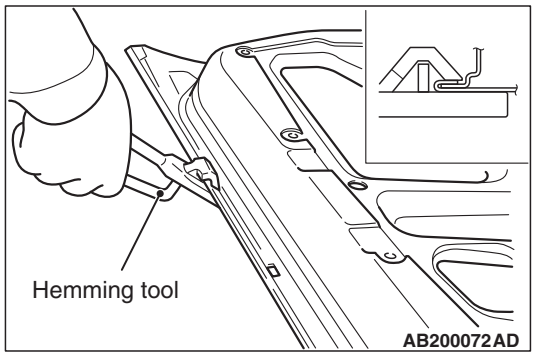

18. **Hemming (Welded type)**
    (1) For the area to be hemmed of the door outer panel, etc., smooth the panel with a hammer and a dolly, and hem it with a hemming tool.

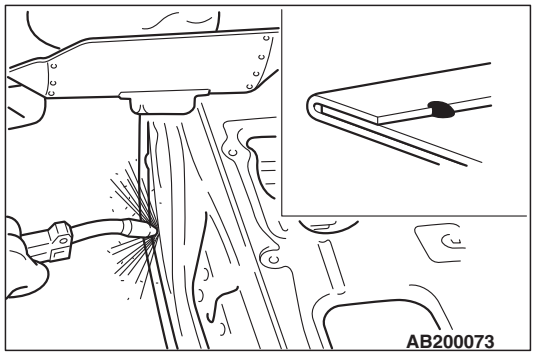

    (2) After completing the hemming work, make MIG spot welds at 50 – 60 mm (1.97 – 2.36 inches) intervals on the inside.

⚠ CAUTION

Be sure not to grind the panel down too much. Before welding the outer panel, be sure to apply an anticorrosion agent.

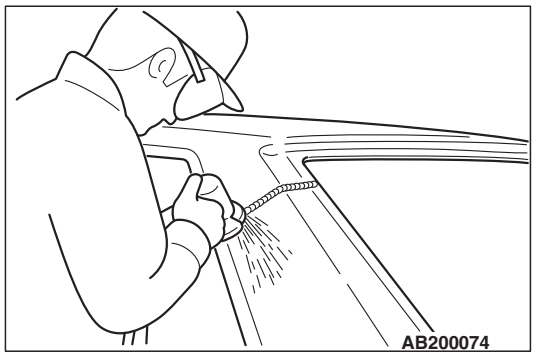

19. **Finishing work for butt welding and plug welding**

    Do the finishing work to smooth the protruding weld traces. However, the butt joints of reinforcements and other internal parts will be stronger if the weld traces are not finished.

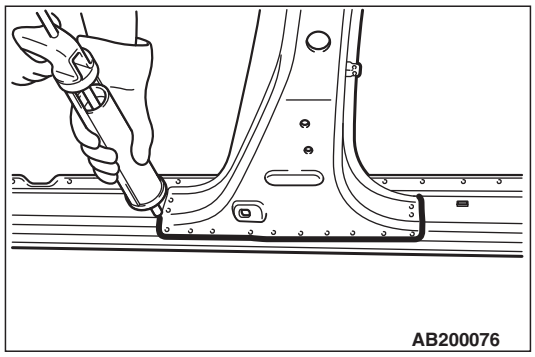

20. **Application of body sealant**

    Apply a coating of sealant carefully, without breaks, as described in the section (of the manual corresponding to that model).

    NOTE: After application has been made to any external surfaces, perform smooth-finishing work.

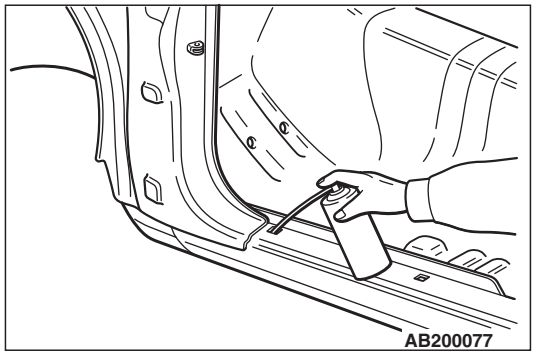

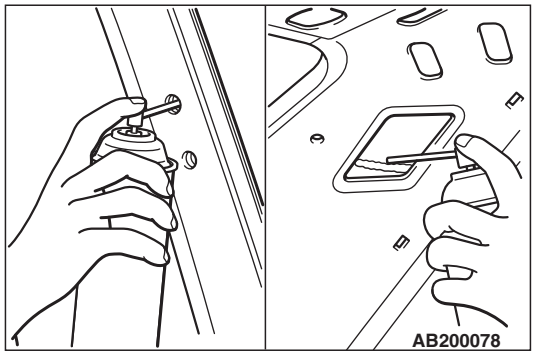

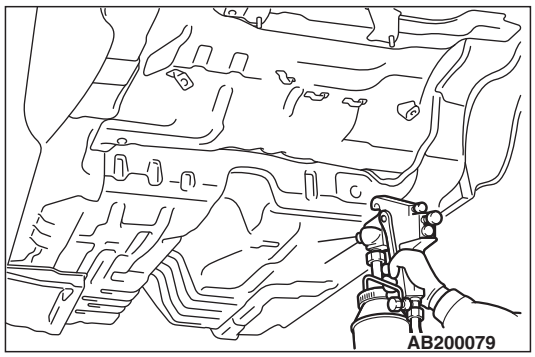

⚠ CAUTION

Wipe off any anticorrosion agent which oozes out onto surfaces to be painted later; the presence of such anticorrosion agent would prevent correct adhesion of the paint coat.

21. **Application of an anticorrosion agent**

    Apply an ample amount of anticorrosion agent to any welded areas and to all surfaces from which the paint coat was removed.

    The paint coat of welded areas will have been damaged by the heat; be sure to apply an anticorrosion agent to surfaces to be repaired.

    Use an aerosol-type anticorrosion agent for application to the side sills, the pillars, and other similar parts which have a hollow construction, by utilizing the trim mounting holes, etc.

22. **Application of undercoating**

    If the underbody is repaired or replaced, carefully apply a coating of undercoating as described in the section (of the manual corresponding to that model).

CAUTIONS REGARDING BODY REPAIR

Because each component part of a single-unit construction body makes some contribution, more or less, to the overall strength of that body, it is necessary to sufficiently understand the actual function of any part to be repaired before attempting any repair or welding procedure.

STRENGTH AND RIGIDITY

1. The suspension installation part plays an important role, determining the wheel alignment. Wheel misalignment is of course potentially very dangerous because it can lead to driving instability, one-sided braking, abnormal tire wear, abnormal vibration, etc.

   At the time of repair, it is particularly necessary to take measurements at the components noted below, and to make all welds and installations with special care.
   - Front sidemember
   - Rear floor sidemember
   - Front wheelhouse (inner)
   - Rear wheelhouse (inner) (Independent rear suspension type)
2. Because the places where the floor panel and sidemember parts are joined have an important effect upon the rigidity of the entire body, welds in these places must be done with particular care.
3. After repairs have been completed, the wheel alignment, wheel base, tread, etc., must be carefully checked to be sure that there is no deviation.

SAFETY

1. Procedures related to the installation of any component related to safety must be done with particular care in order to assure full maintenance of safety.
   - Suspension installation parts
   - Fuel pipe
   - Brakes
   - Fuel tank installation parts, etc.
2. Because seat belts are directly related to driver and passenger safety, any welds of seat belt anchor points or reinforcements must be done with particular care in order to maintain strength.

PREVENTION OF CORROSION AND OF WATER OR DUST ENTRY

1. After any work is completed, it is important to completely remove any welding residue, particles or residue from cutting, and any other dirt, etc.
2. Corrosion-prevention material must without fail be applied at the following places:
   - At any place where paint has flaked off or peeled away.
   - At any surfaces that have been cut.
   - At the outer and inner side of every welded place.
   - Within any semi-enclosed structure or component (aerosol-type rust inhibitors are effective for difficult-to-reach places).
   - At the outer and inner side of any place subjected to heat.
3. Apply a coating of undercoating if the underbody is repaired.
4. Use spot sealer if spot welds are made.
5. Repair any scratches to panels made by moldings, sashes, etc.
6. Carefully apply body sealant to panel connection joints and other fitting places.
7. Tape over any unused holes in the panel inner side by using sealing tape.

VIBRATION AND NOISE

1. Prevent any decrease of tensional rigidity caused by welding distortion.
2. Carefully apply body sealant to panel connection joints and other fitting places.
3. Tape over any unused holes in the panel inner side by using sealing tape.

CONTACT AND ALIGNMENT

1. In order to maintain the precision of openings, make careful measurements as repairs are being made.
2. Make contact/alignment adjustments of door hinge, lid, and hood hinge installation parts.

THEFT PROTECTION

M4090007000067

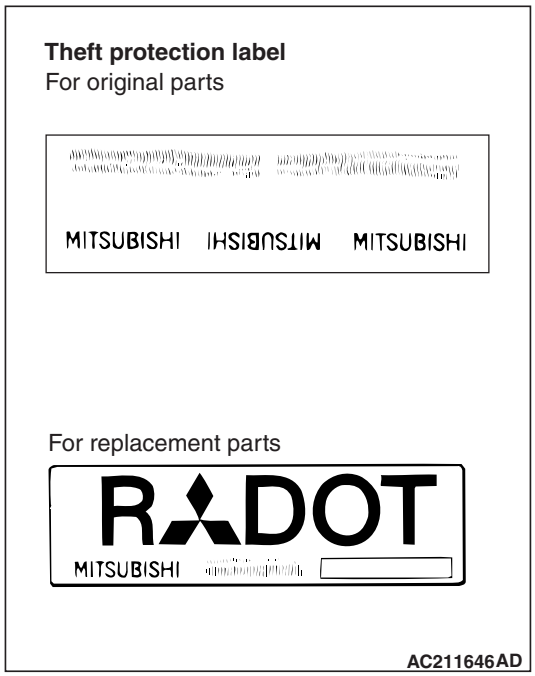

In order to prevent theft, following Vehicle Identification Number (VIN) has been engraved and attached, in the form of a label to the engine, transaxle, and main of the outer body:

Engine cylinder block, Transaxle housing, Fender, Doors, Quarter panel, Hood, Liftgate, Trunk lid, Bumpers

Furthermore, supplementary parts for the main portions of the outer body have theft protection labels attached and the supplementary parts for the engine and the transaxle are engraved with the same details.

PANEL REPAIR CAUTION

1. Take care when respraying the original part to cover the theft protection label with masking tape prior to respraying. In addition, remember to peel off the masking tape after completion of the respray.
2. Because theft protection labels on the supplementary parts are covered with masking tape already, they can be resprayed just as they are.
3. Take care not to peel off the theft protection labels from either the original or the supplementary parts.

HOW TO PEEL OFF THE SURFACE MASKING FILM FROM THE THEFT-PROTECTION LABEL

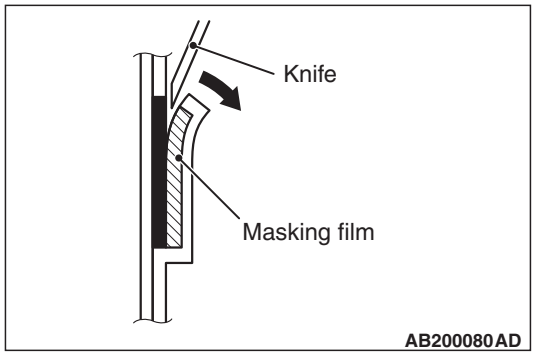

⚠ CAUTION

Be careful not to damage the paint surface or the label itself.

1. Using a sharp knife at the corner of the label surface, lift up the masking film only.
2. Grasp the masking film and peel it all off.

NOTE: If the masking film tears, repeat from step 1. Use the knife, however, to lift the opposite corner of the label, rather than trying to continue peeling from the place where it tore.

ATTACHMENT OF SILENCERS

M4090009000052

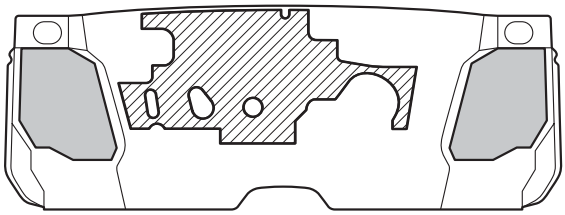

Dash panel interior side

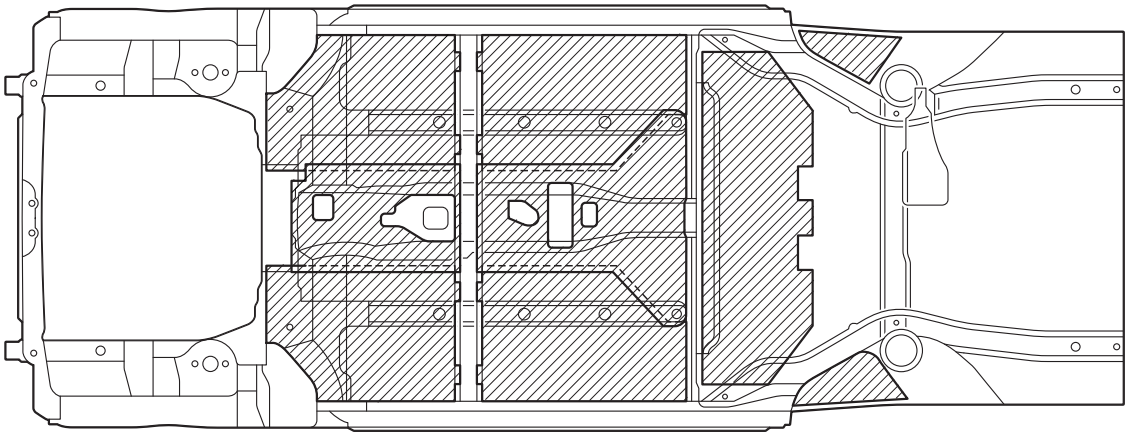

: Thickness: 1.6 mm (0.063 in)
: Thickness: 3.2 mm (0.126 in) (two 1.6 mm (0.063 in) silencers overlapped)

AB200097AD

Silencers (petroleum-asphalt sheets) are attached to the upper surface of the floor and at the interior side of the dash panel in order to absorb vibrations and shut out exhaust gas heat. If these silencers are peeled off in the course of replacement or repair of a welded panel, cut and attach replacement material (in the shape shown in the figure). For detailed information concerning the locations where silencers are to be attached for individual models, refer to the manual for that model.

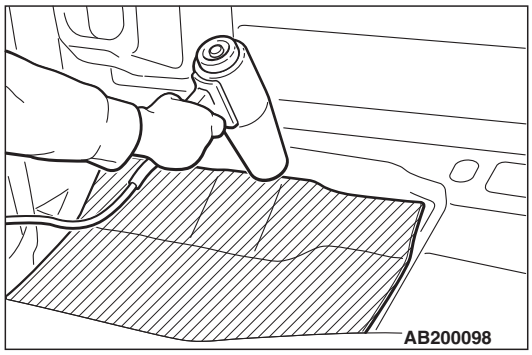

AB200098

1. Heat the "silencer layer" (petroleum-asphalt sheet) with a blow drier to soften it.

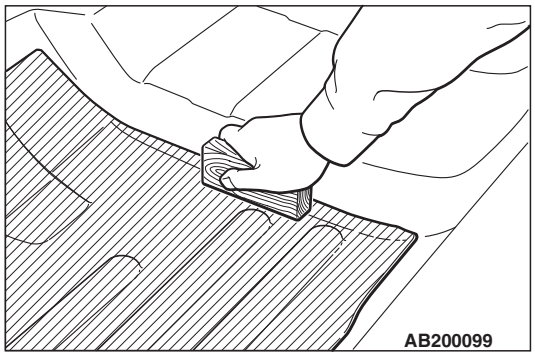

2. Align the silencer layer in the position where it is to be installed, and then press it down with a roller or a block of wood so that it adheres well.

   NOTE: An infrared light can also be used to heat both the silencer layer and the body panels (be sure to wear gloves).

POSITIONING DIMENSIONS FOR OPENINGS

M4090010000045

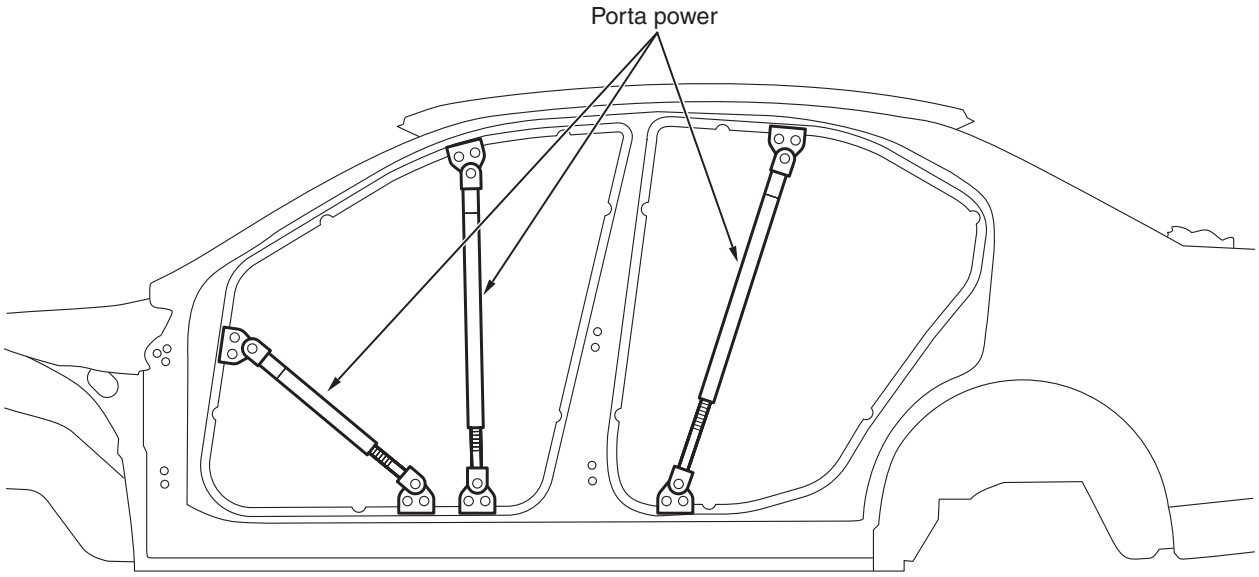

When replacing the panel of the opening of the front pillar, center pillar and other openings, make a point to securely bite the poltapower, etc. so the position of the opening is not off-center. Upon assembling, adjust the opening dimensions to the standard specifications and then weld.

STANDARD PROCEDURES FOR SHEET METAL WORK

M4090012000030

REPAIRS USING A HAMMER AND DOLLY

It a damaged external panel, etc., can be reused, the usual way to repair it is by using a hammer and dolly to hammer out the damaged area. The following describes these repair procedures.

1. Check whether or not there is foreign material (mud, etc.) on the panel surface. If so, clean it away.

⚠ CAUTION

The surface of the hammer and dolly must be free of scars, etc.

2. Select the appropriate hammer and dolly to be used according to the panel shape.

⚠ CAUTION

Care should be taken, as far as possible, not to permit the panel plates to become elongated.

3. Use the hammer and dolly to repair the dents and other uneven surfaces of the panel.
   (1) First repair the larger areas of damage so that they are as close as possible to the original condition before the damage occurred.
   (2) Next repair the areas of moderate damage.
   (3) Finally, smooth the surface out.

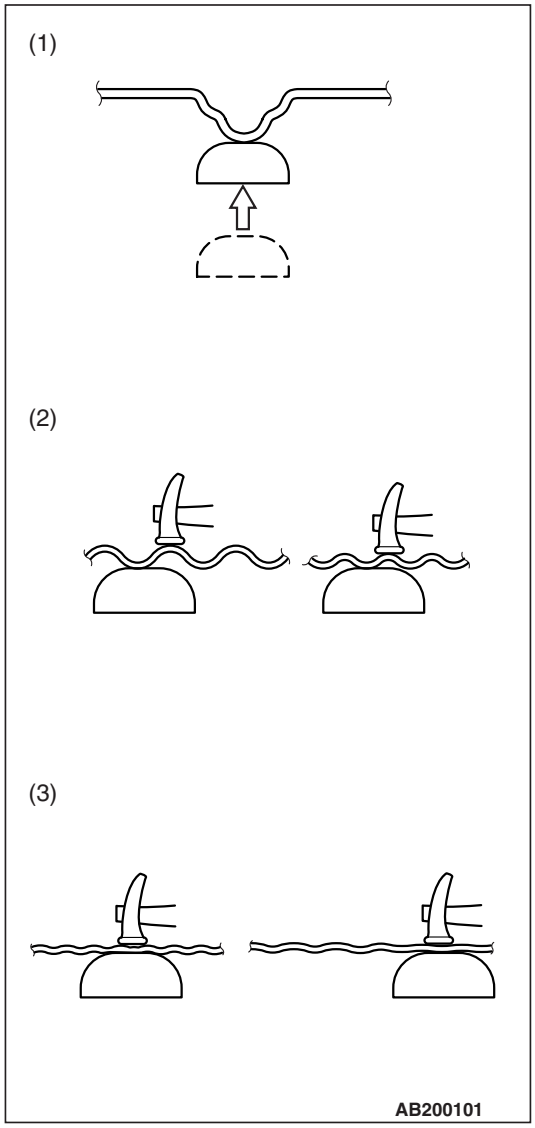

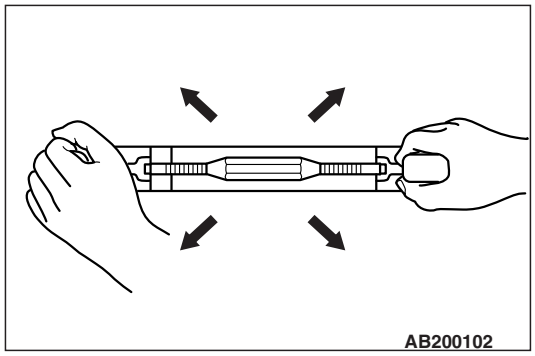

⚠ CAUTION

- **Be careful not to file too much; this will reduce the strength and rigidity of the panel.**
- **Do not use the file in one direction only; alternate use in two directions diagonally opposite each other.**

4. Next, file the area so that convex and concave parts are no longer clearly visible, and at the same time remove small projections.
5. After once again smoothing the clearly visible dents and projections by using the hammer and dolly, follow step 4 above.
   Alternately repeat hammering and filing until there are file traces over the entire repair area.
6. Make a solder build-up at the repair.
7. Finally, finish up the solder build-up using a body file.

USING A FRAME STRAIGHTENER

M4090013000044

For serious and extensive damage, when for example the damage extends to the frame of members, it is necessary to first use a frame straightener to make a rough, overall repair of the body, and then to proceed to careful repairs of each individual area of damage. When a frame straightener is used for body repairs, it is a fundamental principle that the pulling should be in the direction from which the impact was sustained, and from the opposite direction. If this is, in error, not done, previously undamaged components will be deformed, and repair may become impossible.
It is for that reason that it is important to decide upon the method of repair, especially regarding the initial overall repair, by following the steps below.

OVERALL ROUGH REPAIRS

1. First, analyze the impact. This means analysis and consideration of the point of collision, the speed at the time of collision, and the strength, weight and shape of the object hit.
2. Then get a complete understanding of the condition of the existing damage. In particular, if the damage extends to the suspension installation components, an inspection must be made to determine whether or not there is any deviation of the frame or body alignment.
3. Finally, determine what repair methods should be used.
   - To what extent will frame straightening and other overall repairs be necessary in order to restore the damaged areas to the way they were?
   - At what stage of the repairs should panels adjoining the components to be frame straightened, etc., be removed?
   - Decide upon the work steps and restoration methods to be followed after the rough, overall repairs are completed.

Select the frame straightener based upon the results of above, and use it to pull in the appropriate direction. More than one direction may be appropriate, depending upon the damage.
If the damage is of a moderate degree or less, it may be possible to do all that is necessary in one pull.
If, however, the damage is major, that is to say if repairs must be made to components of the passenger compartment such as the dash panel, etc., it may be necessary, after completing the first pull, to set up the frame straightener at a different position and use it again at that position.

FRAME STRAIGHTENING NOTES

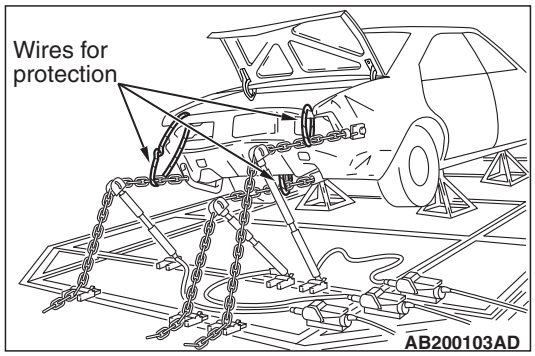

- For safety, no one must be standing in the direction of the pull.
- Wires or chains should be used for protection in the event of an accident.
- For frame straightening of body with frame, care should be taken regarding the position (body mount) of installation to the frame. The reason for this is that usually mounting rubber pieces are used at the installation part in order to improve vibration prevention, and these mounting rubber pieces might be deformed if there is a deviation of the installation position.
- If the part to be pulled is made of high-tensile steel (which has a higher tensional strength and yield point than ordinary steel), the pulling must be done with care in order to avoid "over pull" and "spring back". It is particularly important for the pulling of sidemembers and other reinforcement components made of high-tensile steel that the pulling not be all done at one time; pull gradually while using a hammer to repair distorted areas as the pulling is done.

FRAME REPAIR PROCEDURES

M4090014000047

The frame is subjected to the following types of loads.

- Vertical loads: Vertical loads may occur either while stopped or during travel.
- Lateral (horizontal) loads: This type of loads occurs during turning, start-off and braking.
- Torsional loads: Torsional loads occur while traveling on roads with poor surface conditions.

These various types of loads are compounded under various conditions, and are applied to the frame.
As a result, it is important, before attempting to repair the frame, to carefully observe the shape of the damaged part and to in that way fully understand the cause of the damage.

CHECKING FOR FRAME CRACKING OR FLAKING

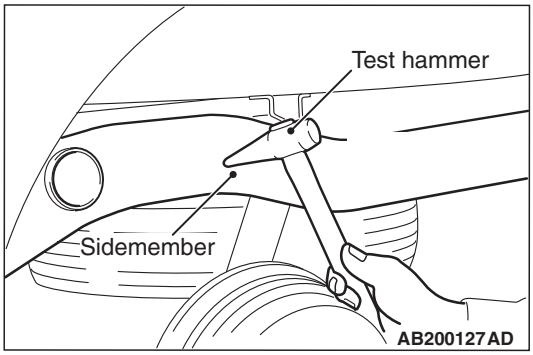

Check, by using a test hammer, for flaking or cracking of the welded surface of the sidemembers, crossmembers and brackets.

REPAIRING CRACKS

If the check reveals a crack(s) in the frame, repair as described bellow.

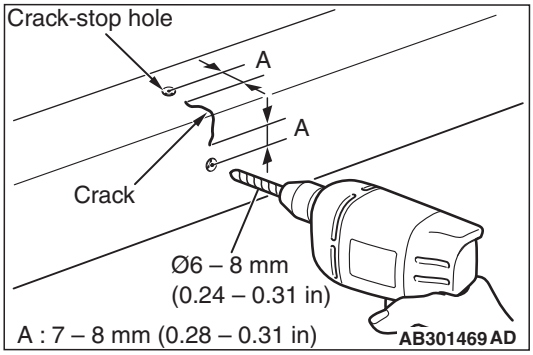

1. Remove the components near the crack.
2. Make ϕ 6 – 8 mm (0.24 – 0.31 inch) holes (to prevent further cracking), by using a drill, at points 7 – 8 mm (0.28 – 0.31 inch) from the crack ends.

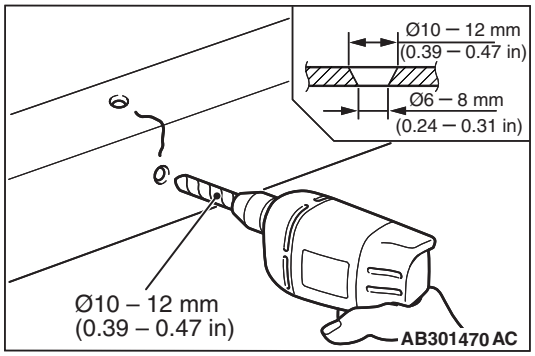

3. Use a ϕ 10 – 12 mm (0.39 – 0.47 inch) drill to bevel the hole openings.

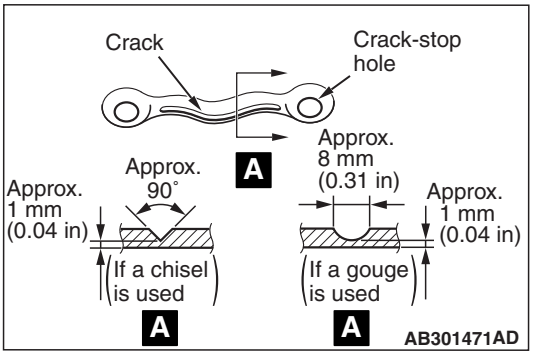

4. Use a chisel or gouging tool to open up the crack and holes, and then fill the crack and holes by MIG welding.

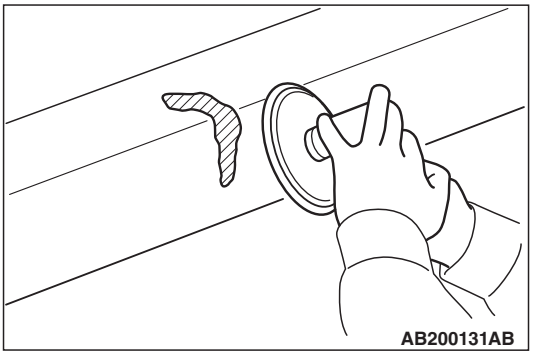

⚠ CAUTION

- **Gas welding should be avoided because it causes thermal distortion of the frame.**
- **When using a grinder for finishing, be careful not to grind the frame excessively.**

5. Using a grinder for finishing after welding.

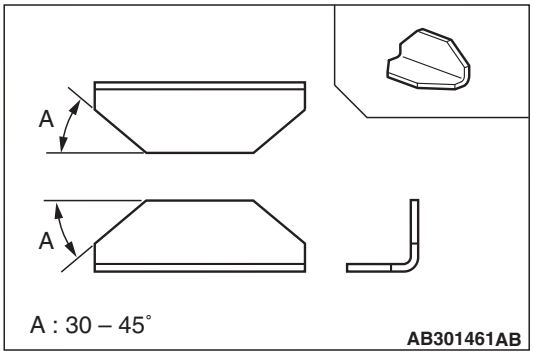

⚠ CAUTION

- **The reinforcement plate should completely cover the cracked part.**
- **The reinforcement plate should be the same thickness and material as the frame.**

6. To avoid a concentration of stress, prepare a reinforcement plate that has been cut to 30 – 45 degree angle at both ends.

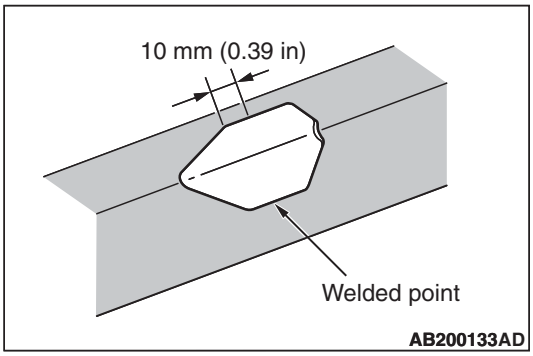

⚠ CAUTION

Be sure that the edges of the reinforcement plate are not near any place where a concentration of stress of the crossmember or spring hanger installation part, etc. could easily occur.

7. Attach the reinforcement plate to the repaired crack area by MIG welding. In order to avoid a concentration of stress at the time, weld the reinforcement plate at points about 10 mm (0.39 inch) from its edges.

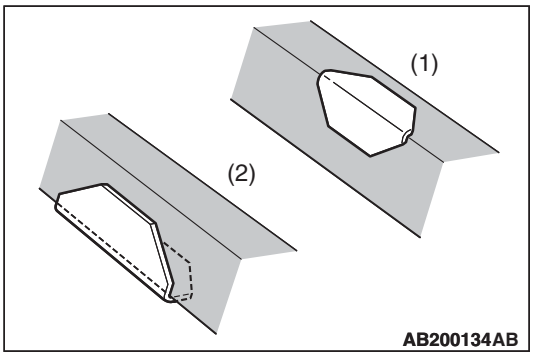

NOTE: If the crack is at the upper side of the frame, attach the reinforcement plate facing downward, as shown in (1). If the crack is at the lower side, attach the reinforcement plate to face upward, as shown in (2).

8. Finally, apply a coating of chassis black to the repaired area and to any places where the coating has flaked off.

NOTES REGARDING REPAIR WORK

M4090015000039

SAFETY MEASURES

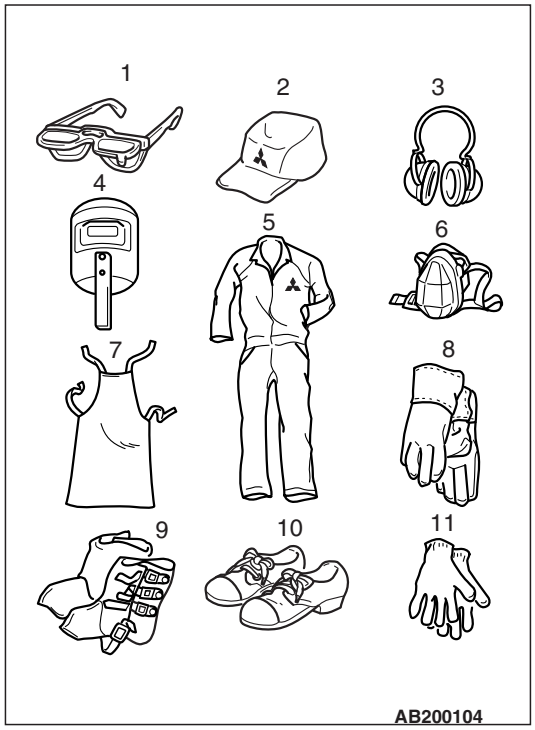

PROTECTIVE GEAR

During body repair work, a work suit, a work cap, and safety shoes should be worn at all times. Depending on the work being done, safety glasses, gloves, ear protectors, a dustproof mask, etc., should also be worn as needed.

1. Safety glasses
2. Work cap
3. Ear protectors
4. Head protector
5. Work suit
6. Dustproof mask
7. Work apron
8. Welding gloves
9. Foot and ankle protectors
10. Safety shoes
11. Work gloves

SUPPLEMENTAL RESTRAINT SYSTEM (SRS)

1. Items to review when servicing SRS
   (1) Be sure to read Service Manual GROUP 52B, Supplemental Restraint System (SRS). For safe operation, please follow the directions and heed all warnings.
   (2) Wait at least 60 seconds after disconnecting the battery cable before doing any further work. The SRS system is designed to retain enough voltage to deploy the air bag even after the battery has been disconnected. Serious injury may result from unintended air bag deployment if work is done on the SRS system immediately after the battery cable is disconnected.
   (3) Warning labels must be heeded when servicing or handling SRS components.
   (4) Always use the designated special tools and test equipment.
   (5) Store components removed from the SRS in a clean and dry place. The air bag module should be stored on a flat surface and placed so that the pad surface is facing upward.
   (6) Never attempt to disassemble or repair the SRS components (SRS-ECU, air bag module and clock spring). If there is a defect, replace the defective part.
   (7) Whenever you finish servicing the SRS, check the SRS warning light operation to make sure that the system functions properly.
   (8) Be sure to deploy the air bag before disposing of the air bag module or disposing of a vehicle equipped with an air bag.
2. Observe the following when carrying out operations on places where SRS components are installed, including operations not directly related to the SRS air bag.
   (1) When removing or installing parts, do not allow any impact or shock to occur to the SRS components.
   (2) If heat damage may occur during paint work, remove the SRS-ECU, the air bag module, clock spring, the front impact sensor, the side impact sensor, and the seat belt pre-tensioner.
   - SRS-ECU, air bag module, clock spring, front impact sensor, the side impact sensor: 93 °C (200 °F) or more
   - Seat belt pre-tensioner: 90 °C (194 °F) or more

SECURING THE VEHICLE

If the vehicle is raised on a jack, be sure to always support it with jack stands positioned at the specified points.

CLEARING THE AREA OF FLAMMABLE MATERIALS

Because of the presence of many various kinds of flammable materials, organic solvents, etc., in the work area, there is always the possibility of a fire or explosion. It is, therefore, important to keep the work area as clear as possible of such dangerous materials.

HANDLING ELECTRONIC PARTS AND SEMICONDUCTORS

⚠ *WARNING*

Battery posts, terminals and related accessories contain lead and lead compounds. WASH HANDS AFTER HANDLING.

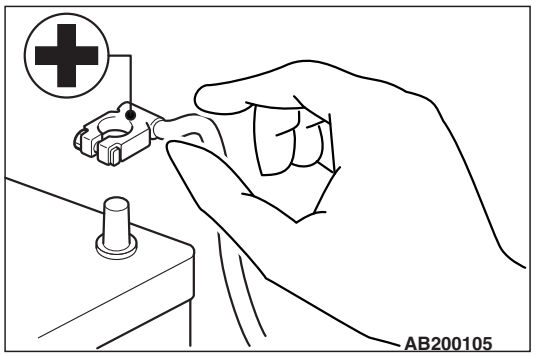

When the body is used as the ground during welding for body repairs, be absolutely sure to first disconnect the battery's positive (+) cable.

⚠ CAUTION

- **Be sure that both the ignition and lighting switches are "LOCK" (OFF) position before either disconnecting or reconnecting a battery cable. (If this is not done, equipment containing semiconductors could be damaged).**
- **Note that the memory of electronic equipment having a memory function will be cleared when the battery cable is disconnected.**

NOTE: Vehicles today include a great many electronic parts and components, and these are in general very susceptible to adverse effects caused by overcurrent, reverse current, electromagnetic waves, high temperature, high humidity, impacts, etc. In particular, such electronic components can be damaged if there is a large current flow during welding from the body side, etc.

This is because, for electronic components that incorporate a back-up circuit (for memory retention) that functions (by a trickle current) even when the ignition switch is at OFF, an electronic circuit is formed even when the switch is at OFF.

HANDLING COMBUSTIBLE MATERIALS

If welding work is to be done in the area of the fuel tank, the fuel tank must be removed to prevent the generation of flammable gases. Also be sure to cap the inlet port and the pipes of the fuel tank after removal to prevent the escape of any fuel or flammable gases.
Wipe up any fuel, oil, etc., spilled in the work area as soon as possible.
Only the amounts of paint to be used for the day's work should be in the work area; do not keep excessive amounts of paint, or paint which is not going to be used, in the work area.

HEALTH AND SANITATION PROCEDURES

The following points should be noted for employee health and sanitation.

- The work area should be well ventilated in order to prevent the inhalation of dust, organic solvent vapors, etc.
- All unused paint cans must be securely covered.
- Care should be taken to avoid exposure to the skin of adhesives, organic solvents, etc.
  If an unavoidable exposure occurs, the exposed area should be immediately washed with clean water.

VEHICLE PROTECTION

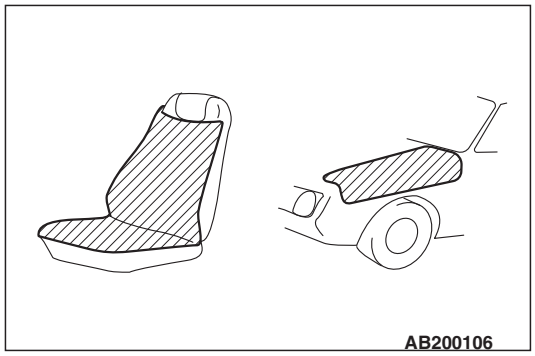

- Vehicle covers (fender covers, seat covers, etc.) and tape (if there is the possibility of damage by tools, equipment, etc.) should be used to protect painted surfaces, interior/exterior parts and components, etc., from staining and damage.

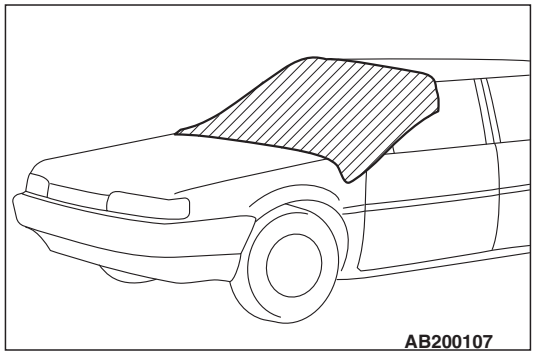

- For welding operations, a heat-resistant protective cover should be used to protect glass, seats, instrument panel, carpeting, etc.

HEAT-WITHSTAND TEMPERATURES OF RESIN-PLASTIC PARTS

M4090016000054

Because resin-plastic parts are deformed by heat, they should be removed if the heat to be applied is high enough to cause deformation, as shown by the table below.

Material name	Abbreviation	Heat-deformation temperature °C (°F)	Where mainly used
Acrylonitrile styrene acrylate	ASA	80 (176)	Door mirror, Pillar garnish, License garnish, Radiator grille
Acrylonitrile butadiene styrene	ABS	80 (176)	Air spoiler, Console box, Radiator grille, Rear garnish, Headlight bezel
Cellulose acetate	CA	50 – 90 (122 – 194)	-
Cellulose acetate butylate	CAB	60 – 100 (140 – 212)	Door trim molding
Polyamide	PA	140 – 160 (284 – 320)	Harness connector, Wheel cover, Cooling fan, Fuel strainer
Talc filled polyamide	PA-TD	190 – 200 (374 – 392)	Hood garnish, Door outside handle
Polybutylene terephthalate	PBT	120 (248)	Dome light lens, Headlight lens
Polyethylene	PE	100 (212)	Heater duct, Fender liner, Washer tank
High density polyethylene	PE-HD (HDPE)	70 – 90 (158 – 194)	Fuel tank, Splash shield
Phenole formaldehyde	PF	170 – 190 (338 – 374)	Ashtray
Polymethyl methacrylate	PMMA	80 – 100 (176 – 212)	Light lens
Polyacetal	POM	120 (248)	Door regulator handle, Ball joint seat
Polypropylene	PP	80 (176)	Glove compartment, Bumper face, Pillar trim, Steering wheel, Heater unit, Cooling fan
Polyphenylene ether	PPE (PPO)	130 – 140 (266 – 284)	Accelerator pedal pad, Wheel cover, Speaker garnish
Talc filled polypropylene	PP-TD (PPF)	100 (212)	Front deck garnish, Stone guard, Floor console, Instrument panel
Talc filled polypropylene (10%)	PP-TD10 (PPF)	110 – 120 (230 – 248)	Center pillar trim
Talc filled polypropylene (15%)	PP-TD15 (PPF)	110 – 120 (230 – 248)	Front pillar trim, Center pillar trim, Rear pillar trim
Talc filled polypropylene (20%)	PP-TD20 (PPF)	120 – 130 (248 – 266)	Beltline trim, Front deck garnish, Front pillar trim
Talc filled polypropylene (30%)	PP-TD30 (PPF)	130 – 140 (266 – 284)	Quarter trim, Rear side trim

Material name	Abbreviation	Heat-deformation temperature °C (°F)	Where mainly used
Polyurethane	PUR	80 – 100 (176 – 212)	Bumper, Steering wheel
Polyurethane (formed)	PUR-E	80 – 100 (176 – 212)	Seat cushion, Arm rest, Door trim, Instrument panel
Glass fiber reinforced RIM urethane	PUR-GF [RIM]	100 – 120 (212 – 248)	Air dam panel
Polyvinyl alcohol	PVAL	*1	-
Polyvinyl butyral	PVB		-
Polyvinyl chloride	PVC	80 (176)	Steering wheel, Side protector molding, Shift lever cover, Window molding
Thermoplastic elastomer (olefine)	TPO (TEO)	80 (176)	Mud guard, Side air dam
Urea formaldehyde	UF	120 – 145 (248 – 293)	-
Glass fiber reinforced unsaturated polyester	UP-(GT + TD) [SMC], [BMC]	200 (392)	Rear air spoiler
Ethylene vinyl acetate	E/VAC (EVA)	60 (140)	Mud guard
Talc filled polypropylene	PP + E/P-TD [HMPP]	80 – 100 (176 – 212)	Bumper face, Side air dam, Side protector molding
Polyvinyl chloride, Polyurethane	PVC, PUR-E	*2	Instrument panel pad
Thermoplastic elastomer (styrene), Talc filled polypropylene	TES, PP-TD	100 – 120 (212 – 248)	Side splash
Polycarbonate + Acrylonitrile butadiene	PC + ABS	120 – 125 (248 – 257)	Door outside handle
Polycarbonate + Polyethylene terephthalate	PC + PET	120 (248)	Door outside handle
Polycarbonate + Polybutylene terephthalate	PC + PBT	130 – 140 (266 – 284)	Door outside handle
Polyphenylene ether + Polyamide 6	PPE (PPO) + PA6	150 – 160 (302 – 320)	Wheel cover
Polyphenylene ether + Polyamide 66	PPE (PPO) + PA66	160 – 170 (320 – 338)	Wheel cover
Polyphenylene ether + Polystyrene	PPE (PPO) + PS	120 – 130 (248 – 266)	Wheel cover

NOTE:

- *A slash (/) in the abbreviation indicates that two different materials make two-layer construction.*
  A plus sign (+) indicates that the two different materials mix each other.
- *If the new material symbols designated by the ISO differ form the old symbols, both are given, with the old symbol being enclosed in brackets. ISO: International Organization for Standardization*
- **1: Temperature differs depending on the ratio of the materials included.*
- **2: Impossible to fix the temperature due to the multi-layer and foam material structure.*
- *If an infra-red lamp is used for drying, use a heat-resistant cover, etc., to protect parts.*

HOW TO DISTINGUISH TYPES OF PLASTICS

M4090017000035

There are various methods that can be employed to determine types of plastics, among them (1) using a chemical solvent, etc., to check it chemically, (2) scratching the material to determine its make-up, (3) cutting of a small piece (where the scar can't be seen) and burning it to judge by the way it burns, etc. The following is an outline of the burning method, which is a relatively simple method.

Plastic name	Abbreviation	Flame color	Combustion Conditions	Self-extinguishing	Odor
Polyvinyl chloride	PVC	Yellow flame top Blue flame bottom	Burns to black residue	Yes	Irritating acid odor
Polyethylene	PE	Yellow flame top Blue flame bottom	Burns cleanly while melting	No	Candle-like odor
Polypropylene	PP	Yellow flame top Blue flame bottom	• Burns briskly and drips • Slight white smoke	No	Petroleum-like odor
Polyurethane	PUR	Orange	Crackles as burns; drips	No	Rubber odor
	TRUR	Orange			
Polycarbonate	PC	Yellow	Cinders remain	To some extent	Sweet odor
Polyamide (nylon)	PA	Yellow flame top Blue flame bottom	Melts and drips	Yes	Strong formic acid odor
Polyester resin	UP	Yellow	Ashes remain	No	Styrene odor
Glass-fiber-reinforced plastic	FRP	Yellow	Ashes with glass-fiber remnants remain	No	Differs according to plastic type
Phenol resin	PF	Yellow	Ashes remain	Yes	Formalin odor
ABS resin	ABS	Orange	Burns accompanied by foaming and black smoke	No	Rubber odor

CORROSION PROTECTION

ANTICORROSION TREATMENT AT THE FACTORY

M4090019000064

Anticorrosion treatment at the time of production includes the following measures.

THE USE OF GALVANIZED STEEL PLATE

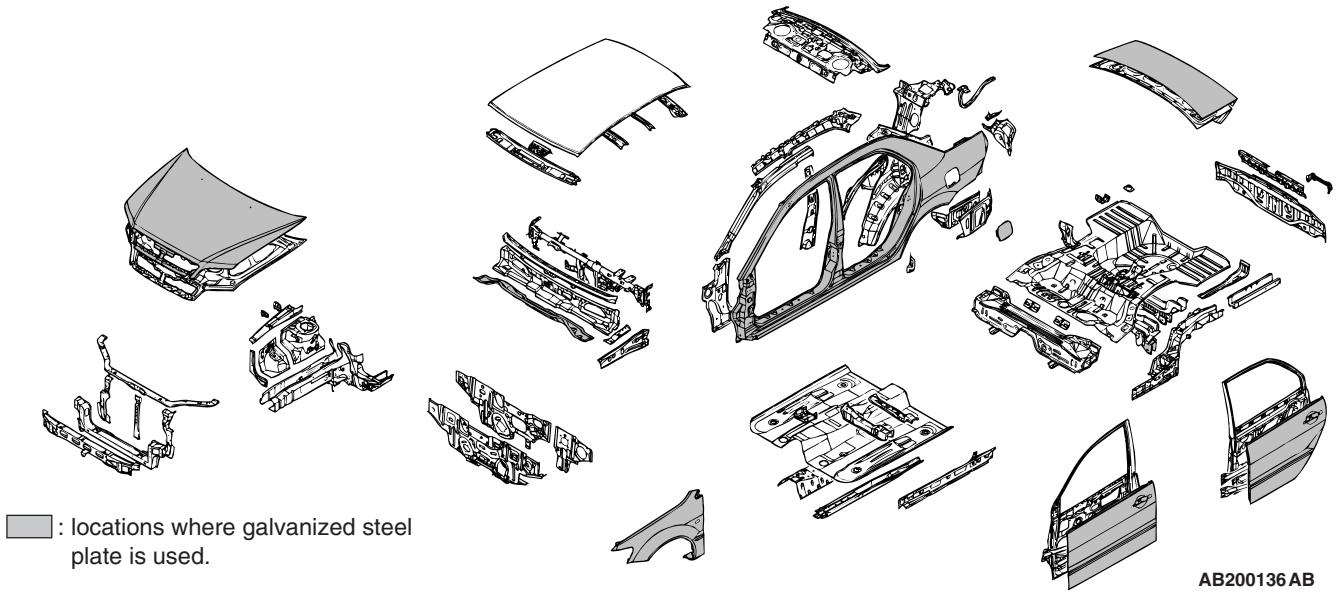

Because galvanized steel plate has excellent corrosion resistance, it is used in areas which have a high possibility of painting deficiency.

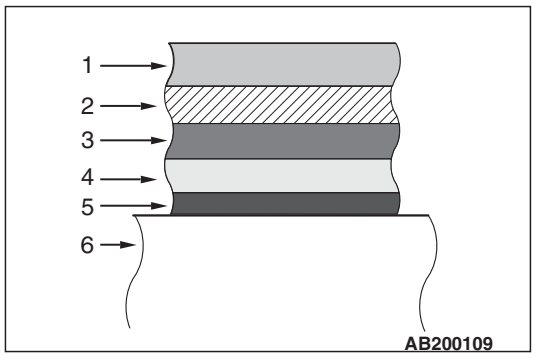

ZINC PHOSPHATE COATING

In order to improve the adhesive properties of the paint coat on the steel plate, and also to improve the finish of the paint coat, the entire body is coated with a film of zinc phosphate prior to undergoing the electrodeposition undercoating process.

1. Final coat
2. Intermediate coat
3. Anticorrosion primer
4. Undercoat
5. Zinc phosphate film
6. Steel plate

CATIONIC ELECTRODEPOSITION UNDERCOATING

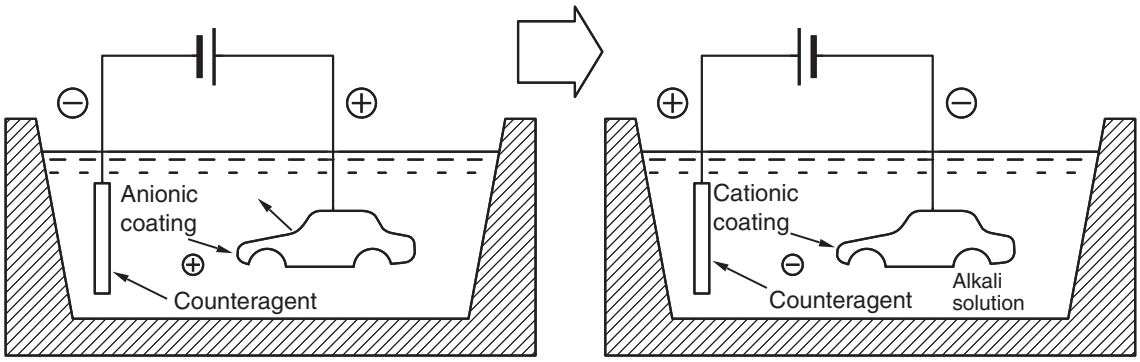

Anionic electrodeposition

Cationic electrodeposition

AB200110AD

In the cationic electrodeposition method, the car body is the negative pole, thus preventing damage to the zinc plating of the galvanized body panels or to the chemically formed phosphate crystals. This method, therefore, maximizes the corrosion resistance and the results obtained are much better than those from conventional anionic electrodeposition.

BODY SEALING

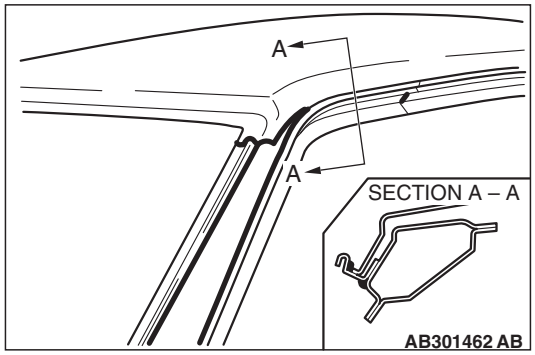

Sealant has been applied to all body panel joints and seams in order to provide resistance to water, dust, and corrosion.

UNDERBODY COATING

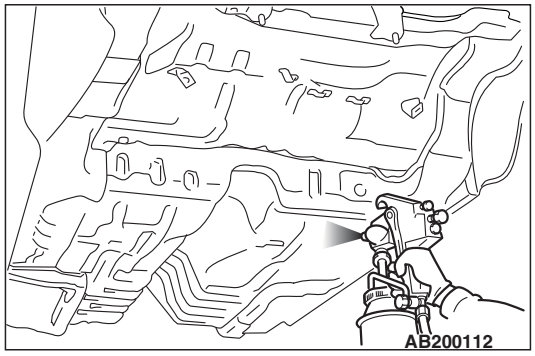

An underbody coating has been applied to the underside of the floor pans, the inside of the doors, etc., in order to provide resistance to vibration, corrosion, and wear.

WAX INJECTION

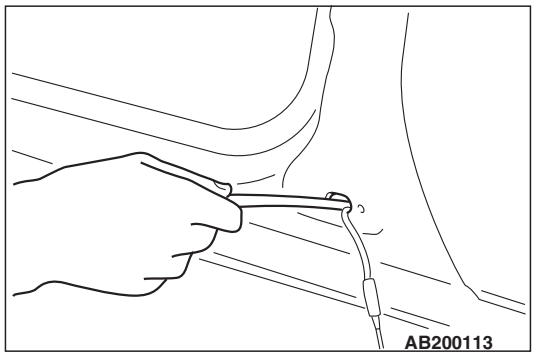

Wax injection is used at the lower part of the frame, side sill and hollow panels, etc., in order to obtain a better anticorrosion effect.

ANTICORROSION PRIMER

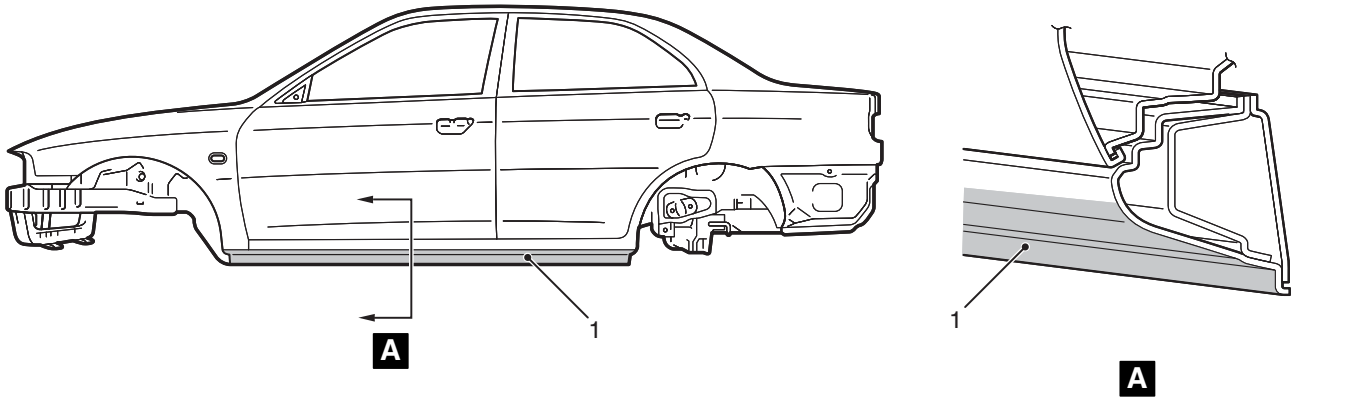

1. Rocker panel primer application

Anticorrosion primer is used at the side sill outer panels in order to prevent corrosion and to suppress vibration.

SEALING TAPE

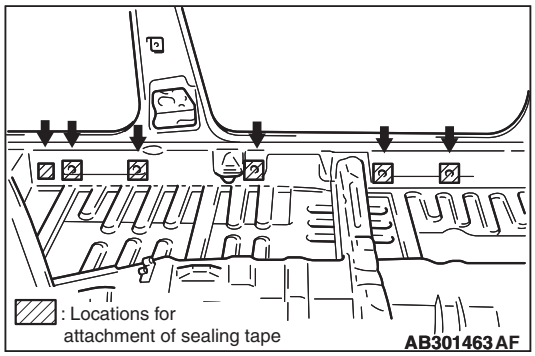

Sealing tape is attached at unused holes, at the inner side of the panel, for waterproofing and anticorrosion protection.

ANTICORROSION TREATMENT AT THE TIME OF BODY REPAIR WORK

M4090020000046

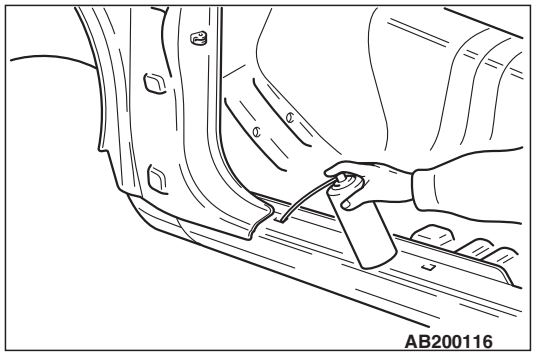

The following procedures should be followed for anticorrosion protection when making repairs.

CORROSION PROTECTION FOR HOLLOW PARTS

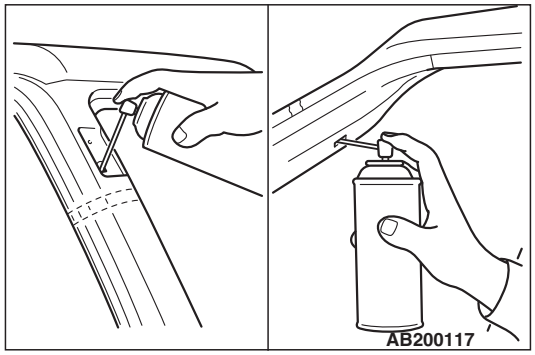

⚠ **CAUTION**

- **Wipe away any excess anticorrosion agent on the coated surface, because it can adversely affect the coating.**
- **When spraying the anticorrosion agent, use holes in different areas to ensure that all weld surfaces of the hollow structure are well coated.**

The insides of hollow parts (such as the side sill, pillars, etc.) which have been welded are more susceptible to corrosion. Spray an aerosol-type anticorrosion agent into these parts by using the trim mounting holes and other openings.

ANTICORROSION TREATMENT OF ROUGH CUTS

An anticorrosion agent should be applied to rough cuts made in the course of welding, because the surface film has been damaged by the heat of welding.

SPOT SEALER

In order to prevent corrosion from occurring at the contact surfaces of panels which are spot welded, apply an electroconductive spot sealer.

SPOT SEALER APPLICATION STEPS

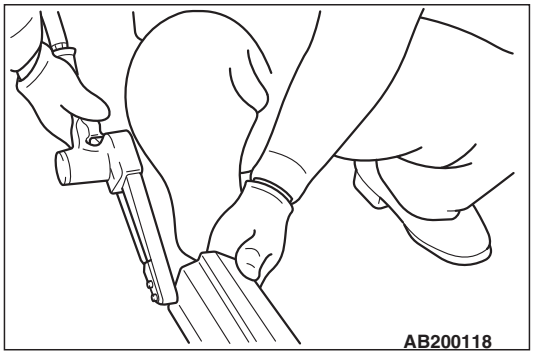

1. Remove all paint, etc., from the areas to be spot welded by using sandpaper or a pneumatic belt sander.

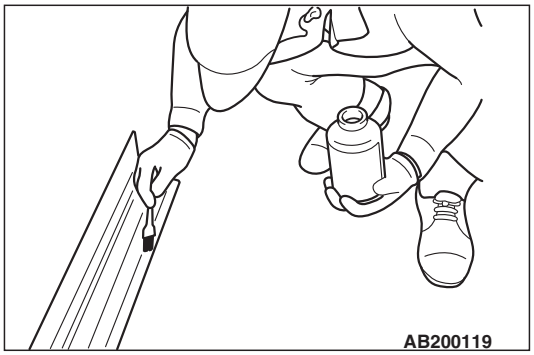

2. Use a brush to apply spot sealer to the contact surfaces of the panels (both the new panel and the panel remaining on the body) to be spot welded.

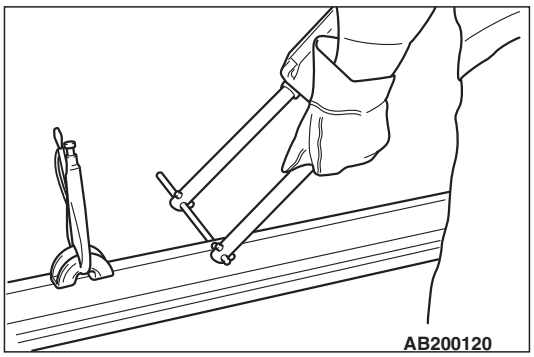

3. Do not spot welding.

   NOTE: The spot welding can be done as the spot sealer is dry to the touch.
   Dry to the touch: 30 minutes or less at 20℃ (68℉)

BODY SEALING

Even if a car body is restored to the exact specified dimensions, the body repair work cannot be considered to be complete if an ample amount of sealant is not applied to each of the panel joints and seams. Insufficient sealant will result in water leakage, corrosion, etc.

NOTE: Use a piece of clean cloth dampened in lead-free gasoline or a similar material to clean parts and areas where sealant is applied.

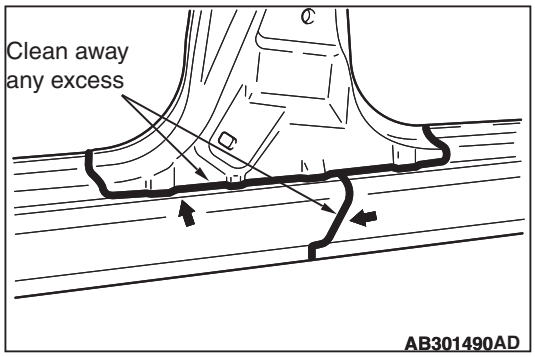

- When applying sealant to areas at which the external appearance is important (areas which can be seen or where the condition of the paint coat is important), be sure to apply the sealant so that it is perfectly level with the surrounding panels.

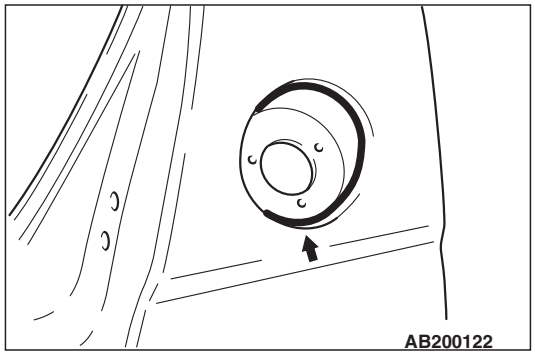

- Apply the sealant at the fuel port so that it is perfectly level with the surrounding panel so that drops of fuel will not collect.

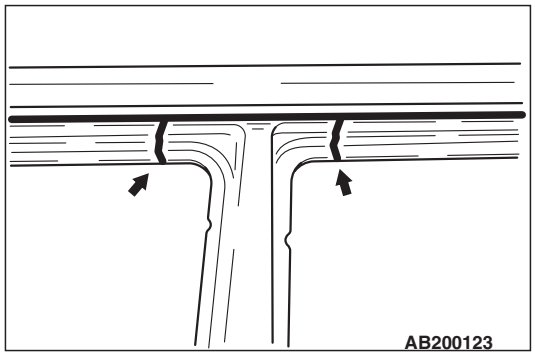

- After applying sealant to the door-stop, etc., clean away any excess so as to be sure that there is no interference with installed parts, etc.

UNDERCOATING

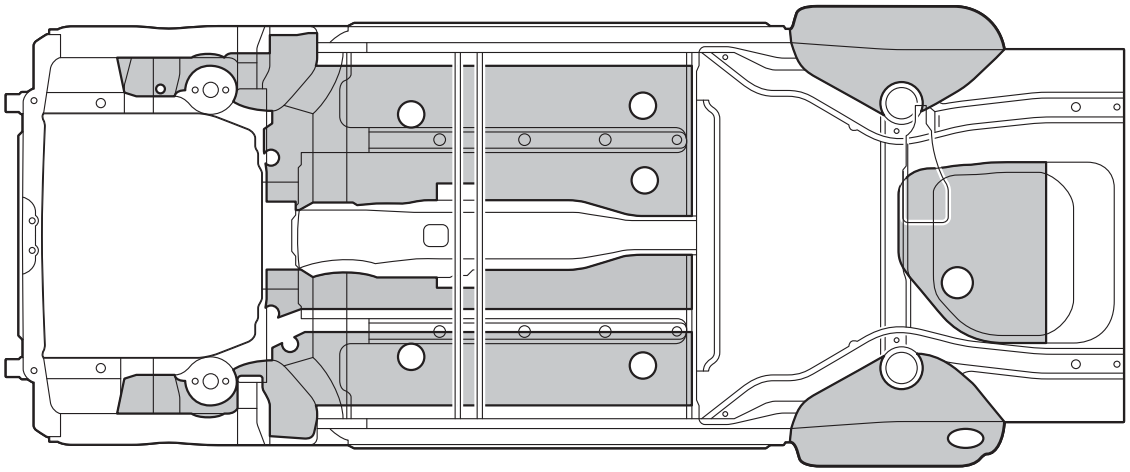

: Undercoating application locations

AB301464AD

- Be sure to mask any parts installation holes, and the area around the place where undercoating is to be applied, before applying it.
- Be sure not to apply the undercoating to tires or to the drive shaft and other drive components.

If the undercoating application inside the wheel housing, on the under body, etc., is insufficient, it can result in corrosion. Be sure, therefore, to apply a good coating of undercoating to such parts after repairs are completed.

REPAIR OF SYNTHETIC-RESIN PARTS

SYNTHETIC-RESIN PARTS REPAIR PROCEDURES

M4090000300090

Bumper is taken as a repair work example for explanation.

FLOWCHART

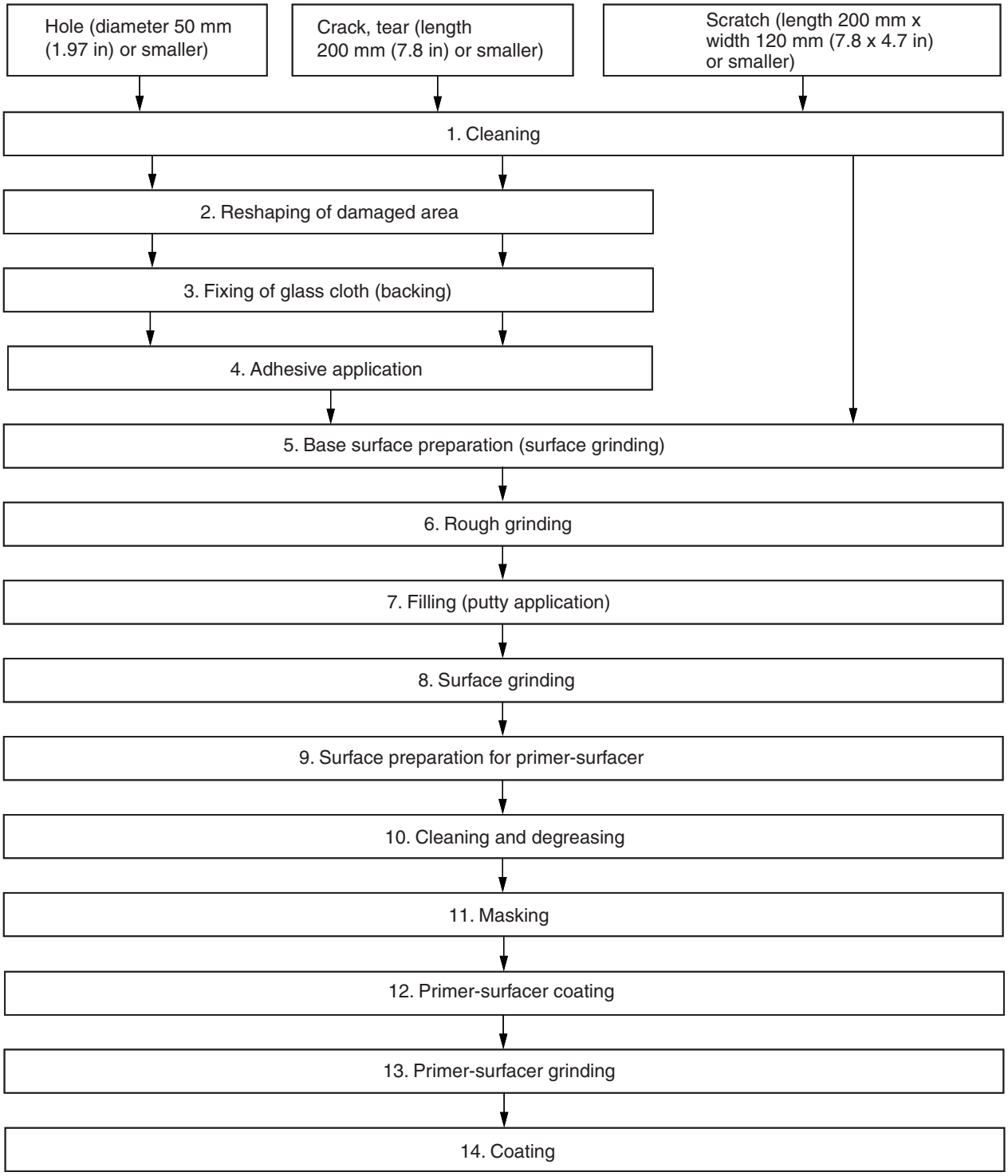

AB401319AB

REPAIR JUDGMENT

REPAIRABLE AREA

- In case of a hole, the damaged area is reshaped to be a circle or ellipse for easier filling of the repair agent. The diameter or major diameter should be 50 mm (1.97 inches) or smaller.
- In case of a crack or tear, if the both ends of the crack or tear are not separated from the body, the length of the area should be 200 mm (7.8 inches) or smaller. If one of the ends reaches the bumper edge, the length of the damaged area should be 200 mm (7.8 inches) or smaller, and also the width should be a half or less of the bumper width.
- In case of a scratch, the area should be 200 x 120 mm (7.8 x 4.7 inches) or smaller.

UNREPAIRABLE COMPONENTS

Black-base area is raw urethane base and repairable, however, its color does not match in color of the repair agent (ash gray). In this case, the replacement of the bumper is preferable.

BUMPER REMOVAL AND CLEANING

- The damage of holes, cracks, and tears requires a repair work from the rear surface. Remove the bumper to clean the whole surface, degrease the front and rear surfaces of the repair area using SU Silicone Off, and then repair, holding the bumper to avoid twisting.
- In case of a scratch, a softener is applied to the bumper as repair paint. The repair area cannot be polished after painting, and surface/gloss matching is difficult. Therefore, do not apply gradated topcoat painting, and paint the whole surface as a rule.

REPAIR PROCEDURE

1. CLEANING

Using SU Silicone Off, degrease the repair area, and then remove the wax and oil completely.

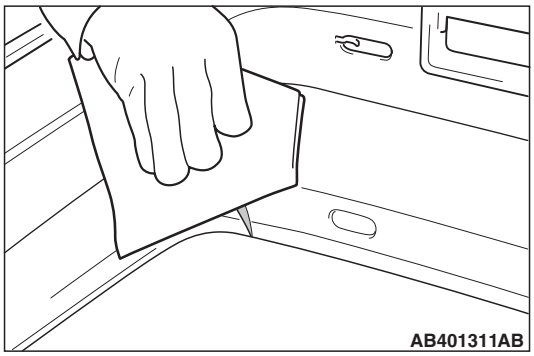

2. RESHAPING OF DAMAGED AREA

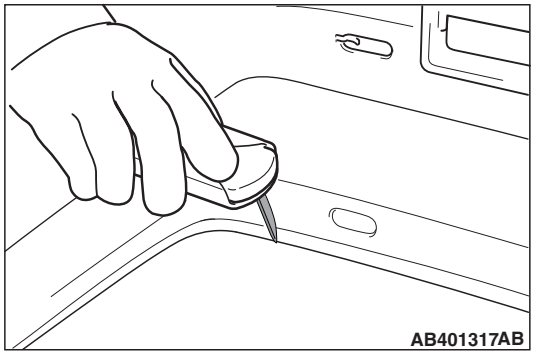

⚠ CAUTION

The grind surface area should be larger than the resin putty application area.

Remove burrs on the rear surface reinforcement point, and grind with a sandpaper #60 to #80, as a surface preparation for painting. When using a sander #80, grind at a low speed 6000 r/min. For PP, apply PP primer after grinding.

PRIMER : PP PRIMER
BRAND : 3M™ Automix Polyolefin Adhesion Promoter 5907 or equivalent

3. FIXING OF GLASS CLOTH (BACKING)

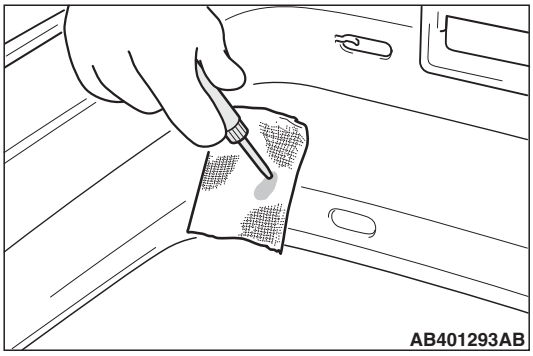

⚠ CAUTION

- **After applying the instant adhesive, fix the repair area.**
- **For PP, apply PP primer.**

Apply the adhesive to the glass cloth fixing area of the repair part in order to adhere the glass cloth.

- **TAPE: Glass cloth tape**
  BRAND: 3M™ Glass Cloth Tape 6400 or equivalent
- **ADHESIVE: Urethane adhesive**
  BRAND: 3M™ Duramix Plastic Repair Semi-rigid 4040 or equivalent

4. ADHESIVE APPLICATION

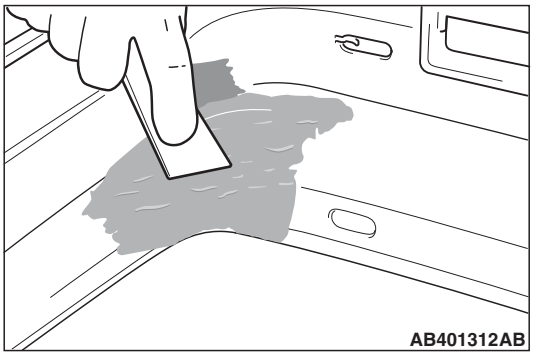

Apply a resin adhesive to cover the fixing glass cloth and its surrounding area. Then smooth it, using a spatula, and dry.

5. BASE SURFACE PREPARATION (SURFACE GRINDING)

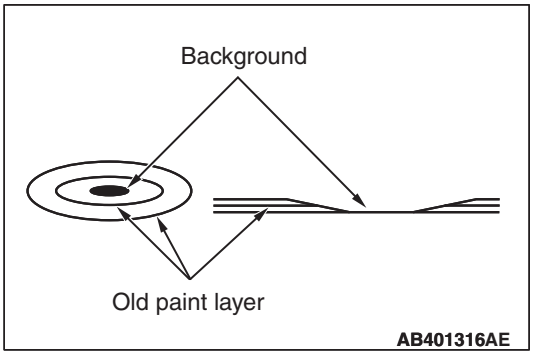

Remove burrs on the surface, and grind with a sandpaper #120 to make the repair area surface lower than the surrounding area. When using a sander #120, grind at a low speed 6000 r/min.

6. ROUGH GRINDING

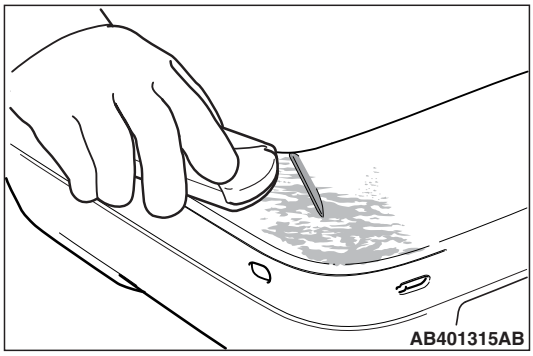

Grind the base surface area with a sandpaper #80 as a surface preparation for painting.

7. FILLING (PUTTY APPLICATION)

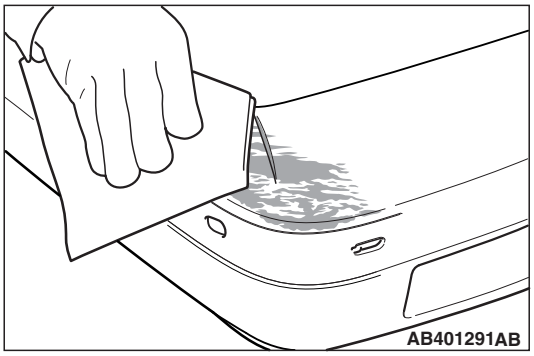

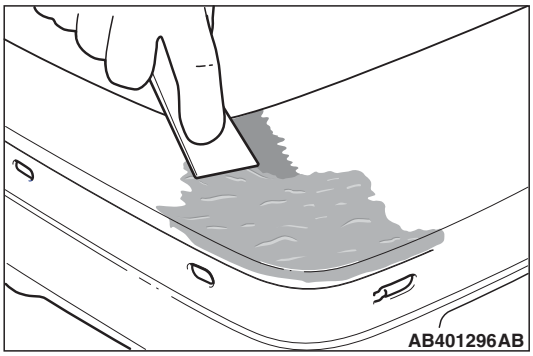

⚠ CAUTION

When mixing the two kinds of liquid, be sure that the air is not mixed in.

1. Using SU Silicone Off, degrease the repair area, and then remove the wax and oil completely.
2. For scrape, apply putty to the repair area.
   - **PUTTY: Epoxy resin putty**
     BRAND: 3M™ Automix EZ Sand Flexble Parts 5887 or equivalent
   - **PUTTY: Epoxy resin putty**
     BRAND: 3M™ Resin Putty No.1, 8120 or equivalent

NOTE:

- *The amount to be applied at a time is approximately 1.5 mm (0.059 inches). Therefore, recoat it as needed.*
- *For tear and scratch, apply putty after sanding the surface.*

8. SURFACE GRINDING

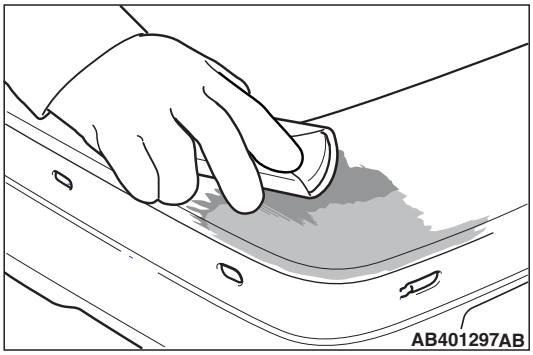

After drying, grind with a sandpaper #120.

9. SURFACE PREPARATION FOR PRIMER-SURFACER

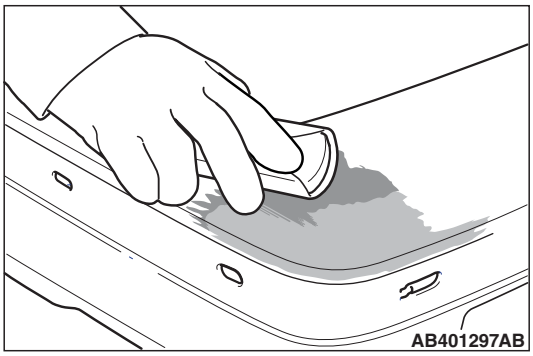

Grind with a sandpaper #180 to #240. Grind the primer-surfacer application area as a surface preparation for painting. In addition, remove the grind mark.

10. CLEANING AND DEGREASING

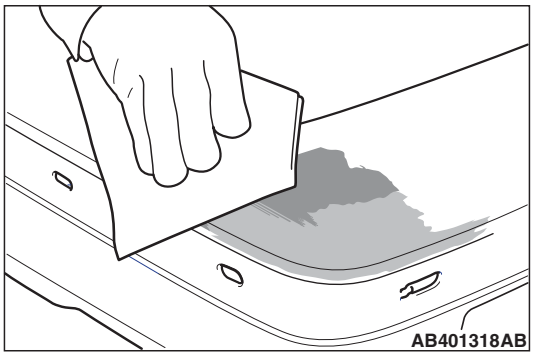

Using SU Silicone Off, degrease and wipe off completely.

11. MASKING

To avoid splashing of primer-surfacer during the coating, apply masking.

MASKING: Masking paper tape
BRAND: 3M™ Scotch Block Masking Paper or equivalent

12. PRIMER-SURFACER COATING

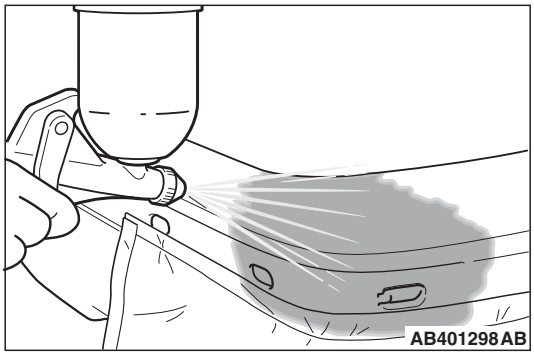

⚠ CAUTION

- **If an excessive amount is applied at a time, or force-dried in a short time, the coating film may crack.**
- **For color separation, use masking tape.**

While taking flash off time, apply 1 to 3 times of double coating, using a spray gun.

13. PRIMER-SURFACER GRINDING

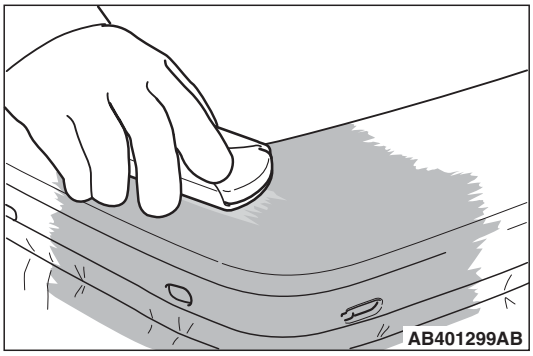

1. Grind the base surface with a sandpaper #240 to #320.

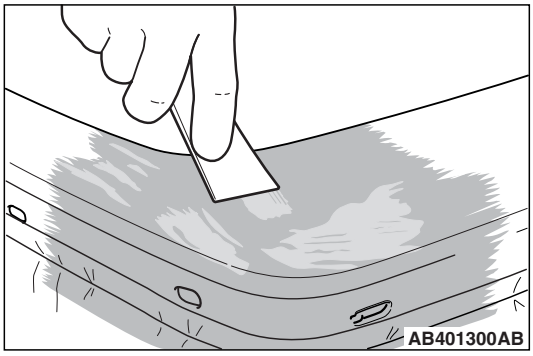

2. Apply the putty to cover pinholes, grind marks, and slight distortion. Do not apply an excessive amount at a time. Repeat application of small amount, taking a drying time.

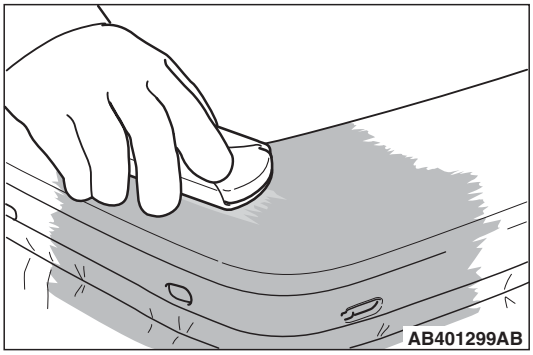

3. Grind with a sandpaper #240 to #320. If the PP base surface is exposed, apply PP primer.

   PRIMER : PP PRIMER
   BRAND : 3M™ Automix Polyolefin Adhesion Promoter 5907 or equivalent

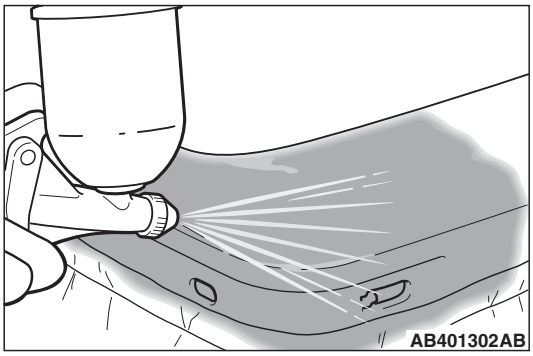

⚠ CAUTION

If an excessive amount is applied at a time, or force-dried in a short time, the coating film may crack.

4. While taking flash off time, apply 1 to 3 times of double coating, using a spray gun.

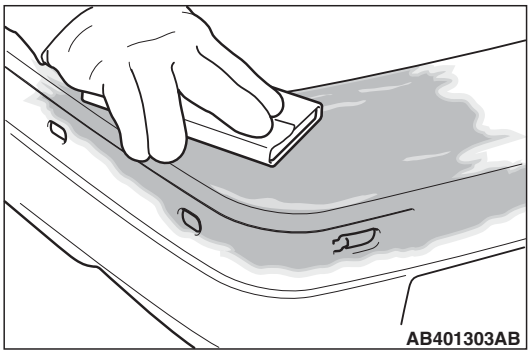

5. Dry sand with a sandpaper #240 to #300 or finer. Then, as a surface preparation for painting, grind lightly so as not to expose the base surface. Finally, use a sandpaper #600 (#800 for dark color coating) or finer to remove grind marks.