DUSTER

DRIVER'S HANDBOOK

RENAULT

RENAULT recommends ELF

ELF has developed a complete range of lubricants for RENAULT:

- engine oils
- manual and automatic gearbox oils

Warning: to ensure the engine operates optimally, the use of a lubricant may be restricted to certain vehicles. Please refer to your maintenance document.

Benefiting from the research applied to Formula 1, lubricants are very high-tech products.

Updated with the help of RENAULT's technical teams, this range is perfectly compatible with the specific features of the brand's vehicles.

- ELF lubricants enhance your vehicle's performance significantly.

RENAULT recommends approved ELF lubricants for oil changes and top-ups.
Contact your RENAULT Dealer or visit www.lubrifiants.elf.com

elf

Une marque de TOTAL

Photo credit: Total/DPPI Imacom group

Welcome aboard your vehicle

This Driver's Handbook contains the information necessary:

– for you to familiarise yourself with your vehicle, to use it to its best advantage and to benefit fully from the all the functions and the technical developments it incorporates.

– to ensure that it always gives the best performance by following the simple, but comprehensive advice concerning regular maintenance.

– to enable you to deal quickly with minor faults not requiring specialist attention.

It is well worth taking a few minutes to read this handbook to familiarise yourself with the information and guidelines it contains about the vehicle and its functions and new features. If certain points are still unclear, our Network technicians will be only too pleased to provide you with any additional information.

The following symbol will help you when reading this handbook:

To indicate a hazard, danger or safety recommendation.

The descriptions of the models given in this handbook are based on the technical specifications at the time of writing. **This handbook covers all items of equipment** (both standard and optional) **available for these models, but whether or not these are fitted to the vehicle depends on the version, options selected and the country where the vehicle is sold.**

This handbook may also contain information about items of equipment to be introduced later in the model year.

Throughout the manual, the "approved dealer" is your DACIA dealer.

Enjoy driving your new vehicle.

Translated from French. Copying or translation, in part or in full, is forbidden unless prior written permission has been obtained from the vehicle manufacturer.

0.2

C O N T E N T S

Sections

Getting to know your vehicle 1

Driving 2

Your comfort 3

Maintenance 4

Practical advice 5

Technical specifications 6

Alphabetical index 7

0.4

Section 1: Getting to know your vehicle

Keys/Radio frequency remote control . . . 1.2
Locking and unlocking the doors . . . 1.5
Opening and closing the doors . . . 1.7
Engine immobiliser system . . . 1.8
Headrests . . . 1.9
Front seats. . . . 1.11
Seat belts. . . . 1.12
Methods of restraint in addition to the front seat belts. . . . 1.16
Side protection devices . . . 1.19
Additional methods of restraint . . . 1.20
Child safety: general information . . . 1.21
- mounting a child seat . . . 1.24
- fitting a child seat . . . 1.26
- deactivating/activating the front passenger airbag . . . 1.32

Rear-view mirrors . . . 1.35
Driving position . . . 1.36
Instrument panel: warning lights . . . 1.40
Display and indicators . . . 1.44
On-board computer . . . 1.46
Steering wheel, Power-assisted steering . . . 1.50
Clock . . . 1.51
Audible and visual signals . . . 1.52
Exterior lighting and signals. . . . 1.54
Adjusting the headlight beam height . . . 1.56
Windscreen washer/wiper, De-icing . . . 1.57
Fuel tank (filling with fuel) . . . 1.60

KEYS, RADIO FREQUENCY REMOTE CONTROL: general information (1/2)

Key *A*

1 Coded key for ignition switch, doors and fuel filler cap.

The key must not be used for any function other than those described in the handbook (removing the cap from a bottle, etc.).

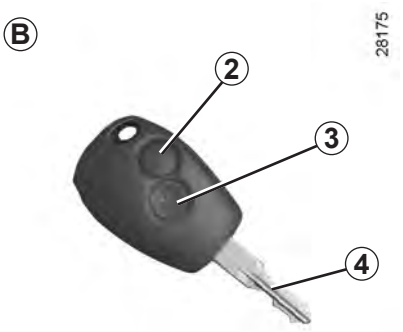

Radio frequency remote control *B*

2 Locking the doors and tailgate.
3 Unlocking the doors and tailgate.
4 Coded key for ignition switch, driver's door and fuel filler cap.

Advice

Avoid leaving the remote control in hot, cold or humid areas.

Driver's responsibility

Never leave your vehicle with the key or remote control inside and never leave a child (or a pet) unsupervised, even for a short while.

The reason for this is that the child may endanger himself or others by starting the engine, activating equipment such as the window winders for example, or locking the doors.

Risk of serious injury.

The remote control unit operating range

This varies according to the environment. It is therefore important when handling the remote control to ensure that you do not lock or unlock the vehicle by inadvertently pressing the buttons.

Interference

The presence of certain objects (metal objects, mobile telephones, or an area with strong electromagnetic radiation, etc.) close to the key may create interference and affect the operation of the system.

Replacement and additional keys or remote controls.

You must only contact an approved Dealer:

– If you need to replace a key it will be necessary to take the vehicle and all of its keys to an approved Dealer in order to initialise the system.

– depending on the vehicle, you have the option of using up to four remote controls.

Remote control unit failure

Make sure that the correct battery type is being used, and that the battery is in good condition and inserted correctly. These batteries should have a service life of approximately two years.

Refer to Section 5: “Radio frequency remote control: batteries” for the battery changing procedure.

RADIO FREQUENCY REMOTE CONTROL: use

Doors are locked and unlocked using remote control unit ***B***.

It is powered by a battery which must be replaced (refer to the information on the “Radio frequency remote control: batteries” in Section 5).

Locking the doors

Press locking button ***1***.

The hazard warning lights and side indicator lights **flash twice** to indicate that the doors have locked.

If a door or the tailgate is open or not properly shut, the doors and tailgate lock then quickly unlock and the hazard warning lights and side indicator lights do not flash.

Unlocking the doors

Press unlocking button ***2***.

The hazard warning lights and side indicator lights **flash once** to indicate that the doors have unlocked.

LOCKING AND UNLOCKING THE DOORS (1/2)

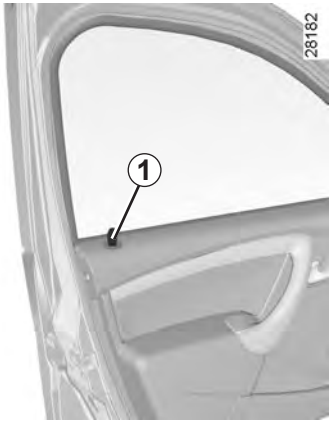

Manual locking

From the outside

Unlock the doors using the remote control (refer to information on the “Radio frequency remote control: use” in Section 1) or using the key in one of the door locks.

Depending on the vehicle, the key locks and unlocks the driver’s door or all four doors.

From the inside (depending on vehicle)

Push in button ***1*** to lock and lift button ***1*** to unlock.

Child safety

To make it impossible for the rear doors to be opened from the inside, move lever ***2*** on each door and check from the inside that the doors are securely locked.

Electric central locking

Depending on the vehicle, it can be used to simultaneously lock or unlock the four doors and the boot. Lock or unlock the doors by pressing switch ***3***.

The front door mechanism cannot be locked if the door is open.

Driver's responsibility

If you decide to keep the doors locked when you are driving, remember that it may be more difficult for those assisting you to gain access to the passenger compartment in the event of an emergency.

Opening from the outside

With the doors unlocked (refer to the information on “Locking/unlocking the doors” in Section 1).

Front: place your hand behind handle ***1*** and pull it towards you..

Rear (manual opening)**:** lift unlocking button ***2*** from the inside and move the door handle.

Opening from the inside

Front: pull handle ***3***

Rear: from the inside, lift unlocking button ***2*** and pull door handle ***3***.

Lights-on reminder buzzer

If you have left the lights on after switching off the ignition, a warning buzzer will sound when a front door is opened (to prevent the battery from discharging, etc.).

Driver’s responsibility when parking or stopping the vehicle

Never leave an animal, child or adult who is not self-sufficient alone on your vehicle, even for a short time.
They may pose a risk to themselves or to others by starting the engine, activating equipment such as the electric windows or by locking the doors.
Also, in hot and/or sunny weather, please remember that the temperature inside the passenger compartment increases very quickly.
RISK OF DEATH OR SERIOUS INJURY.

As a safety precaution, the doors should only be opened or closed when the vehicle is stationary.

ENGINE IMMOBILISER

This prevents the vehicle being driven by anyone not in possession of the vehicle's coded ignition key.

Operating principle

The vehicle is automatically protected a few seconds after the ignition is switched off.

If the vehicle does not recognise the coded ignition key, tell-tale light ***1*** will flash continuously and the engine cannot be started.

Any unauthorised work carried out on the engine immobiliser (computers, wiring, etc.) could be dangerous. Work must be carried out by qualified personnel.

System operation

When the ignition is switched on, tell-tale ***1*** lights up continuously for approximately three seconds and then goes out. The vehicle has recognised the code. You can then start the engine.

Vehicle protection

A few seconds after the ignition has been switched off, tell-tale light ***1*** will flash constantly.

The vehicle will only be protected after the ignition has been switched off.

Operating faults

After the ignition has been switched on, if warning light ***1*** continues to flash or remains continuously lit, there is a system operating fault.

In all cases, it is **essential** to contact an approved dealer as only they are qualified to repair the engine immobiliser.

If the coded ignition key is faulty, use the second key (supplied with the vehicle).

FRONT HEADRESTS

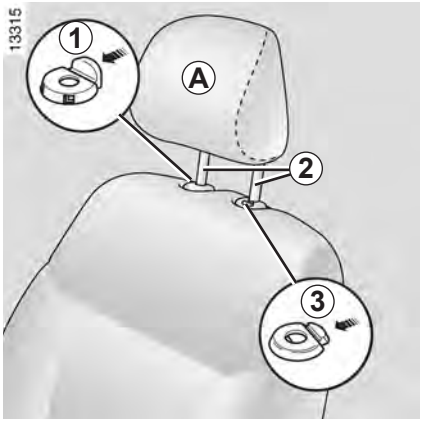

Adjusting the height of headrest *A*

Press tab ***1*** and simultaneously slide the headrest to the required position.

To raise the headrests *A* or *B*

Depending on the vehicle, press tabs ***1*** and ***2*** on the head restraint guides or on button ***3*** or ***4*** and lift the headrest to release it (tilt the seatback backwards if necessary).

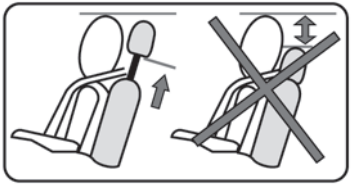

The headrest is a safety component. Ensure that it is fitted and in the correct position: the top of your head should be in line with the top of the headrest.

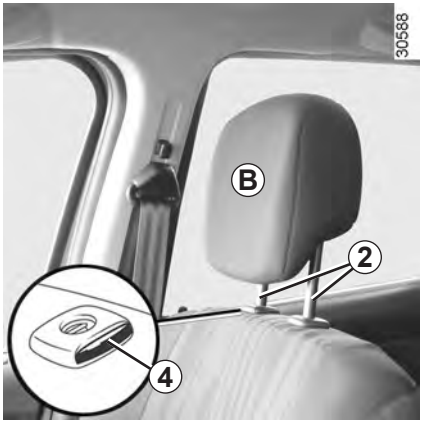

To refit headrests *A* or *B*

Insert headrest rods ***2*** into the holes (tilt the seatback backwards if necessary). Push the headrest in until it locks in position.

Headrest ***B*** is fixed and its height cannot be adjusted.

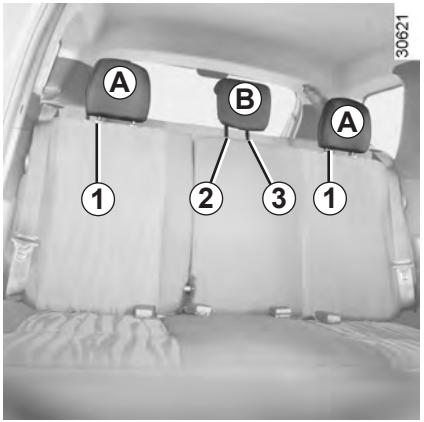

Adjusting the height of the headrests *A*

Press lock tab ***1*** and simultaneously slide the headrest to the required position.

To remove the headrests *A*

Press the tabs on the catches ***1*** and ***4*** and remove the headrest.

To remove headrest *B* (depending on vehicle)

Simultaneously press the tabs on catches ***2*** and ***3*** on each of the headrest rods, then remove the headrest.

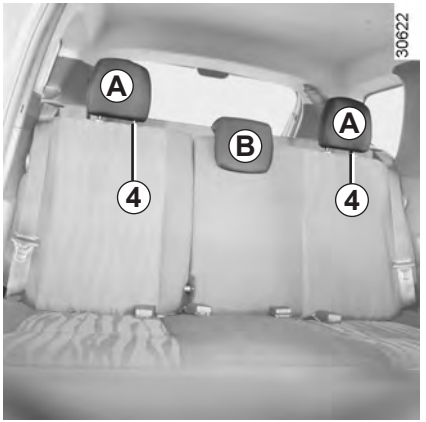

Position for using headrest *B* (depending on vehicle)

Raise the headrest until it locks to use it in the high position. Simultaneously press the tabs on catches ***2*** and ***3*** and lower the headrest completely.

Storage position for headrest *B* (depending on vehicle)

When the headrest is set at the lowest position, this is for storage only. It should not be in this position when a seat is occupied.

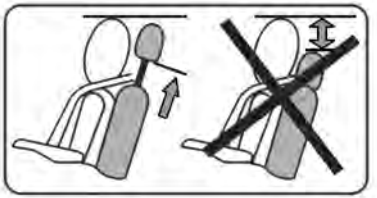

To reinstall headrests *A* and *B* (depending on the vehicle)

Insert the rods into the holes, press the tabs on both rods and lower the headrest.

The headrest is a safety component. Ensure that it is fitted and in the correct position: the top of your head should be in line with the top of the headrest.

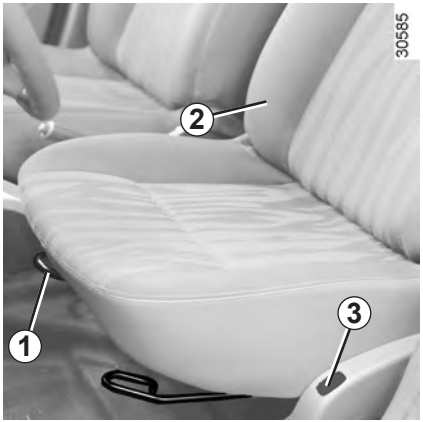

To move forwards or backwards

Lift bar ***1*** to release. Release the bar once the seat is in the correct position and ensure that the seat is fully locked into position.

To raise or lower the driver's seat surface

Depending on the vehicle, lift lever ***2***, adjust the seat base to the desired height, then release the lever.

Heated seats

Depending on the vehicle, with the ignition on, press switch ***3***.

The system, which has a thermostat, decides whether or not the heating is needed.

To tilt the seatback

Depending on the vehicle, move the handle or control knob ***4*** and tilt the seatback to the desired position.

For safety reasons, carry out any adjustments when the vehicle is not being driven.

We would advise you not to recline the seatbacks too far to ensure that the effectiveness of the seat belts is not reduced.

Make sure that the seatbacks are correctly locked in place.

Nothing should be placed on the floor (area in front of driver) as such objects may slide under the pedal during braking manoeuvres, thus obstructing its use.

Always wear your seat belt when travelling in your vehicle. You must also comply with the legislation of the particular country you are in.

Make sure that the rear bench seat is locked in position correctly so that the rear seat belts will operate efficiently. Refer to the information on the “Rear bench seat: functions” in Section 3.

Incorrectly adjusted or twisted seat belts may cause injuries in the event of an accident.

The seatbelt is for the use of one person only, whether adult or child. Even pregnant women should wear a seat belt. In this case, ensure that the lap belt is not exerting too much pressure on the abdomen, but do not allow any slack.

Before starting, adjust your driving position and then have each occupant adjust their seat belt to ensure optimum protection.

Adjusting your driving position
(depending on the vehicle)

- **Sit well back in your seat** (having removed your coat or jacket etc.). This is essential to ensure your back is positioned correctly;
- **adjust the distance between the seat and the pedals.** Your seat should be as far back as possible while still allowing you to depress the clutch pedal fully. The seatback should be adjusted so that your arms are slightly bent when you hold the steering wheel;
- **adjust the position of your headrest.** For the maximum safety, your head must be as close as possible to the headrest;
- **adjust the height of the seat.** This adjustment allows you to select the seat position which offers you the best possible view;
- **adjust the position of the steering wheel.**

Adjusting the seat belts

Sit with your back firmly against the seatback.

Shoulder strap ***1*** should be as close as possible to the base of the neck but not on it.

Lap belt ***2*** must be worn flat over the thighs and against the pelvis. The seat belt must be worn as close to the body as possible. i.e.: avoid wearing heavy clothing or keeping bulky objects under the belts, etc.

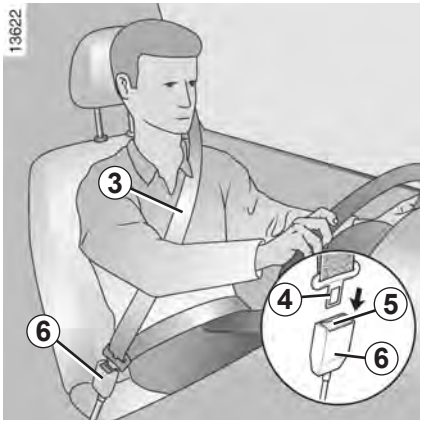

To fasten

Unwind the belt **slowly and smoothly** and ensure that buckle ***4*** locks into catch ***6*** (check that it is locked by pulling on buckle ***4***). If it jams, allow it to return before attempting to unwind it again. If your seat belt is completely jammed, pull slowly, but firmly so that just over 3 cm unwinds. Allow it to return slightly before attempting to unwind it again.

If there is still a problem, contact an approved dealer.

Adjusting the front seat belt height

(depending on the vehicle)

Move button ***7*** to select the position you require so that chest strap ***3*** is worn as described above.

Make sure that the seat belt is locked in position correctly after you have adjusted it.

Seat belt reminder light

Depending on the vehicle, it comes on when the engine is started if the driver's seat belt is not fastened. When the vehicle is being driven, it comes on and a beep sounds for approximately 2 minutes until the driver's seat belt is fastened.

Unlocking

Press button ***5*** on catch ***6***; the seat belt is wound up by the inertia reel. Guide the buckle to facilitate this manoeuvre.

Rear side seat belts

Slowly unwind belt ***8*** and click buckle ***9*** into red catch ***10***.

Rear centre seat belt *A*

(depending on vehicle)

Remove buckle ***15*** from its housing ***16***.

Slowly unwind belt ***14*** and click buckle ***15*** into black catch ***12***.

Fasten sliding buckle ***13*** into red catch ***11***.

Insert buckle ***15*** into housing ***16*** whenever the seat belt is not in use.

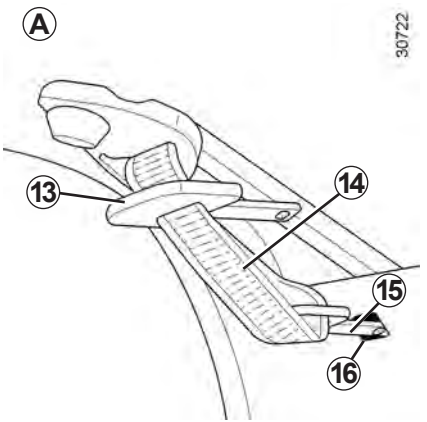

Check that the rear seat belts are positioned and operating correctly each time the rear seats are moved.

SEAT BELTS (4/4)

The following information applies to the vehicle's front and rear seat belts.

– No modification may be made to the component parts of the restraint system (belts and seats and their mountings) fitted originally. For special operations (e.g. fitting child seats) contact an approved Dealer.

– Do not use devices which allow any slack in the belts (e.g. clothes pegs, clips, etc.): a seat belt which is worn too loosely may cause injury in the event of an accident.

– Never wear the shoulder strap under your arm or behind your back.

– Never use the same belt for more than one person and never hold a baby or child on your lap with your seat belt around them.

– The belt should never be twisted.

– Following an accident, have the seat belts checked and replaced if necessary. Always replace your seat belts as soon as they show any signs of wear.

– Make sure that the buckle is inserted into the appropriate catch.

– Ensure that no objects are placed in the area around the seat belt catch as they could prevent it from being properly secured.

METHODS OF RESTRAINT IN ADDITION TO THE FRONT SEAT BELTS (1/3)

Depending on the vehicle, they are composed of:

– seat belt pretensioners;

– chest-level load limiters;

– air bags for the driver and front passenger.

These systems are designed to act independently or together when the vehicle is subjected to a frontal impact.

Depending on the severity of the impact, the system can trigger:

– seat belt locking;

– the seat belt pretensioner to hold the occupant in the seat, and the force limiter;

– the front air bag.

Pretensioner

With the ignition switched on, if the vehicle is subject to a significant frontal impact the system may, depending on the severity of the impact, trigger a piston which instantly retracts the seat belt.
The pretensioner holds the seat belt against the body, holding the occupant more securely against the seat, thus increasing the seat belt's efficiency.

Load limiter

Above a certain level of impact force, this mechanism is used to limit the force of the belt against the body so that it is at an acceptable level.

– Have the entire restraint system checked following an accident.

– No operation whatsoever is permitted on any part of the system (air bags, electronic control units, wiring) and the system components must not be reused on any other vehicle, even if identical.

– To avoid premature triggering of the system which may cause injury, only qualified Network personnel are authorisedto work on the methods of restraint in addition to the front seat belt.

– The electric trigger system may only be tested by a specially trained technician using special equipment.

– When the vehicle is scrapped, contact an approved dealer for disposal of the pretensioner and airbag gas generators.

Driver's and passenger air bags

These may be fitted to the front seats on the driver and passenger side (location ***A***).

Each air bag system consists of:

– an air bag and gas generator fitted on the steering wheel for the driver and in the dashboard for the front passenger;

– an electronic unit for system monitoring which controls the gas generator electrical trigger system;

– a special warning light ;

– remote sensors.

Operation

This system is only operational when the ignition is switched on.

If a severe **frontal** impact occurs, the air bag(s) inflate(s) rapidly, cushioning the impact of the driver's head and chest against the steering wheel and the front passenger's head against the dashboard. The air bag then deflates immediately so that the passengers are not impeded in any way when they get out of the vehicle.

The air bag system uses pyrotechnic principles. This explains why, when the air bag inflates, it will generate heat, produce smoke (this does not mean that a fire is about to start) and make a noise upon detonation. An air bag may inflate immediately, causing some minor, superficial grazing to the skin or other discomfort.

METHODS OF RESTRAINT IN ADDITION TO THE FRONT SEAT BELTS (3/3)

All of the warnings below are given so that the air bag is not obstructed in any way when it is deployed and also to prevent the risk of serious injuries caused by items which may be dislodged when the air bag deploys.

Warnings concerning the driver's air bag

– Do not modify the steering wheel or the steering wheel boss.
– Do not cover the steering wheel boss under any circumstances.
– Do not attach any objects (badge, logo, clock, telephone holder, etc.) to the steering wheel boss.
– You must not remove the steering wheel (such work must only be performed by trained personnel from our Network).
– When driving, do not sit too close to the steering wheel. Sit with your arms slightly bent (see the information on "Adjusting your driving position" in Section 1). This will allow sufficient space for the air bag to inflate properly and be fully effective.

Warnings concerning the passenger air bag

– Do not attach or glue any objects (badge, logo, clock, telephone holder, etc.) to the dashboard in the proximity of the air bag housing.
– Do not place anything between the dashboard and the passenger (pet, umbrella, walking stick, parcels, etc.).
– The passenger must not put his or her feet on the dashboard or seat as there is a risk that serious injuries may occur. In general, all parts of the body should be kept away from the dashboard (knees, hands, head etc.).
– You should reactivate the passenger air bag as soon as you remove the child seat to ensure the protection of the front passenger in the event of an impact.

A REAR-FACING CHILD SEAT MUST NOT BE FITTED TO THE FRONT PASSENGER SEAT UNLESS THE RESTRAINT SYSTEMS IN ADDITION TO THE SEAT BELT, I.E. AIR BAG, ARE DEACTIVATED.

(refer to the information on "Child safety: deactivating/activating the front passenger air bag" in Section 1)

Side air bags

These air bags may be fitted to the front seats and are deployed at the sides of the seats (door side) to protect the occupants in the event of a severe side impact.

Warnings concerning the side air bag

– **Fitting seat covers:** seats equipped with an air bag require covers specifically designed for your vehicle. Contact an approved dealer to find out if such covers are available from our Network. The use of any covers other than those designed for your vehicle (including those designed for another vehicle) may affect the operation of the air bags and reduce your protection.

– Do not place any accessories, objects, or even pets, between the seatback, the door and the internal fittings. Do not cover the seatback with objects such as clothes or accessories. This may prevent the air bag from operating correctly or cause injury when the air bag is deployed.

– No work or modification whatsoever may be carried out on the seat or internal fittings, except by qualified personnel from our Network.

ADDITIONAL METHODS OF RESTRAINT

All of the warnings below are given so that the air bag is not obstructed in any way when it is inflated and also to prevent the risk of serious injuries caused by items which may be dislodged when the air bag inflates.

The airbag is designed to complement the action of the seat belt. Both the airbags and seat belts are integral parts of the same protection system. It is therefore essential to wear the seat belt at all times. If seat belts are not worn, the occupants are exposed to the risk of serious injury in the event of an accident. It may also increase the risk of minor superficial injuries occurring when the airbag is deployed, although such minor injuries are always possible with airbags.

If the vehicle should overturn or suffer a rear impact, however severe, the pre-tensioners and air bags are not always triggered. Impacts to the underside of the vehicle, e.g. from pavements, potholes or stones, can all trigger these systems.

– No work or modification **whatsoever** may be carried out on any part of the driver or passenger air bag system (air bag, electronic unit, wiring, etc.), except by qualified personnel from our Network.

– To ensure that the system is in good working order and to avoid accidental triggering of the system which could cause injury, only qualified personnel from our Network may work on the air bag system.

– As a safety precaution, have the air bag system checked if your vehicle has been involved in an accident, or is stolen or broken into.

– When selling or lending the vehicle, inform the user of these points and hand over this driver's handbook with the vehicle.

– When scrapping your vehicle, contact your approved Dealer for disposal of the gas generator(s).

Operating faults

Indicator light ***1***, , lights up when the ignition is switched on and goes out after a few seconds.

If it does not light up when the ignition is switched on, or if it lights up when the engine is running, it indicates a fault in the system. In this case, fitting a child seat in the front passenger seat is PROHIBITED.

Contact an approved dealer as soon as possible. Your protection will be reduced until this fault is rectified.

Carrying children

Children, and adults, must be correctly seated and strapped in for all journeys. The children being carried in your vehicle are your responsibility.

A child is not a miniature adult. Children are at risk of specific injuries as their muscles and bones have not yet finished growing. The seat belt alone would not provide suitable protection. Use an approved child seat and ensure you use it correctly.

To prevent the doors being opened, use the childproof locks (refer to the information on “Locking/unlocking the doors” in Section 1).

A collision at 30 mph (50 km/h) is the same as falling a distance of 10 metres. Transporting a child without a restraint is the equivalent of allowing him or her to play on a fourth-floor balcony without railings.
Never travel with a child held in your arms. In the event of an accident, you will not be able to keep hold of the child, even if you yourself are wearing a seat belt.
If your vehicle has been involved in a road accident, replace the child seat and have the seat belts and ISOFIX fittings checked.

Never leave a child unattended in the vehicle.

Check that your child is always strapped in and that the belt or safety harness used is correctly set and adjusted. Avoid wearing bulky clothing which could cause the belts to slacken.

Never let your child put their head or arms out of the window.

Check that the child is in the correct position for the entire journey, especially if asleep.

Using a child seat

The level of protection offered by the child seat depends on its ability to restrain your child and on its installation. Incorrect installation compromises the protection it offers the child in the event of harsh braking or an impact.

Before purchasing a child seat, check that it complies with the regulations for the country you are in and that it can be fitted in your vehicle. Consult an approved dealer to find out which seats are recommended for your vehicle.

Before fitting a child seat, read the manual and respect its instructions. If you experience any difficulties during installation, contact the manufacturer of the equipment. Keep the instructions with the seat.

Set a good example by always fastening your seat belt and teaching your child:
– to strap themselves in correctly;
– to always get in and out of the car at the kerb, away from busy traffic.

Do not use a second-hand child seat or one without an instruction manual.
Check that there are no objects in the vicinity of the child seat which could impede its operation.

Never leave a child unattended in the vehicle.

Check that your child is always strapped in and that the belt or safety harness used is correctly set and adjusted. Avoid wearing bulky clothing which could cause the belts to slacken.

Never let your child put their head or arms out of the window.

Check that the child is in the correct position for the entire journey, especially if asleep.

Rear-facing child seats

A baby's head is, proportionally, heavier than that of an adult and its neck is very fragile. Transport the child in this position for as long as possible (until the age of 2 at the very least). It supports the head and neck. Choose a bucket type seat for better side protection and replace it as soon as the child's head extends past the seat shell.

Forward-facing child seats

The child's head and abdomen need to be protected as a priority. A forward-facing child seat which is firmly attached to the vehicle will reduce the risk of impact to the head. Transport your child in a forward-facing seat with a safety harness or guard depending on the child's size. Choose a bucket type seat for better side protection.

Booster cushions

From 15 kg or 4 years, the child can travel using a booster seat, which will enable the seat belt to be adapted to suit his/her size and shape. The booster seat cushion must be fitted with guides to position the seat belt on the child's thighs rather than the stomach. It is recommended that you use a seat-back fitted with a belt strap guide which can be adjusted in terms of height to position the seat belt in the centre of the shoulder. It should never rest on the neck or over the arm. Choose a bucket type seat for better side protection.

Attachment via the seat belt

The seat belt must be adjusted to ensure that it is effective in the event of harsh braking or an impact.

Ensure that the strap paths indicated by the child seat manufacturer are respected.

Always check that the seat belt is correctly fastened by pulling it up, then pulling it out fully whilst pressing on the child seat.

Check that the seat is correctly held by moving it from side to side and back to front: the seat should remain firmly fixed.

Check that the child seat has not been installed at an angle and that it is not resting against a window.

Do not use the child seat if it may unfasten the seat belt restraining it: the base of the seat must not rest on the buckle and/or catch of the seat belt.

The seat belt must never be twisted or the tension relieved. Never pass the shoulder strap under the arm or behind the back.
Check that the seat belt has not been damaged by sharp edges.
If the seat belt does not operate normally, it will not protect the child. Consult an approved dealer. Do not use this seat until the seat belt has been repaired.

No modifications may be made to the component parts of the restraint system (seat belts, ISOFIX, seats and their mountings) originally fitted.

Attachment with the ISOFIX system

Authorised ISOFIX child seats are approved in accordance with regulation ECE-R44 in one of the three following cases:
– ISOFIX universal 3-point forward-facing seat;
– ISOFIX semi-universal 2-point seat;
– specific.

For the latter two, check that your child seat can be installed by consulting the list of compatible vehicles.

Attach the child seat with the ISOFIX locks, if these are provided. The ISOFIX system allows quick, easy, safe fitting.

The ISOFIX system is composed of 2 rings for each rear side seat.

Before using an ISOFIX child seat that you purchased for another vehicle, check that its installation is authorised. Consult the list of vehicles which can be fitted with the seat from the equipment manufacturer.

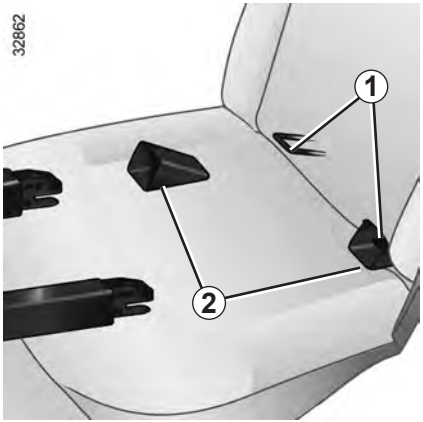

The rings ISOFIX ***1*** are located between the seatback and the seat base and are clearly visible.

To ensure your child seat can be easily fitted and locked on rings ***1***, use access guides ***2*** on the child seat.

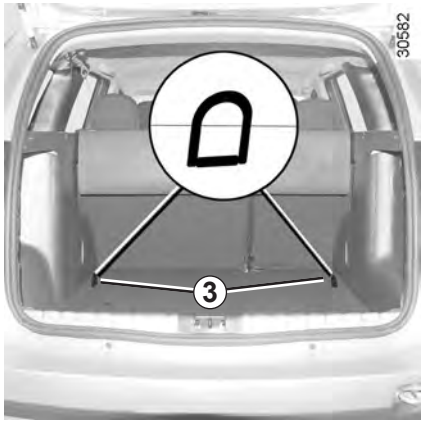

The third ring of each side seat is used to attach the upper strap on some child seats.

Pass the belt between the seatback and the luggage compartment cover.

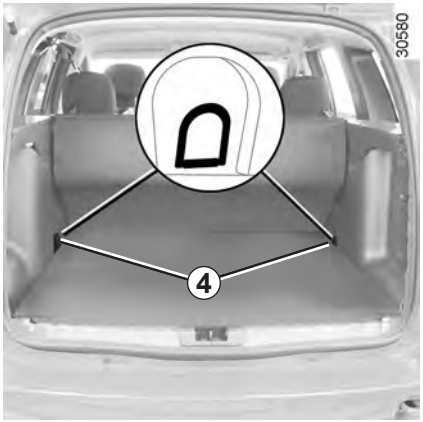

Attach the hook on the belt to one of the rings ***3*** (4x2 version) or ***4*** (4x4 version).

Pull the belt so that the back of the child seat comes into contact with the vehicle seatback.

The ISOFIX anchorage points have been exclusively designed for child seats with the ISOFIX system. Never fit a different type of child seat, seat belt or other objects to these anchorage points.

Check that nothing is obstructing the anchorage points.

If your vehicle has been involved in a road accident, have the ISOFIX anchorage points checked and replace your child seat.

It is essential to use the luggage compartment anchorage points ***3*** or ***4*** to attach the upper belt of the child seat.

It is forbidden to use other mounting points to attach this strap.

Some seats are not suitable for fitting child seats. The diagram on the following page shows you how to attach a child seat.

The types of child seats indicated may not be available. Before using a different child seat, check with the manufacturer that it can be fitted.

Fit the child seat in a rear seat wherever possible.

Check that when installing the child seat in the vehicle it is not at risk of coming loose from its base.

If you have to remove the headrest, check that it is correctly stored so that it does not come loose under harsh braking or impact.

Always attach the child seat to the vehicle even if it is not in use so that it does not come loose under harsh braking or impact.

In the front seat

The laws concerning children travelling in the front passenger seat differ in every country. Consult the legislation in force and follow the indications on the diagram on the following page.

Before fitting a child seat in this seat (if authorised):
- deactivate the front passenger air bag;
- lower the seat belt as far as possible;
- move the seat as far back as possible;
- gently tilt the seatback away from vertical (approximately 25°).

Do not change these settings after the child seat is installed.

RISK OF DEATH OR SERIOUS INJURY: before fitting a child seat in this seat, check that the air bag has been deactivated (refer to the information on “Deactivating the front passenger air bag” in Section 1).

In the rear side seat

A carrycot can be installed across the vehicle and will take up at least two seats. Position the child with his or her feet nearest the door.

Before installing a child seat in the ISOFIX anchoring points on a rear side seat, check that the seat belt buckles are not placed between the two ISOFIX anchorage points in this seat. If necessary, move the buckle for the seat concerned towards the centre of the vehicle.

Move the front seat as far forward as possible to install a rear-facing child seat, then move back the seat in front as far as it will go, although without allowing it to come into contact with the child seat.

For the safety of the child in the forward-facing seat, do not move the seat in front back past the middle of the runner, do not tilt the seatback too far (maximum of 25°) and raise the seat as much as possible.

Check that the forward-facing child seat is resting against the back of the vehicle seat and that the headrest of the vehicle is not obstructing its use.

Make sure that the child seat or the child's feet do not prevent the front seat from locking correctly. Please refer to the information on the "Front seat" in Section 1.

Rear centre seat

A child seat may only be fitted in this seat if it is equipped with an inertia-reel belt. For any additional information, contact an approved dealer.

Vehicles without air bag OR with air bag deactivated

28173

Check the status of the air bag before fitting a child seat or allowing a passenger to use the seat.

RISK OF DEATH OR SERIOUS INJURY: before installing a child/baby seat on the front passenger seat, check that the air bag has been deactivated (refer to “Deactivating the front passenger air bag” at the end of the paragraph).

Seat not suitable for fitting child seats.

U Seat which allows a child seat with “Universal” approval to be attached by a seat belt.

UD Seat which **only** allows a **rear-facing seat** with “Universal” approval to be attached with a seat belt.

(1) Only if the seat is equipped with an inertia-reel belt.

Child seat attached using the ISOFIX mounting

Seat which allows an ISOFIX child seat to be fitted.

The rear seats are fitted with an anchorage point which allows a forward-facing ISOFIX child seat with universal approval to be fitted. The anchorage points are located under the luggage compartment carpet and are indicated by a marking.

The size of the ISOFIX child seat is indicated by a letter:

– A, B and B1: for forward-facing seats in group 1 (9 to 18 kg);
– C: rear-facing seats in group 1 (9 to 18 kg);
– D and E: shell seat or rear-facing seats in group 0 or 0+ (less than 13 kg);
– F and G: cots in group 0 (less than 10 kg).

Using a child safety system which is not approved for this vehicle will not correctly protect the baby or child. They risk serious or even fatal injury.

Vehicles with passenger air bag not deactivated

Seat not suitable for fitting child seats.

RISK OF DEATH OR SERIOUS INJURY: never fit a child seat to this seat.

Child seat attached using the belt

U Seat which allows a child seat with “Universal” approval to be attached by a seat belt.

(1) Only if the seat is equipped with an inertia-reel belt.

Child seat attached using the ISOFIX mounting

Seat which allows an ISOFIX child seat to be fitted.

The rear seats are fitted with an anchorage point which allows a forward-facing ISOFIX child seat with universal approval to be fitted. The anchorage points are located under the luggage compartment carpet and are indicated by a marking.

The size of the ISOFIX child seat is indicated by a letter:

– A, B and B1: for forward-facing seats in group 1 (9 to 18 kg);
– C: rear-facing seats in group 1 (9 to 18 kg);
– D and E: shell seat or rear-facing seats in group 0 or 0+ (less than 13 kg);
– F and G: cots in group 0 (less than 10 kg).

Using a child safety system which is not approved for this vehicle will not correctly protect the baby or child. They risk serious or even fatal injury.

CHILD SAFETY: fitting a child seat (5/6)

The table below summarises the information already shown on the diagram on the previous pages, to ensure the regulations in force are respected.

Type of child seat	Weight of the child	Seat size	Front passenger seat without air bag or with air bag deactivated (1) (5)	Front passenger seat with air bag without deactivation (1) (6)	Rear side seats	Rear centre seat (7)
Carrycot fitted across the vehicle Approved for group 0	< 10 kg	F - G	X	X	U-IL (2)	U
Rear-facing shell seat Approved for group 0 or 0+	< 13 kg 9 to 18 kg	D, E	U	X	U-IL (3)	U
Rear-facing seat Approved for group 0+ and 1	9 to 18 kg	C	U	X	U-IL (3)	U
Forward-facing seat Approved for group 1	9 to 18 kg	A, B, B1	X	X	U - IUF - IL (4)	U
Booster seat Approved for group 2 and 3	15 kg to 25 kg and 22 to 36 kg	–	X	X	U (4)	U

(5) RISK OF DEATH OR SERIOUS INJURY: before fitting a child seat on the front passenger seat, check that the air bag has been deactivated (refer to the information on “Deactivating the front passenger air bag” in Section 1).

(6) RISK OF DEATH OR SERIOUS INJURY: never fit a child seat to this seat.

CHILD SAFETY: fitting a child seat (6/6)

X = Seat not suitable for fitting child seats.
U = Seat which allows a child seat with “Universal” approval to be installed using a seat belt; check that it can be fitted.
IUF = Seat which, on equipped vehicles, allows forward-facing child seats with “Universal” approval to be attached by the ISOFIX system: check that it can be fitted.
IL = On equipped vehicles, seat which allows an approved “semi-universal” or “vehicle specific” child seat to be attached using the ISOFIX system; check that it can be fitted.

Refer to the brochure “Child safety equipment” available from the Network to choose the seat suited to your child and recommended for your vehicle.

(1) Only a rear-facing child seat can be fitted in this seat: raise the seat to the maximum and position it as far back as possible, tilting the seatback slightly (approximately 25°).
(2) A carrycot can be installed across the vehicle and will take up two seats. Position the child with his or her feet nearest the door.
(3) Move the front seat as far forward as possible to install a rear-facing child seat, then move back the seat in front as far as it will go, although without allowing it to come into contact with the child seat.
(4) Forward-facing child seat; position the seatback of the child seat in contact with the seatback of the vehicle seat. Adjust the headrest, or remove it if necessary. Do not push the seat in front of the child more than halfway back on its runners and do not recline the seatback more than 25°.
(7) A child seat may only be fitted in this seat if it is equipped with an inertia-reel seat belt. For any additional information, please contact an authorised dealer.

Deactivating the front passenger air bag
(depending on vehicle)

To fit a rear-facing child seat on the front passenger seat, you **must** deactivate the front passenger air bag if your vehicle is fitted with air bag deactivation.

To deactivate the passenger airbag, with the ignition off, press and turn button ***1*** to the OFF position.

With the ignition switched back on, it is **essential** to check that warning light ***2***, , is lit up on the instrument panel.

This warning light remains continuously lit to let you know that you can fit a child seat.

The passenger air bag must be activated or deactivated with the **ignition off**.

If handled when the ignition is on, the warning light comes on.

Switch the ignition off then on again to reset the air bag in accordance with the lock position.

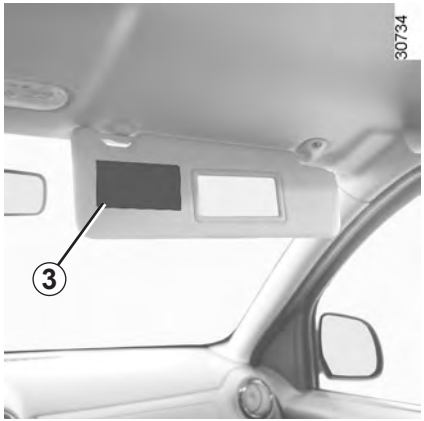

DANGER

Since front passenger air bag triggering and the position of a rear-facing child seat are incompatible, it is not permitted to fit such a seat in this position unless the vehicle is fitted with an air bag deactivation device. The child may suffer very serious injuries if the air bag inflates.

The markings on the dashboard and on each side of passenger sun visor ***3*** will remind you of these instructions.

Activation of the front passenger air bag
(depending on vehicle)

You should reactivate the airbag as soon as you remove the child seat from the front passenger seat to ensure the protection of the front passenger in the event of an impact.

To reactivate the airbag: with the vehicle at a standstill and with the ignition switched off, press and turn button ***1*** to the ON position.

With the ignition switched on, it is **essential** to check that warning light ***2***, , is off.

Operating faults

It is forbidden to fit a rear-facing child seat to the front passenger seat if the air bag activation/deactivation system is faulty.

Allowing any other passenger to sit in that seat is not recommended.

Contact your approved dealer as soon as possible.

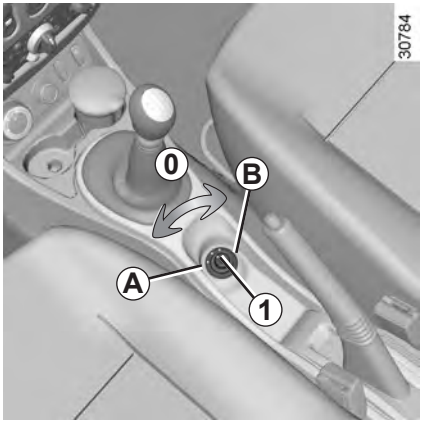

Door mirrors with electrical adjustment:

With the ignition on, move button ***1***:
– position ***A*** to adjust the left-hand door mirror;
– position ***B*** to adjust the right-hand door mirror;

0 is the neutral centre position.

Heated door mirrors

The mirror is de-iced when the rear screen is de-iced/demisted; refer to the information on the “Heated rear screen”.

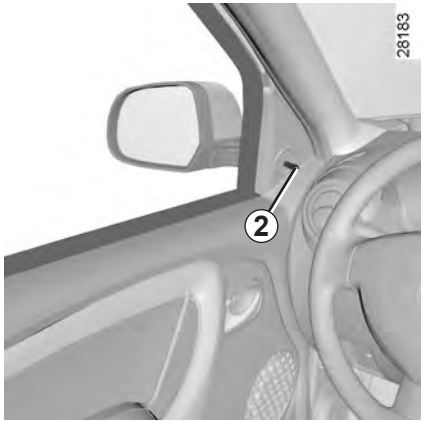

Door mirrors with manual adjustment

To adjust the mirror, move lever ***2***.

Folding door mirrors

Manually fold the mirror in the direction of the arrows.

Interior rear view mirror

Its position can be adjusted. When driving at night, to avoid being dazzled by the headlights of the vehicle behind, depress the little lever located behind the rear view mirror ***3***.

DRIVING POSITION, LEFT-HAND DRIVE (1/4)

The fittings described DEPEND ON THE VEHICLE VERSION AND COUNTRY

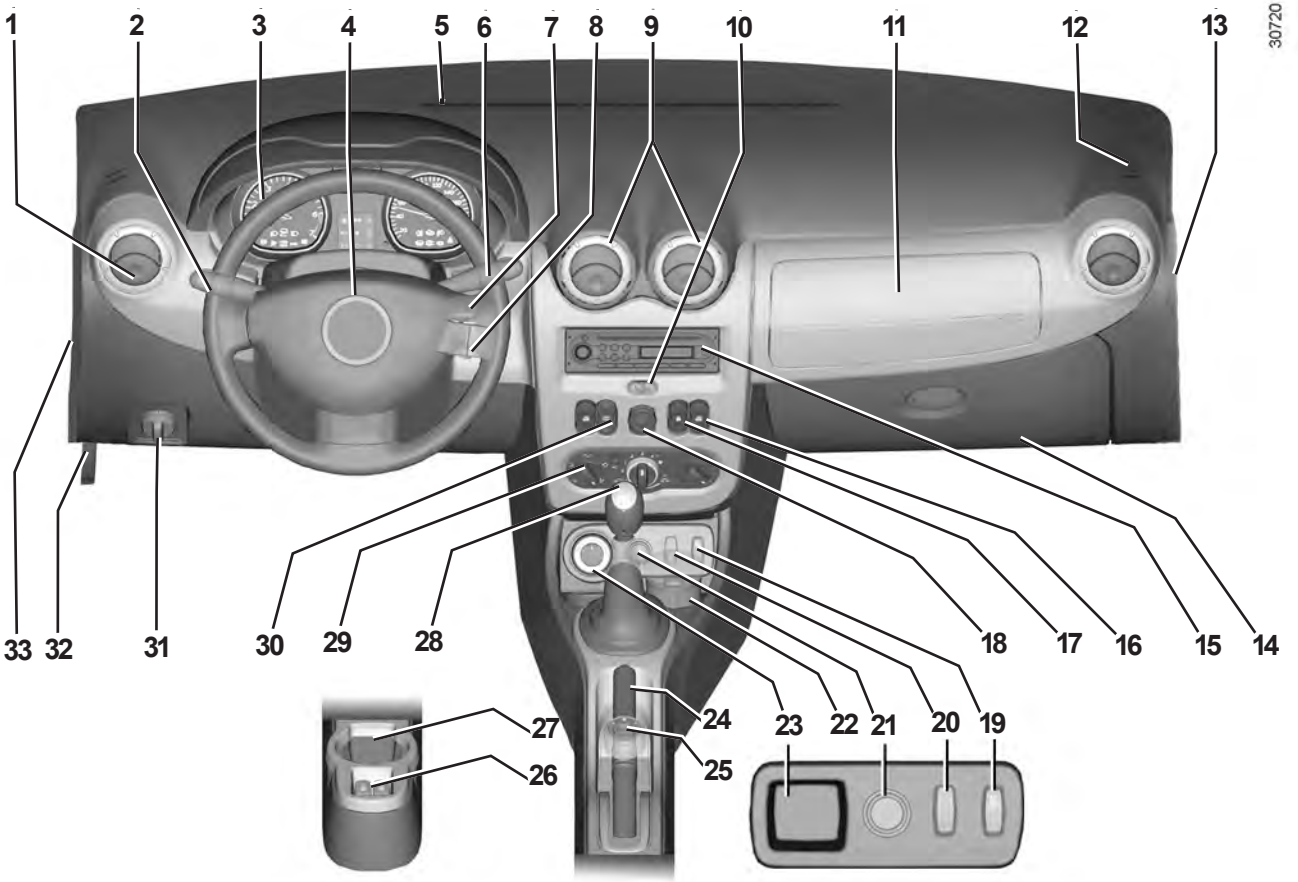

DRIVING POSITION, LEFT-HAND DRIVE (2/4)

The fittings described DEPEND ON THE VEHICLE VERSION AND COUNTRY.

1 Side air vent.

2 Stalk for:
- direction indicator lights,
- exterior lights,
- front fog lights,
- rear fog light,
- horn.

3 Instrument panel.

4 Location for driver's air bag.

5 Windscreen demister outlet.

6 Steering column stalk for windscreen and rear screen wash/wipe. Information readout control.

7 Ignition switch.

8 Radio remote control.

9 Centre air vents.

10 Seat belt reminder light.
Front passenger airbag deactivation warning light.

11 Location for passenger air bag or storage compartment.

12 Side window demister.

13 Front passenger air bag activation/deactivation lock.

14 Glove box.

15 Location for radio or storage compartment.

16 Electric front window control.

17 Central window electric locking control.

18 Hazard warning lights switch.

19 Rear window electric locking control.

20 ESP control (**4x4** version (**4WD**)) or blanking cover.

21 Cigar lighter or accessories socket.

22 Location for ashtray or cup holder.

23 **4x2** (**2WD**) and **4x4** (**4WD**) mode selector or storage compartment.

24 Handbrake.

25 Electric rear-view mirror control.

26 Electric rear window control.

27 Bottle holder

28 Gear lever.

29 Heating and ventilation controls.

30 Heated rear screen control.

31 Headlight beam height adjustment control.

32 Bonnet release.

33 Fuse box.

DRIVING POSITION, LEFT-HAND DRIVE (3/4)

The fittings described DEPEND ON THE VEHICLE VERSION AND COUNTRY

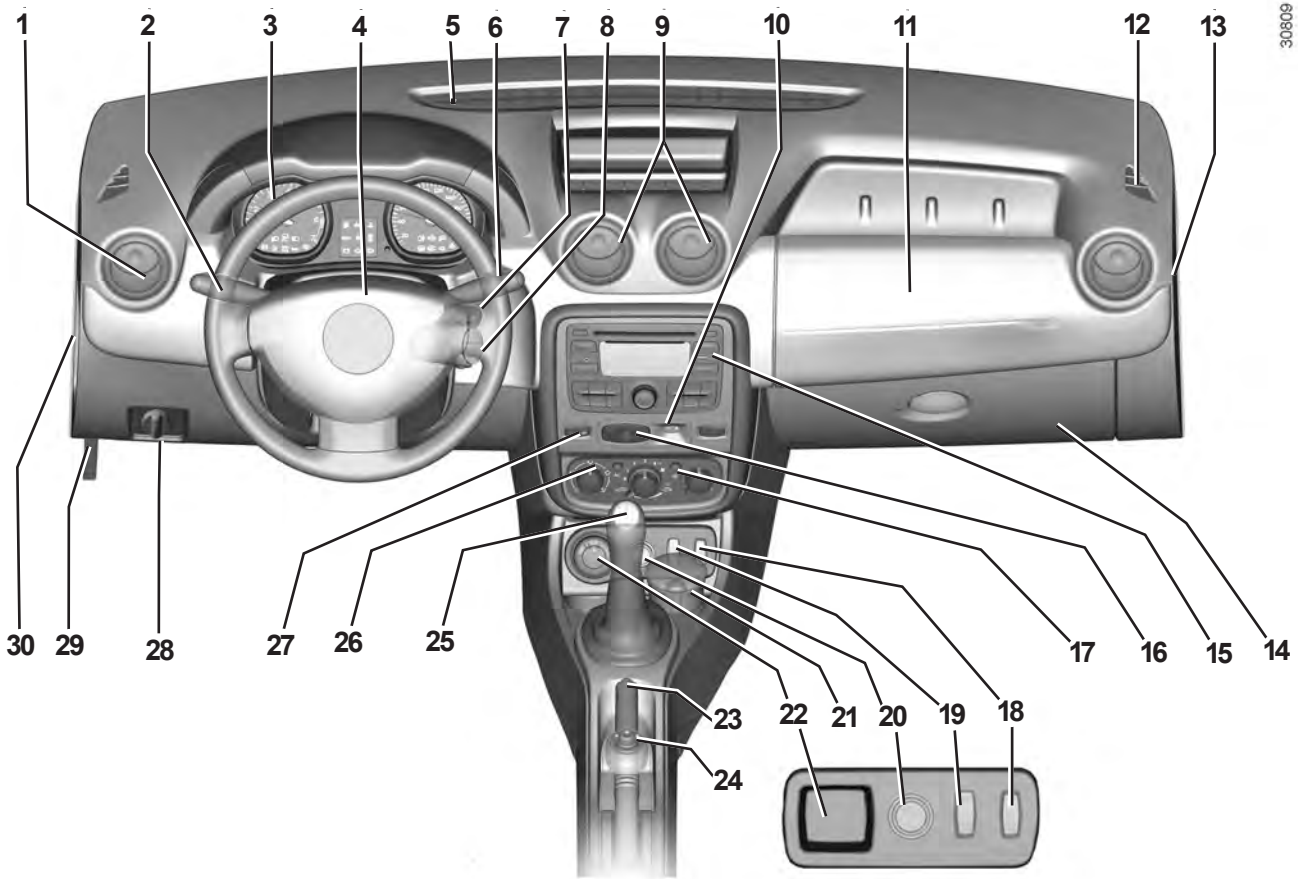

DRIVING POSITION, LEFT-HAND DRIVE (4/4)

The fittings described DEPEND ON THE VEHICLE VERSION AND COUNTRY.

1 Side air vent.

2 Stalk for:
- direction indicator lights,
- exterior lights,
- front fog lights,
- rear fog light,
- horn.

3 Instrument panel.

4 Location for driver's air bag.

5 Windscreen demister outlet.

6 Steering column stalk for windscreen and rear screen wash/wipe. Information readout control.

7 Ignition switch.

8 Radio remote control.

9 Centre air vents.

10 Seat belt reminder light. Front passenger airbag deactivation warning light.

11 Location for passenger air bag or storage compartment.

12 Side window demister.

13 Front passenger air bag activation/deactivation lock.

14 Glove box.

15 Location for radio or storage compartment.

16 Hazard warning lights switch.

17 Heated rear screen control.

18 Rear window electric locking control.

19 ESP control or blanking cover.

20 Cigarette lighter or accessories socket.

21 Location for ashtray or cup holder.

22 Mode selector **4x2** (**2WD**), **4x4** (**4WD**) or storage compartment.

23 Handbrake.

24 Electric rear-view mirror control.

25 Gear lever.

26 Heating and ventilation controls.

27 Electric central locking switch.

28 Beam height adjustment control.

29 Bonnet release control.

30 Fuse box.

WARNING LIGHTS (1/4)

The presence and operation of the warning lights DEPEND ON THE EQUIPMENT AND COUNTRY.

Warning lights on instrument panel *A*

These warning lights require you to stop immediately, for your own safety, as soon as traffic conditions allow. Switch off the engine and do not restart it. Contact an approved dealer.

Engine oil change warning light

This lights up on the instrument panel when an oil change is required.
Change the oil or have it changed as soon as possible.

Only the distance travelled between two oil changes is taken into account; the time interval between two oil changes is not.
The oil should always be changed when the first threshold is reached, i.e. either the distance travelled or the interval specified in your vehicle's maintenance document. This means you may have to change the oil before the warning light comes on.
Refer to the information on the "Oil change" in Section 4.

Anti-lock braking warning light

This light comes on when the ignition is switched on and goes out within three seconds. If it lights up when you are driving, it indicates a fault in the anti-lock braking system.
Braking will then be as normal, without the ABS.
Contact an approved dealer as soon as possible.

Dipped beam headlight tell-tale light

Main beam headlight tell-tale light

Air bag warning light

This comes on when the engine is started and goes out after a few seconds.
If it does not come on when the ignition is switched on, or comes on when the engine is running, there is a fault in the system.
Contact an approved dealer as soon as possible.

If no lights or sounds are apparent, this indicates a fault in the instrument panel. This indicates that it is essential to stop immediately (as soon as traffic conditions allow). Ensure that the vehicle is correctly immobilised and contact an approved Dealer.

WARNING LIGHTS (2/4)

The presence and operation of the warning lights DEPEND ON THE EQUIPMENT AND COUNTRY.

4-wheel drive mode indicator light

Refer to the information on “4WD Lock mode” in Section 2.

2-wheel drive mode indicator light

Refer to the information on “2WD mode” in Section 2.

Rear screen de-icing/demisting indicator light

Low fuel level warning light

It comes on when the engineis started then goes out after three seconds. If it stays on, fill up with fuel assoon as possible.

Direction indicator tell-tale light

Coolant temperature warning light

This goes out as soon as the engine starts. If it comes on when driving, it indicates an increase in the coolant temperature. Stop and let the engine idle for a minute or two; the temperature should fall.

If not, switch off the engine and allow it to cool before checking the coolant level and the cleanliness of the radiator. If the level is normal, this indicates another fault. Consult an approved dealer.

Oil pressure warning light

This goes out as soon as the engine starts; if it lights up while driving, stop immediately and switch off the ignition. Check the oil level.
If the level is normal, something else is the cause. Contact an approved dealer.

Engine immobiliser system warning light

This light performs several functions. Refer to the information on the “Engine immobiliser” in Section 1.

Electronic fault or diesel preheating warning light

With the ignition switched on, this light comes on; it indicates that the heater plugs are operating.

It goes out after preheating is sufficient and the engine can be started.

If it remains lit or comes on when you are driving, it indicates an electrical or electronic fault. Contact an approved dealer as soon as possible.

Electronic fault warning light, petrol versions

If it remains lit or comes on when you are driving, it indicates an electrical or electronic fault. Contact an approved dealer as soon as possible.

Battery charge warning light

It should go out as soon as the engine starts.

If it comes on when you are driving, it indicates that the circuit is overcharging or has discharged. Stop and contact an approved Dealer.

ESP warning light

Refer to the information on the “Electronic stability program (ESP) with understeer control and traction control (ASR)” in Section 2.

WARNING LIGHTS (3/4)

The presence and operation of the warning lights DEPEND ON THE EQUIPMENT AND COUNTRY.

Toxic Fume Filter System Warning Light

It comes on when the ignition is switched on and then goes out.

– If it comes on continuously, consult an approved dealer as soon as possible.

– If it flashes, reduce the engine speed until the light stops flashing. Contact an approved dealer as soon as possible.

Refer to the information “Advice on antipollution, fuel economy and driving” in Section 2.

Handbrake on and brake circuit incident warning light

If it lights up, check that the hand brake is fully released. If not, it indicates that the fluid level is low in one of the circuits. It may be dangerous to continue driving, contact an approved dealer.

Rear fog light tell-tale

STOP light

This lights up when the ignition is switched on and goes out as soon as the engine is started. It lights up at the same time as other warning lights, and is accompanied by a beep.

It requires you to stop immediately, for your own safety, as soon as traffic conditions allow.

Switch off the engine and do not restart it.

Consult an approved dealer.

Front fog light tell-tale

Water in the diesel filter warning light

If it remains lit or comes on while driving, it indicates that water is present in the diesel filter. Contact an approved dealer as soon as possible.

Door status warning light

This indicates the status of the doors (or tailgate).

Not used

Not used

WARNING LIGHTS (4/4)

The presence and operation of the warning lights DEPEND ON THE EQUIPMENT AND COUNTRY.

Warning lights on console *B*

Front passenger air bag deactivation warning light.

Refer to the information on “Child Safety” in Section 1.

Front seat belt reminder warning light

This warning light comes on continuously on the centre console when the engine is started. If one of the seat belts affected is not fastened, the light stays on then, when the vehicle reaches a speed of approximately 6 mph (10 km/h), it flashes and a beep sounds for approximately 90 seconds.

Rev counter *1* (rpm × 1 000)

Speedometer *2* (km or miles per hour)

Overspeed buzzer

Depending on the vehicle, a buzzer sounds for approximately 10 seconds every 30 seconds, as long as the vehicle is travelling in excess of 72 mph (120 km/h).

Fuel gauge *3*

The number of squares lit shows the fuel level. When it is at minimum, the squares disappear and the low fuel level warning light comes on.

In **4x4** (**4WD**) mode on rough terrain, there is a risk that incorrect information on the fuel level may be displayed. Wait until you are on flat ground again for a stable reading of the oil level squares.

Coolant temperature indicator *4*

The number of squares lit depends on the engine coolant temperature. There is no warning unless the last three squares light up.

Multifunction display *A*

Total mileage recorder, distance travelled trip mileometer, clock.

OR

Trip computer and warning system

Refer to the information on the “Trip computer and warning system” in Section 1.

Multifunction key *5*

– **Display selection**

By pressing the button you can shift from the total mileage recorder, trip mileometer and time or vice-versa.

– **Resetting the trip mileage recorder**

Once the trip mileage display is selected, press and hold the button.

– **Resetting the clock**

Refer to the information on the “Clock” in Section 1.

TRIP COMPUTER AND WARNING SYSTEM (1/4)

The information display DEPENDS ON THE VEHICLE EQUIPMENT AND COUNTRY.

Display *1*

General reset and trip mileage recorder reset key *2*

To reset the trip mileage recorder, the display must show the Trip mileometer function.

Press and hold button ***2***.

Display selection key *3*

Keep pressing key ***3*** briefly to scroll through the following information (depending on the vehicle) in sequence:

a) total mileage recorder,
b) trip mileage recorder,
c) fuel used,
d) average consumption,
e) estimated range,
f) distance travelled,
g) average speed.

Refer to the table on the following pages showing display examples.

The information display DEPENDS ON THE VEHICLE EQUIPMENT AND COUNTRY.

Interpreting some of the values displayed after resetting

The values showing average fuel consumption, range and average speed will become more stable and reliable the further you travel after pressing the reset button.

For the first few miles after pressing the reset key you will notice that the range increases as you travel. This range takes into account the average fuel consumption since the last time the reset button was pressed. Therefore, the fuel consumption may decrease when:

– the vehicle stops accelerating,

– the engine reaches its operating temperature (engine cold when reset button pressed),

– when driving from a built-up area onto the open road.

Therefore, if the average fuel consumption decreases, the range will increase.

– You may also notice that the average fuel consumption increases when the vehicle is stationary and the engine idling.

This is normal, since the computer takes account of fuel used during idling.

Manually resetting the journey parameters: with the display showing one of the journey parameters, press button 2 until the display is reset.

Automatically resetting the journey parameters: the reset is automatic when the capacity of one of the memories is exceeded.

TRIP COMPUTER AND WARNING SYSTEM (3/4)

The information display DEPENDS ON THE VEHICLE EQUIPMENT AND COUNTRY.

Examples of display selections by repeatedly pressing *3*	Interpreting the display
	a) Total mileage recorder.
	b) Trip mileage recorder.
	c) Fuel used since the last time the reset button was pressed.
	d) Average fuel consumption since the last time the reset button was pressed. This value is displayed after driving 400 metres and takes into account the distance travelled and the fuel used since the last time the reset button was pressed.

TRIP COMPUTER AND WARNING SYSTEM (4/4)

The information display DEPENDS ON THE VEHICLE EQUIPMENT AND COUNTRY.

Examples of display selections by repeatedly pressing *3*	Interpreting the display
24445	**e) Estimated range with remaining fuel** This range takes into account the average fuel consumption since the last time the reset button was pressed. The value is displayed after driving around 400 metres.
24446	**f) Distance travelled** since the last reset.
24447	**g) Average speed** since the last reset. The value is displayed after driving around 400 metres.

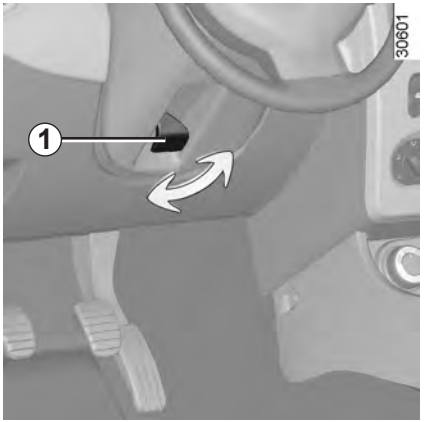

Adjusting the steering wheel

Depending on the vehicle, the steering wheel position is adjustable.

Lift lever ***1*** and place the steering wheel in the required position; raise the lever to lock the steering wheel in place.

Make sure that the steering wheel is correctly locked.

For safety reasons, only adjust the steering wheel when the vehicle is stationary.

Power Assisted Steering

With the engine running, do not leave the steering wheel at full lock while stationary as this may damage the power-assisted steering pump.

With the engine switched off, or if there is a system fault, it is still possible to turn the steering wheel. The force required will be greater.

Never switch off the ignition when travelling downhill, and avoid doing so in normal driving (assistance is not provided).

Resetting the clock

With the ignition on, select display ***1*** showing total mileage and clock.

There are two ways to set the time:

– Pressing and holding button ***2*** allows you to scroll through the hours and minutes quickly;

– short presses on button ***2*** allow you to set the time minute by minute.

If the electrical supply is cut (battery disconnected, broken supply wire, etc.), the clock will lose its time setting.

The clock must be reset.

For your safety, we recommend that you do not adjust the clock while driving.

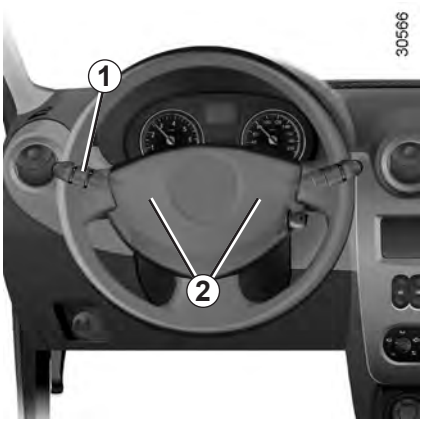

Horn

Press the end of the stalk ***1***.

Depending on the vehicle, press on one of areas ***2***.

Headlight flasher

Pull stalk ***1*** towards you to flash the headlights.

Direction indicators

Move stalk ***1*** parallel to the steering wheel and in the direction you are going to turn it.

When driving on the motorway, the steering wheel is not usually turned sufficiently to return the stalk automatically to its starting position. There is an intermediate position in which the stalk may be held when changing lanes.

When the stalk is released, it will automatically return to its starting position.

Hazard warning lights

Press switch ***3***.

This switch activates all four direction indicators and the side indicator lights simultaneously.

It must only be used in an emergency to warn drivers of other vehicles that you have had to stop in an area where stopping is prohibited or unexpected, or that you are obliged to drive under special conditions.

Side lights

Turn the end of stalk ***1*** until the symbol is opposite mark ***2***.

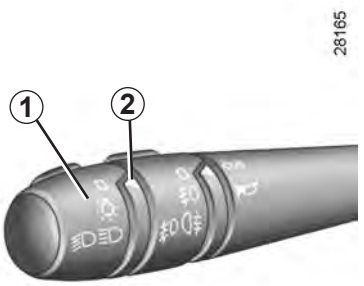

Dipped beam headlights

Turn the end of stalk ***1*** until the symbol is opposite mark ***2***.

An indicator light on the instrument panel will come on.

Main beam headlights

With stalk ***1*** in dipped beam headlights position, move the stalk towards you.

When the main beam headlights are lit up, an indicator light on the instrument panel lights up.

To return to the dipped headlight position, pull the stalk towards you again.

Switching off the lights

Return the end of stalk ***1*** to its initial position.

Lights-on warning buzzer

A warning buzzer will sound when a front door is opened and the lights are left on after the ignition has been switched off (to prevent discharge of the battery).

Before driving at night, check that the electrical equipment is operating correctly and adjust the headlight beams (if your vehicle is not carrying its normal load).

Check that the lights are not obscured (by dirt, mud, snow or objects which could cover them).

Front fog lights

Turn the centre ring of stalk ***3*** until the symbol is opposite mark ***4***.

The fog lights only light up if the exterior lights have been switched on. An indicator light on the instrument panel then lights up.

Do not forget to switch off the fog lights when they are no longer needed, to avoid inconveniencing other road users.

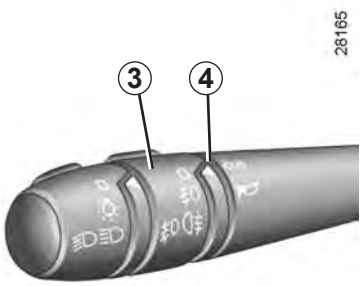

Rear fog lights

Turn the centre ring of stalk ***3*** until the symbol is opposite mark ***4***.

The fog lights only light up if the exterior lights have been switched on. An indicator light on the instrument panel then lights up.

Remember to switch off the these lights when they are no longer required to avoid inconveniencing other road users.

Turning off the fog lights

Turn centre ring ***3*** again until the symbol for the fog light or for extinction position is opposite mark ***4***.

The corresponding indicator light on the instrument panel goes out.

The front and rear fog lights switch off when the exterior lights are switched off.

ADJUSTING THE BEAM HEIGHT

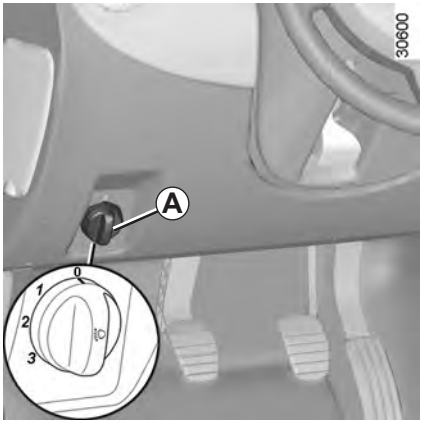

Control ***A*** is used to adjust the height of the headlight beams according to the load.

Turn control ***A*** anticlockwise to lower the beams and clockwise to raise them.

Examples of positions for adjusting control *A* according to the load	
Driver alone or with front passenger	**0**
Driver with one front passenger and one rear passenger	**0**
Driver with one front passenger and two rear passengers	**1**
Driver with one front passenger and three rear passengers	**1**
Driver with one front passenger, three rear passengers and luggage	**2**
Driver with one front passenger and luggage	**3**

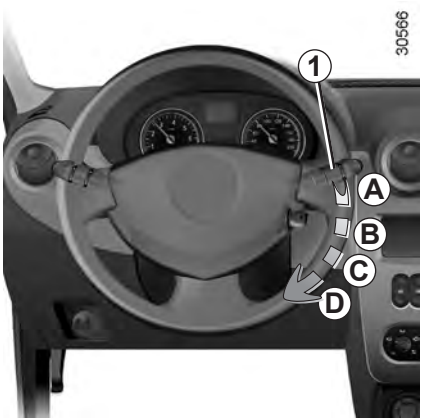

Windscreen wiper

With the ignition on, move stalk ***1*** around the steering wheel:

A Park.

B Intermittent wiping.
The wipers will pause for several seconds between sweeps.

C Normal wiping speed.

D Fast wiping speed.

Windscreen wiper

With the ignition on, pull stalk ***1*** towards you.

A brief pull will trigger a single sweep of the wipers, in addition to the windscreen washer.

A longer pull will trigger three sweeps of the wipers, in addition to the windscreen washer.

When working in the engine compartment, ensure that the windscreen wiper stalk is in position **A** (park). Risk of injury.

In frosty weather, make sure that the wiper blades are not stuck by ice (risk of motor overheating).

Keep an eye on the condition of the blades. They should be replaced as soon as they become less efficient. This will occur approximately once a year. Clean your windscreen regularly.

If you switch off the ignition before switching off the windscreen wiper (position ***A***) the blades will stop at random on the windscreen.

After switching the ignition back on, simply move stalk ***1*** to position ***A*** to place them in the park position.

Before touching the windscreen (washing the vehicle, de-icing, cleaning the windscreen, etc.) move stalk ***1*** to position **A** (park). Risk of injury and/or damage.

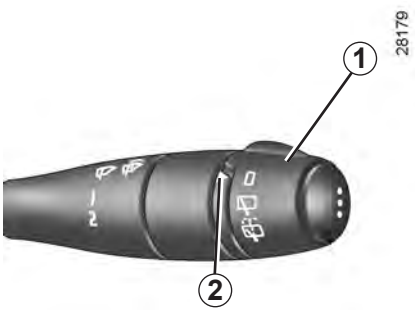

Rear screen wiper

With the ignition on, turn the end of stalk ***1*** to align the symbol with mark ***2***.

Rear screen washer/ wiper

With the ignition on, turn the end of stalk ***1*** to align the symbol with mark ***2***.

When the stalk is released, it returns to the rear wipe position.

Before using the rear wiper, check that no object is obstructing the travel of the blade.

In frosty weather, make sure that the wiper blades are not stuck by ice (to avoid the risk of the motor overheating).

Keep an eye on the condition of the blades. They should be replaced as soon as they become less efficient. This will occur approximately once a year. Clean your windscreen regularly.

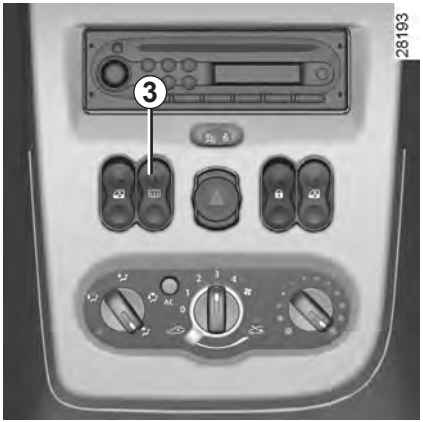

Heated rear screen

With the engine running, press button ***3*** (the indicator light on the instrument panel lights up).
This function de-ices/demists the rear screen and the electric de-icing rear-view mirrors (depending on the vehicle).

Depending on the vehicle, the function is stopped:

– automatically after it has been running for 12 minutes (the indicator light goes out);

– by pressing button ***3*** again (the indicator light goes out).

Before touching the windscreen (washing the vehicle, de-icing, cleaning the windscreen, etc.) move stalk ***1*** to position **A** (park). Risk of injury and/or damage.

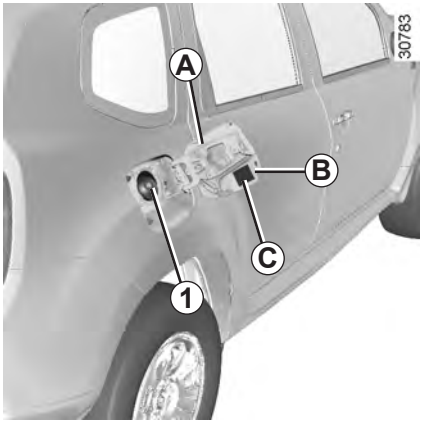

Usable capacity of the fuel tank: 50 litres approximately.

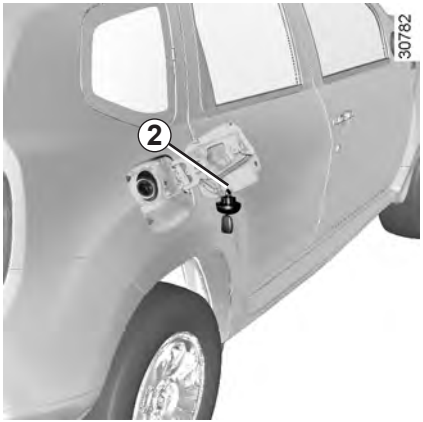

To open fuel flap ***A***, insert your finger in recess ***B***.

To close, push the fuel filler flap ***A*** by hand as far as it will go. Depending on the vehicle, the cap ***1*** is unlocked using the ignition key. If not, it will be connected to the vehicle by a strip of plastic. For details on filling the fuel tank, please refer to the information on “Filling with fuel”.

There is a cap holder ***2*** on the fuel filler flap for holding the cap when the tank is being filled.

Fuel filler cap: this is specific to the vehicle type. If you have to replace it, make sure the new cap is of the same type. Contact an approved dealer.

Never place the cap near a source of heat or flame.

Do not wash the filler area with a high-pressure washer.

Fuel grade

Always use a high-grade fuel that complies with the legislation in force in each country. It must conform to the specifications given on label ***C*** inside the fuel filler flap.

Refer to the "Engine specifications" table in Section 6.

Petrol version

It is essential to use unleaded petrol. The octane rating (RON) must conform to the specifications given on the label inside fuel filler flap ***C***.

Diesel versions

It is essential to use diesel fuel that conforms to the specifications given on the label inside fuel flap ***C***.

Vehicles running on ethanol-based fuel

Always use unleaded petrol or fuel containing a maximum of 85 percent ethanol (E85).

In very cold conditions, it may be very difficult or even impossible to start the engine.

Note: you may notice an increase in fuel consumption with this type of fuel.

When the fuel is changed the engine must adjust, which may cause minor inconveniences for a few minutes (longer starting times, cutting out, etc.).

Do not mix even small amounts of petrol (unleaded or E85) with diesel.
Do not use ethanol-based fuel if your vehicle is not compatible with this fuel.
Do not add additive to the fuel otherwise you risk damaging the engine.

Filling with fuel

Insert the nozzle to open valve ***A*** and insert it **fully** before turning it on to fill the fuel tank (risk of splashing).

Keep the nozzle in this position throughout the entire filling operation. When the pump cuts out automatically at the end of the filling procedure, a maximum of two further filling attempts may be made, as there must be sufficient space in the fuel tank to allow for expansion.

Make sure that no water enters the fuel tank during filling. The valve ***A*** and its surround must remain clean.

Petrol versions
Using leaded petrol will damage the antipollution system and may lead to a loss of warranty.

To ensure that the fuel tank is not filled with leaded petrol, the fuel tank filler neck contains a restrictor fitted with a foolproof system which **only allows the nozzle for unleaded petrol to be used** (at the pump).

Persistent smell of fuel
If you notice a persistent smell of fuel you should:
– stop the vehicle as soon as traffic conditions allow and switch off the ignition;
– switch on the hazard warning lights and ask your passengers to leave the vehicle and stay clear of the traffic;
– contact an approved Dealer.

No modifications whatsoever are permitted on any part of the fuel supply system (computers, wiring, fuel circuit, injector, protection covers, etc.) as this may be dangerous (such work must be undertaken by qualified Network personnel).

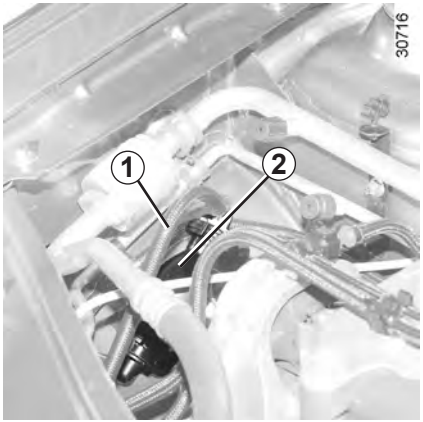

Priming bulb
(diesel version)

After a breakdown caused by completely running out of fuel, the system must be reprimed before the engine is restarted:

Note: the bulb is always located on the right-hand side of the engine compartment.

Work bulb ***2*** until the fuel runs into pipe ***1***.

If the engine does not start after several attempts, contact an approved dealer.

The engine may be hot when working in close proximity. In addition, the engine cooling fan may come on at any moment.

Risk of injury.

Section 2: Driving

(Advice on use relating to fuel economy and the environment)

Running in, Ignition switch 2.2
Starting, stopping the engine 2.3
Special features of petrol versions 2.4
Special features of diesel versions 2.5
Recommendations: emission control, fuel economy and driving 2.6
Environment 2.9
Gear lever, Handbrake 2.10
Transmission: 4-wheel drive (4WD) 2.11
Driver correction devices and aids 2.15
Automatic gearbox 2.19

Petrol version

For the first **600 miles (1,000 km)**, do not exceed 78 mph (130 km/h) in the highest gear, or 3,000 to 3,500 rpm.

You may only expect top performance from your vehicle after approximately **1,800 miles (3,000 km).**

Service intervals: refer to the Maintenance Service Booklet for the vehicle.

Diesel version

For the first **900 miles (1,500 km)**, do not exceed 2,500 rpm. After completing this mileage you may drive faster, although you may only expect top performance after approximately 3,600 miles (6,000 km).

Do not accelerate hard while the engine is still cold and do not let the engine over-rev.

Service intervals: refer to the Maintenance Service Booklet for the vehicle.

Stop and steering lock position St

To lock: remove the key and turn the steering wheel until the steering column locks.

To unlock: turn the key and the steering wheel slightly.

Accessories position A

When the ignition is switched off, any accessories (radio, etc.) will continue to function.

Ignition on position M

The ignition is switched on:

– **petrol version:** the engine may be started.

– **diesel version:** the engine is pre-heating.

Start position D

If the engine fails to start at the first attempt, the key must be turned back before the starter can be activated again.

Release the key as soon as the engine starts.

STARTING/STOPPING THE ENGINE

Starting the engine

In very cold conditions (temperatures below –20°C): so that it is easier to start the engine, switch on the ignition for several seconds **before** starting the engine.

Make sure the engine immobiliser is not activated. Refer to the information on the “Engine immobiliser” in Section 1.

Petrol injection

Engine warm or cold

– Turn the key to the start position **without depressing the accelerator**.

– Release the key as soon as the engine starts.

Diesel injection

Turn the ignition key to ignition “On” position **M**, and hold this position until the preheating warning light goes out.

Turn the key to starter position **D without depressing the accelerator pedal.**

Release the key as soon as the engine starts.

Stopping the engine

With the engine idling, turn the key back to “Stop” position **St**.

Never leave your vehicle with the key or remote control inside and never leave a child (or a pet) unsupervised, even for a short while.

The reason for this is that the child may endanger himself or others by starting the engine, activating equipment such as the window winders for example, or locking the doors.

Risk of serious injury.

Never switch off the ignition before the vehicle has stopped completely. Once the engine has stopped, the brake servo, power assisted steering and passive safety equipment such as air bags will no longer operate.

The steering is locked when the key is removed.

The following operating conditions:

– driving for long periods when the low fuel level warning light is lit;
– using leaded petrol;
– using oil or fuel additives which are not approved by the manufacturer.

Or operating faults such as:

– faulty ignition system, running out of fuel or disconnected spark plugs resulting in the engine misfiring or cutting out when driving;
– loss of power,

may cause the catalytic converter to overheat, reducing its efficiency **which may irreparably damage it and cause heat damage to the vehicle.**

If you notice any of the above operating faults, have the necessary repairs carried out as soon as possible by an approved Dealer.

These faults may be avoided by regularly taking your vehicle to your approved dealer at the intervals specified in your Maintenance Service Document.

Starting problems

To avoid damaging the catalytic converter, **do not** keep trying to start the engine (using the start button, or by pushing or towing the vehicle) **without having identified and corrected the starting fault.**

If the fault cannot be identified, do not continue to try and start the engine, but contact an approved dealer.

Do not park the vehicle or run the engine in locations where combustible substances or materials such as grass or leaves can come into contact with a hot exhaust system.

SPECIAL FEATURES OF DIESEL VERSIONS

Diesel engine speed

Diesel engines are fitted with an injection pump **which prevents the engine speed being exceeded** irrespective of the gear selected.

If the and warning lights come on, consult an approved dealer as soon as possible.

When driving, depending on the fuel grade used, it is possible that white smoke may be emitted.

This is due to the exhaust particle filter being cleaned automatically, and does not affect the way the vehicle runs.

Running out of fuel

If the **tank has been completely drained**, the system must be reprimed after the tank is refilled: see information on the “Fuel tank” in Section 1 before restarting the engine.

Precautions to be taken in winter

To avoid any faults in icy weather:

– ensure that the battery is always fully charged;

– always keep the diesel tank relatively full to avoid water vapour condensing in it and accumulating at the bottom of the tank.

Do not park the vehicle or run the engine in locations where combustible substances or materials such as grass or leaves can come into contact with a hot exhaust system.

ADVICE: antipollution, fuel economy and driving (1/3)

By virtue of its design, moderate fuel consumption and initial settings, your vehicle conforms to current antipollution regulations. The manufacturer is actively striving to reduce pollutant exhaust gas emissions and to save energy. But the fuel consumption of your vehicle and the level of pollutant exhaust gas emissions are also your responsibility. Ensure that it is maintained and used correctly.

Maintenance

It should be noted that failure to respect antipollution regulations may lead to legal action being taken against the vehicle owner. In addition, replacing engine, fuel supply system and exhaust components with parts other than those originally recommended by the manufacturer may alter your vehicle so that it no longer complies with antipollution standards. Have your vehicle adjusted and checked by an authorised dealer, in accordance with the instructions given in your maintenance schedule: they will have all the equipment necessary for ensuring that your vehicle is maintained to its original standard.

Engine adjustments

Air filter, diesel filter: a choked element hinders performance. It must be replaced.

Exhaust gas monitoring system

The exhaust gas monitoring system will detect any operating faults in the vehicle's antipollution system.

If this system malfunctions, toxic substances may be released into the atmosphere or damage may occur.

This warning light on the instrument panel will indicate if there are any faults in the system:
This lights up when the ignition is switched on and goes out when the engine is started.

– If it lights up continuously, consult an approved Dealer as soon as possible;

– if it flashes, reduce the engine speed until the light stops flashing. Contact your approved dealer as soon as possible.

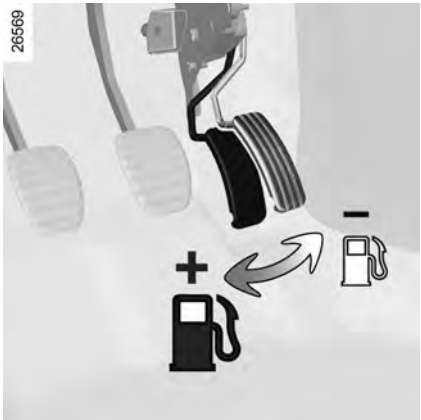

Driving

– Drive carefully for the first few miles until the engine reaches its normal operating temperature, rather than let it warm up while the vehicle is stationary.

– Speed is expensive.

– Sporty driving uses a lot of fuel: drive with a light right foot.

– Brake as little as possible. If you anticipate an obstacle or bend in advance, you may then simply release the accelerator pedal.

– Avoid sudden acceleration.

– Double declutching and accelerating before switching off are unnecessary in modern vehicles.

– Do not try to maintain the same speed up a hill, accelerate no more than you would on the level. Keep your foot in the same position on the accelerator pedal.

– Do not overrev the engine in the intermediate gears. Always use the highest gear possible without labouring the engine.

On versions with an automatic gearbox, it is preferable to keep the gear lever in position **D**.

Driving problems

On the driver's side, only use mats specially adapted for the vehicle and attached to prefitted devices. Check regularly to make sure they are secure. Do not overlay several mats.

Risk of pedals jamming.

Vehicles with 4x4 (4WD) transmission

On flat, level ground, with the vehicle unladen, you are recommended to start in second gear.

Your vehicle has a greater ground clearance than an ordinary passenger vehicle. This gives it a higher centre of gravity, making it more susceptible to rolling during sudden or aggressive manoeuvres, or when cornering at high speeds.

Take extra care when the vehicle is loaded (in particular when the load is on the roof).

Ensure that all passengers are wearing their seat belts.

A label affixed to the sun visor reminds you of this.

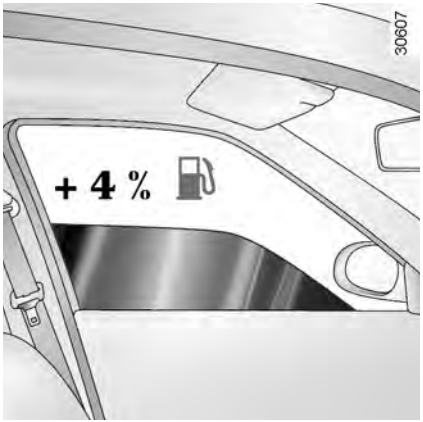

Advice on use

– Electricity is fuel; switch off all the electrical components which are not really needed. **However** (safety first), keep your lights on when the visibility is bad (“see and be seen”).

– Use the air vents. Driving with the windows open at 60 mph (100 km/h) will increase fuel consumption by 4%.

– **In vehicles fitted with air conditioning,** it is normal to observe an increase in fuel consumption (especially in urban conditions) when it is used. For vehicles fitted with manual air conditioning, switch off the system when it is not required.

Advice for reducing consumption and therefore helping to preserve the environment:

If the vehicle has been parked in the sun, open the doors for a few moments to let the hot air escape before starting the engine.

– Never fill the fuel tank right to the brim to avoid overflow.

– Do not leave an empty roof rack fitted to the vehicle.

– It is better to fit a trailer for bulky objects.

– When towing a caravan, fit a wind deflector and adjust it carefully.

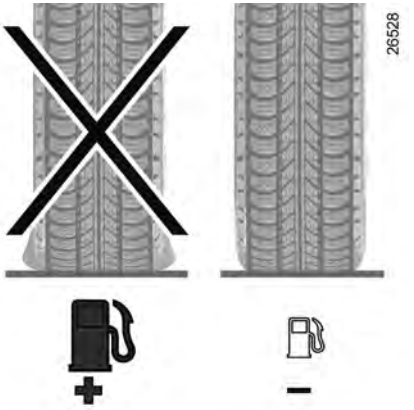

– Avoid using the vehicle for door-to-door journeys (short journeys, with long stops in-between) because in these conditions, the engine never reaches its ideal temperature.

Tyres

Increased fuel consumption could be the result of:

– insufficient pressure,

– using non-recommended tyres.

31236

Your vehicle has been designed with respect for the **environment** in mind for its entire service life: during production, use and at the end of its life.
This commitment is illustrated by the Dacia eco² group signature.

Manufacture

Your vehicle has been manufactured at an industrial site which uses a progress policy to reduce environmental impacts on rivers and natural areas (reduction of water and energy consumption, visual and noise pollution, atmospheric emissions and waste water, sorting and reusing waste).

Emissions

Your vehicle has been designed to emit fewer greenhouse gases (CO2) while in use, and therefore to consume less fuel (e.g. 140 g/km, equivalent to 5.3 l/100 km for a diesel vehicle).
Our vehicles are also equipped with a particle filter system including a catalytic converter, an oxygen sensor and an active carbon filter (the latter prevents vapour from the fuel tank being released into the open air).

For certain diesel vehicles, this system also has a particle filter to reduce the volume of soot particles emitted.

Please make your own contribution towards protecting the environment too.

– Worn parts replaced in the course of routine vehicle maintenance (battery, oil filter, air filter, batteries, etc.) and oil containers (empty or filled with used oil) must be disposed of through specialist organisations.
– At the end of the vehicle's service life, it should be sent to approved centres to ensure that it is recycled.
– In all cases, comply with local legislation.

Recycling

Your vehicle is 85% recyclable and 95% recoverable.

To achieve these objectives, many of the vehicle components have been designed to enable them to be recycled. The materials and structures have been carefully designed to allow these components to be easily removed and reprocessed by specialist companies. In order to preserve raw material resources, this vehicle incorporates numerous parts made from recycled plastics or renewable materials (vegetable or animal-derived materials such as cotton or wool).

To select reverse gear
(vehicle stationary)

Follow the grid shown on knob ***1***.

The reversing light will come on as soon as reverse gear is selected (ignition on).

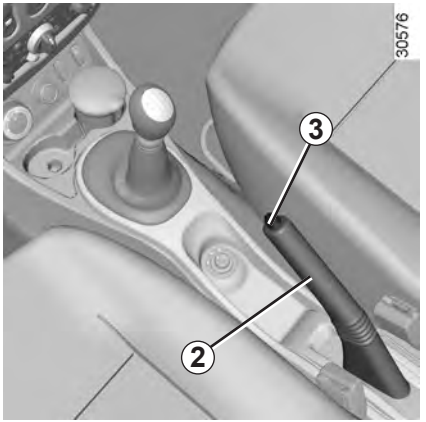

Handbrake

To release

Pull lever ***2*** up slightly, press button ***3*** and then lower the lever to the floor.

To apply

Pull lever ***2*** upwards and make sure the vehicle is immobilised.

An impact to the underside of the vehicle (eg. striking a post, raised kerb or other street furniture) may result in damage to the vehicle (eg. deformation of an axle).

To prevent any risk of accident, have your vehicle checked by an approved dealer.

When driving, make sure the handbrake is completely released.

Risk of overheating.

When the vehicle is stopped, depending on the gradient and/or the vehicle load, it may be necessary to apply the handbrake by at least two further notches and engage a gear (1st or reverse).

Remember that driving a vehicle off-road is very different to driving it on the road.

To make the most of your vehicle in an off-road situation, we recommend that you are trained to drive a 4x4 (4WD) vehicle.

The safety of both you and your passengers is your responsibility, and depends on your skill and the care you take when driving off-road.

4x2 (2WD) and 4x4 (4WD) mode selector

Depending on the road conditions, turning selector ***1*** enables the following modes to be selected:

– 2WD;

– AUTO;

– 4WD Lock.

“AUTO" mode

To activate this mode, turn selector 1 to the “**AUTO**” position.

Operating principle

“AUTO” mode automatically distributes the engine torque between the front and rear axles according to the road conditions and the vehicle speed. This position optimises roadholding. Use this mode on any type of road (dry, snow-covered, slippery, etc.) or when towing (trailer or caravan). This mode is not indicated on the instrument panel.

“2WD" mode

To activate this mode, turn selector ***1*** to the “2WD" position. The **2WD** indicator light will light up on the instrument panel.

Operating principle

The “2WD” mode uses the front wheels only. Use this mode on dry roads with good grip.

To deactivate this mode, turn selector ***1*** to the “AUTO” position. The 2WD indicator light on the instrument panel goes out.

“4WD Lock" mode

To activate this mode, turn selector ***1*** to the “4WD Lock” position. The selector the returns to the “AUTO” position. The 4WD LOCK indicator light will light up on the instrument panel.

Operating principle

“4WD Lock” mode distributes the engine torque between the front and rear axles in order to optimise the performance capacity of the vehicle in off-road situations. This mode should only be used in extreme driving conditions (mud, steep slopes, sand).
To deactivate this mode, turn selector ***1*** to the “4WD Lock” position again. The indicator light on the instrument panel goes out. When the engine is switched off, the system stays in “4WD Lock” mode for one minute.

After one minute, the system switches to “2WD” or “AUTO” mode depending on the position of the selector.

Note: if the vehicle speed exceeds 36 mph (60 km/h) in 4WD Lock mode, the system automatically switches back to AUTO mode. The 4WD LOCK indicator light goes out.

Special features of the 4-wheel drive transmission

The vehicle may make more noise when the “AUTO" or "4WD Lock" modes are activated. This is normal. If the system detects a difference in the dimensions of the front and rear wheels (eg. underinflation, severe wear on an axle), the system automatically switches to "2WD" mode.

The 2WD and warning lights on the instrument panel come on. Drive as soon as possible at a moderate speed to an approved dealer.

This problem may be resolved by changing the tyres. Always use four identical tyres (same brand, profile, etc.) and with similar wear.

In the event of excessive wheelspin, the mechanical components may be overheating.

If this happens:

– at first, the 4WD LOCK warning light flashes. “4WD Lock” mode is still active, however we recommend that you stop as soon as possible to allow the system to cool down (until the warning light stops flashing);

– if the wheels still spin, the system automatically switches to “2WD” mode to protect the mechanical components.

  The 2WD warning light flashes. The mode cannot be changed while the light is flashing.

In this case, we recommend that you stop as soon as possible to allow the system to cool down (until the warning light stops flashing).
Cooling may take up to five minutes.
If the system detects excessive wheelspin on the front wheels, it adapts the engine to run in a way that reduces wheelspin.

Anti-lock braking in "LOCK**" mode (vehicles equipped with** ABS**)**

When "4WD Lock" mode is active, the ABS switches to off-road mode. In this case, the wheels may lock intermittently to achieve better grip, thus reducing braking distances on soft ground. When this mode is active:
– the vehicle's manoeuvrability is limited during braking. This operating mode is therefore not recommended in very low-grip conditions (eg. ice).
– there may be some noise. This is normal, and does not indicate an operating fault.

Electronic stability program and traction control when driving off-road
(vehicles equipped with ESP)

When driving on soft ground (sand, mud, deep snow), we recommend that you deactivate the ESP function by pressing the "ESP" switch.

In this case, only individual wheel braking remains active. This function applies the brake to any wheel that is slipping, allowing the engine torque to be transferred to the wheels with the most grip. This is particularly useful when crossing a bridge.

All the ESP functions will be reactivated when the vehicle speed reaches approximately 30 mph (50 km/h), (36 mph (60 km/h) in "4WD Lock" mode), or when the engine is restarted, or when the "ESP" button is pressed again.

Operating faults

If the system detects an operating fault, it automatically switches to "2WD" mode, and the 2WD and warning lights come on.

Drive as soon as possible at a moderate speed to an approved dealer.

For certain operating faults, the system may not be able to switch to "2WD" or "4WD Lock" mode. "AUTO" mode remains active.

Contact an approved dealer as soon as possible.

All-wheel drive system

– Irrespective of the mode selected, do not start the engine if one or more wheels are not in contact with the ground (eg. when the vehicle is on a jack or roller bench).

– Do not turn the mode selector when cornering, reversing or if the wheels are spinning excessively. Only select the “2WD”, “AUTO” or “4WD Lock” mode when the vehicle is being driven in a straight line.

– Only use tyres which meet the required specifications.

– “4WD Lock” mode is reserved solely for use **off-road.** The use of this mode in any other conditions may adversely affect the vehicle’s manoeuvrability and damage its mechanical components.

– Always ensure tyres with identical specifications are fitted to all four wheels (brand, size, structure, wear etc.). Fitting tyres of different sizes to the front and rear wheels and/or left and right wheels may have serious consequences for the tyres, gearbox, transfer gearbox and the rear differential pinions.

Depending on the vehicle, this is composed of:

- **the ABS (anti-lock braking system);**
- **the emergency brake assist;**
- **the ESP (electronic stability program) with understeer control and traction control ASR.**

These functions are an additional aid in the event of critical driving conditions, enabling the vehicle behaviour to be adapted to suit the driving conditions.

However, the functions do not take the place of the driver. **They do not increase the vehicle's limits and should not encourage you to drive more quickly.** Therefore, they can under no circumstances replace the vigilance or responsibility of the driver when manoeuvring the vehicle (the driver must always be ready for sudden incidents which may occur when driving).

ABS (anti-lock braking system)

Under heavy braking, the ABS prevents the wheels from locking, allowing the stopping distance to be managed and keeping control of the vehicle. Under these circumstances, the vehicle can be steered to avoid an obstacle whilst braking. In addition, this system can increase stopping distances, particularly on roads with low surface grip (wet ground etc.).

You will feel a pulsation through the brake pedal each time the system is activated. The ABS does not in any way improve the vehicle's physical performance relating to the road surface and roadholding. It is still **essential** to follow the rules of good driving practice (such as driving at a safe distance from the vehicle in front etc.).

In an emergency, apply **firm and continuous pressure** to the brake pedal. There is no need to pump it repeatedly. The ABS will modulate the force applied in the braking system.

Special feature of 4-wheel drive vehicles

In 4WD Lock mode, the system may lock the wheels briefly to optimise the braking distance on very wet ground (snow, mud, sand, etc.).

Operating faults

– If the warning light on the instrument panel comes on while you are driving, **the brakes will still work normally without ABS;**

– If the and warning lights on the instrument panel come on while you are driving, **there is a fault in the braking system.**

In both cases, consult an approved Dealer.

Your braking systems are partially operational. However, it is **dangerous to brake suddenly** and it is essential to stop immediately, as soon as traffic conditions allow. Contact an approved dealer.

Emergency brake assist with electronic brake distribution

(depending on the vehicle)

This system supplements the ABS and helps reduce vehicle stopping distances.

Operating principle

The system is for detecting an emergency braking situation. In this case, the braking assistance immediately develops maximum power and may trigger ABS regulation.

ABS braking is maintained as long as the brake pedal is applied.

Electronic stability program ESP with understeer control and traction control ASR

Electronic Stability Program ESP (depending on the vehicle)

This system helps you to keep control of the vehicle in critical driving conditions (avoiding an obstacle, loss of grip on a bend, etc.).

Understeer control

This system optimises the action of the ESP in the case of pronounced understeering (loss of front axle road holding).

Traction control ASR

This system helps to limit wheelspin of the drive wheels and to control the vehicle when pulling away accelerating or decelerating.

Deactivating the function

Deactivating the ASR traction control function also deactivates the ESP function (refer to the following page).

Special feature of 4-wheel drive and 2-wheel drive vehicles (depending on the vehicle)

Disabling the ESP function

In some situations (driving on very wet ground: snow, mud, etc. or driving with snow chains fitted), the system may reduce the engine output to limit wheelspin. If this is not required, it is possible to deactivate the function by pressing switch ***1***.

The warning light on the instrument panel comes on to warn you of this.

If you deactivate this function, the ASR traction control function will also be deactivated.

As the 'ESP and ASR provide enhanced safety, it is not advisable to drive with the function switched off. Correct this as soon as possible by pressing switch ***1*** again.

Note: the function is automatically re-activated when the ignition is switched on, or when the speed exceeds 30 mph (50 km/h) in AUTO and 2WD modes, and approximately 36 mph (60 km/h) in 4WD Lock mode.

Operating principle

A sensor in the steering wheel detects the direction selected by the driver.

Other sensors throughout the vehicle measure the actual direction.

The system compares driver input to the actual trajectory of the vehicle and corrects the trajectory if necessary by controlling the braking of certain wheels and/or engine power. In the event that the system is engaged, indicator light flashes on the instrument panel.

Operating faults

When the system detects an operating fault, warning lights and light up on the instrument panel. In this case, the ESP and ASR are deactivated.

Please consult an authorised dealer if these warning lights remain displayed on the instrument panel after the ignition is switched off and on again.

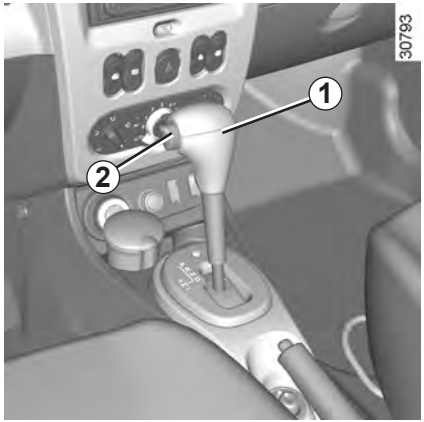

Selector lever *1*

Display ***3*** on the instrument panel shows the mode and gear selected.

P: park

R: reverse

N: neutral

D: automatic mode

***4*:** zone displaying gearbox mode or gear engaged in manual mode.

Operation

With the gear lever in position **P** or **N**, switch on the ignition.

With your foot on the brake pedal, move the lever out of position **P**.

Only engage D or R when the vehicle is stopped, with your foot on the brake and the accelerator pedal released.

You must apply the brake before pressing the unlocking button *2* to move out of position P.

Driving in automatic mode

Move lever ***1*** to position **D**.

In the majority of traffic conditions, you will not have to touch the gear selector lever again: the gear will be changed automatically at the right time and at the most suitable engine speed because the automatic system takes into account the vehicle load and road contour and adjusts itself to the particular driving style you have chosen.

Economical driving

When driving, leave the lever in position **D**, keeping the accelerator pedal lightly depressed to ensure automatic gear changes at comparatively low engine speeds.

Accelerating and overtaking

Depress the accelerator pedal firmly and fully (so that it goes beyond the kickdown point).

This will enable you to change down to the optimum gear within the engine range.

For safety reasons, do not switch off the ignition before the vehicle has come to a complete standstill.

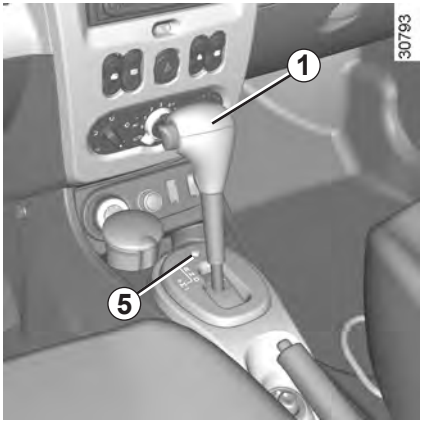

Driving in manual mode

With selector lever ***1*** in position **D**, move the lever to the left.
Shifting the lever repeatedly allows you to change gears manually:

– To move down through the gears, push the lever backwards;

– to move up through the gears, push the lever forwards.

The gear selected is displayed on the instrument panel.

Special cases

In certain driving conditions (e.g.: to protect the engine) the “automated system” may change the gear automatically.

Likewise, to prevent incorrect manoeuvres, a gear change may be refused by the automatic system: in this case the gear display flashes for a few seconds as a warning.

Special circumstances

– **Snow position:** if you are driving on ground where there is a risk of skidding (snow, mud, etc.), press switch ***5*** and warning light ***6*** will come on.
Once these special driving conditions no longer apply, exit this function by pressing switch *5* again. Warning light *6* goes out.

– **If the road contour and bends in the road** do not allow you to stay in automatic mode (e.g.: in mountainous areas), it is recommended that you switch to manual mode.
This will prevent the automatic gearbox from changing gears repeatedly when climbing, and permit engine braking on long descents.

– **In cold weather**, start the engine and wait a few seconds before moving the selector lever from position **P** or **N** and engaging it in **D** or **R** to prevent the engine stalling.

– **Vehicles not fitted with traction control:** on a slippery surface or surface with a low level of adhesion, change to manual mode and select second gear (or even third) before starting the engine to avoid wheelspin when accelerating.

In very cold weather, the system may prevent the gears from being shifted in manual mode until the gearbox reaches the right temperature.

Parking the vehicle

When the vehicle is stopped, move the lever to position **P** while keeping your foot on the brake pedal: the gearbox is in neutral and the drive wheels are mechanically locked by the driveshaft.
Apply the handbrake.

For safety reasons, do not switch off the ignition before the vehicle has come to a complete standstill.

An impact to the underside of the vehicle while manoeuvring (e.g.: striking a post, raised kerb or other street furniture) may result in damage to the vehicle (e.g.: deformation of an axle).

To avoid any risk of accident, have your vehicle checked by an approved Dealer.

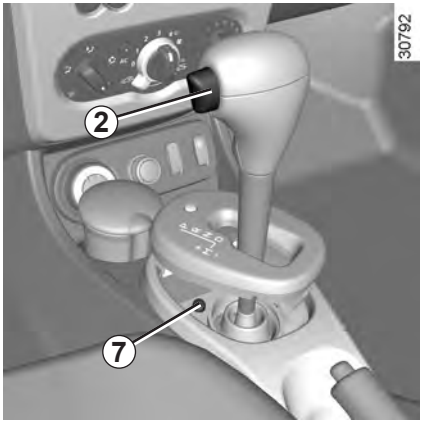

Operating faults

If a vehicle with an automatic gearbox breaks down, please refer to the information on “Towing” in Section 5.
When setting off, if the lever is locked in position **P** when you are pressing the brake pedal, the lever can be released manually. To do this, unclip the base of the lever, and press recess ***7*** and the unlocking button ***2*** simultaneously.

Section 3: Your comfort

Air vents, air outlets 3.2
Air conditioning: information and advice on use 3.8
Windows 3.9
Interior lighting 3.12
Sun visor, Grab handle 3.13
Ashtrays, Cigarette lighter, Accessories socket 3.14
Passenger compartment storage space and fittings 3.15
Rear bench seat 3.19
Boot 3.20
Transporting objects in the boot 3.21
Luggage cover 3.22
Roof bars 3.24

AIR VENTS, air outlets (1/2)

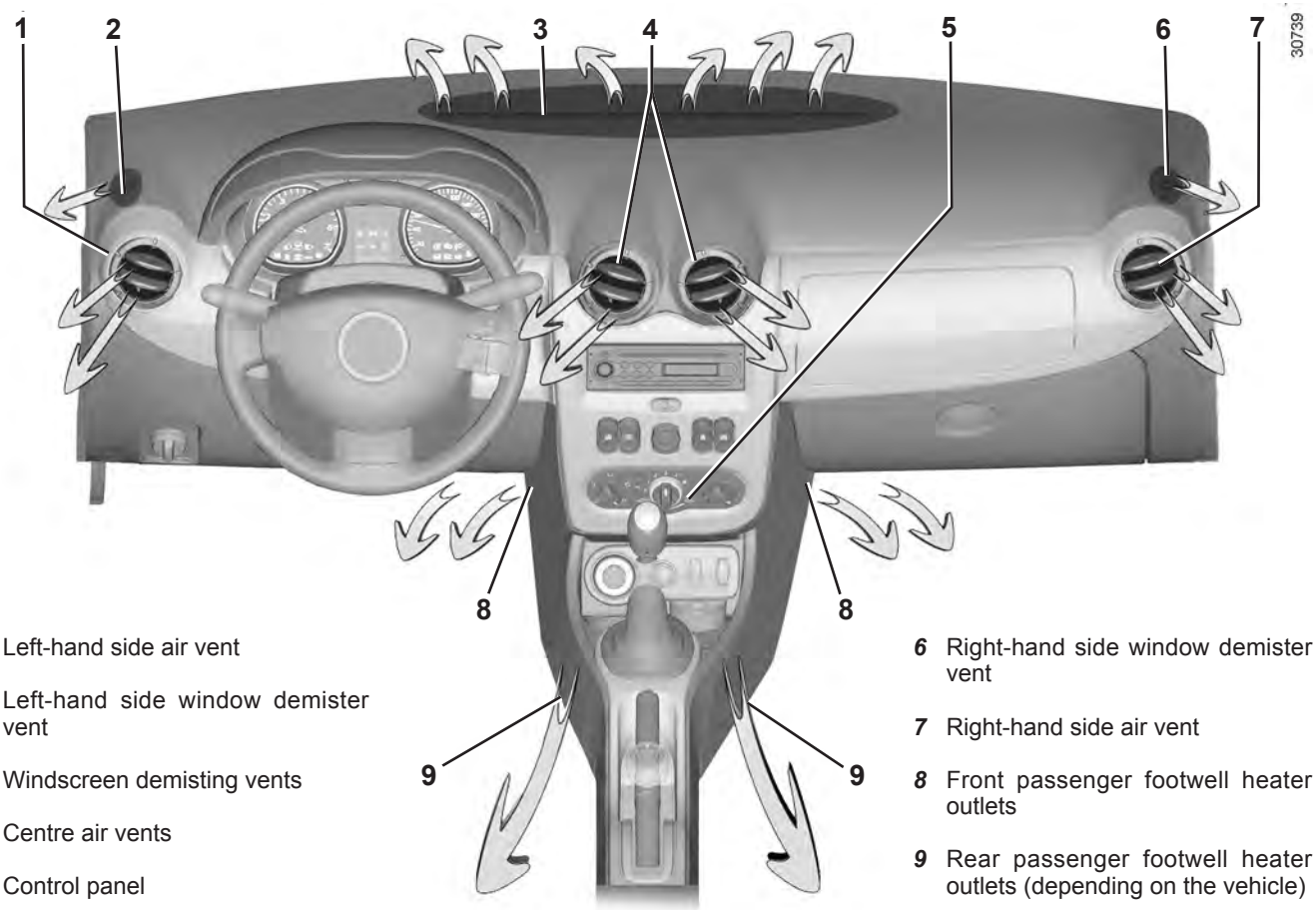

1 Left-hand side air vent

2 Left-hand side window demister vent

3 Windscreen demisting vents

4 Centre air vents

5 Control panel

6 Right-hand side window demister vent

7 Right-hand side air vent

8 Front passenger footwell heater outlets

9 Rear passenger footwell heater outlets (depending on the vehicle)

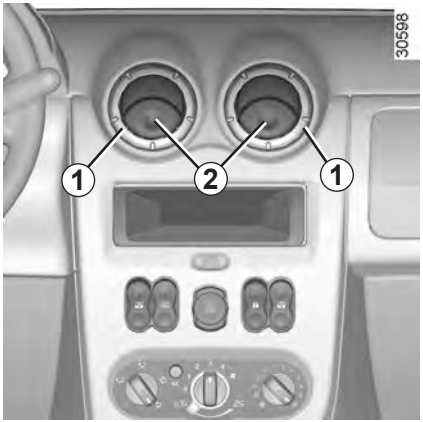

Centre and side air vents

Air flow

To open air vent ***1*** or ***3***, press on the air vent (point ***2***) until it is open as far as required.

Direction

To direct the air flow, swivel air vent ***1*** or ***3***.

To remove bad odours from your vehicles, only use the systems designed for this purpose. Consult an approved Dealer.

Do not add anything to the vehicle's ventilation circuit (for example, to remove bad odours).

There is a risk of damage or of fire.

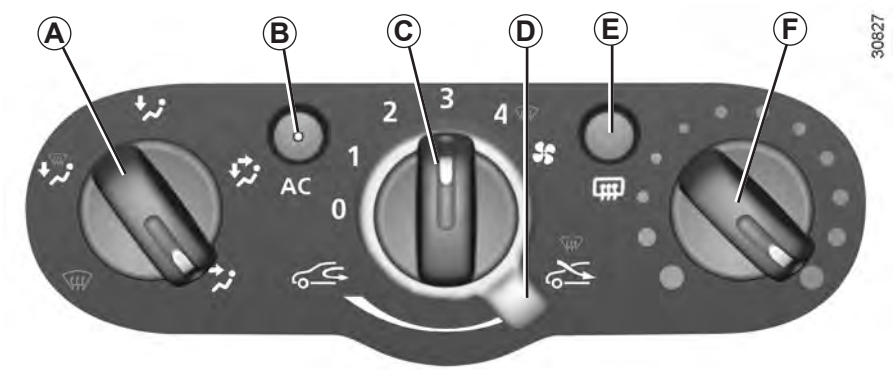

Controls
(depending on vehicle)

- ***A*** Air distribution.
- ***B*** Switching the air conditioning on and off.
- ***C*** Ventilation speed adjustment.
- ***D*** Switching passenger compartment isolation mode/air recirculation mode on.
- ***E*** Rear screen de-icing/demisting.
- ***F*** Air temperature adjuster.

Information and advice for use:
Refer to information on “Air conditioning: information and advice on use”.

Distribution of air in the passenger compartment

Turn control ***A*** to position the pointer opposite the marked positions.

All the air flow is directed to the dashboard vents.

The air flow is directed towards the dashboard vents and the footwells.

The air flow is directed towards the footwells and the dashboard vents.

Close the dashboard vents to direct all the air to the foot wells.

The air flow is distributed between all the air vents, the front side window demister outlets, the windscreen demisting vents and the footwells.

For more efficient demisting, close the vents in the dashboard and ensure that you are set to external air (control *D* to the right).
All the air flow is then directed to the windscreen demisting vents and the front side windows.
For maximum efficiency, set control ***C*** to **4**.
Using the air conditioning increases the speed of demisting.

Recommended demisting option:

Turn controls A, C and D to the position.
This is the quickest option for de-icing and demisting the side windows and the windscreen.

Fuel consumption increases when the air conditioning is being used (switch it off when it is not required).

Switching air conditioning on or off
(depending on vehicle)

Button ***B*** starts or stops the air conditioning system.

The system cannot be switched on if control ***C*** is set to **0**.

The air conditioning system is used for:

– lower the temperature inside the passenger compartment;

– eliminate condensation more quickly.

Note: the air conditioning may be used in all conditions but does not operate when the external temperature is low.

– **Button *B* not activated (indicator light off)**

The air conditioning is not operating.

The settings are the same as a vehicle without air conditioning.

– **Button *B* activated (indicator light on)**

The air conditioning is operational

Switching passenger compartment isolation mode/ air recirculation mode on

Push control ***D*** to the left.

Under these conditions, air is taken from the passenger compartment and is recirculated, with no air being taken from outside the vehicle.

Air recirculation is used to:

– isolate the passenger compartment from the external atmosphere (eg.: driving in polluted areas, etc.);

– bring the passenger compartment to the desired temperature more effectively.

To return to the external air position, push control ***D*** to the right.

Prolonged use of this position can lead to condensation forming on the side windows and windscreen and problems due to the use of non-renewed air in the passenger compartment.

It is therefore advisable to return to normal operation (external air) by moving control ***D*** to the right once you are out of the polluted area.

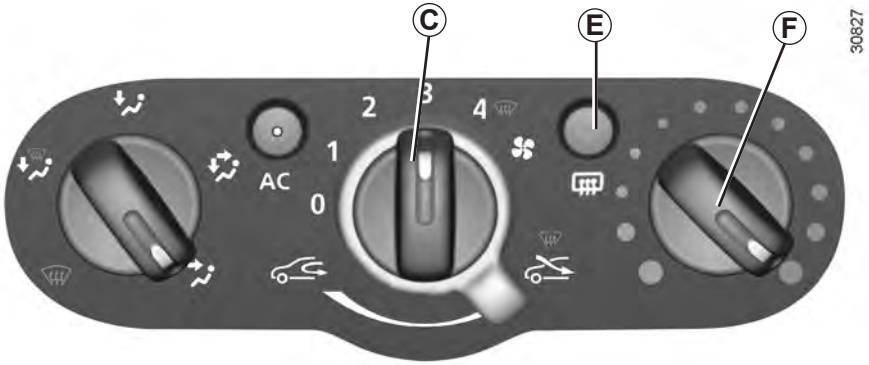

Adjusting the ventilation speed

Turn control ***C*** from **0** to **4**. The further to the right it is positioned, the more air is blown into the passenger compartment. If you want to shut off the flow of air completely and stop the system, set control ***C*** to **0**.

The system is deactivated: the ventilation speed for the passenger compartment air is zero (vehicle stationary), you can however still feel a slight flow of air when the vehicle is moving.

Adjusting the air temperature

Turn control ***F***.
To the right: maximum possible temperature.
To the left: minimum possible temperature.

Heated rear screen
(depending on vehicle)

With the engine running, press button ***E*** (the warning light on the instrument panel comes on).
This function de-ices/demists the rear screen and the electric de-icing rear-view mirrors (depending on the vehicle).
Depending on the vehicle, the function is stopped:
– automatically after it has been running for 12 minutes (the indicator light goes out);
– by pressing button ***E*** again (the warning light goes out).

Before using the rear wiper, check that no object is obstructing the travel of the blade.
In frosty weather, make sure that the wiper blades are not stuck by ice (to avoid the risk of the motor overheating).
Keep an eye on the condition of the blades. Replace the wiper blades as soon as they begin to lose efficiency (approximately once a year).
Regularly clean your rear screen.

Fuel consumption

You will normally notice an increase in fuel consumption (especially when driving in town) when the air conditioning is operating.

For vehicles fitted with air conditioning with no automatic mode, switch off the system when it is not required.

Advice for reducing consumption and helping to preserve the environment

Drive with the air vents open and the windows closed.

If the vehicle has been parked in the sun, open the doors for a few moments to let the hot air escape before starting the engine.

Maintenance

Refer to the Maintenance Service Booklet for your vehicle for the inspection frequency.

Operating faults

As a general rule, contact your approved dealer in the event of an operating fault.

– **Reduction in de-icing, demisting or air conditioning performance**.
  This may be caused by the passenger compartment filter cartridge becoming clogged.

– **No cold air is being produced**.
  Check that the controls are set correctly and that the fuses are sound. Otherwise, switch off the system.

Presence of water under the vehicle. After prolonged use of the air conditioning system, it is normal for water to be present under the vehicle. This is caused by condensation.

Do not open the refrigerant fluid circuit. The fluid may damage eyes or skin.

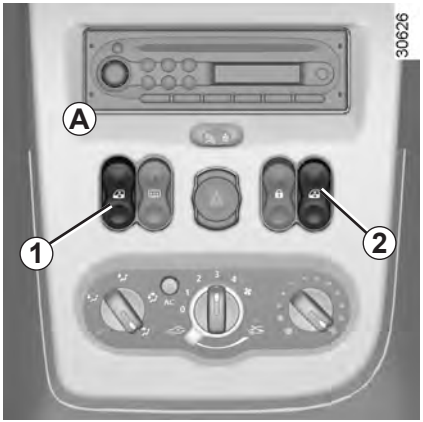

Electric front windows

If fitted on the vehicle, the switches will be placed in ***A*** or ***B***.

Switches in *A*

With the ignition on, press the bottom of switch ***1*** or ***2*** to open the window or press the top of switch ***1*** or ***2*** to close it to the desired level.

Avoid resting any objects against a half-open window: there is a risk that the electric window winder could be damaged.

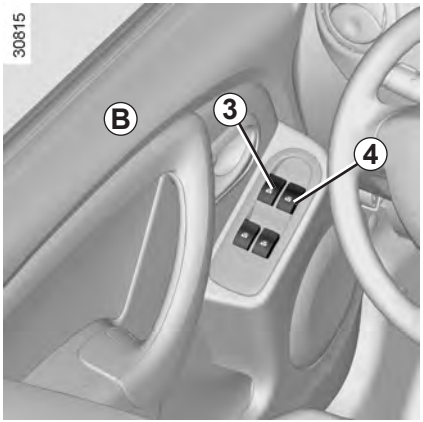

Switches in *B*

With the ignition on, press switch ***3*** or ***4*** to lower the window to the required level.

Lift switch ***3*** or ***4*** to raise the window to the desired height.

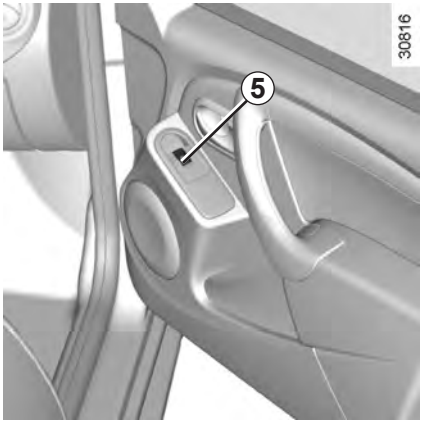

From the front passenger seat

Operate switch ***5***.

Closing windows can cause serious injury.

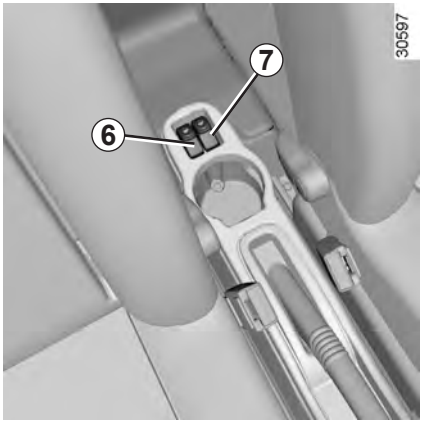

Electric rear windows
(depending on the vehicle)

With the ignition on, press switch ***6*** or ***7*** to open the window or lift switch ***6*** or ***7*** to raise it to the desired height.

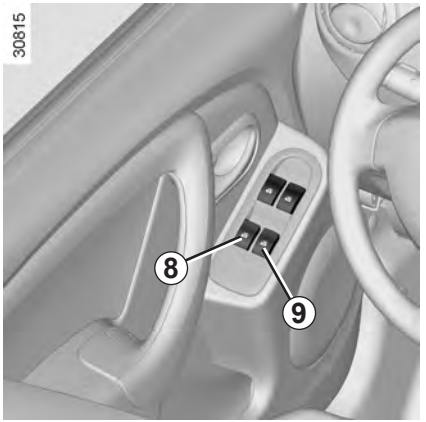

From the driver's seat

With the ignition on, press switch ***8*** or ***9*** to lower the window to the required level.

Lift switch ***8*** or ***9*** to raise the window to the desired height.

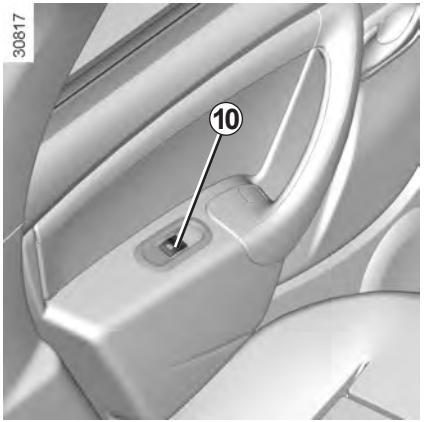

From the rear seats

Operate switch ***10***.

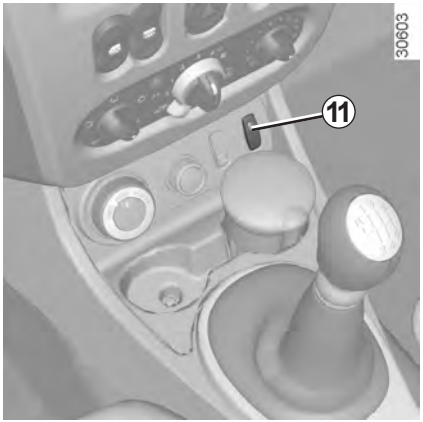

Locking and unlocking the rear window controls

(depending on vehicle)

Press the top of switch ***11*** to lock the operation of the rear electric windows or on the bottom of switch ***11*** to unlock.

Safety of rear occupants

The driver can prevent operation of the rear electric windows by pressing switch ***11***.

Driver's responsibility

Never leave your vehicle with the key or remote control inside and never leave a child (or a pet) unsupervised, even for a short while. They may pose a risk to themselves or to others by starting the engine, activating equipment such as the electric windows or by locking the doors. If any part of the body becomes trapped, reverse the direction of the window immediately by pressing the relevant switch.

Risk of serious injury.

Manual window winders

Turn handle ***12*** to lower or raise the window to the desired height.

Courtesy light

Pressing switch ***1*** provides:

– continuous lighting;

– or temporary lighting by opening one of the front doors, or by opening one of the four doors, depending on the vehicle. The light only goes out when the doors are correctly closed;

– no lighting.

Automatic operation of interior lighting
(depending on the vehicle)

– if the doors are unlocked using the remote control, the lighting is switched on for approximately 30 seconds.

– if a door is open (or not properly closed), the lighting is switched on for approximately 30 minutes.

– if all the doors are closed, the lighting start to dim when the ignition is switched on.

Map reading light
(depending on the vehicle)

Pressing switch ***2*** provides:

– continuous lighting;

– no lighting.

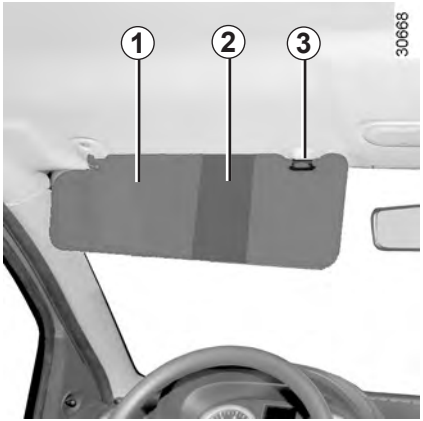

Sun visor

Pivot sun visor ***1*** or ***5*** against the windscreen.

OR

Unclip the sun visor from its mounting ***3*** or ***4*** and pivot it against the door window.

Sun visor storage compartment *2*

This can be used for storing motorway tickets, cards, etc.

Vanity mirror (depending on the vehicle)

The passenger sun blind is fitted with a courtesy mirror ***6*** on the passenger side.

Grab handle *7*

This offers support and can be held when the vehicle is being driven.

Do not use these for getting into or out of the vehicle.

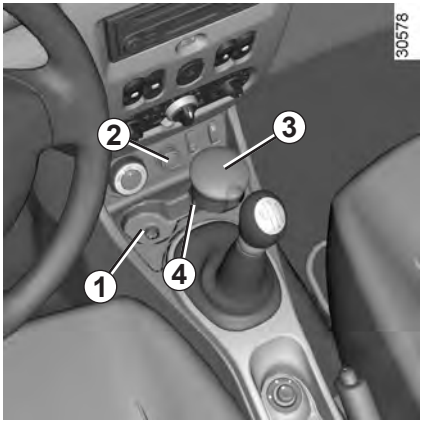

Ashtray

It can be housed in either position ***1*** or ***4***.

Lift cover ***3*** to open.

Remove the ashtray to empty it.

Cigar lighter 2

With the ignition on, push in cigar lighter ***2***.

It will spring back with a click when it is ready. Pull it out to use. After use, replace it without pushing it all the way in.

OR

Accessories socket 2

It is provided for connecting accessories approved by our Technical Department with a maximum power of 120 Watts (12 V).

Connect accessories with a maximum power of 120 Watts only.

Fire hazard.

If your vehicle is not fitted with a cigar lighter and an ashtray, these can be obtained from an approved Dealer.

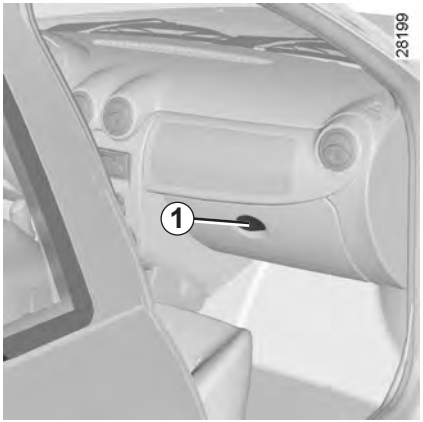

Passenger side glove box

Pull handle ***1*** to open it.

This glove box can be used to store A4 format documents.

Inside the cover, section ***2*** has been provided for pens, maps, etc.

Precautions during use

Cover ***A*** in the bottom of the glove box protects a socket reserved exclusively for operations by the approved dealer network

You should therefore avoid keeping liquids in this compartment (there is a risk of liquid leaking and getting into this socket).

Nothing should be placed on the floor area in front of the driver as such objects may slide under the pedal during braking manoeuvres, thus obstructing its use.

Centre console storage compartment *3*

(or radio location)

When cornering, accelerating or braking, ensure that the cup does not spill.

There is a risk of burning if hot liquid escapes.

Ensure that no hard, heavy or pointed objects are placed in the “open” storage compartments in such a way that they may fall onto passengers during sudden turning, braking or in the event of an accident.

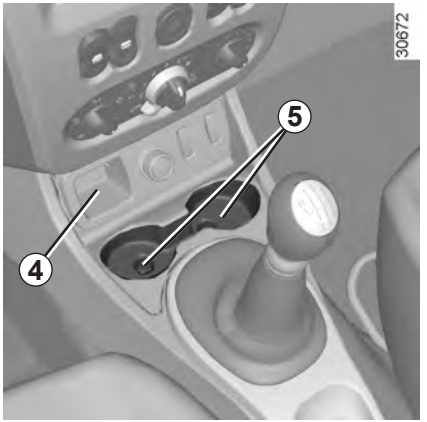

Centre console storage compartment *4*

(or location of the 4x2 (2WD) and 4X4 (4WD) mode selector)

Place for cups or ashtray *5*

Storage compartment *6*
(or passenger air bag location)

Front door storage compartments *7*

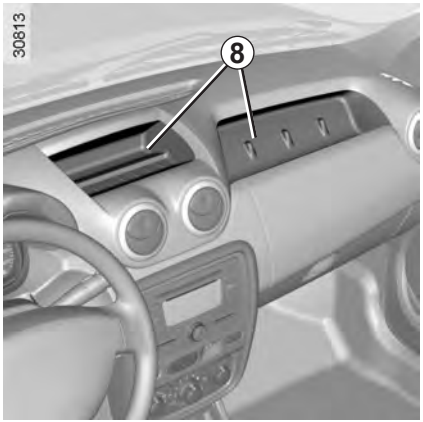

Dashboard upper storage compartment *8*
(depending on the vehicle)

Nothing should be placed on the floor area in front of the driver as such objects may slide under the pedal during braking manoeuvres, thus obstructing its use.

Ensure that no hard, heavy or pointed objects are placed in the “open” storage compartments in such a way that they may fall onto passengers during sudden turning, braking or in the event of an accident.

Front seat storage pockets *9*

Bottle holders *10*

It can hold a 1.5 litre bottle.

Rear storage compartment *11*

(or location for electric rear window control).

Ensure that no hard, heavy or pointed objects are placed in the “open” storage compartments in such a way that they may fall onto passengers during sudden turning, braking or in the event of an accident.

The seatback(s) ***A*** and/or ***B*** can be folded away to allow bulky objects to be carried.

Folding the seatback(s) down onto the seat base

To fold down the seatback(s) (depending on the vehicle)

Insert buckles ***1*** into housings ***2*** before moving the seatback(s).

Lower the rear headrests completely (refer to the information on the “Rear headrests” in Section 1).

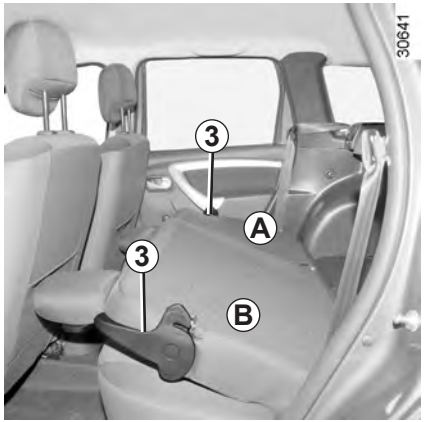

Lower handle(s) ***3***.

Lower seatback(s) ***A*** and/or ***B***.

To raise the seatback(s) (depending on the vehicle)

Lift the seatback(s).

Check the seatbacks are securely locked in position.

For safety reasons, carry out any adjustments when the vehicle is not being driven.

When refitting the seatback, make sure it is correctly locked in place.
If seat covers are fitted, make sure these do not prevent the seatback latch from locking in.
Make sure that the seat belts are positioned correctly.
Reposition the headrests.

Check that the rear seat belts are positioned and operating correctly each time the rear bench seat is moved.

When moving the rear bench seat, ensure that nothing obstructs the anchorage points (part of the body, a pet, gravel, cloth, toys, etc.).

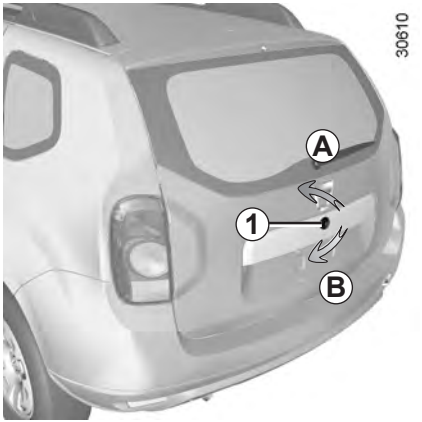

Manual control

To open, insert the key in the lock and turn it (movement ***A***).
Remove the key and press button ***1***.
Lift the tailgate.

To close, lower the tailgate using interior handle ***2*** to help at first.
Once you have lowered the tailgate to shoulder height, release the interior handle and finish closing the tailgate by pressing down on the tailgate from the outside.
Insert the key in the lock and turn it (movement ***B***).

Electric central locking

The tailgate is locked and unlocked at the same time as the doors.

To open, press the button ***1*** and lift the tailgate.

To close, lower the tailgate using interior handle ***2*** to help at first.

Once you have lowered the tailgate to shoulder height, release the interior handle and finish closing the tailgate by pressing down on the tailgate from the outside.

Always place objects being transported so that their longest side rests against the back of the rear bench seatbacks, as with normal loads (example ***A***) or against the back of the front seats when the rear bench seatbacks are folded down. Refer to the information on the “Rear bench seat” in this section.

Fasten the rear seat belts, even if the seats are not occupied.

Ensure that the load is evenly distributed over the largest loading surface to prevent damage to the vehicle.

Always position the heaviest items directly on the floor. Use the lashing points on the luggage compartment floor, if these are fitted to the vehicle. The luggage should be loaded in such a way that no items will be thrown forward and strike the occupants if the driver has to brake suddenly.

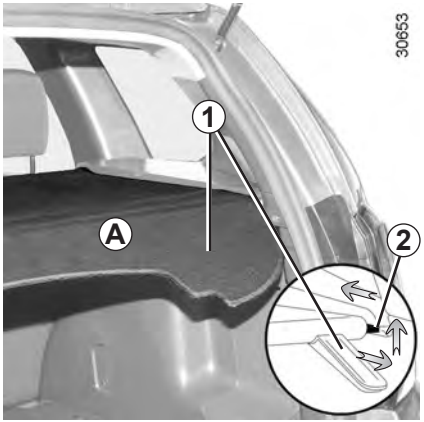

Position for use *A*

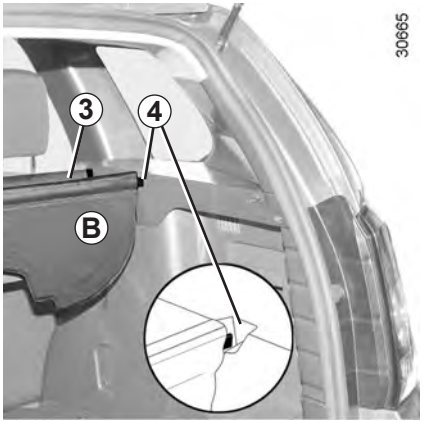

Position for use *B*

Gently pull the two handles ***1*** located underneath the luggage compartment cover and place the two ends ***2*** in the housings ***4*** in each side of the luggage compartment.

In this position for use, it is possible to place a light object (a jacket, for example) in space ***3*** on the luggage compartment cover.

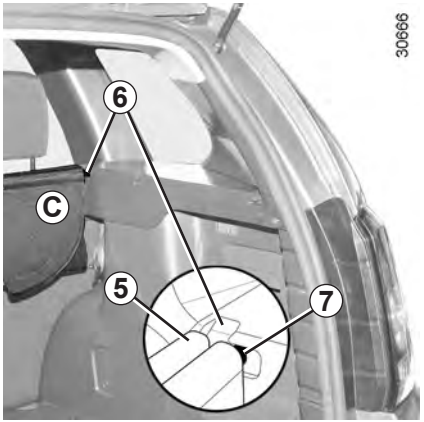

Position for use *C*

Remove the two ends ***5*** of the luggage compartment cover on the rear bench seat side from the housings ***6*** in each side of the luggage compartment.

Insert the two ends ***7*** of the luggage compartment cover into the housings ***6*** and pull gently towards you.

Insert the two ends ***5*** of the luggage compartment cover in housings ***6***.

Removing the luggage cover

Gently pull the two handles ***1*** located underneath luggage compartment cover ***D*** and remove the two ends ***2*** from their housings.

Remove the two ends on the rear bench seat side of the luggage compartment cover from their housings.

Refitting the luggage compartment cover

To refit it, proceed in the reverse order to removal.

Do not place any objects, especially heavy or solid objects on the luggage cover. These may pose a risk to the vehicle occupants if the driver has to brake suddenly or if the vehicle is involved in an accident.

LONGITUDINAL ROOF BARS

When these are fitted to the vehicle, you can transport luggage or additional accessories (bike rack, ski rack, etc.) on a roof rack or on transverse roof bars attached to the longitudinal roof bars ***1*** or directly on these bars.

It is forbidden to fit longitudinal roof bars on vehicles which are not originally equipped with them.

For information on the range of equipment adapted to your vehicle, we advise you to consult an approved Dealer. Refer to the manufacturer's instructions for information on how to fit and operate the equipment.

Please keep these instructions with the rest of the vehicle documentation.

Maximum permissible load on roof rack: refer to the information on "Weights" in Section 6.

Section 4: Maintenance

Bonnet 4.2
Engine oil level: general information 4.4
Engine oil level: topping up, filling 4.5
Levels: 4.7
- Brake fluid 4.7
- Engine coolant 4.8
- Power-assisted steering pump 4.9
- Windscreen washer reservoir 4.9

Filters 4.10
Tyre pressure 4.11
Battery 4.12
Bodywork and engine compartment maintenance 4.13
Interior trim maintenance 4.16

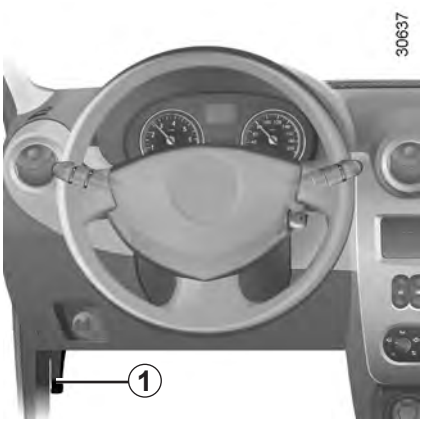

To open the bonnet, pull handle ***1***.

Unlocking the bonnet catch

To unlock, raise the bonnet slightly and release hook ***2*** by pushing tab ***4*** to the left.

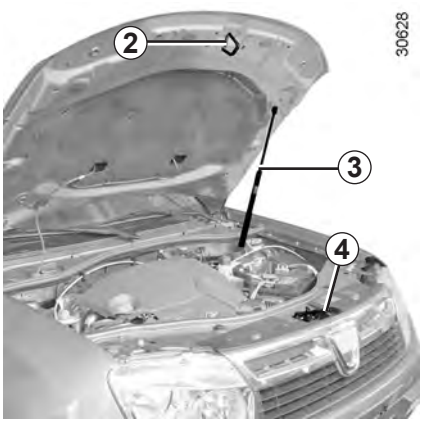

Opening the bonnet

Lift the bonnet and guide it upwards; it is held by strut ***3***.

The engine may be hot during operations in close proximity. In addition, the engine cooling fan may come on at any moment.

Risk of injury.

Do not press down on the bonnet: there is a risk that the bonnet may accidentally close.

In the event of even a slight impact involving the radiator grille or bonnet, have the bonnet lock checked by an approved Dealer as soon as possible.

Closing the bonnet

Check that nothing has been left in the engine compartment.

To close the bonnet again, hold the bonnet in the middle and lower it to 30 cm above the closed position, then release it. It will latch automatically under its own weight.

Ensure that the bonnet is properly locked. Check that nothing is preventing the catch from locking (gravel, cloth, etc.).

Make sure nothing is left in the engine compartment (cloth, tools, etc.).

Otherwise, this may lead to engine damage or cause a fire.

ENGINE OIL LEVEL: general information

It is normal for an engine to use oil for lubrication and cooling of moving parts and it is sometimes necessary to top up the level between oil changes.

However, contact an approved dealer if more than 0.5 litres is being consumed every 600 miles (1,000 km) after the running in period.

Oil change frequency: check the oil level from time to time and certainly before any long journey to avoid the risk of damaging your engine.

The vehicle must be parked on level ground and the engine should have been switched off for some time beforehand to obtain an accurate reading.

Consult your approved dealer at once if you notice an abnormal or repeated drop in any of the fluid levels.

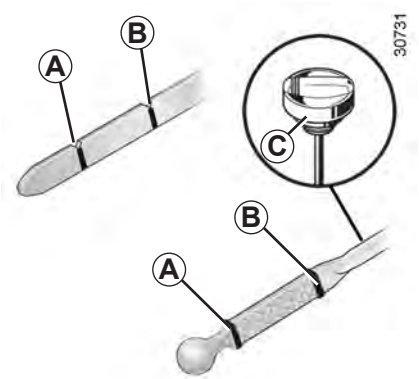

Reading the oil level

- remove the dipstick and wipe with a clean, lint-free cloth;
- push the dipstick in as far as it will go (for vehicles equipped with a cap-type dipstick ***C***, screw the cap in as far as it will go);
- take out the dipstick again;
- read the level: it should never fall below minimum mark ***A*** or exceed maximum mark ***B***.

Once the operation has been completed, ensure that the dipstick is pushed in as far as it will go or that the cap-type dipstick is completely screwed in.

Exceeding the maximum engine oil level

The oil level should only be read with the dipstick as explained above.

If the oil level exceeds the maximum level, **do not start your vehicle** and contact an approved dealer.

Under no circumstances must maximum fill level ***A*** be exceeded: risk of damage to the engine and catalytic converter.

ENGINE OIL LEVEL: topping up/filling (1/2)

Topping up/filling

The vehicle must be parked on level ground and the engine should be cold (for instance, before the engine is started up for the first time in the day).

Engine oil grade

Refer to the Maintenance Service Booklet for your vehicle.

In order to prevent splashback, it is recommended that a funnel be used when topping up/filling with oil.

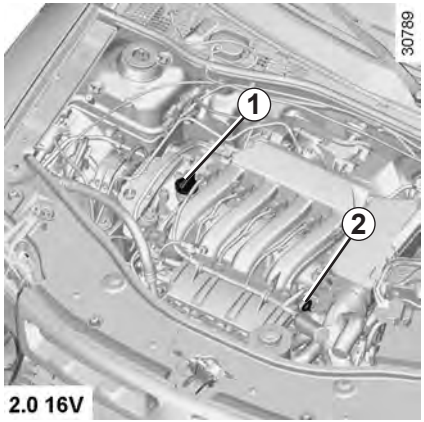

– Unscrew cap ***1***;
– top up the level (as a guide, the capacity between the minimum and maximum reading on dipstick ***2*** is between 1.5 and 2 litres, depending on the engine);
– wait approximately 10 minutes to allow the oil to flow into the engine;
– check the level using the dipstick ***2*** (as described above).

Once the operation has been completed, ensure that the dipstick is pushed in as far as it will go or that the “cap-type dipstick” is completely screwed in.

Do not exceed the **MAX** level and do not forget to refit dipstick ***2*** and cap ***1***.

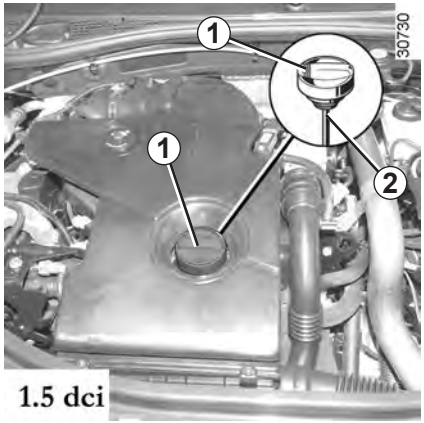

Oil change

Service interval: refer to the Maintenance Service Booklet for your vehicle.

Average capacities for oil change oil filter included.
(for information)

1.6 16V engine: 4.80 litres

Engine2.0 16V : 5.40 litres

1.5 dCi engine: 4.50 litres

Engine oil grade

Refer to the Maintenance Service Booklet for your vehicle.

Filling: take care when topping up the oil that no oil drips onto engine components - risk of fire. Remember to refit the cap securely as there is a risk of fire if oil splashes onto hot engine components.

Resetting the alert after an oil change

(depending on the vehicle)

If you change the oil yourself, you will need to reset the oil change warning.
To do this, after switching on the ignition, for ten seconds you must:
– Depress the accelerator pedal fully,
– with your foot on the accelerator, depress the brake pedal three times in succession.

Reinitialisation is complete when the indicator light goes out. If this is not the case, repeat the operation.

Special case: if you change the oil before the oil change interval exceeded warning is displayed, it will also be necessary to reset the display. In this case, the warning light comes on for approximately 5 seconds to confirm the reset.

If there is an abnormal or repeated drop in the fluid level, please consult an authorised dealer.

Engine oil change: if you are changing the oil when the engine is hot, be careful not to scald yourself if the oil overflows.

The engine may be hot during operations in close proximity. In addition, the engine cooling fan may come on at any moment.

Risk of injury.

Never run the engine in an enclosed space as exhaust gases are poisonous.

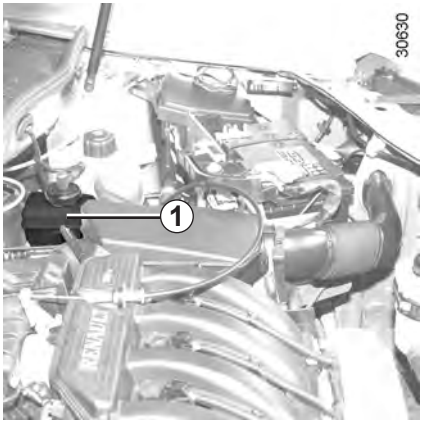

Brake fluid level

This should be checked frequently, and immediately if you notice even the slightest loss in braking efficiency.

The level should be read with the engine switched off and on level ground.

The engine may be hot when carrying out operations in close proximity. In addition, the engine cooling fan can come on at any moment.

Risk of injury.

Level

It is normal for the level to drop as the brake shoes become worn, but it must never drop lower than the **"MINI"** warning line shown on brake fluid reservoir ***1***.

If you wish to check the disc and drum wear yourself, you should obtain the document explaining the checking procedure from the manufacturer's network or web site.

Topping up

After any operation on the hydraulic circuit, a specialist must replace the fluid.

Only use fluids approved by our Technical Department (and taken from a sealed container).

Replacement intervals

Refer to the Maintenance Service Booklet for your vehicle.

Consult your approved dealer at once if you notice an abnormal or repeated drop in any of the fluid levels.

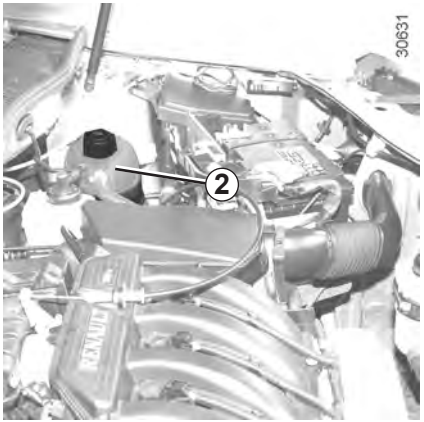

Coolant

With the engine switched off and on level ground, the level **when cold** must be between the MINI and MAXI marks on reservoir ***2***.
Top this level up **when cold** before it reaches the MINI mark.

No operations should be carried out on the cooling circuit when the engine is hot.

Risk of burns.

Coolant level checking frequency

Check the coolant level regularly (very severe damage is likely to be caused to the engine if it runs out of coolant).

If the level needs to be topped up, only use products approved by our Technical Department which ensure:

– protection against freezing;

– anticorrosion protection of the cooling system.

Replacement intervals

Refer to the Maintenance Service Booklet for your vehicle.

Consult your approved dealer at once if you notice an abnormal or repeated drop in any of the fluid levels.

The engine may be hot when carrying out operations in close proximity. In addition, the engine cooling fan can come on at any moment.

Risk of injury.

Windscreen washer reservoir

Filling: Remove cap ***3***, fill until you can see the fluid, then refit the cap.

This reservoir supplies the front and rear screen washers.

Liquid: Special windscreen washer fluid (anti-freeze product in winter).

Jets: to adjust the angle of the jets, pivot the little ball using a pin.

Use products approved by the Technical Department.

Power-assisted steering fluid reservoir *4* or *5*

Level: for a correct level **when cold**, with the engine switched off and on level ground, it must be visible between the “MINI” and “MAXI” marks on reservoir ***4*** or ***5***.

For maintenance operations on the power-assisted steering, contact an approved dealer.

Consult an approved dealer at once if you notice an abnormal or repeated drop in any of the fluid levels.

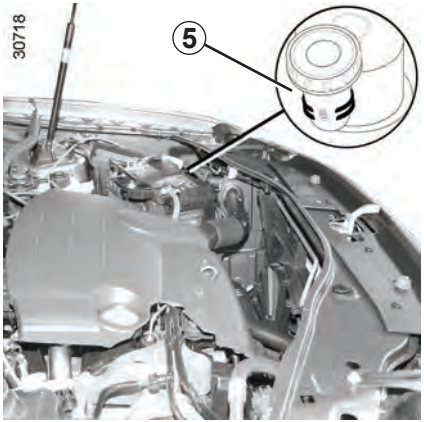

If you feel any variation in the effectiveness of the power-assisted steering, consult an approved dealer.

The engine may be hot when carrying out operations in close proximity. In addition, the engine cooling fan can come on at any moment.

Risk of injury.

FILTERS

The replacement of filter elements (air filter, passenger compartment filter, diesel filter, etc.) is scheduled in the maintenance operations for your vehicle.

Replacement intervals for filter elements: refer to the Maintenance Service Booklet for your vehicle.

Passenger compartment filter

If your vehicle is not originally fitted with a passenger compartment filter, it is possible to have one retrofitted.

Contact an approved dealer.

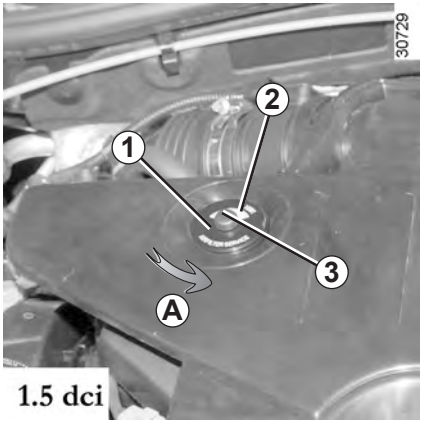

Air filter

If fitted to the vehicle, clogging sensor ***1*** allows you to see the condition of the air filter.

Replacement of the filter is scheduled in the maintenance operations: refer to your vehicle's Maintenance Service Booklet for your vehicle.

However, it must be checked regularly, especially if you drive in dusty environments.

If clogging level indicator ***2*** reaches 100%, consult an approved dealer as soon as possible to have the filter replaced.

Resetting the air filter clogging sensor

Once the air filter has been replaced, turn button ***3*** on the clogging sensor fully (movement ***A***).

The engine may be hot when carrying out operations in close proximity. In addition, the engine cooling fan can come on at any moment.

Risk of injury.

TYRE PRESSURE

The tyre pressure is indicated on label ***A*** affixed to the edge of the driver's door. Open the door to read it.

B: dimension of the tyres fitted to the vehicle.

C: tyre pressures for the front wheels (non-motorway).

D: tyre pressures for the rear wheels (non-motorway).

E: tyre pressures for the front wheels (motorway).

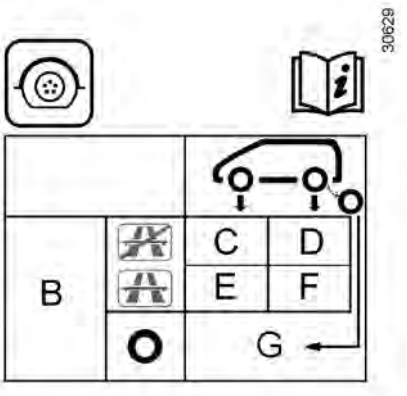

F: tyre pressures for the rear wheels (motorway).

G: tyre pressure for the emergency spare wheel.

Tyre safety and use of snow chains

Refer to the information on "Tyres" in Section 5 for the servicing conditions and, depending on the version, the use of chains.

Special note

For vehicles used fully laden (maximum permissible all-up weight) **and towing a trailer.** The maximum speed must be limited to **60 mph (100 km/h)** and the tyre pressure increased by **0.2 bar.**

Refer to the information on "Weights" in Section 6.

When they need to be replaced, only tyres of the same make, size, type and profile should be used.

Tyres fitted to the vehicle should either be identical to those fitted originally or conform to those recommended by your approved dealer.

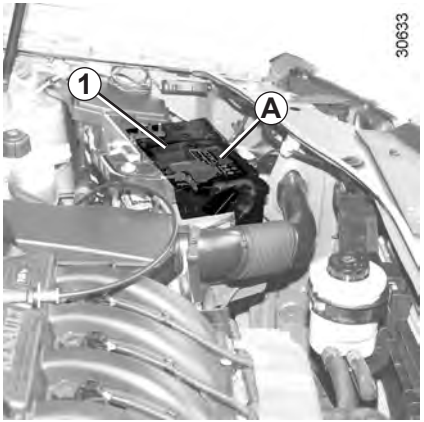

Battery ***1*** does not require any maintenance.

As the battery is specific to your vehicle, ensure that you replace it with a battery to which a degassing pipe can be connected.

Consult an approved dealer.

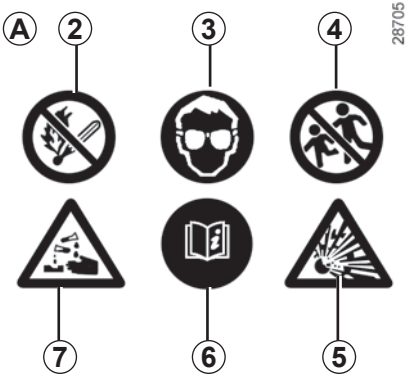

Label *A*

Observe the indications on the battery:

– ***2*** Naked flames and smoking forbidden;
– ***3*** Wear eye protection;
– ***4*** Keep away from children;
– ***5*** Explosive substances;
– ***6*** Refer to the handbook;
– ***7*** Corrosive substances.

The engine may be hot during operations in close proximity. In addition, the engine cooling fan may start at any moment.

Risk of injury.

Replacing the battery

As this operation is complex, we advise you to contact an approved dealer.

Handle the battery with care as it contains sulphuric acid, which must not come into contact with eyes or skin. If it does, wash the affected area with plenty of cold water and consult a doctor, if necessary.

Ensure that naked flames, red hot objects and sparks do not come into contact with the battery as there is a risk of explosion.

A well-maintained vehicle has a longer service life. It is therefore recommended that attention is paid to the outside of the vehicle on a regular basis.

Protection against the effects of corrosive agents

Although your vehicle has been treated with very effective anti-corrosion products, it nevertheless remains subject to the effects of:

– **corrosives in the atmosphere**
– atmospheric pollution (urban and industrial areas);
– saline atmosphere (near the sea, particularly in hot weather);
– seasonal and damp climatic conditions, (e.g.: road salt in winter, water from road cleaners, etc.).
– **abrasives**

Wind-borne dust and sand, mud, road grit thrown up by other vehicles, etc.

– **minor impacts**

You should take a minimum number of precautions in order to safeguard your vehicle against such risks and not to lose the benefit of your vehicle's anti-corrosion protection.

You should not:

– Degrease or clean mechanical components, underneath the body, parts with hinges (eg. fuel filler cap, inside the fuel flap) and painted plastic external fittings (eg. bumpers) using high-pressure cleaning equipment or by spraying on products not approved by our Technical Department. If adequate precautions are not taken, this could cause corrosion or lead to operational faults.
– Aim a high pressure water jet directly onto damaged parts of the vehicle (eg. painted bumpers, lights, etc.). Wash these parts carefully by hand.
– Wash the vehicle in bright sunlight or freezing temperatures.
– Use hard brushes to clean alloy wheels. These can scratch or damage the wheel's protective coating.
– Scrape off mud or dirt without prewetting.
– Allow dirt to accumulate.
– Allow rust to form following minor impacts.
– Use solvents not approved by the Technical Department to remove stains as this could damage the paintwork.
– Drive when the vehicle is muddy or covered in snow (the wheel arches, underneath the body, radiator, etc. must always be free from mud or snow).

It is forbidden to wash the engine compartment using a high-pressure water jet: this risks damaging the electrical/electronic components in the engine compartment.
A label affixed in the engine compartment reminds you of this.

You should

- Respect local regulations about washing vehicles (e.g. do not wash your vehicle on a public highway).
- Always follow the recommendations supplied with the high-pressure cleaning equipment (jet distance and pressure).
- Before going through a roller type car wash, return the windscreen wiper stalk to park position (refer to the information on “Windscreen wash/wipe” in Section 1), check the mounting of external accessories, additional lights and door mirrors and be sure to hold the wiper blades and radio aerial in place with adhesive tape. Remove the radio aerial mast if your vehicle is fitted with this equipment.

  Remember to remove the tape and refit the antenna after washing.
- After driving off-road (eg. on muddy, dusty or sandy terrain) quickly clean the radiator **from the outside** of the vehicle through the openings in the bumper, to prevent it from becoming blocked or clogged (risk of engine overheating).
- Wash your vehicle frequently with the **engine off**, using shampoo approved by our Technical Department (never use abrasive products) and rinse thoroughly using a warm or cold water jet (never hot):
  - spots of tree resin and industrial grime;
  - the layer of dust or mud and any insects;
  - **bird droppings**, which contain chemicals that rapidly **discolour paintwork and may even cause the paint to peel off**;
    Wash the vehicle **immediately** to remove these marks since it is impossible to remove them by polishing;
  - salt deposited in the wheel arches and underneath the body after driving in areas where the roads are chemically treated;
  - mud in the wheel arches and underneath the body which form damp patches.
- Clean mud and sand from the wheels, in particular the inside of the wheels and the brakes, as this can:
  - reduce the braking efficiency and damage the components of the braking system;
  - cause vibrations in the bodywork and steering column.

We have selected special products to care for your vehicle and you can obtain these from the manufacturer’s accessory outlets.

BODYWORK MAINTENANCE, ENGINE COMPARTMENT (3/3)

– After cleaning your vehicle, check the brakes while driving at low speed to ensure that the braking efficiency has not been reduced by the water. If it has, depress the brake pedal gently while driving to dry the brakes.

– Check the drain holes at the bottom of the doors to make sure they are not blocked.

– Inspect the wheels regularly to check for any traces of impacts or corrosion. These can damage the tyre or cause it to lose pressure.

– Keep well away from the vehicle in front when driving on gravelled surfaces to prevent paint damage.

– Repair, or have repaired quickly, patches where the paint has been damaged to prevent corrosion spreading.

– Remember to visit the body shop periodically in order to maintain your anticorrosion warranty. Refer to the Maintenance Service Booklet.

– Spray mechanical components, hinges, etc. with products approved by the Technical Department to protect them after they have been cleaned.

INTERIOR TRIM MAINTENANCE (1/2)

A well-maintained vehicle will have a longer service life. It is therefore advisable to maintain the vehicle interior regularly.

Stains should always be dealt with quickly. Whatever type of stain is on the trim, use **soapy water** (if possible, warm water) containing:

Do not use detergents (washing up liquid, powdered products, alcohol-based products, etc.).

Use a soft cloth.

Rinse and soak up the excess.

Glass instrument panel

(e.g.: instrument panel, clock, exterior temperature display, radio display).

Use a soft or cotton cloth. If this does not clean them properly, use a soft cloth (or cotton wool) slightly moistened with soapy water and then wipe clean with another damp soft or cotton cloth.

Finally, dry off **carefully** with a soft dry cloth.

Cleaning products containing alcohol must not be used under any circumstances.

Seat belts

These must be kept clean. Use products selected by our Technical Department or warm, soapy water and a sponge and wipe with a dry cloth.

Detergents or dyes must not be used under any circumstances.

Fabrics (seats, door trim, etc.)

Dust fabrics **regularly**.

Liquid stains

Use soapy water.

Dab lightly (never rub) with a soft cloth, rinse and remove the excess.

Solid or thick stains

Remove any excess solid or thick material **immediately** and carefully using a spatula (from the edge inwards to avoid spreading the stain).
Clean using the procedure for a liquid stain.

Special instructions for sweets or chewing gum

Put an ice cube on the stain to solidify it, then proceed as for a solid stain.

For advice on interior maintenance and/or on unsatisfactory results, contact an approved dealer.

Removing/refitting factory fitted removable equipment in the vehicle

If you need to remove equipment to clean the passenger compartment (e.g. mats), always make you refit it properly and on the correct side (driver's side mats must be fitted on the driver's side, etc.), using retaining components supplied with the equipment (e.g. the driver's side mat must always be secured using prefitted retaining devices).

In all cases, with the vehicle stationary, ensure that nothing can hinder driving (obstacle underneath the pedals, heel trapped by the mat, etc.).

What you should not do

You are strongly advised not to place items such as air fresheners, perfume etc. near the air vents as these could damage the dashboard fittings.

You are strongly recommended not to use high-pressure or spray cleaning equipment inside the passenger compartment: this equipment could impair the correct functioning of the electrical or electronic components in the vehicle, or have other detrimental effects.

Section 5: Practical advice

Tools 5.2
Puncture 5.3
Tyre inflation kit 5.5
Wheel trims and wheels 5.8
Changing a wheel 5.9
Tyres 5.11
Changing bulbs 5.14
Front lights 5.14
Fog lights 5.17
Rear lights 5.18
Side indicator lights 5.21
Interior lights. 5.22
Fuses. 5.25
Battery: troubleshooting. 5.28
Radio frequency remote control unit: battery. 5.30
Wiper blades 5.31
Towing: breakdown 5.32
Towing: towbar. 5.35
Fitted audio equipment 5.36
Accessories 5.38
Operating faults 5.39

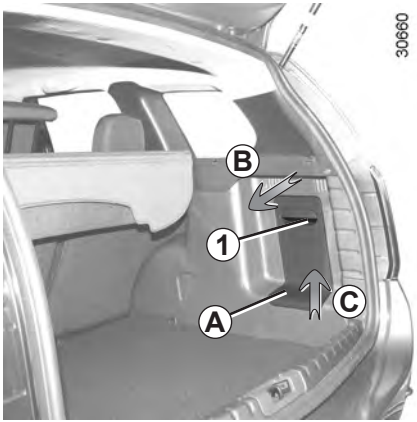

Accessing the tools

The tools are located in the luggage compartment. The presence of the various tools depends on the vehicle.

Unclip flap ***A*** by placing your hand in handle ***1*** (movement ***B***).

Remove the flap (movement ***C***).

When you have finished using the tools, make sure the three lugs ***6*** are positioned in the three notches ***5.***

Close the flap, making sure that the two lugs ***8*** are clipped into the two notches ***9***.

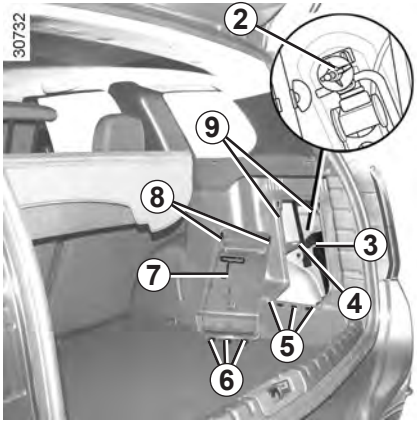

Jack *3*
To use the jack, undo nut ***2***. When refitting, fold the jack before placing it in its housing.
Tighten the nut to secure the jack.

Wheelbrace *4*
This is used to tighten/loosen the wheel bolts and, depending on the vehicle, to access the emergency spare wheel.

Hubcap tool *7*
This tool is used to remove the wheel trims.

Do not leave the tools unsecured inside the vehicle as they may come loose under braking. After use, make sure the tools are correctly positioned in their housings: risk of injury.

If wheel bolts are supplied in the tool kit, only use these bolts for the emergency spare wheel: refer to the label affixed to the emergency spare wheel. The jack is designed for wheel changing purposes only. Under no circumstances should it be used for carrying out repairs underneath the vehicle or to gain access to the underside of the vehicle.

In the event of a puncture, depending on the vehicle, you will have:

An emergency spare wheel or tyre inflation kit (refer to the information on the following pages).

If the emergency spare wheel has been stored for several years, have it checked by your Dealer to ensure that it is safe to use.

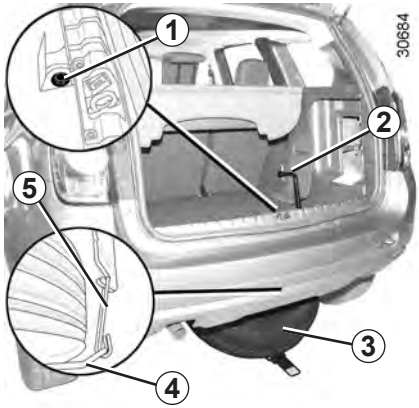

Emergency spare wheel 4x2 version (2WD)

This is placed in cage ***4*** underneath the vehicle.

To take out the emergency spare wheel:

- Open the tailgate;
- undo bolt ***1*** using wheelbrace ***2*** (refer to the information on “Tools” in this section);
- detach the cage using handle ***5***;
- remove emergency spare wheel ***3***;
- turn the emergency spare wheel over and unclip protector ***6***.

To store the wheel in the cage:

- Clip protector ***6*** onto the punctured wheel;
- turn the punctured wheel over and slide it into cage ***4***;
- reattach the cage using handle ***5*** and retighten the nut using wheelbrace ***2*** to refit the assembly;
- make sure it is correctly locked.

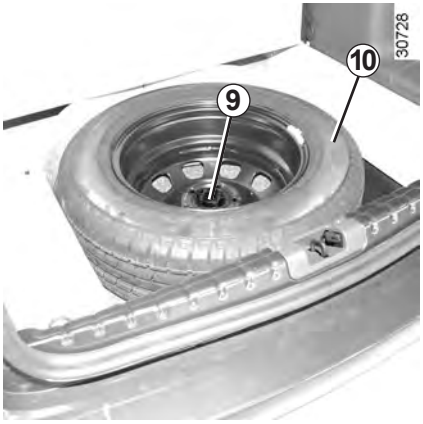

Note: ensure that the emergency spare wheel or punctured wheel and the wheel tray are correctly positioned so that the luggage compartment carpet can be properly fitted.

After lowering, check that luggage compartment carpet ***7*** is correctly positioned in its indexing stops to prevent it from being damaged.

Emergency spare wheel 4x4 version (4WD)

This is located in the luggage compartment.

To access it:

– Open the tailgate;

– remove luggage compartment cover ***7*** or fold it fully;

– lift luggage compartment carpet ***8*** vertically against the rear seatback or the folded luggage compartment cover;

– unscrew central mounting ***9***;

– remove emergency spare wheel ***10***.

If the emergency spare wheel has been stored for several years, have it checked by your Dealer to ensure that it is safe to use.

Vehicles fitted with an emergency spare wheel which is different to the four other wheels:

– Never fit more than one emergency spare wheel to the same vehicle.
– Replace the emergency spare wheel as soon as possible with a wheel identical to the original one.
– When this is fitted to the vehicle, which must only be a temporary measure, the driving speed must not exceed the speed indicated on the label on the wheel.
– Fitting an emergency spare wheel may alter the way the vehicle usually runs. Avoid sudden acceleration or deceleration and reduce your speed when cornering.
– If you need to use snow chains, fit the emergency spare wheel to the rear axle and check the tyre pressure.

TYRE INFLATION KIT (1/3)

The kit repairs tyres with tread ***A*** damaged by objects smaller than **4** mm. It cannot repair all types of puncture, such as cuts of more than **4** mm, or cuts in tyre sidewall ***B*** etc.

Ensure also that the wheel rim is in good condition.

Do not pull out the foreign body causing the puncture if it is still in the tyre.

Do not attempt to use the inflation kit if the tyre has been damaged as a result of driving with a puncture.

You should therefore carefully check the condition of the tyre sidewalls before any operation.

Driving with underinflated, flat or punctured tyres can be dangerous and may make the tyre impossible to repair.

This repair is temporary

A tyre which has been punctured should always be inspected (and repaired, where possible) as soon as possible by a specialist.

When replacing a tyre repaired with this kit, you must consult a specialist. When driving, vibration may be felt due to the presence of the repair product injected into the tyre.

The kit is only approved for inflating the tyres of the vehicle originally equipped with the kit.

It must never be used to inflate the tyres of another vehicle, or any other inflatable object (rubber ring, rubber boat, etc.).

Avoid spillage on skin when handling the repair liquid bottle. If droplets do leak out, rinse them off with plenty of water.

Keep the repair kit away from children.

Do not dispose of the empty bottle in the countryside. Return it to your approved dealer or to a recycling organisation.

The bottle has a limited service life which is indicated on its label. Check the expiry date.

Contact an approved dealer to replace the inflation tube and repair product bottle.

TYRE INFLATION KIT (2/3)

Depending on the vehicle, in the event of a puncture, use the kit located on the left side of the luggage compartment on 4x2 versions or in the in the emergency spare wheel tray under the luggage compartment carpet on 4x4 versions.

Before using this kit, park the vehicle at a sufficient distance from traffic, switch on the hazard warning lights, apply the handbrake, ask all passengers to leave the vehicle and keep them away from traffic.

Open the kit, remove caps ***1*** and ***3*** (it is **essential** not to remove the cap from the bottle) then screw bottle ***2*** to its base **3**.

With the engine running and the handbrake applied,

– unscrew the valve cap on the wheel concerned and screw the inflation adapter ***6*** onto valve;

– connect adapter ***8*** to accessories socket ***9*** on the dashboard of the vehicle;

– press switch ***5*** to inflate the tyre to the recommended pressure (check the label affixed to the edge of the driver's door);

– after a maximum of **5** minutes, stop inflating and read the pressure (on the pressure gauge ***4***);

  Note: while the bottle is emptying (approximately 30 seconds), pressure gauge ***4*** will briefly indicate a pressure of 6 bar, then the pressure will drop.

– adjust the pressure: to increase it, continue inflating with the kit, to reduce it, turn button ***7*** located on the inflation adapter.

If a minimum pressure of 1.8 bar is not reached after 15 minutes, repair is not possible; do not drive the vehicle but contact an approved dealer.

Once the tyre is inflated correctly:

– stop using the kit;
– close the integrated cap on the bottle again;
– disconnect adapter ***8***;

Nothing should be placed around the driver's feet as such objects may slide under the pedals during sudden braking manoeuvres and obstruct their use.

– affix driving recommendation label ***10*** to the dashboard where it can easily be seen by the driver;
– store the kit;
– after the first inflation procedure the tyre will still be leaking; it is vital to drive in order to plug the hole;
– start immediately and drive at between 12 and 36 mph (20 and 60 km/h) to distribute the product evenly throughout the tyre, stopping after a distance of 2 miles (3 kilometres) to check the pressure;

Following repair with the kit, do not travel further than 120 miles (200 km). In addition, reduce your speed and under no circumstances exceed 48 mph (80 km/h). The sticker, which you must affix in a prominent position on the dashboard, reminds you of this.

Depending on the country or local legislation, a tyre repaired with the tyre pressure kit will need to be replaced.

– if the pressure is greater than 1.3 bar but less than the recommended pressure (refer to the label affixed to the edge of the driver's door), readjust it; otherwise, please contact an authorised dealer: the tyre cannot be repaired.

Note: after using the inflation kit, you should visit an approved dealer to replace the inflation hose and the bottle of repair product.

Precautions when using the kit

The kit should not be operated for more than 15 consecutive minutes.

Important: a missing or loose valve cap may compromise the tyre seal and cause a loss of pressure. Always use valve caps which are identical to the originals and fully tightened.

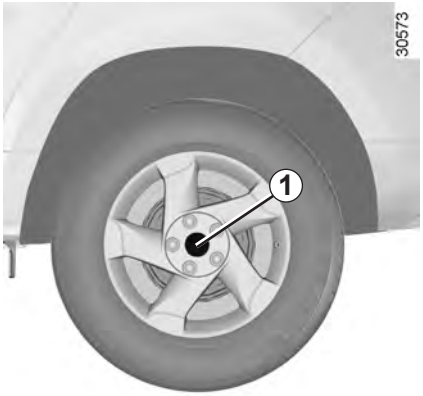

Central wheel trim with visible wheel bolts

(example: wheel trim ***1***)

The bolts are directly accessible.

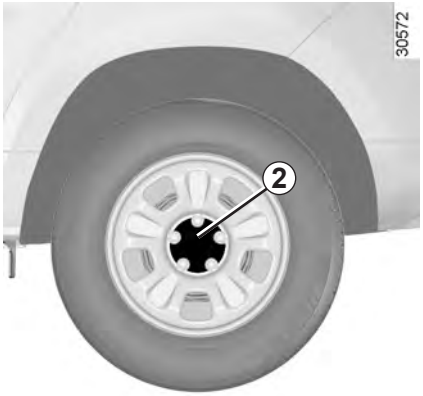

Central wheel trim with visible wheel bolts

(example: wheel trim ***2***)

Remove it using the hubcap tool, by inserting the hook near a wheel bolt.

To put it back, position hooks ***4*** in relation to bolts ***3***.

Push in the wheel trim's retaining hooks.

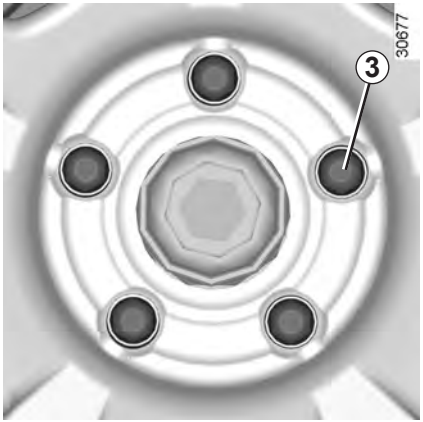

Switch on the hazard warning lights.

Park the vehicle away from traffic on firm, flat, non-slippery ground (if necessary, place a solid support under the jack base). Apply the handbrake and engage a gear (first or reverse gear).

Ask the passengers to leave the vehicle and to keep away from traffic.

If you have a puncture, replace the wheel as soon as possible.

A tyre which has been punctured should always be inspected (and repaired, where possible) by a specialist.

Vehicles equipped with a jack and wheelbrace

If necessary, remove the wheel trim, refer to the information on “Wheel trims - Wheels” in this Section. Undo the wheel bolts using wheelbrace ***4***. Fit it so that you press downwards rather than pulling upwards.

To prevent any risk of injury or damage to the vehicle, only crank the jack until the wheel you are replacing is a maximum of 3 centimetres off the ground.

Mark hole ***1***, which is the nearest to the wheel in question. The jack **must** be fitted in this location. Offer up jack ***3*** horizontally and position jack head ***2*** under the sill.

Start cranking the jack up by hand to align the base plate (which should be pushed slightly under the vehicle).
Turn the wheelbrace until the wheel lifts off the ground.

Remove the bolts.

Take off the wheel.

Fit the emergency spare wheel on the central hub and turn it to align the mounting holes in the wheel and the hub.

If the vehicle is parked on the hard shoulder, you must warn other road users of your vehicle’s presence with a warning triangle or with other devices as per the legislation applying to the country you are in.

Tighten the bolts, checking that the wheel is correctly positioned on its hub and lower the jack.

With the wheels on the ground, tighten the bolts firmly, beginning on side ***5***, then ***7***, ***9***, ***6***, and finishing with ***8***. Check the tightness (tightening torque 105 Nm), and the pressure of the emergency spare wheel's tyre as soon as possible.

If the vehicle is not equipped with a jack or wheelbrace, you can obtain these from your approved dealer.

Note: ensure that the emergency spare wheel or punctured wheel and the wheel tray are correctly positioned so that the luggage compartment carpet can be properly fitted.

If the vehicle is parked on the hard shoulder, you must warn other road users of your vehicle's presence with a warning triangle or with other devices as per the legislation applying to the country you are in.

Tyre and wheel safety

The tyres are the only contact between the vehicle and the road, so it is essential to keep them in good condition.

You must make sure that your tyres conform to local road traffic regulations.

When they need to be replaced, only tyres of the same make, size, type and profile should be used.

Tyres fitted to the vehicle should either be identical to those fitted originally or conform to those recommended by your approved dealer.

Maintaining the tyres

The tyres must be in good condition and the tread form must have sufficient depth; tyres approved by our Technical Department have wear warning strips ***1*** which are **indicators moulded into the tread at several points.**

When the tyre tread has been worn to the level of the warning strips, **they become visible *2***: it is **then** necessary to replace your tyres because the tread rubber is now only **1.6 mm deep at most, resulting in poor road holding on wet roads.**

An overloaded vehicle, long journeys by motorway, particularly in very hot weather, or continual driving on poorly surfaced minor roads will lead to more rapid tyre wear and affect safety.

Incidents which occur when driving, such as striking the kerb, may damage the tyres and wheel rims, and could also lead to misalignment of the front or rear axle geometry. If such incidents occur, have the condition of these parts checked by an approved dealer.

Tyre pressures

Adhere to the tyre pressures (including the emergency spare wheel). The tyre pressures should be checked at least once a month and additionally before any long journey (refer to the label affixed to the edge of the driver's door).

Incorrect tyre pressures lead to abnormal tyre wear and unusually hot running. These are factors which may seriously affect safety and lead to:

– poor road holding;

– risk of blowouts or throwing a tread.

The tyre pressure depends on the load and speed of use; adjust the pressures according to the conditions of use (refer to the information on "Tyre pressures" in Section 4).

Pressures should be checked when the tyres are cold; ignore higher pressures which may be reached in hot weather or following a fast journey.
If tyre pressures cannot be checked when the tyres are **cold**, assume an increase of **0.2** to **0.3** bar.
Never deflate a hot tyre.

Special note
Depending on the vehicle, there may be an adapter which needs to be positioned on the valve before air is added.

Your vehicle is equipped with large wheels. These are more sensitive to imbalance. If you experience vibration while driving, contact an approved dealer.

Fitting new tyres

For safety reasons, this operation must be carried out by a specialist.

Fitting different tyres may change your vehicle as follows:

– it may mean that your vehicle no longer conforms to current regulations;

– It may change the way it handles when cornering;

– It may cause the steering to be heavy;

– it may affect the use of snow chains.

Emergency spare wheel

Refer to the information on the "Emergency spare wheel" and "Changing a wheel" in Section 5.

Please be aware that a poorly tightened or missing valve cap can make the tyres less airtight and may lead to pressure loss. Always use valve caps of the same type as the originals and tighten them fully.

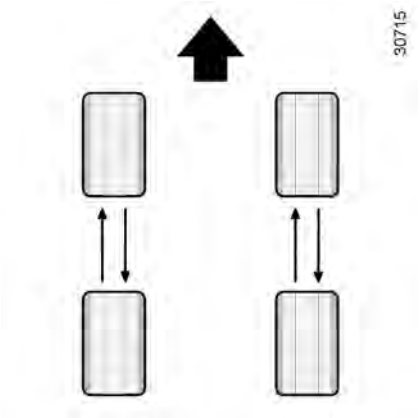

Changing wheels around

We recommend that you swap the wheels regularly in order to ensure that the tyres wear evenly.

Swap the wheels as shown in the above diagram. Refer to your vehicle's maintenance document for the intervals.

Use in winter

Chains

2-wheel drive version (2WD)

Snow chains must be fitted to the front wheels.

4-wheel drive version (4WD)

Snow chains may be fitted to only the front wheels, or to all four wheels.

It is forbidden to fit snow chains to only the rear wheels.

Snow chains may only be fitted to tyres of the same size as those originally fitted to your vehicle.

Only certain chains can be fitted to tyres.

Consult an approved dealer.

Snow or Winter tyres

We would recommend that these be fitted to all **four wheels** to ensure that your vehicle retains maximum adhesion.

Warning: These tyres sometimes have a specific direction of rotation and a maximum speed index which may be lower than the maximum speed of your vehicle.

Studded tyres

This type of equipment may only be used for a limited period and as laid down by local legislation.

It is necessary to observe the speed specified by current legislation.

These tyres must, at a minimum, be fitted to the two front wheels.

In all cases, we would recommend that you contact your approved dealer who will be able to advise you on the choice of equipment which is most suitable for your vehicle.

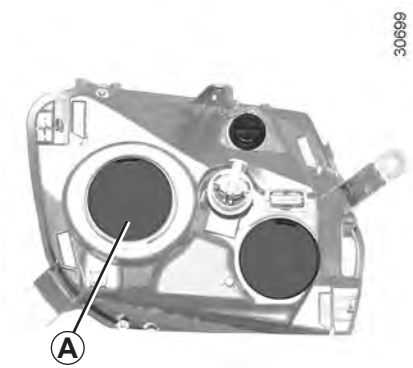

The bulbs detailed below can be replaced. However, we recommend that these be replaced by an approved dealer if this proves difficult.

Dipped beam headlights

Remove cover ***A***.

Unclip bulb ***4*** by pressing connector ***3*** downwards to release the bulb from clips ***2*** and ***1***.

Do not touch the bulb glass. Hold it by its base.
It is **essential** to use anti-UV bulbs so as not to damage the plastic on the headlights**.**
Remove bulb ***4*** from connector ***3***.

Bulb type: H7
Once the bulb has been replaced, be sure to correctly reposition lug ***5*** in notch ***6***, then refit cover ***A***.

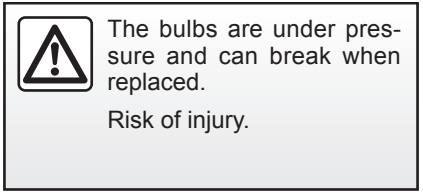

The bulbs are under pressure and can break when replaced.

Risk of injury.

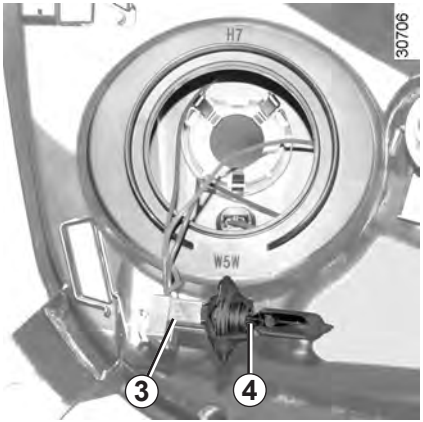

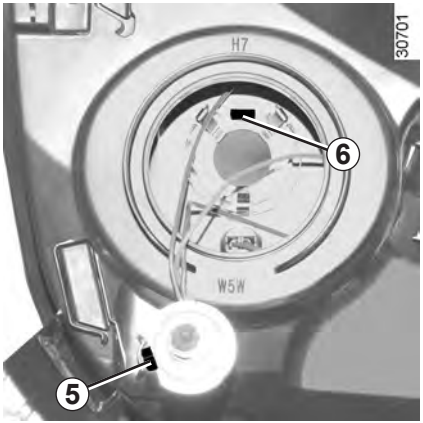

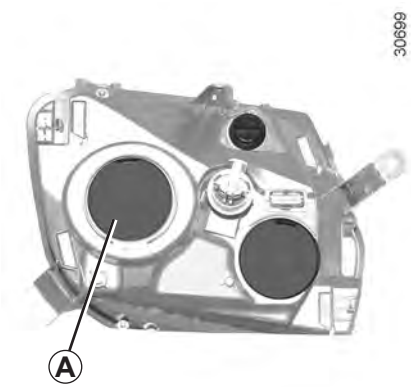

Front side light

Remove cover ***A***.

Remove bulb holder ***7***.

Remove bulb ***8***.

Bulb type: W5W.

When the bulb has been changed, make sure you refit cover ***A*** correctly.

The engine may be hot during operations in close proximity. In addition, the engine cooling fan may come on at any moment.

Risk of injury.

The bulbs are under pressure and can break when replaced.

Risk of injury.

To comply with local legislation, or as a precaution, you can obtain an emergency kit containing a set of spare bulbs and fuses from an approved dealer.

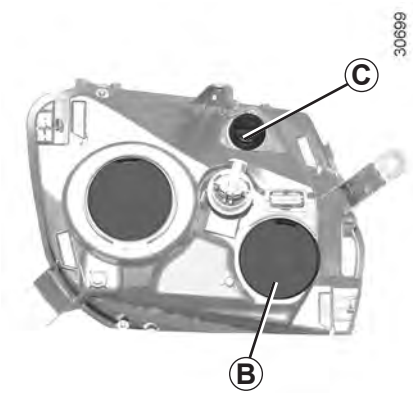

Main beam headlights

Remove cover ***B***.

Release spring ***9*** and remove bulb ***12*** with connector ***10***.

Unclip the bulb from its connector.
Bulb type: H1.

Once the bulb has been replaced, be sure to correctly reposition the two lugs ***13*** in holes ***11***, as well as the spring and the cover.

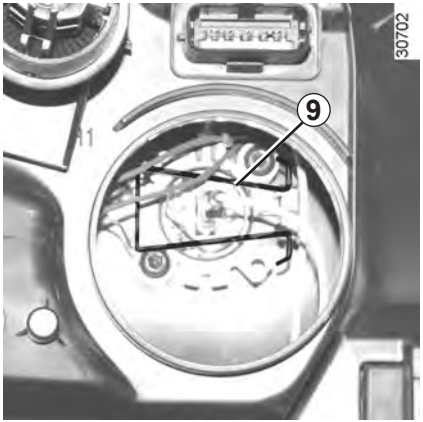

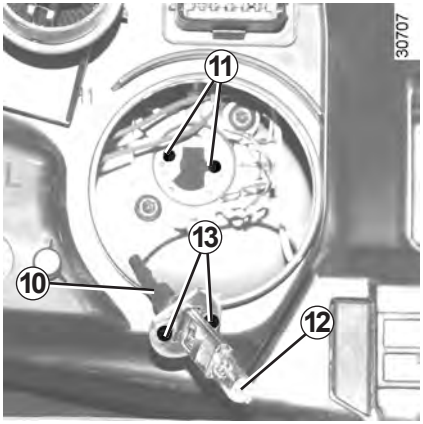

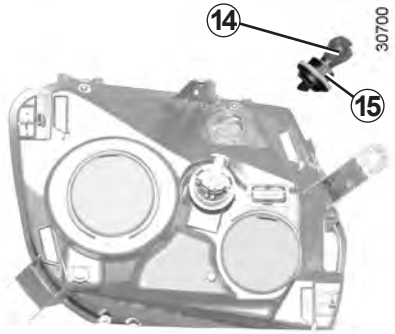

Direction indicator lights

Turn bulb holder ***C*** fully anticlockwise and remove it.

Replace bulb ***14***.

Bulb type: PY21W.

Once the bulb has been replaced, be sure to correctly reposition the two lugs ***15*** in relation to the slots in the light.

Turn the bulb holder fully clockwise.

FOG LIGHTS: changing bulbs

Front fog lights *1*

Consult an approved dealer.

Bulb type: H11.

The bulbs are under pressure and can break when replaced.

Risk of injury.

Additional lights

If you wish to fit fog lights or long range headlights to your vehicle, consult an approved dealer.

Any operation on (or modification to) the electrical system must be performed by an approved Dealer since an incorrect connection might damage the electrical equipment (harness, components and in particular the alternator). In addition, your Dealer has all the parts required for fitting these units.

The engine may be hot during operations in close proximity. In addition, the engine cooling fan may come on at any moment.

Risk of injury.

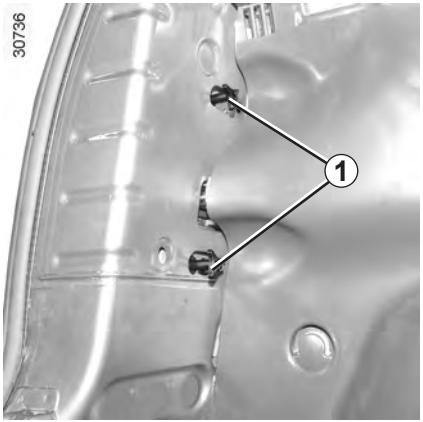

Rear lights

Open the tailgate and undo nuts ***1***, then release light unit ***2*** by pulling it rearwards.

Release clips ***3*** to remove bulb holder ***4***.

5 **Side light and brake light**
Pear-shaped, bayonet type bulb with two P 21/5 W filaments.

6 **Direction indicator light**
Pear-shaped, bayonet type P 21 W or PY 21 W bulb (depending on vehicle).

7 **Reversing light**
Pear-shaped, bayonet type bulb, P 21 W.
or
Rear fog light
Pear-shaped, bayonet type P 21 W bulb.

Refitting

To refit, proceed in the reverse order, taking care not to damage the wiring.

The bulbs are under pressure and can break when replaced.

Risk of injury.

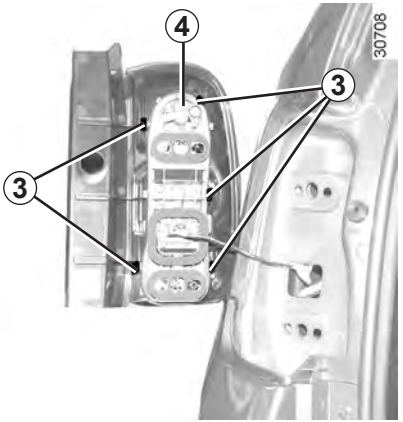

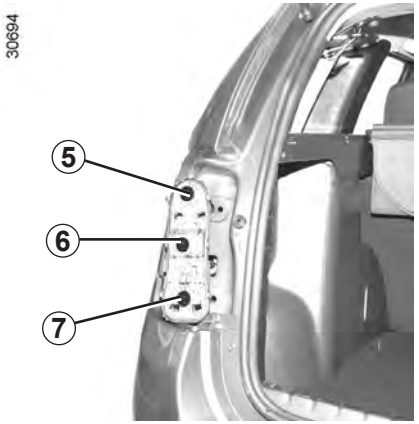

High-level brake light

The bulb for high-level brake light ***9*** may be accessed through the luggage compartment.
Carefully unclip cover ***8*** by pressing tabs ***10***.

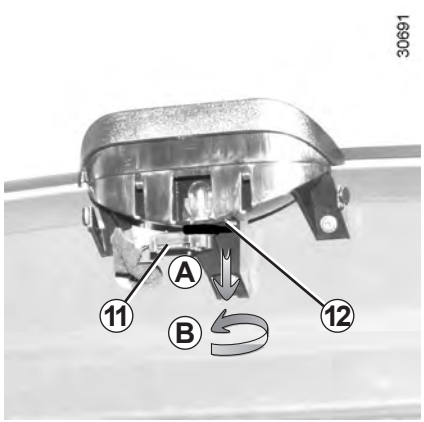

Unclip tab ***12*** carefully (movement ***A***) and turn it an eighth of a turn (movement ***B***) to release the bulb holder ***11***.

The bulbs are under pressure and can break when replaced.

Risk of injury.

Remove bulb ***13***.

Bulb type: P 21 W.

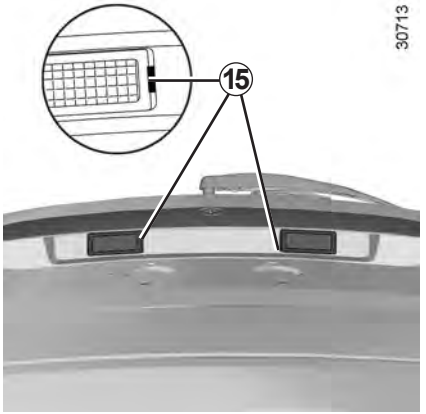

Number plate light

Unclip light ***14*** by pressing tab ***15*** using a flat-blade screwdriver or similar.

Unclip lens ***17*** and take out bulb ***16***.

Bulb type: W 5 W.

INDICATOR LIGHTS: changing bulbs

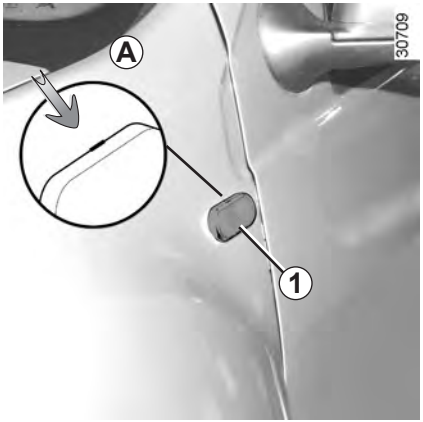

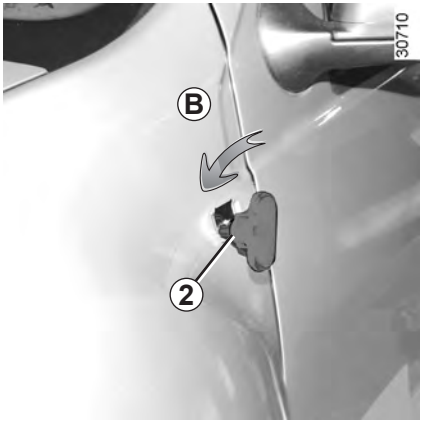

Unclip indicator light ***1*** (using a flat-blade screwdriver or similar positioned at ***A*** to move the indicator light towards the outside of the vehicle).

Turn bulb holder ***2*** a quarter of a turn (movement ***B***) and take out bulb ***3*** (movement ***C***).

Bulb type: WY5W.

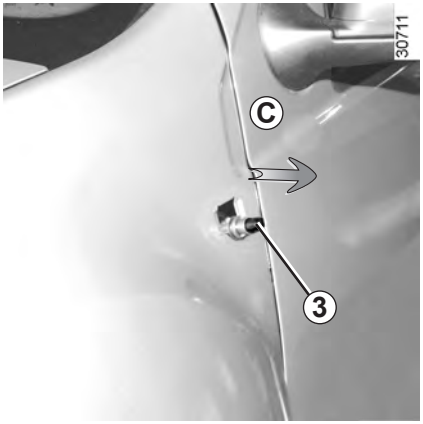

The bulbs are under pressure and can break when replaced.

Risk of injury.

Courtesy light

Unclip lens ***1*** using a flat-blade screwdriver or similar.

Remove the bulb concerned**.**

Bulb type *2*: W5W.

The bulbs are under pressure and can break when replaced.

Risk of injury.

Glove box light
(depending on the vehicle)

Unclip light ***3*** using a flat-blade screwdriver or similar, by pressing on the tab to move the light towards the inside of the unit.

Disconnect the light.

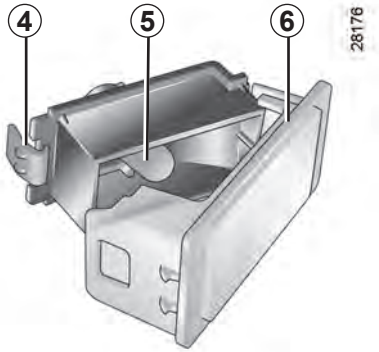

Press tab ***4*** to release lens ***6*** and access bulb ***5***.

Bulb type: W5W.

The bulbs are under pressure and can break when replaced.

Risk of injury.

Luggage compartment light

Unclip light ***7*** using a flat-blade screwdriver or similar, by pressing on tab ***6*** to move the light towards the inside of the luggage compartment.

Press tab ***9*** to release lens ***8***.

The bulbs are under pressure and can break when replaced.

Risk of injury.

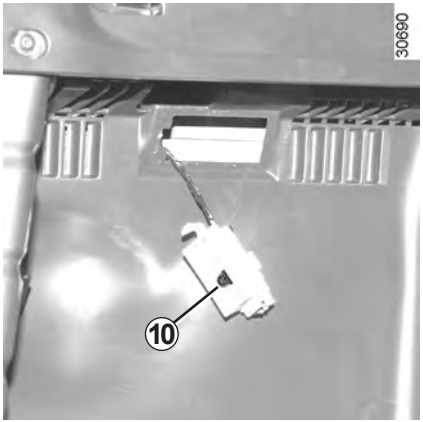

Remove the bulb ***10***.

Bulb type: W5W.

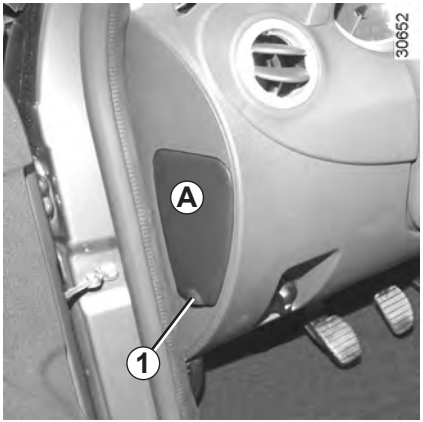

Passenger compartment fuses

If any electrical component does not work, check the condition of the fuses. Unclip flap ***A*** using notch ***1*** to help you. Use the fuse allocation label on the back of flap ***A*** to identify the fuses.

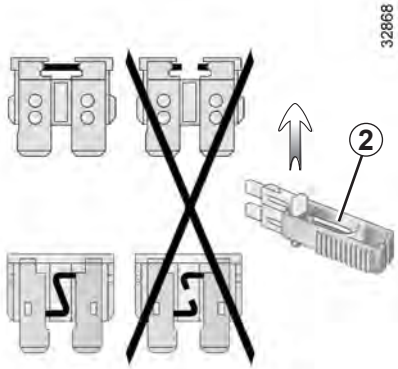

Tweezers *2*

Release the fuse using tweezers ***2***, located on the back of flap ***A***. To remove the fuse from the tweezers, slide it sideways.
It is not advisable to use the free fuse locations.

Fuses in engine compartment *B*
Some functions are protected by fuses located in the engine compartment (unit ***B***).
However, because of their reduced accessibility, **we advise you to have your fuses replaced by an approved dealer**.

To comply with current legislation, or as a precaution, you can obtain an emergency kit from your approved Dealer containing a set of spare bulbs and fuses.

Check the fuse in question and **replace it**, if necessary, **with a fuse of the same rating**.

If a fuse is fitted where the rating is too high, it may cause the electrical circuit to overheat (risk of fire) in the event of an item of equipment using an excessive amount of current.

Allocation of fuses in the passenger compartment
(the presence of certain fuses DEPENDS ON THE VEHICLE EQUIPMENT LEVEL)

Symbol	Allocation
ABS	ABS
	Radio
STOP	Brake lights
	Air conditioning
	Front fog lights
	Instrument panel Injection
	Windscreen wiper

Symbol	Allocation
	Central locking of doors and tailgate
	Rear screen de-icing
	Not used
	Horn
UCH	Main power supply
	Heated seats
	Heated door mirrors

Symbol	Allocation
AV	Electric front windows
	Interior lighting
	Electric door mirror
	Heating
	Not used
	Air bag
	Right-hand main beam headlight

Allocation of fuses in the passenger compartment
(the presence of certain fuses DEPENDS ON THE VEHICLE EQUIPMENT LEVEL)

Symbol	Allocation
	Left-hand main beam headlight
	Left-hand dipped beam headlight
	Right-hand dipped beam headlight
	Right-hand side light
	Left-hand side light
	Rear fog light
AR	Electric rear windows

Symbol	Allocation
	Engine immobiliser
	Reversing light and rear screen wiper
	Power-assisted steering
	Automatic gearbox
CNG	GAS fuel
	4-wheel drive (4WD) transmission

To avoid all risk of sparks:

– Ensure that any consumers (courtesy lights, etc.) are switched off before disconnecting or reconnecting the battery;

– when charging, stop the charger before connecting or disconnecting the battery;

– to avoid creating a short circuit between the terminals, do not place metal objects on the battery;

– always wait at least one minute after the engine has been switched off before disconnecting a battery;

– make sure that you reconnect the battery terminals after refitting.

Connecting a battery charger

The battery charger must be compatible with a battery with nominal voltage of 12 volts.

Do not disconnect the battery when the engine is running. **Follow the instructions given by the manufacturer of the battery charger you are using.**

When many accessories are fitted to the vehicle, have them connected to the + after ignition feed.

Special procedures may be required to charge some batteries. Contact your approved dealer.

Avoid all risk of sparks which may cause an immediate explosion, and charge the battery in a well-ventilated area.

Risk of serious injury.

Handle the battery with care as it contains sulphuric acid, which must not come into contact with eyes or skin. If it does, wash the affected area with plenty of cold water and consult a doctor, if necessary.

Ensure that naked flames, red hot objects and sparks do not come into contact with the battery as there is a risk of explosion.

The engine may be hot when carrying out operations in close proximity. In addition, the engine cooling fan can come on at any moment.

Risk of serious injury.

Starting the vehicle using the battery from another vehicle

If you have to use the battery from another vehicle to start, obtain suitable jump leads (with a large cross section) from an approved dealer or, if you already have jump leads, ensure that they are in perfect condition.

The two batteries must have an identical nominal voltage of 12 volts. The battery supplying the current should have a capacity (amp-hours, Ah) which is at least the same as that of the discharged battery.

Ensure that there is no risk of contact between the two vehicles (risk of short circuiting when the positive terminals are connected) and that the discharged battery is properly connected. Switch off your vehicle ignition.

Start the engine of the vehicle supplying the current and run it at an intermediate engine speed.

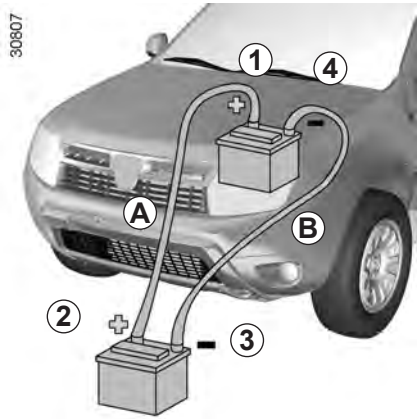

Connect the positive (+) lead ***A*** to (+) terminal ***1*** of the discharged battery, then to (+) terminal ***2*** of the battery supplying the current.

Connect the negative (–) lead ***B*** to (–) terminal ***3*** of the battery supplying the current and then to (–) terminal ***4*** of the discharged battery.

Start the engine as normal. As soon as it is running, disconnect leads ***A*** and ***B*** in the reverse order (***4-3-2-1***)

Check that there is no contact between leads ***A*** and ***B*** and that the positive lead ***A*** is not touching any metal parts on the vehicle supplying the current.

Risk of injury and/or damage to the vehicle.

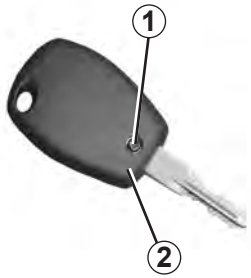

Replacing the battery

Unscrew screw ***1*** then unclip cover ***2***.

Batteries can be obtained from your approved dealer. These batteries should have a service life of approximately two years.

Check that there is no dye on the battery: risk of an incorrect electrical contact.

Replace battery ***3*** according to the direction marked on the cover.

Note: It is not advisable to touch the electronic circuit in the key cover when replacing the battery.

Battery type: **CR 2016**.

When refitting, ensure that the cover is correctly clipped on and the screw tightened.

Do not dispose of your used batteries in the countryside. Give them to an organisation that collects and recycles used batteries.

WIPER BLADES

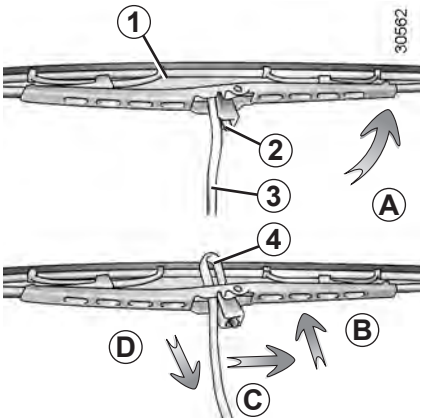

Replacing windscreen wiper blades *1*

– With the ignition off, lift wiper arm ***3***.

– Turn the blade horizontally (movement ***A***).

– Press tab ***2*** and slide the wiper blade downwards (movement ***D***) until hook ***4*** on the wiper arm is released.

– Slide the blade (movement ***C***) then lift it (movement ***B***) to release it.

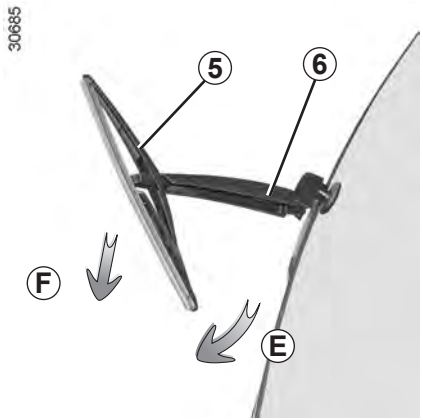

Replacing the rear screen wiper blades *5*

– With the ignition off, lift wiper arm ***6***.

– Turn blade ***5*** until some resistance is met (movement ***E***).

– Pull the blade to release it (movement ***F***).

Refitting windscreen wiper blades

To refit the wiper blade, proceed in the reverse order to removal. Make sure that the blade is correctly locked in position.

Check the condition of the wiper blades. You are responsible for their service life:

– clean the blades, windscreen and rear screen regularly with soapy water;

– do not use them when the windscreen or rear screen are dry;

– free them from the windscreen or rear screen when they have not been used for a long time.

– In frosty weather, make sure that the wiper blades are not stuck by ice (to avoid the risk of the motor overheating).

– Check the condition of the wiper blades.
Replace the wiper blades as soon as they begin to lose efficiency (approximately once a year).

Whilst changing the blade, take care not to drop the arm onto the window after it has been removed as this may break the window.

Towing procedure

The steering wheel must be unlocked and the ignition key must be in position M (ignition on) to provide stop lights and hazard warning lights on the towed vehicle. At night the vehicle must have its lights on.

Unhitch the trailer, etc., if one is being towed.

You must observe the towing regulations which apply in the country in which you are driving: do not exceed the towing weight for your vehicle. Contact an approved Dealer.

When the engine is stopped, steering and braking assistance are not operational.

Do not leave the tools unsecured inside the vehicle as they may come loose under braking.

Front and rear towing points

Only use the front *1* and rear *2* towing points.

These towing points may only be used for towing: never use them for lifting the vehicle directly or indirectly.

– Use a rigid towing bar (except for off-road recovery). If a rope or cable is used (where the law allows this), the vehicle being towed must be able to brake.
– A vehicle must not be towed if it is not fit to be driven.
– Avoid accelerating or braking suddenly when towing, as this may result in damage being caused to the vehicle.
– When towing a vehicle, it is advisable not to exceed **15 mph (25 km/h)**.

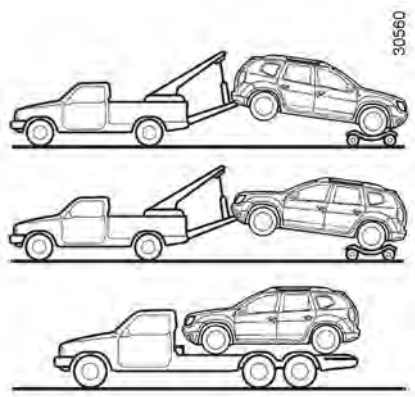

4-wheel drive vehicles (4WD)

Whichever type of gearbox is fitted, a 4WD vehicle must never be towed if any of its 4 wheels are touching the ground.

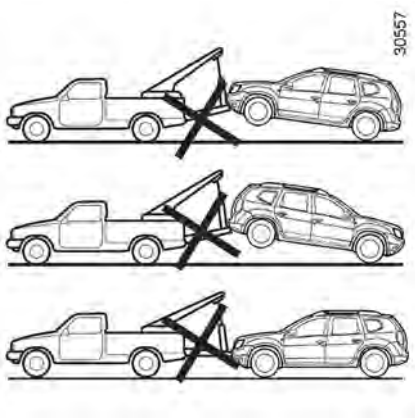

You must never tow a 4-wheel drive vehicle, irrespective of the mode selected, if one of the 4 wheels is in contact with the ground (except for off-road recovery). Risk of mechanical damage.

Off-road recovery

If your vehicle is stuck in sand, snow or mud, attach a flexible towing device (towing belt or other device specially designed for this purpose) to the front or rear towing point (refer to the information on “Front and rear towing points” on the previous page).

Refer to the manufacturer’s instructions for information on how to fit and operate the equipment.

If a **4x4** (**4WD**) vehicle becomes stuck, it should only be towed for a short distance. Risk of mechanical damage.

For off-road recovery, it is forbidden to use a rigid bar to tow a vehicle that is stuck. Risk of mechanical damage.

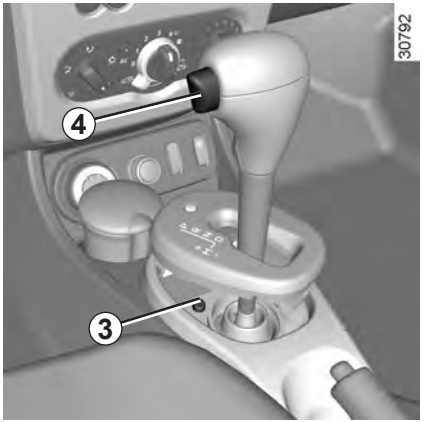

Vehicle equipped with an automatic gearbox

If the lever is stuck in **P**, even though you are depressing the brake pedal, the lever can be released manually.

To do this, unclip the cover at the base of the lever.

Simultaneously press button ***3*** and unlocking button ***4***.

When storing the tools, ensure they are securely replaced in the luggage compartment, in their original position.

Do not leave the tools unsecured inside the vehicle as they may come loose under braking.

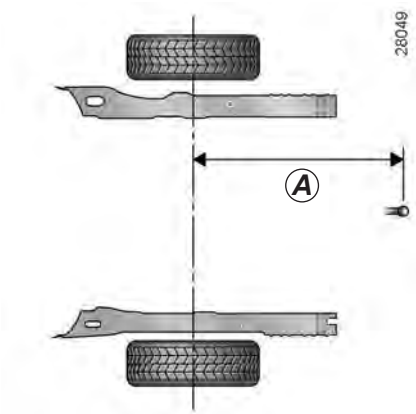

A = 893 mm.

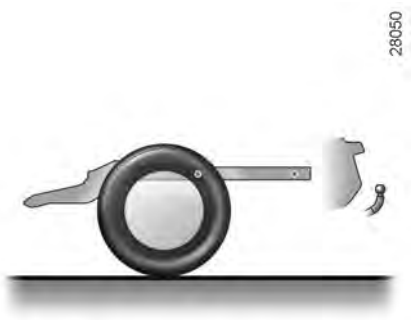

Permissible nose weight, maximum permissible towing weight braked and unbraked:

Refer to the information on “Weights” in Section 6.

Refer to the manufacturer’s instructions for information on how to fit and operate the towing equipment.

Please keep these instructions with the rest of the vehicle documentation.

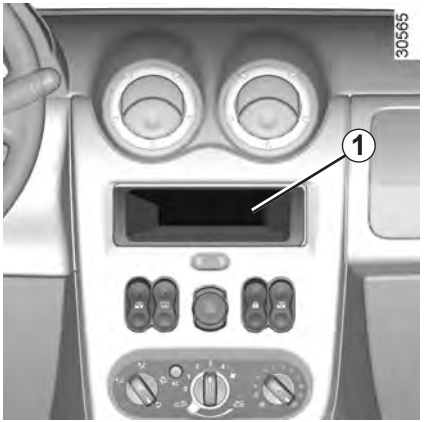

Radio location *1*

If your vehicle is not fitted with an audio system, one can be fitted and locations have been provided for:

– the radio ***1***;

– front speakers ***2***;

– rear speakers ***3***.

To install any equipment, please consult an approved dealer.

Unclip and remove storage compartment ***1***.

– In all cases, it is very important to follow the manufacturer's instructions carefully.

– The specifications of the brackets and wires (available from our network) vary depending on the equipment level of your vehicle and the type of radio. Consult an approved dealer to find out the correct part number.

– No work may be carried out on the vehicle's electrical or radio circuits, except by approved Dealers: an incorrectly connected system may result in damage being caused to the electrical equipment and/or the components connected to it.

Location for front speaker *2*

Unclip cover ***2*** using a flat-blade screwdriver or similar.

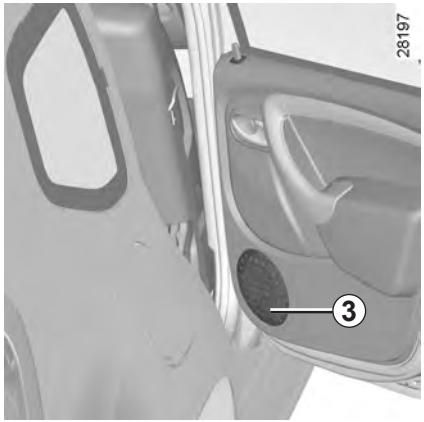

Location for rear speaker *3*

Unclip cover ***3*** using a flat-blade screwdriver or similar.

Before fitting an electrical or electronic device (particularly for transmitters/receivers: frequency bandwidth, power level, position of the aerial etc.), ensure that it is compatible with your vehicle.

Contact an approved dealer for this information.

Use of transmission/ receiving devices (telephones, CB equipment etc.).

Telephones and CB equipment with integrated aerials may cause interference to the original electronic systems fitted to the vehicle: it is advisable only to use equipment with an external aerial.

Furthermore, we remind you of the need to comply with the legislation in force concerning the use of such equipment.

Fitting after-market accessories

If you wish to install accessories on the vehicle: consult an approved dealer.

Also, to ensure the correct operation of your vehicle, and to avoid any risk to your safety, we recommend that you use only specific accessories, designed for your vehicle, which are the only accessories for which the manufacturer will provide a warranty.

If you are using an anti-theft device, only attach it to the brake pedal.

Electrical and electronic accessories

– Connect accessories with a maximum power of 120 Watts only.

Fire hazard.

– No work may be carried out on the vehicle's electrical or radio circuits, except by approved dealers: an incorrectly connected system may result in damage being caused to the electrical equipment and/or the components connected to it;

– if the vehicle is fitted with any aftermarket electrical equipment, make sure that the unit is correctly protected by a fuse. Establish the rating and position of this fuse.

OPERATING FAULTS (1/5)

The following advice will enable you to carry out quick, temporary repairs. For safety reasons you should always contact an approved dealer as soon as possible.

The starter is activated	POSSIBLE CAUSES	WHAT TO DO
Warning lights dim or fail to come on; the starter does not run.	Battery terminals disconnected, oxidised or incorrectly secured.	Retighten them, reconnect them or clean them if they are oxidised.
	Battery discharged or worn.	Connect another battery to the faulty battery. Refer to the information on “Battery: troubleshooting” in Section 5 or replace the battery if necessary. Do not push the vehicle if the steering column is locked.
The engine will not start.	Starting conditions are not fulfilled.	Refer to the information on “Starting/stopping the engine in Section 2.
The steering column remains locked.	Steering wheel locked.	To unlock, gently move the key and the steering wheel (refer to the information on the “Ignition switch” in Section 2).

OPERATING FAULTS (2/5)

On the road	POSSIBLE CAUSES	WHAT TO DO
Vibrations.	Tyres not inflated to correct pressures, incorrectly balanced or damaged.	Check the tyre pressures; if this is not the cause, have their condition checked by an approved dealer.
	Mud or snow in the wheels.	Clean the vehicle, particularly the wheels (refer to the information on “Bodywork maintenance/engine compartment” in Section 4).
Abnormal white smoke from the exhaust.	Mechanical fault: damaged cylinder head gasket. or	Stop the engine. Contact an approved dealer.
	This is not necessarily a fault. Smoke may be caused by regeneration of the particle filter.	Refer to the information on “Special features of diesel versions” in Section 2.
The oil pressure warning light comes on:		
on a bend or under braking	The engine oil level is too low.	Top up the engine oil (refer to the information on “Engine oil level, topping up/refilling” in Section 4).
at idle speed	Low oil pressure.	Go to your nearest approved dealer.

OPERATING FAULTS (3/5)

On the road	POSSIBLE CAUSES	WHAT TO DO
The oil pressure warning light takes a long time to go out or remains lit during acceleration.	Loss of oil pressure.	Stop the vehicle: contact a an approved dealer.
The oil change warning light remains lit after an oil change.	Warning not reset after oil change.	Reset the warning after changing the oil; refer to the information on “Resetting the warning after an oil change” in Section 4.
The “2WD” mode and electronic fault warning lights come on.	Fault in the 4-wheel drive system.	Drive as soon as possible at a moderate speed to an approved dealer. The problem may be resolved by replacing the wheels.
The system will not switch to “2WD” or “4WD Lock” mode. “AUTO” mode remains active.	Fault in the 4-wheel drive system.	Contact an approved dealer as soon as possible.
Whistling	Roof aerial poorly positioned.	Position the aerial.
Coolant boiling in the coolant reservoir.	Mechanical fault: damaged cylinder head gasket, defective water pump.	Stop the engine. Contact an approved dealer.
Smoke under the bonnet.	Short circuit or cooling system leak.	Stop, switch off the ignition, stand away from the vehicle and contact an approved Dealer.

OPERATING FAULTS (4/5)

On the road	POSSIBLE CAUSES	WHAT TO DO
The power-assisted steering becomes heavy.	Belt broken.	Have the belt replaced.
	Lack of power-assisted steering oil in the pump.	For maintenance operations on the power-assisted steering, contact an approved dealer.
The engine overheats. The coolant temperature indicator light comes on.	Engine cooling fan not working.	Stop the vehicle, switch off the engine and contact an approved dealer.
	Coolant leaks.	Stop the vehicle, switch off the engine and check the coolant reservoir: it should contain fluid. If there is no coolant, consult an approved dealer as soon as possible.
	Radiator blocked or clogged.	Stop the vehicle, switch off the engine and clean the radiator (refer to the information on “Bodywork maintenance/engine compartment” in Section 2). If it is clean, consult an approved dealer as soon as possible.

Radiator: If there is a significant lack of coolant, remember that it must never be topped up using cold coolant while the engine is very warm. After any procedure on the vehicle which has involved even partial draining of the cooling system, it must be refilled with a new mixture prepared in the correct proportions. Reminder: only products approved by the Technical Department may be used for this purpose.

OPERATING FAULTS (5/5)

Electrical equipment	POSSIBLE CAUSES	WHAT TO DO
The wipers do not work.	Wiper blades stuck.	Free the blades before using the wipers.
	Faulty electrical circuit.	Consult an approved dealer.
The wiper does not stop.	Faulty electrical controls.	Consult an approved dealer.
Direction indicators flashing more quickly.	Blown bulb.	Replace the bulb.
The direction indicators do not work.	Faulty electrical circuit.	Consult an approved dealer.
The headlights do not switch on or off.	Faulty electrical circuit or control.	Consult an approved dealer
Traces of condensation in the lights.	This is not a fault. Traces of condensation are a natural phenomenon caused by variations in temperature. These traces soon disappear when the lights are switched on.	

Section 6: Technical specifications

Vehicle identification plate 6.2
Engine specifications 6.5
Weights/Towing weights 6.6
Replacement parts and repairs 6.7
Service sheets 6.8
Anti-corrosion check 6.14

VEHICLE IDENTIFICATION PLATE

Quote the details given on identification plate *A* on all letters or orders.

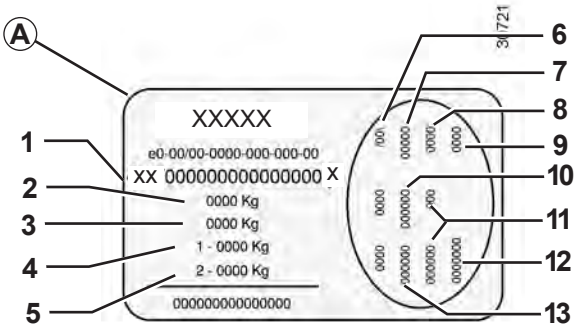

Vehicle identification plate *A*

1 Vehicle type and chassis number.

2 MMAC (Maximum permissible all-up weight).

3 MTR (Total train weight – vehicle fully loaded, with trailer).

4 MMTA (Maximum permissible weight) front axle.

5 Maximum permissible weight on rear axle.

6 Technical specifications of vehicle.

7 Vehicle paint reference.

8 Equipment level.

9 Vehicle type.

10 Trim code.

11 Additional equipment specification.

12 Fabrication number.

13 Interior trim code.

ENGINE IDENTIFICATION PLATES

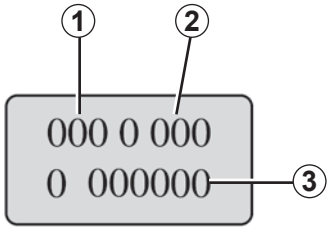

Quote the details given on identification plate *B* on all letters or orders.
(Location varies depending on engine)

1 Engine type
2 Engine suffix
3 Engine number

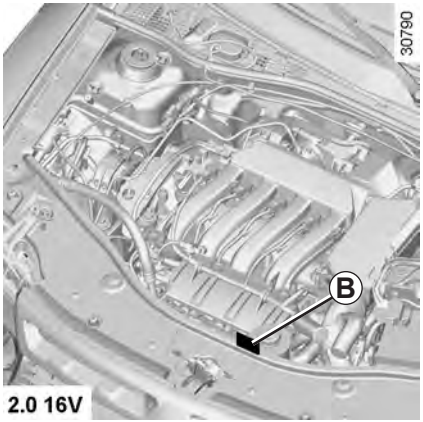

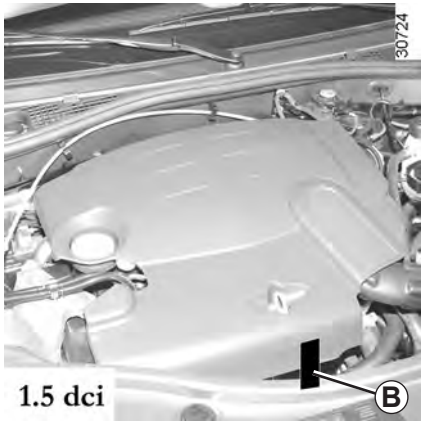

DIMENSIONS (in metres)

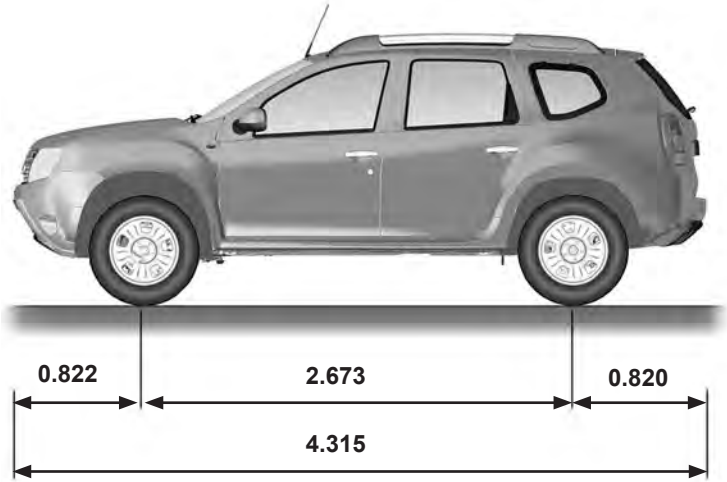

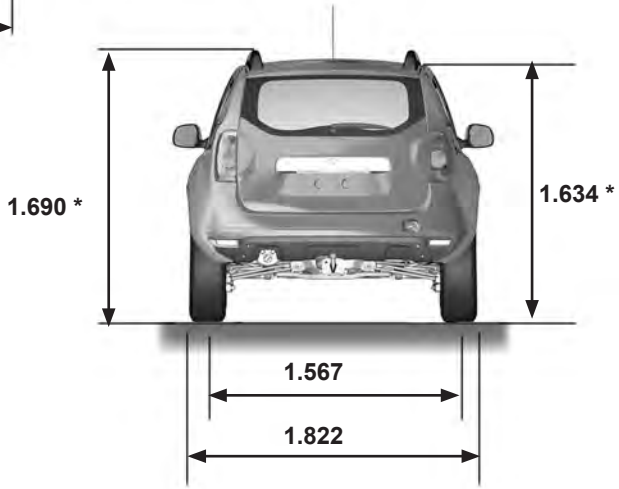

30808

(*) Unladen

ENGINE SPECIFICATIONS

Versions	1.6 16V	2.0 16V	1.5 dCi
Engine type (see engine plate)	K4M	F4R	K9K
Cubic capacity (cc)	1,598	1998	1,461
Type of fuel **Octane rating**	Petrol It is essential to use unleaded petrol and this must be of the octane rating stated on the label inside the fuel filler flap. If not available, for a limited time only, use unleaded fuel: – with an octane rating of 91 for a label with the ratings 95 or 98; – with an octane rating of 87 for a label showing 91, 95 or 98.		Diesel The label located in the fuel filler flap indicates the authorised fuels.
Spark plugs	Only use the spark plugs specified for your vehicle's engine. The type should be marked on a label affixed inside the engine compartment. If it is not then contact an authorised dealer. Fitting spark plugs which are not to specification may damage the engine.		

WEIGHTS (in kg)

The weights shown are for a basic vehicle without options: they will vary depending on the equipment level of your vehicle. Please consult an authorised dealer.

Versions	4x2			4x4		
	1.6 16V	2.0 16V	1.5 dCi	1.6 16V	2.0 16V	1.5 dCi
Maximum permissible all-up weight (MMAC) **Total train weight (MTR)**	Weights shown on the vehicle identification plate (refer to the information on “Vehicle identification plates” in Section 6)					
Braked Trailer Weight*	found by calculating: **MTR - MMAC**					
Unbraked trailer weight*	615	640	625	660	685	680
Permissible nose weight*	50			75		
Maximum permissible load on roof with a carrying device	100 (including the carrying device)					

***Towing weight (towing a caravan, boat, etc.)**
Towing is prohibited when the GTW - MAM calculation is equal to zero.

- It is important to comply with the towing weights, governed by local legislation in each country and, in particular, laid down in the Road Traffic Regulations. Contact an authorised dealer for any towing equipment modifications.
- For vehicles fitted with a trailer, **the gross train weight (vehicle + trailer) must never be exceeded**. However, the following is tolerated:
  - the Maximum permissible weight at the rear may be exceeded by no more than 15%,
  - the maximum permissible all-up weight may be exceeded by no more than 10% or 100 kg (whichever occurs first).

  In either case, the maximum speed of the vehicle and trailer must not exceed 60 mph (100 kph) and the tyre pressures must be increased by 0.2 bar (3 PSI).
- The engine output and climbing capability are reduced with altitude. We recommend that the maximum load be reduced by 10% at an altitude of 1,000 metres and by an additional 10% for each 1,000 metres thereafter.

SPARE PARTS AND REPAIRS

Original parts are based on strict specifications and are subject to highly-specialised tests. Therefore, they are of at least the same level of quality as the parts fitted originally.

If you always fit genuine replacement parts to your vehicle, you will ensure that it performs well. Furthermore, repairs carried out within the manufacturer's Network using original parts are guaranteed according to the conditions set out on the reverse of the repair order.

SERVICE SHEETS (1/6)

VIN: .....

Date: Miles (Km):	Invoice number:	Comments/miscellaneous
Type of operation: Service □ ..... □ **Anti-corrosion check:** OK □ Not OK* □ *See specific page	**Stamp**	

Date: Miles (Km):	Invoice number:	Comments/miscellaneous
Type of operation: Service □ ..... □ **Anti-corrosion check:** OK □ Not OK* □ *See specific page	**Stamp**	

Date: Miles (Km):	Invoice number:	Comments/miscellaneous
Type of operation: Service □ ..... □ **Anti-corrosion check:** OK □ Not OK* □ *See specific page	**Stamp**	

SERVICE SHEETS (2/6)

VIN: .....

Date: Miles (Km):	Invoice number:	Comments/miscellaneous
Type of operation: Service □ ..... □ **Anti-corrosion check:** OK □ Not OK* □ *See specific page	**Stamp**	

Date: Miles (Km):	Invoice number:	Comments/miscellaneous
Type of operation: Service □ ..... □ **Anti-corrosion check:** OK □ Not OK* □ *See specific page	**Stamp**	

Date: Miles (Km):	Invoice number:	Comments/miscellaneous
Type of operation: Service □ ..... □ **Anti-corrosion check:** OK □ Not OK* □ *See specific page	**Stamp**	

SERVICE SHEETS (3/6)

VIN: .....

Date: Miles (Km):	Invoice number:	Comments/miscellaneous
Type of operation: Service □ ..... □ **Anti-corrosion check:** OK □ Not OK* □ *See specific page	**Stamp**	

Date: Miles (Km):	Invoice number:	Comments/miscellaneous
Type of operation: Service □ ..... □ **Anti-corrosion check:** OK □ Not OK* □ *See specific page	**Stamp**	

Date: Miles (Km):	Invoice number:	Comments/miscellaneous
Type of operation: Service □ ..... □ **Anti-corrosion check:** OK □ Not OK* □ *See specific page	**Stamp**	

SERVICE SHEETS (4/6)

VIN: .....

Date: Miles (Km):	Invoice number:	Comments/miscellaneous
Type of operation: Service □ ..... □ **Anti-corrosion check:** OK □ Not OK* □ *See specific page	**Stamp**	

Date: Miles (Km):	Invoice number:	Comments/miscellaneous
Type of operation: Service □ ..... □ **Anti-corrosion check:** OK □ Not OK* □ *See specific page	**Stamp**	

Date: Miles (Km):	Invoice number:	Comments/miscellaneous
Type of operation: Service □ ..... □ **Anti-corrosion check:** OK □ Not OK* □ *See specific page	**Stamp**	

SERVICE SHEETS (5/6)

VIN: .....

Date: Miles (Km):	Invoice number:	Comments/miscellaneous
Type of operation: Service □ ..... □ **Anti-corrosion check:** OK □ Not OK* □ *See specific page	**Stamp**	

Date: Miles (Km):	Invoice number:	Comments/miscellaneous
Type of operation: Service □ ..... □ **Anti-corrosion check:** OK □ Not OK* □ *See specific page	**Stamp**	

Date: Miles (Km):	Invoice number:	Comments/miscellaneous
Type of operation: Service □ ..... □ **Anti-corrosion check:** OK □ Not OK* □ *See specific page	**Stamp**	

SERVICE SHEETS (6/6)

VIN: .....

Date: Miles (Km):	Invoice number:	Comments/miscellaneous
Type of operation: Service □ ..... □ **Anti-corrosion check:** OK □ Not OK* □ *See specific page	**Stamp**	

Date: Miles (Km):	Invoice number:	Comments/miscellaneous
Type of operation: Service □ ..... □ **Anti-corrosion check:** OK □ Not OK* □ *See specific page	**Stamp**	

Date: Miles (Km):	Invoice number:	Comments/miscellaneous
Type of operation: Service □ ..... □ **Anti-corrosion check:** OK □ Not OK* □ *See specific page	**Stamp**	

ANTICORROSION CHECK (1/5)

If the continuation of the warranty is subject to repair, it is indicated below.

VIN: .....

Corrosion repair operation to be carried out: Date of repair:		**Stamp**
Repair to be carried out: Date of repair:		**Stamp**
Repair to be carried out: Date of repair:		**Stamp**

ANTICORROSION CHECK (2/5)

If the continuation of the warranty is subject to repair, it is indicated below.

VIN: .....

Corrosion repair operation to be carried out: Date of repair:		**Stamp**
Repair to be carried out: Date of repair:		**Stamp**
Repair to be carried out: Date of repair:		**Stamp**

ANTICORROSION CHECK (3/5)

If the continuation of the warranty is subject to repair, it is indicated below.

VIN: .....

Corrosion repair operation to be carried out: Date of repair:		**Stamp**
Repair to be carried out: Date of repair:		**Stamp**
Repair to be carried out: Date of repair:		**Stamp**

ANTICORROSION CHECK (4/5)

If the continuation of the warranty is subject to repair, it is indicated below.

VIN: .....

Corrosion repair operation to be carried out: Date of repair:		**Stamp**
Repair to be carried out: Date of repair:		**Stamp**
Repair to be carried out: Date of repair:		**Stamp**

ANTICORROSION CHECK (5/5)

If the continuation of the warranty is subject to repair, it is indicated below.

VIN: .....

Corrosion repair operation to be carried out: Date of repair:		**Stamp**
Repair to be carried out: Date of repair:		**Stamp**
Repair to be carried out: Date of repair:		**Stamp**

ALPHABETICAL INDEX (1/4)

A

ABS ....2.15 → 2.18
accessories....5.38
accessories - installation 5.38
accessories socket 3.14
adjusting your driving position ....1.10, 1.12 → 1.15
advice on antipollution ....5.25 → 5.27
air bag....1.16 → 1.20
    deactivating the front passenger air bags 1.32
air conditioning ....3.2 → 3.8
air vents ....3.2 – 3.3
anti-corrosion check ....6.14 → 6.18
anti-lock braking system: ABS ....2.15 → 2.18
antipollution
    advice ....2.6 → 2.8
ashtrays 3.14
automatic gearbox (use)....2.19 → 2.21
automatic gearbox selector lever....2.19 → 2.21

B

battery....4.12
    troubleshooting ....5.28 – 5.29
battery (remote control) 5.30
bodywork (maintenance) ....4.13 → 4.15
bonnet....4.2 – 4.3
brake fluid 4.7
bulbs
    changing ....5.14 → 5.24

C

capacity of mechanical components....4.4, 4.12
catalytic converter....2.4
central door locking ....1.5 – 1.6
changing a bulb ....5.14 → 5.24
changing a wheel....5.9 – 5.10
changing gear....2.19 → 2.21
child booster seat ....1.21 → 1.23
child restraint/seat ....1.21 → 1.31
child safety....1.7, 1.21 → 1.31
child seats....1.21 → 1.31
children....1.5 → 1.7
cigar lighter 3.14
clock 1.51
closing the doors 1.7
control instruments ....1.40 → 1.49, 1.54 – 1.55
controls ....1.36 → 1.39
courtesy light 3.12

D

dashboard....1.36 → 1.39
de-icing
    rear screen....1.59
dipstick....4.4
doors....1.5 → 1.7
driver's position ....1.36 → 1.39
driving ....2.2 → 2.21

E

electric door locking....1.5 – 1.6
electric windows ....3.9 → 3.11
emergency brake assist....2.16 → 2.18
emergency spare wheel ....5.3 – 5.4, 5.11 → 5.13
engine
    technical specifications 6.5
engine coolant 4.8
engine immobiliser....1.8
engine immobiliser (switch) 2.2
engine oil 4.4
engine oil grade ....4.5 – 4.6
engine oil level....4.5
engine specifications 6.5
environment....2.9

F
4 wheel drive (4WD) ..... 2.11 → 2.14
faults
operating faults ..... 5.39 → 5.43
filter 4.10
air filter 4.10
diesel filter 4.10
passenger compartment filter 4.10
fitting a radio ..... 5.36 – 5.37
fittings ..... 3.15 → 3.18
fog lights 1.55
front passenger air bag deactivation 1.32
front seat adjustment 1.11
front seats
adjustment 1.11
fuel
advice on fuel economy ..... 2.6 → 2.8
filling 1.61
grade 1.60, 6.5
fuel economy ..... 2.6 → 2.8
fuel filler cap 1.60
fuel grade 1.60
fuel level 1.45
fuel tank ..... 1.60 → 1.62
fuel tank capacity 1.60
fuses ..... 5.25 → 5.27

G
gear lever 2.10
glove box 3.15
grab handle 3.13

H
handbrake 2.10
hazard warning lights signal ..... 1.52 – 1.53
headlight beam adjustment 1.56
headlight flashers ..... 1.52 – 1.53
headrest ..... 1.9 – 1.10
heating and air conditioning system ..... 3.2 → 3.8
heating system ..... 3.2 → 3.8
horn ..... 1.52 – 1.53
hubcap tool 5.2

I
ignition switch 2.2
indicator lights 5.21
indicators ..... 1.52 – 1.53, 5.14
indicators:
direction indicators ..... 1.52 – 1.53
instrument panel ..... 1.40 → 1.45
interior trim
maintenance ..... 4.16 – 4.17

J
jack ..... 5.2, 5.9 – 5.10

K
keys ..... 1.2 – 1.3
replacing the battery 5.30

L
levels ..... 4.4, 4.7 → 4.9
levels:
coolant 4.8
windscreen washer reservoir 4.9
lifting the vehicle
changing a wheel ..... 5.2 – 5.4, 5.8 → 5.10
lighting:
exterior ..... 1.54 – 1.55, 5.14 → 5.21
interior ..... 3.12, 5.22 → 5.24
lights ..... 1.54 → 1.56
additional 5.17

adjustment 1.56
lights:
adjusting 1.56
brake lights ..... 5.18 – 5.19
dipped beam headlights ..... 1.54, 5.14 → 5.16
direction indicators ..... 1.52 – 1.53, 5.14 → 5.16
fog lights 1.55, 5.17
hazard warning ..... 1.52 – 1.53
main beam headlights ..... 1.54, 5.14 → 5.16
reversing lights ..... 5.18 – 5.19
side lights ..... 1.54, 5.14 → 5.16
locking the doors 1.4
luggage compartment cover ..... 3.22 – 3.23

M

maintenance:
bodywork ..... 4.13 → 4.15
interior trim ..... 4.16 – 4.17
mechanical ..... 4.4, 4.7, 4.12, 6.8 → 6.13
mileage before service ..... 6.8 → 6.13
methods of restraint in addition to the front seat belts ..... 1.16 → 1.18, 1.20
mirrors 3.13

O

oil change 4.5
opening the doors 1.7
operating faults ..... 5.39 → 5.43
overspeed buzzer 1.44

P

paintwork
maintenance 4.13
reference ..... 6.2 – 6.3
power-assisted steering 1.50, 4.9
power-assisted steering pump 4.9
practical advice ..... 5.2 – 5.4, 5.8 → 5.43
puncture ..... 5.3 – 5.4, 5.9 – 5.10

R

radio
fitting a radio ..... 5.36 – 5.37
rear bench seat 3.19
rear screen
demisting 1.42
rear screen de-icing/demisting ..... 3.4 → 3.7
rear seats
functions 3.19
rear view mirrors 1.35
remote control door locking unit 1.2, 1.4
replacement parts 6.7
reverse gear
selecting 2.10
roof bars 3.24
roof rack
roof bars 3.24
running in 2.2

S

seat belts ..... 1.12 → 1.20
service sheets ..... 6.8 → 6.13
signals and lights ..... 1.54 – 1.55
speakers
location ..... 5.36 – 5.37
special features of diesel versions 2.5
special features of petrol vehicles 2.4
starting 2.3
starting the engine ..... 2.2 – 2.3
steering wheel
adjustment 1.50
storage compartment ..... 3.15 → 3.18
storage compartments ..... 3.15 → 3.18

sun visor 3.13

T
tailgate 3.20
tanks and reservoirs
  brake fluid 4.7
  coolant 4.8
tanks and reservoirs:
  windscreen washer 4.9
technical specifications ..... 6.2 – 6.3, 6.5 → 6.7
towing 6.6
  breakdown ..... 5.32 → 5.34
  towing equipment 3.21, 5.35
towing a caravan 3.21, 6.6
towing equipment
  fitting 3.21
towing hitch ..... 5.32 → 5.34
towing rings 3.21
towing weights 6.6
transporting children ..... 1.21 → 1.31
transporting objects
  in the luggage compartment 3.21
trims 5.8
trip computer and warning system ..... 1.46 → 1.49
tyre inflation kit ..... 5.5 → 5.7
tyre pressure 4.11, 5.12
tyre pressures 4.11
tyres ..... 4.11, 5.11 → 5.13

V
variable power-assisted steering 1.50
vehicle identification ..... 6.2 – 6.3
vehicle identification plates ..... 6.2 – 6.3
ventilation
  air conditioning ..... 3.2 – 3.3
  heating and air conditioning system ..... 3.4 → 3.8

W
warning buzzer 1.55
warning lights ..... 1.40 → 1.49
washing ..... 4.13 → 4.15
weight 6.6
weights 6.6
wheelbrace 5.2
windows ..... 3.9 → 3.11
windscreen washer ..... 1.57 → 1.59, 4.9
wiper blades 5.31
wipers ..... 1.57 → 1.59
  blades 5.31

(www.renault.com)

RENAULT S.A.S. SOCIÉTÉ PAR ACTIONS SIMPLIFIÉE AU CAPITAL DE 533 941 113 € / 13-15, QUAI LE GALLO
92100 BOULOGNE-BILLANCOURT R.C.S. NANTERRE 780 129 987 — SIRET 780 129 987 03591 / TÉL. : 0810 40 50 60
NU 898-5 – 99 91 070 97R – 08/2011 – Edition anglaise

JL