Heating, Ventilation and Air Conditioning

GENERAL

AIR CONDITIONING SYSTEM
- COMPRESSOR OIL

A/C COMPRESSOR CONTROLS (MANUAL)
- COMPRESSOR
- CONDENSER
- A/C PRESSURE TRANSDUCER
- REFRIGERANT LINE
- EVAPORATOR TEMPERATURE SENSOR

A/C COMPRESSOR CONTROLS (FULL AUTO)
- IN CAR SENSOR
- PHOTO SENSOR
- WATER TEMPERATURE SENSOR
- AMBIENT TEMPERATURE SENSOR
- A.Q.S (AIR QUALITY SENSOR)
- HUMIDITY SENSOR

HEATER
- HEATER UNIT
- PTC (POSITIVE TEMPERATURE COEFFICIENT) HEATER
- TEMPERATURE CONTROL ACTUATOR
- MODE CONTROL ACTUATOR

REAR HEATER
- REAR HEATER UNIT
- REAR HEATER BLOWER UNIT
- REAR BLOWER RESISTER
- REAR CONTROL PANEL

BLOWER CONTROLS
- BLOWER UNIT
- BLOWER MOTOR
- BLOWER RELAY
- POWER TRANSISTOR
- A/C AIR FILTER
- INTAKE ACTUATOR

BLOWER AND A/C CONTROLS (MANUAL)
- CONTROL PANEL

BLOWER AND A/C CONTROLS (AUTOMATIC)
- CONTROL PANEL

GENERAL

SPECIFICATION E3E448F0

AIR CONDITIONER

Item		Specification	
		2.2	2.7
Compressor	Type	VS18 (Variable capacity)	
	Oil type & Capacity	FRONT ONLY	FRONT & REAR
		PAG(FD46XG)/140~160	PAG(FD46XG)/200~220
	Pulley type	6PK-TYPE	
	Displacement	180cc/rev	
Condenser	Heat rejection	19,000 - 5% kcal/hr	
A/C Pressure transducer	The method to measure the pressure	Voltage = 0.001758 * Pressure + 0.074162 [PSIA]	
Expansion valve	Type	Block	
Refrigerant	Type	R-134a	
	Capacity [oz(g)]	FRONT(ONLY) 21.64 ± 0.88 (600 ±25)	FRONT & REAR 29.98 ± 0.88 (850 ±25)

BLOWER UNIT

Item		Specification
Fresh and recirculation	Operating method	Actuator
Blower	Type	Sirocco
	Speed step	Auto + 8 speed (Automatic), 1~8speed (Manual)
	Speed control	Power transistor & High-relay(AUTO)
Air filter	Type	Particle filter

HEATER AND EVAPORATOR UNIT

Item		Specification
Heater	Type	Pin & Tube type
	Heating capacity	4,600 ± 5% kcal/hr
	Mode operating method	Actuator
	Temperature operating method	Actuator
Evaporator	Temperature control type	Evaporator temperature sensor
	A/C ON/OFF [°C (°F)]	ON : 2.1 ± 0.5 (35.78 ± 32.9), OFF: 0.5 (32.9)

TROUBLESHOOTING E907DB5D

PROBLEM SYMPTOMS TABLE

Before replacing or repairing air conditioning components, first determine if the malfunction is due to the refrigerant charge, air flow or compressor.

Use the table below to help you find the cause of the problem. The numbers indicate the priority of the likely cause of the problem. Check each part in order. If necessary, replace these parts.
After correcting the malfunction, check the complete system to ensure that performance is satisfactory.

STANDARD:

Symptom	Suspect Area	See page
No blower operation	1. Blower fuse 2. Blower relay 3. Blower motor 4. Power transistor 5. Blower speed control switch 6. Wire harness	- HA- 69 HA- 67 HA- 71 HA- 76, 79 -
No air temperature control	1. Engine coolant capacity 2. Heater control assembly	- HA- 76, 79
No compressor operation	1. Refrigerant capacity 2. A/C Fuse 3. Magnetic clutch 4. Compressor 5. A/C pressure transducer 6. A/C switch 7. Evaporator temperature sensor 8. Wire harness	HA- 3 - HA- 19 HA- 15 HA- 23 - HA- 27 -
No cool comes out	1. Refrigerant capacity 2. Refrigerant pressure 3. Drive belt 4. Magnetic clutch 5. Compressor 6. A/C pressure transducer 7. Evaporator temperature sensor 8. A/C switch 9. Heater control assembly 10. Wire harness	HA- 3 - - HA- 19 HA- 15 HA- 23 HA- 27 - HA- 76, 79 -
Insufficient cooling	1. Refrigerant capacity 2. Drive belt 3. Magnetic clutch 4. Compressor 5. Condenser 6. Expansion valve 7. Evaporator 8. Refrigerant lines 9. A/C pressure transducer 10. Heater control assembly	HA- 3 - HA- 19 HA- 15 HA- 20 HA- 48 HA- 49 HA- 25 HA- 23 HA- 76, 79
No engine idle-up when A/C switch ON	1. Engine ECM 2. Wire harness	- -
No air inlet control	1. Heater control assembly	HA- 76, 79

Symptom	Suspect Area	See page
No mode control	1. Heater control assembly 2. Mode actuator	HA- 76, 79 HA- 55
No cooling fan operation	1. Cooling fan fuse 2. Fan motor 3. Engine ECM 4. Wire harness	- - - -

SPECIAL TOOLS E527C2E1

Tool (Number and name)	Illustration	Use
09977-29000 Disc & hub assembly bolt remover	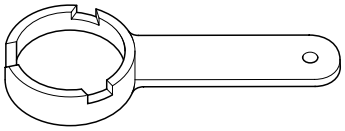 EQA9002A	Removal and installation of the disc & hub assembly bolt

AIR CONDITIONING SYSTEM

INSTRUCTIONS E3BA7FFA

WHEN HANDLING REFRIGERANT

1. R-134a liquid refrigerant is highly volatile. A drop on the skin of your hand could result in localized frostbite. When handling the refrigerant, be sure to wear gloves.

2. It is standard practice to wear goggles or glasses to protect your eyes, and gloves to protect your hands. If the refrigerant splashes into your eyes, wash them with clean water immediately.

3. The R-134a container is highly pressurized. Never leave it in a hot place, and check that the storage temperature is below 52℃ (126°F)

4. An electronic leak detector should be used to check the system for refrigerant leakage. Bear in mind that the R-134a, upon coming into contact with flame, produces phosgene, a highly toxic gas.

5. Use only recommended the lubricant for R-134a systems. If lubricants other than the recommended one used, system failure may occur.

6. PAG lubricant absorbs moisture from the atmosphere at a rapid rate, therefore the following precautions must be observed:
   - When removing refrigerant components from a vehicle, cap immediately the components to prevent from the entry of moisture.
   - When installing refrigerant components to a vehicle, do not remove the cap until just before connecting the components.
   - Complete the connection of all refrigerant tubes and hoses without delay to prevent the A/C system from taking on moisture.
   - Use the recommended lubricant from a sealed container only.

7. If an accidental discharge in the system occurs, ventilate the work area before resuming service.

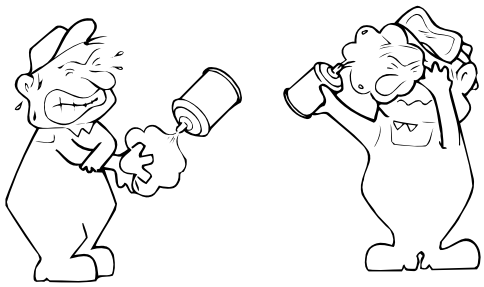

LQAC003A

WHEN REPLACING PARTS ON A/C SYSTEM

1. Never open or loosen a connection before discharging the system.

2. Seal the open fittings of components with a cap or plug immediately to prevent intrusion of moisture or dust.

3. Do not remove the sealing caps from a replacement component until it is ready to be installed.

4. Before connecting an open fitting, always install a new sealing ring. Coat the fitting and seal with refrigerant oil before making the connection.

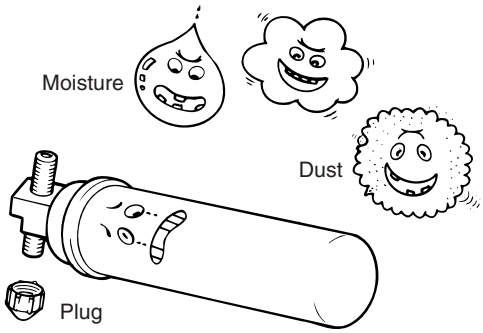

LQAC003B

WHEN INSTALLING CONNECTING PARTS

FLANGE WITH GUIDE PIN

Check the new O-ring for damage (use only the specified) and lubricate it using compressor oil. Tighten the nut to specified torque.

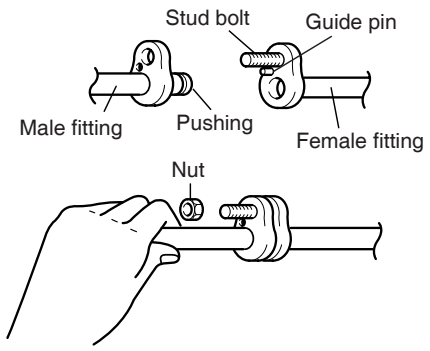

LQAC003C

Size	Tightening torque [N.m (kg.m, lbf.ft)]	
	General bolt, nut	
	4T	7T
M6	5-6 (0.5 - 0.6, 3.6 - 4.3)	9-11 (0.9 - 1.1, 6.5 - 7.9)
M8	12-14 (1.2 - 1.4, 8.7 - 10)	20 - 26 (2.0 - 2.6, 14 - 18)
M10	25 - 28) (2.5 - 2.8, 18 - 20	45 - 55 (4.5 - 5.5, 32 - 39)
Size	Flange bolt, nut	
	4T	7T
M6	5-7 (0.5 - 0.7, 3.6 - 5.0)	8-12 (0.8 - 1.2, 5.8 - 8.6)
M8	10-15 (1.0 - 1.5, 7 - 10)	19 - 28 (1.9 - 2.8, 14 - 20)
M10	21 - 31 (2.1 - 3.1, 15 - 22)	39 - 60 (3.9 - 6.0, 28 - 43)

HANDLING TUBING AND FITTINGS

The internal parts of the refrigeration system will remain in a state of chemical stability as long as pure moisture-free refrigerant and refrigerant oil are used. Abnormal amounts of dirt, moisture or air can upset the chemical stability and cause problems or serious damage.

THE FOLLOWING PRECAUTIONS MUST BE OBSERVED

1. When it is necessary to open the refrigeration system, have everything you will need to service the system ready so the system will not be left open any longer than necessary.
2. Cap or plug all lines and fittings as soon as they are opened to prevent the entrance of dirt and moisture.
3. All lines and components in parts stock should be capped or sealed until they are ready to be used.
4. Never attempt to rebind formed lines to fit. Use the correct line for the installation you are servicing.
5. All tools, including the refrigerant dispensing manifold, the gauge set manifold and test hoses, should be kept clean and dry.

REFRIGERATION CYCLE EA6E42C2

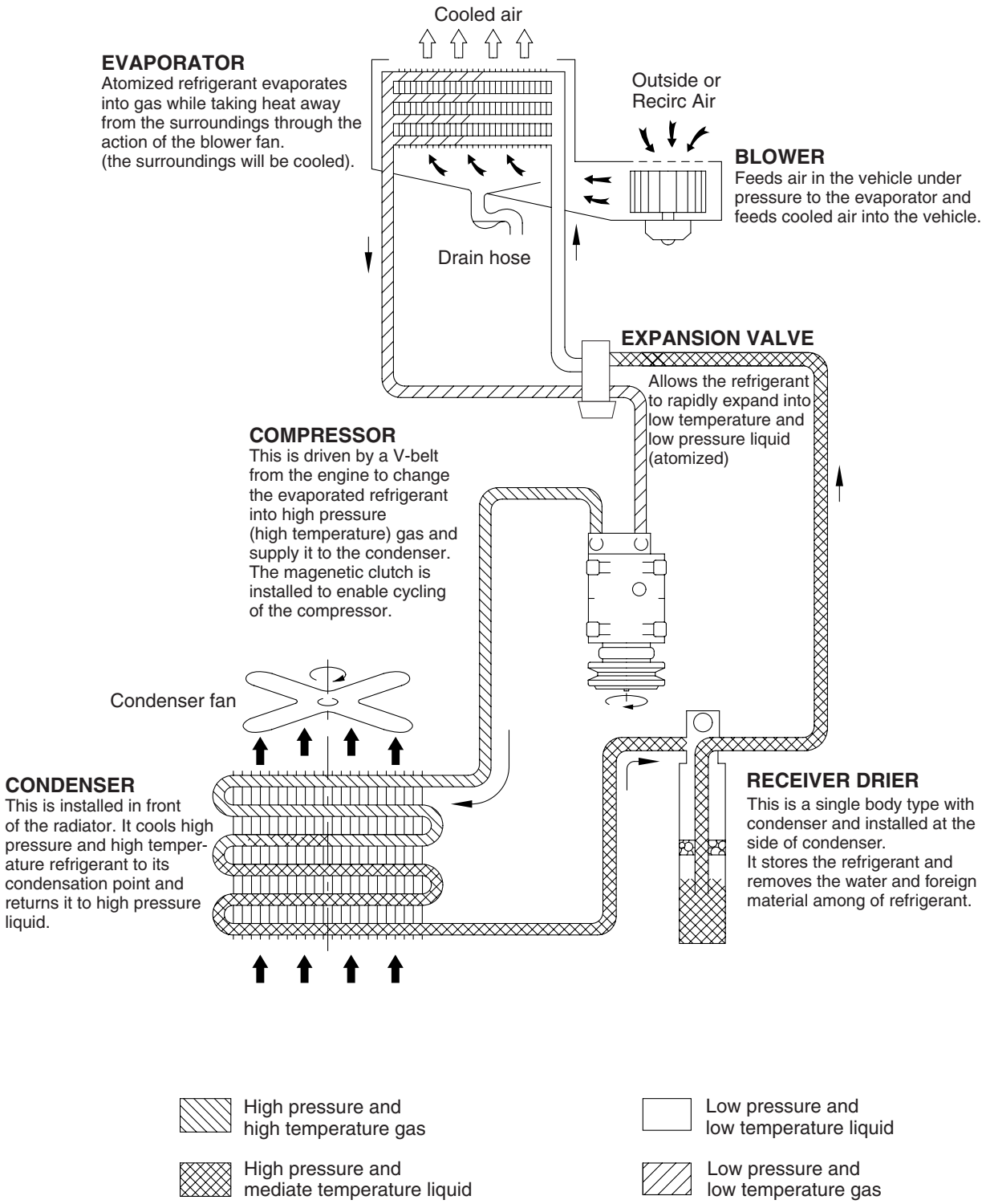

EQRF004A

REFRIGERANT SYSTEM SERVICE BASICS ECE8B818

REFRIGERANT RECOVERY

Use only service equipment that is U.L-listed and is certified to meet the requirements of SAE J2210 to remove HFC-134a(R-134a) from the air conditioning system.

CAUTION

- ***Air conditioning refrigerant or lubricant vapor can irritate your eyes, nose, or throat.***
- ***Be careful when connecting service equipment.***
- ***Do not breathe refrigerant or vapor.***

If accidental system discharge occurs, ventilate work area before resuming service.
Additional health and safety information may be obtained from the refrigerant and lubricant manufacturers.

1. Connect an R-134a refrigerant Recovery/Recycling/Charging System (A) to the high-pressure service port (B) and the low-pressure service port (C) as shown, following the equipment manufacturer's instructions.

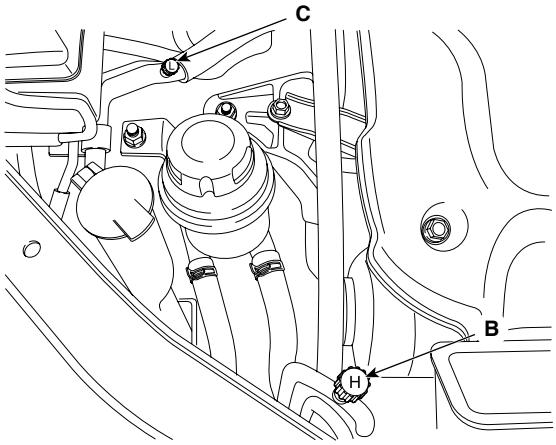

SCMHA6003D

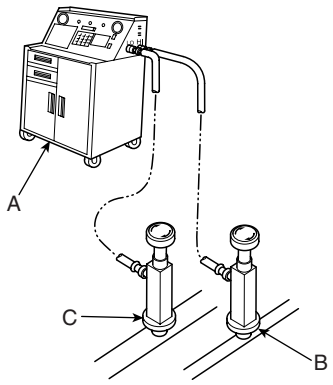

EQKE004A

2. Measure the amount of refrigerant oil removed from the A/C system after the recovery process is completed. Be sure to install the same amount of new refrigerant oil back into the A/C system before charging.

SYSTEM EVACUATION

Use only service equipment that is U.L-listed and is certified to meet the requirements of SAE J2210 to remove HFC-134a(R-134a) from the air conditioning system.

CAUTION

- ***Air conditioning refrigerant or lubricant vapor can irritate your eyes, nose, or throat.***
- ***Be careful when connecting service equipment.***
- ***Do not breathe refrigerant or vapor.***

If accidental system discharge occurs, ventilate work area before resuming service.
Additional health and safety information may be obtained from the refrigerant and lubricant manufacturers.

1. When an A/C System has been opened to the atmosphere, such as during installation or repair, it must be evacuated using an R-134a refrigerant Recovery/Recycling/Charging System. (If the system has been open for several days, the receiver/dryer should be replaced, and the system should be evacuated for several hours.)

2. Connect an R-134a refrigerant Recovery/Recycling/Charging System (A) to the high-pressure service port (B) and the low-pressure service port (C) as shown, following the equipment manufacturer's instructions.

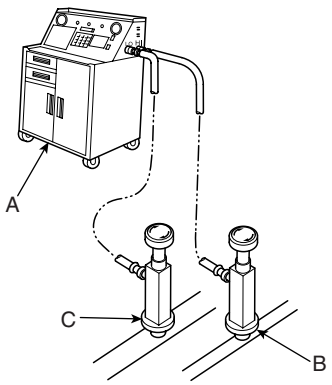

EQKE004A

3. If the low-pressure does not reach more than 93.3 kPa (700 mmHg, 27.6 in.Hg) in 10 minutes, there is probably a leak in the system. Partially charge the system, and check for leaks (see Leak Test.).

4. Remove the low pressure valve from the low-pressure service port.

SYSTEM CHARGING

Use only service equipment that is U.L-listed and is certified to meet the requirements of SAE J2210 to remove HFC-134a(R-134a) from the air conditioning system.

CAUTION

- ***Air conditioning refrigerant or lubricant vapor can irritate your eyes, nose, or throat.***
- ***Be careful when connecting service equipment.***
- ***Do not breathe refrigerant or vapor.***

If accidental system discharge occurs, ventilate work area before resuming service.
Additional health and safety information may be obtained from the refrigerant and lubricant manufacturers.

1. Connect an R-134a refrigerant Recovery/Recycling/Charging System (A) to the high-pressure service port (B) as shown, following the equipment manufacturer's instructions.

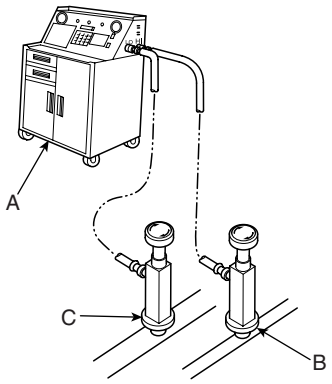

EQKE004A

2. Add the same amount of new refrigerant oil to system that was removed during recovery. Use only specified refrigerant oil. Charge the system with 29.98 ± 0.88 oz. (850 ± 25g) of R-134a refrigerant. Do not overcharge the system the compressor will be damaged.

REFRIGERANT LEAK TEST

Always conduct a leak test with an electronic leak detector whenever leakage or refrigerant is suspected and when conducting service operations which are accompanied by disassembly or loosening or connection fittings.

NOTE

In order to use the leak detector properly, read the manual supplied by the manufacturer.

If a gas leak is detected, proceed as follows:

1. Check the torque on the connection fittings and, if too loose, tighten to the proper torque. Check for gas leakage with a leak detector (A).
2. If leakage continues even after the fitting has been tightened, discharge the refrigerant from the system, disconnect the fittings, and check their seating faces for damage. Always replace, even if the damage is slight.
3. Check the compressor oil and add oil if required.
4. Charge the system and recheck for gas leaks. If no leaks are found, evacuate and charge the system again.

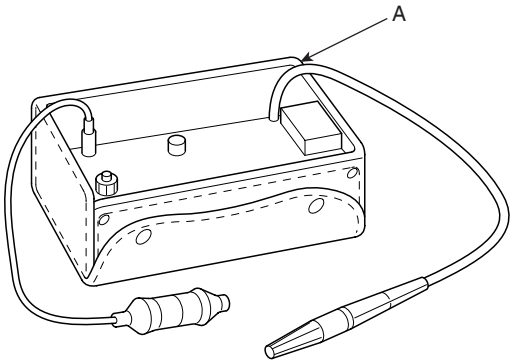

EQKE007A

COMPONENT LOCATION INDEX EEDE67DE

ENGINE ROOM

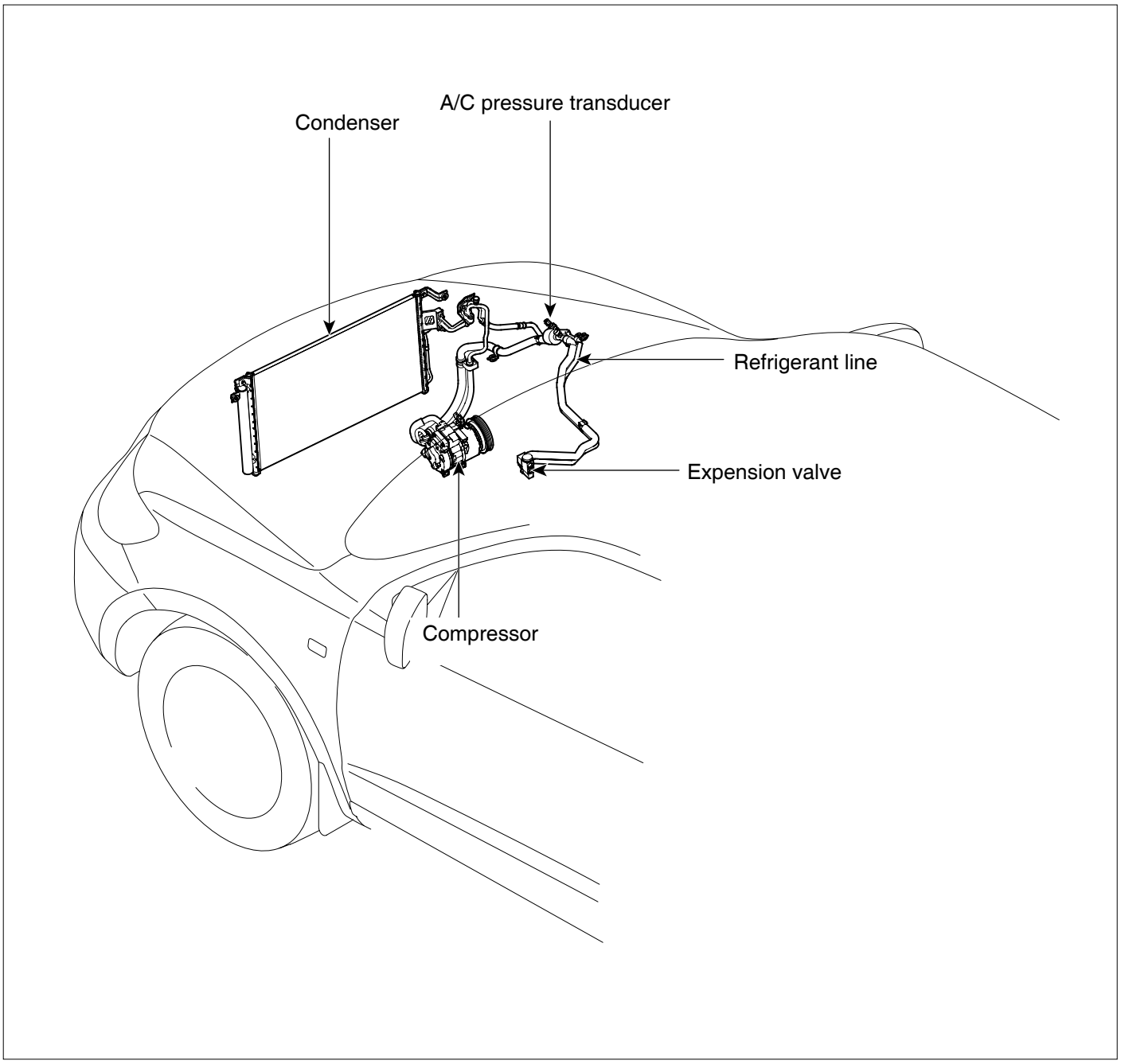

SCMHA6006L

INTERIOR

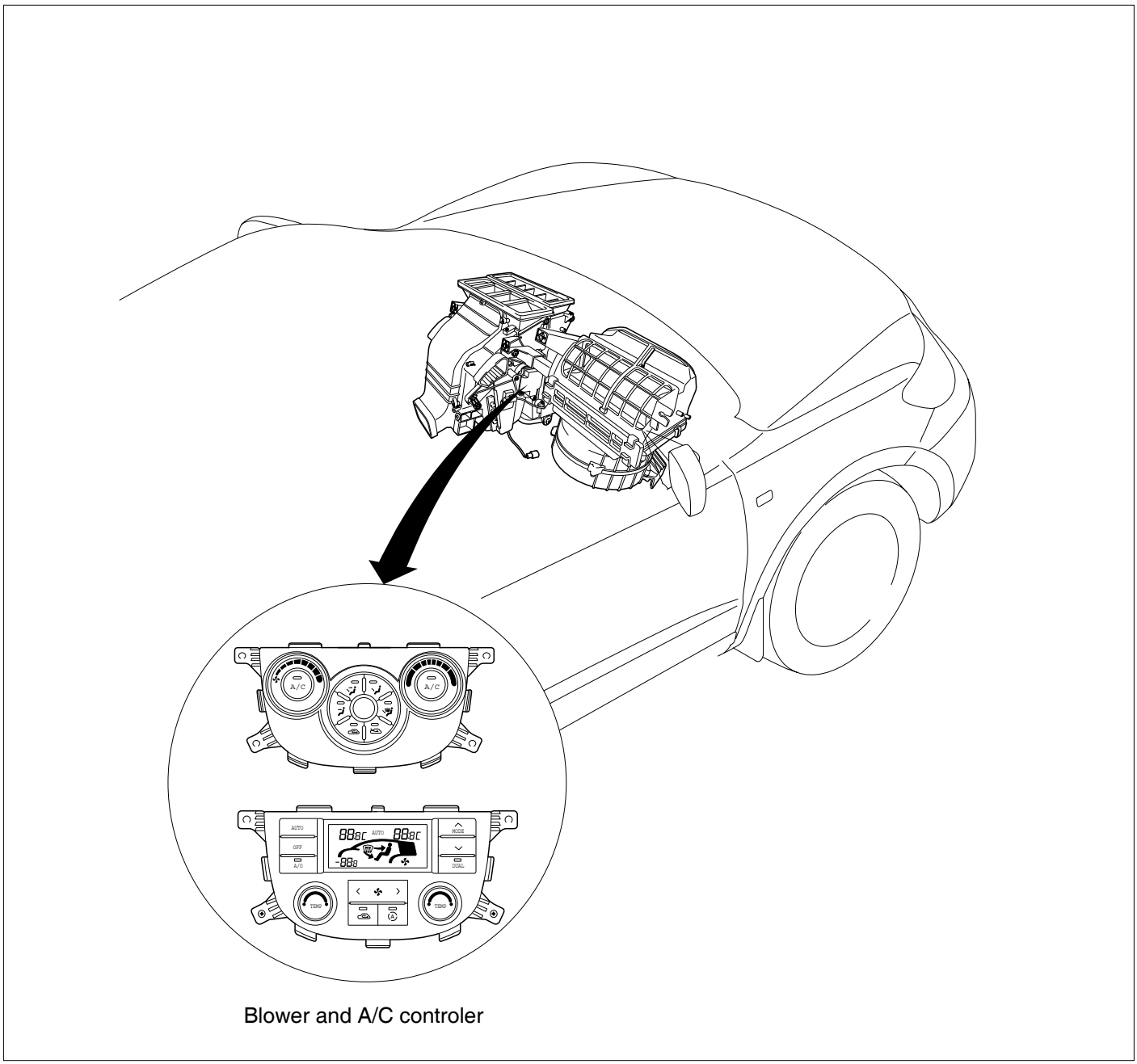

Blower and A/C controler

SCMHA6007L

COMPRESSOR OIL

INSPECTION E5FC3B3D

OIL SPECIFICATION

1. The HFC-134a system requires synthetic (PAG) compressor oil whereas the R-12 system requires mineral compressor oil. The two oils must never be mixed.
2. Compressor (PAG) oil varies according to compressor model. Be sure to use oil specified for the model of compressor.

HANDLING OF OIL

1. The oil should be free from moisture, dust, metal powder, etc.
2. Do not mix with other oil.
3. The water content in the oil increases when exposed to the air. After use, seal oil from air immediately. (HFC-134a Compressor Oil absorbs moisture very easily.)
4. The compressor oil must be stored in steel containers, not in plastic containers.

COMPRESSOR OIL CHECK

The oil used to lubricate the compressor is circulating with the refrigerant.
Whenever replacing any component of the system or a large amount of gas leakage occurs, add oil to maintain the original amount of oil.

Oil total volume in system: FRONT ONLY : 150 ± 10cc (5.07 ± 0.338 fl.oz) FRONT & REAR : 210 ± 10cc (7.1 ± 0.33 fl.oz)

OIL RETURN OPERATION

There is close affinity between the oil and the refrigerant. During normal operation, part of the oil recirculates with the refrigerant in the system. When checking the amount of oil in the system, or replacing any component of the system, the compressor must be run in advance for oil return operation. The procedure is as follows:

1. Open all the doors and the engine hood.
2. Start the engine and air conditioning switch to "ON" and set the blower motor control knob at its highest position.
3. Run the compressor for more than 20 minutes between 800 and 1,000 rpm in order to operate the system.
4. Stop the engine.

A/C COMPRESSOR CONTROLS (MANUAL)

COMPRESSOR

COMPONENT LOCATION EB6BAC26

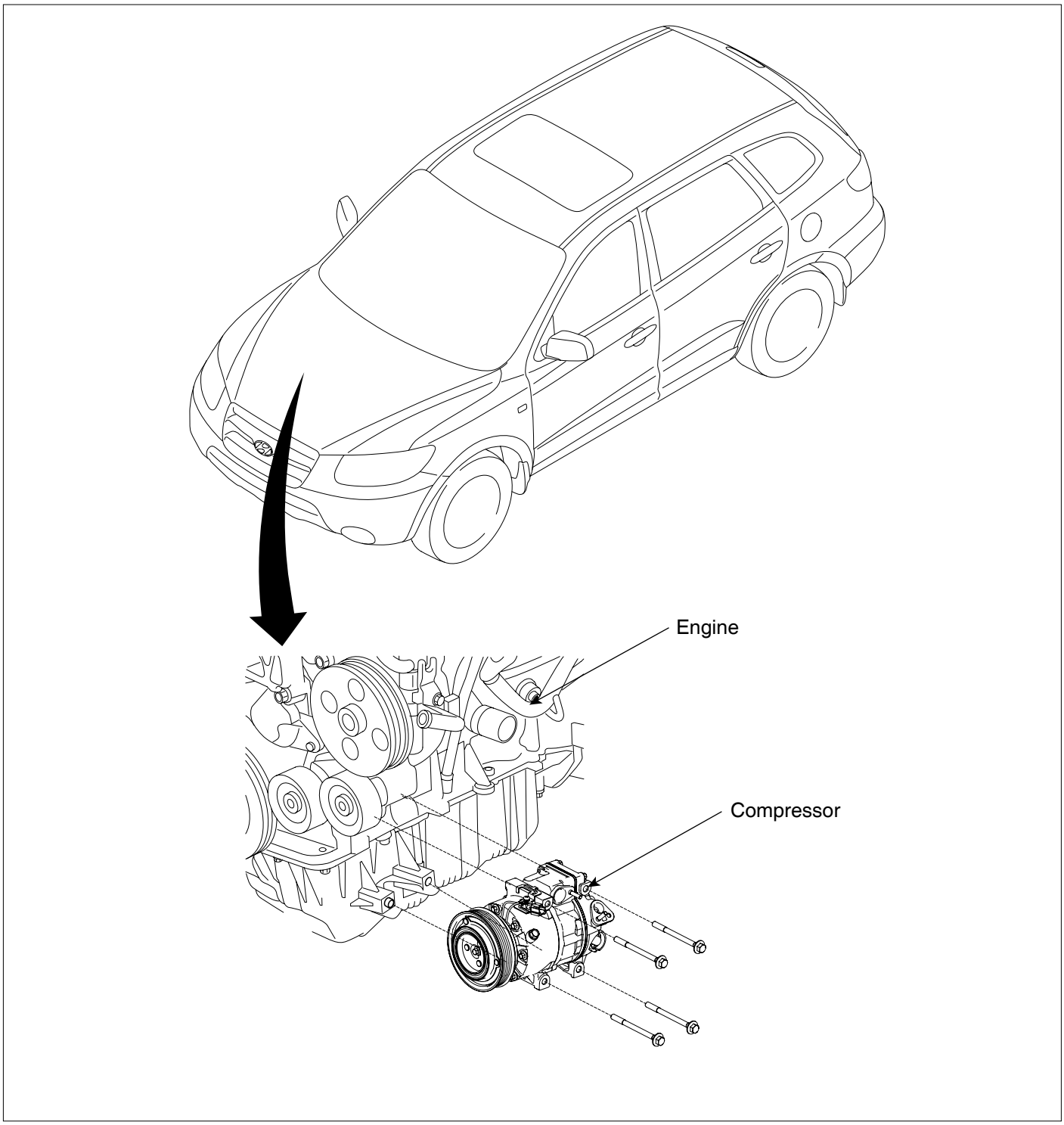

SCMHA6101L

COMPONENTS EE9B0AFF

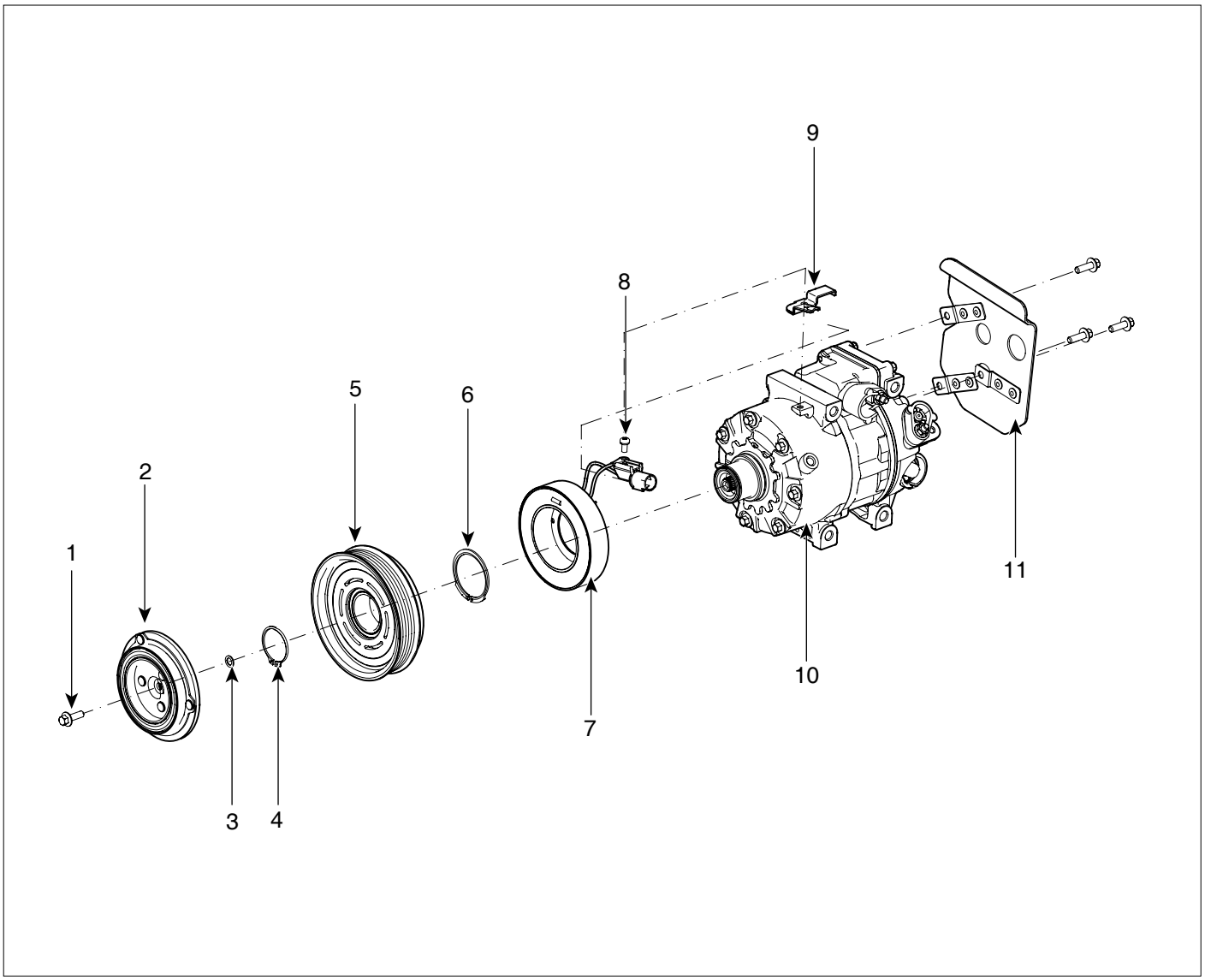

1. Bolt
2. Disc & hub assembly
3. Shim (Gap washer)
4. Retainer ring (Pulley)
5. Pulley
6. Retainer ring (Field Oil)
7. Field coil
8. Screw
9. Connector bracket
10. Compressor assembly
11. Compressor bracket

SCMHA6102L

REMOVAL E6183B77

1. If the compressor is marginally operable, run the engine at idle speed, and let the air conditioning work for a few minutes, then shut the engine off.
2. Disconnect the negative cable from the battery.
3. Recover the refrigerant with a recovery/charging station.
4. Loosen the drive belt.
5. Remove the bolts, then disconnect the suction line (A) and discharge line (B) from the compressor. Plug (C) or cap the lines immediately after disconnecting them to avoid moisture and dust contamination.

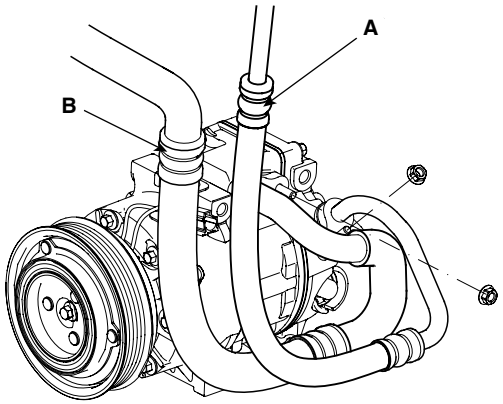

SCMHA6103D

6. Disconnect the compressor clutch connector (A), and then remove 4 mounting bolts and the compressor.

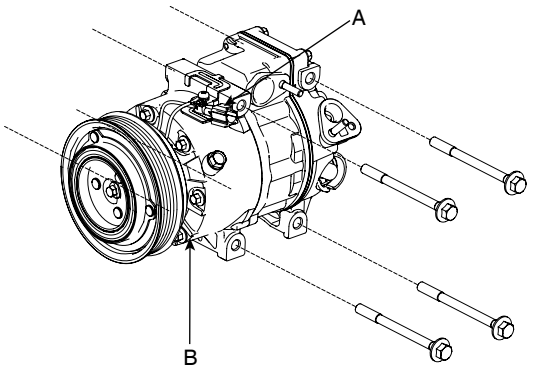

SCMHA6104D

INSTALLATION EC9BDAD4

1. Make sure of the length of compressor mounting bolts.

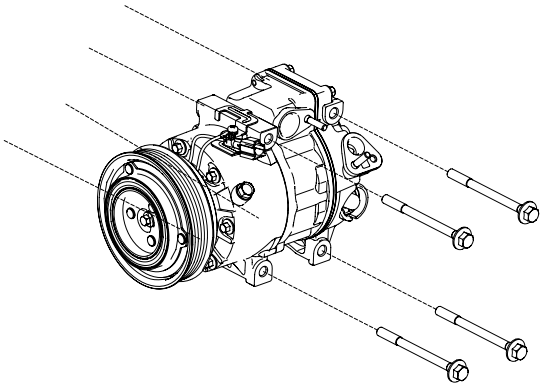

SCMHA6105D

2. Install in the reverse order of removal, and note these items.
   - If you're installing a new compressor, drain all the refrigerant oil from the removed compressor, and measure its volume, Subtract the volume of drained oil from 120cc(4.20 oz.) the result is the amount of oil you should drain from the new compressor (through the suction fitting).
   - Replace the O-rings with new ones at each fitting, and apply a thin coat of refrigerant oil before installing them. Be sure to use the right O-rings for R-134a to avoid leakage.
   - To avoid contamination, do not return the oil to the container once dispensed, and never mix it with other refrigerant oils.
   - Immediately after using the oil, replace the cap on the container and seal it to avoid moisture absorption.
   - Do not spill the refrigerant oil on the vehicle; it may damage the paint; if the refrigerant oil contacts the paint, wash it off immediately.
   - Adjust the drive belt.
   - Charge the system and test its performance.

INSPECTION EBD55AB1

1. Check the plated parts of the disc & hub assembly (A) for color changes, peeling or other damage. If there is damage, replace the clutch set.

2. Check the pulley (B) bearing play and drag by rotating the pulley by hand. Replace the clutch set with a new one if it is noisy or has excessive play/drag.

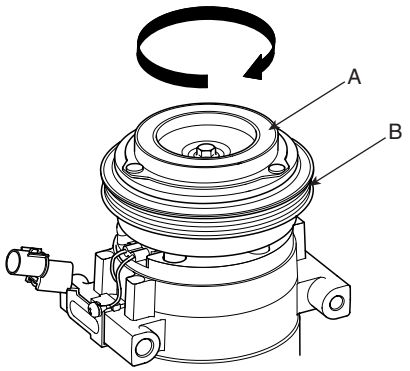

AQJF106A

3. Measure the clearance between the pulley (B) and the disc & hub assembly (A) all the way around. If the clearance is not within specified limits, remove the disc & hub assembly and add or remove shim (gap washer) as needed to increase or decrease clearance.

Clearance: 0.45 ± 0.1mm (0.018 ± 0.004 in.)

NOTE

The shims (gap washers) are available in seven thicknesses: 0.7mm, 0.8mm, 0.9mm, 1.0mm, 1.1mm, 1.2mm and 1.3mm.

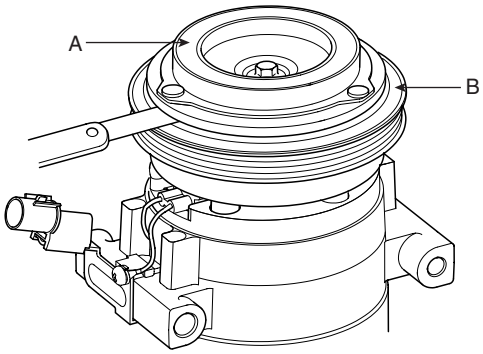

AQJF106B

4. Check operation of the magnetic clutch.Connect the compressor side terminals to the battery (+) terminal and the ground battery (-) terminal to the compressor body.
   Check the magnetic clutch operating noise to determine the condition.

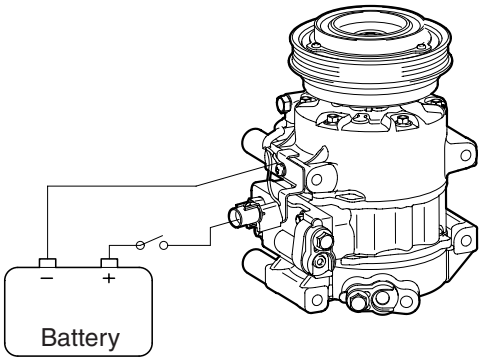

AQJF106C

DISASSEMBLY EA365562

1. Remove the center bolt (A) while holding the disc & hub assembly with a commercially available disc & hub assembly bolt remover; Special tool number 09977-29000.

TORQUE: 10~15N.m (1.02~1.53kgf.m, 7.37~11lbf.ft)

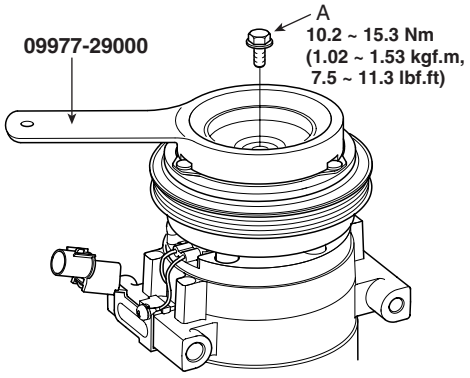

AQJF106D

2. Remove the disc & hub assembly (A) and shim (gap washer) (B), taking care not to lose the shims. If the clutch needs adjustment, increase or decrease the number and thickness of shims as necessary, then reinstall the disc & hub assembly, and recheck its clearance.

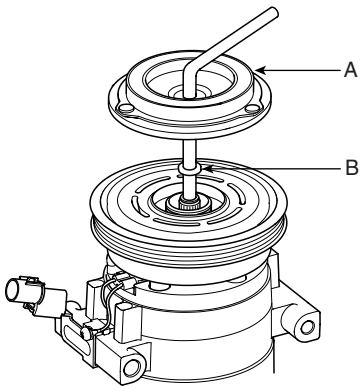

AQJF106E

3. If you removal the field coil, remove retainer ring (A) with retainer ring pliers.

NOTE

- *Be careful not to damage the pulley (B) and compressor during removal/installation.*
- *Once retainer ring (A) is removed, replace it with a new one.*

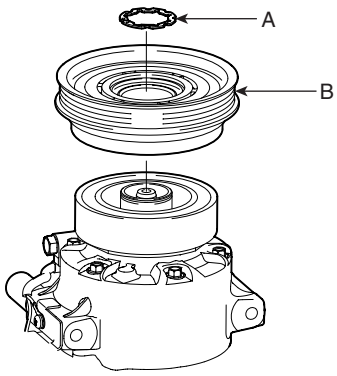

AQJF106F

4. Remove the screw (A) from the field coil ground terminal. Remove the retainer ring (B) and then remove the field coil (C) from the shaft with a puller. Be careful not to damage the coil and compressor.

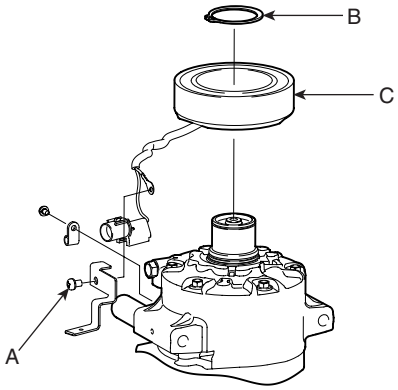

AQJF106G

5. Reassemble the compressor clutch in the reverse order of disassembly, and note these items :
   - Clean the pulley and compressor sliding surfaces with non-petroleum solvent.
   - Install new retainer rings, and make sure they are fully seated in the groove.
   - Make sure that the pulley turns smoothly after its reassembled.

CONDENSER

COMPONENT LOCATION E786D4B5

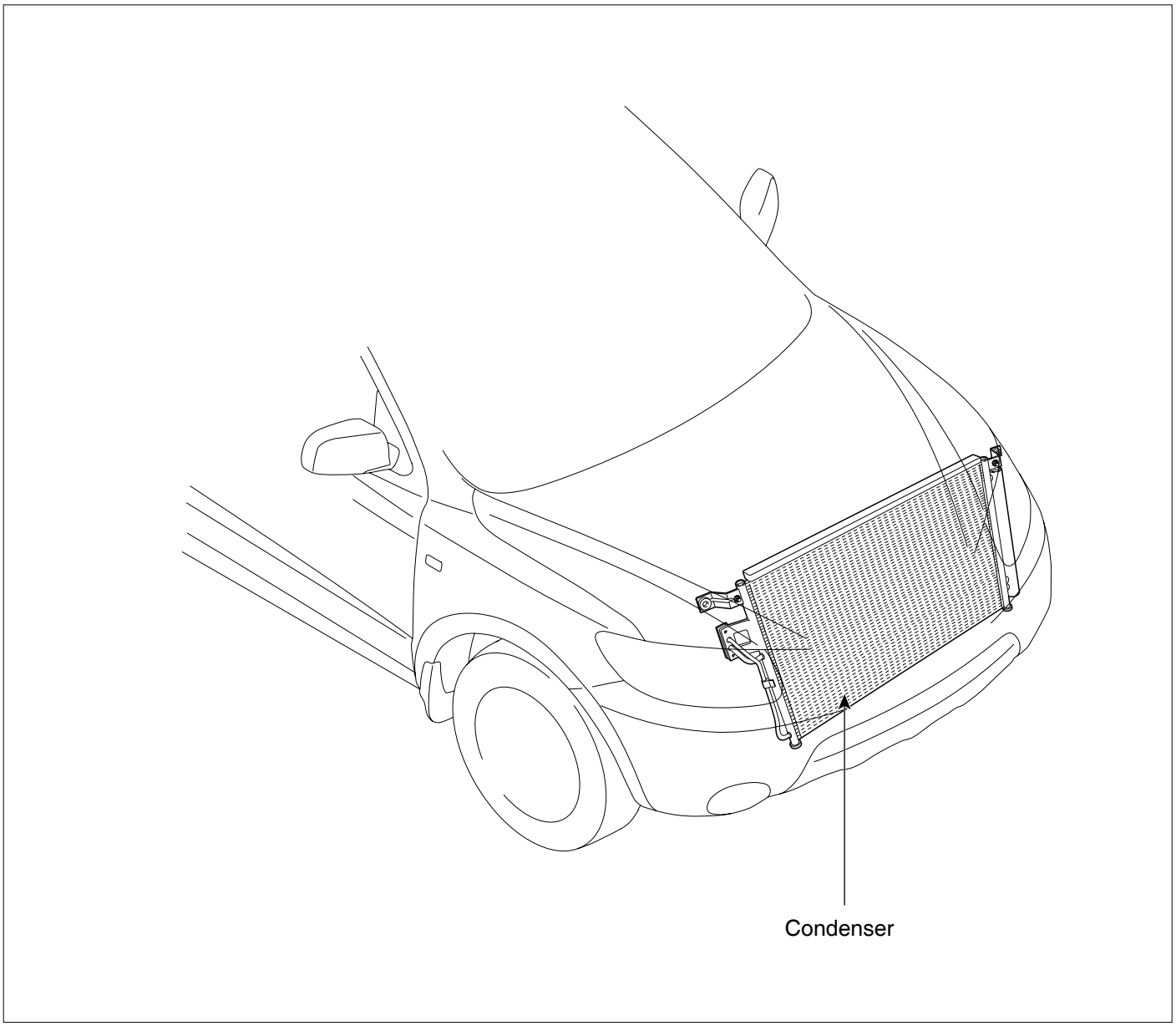

SCMHA6113L

INSPECTION E1D4D1C2

1. Check the condenser fins for clogging and damage. If clogged, clean them with water, and blow them with compressed air. If bent, gently bend them using a screwdriver or pliers.

2. Check the condenser connections for leakage, and repair or replace it, if required.

REPLACEMENT EE89F4B4

CONDENSER ASSEMBLY

1. Recover the refrigerant with a recovery/ recycling/ charging station.

2. Disconnect the negative (-) battery terminal.

3. Remove the radiator. (Refer to EM- Radiator)

4. Remove 2 bolts, and then remove the condenser (A) by lifting it up. Be careful not to damage the radiator and condenser fins when removing the condenser.

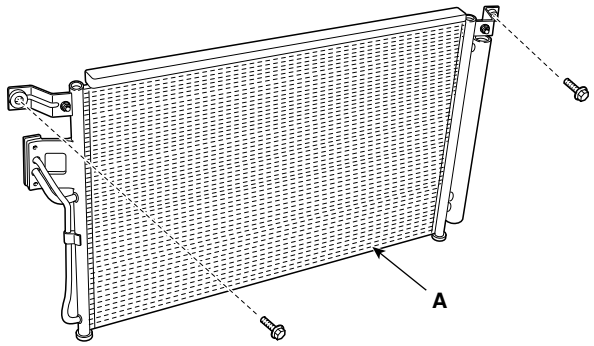

SCMHA6114L

5. Install in the reverse order of removal, and note these items :
   - If you're installing a new condenser, add refrigerant oil ND-OIL8.
   - Replace the O-rings with new ones at each fitting, and apply a thin coat of refrigerant oil before installing them. Be sure to use the right O-rings for R-134a to avoid leakage.
   - Be careful not to damage the radiator and condenser fins when installing the condenser.
   - Be sure to install the lower mount cushions of condenser securely into the holes.
   - Charge the system, and test its performance.

DESICCANT

1. Remove the condenser, and then remove the bottom cap (B) with L wrench (A) from the condenser.

TORQUE: 20~25N.m (2.0~2.5kgf-m, 14.5~18.2lb-ft)

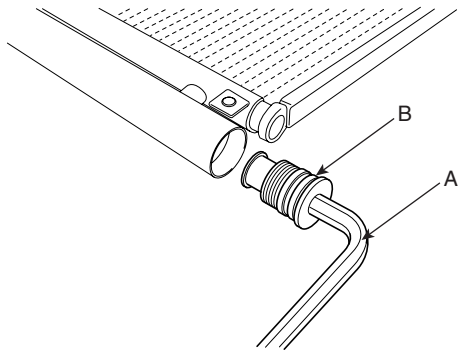

KQRE108D

2. Remove the desiccant (A) from condenser using a long nose plier. Check for crumbled desiccant and clogged bottom cap filter.

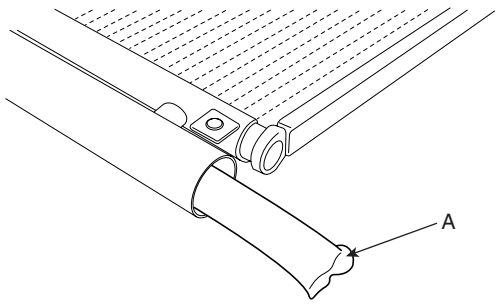

KQRE108E

3. Apply air conditioning compressor oil along the O-rings and threads of the new bottom cap.

4. Insert the new desiccant into the receiver drier tank. The desiccant must be sealed in vacuum before it is exposed to air for use.

5. Install the new bottom cap to the condenser.

NOTE

- *Always replace the desiccant and bottom cap at the same time.*
- *Replace the O-rings with new ones at each fitting, and apply a thin coat of refrigerant oil before installing them. Be sure to use the right O-rings for R-134a to avoid leakage.*
- *Be careful not to damage the radiator and condenser fins when installing the condenser.*
- *Be sure to install the lower mount cushions of condenser securely into the holes.*
- *Charge the system, and test its performance.*

A/C PRESSURE TRANSDUCER

COMPONENT LOCATION E07FA5EA

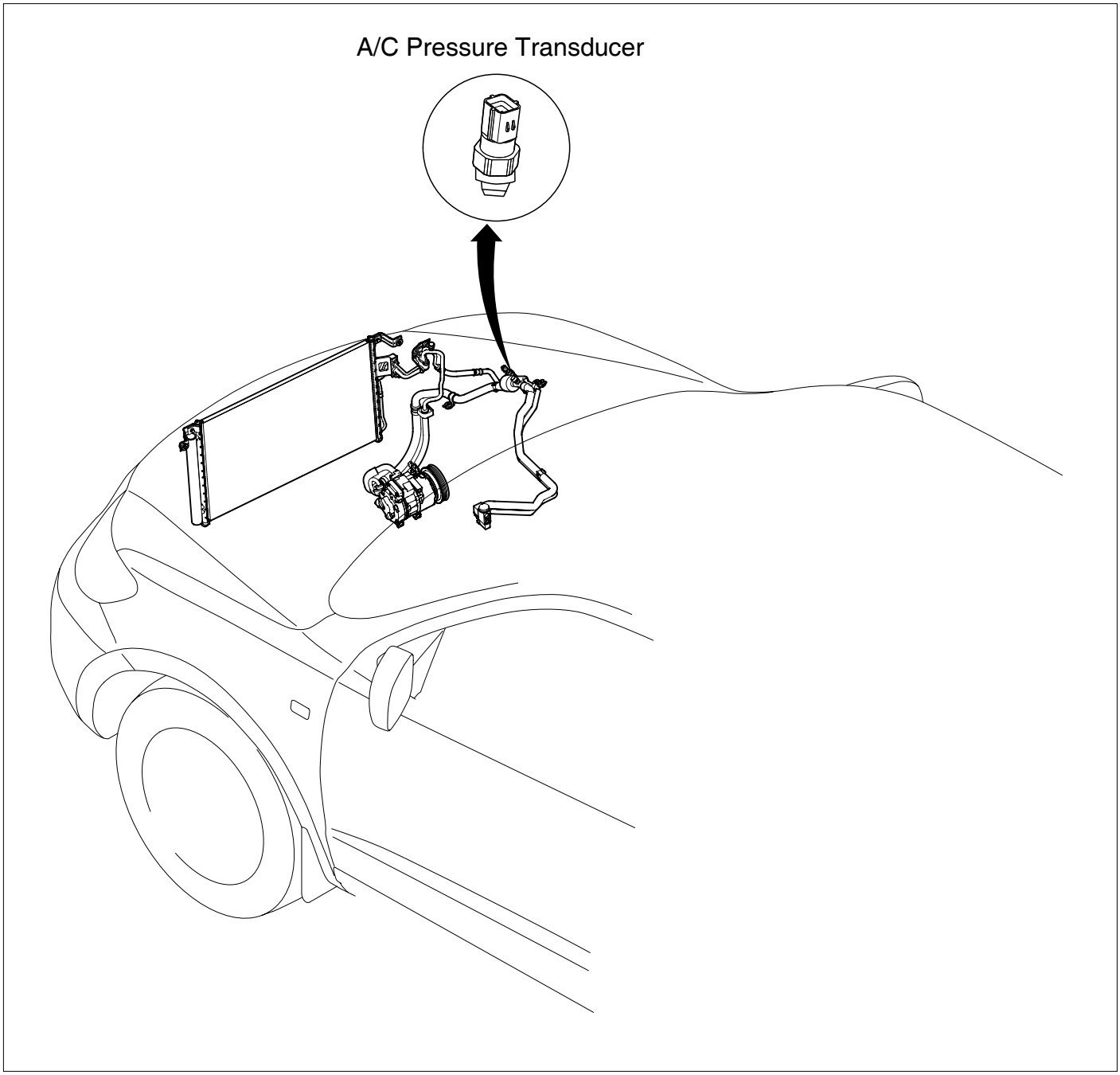

SCMHA6117L

DESCRIPTION EE9BED9D

A/C pressure transducer convert the pressure value of high pressure line into voltage value after measure it. By converted voltage value, engine ECM controls cooling fan by operating it high speed or low speed. Engine ECM stop the operation of compressor when the temperature of refrigerant line is so high or so low irregularly to optimize air conditioning system.

INSPECTION E4CA7D70

1. Measure the pressure of high pressure line by measuring voltage output between NO.1 and NO.2 terminals.

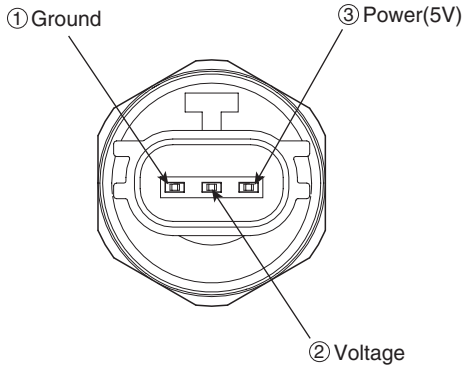

EQRF116B

2. Inspect the voltage value whether it is sufficient to be regular value or not.

Voltage = 0.025 * Pressure + 0.1 [kgf/cm²]
Voltage = 0.001758 * Pressure + 0.074162 [PSIA]

3. If the measured voltage value is not specification, replace the A/C pressure transducer.

REPLACEMENT EC52DA5D

1. Disconnect the negative (-) battery terminal.
2. Recover the refrigerant with a recovery/charging station.
3. Disconnect A/C pressure transducer connector (3P) (A).

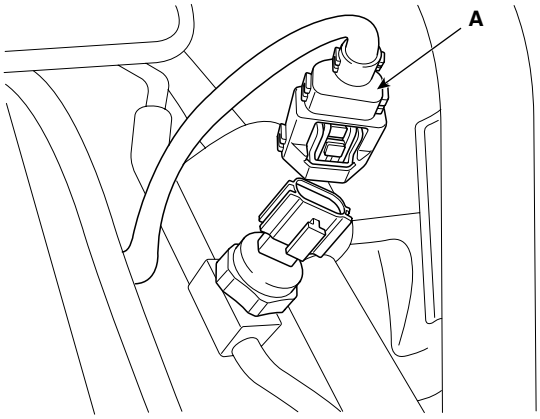

SCMHA6119L

REFRIGERANT LINE

COMPONENT LOCATION EA7DBABA

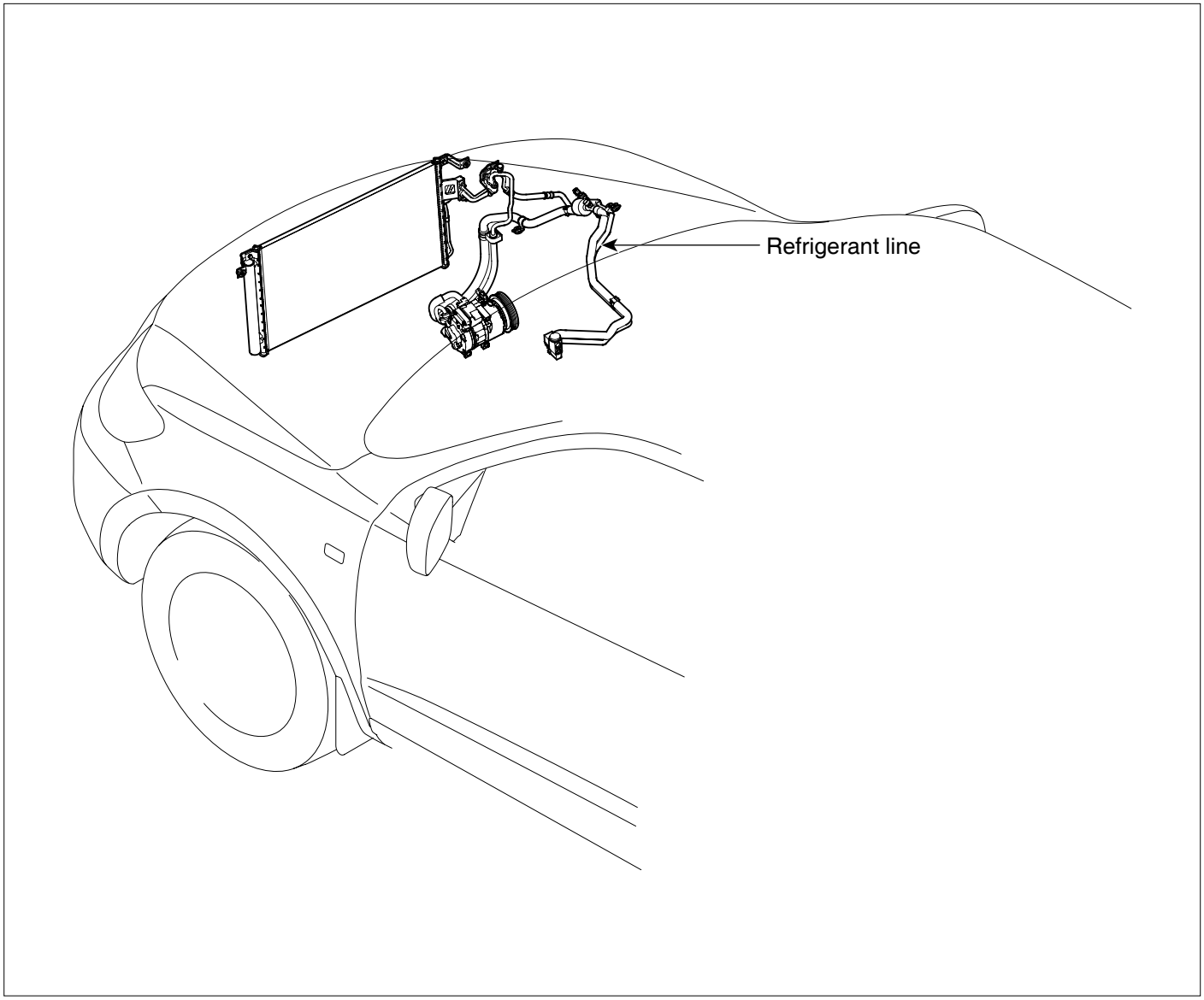

SCMHA6100L

REPLACEMENT EB1FF0FD

1. Discharge refrigerant from refrigeration system.

2. Replace faulty tube or hose.

   CAUTION

   Cap the open fittings immediately to keep moisture or dirt out of the system.

3. Tighten joint of bolt or nut to specified torque.

   CAUTION

   Connections should not be torque tighter than the specified torque.

Part tightened	N.m	Kgf.m	lbf.ft
Condenser - Discharge hose	8 ~ 12	0.8~1.2	5.8 ~ 8.7
Condenser - Liquid tube			
Compressor - Discharge hose			
Compressor - Suction hose			
Expansion valve - Evaporator			

4. Evacuate air in refrigeration system and charge system with refrigerant.

FRONT ONLY : 600 ± 25(g) (21.164 ± 0.88 [oz])
FRONT & REAR : 850 ± 25(g) (29.98 ± 0.88 [oz])

5. Inspect for leakage of refrigerant.
   Using a gas leak detector, check for leakage of refrigerant.

6. Inspect A/C operation.

EVAPORATOR TEMPERATURE SENSOR

COMPONENT LOCATION E5540B31

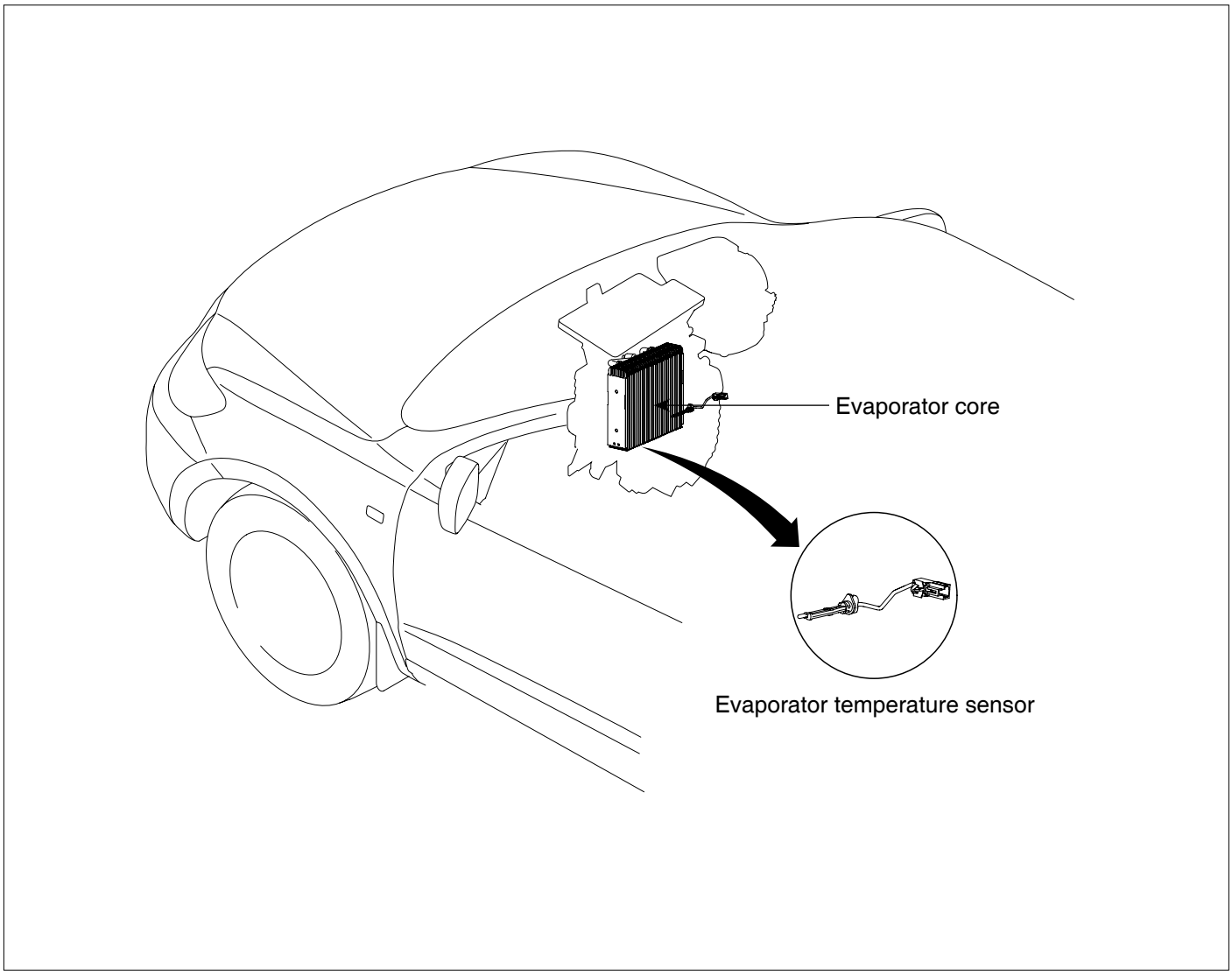

SCMHA6132L

DESCRIPTION E5F1BCCF

The evaporator temperature sensor will detect the evaporator core temperature and interrupt compressor relay power in order to prevent evaporator freezing by excessive cooling.

INSPECTION E05C43ED

1. Ignition "OFF"
2. Disconnect evaporator temperature sensor.
3. Using the multi-tester, Measure resistance between terminal "1" and "2" of evaporator temperature sensor.

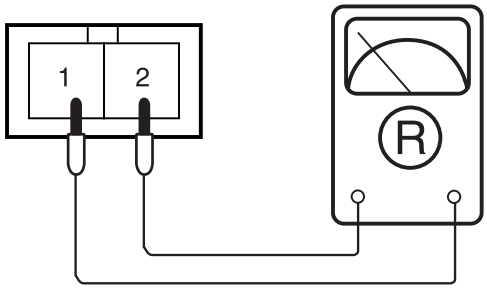

AQGE116C

SPECIFICATION

Evaporator core temperature [°C(°F)]	Resistance [KΩ]
-10(14)	13.56
-5(23)	10.37
0(32)	8.000
5(41)	6.222
10(50)	4.877
15(59)	3.851
20(68)	3.063
25(77)	2.453
30(86)	1.978
35(95)	1.605
40(104)	1.31
45(113)	1.075
50(122)	0.888

4. If the measured resistance is not specification, substitute with a known-good evaporator temperature sensor and check for proper operation.
5. If the problem is corrected, replace the evaporator temperature sensor.

REPLACEMENT E0EEFB9A

1. Disconnect the negative (-) battery terminal.
2. Remove the center lower side cover.

[LHD]

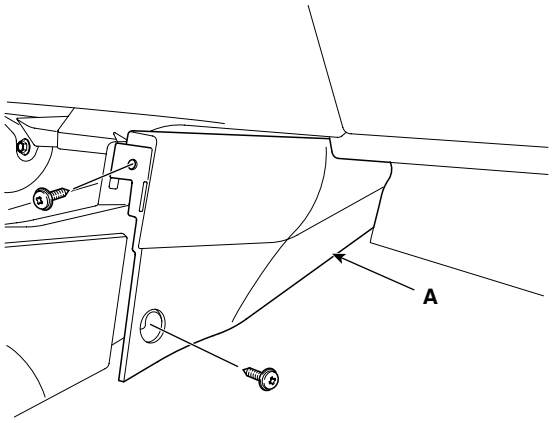

SCMHA6133L

[RHD]

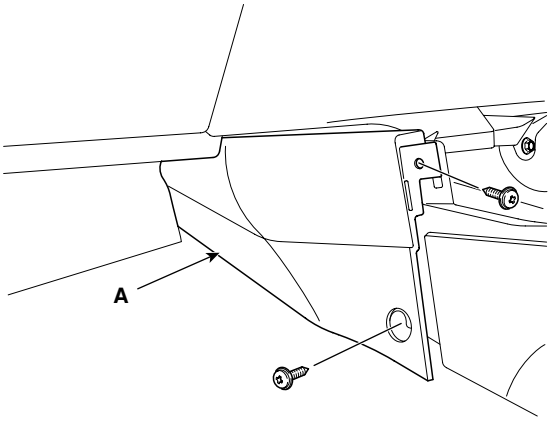

SCMHA6133R

3. Disconnect the evaporator sensor connector (A).
4. Remove the evaporator temperature sensor(B), by pulling it after rorating 90° in a counterclockwise direction.

[LHD]

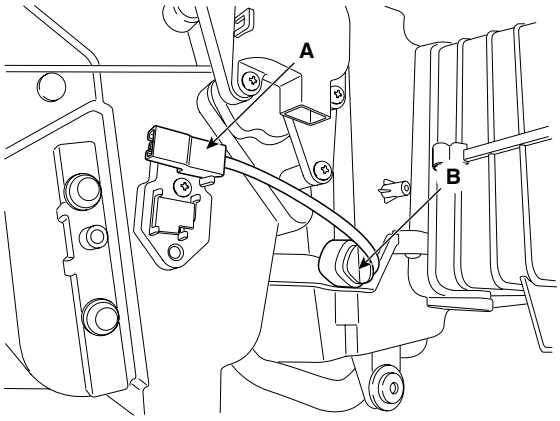

SCMHA6134D

[RHD]

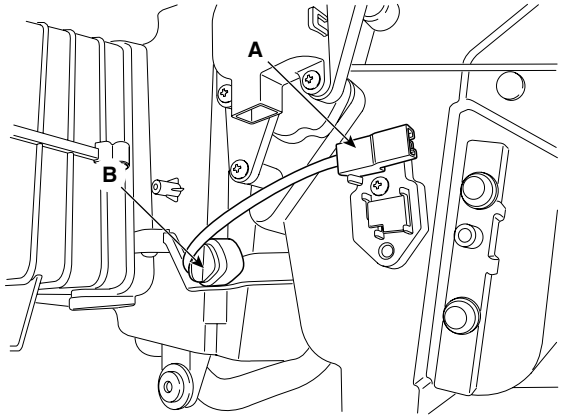

SCMHA6134R

CAUTION

Take care that evaporator core pins are not bent.

5. Installation is the reverse order of removal.

A/C COMPRESSOR CONTROLS (FULL AUTO)

IN CAR SENSOR

COMPONENT LOCATION EE1F070B

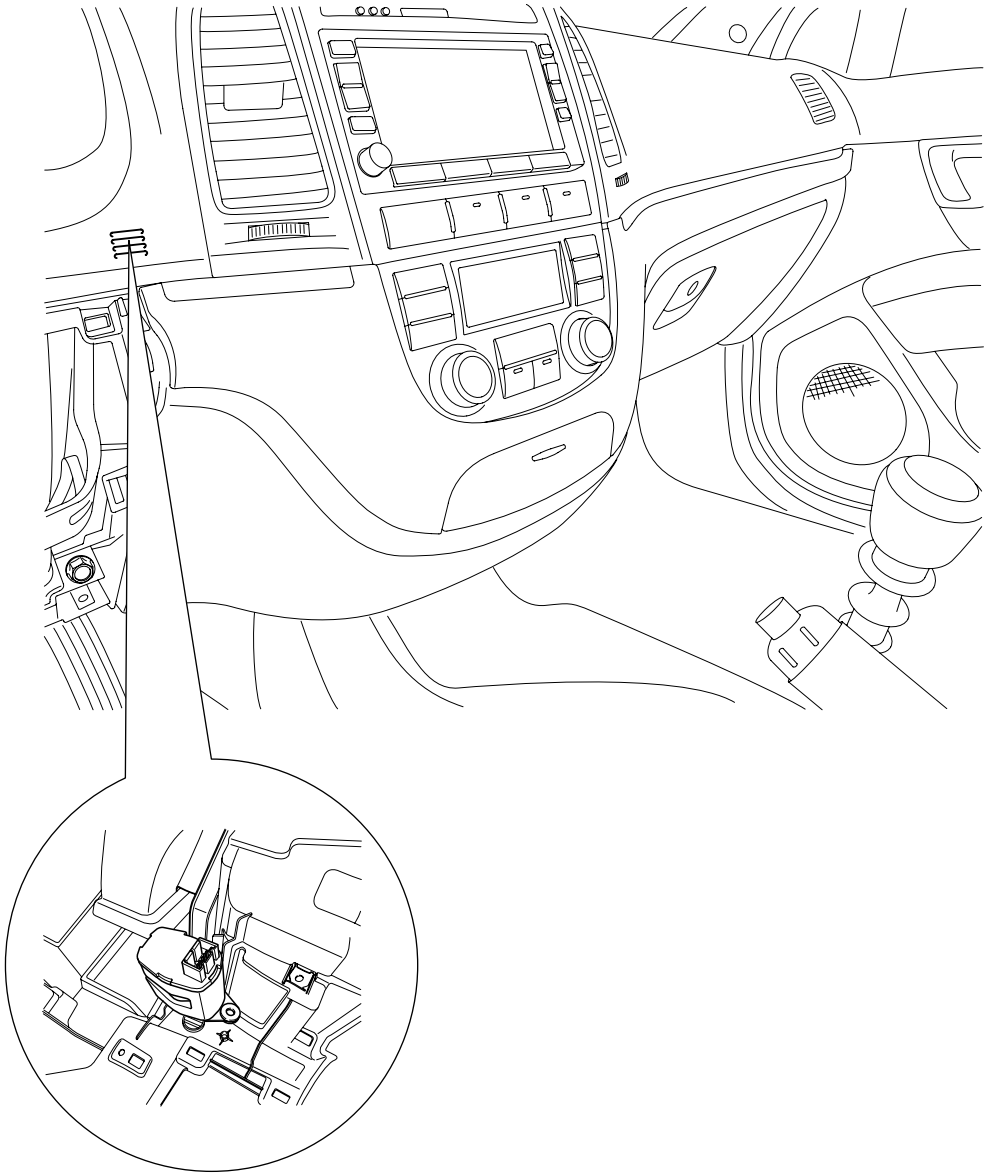

SCMHA6120L

DESCRIPTION EC707BB8

1. In-car air temperature sensor is located at the lower crush pad.
2. The sensor contains a thermistor which measures the temperature of the inside. The signal, decided by the resistance value which changes in accordance with perceived inside temperature, is delivered to heater control unit and according to this signal the control unit regulates incar temperature to intended value.

INSPECTION EFF90998

1. Ignition "ON"
2. Blow air with changing temperature to the in car sensor air inlet. Measure sensor resistance between 2 and 4 terminals.

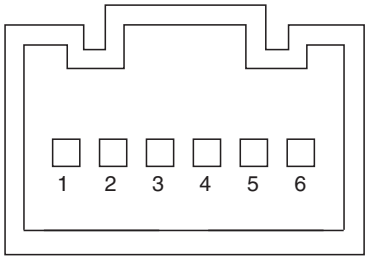

1. Motor (-)
2. Sensor ground (-)
3. Humidity sensor signal
4. In-car sensor temp.signal
5. Sensor power (+)
6. Motor (+)

EQRF201B

SPECIFICATION

Temperature [℃(°F)]	Resistance between terminals 2and 4 (kΩ)
60(140)	7.463 ± 2.6%
50(122)	10.810 ± 2.2%
35(95)	19.59 ± 1.6%
25(77)	30.00 ± 1.2%
15(59)	47.130 ± 1.7%
0(32)	97.710 ± 2.4%
-15(5)	216.1 ± 3.2%
-30(-22)	50936 ± 4.1%

NOTE

In car sensor is negative type thermistor that resistance will rise with lower temperature, and reduce with higher temperature.

REPLACEMENT EA7F2D51

1. Disconnect the negative (-) battery terminal.
2. Remove the A/C control pannel. (Refer to BD group).
3. Disconnect the connector of in-car sensor (A).Loosen the mounting 2 screws and then remove the in-car sensor (B).

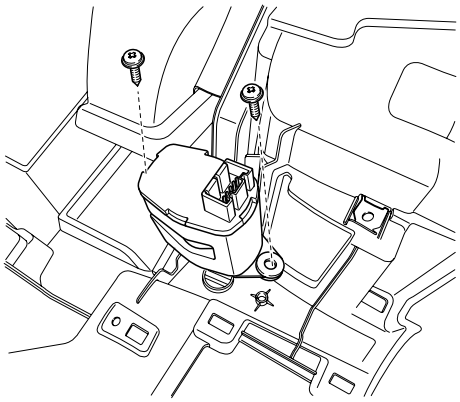

SCMHA6122D

4. Installation is the reverse order of removal.

PHOTO SENSOR

COMPONENT LOCATION EF23C30B

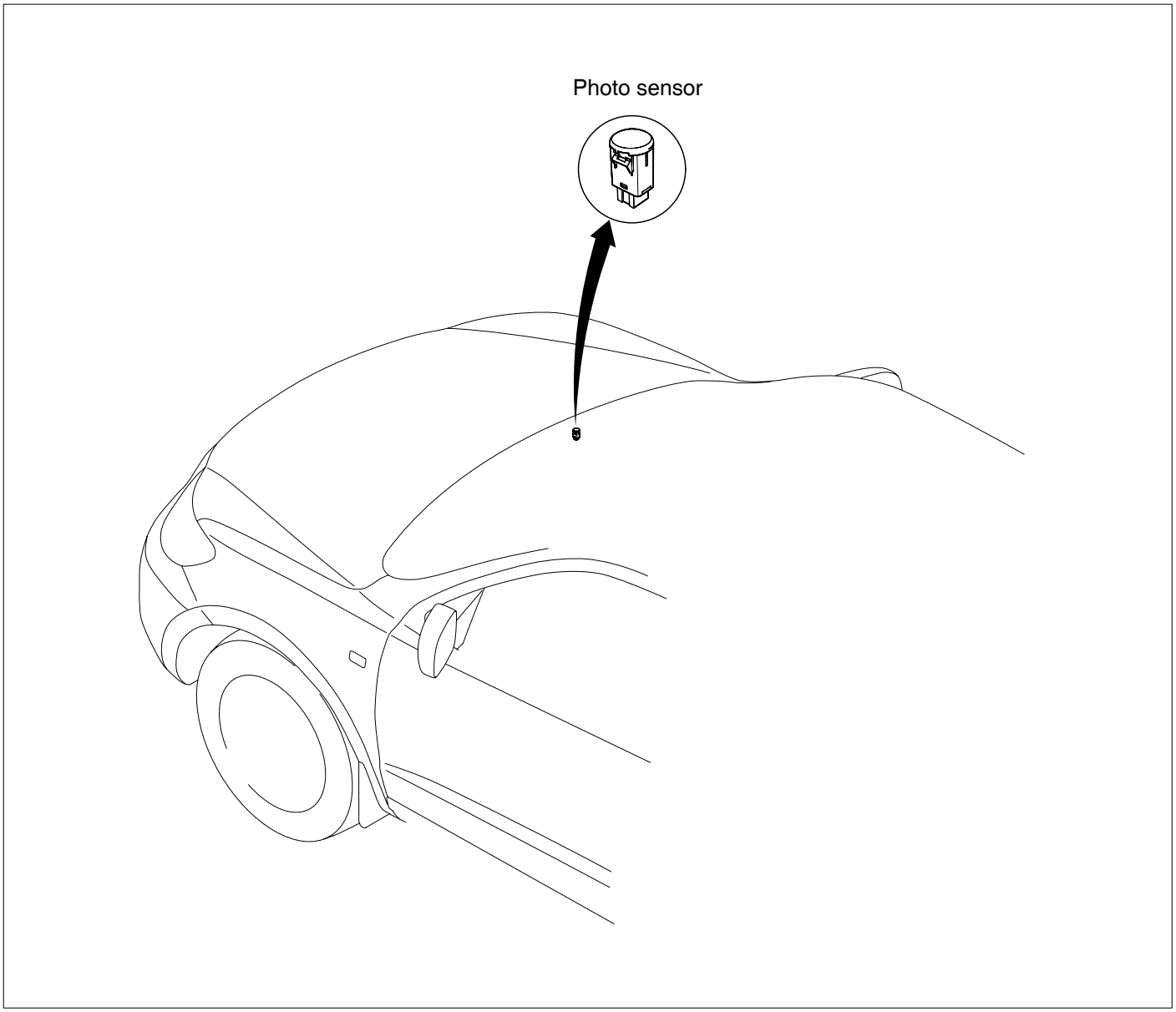

SCMHA6123L

DESCRIPTION E9E29167

1. The photo sensor (A) is located at the center of defrost nozzle.
2. The photo sensor contains a photovoltaic (sensitive to sunlight) diode. The solar radiation received by its light receiving portion, generates an electromotive force in proportion to the amount of radiation received which is transferred to the automatic temperature control module so that the solar radiation compensation will be performed.

INSPECTION E3DC5DB8

1. Ignition "ON"
2. Using the scan tool.
3. Emit intensive light toward photo sensor using a lamp, and check the output voltage change.
4. The voltage will rise with higher intensive light and reduce with lower intensive light.

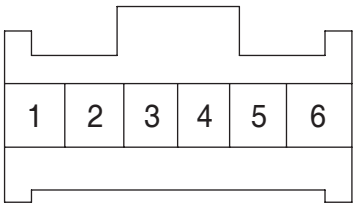

1. Ground
2. 5V (VCC)
3. Signal
4. -
5. Photo sensor (+)
6. Photo sensor (-)

LQLG202B

REPLACEMENT E6DB0564

1. Disconnect the negative (-) battery terminal.
2. With the (-) driver, remove the photo sensor (B) from the center of defrost nozzle (A).

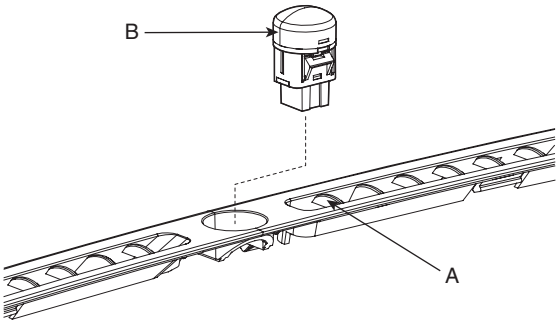

AQKF202C

3. Install in the reverse order of removal.

WATER TEMPERATURE SENSOR

COMPONENT LOCATION E4BFEDE4

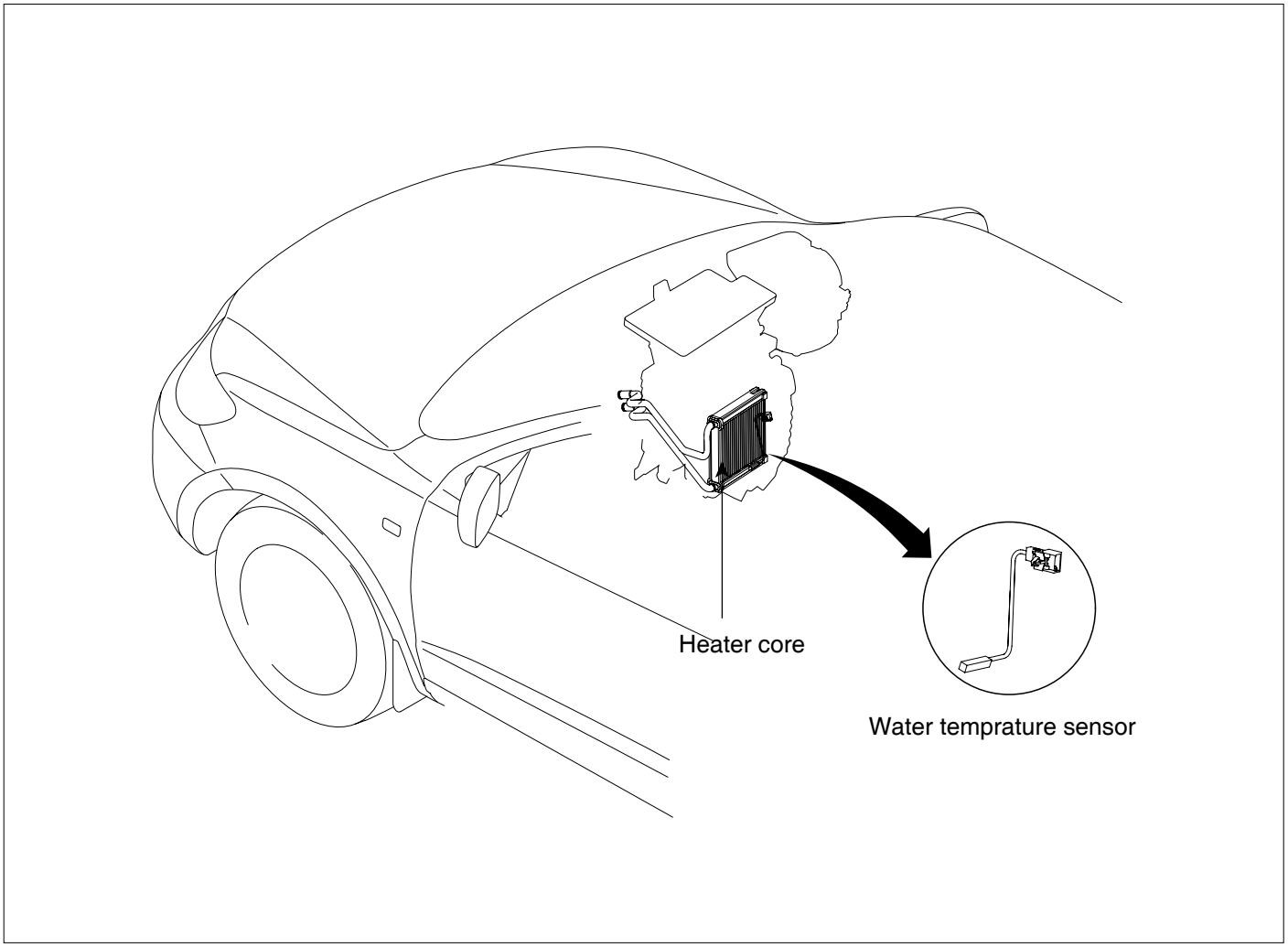

SCMHA6126L

DESCRIPTION EF9C5A75

1. Water temperature sensor is located at the heater unit.
2. It detects coolant temperature. Its signal is used for cold engine lockout control. When the driver operates the heater before the engine is warmed up, the signal from sensor causes the heater control unit to reduce blower motor speed until coolant temperature reaches the threshold value.

INSPECTION EFC0971F

1. Ignition "ON"
2. Using the multi-tester, Measure resistance between terminal "1" and "2" of water temperature sensor.

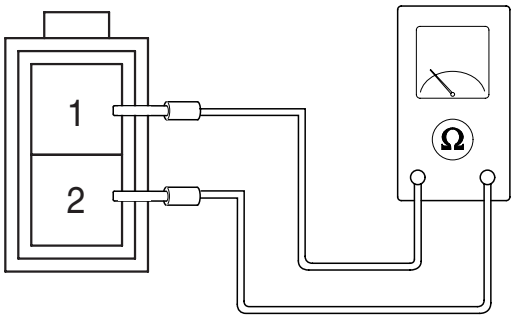

1. Water temperature sensor (+)
2. Ground (-)

EQRF203D

SPECIFICATION

Coolant temperature [℃(°F)]	Resistance (kΩ)	Voltage (V)
-10(14)	55.85 ± 3%	4.24 ± 3%
0(32)	32.91 ± 3%	3.83 ± 3%
10(50)	19.99 ± 3%	3.33 ± 3%
20(68)	12.51 ± 3%	2.78 ± 3%
30(86)	8.047 ± 3%	2.23 ± 3%
40(104)	5.311 ± 3%	1.73 ± 3%
50(122)	3.588 ± 3%	1.32 ± 3%
60(140)	2.476 ± 3%	0.99 ± 3%
70(158)	1.742 ±3%	0.74 ± 3%
80(176)	1.246 ± 3%	0.55 ± 3%

3. If the measured resistance is not specification, substitute with a known-good water temperature sensor and check for proper operation.
4. If the problem is corrected, replace the water temperature sensor.

NOTE

Negative type thermistor that resistance will rise with lower temperature, and reduce with higher temperature.

REPLACEMENT E22FAC9F

1. Disconnect the negative (-) battery terminal.
2. Remove the grove box. (Refer to BD group)
3. Disconnect the connector (A) of water temperature sensor and then remove the water temperature sensor (B) by pulling out.

[LHD]

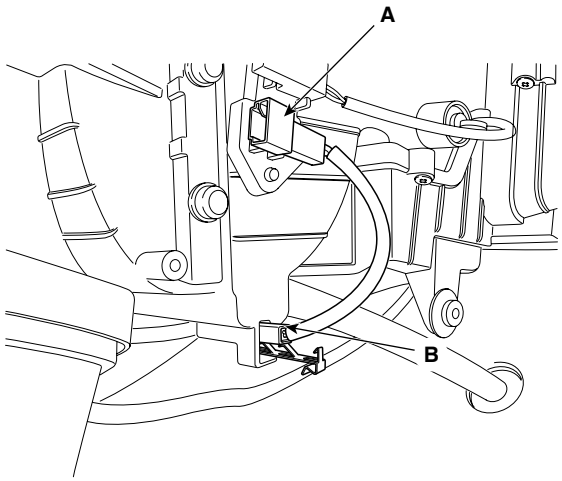

SCMHA6128D

[RHD]

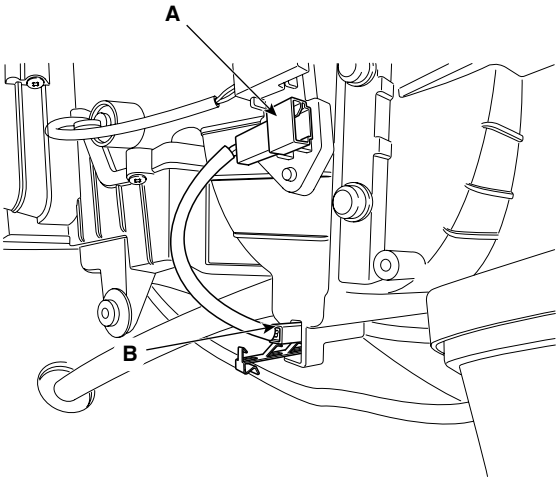

SCMHA6128R

4. Installation is the reverse order of removal.

NOTE

Take care that wire of water temperature sensor is not to be damaged

AMBIENT TEMPERATURE SENSOR

COMPONENT LOCATION E63BA10B

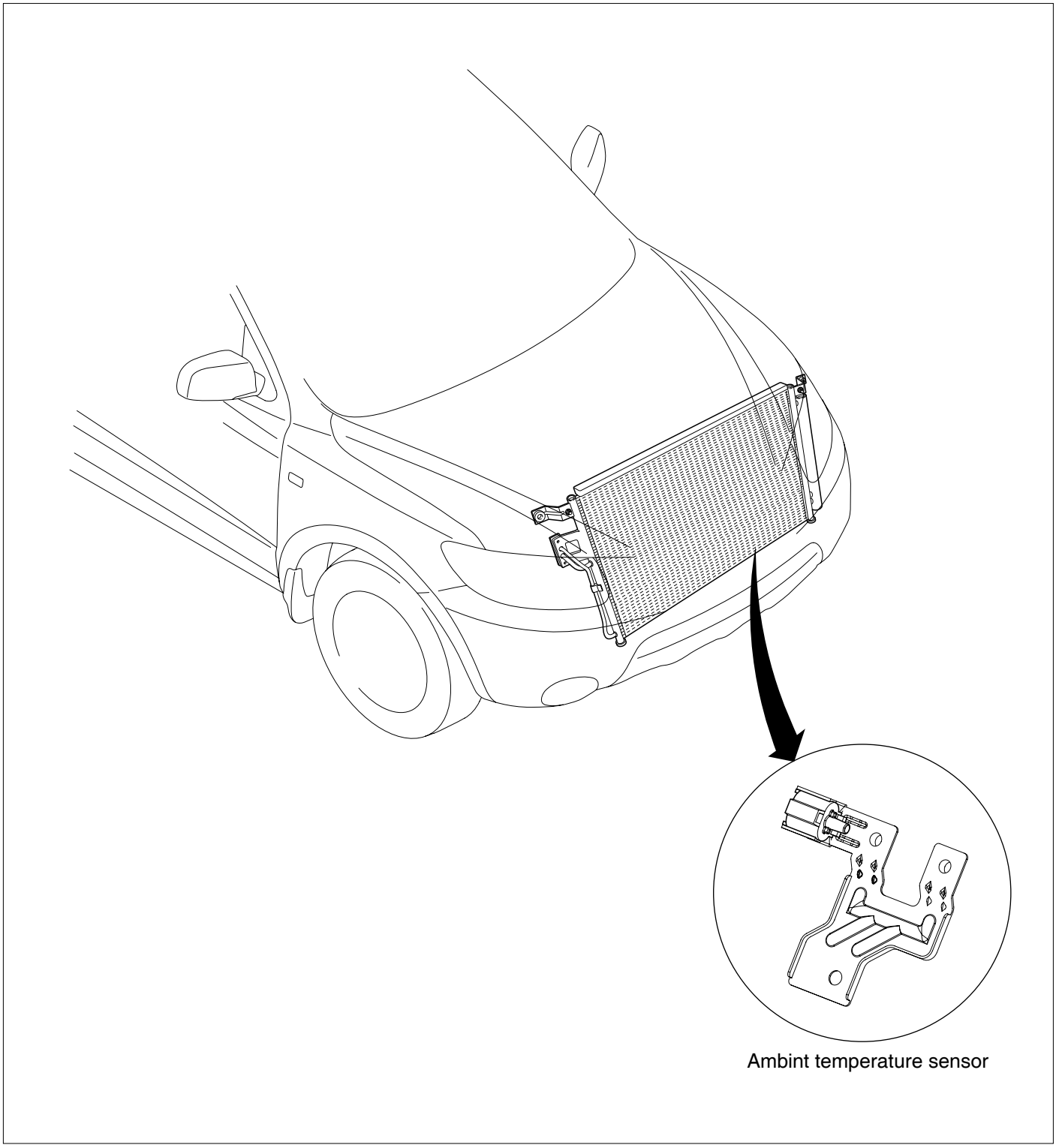

SCMHA6129L

DESCRIPTION EE9AFC97

1. The ambient temperature sensor is located at the front of the condenser and detects ambient air temperature. It is a negative type thermistor; resistance will increase with lower temperature, and decrease with higher temperatures.

2. The sensor output will be used for discharge temperature control, temperature regulation door control, blower motor level control, mix mode control and in-car humidity control.

NOTE

If the ambient temperature is below 2.0℃ (35.6°F), the A/C compressor will be stopped.
The compressor will be operated by manual operating.

INSPECTION EBCCA26E

1. Ignition "OFF"

2. Disconnect ambient temperature sensor.

3. Check the resistance of ambient temperature sensor between terminals 1 and 2 whether it is changed by changing of the ambient temperature.

SPECIFICATION

Ambient temperature [℃(°F)]	Resistance between terminals 1and 2 (kΩ)
-30(-22)	515.428
-20(-4)	287.671
-10(14)	165.981
0(32)	98.775
10(50)	60.49
20(68)	38.04
30(86)	24.729
40(104)	16.576
50(122)	11.341
60(140)	7.907

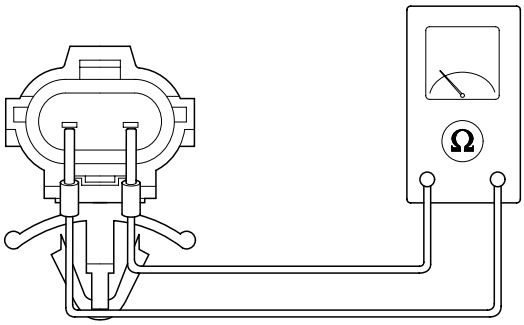

AQJF204B

4. If the measured resistance is not specification, substitute with a known-good ambient temperature sensor and check for proper operation.

5. If the problem is corrected, replace the ambient temperature sensor.

REPLACEMENT EE84B2FD

1. Disconnect the negative (-) battery terminal.
2. Remove the front bumper.
3. Remove the ambient temperature sensor (A).

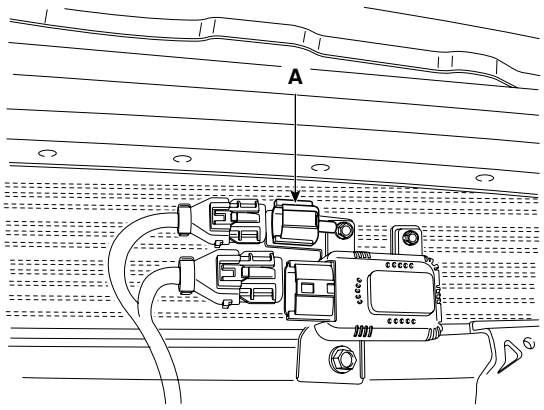

SCMHA6131D

4. Installation is the reverse order of removal.

A.Q.S (AIR QUALITY SENSOR)

COMPONENT LOCATION EF783C43

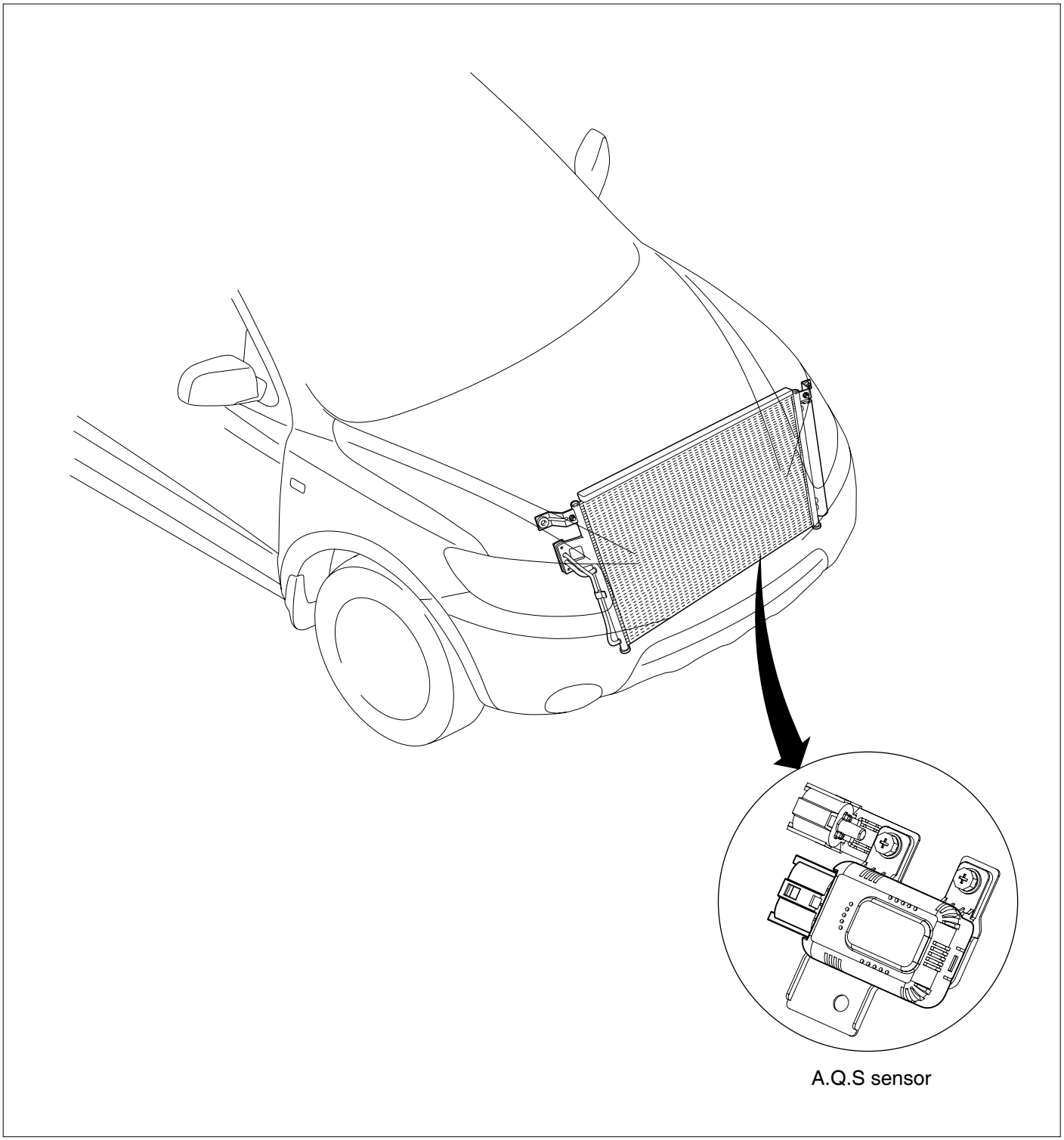

SCMHA6135L

DESCRIPTION E122A2FC

1. A.Q.S is located at center support in front of the engine radiator, and detects hazardous elements in ambient air providing output signal to control.
2. It will detect sulfurous acid gas, carbon dioxide, carbon monoxide, hydrocarbon and allergen.

INSPECTION EF4C1E6B

1. Ignition "ON"
2. Using the scan tool.
3. Check the output voltage of AQS between terminals 2 and 3.

SPECIFICATION

Condition	Output signal	Fresh/recirculation
Normal condition	4 ~ 5V	Fresh
Hazardous gas detection	0 ~ 1V	Recirculation

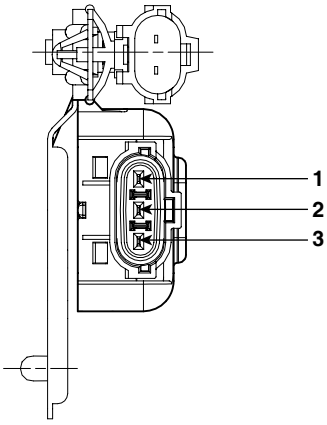

1. 12V(IGN)
2. GND
3. AQS signal

SCMHA6136L

4. AQS diagnosis and fail safe
   Detect the open of signal for 7 seconds without choosing the AQS switch when IG on.
   If 2.5V or more is detected for 3.5 seconds or more among 7 seconds, be judged the open of AQS signal. Operate as below fail safe function, while choosing AQS.
   Fail safe: Release the AQS (AQS cannot be selected), Fresh/recirculation maintains previous situation of AQS selection.

   NOTE

   When IG is turned ON, AQS heats for 34±5 seconds, it will output below 1.0 voltage during this time.

REPLACEMENT E4CD857C

1. Disconnect the negative (-) battery terminal.
2. Remove the front bumper.
3. Remove the AQS (B) after loosening the mounting screws (A).

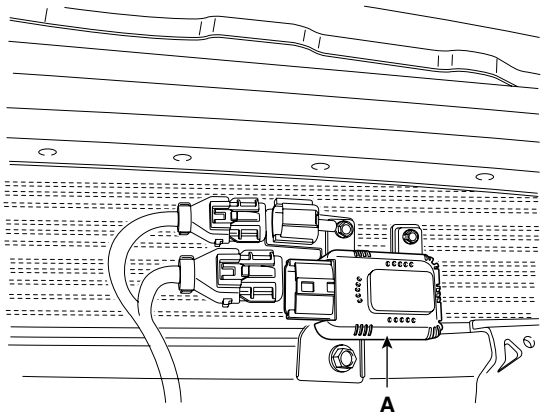

SCMHA6137D

4. Installation is the reverse order of removal.

HUMIDITY SENSOR

COMPONENT LOCATION ED4862C0

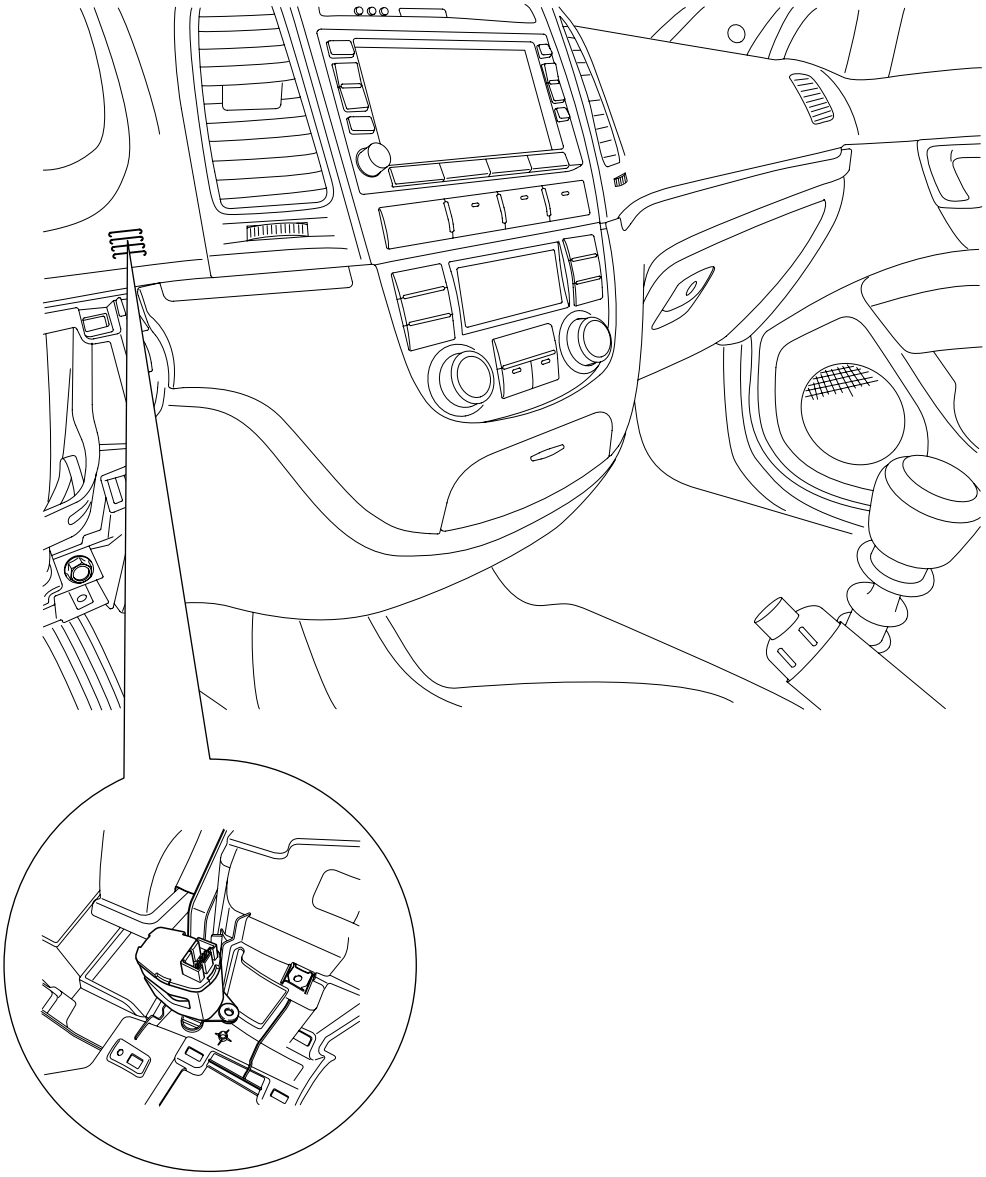

SCMHA6138L

DESCRIPTION E4A63763

1. Humidity sensor is located at the lower crush pad and detected in-car humidity for in-car humidity control.

2. If ambient air temperature or in-car humidity is outside certain range, it will turn on A/C to control in-car humidity preventing in car fogging.
   Air conditioner operation depends on ambient temperature and humidity.

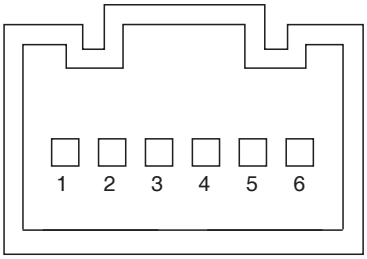

1. Motor (-)
2. Sensor (-)
3. Humidity sensor signal
4. In-car sensor temp.signal
5. Sensor (+)
6. Motor (+)

SCMHA6400L

INSPECTION ED2CFA50

1. Ignition "ON"

2. Using the scan tool.

3. Check the frequency of humidity sensor between terminals 2 and 3.

Humidity (%)	Frequency between terminals 2and 3 (Hz)
30	6976 ± 5%
50	6728 ± 5%
60	6600 ± 5%
70	6468 ± 5%
80	6330 ± 5%
90	6186 ± 5%

4. If the measured resistance is not specification, substitute with a known-good humidity sensor and check for proper operation.

5. If the problem is corrected, replace the Humidity sensor.

REPLACEMENT EF181EBC

1. Disconnect the negative (-) battery terminal.
2. Remove the crash pad. (Refer to BD- Crash pad)
3. Disconnect the humidity sensor connector.
4. Loosen 2 screws and then remove the humidity sensor (C).

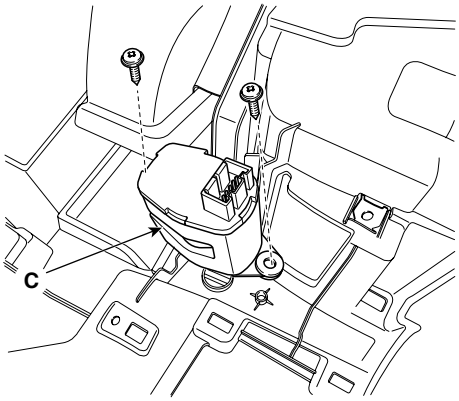

SCMHA6140D

5. Installation is the reverse order of removal.

HEATER

HEATER UNIT

COMPONENT LOCATION EDABBA22

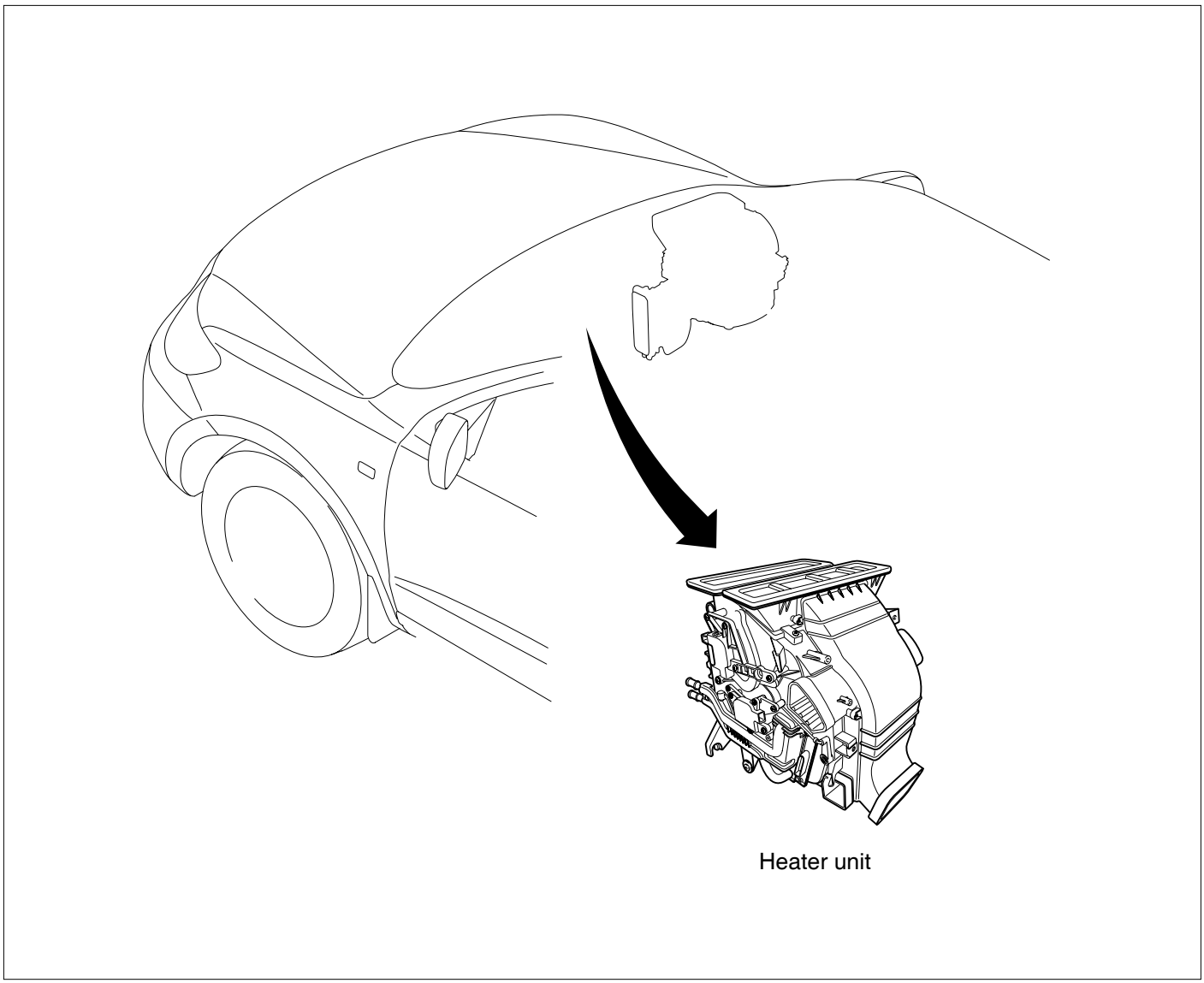

SCMHA6141L

COMPONENTS E057B840

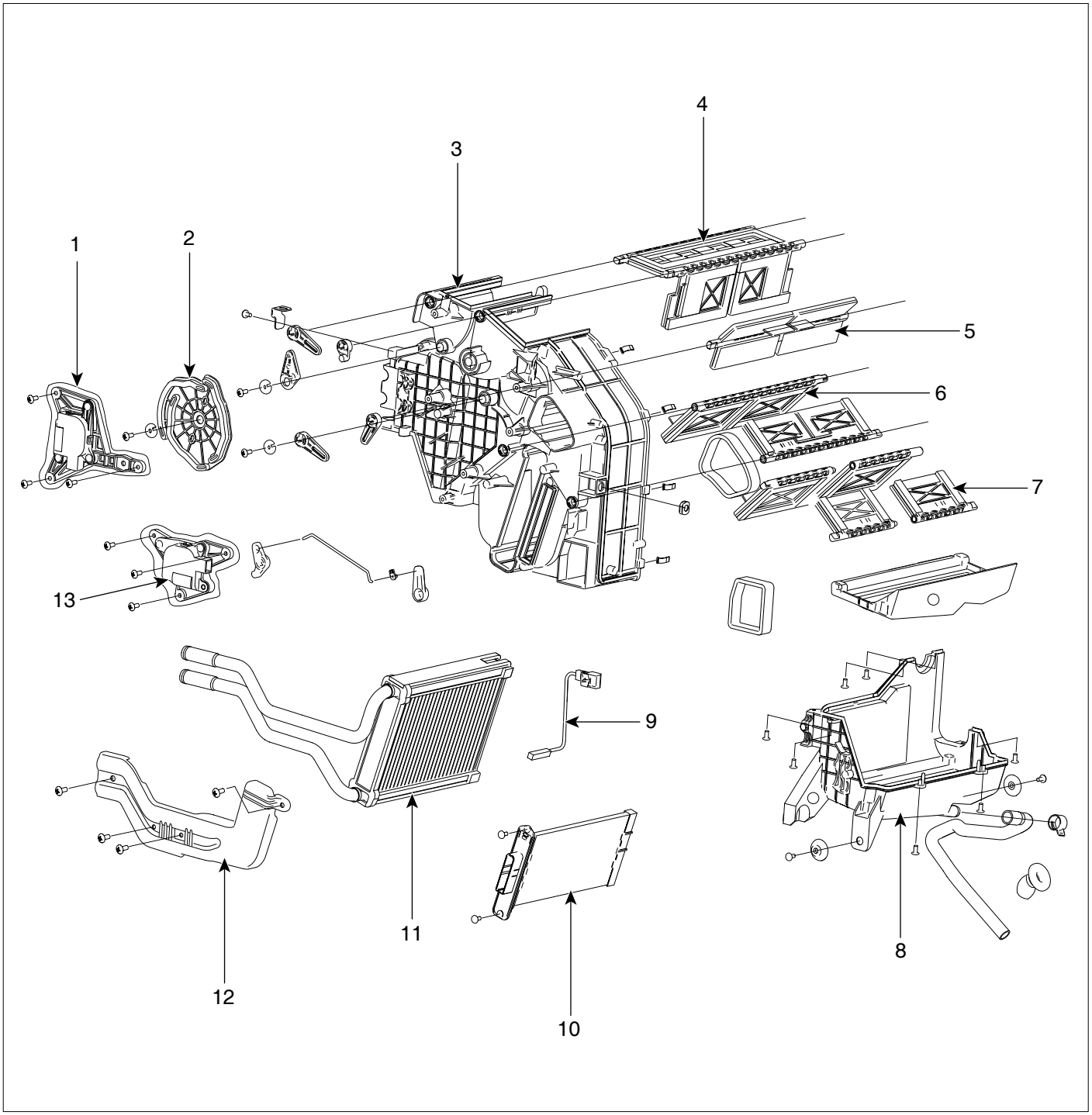

1. Mode control actuator
2. Mode cam
3. Heater & Evqporator (R)
4. Defrost door
5. Vent door
6. Temp control door (Single type)
7. Temp control door (Dual type)
8. Lower case
9. Water temperature sensor
10. PTC heater
11. Heater core cover
12. Temp control actuator

SCMHA6142L

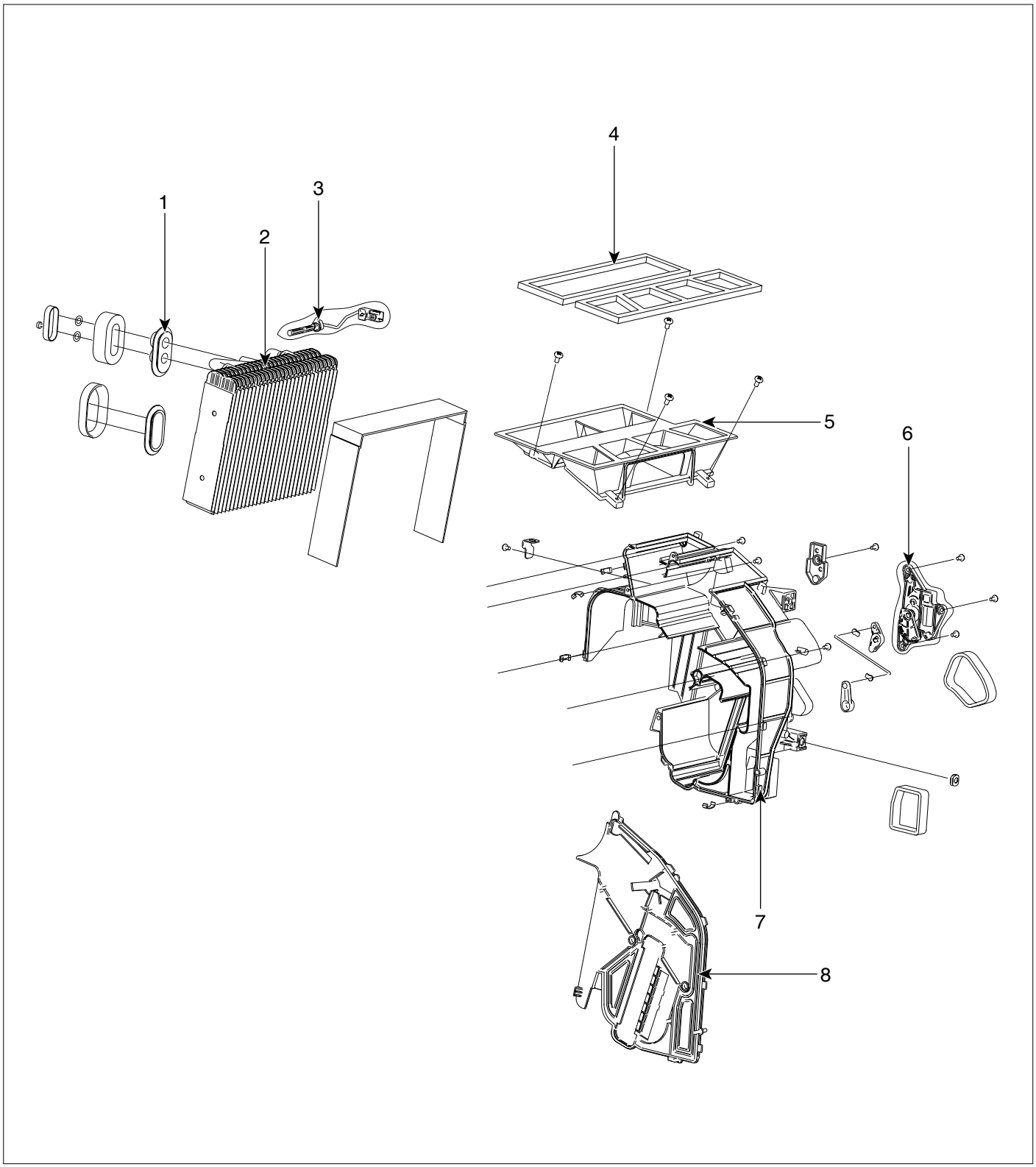

1. Evaporator case seal
2. Evaporator core
3. Evaporator temprature sensor
4. Frame duct seal
5. Heater & Evaporator opper case
6. Temp control actuator
7. Heater & Evaporator case (R)
8. Lower case

SCMHA6143L

REPLACEMENT EBA719FC

1. Disconnect the negative (-) battery terminal.
2. Recover the refrigerant with a recovery/ recycling/ charging station.
3. When the engine is cool, drain the engine coolant from the radiator.
4. Remove the bolts (A) and the expansion valve (B) from the evaporator core.
   Plug or cap the lines immediately after disconnecting them to avoid moisture and dust contamination.

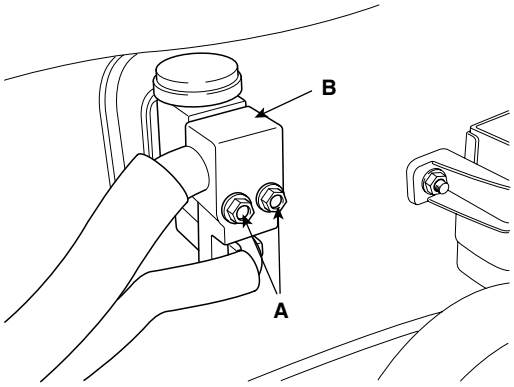

SCMHA6144D

5. Disconnect the inlet (C) and outlet (D) heater hoses from the heater unit.

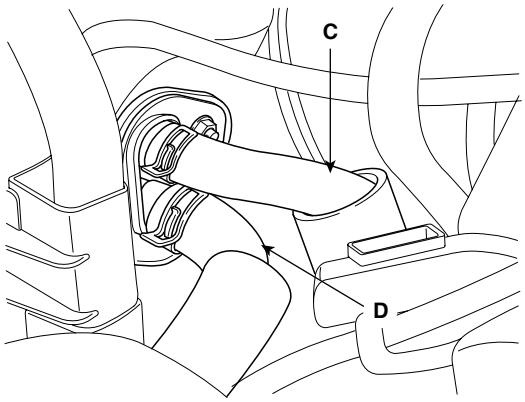

SCMHA6145D

CAUTION

Engine coolant will run out when the hoses are disconnected; drain it into a clean drip pan. Be sure not to let coolant spill on electrical parts or painted surfaces. If any coolant spills, rinse it off immediately.

6. Remove the crash pad.
7. Remove the cowl cross bar assembly.
8. Disconnect the connectors from the temperature control actuator, the mode control actuator and the evaporator temperature sensor.
9. Remove the heater & blower unit after loosening 3 mounting bolts.

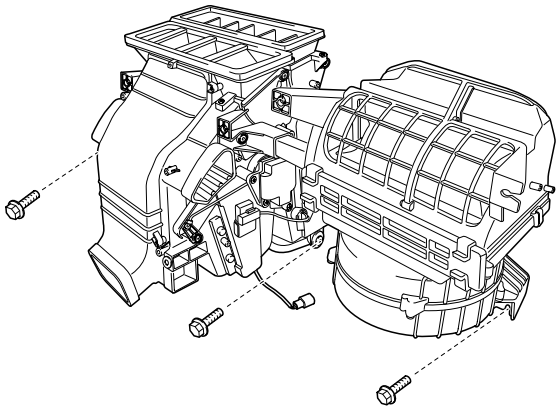

SCMHA6146D

10. Remove the blower unit (B) from heater unit after loosening 3 screws.

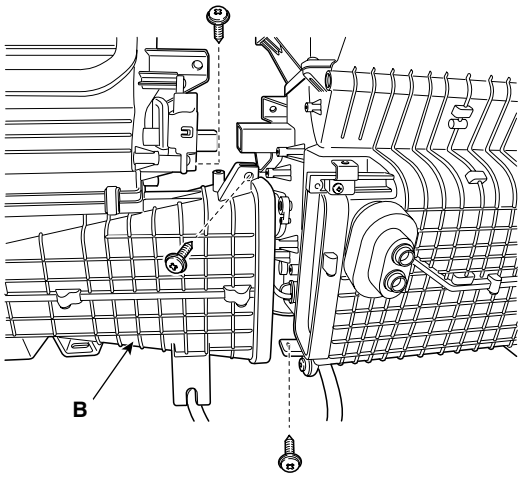

SCMHA6147D

11. Remove the self-tapping screws (A) and remove the PTC heater unit (B) or cover. (In case of PTC heater)

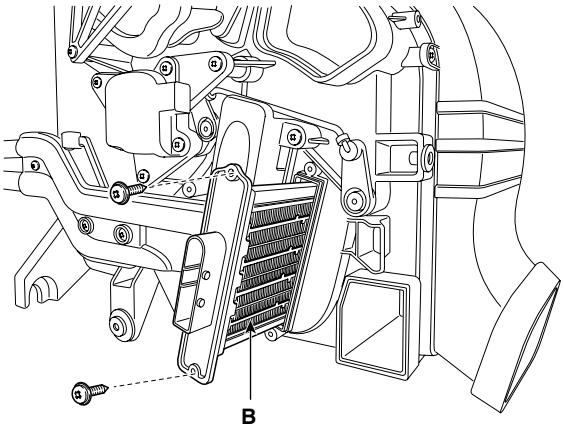

SCMHA6148D

12. Remove the water temperature sensor. (Refer to HA - Water temp sensor)

13. Remove the heater core (B) after remove the cover (A).

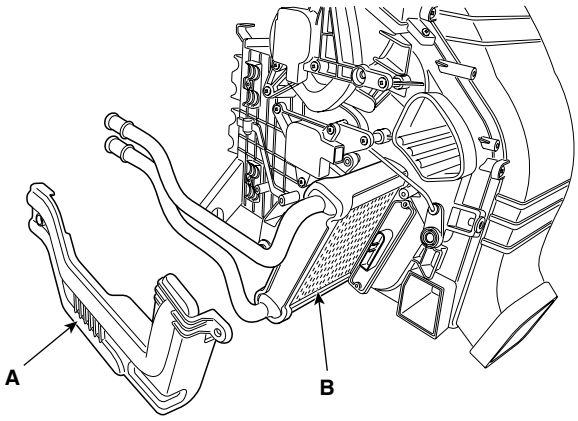

SCMHA6149D

14. Loosen a screw and then remove the heater unit cover(A).

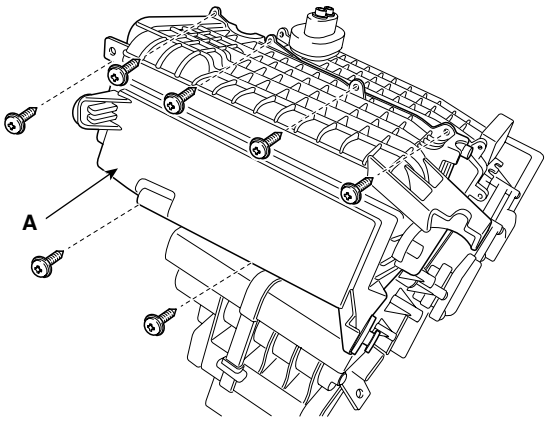

SCMHA6150D

15. Remove the evaporator core(A).

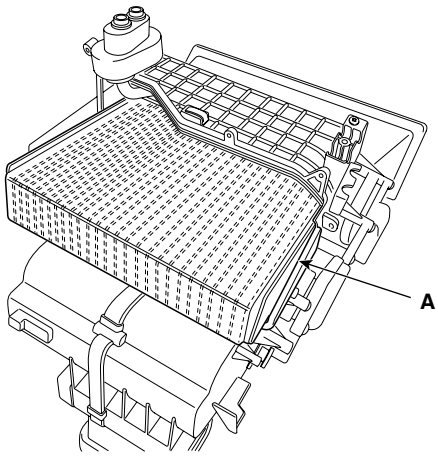

SCMHA6151D

16. Be careful that the inlet and outlet pipe are not bent during heater core removal, and pull out the heater core.

17. Install the heater core in the reverse order of removal.

18. Installation is the reverse order of removal, and note these items :
    - If you're installing a new evaporator, add refrigerant oil (ND-OIL8).
    - Replace the O-rings with new ones at each fitting, and apply a thin coat of refrigerant oil before installing them. Be sure to use the right O-rings for R-134a to avoid leakage.
    - Immediately after using the oil, replace the cap on the container, and seal it to avoid moisture absorption.
    - Do not spill the refrigerant oil on the vehicle ; it may damage the paint ; if the refrigerant oil contacts the paint, wash it off immediately
    - Apply sealant to the grommets.
    - Make sure that there is no air leakage.
    - Charge the system and test its performance.
    - Do not interchange the inlet and outlet heater hoses and install the hose clamps securely.
    - Refill the cooling system with engine coolant.

PTC (POSITIVE TEMPERATURE COEFFICIENT) HEATER

DESCRIPTION EC3EA1C9

PTC (Positive Temperature Coefficient) heater (A) is an electric heater using a PTC element as an auxiliary heating device that supplements deficiency of interior heat source in highly effective diesel engine (U engine).

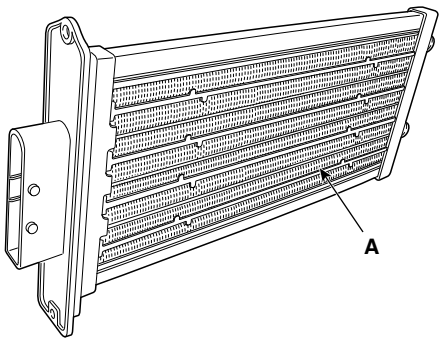

SCMHA6152D

An electric heater heats up the interior by directly heating the air that passes through the heater.
PTC = positive Temperature Coefficient
The name itself implies that the element has a proportional resistance change sensitive to temperature. PTC heater is installed at the exit or the backside of heater core.

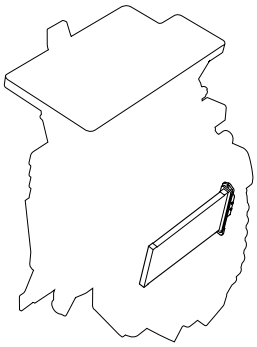

AQJF301A

OPERATION PRINCIPLE

ECM outputs a PTC on signal. Operate PTC from 1st setting to 3rd setting with an interval of 15 seconds.
Heat up the air, which passes through a heater core.

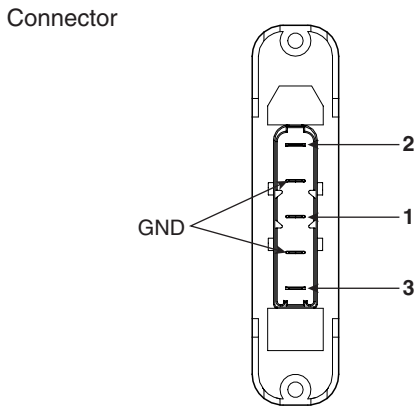

LQJF301C

OPERATION CONDITION

Judge the condition by ambient temperature is below 5°C, coolant temperature is below 70°C, and battery voltage is above 11V and engine RPM is above 700RPM.

INSPECTION EBEBB6AB

Inspect the PTC operation by confirmation logic as below.

1. Entering method
   1) Set the floor mode, maximum heating
   2) Turn off the blower switch
   3) Press the intake button more than 5 times.
   4) Indicator of entire button is flashed with an interval of 0.5 seconds continuously (Manual).
      Graphics of the entire LCD display switch on and off with an interval of 0.5 seconds continuously (Automatic)
   5) Confirm the PTC operation by operating the blower switch
      Manual : 1~4 step, Automatic: 1~8step.
   6) Each PTC relay is operated with an interval of 3 seconds.
   7) Execute the PTC operation by confirmation logic for 30 seconds.
2. Cancellation method
   1) Select the A/C button or intake button.
   2) IG "OFF".
   3) Cancel the logic after 30 seconds automatically.
3. If the PTC operation is not operated, substitute with a known-good PTC and check for proper operation.
   If the problem is corrected, replace the PTC.

REPLACEMENT EFACC0BC

1. Remove the crash pad glove box. (Refer to BD - Crash pad)
2. After loosen the PTC heater mounting serew, remove the PTC heater(A).

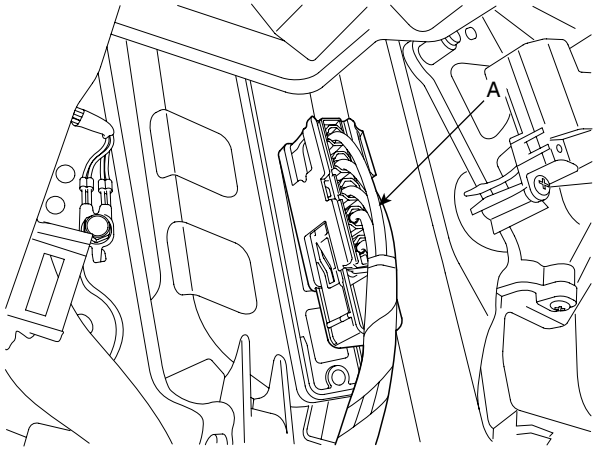

SCMHA6155D

3. Remove the PTC heatoer(A).

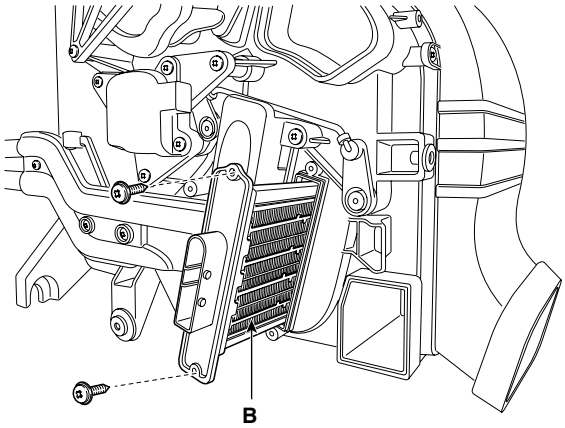

SCMHA6156D

TEMPERATURE CONTROL ACTUATOR

COMPONENT LOCATION EFC61DF9

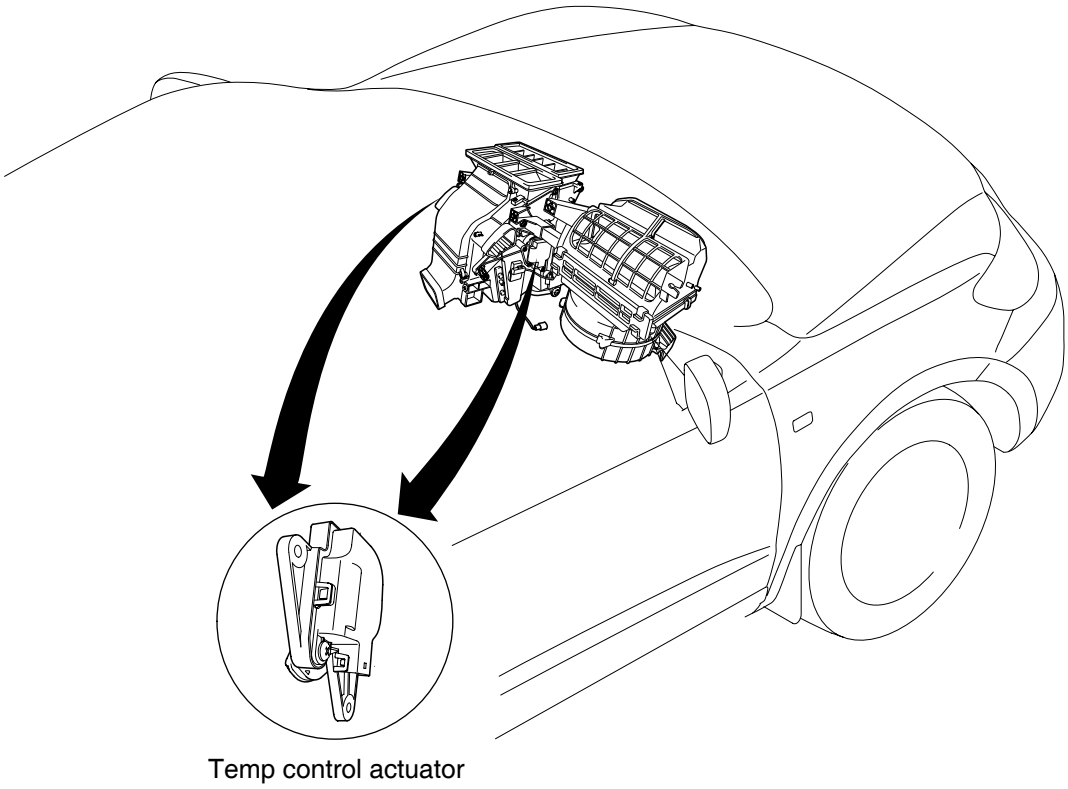

SCMHA6157L

DESCRIPTION EEB86C0E

1. Heater unit includes mode control actuator and temperature control actuator.

2. Temperature control actuator is located at the heater unit. It regulates the temperature by the procedure as follows. Signal from control unit adjusts position of temperature door by operating temperature switch and then temperature will be regulated by the hot/cold air ratio decided by position of temperature door

INSPECTION EAE4CBCC

1. Ignition "OFF"

2. Disconnect the connector of temperature control actuator.

3. Verify that the temperature control actuator operates to the hot position when connecting 12V to the terminal 3 and grounding terminal 4.
   Verify that the temperature control actuator operates to the cool position when connecting in the reverse.

[DRIVER]

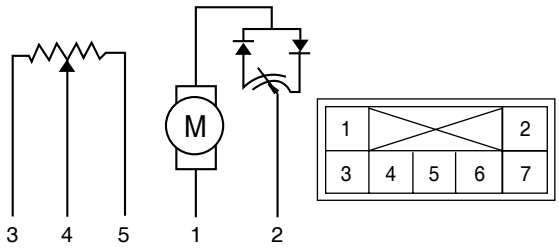

1. -
2. -
3. Cool position
4. Hot position
5. 5V (VCC)
6. Feedback signal
7. Sensor ground

SCMHA6303L

SPECIFICATION

Door position	Voltage (6-7)	Error detecting
Max. cooling	0.3 ± 0.15V	Low voltage : 0.1V or less
Max. heating	4.7 ± 0.15V	High voltage : 4.9V or more

[PASSENGER]

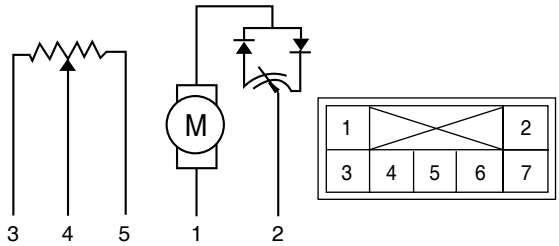

1. -
2. -
3. Hot position
4. Cool position
5. Sensor ground
6. Feedback signal
7. 5V (VCC)

SCMHA6304L

SPECIFICATION

Door position	Voltage (5-6)	Error detecting
Max. cooling	0.3 ± 0.15V	Low voltage : 0.1V or less
Max. heating	4.7 ± 0.15V	High voltage : 4.9V or more

It will feedback current position of actuator to controls.

4. If the measured voltage is not specification, substitute with a known-good temperature control actuator and check for proper operation.

5. If the problem is corrected, replace the temperature control actuator.

REPLACEMENT E8AEACEC

1. Disconnect the negative (-) battery terminal.
2. Remove the driver' s crush pad lower panel (Refer to BD- Crash pad)
3. Disconnect the temperature control actuator connector (A) after removing the air duct.
4. Loosen the mounting screw and then remove the temperature control actuator (B).

[PASSENGER'S]

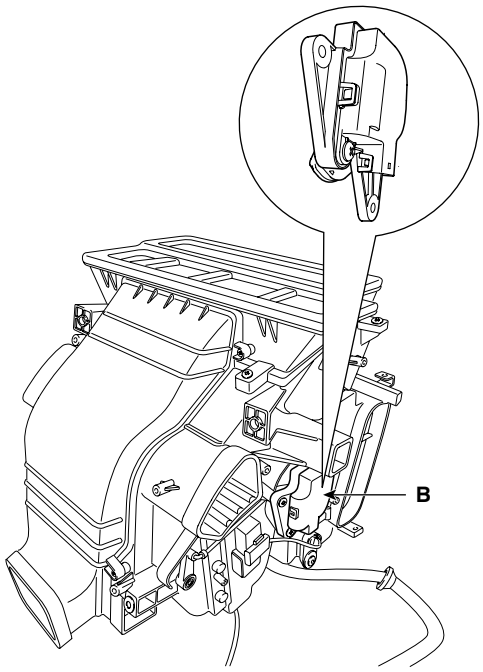

SCMHA6160D

[DRIVER'S]

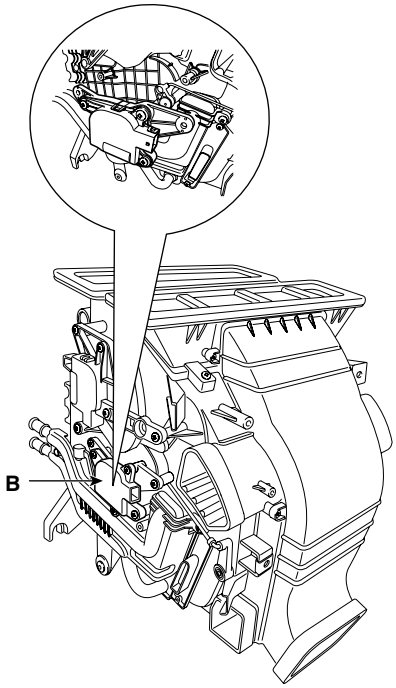

SCMHA6161D

5. Installation is the reverse order of removal.

MODE CONTROL ACTUATOR

COMPONENT LOCATION E8FDCBD7

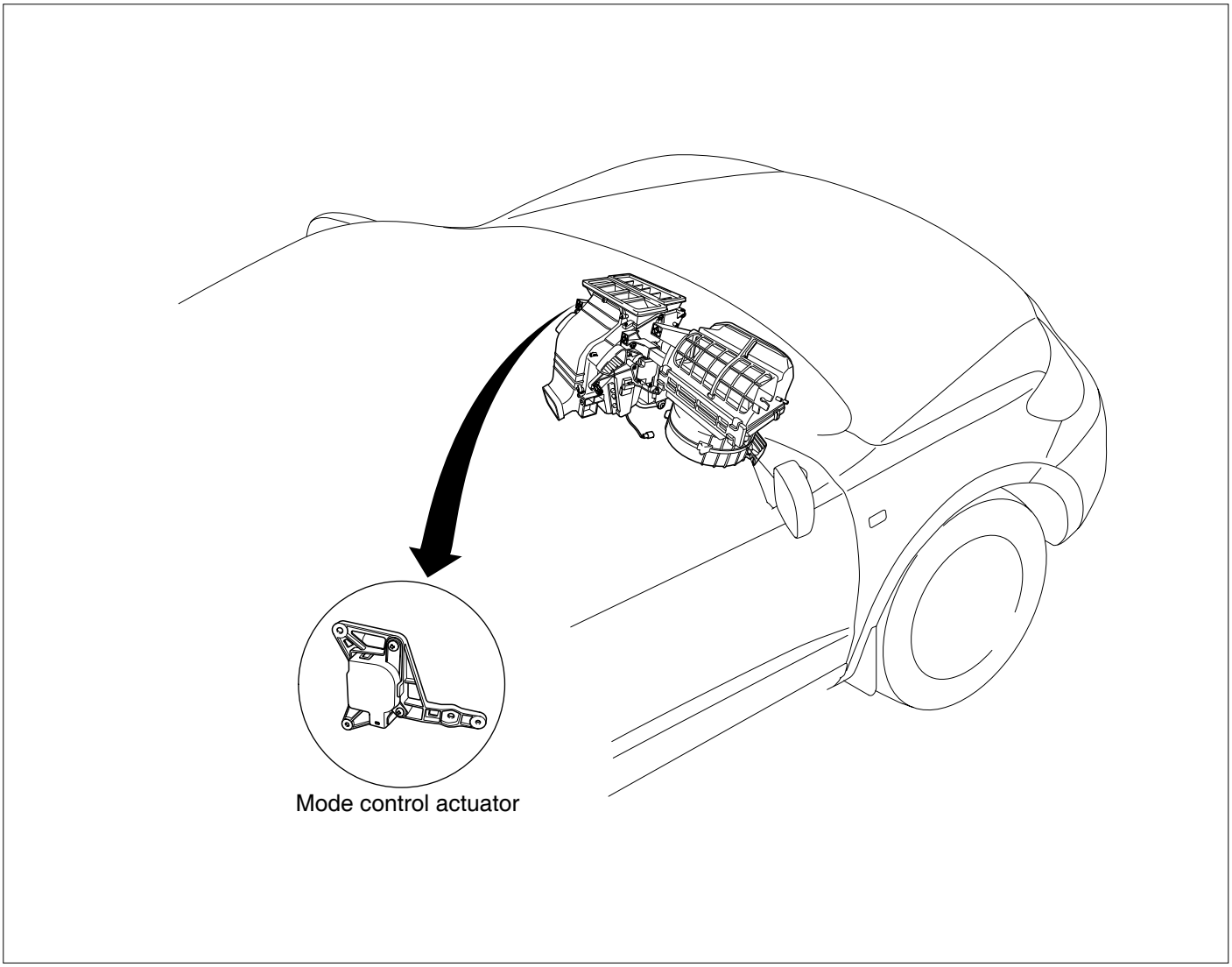

SCMHA6162L

DESCRIPTION E6DBF81F

The mode control actuator is located at the heater unit. It adjusts position of mode door by operating mode control actuator based on signal of A/C control unit. Pressing mode select switch makes the mode control actuator shift in order of vent→ B/L → floor → mix.

INSPECTION EBFACAE1

1. Ignition "OFF"
2. Disconnect the connector of mode control actuator.
3. Verify that the mode control actuator operates to the defrost mode when connecting 12V to the terminal 3 and grounding terminal 4.
4. Verify that the mode control actuator operates to the vent mode when connecting in the reverse.

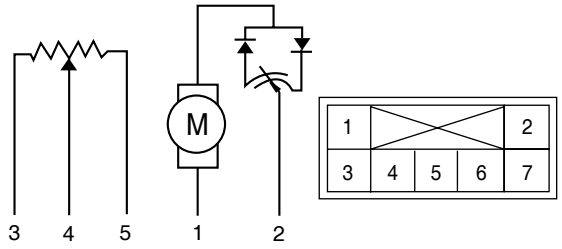

1. -
2. -
3. Defrost mode
4. Vent mode
5. Sensor ground
6. 5V (VCC)
7. Feedback signal

SCMHA6305L

5. Check the voltage between terminals 5 and 7.

Door position	Voltage (5-7)	Error detecting
Vent	0.3 ± 0.15V	Low voltage : 0.1V or less
Defrost	4.7 ± 0.15V	High voltage : 4.9V or more

It will feedback current position of actuator to controls.

6. If the measured voltage is not specification, substitute with a known-good mode control actuator and check for proper operation.
7. If the problem is corrected, replace the mode control actuator.

REPLACEMENT EA2DAD4F

1. Disconnect the negative (-) battery terminal.
2. Remove the driver' s crush pad lower panel (Refer to BD group).
3. Disconnect the temperature control actuator connector (A) after removing the air duct.
4. Loosen the mounting screw and then remove the temperature control actuator (B).

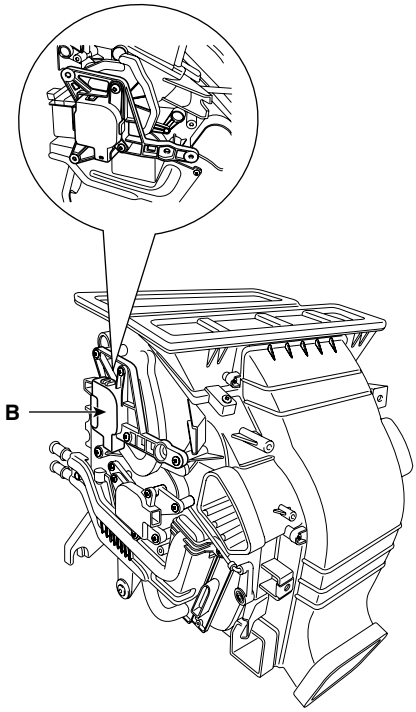

SCMHA6163D

5. Installation is the reverse order of removal.

REAR HEATER

REAR HEATER UNIT

COMPONENT LOCATION E2D30DFC

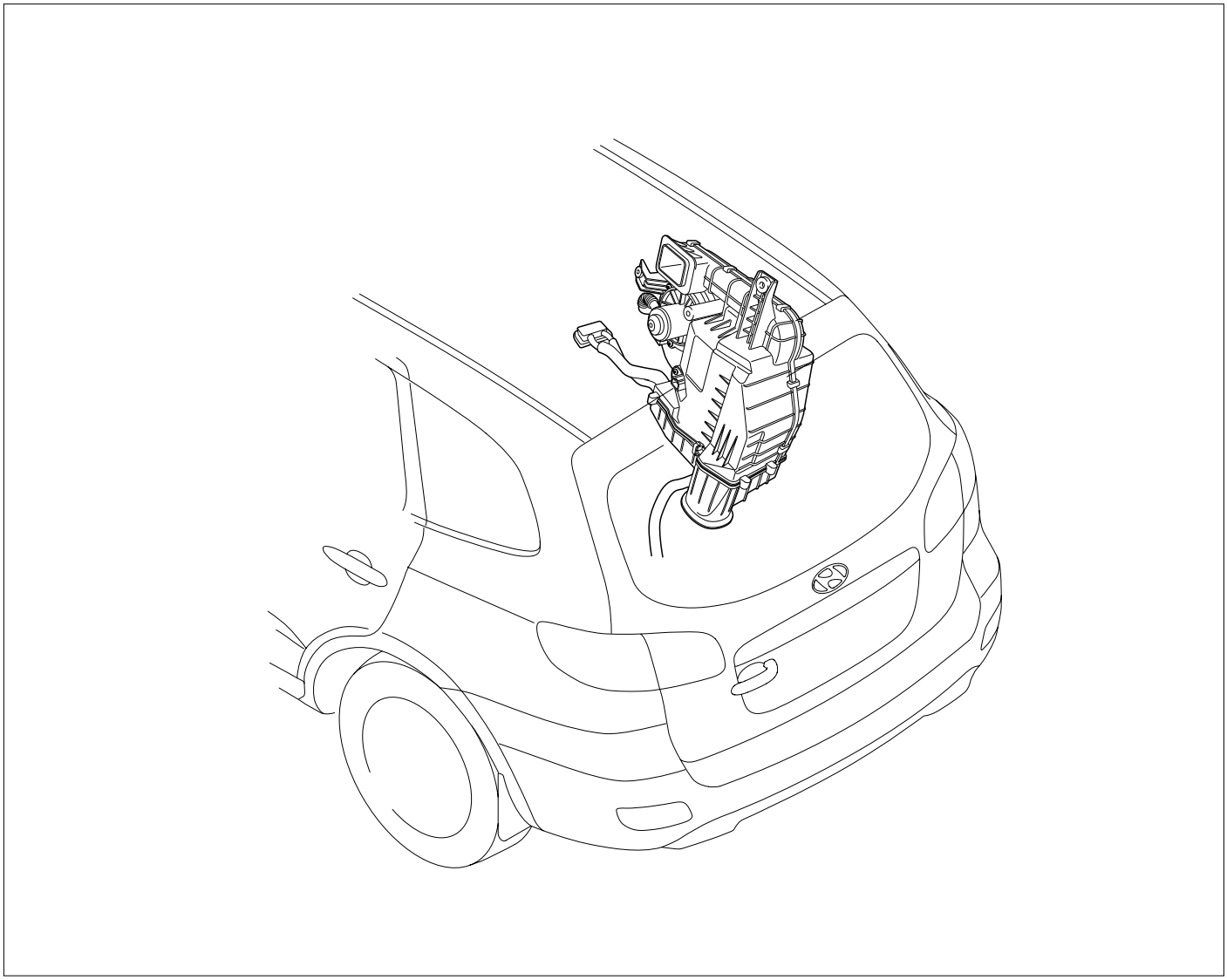

SCMHA6182D

COMPONENTS E7CCAEEB

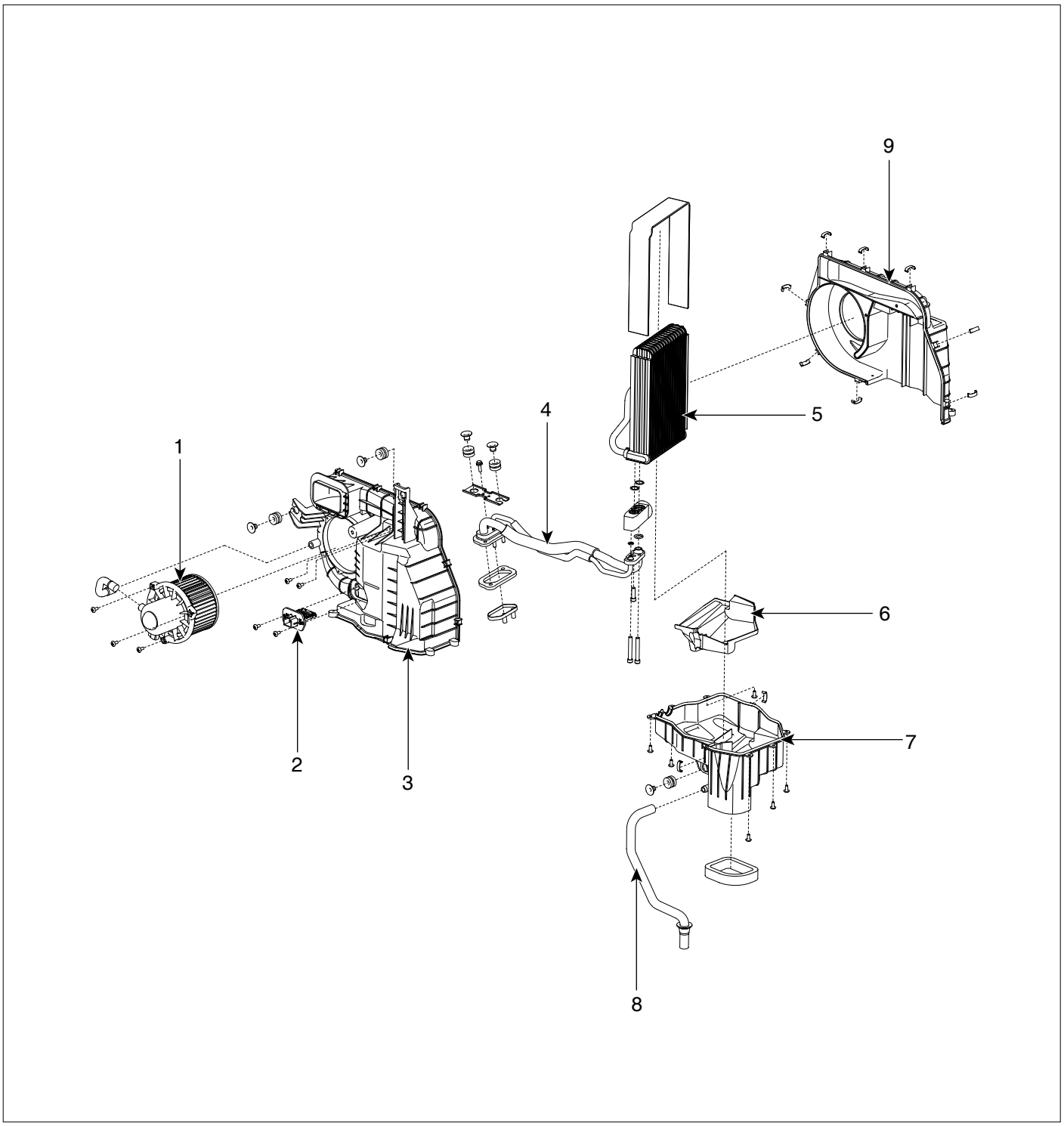

1. Rear blower motor
2. Rear blower resistor
3. Heater case (L)
4. Rear refrigerant
5. Rear evaporator core
6. Lower case seal
7. Lower case
8. Drain hose
9. Heater case (R)

SCMHA6183L

REPLACEMENT EE2F6D5B

1. Disconnect the negative(-) battery terminal.
2. Recover the refrigerant with a recover/ recycling/ charging station.
3. Remove luggage side trim.
4. Remove the rear wheel guard.
5. Loosen the refrigerant line mounting nuts.

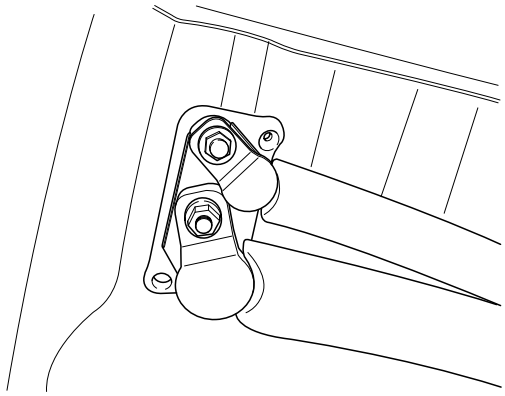

SCMHA6184D

6. Loosen the refrigerant line mounting bolts, and then remove the rear refrigerant line(A).

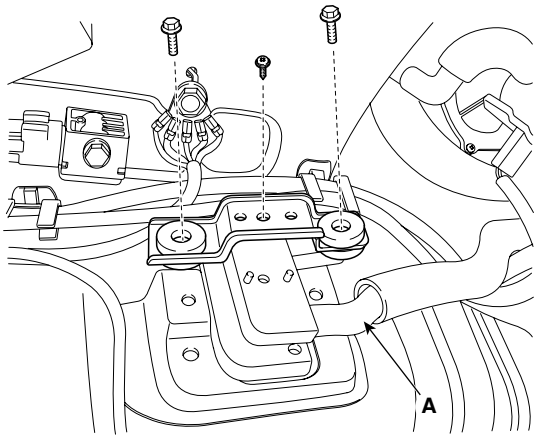

SCMHA6185L

7. Loosen the mounting bolts and then remove the rear heater unit(A).

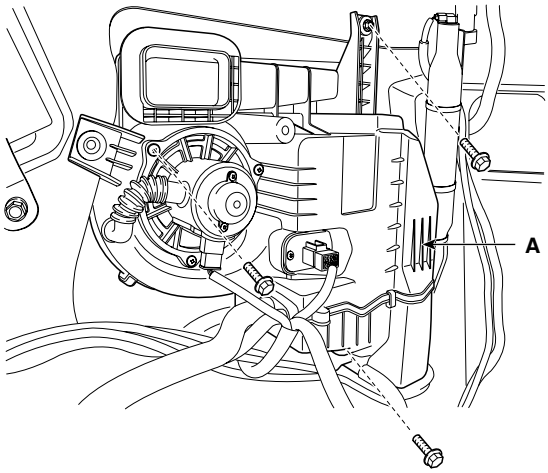

SCMHA6186D

8. Disconnect the rear evaporator core cover(A) and then remove the evaporator core(B).

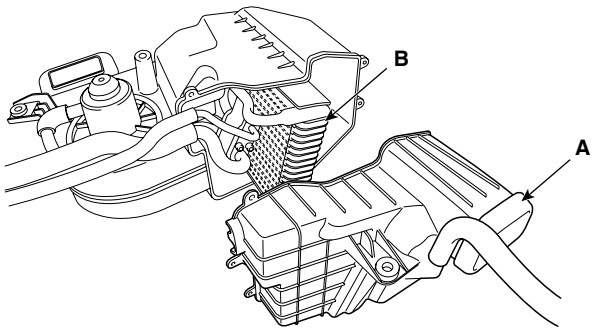

SCMHA6187D

9. Installation is the reverse order of removal.

REAR HEATER BLOWER UNIT

INSPECTION EDCD35CC

1. Connect the battery voltage and check the blower motor rotation.

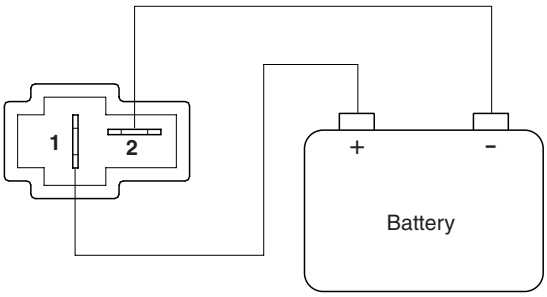

AQIE352C

2. If the blower motor voltage is not operated well, substitute with a known-good blower motor and check for proper operation.

3. If the problem is corrected, replace the blower motor.

REPLACEMENT EE4249A8

1. Disconnect the negative (-) battery terminal.

2. Remove luggage side trim. (Refer to BD- Interior trim)

3. Disconnect the connector (A) of the blower motor.

4. Remove the blower motor (B) after loosening the mounting screws.

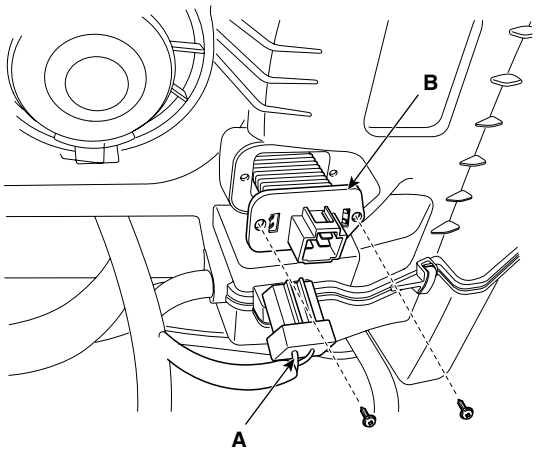

SCMHA6190L

5. Installation is the reverse order of removal.

REAR BLOWER RESISTER

INSPECTION E1A3166A

1. Measure terminal-to-terminal resistance of the blower resistor.
2. If measured resistance is not within specification, the blower resistor must be replaced. (After removing the resistor)

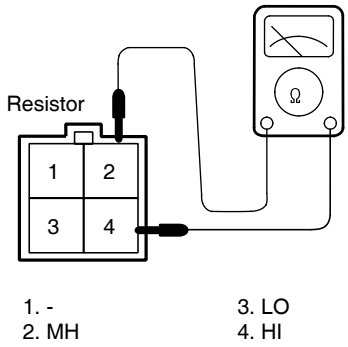

SCMHA6189L

Terminal / Speed / Ohmmeter	2	3	4	Resis - tance [Ω]
	MH	LO	HI	
Measurement of resistance between each terminal	○		○	2.05 Ω ± 5%
	○	○		3.40 Ω ± 5%

SCMHA6308L

REPLACEMENT E8A1FA5F

1. Disconnect the negative (-) battery terminal.
2. Remove the luggage side trim. (Refer to BD- Interior trim)
3. Disconnect the rear blower resister connector (A).
4. Remove rear blower resister (B) after loosening the mounting screws.

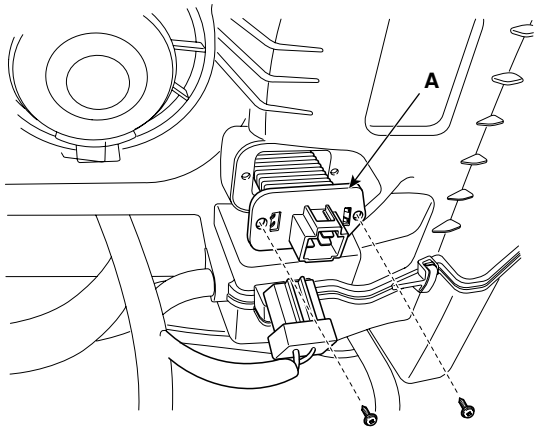

SCMHA6190D

5. Installation is the reverse order of removal.

REAR CONTROL PANEL

COMPONENTS ECAE2C68

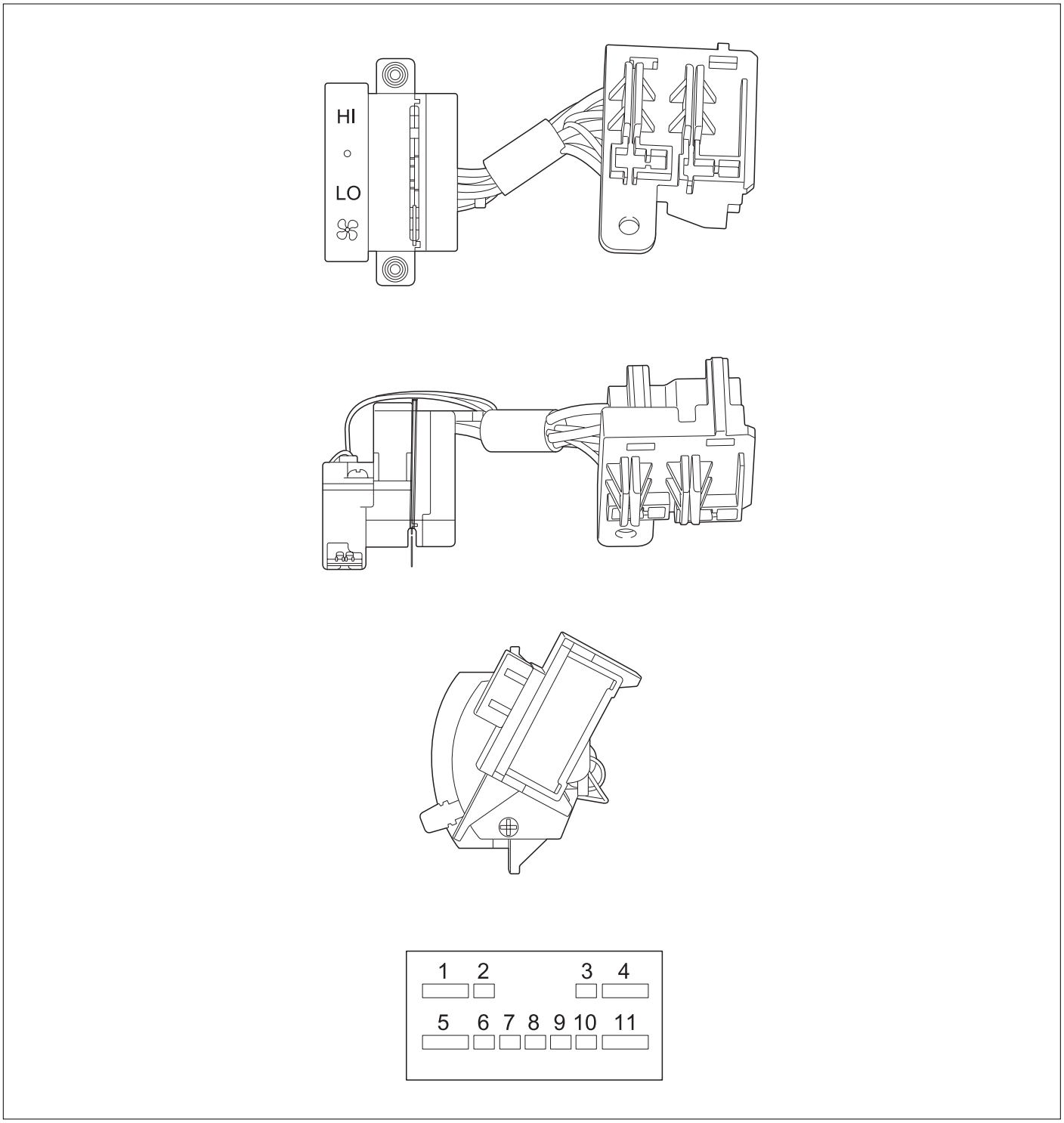

SCMHA6191D

[CONNECTOR]

PIN	
1	LOW
2	ILL(+)
3	ILL(-)
4	MIDDLE
5	HIGH
6	-
7	-
8	-
9	-
10	COMMON
11	GND

REPLACEMENT E6EEDD17

1. Remove the rear side trim. (Refer to BD- Interior Trim)
2. Loosen the mounting screw and then remove the rear blower controler(A) from the rear side trim.

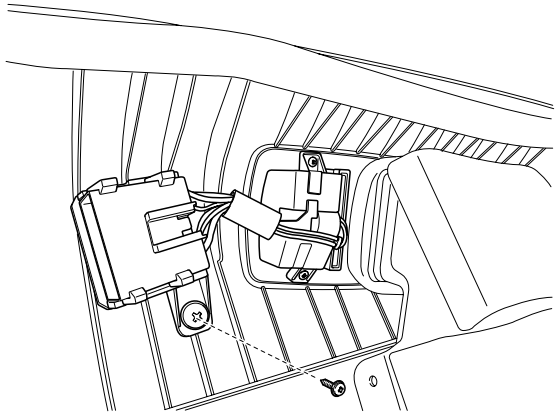

SCMHA6192D

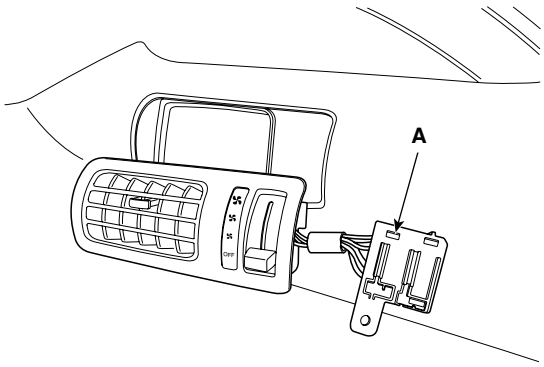

SCMHA6193L

3. Loosen the mounting screw and then remove the rear blower cintrol unit (A) from the air vant(B).

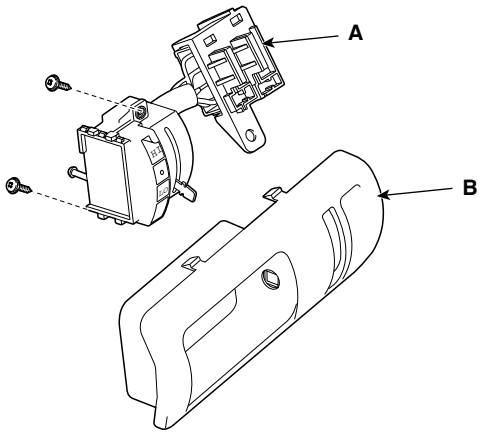

SCMHA6194L

4. Installation is the reverse order of removal.

BLOWER CONTROLS

BLOWER UNIT

COMPONENT LOCATION E59E4ACA

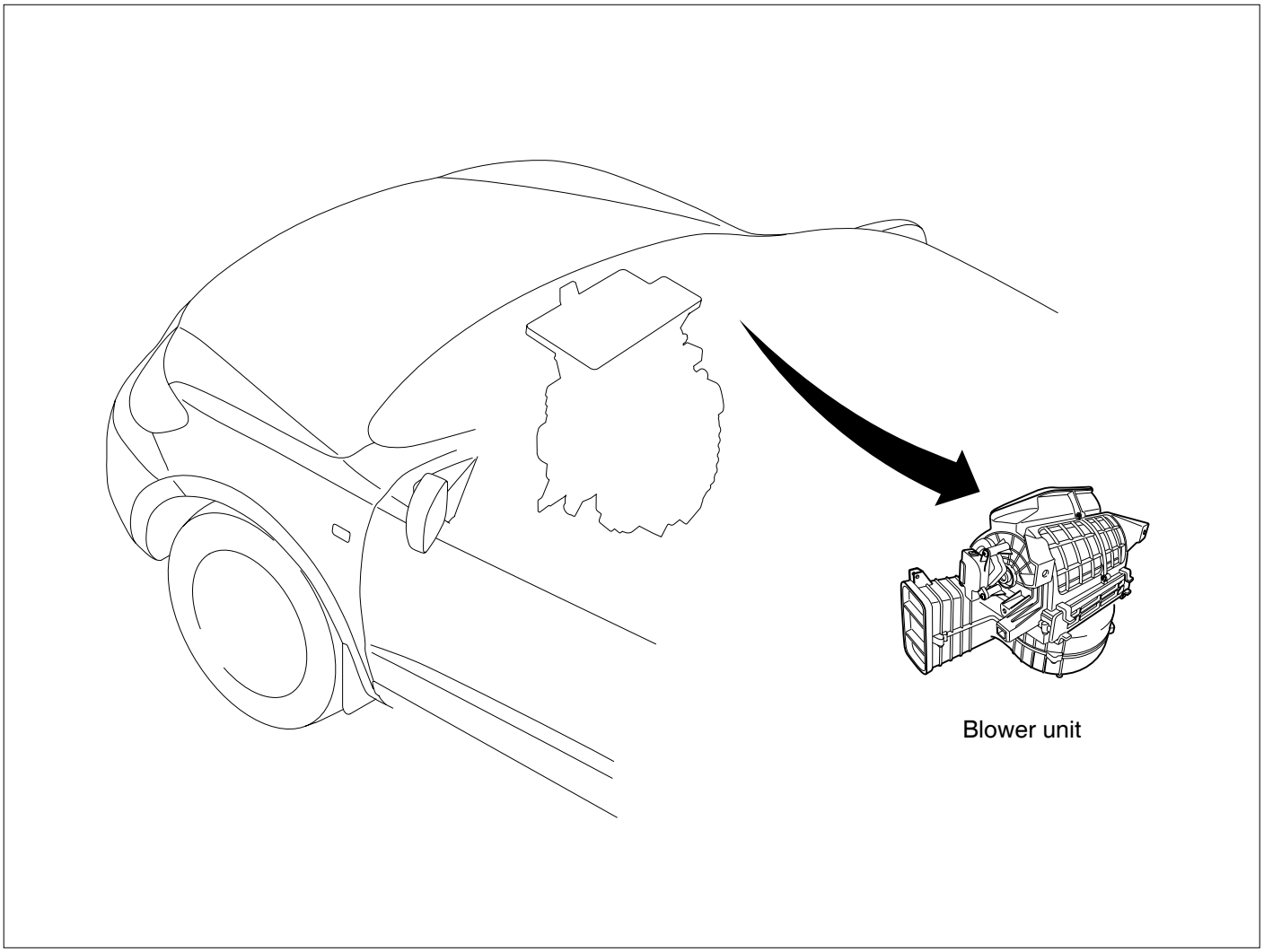

SCMHA6164L

COMPONENTS E28B595E

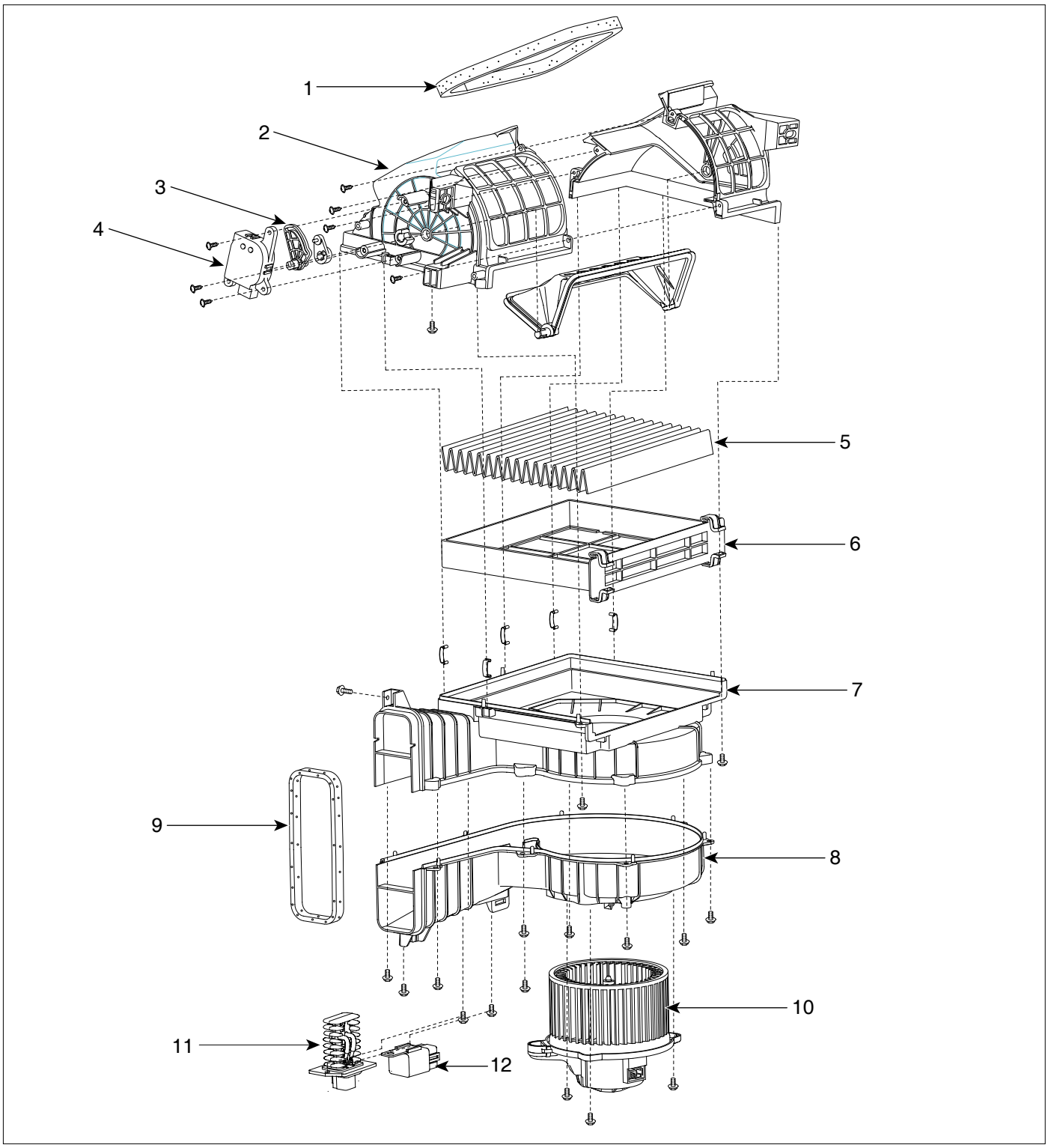

1. Rec.duct seal
2. Fresh duct case
3. Intake door assembly
4. Intake actuator
5. Air filter
6. Air filter housing
7. Blower upper case
8. Blower lower case
9. Blower seal
10. Blower motor
11. Power transistor
12. Blower relay

SCMHA6165L

REPLACEMENT E6B3309E

1. Disconnect the negative (-) battery terminal.
2. Remove the crush pad.(Refer to BD-crashpad)
3. Disconnect the connectors from the intake actuator, the blower motor and blower resister.
4. Remove the blower unit (A) from the heater unit after loosening a mounting bolt and 3 screws.

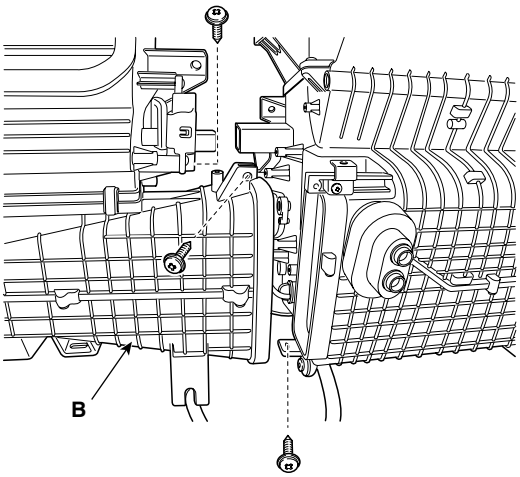

SCMHA6166D

NOTE

Make sure that there is no air leaking out of the blower and duct joints.

5. Installation is the reverse order of removal.

BLOWER MOTOR

COMPONENT LOCATION E379A6B5

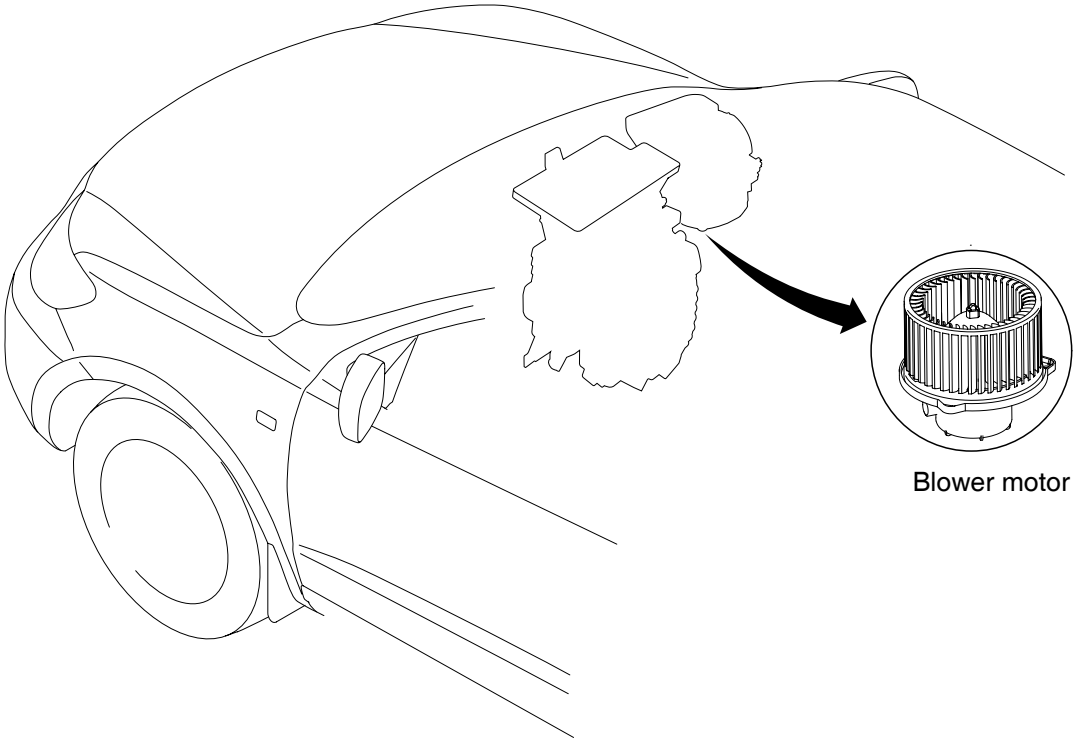

SCMHA6167L

INSPECTION EBECCB8E

1. Connect the battery voltage and check the blower motor rotation.

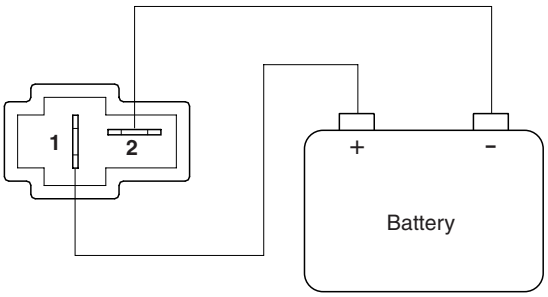

AQIE352C

2. If the blower motor voltage is not operated well, substitute with a known-good blower motor and check for proper operation.

구분	MENUAL	AUTO
1	3.8V	AUTO LO(4.5V)
2	4.9V	4.6~5.5V
3	6.1V	5.6~6.7V
4	7.2V	6.8~7.7V
5	8.3V	7.8~8.9V
6	9.5V	9.0~10.1V
7	10.6V	10.2~AUTO HI(10.6V)
8	B+	

3. If the problem is corrected, replace the blower motor.

REPLACEMENT E826820A

1. Disconnect the negative (-) battery terminal.
2. Disconnect the connector (A) of the blower motor.

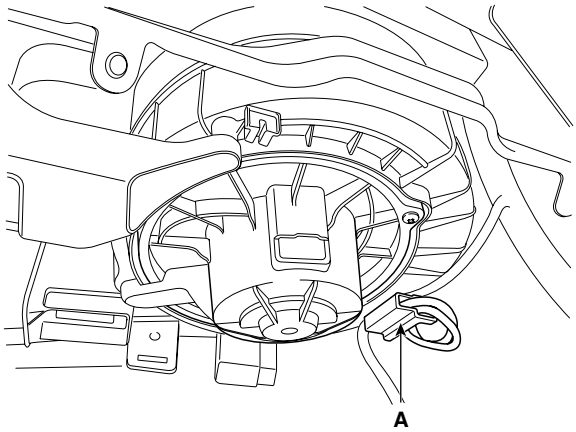

SCMHA6168D

3. Remove the blower motor (A) after loosening the mounting screws.

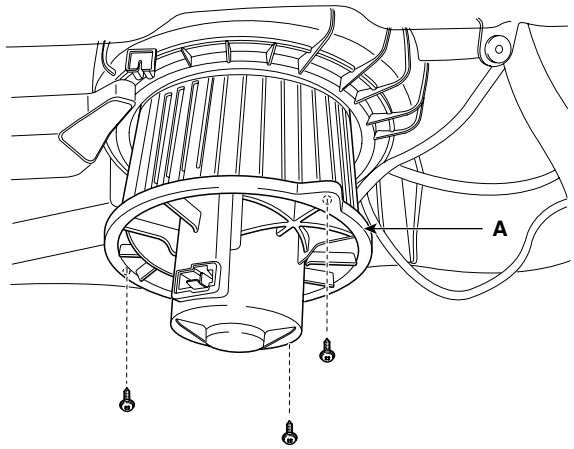

SCMHA6169D

4. Installation is the reverse order of removal.

BLOWER RELAY

COMPONENT LOCATION E217DB4E

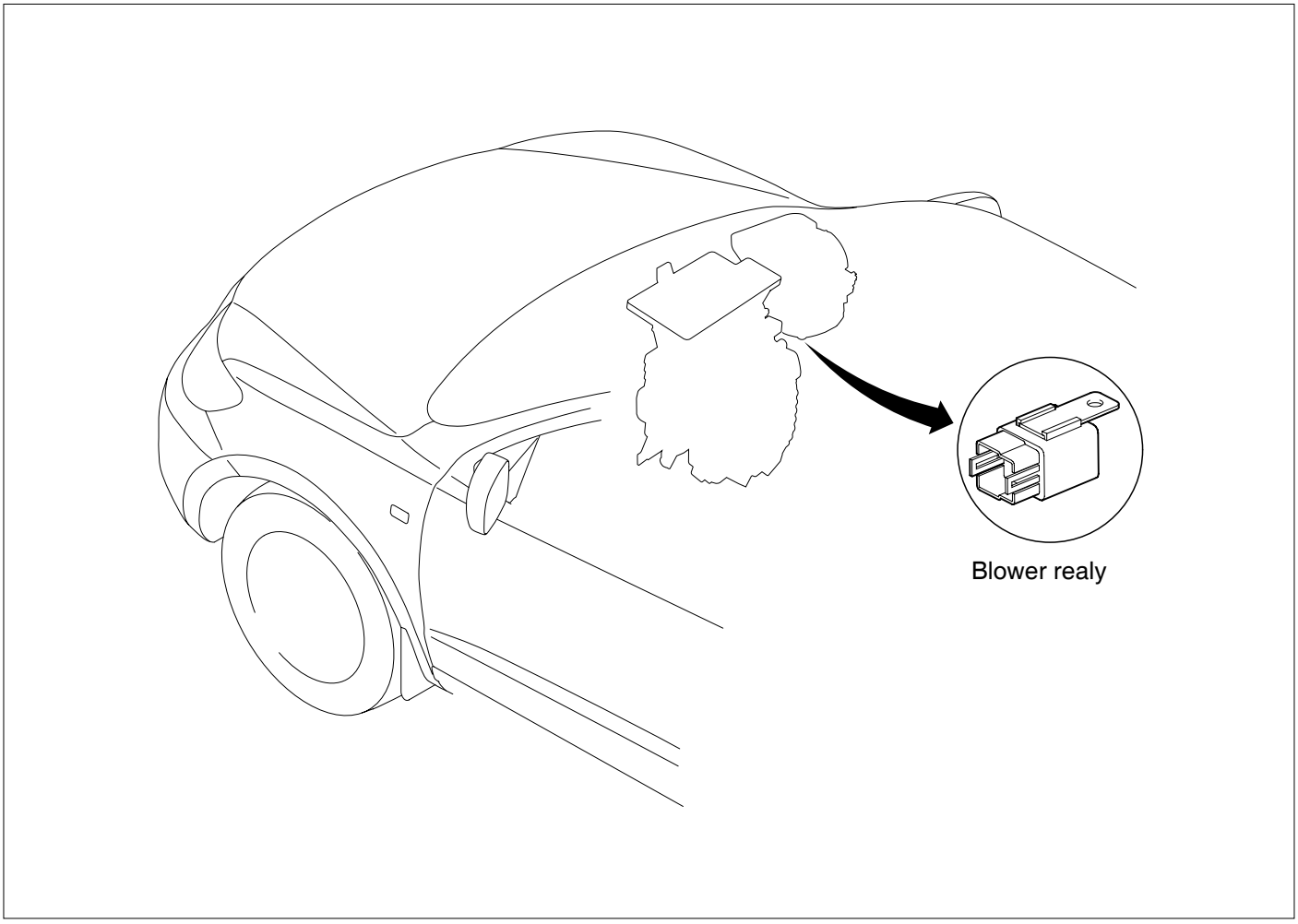

SCMHA6171L

INSPECTION E5C82BE0

1. There should be continuity between the NO.1 and NO.2 terminals when power and ground are connected to the NO.3 and NO.4 terminals.
2. There should be to no continuity btween the NO.1 and NO.2 terminals when power is disconnected.

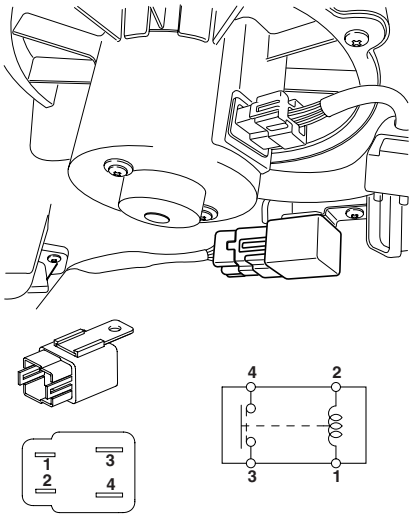

KQRE353B

Terminal / Position	3	4	1	2
Disconnected			○	○
Connected	○	○	⊕	⊖

SCMHA6401L

REPLACEMENT EDF4C010

1. Disconnect the negative (-) battery terminal.
2. Disconnect the blower realy connector(B).
3. Loosen the blower relay mounting screw and then remove the blower relay(A).

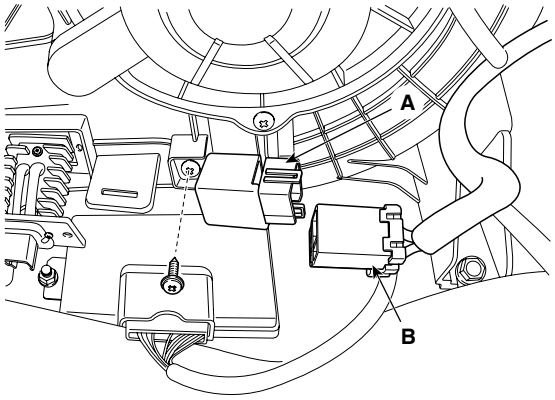

SCMHA6173L

4. Install in the reverse order of removal.

POWER TRANSISTOR

COMPONENT LOCATION E14CE3A4

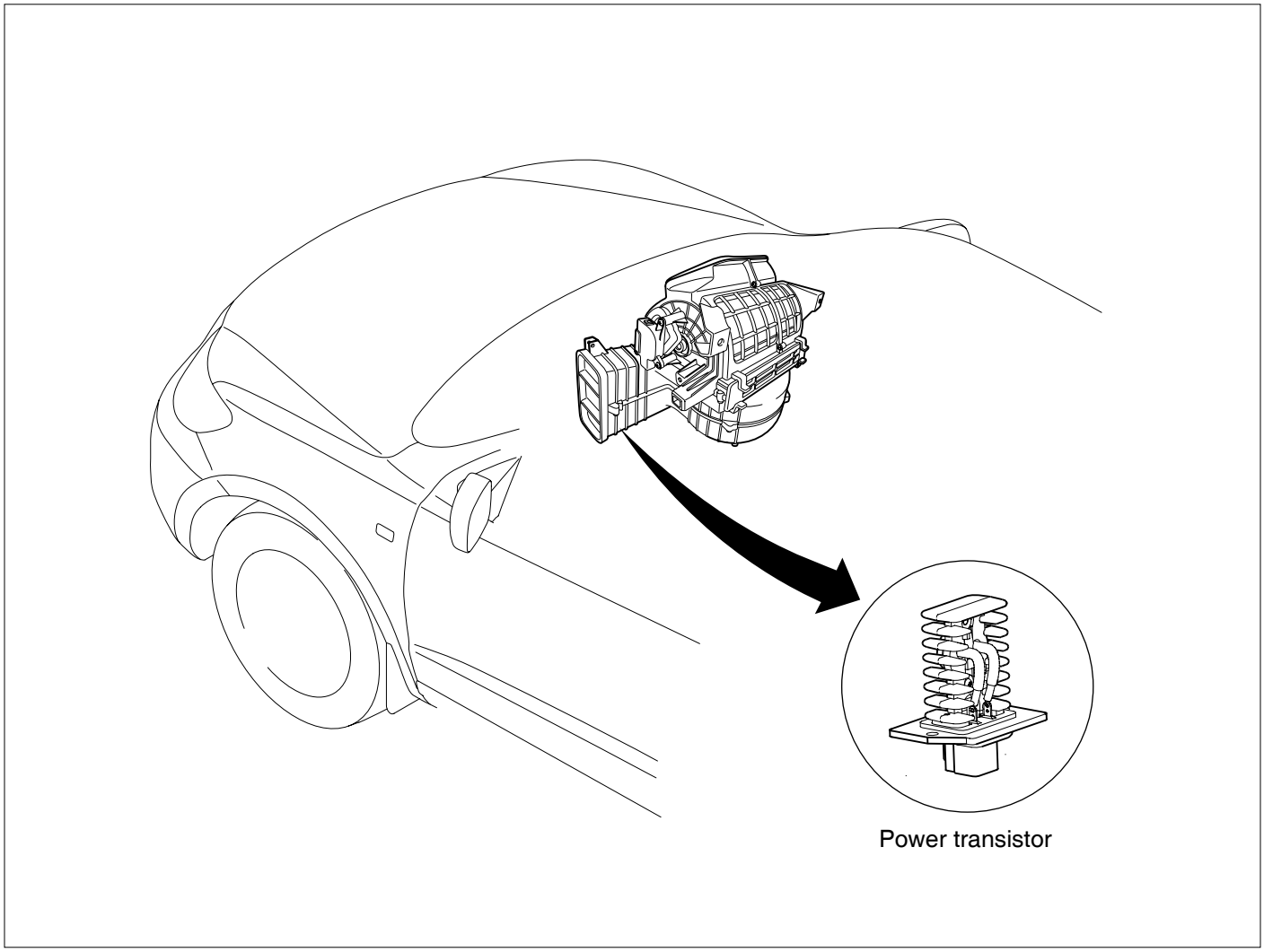

SCMHA6174L

INSPECTION ED3F315D

1. Ignition "ON"
2. Manually operate the control switch and measure the voltage of blower motor between pin 1 and 2.
3. Select the control switch to raise voltage until high speed.

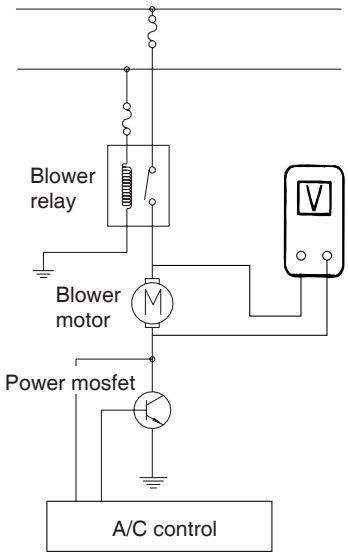

BQKF355B

[SPECIFICATION]

Fan	Motor Voltage
	Manual
First speed	3.8 ±0.5V
Second speed	4.9 ±0.5V
Third speed	6.1 ±0.5V
Fourth speed	7.2 ±0.5V
Fifth speed	8.3 ±0.5V
Sixth speed	9.5 ±0.5V
Seventh speed	10.6 ±0.5V
eighth speed	BAT(+)

*AUTO COOLING: Auto speed (4.5V~B+)
*AUTO HEATING: Auto speed (4.5V~10.5V)

4. If the measured voltage is not specification, substitute with a known-good power transister and check for proper operation.
5. If the problem is corrected, replace the power transister.

REPLACEMENT EFD2AE6E

1. Disconnect the negative (-) battery terminal.
2. Disconnect the power transister connector (A) at the connecting part between heater and blower unit.
3. Remove the power transister(B) after loosening the mounting screws.

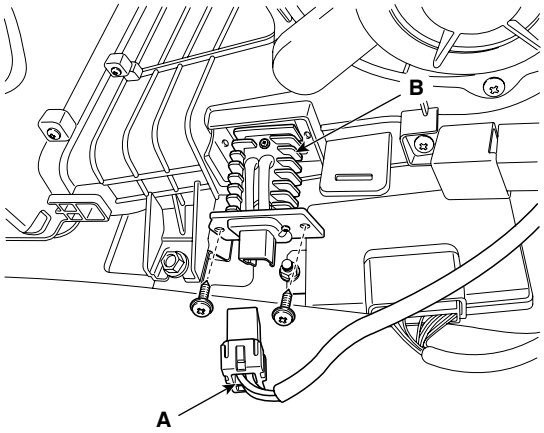

SCMHA6176L

4. Installation is the reverse order of removal.

A/C AIR FILTER

DESCRIPTION E5670FD2

This has particle filter which eliminates foreign materials and odor. The particle filter includes odor filter as well as conventional dust filter to ensure comfortable interior environment.

REPLACEMENT EA9B8207

1. Open the glove box (B).
   Lower the glove box down completely by removing the glove box stopper (A) to the glove box.

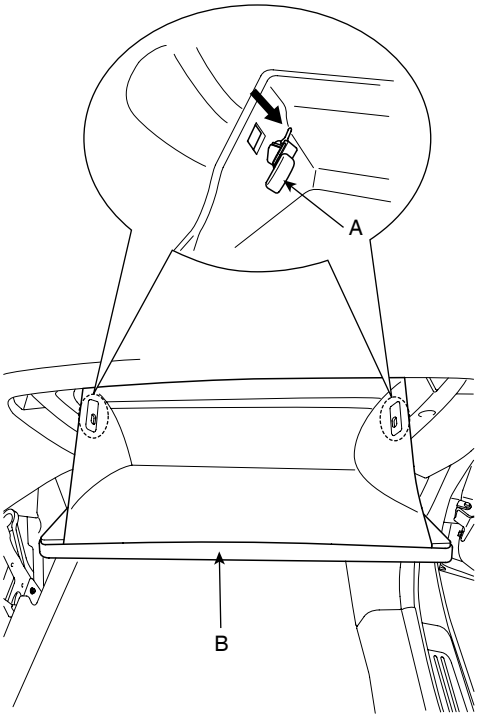

SCMHA6177L

2. Remove the glove box(B) from the left(A).

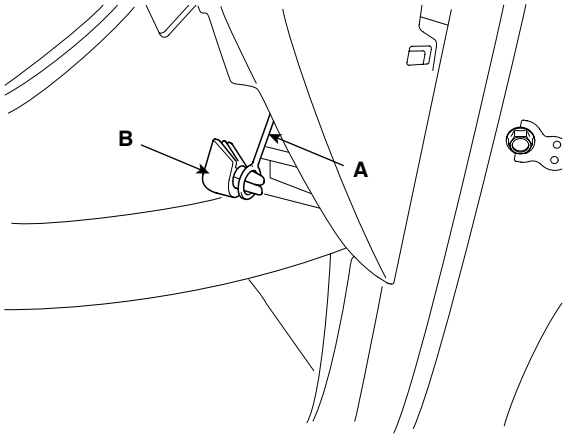

SCMHA6307D

3. Remove the filter cover (A) with pushing the knob.
4. Replace the air filter (B), install it after making sure of the direction of air filter.

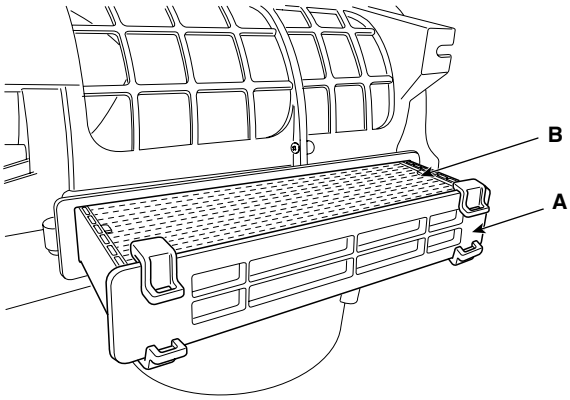

SCMHA6178D

NOTE

In case of driving in an air-polluted area or rugged terrain, check and replace the air filter as frequently as possible.

Replacement period: 15,000 km (9320 mile)

INTAKE ACTUATOR

COMPONENT LOCATION E0BBA06D

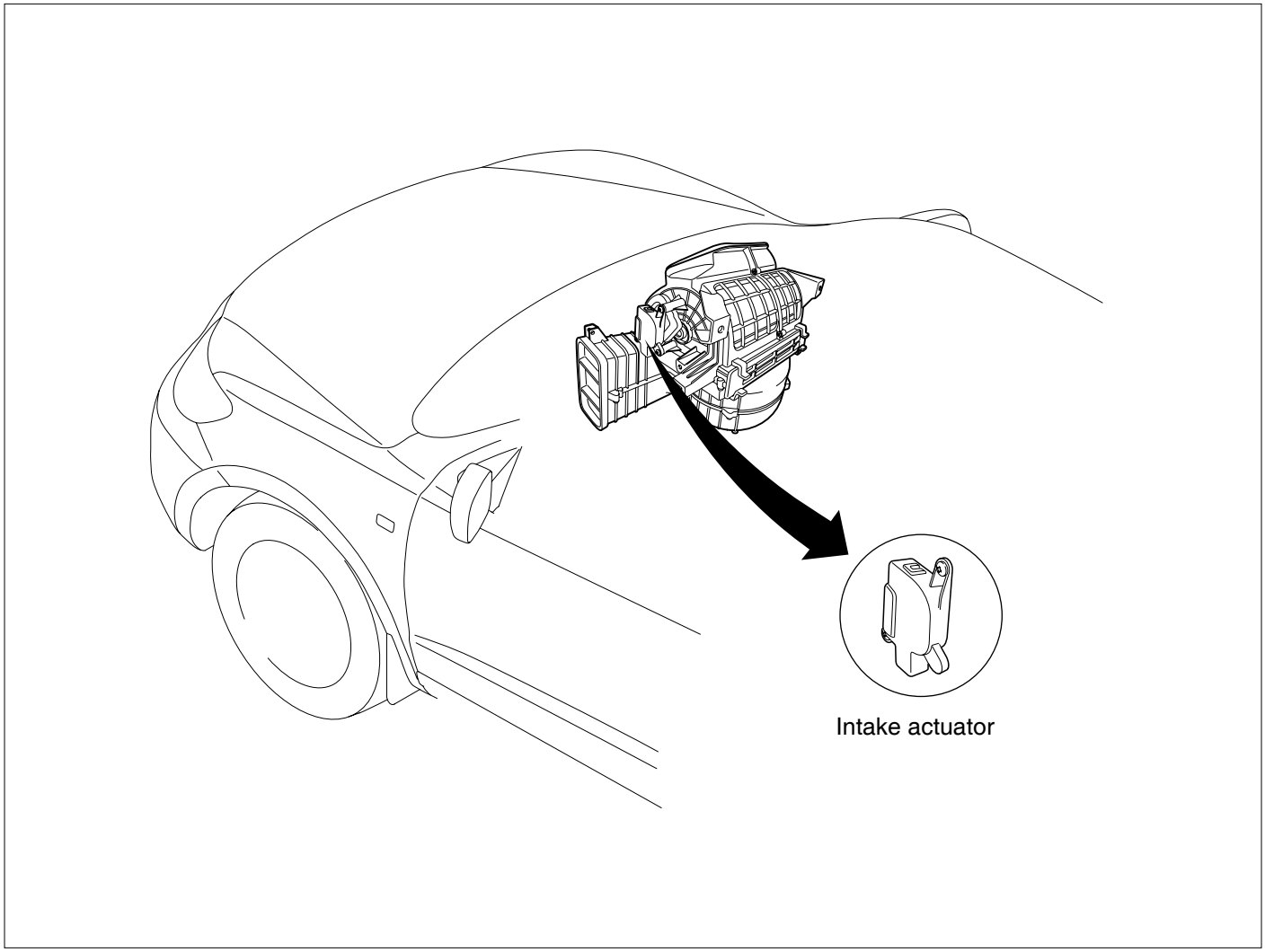

SCMHA6179L

DESCRIPTION EF5C8F9E

1. The intake actuator is located at the blower unit.
2. It regulates the intake door by signal from control unit.
3. Pressing the intake selection switch will shift between recirculation and fresh air modes.

INSPECTION EFB0F6A4

1. Ignition "OFF"
2. Disconnect the intake actuator connector.
3. Verify that the actuator operates to the recirculation position when connecting 12V to the terminal 3 and grounding terminal 4.
4. Verify that the intake actuator operates to the fresh position when connecting in the reverse.

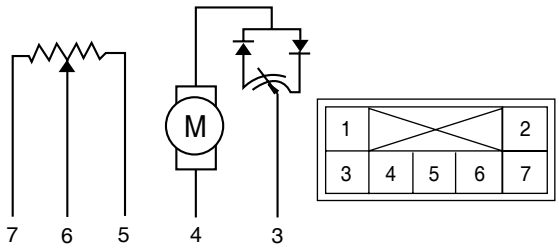

1. -
2. -
3. Rec
4. Fresh
5. Sensor ground
6. Feed back signal
7. 5V(VCC)

SCMHA6306L

5. If the intake actuator is not operated well, substitute with a known-good intake actuator and check for proper operation.
6. If the problem is corrected, replace the intake actuator.

REPLACEMENT ED7D1260

1. Disconnect the negative (-) battery terminal.
2. Remove the glove box (Refer to BD- Crach pad).
3. Disconnect the intake actuator connector.
4. Loosen the mounting screw and then remove the intake actuator (A) from the blower unit.

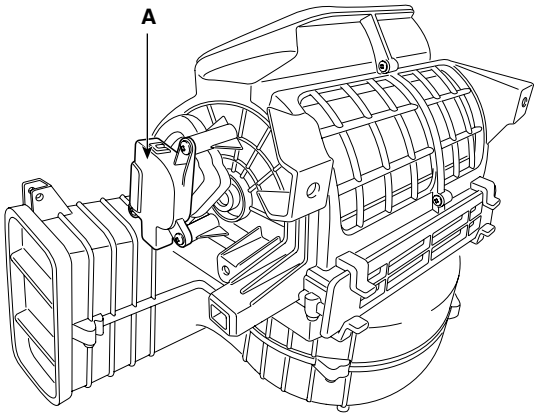

SCMHA6181L

5. Installation is the reverse order of removal.

BLOWER AND A/C CONTROLS (MANUAL)

CONTROL PANEL

COMPONENT EF62D2E9

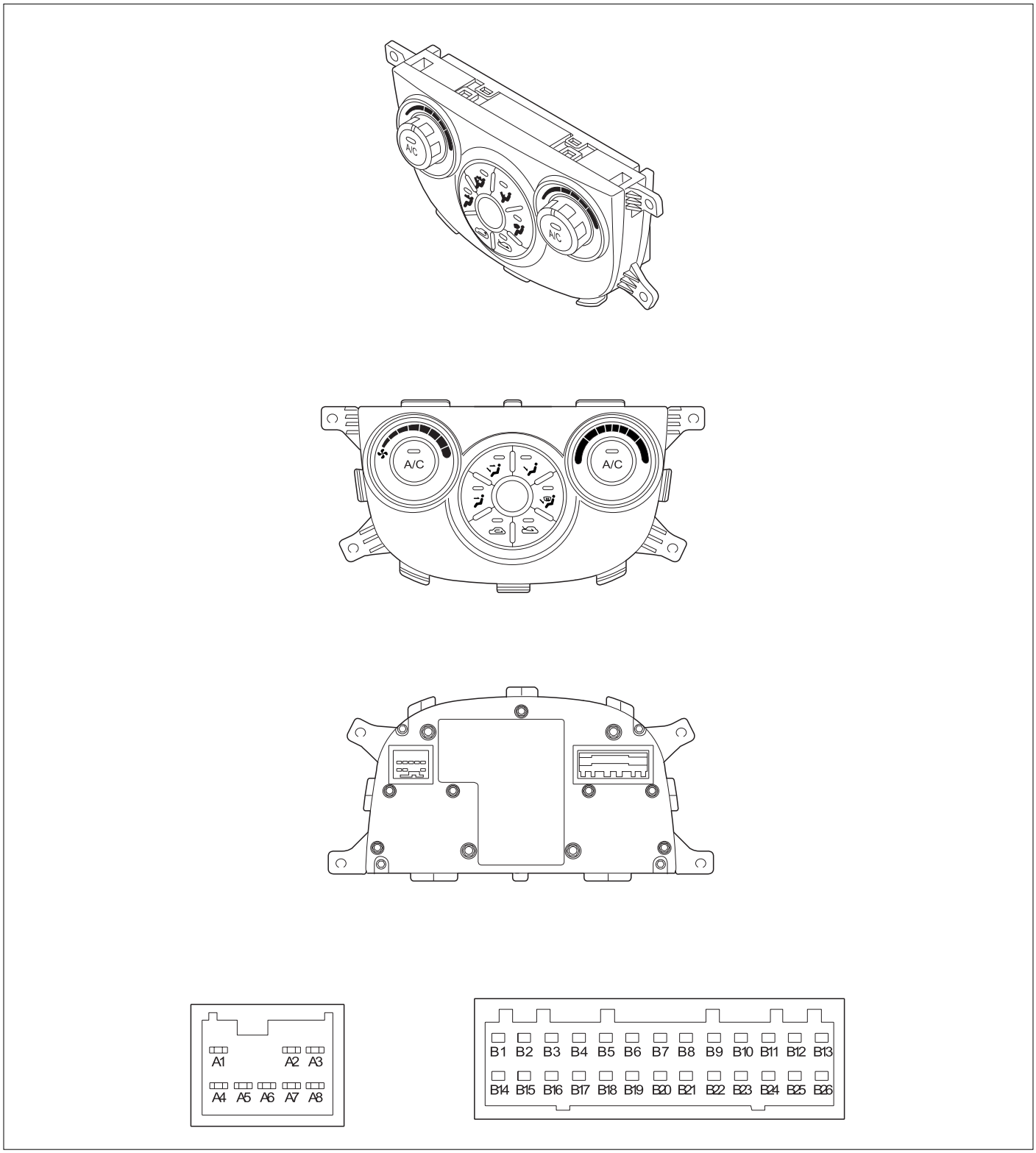

SCMHA6195D

[CONNECTOR PIN FUNCTION]

Con-nector	PIN NO.	Function	Con-nector	PIN NO.	Function
Con-nector (A)	1	PTC RLY2	Con-nector (B)	10	DEF SELECT SIGNAL
	2	PTC RLY3		11	SENSOR REF(+5V)
	3	BLOWER ON SIGNAL		12	HI SPEED RELAY
	4	PTC ON SIGNAL		13	IGN2
	5	-		14	RHEOSTAT (ILL-)
	6	-		15	POWER TR(B)
	7	-		16	POWER TR(C)
	8	-		17	TEMP ACT'R F/B
Con-nector (B)	1	TAIL LAMP		18	MODE ACT'R F/B
	2	BATTERY		19	INTAKE ACT'R F/B
	3	A/C OUT PUT		20	EVAP SENSOR (+)
	4	MODE ACT'R (VENT)		21	BLOWER MOTOR (+)
	5	MODE ACT'R (DEF)		22	A/C SELECT SIGNAL
	6	TEMP ACT'R (COOL)		23	DEF INDICATOR OUTPUT
	7	TEMP ACT'R (WARM)		24	SENSOR GND
	8	INTAKE ACT'R (FRE)		25	-
	9	INTAKE ACT'R (REC)		26	GND

REPLACEMENT E9AF6DF1

1. Disconnect the negative (-) battery terminal.
2. Remove the crash pad center lower garnish(A).

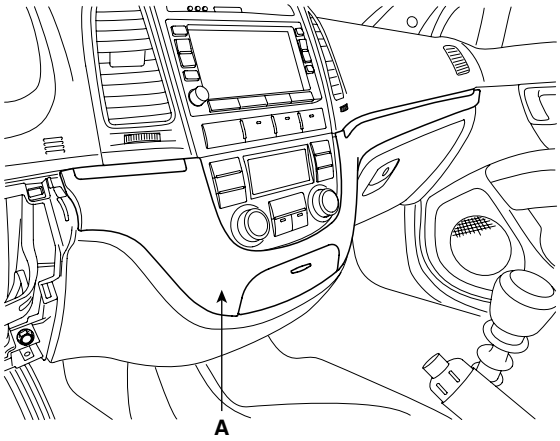

SCMHA6196D

3. Remove the heater & A/C controller (A) after loosening 4 screws.

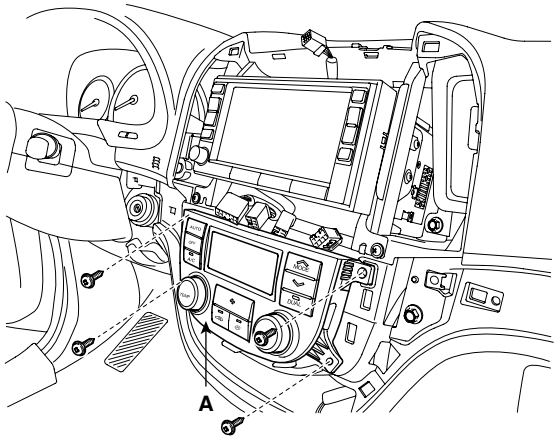

SCMHA6197D

4. Dissconnect the connector(A).

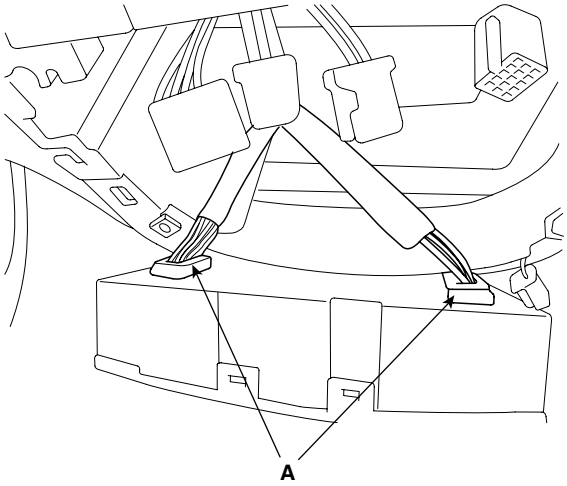

SCMHA6198D

5. Installation is the reverse order of removal.

BLOWER AND A/C CONTROLS (AUTOMATIC)

CONTROL PANEL

COMPONENT EC2C9DBE

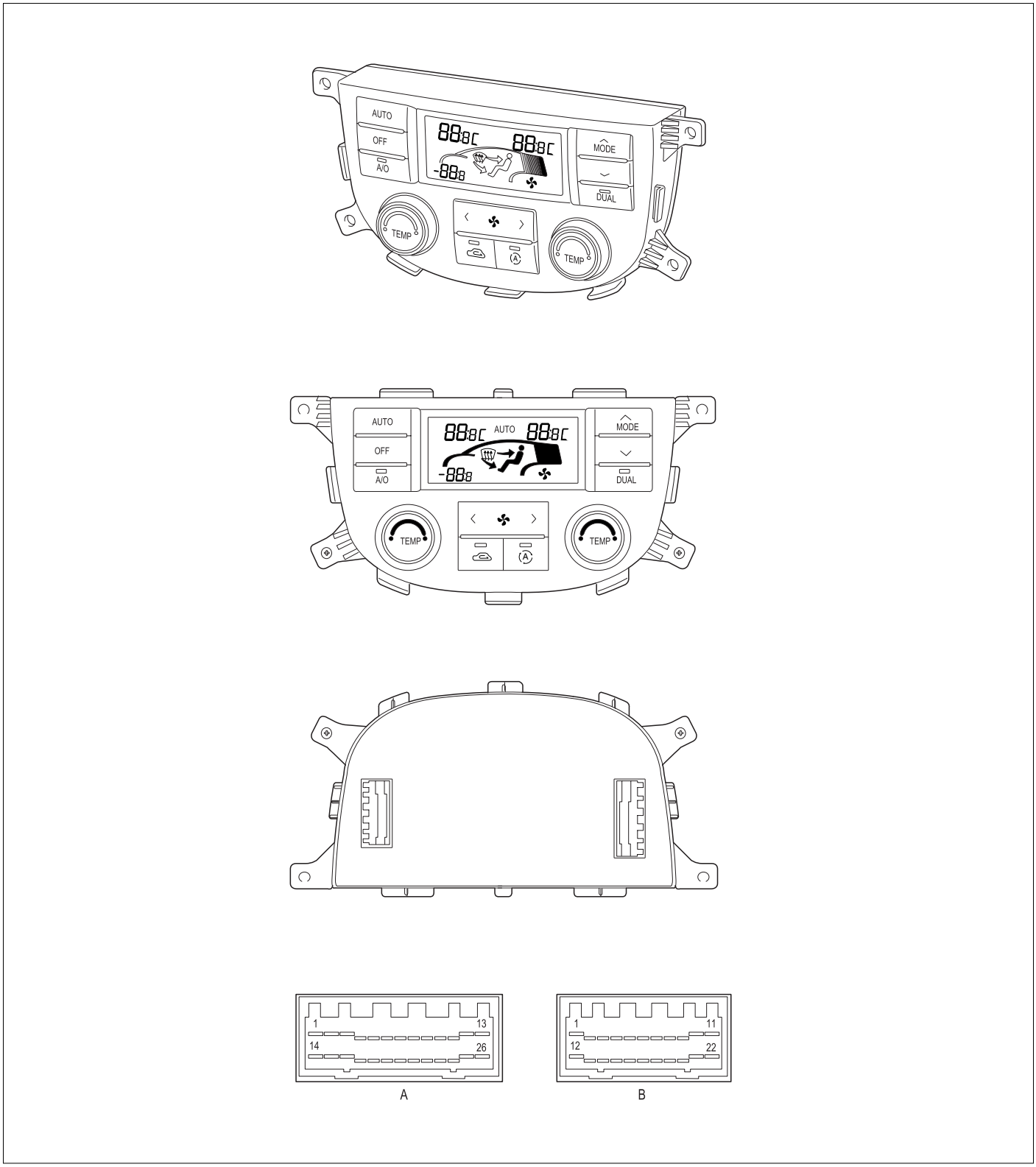

SCMHA6199D

[CONNECTOR PIN FUNCTION]

Con-nec-tor	PIN NO.	Function	Con-nector	PIN NO.	Function
Con-nec-tor(A)	1	TAIL LAMP	Con-nec-tor(B)	1	SENSOR REF(+5V)
	2	BATTERY		2	AQS SIGNAL
	3	A/C OUTPUT		3	AMB SENSOR(+)
	4	A/C SELECT SIGNAL		4	HUMIDITY SENSOR(+)
	5	-		5	INCAR SENSOR(+)
	6	K-LINE		6	EVAP. SENSOR(+)
	7	-		7	WATER TEMP SENSOR(+)
	8	DEF SELECT SIGNAL		8	SENSOR REF(+5V)
	9	DEF INDCATOR OUTPUT		9	POWER TR (B)
	10	-		10	POWER TR (C)
	11	-		11	BLOWER MOTOR (+)
	12	IGN2		12	SENSOR GND
	13	IGN2		13	TEMP ACT’R DR (COOL)
	14	RHEOSTAT		14	TEMP ACT’R DR (WARM)
	15	HIGH SPEED RELAY		15	DR PHOTO (-)
	16	TEMP ACT’R PS(COOL)		16	PS PHOTO (-)
	17	TEMP ACT’R PS(WARM)		17	INCAR MOTOR (-)
	18	TEMP ACT’R PS F/B		18	TEMP ACT’R DR F/B
	19	MODE ACT’R(VENT)		19	BLOWER ON SIGNAL
	20	MODE ACT’R(DEF)		20	PTC ON SIGNAL
	21	MODE ACT’R F/B		21	PTC RLY 2
	22	INTAKE ACT’R (FRE)		22	PTC RLY 3
	23	INTAKE ACT’R (REC)			
	24	INTAKE ACT’R F/B			
	25	GND			
	26	GND			

SELFDIAGNOSIS EC1C2BC5

1. Self-diagnosis process

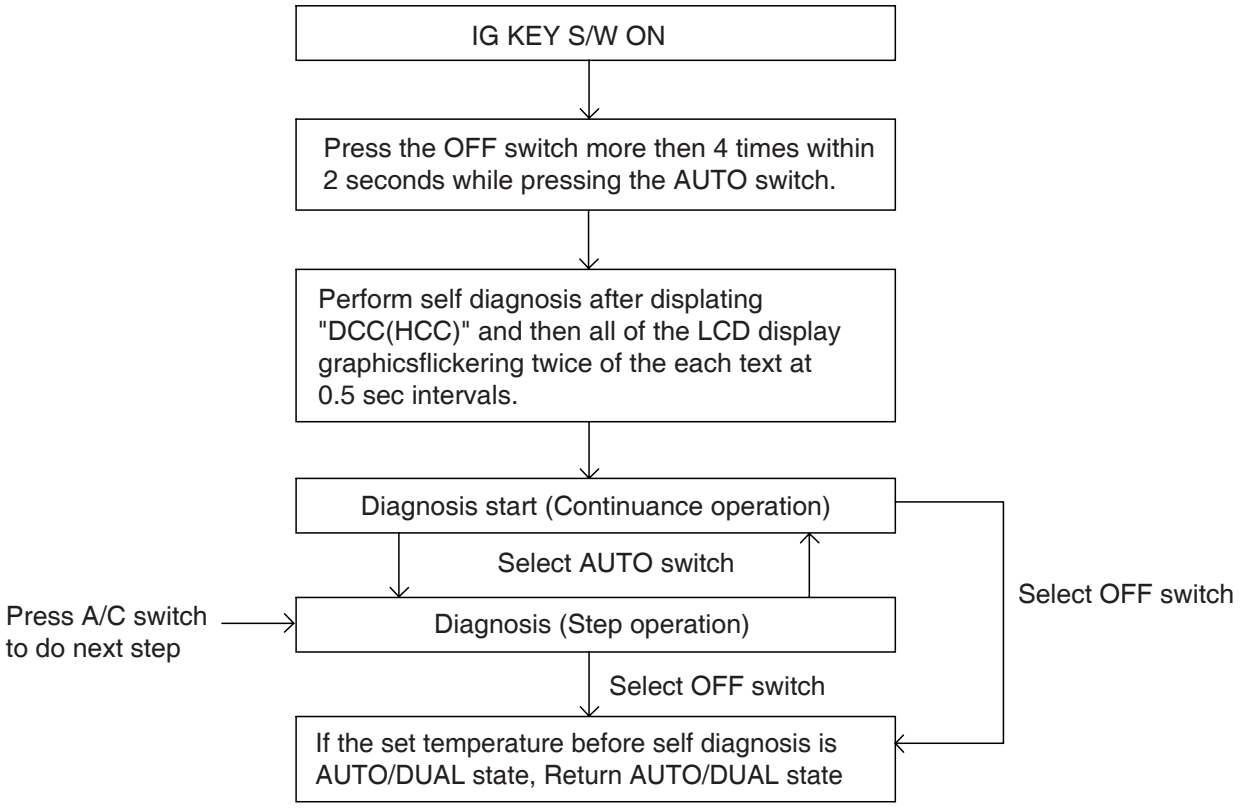

LQKG001D

2. How to read self-diagnostic code
   After the display panel flickers three times every 0.5 second, the corresponding fault code flickers on the setup temperature display panel every 0.5 second and will show two figures. Codes are displayed in numerical format

FAULT CODE

Fault code		Fail description
Control unit	DTC	
00	-	Normal
11	B1234	In-car temperature sensor open
12	B1233	In-car temperature sensor short
13	B1238	Ambient temperature sensor open
14	B1237	Ambient temperature sensor short
15	B1202	Water temperature sensor open
16	B1203	Water temperature sensor short
17	B1242	Evaporator temperature sensor open
18	B1241	Evaporator temperature sensor short
19	B1245	Temperature control actuator feed back open (Drive's)
19	B1246	Temperature control actuator feed back short (Drive's)
20	B2406	Temperature control actuator failure
21	B1249	Mode control actuator open
21	B1250	Mode control actuator short
22	B2409	Mode control actuator failure
23	B1200	Humidity sensor open
24	B1201	Humidity sensor short
25	B1208	Intake potentiometer open
25	B1209	Intake potentiometer short
26	B2408	Intake potentiometer failure
27	B1257	AQS sensor open
28	B1258	AQS sensor short
31	B1259	AQS sensor failure
32	B1204	Temperature control actuator open (Passenger's)
32	B1205	Temperature control actuator short (Passenger's)
33	B2415	Temperature control actuator failure

3. Fault code display

1) Continuance operation : DTC code is one.

BQKF500C

2) Continuance operation : DTC code is more two.

BQKF500D

3) STEP operation
A. Nomal or one fault code is same as a continuance operation.
B. DTC code os more two.

BQKF500E

4. Diagnostic procedure refer to DTC code.

5. Fail safe

   1) In-car temperature sensor: Control with the value of 25°C(77°F)

   2) Ambient temperature sensor: Control with the value of 20°C(67°F)

   3) Evaporator temperature sensor: Control with the value of -2°C(28.4°F)

   4) Humidity sensor: Control with the value of 10%

   5) Temperature sensor : Control with the value of -2°C (28.4°F)

   6) Temperature control actuator (Air mix potentiometer):
      If temperature setting 17°C-24.5°C, fix at maximum cooling position.
      If temperature setting 25°C-32°C, fix at maximum heating position.

   7) Mode control actuator (Direction potentiometer):
      Fix vent position, while selecting vent mode.
      Fix defrost position, while selecting all except vent mode.

   8) Intake control actuator :
      Fix fresh position, while selecting fresh mode.
      Fix recirculation position, while selecting recirculation mode.

   9) AQS sensor : AQS operation OFF.
      Intake position : The position before selecting AQS switch.

REPLACEMENT EEA8B2D2

1. Disconnect the negative (-) battery terminal.
2. Remove the crash pad center lower garnish(A).

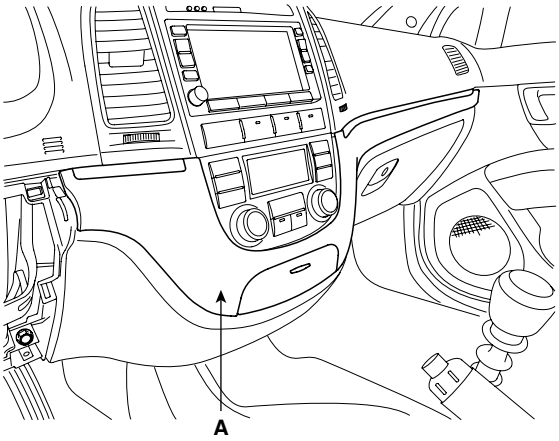

SCMHA6196D

3. Remove the heater & A/C controller (A) after loosening 4 screws.

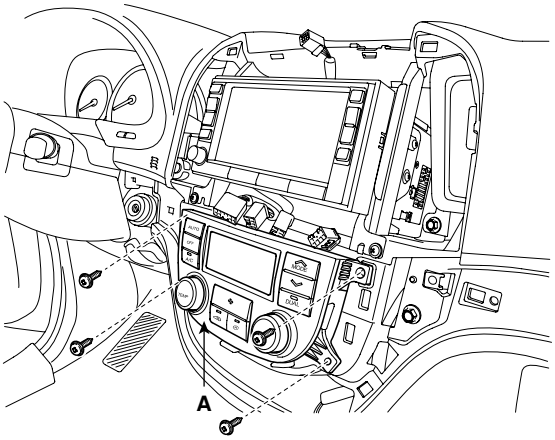

SCMHA6197D

4. Dissconnect the connector(A).

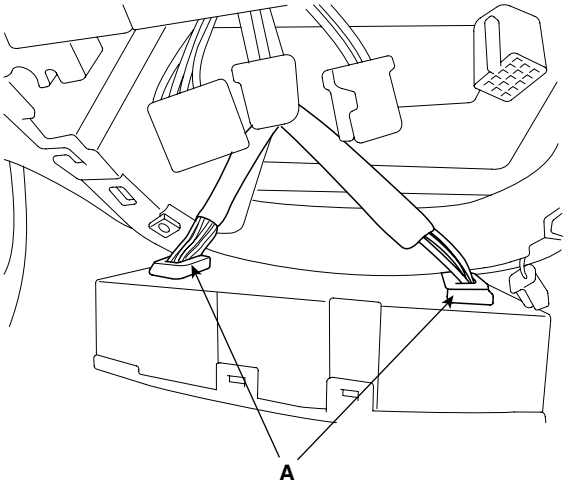

SCMHA6198D

5. Installation is the reverse order of removal.

DTC B1200 HUMIDITY SENSOR OPEN (HIGH)

COMPONENT LOCATION E55A86D0

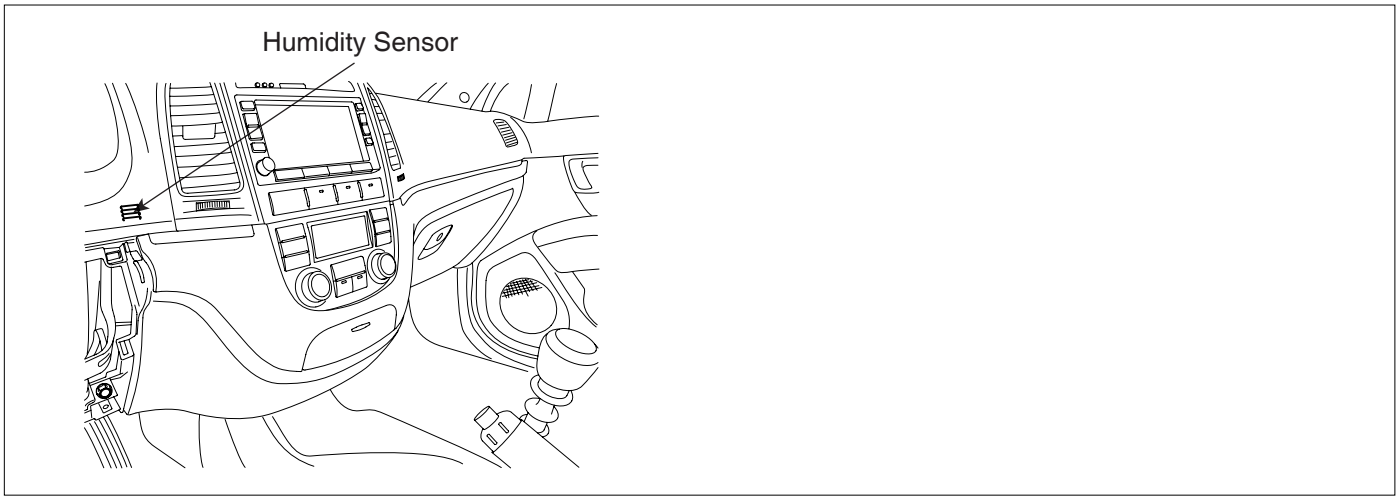

SCMHA6500L

GENERAL DESCRIPTION E813CFB8

Humidity sensor located at crush pad, detects in-car humidity for in-car humidity control. If ambient air temperature or in-car humidity is outside certain range, it will turn on A/C to control in-car humidity for preventing in-car fogging. Air conditioner operation depends on ambient temperature and humidity.

DTC DESCRIPTION E26F8FC5

The A/C controller sets DTC B1200 if there is an open circuit in humidity sensor signal harness or the measured frequency value of sensor is more than threshold value(about 7,100㎐)

DTC DETECTING CONDITION E609B0DF

Item	Detecting Condition	Possible cause
DTC Strategy	• Frequency check	• Open Circuit in signal harness • Faulty Humidity Sensor • Faulty A/C control unit
Threshold value	• > 7,100 Hz	
Detecting time	• 10msec	
FAIL SAFE	• Control with the value of 10%	

SPECIFICATION EF7B8179

Relative humidity(%)	Frequency(Hz)	Relative humidity(%)	Frequency(Hz)
20	7,100	60	6,600
30	6,976	70	6,468
40	6,853	80	6,330
50	6,728	90	6,186

MONITOR SCANTOOL DATA EA55BAF5

1. Connect scantool to data link connector(DLC).

2. Engine "ON"

3. Monitor the "Humidity Sensor" Parameter on the Scantool while drying the humidity sensor with a hair drier or heat gun adjusted to a low heat setting.

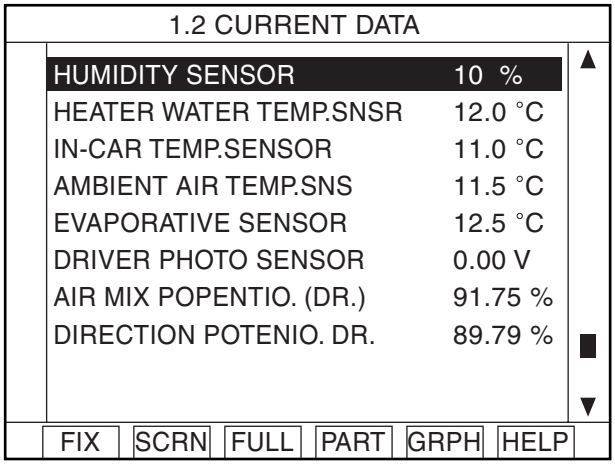

Fig. 1

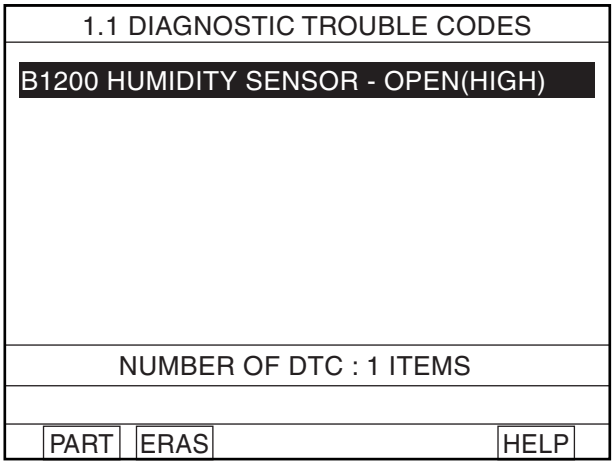

Fig. 2

Fig 1 : The current data in abnormal state.
Fig 2 : DTC B1200.

EQBF510B

4. Are the DTC B1200 present and is parameter of "Humidity Sensor" fixed?
   ※ Parameter of "Humidity Sensor" will be fixed at 10%, if there is any fault in Humidity Sensor.

   YES

   Go to "Inspection" procedure.

   NO

   Fault is intermittent caused by poor contact in the sensor's and/or A/C controller's connector or was repaired and A/C controller memory was not cleared. Thoroughly check connectors for looseness, poor connection, bending, corrosion, contamination, deterioration, or damage. Repair or replace as necessary and then go to "Verification of Vehicle Repair" procedure.

TERMINAL AND CONNECTOR INSPECTION E5F388B6

1. Many malfunctions in the electrical system are caused by poor harness and terminals.
   Faults can also be caused by interference from other electrical systems, and mechanical or chemical damage.

2. Thoroughly check connectors for looseness, poor connection, bending, corrosion, contamination, deterioration, or damage.

3. Has a problem been found?

   YES

   Repair as necessary and go to "Verification of Vehicle Repair" procedure.

NO

Go to "Signal circuit inspection" procedure.

SIGNAL CIRCUIT INSPECTION EE9EA63F

1. Check for open in harness.
   1) Ignition "OFF"
   2) Disconnect Humidity Sensor.
   3) Measure resistance between terminal "3" of Humidity Sensor and terminal "4" of A/C Control Unit.

Specification : Approx. 0 Ω

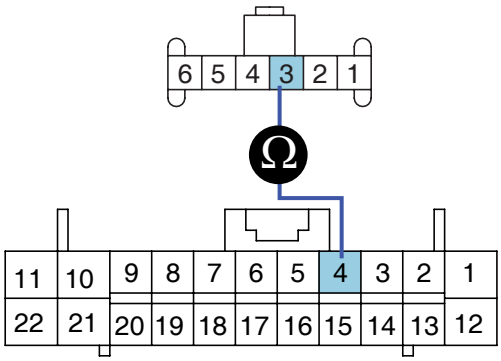

1. Motor(-)
2. Sensor ground
3. **Humidity sensor signal**
4. In-car sensor temp. signal
5. Sensor power (5V)
6. Motor(+)

SCMHA6501L

   4) Is the measured resistance within specifications?

YES

Go to "Ground circuit Inspection " procedure.

NO

Check for open in harness. Repair as necessary and go to "Verification of Vehicle Repair" procedure.

GROUND CIRCUIT INSPECTION E607AF32

1. Check for open in ground harness.
   1) Ignition "OFF"
   2) Disconnect Humidity Sensor.
   3) Measure resistance between terminal "2" of Humidity Sensor and terminal "12" of A/C Control Unit.

Specification :Approx. 0 Ω

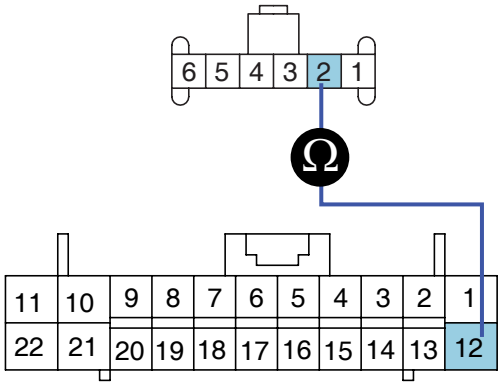

1. Motor(-)
2. **Sensor ground**
3. Humidity sensor signal
4. In-car sensor temp. signal
5. Sensor power (5V)
6. Motor(+)

SCMHA6502L

4) Is the measured resistance within specifications?

YES

Go to "Component Inspection " procedure.

NO

Check for open in ground harness. Repair as necessary and go to "Verification of Vehicle Repair" procedure.

COMPONENT INSPECTION E3A920B6

1. Check Humidity Sensor.

   1) Engine "ON"

   2) Connect Humidity Sensor.

   3) Measure Frequency between terminal "3" and "2" of Humidity sensor while increasing humidity.

Specification : Refer the specifications in fig 5.

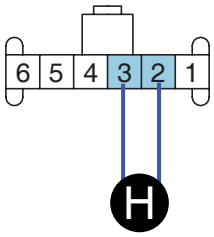

1. Motor(-)
2. **Sensor ground**
3. **Humidity sensor signal**
4. In-car sensor temp. signal
5. Sensor power (5V)
6. Motor(+)

SCMHA6503L

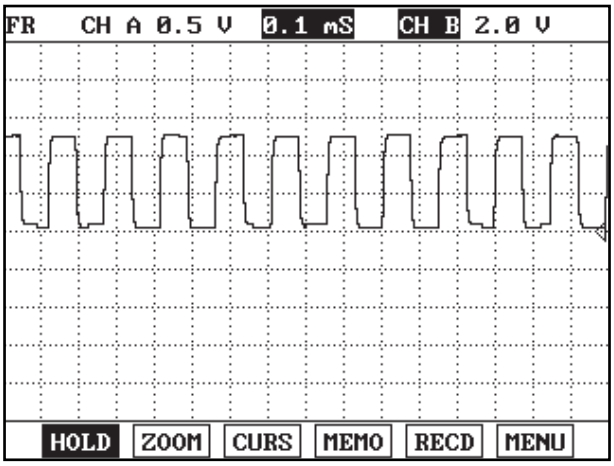

Fig. 3

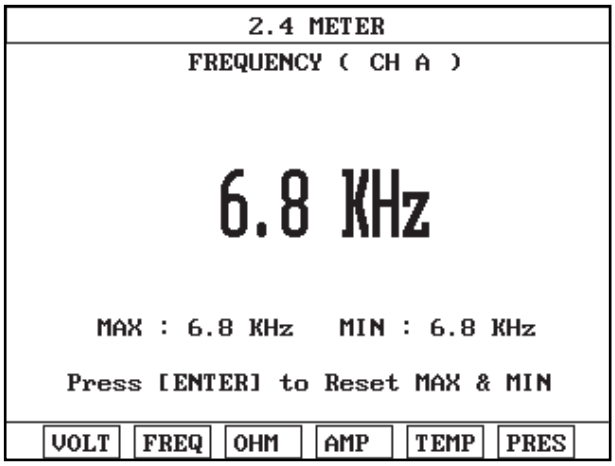

Fig. 4

Fig 3 : Signal waveform of Humidity sensor.
Fig 4 : Frequency of Humidity sensor Measured by scantool.

EQBF510F

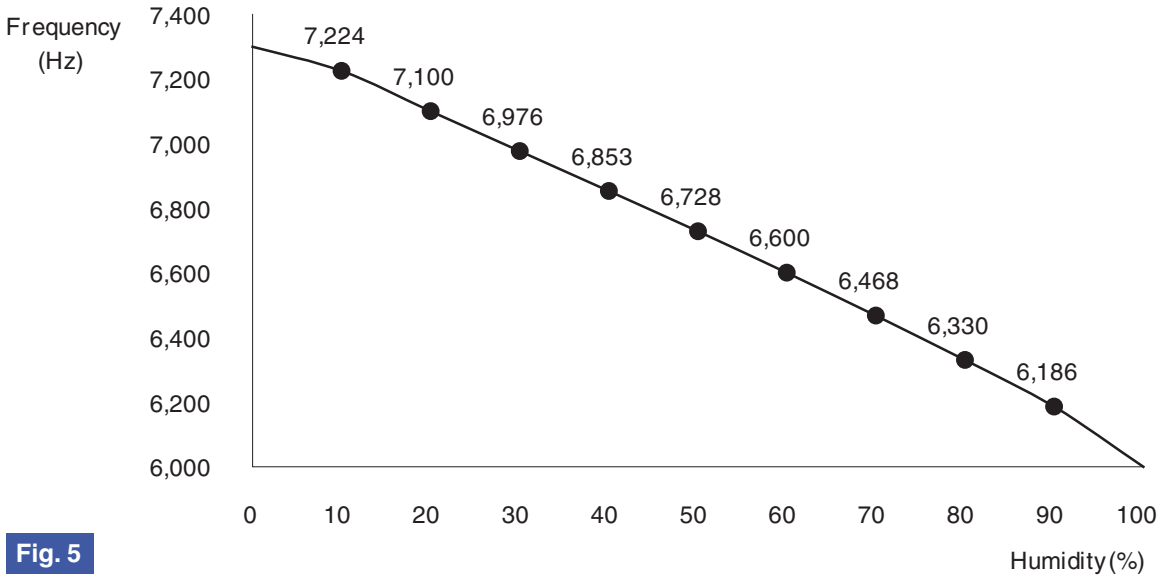

Fig. 5

Fig 5) Specifications : Frequency value of humidity sensor as a function of Relative humidity.

EQBF510Q

4) Is the measured frequency within specifications in fig 5? (tolerance limits ± 5%)

YES

Go to "Check A/C Control Unit" procedure.

NO

Substitute with a known-good Humidity sensor and check for proper operation.
If the problem is corrected, replace Humidity sensor and then go to "Verification of Vehicle Repair" procedure.

2. Check A/C Control Unit

1) Engine "ON"

2) Disconnect Humidity Sensor.

3) Measure voltage value between terminal "4" of A/C control unit and chassis ground.

Specification : 5V

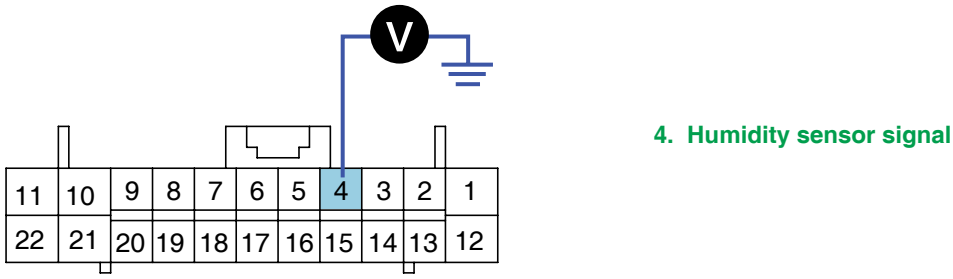

SCMHA6504L

4) Is the measured voltage within specification?

YES

Check connectors for looseness, poor connection, bending, corrosion, contamination, deterioration, or damage. Repair or replace as necessary and then go to "Verification of Vehicle Repair" procedure.

NO

Substitute with a known-good A/C Control Unit and check for proper operation.
If the problem is corrected, replace A/C Control Unit and then go to "Verification of Vehicle Repair" procedure.

VERIFICATION OF VEHICLE REPAIR E0FE9B19

After a repair, it is essential to verify that the fault has been corrected.

1. Connect scantool and select "Diagnostic Trouble Codes(DTCs)" mode and then clear DTC.
2. Operate the vehicle and monitor the DTC on the scantool.
3. Are any DTCs present?

YES

Go to the applicable troubleshooting procedure.

NO

System is performing to specification at this time.

DTC B1201 HUMIDITY SENSOR SHORT (LOW)

COMPONENT LOCATION E7DBA350

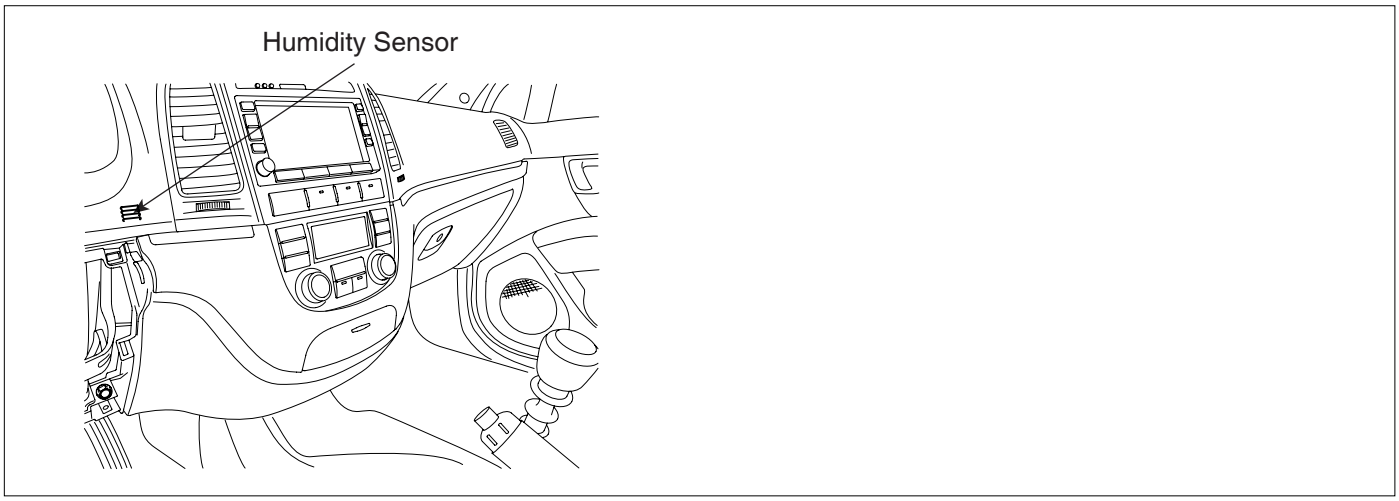

SCMHA6500L

GENERAL DESCRIPTION E40CCE08

Humidity sensor located at crush pad, detects in-car humidity for in-car humidity control. If ambient air temperature or in-car humidity is outside certain range, it will turn on A/C to control in-car humidity for preventing in-car fogging. Air conditioner operation depends on ambient temperature and humidity.

DTC DESCRIPTION ED9AB2BE

The A/C controller sets DTC B1201 if there is a short circuit in humidity sensor signal harness or the measured frequency value of sensor is less than threshold value(about 6,186㎐)

DTC DETECTING CONDITION ED9D02C4

Item	Detecting Condition	Possible cause
DTC Strategy	• Frequency check	• Open Circuit in power harness • Short Circuit in signal harnes • Faulty Humidity Sensor • Faulty A/C control unit
Threshold value	• < 6,186 Hz	
Detecting time	• 10msec	
FAIL SAFE	• Control with the value of 10%	

SPECIFICATION E39EABFF

Refer to DTC B1200.

MONITOR SCANTOOL DATA E1282110

1. Connect scantool to data link connector(DLC).
2. Engine "ON"
3. Monitor the "Humidity Sensor" Parameter on the Scantool while drying the humidity sensor with a hair drier or heat gun adjusted to a low heat setting.

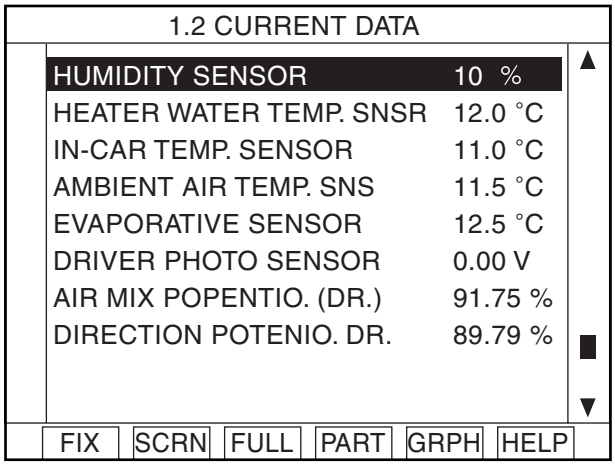

Fig. 1

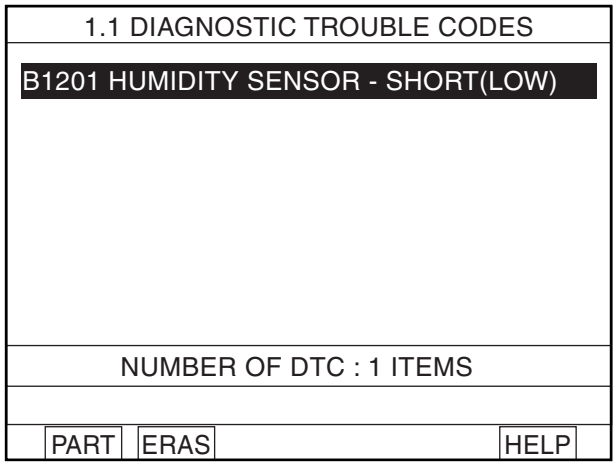

Fig. 2

Fig 1 : The current data in abnormal state.
Fig 2 : DTC B1201.

EQBF511A

4. Are the DTC B1201 present and is parameter of "Humidity Sensor" fixed?
   ※ Parameter of "Humidity Sensor" will be fixed at 10%, if there is any fault in Humidity Sensor.

YES

Go to "Inspection" procedure.

NO

Fault is intermittent caused by poor contact in the sensor's and/or A/C controller's connector or was repaired and A/C controller memory was not cleared. Thoroughly check connectors for looseness, poor connection, bending, corrosion, contamination, deterioration, or damage. Repair or replace as necessary and then go to "Verification of Vehicle Repair" procedure.

TERMINAL AND CONNECTOR INSPECTION E46CEF9E

Refer to DTC B1200.

SIGNAL CIRCUIT INSPECTION ECC3D1A0

1. Check for short to ground in harness.
   1) Ignition "OFF"
   2) Disconnect Humidity Sensor.
   3) Measure resistance between terminal "3" of Humidity Sensor and chassis ground.

Specification :	Approx. ∞ Ω

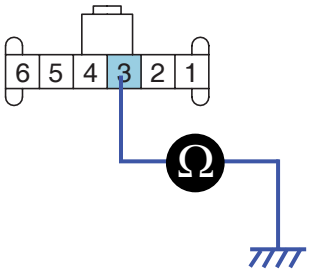

1. Motor(-)
2. Sensor ground
3. **Humidity sensor signal**
4. In-car sensor temp. signal
5. Sensor power (5V)
6. Motor(+)

SCMHA6505L

4) Is the measured resistance within specifications?

YES

Go to "Power circuit Inspection " procedure.

NO

Check for short to ground in harness. Repair as necessary and go to "Verification of Vehicle Repair" procedure.

POWER SUPPLY CIRCUIT INSPECTION ED180193

1. Check for open in power harness.

   1) Ignition "ON"

   2) Disconnect Humidity Sensor.

   3) Measure voltage value between terminal "5" of Humidity Sensor and chassis ground.

Specification : 5V

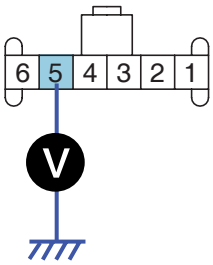

1. Motor(-)
2. Sensor ground
3. Humidity sensor signal
4. In-car sensor temp. signal
5. **Sensor power (5V)**
6. Motor(+)

SCMHA6506L

4) Is the measured voltage within specifications?

YES

Go to "Component Inspection " procedure.

NO

Check for open in power harness. Repair as necessary and go to "Verification of Vehicle Repair" procedure.

COMPONENT INSPECTION E21ABF1E

Refer to DTC B1200.

VERIFICATION OF VEHICLE REPAIR ECEB8038

Refer to DTC B1200.

DTC B1202 WATER TEMPERATURE SENSOR OPEN (HIGH)

COMPONENT LOCATION ECDA84B4

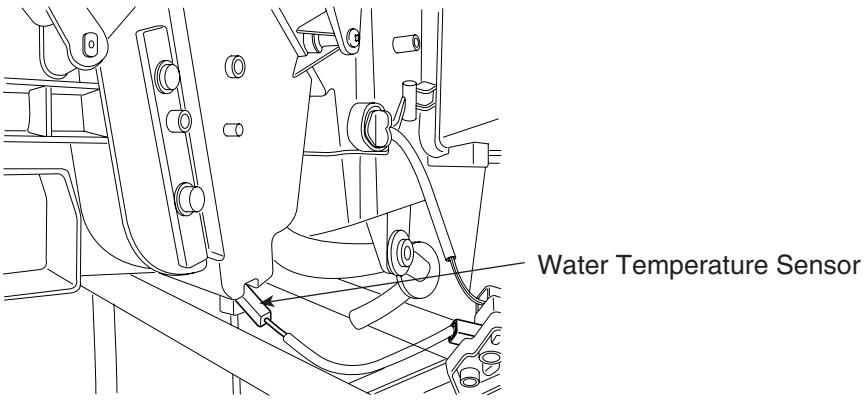

EQBF512A

GENERAL DESCRIPTION E79C5561

A water temp. sensor located at heater unit, detects coolant temperature. Its signal is used for cold engine lockout control. When the driver operates the heater before the engine is warmed up, the signal from sensor causes the heater control unit to reduce blower motor speed until coolant temperature reaches the threshold value.

DTC DESCRIPTION EFAC8202

The A/C controller sets DTC B1202 if there is an open circuit in water temp. sensor signal harness or the measured resistance value of the sensor is more than the threshold value(about 176.3kΩ)

DTC DETECTING CONDITION EDDA37B8

Item	Detecting Condition	Possible cause
DTC Strategy	• Resistance check	• Open Circuit in harness • Faulty water temp. Sensor • Faulty A/C control unit
Threshold value	• > 176.3 kΩ	
Detecting time	• 0.3 sec	
FAIL SAFE	• Control with the value of -2°C(28.4°F)	

SPECIFICATION EEDFF0BB

Temperature[°C(°F)]	Resistance(kΩ)	Temperature[°C(°F)]	Resistance(kΩ)
-30(-22)	176.3	25(77)	10
-15(5)	73.6	35(95)	6.5
0(32)	32.9	60(140)	2.5
15(59)	15.8	80(176)	1.2

MONITOR SCANTOOL DATA E23A4490

1. Connect scantool to data link connector(DLC).
2. Engine "ON"
3. Monitor the "WATER TEMP. SENSOR" Parameter on the Scantool.

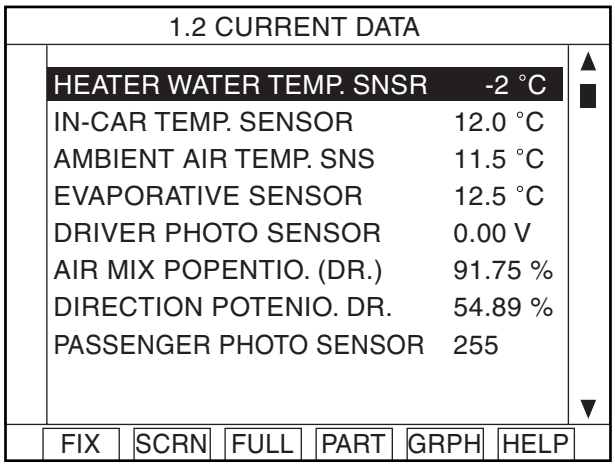

Fig. 1

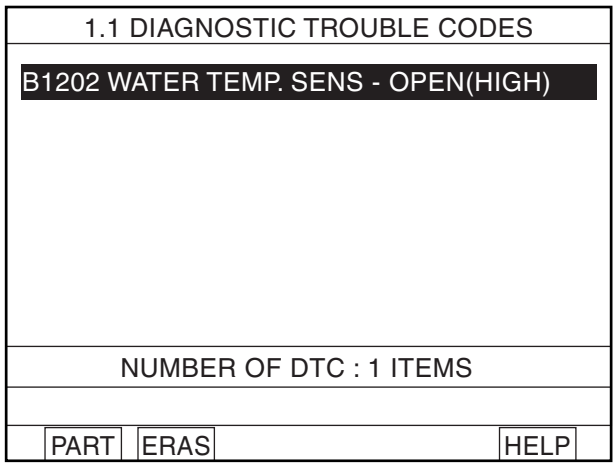

Fig. 2

Fig 1 : The current data in abnormal state.
Fig 2 : DTC B1202.

EQBF512B

4. Are the DTC B1202 present and is parameter of "WATER TEMP. SENSOR" fixed?
   ※ Parameter of "WATER TEMP. SENSOR" will be fixed at -2℃(28.4°F), if there is any fault in WATER TEMP. SENSOR.

   YES

   Go to "Inspection" procedure.

   NO

   Fault is intermittent caused by poor contact in the sensor's and/or A/C controller's connector or was repaired and A/C controller memory was not cleared. Thoroughly check connectors for looseness, poor connection, bending, corrosion, contamination, deterioration, or damage. Repair or replace as necessary and then go to "Verification of Vehicle Repair" procedure.

TERMINAL AND CONNECTOR INSPECTION EC92E599

1. Many malfunctions in the electrical system are caused by poor harness and terminals.
   Faults can also be caused by interference from other electrical systems, and mechanical or chemical damage.
2. Thoroughly check connectors for looseness, poor connection, bending, corrosion, contamination, deterioration, or damage.
3. Has a problem been found?

   YES

   Repair as necessary and go to "Verification of Vehicle Repair" procedure.

NO

Go to "Signal circuit inspection" procedure.

SIGNAL CIRCUIT INSPECTION EE5CF56F

1. Check for open in harness.

   1) Ignition "OFF"

   2) Disconnect water temp. sensor.

   3) Measure resistance between terminal "1" of water temp. sensor and terminal "7" of A/C Control Unit.

Specification : Approx. 0 Ω

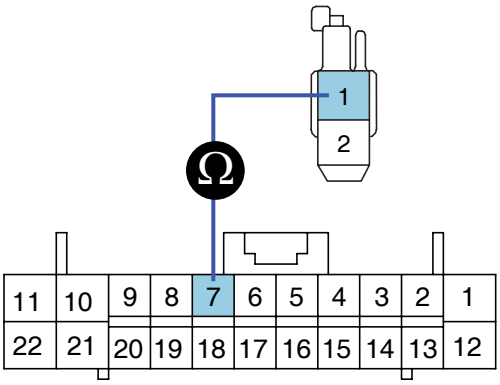

1. Water temp. sensor signal
2. Sensor ground

SCMHA6507L

   4) Is the measured resistance within specifications?

   YES

   Go to "Ground circuit Inspection " procedure.

   NO

   Check for open in harness. Repair as necessary and go to "Verification of Vehicle Repair" procedure.

GROUND CIRCUIT INSPECTION E20A6934

1. Check for open in ground harness.

   1) Ignition "OFF"

   2) Disconnect water temp. sensor.

   3) Measure resistance between terminal "2" of water temp. sensor and chassis ground.

Specification : Approx. 0 Ω

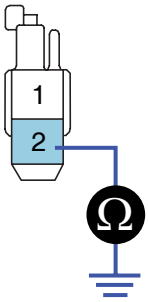

1. Water temp. sensor signal
2. Sensor ground

SCMHA6508L

4) Is the measured resistance within specifications?

YES

Go to "Component Inspection " procedure.

NO

Check for open in ground harness. Repair as necessary and go to "Verification of Vehicle Repair" procedure.

COMPONENT INSPECTION E8B1ACAD

1. Check water temp. sensor.

   1) Ignition "OFF"

   2) Disconnect water temp. sensor.

   3) Measure resistance between terminal "1" and "2" of water temp. sensor.

Specification : Refer the specifications in fig 3.

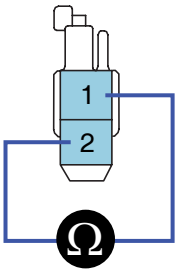

1. Water temp. sensor signal
2. Sensor ground

SCMHA6509L

4) Is the measured resistance within specifications in fig 3)? (tolerance limits ± 3%)

YES

Go to "Check A/C Control Unit" procedure.

NO

Substitute with a known-good water temp. sensor and check for proper operation.
If the problem is corrected, replace water temp. sensor and then go to "Verification of Vehicle Repair" procedure.

2. Check A/C Control Unit

1) Engine "ON"

2) Disconnect water temp. sensor.

3) Measure Voltage between terminal "7" of A/C Control Unit and chassis ground.

Specification : Approx. 5V

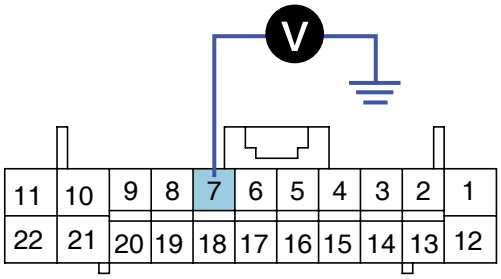

7. Water temp. sensor signal

SCMHA6510L

4) Is the measured voltage within specifications?

YES

Check connectors for looseness, poor connection, bending, corrosion, contamination, deterioration, or damage. Repair or replace as necessary and then go to "Verification of Vehicle Repair" procedure.

NO

Substitute with a known-good A/C Control Unit and check for proper operation.
If the problem is corrected, replace A/C Control Unit and then go to "Verification of Vehicle Repair" procedure.

VERIFICATION OF VEHICLE REPAIR E60A09C9

After a repair, it is essential to verify that the fault has been corrected.

1. Connect scantool and select "Diagnostic Trouble Codes(DTCs)" mode and then clear DTC.
2. Operate the vehicle and monitor the DTC on the scantool.
3. Are any DTCs present?

YES

Go to the applicable troubleshooting procedure.

NO

System is performing to specification at this time.

DTC B1203 WATER TEMPERATURE SENSOR SHORT (LOW)

COMPONENT LOCATION E0E2BC32

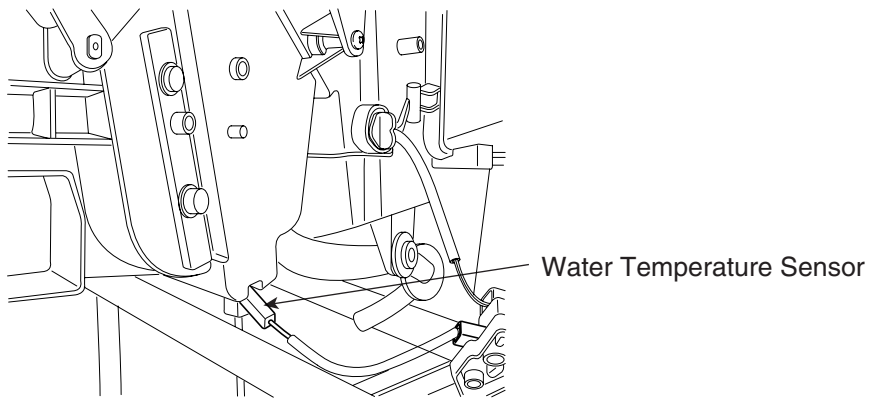

EQBF512A

GENERAL DESCRIPTION EFE4C535

A water temp. sensor located at heater unit, detects coolant temperature. Its signal is used for cold engine lockout control. When the driver operates the heater before the engine is warmed up, the signal from sensor causes the heater control unit to reduce blower motor speed until coolant temperature reaches the threshold value.

DTC DESCRIPTION EA17C85B

The A/C controller sets DTC B1203 if there is a short circuit in water temp. sensor signal harness or the measured resistance value of sensor is less than threshold value(about 1.2kΩ)

DTC DETECTING CONDITION EF2E3145

Item	Detecting Condition	Possible cause
DTC Strategy	• Resistance check	• Short circuit in harness • Faulty water temp. Sensor • Faulty A/C control unit
Threshold value	• < 1.2 kΩ	
Detecting time	• 0.3 sec	
FAIL SAFE	• Control with the value of -2°C(28.4°F)	

SPECIFICATION E6B0F9BF

Refer to DTC B1202.

MONITOR SCANTOOL DATA EADCD72B

1. Connect scantool to data link connector(DLC).
2. Engine "ON"
3. Monitor the "WATER TEMP. SENSOR" Parameter on the Scantool.

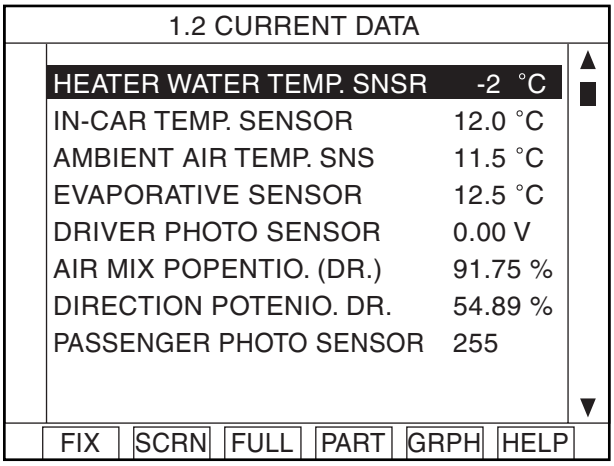

Fig. 1

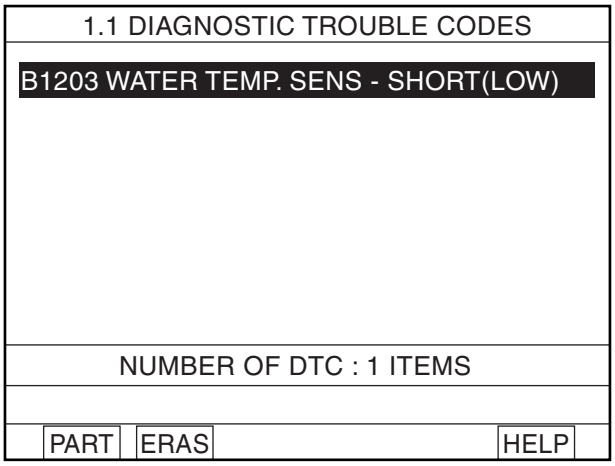

Fig. 2

Fig 1 : The current data in abnormal state.
Fig 2 : DTC B1203.

EQBF513A

4. Are the DTC B1203 present and is parameter of "WATER TEMP. SENSOR" fixed?
   ※ Parameter of "WATER TEMP. SENSOR" will be fixed at -2℃(28.4°F), if there is any fault in WATER TEMP. SENSOR.

   YES

   Go to "Inspection" procedure.

   NO

   Fault is intermittent caused by poor contact in the sensor's and/or A/C controller's connector or was repaired and A/C controller memory was not cleared. Thoroughly check connectors for looseness, poor connection, bending, corrosion, contamination, deterioration, or damage. Repair or replace as necessary and then go to "Verification of Vehicle Repair" procedure.

TERMINAL AND CONNECTOR INSPECTION E4A5AB7F

Refer to DTC B1202.

SIGNAL CIRCUIT INSPECTION E5290ACF

1. Check for short to ground in harness.

   1) Ignition "OFF"

   2) Disconnect water temp. sensor.

   3) Measure resistance between terminal "1" of water temp. sensor and chassis ground.

Specification : Approx. ∞Ω

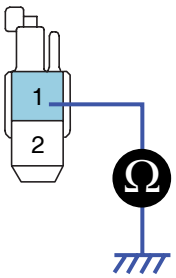

1. Water temp. sensor signal
2. Sensor ground

SCMHA6511L

4) Is the measured resistance within specifications?

YES

Go to "Component Inspection" procedure.

NO

Check for short to ground in harness. Repair as necessary and go to "Verification of Vehicle Repair" procedure.

COMPONENT INSPECTION E688EEF4

Refer to DTC B1202.

VERIFICATION OF VEHICLE REPAIR ED6AB445

Refer to DTC B1202.

DTC B1204 AIR MIX POTENTIOMETER OPEN (LOW) - PASSENGER'S

COMPONENT LOCATION ECDA6CAE

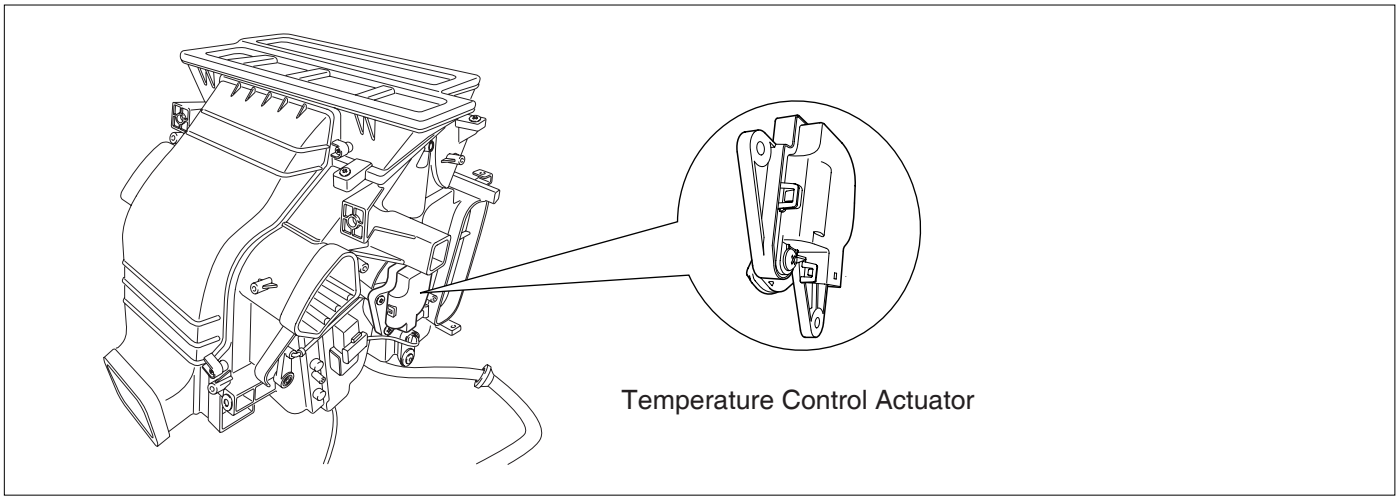

SCMHA6700L

GENERAL DESCRIPTION E6FDAF92

Temperature control actuator located at heater unit, regulates the temperature by the procedure as follows. Signal from control unit adjusts position of temp. door by operating temp. motor and then temperature will be regulated by the hot/cold air ratio decided by position of temp. door.

DTC DESCRIPTION E4F166A6

The A/C controller sets DTC B1204 if there is an open circuit or poor connection in the air mix potentiometer.

DTC DETECTING CONDITION E8DA37FC

Item	Detecting Condition	Possible cause
DTC Strategy	• Voltage check	• Poor connection of connected part • Open circuit in harness • Short circuit in harness • Faulty driver Air Mix potentiometer
Threshold value	• < 0.1V	
Detecting time	• 0.3 sec	
FAIL SAFE	• If temperature setting 17~24.5°C(63~76°F) fix at max. cooling position. • If temperature setting 25~32°C(77~90°F) fix at max. heating position.	

SPECIFICATION E927FFAF

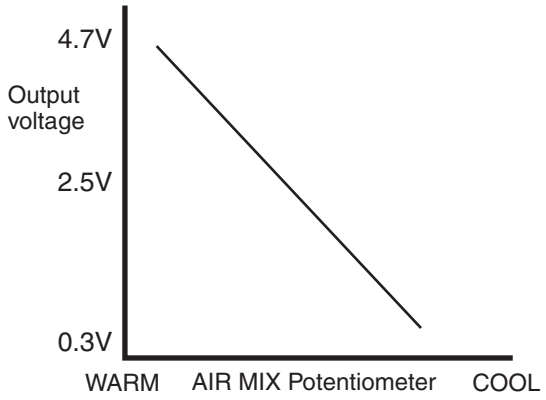

EQBF521B

MONITOR SCANTOOL DATA EF8DAA6E

1. Connect scantool to Data Link Connector(DLC).
2. Engine "ON"
3. Monitor the "Passenger's Air Mix Potentiometer" Parameter on the Scantool while operating temp. switch.

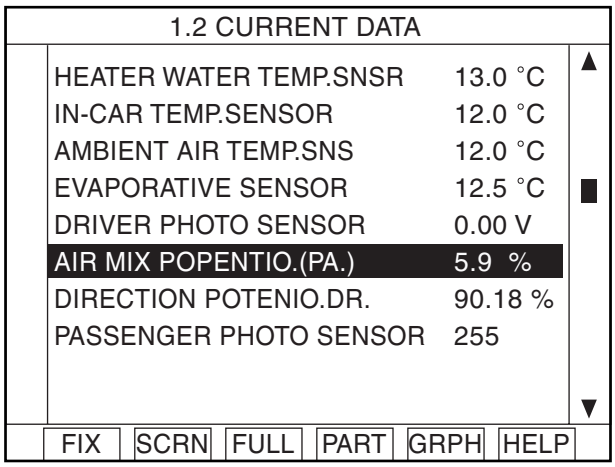

Fig. 1

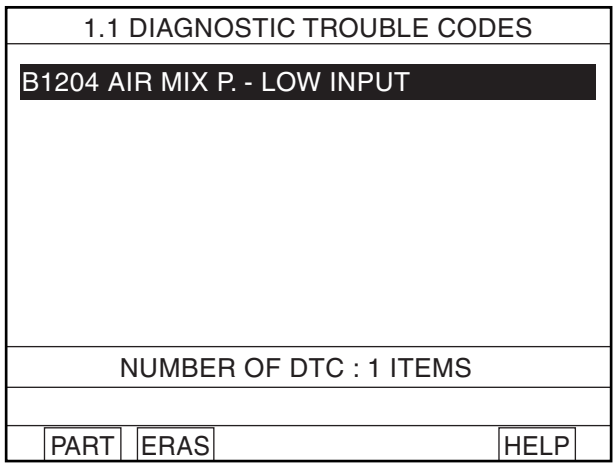

Fig. 2

Fig 1 : The current data in abnormal state.
Fig 2 : DTC B1204.

EQBF521K

4. Are the DTC B1204 present and is parameter of "Passenger's Air Mix Potentiometer" fixed?
   ※ Parameter of "Passenger's Air Mix Potentiometer" will be fixed at 100%(or any value above 90%), or 0% (or any value below 10%), if there is any fault in Passenger's Air Mix potentiometer.

   YES

   Go to "Inspection" procedure.

NO

Fault is intermittent caused by poor contact in the sensor's and/or A/C controller's connector or was repaired and A/C controller memory was not cleared. Thoroughly check connectors for looseness, poor connection, bending, corrosion, contamination, deterioration, or damage. Repair or replace as necessary and then go to "Verification of Vehicle Repair" procedure.

TERMINAL AND CONNECTOR INSPECTION E27080F9

1. Many malfunctions in the electrical system are caused by poor harness and terminals.
   Faults can also be caused by interference from other electrical systems, and mechanical or chemical damage.
2. Thoroughly check connectors for looseness, poor connection, bending, corrosion, contamination, deterioration, or damage.
3. Has a problem been found?

YES

Repair as necessary and go to "Verification of Vehicle Repair" procedure.

NO

Go to "Signal circuit inspection" procedure.

SIGNAL CIRCUIT INSPECTION EEC01ECA

1. Check for open in harness.
   1) Ignition "OFF"
   2) Disconnect Passenger's Air Mix potentiometer.
   3) Measure resistance between terminal "6" of Passenger's Air Mix Potentiometer and terminal "18" of A/C control unit.

Specification : Approx. 0 Ω

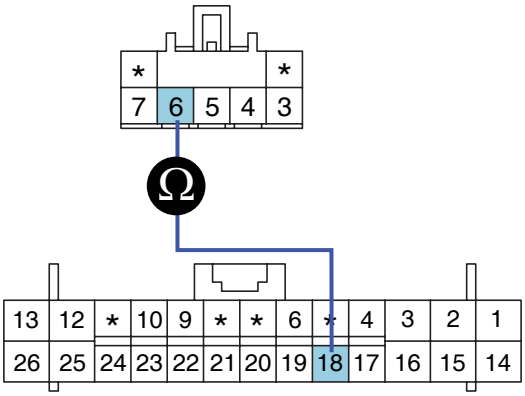

3. Motor (Warm)
4. Motor (Cool)
5. Potentiometer ground
6. **Potentiometer signal**
7. Sensor reference voltage(+5V)

SCMHA6514L

4) Is the measured resistance within specifications?

YES

Go to "Check for short to ground in harness" procedure.

NO

Check for open in signal harness. Repair as necessary and go to "Verification of Vehicle Repair" procedure.

2. Check for short to ground in harness.

1) Ignition "OFF"

2) Disconnect Passenger's Air Mix potentiometer.

3) Measure resistance between terminal "6" of Passenger's Air Mix Potentiometer and chassis ground.

Specification : Approx. ∞ Ω

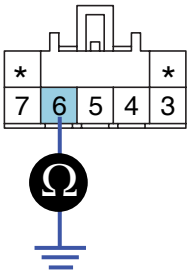

3. Motor (Warm)
4. Motor (Cool)
5. Potentiometer ground
6. **Potentiometer signal**
7. Sensor reference voltage(+5V)

SCMHA6515L

4) Is the measured resistance within specifications?

YES

Go to "Power circuit Inspection" procedure.

NO

Check for short to ground in signal harness. Repair as necessary and go to "Verification of Vehicle Repair" procedure.

POWER SUPPLY CIRCUIT INSPECTION EED3C936

1. Check for short or open in harness.

1) Ignition "ON"

2) Connect Passenger's Air Mix Potentiometer.

3) Measure voltage between terminal "7" of Passenger's Air Mix Potentiometer and chassis ground.

Specification : Approx. 5V

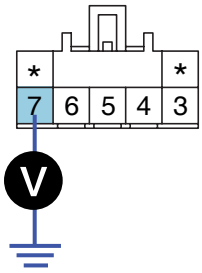

3. Motor (Warm)
4. Motor (Cool)
5. Potentiometer ground
6. Potentiometer signal
7. Sensor reference voltage(+5V)

SCMHA6516L

4) Is the measured voltage within specifications?

YES

Go to "Component inspection" procedure.

NO

Check for short or open in power harness. Repair as necessary and go to "Verification of Vehicle Repair" procedure.

COMPONENT INSPECTION E3EE5ADD

1. Check actuator motor.

   1) Ignition "OFF"

   2) Disconnect Passenger's Air Mix Potentiometer.

   3) Verify that the temperature actuator operates to the hot position when connecting 12V to the terminal "3" and grounding terminal "4".

   4) Verify that the temperature actuator operates to the cool position when the connections are reversed.

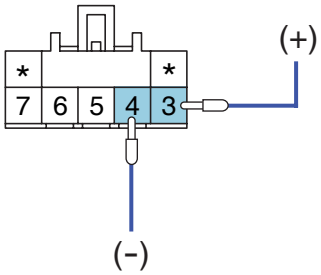

3. Motor (Warm)
4. Motor (Cool)
5. Potentiometer ground
6. Potentiometer signal
7. Sensor reference voltage(+5V)

SCMHA6517L

   5) Does the actuator work properly?

YES

Go to "Check potentiometer" procedure.

NO

Substitute with a known-good actuator and check for proper operation. If the problem is corrected, replace actuator and then go to "Verification of Vehicle Repair" procedure.

2. Check potentiometer

1) Ignition "ON"

2) Connect Passenger's Air Mix potentiometer.

3) Measure voltage between terminal "5" and "6" of Passenger's Air Mix potentiometer while operating the temp. switch.

Specification : Refer the specifications in fig 3)

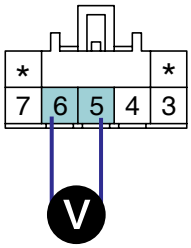

3. Motor (Warm)
4. Motor (Cool)
5. Potentiometer ground
6. Potentiometer signal
7. Sensor reference voltage(+5V)

SCMHA6518L

Door position	Voltage (5-6)	Error detecting
MAX. Cooling	0.3 ± 0.15V	Low voltage : 0.08V or less
MAX. Heating	4.7 ± 0.15V	High voltage : 4.9V or more

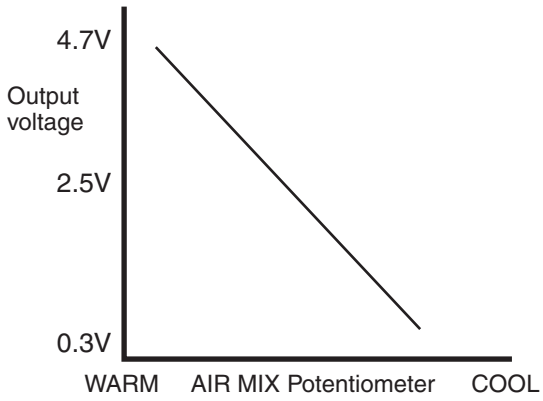

Fig. 3

Fig 3) Specifications : Voltage value of air mix potentiometer as a function of position of setting temperature.

EQBF521J

4) Is the measured voltage within specifications in fig3?

YES

Check connectors for looseness, poor connection, bending, corrosion, contamination, deterioration, or damage. Repair or replace as necessary and then go to "Verification of Vehicle Repair" procedure.

NO

Substitute with a known-good actuator and check for proper operation. If the problem is corrected, replace actuator and then go to "Verification of Vehicle Repair" procedure.

VERIFICATION OF VEHICLE REPAIR E960BEBC

After a repair, it is essential to verify that the fault has been corrected.

1. Connect scantool and select "Diagnostic Trouble Codes(DTCs)" mode and then clear DTC.
2. Operate the vehicle and monitor the DTC on the scantool.
3. Are any DTCs present?

   YES

   Go to the applicable troubleshooting procedure.

   NO

   System is performing to specification at this time.

DTC B1205 AIR MIX POTENTIOMETER SHORT (HIGH) - PASSENGER'S

COMPONENT LOCATION E3CE4D5C

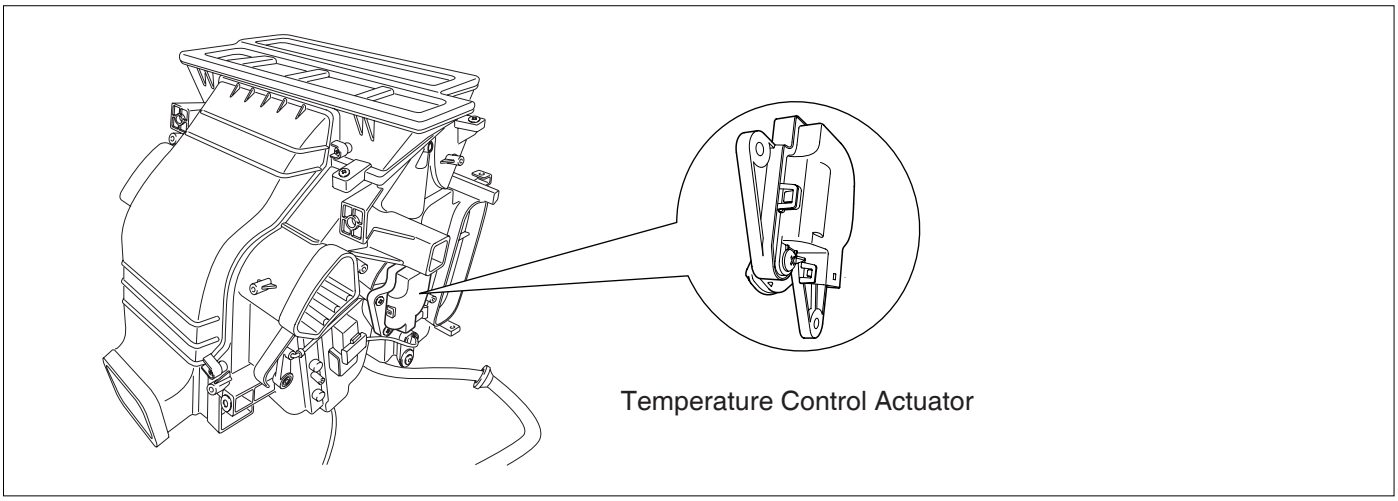

SCMHA6700L

GENERAL DESCRIPTION EBBBA148

Temperature control actuator located at heater unit, regulates the temperature by the procedure as follows. Signal from control unit adjusts position of temp. door by operating temp. motor and then temperature will be regulated by the hot/cold air ratio decided by position of temp. door.

DTC DESCRIPTION EEFEA86B

The A/C controller sets DTC B1205 if there is a short to power in the air mix potentiometer.

DTC DETECTING CONDITION E0C85E40

Item	Detecting Condition	Possible cause
DTC Strategy	• Voltage check	• Short circuit in harness • Faulty driver Air Mix potentiometer
Threshold value	• > 4.9V	
Detecting time	• 0.3 sec	
FAIL SAFE	• If temperature setting 17~24.5°C(63~76°F) fix at max. cooling position. • If temperature setting 25~32°C(77~90°F) fix at max. heating position.	

SPECIFICATION EE47778F

Refer to DTC B1204.

MONITOR SCANTOOL DATA E7CFD25C

1. Connect scantool to Data Link Connector(DLC).
2. Engine "ON"

3. Monitor the "Passenger's Air Mix Potentiometer" Parameter on the Scantool while operating temp. switch.

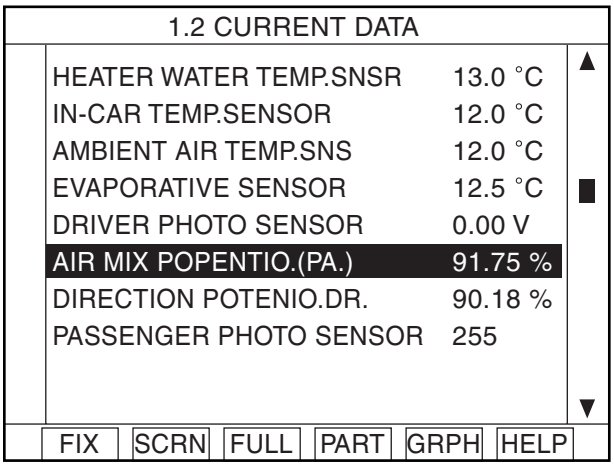

Fig. 1

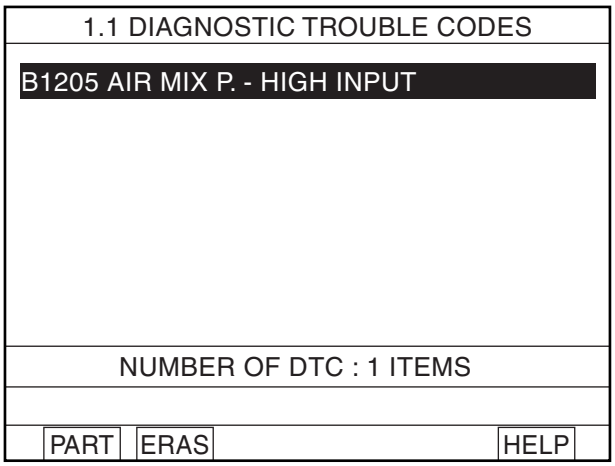

Fig. 2

Fig 1 : The current data in abnormal state.
Fig 2 : DTC B1205.

EQBF522F

4. Are the DTC B1205 present and is parameter of "Passenger's Air Mix potentiometer" fixed?
※ Parameter of "Passenger's Air Mix potentiometer" will be fixed at 100%(or any value above 90%), or 0% (or any value below 10%), if there is any fault in Passenger's Air Mix potentiometer.

YES

Go to "Inspection" procedure.

NO

Fault is intermittent caused by poor contact in the sensor's and/or A/C controller's connector or was repaired and A/C controller memory was not cleared. Thoroughly check connectors for looseness, poor connection, bending, corrosion, contamination, deterioration, or damage. Repair or replace as necessary and then go to "Verification of Vehicle Repair" procedure.

TERMINAL AND CONNECTOR INSPECTION E283B9EA

Refer to DTC B1204.

SIGNAL CIRCUIT INSPECTION E5E91EAA

1. Check for short in harness.

   1) Ignition "OFF"

   2) Disconnect Passenger's Air Mix potentiometer.

   3) Measure resistance between terminal "6" and "7" of Passenger's Air Mix potentiometer.

Specification : Approx. ∞ Ω

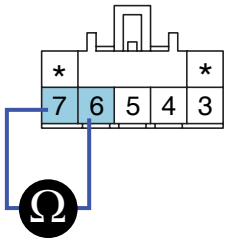

3. Motor (Warm)
4. Motor (Cool)
5. Potentiometer ground
6. Potentiometer signal
7. Sensor reference voltage(+5V)

SCMHA6519L

4) Is the measured resistance within specifications?

YES

Go to "Ground circuit Inspection" procedure.

NO

Check for short to power harness in signal harness. Repair as necessary and go to "Verification of Vehicle Repair" procedure.

GROUND CIRCUIT INSPECTION EE38C85A

1. Check for open in harness.

1) Ignition "OFF"

2) Disconnect Passenger's Air Mix Potentiometer.

3) Measure resistance between terminal "5" of Passenger's Air Mix Potentiometer and chassis ground.

Specification : Approx. 0 Ω

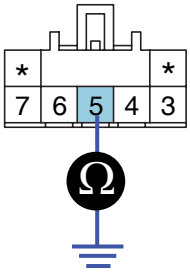

3. Motor (Warm)
4. Motor (Cool)
5. Potentiometer ground
6. Potentiometer signal
7. Sensor reference voltage(+5V)

SCMHA6520L

4) Is the measured resistance within specifications?

YES

Go to "Component Inspection" procedure.

NO

Check for open in ground harness. Repair as necessary and go to "Verification of Vehicle Repair" procedure.

COMPONENT INSPECTION EE9D88DB

Refer to DTC B1204.

VERIFICATION OF VEHICLE REPAIR ECF5DABA

Refer to DTC B1204.

DTC B1208 INTAKE POTENTIOMETER OPEN

COMPONENT LOCATION EF749215

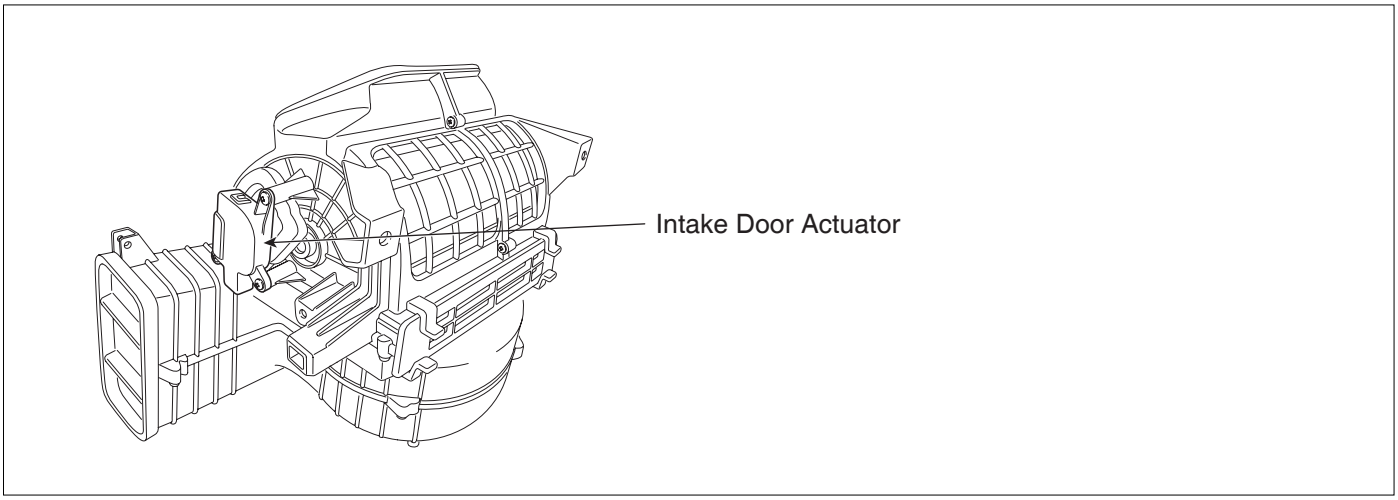

SCMHA6701L

GENERAL DESCRIPTION EA50D8D5

Intake door located at heater unit controls the inlet of car. When driver operates the intake switch, A/C controller recirculationeives mode signal from intake switch and operates intake door actuator to turn intake door to intended position. (with fresh mode signal, intake door is closed and with fresh mode signal, intake door is opened).

DTC DESCRIPTION E6782025

The A/C controller sets DTC B1208 if there is an open circuit or poor connection in the intake potentiometer.

DTC DETECTING CONDITION E0CD3E1C

Item	Detecting Condition	Possible cause
DTC Strategy	• Voltage check	• Poor connection of connected part • Open circuit in harness • Short circuit in harness • Faulty driver intake potentiometer
Threshold value	• < 0.1V	
Detecting time	• 0.3 sec	
FAIL SAFE	• If temperature setting 17~24.5°C(63~76°F) fix at max. cooling position. • Fix at fresh	

SPECIFICATION E6D66101

※ Voltage value of Intake potentiometer as a function of position of Intake door

Door position	Voltage	Threshold value
Fresh	0.3±0.15V	Voltage value & 〈 0.08V
Recirculation	4.7±0.15V	Voltage value & 〈 4.9V

MONITOR SCANTOOL DATA EBF0EE9F

1. Connect scantool to Data Link Connector(DLC).
2. Engine "ON"
3. Monitor the "Intake Potentiometer" Parameter on the Scantool while operating intake switch.

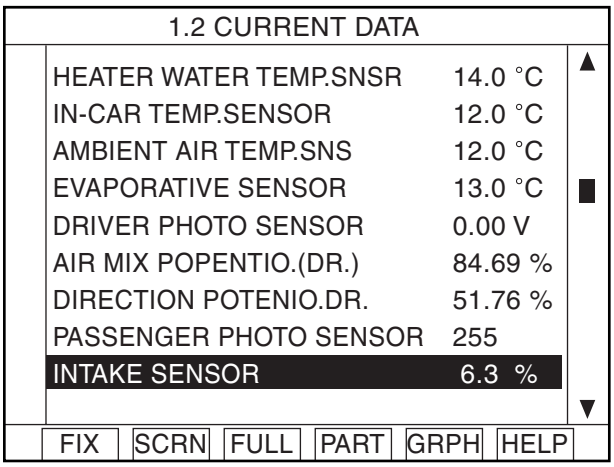

Fig. 1

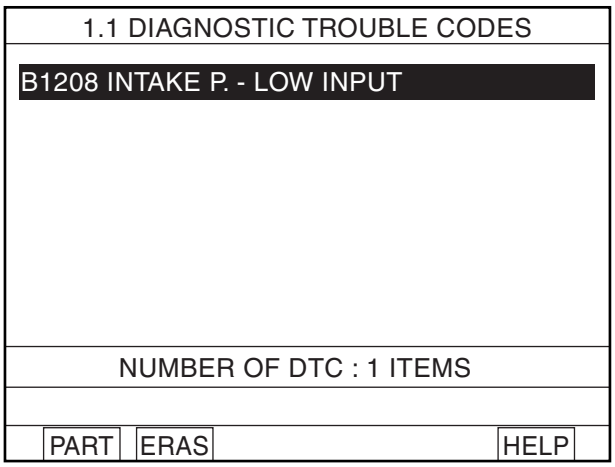

Fig. 2

Fig 1 : The current data in abnormal state.
Fig 2 : DTC B1208.

EQBF590C

4. Are the DTC B1208 present and is parameter of "Intake Potentiometer" fixed?
   ※ Parameter of "Intake Potentiometer" will be fixed at 100%(or any value above 90%), or 0% (or any value below 10%), if there is any fault in Intake potentiometer.

   YES

   Go to "Inspection" procedure.

   NO

   Fault is intermittent caused by poor contact in the sensor's and/or A/C controller's connector or was repaired and A/C controller memory was not cleared. Thoroughly check connectors for looseness, poor connection, bending, corrosion, contamination, deterioration, or damage. Repair or replace as necessary and then go to "Verification of Vehicle Repair" procedure.

TERMINAL AND CONNECTOR INSPECTION E0353933

1. Many malfunctions in the electrical system are caused by poor harness and terminals.
   Faults can also be caused by interference from other electrical systems, and mechanical or chemical damage.
2. Thoroughly check connectors for looseness, poor connection, bending, corrosion, contamination, deterioration, or damage.
3. Has a problem been found?

   YES

   Repair as necessary and go to "Verification of Vehicle Repair" procedure.

NO

Go to "Signal circuit inspection" procedure.

SIGNAL CIRCUIT INSPECTION E9A2AB82

1. Check for open in harness.

   1) Ignition "OFF"

   2) Disconnect Intake potentiometer.

   3) Measure resistance between terminal "6" of Intake Potentiometer and terminal "24" of A/C control unit.

Specification : Approx. 0 Ω

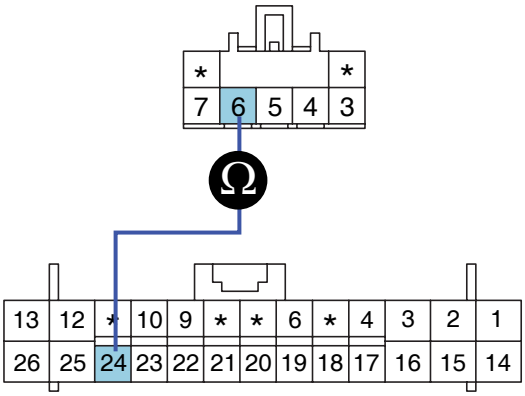

3. Motor (Rec)
4. Motor (Fre)
5. Potentiometer ground
6. **Potentiometer signal**
7. Sensor reference voltage(+5V)

SCMHA6522L

   4) Is the measured resistance within specifications?

   YES

   Go to "Check for short to ground in harness" procedure.

   NO

   Check for open in signal harness. Repair as necessary and go to "Verification of Vehicle Repair" procedure.

2. Check for short to ground in harness.

   1) Ignition "OFF"

   2) Disconnect Intake potentiometer.

   3) Measure resistance between terminal "6" of Intake Potentiometer and chassis ground.

Specification : Approx. ∞ Ω

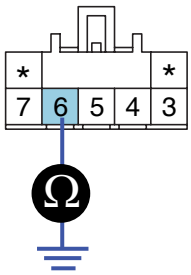

3. Motor (Rec)
4. Motor (Fre)
5. Potentiometer ground
6. Potentiometer signal
7. Sensor reference voltage(+5V)

SCMHA6523L

4) Is the measured resistance within specifications?

YES

Go to "Power circuit Inspection" procedure.

NO

Check for short to ground in signal harness. Repair as necessary and go to "Verification of Vehicle Repair" procedure.

POWER SUPPLY CIRCUIT INSPECTION E638022A

1. Check for short or open in harness.

   1) Ignition "ON"

   2) Connect Intake Potentiometer.

   3) Measure voltage between terminal "7" of Intake Potentiometer and chassis ground.

Specification : Approx. 5V

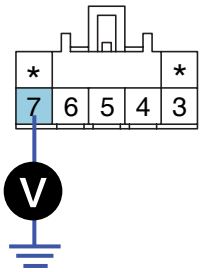

3. Motor (Rec)
4. Motor (Fre)
5. Potentiometer ground
6. Potentiometer signal
7. Sensor reference voltage(+5V)

SCMHA6524L

4) Is the measured voltage within specifications?

YES

Go to "Component inspection" procedure.

NO

Check for short or open in power harness. Repair as necessary and go to "Verification of Vehicle Repair" procedure.

COMPONENT INSPECTION E4DCDE12

1. Check actuator motor.

   1) Ignition "OFF"

   2) Disconnect Intake Potentiometer.

   3) Verify that the temperature actuator operates to the fresh position when connecting 12V to the terminal "3" and grounding terminal "4".

   4) Verify that the temperature actuator operates to the recirculation position when the connections are reversed.

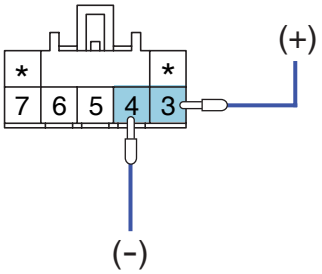

3. Motor (Rec)
4. Motor (Fre)
5. Potentiometer ground
6. Potentiometer signal
7. Sensor reference voltage(+5V)

SCMHA6525L

   5) Does the actuator work properly?

   YES

   Go to "Check potentiometer" procedure.

   NO

   Substitute with a known-good actuator and check for proper operation. If the problem is corrected, replace actuator and then go to "Verification of Vehicle Repair" procedure.

2. Check potentiometer

   1) Ignition "ON"

   2) Connect Intake potentiometer.

   3) Measure voltage between terminal "5" and "6" of Intake potentiometer while operating Intake switch.

Specification : Refer to the specifications

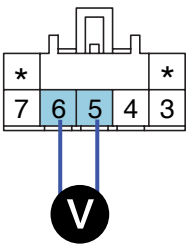

3. Motor (Rec)
4. Motor (Fre)
5. Potentiometer ground
6. Potentiometer signal
7. Sensor reference voltage(+5V)

SCMHA6526L

Door position	Voltage (5-6)	Error detecting
Fresh	0.3 ± 0.15V	Low voltage : 0.08V or less
Recirculation	4.7 ± 0.15V	High voltage : 4.9V or more

Specifications : Voltage value of Intake potentiometer as a function of position of Intake.

4) Is the measured voltage within specifications?

YES

Check connectors for looseness, poor connection, bending, corrosion, contamination, deterioration, or damage. Repair or replace as necessary and then go to "Verification of Vehicle Repair" procedure.

NO

Substitute with a known-good actuator and check for proper operation. If the problem is corrected, replace actuator and then go to "Verification of Vehicle Repair" procedure.

VERIFICATION OF VEHICLE REPAIR E5797203

After a repair, it is essential to verify that the fault has been corrected.

1. Connect scantool and select "Diagnostic Trouble Codes(DTCs)" mode and then clear DTC.
2. Operate the vehicle and monitor the DTC on the scantool.
3. Are any DTCs present?

YES

Go to the applicable troubleshooting procedure.

NO

System is performing to specification at this time.

DTC B1209 INTAKE POTENTIOMETER SHORT

COMPONENT LOCATION E093235F

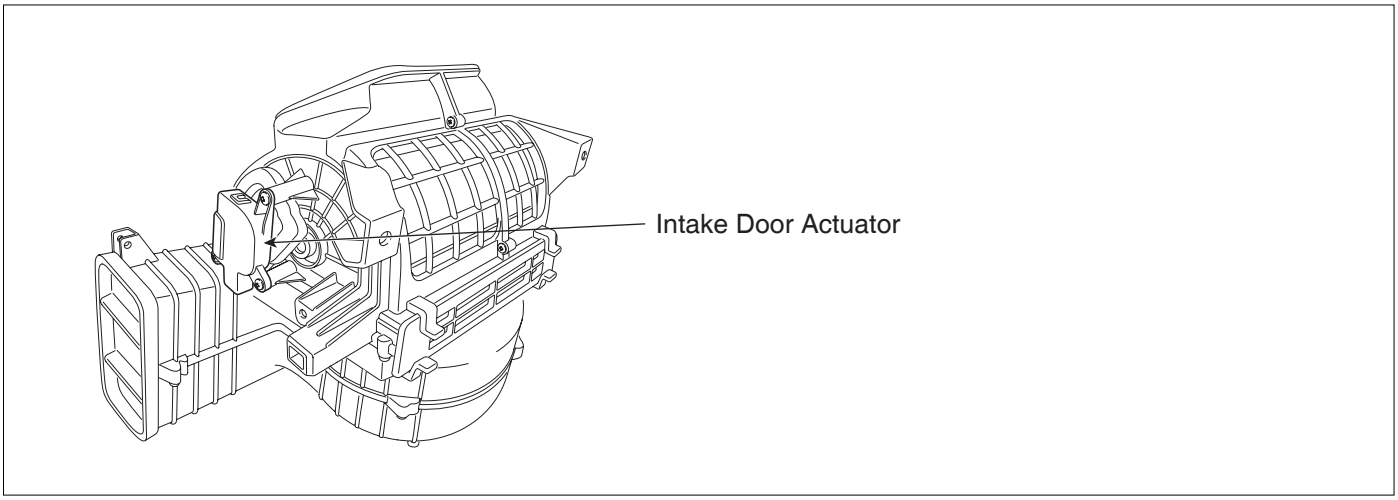

SCMHA6701L

GENERAL DESCRIPTION EE9BD028

Intake door located at heater unit controls the inlet of car. When driver operates the intake switch, A/C controller recirculationeives mode signal from intake switch and operates intake door actuator to turn intake door to intended position. (with fresh mode signal, intake door is closed and with fresh mode signal, intake door is opened).

DTC DESCRIPTION E2770B43

The A/C controller sets DTC B1209 if there is a short to power in the Intake potentiometer.

DTC DETECTING CONDITION EEE85217

Item	Detecting Condition	Possible cause
DTC Strategy	• Voltage check	• Short circuit in harness • Faulty Intake potentiometer • Open circuit in harness
Threshold value	• > 4.9V	
Detecting time	• 0.3 sec	
FAIL SAFE	• Fix at fresh	

SPECIFICATION E39D5040

Refer to DTC B1208.

MONITOR SCANTOOL DATA E43084A0

1. Connect scantool to Data Link Connector(DLC).
2. Engine "ON"
3. Monitor the "Intake Potentiometer" Parameter on the Scantool while operating Intake switch.

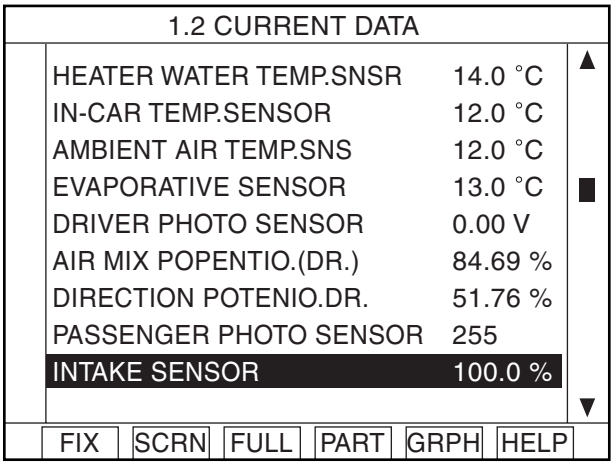

Fig. 1

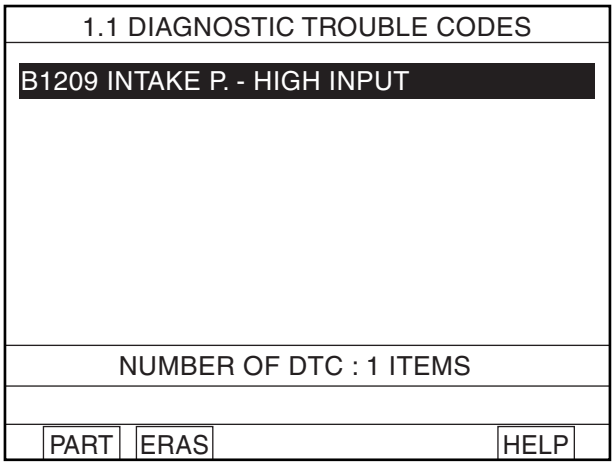

Fig. 2

Fig 1 : The current data in abnormal state.
Fig 2 : DTC B1209.

EQBF590D

4. Are the DTC B1209 present and is parameter of "Intake potentiometer" fixed?
   ※ Parameter of "Intake potentiometer" will be fixed at 100%(or any value above 90%), or 0% (or any value below 10%), if there is any fault in Intake potentiometer.

YES

Go to "Inspection" procedure.

NO

Fault is intermittent caused by poor contact in the sensor's and/or A/C controller's connector or was repaired and A/C controller memory was not cleared. Thoroughly check connectors for looseness, poor connection, bending, corrosion, contamination, deterioration, or damage. Repair or replace as necessary and then go to "Verification of Vehicle Repair" procedure.

TERMINAL AND CONNECTOR INSPECTION E38A07A2

Refer to DTC B1208.

SIGNAL CIRCUIT INSPECTION E7CCC554

1. Check for short in harness.

   1) Ignition "OFF"

   2) Disconnect Intake potentiometer.

   3) Measure resistance between terminal "6" and "7" of Intake potentiometer.

Specification :	Approx. ∞ Ω

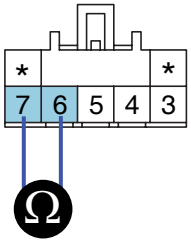

3. Motor (Rec)
4. Motor (Fre)
5. Potentiometer ground
6. Potentiometer signal
7. Sensor reference voltage(+5V)

SCMHA6527L

4) Is the measured resistance within specifications?

YES

Go to "Ground circuit Inspection" procedure.

NO

Check for short to power harness in signal harness. Repair as necessary and go to "Verification of Vehicle Repair" procedure.

GROUND CIRCUIT INSPECTION E226B4E7

1. Check for open in harness.

1) Ignition "OFF"

2) Disconnect Intake Potentiometer.

3) Measure resistance between terminal "5" of Intake Potentiometer and chassis ground.

Specification : Approx. 0 Ω

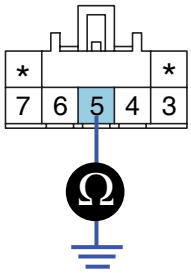

3. Motor (Rec)
4. Motor (Fre)
5. Potentiometer ground
6. Potentiometer signal
7. Sensor reference voltage(+5V)

SCMHA6528L

4) Is the measured resistance within specifications?

YES

Go to "Component Inspection" procedure.

NO

Check for open in ground harness. Repair as necessary and go to "Verification of Vehicle Repair" procedure.

COMPONENT INSPECTION EF55F62B

Refer to DTC B1208.

VERIFICATION OF VEHICLE REPAIR E43701D1

Refer to DTC B1208.

DTC B1233 IN-CAR TEMPERATURE SENSOR SHORT (LOW)

COMPONENT LOCATION EB57D004

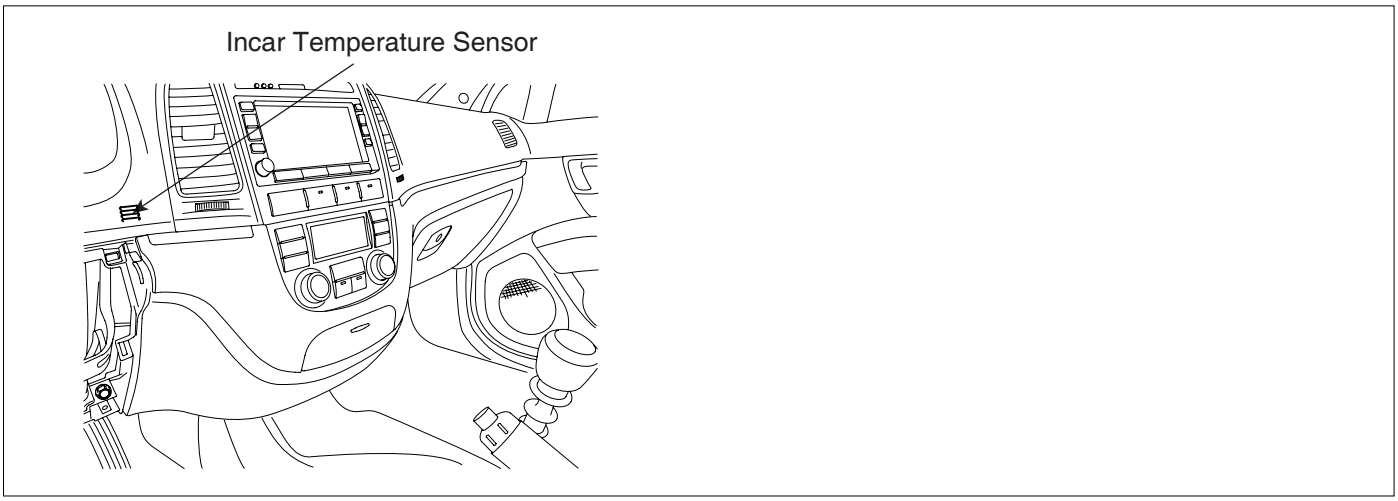

SCMHA6702L

GENERAL DESCRIPTION EC43DDF5

The incar temperature sensor located at crush pad, control unit contains a thermistor which measures the temperature of the inside. The signal, decided by the resistance value which changes in accordance with perceived inside temperature, is delivered to heater control unit and according to this signal, the control unit regulates incar temperature to intended value.

DTC DESCRIPTION EB63EFE3

The A/C controller sets DTC B1233 if there is a short circuit in incar temp. sensor signal harness or the measured resistance value of sensor is less than threshold value(about 7.46kΩ)

DTC DETECTING CONDITION E1046384

Item	Detecting Condition	Possible cause
DTC Strategy	• Resistance check	• Short circuit in harness • Faulty incar temp. Sensor • Faulty A/C control unit
Threshold value	• < 7.46 kΩ	
Detecting time	• 0.3 sec	
FAIL SAFE	• Control with the value of 25°C(77°F)	

SPECIFICATION E4823648

Temperature[°C(°F)]	Resistance(kΩ)	Temperature[°C(°F)]	Resistance(kΩ)
-30(-22)	509.57	25(77)	30
-15(5)	216.07	35(95)	15.59
0(32)	97.71	50(122)	10.81
15(59)	47.13	60(140)	7.46

MONITOR SCANTOOL DATA E2472961

1. Connect scantool to data link connector(DLC).

2. Engine "ON"

3. Monitor the "INCAR TEMP. SENSOR" Parameter on the Scantool.

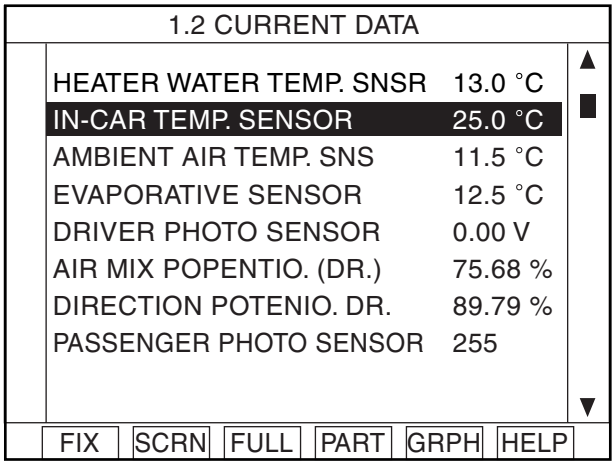

Fig. 1

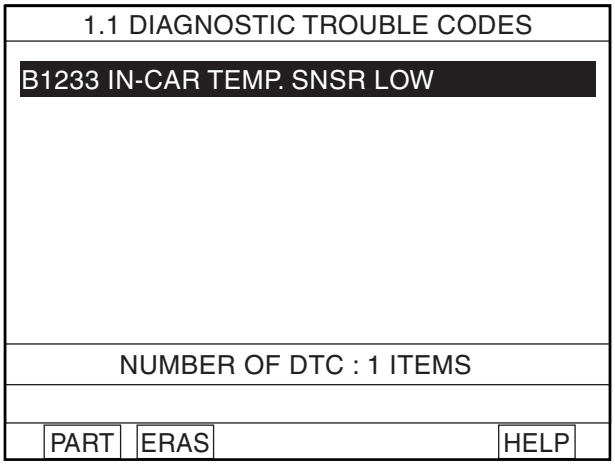

Fig. 2

Fig 1 : The current data in abnormal state.
Fig 2 : DTC B1233.

EQBF514A

4. Are the DTC B1233 present and is parameter of "INCAR TEMP. SENSOR" fixed?
   ※ Parameter of "INCAR TEMP. SENSOR" will be fixed at 25℃(77°F), if there is any fault in INCAR TEMP. SENSOR.

   YES

   Go to "Inspection" procedure.

   NO

   Fault is intermittent caused by poor contact in the sensor's and/or A/C controller's connector or was repaired and A/C controller memory was not cleared. Thoroughly check connectors for looseness, poor connection, bending, corrosion, contamination, deterioration, or damage. Repair or replace as necessary and then go to "Verification of Vehicle Repair" procedure.

TERMINAL AND CONNECTOR INSPECTION EB821E5B

1. Many malfunctions in the electrical system are caused by poor harness and terminals.
   Faults can also be caused by interference from other electrical systems, and mechanical or chemical damage.

2. Thoroughly check connectors for looseness, poor connection, bending, corrosion, contamination, deterioration, or damage.

3. Has a problem been found?

   YES

   Repair as necessary and go to "Verification of Vehicle Repair" procedure.

NO

Go to "Signal circuit inspection" procedure.

SIGNAL CIRCUIT INSPECTION EBF88FB5

1. Check for short to ground in harness.
   1) Ignition "OFF"
   2) Disconnect incar sensor.
   3) Measure resistance between terminal "4" of incar sensor and chassis ground.

Specification : Approx. ∞Ω

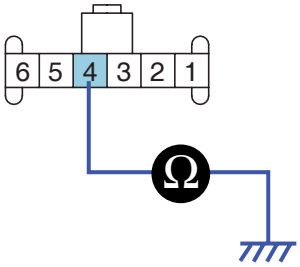

1. Motor(-)
2. Sensor ground
3. Humidity sensor signal
4. **In-car sensor temp. signal**
5. Sensor power (5V)
6. Motor(+)

SCMHA6529L

   4) Is the measured resistance within specifications?

YES

Go to "Component Inspection" procedure.

NO

Check for short to ground in harness. Repair as necessary and go to "Verification of Vehicle Repair" procedure.

COMPONENT INSPECTION E6BB9B31

1. Check incar temp. sensor.
   1) Ignition "OFF"
   2) Disconnect incar sensor.
   3) Measure resistance between terminal "4" and "2" of incar sensor.

Specification : Refer the specifications in fig 3.

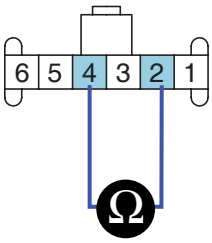

1. Motor(-)
2. **Sensor ground**
3. Humidity sensor signal
4. **In-car sensor temp. signal**
5. Sensor power (5V)
6. Motor(+)

SCMHA6530L

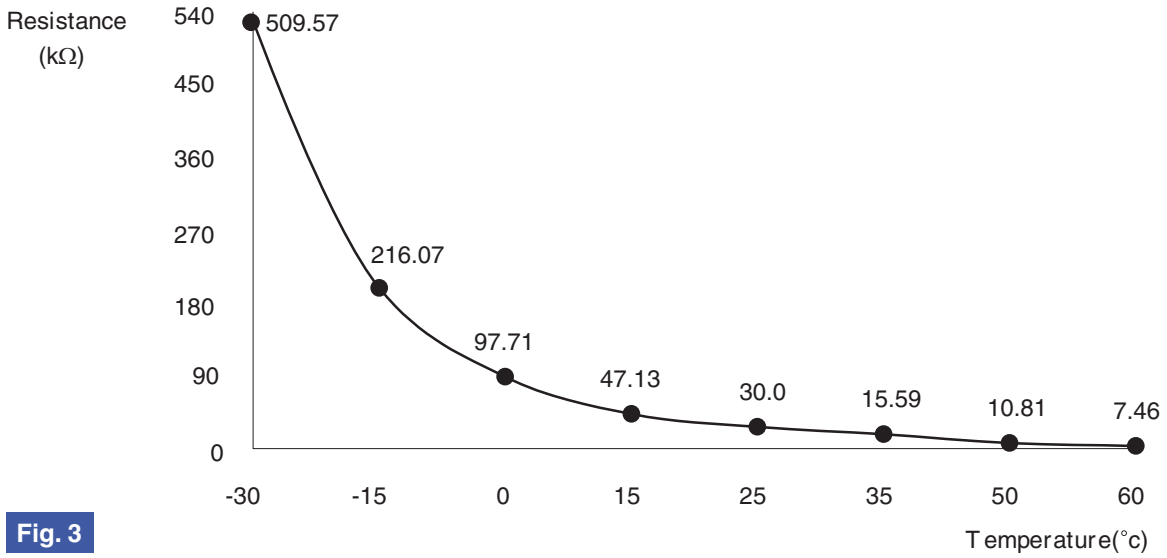

Fig. 3

Fig 3) Specifications : Resistance value of incar temp. sensor as a function of temperature.

EQBF514G

4) Is the measured resistance within specifications in fig3? (tolerance limits ± 3%)

YES

Go to "Check A/C Control Unit" procedure.

NO

Substitute with a known-good incar sensor and check for proper operation.
If the problem is corrected, replace incar sensor and then go to "Verification of Vehicle Repair" procedure.

2. Check A/C Control Unit

1) Engine "ON"

2) Disconnect incar sensor.

3) Measure Voltage between terminal "5" of A/C Control Unit and chassis ground.

Specification : Approx. 5V

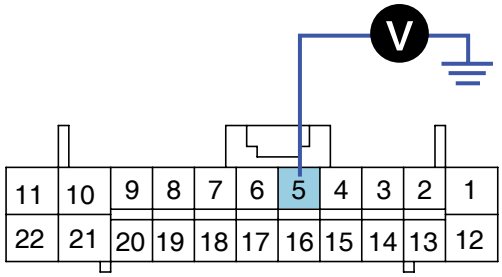

5. Incar sensor temp. signal

SCMHA6531L

4) Is the measured voltage within specifications?

YES

Check connectors for looseness, poor connection, bending, corrosion, contamination, deterioration, or damage. Repair or replace as necessary and then go to "Verification of Vehicle Repair" procedure.

NO

Substitute with a known-good A/C Control Unit and check for proper operation.
If the problem is corrected, replace A/C Control Unit and then go to "Verification of Vehicle Repair" procedure.

VERIFICATION OF VEHICLE REPAIR E5F6DCB4

After a repair, it is essential to verify that the fault has been corrected.

1. Connect scantool and select "Diagnostic Trouble Codes(DTCs)" mode and then clear DTC.
2. Operate the vehicle and monitor the DTC on the scantool.
3. Are any DTCs present?

YES

Go to the applicable troubleshooting procedure.

NO

System is performing to specification at this time.

DTC B1234 IN-CAR TEMPERATURE SENSOR OPEN (HIGH)

COMPONENT LOCATION EE9B6B17

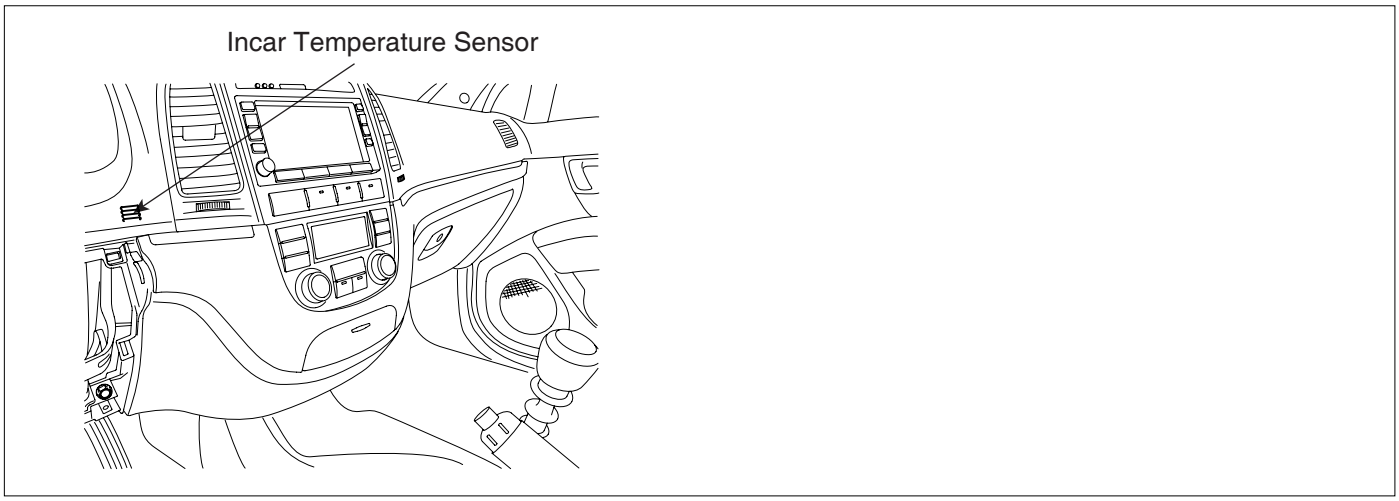

SCMHA6702L

GENERAL DESCRIPTION E9F794B3

The incar temperature sensor located at crush pad, control unit contains a thermistor which measures the temperature of the inside. The signal, decided by the resistance value which changes in accordance with perceived inside temperature, is delivered to heater control unit and according to this signal, the control unit regulates incar temperature to intended value.

DTC DESCRIPTION E11DE569

The A/C controller sets DTC B1234 if there is an open circuit in incar temp. sensor signal harness or the measured resistance value of sensor is more than threshold value(about 509.57kΩ)

DTC DETECTING CONDITION E854B0E4

Item	Detecting Condition	Possible cause
DTC Strategy	• Resistance check	• Open Circuit in harness • Faulty incar temp. Sensor • Faulty A/C control unit
Threshold value	• > 509.57 kΩ	
Detecting time	• 0.3 sec	
FAIL SAFE	• Control with the value of 25°C(77°F)	

SPECIFICATION E1AB1CCB

Refer to DTC B1233.

MONITOR SCANTOOL DATA E60EDB2F

1. Connect scantool to data link connector(DLC).
2. Engine "ON"
3. Monitor the "INCAR TEMP. SENSOR" Parameter on the Scantool.

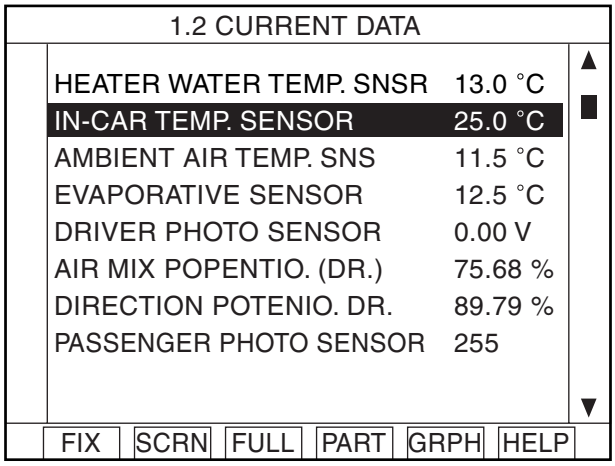

Fig. 1

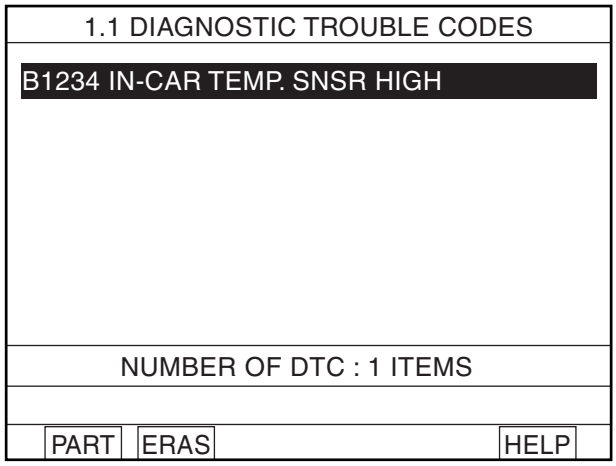

Fig. 2

Fig 1 : The current data in abnormal state.
Fig 2 : DTC B1234.

EQBF515A

4. Are the DTC B1234 present and is parameter of "INCAR TEMP. SENSOR" fixed?
   ※ Parameter of "INCAR TEMP. SENSOR" will be fixed at 25℃(77°F), if there is any fault in INCAR TEMP. SENSOR.

YES

Go to "Inspection" procedure.

NO

Fault is intermittent caused by poor contact in the sensor's and/or A/C controller's connector or was repaired and A/C controller memory was not cleared. Thoroughly check connectors for looseness, poor connection, bending, corrosion, contamination, deterioration, or damage. Repair or replace as necessary and then go to "Verification of Vehicle Repair" procedure.

TERMINAL AND CONNECTOR INSPECTION E941866C

Refer to DTC B1233.

SIGNAL CIRCUIT INSPECTION E1781154

1. Check for open in harness.
   1) Ignition "OFF"
   2) Disconnect incar temp. sensor.
   3) Measure resistance between terminal "4" of incar temp. sensor and terminal "5" of A/C Control Unit..

Specification : Approx. 0 Ω

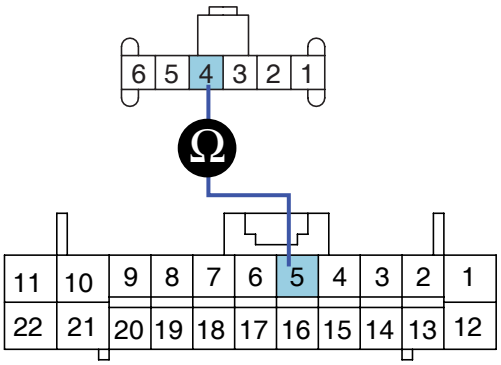

1. Motor(-)
2. Sensor ground
3. Humidity sensor signal
4. **In-car sensor temp. signal**
5. Sensor power (5V)
6. Motor(+)

SCMHA6532L

4) Is the measured resistance within specifications?

YES

Go to "Ground circuit Inspection " procedure.

NO

Check for open in harness. Repair as necessary and go to "Verification of Vehicle Repair" procedure.

GROUND CIRCUIT INSPECTION EF779270

1. Check for open in ground harness.

   1) Ignition "OFF"

   2) Disconnect incar temp. sensor.

   3) Measure resistance between terminal "2" of incar temp. sensor and terminal "12" of A/C Control Unit.

Specification : Approx. 0 Ω

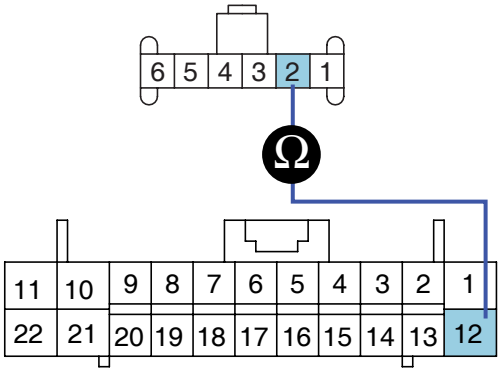

1. Motor(-)
2. **Sensor ground**
3. Humidity sensor signal
4. In-car sensor temp. signal
5. Sensor power (5V)
6. Motor(+)

SCMHA6533L

4) Is the measured resistance within specifications?

YES

Go to "Component Inspection " procedure.

NO

Check for open in ground harness. Repair as necessary and go to "Verification of Vehicle Repair" procedure.

COMPONENT INSPECTION EB9720FD

Refer to DTC B1233.

VERIFICATION OF VEHICLE REPAIR E10F3C2D

Refer to DTC B1233.

DTC B1237 AMBIENT TEMPERATURE SENSOR SHORT (LOW)

COMPONENT LOCATION ED485BBE

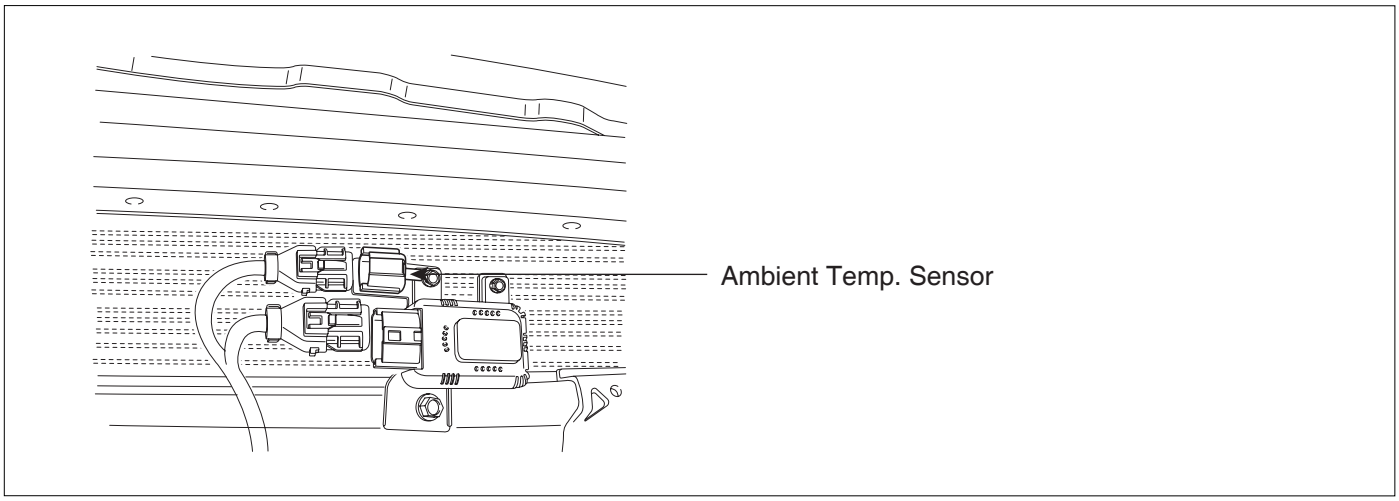

SCMHA6703L

GENERAL DESCRIPTION E2ABCF83

The ambient temperature senor located at the center stay of the condenser, detects ambient air temperature. It is a negative type thermistor whose resistance is inversely proportional to temperature. Its output is used for discharge temperature sensor, sensor fail-safe, temperature regulation door lock, blower motor level control, mix mode control and in-car humidity control.

DTC DESCRIPTION EF007347

The A/C controller sets DTC B1237 if there is a short circuit in ambient temp. sensor signal harness or the measured resistance value of sensor is less than threshold value(about 7.48kΩ)

DTC DETECTING CONDITION E76C2039

Item	Detecting Condition	Possible cause
DTC Strategy	• Resistance check	• Short circuit in harness • Faulty ambient temp. Sensor • Faulty A/C control unit
Threshold value	• < 7.48kΩ	
Detecting time	• 0.3 sec	
FAIL SAFE	• Control with the value of 20°C(68°F)	

SPECIFICATION EA51C1AC

Temperature[°C(°F)]	Resistance(kΩ)	Temperature[°C(°F)]	Resistance(kΩ)
-30(-22)	527.99	25(77)	30
-15(5)	218.21	35(95)	19.6
0(32)	97.83	50(122)	10.82
15(59)	47.12	60(140)	7.48

MONITOR SCANTOOL DATA E30FCFE7

1. Connect scantool to data link connector(DLC).

2. Engine "ON"

3. Monitor the "AMBIENT TEMP. SENSOR" Parameter on the Scantool.
   ※ Parameter of "AMBIENT TEMP. SENSOR" will be fixed at 20°C, if there is any fault in AMBIENT TEMP. SENSOR.

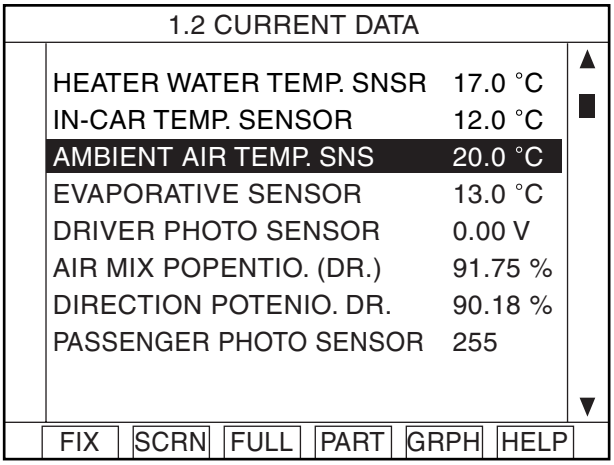

Fig. 1

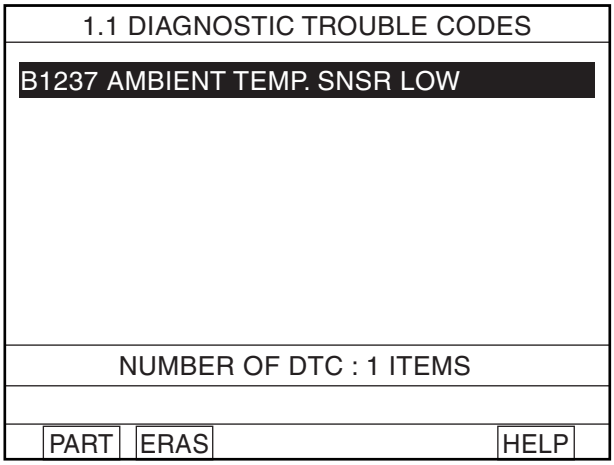

Fig. 2

Fig 1 : The current data in abnormal state.
Fig 2 : DTC B1237.

EQBF516B

4. Are the DTC B1237 present and is parameter of "AMBIENT TEMP. SENSOR" fixed?

YES

Go to "Inspection" procedure.

NO

Fault is intermittent caused by poor contact in the sensor's and/or A/C controller's connector or was repaired and A/C controller memory was not cleared. Thoroughly check connectors for looseness, poor connection, bending, corrosion, contamination, deterioration, or damage. Repair or replace as necessary and then go to "Verification of Vehicle Repair" procedure.

TERMINAL AND CONNECTOR INSPECTION E20274CA

1. Many malfunctions in the electrical system are caused by poor harness and terminals.
   Faults can also be caused by interference from other electrical systems, and mechanical or chemical damage.

2. Thoroughly check connectors for looseness, poor connection, bending, corrosion, contamination, deterioration, or damage.

3. Has a problem been found?

YES

Repair as necessary and go to "Verification of Vehicle Repair" procedure.

NO

Go to "Signal circuit inspection" procedure.

SIGNAL CIRCUIT INSPECTION EC50D358

1. Check for short to ground in harness.

   1) Ignition "OFF"

   2) Disconnect ambient temp. sensor.

   3) Measure resistance between terminal "1" of ambient temp. sensor and chassis ground.

Specification : Approx. ∞Ω

SCMHA6534L

   4) Is the measured resistance within specifications?

   YES

   Go to "Component Inspection" procedure.

   NO

   Check for short to ground in harness. Repair as necessary and go to "Verification of Vehicle Repair" procedure.

COMPONENT INSPECTION E3B39A1B

1. Check Ambient temp. sensor.

   1) Ignition "OFF"

   2) Disconnect ambient temp. sensor.

   3) Measure resistance between terminal "1" and "2" of ambient temp. sensor.

Specification : Refer the specifications in fig 3.

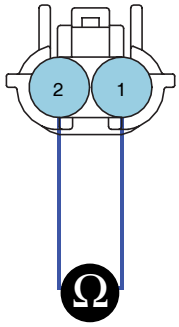

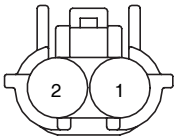

1. Ambient temp. sensor signal
2. Ambient temp. sensor ground

SCMHA6535L

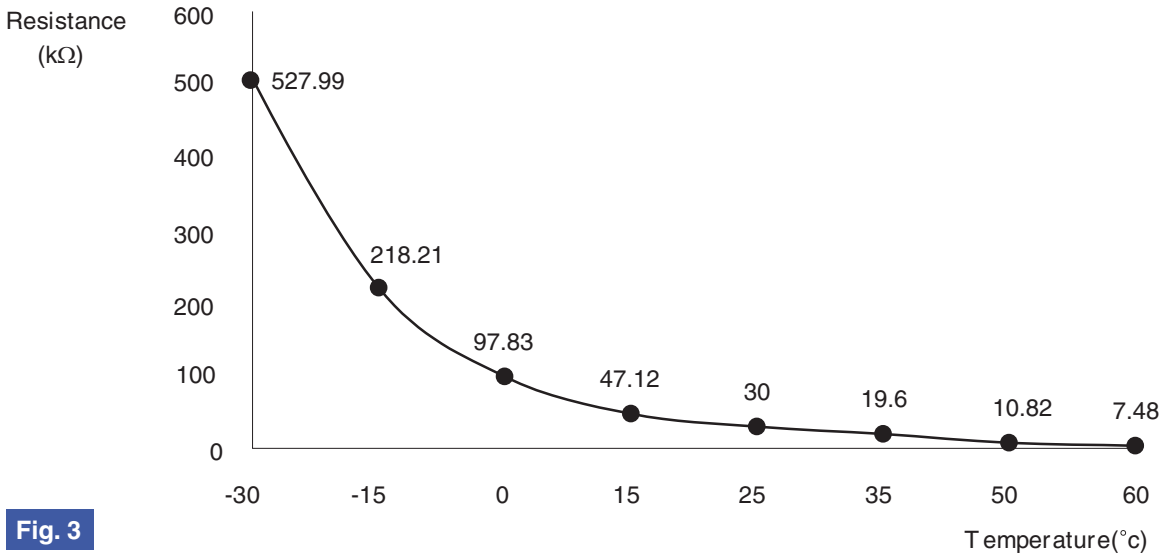

Fig. 3

Fig 3) Specifications : Resistance value of ambient temp. sensor as a function of temperature.

EQBF516F

4) Is the measured resistance within specifications in fig3? (tolerance limits ±3%)

YES

Go to "Check A/C Control Unit" procedure.

NO

Substitute with a known-good ambient temp. sensor and check for proper operation.
If the problem is corrected, replace ambient temp. sensor and then go to "Verification of Vehicle Repair" procedure.

2. Check A/C Control Unit

1) Engine "ON"

2) Disconnect ambient temp. sensor.

3) Measure voltage between terminal "3" of A/C Control Unit and chassis ground.

Specification : Approx. 5V

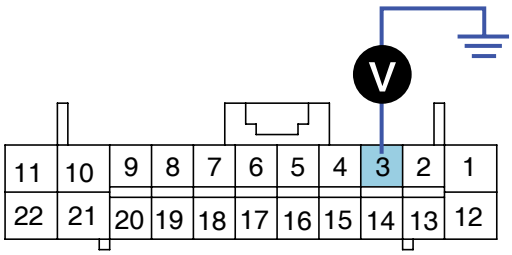

3. Ambient temp. sensor signal

SCMHA6536L

4) Is the measured voltage within specifications?

YES

Check connectors for looseness, poor connection, bending, corrosion, contamination, deterioration, or damage. Repair or replace as necessary and then go to "Verification of Vehicle Repair" procedure.

NO

Substitute with a known-good A/C Control Unit and check for proper operation.
If the problem is corrected, replace A/C Control Unit and then go to "Verification of Vehicle Repair" procedure.

VERIFICATION OF VEHICLE REPAIR EC81091E

After a repair, it is essential to verify that the fault has been corrected.

1. Connect scantool and select "Diagnostic Trouble Codes(DTCs)" mode and then clear DTC.
2. Operate the vehicle and monitor the DTC on the scantool.
3. Are any DTCs present?

YES

Go to the applicable troubleshooting procedure.

NO

System is performing to specification at this time.

DTC B1238 AMBIENT TEMPERATURE SENSOR OPEN (HIGH)

COMPONENT LOCATION EDF1649A

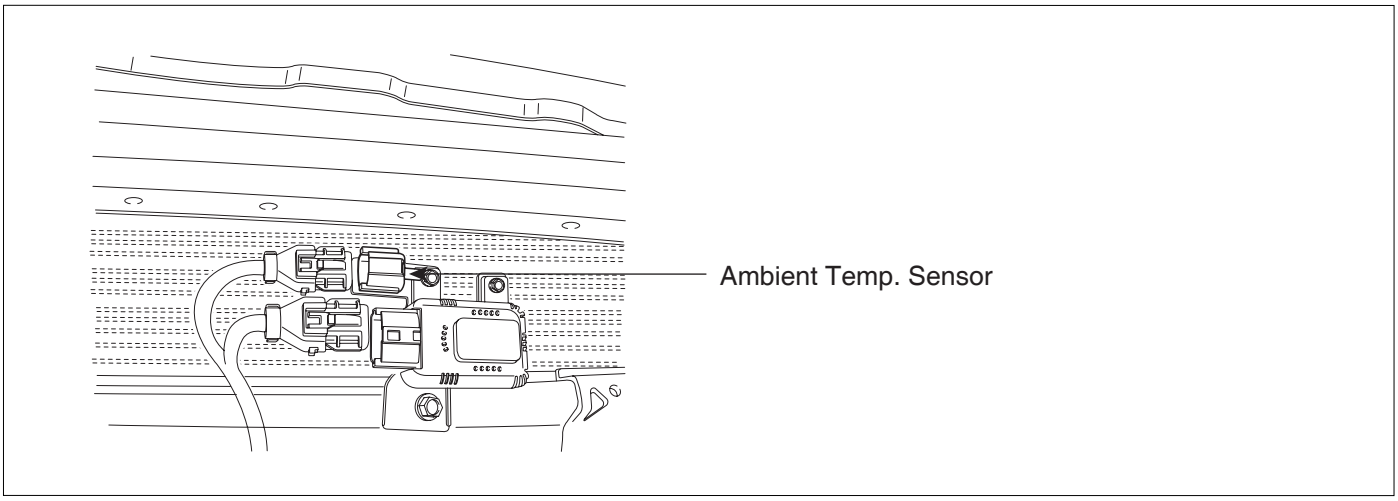

SCMHA6703L

GENERAL DESCRIPTION E4951473

The ambient temperature senor located at the center stay of the condenser, detects ambient air temperature. It is a negative type thermistor whose resistance is inversely proportional to temperature. Its output is used for discharge temperature sensor, sensor fail-safe, temperature regulation door lock, blower motor level control, mix mode control and in-car humidity control.

DTC DESCRIPTION EBEAF741

The A/C controller sets DTC B1238 if there is an open circuit in ambient temp. sensor signal harness or the measured resistance value of sensor is more than threshold value(about 527kΩ)

DTC DETECTING CONDITION ECC7468F

Item	Detecting Condition	Possible cause
DTC Strategy	• Resistance check	• Open Circuit in harness • Faulty ambient temp. Sensor • Faulty A/C control unit
Threshold value	• > 527kΩ	
Detecting time	• 0.3 sec	
FAIL SAFE	• Control with the value of 20°C(67°F)	

SPECIFICATION E611C585

Refer to DTC B1237.

MONITOR SCANTOOL DATA E1C87A66

1. Connect scantool to Data Link Connector(DLC).
2. Engine "ON"
3. Monitor the "AMBIENT TEMP. SENSOR" Parameter on the Scantool.

※ Parameter of "AMBIENT TEMP. SENSOR" will be fixed at 20℃(67°F), if there is any fault in AMBIENT TEMP. SENSOR.

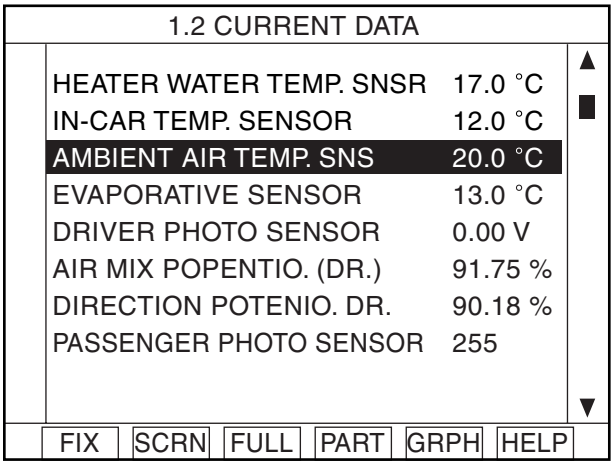

Fig. 1

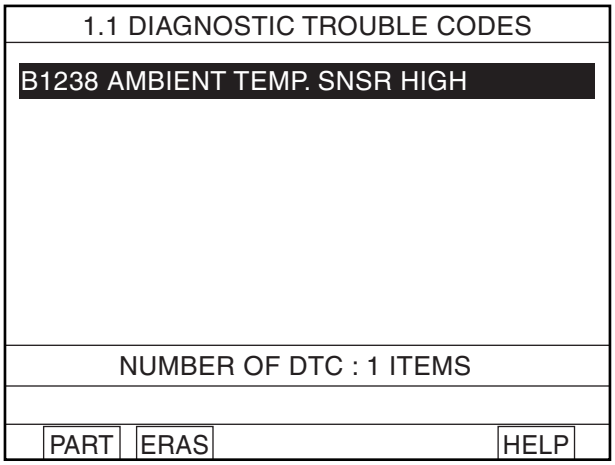

Fig. 2

Fig 1 : The current data in abnormal state.
Fig 2 : DTC B1238.

EQBF517A

4. Are the DTC B1238 present and is parameter of "AMBIENT TEMP. SENSOR" fixed?

YES

Go to "Inspection" procedure.

NO

Fault is intermittent caused by poor contact in the sensor's and/or A/C controller's connector or was repaired and A/C controller memory was not cleared. Thoroughly check connectors for looseness, poor connection, bending, corrosion, contamination, deterioration, or damage. Repair or replace as necessary and then go to "Verification of Vehicle Repair" procedure.

TERMINAL AND CONNECTOR INSPECTION E7F0FB77

Refer to DTC B1237.

SIGNAL CIRCUIT INSPECTION E124C6B6

1. Check for open in harness.

   1) Ignition "OFF"

   2) Disconnect ambient temp. sensor.

   3) Measure resistance between terminal "1" of ambient temp. sensor and terminal "3" of A/C Control Unit.

Specification :	Approx. 0 Ω

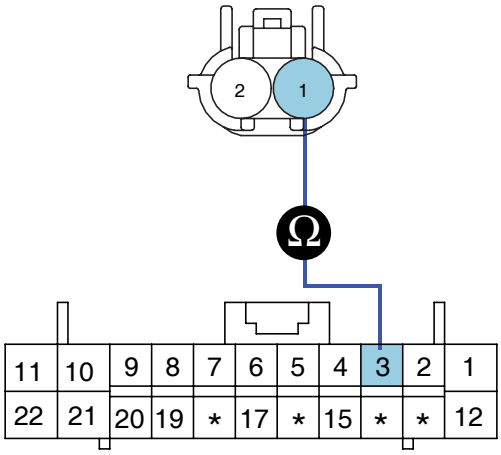

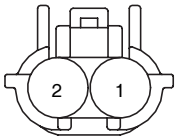

1. Ambient temp. sensor signal(+)
2. Ambient temp. sensor ground

SCMHA6537L

4) Is the measured resistance within specifications?

YES

Go to "Ground circuit Inspection " procedure.

NO

Check for open in harness. Repair as necessary and go to "Verification of Vehicle Repair" procedure.

GROUND CIRCUIT INSPECTION EA9F4A89

1. Check for open in ground harness.

   1) Ignition "OFF"

   2) Disconnect ambient temp. sensor.

   3) Measure resistance between terminal "2" of ambient temp. sensor and chassis ground.

Specification : Approx. 0 Ω

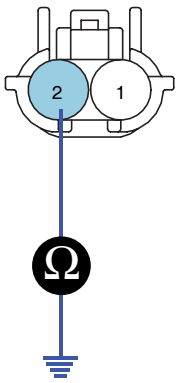

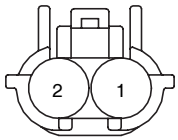

1. Ambient temp. sensor signal(+)
2. Ambient temp. sensor ground

SCMHA6538L

4) Is the measured resistance within specifications?

YES

Go to "Component Inspection " procedure.

NO

Check for open in ground harness. Repair as necessary and go to "Verification of Vehicle Repair" procedure.

COMPONENT INSPECTION E513CAB3

Refer to DTC B1237.

VERIFICATION OF VEHICLE REPAIR E58CEDF6

Refer to DTC B1237.

DTC B1241 EVAPORATOR TEMPERATURE SENSOR SHORT (LOW)

COMPONENT LOCATION E486BCF6

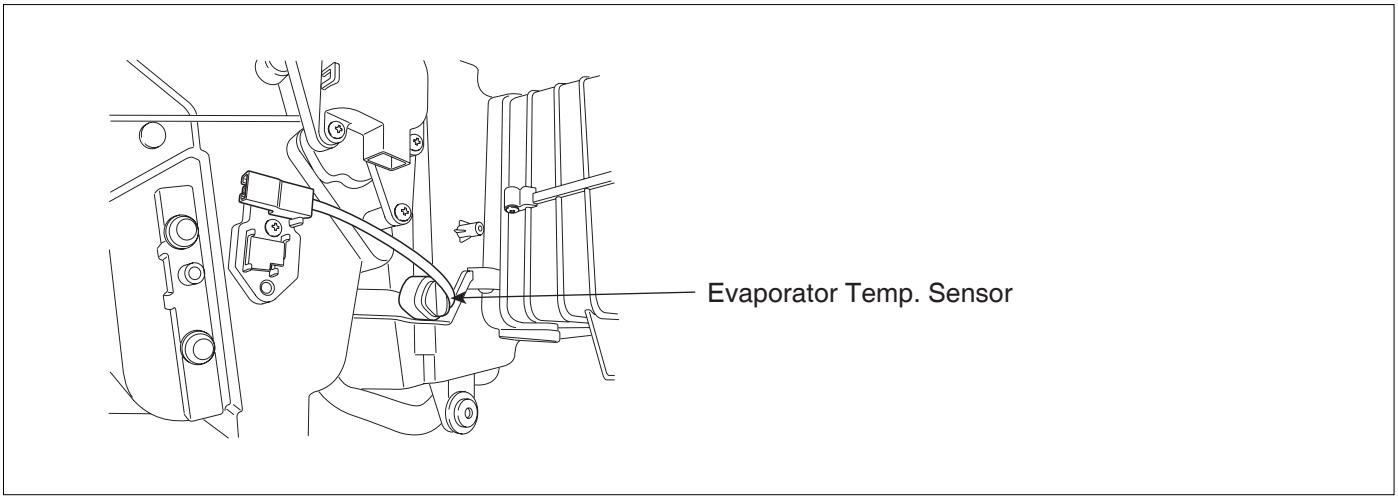

SCMHA6704L

GENERAL DESCRIPTION E8813265

The Evaporator temperature sensor located on heater unit, detects the core temperature and interrupts compressor relay power, in order to prevent evaporator freezing by excessive cooling. It is a negative type thermistor whose resistance is inversely proportional to temperature.

DTC DESCRIPTION E059C248

The A/C controller sets DTC B1241 if there is a short circuit in evaporator temp. sensor signal harness or the measured resistance value of sensor is less than threshold value(about 0.9kΩ)

DTC DETECTING CONDITION E71F012F

Item	Detecting Condition	Possible cause
DTC Strategy	• Resistance check	• Short circuit in harness • Faulty Evaporator temp. Sensor • Faulty A/C control unit
Threshold value	• < 0.9kΩ	
Detecting time	• 0.3 sec	
FAIL SAFE	• Control with the value of -2°C(28.4°F)	

SPECIFICATION E8C0ABD9

※ Resistence value of evaporator sensor as a function of temperature.

Temperature[°C(°F)]	Resistance(kΩ)	Temperature[°C(°F)]	Resistance(kΩ)
-10(14)	13.6	15(59)	3.9
0(32)	8	30(86)	2
5(41)	6.2	40(104)	1.3
10(50)	4.9	50(122)	0.9

MONITOR SCANTOOL DATA E6823FFB

1. Connect scantool to Data Link Connector(DLC).

2. Engine "ON"

3. Monitor the "EVAPORATIVE SENSOR" Parameter on the Scantool.

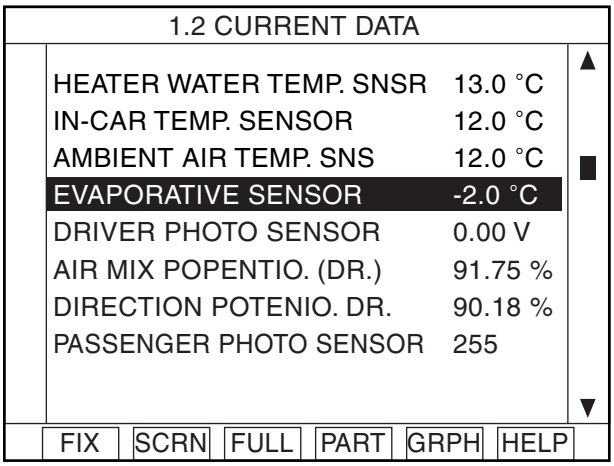

Fig. 1

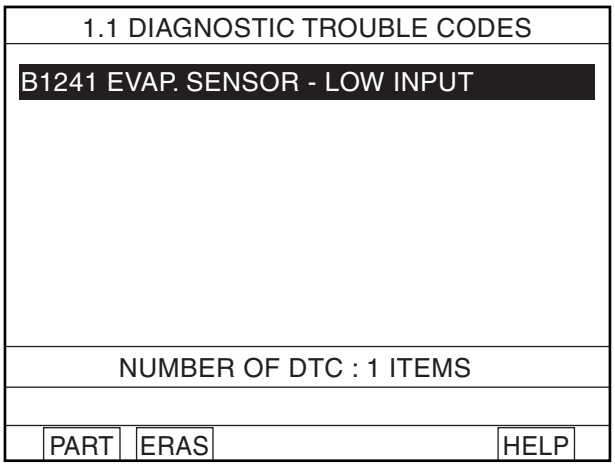

Fig. 2

Fig 1 : The current data in abnormal state.
Fig 2 : DTC B1241.

EQBF519B

4. Are the DTC B1241 present and is parameter of "EVAPORATIVE SENSOR" fixed?
   ※ Parameter of "EVAPORATIVE SENSOR" will be fixed at -2℃(28.4°F), if there is any fault in EVAPORATIVE SENSOR.

   YES

   Go to "Inspection" procedure.

   NO

   Fault is intermittent caused by poor contact in the sensor's and/or A/C controller's connector or was repaired and A/C controller memory was not cleared. Thoroughly check connectors for looseness, poor connection, bending, corrosion, contamination, deterioration, or damage. Repair or replace as necessary and then go to "Verification of Vehicle Repair" procedure.

TERMINAL AND CONNECTOR INSPECTION EAF84DC8

1. Many malfunctions in the electrical system are caused by poor harness and terminals.
   Faults can also be caused by interference from other electrical systems, and mechanical or chemical damage.

2. Thoroughly check connectors for looseness, poor connection, bending, corrosion, contamination, deterioration, or damage.

3. Has a problem been found?

   YES

   Repair as necessary and go to "Verification of Vehicle Repair" procedure.

NO

Go to "Signal circuit inspection" procedure.

SIGNAL CIRCUIT INSPECTION EAF42A6E

1. Check for short to ground in harness.
   1) Ignition "OFF"
   2) Disconnect evaporator temp. sensor.
   3) Measure resistance between terminal "1" of evaporator temp. sensor and chassis ground.

Specification : Approx. ∞Ω

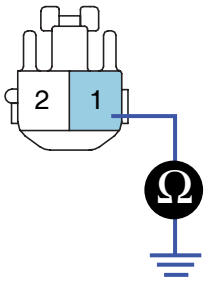

1. Evaporator temp. sensor signal
2. Evaporator temp. sensor ground

SCMHA6539L

   4) Is the measured resistance within specifications?

YES

Go to "Component Inspection" procedure.

NO

Check for short to ground in harness. Repair as necessary and go to "Verification of Vehicle Repair" procedure.

COMPONENT INSPECTION EB45B875

1. Check evaporator temp. sensor.
   1) Ignition "OFF"
   2) Disconnect evaporator temp. sensor.
   3) Measure resistance between terminal "1" and "2" of evaporator temp. sensor.

Specification : Refer the specifications in fig 3.

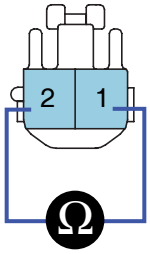

1. Evaporator temp. sensor signal
2. Evaporator temp. sensor ground

SCMHA6540L

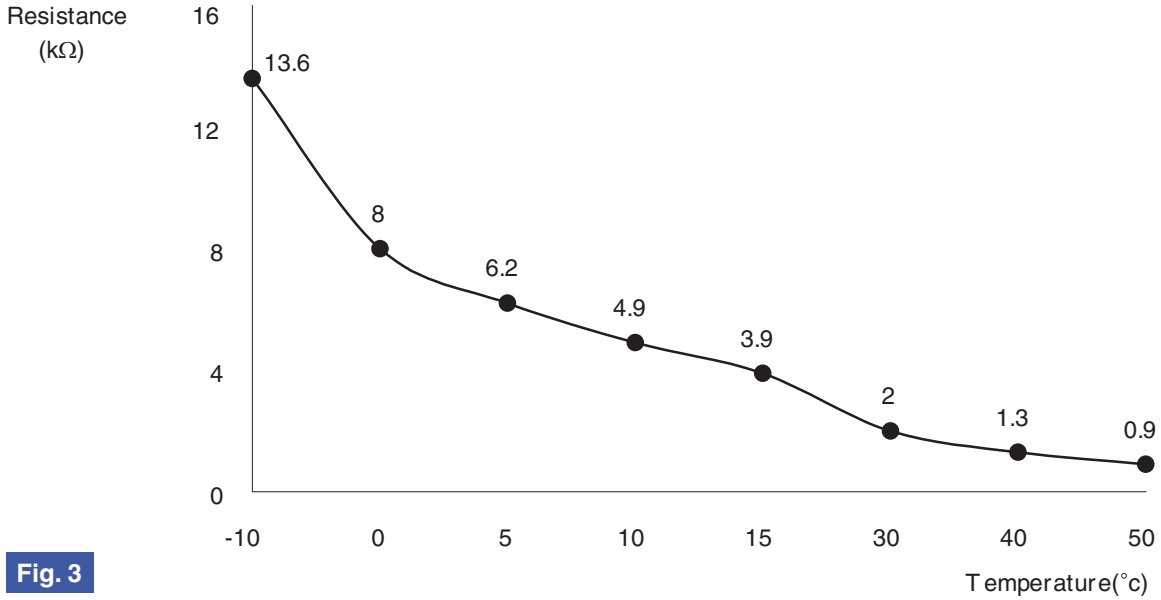

Fig. 3

Fig 3) Specifications : Resistance value of evaporator temp. sensor as a function of temperature.

EQBF519F

4) Is the measured resistance within specifications in fig3? (tolerance limits ±3%)

YES

Go to "Check A/C Control Unit" procedure.

NO

Substitute with a known-good evaporator temp. sensor and check for proper operation.
If the problem is corrected, replace evaporator temp. sensor and then go to "Verification of Vehicle Repair" procedure.

2. Check A/C Control Unit

1) Engine "ON"

2) Disconnect evaporator temp. sensor.

3) Measure voltage between terminal "6" of A/C Control Unit and chassis ground.

Specification : Approx. 5V

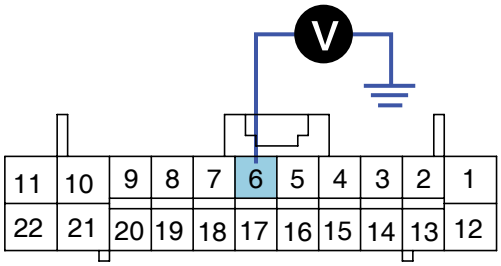

6. Evaporator temp. sensor signal

SCMHA6541L

4) Is the measured voltage within specifications?

YES

Check connectors for looseness, poor connection, bending, corrosion, contamination, deterioration, or damage. Repair or replace as necessary and then go to "Verification of Vehicle Repair" procedure.

NO

Substitute with a known-good A/C Control Unit and check for proper operation.
If the problem is corrected, replace A/C Control Unit and then go to "Verification of Vehicle Repair" procedure.

VERIFICATION OF VEHICLE REPAIR E32624E3

After a repair, it is essential to verify that the fault has been corrected.

1. Connect scantool and select "Diagnostic Trouble Codes(DTCs)" mode and then clear DTC.
2. Operate the vehicle and monitor the DTC on the scantool.
3. Are any DTCs present?

YES

Go to the applicable troubleshooting procedure.

NO

System is performing to specification at this time.

DTC B1242 EVAPORATOR TEMPERATURE SENSOR OPEN (HIGH)

COMPONENT LOCATION EB9F7C1F

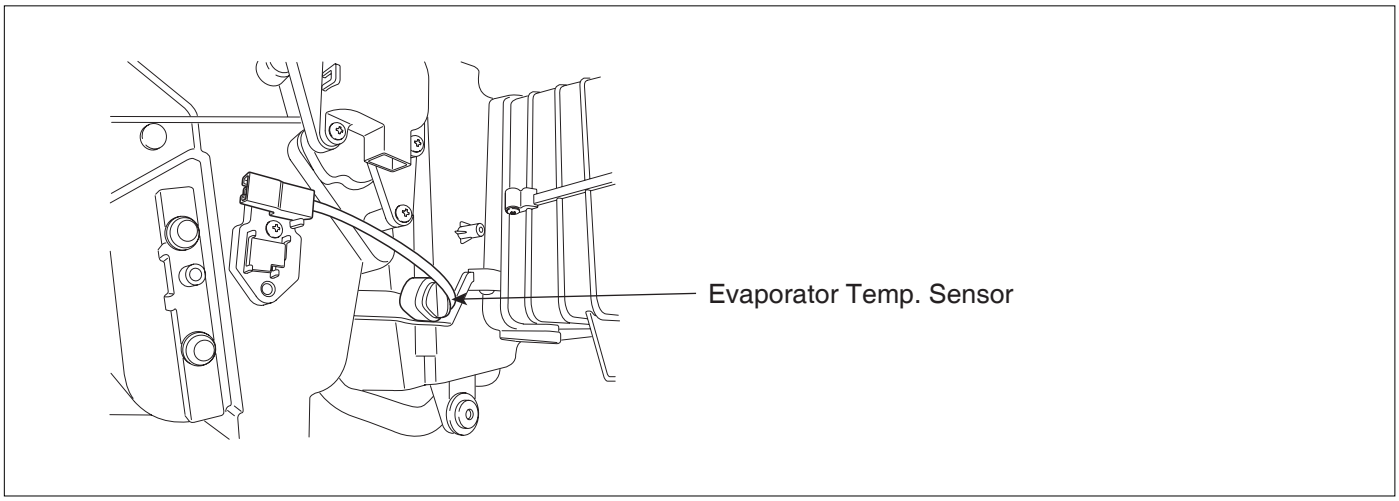

SCMHA6704L

GENERAL DESCRIPTION E073E679

The Evaporator temperature sensor located on heater unit, detects the core temperature and interrupts compressor relay power, in order to prevent evaporator freezing by excessive cooling. It is a negative type thermistor whose resistance is inversely proportional to temperature.

DTC DESCRIPTION E9354B2A

The A/C controller sets DTC B1242 if there is an open circuit in evaporator temp. sensor signal harness or the measured resistance value of sensor is more than threshold value(about 13.6kΩ)

DTC DETECTING CONDITION E61B9B78

Item	Detecting Condition	Possible cause
DTC Strategy	• Resistance check	• Open Circuit in harness • Faulty Evaporator temp. Sensor • Faulty A/C control unit
Threshold value	• > 13.6kΩ	
Detecting time	• 0.3 sec	
FAIL SAFE	• Control with the value of -2°C(28.4°F)	

SPECIFICATION E70F7716

Refer to DTC B1241.

MONITOR SCANTOOL DATA E1C7971C

1. Connect scantool to Data Link Connector(DLC).
2. Engine "ON"
3. Monitor the "EVAPORATIVE SENSOR" Parameter on the Scantool.

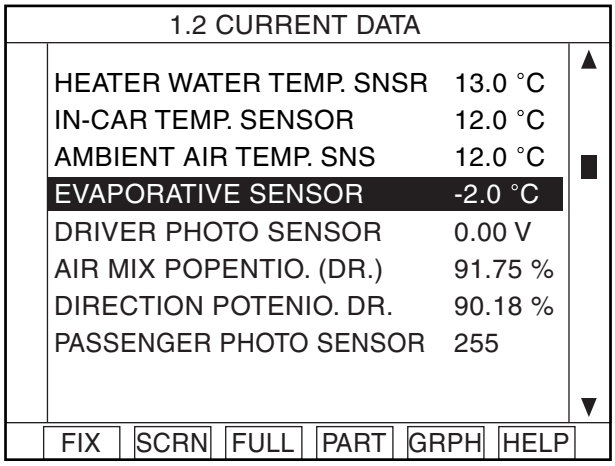

Fig. 1

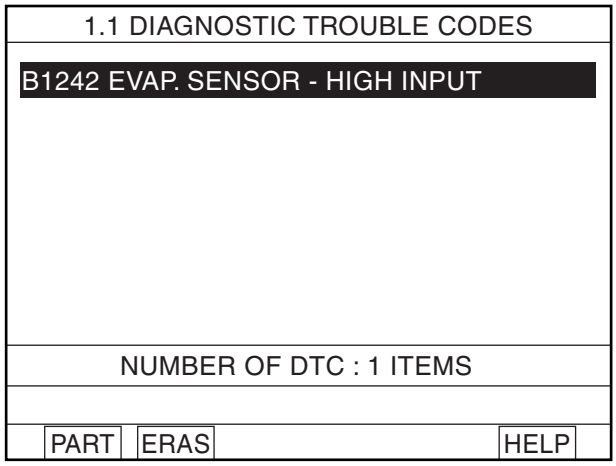

Fig. 2

Fig 1 : The current data in abnormal state.
Fig 2 : DTC B1242.

EQBF520A

4. Are the DTC B1242 present and is parameter of "EVAPORATIVE SENSOR" fixed?
   ※ Parameter of "EVAPORATIVE SENSOR" will be fixed at -2℃(28.4°F), if there is any fault in EVAPORATIVE SENSOR.

   YES

   Go to "Inspection" procedure.

   NO

   Fault is intermittent caused by poor contact in the sensor's and/or A/C controller's connector or was repaired and A/C controller memory was not cleared. Thoroughly check connectors for looseness, poor connection, bending, corrosion, contamination, deterioration, or damage. Repair or replace as necessary and then go to "Verification of Vehicle Repair" procedure.

TERMINAL AND CONNECTOR INSPECTION E2790250

Refer to DTC B1241.

SIGNAL CIRCUIT INSPECTION EE8145E7

1. Check for open in harness.

   1) Ignition "OFF"

   2) Disconnect evaporator temp. sensor.

   3) Measure resistance between terminal "1" of evaporator temp. sensor and terminal "6" of A/C Control Unit.

Specification :	Approx. 0 Ω

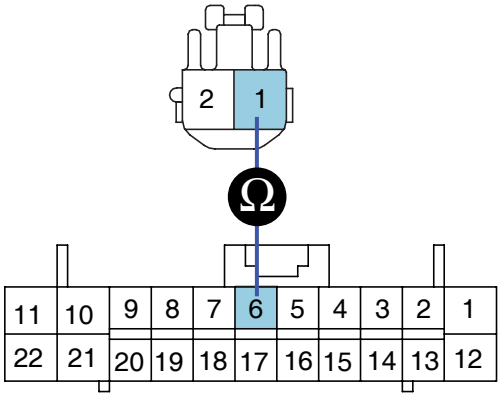

1. Evaporator temp. sensor signal
2. Evaporator temp. sensor ground

SCMHA6542L

4) Is the measured resistance within specifications?

YES

Go to "Ground circuit Inspection " procedure.

NO

Check for open in harness. Repair as necessary and go to "Verification of Vehicle Repair" procedure.

GROUND CIRCUIT INSPECTION ED7ACE72

1. Check for open in ground harness.

   1) Ignition "OFF"

   2) Disconnect evaporator temp. sensor.

   3) Measure resistance between terminal "2" of evaporator temp. sensor and chassis ground.

Specification : Approx. 0 Ω

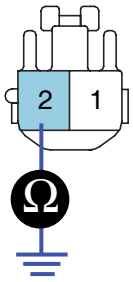

1. Evaporator temp. sensor signal
2. Evaporator temp. sensor ground

SCMHA6543L

4) Is the measured resistance within specifications?

YES

Go to "Component Inspection " procedure.

NO

Check for open in harness. Repair as necessary and go to "Verification of Vehicle Repair" procedure.

COMPONENT INSPECTION EAB63ADA

Refer to DTC B1241.

VERIFICATION OF VEHICLE REPAIR E70127E7

Refer to DTC B1241.

DTC B1245 AIR MIX POTENTIOMETER OPEN (LOW) - DRIVER

COMPONENT LOCATION E719A3CD

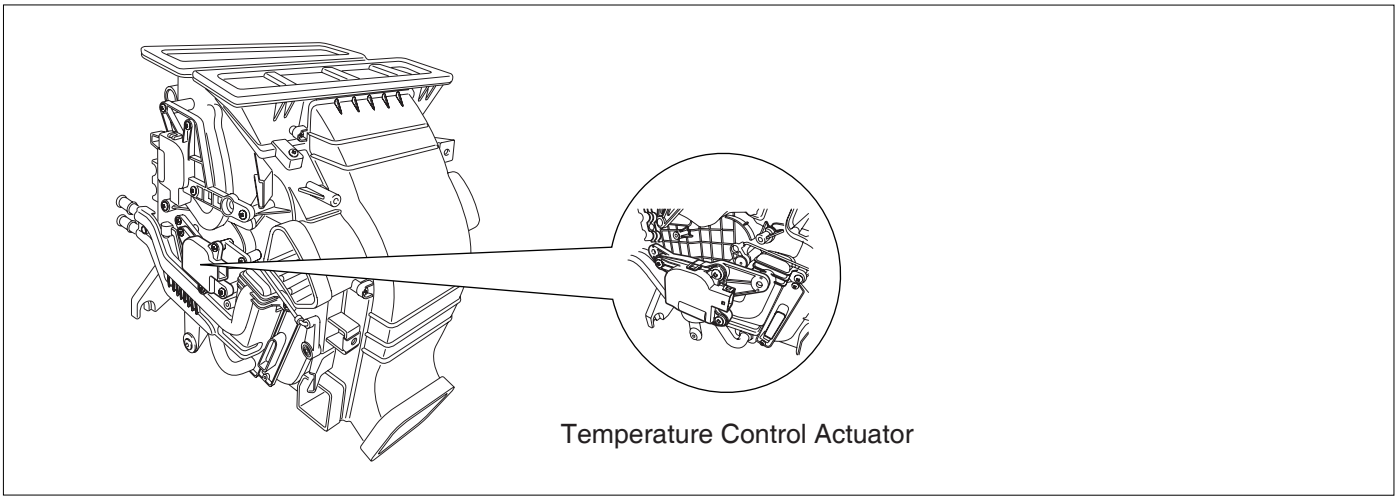

SCMHA6705L

GENERAL DESCRIPTION E1CAAD32

Temperature control actuator located at heater unit, regulates the temperature by the procedure as follows. Signal from control unit adjusts position of temp. door by operating temp. motor and then temperature will be regulated by the hot/cold air ratio decided by position of temp. door.

DTC DESCRIPTION E60167C1

The A/C controller sets DTC B1245 if there is an open circuit or poor connection in the air mix potentiometer.

DTC DETECTING CONDITION E5EC5C4F

Item	Detecting Condition	Possible cause
DTC Strategy	• Voltage check	• Poor connection of connected part • Open circuit in harness • Short circuit in harness • Faulty driver Air Mix potentiometer
Threshold value	• < 0.1V	
Detecting time	• 0.3 sec	
FAIL SAFE	• If temperature setting 17~24.5°C(63~76°F) fix at max. cooling position. • If temperature setting 25~32°C(77~90°F) fix at max. heating position.	

SPECIFICATION E0B2DE0B

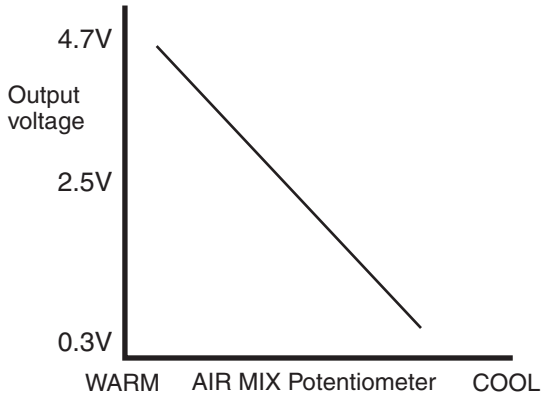

EQBF521B

MONITOR SCANTOOL DATA ED7CC1EA

1. Connect scantool to Data Link Connector(DLC).
2. Engine "ON"
3. Monitor the "Driver Air Mix Potentiometer" Parameter on the Scantool while operating temp. switch.

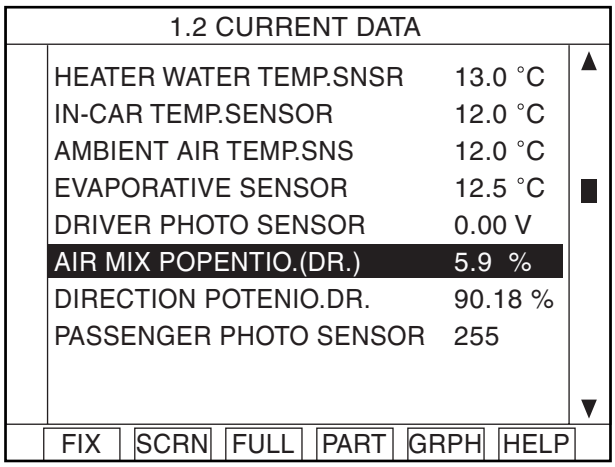

Fig. 1

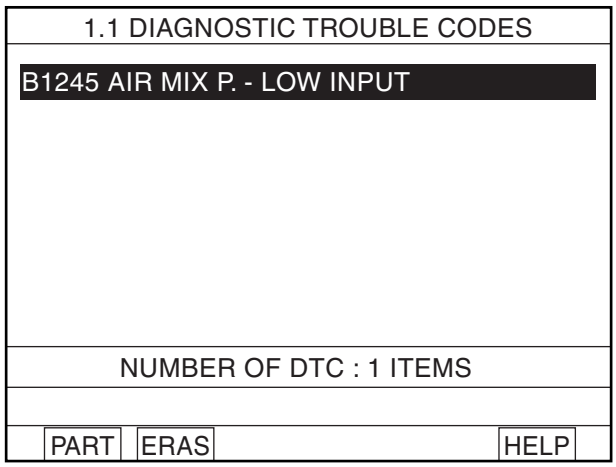

Fig. 2

Fig 1 : The current data in abnormal state.
Fig 2 : DTC B1245.

EQBF521C

4. Are the DTC B1245 present and is parameter of "Driver Air Mix Potentiometer" fixed?
   ※ Parameter of "Driver Air Mix Potentiometer" will be fixed at 100%(or any value above 90%), or 0% (or any value below 10%), if there is any fault in Driver Air Mix potentiometer.

   YES

   Go to "Inspection" procedure.

NO

Fault is intermittent caused by poor contact in the sensor's and/or A/C controller's connector or was repaired and A/C controller memory was not cleared. Thoroughly check connectors for looseness, poor connection, bending, corrosion, contamination, deterioration, or damage. Repair or replace as necessary and then go to "Verification of Vehicle Repair" procedure.

TERMINAL AND CONNECTOR INSPECTION E3032942

1. Many malfunctions in the electrical system are caused by poor harness and terminals.
   Faults can also be caused by interference from other electrical systems, and mechanical or chemical damage.
2. Thoroughly check connectors for looseness, poor connection, bending, corrosion, contamination, deterioration, or damage.
3. Has a problem been found?

YES

Repair as necessary and go to "Verification of Vehicle Repair" procedure.

NO

Go to "Signal circuit inspection" procedure.

SIGNAL CIRCUIT INSPECTION EC98F659

1. Check for open in harness.
   1) Ignition "OFF"
   2) Disconnect Driver Air Mix potentiometer.
   3) Measure resistance between terminal "6" of Driver Air Mix Potentiometer and terminal "18" of A/C control unit.

Specification :	Approx. 0 Ω

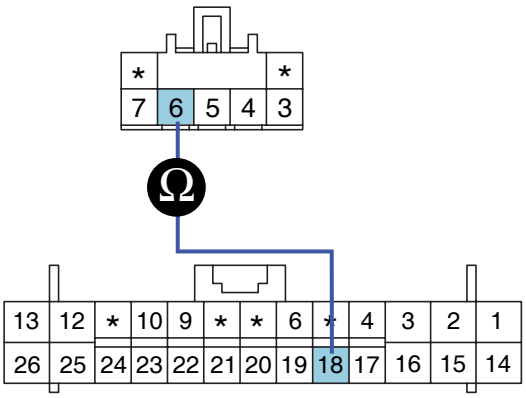

3. Motor (Cool)
4. Motor (Warm)
5. Sensor reference voltage(+5V)
6. **Potentiometer signal**
7. Potentiometer ground

SCMHA6544L

   4) Is the measured resistance within specifications?

YES

Go to "Check for short to ground in harness" procedure.

NO

Check for open in signal harness. Repair as necessary and go to "Verification of Vehicle Repair" procedure.

2. Check for short to ground in harness.

   1) Ignition "OFF"

   2) Disconnect Driver Air Mix potentiometer.

   3) Measure resistance between terminal "6" of Driver Air Mix Potentiometer and chassis ground.

Specification : Approx. ∞ Ω

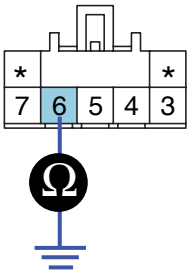

3. Motor (Cool)
4. Motor (Warm)
5. Sensor reference voltage(+5V)
6. **Potentiometer signal**
7. Potentiometer ground

SCMHA6545L

   4) Is the measured resistance within specifications?

YES

Go to "Power circuit Inspection" procedure.

NO

Check for short to ground in signal harness. Repair as necessary and go to "Verification of Vehicle Repair" procedure.

POWER SUPPLY CIRCUIT INSPECTION E2387022

1. Check for short or open in harness.

   1) Ignition "ON"

   2) Connect Driver Air Mix Potentiometer.

   3) Measure voltage between terminal "7" of Driver Air Mix Potentiometer and chassis ground.

Specification : Approx. 5V

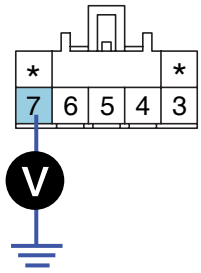

3. Motor (Cool)
4. Motor (Warm)
5. Sensor reference voltage(+5V)
6. Potentiometer signal
7. Potentiometer ground

SCMHA6546L

4) Is the measured voltage within specifications?

YES

Go to "Component inspection" procedure.

NO

Check for short or open in power harness. Repair as necessary and go to "Verification of Vehicle Repair" procedure.

COMPONENT INSPECTION EFB9A59D

1. Check actuator motor.

   1) Ignition "OFF"

   2) Disconnect Driver Air Mix Potentiometer.

   3) Verify that the temperature actuator operates to the hot position when connecting 12V to the terminal "3" and grounding terminal "4".

   4) Verify that the temperature actuator operates to the cool position when the connections are reversed.

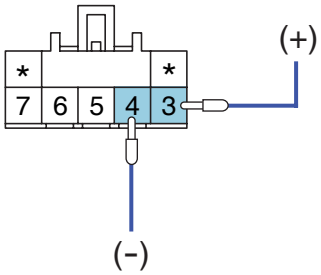

3. Motor (Cool)
4. Motor (Warm)
5. Sensor reference voltage(+5V)
6. Potentiometer signal
7. Potentiometer ground

SCMHA6547L

   5) Does the actuator work properly?

YES

Go to "Check potentiometer" procedure.

NO

Substitute with a known-good actuator and check for proper operation. If the problem is corrected, replace actuator and then go to "Verification of Vehicle Repair" procedure.

2. Check potentiometer

1) Ignition "ON"

2) Connect Driver Air Mix potentiometer.

3) Measure voltage between terminal "6" and "7" of Driver Air Mix potentiometer while operating the temp. switch.

Specification : Refer the specifications in fig 3)

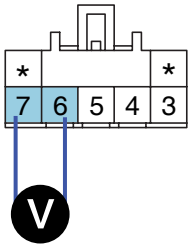

3. Motor (Cool)
4. Motor (Warm)
5. Sensor reference voltage(+5V)
6. Potentiometer signal
7. Potentiometer ground

SCMHA6548L

Door position	Voltage (6-7)	Error detecting
MAX. Cooling	0.3 ± 0.15V	Low voltage : 0.08V or less
MAX. Heating	4.7 ± 0.15V	High voltage : 4.9V or more

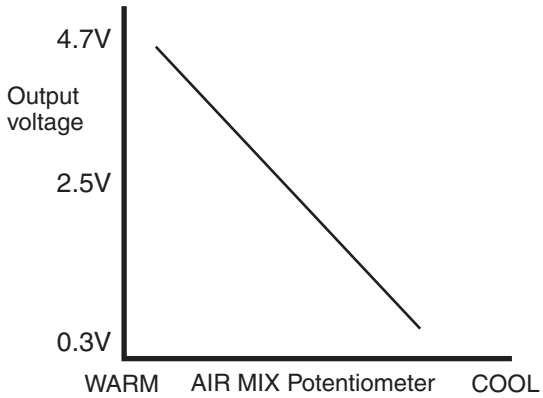

Fig. 3

Fig 3) Specifications : Voltage value of air mix potentiometer as a function of position of setting temperature.

EQBF521J

4) Is the measured voltage within specifications in fig3?

YES

Check connectors for looseness, poor connection, bending, corrosion, contamination, deterioration, or damage. Repair or replace as necessary and then go to "Verification of Vehicle Repair" procedure.

NO

Substitute with a known-good actuator and check for proper operation. If the problem is corrected, replace actuator and then go to "Verification of Vehicle Repair" procedure.

VERIFICATION OF VEHICLE REPAIR E883B840

After a repair, it is essential to verify that the fault has been corrected.

1. Connect scantool and select "Diagnostic Trouble Codes(DTCs)" mode and then clear DTC.
2. Operate the vehicle and monitor the DTC on the scantool.
3. Are any DTCs present?

YES

Go to the applicable troubleshooting procedure.

NO

System is performing to specification at this time.

DTC B1246 AIR MIX POTENTIOMETER SHORT (HIGH) - DRIVER

COMPONENT LOCATION E3948C9B

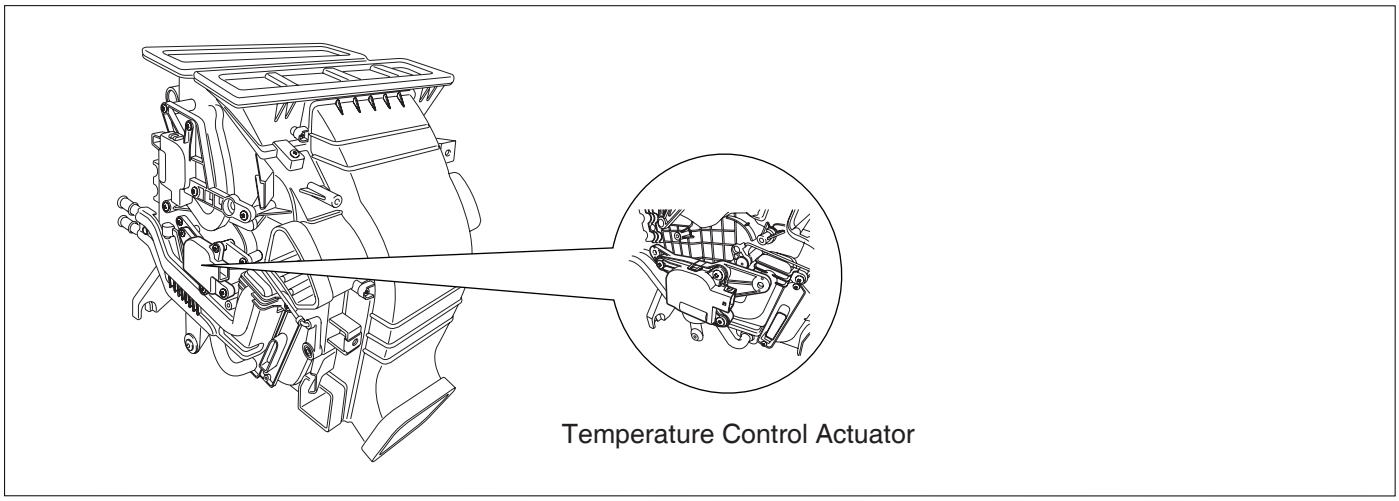

SCMHA6705L

GENERAL DESCRIPTION E8B15D5D

Temperature control actuator located at heater unit, regulates the temperature by the procedure as follows. Signal from control unit adjusts position of temp. door by operating temp. motor and then temperature will be regulated by the hot/cold air ratio decided by position of temp. door.

DTC DESCRIPTION ECABD6D9

The A/C controller sets DTC B1246 if there is a short to power in the air mix potentiometer.

DTC DETECTING CONDITION E946FDCA

Item	Detecting Condition	Possible cause
DTC Strategy	• Voltage check	• Short circuit in harness • Faulty driver Air Mix potentiometer
Threshold value	• > 4.9V	
Detecting time	• 0.3 sec	
FAIL SAFE	• If temperature setting 17~24.5°C(63~76°F) fix at max. cooling position. • If temperature setting 25~32°C(77~90°F) fix at max. heating position.	

SPECIFICATION ED6C5BE4

Refer to DTC B1245.

MONITOR SCANTOOL DATA E0F5D9A1

1. Connect scantool to Data Link Connector(DLC).
2. Engine "ON"

3. Monitor the "Driver Air Mix Potentiometer" Parameter on the Scantool while operating temp. switch.

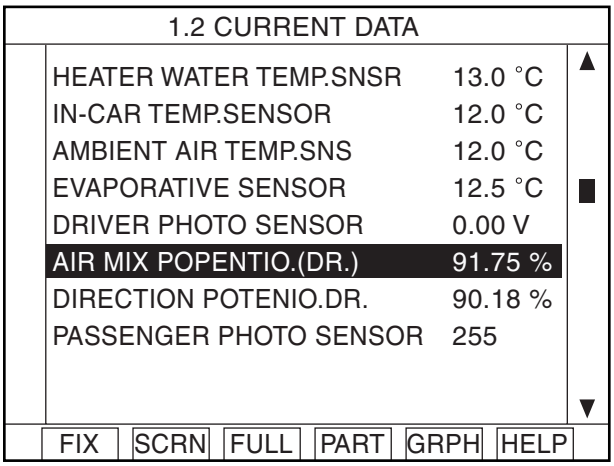

Fig. 1

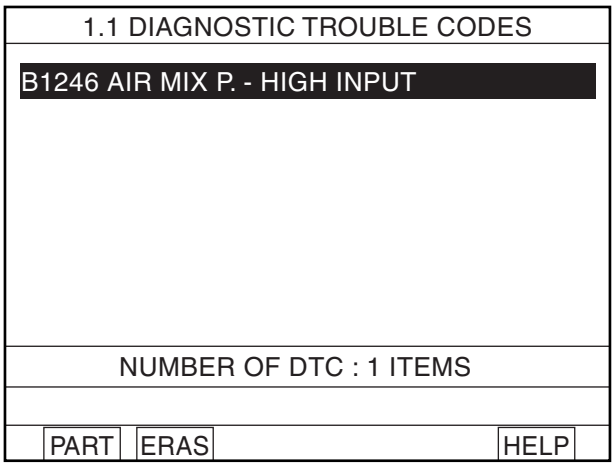

Fig. 2

Fig 1 : The current data in abnormal state.
Fig 2 : DTC B1246.

EQBF522A

4. Are the DTC B1246 present and is parameter of "Driver Air Mix potentiometer" fixed?
※ Parameter of "Driver Air Mix potentiometer" will be fixed at 100%(or any value above 90%), or 0% (or any value below 10%), if there is any fault in Driver Air Mix potentiometer.

YES

Go to "Inspection" procedure.

NO

Fault is intermittent caused by poor contact in the sensor's and/or A/C controller's connector or was repaired and A/C controller memory was not cleared. Thoroughly check connectors for looseness, poor connection, bending, corrosion, contamination, deterioration, or damage. Repair or replace as necessary and then go to "Verification of Vehicle Repair" procedure.

TERMINAL AND CONNECTOR INSPECTION EFE9FA90

Refer to DTC B1245.

SIGNAL CIRCUIT INSPECTION EC608CD7

1. Check for short in harness.

   1) Ignition "OFF"

   2) Disconnect Driver Air Mix potentiometer.

   3) Measure resistance between terminal "6" and "5" of Driver Air Mix potentiometer.

Specification : Approx. ∞ Ω

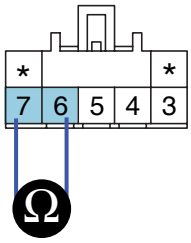

3. Motor (Cool)
4. Motor (Warm)
5. Sensor reference voltage(+5V)
6. Potentiometer signal
7. Potentiometer ground

SCMHA6549L

4) Is the measured resistance within specifications?

YES

Go to "Ground circuit Inspection" procedure.

NO

Check for short to power harness in signal harness. Repair as necessary and go to "Verification of Vehicle Repair" procedure.

GROUND CIRCUIT INSPECTION E4163DA5

1. Check for open in harness.

1) Ignition "OFF"

2) Disconnect Driver Air Mix Potentiometer.

3) Measure resistance between terminal "7" of Driver Air Mix Potentiometer and chassis ground.

Specification : Approx. 0 Ω

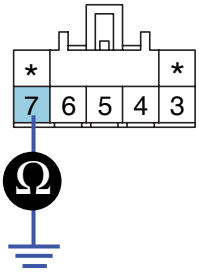

3. Motor (Cool)
4. Motor (Warm)
5. Sensor reference voltage(+5V)
6. Potentiometer signal
7. Potentiometer ground

SCMHA6550L

4) Is the measured resistance within specifications?

YES

Go to "Component Inspection" procedure.

NO

Check for open in ground harness. Repair as necessary and go to "Verification of Vehicle Repair" procedure.

COMPONENT INSPECTION E74FBEDE

Refer to DTC B1245.

VERIFICATION OF VEHICLE REPAIR EB8C6BA5

Refer to DTC B1245.

DTC B1249 DIRECTION POTENTIOMETER OPEN (LOW) - DRIVER

COMPONENT LOCATION E1A16B4D

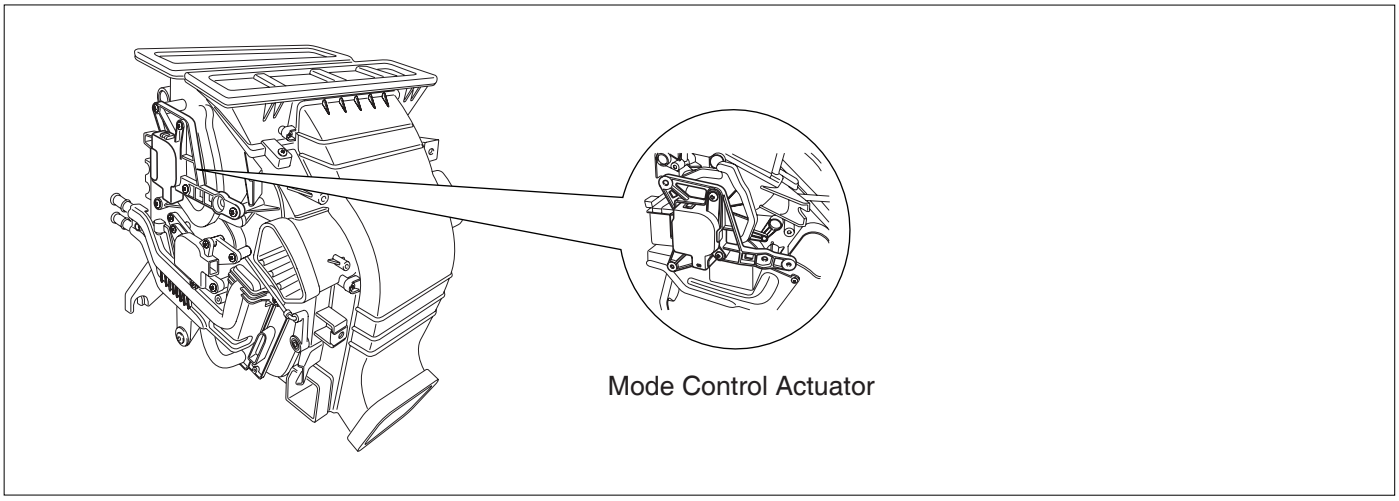

SCMHA6706L

GENERAL DESCRIPTION E25C3DBB

The mode control actuator mounted on heater unit, adjusts position of mode door by operating Direction Motor based on signal of A/C control unit. Pressing mode select switch makes the mode control actuator shift in order of vent→ B/L → floor → mix.

DTC DESCRIPTION E2F32A26

The A/C controller sets DTC B1249 if there is an open circuit or poor connection in the Direction potentiometer.

DTC DETECTING CONDITION E699D917

Item	Detecting Condition	Possible cause
DTC Strategy	• Voltage check	• Poor connection of connected part • Open circuit in harness • Short circuit in harness • Faulty driver direction potentiometer
Threshold value	• < 0.1V	
Detecting time	• 0.3 sec	
FAIL SAFE	• Fix vent position, while selecting vent mode. • Fix defrost position while selecting except vent mode.	

SPECIFICATION E0101031

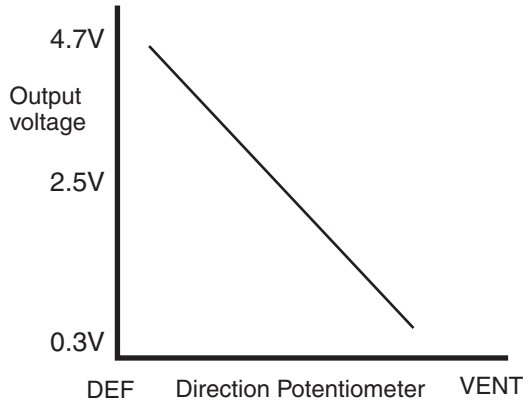

EQBF523B

MONITOR SCANTOOL DATA E63388EE

1. Connect scantool to Data Link Connector(DLC).
2. Engine "ON"
3. Monitor the "DR. DIRECTION POTENTIO." parameter on the scantool while operating mode switch.

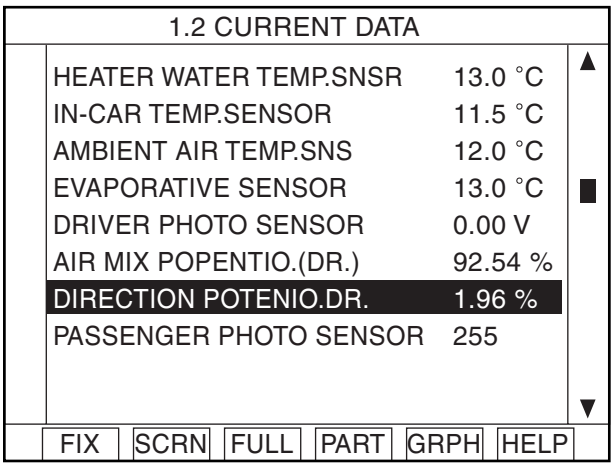

Fig. 1

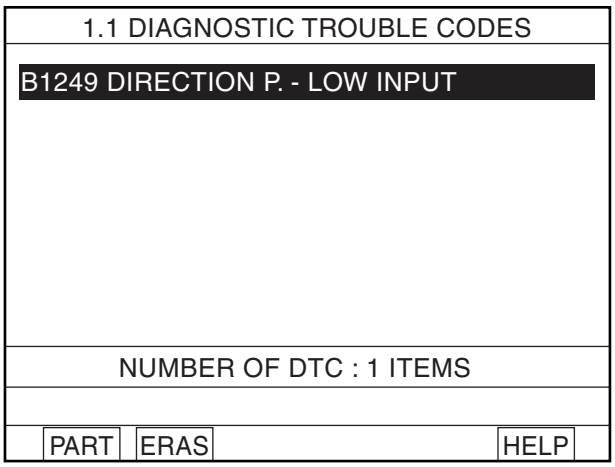

Fig. 2

Fig 1 : The current data in abnormal state.
Fig 2 : DTC B1249.

EQBF523C

4. Are the DTC B1249 present and is parameter of "DR. DIRECTION POTENTIO." fixed?
   ※ Parameter of "DR. DIRECTION POTENTIO." will be fixed at 100%(or any value above 90%), or 0% (or any value below 10%), if there is any fault in Driver Direction potentiometer.

YES

Go to "Inspection" procedure.

NO

Fault is intermittent caused by poor contact in the sensor's and/or A/C controller's connector or was repaired and A/C controller memory was not cleared. Thoroughly check connectors for looseness, poor connection, bending, corrosion, contamination, deterioration, or damage. Repair or replace as necessary and then go to "Verification of Vehicle Repair" procedure.

TERMINAL AND CONNECTOR INSPECTION E3E72485

1. Many malfunctions in the electrical system are caused by poor harness and terminals.
   Faults can also be caused by interference from other electrical systems, and mechanical or chemical damage.
2. Thoroughly check connectors for looseness, poor connection, bending, corrosion, contamination, deterioration, or damage.
3. Has a problem been found?

YES

Repair as necessary and go to "Verification of Vehicle Repair" procedure.

NO

Go to "Signal circuit inspection" procedure.

SIGNAL CIRCUIT INSPECTION EEDADDD6

1. Check for open in harness.
   1) Ignition "OFF"
   2) Disconnect Driver mode Actuator.
   3) Measure resistance between terminal "6" of Driver Direction potentiometer and terminal "21" of A/C control unit.

Specification : Approx. 0 Ω

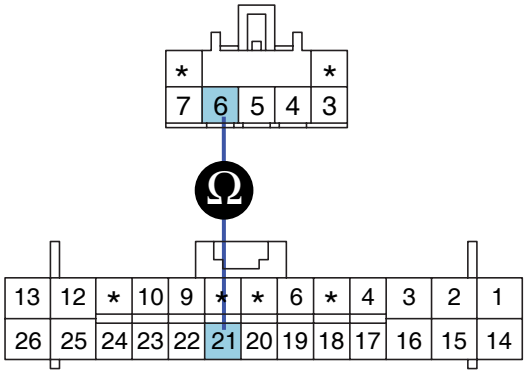

3. Motor
4. Motor
5. Potentiometer ground
6. **Potentiometer signal**
7. Sensor reference voltage(+5V)

SCMHA6551L

4) Is the measured resistance within specifications?

YES

Go to "Check for short to ground in harness" procedure.

NO

Check for open in signal harness. Repair as necessary and go to "Verification of Vehicle Repair" procedure.

2. Check for short to ground in harness.

   1) Ignition "OFF"

   2) Disconnect Driver mode Actuator.

   3) Measure resistance between terminal "6" of Driver Direction potentiometer and chassis ground.

Specification : Approx. ∞ Ω

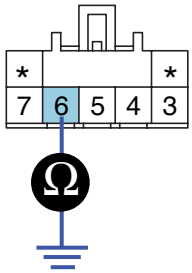

3. Motor
4. Motor
5. Potentiometer GND
6. **Potentiometer signal**
7. Sensor REF +5V

SCMHA6552L

   4) Is the measured resistance within specifications?

YES

Go to "Power circuit Inspection" procedure.

NO

Check for short to ground in signal harness. Repair as necessary and go to "Verification of Vehicle Repair" procedure.

POWER SUPPLY CIRCUIT INSPECTION E7CE5F7A

1. Check for short or open in harness.

   1) Ignition "ON"

   2) Connect Driver Direction potentiometer.

   3) Measure voltage between terminal "7" of Driver Direction potentiometer and chassis ground.

Specification : Approx. 5V

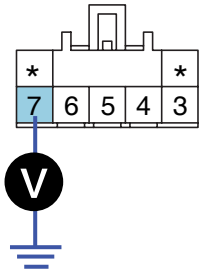

3. Motor
4. Motor
5. Potentiometer GND
6. Potentiometer signal
7. Sensor REF +5V

SCMHA6553L

4) Is the measured voltage within specifications?

YES

Go to "Component Inspection" procedure.

NO

Check for short or open in power harness. Repair as necessary and go to "Verification of Vehicle Repair" procedure.

COMPONENT INSPECTION E1CC0BF4

1. Check actuator.

1) Ignition "OFF"

2) Disconnect Driver Direction potentiometer.

3) Verify that the mode actuator operates to the vent mode when connecting 12V to the terminal "3" and grounding terminal "4".

4) Verify that the mode actuator operates to the def mode when the connections are reversed.

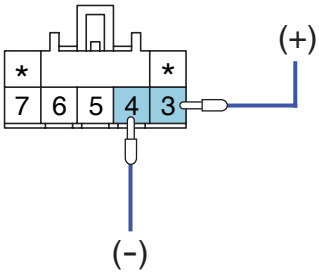

3. Motor
4. Motor
5. Potentiometer ground
6. Potentiometer signal
7. Sensor reference voltage(+5V)

SCMHA6554L

5) Does the actuator work properly?

YES

Go to "Check potentiometer" procedure.

NO

Substitute with a known-good actuator and check for proper operation. If the problem is corrected, replace actuator and then go to "Verification of Vehicle Repair" procedure.

2. Check potentiometer

1) Ignition "ON"

2) Connect Driver Direction potentiometer.

3) Measure voltage between terminal "5" and "6" of Driver Direction potentiometer as the mode switch is operated.

Specification : Refer the specifications in fig 3

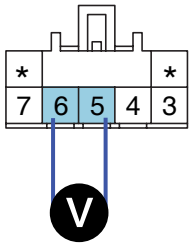

3. Motor
4. Motor
5. Potentiometer ground
6. Potentiometer signal
7. Sensor reference voltage(+5V)

SCMHA6555L

Door position	Voltage (5-6)	Error detecting
VENT	0.3 ± 0.15V	Under voltage : 0.08V or less Over voltage : 4.92V or more
BI-LEVEL(1)	1.35 ± 0.4V	
BI-LEVEL(2)	2.25 ± 0.4V	
FLOOR	3.0 ± 0.4V	
MIX	3.6 ± 0.4V	
DEF	4.7 ± 0.15V	

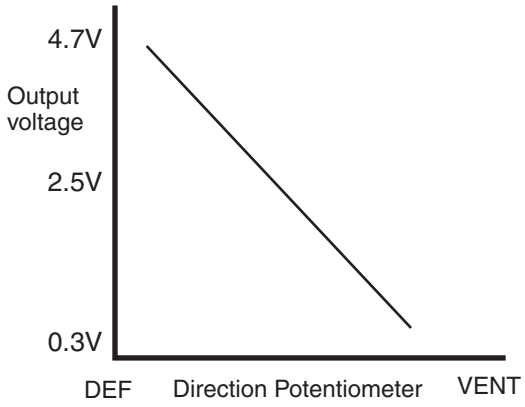

Fig. 3

Fig 3) Specifications : Voltage value as a function of position of direction potentiometer.

EQBF523J

4) Is the measured voltage within specifications in fig3?

YES

Check connectors for looseness, poor connection, bending, corrosion, contamination, deterioration, or damage. Repair or replace as necessary and then go to "Verification of Vehicle Repair" procedure.

NO

Substitute with a known-good actuator and check for proper operation. If the problem is corrected, replace actuator and then go to "Verification of Vehicle Repair" procedure.

VERIFICATION OF VEHICLE REPAIR E17B27B5

After a repair, it is essential to verify that the fault has been corrected.

1. Connect scantool and select "Diagnostic Trouble Codes(DTCs)" mode and then clear DTC.
2. Operate the vehicle and monitor the DTC on the scantool.
3. Are any DTCs present?

YES

Go to the applicable troubleshooting procedure.

NO

System is performing to specification at this time.

DTC B1250 DIRECTION POTENTIOMETER SHORT (HIGH) - DRIVER

COMPONENT LOCATION EAAF06F7

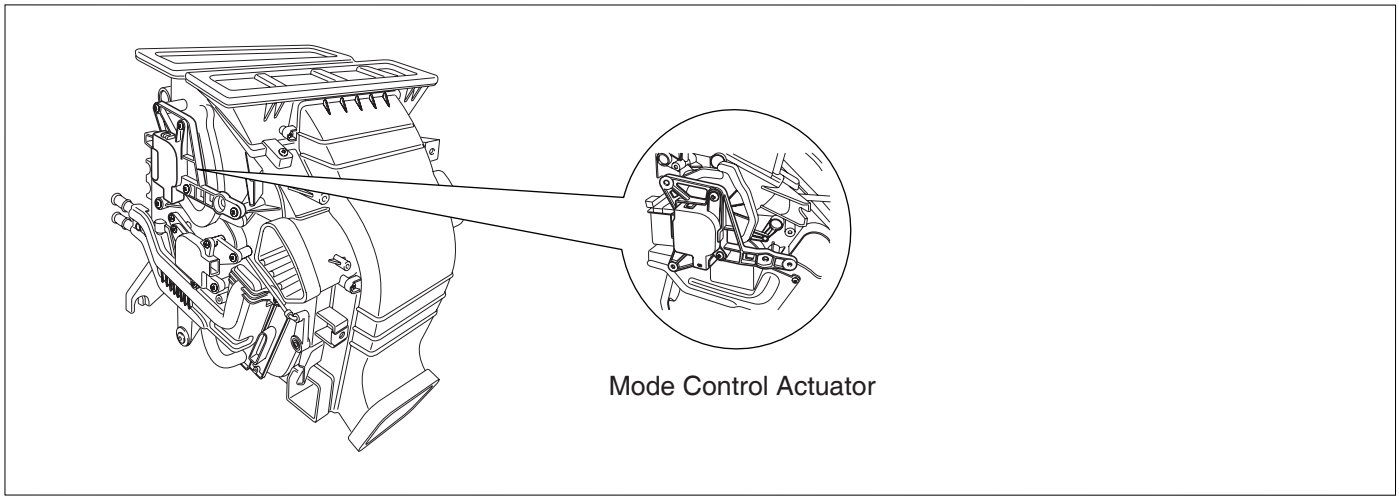

SCMHA6706L

GENERAL DESCRIPTION E42DB595

The mode control actuator mounted on heater unit, adjusts position of mode door by operating Direction Motor based on signal of A/C control unit. Pressing mode select switch makes the mode control actuator shift in order of vent→ B/L → floor → mix.

DTC DESCRIPTION E506ACD5

The A/C controller sets DTC B1250 if there is a short to power in the Direction potentiometer.

DTC DETECTING CONDITION E6521921

Item	Detecting Condition	Possible cause
DTC Strategy	• Voltage check	• Short circuit in harness • Faulty driver direction potentiometer • Open circuit in harness
Threshold value	• > 4.9V	
Detecting time	• 0.3 sec	
FAIL SAFE	• Fix vent position	

SPECIFICATION E80F0A06

Refer to DTC B1249.

MONITOR SCANTOOL DATA E6C26D12

1. Connect scantool to Data Link Connector(DLC).
2. Engine "ON"
3. Monitor the "DR. DIRECTION POTENTIO." parameter on the scantool while operating mode switch.

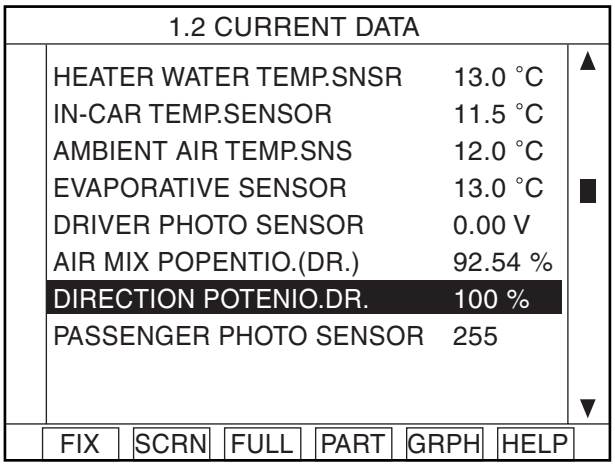

Fig. 1

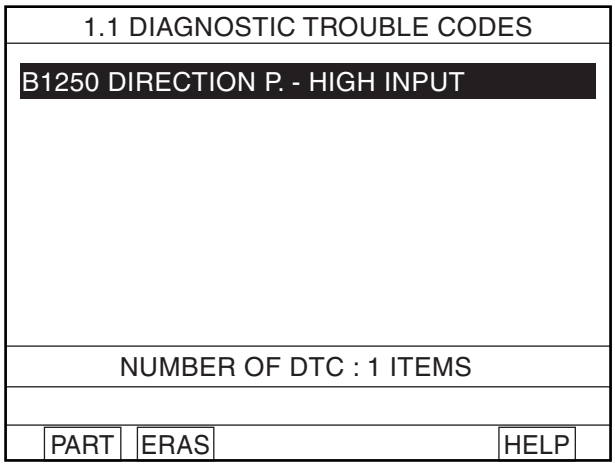

Fig. 2

Fig 1 : The current data in abnormal state.
Fig 2 : DTC B1250.

EQBF524A

4. Are the DTC B1250 present and is parameter of "DR. DIRECTION POTENTIO." fixed?
   ※ Parameter of "DR. DIRECTION POTENTIO." will be fixed at 100%(or any value above 90%), or 0% (or any value below 10%), if there is any fault in Driver Direction potentiometer.

   YES

   Go to "Inspection" procedure.

   NO

   Fault is intermittent caused by poor contact in the sensor's and/or A/C controller's connector or was repaired and A/C controller memory was not cleared. Thoroughly check connectors for looseness, poor connection, bending, corrosion, contamination, deterioration, or damage. Repair or replace as necessary and then go to "Verification of Vehicle Repair" procedure.

TERMINAL AND CONNECTOR INSPECTION E7C9EC9A

Refer to DTC B1249.

SIGNAL CIRCUIT INSPECTION EBA6FBEC

1. Check for short in harness.

   1) Ignition "OFF"

   2) Disconnect Driver mode Actuator.

   3) Measure resistance between terminal "6" and "7"of Driver Direction potentiometer.

Specification : Approx. ∞ Ω

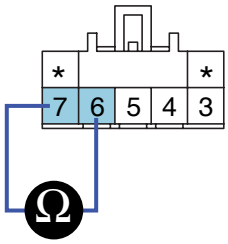

3. Motor
4. Motor
5. Potentiometer ground
6. Potentiometer signal
7. Sensor reference voltage(+5V)

SCMHA6556L

4) Is the measured resistance within specifications?

YES

Go to "Ground circuit inspection" procedure.

NO

Check for open in signal harness. Repair as necessary and go to "Verification of Vehicle Repair" procedure.

GROUND CIRCUIT INSPECTION E64B7078

1. Check for open in ground harnesS.

1) Ignition "OFF"

2) Disconnect Driver mode Actuator.

3) Measure resistance between terminal "5" of evaporator sensor and chassis ground.

Specification :Approx. 0 Ω

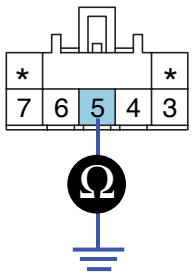

3. Motor
4. Motor
5. Potentiometer GND
6. Potentiometer signal
7. Sensor REF +5V

SCMHA6557L

4) Is the measured resistance within specifications?

YES

Go to "Component Inspection " procedure.

NO

Check for open in ground harness. Repair as necessary and go to "Verification of Vehicle Repair" procedure.

COMPONENT INSPECTION E48D945D

Refer to DTC B1249.

VERIFICATION OF VEHICLE REPAIR E41A230A

Refer to DTC B1249.

DTC B1257 AQS OPEN

COMPONENT LOCATION EF8D2F76

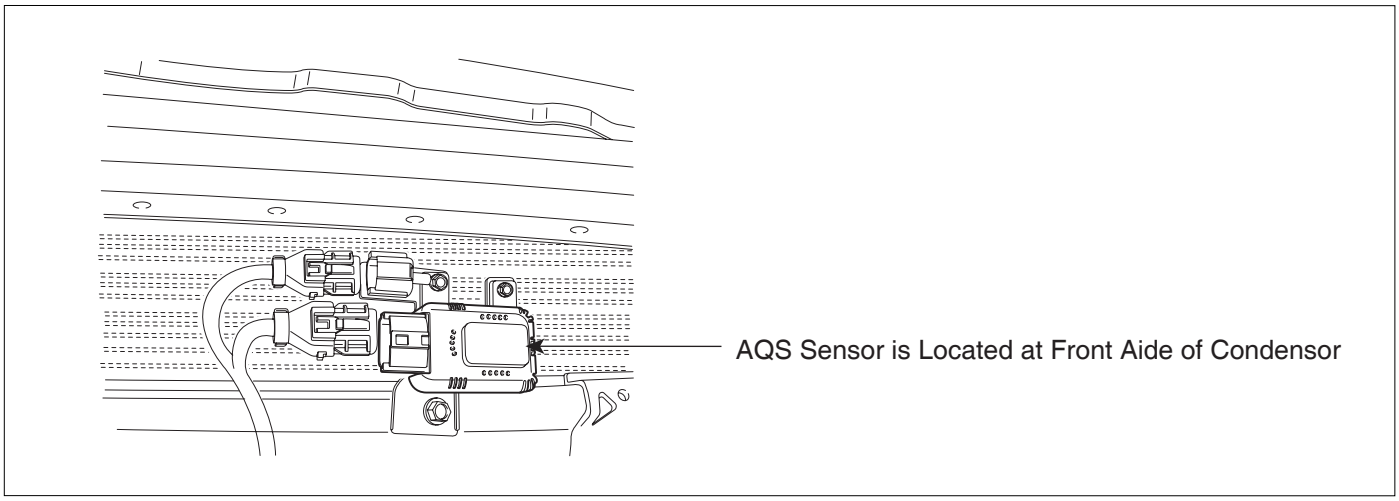

SCMHA6707L

GENERAL DESCRIPTION ED4DF3B0

AQS(Air Quality System) keeps air inside in the most suitable state for driver. In polluted area AQS detects hazardous gas and intercepts inflow automatically, Inversely, In freshsh area it allows the inflow of air to prevent the shortage of air and the accumulation of carbon dioxide. AQS sensor is located at front side of condensor and once hazardous gas is detected, it delivers the voltage signal to A/C controller for closing intake door.

DTC DESCRIPTION E12FB0BD

The A/C controller sets DTC B1257 if there is an open circuit in AQS sensor signal harness or the measured voltage value of sensor is more than threshold value.

DTC DETECTING CONDITION EB1B1045

Item	Detecting Condition	Possible cause
DTC Strategy	• Voltage check	• Open Circuit in power harness • Open circuit in ground harness • Faulty AQS Sensor • Poor connection of connected part
Threshold value	• > 4.9V	
Detecting time	• 1 sec	
FAIL SAFE	• AQS function OFF • Intake door : return to previous state	

SPECIFICATION ECC6418A

Refer to DTC B1258.

MONITOR SCANTOOL DATA EA426CBE

1. Connect scantool to Data Link Connector(DLC).

2. Engine "ON"

3. Monitor the " AQS sensor " Parameter on the Scantool. While making hazardous gas such as tobacco fumes around the AQS sensor.

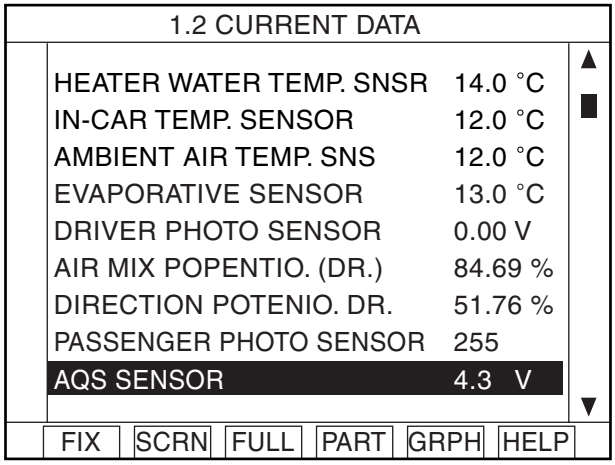

Fig. 1

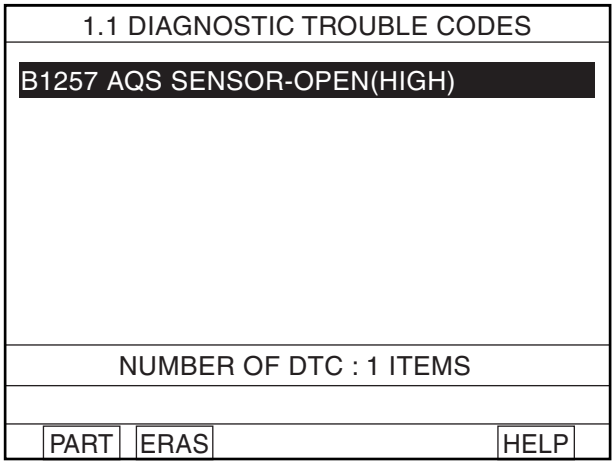

Fig. 2

Fig 1 : The current data in abnormal state.
Fig 2 : DTC B1257.

EQBF590B

4. Are the DTC B1257 present and is parameter of "AQS SENSOR" fixed?

YES

Go to "Inspection" procedure.

NO

Fault is intermittent caused by poor contact in the sensor's and/or A/C controller's connector or was repaired and A/C controller memory was not cleared. Thoroughly check connectors for looseness, poor connection, bending, corrosion, contamination, deterioration, or damage. Repair or replace as necessary and then go to "Verification of Vehicle Repair" procedure.

TERMINAL AND CONNECTOR INSPECTION E078D7E2

1. Many malfunctions in the electrical system are caused by poor harness and terminals.
Faults can also be caused by interference from other electrical systems, and mechanical or chemical damage.

2. Thoroughly check connectors for looseness, poor connection, bending, corrosion, contamination, deterioration, or damage.

3. Has a problem been found?

YES

Repair as necessary and go to "Verification of Vehicle Repair" procedure.

NO

Go to "Signal circuit inspection" procedure.

SIGNAL CIRCUIT INSPECTION EF29F40C

1. Check for open in harness.

   1) Ignition "OFF"

   2) Disconnect AQS sensor.

   3) Measure resistance between terminal "1" of AQS sensor and terminal "2" of A/C Control Unit.

Specification : Approx. 0 Ω

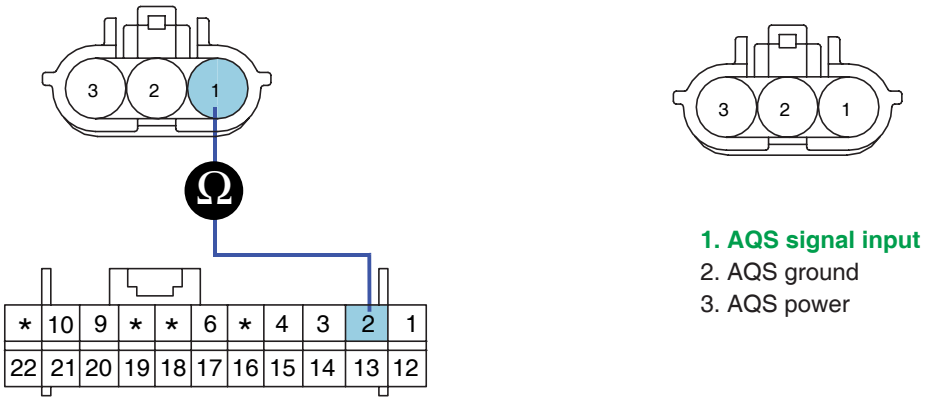

SCMHA6558L

   4) Is the measured resistance within specifications?

   YES

   Go to "Ground circuit Inspection " procedure.

   NO

   Check for open in harness. Repair as necessary and go to "Verification of Vehicle Repair" procedure.

GROUND CIRCUIT INSPECTION E60583A8

1. Check for open in ground harness.

   1) Ignition "OFF"

   2) Disconnect AQS sensor.

   3) Measure resistance between terminal "2" of AQS sensor and chassis ground.

Specification : Approx. 0 Ω

SCMHA6559L

4) Is the measured resistance within specifications?

YES

Go to "Component Inspection " procedure.

NO

Check for open in ground harness. Repair as necessary and go to "Verification of Vehicle Repair" procedure.

COMPONENT INSPECTION E0F5764B

1. Check AQS sensor.

   1) Engine "ON"

   2) Connect AQS sensor.

   3) Measure voltage between terminal "1" and "2" of AQS sensor.

Specification : Refer to the specifications.

SCMHA6560L

Operating condition	Voltage	Note
Right after IGN "ON"	2.5V ± 0.3V	preheating(35 ± 2sec)
Normal	4.3V ± 0.3V	Intake door : Fresh
Gas detected	0.9V ± 0.3V	Intake door : Recirculation

Specifications : Voltage value of AQS sensor as a function of position of operating condition.

4) Is the measured voltage within specifications?

YES

Check connectors for looseness, poor connection, bending, corrosion, contamination, deterioration, or damage. Repair or replace as necessary and then go to "Verification of Vehicle Repair" procedure.

NO

Substitute with AQS sensor and check for proper operation.
If the problem is corrected, replace AQS sensor and then go to "Verification of Vehicle Repair" procedure.

VERIFICATION OF VEHICLE REPAIR EF0A99CE

After a repair, it is essential to verify that the fault has been corrected.

1. Connect scantool and select "Diagnostic Trouble Codes(DTCs)" mode and then clear DTC.
2. Operate the vehicle and monitor the DTC on the scantool.
3. Are any DTCs present?

YES

Go to the applicable troubleshooting procedure.

NO

System is performing to specification at this time.

DTC B1258 AQS SHORT

COMPONENT LOCATION E1AE9C53

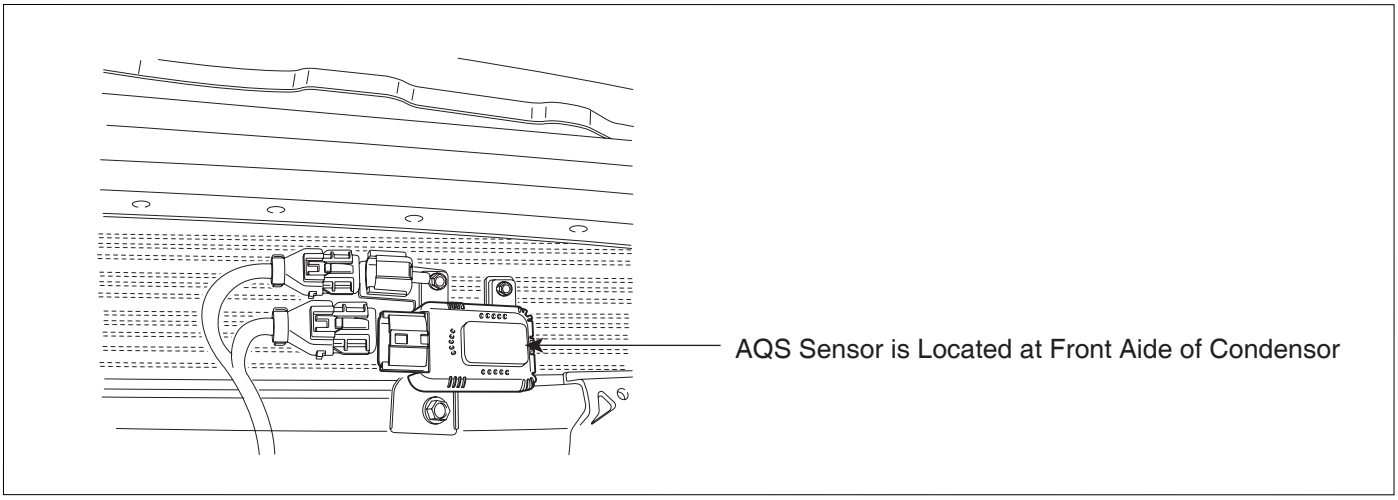

SCMHA6707L

GENERAL DESCRIPTION E78FDD65

AQS(Air Quality System) keeps air inside in the most suitable state for driver. In polluted area AQS detects hazardous gas and intercepts inflow automatically, Inversely, In freshsh area it allows the inflow of air to prevent the shortage of air and the accumulation of carbon dioxide. AQS sensor is located at front side of condensor and once hazardous gas is detected, it delivers the voltage signal to A/C controller for closing intake door.

DTC DESCRIPTION E65E21A7

The A/C controller sets DTC B1258 if there is a short circuit in AQS sensor signal harness or the measured voltage value of the sensor is less than the threshold value.

DTC DETECTING CONDITION E862F7F5

Item	Detecting Condition	Possible cause
DTC Strategy	• Voltage check	• Short circuit in harness • Faulty AQS Sensor • Fault A/C Control Unit
Threshold value	• < 0.1V	
Detecting time	• 1 sec	
FAIL SAFE	• AQS function OFF • Intake door : return to previous state	

SPECIFICATION EBC31DE0

※ Voltage value of AQS sensor as a function of position of operating condition.

Operating condition	Voltage	Note
Right after IGN "ON"	2.5V ± 0.3V	preheating(35 ± 2sec)
Normal	4.3V ± 0.3V	Intake door : Fresh
Gas detected	0.9V ± 0.3V	Intake door : Recirculation

MONITOR SCANTOOL DATA EB72B2D9

1. Connect scantool to Data Link Connector(DLC).

2. Engine "ON"

3. Monitor the "AQS sensor" Parameter on the Scantool. While making hazardous gas such as tobacco fumes around the AQS sensor.

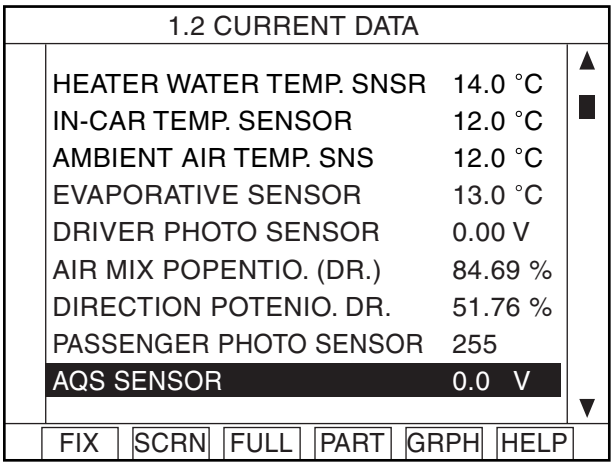

Fig. 1

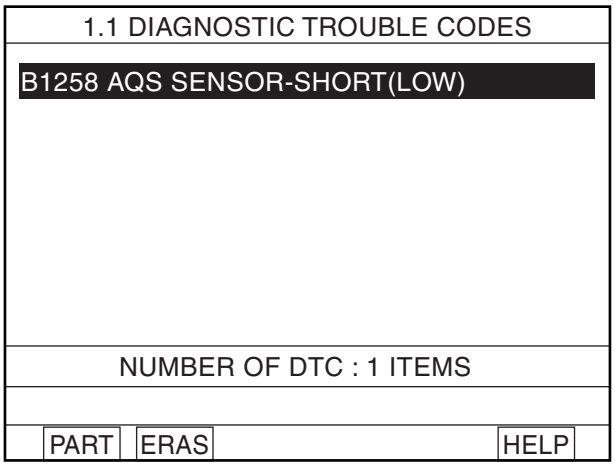

Fig. 2

Fig 1 : The current data in abnormal state.
Fig 2 : DTC B1258.

EQBF590A

4. Are the DTC B1258 present and is parameter of "AQS SENSOR" fixed?

YES

Go to "Inspection" procedure.

NO

Fault is intermittent caused by poor contact in the sensor's and/or A/C control unit's connector or was repaired and A/C control unit memory was not cleared. Thoroughly check connectors for looseness, poor connection, bending, corrosion, contamination, deterioration, or damage. Repair or replace as necessary and then go to "Verification of Vehicle Repair" procedure.

TERMINAL AND CONNECTOR INSPECTION EA2C2E51

1. Many malfunctions in the electrical system are caused by poor harness and terminals.
   Faults can also be caused by interference from other electrical systems, and mechanical or chemical damage.

2. Thoroughly check connectors for looseness, poor connection, bending, corrosion, contamination, deterioration, or damage.

3. Has a problem been found?

YES

Repair as necessary and go to "Verification of Vehicle Repair" procedure.

NO

Go to "Signal circuit inspection" procedure.

SIGNAL CIRCUIT INSPECTION E0460C72

1. Check for open in harness.

   1) Ignition "OFF"

   2) Disconnect AQS sensor.

   3) Measure resistance between terminal "1" of AQS sensor and terminal chassis ground.

Specification : Approx. 0 Ω

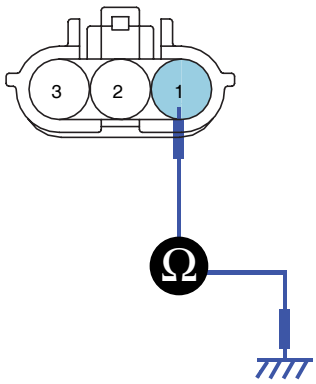

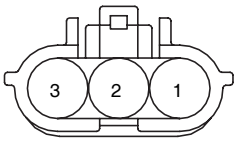

1. AQS signal input
2. AQS ground
3. AQS power

SCMHA6561L

   4) Is the measured resistance within specifications?

   YES

   Go to "Component inspection" procedure.

   NO

   Check for open in harness. Repair as necessary and go to "Verification of Vehicle Repair" procedure.

COMPONENT INSPECTION E2A85239

1. Check AQS sensor.

   1) Engine "ON"

   2) Connect AQS sensor.

   3) Measure voltage between terminal "1" and "2" of AQS sensor.

Specification : Refer the specifications.

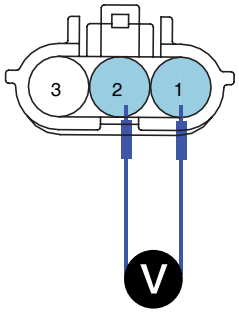

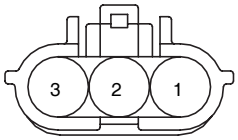

1. AQS signal input
2. AQS ground
3. AQS power

SCMHA6560L

Operating condition	Voltage	Note
Right after IGN "ON"	2.5V ± 0.3V	preheating(35 ± 2sec)
Normal	4.3V ± 0.3V	Intake door : Fresh
Gas detected	0.9V ± 0.3V	Intake door : Recirculation

Specifications : Voltage value of AQS sensor as a function of position of operating condition.

4) Is the measured voltage within specifications?

YES

Check connectors for looseness, poor connection, bending, corrosion, contamination, deterioration, or damage. Repair or replace as necessary and then go to "Verification of Vehicle Repair" procedure.

NO

Substitute with a AQS sensor and check for proper operation.
If the problem is corrected, replace AQS sensor and then go to "Verification of Vehicle Repair" procedure.

2. Check A/C Control Unit

1) Engine : "ON"

2) Disconnect AQS sensor.

3) Measure voltage between terminal "2" of A/C Control Unit and chassis ground.

Specification :Approx. 5V

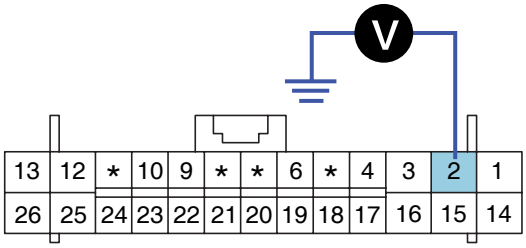

2. AQS sensor signal input

SCMHA6562L

4) Is the measured voltage within specifications?

YES

Check connectors for looseness, poor connection, bending, corrosion, contamination, deterioration, or damage. Repair or replace as necessary and then go to "Verification of Vehicle Repair" procedure.

NO

Substitute with a known-good A/C Control Unit and check for proper operation.
If the problem is correcirculationted, replace A/C Control Unit and then go to "Verification of Vehicle Repair" procedure.

VERIFICATION OF VEHICLE REPAIR E37705AF

After a repair, it is essential to verify that the fault has been corrected.

1. Connect scantool and select "Diagnostic Trouble Codes(DTCs)" mode and then clear DTC.
2. Operate the vehicle and monitor the DTC on the scantool.
3. Are any DTCs present?

YES

Go to the applicable troubleshooting procedure.

NO

System is performing to specification at this time.

DTC B1259 AQS FAILURE

COMPONENT LOCATION E898B5F4

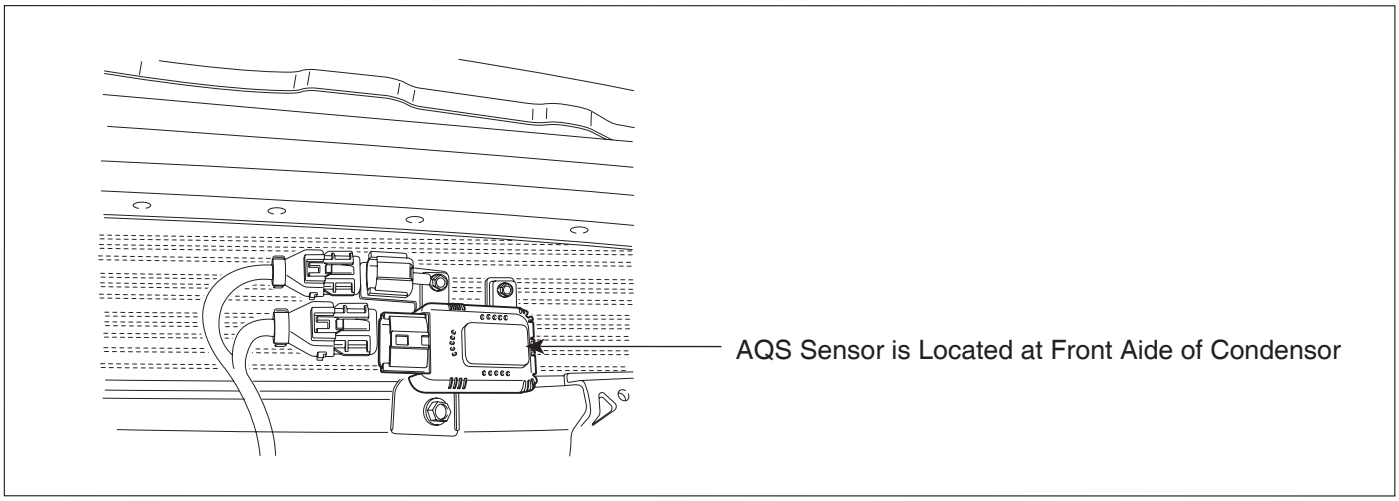

SCMHA6707L

GENERAL DESCRIPTION EB944E6D

AQS(Air Quality System) keeps air inside in the most suitable state for driver. In polluted area AQS detects hazardous gas and intercepts inflow automatically, Inversely, In freshsh area it allows the inflow of air to prevent the shortage of air and the accumulation of carbon dioxide. AQS sensor is located at front side of condensor and once hazardous gas is detected, it delivers the voltage signal to A/C controller for closing intake door.

DTC DESCRIPTION E1DFB9E8

The A/C controller sets DTC B1259 if preheating time of AQS sensor is over 40sec or signal from AQS sensor is not within specifications.

DTC DETECTING CONDITION E734CCDD

Item	Detecting Condition	Possible cause
DTC Strategy	• Voltage/time check	• Faulty AQS Sensor • Poor connection of connected part
Threshold value	• Voltage : Preheating - 2.5V±0.3V Normal - 4.3V±0.3V Gas detected - 0.9V±0.3V • Preheating time > 40sec	
Detecting time	-	
FAIL SAFE	• AQS function OFF • Intake door : return to previous state	

SPECIFICATION E441620B

Refer to DTC B1258.

MONITOR SCANTOOL DATA E226D7AB

1. Connect scantool to Data Link Connector(DLC).

2. Engine "ON"

3. Monitor the " AQS sensor " Parameter on the Scantool. While making hazardous gas such as tobacco fumes around the AQS sensor.

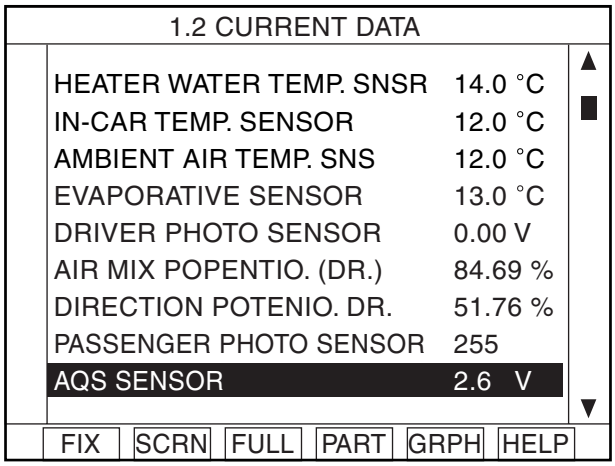

Fig. 1

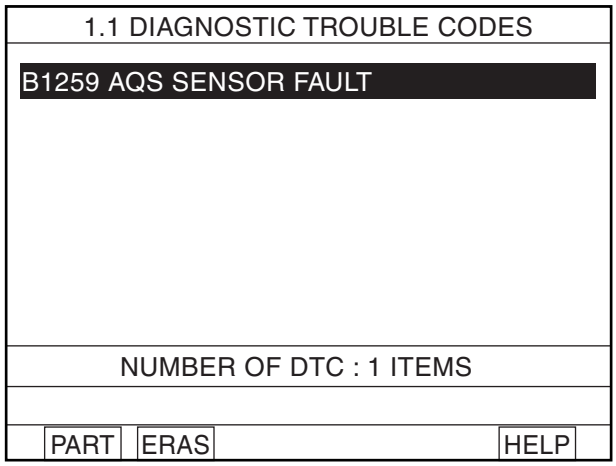

Fig. 2

Fig 1 : The current data in abnormal state.
Fig 2 : DTC B1259.

EQBF517B

4. Are the DTC B1259 present and is parameter of "AQS SENSOR" fixed?

YES

Go to "Inspection" procedure.

NO

Fault is intermittent caused by poor contact in the sensor's and/or A/C controller's connector or was repaired and A/C controller memory was not cleared. Thoroughly check connectors for looseness, poor connection, bending, corrosion, contamination, deterioration, or damage. Repair or replace as necessary and then go to "Verification of Vehicle Repair" procedure.

TERMINAL AND CONNECTOR INSPECTION EFA337DB

Refer to DTC B1258.

SIGNAL CIRCUIT INSPECTION E3C76BFD

1. Check for open in harness.

   1) Ignition "ON"

   2) Disconnect AQS sensor.

   3) Measure voltage value between terminal "3" of AQS sensor and chassis ground.

Specification : Approx. 12V

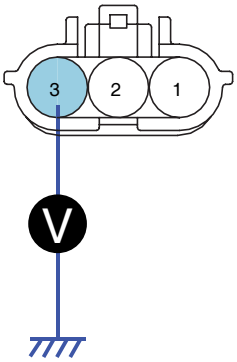

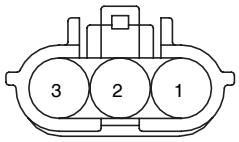

1. AQS signal input
2. AQS ground
3. **AQS power**

SCMHA6563L

4) Is the measured resistance within specifications?

YES

Go to "Component inspection " procedure.

NO

Check for open in harness. Repair as necessary and go to "Verification of Vehicle Repair" procedure.

COMPONENT INSPECTION E81F882D

Refer to DTC B1258.

VERIFICATION OF VEHICLE REPAIR E5CA9EEA

Refer to DTC B1258.

DTC B2406 AIR MIX MOTOR (DRIVER)

COMPONENT LOCATION EFE0376F

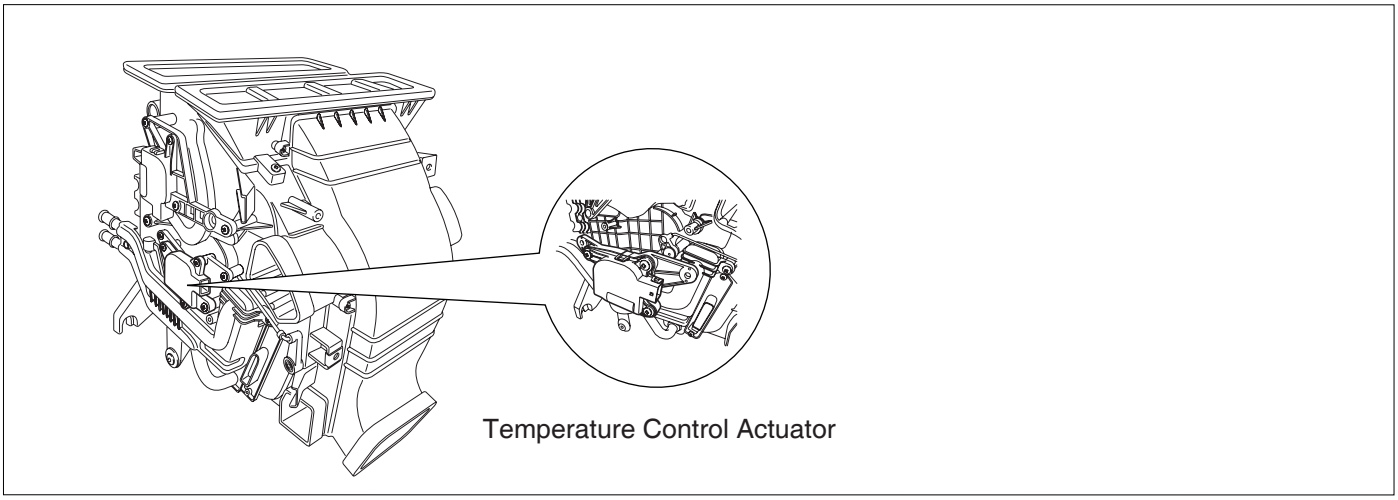

SCMHA6708L

GENERAL DESCRIPTION E64AC948

Temperature control actuator located at heater unit, regulates the temperature by the procedure as follows. Signal from control unit adjusts position of temp. door by operating temp. motor and then temperature will be regulated by the hot/cold air ratio decided by position of temp. door.

DTC DESCRIPTION E2ABFEF5

The A/C controller sets DTC B2406 if the air mix actuator doesn't move to intended position within 40sec (In this case, A/C controller try to move temp. door for 2sec. 3 times, every 20 sec. before setting DTC).

DTC DETECTING CONDITION EA8F2B90

Item	Detecting Condition	Possible cause
DTC Strategy	• Voltage check	• Poor connection of connected part • Open circuit in harness • Short circuit in harness • Faulty driver Air Mix potentiometer • Fault A/C Control Unit
Threshold value	• < 0.1V	
Detecting time	• 0.3 sec	
FAIL SAFE	-	

SPECIFICATION EC47D91F

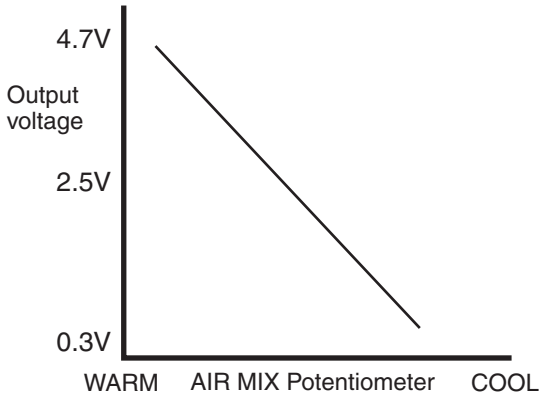

EQBF521B

MONITOR SCANTOOL DATA E41751B0

1. Connect scantool to Data Link Connector(DLC).
2. Engine "ON"
3. Monitor the "Driver Air Mix Potentiometer" Parameter on the Scantool while operating temp. switch.

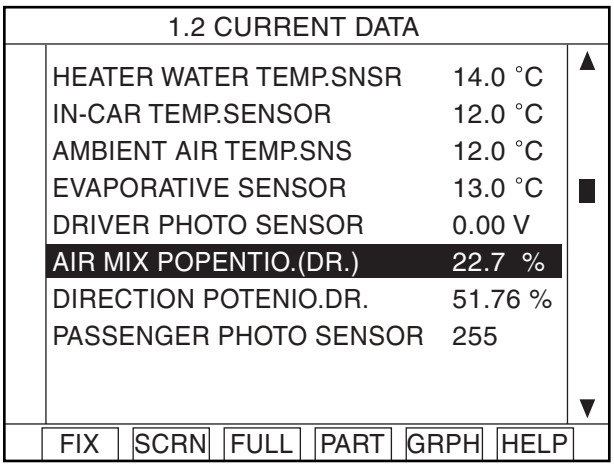

Fig. 1

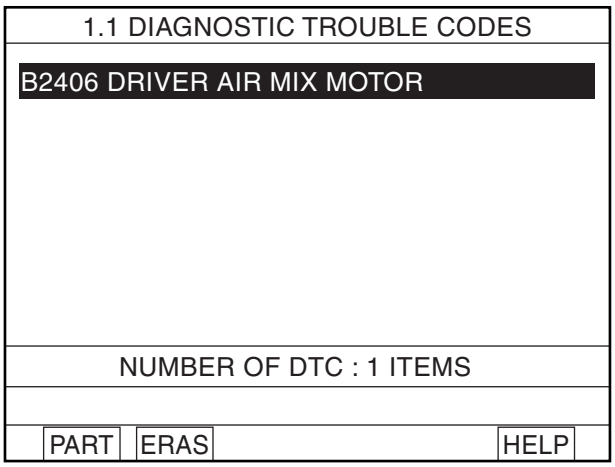

Fig. 2

Fig 1 : The current data in abnormal state.
Fig 2 : DTC B2406.

EQBF525A

4. Are the DTC B2406 present and is parameter of "Driver AIR MIX Potentiometer" fixed?
   ※ There is any fault in Driver AIR MIX Motor. If the parameter of "Driver AIR MIX DOOR" is 30% or less when the actuator operates to the hot position, or If the parameter is 60% and more when the actuator operates to the cold position.

   YES

   Go to "Inspection" procedure.

   NO

   Fault is intermittent caused by poor contact in the sensor's and/or A/C controller's connector or was repaired and A/C controller memory was not cleared. Thoroughly check connectors for looseness, poor connection, bending, corrosion, contamination, deterioration, or damage. Repair or replace as necessary and then go to "Verification of Vehicle Repair" procedure.

TERMINAL AND CONNECTOR INSPECTION E7F42C7B

1. Many malfunctions in the electrical system are caused by poor harness and terminals.
   Faults can also be caused by interference from other electrical systems, and mechanical or chemical damage.

2. Thoroughly check connectors for looseness, poor connection, bending, corrosion, contamination, deterioration, or damage.

3. Has a problem been found?

   YES

   Repair as necessary and go to "Verification of Vehicle Repair" procedure.

   NO

   Go to "Signal circuit inspection" procedure.

SIGNAL CIRCUIT INSPECTION EAE92A03

1. Check for open in harness.

   1) Ignition "OFF"

   2) Disconnect Driver Air Mix potentiometer.

   3) Measure resistance between terminal "3,4" of Driver Air Mix Motor and terminal "15,16" of A/C control unit.

Specification : Approx. 0 Ω

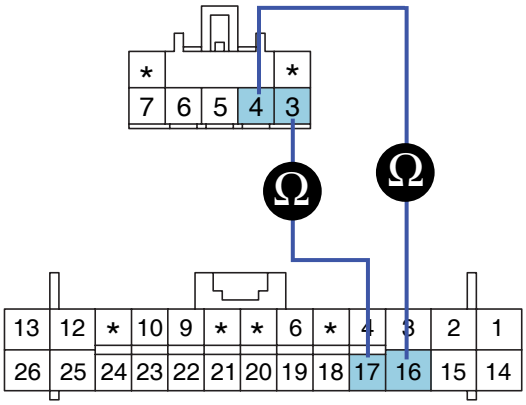

3. Motor (Cool)
4. Motor (Warm)
5. Sensor reference voltage(+5V)
6. Potentiometer signal
7. Potentiometer ground

SCMHA6564L

4) Is the measured resistance within specifications?

YES

Go to "Check for short to ground in harness" procedure.

NO

Check for open in signal harness. Repair as necessary and go to "Verification of Vehicle Repair" procedure.

2. Check for short to ground in harness.

1) Ignition "OFF"

2) Disconnect Driver Air Mix Actuator.

3) Measure resistance between terminal "3,4" of Driver Air Mix Motor and chassis ground.

Specification : Approx. ∞ Ω

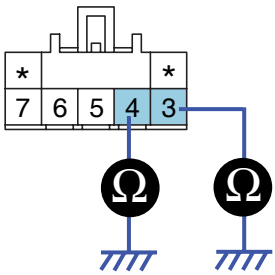

3. Motor (Cool)
4. Motor (Warm)
5. Sensor reference voltage(+5V)
6. Potentiometer signal
7. Potentiometer ground

SCMHA6565L

4) Is the measured resistance within specifications?

YES

Go to "Visual/Physical Inspection " procedure.

NO

Check for short to ground in signal harness. Repair as necessary and go to "Verification of Vehicle Repair" procedure.

VISUAL/PHYSICAL INSPECTION E991C1F7

1. Check actuator.
   ※ Check if Driver Air Mix Actuator works properly through ACTUATION TEST.

   1) Ignition : ON

   2) Connect Scantool and select " ACTUATION TEST" mode and press [F1]

1.3 ACTUATION TEST	
DRIVER AIR MIX DOOR - DRIVE 50%	
DURATION	UNTIL STOP KEY
METHOD	ACTIVATION
CONDITION	IG. KEY ON ENGINE RUNNING
PRESS [STRT], IF YOU ARE READY!	
STRT STOP	

Fig. 3

Fig 3 : Selecting "ACTUATION TEST" mode.

EQBF525D

   3) Does Driver Air Mix Actuator work properly?

   YES

   Go to "Component Inspection" procedure.

   NO

   Check connectors for looseness, poor connection, bending, corrosion, contamination, deterioration, or damage. Repair or replace as necessary and then go to "Verification of Vehicle Repair" procedure.

COMPONENT INSPECTION E076DD0D

1. Check actuator motor.

   1) Ignition "OFF"

   2) Disconnect Driver Air Mix Potentiometer.

   3) Verify that the temperature actuator operates to the hot position when connecting 12V to the terminal "3" and grounding terminal "4".

   4) Verify that the temperature actuator operates to the cool position when the connections are reversed.

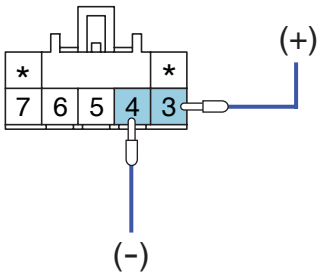

3. Motor (Cool)
4. Motor (Warm)
5. Sensor reference voltage(+5V)
6. Potentiometer signal
7. Potentiometer ground

SCMHA6566L

5) Does the actuator work properly?

YES

Go to "Check potentiometer" procedure.

NO

Substitute with a known-good actuator and check for proper operation. If the problem is corrected, replace actuator and then go to "Verification of Vehicle Repair" procedure.

2. Check potentiometer

1) Ignition "ON"

2) Connect Driver Air Mix potentiometer.

3) Measure voltage between terminal "6" and "7" of Driver Air Mix potentiometer while operating the temp. switch.

Specification : Refer the specifications in fig 3)

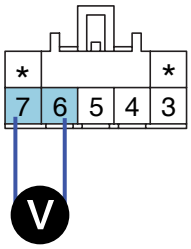

3. Motor (Cool)
4. Motor (Warm)
5. Sensor reference voltage(+5V)
6. Potentiometer signal
7. Potentiometer ground

SCMHA6567L

Door position	Voltage (6-7)	Error detecting
MAX. Cooling	0.3 ± 0.15V	Low voltage : 0.08V or less
MAX. Heating	4.7 ± 0.15V	High voltage : 4.9V or more

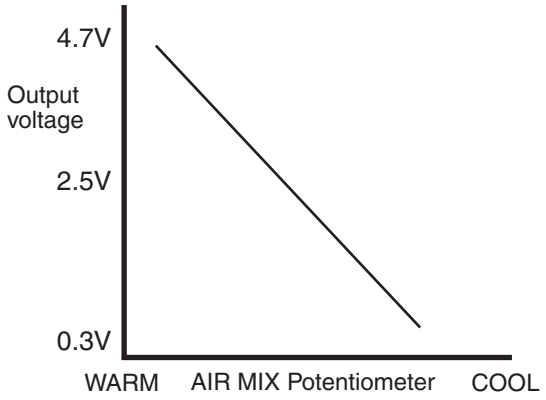

Fig. 3

Fig 3) Specifications : Voltage value of air mix potentiometer as a function of position of setting temperature.

EQBF521J

4) Is the measured voltage within specifications in fig3?

YES

Check connectors for looseness, poor connection, bending, corrosion, contamination, deterioration, or damage. Repair or replace as necessary and then go to "Verification of Vehicle Repair" procedure.

NO

Substitute with a known-good actuator and check for proper operation. If the problem is corrected, replace actuator and then go to "Verification of Vehicle Repair" procedure.

3. Check A/C Control Unit.

1) Engine "ON"

2) Connect A/C Control Unit.

3) Measure voltage between terminal "13" and "14" of A/C Control Unit while operating the temp. switch.

Specification :Approx. 12V

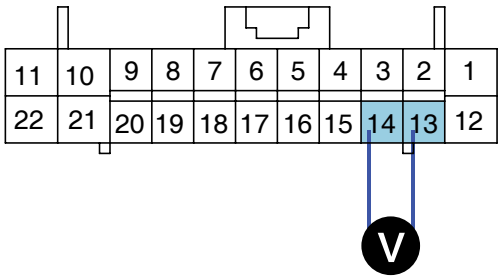

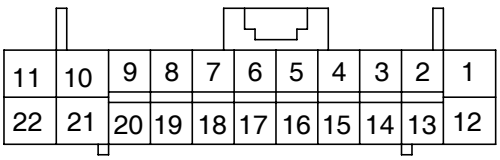

16. Motor
17. Motor

SCMHA6568L

4) Is the measured voltage within specifications?

YES

Check connectors for looseness, poor connection, bending, corrosion, contamination, deterioration, or damage. Repair or replace as necessary and then go to "Verification of Vehicle Repair" procedure.

NO

Substitute with a known-good A/C Control Unit and check for proper operation.
If the problem is corrected, replace A/C Control Unit and then go to "Verification of Vehicle Repair" procedure.

VERIFICATION OF VEHICLE REPAIR E9F02EC4

After a repair, it is essential to verify that the fault has been corrected.

1. Connect scantool and select "Diagnostic Trouble Codes(DTCs)" mode and then clear DTC.
2. Operate the vehicle and monitor the DTC on the scantool.
3. Are any DTCs present?

YES

Go to the applicable troubleshooting procedure.

NO

System is performing to specification at this time.

DTC B2408 INTAKE MOTOR FAILURE

COMPONENT LOCATION EF1AEBEF

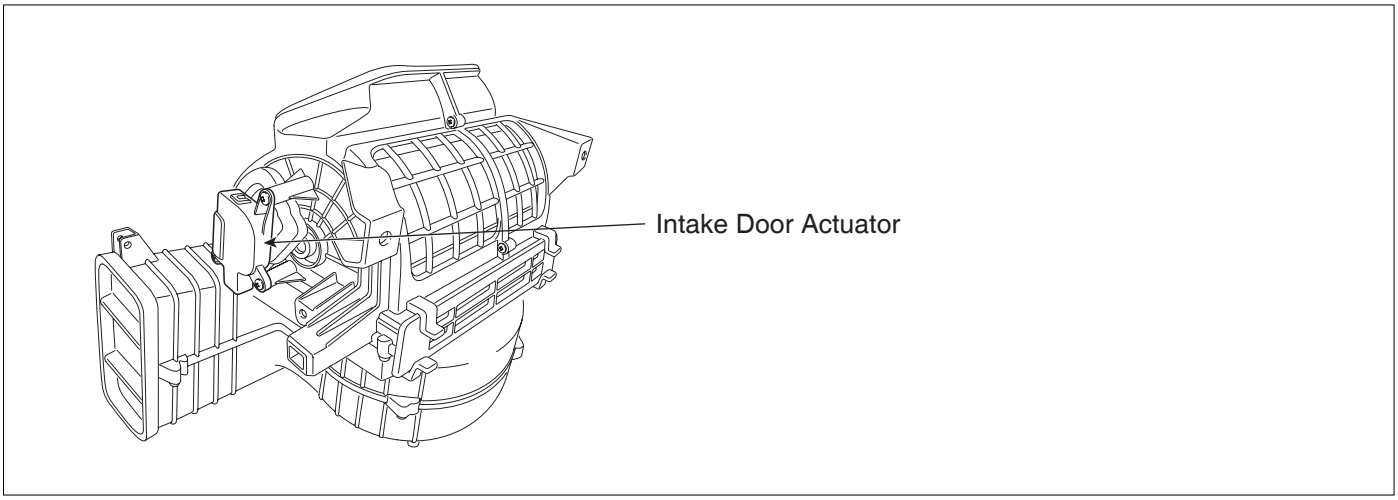

SCMHA6701L

GENERAL DESCRIPTION EBF43D13

Intake door located at heater unit controls the inlet of car. When driver operates the intake switch, A/C controller recirculationeives mode signal from intake switch and operates intake door actuator to turn intake door to intended position. (with fresh mode signal, intake door is closed and with fresh mode signal, intake door is opened.

DTC DESCRIPTION EDEFA576

The A/C controller sets DTC B2408 if the intake motor Doesn't move to intended position within 40sec(The A/C controller attempts to move the intake door for a 2 second duration at a freshquency of 3 times every 20 seconds before storing a DTC.)

DTC DETECTING CONDITION E70DC6B0

Item	Detecting Condition	Possible cause
DTC Strategy	• Voltage check	• Poor connection of connected part • Open circuit in harness • Short circuit in harness • Faulty Intake potentiometer
Threshold value	• < 0.1V	
Detecting time	• 0.3 sec	
FAIL SAFE	-	

SPECIFICATION E6B3190E

※ Voltage value of Intake potentiometer as a function of position of Intake door

Door position	Voltage	Threshold value
Fresh	0.3±0.15V	Voltage value 0.08V or less
Recirculation	4.7±0.15V	Voltage value 4.9V or more

MONITOR SCANTOOL DATA E73BFCC6

1. Connect scantool to Data Link Connector(DLC).
2. Engine "ON"
3. Monitor the "Intake Potentiometer" Parameter on the Scantool while operating Intake switch.

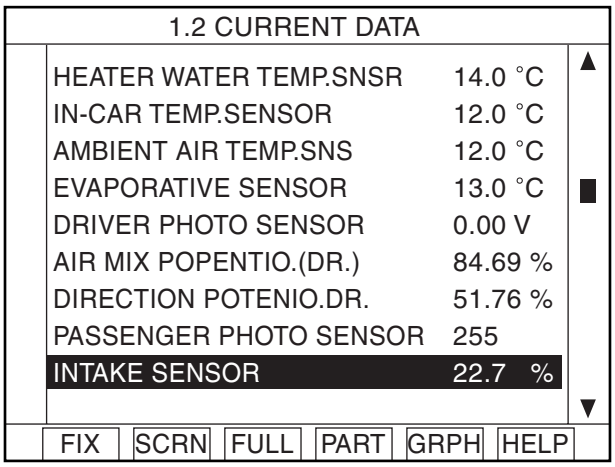

Fig. 1

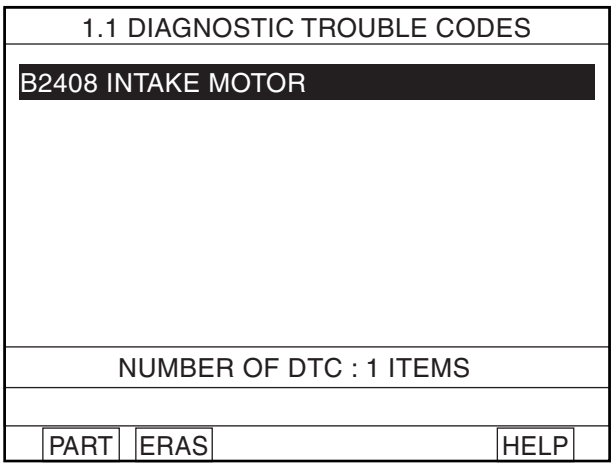

Fig. 2

Fig 1 : The current data in abnormal state.
Fig 2 : DTC B2408.

EQBF529A

4. Are the DTC B2408 present and is parameter of "Intake Potentiometer" fixed?
   ※ There is any fault in Intake potentiometer. If the parameter of "Intake potentiometer" is 30% or less when the actuator operates to the fresh position, or If the parameter is 60% and more when the actuator operates to the recirculation position.

YES

Go to "Inspection" procedure.

NO

Fault is intermittent caused by poor contact in the sensor's and/or A/C controller's connector or was repaired and A/C controller memory was not cleared. Thoroughly check connectors for looseness, poor connection, bending, corrosion, contamination, deterioration, or damage. Repair or replace as necessary and then go to "Verification of Vehicle Repair" procedure.

TERMINAL AND CONNECTOR INSPECTION E0CEF15E

1. Many malfunctions in the electrical system are caused by poor harness and terminals.
   Faults can also be caused by interference from other electrical systems, and mechanical or chemical damage.

2. Thoroughly check connectors for looseness, poor connection, bending, corrosion, contamination, deterioration, or damage.

3. Has a problem been found?

   YES

   Repair as necessary and go to "Verification of Vehicle Repair" procedure.

   NO

   Go to "Signal circuit inspection" procedure.

SIGNAL CIRCUIT INSPECTION E0DD314B

1. Check for open in harness.

   1) Ignition "OFF"

   2) Disconnect Intake potentiometer.

   3) Measure resistance between terminal "3,4" of Intake potentiometer and terminal "22,23" of A/C control unit.

Specification : Approx. 0 Ω

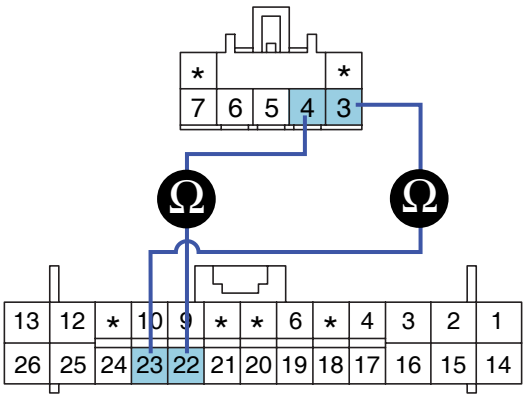

3. Motor
4. Motor
5. Potentiometer ground
6. Potentiometer signal
7. Sensor reference voltage(+5V)

SCMHA6569L

   4) Is the measured resistance within specifications?

   YES

   Go to "Check for short to ground in harness" procedure.

   NO

   Check for open in signal harness. Repair as necessary and go to "Verification of Vehicle Repair" procedure.

2. Check for short to ground in harness.

   1) Ignition "OFF"

   2) Disconnect Driver Air Mix Actuator.

   3) Measure resistance between terminal "3,4" of Driver Air Mix Motor and chassis ground.

Specification : Approx. ∞ Ω

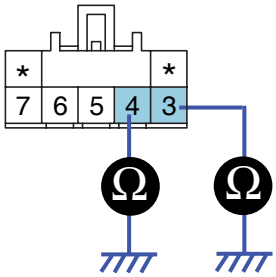

3. Motor
4. Motor
5. Potentiometer ground
6. Potentiometer signal
7. Sensor reference voltage(+5V)

SCMHA6570L

   4) Is the measured resistance within specifications?

YES

Go to "Visual/Physical Inspection " procedure.

NO

Check for short to ground in signal harness. Repair as necessary and go to "Verification of Vehicle Repair" procedure.

VISUAL/PHYSICAL INSPECTION E43EAB6A

1. Check actuator.
   ※ Check if Driver Air Mix Actuator works properly through ACTUATION TEST.

   1) Ignition : ON

   2) Connect Scantool and select " ACTUATION TEST" mode and press [F1]

1.3 ACTUATION TEST	
DRIVER AIR MIX DOOR - DRIVE 50%	
DURATION	UNTIL STOP KEY
METHOD	ACTIVATION
CONDITION	IG. KEY ON ENGINE RUNNING
PRESS [STRT], IF YOU ARE READY!	
STRT STOP	

Fig. 3

Fig 3 : Selecting "ACTUATION TEST" mode.

EQBF525D

   3) Does Intake Actuator work properly?

   YES

   Go to "Component Inspection" procedure.

   NO

   Check connectors for looseness, poor connection, bending, corrosion, contamination, deterioration, or damage. Repair or replace as necessary and then go to "Verification of Vehicle Repair" procedure.

COMPONENT INSPECTION EC3D4A88

1. Check actuator motor.

   1) Ignition "OFF"

   2) Disconnect Intake Potentiometer.

   3) Verify that the temperature actuator operates to the fresh position when connecting 12V to the terminal "3" and grounding terminal "4".

   4) Verify that the temperature actuator operates to the recirculation position when the connections are reversed.

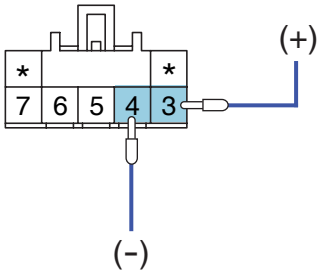

3. Motor
4. Motor
5. Potentiometer ground
6. Potentiometer signal
7. Sensor reference voltage(+5V)

SCMHA6572L

   5) Does the actuator work properly?

   YES

   Go to "Check potentiometer" procedure.

   NO

   Substitute with a known-good actuator and check for proper operation. If the problem is corrected, replace actuator and then go to "Verification of Vehicle Repair" procedure.

2. Check potentiometer

   1) Ignition "ON"

   2) Connect Intake potentiometer.

   3) Measure voltage between terminal "5" and "6" of Intake potentiometer while operating Intake switch.

Specification : Refer the specifications

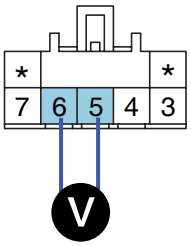

3. Motor
4. Motor
5. Potentiometer ground
6. Potentiometer signal
7. Sensor reference voltage(+5V)

SCMHA6571L

Door position	Voltage (5-6)	Error detecting
Fresh	0.3 ± 0.15V	Low voltage : 0.08V or less
Recirculation	4.7 ± 0.15V	High voltage : 4.9V or more

Specifications : Voltage value of Intake potentiometer as a function of position of Intake.

4) Is the measured voltage within specifications?

YES

Check connectors for looseness, poor connection, bending, corrosion, contamination, deterioration, or damage. Repair or replace as necessary and then go to "Verification of Vehicle Repair" procedure.

NO

Substitute with a known-good actuator and check for proper operation. If the problem is corrected, replace actuator and then go to "Verification of Vehicle Repair" procedure.

3. Check A/C Control Unit.

1) Engine "ON"

2) Connect A/C Control Unit.

3) Measure voltage between terminal "22" and "23" of A/C Control Unit while operating the Intake switch.

Specification :Approx. 12V

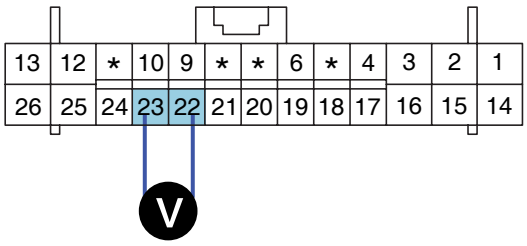

22. Motor
23. Motor

SCMHA6573L

4) Is the measured voltage within specifications?

YES

Check connectors for looseness, poor connection, bending, corrosion, contamination, deterioration, or damage. Repair or replace as necessary and then go to "Verification of Vehicle Repair" procedure.

NO

Substitute with a known-good A/C Control Unit and check for proper operation.
If the problem is corrected, replace A/C Control Unit and then go to "Verification of Vehicle Repair" procedure.

VERIFICATION OF VEHICLE REPAIR E0DD17DE

After a repair, it is essential to verify that the fault has been corrected.

1. Connect scantool and select "Diagnostic Trouble Codes(DTCs)" mode and then clear DTC.
2. Operate the vehicle and monitor the DTC on the scantool.
3. Are any DTCs present?

   YES

   Go to the applicable troubleshooting procedure.

   NO

   System is performing to specification at this time.

DTC B2409 DIRECTION CONTROL MOTOR (DRIVER)

COMPONENT LOCATION E106240B

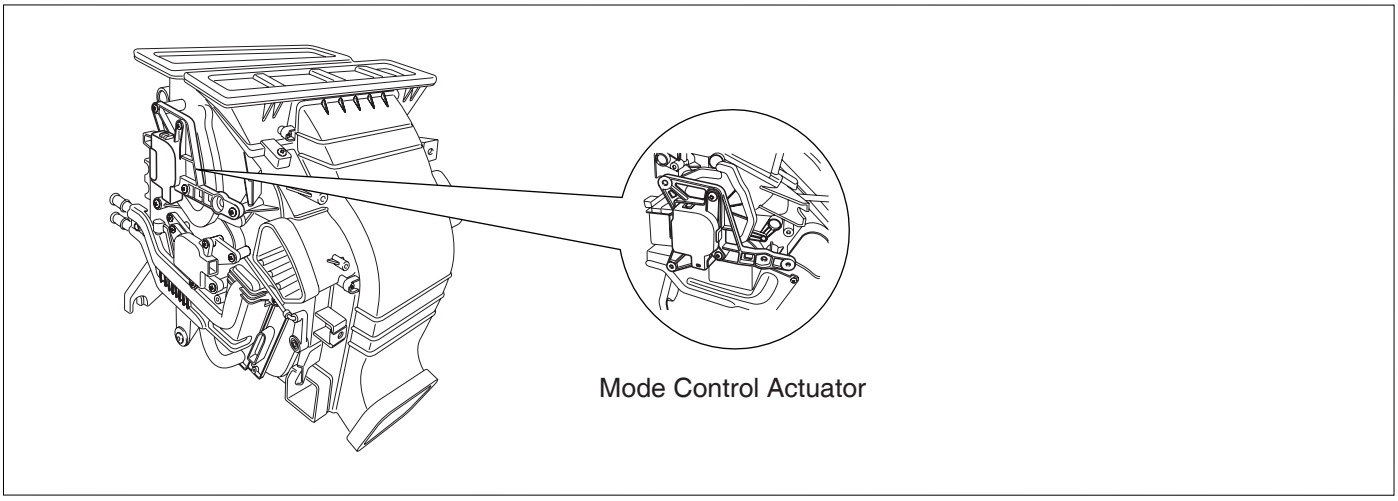

SCMHA6709L

GENERAL DESCRIPTION EF5781CF

The mode control actuator mounted on heater unit, adjusts position of mode door by operating Direction Motor based on signal of A/C control unit. Pressing mode select switch makes the mode control actuator shift in order of vent→ B/L → floor → mix.

DTC DESCRIPTION EC2E4DF8

The A/C controller sets DTC B2409 if the direction motor doesn't move to intended position within 40sec(In this case, A/C controller try to move mode door for 2sec. 3 times, every 20 sec. before setting DTC).

DTC DETECTING CONDITION EC90DC02

Item	Detecting Condition	Possible cause
DTC Strategy	• Voltage check	• Poor connection of connected part • Open circuit in harness • Short circuit in harness • Faulty driver direction potentiometer • Fault A/C Control Unit.
Threshold value	• < 0.1V	
Detecting time	• 0.3 sec	
FAIL SAFE	-	

SPECIFICATION E463272E

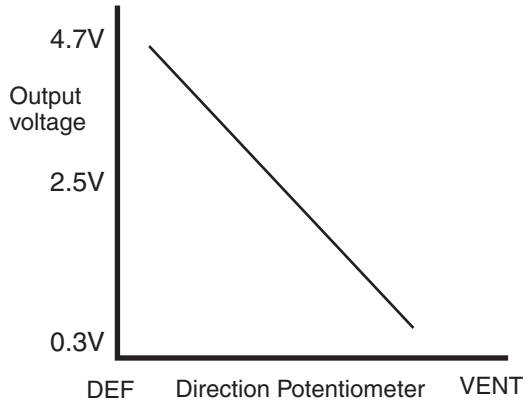

EQBF523B

MONITOR SCANTOOL DATA E65417DD

1. Connect scantool to Data Link Connector(DLC).
2. Engine "ON"
3. Monitor the "DR DIRECTION POTENTIO" parameter on the scantool while operating mode switch.

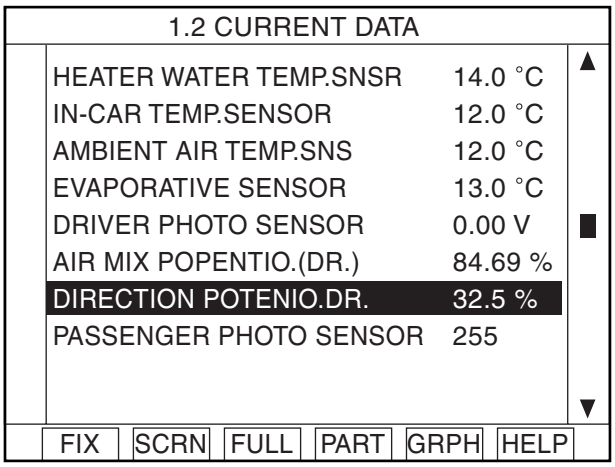

Fig. 1

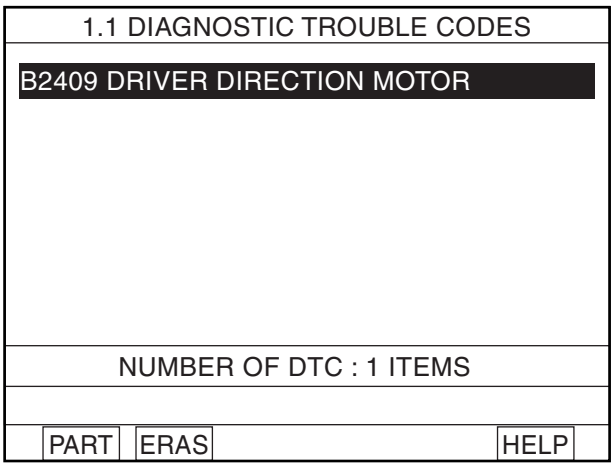

Fig. 2

Fig 1 : The current data in abnormal state.
Fig 2 : DTC B2409.

EQBF526A

4. Are the DTC B2409 present and is parameter of "Driver DIRECTION POTENTIO." fixed?
   ※ There is any fault in Driver Direction Motor. If the parameter of "Driver DIRECTION POTENTIO." is 10% or less on "VENT" mode, or If the parameter is 90% or more on "DEF" mode.

   YES

   Go to "Inspection" procedure.

   NO

   Fault is intermittent caused by poor contact in the sensor's and/or A/C controller's connector or was repaired and A/C controller memory was not cleared. Thoroughly check connectors for looseness, poor connection, bending, corrosion, contamination, deterioration, or damage. Repair or replace as necessary and then go to "Verification of Vehicle Repair" procedure.

TERMINAL AND CONNECTOR INSPECTION E445635C

1. Many malfunctions in the electrical system are caused by poor harness and terminals.
   Faults can also be caused by interference from other electrical systems, and mechanical or chemical damage.

2. Thoroughly check connectors for looseness, poor connection, bending, corrosion, contamination, deterioration, or damage.

3. Has a problem been found?

   YES

   Repair as necessary and go to "Verification of Vehicle Repair" procedure.

   NO

   Go to "Signal circuit inspection" procedure.

SIGNAL CIRCUIT INSPECTION E1953B5C

1. Check for open in harness.

   1) Ignition "OFF"

   2) Disconnect Driver mode Actuator.

   3) Measure resistance between terminal "3,4" of Driver Direction Motor and terminal "19,20" of A/C control unit.

Specification : Approx. 0 Ω

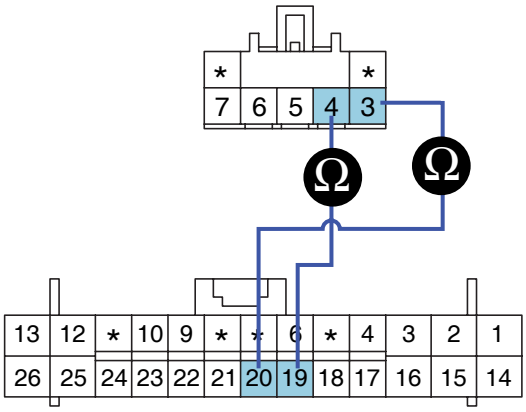

3. Motor
4. Motor
5. Potentiometer ground
6. Potentiometer signal
7. Sensor reference voltage(+5V)

SCMHA6574L

4) Is the measured resistance within specifications?

YES

Go to "Check for short to ground in harness" procedure.

NO

Check for open in signal harness. Repair as necessary and go to "Verification of Vehicle Repair" procedure.

2. Check for short to ground in harness.

1) Ignition "OFF"

2) Disconnect Driver mode Actuator.

3) Measure resistance between terminal "3,4" of Driver Direction Motor and chassis ground.

Specification : Approx. ∞ Ω

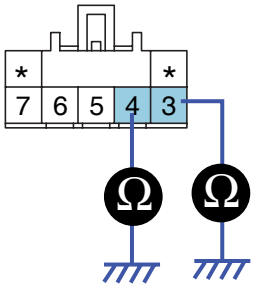

3. Motor
4. Motor
5. Potentiometer ground
6. Potentiometer signal
7. Sensor reference voltage(+5V)

SCMHA6575L

4) Is the measured resistance within specifications?

YES

Go to "Visual/Physical Inspection " procedure.

NO

Check for short to ground in signal harness. Repair as necessary and go to "Verification of Vehicle Repair" procedure.

VISUAL/PHYSICAL INSPECTION E50E56B6

1. Check actuator.
   ※ Check if Driver Direction Actuator works properly through ACTUATION TEST.

   1) Ignition : ON

   2) Connect Scantool and select " ACTUATION TEST" mode and press [F1]

1.3 ACTUATION TEST	
DRIVER AIR OUTLET MODE-DRIVE FOOT	
DURATION	UNTIL STOP KEY
METHOD	ACTIVATION
CONDITION	IG. KEY ON ENGINE RUNNING
PRESS [STRT], IF YOU ARE READY!	
STRT STOP	

Fig. 3

Fig 3 : Selecting "ACTUATION TEST" mode.

EQBF526D

   3) Does Driver Direction Actuator work properly?

   YES

   Go to "Component Inspection" procedure.

   NO

   Check connectors for looseness, poor connection, bending, corrosion, contamination, deterioration, or damage. Repair or replace as necessary and then go to "Verification of Vehicle Repair" procedure.

COMPONENT INSPECTION E2354556

1. Check actuator.

   1) Ignition "OFF"

   2) Disconnect Driver Direction potentiometer.

   3) Verify that the mode actuator operates to the vent mode when connecting 12V to the terminal "3" and grounding terminal "4".

   4) Verify that the mode actuator operates to the def mode when the connections are reversed.

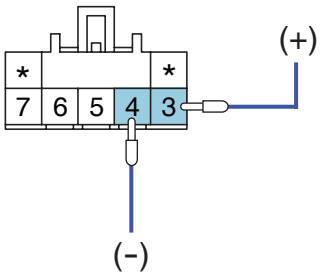

3. Motor
4. Motor
5. Potentiometer ground
6. Potentiometer signal
7. Sensor reference voltage(+5V)

SCMHA6554L

5) Does the actuator work properly?

YES

Go to "Check potentiometer" procedure.

NO

Substitute with a known-good actuator and check for proper operation. If the problem is corrected, replace actuator and then go to "Verification of Vehicle Repair" procedure.

2. Check potentiometer

1) Ignition "ON"

2) Connect Driver Direction potentiometer.

3) Measure voltage between terminal "5" and "6" of Driver Direction potentiometer as the mode switch is operated.

Specification : Refer the specifications in fig 3

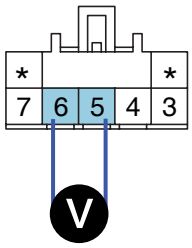

3. Motor
4. Motor
5. Potentiometer ground
6. Potentiometer signal
7. Sensor reference voltage(+5V)

SCMHA6555L

Door position	Voltage (5-6)	Error detecting
VENT	0.3 ± 0.15V	Under voltage : 0.08V or less Over voltage : 4.92V or more
BI-LEVEL(1)	1.35 ± 0.4V	
BI-LEVEL(2)	2.25 ± 0.4V	
FLOOR	3.0 ± 0.4V	
MIX	3.6 ± 0.4V	
DEF	4.7 ± 0.15V	

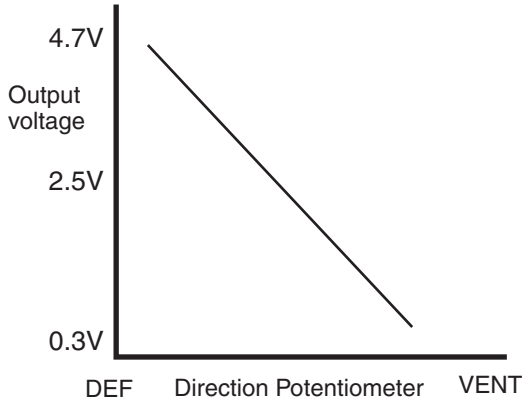

Fig. 3

Fig 3) Specifications : Voltage value as a function of position of direction potentiometer.

EQBF523J

4) Is the measured voltage within specifications in fig3?

YES

Check connectors for looseness, poor connection, bending, corrosion, contamination, deterioration, or damage. Repair or replace as necessary and then go to "Verification of Vehicle Repair" procedure.

NO

Substitute with a known-good actuator and check for proper operation. If the problem is corrected, replace actuator and then go to "Verification of Vehicle Repair" procedure.

3. Check A/C Control Unit.

1) Engine : "ON"

2) Connect A/C Control Unit.

3) Measure voltage between terminal "19" and "20" of A/C Control Unit while operating the mode switch.

Specification :Approx. 12V

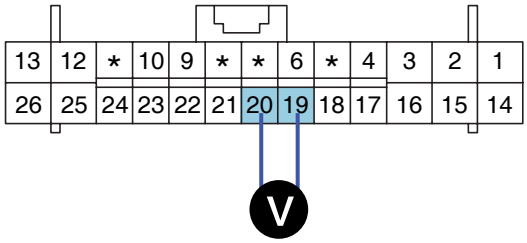

19 : Motor
20 : Motor

SCMHA6576L

4) Is the measured voltage within specifications?

YES

Check connectors for looseness, poor connection, bending, corrosion, contamination, deterioration, or damage. Repair or replace as necessary and then go to "Verification of Vehicle Repair" procedure.

NO

Substitute with a known-good A/C Control Unit and check for proper operation.
If the problem is corrected, replace A/C Control Unit and then go to "Verification of Vehicle Repair" procedure.

VERIFICATION OF VEHICLE REPAIR ED389E33

After a repair, it is essential to verify that the fault has been corrected.

1. Connect scantool and select "Diagnostic Trouble Codes(DTCs)" mode and then clear DTC.
2. Operate the vehicle and monitor the DTC on the scantool.
3. Are any DTCs present?

YES

Go to the applicable troubleshooting procedure.

NO

System is performing to specification at this time.

DTC B2415 AIR MIX MOTOR (PASSENGER)

COMPONENT LOCATION E8B6758A

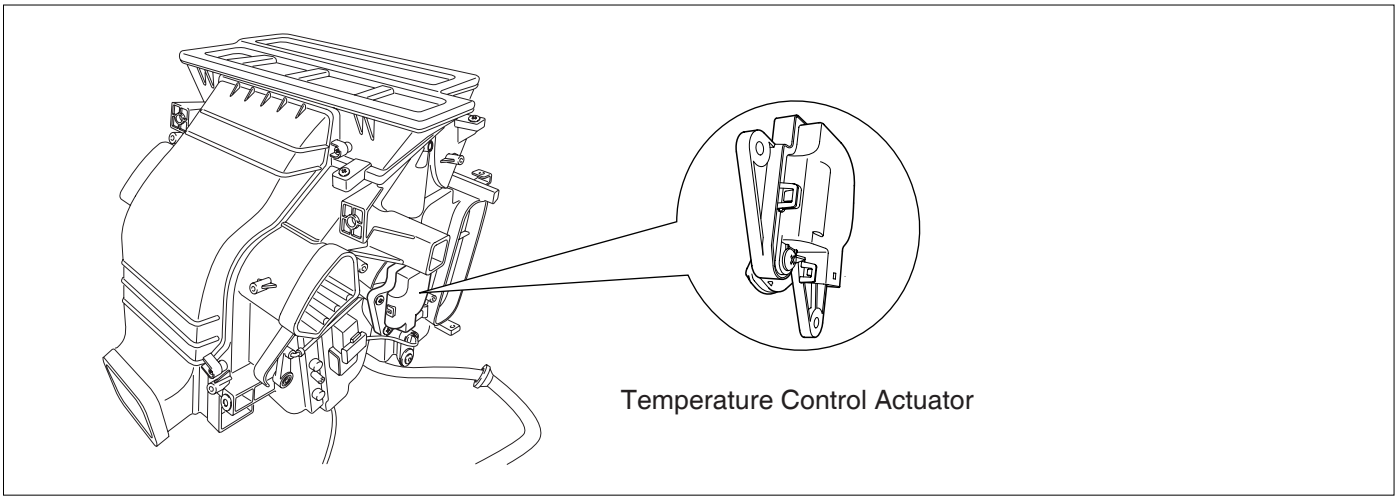

SCMHA6700L

GENERAL DESCRIPTION ECC6FEEE

Temperature control actuator located at heater unit, regulates the temperature by the procedure as follows. Signal from control unit adjusts position of temp. door by operating temp. motor and then temperature will be regulated by the hot/cold air ratio decided by position of temp. door.

DTC DESCRIPTION E9CEC9DA

The A/C controller sets DTC B2415 if the air mix actuator doesn't move to intended position within 40sec (In this case, A/C controller try to move temp. door for 2sec. 3 times, every 20 sec. before setting DTC).

DTC DETECTING CONDITION EF3351EF

Item	Detecting Condition	Possible cause
DTC Strategy	• Voltage check	• Poor connection of connected part • Open circuit in harness • Short circuit in harness • Faulty driver Air Mix potentiometer • Fault A/C Control Unit
Threshold value	• < 0.1V	
Detecting time	• 0.3 sec	
FAIL SAFE	-	

SPECIFICATION EF5771E4

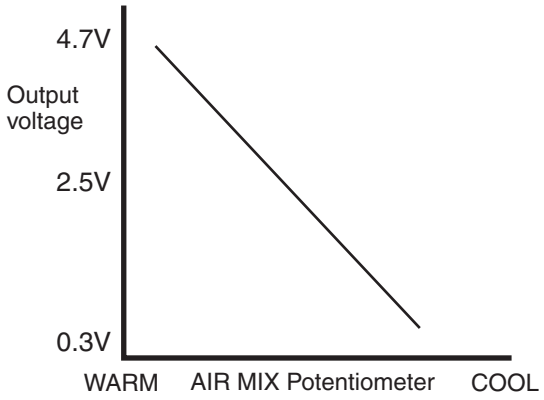

EQBF521B

MONITOR SCANTOOL DATA E080E9AB

1. Connect scantool to Data Link Connector(DLC).
2. Engine "ON"
3. Monitor the "Passenger Air Mix Potentiometer" Parameter on the Scantool while operating temp. switch.

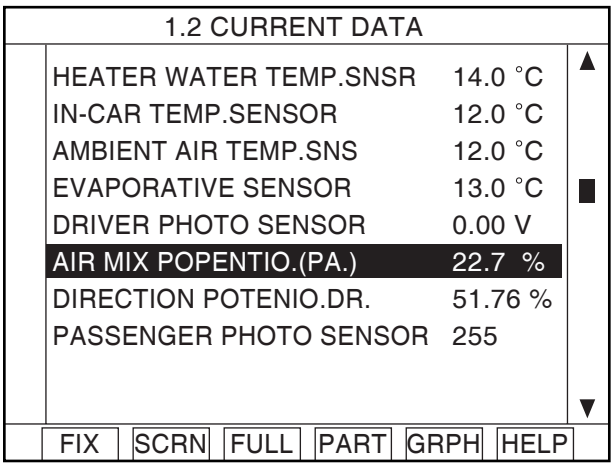

Fig. 1

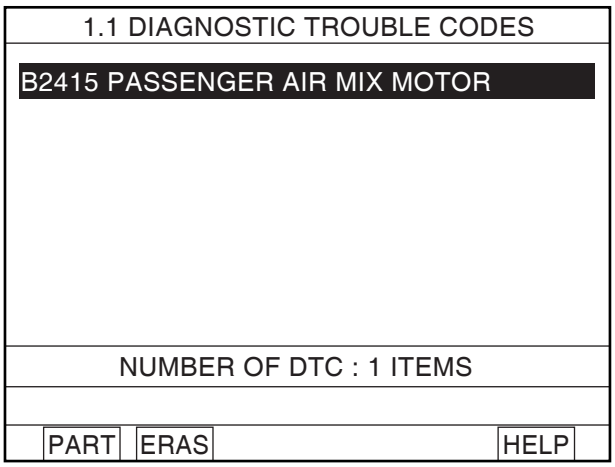

Fig. 2

Fig 1 : The current data in abnormal state.
Fig 2 : DTC B2415.

LQKG990J

4. Are the DTC B2415 present and is parameter of "Passenger AIR MIX Potentiometer" fixed?
   ※ There is any fault in Passenger AIR MIX Motor. If the parameter of "Passenger AIR MIX DOOR" is 30% or less when the actuator operates to the hot position, or If the parameter is 60% and more when the actuator operates to the cold position.

   YES

   Go to "Inspection" procedure.

NO

Fault is intermittent caused by poor contact in the sensor's and/or A/C controller's connector or was repaired and A/C controller memory was not cleared. Thoroughly check connectors for looseness, poor connection, bending, corrosion, contamination, deterioration, or damage. Repair or replace as necessary and then go to "Verification of Vehicle Repair" procedure.

TERMINAL AND CONNECTOR INSPECTION E3270973

1. Many malfunctions in the electrical system are caused by poor harness and terminals.
   Faults can also be caused by interference from other electrical systems, and mechanical or chemical damage.
2. Thoroughly check connectors for looseness, poor connection, bending, corrosion, contamination, deterioration, or damage.
3. Has a problem been found?

YES

Repair as necessary and go to "Verification of Vehicle Repair" procedure.

NO

Go to "Signal circuit inspection" procedure.

SIGNAL CIRCUIT INSPECTION E7D7A9BC

1. Check for open in harness.
   1) Ignition "OFF"
   2) Disconnect Passenger Air Mix potentiometer.
   3) Measure resistance between terminal "3,4" of Passenger Air Mix Motor and terminal "16,17" of A/C control unit.

Specification : Approx. 0 Ω

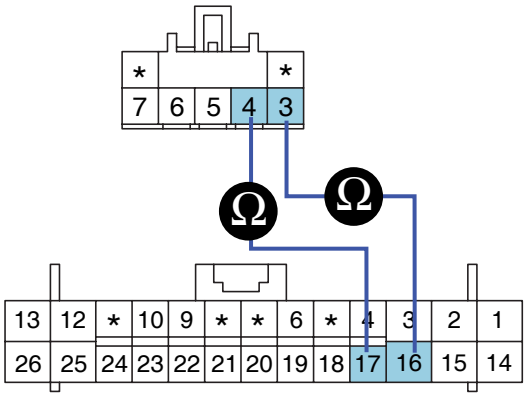

3. Motor (Warm)
4. Motor (Cool)
5. Potentiometer ground
6. Potentiometer signal
7. Sensor reference voltage(+5V)

SCMHA6710L

4) Is the measured resistance within specifications?

YES

Go to "Check for short to ground in harness" procedure.

NO

Check for open in signal harness. Repair as necessary and go to "Verification of Vehicle Repair" procedure.

2. Check for short to ground in harness.

   1) Ignition "OFF"

   2) Disconnect Passenger Air Mix Actuator.

   3) Measure resistance between terminal "3,4" of Passenger Air Mix Motor and chassis ground.

Specification : Approx. ∞ Ω

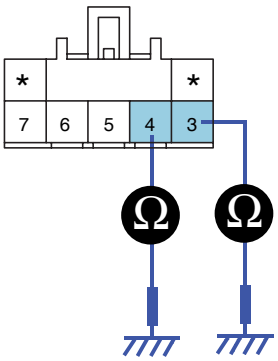

3. Motor
4. Motor
5. Potentiometer ground
6. Potentiometer signal
7. Sensor reference voltage(+5V)

SCMHA6711L

   4) Is the measured resistance within specifications?

YES

Go to "Visual/Physical Inspection " procedure.

NO

Check for short to ground in signal harness. Repair as necessary and go to "Verification of Vehicle Repair" procedure.

VISUAL/PHYSICAL INSPECTION E24C54B8

1. Check actuator.
   ※ Check if Passenger Air Mix Actuator works properly through ACTUATION TEST.

   1) Ignition : ON

   2) Connect Scantool and select " ACTUATION TEST" mode and press [F1]

1.3 ACTUATION TEST	
PASSENGER AIR MIX DOOR - PASSENGER 50%	
DURATION	UNTIL STOP KEY
METHOD	ACTIVATION
CONDITION	IG. KEY ON ENGINE RUNNING
PRESS [STRT], IF YOU ARE READY!	
STRT STOP	

Fig. 3

Fig 3 : Selecting "ACTUATION TEST" mode.

LQKG525D

   3) Does Passenger Air Mix Actuator work properly?

   YES

   Go to "Component Inspection" procedure.

   NO

   Check connectors for looseness, poor connection, bending, corrosion, contamination, deterioration, or damage. Repair or replace as necessary and then go to "Verification of Vehicle Repair" procedure.

COMPONENT INSPECTION E760C3E3

1. Check actuator motor.

   1) Ignition "OFF"

   2) Disconnect Passenger Air Mix Potentiometer.

   3) Verify that the temperature actuator operates to the hot position when connecting 12V to the terminal "3" and grounding terminal "4".

   4) Verify that the temperature actuator operates to the cool position when the connections are reversed.

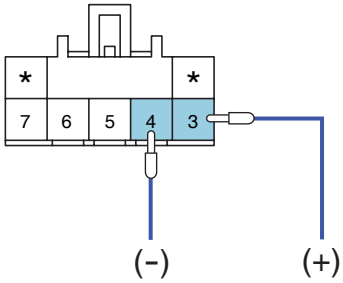

3. Motor
4. Motor
5. Potentiometer ground
6. Potentiometer signal
7. Sensor reference voltage(+5V)

SCMHA6712L

   5) Does the actuator work properly?

   YES

   Go to "Check potentiometer" procedure.

   NO

   Substitute with a known-good actuator and check for proper operation. If the problem is corrected, replace actuator and then go to "Verification of Vehicle Repair" procedure.

2. Check potentiometer

   1) Ignition "ON"

   2) Connect Passenger Air Mix potentiometer.

   3) Measure voltage between terminal "5" and "6" of Passenger Air Mix potentiometer while operating the temp. switch.

Specification : Refer the specifications in fig 3)

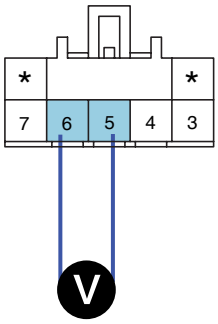

3. Motor
4. Motor
5. Potentiometer ground
6. Potentiometer signal
7. Sensor reference voltage(+5V)

SCMHA6713L

Door position	Voltage (5-6)	Error detecting
MAX. Cooling	0.3 ± 0.15V	Low voltage : 0.08V or less
MAX. Heating	4.7 ± 0.15V	High voltage :4.9V or more

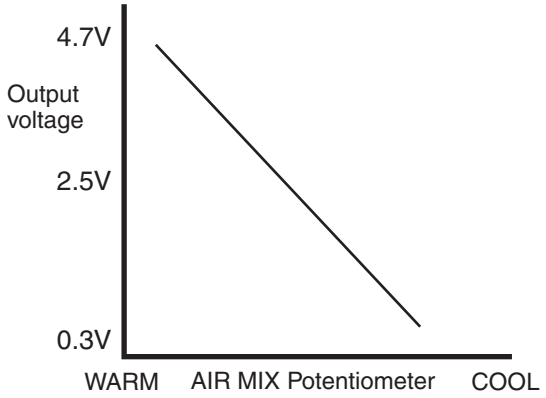

Fig. 3

Fig 3) Specifications : Voltage value of air mix potentiometer as a function of position of setting temperature.

EQBF521J

4) Is the measured voltage within specifications in fig3?

YES

Check connectors for looseness, poor connection, bending, corrosion, contamination, deterioration, or damage. Repair or replace as necessary and then go to "Verification of Vehicle Repair" procedure.

NO

Substitute with a known-good actuator and check for proper operation. If the problem is corrected, replace actuator and then go to "Verification of Vehicle Repair" procedure.

3. Check A/C Control Unit.

1) Engine "ON"

2) Connect A/C Control Unit.

3) Measure voltage between terminal "16" and "17" of A/C Control Unit while operating the temp. switch.

Specification :Approx. 12V

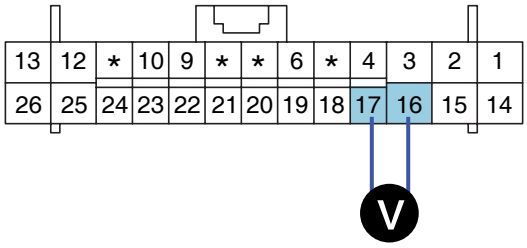

16 : Motor
17 : Motor

SCMHA6714L

4) Is the measured voltage within specifications?

YES

Check connectors for looseness, poor connection, bending, corrosion, contamination, deterioration, or damage. Repair or replace as necessary and then go to "Verification of Vehicle Repair" procedure.

NO

Substitute with a known-good A/C Control Unit and check for proper operation.
If the problem is corrected, replace A/C Control Unit and then go to "Verification of Vehicle Repair" procedure.

VERIFICATION OF VEHICLE REPAIR E9BA69FB

After a repair, it is essential to verify that the fault has been corrected.

1. Connect scantool and select "Diagnostic Trouble Codes(DTCs)" mode and then clear DTC.
2. Operate the vehicle and monitor the DTC on the scantool.
3. Are any DTCs present?

YES

Go to the applicable troubleshooting procedure.

NO

System is performing to specification at this time.