Body Electrical System > General Information > General Information

General Troubleshooting Information

Before Troubleshooting

1. Check applicable fuses in the appropriate fuse/relay box.
2. Check the battery for damage, state of charge, and clean and tight connections.
   (Refer to the EE group - "Battery")

> NOTE
>
> • Do not quick-charge a battery unless the battery ground cable has been disconnected, otherwise you will damage the alternator diodes.
> • Do not attempt to crank the engine with the battery ground cable loosely connected or you will severely damage the wiring.

3. Check the alternator belt tension.

Handling Connectors

1. Make sure the connectors are clean and have no loose wire terminals.
2. Make sure multiple cavity connectors are packed with grease (except watertight connectors).
3. All connectors have push-down release type locks (A).

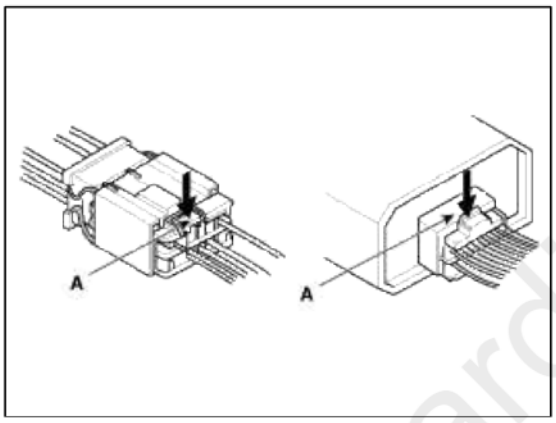

4. Some connectors have a clip on their side used to attach them to a mount bracket on the body or on another component. This clip has a pull type lock.
5. Some mounted connectors cannot be disconnected unless you first release the lock and remove the connector from its mount bracket (A).

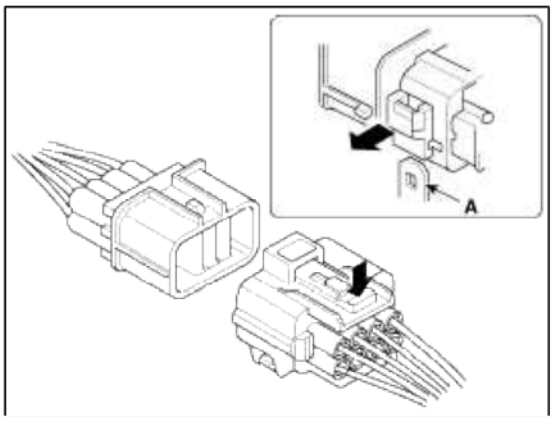

6. Never try to disconnect connectors by pulling on their wires; pull on the connector halves instead.

cardiagn.com

7. Always reinstall plastic covers.

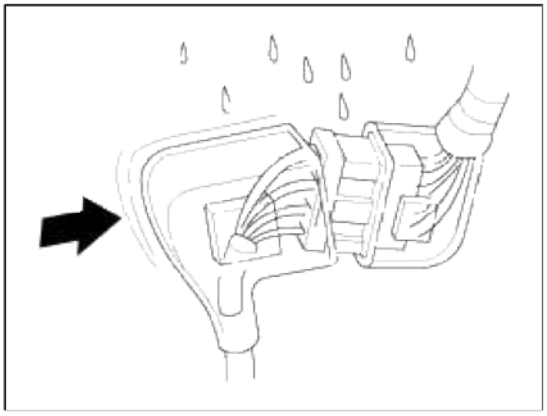

8. Before connecting connectors, make sure the terminals (A) are in place and not bent.

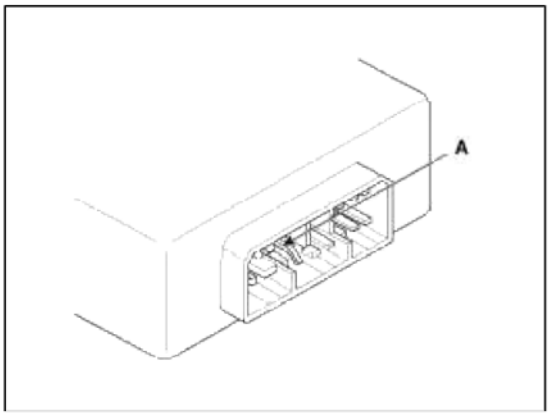

9. Check for loose retainer (A) and rubber seals (B).

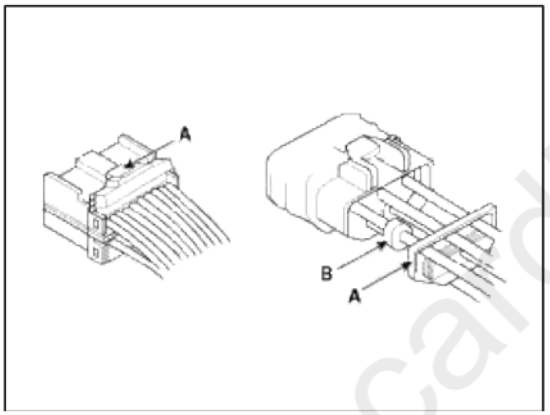

10. The backs of some connectors are packed with grease. Add grease if necessary. If the grease (A) is contaminated, replace it.

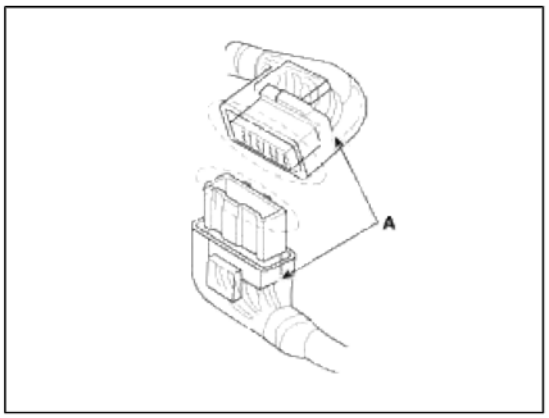

11. Insert the connector all the way and make sure it is securely locked.

cardiagn.com

12. Position wires so that the open end of the cover faces down.

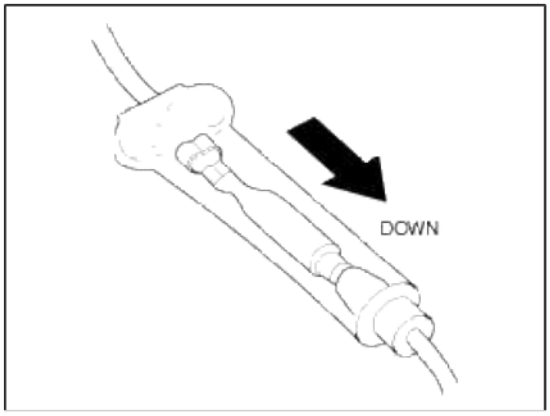

Handling Wires And Harnesses

1. Secure wires and wire harnesses to the frame with their respective wire ties at the designated locations.
2. Remove clips carefully; don't damage their locks (A).

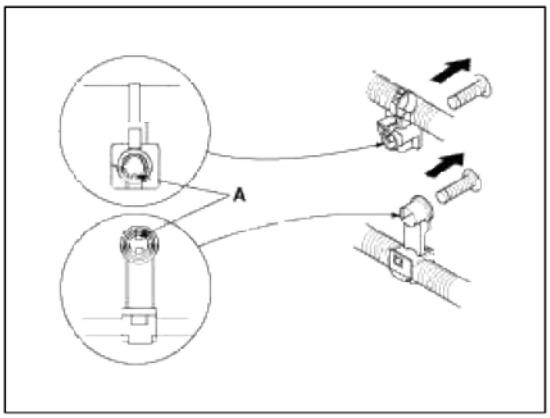

3. Slip pliers (A) under the clip base and through the hole at an angle, and then squeeze the expansion tabs to release the clip.

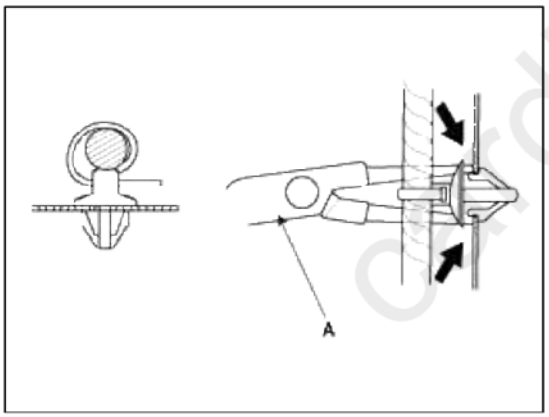

4. After installing harness clips, make sure the harness doesn't interfere with any moving parts.
5. Keep wire harnesses away from exhaust pipes and other hot parts, from sharp edges of brackets and holes, and from exposed screws and bolts.
6. Seat grommets in their grooves properly (A). Do not leave grommets distorted (B).

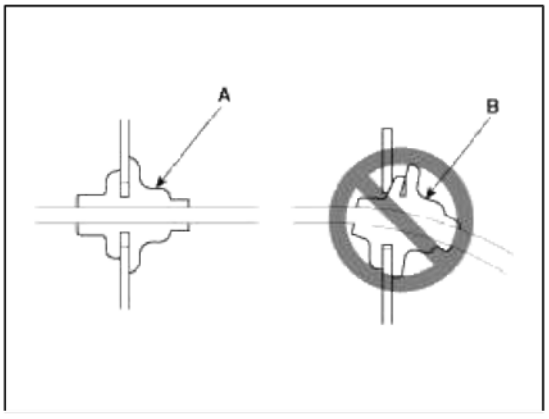

cardiagn.com

Testing And Repairs

1. Do not use wires or harnesses with broken insulation.
   Replace them or repair them by wrapping the break with electrical tape.
2. After installing parts, make sure that no wires are pinched under them.
3. When using electrical test equipment, follow the manufacturer's instructions and those described in this manual.
4. If possible, insert the remover tool from the wire side (except waterproof connector).

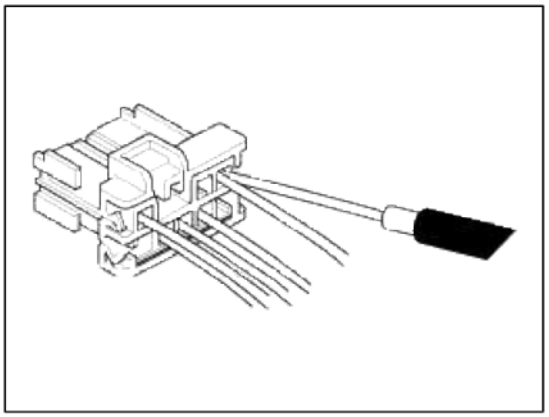

5. Use a remover tool with a tapered tip.

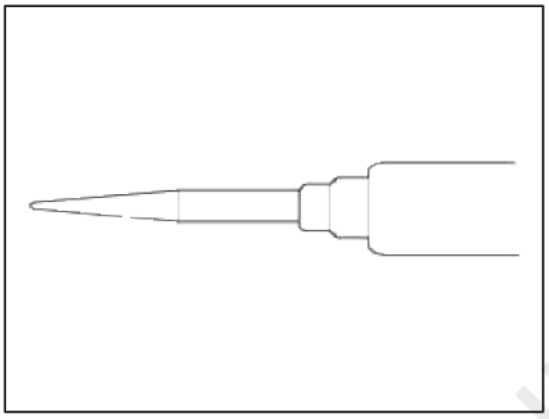

Refer to the user's guide in the wiring repair kit II (Pub. No. : 0K000 003 A05)

Five-step Troubleshooting

1. Verify the complaint
   Turn on all the components in the problem circuit to verify the customer complaint. Note the symptoms. Do not begin disassembly or testing until you have narrowed down the problem area.
2. Analyze the schematic
   Look up the schematic for the problem circuit.
   Determine how the circuit is supposed to work by tracing the current paths from the power feed through the circuit components to ground. If several circuits fail at the same time, the fuse or ground is a likely cause.
   Based on the symptoms and your understanding of the circuit operation, identify one or more possible causes of the problem.
3. Isolate the problem by testing the circuit.
   Make circuit tests to check the diagnosis you made in step 2. Keep in mind that a logical, simple procedure is the key to efficient troubleshooting.
   Test for the most likely cause of failure first. Try to make tests at points that are easily accessible.
4. Fix the problem
   Once the specific problem is identified, make the repair. Be sure to use proper tools and safe procedures.
5. Make sure the circuit works
   Turn on all components in the repaired circuit in all modes to make sure you've fixed the entire problem. If the problem was a blown fuse, be sure to test all of the circuits on the fuse. Make sure no new problems turn up and the original problem does not recur.

Battery Reset

cardiagn.com

Description

When reconnecting the battery cable after disconnecting, recharging battery after discharged or installing the memory fuse located on the driver's side panel after removing, be sure to reset systems mentioned in the below table.

In addition, when replacing or reinstalling their fuses after removing, they should be reset according to the below table. Please refer to the below table when servicing.

System	Resetting
Power window	Whenever the window cannot be properly closed or opened. Whenever the battery is discharged or the related fuse is replaced or reinstalled, reset the power window system according to the procedure below. 1. Turn the ignition switch to the ON position. 2. Push up the power window switch until the window glass is entirely down and then push up continuously for about 1 sec.
Panoramaroof	Whenever the vehicle battery is disconnected or discharged, or you use the emergency handle to operate the panoramaroof, you have to reset your panoramaroof system as follows : 1. Turn the ignition key to the ON position and then close the panoramaroof completely. 2. Release the panoramaroof control lever. 3. Press and hold the CLOSE button for more than 10 seconds until the panoramaroof has moved slightly. 4. Release the panoramaroof control lever. 5. Press and hold the CLOSE button once again within 3 seconds until the panoramaroof do as follows : A. Tilt → Slide Open → Slide Close Then release the lever. 6. Reset procedure of panorama system is finished.
Trip computer	When the battery is disconnected and reconnected, the set functions of the trip computer become initialized. So, you need to explain this information to the customer.
Clock	When the battery is disconnected and reconnected, the clock becomes initialized. So, the clock should be reset. (Refer to the owner's manual)
Audio	When the battery is disconnected and reconnected, the customer's radio stations become initialized. So, you need to record the customer's radio stations prior to service, and after service, set the customer's radio stations into the audio.
Heater & Air Conditioner	When the battery is disconnected and reconnected, the heater and A/Con become initialized. So, heater and A/Con should be reset.

cardiagn.com

Body Electrical System > General Information > Special Service Tools

Special Service Tools

Tool (Number and Name)	Illustration	Application
RKE Battery Checker (09954-2P100)	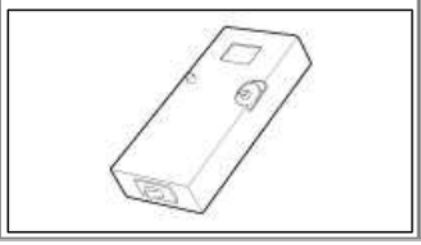	Measuring the RKE battery voltage

Body Electrical System > Audio > Specifications

Specification

Audio

Item		Specification		
Model		RADIO+CD+MP3+B/T+SDARS (PA710S)	Bristol Audio BA900	Bristol Audio BA950 (USA Only)
Power supply		DC 14.4V		
Impedance (Ω)		4Ω X 4		
Tuning type		PLL synthesized type		
Other		Internal Amplifier	Internal Amplifier/ External Amplifier, Subwoofer	External Amplifier, Subwoofer
Frequency range / Channel space	FM	87.5MHz ~ 107.9MHz/200KHz (USA, CANADA)		
	AM	530KHz~1710KHz/10KHz (USA, CANADA)		

Speaker

Item		PA710S	BA900	BA900, BA950 (Infinity sound)
Input power (W or V)	Front	MAX 40W		MAX 50W
	Rear	MAX 40W		MAX 50W
	Midrange	MAX 40W		MAX 50W
	Sub woofer	-		16 V rms
	Center	-		MAX 50W
Impedance (Ω)	Front	4.0 ± 0.6		2.0 ± 0.3
	Rear	4.0 ± 0.6		2.0 ± 0.3
	Midrange	4.0 ± 0.6		1.9 ± 0.3
	Sub woofer	-		4.8 ± 1.0
	Center	-		2.0 ± 0.3
Number of speaker		6		8

cardiagn.com

Body Electrical System > Audio > Components and Components Location

Component Location

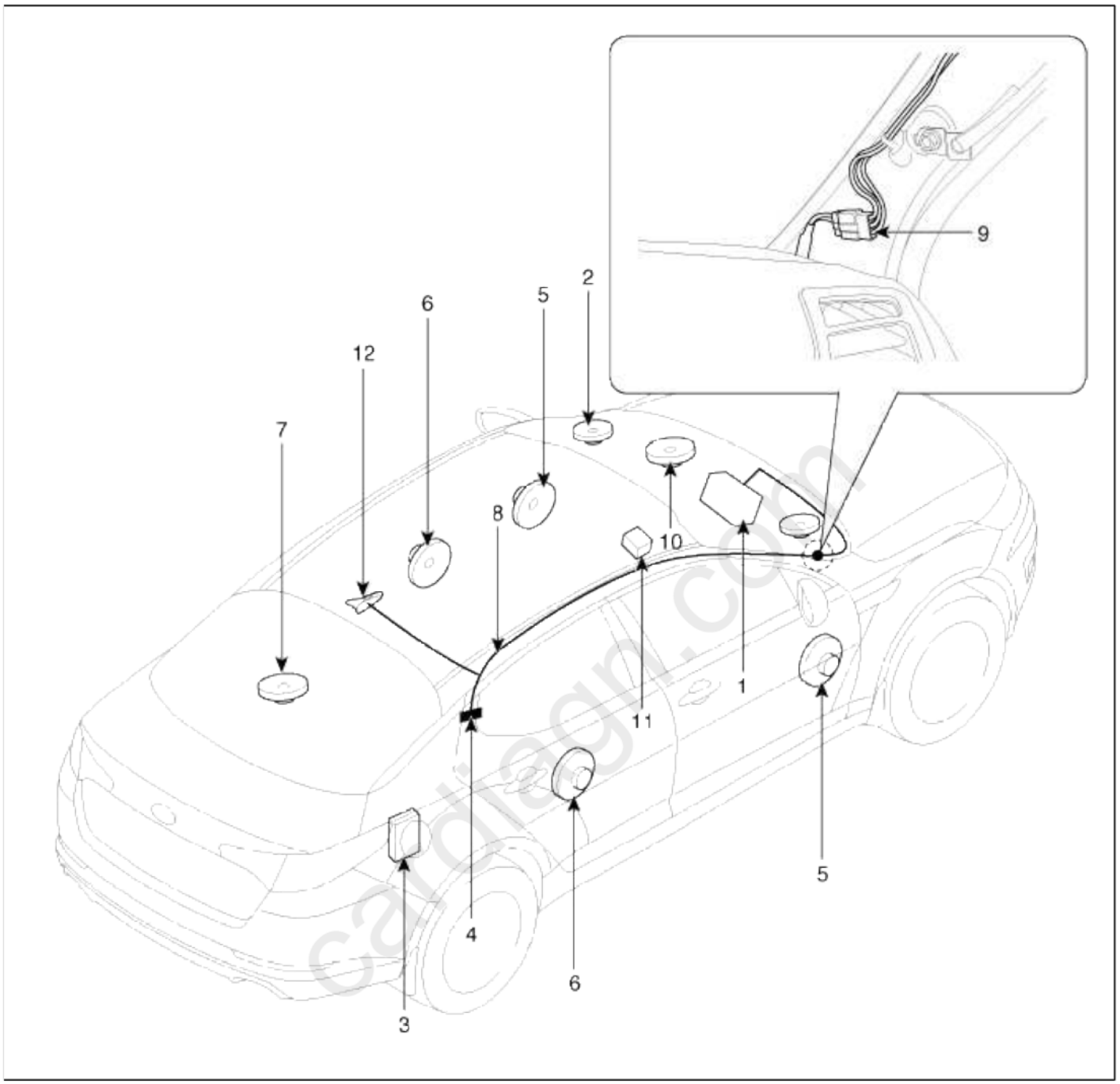

1. Audio unit 2. Midrange speaker 3. External amplifier 4. Glass antenna (AM/FM) 5. Front door speaker 6. Rear door speaker	7. Woofer speaker 8. Antenna feeder cable 9. Feeder cable joint connector 10. Center speaker 11. Multimedia jack 12. Roof antenna (SDARS)

Body Electrical System > Audio > Audio Unit > Components and Components Location

Components

[RADIO/CD/MP3(PA710)]

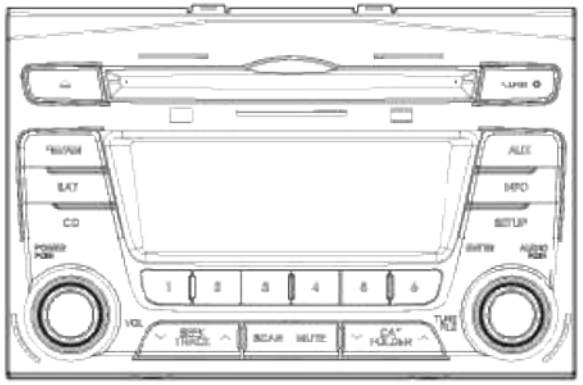

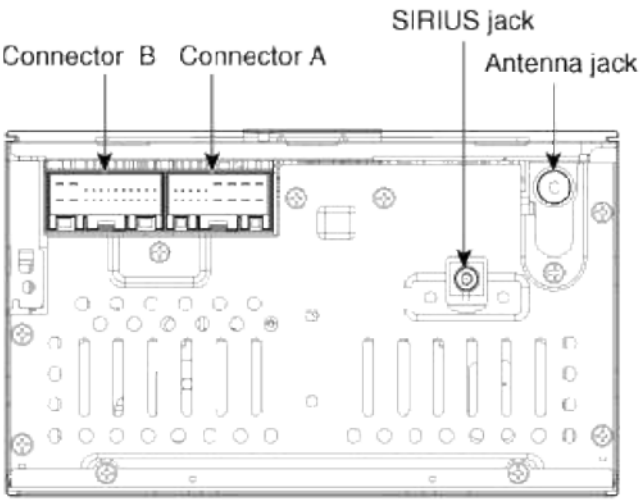

	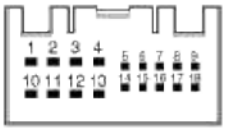	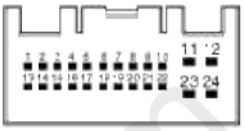
Pin No	Connector A	Connector B
1	Rear left speaker (+)	-
2	Front left speaker (+)	-
3	Front right speaker (+)	-
4	Rear right speaker (+)	Steering wheel remote
5	-	-
6	-	USB D (+)
7	IGN	USB/iPod VDD
8	Illumination (+)	AUX R IN
9	Detent	AUX GND
10	Rear left speaker (-)	Mic(+) (Blue tooth)
11	Front left speaker (-)	ACC
12	Front right speaker (-)	B+
13	Rear right speaker (-)	-
14	-	-
15	-	-
16	-	Speed
17	Illumination (-)	Remote GND
18	Remote anntena	USB D (-)
19		USB/iPod GND
20		AUX DETECT
21		AUX L IN
22		Mic(-) (Blue tooth)
23		-
24		Power GND

carmanuals.com

[RADIO/MP3/VCD(BA900)]

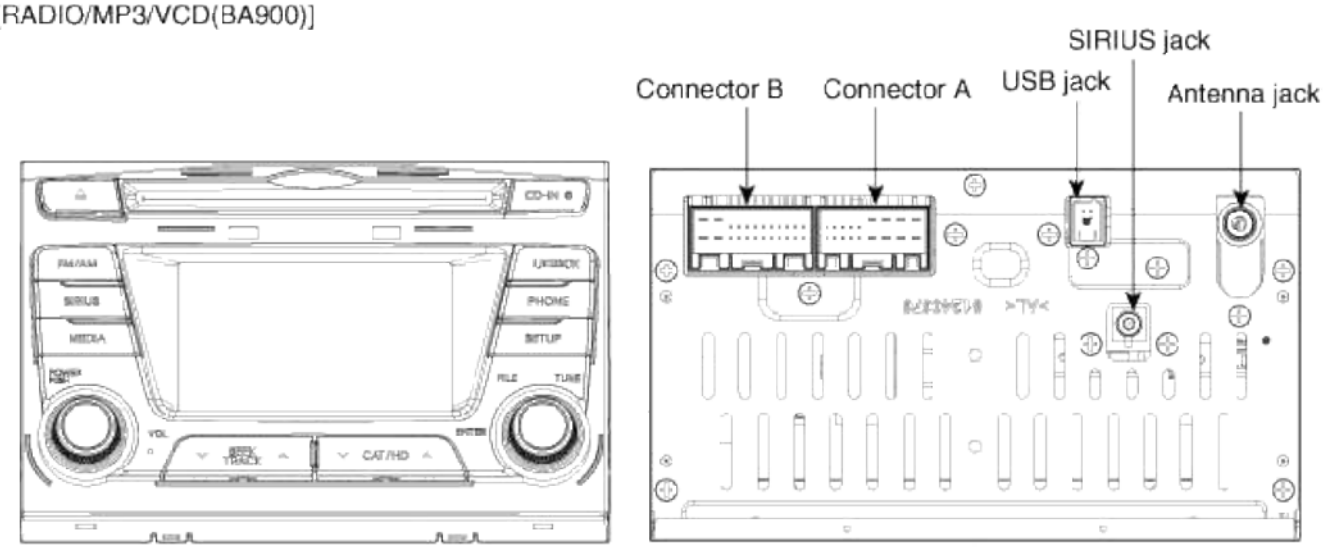

[Internal AMP]

Pin No	Connector A	Connector B
1	Rear left speaker (+)	CAN HI
2	Front left speaker (+)	-
3	Front right speaker (+)	-
4	Rear right speaker (+)	Steering wheel remote
5	-	-
6	-	Camera VIN
7	IGN	Camera B+
8	Illumination (+)	AUX R IN
9	-	AUX GND
10	Rear left speaker (-)	Mic(+) (Blue tooth)
11	Front left speaker (-)	ACC
12	Front right speaker (-)	B+
13	Rear right speaker (-)	CAN LOW
14	P position	-
15	-	AV Tail
16	-	Speed
17	Illumination (-)	Remote GND
18	Remote anntena	Camera VGND
19		Camera REQ
20		AUX DETECT
21		AUX L IN
22		Mic(-) (Blue tooth)
23		Camera PGND
24		Power GND

carmanuals.com

[RADIO/MP3/VCD(BA900)]

[External AMP]

	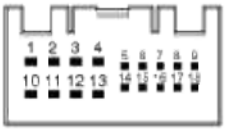	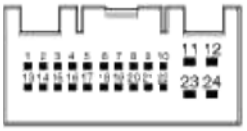
Pin No	Connector A	Connector B
1	-	CAN HI
2	-	-
3	-	-
4	-	Steering wheel remote
5	SPDIF(Digital amp) GND	-
6	SPDIF ON	Camera VIN
7	IGN	Camera B+
8	Illumination (+)	AUX R IN
9	-	AUX GND
10	-	Mic(+) (Blue tooth)
11	-	ACC
12	-	B+
13	-	CAN LOW
14	P position	-
15	SPDIF DP	AV Tail
16	-	Speed
17	Illumination (-)	Remote GND
18	Remote anntena	Camera VGND
19		Camera REQ
20		AUX DETECT
21		AUX L IN
22		Mic(-) (Blue tooth)
23		Camera PGND
24		Power GND

USB jack	No.	Description	No.	Description
	1	USB / iPod 5V	3	USB / iPod TX
	2	USB / iPod RX	4	USB / iPod GND

cardiagn.com

[External Amplifier]

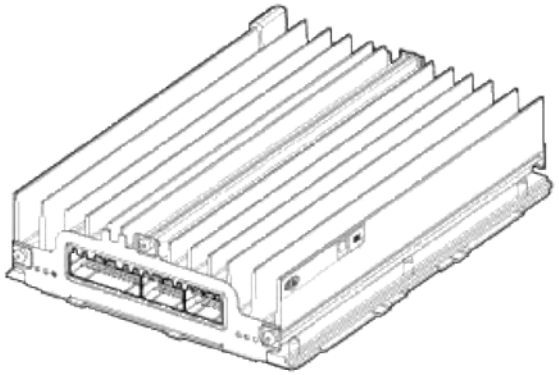

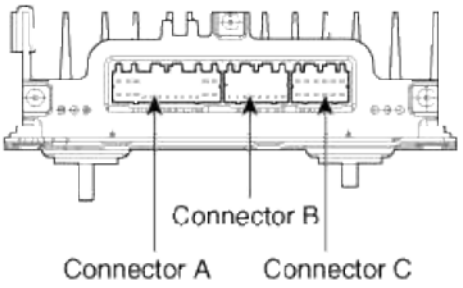

No	Connector A (26Pin)	Connector B (16Pin)	Connector C (12Pin)
	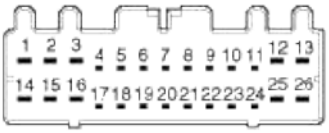	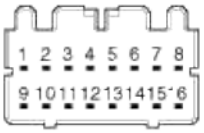	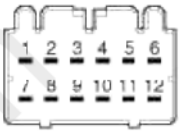
1	B (+)	Midrange right (+)	Rear door right (+)
2	B (+)	Midrange left (+)	Rear door left (+)
3	B (+)	-	Front right (+)
4	-	-	Front left (+)
5	CAN (+)	-	Front door right (+)
6	CAN (-)	-	Front door left (+)
7	ACC	Center speaker (+)	Rear door right (-)
8	-	-	Rear door left (-)
9	-	Midrange right (-)	Front right (-)
10	-	Midrange left (-)	Front left (-)
11	Navi (+)	-	Front door right (-)
12	Subwoofer 2 (+)	-	Front door left (-)
13	Subwoofer 1 (+)	-	
14	GND	-	
15	GND	Center speaker (-)	
16	GND	-	
17	-		
18	SPDIF (+)		
19	SPDIF (-)		
20	SPDIF GND		
21	-		
22	-		
23	-		
24	Navi (-)		
25	Subwoofer 2 (-)		
26	Subwoofer 1 (-)		

cardiagn.com

[Roof Antenna (SDARS)]

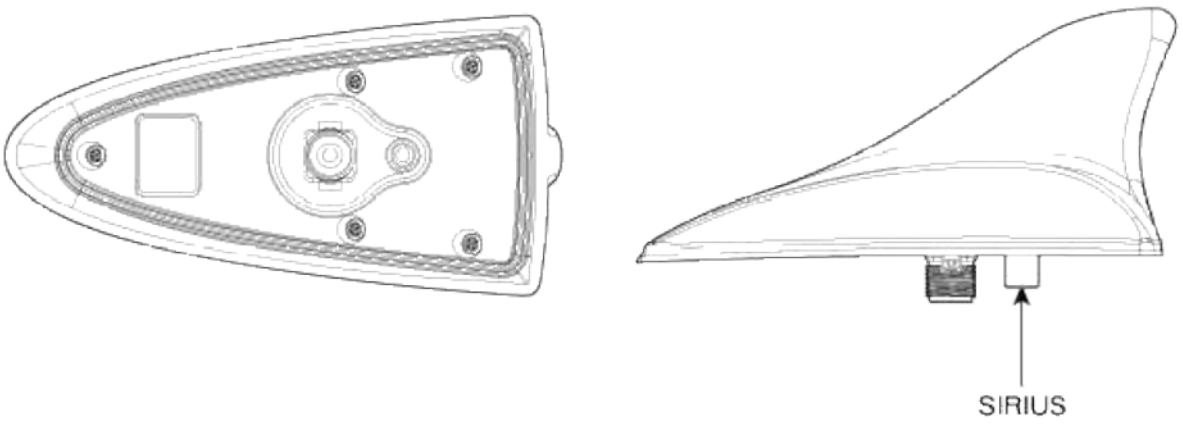

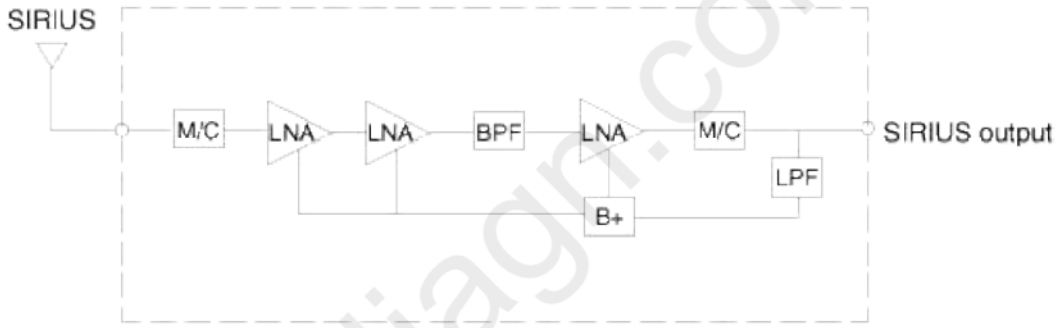

cardiagn.com

Body Electrical System > Audio > Audio Unit > Repair procedures

Removal

NOTE

- Take care not to scratch the center fascia panel and related parts.
- Eject all the disc before removing the audio unit to prevent damaging the CD player's load mechanism.

1. Disconnect the negative (-) battery terminal.

2. Using a screwdriver or remover, remove the crash pad garnish RH (A).

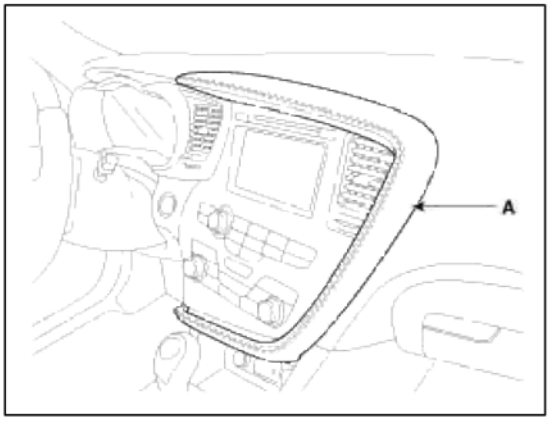

NOTE

Apply the protective tapes to crash pad garnish and its related parts.

3. Using a screwdriver or remover, remove the crash pad side cover (A).

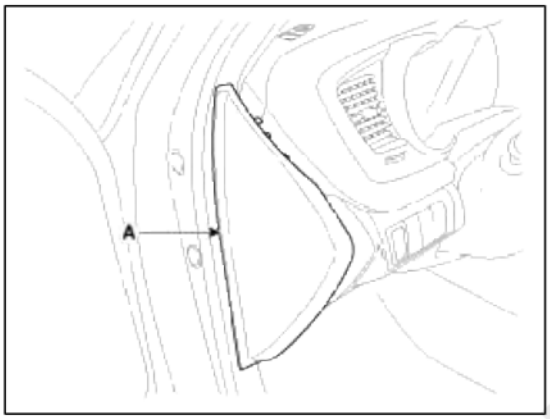

4. After loosening the crash pad lower panel mounting screws, then remove the lower panel (A).

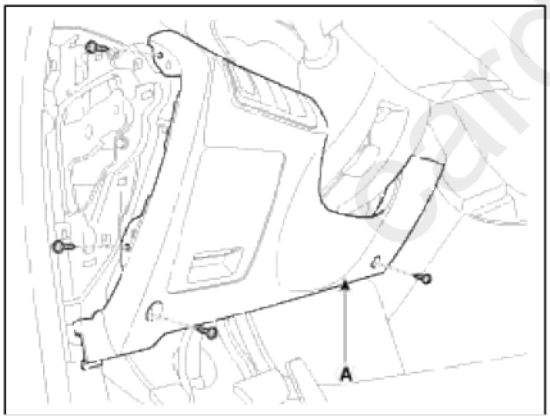

cardiagn.com

5. Remove the switch connector (A) and SSB connector (B) from crash pad lower panel.

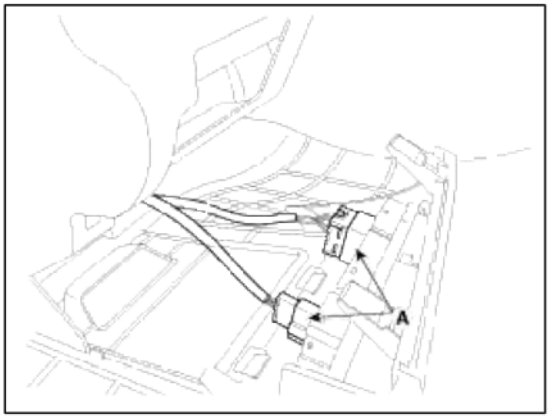

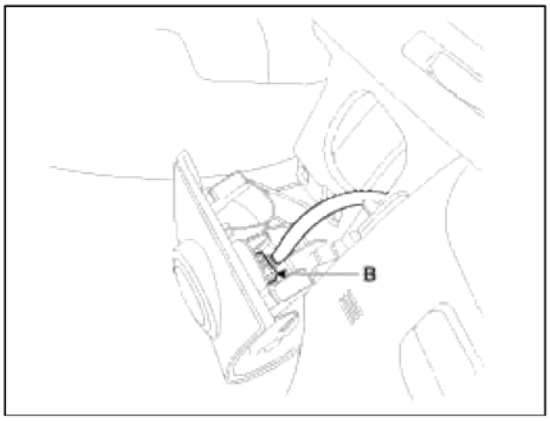

6. Remove the crash pad garnish LH (A) after removing the screws.

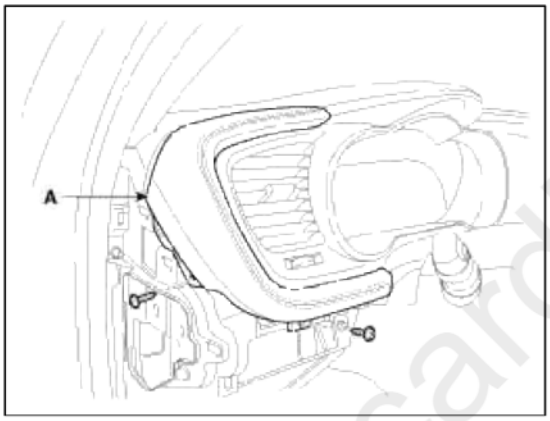

7. Remove the instrument cluster fascia panel (A) after loosening the screws.

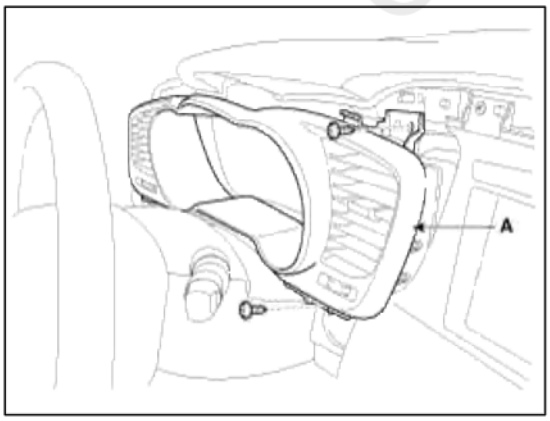

cardiagn.com

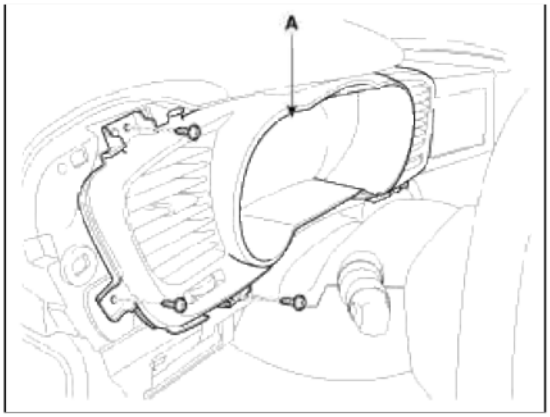

8. Remove the center fascia lower panel (A) after loosening the screws.

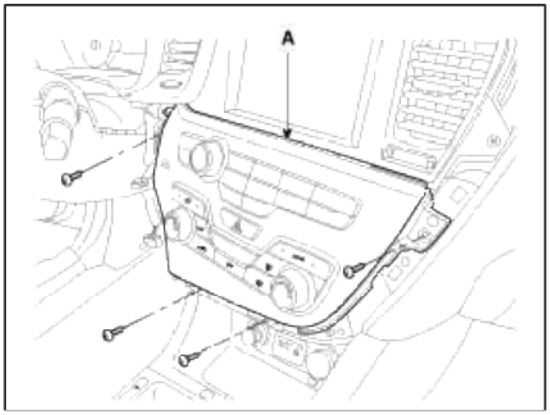

9. Remove the connectors (A) and hose (B).

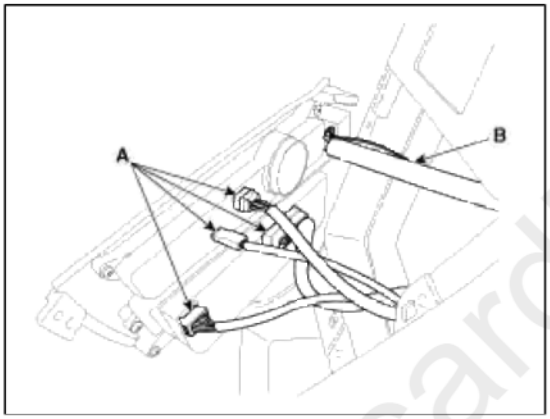

10. Remove the center fascia upper panel (A) after loosening the screws.

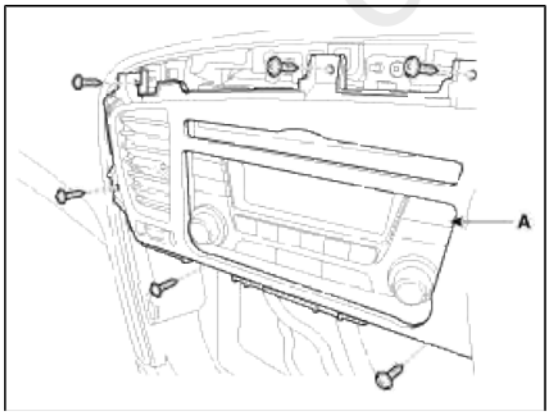

cardiagn.com

11. Remove the audio assembly (A) after loosening the mounting screws.

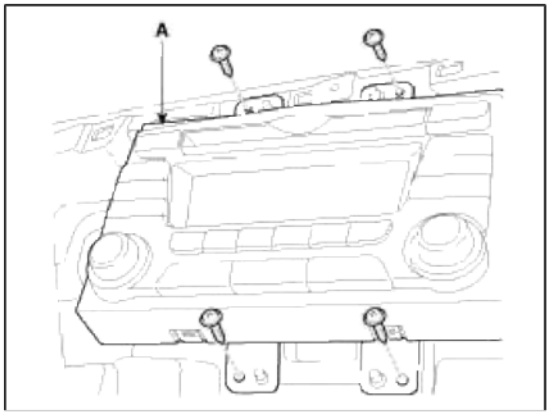

12. Disconnect the audio connectors and cable (A), then remove the audio unit completely.

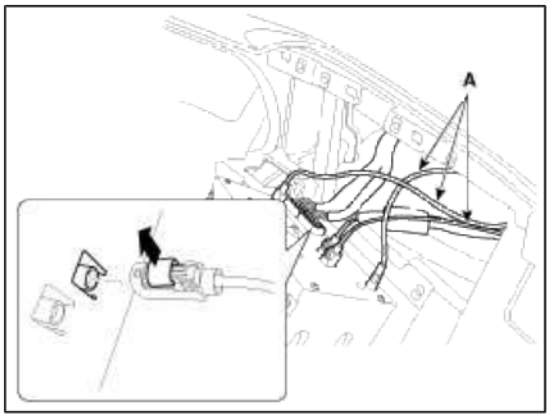

NOTE

Lift the connector locking clip to the arrow direction, disconnect the connector.
When assembling, install the connector and connector locking clip tightly.

NOTE

If the CD does not eject, do not attempt to remove it because the audio unit may be damaged.Contact an authorized dealership for assistance.

Disassembly

NOTE

- Do not work in a dusty or dirty place.
- Do not touch the circuit board with your bare hands.
- Do not touch the terminal connector of the flat plate cable with your bare hands. (If you have touched it, wipe it off thoroughly with a soft cloth)
- If the CD-rom needs to BE removed, follow the procedure below.

cardiagn.com

1. If necessary, separate the CD Rom drive by removing the brackets (A) after loosening the screws (8EA).

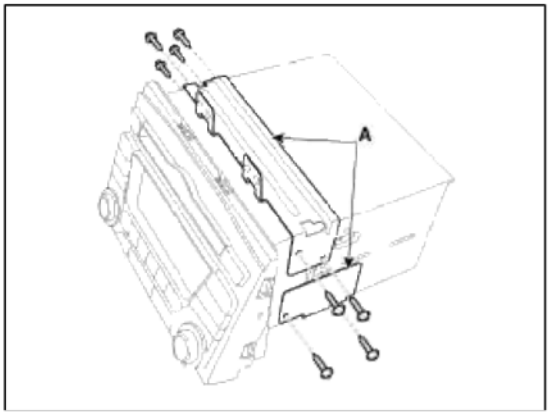

2. Remove the screws (4EA) on the head unit, and then disassemble the top cover (A).

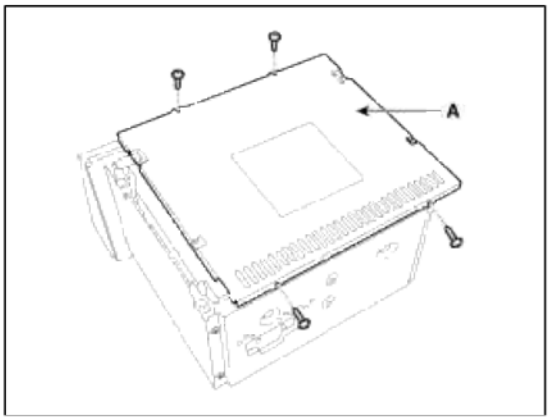

3. Remove the front panel (A) on the head unit after loosening the screws (2EA).

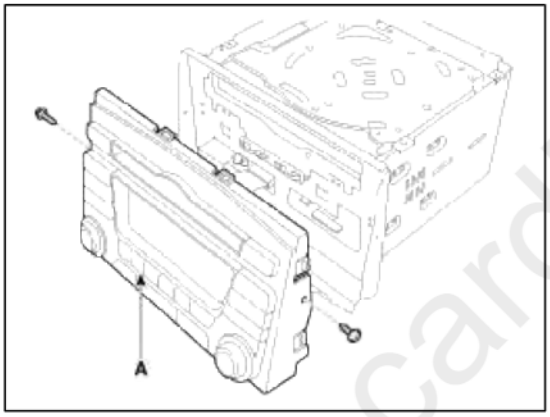

NOTE

Take care not to damage the cable when removing the front panel.

4. Remove the screws (4EA).

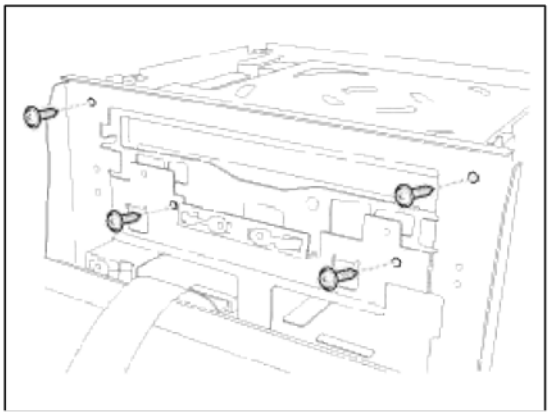

cardiagn.com

5. Remove the CD rom drive (A).

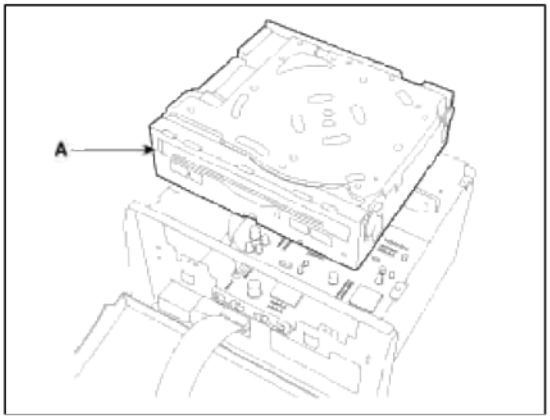

Reassembly

1. Reassemble the CD-rom drive to the audio unit.
2. Reassemble the top cover and front panel.

> NOTE
>
> Make sure the ribbon connector and cable jack are plugged in properly.

Installation

1. Connect the audio unit connectors and cables.
2. Install the audio unit.
3. Install the center fascia upper panel.
4. Install the heater control unit.
5. Install the crash pad garnish LH and instrument cluster fascia panel.
6. Install the crash pad lower panel and side cover.
7. Install the crash pad garnish RH.

> NOTE
>
> Make sure the audio head unit connectors are plugged in properly and the antenna cable is connected properly.

cardiagn.com

Body Electrical System > Audio > Speakers > Repair procedures

Inspection

1. Troubleshooting for Speaker

(1) Basic inspection of speaker

Inspect the sound from speaker after verifying that the speaker mounting screws are removed and the wiring connector is connected to remove any possible vibration transmitted from body trims and surrounding parts.

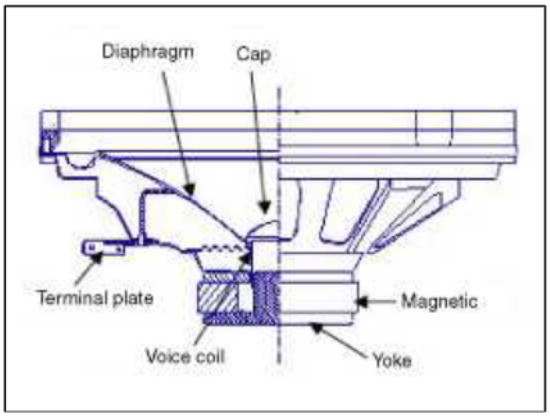

(2) Case Troubleshooting

No.	Case	Inspection/Remedy
1	Trembling sound	1. Before replacing the speaker, inspect that the mounting screw is installed normally. 2. After re-installing the speaker, verify that no trembling sound is heard. 3. When hearing a trembling sound again, replace the speaker with new one.
2	Noise	1. Check if the wiring connector is connected normally. If not, reconnect the wiring connector. 2. In case of radio static, check if there is a noise from CD. 3. If a noise is heard with the radio and CD on, replace the speaker with new one. NOTE In case there is only radio static, this causes from poor radio reception. Thus the speaker needs no repair and replacement.
3	Speaker in operative	Inspection of the wiring connection between the battery and the speaker 1. Before replacing the speaker, inspect the wiring connection between the battery and the speaker is normal. 2. Check the supply power to the speaker and the resistance, then inspect the sound quality. ■ Specified impedance : 2 ~ 4Ω 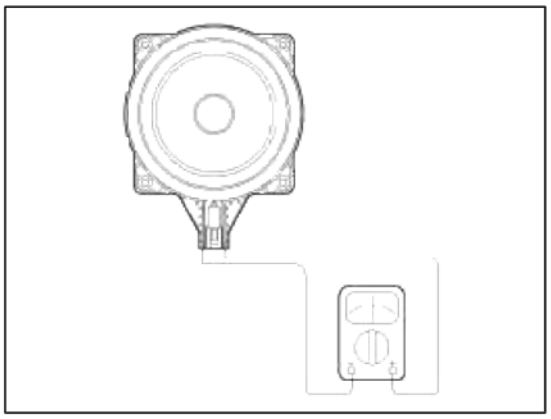 3. If the speaker works poorly, replace it with new one.

cardiagn.com

CAUTION

When handling the speakers:

- Do not damage the speaker with impact, like dropping or throwing it.
- Be careful not to drop water and oil on the speakers.
- Caution during handling of speaker because the material of diaphragm is paper which is easily torn by impact or external force.
- Modifying the audio system may cause damage the speakers. If this is the case, the speakers are not covered by the manufacturer's warranty.

Removal

Front Speaker

1. Remove the front door trim panel and speaker connector.
   (Refer to the BD group - "Front door")
2. Remove the front speaker (A) after loosening 4 screws.

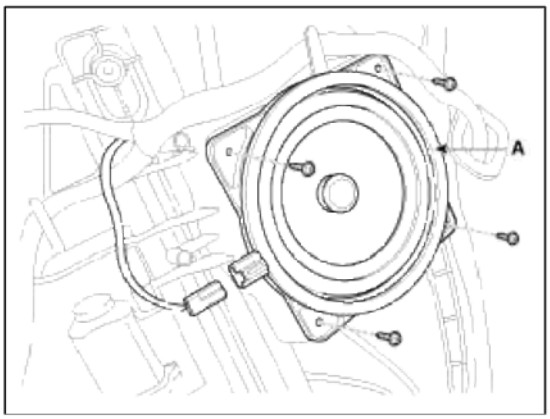

Rear Speaker

1. Remove the rear door trim panel and speaker connector.
   (Refer to the BD group - "Rear door")
2. Remove the rear speaker (A) after removing 4 screws.

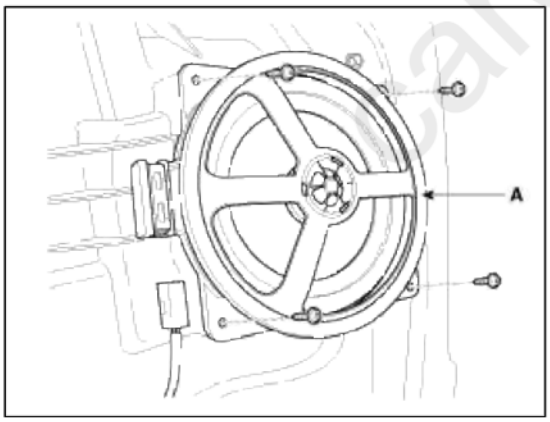

Crash Pad Midrange Speaker

1. Remove the main crash pad.
   (Refer to the BD group - "Crash pad")

cardiagn.com

2. Disconnect the midrange speaker connector (A).

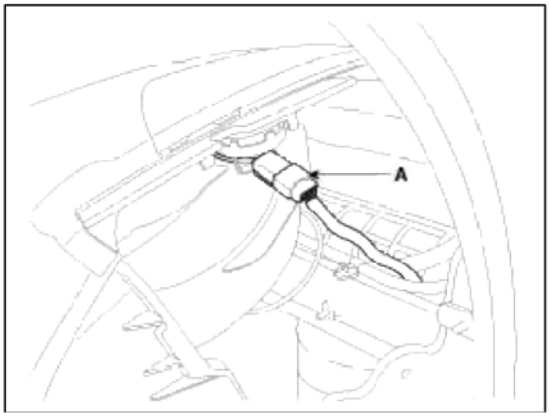

3. Remove the crash pad side speaker grill (A).

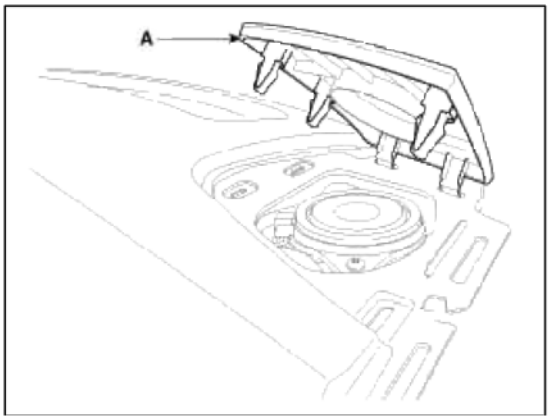

4. Remove the midrange speaker (A) after loosening the mounting screws.

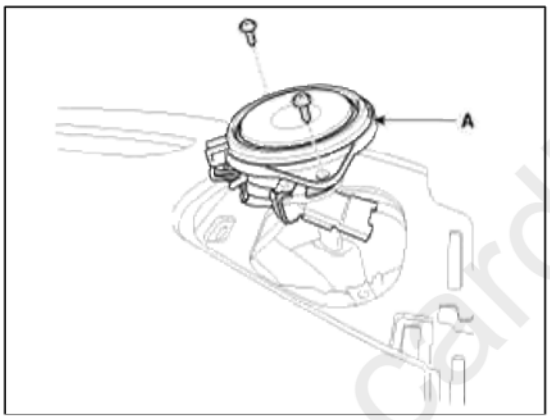

Subwoofer Speaker

1. Remove the rear seat forward.
   (Refer to the BD group - "Rear seat")
2. Remove the rear package tray.
   (Refer to the BD group - "Package tray")
3. Disconnect the subwoofer speaker connector (A).

cardiagn.com

4. Remove the subwoofer speaker (B) after removing 4 bolts.

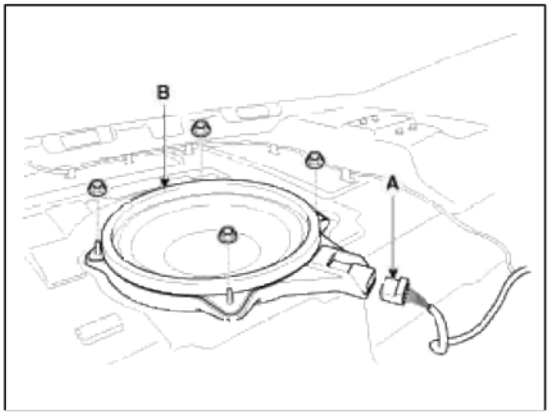

Center speaker

1. Remove the center speaker grill (A).

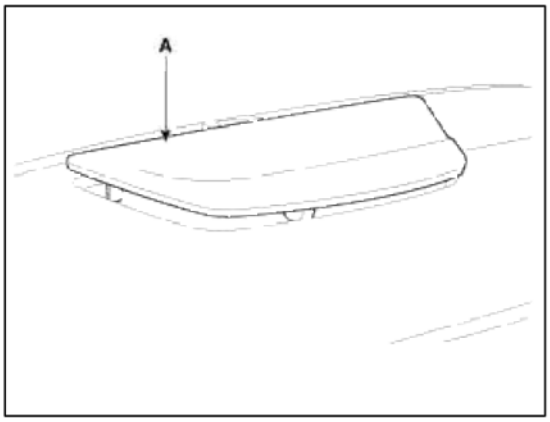

NOTE

Apply the protective tapes to the speaker grill and its related parts.

2. Remove the center speaker (A) after loosening the mounting screws.

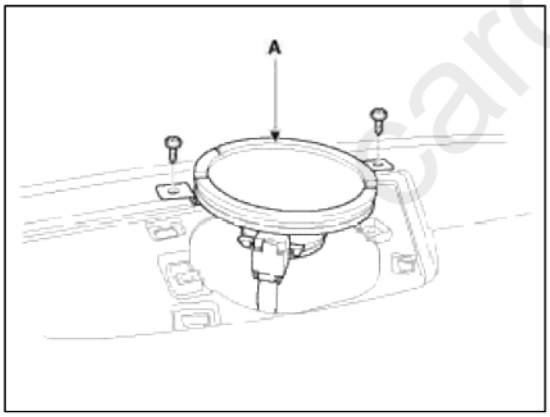

External Amp

1. Remove the trunk right luggage side trim.
   (Refer to the BD group - "Interior trim")

cardiagn.com

2. Remove the external amplifier connector (A).

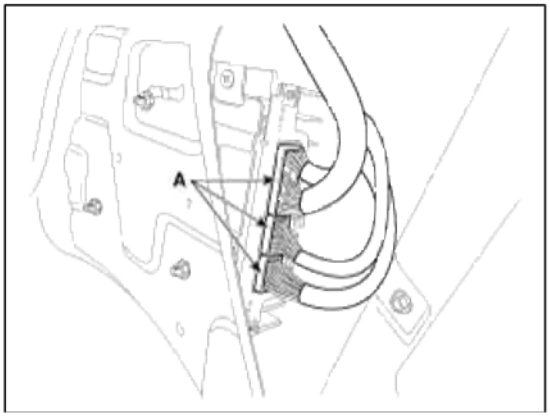

3. Remove the external amplifier (A) after loosening the mounting nuts.

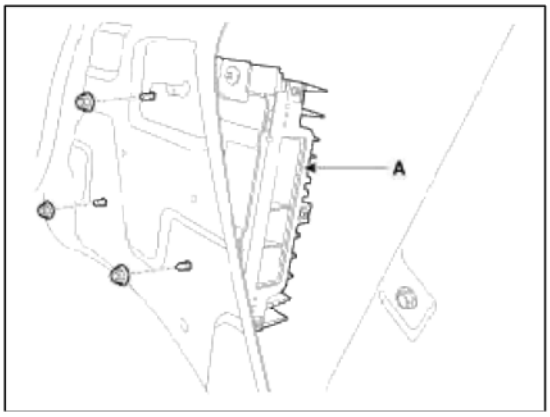

Installation

Front Speaker

1. Install the front speaker.
2. Install the front door trim.

Rear Speaker

1. Install the rear speaker.
2. Install the rear door trim.

Crash pad midrange speaker

1. Install the midrange speaker.
2. Install the speaker grille.

Subwoofer Speaker

1. Install the subwoofer speaker after connecting the connector.
2. Install the rear package tray and rear seat assembly.

External Amp

1. Install the external amplifier after connecting the connector.
2. Install the trunk right luggage side trim.

> NOTE
>
> - Make sure the speaker and related connectors are plugged in properly.

Center speaker

1. Install the center speaker.
2. Install the center speaker grill.

Body Electrical System > Audio > Antenna > Repair procedures

cardiagn.com

Inspection

Glass Antenna Test

1. Wrap aluminum foil (A) around the tip of the tester probe (B) as shown.

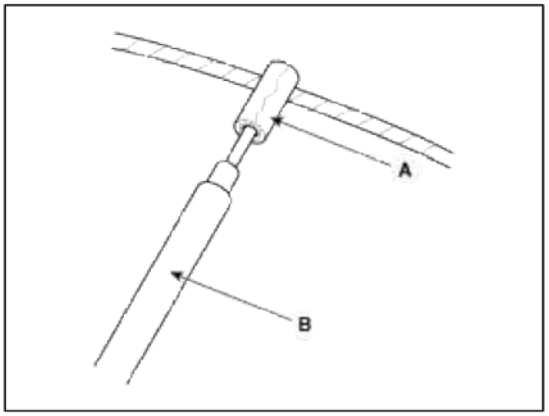

2. Touch one tester probe to the glass antenna terminal (A) and move the other tester probe along the antenna wires to check that continuity exists.

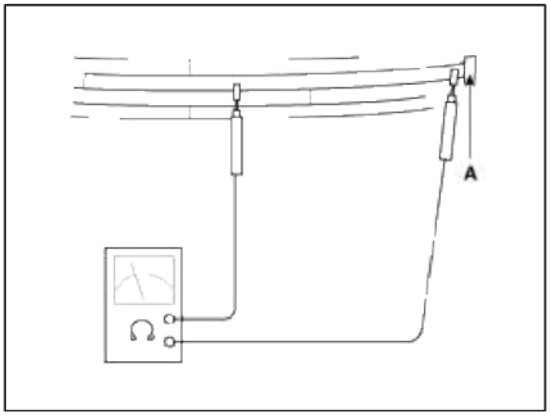

Glass Antenna Repair

NOTE

To make an effective repair, the broken section must be no longer than one inch.

1. Lightly rub the area around the broken section (A) with fine steel wool, and then clean it with alcohol.

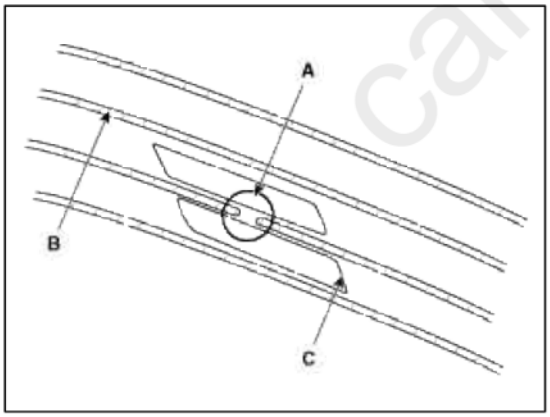

2. Carefully mask above and below the broken portion of the glass antenna wire (B) with cellophane tape (C).

cardiagn.com

3. Using a small brush, apply a heavy coat of silver conductive paint (A) extending about 1/8″on both sides of the break. Allow 30 minutes to dry.

> NOTE
>
> Thoroughly mix the paint before use.

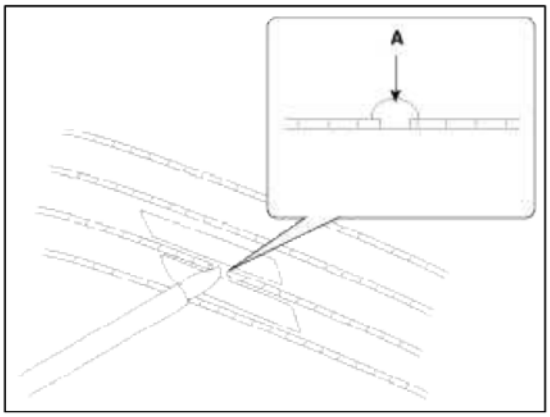

4. Check for continuity in the repaired wire.
5. Apply a second coat of paint in the same way. Let it dry three hours before removing the tape.

Glass Antenna Circuit Inspection

1. Remove the right side rear quarter trim.
   Then disconnect the antenna feeder cable (A) from the glass antenna amp.

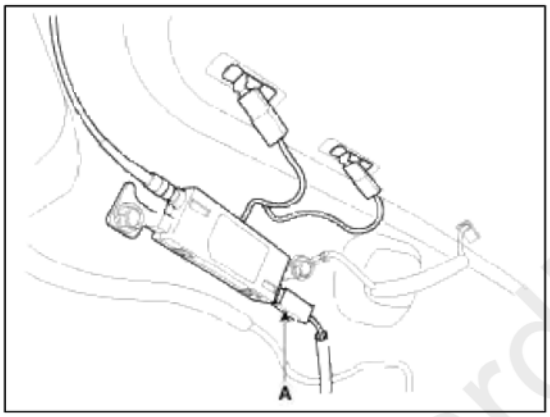

2. Turn the radio ON.
   Measure the voltage between the harness side feeder cable (A) and body ground (B).

OK : approximately 12V (ACC+)

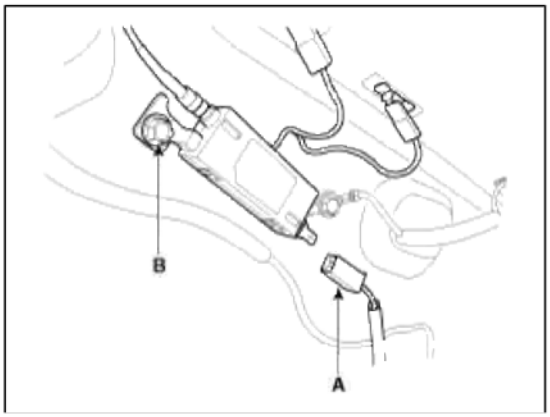

cardiagn.com

3. Check for FM wire resistance between terminals of No.1 and 3
   1. FM antenna grid terminal
   2. AM antenna grid terminal
   3. Body ground.

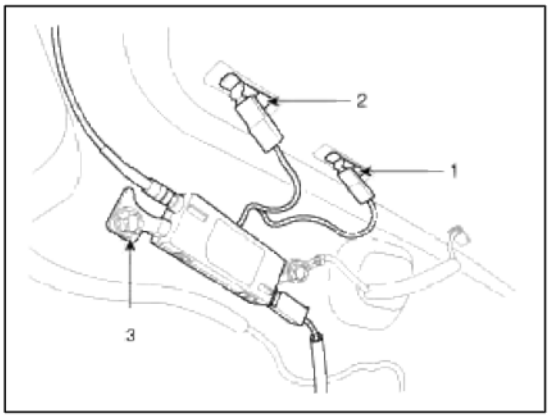

Standard value : 80~120KΩ
Short : Approx. 0Ω
Open : ∞ Ω

4. Check for AM wire resistance between terminals of No.2 and 3.

Standard value : 120~170KΩ
Short : Approx. 0Ω
Open : ∞ Ω

5. Check the grid lines for continuity.
6. When a poor radio reception is not repaired through the above inspection methods, replace the amp. If the radio reception is still poor, check the radio cable for short and radio head unit for failure.

Antenna Cable

1. Remove the antenna jack (A) from the audio unit and antenna.

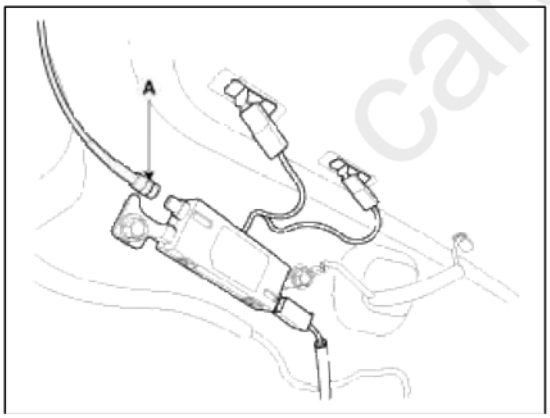

cardiagn.com

2. Check for continuity between the center poles of antenna cable.

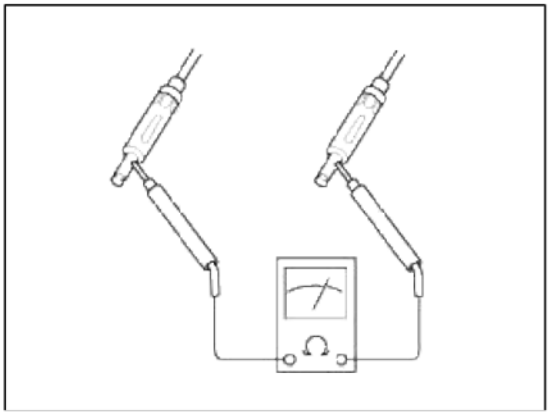

3. Check for continuity between the outer poles of antenna cable. There should be continuity.

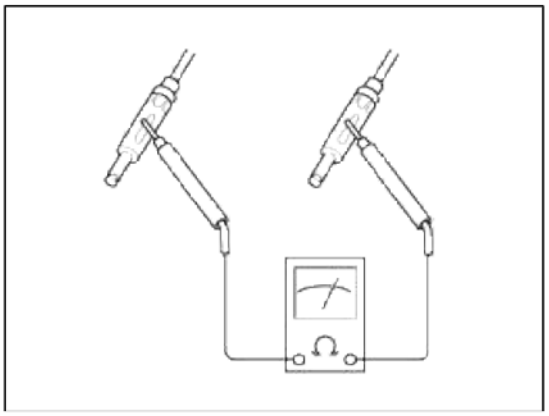

4. If there is no continuity, replace the antenna cable.
5. Check for continuity between the center pole (A) and outer pole (B) of antenna cable. There should be no continuity.

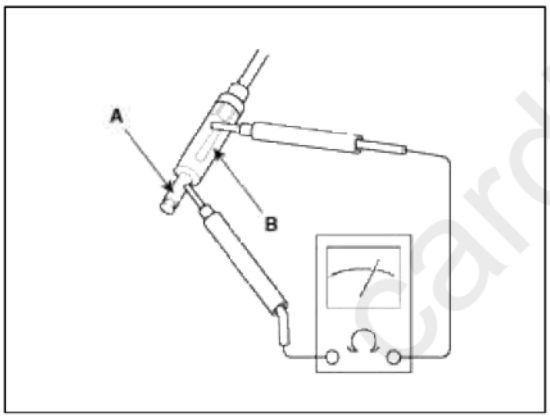

6. If there is continuity, replace the antenna cable.

Body Electrical System > Audio > Audio Remote Control > Schematic Diagrams

Circuit Diagram

cardiagn.com

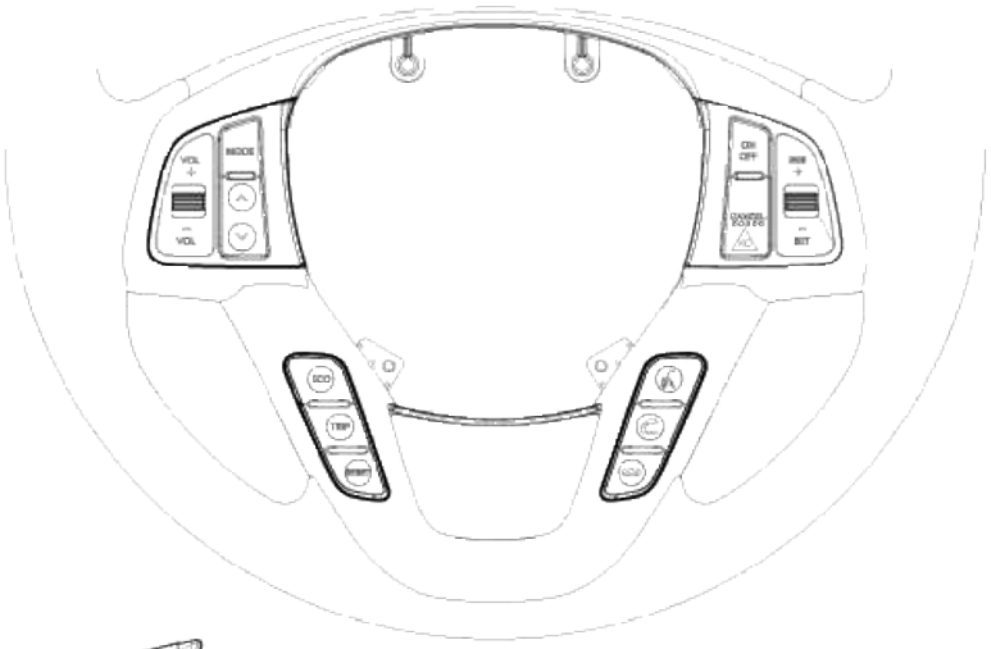

[Audio]

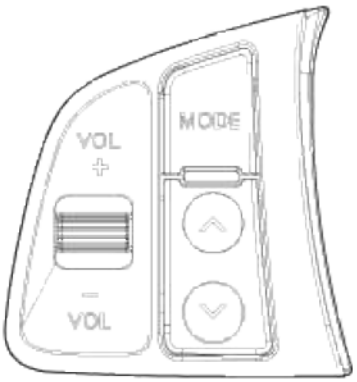

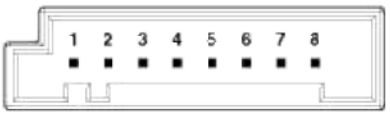

NO.	Description
1	Illumination (+)
2	Audio (+)
3	MUTE OUT
4	Bluetooth OUT
5	-
6	-
7	Audio (-)
8	Illumination (-)

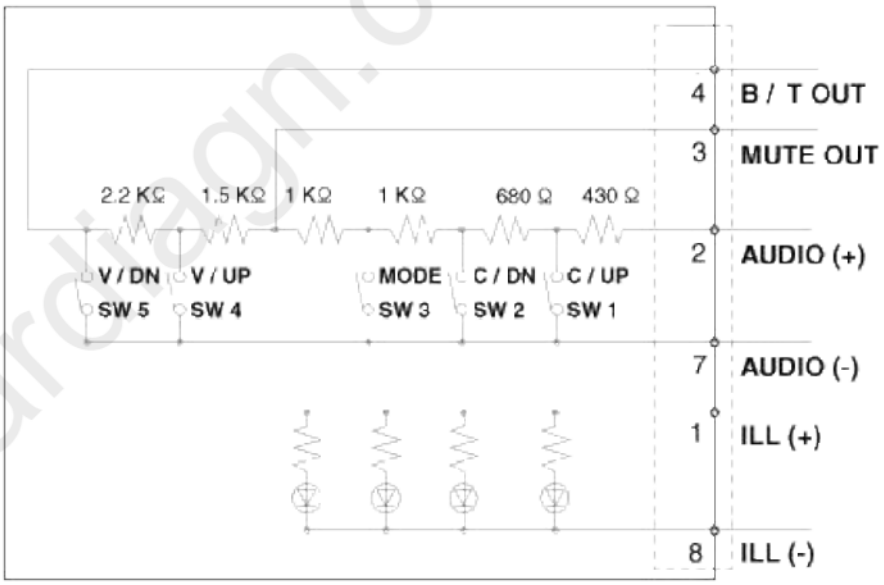

cardiagn.com

[TRIP+RESET]

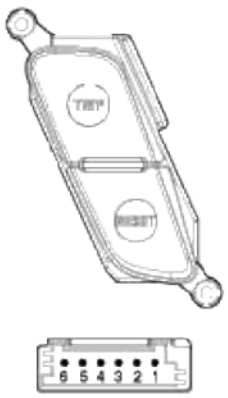

NO.	Description
1	Illumination (+)
2	Trip (+)
3	-
4	-
5	Trip (-)
6	Illumination (-)

LH (TRIP)

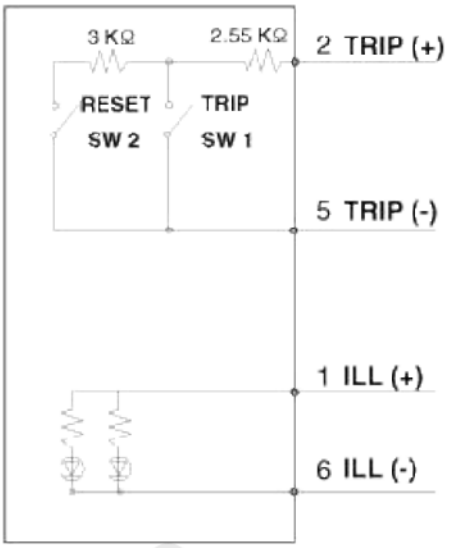

[MUTE+TRIP+RESET]

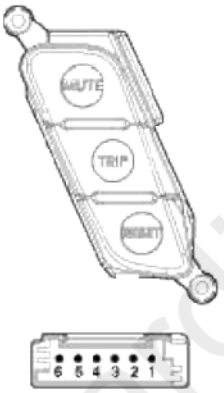

NO.	Description
1	Illumination (+)
2	Trip (+)
3	MUTE IN
4	Audio (-)
5	Trip (-)
6	Illumination (-)

LH (TRIP + MUTE)

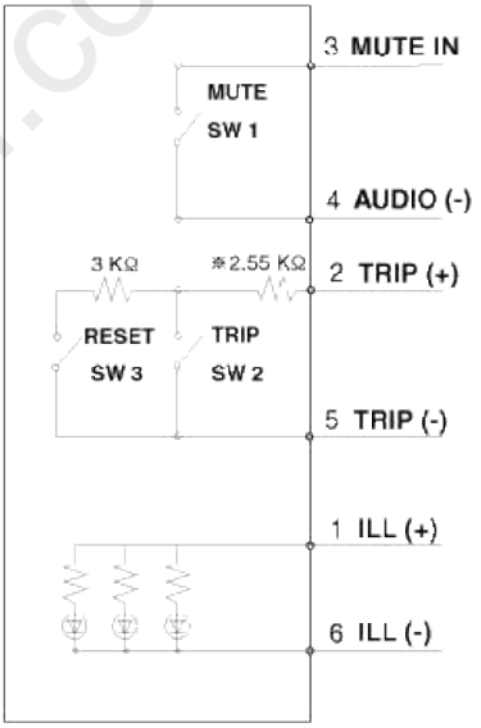

※ Cruise control option : 1.1KΩ

cardiagn.com

[ECO+TRIP+RESET]

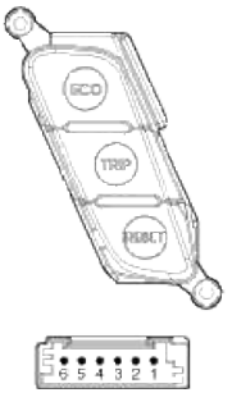

NO.	Description
1	Illumination (+)
2	Trip (+)
3	ECO (+)
4	Audio (-)
5	Trip (-)
6	Illumination (-)

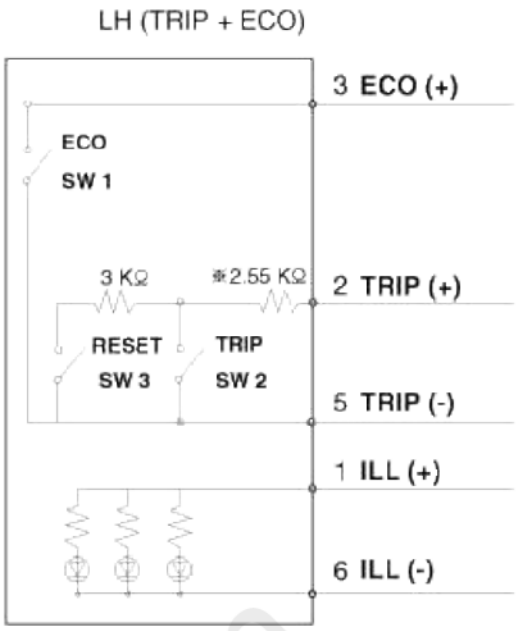

※ Cruise control option : 1.1KΩ

[BLUETOOTH+VOICE]



NO.	Description
1	Illumination (+)
2	Bluetooth (+)
3	-
4	-
5	Audio (-)
6	Illumination (-)

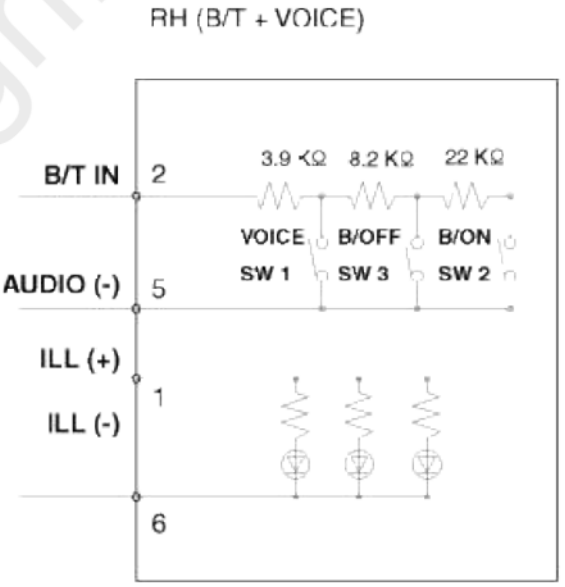

cardiagn.com

Body Electrical System > Audio > Audio Remote Control > Repair procedures

Inspection

1. Check the audio remote control switch (A) for resistance between connector terminals in each switch position.

[LH-Audio]

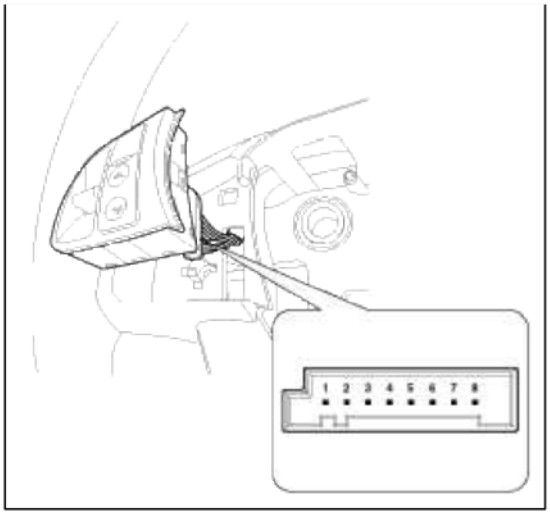

[LH-Mute]

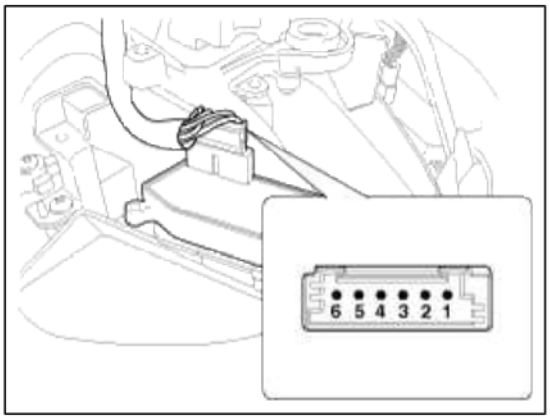

[Audio]

Switch	Connector terminal	Resistance (±5%)
Volume down	2-7	6.81 kΩ
Volume up	2-7	4.61 kΩ
Mode	2-7	2.11 kΩ
Seek up	2-7	1.11 kΩ
Seek down	2-7	430 Ω

[Bluetooth + Voice]

Switch	Connector terminal	Resistance (±5%)
Bluetooth off	2-5	12.1 kΩ
Bluetooth on	2-5	34.1 kΩ
Voice	2-5	3.9 kΩ

[Mute + Trip + Reset]

cardiagn.com

Switch	Connector terminal	Resistance (±5%)
Mute	3-4	0 Ω
Trip (General option)	2-5	2.55 kΩ
Reset (General option)	2-5	5.55 kΩ
Trip (Cruise option)	2-5	1.1 kΩ
Reset (Cruise option)	2-5	4.1 kΩ

Removal

1. Disconnect the negative (-) battery terminal.
2. Remove the driver airbag module.
   (Refer to the RT group)
3. Remove the steering wheel.
   (Refer to the ST group - "Steering column & shaft")
4. Remove the steering wheel cover (A) after loosening the screws.

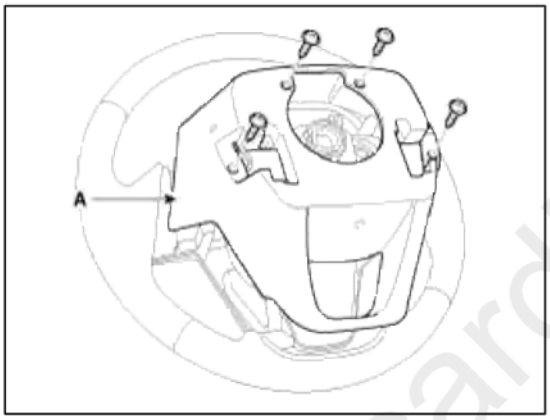

5. Remove the steering wheel remote control switch connector (A) after loosening the mounting screws.

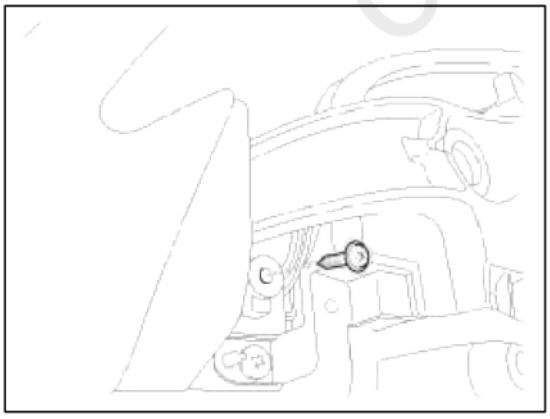

[LH-Audio]

cardiagn.com

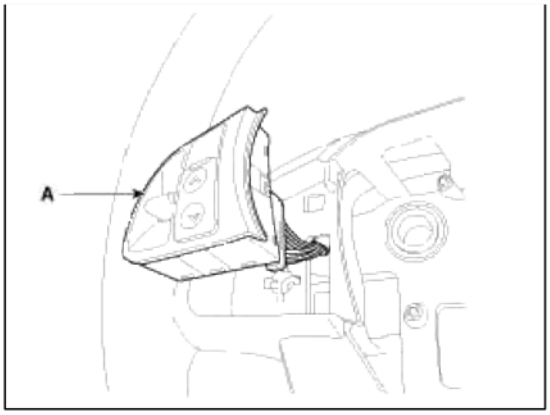

[LH-Mute]

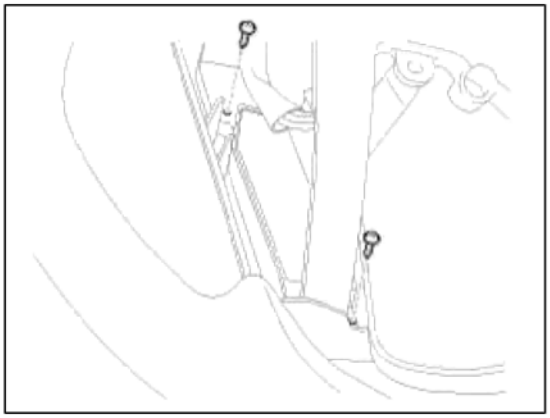

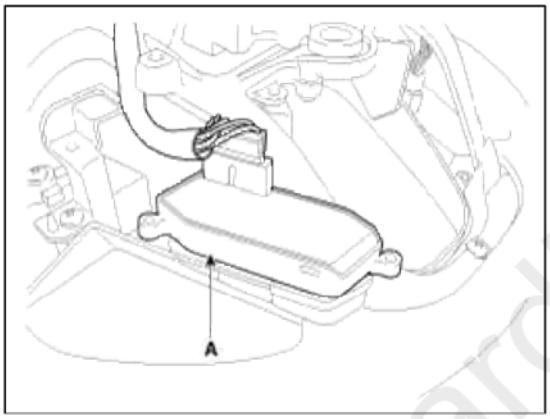

Installation

1. Reassemble the steering wheel remote control switch after connecting the connector.
2. Reassemble the steering wheel.
3. Reassemble the driver airbag module.

NOTE

Make sure the audio remote control switch and the airbag module connectors are plugged in properly.

Body Electrical System > Audio > Multimedia jack > Schematic Diagrams

Circuit Diagram

cardiagn.com

[Audio]

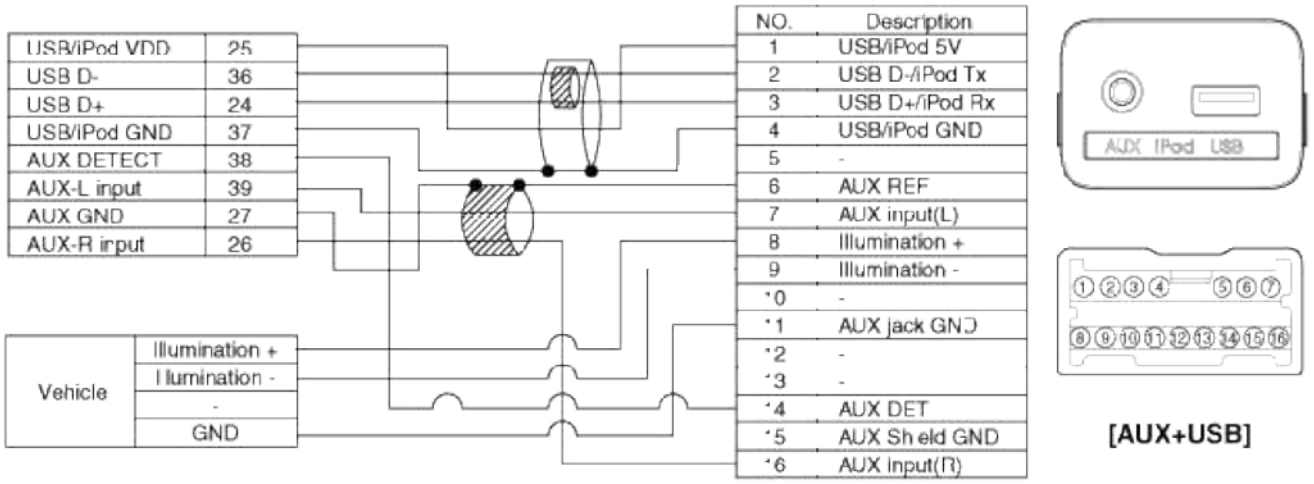

[AUX+USB]

cardiagn.com

[Bristol Audio]

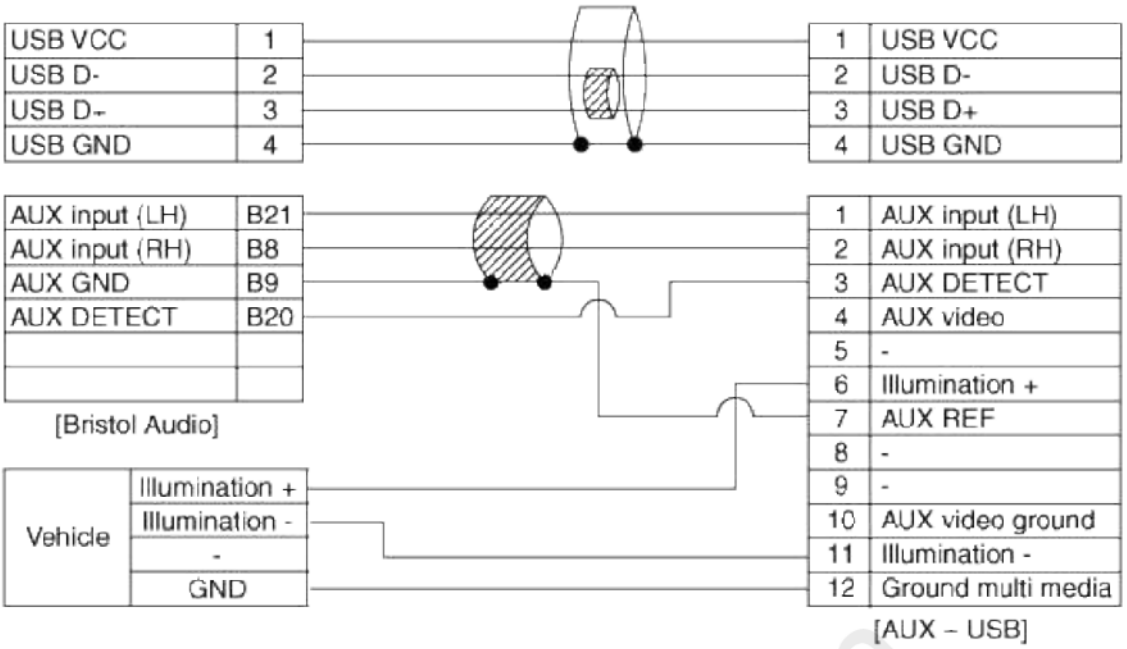

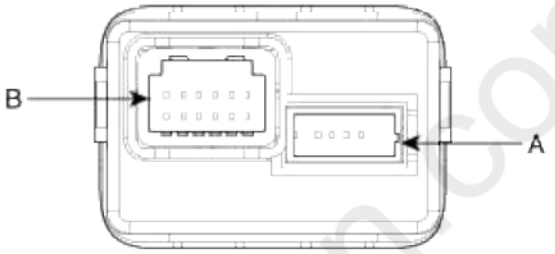

Connector A	Pin No.	USB connector
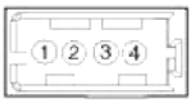	1	USB/ iPod VCC
	2	USB D (-)
	3	USB D (+)
	4	USB/ iPod ground

Connector B	Pin No.	AUX connector
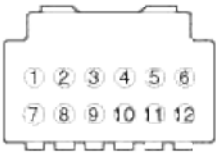	1	AUX input (LH)
	2	AUX input (RH)
	3	AUX DETECT
	4	AUX video input
	5	-
	6	Illumination (+)
	7	Shield ground
	8	-
	9	-
	10	AUX video ground
	11	Illumination (-)
	12	Ground multi media

carmagnet.com

Body Electrical System > Audio > Multimedia jack > Description and Operation

Description

The multimedia jack on the console upper cover is for customers who like to listen to external portable music players like the MP3, iPod and etc., through the vehicle's sound system when it is linked to this jack. The customer has this added option.

In case of distortions from media connected to the AUX source, the audio unit may not be defective but the output level of the used media does not match the specification of the AUX input.

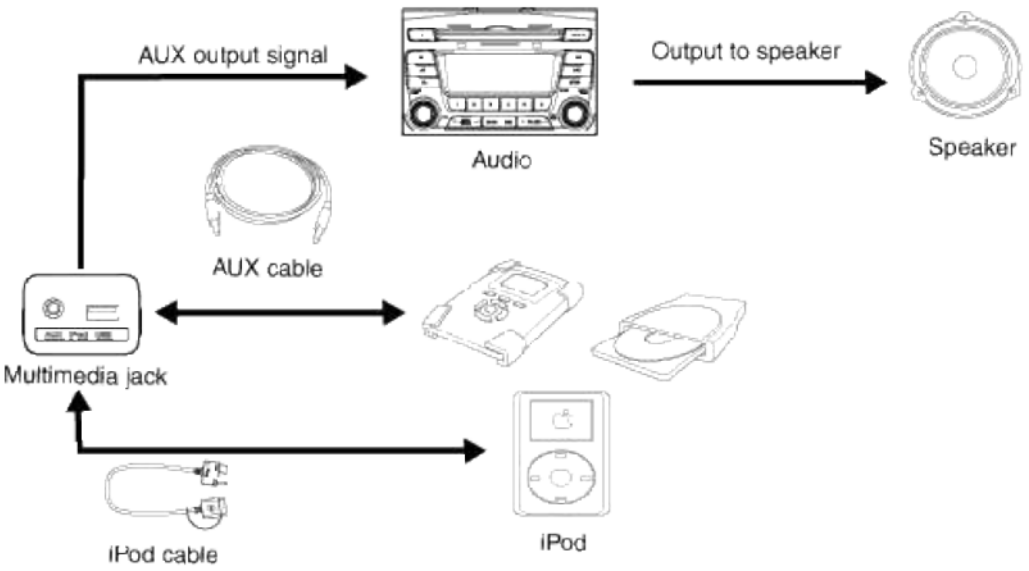

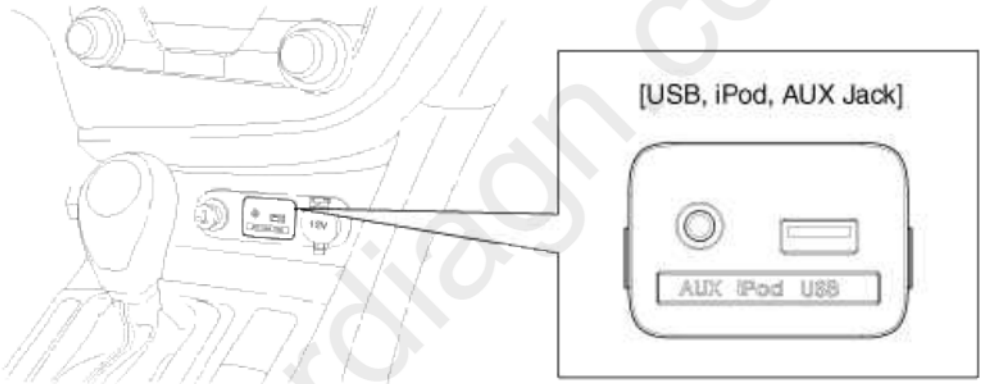

cardiagn.com

Body Electrical System > Audio > Multimedia jack > Repair procedures

Removal

1. Remove the shift lever knob.
   (Refer to the BD group - "Console")

2. Remove the console upper cover (A).

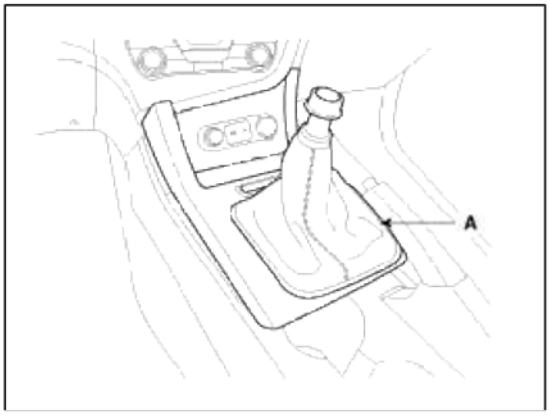

3. Disconnect the connector from the console upper cover.
4. Remove the multimedia jack (B) from the console under cover after releasing the fixed hooks (A).

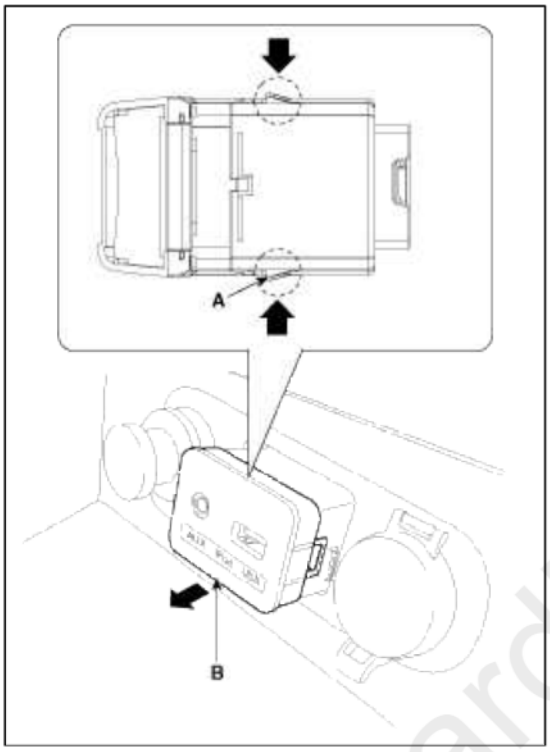

Installation

1. Install the multimedia jack.
2. Connect the multimedia jack connector.
3. Install the console upper cover.
4. Install the shift lever knob.

NOTE

Make sure the multimedia connector and the console upper cover connectors are plugged in properly.

Body Electrical System > Audio > Troubleshooting

Troubleshooting

Customer Complaint Analysis Check Sheet

cardiagn.com

TROUBLE IN	☐ ALL ☐ AM ☐ FM ☐ CD ☐ MP3 ☐ CD changer ☐ AMP ☐ Others
TROUBLE OCCURS	☐ Always ☐ Engine start ☐ Engine Running ☐ Cold ☐ Warm ☐ Sometimes ☐ Most of the time ☐ Engine off
TYPE OF TROUBLE	☐ Will not play ☐ Weak ☐ Squealing noise ☐ Display/illumination poor ☐ CD skips & jumps ☐ CD will not eject or insert ☐ Others (Describe) :
OTHERS	▶ Customer complaint contents : ▶ Have you checked customer's defects :
★ Using the customer complaint analysis check sheet for reference, ask the customer for as much detail as possible about the problem.	

There are several areas where a problem can occur: wiring harness, the radio, the CD player, and speaker. Troubleshooting enables you to confine the problem to a particular area.

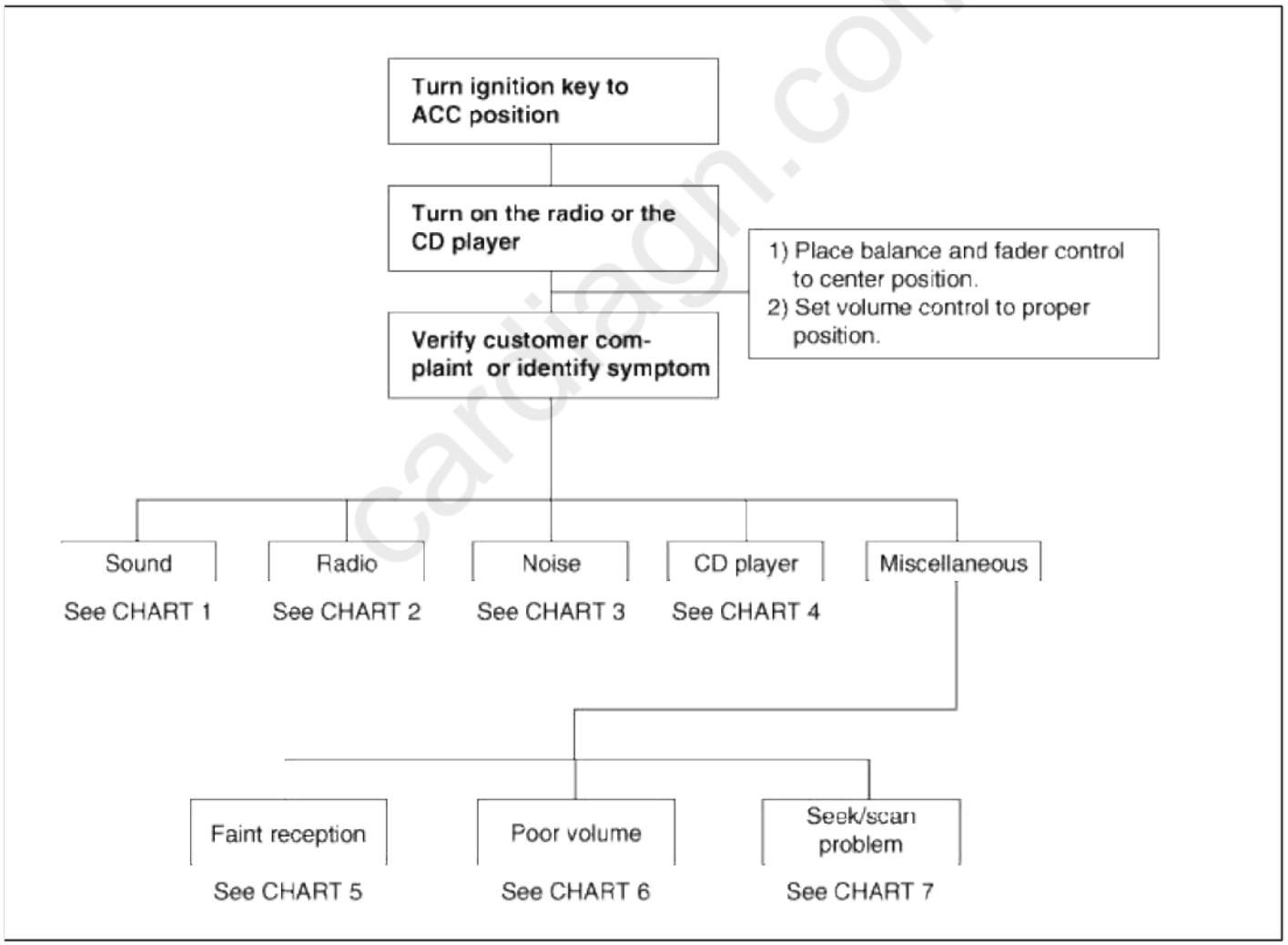

Chart 1

carmagn.com

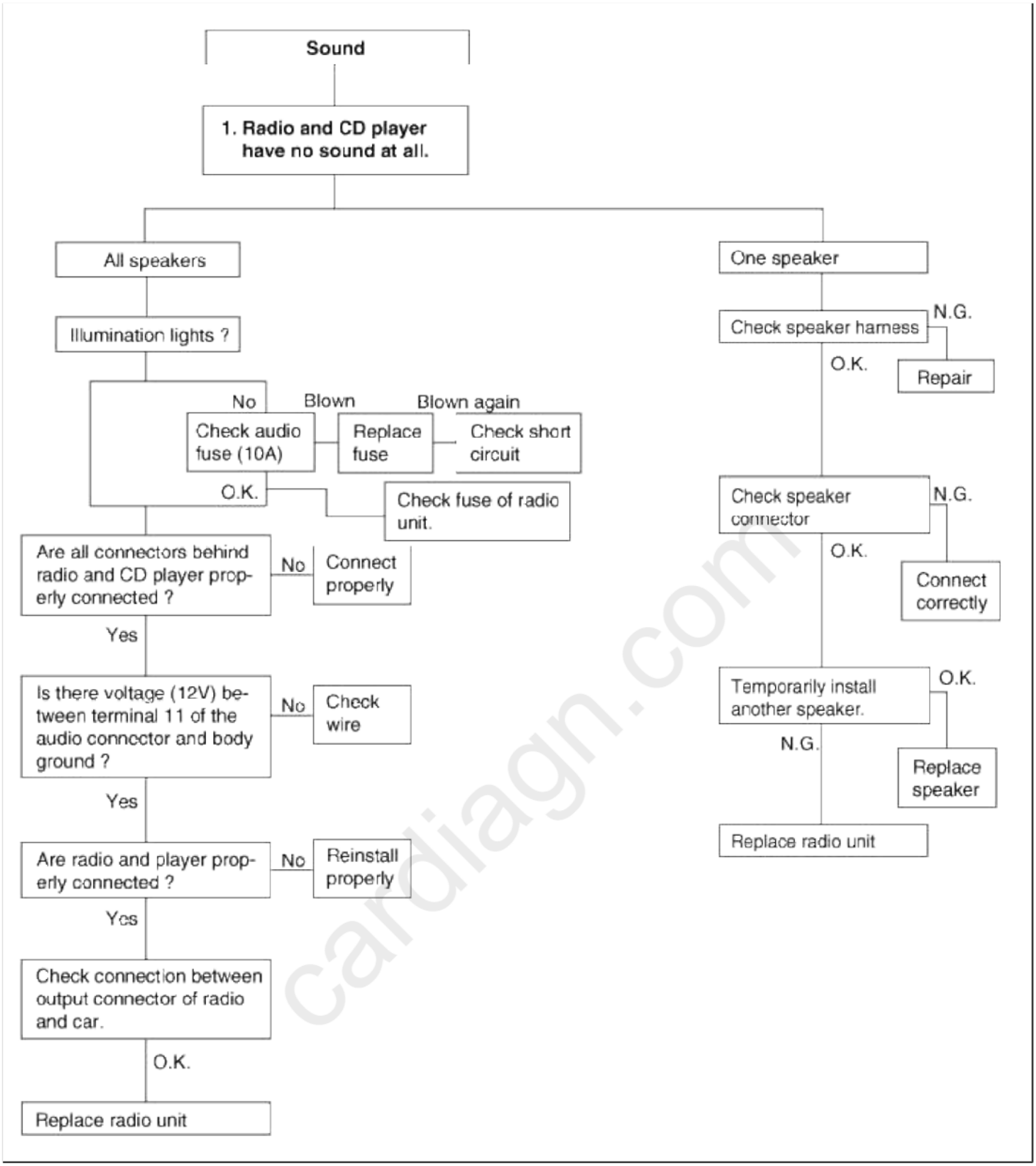
Sound
1. Radio and CD player have no sound at all.
All speakers
Illumination lights ?
No
Blown
Blown again
Check audio fuse (10A)
Replace fuse
Check short circuit
O.K.
Check fuse of radio unit.
Are all connectors behind radio and CD player properly connected ?
No
Connect properly
Yes
Is there voltage (12V) between terminal 11 of the audio connector and body ground ?
No
Check wire
Yes
Are radio and player properly connected ?
No
Reinstall properly
Yes
Check connection between output connector of radio and car.
O.K.
Replace radio unit
One speaker
Check speaker harness
N.G.
O.K.
Repair
Check speaker connector
N.G.
O.K.
Connect correctly
Temporarily install another speaker.
O.K.
N.G.
Replace speaker
Replace radio unit

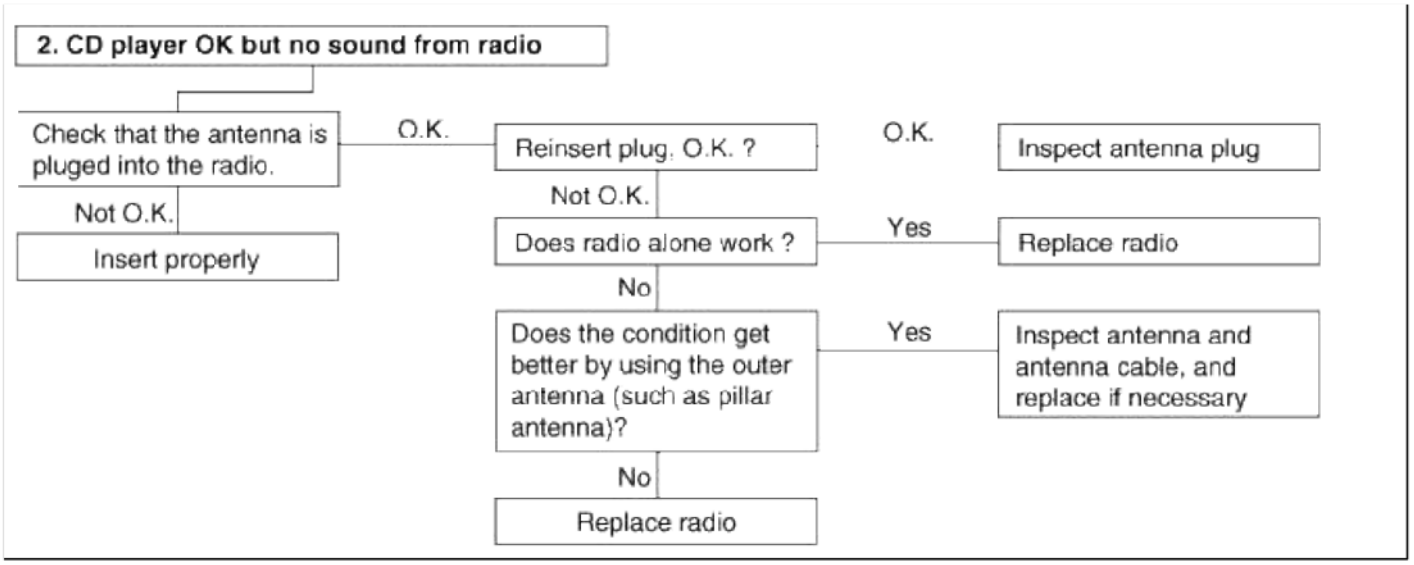

Chart 2

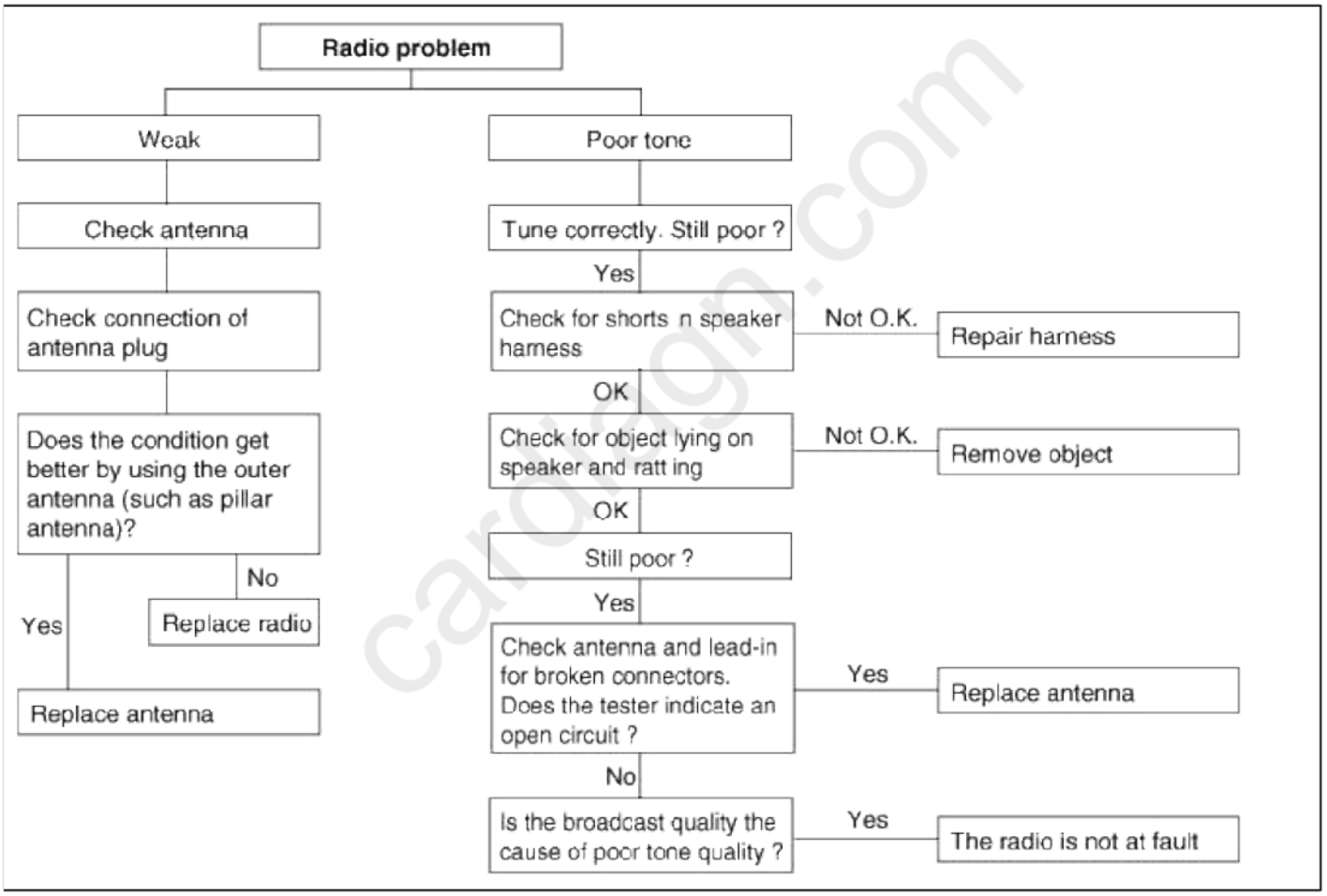

Chart 3

1. RADIO

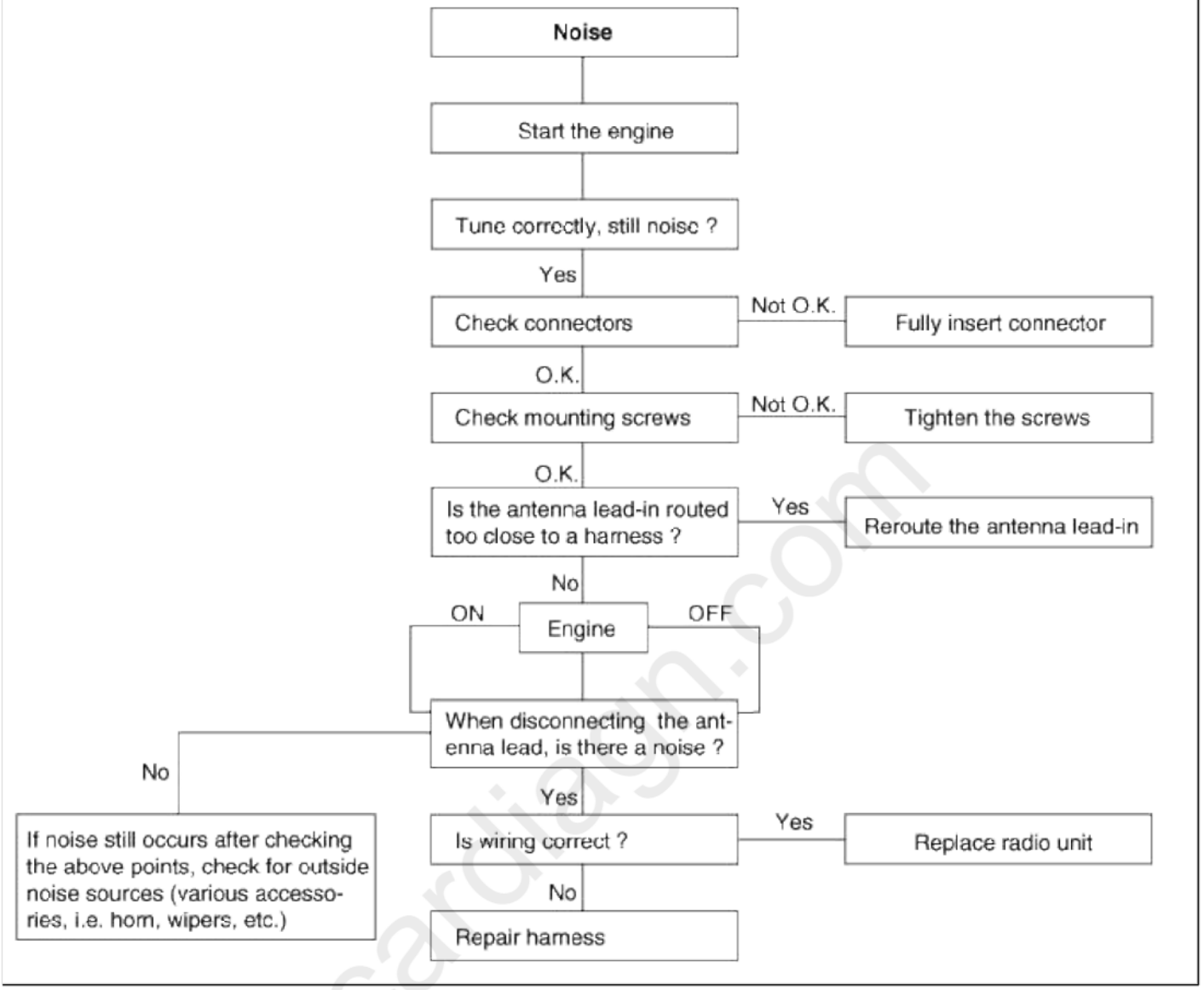

cardiagn.com

Chart 4

1. CD WILL NOT BE ACCEPTED

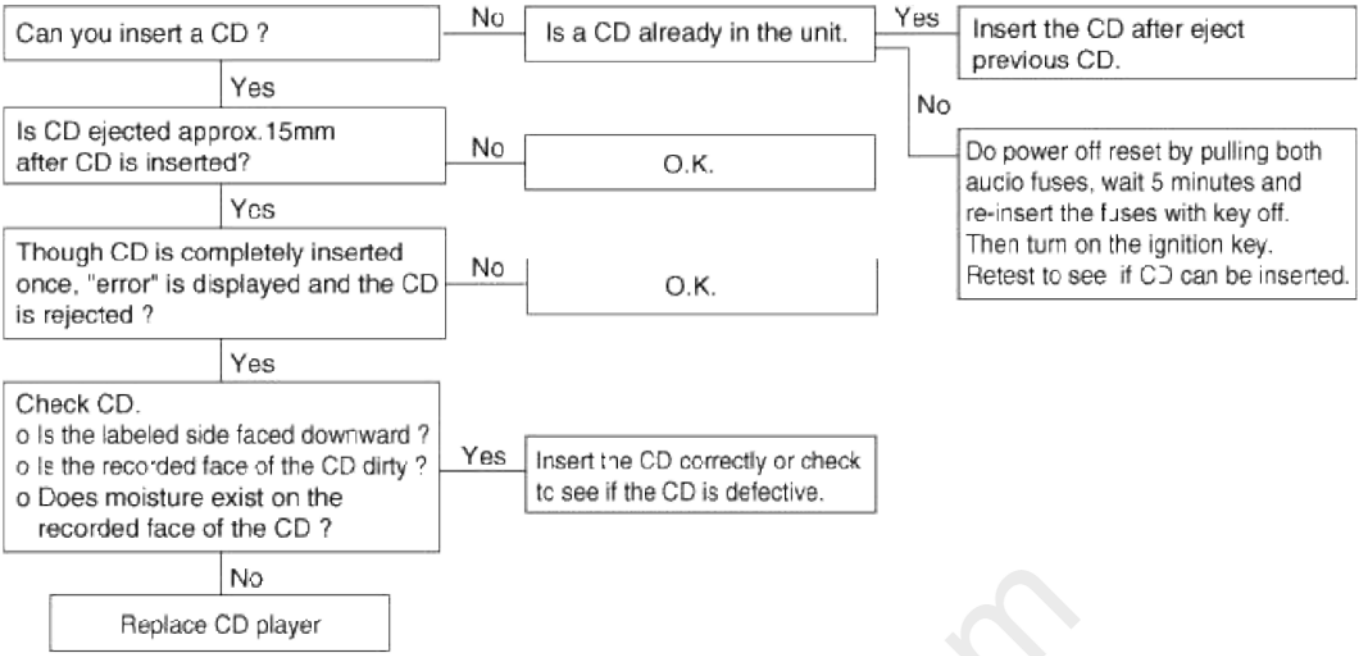

2. NO SOUND

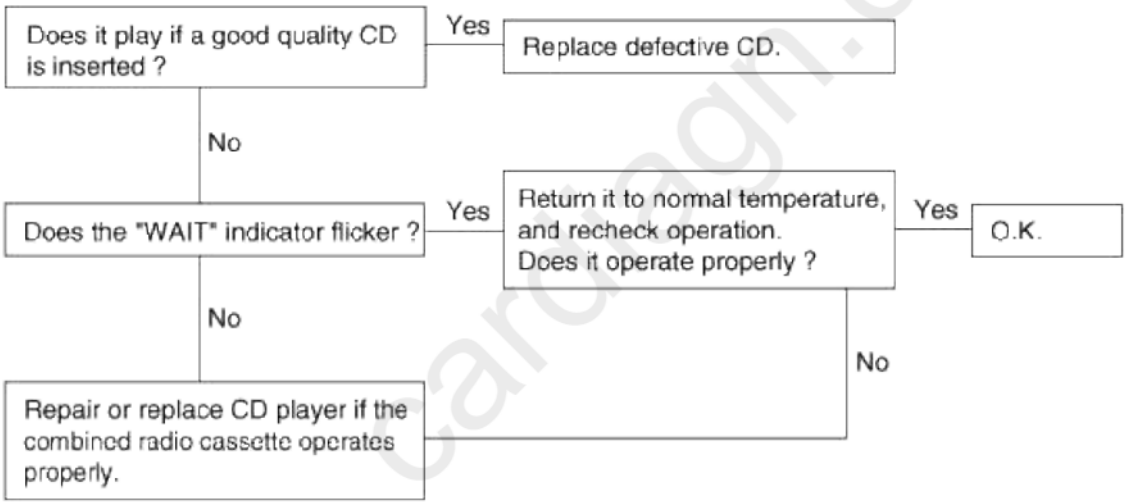

carmagn.com

3. CD SOUND SKIPS

1) Sound sometimes skips when parking.

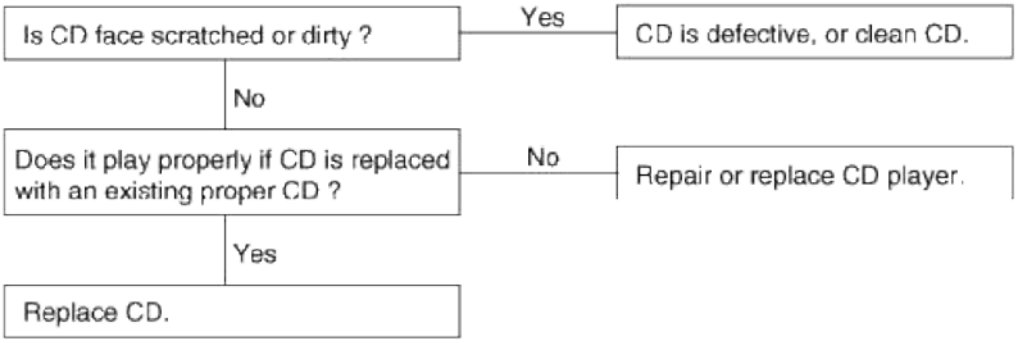

2) Sound sometimes skips when driving.
(Stop vehicle, and check it.)
(Check by using a CD which is free of scratches, dirt or other damage.)

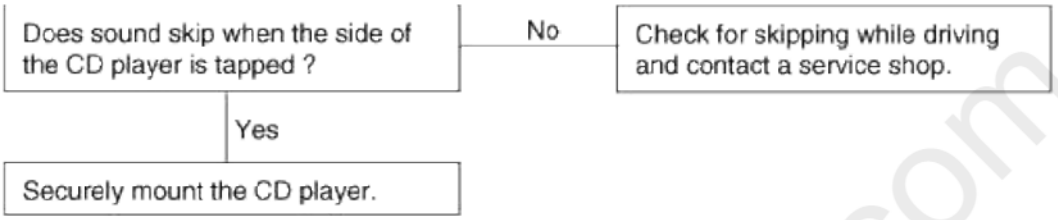

cardiagn.com

4. SOUND QUALITY IS POOR

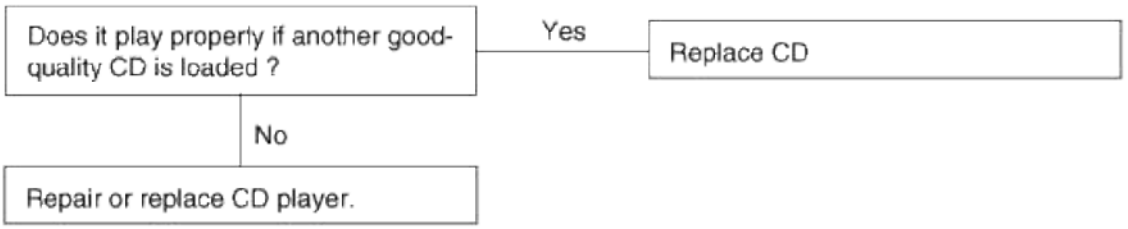

5. CD WILL NOT EJECT

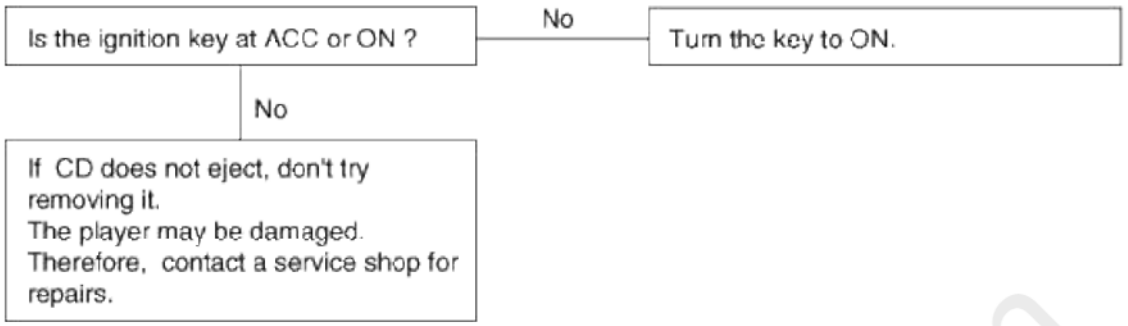

6. NO SOUND FROM ONE SPEAKER

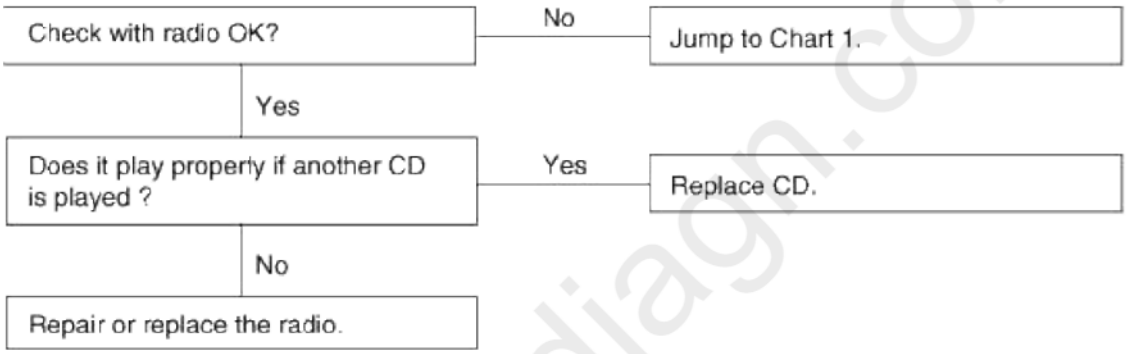

cardiagn.com

Chart 5

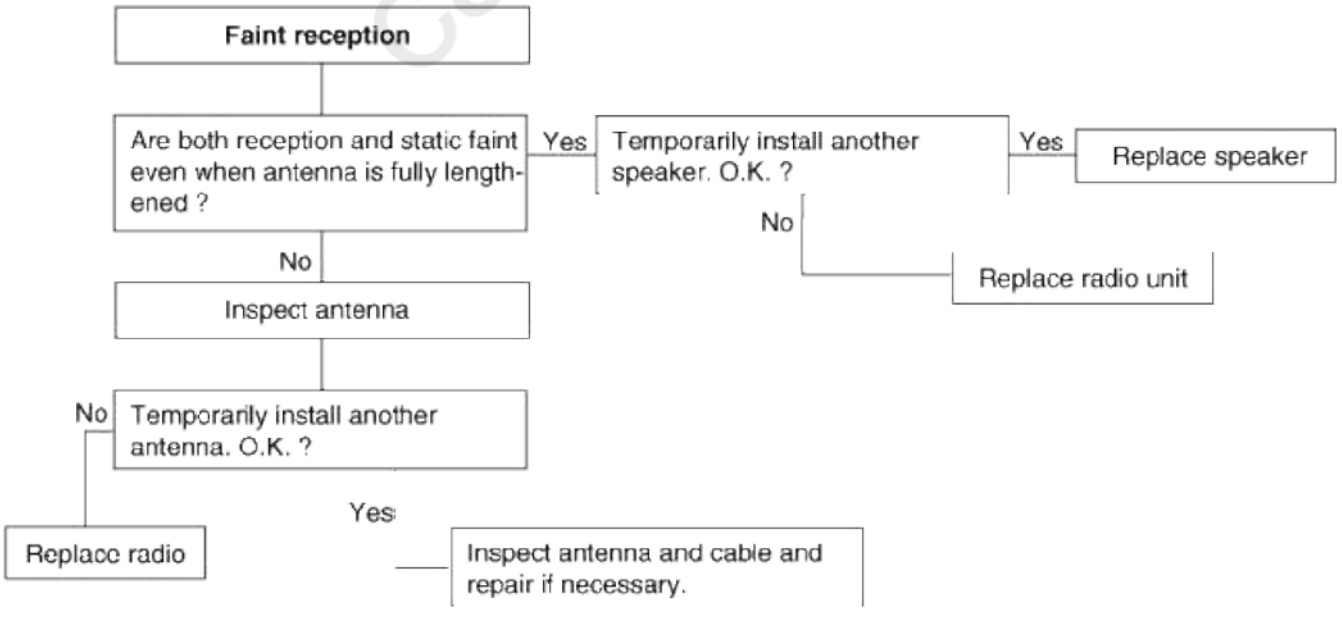

Chart 6

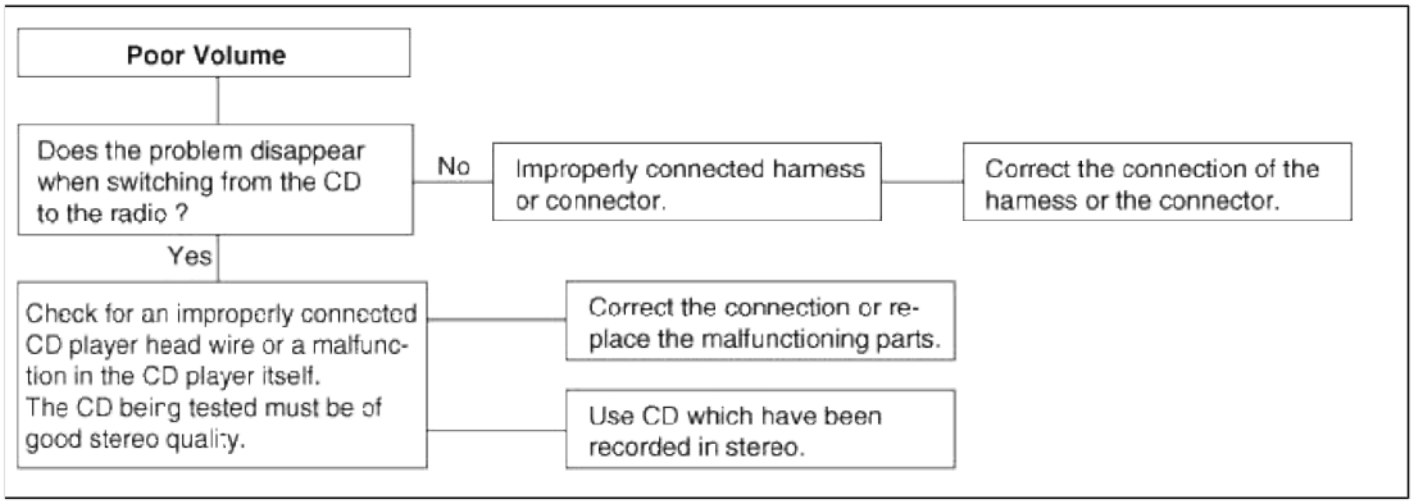

Chart 7

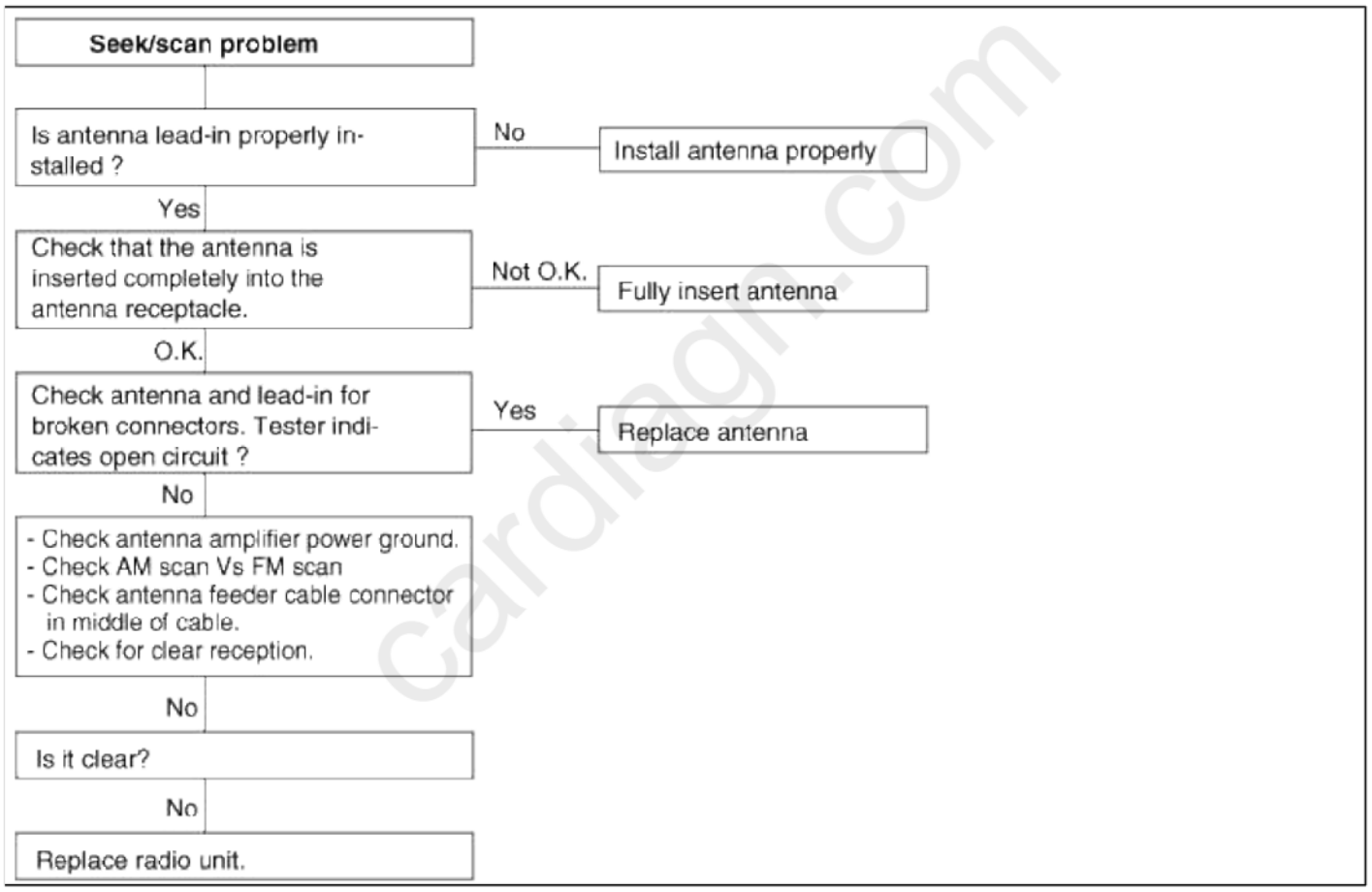

cardiagn.com

Body Electrical System > Multifunction switch > Specifications

Specifications

Items		Specifications
Rated voltage		DC 12V
Operating temperature range		-30°C ~ +80°C (-22 ~ +176°F)
Rated load	Dimmer & passing switch	High : 0.2A (Relay load) Low : 0.2A (Relay load) Passing : 0.2A (Relay load)
	Lighting switch	Lighting : 0.2A (Relay load)
	Turn signal & lane change switch	6.6 ± 0.5A (Lamp load)
	Fog lamp switch	0.2A (Relay load)
	Wiper & mist switch	Low, High : 4.5A (Motor load) Intermittent : 0.22 ± 0.05A (Relay load) Lock : Max. 28A (Motor load) Mist : 4.0A (Motor load)
	Washer switch	4A (Motor load)

Body Electrical System > Multifunction switch > Components and Components Location

Component(1)

cardiagn.com

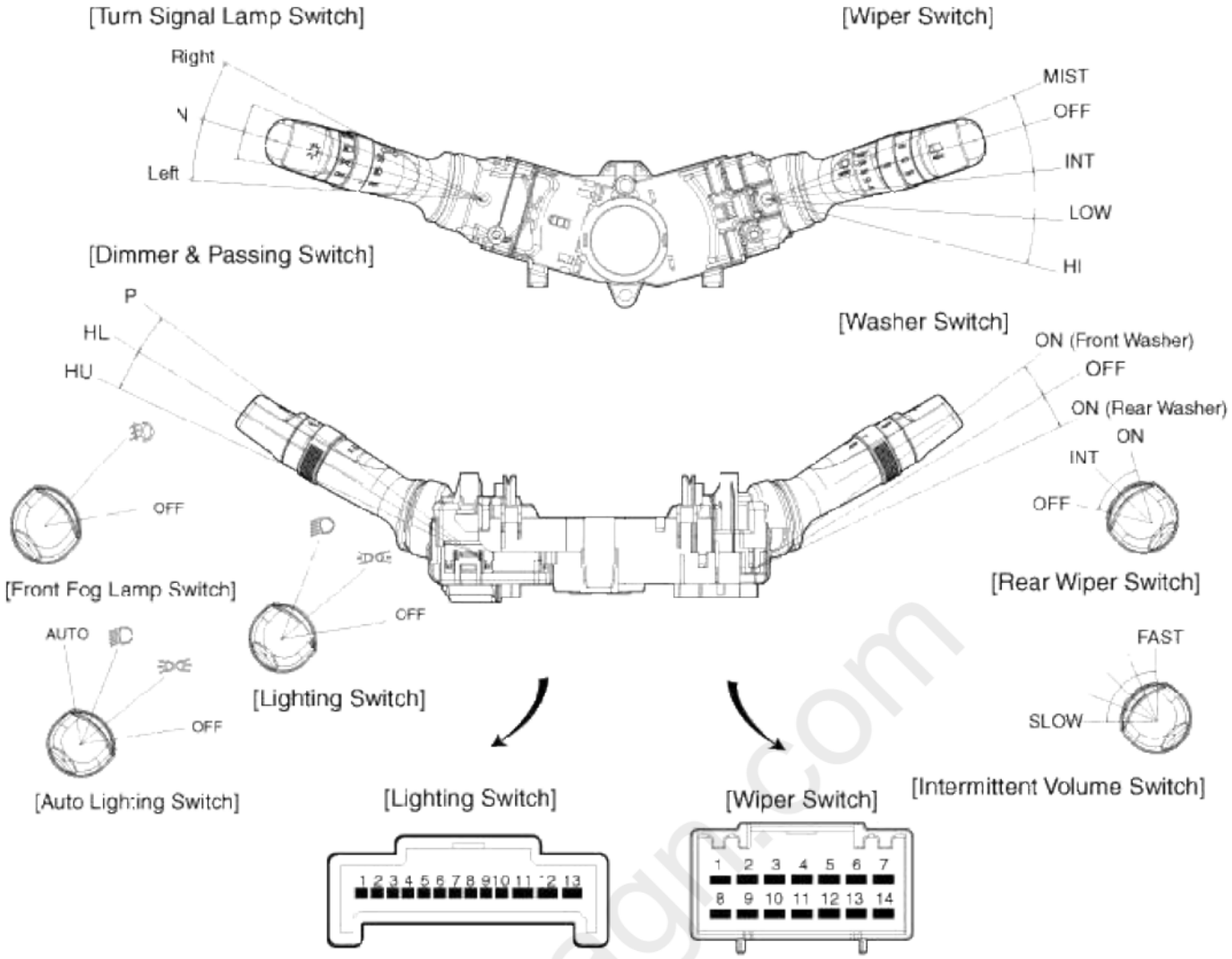

Connector name	No	Description	Connector name	No	Description
Lighting (13 pin)	1	Tail lamp switch	Wiper & Washer (14 pin)	1	Mist switch
	2	Lighting switch GND		2	Wiper parking
	3	Auto light switch		3	Wiper low speed
	4	Head lamp switch		4	Intermittent volume base
	5	Fog lamp switch base		5	Intermittent time base
	6	Front fog lamp switch		6	Rear wiper switch
	7	-		7	Intermittent rear wiper switch
	8	Head lamp low		8	Intermittent wiper switch
	9	Head lamp high		9	Wiper high speed
	10	Dimmer switch base		10	IGN2 (front washer & wiper)
	11	Turn signal left		11	Washer switch
	12	Turn signal base		12	IGN2 (rear wiper & washer)
	13	Turn signal right		13	Rear washer switch
				14	-

Diagram.com

Component(2)

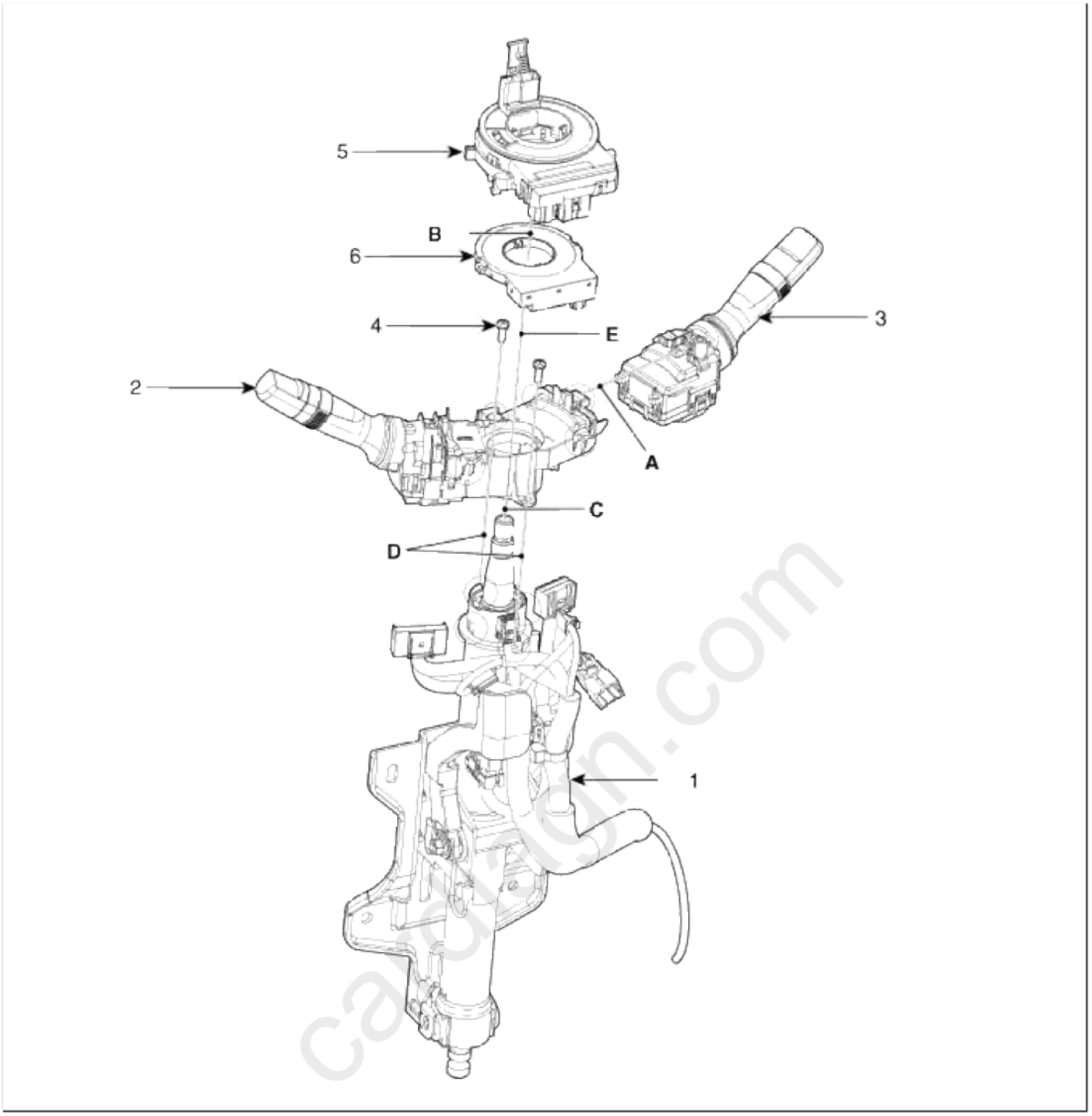

<Installation order : A→B→C→D→E>

1. Steering column shaft 2. Lighting switch 3. Wiper and washer switch	4. Screw 5. Clock spring 6. Steering angle sensor

Body Electrical System > Multifunction switch > Repair procedures

Inspection

Lighting Switch Inspection

With the multifunction switch in each position, make sure that continuity exists between the terminals below. If continuity is not as specified, replace the multi-function switch.

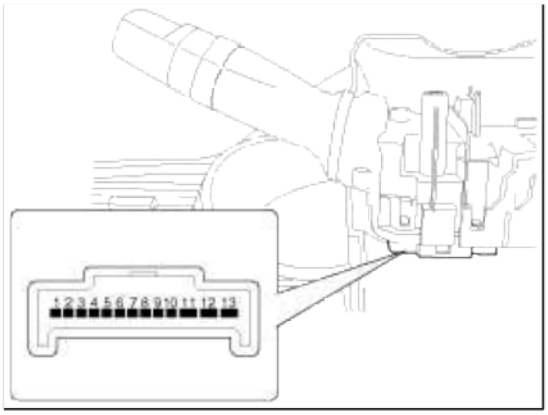

Lighting Switch (Auto Light)

Position \ Terminal	1	2	4	3
OFF				
Tail	○	○		
H/Lamp	○	○	○	
AUTO	○			○

Lighting Switch

Position \ Terminal	1	2	4
OFF			
Tail	○	○	
H/Lamp	○	○	○

Dimmer And Passing Switch

Position \ Terminal	10	8	9	2
HU	○		○	
HL	○	○		
P	○		○	○

HU : Head lamp high beam
HL : Head lamp low beam
P : Head lamp passing switch
Turn Signal Switch

Hazard switch	Turn signal switch \ Terminal	12	11	13
OFF	L	○	○	
	N			
	R	○		○

Front Fog Lamp Switch

cardiagn.com

Terminal / Position	5	6	7
OFF			
Front	○	○	

Wiper And Washer Switch Inspection

With the multifunction switch in each position, make sure that continuity exists between the terminals below. If continuity is not as specified, replace the multi-function switch.

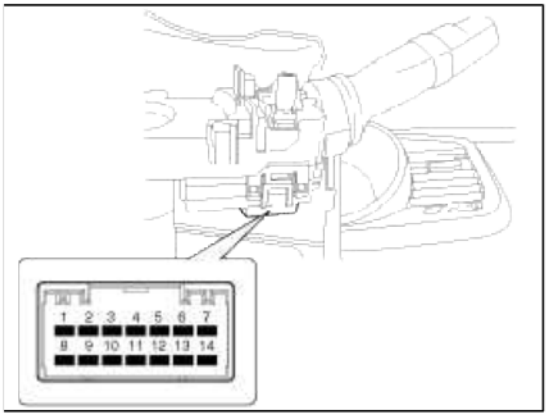

Wiper Switch

Terminal / Position	3	9	2	8	10	1	4	5
MIST	○		○		○	○		
OFF	○		○					
AUTO	○		○	○	○		○	○
LOW	○				○			
HI		○			○			

Washer Switch

Terminal / Position	11	10
OFF		
ON	○	○

Inspection (With GDS)

1. Check BCM input/output specification of multifunction switch using the GDS. If the specification is abnormal, replace the lamp or wiper switch.
2. If diagnosis is required on the multifunction switch, select model and "BCM".

cardiagn.com

3. To consult the present input/output value of BCM, "Current DATA". It provides information of BCM input/output conditions of power supply, turn signal/brake lamp, headlamp, door, locks, outside mirror, wipe auto-light and transmitters etc.

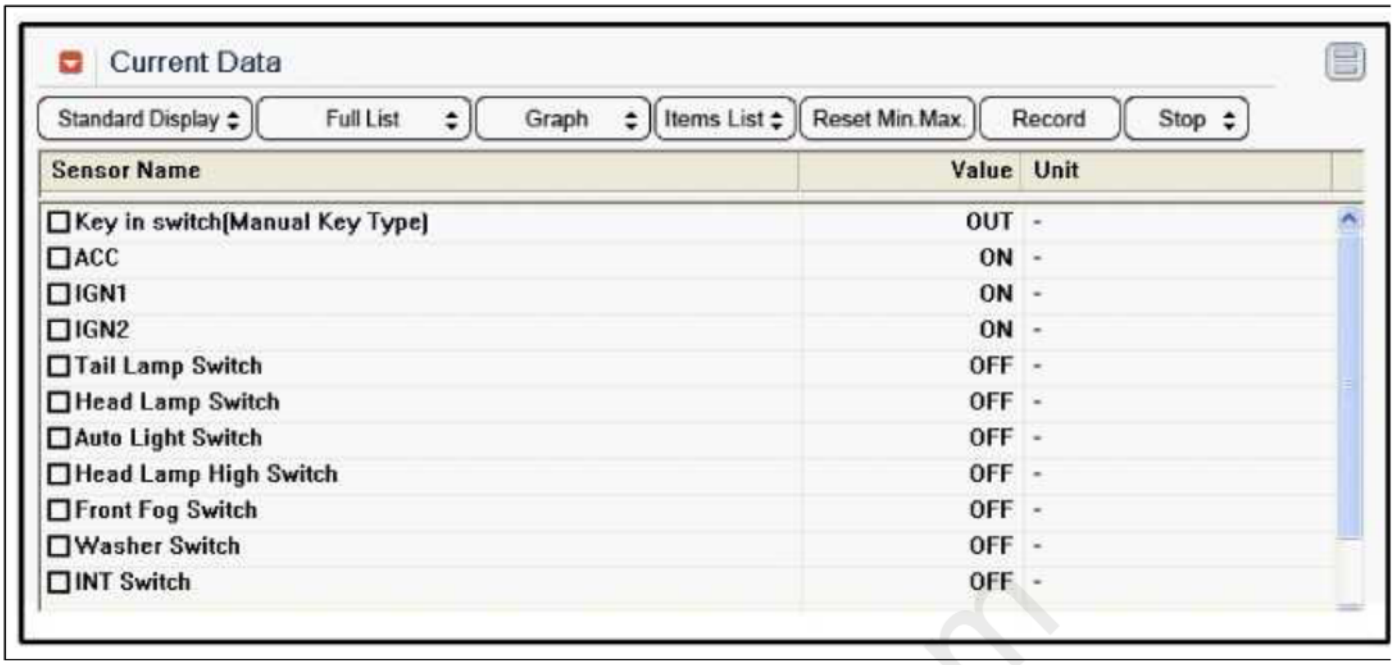

4. To perform compulsory operation on BCM input factors, select "ACTUATION TEST".

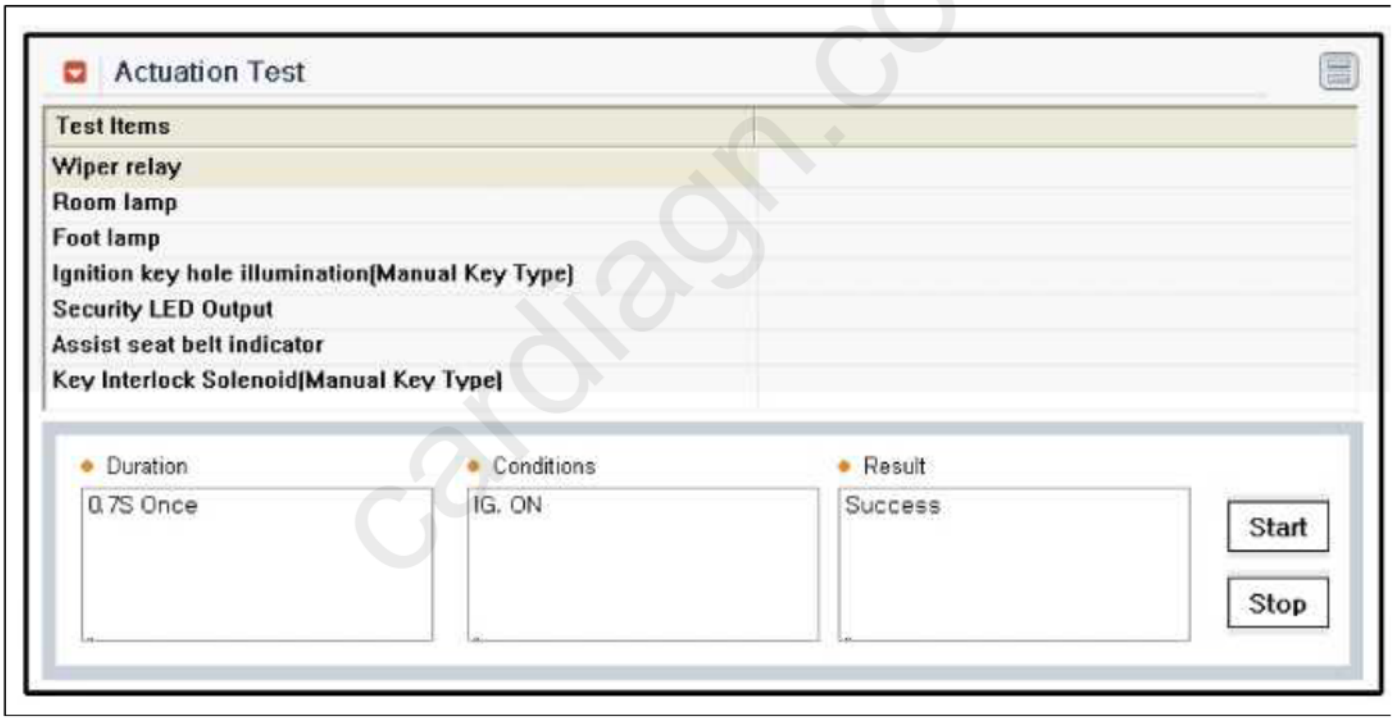

Removal

1. Disconnect the negative (-) battery terminal.
2. Remove the steering wheel.
   (Refer to the ST group - "Steering column & shaft")

cardiagn.com

3. Remove the steering column upper and lower shrouds after removing 3 screws.

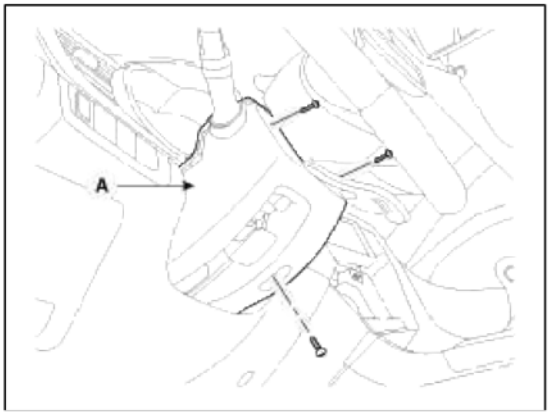

4. If it is necessary to remove. The wiper & washer switch (A) only, release the lock of wiper switch using tool without removing the steering wheel and the clock spring.

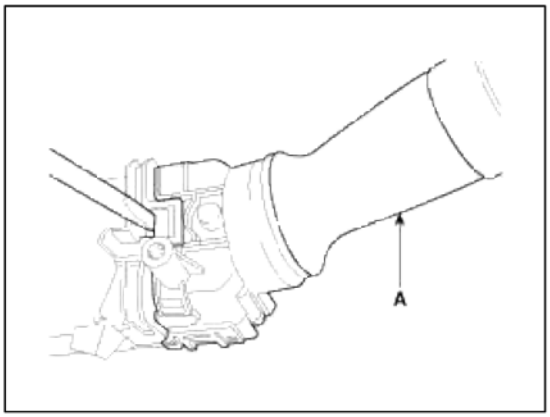

5. Disconnect the lighting switch connector (A) and wiper & washer switch connector (B).

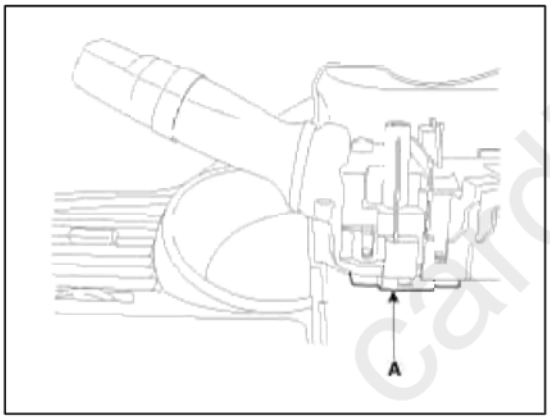

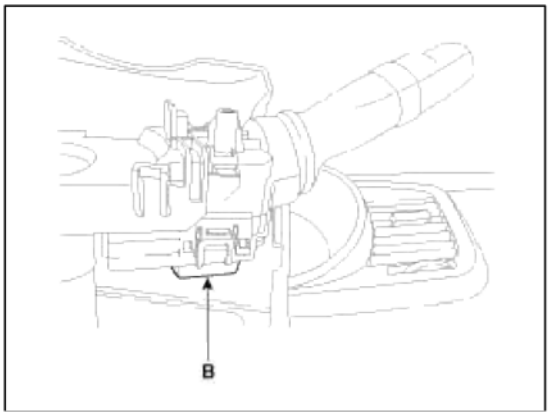

6. Remove the steering wheel.
   (Refer to the ST group - "Steering column & shaft")
7. Remove the clock spring.
   (Refer to the RT group - "Airbag module")

cardiagn.com

8. Remove the multifunction switch assembly (A) after loosening the mounting screws.

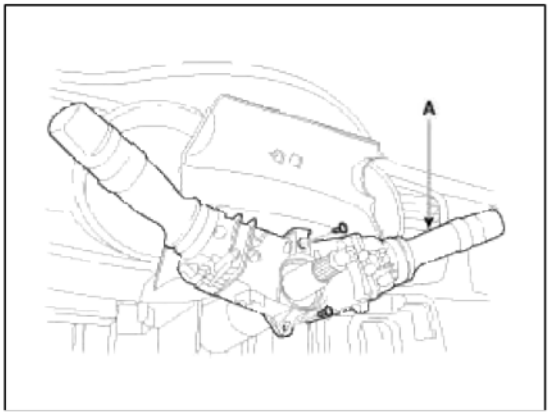

Installation

1. Install the multifunction switch.
2. Install the clock spring.
3. Install the steering column upper and lower shrouds.
4. Install the steering wheel.

> NOTE
>
> Make sure the multifunction switch connectors are plugged in properly.

Body Electrical System > Horn > Components and Components Location

Component Location

cardiagn.com

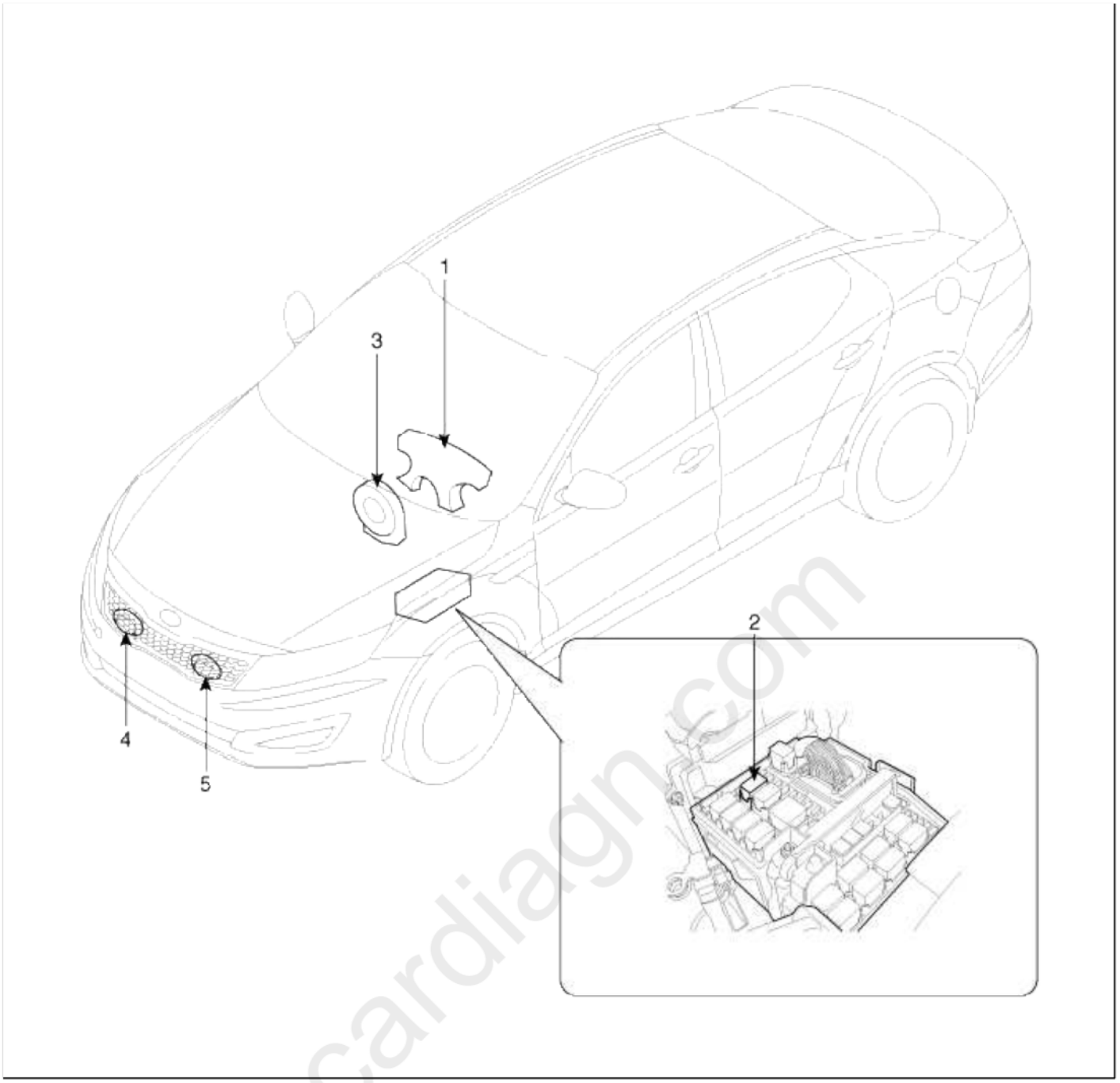

1. Horn switch 2. Horn relay (Engine room compartment) 3. Clock spring	4. Horn (Low) 5. Horn (High)

Body Electrical System > Horn > Repair procedures

Inspection

Test the horn by connecting battery voltage to the 1 terminal and ground the 2 terminal.
The horn should make a sound. If the horn fails to make a sound, replace it.

Horn Relay Inspection

1. Remove the horn relay (A) from the engine room relay box.
2. There should be continuity between the No.30 and No.87 terminals when power and ground are connected to the No.85 and No.86 terminals.

cardiagn.com

3. There should be no continuity between the No.30 and No.87 terminals when power is disconnected.

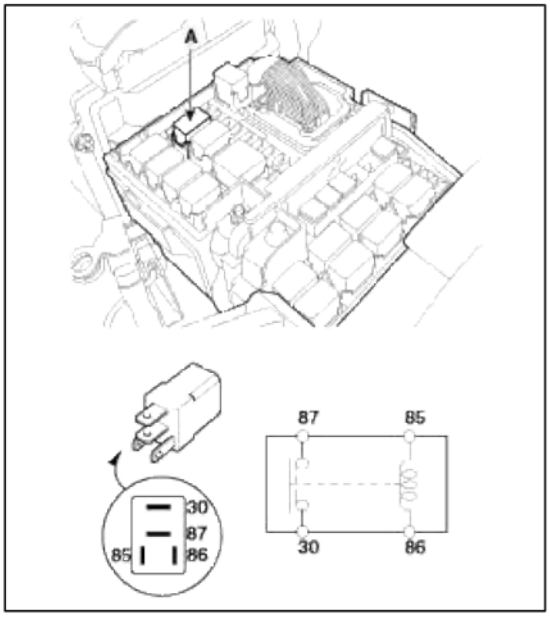

Terminal / Position	30	87	85	86
Disconnected			○	○
Connected	○	○	○	①

Removal

1. Remove the radiator grill upper cover.
   (Refer to the BD group - "Front bumper")
2. Remove the mounting nut and disconnect the horn connector (B), then remove the horn (A).

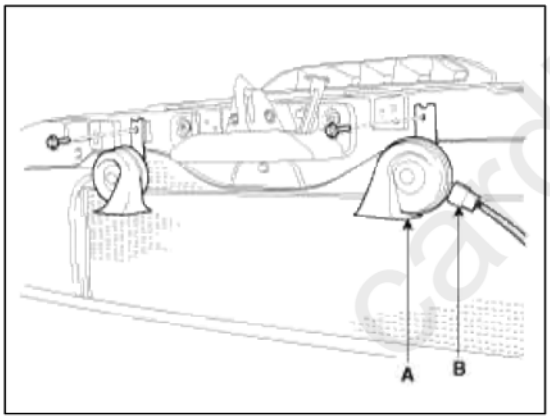

Installation

1. Connect the horn connector, then reassemble the horn.
2. Reassemble the front bumper.

Body Electrical System > AVN System > Specifications

Specifications

cardiagn.com

Item	Specification
Power source	DC 14.4V (-) ground
Frequency range / Channel space	FM : 87.5 ~ 107.9 MHz / 200 KHz AM : 530 ~ 1710 KHz / 10 KHz
Tuning type	PLL SYNTHESIZED TUNING
Impedance	2 ohm x 4
Antenna	80 pF 75 Ohm
Dark current	MAX 3mA (Head unit only)
S/N	FM : MIN 50 dB AM : MIN 40 dB
Temperature range	Operating : -20 °C~ +70 °C (-4 °F~ +158 °)F Storage : -30 °C~ +80 °C (-22 °F~ +316 °F)

GPS

Item	Specification
Frequency	1.57542 GHz
Sensitivity level	- 144 dbm
Channel	12CH

Speaker

Item		AVN system (Infinity sound)
Input power (W or V)	Front	MAX 50W
	Rear	MAX 50W
	Midrange	MAX 50W
	Sub woofer	16 V rms
	Center	MAX 50W
Impedance (Ω)	Front	2.0 ± 0.3
	Rear	2.0 ± 0.3
	Midrange	1.9 ± 0.3
	Sub woofer	4.8 ± 1.0
	Center	2.0 ± 0.3
Number of speaker		8

cardiagn.com

Body Electrical System > AVN System > Components and Components Location

Components Location

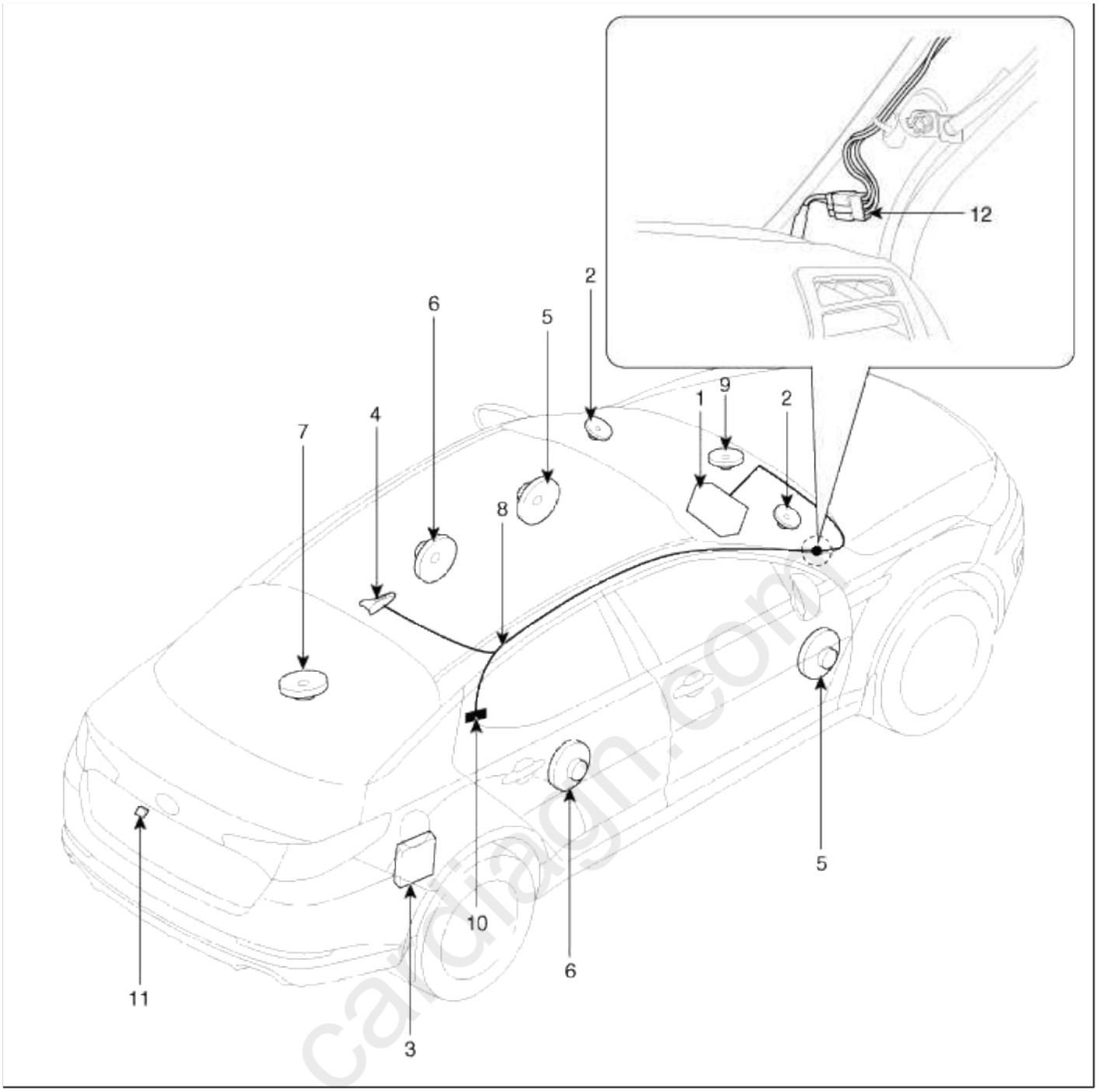

1. AVN (A/V & Navigation head unit) 2. Midrange speaker 3. External amplifier 4. Roof antenna (GPS + SDARS) 5. Front door speaker 6. Rear speaker	7. Woofer speaker 8. Antenna feeder cable 9. Center speaker 10. Glass antenna (Radio) 11. Back view camera 12. Feeder cable joint connector

SDARS : Satellite Digital Audio Radio Service

Body Electrical System > AVN System > Schematic Diagrams

System Block Diagram

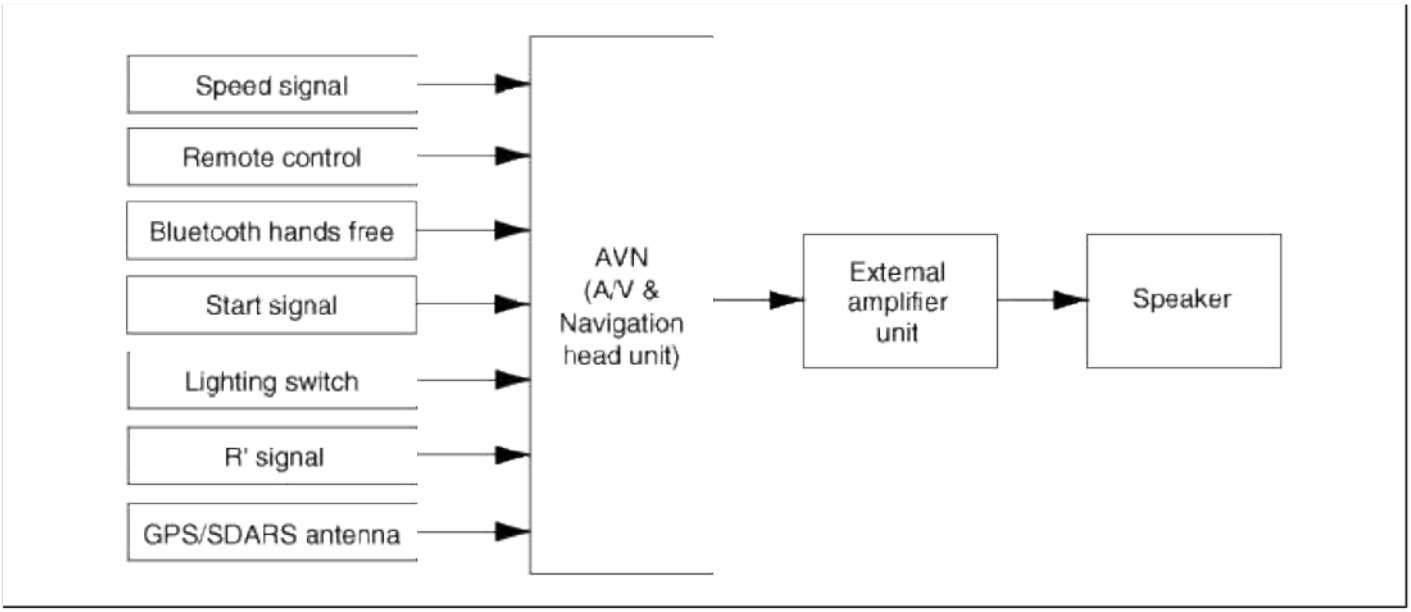

Body Electrical System > AVN System > Description and Operation

Limitations Of The Navigation system

GPS Signal Reception State

As the GPS satellite frequency is received/transmitted in straight lines, reception may not work if hiding devices are placed on or near the GPS antenna or when traveling through the following locations.

- Tunnels
- Basement parking structures
- Underneath an overpass
- Roads within forested areas
- Areas near high rise buildings
- Roads within canyons

Vehicle Position Display

1. If multipass errors occur due to reflections from buildings or related causes, the current position mark on the navigation may differ from the actual position of the vehicle.
2. The position of the vehicle on the navigation may be different from the actual position if the vehicle is under the situation. Driving a vehicle for a short period of time will correct the position on thenavigation through map matching or GPS information.
   A. When driving on a Y-shaped road with a narrow angle, the current position may be displayed in the opposite direction.
   B. If the vehicle is loaded onto a car transport vehicle, the current position mark may be stalled on the last position prior to loading.
   C. When driving on a spiral-shaped road.
   D. When driving in mountain regions with sharp turns or sudden brakes.
   E. When entering a road after having been in an underground parking structure, building parking structure, or turnable with many rotations.
   F. When the tires have recently been replaced (Especially upon use of spare or studless tires)
   G. If the battery terminal is removed.
   H. When driving in city streets, the current position may be displayed on the opposite side or on an off-road position.
   I. When changing the zoom level from the maximum zoom in level to a different zoom level, the current position mark may be displayed on a different road.
   J. When driving in heavy traffic with frequent go · stops in traffic or intersections.

cardiagn.com

K. When driving under slippery conditions, such as heavy sand, snow, etc.

L. When driving with the tire chain in place.

M. When using a tire with an incorrect size specification.

N. When the tire pressure for the 4 tires are different.

O. When the replacement tire is a worn or used tire (Especially studless tires having passed a 2nd seasons, etc.)

P. When driving near high-rise buildings

Q. If a roof carrier has been installed

R. When driving under high speeds or having calculated a long-distance route.

Route Guidance

Suitable route guidance may not occur caused by search conditions or the driving position.

- Guidance to go straight may be given while driving on a straight road.
- Guidance may not be given even when having turned at an intersection.
- There are certain intersections in which guidance may not occur.
- A route guidance signaling entrance into a no enter zone may occur (No enter zone, road under construction, etc.)
- Guidance may be given to a position removed from the actual destination if roads to reach the actual destination do not exist or are too narrow.
- Faulty voice guidance may be given if the vehicle breaks from the designated route (ex : if a turn is made at an intersection while the navigation provided guidance to go straight).
- Map Data may be missing or incorrect causing route guidance to not be given.

Route Re-calculation

The following phenomena may occur after conducting route recalculation.

- Guidance may be given to a position differing from the current position when turning at an intersection.
- Route recalculation may take a longer period of time when driving under high speeds.
- A route guidance signaling for a U-Turn in a No U-Turn location may occur.
- A route guidance signaling entrance into a no enter zone may occur (No enter zone, road under construction, etc).
- Guidance may be given to a position removed from the actual destination do not exist or are too narrow.
- Faulty voice guidance may be given if the vehicle breaks from the designated route (ex : if a turn is made at an intersection while the navigation provided guidance to go straight)

cardiagn.com

Body Electrical System > AVN System > AVN Head Unit > Components and Components Location

Components

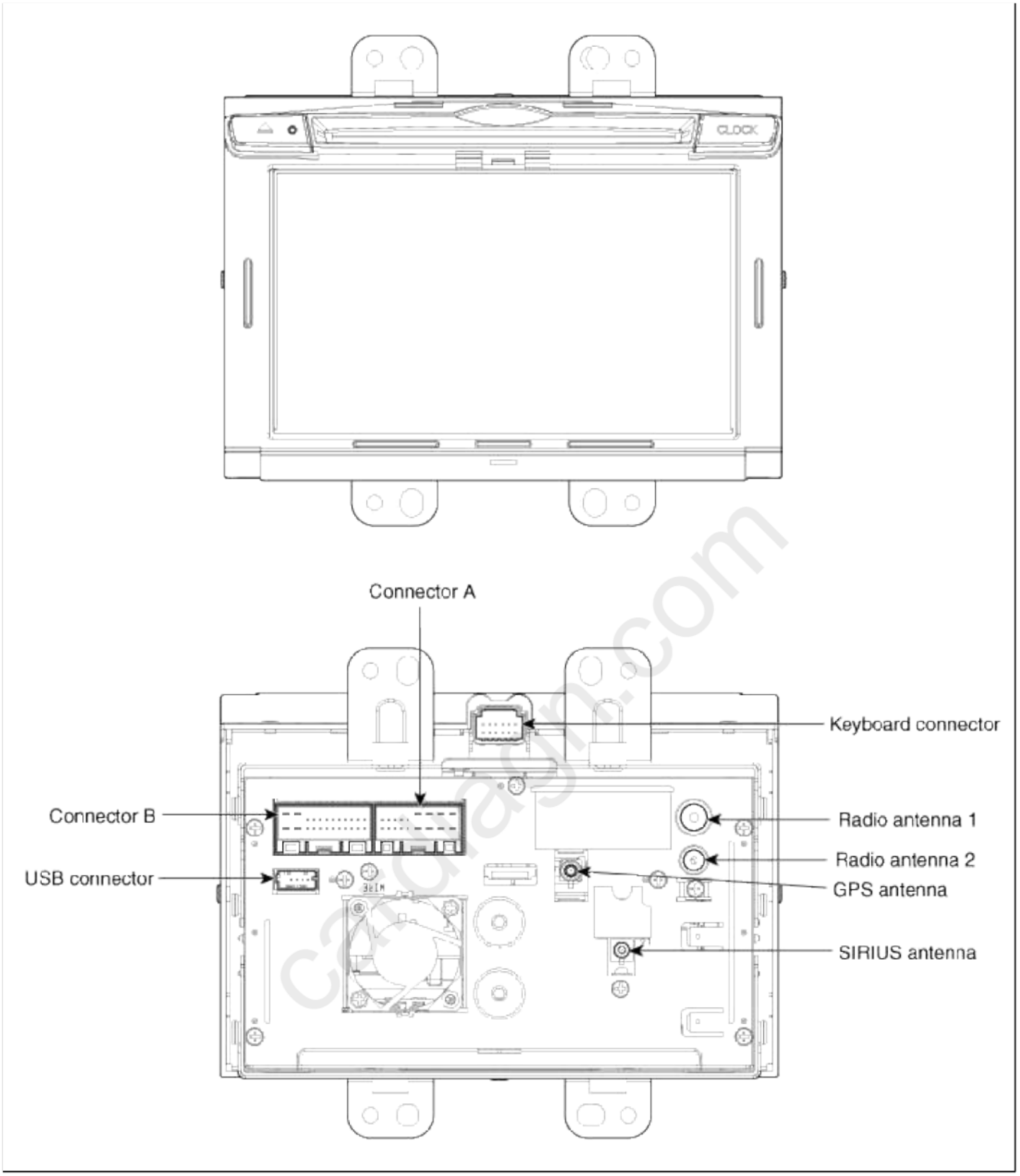

AVN (A/V & Navigation) Head Unit Connector

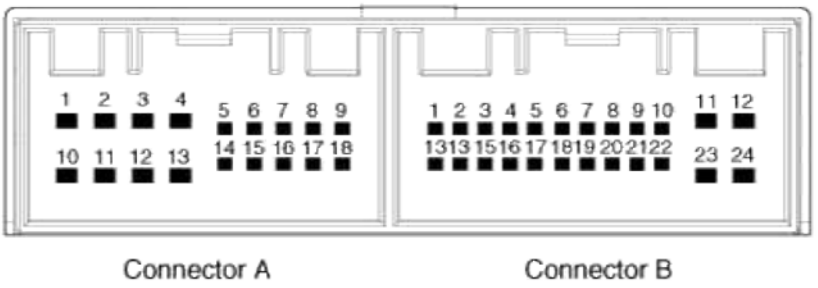

NO	Connector A	Connector B
1	-	CAN H
2	Video V	-
3	Video V GND	-
4	Video GND	Steering remote control
5	SPDIF GND	-
6	SPDIF +	-
7	-	iPod Video
8	Illumination +	AUX R IN
9	R position	AUX GND
10	-	MIC+ (B/T)
11	Video power	ACC
12	Navi voice -	B+
13	Navi voice +	CAN L
14	-	AV-TAIL
15	SPDIF -	P position
16	Door unlock	Speed
17	Illumination -	Steering GND
18	Antenna power	-
19		iPod V GND
20		AUX detect
21		AUX L IN
22		MIC- (B/T)
23		Main GND
24		Main GND

cardiagn.com

Radio antenna 1	No.	Description	No.	Description
	1	Diversity ANT	2	-

Radio antenna 2	No.	Description	No.	Description
	1	-	2	FM2

USB connector	No.	Description	No.	Description
	1	USB Ground	3	USB D (-)
	2	USB D (+)	4	USB VCC

SIRIUS antenna	No.	Description	No.	Description
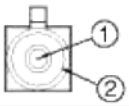	1	SIRIUS Signal	2	Ground

GPS antenna	No.	Description	No.	Description
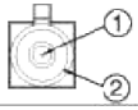	1	GPS Signal	2	Ground

Keyboard connector	No.	Description	No.	Description
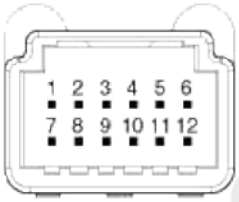	1	GND	7	Key Right
	2	-	8	Key Left
	3	-	9	Right CW
	4	GND	10	Left CCW
	5	Illumination -	11	Left CW
	6	Illumination +	12	-

cardiagn.com

[External Amplifier]

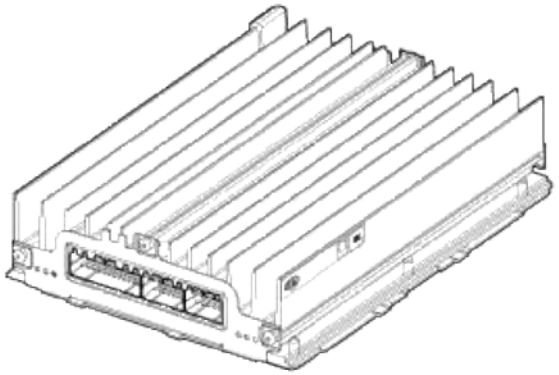

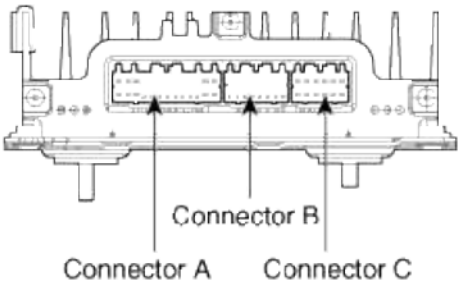

No	Connector A (26Pin)	Connector B (16Pin)	Connector C (12Pin)
	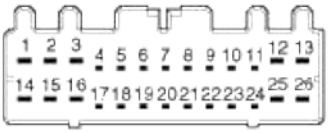	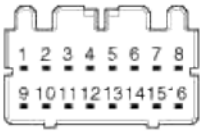	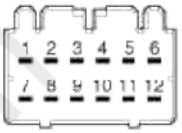
1	B (+)	Midrange right (+)	Rear door right (+)
2	B (+)	Midrange left (+)	Rear door left (+)
3	B (+)	-	Front right (+)
4	-	-	Front left (+)
5	CAN (+)	-	Front door right (+)
6	CAN (-)	-	Front door left (+)
7	ACC	Center speaker (+)	Rear door right (-)
8	-	-	Rear door left (-)
9	-	Midrange right (-)	Front right (-)
10	-	Midrange left (-)	Front left (-)
11	Navi (+)	-	Front door right (-)
12	Subwoofer 2 (+)	-	Front door left (-)
13	Subwoofer 1 (+)	-	
14	GND	-	
15	GND	Center speaker (-)	
16	GND	-	
17	-		
18	SPDIF (+)		
19	SPDIF (-)		
20	SPDIF GND		
21	-		
22	-		
23	-		
24	Navi (-)		
25	Subwoofer 2 (-)		
26	Subwoofer 1 (-)		

cardiagn.com

[Roof Antenna (SIRIUS+GPS)]

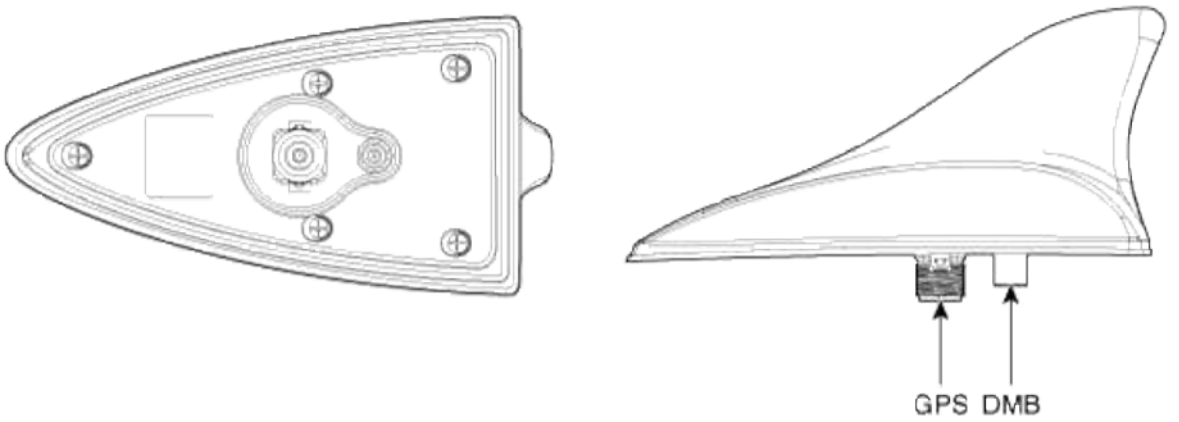

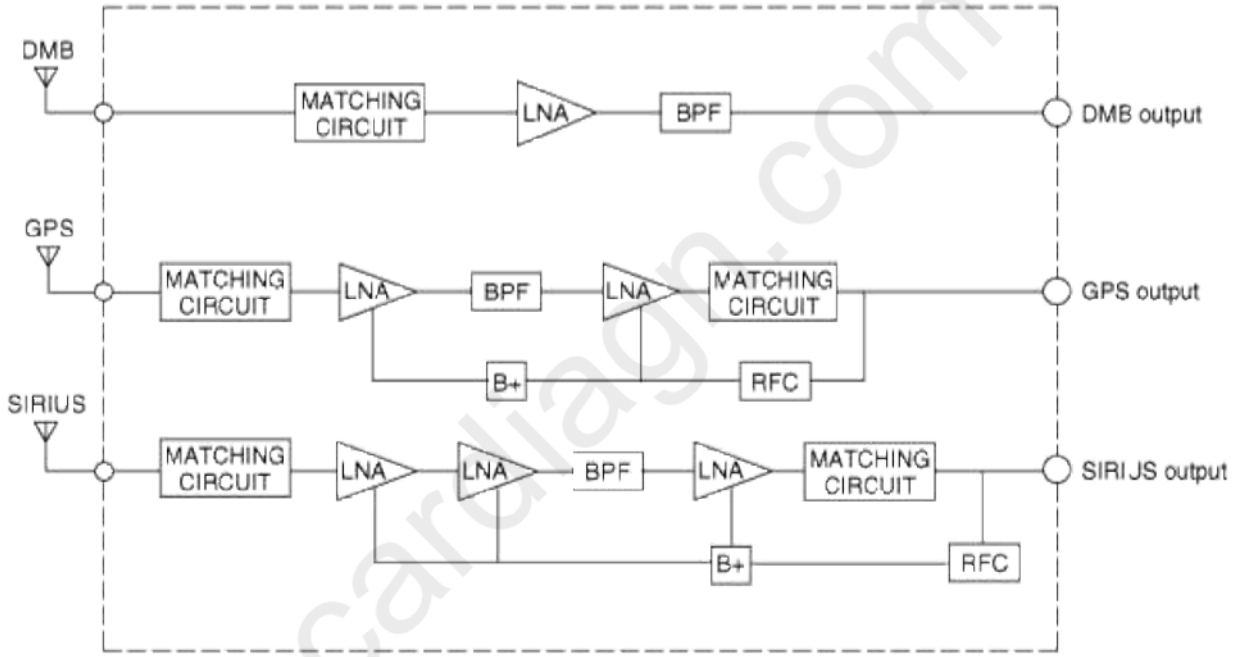

cardiagn.com

Body Electrical System > AVN System > AVN Head Unit > Repair procedures

Removal

AVN Head Unit

NOTE

- Take care not to scratch the center fascia panel and related parts.
- Eject all the disc before removing the AVN head unit to prevent damaging the CD player's load mechanism.

1. Disconnect the negative (-) battery terminal.

2. Using a screwdriver or remover, remove the crash pad garnish RH (A).

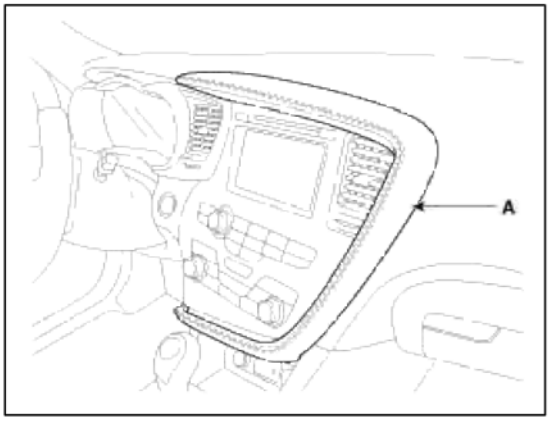

NOTE

Apply the protective tapes to crash pad garnish and its related parts.

3. Using a screwdriver or remover, remove the crash pad side cover (A).

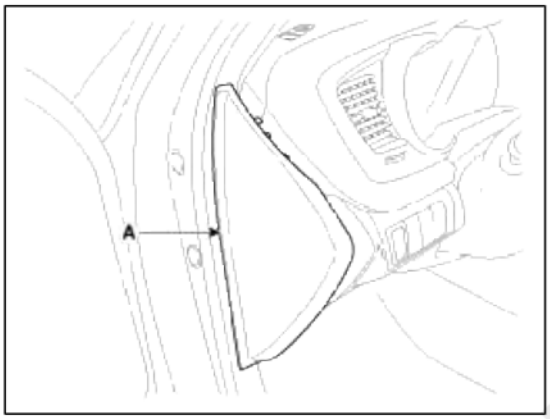

4. After loosening the crash pad lower panel mounting screws, then remove the lower panel (A).

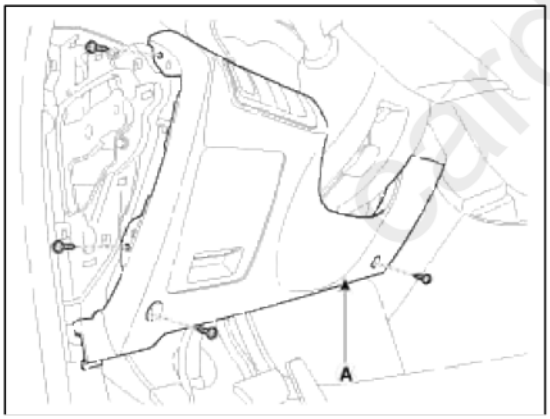

cardiagn.com

5. Remove the switch connector (A) and SSB connector (B) from crash pad lower panel.

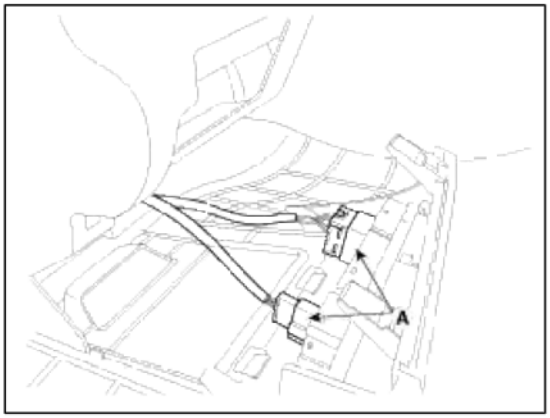

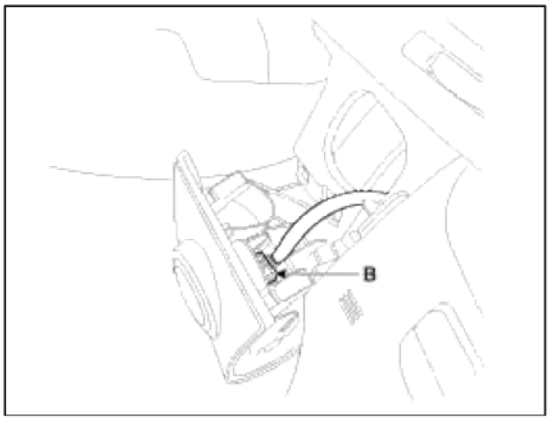

6. Remove the crash pad garnish LH (A) after removing the screws.

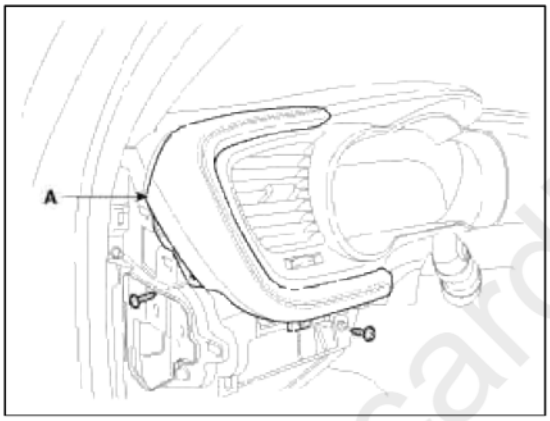

7. Remove the instrument cluster fascia panel (A) after loosening the screws.

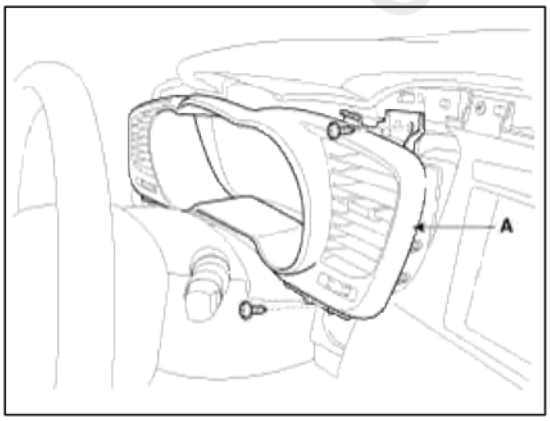

cardiagn.com

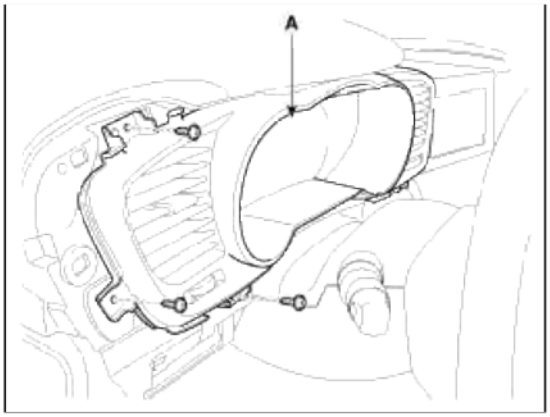

8. Remove the center fascia lower panel (A) after loosening the screws.

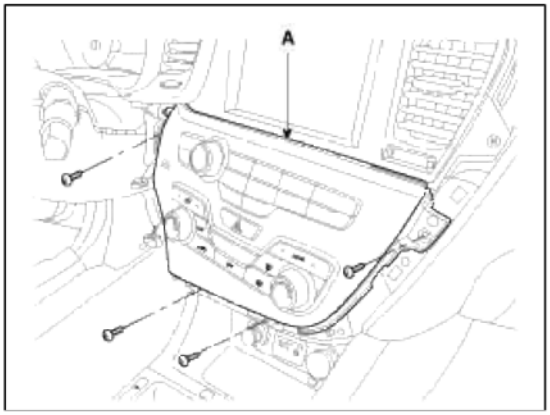

9. Remove the connectors (A) and hose (B).

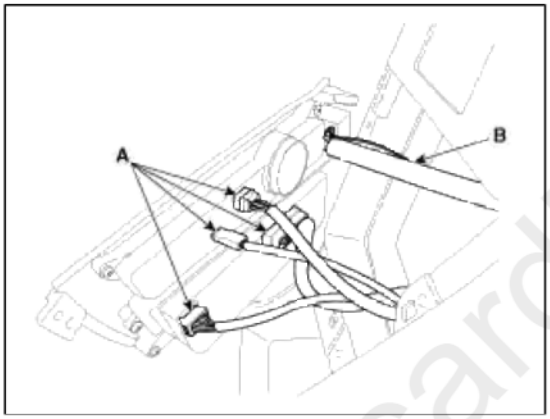

10. Remove the center fascia upper panel (A) after loosening the screws.

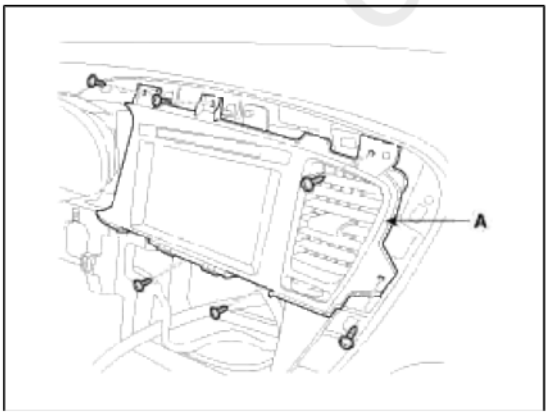

cardiagn.com

11. Remove the AVN head unit assembly (A) after loosening the mounting screws.

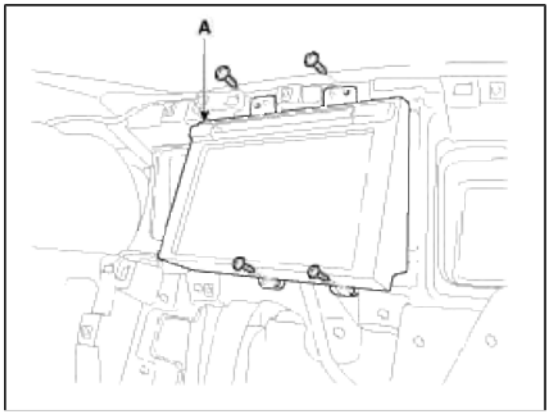

12. Disconnect the audio connectors and cable (A), then remove the audio unit completely.

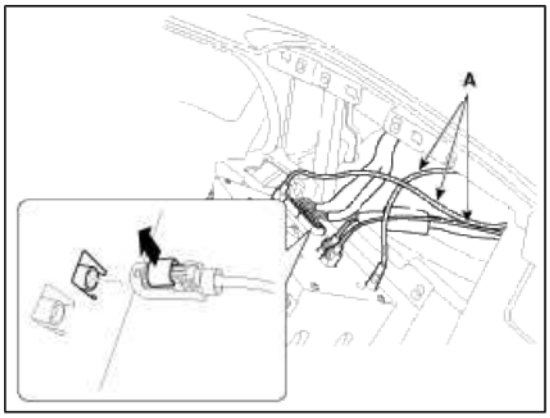

NOTE

Lift the connector locking clip to the arrow direction, disconnect the connector.
When assembling, install the connector and connector locking clip.

NOTE

If the CD does not eject, do not attempt to remove it because the audio unit may be damaged.Contact an authorized hyundai dealership for assistance.

NOTE

If the CD-rom needs to be removed, follow the procedure below.

Roof Antenna (GPS + SIRIUS)

1. Remove the rear roof trim.
   (Refer to the BD group - "Roof trim")
2. Disconnect the GPS (B) cable and SIRIUS cable (A) from the roof antenna.

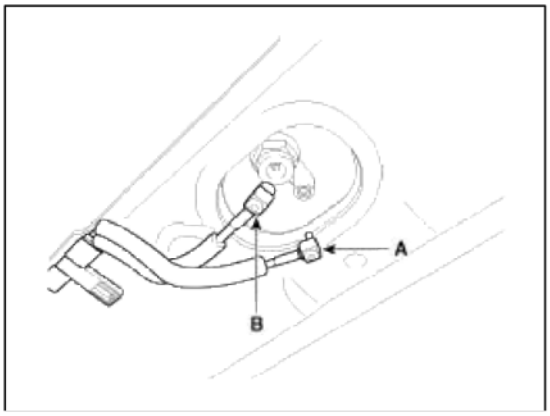

cardiagn.com

3. Remove the roof antenna (A) after removing a nut

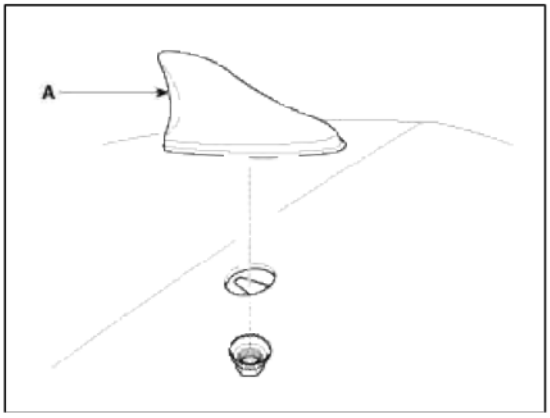

Installation

AVN Head Unit

1. Connect the audio unit connectors and cables.
2. Install the AVN head unit.
3. Install the center fascia upper panel.
4. Install the heater control unit.
5. Install the crash pad garnish LH and instrument cluster fascia panel.
6. Install the crash pad lower panel and side cover.
7. Install the crash pad garnish RH.

> NOTE
>
> Make sure the AVN head unit connectors are plugged in properly and the antenna cable is connected properly.

Roof Antenna (GPS + SIRIUS)

1. Installation the roof antenna.
2. Connect the GPS cable and SIRIUS cable.
3. Install the rear roof trim.

> NOTE
>
> - Make sure that the cables and connectors are plugged in properly.
> - Check the AVN system.

cardiagn.com

Body Electrical System > AVN System > Multimedia Jack > Schematic Diagrams

Circuit Diagram

[AUX, USB Jack (AVN)]

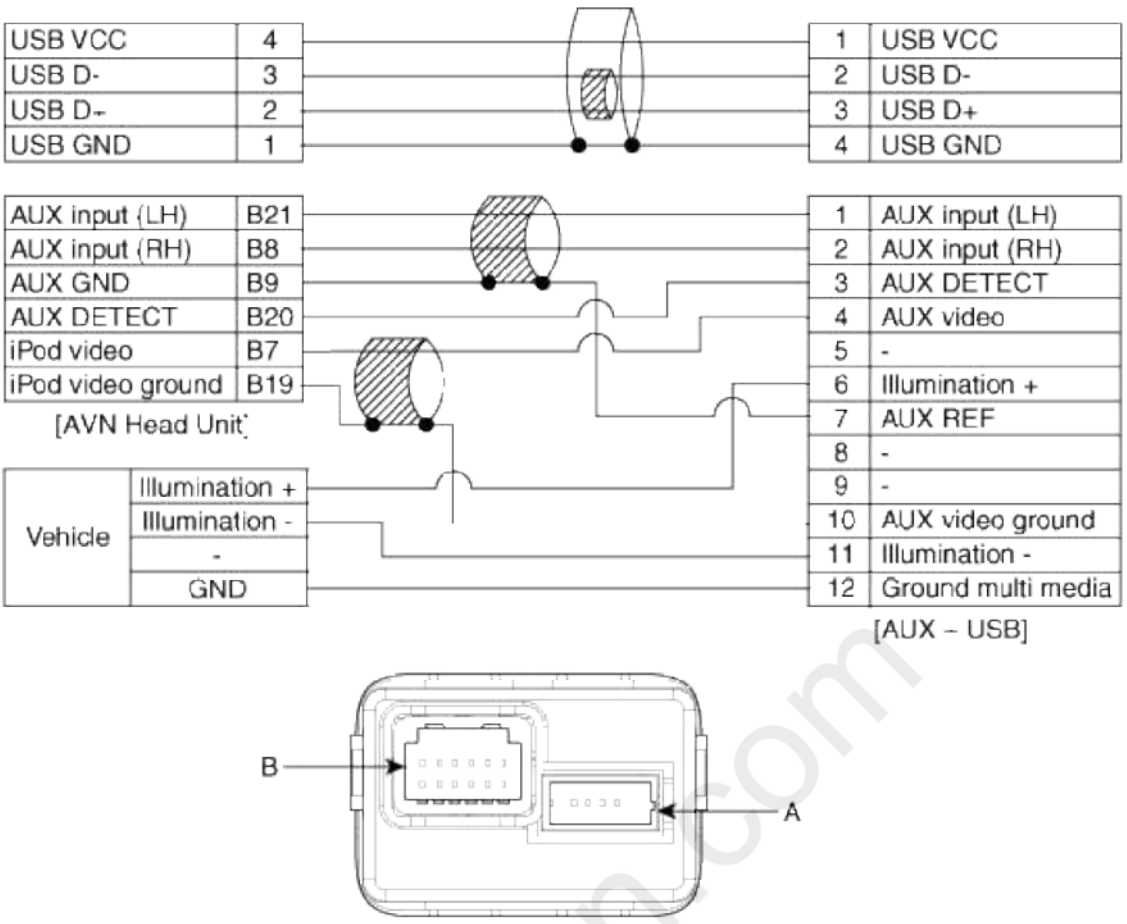

Connector A	Pin No.	USB connector
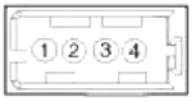	1	USB/ iPod VOD
	2	USB D (-)
	3	USB D (+)
	4	USB/ iPod ground

Connector B	Pin No.	AUX connector
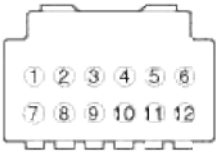	1	AUX input (LH)
	2	AUX input (RH)
	3	AUX DETECT
	4	AUX video input
	5	-
	6	Illumination (+)
	7	Shield ground
	8	-
	9	-
	10	AUX video ground
	11	Illumination (-)
	12	Ground multi media

carmagnet.com

Body Electrical System > AVN System > Multimedia Jack > Description and Operation

Description

The multimedia jack on the console upper cover is for customers who like to listen to external portable music players like the MP3, iPod and etc., through the vehicle's sound system when it is linked to this jack. The customer has this added option.

In case of distortions from media connected to the AUX source, the audio unit may not be defective but the output level of the used media does not match the specification of the AUX input.

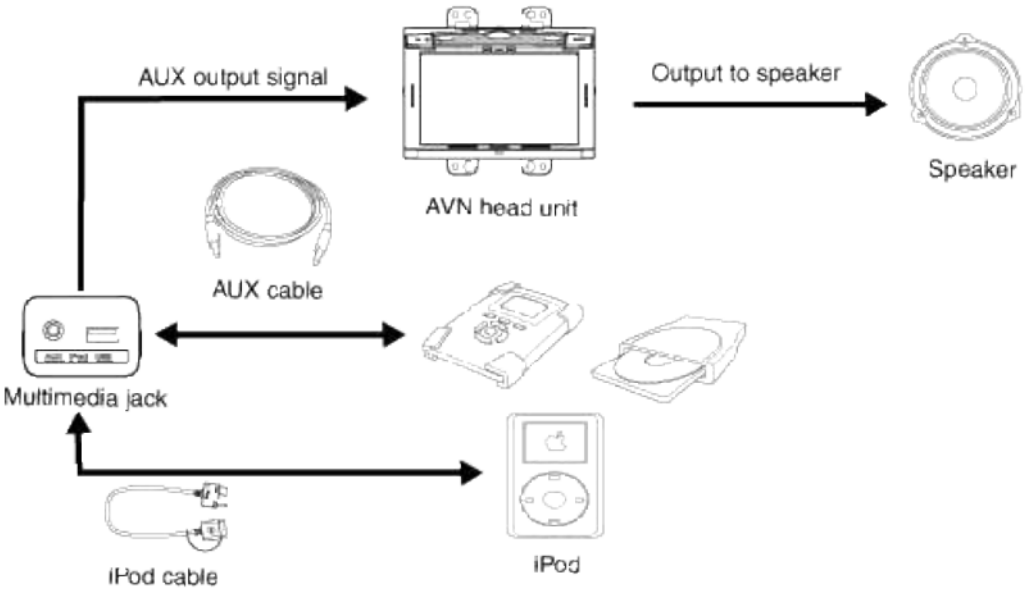

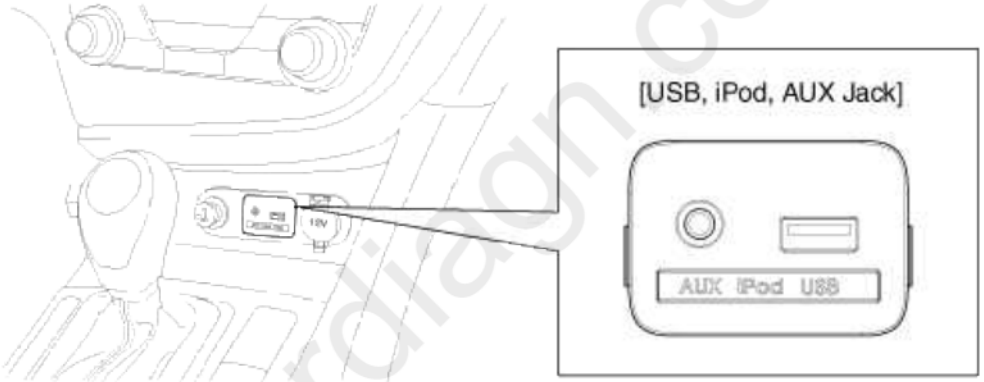

cardiagn.com

Body Electrical System > AVN System > Multimedia Jack > Repair procedures

Removal

1. Remove the shift lever knob.
   (Refer to the BD group - "Console")

2. Remove the console upper cover (A).

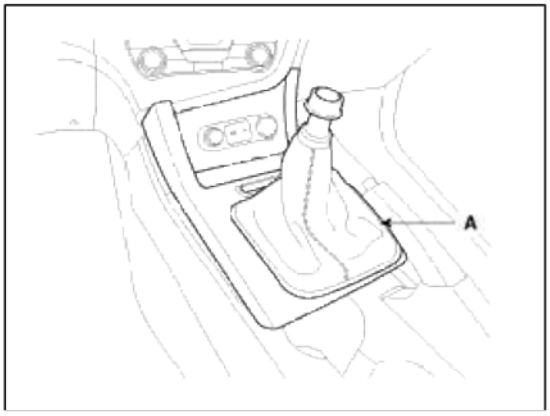

3. Disconnect the connector from the console upper cover.
4. Remove the multimedia jack (B) from the console under cover after releasing the fixed hooks (A).

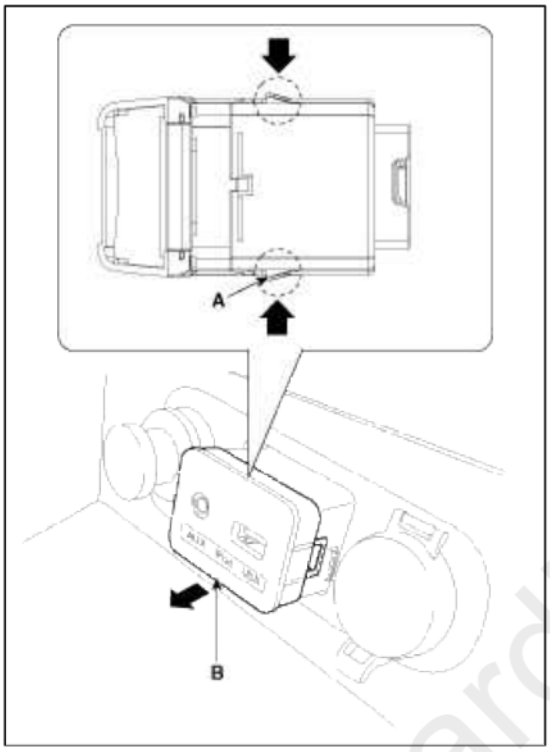

Installation

1. Install the multimedia jack.
2. Connect the multimedia jack connector.
3. Install the console upper cover.
4. Install the shift lever knob.

NOTE

Make sure the multimedia connector and the console upper cover connectors are plugged in properly.

Body Electrical System > Smart key System > Specifications

Specification

Smart Key Unit

cardiagn.com

Items	Specification
Rated voltage	DC 12V
Operating voltage	DC 9 ~ 16V
Operating temperature	-30°C ~ 75°C (-22°F ~ 167°F)
Load	Max. 2mA

RF Receiver

Items	Specification
Frequency	315 MHz
Antenna type	FSK (Frequency Shift Keying)

Smart Key FOB

Items	Specification
Battery	Lithium battery 3V 1EA
Distance	30m from vehicle, RF : 30m, Passive(LF) : 0.7m
Battery life	More than 2years (10 times / a day)
Push buttons	4 (Door lock / unlock, Trunk lid / Panic)
Frequency(Rx)	125 kHz
Frequency(Tx)	315 MHz
Numbers	2EA

Antenna

Items	Specification
Rated voltage	DC 12V
Operating voltage	DC 9 ~ 16V
Operating temperature	-30°C ~ 75°C (-22°F ~ 167°F)
Frequency	125kHz
Numbers	Interior(3EA), Door(2EA), Bumper(1EA)

cardiagn.com

Body Electrical System > Smart key System > Components and Components Location

Component Location (1)

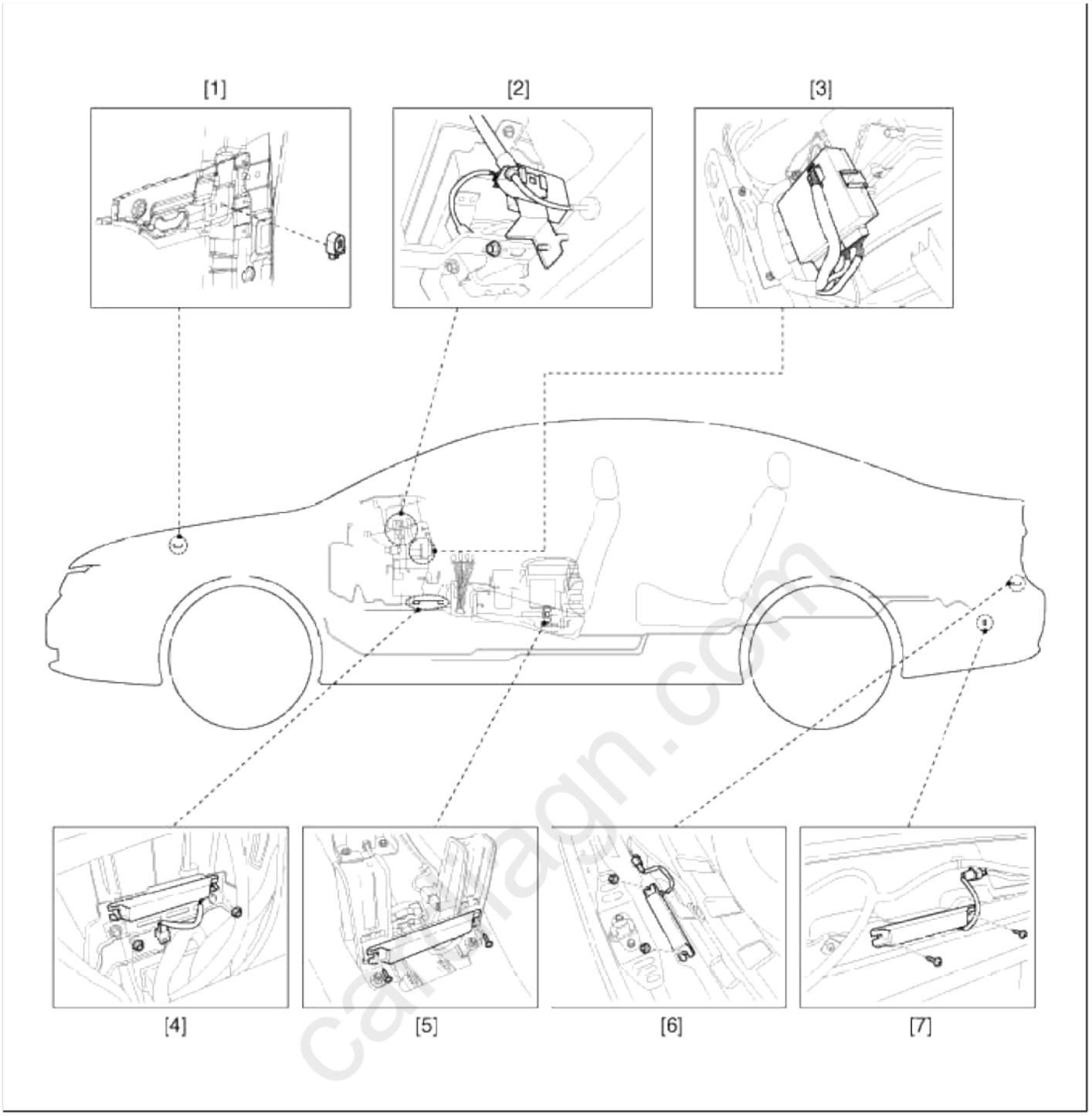

1. Buzzer 2. RF receiver 3. Smart key unit 4. Interior antenna 1	5. Interior antenna 2 6. Trunk antenna 7. Bumper antenna

Component Location (2)

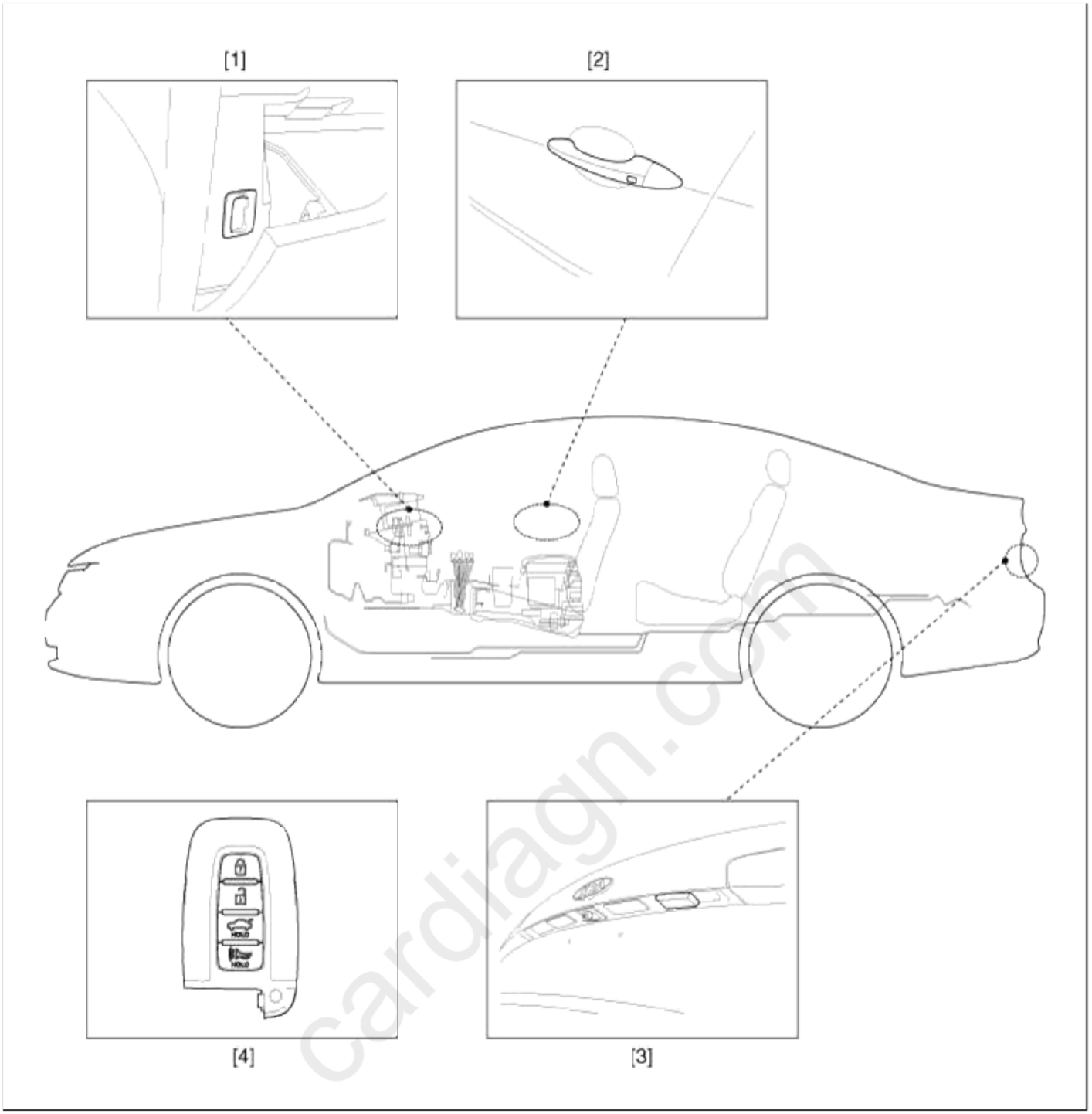

1. FOB holder 2. Door outside handle	3. Trunk lid open switch 4. FOB key

Body Electrical System > Smart key System > Description and Operation

Description

The SMART KEY system is a system that allows the user to access and operate a vehicle in a very convenient way. To access the vehicle, no traditional key or remote control unit is needed.

The user carries a SMART KEY FOB which does not require any conscious actions by the user (e.g. operate a RKE button). The SMART KEY system is triggered by pressing a push button in the door handle.

After being triggered the vehicle sends out a request in a limited range. If the SMART KEY FOB receives this request, it automatically sends a response to the vehicle. Then the system decides whether to perform a

particular action (unlocking, locking…) or remain inactive.
Again, a communication between the vehicle and the SMART KEY FOB is needed before any actions will be performed.
The System offers the following features :

- Passive unlock via door driver side and passenger side
- Passive locking via door driver side and passenger side
- Passive start
- Passive access trunk via the trunk lid switch at the trunk
- Passive locking via tailgate
- Max. 2 fobs can be handled by the system
- Immobilizer backup antenna driver integrated into FOB-HOLDER for TP authentication (i.e. limp home mode)
- Communication with engine management system
- Communication with SRX
- LF-RF communication

1. Passive unlock
   The system allows the user to access (unlock) the vehicle without performing any actions with the SMART KEY FOB. This feature could be different depending on platform as follows:
   A. Pressing Push button in door handle
2. Passive locking
   The system allows the user to lock the vehicle by pushing a button on door handle with the SMART KEY FOB.
3. Button start
   The system allows to switch the power modes (Off, Accessory, Ignition), as well as to start and stop the vehicle's engine without performing any actions with the SMART KEY FOB. See Button Engine Start system specification.
4. LIMP HOME Mode
   Additionally, the system offers so called "limp home mode", which is the user can operate all vehicle functions by inserting the key into the FOB HOLDER.

Smart Key ECU (SMK ECU)
The SMK ECU manages all functions related to "Passive Unlock", "Passive Lock" and "Passive Authorization for Engine Start Operation".
It reads the inputs (Push button in door handle, Start Stop Button (SSB), PARK position Switch), controls the outputs (e.g. exterior and interior antennas), and communicates via the CAN/LIN (depends on the vehicle) as well as a single line interface to further devices of the car.
It reads the inputs (Push button in door handle, Start Stop Button (SSB), PARK position Switch), controls the outputs (e.g. exterior and interior antennas), and communicates via the CAN as well as a single line interface to further devices of the car.
For communication with the SMART KEY FOB, SMK ECU generates a request (challenge) as an encoded and modulated 125 kHz signal at the inductive antenna outputs and receives the SMART KEY FOB's response via the external RF receiver.
The main functional blocks of the SMK ECU are:

- Power supply
- Microcontroller with FLASH Memory
- Single Line Interface to SRX
- Single Line Interface to EMS
- Input stage
- LF antenna amplifier/driver
- CAN communication with BCM

cardiagn.com

• LIN communication with other unit (depending on platform)

The LF antenna amplifier/driver generates a 125 kHz sinusoidal carrier signal which is distributed to the different antennas.

Smart Key FOB

The system supports up to 2 SMART KEY FOBs.

The main functions of the SMART KEY FOB are:

• Passive functionality: receives LF-challenge and sends automatically RF response.

• Classic RKE function by action up to 6 push buttons.

• Transponder-functionality in case of a flat battery or a disturbed communication.

• LED for operation feedback and battery monitoring.

NOTE

The FOB's LED indicator may continue to light even with a low transmitter battery.
If the performance or range of the FOB is less than expected, check the transmitter battery.

Antennas

1. Emitting LF Antennas:
   Inductive antennas in and at the vehicle are used to transform the current, driven by the SMK ECU antenna driver, into a 125 kHz magnetic field, which is the carrier for the SMART KEY challenge.
   Three antennas cover the vehicle's exterior: two antennas in the Door Handles (DS and PS) cover the area around the doors; one antenna in the rear bumper covers the area around the trunk.
   Two antennas cover the vehicle's exterior: two antennas in the Door Handles (DS and PS) cover the area around the doors.
   Up to three antennas cover the vehicle's interior and the trunk interior: two in the passenger compartment and one in the trunk.
2. Bidirectional Immobilizer Antenna (for Limp Home):
   The Immobilizer Backup Antenna is used for sending and receiving data: it emits a magnetic field (125 - 135 kHz challenge) and receives changes in the field strength (response of Transponder).
3. External Receiver
   The SMART KEY FOB's response is received via the external RF receiver, which is connected to the SMK ECU via a serial communication Line.
   The SMK ECU provides a connector pin for the serial communication Line.

Door Handle

The front door handles of the two doors (driver door / passenger door) are equipped with emitting LF-antennas to emit the 125 kHz signals. The front door handles are also equipped with a push button.

Push Button

The push button in door handle serves as a trigger to indicate the user's intent to unlock or lock the vehicle.
The push buttons are installed at front doors, integrated into the door handles.
Another button is installed at the trunk lid.

Operation

Passive Functions

The system allows the user to access the vehicle without having to perform any actions (e.g. RKE button pressing) with the SMART KEY FOB. It is sufficient that a valid SMART KEY FOB is located within a defined and limited range with respect to the vehicle. So the system is capable of detecting and authenticating a SMART KEY FOB in the ranges as specified below.

Operating Range

The SMART KEY FOB receives and interprets a challenge sent from the vehicle via the exterior antennas in a free space range of min. 0.7m measured around the exterior antennas which are integrated in the door handles; refer to the below given picture. The trunk access range is also min. 0.7m measured from the antenna position.
The SMART KEY FOB receives and interprets a challenge sent from the vehicle via the exterior antennas in a

cardiagn.com

free space range of min. 0.7m measured around the exterior antennas which are integrated in the door handles; refer to the below given picture

Passive Access (Passive Entry)

Pressing one of the push buttons in the door handles when all doors locked indicates the operator's intent to access the vehicle and thus triggers the system for unlock

Passive Locking (Exit)

Pressing one of the push buttons in the door handles when one of the following condition is fulfilled:

- At least one door is unlocked and two_steps timer is not running or
- Two_steps timer is running and one of the push button except Front Left side is triggered

indicates the operator's intent to lock the vehicle and thus triggers the system for a lock.

Passive Open Tailgate

Pressing the Trunk Lid Switch when trunk is closed indicates the operator's intent to open the trunk and thus triggers the system. Subsequently, the SMK ECU sends a LF-challenge to the SMART KEY FOB via the exterior bumper antenna. The SMART KEY FOB answers with a RF-response. If the received response matches the expected answer, SMK ECU sends a "trunk open" message via the CAN network.

Passive Trunk Warning

Whenever the trunk is closed, SMK ECU uses a suitable search strategy to avoid trunk buzzer warning by a fob outside the vehicle. Then SMK searches for a SMART KEY FOB in the interior of the trunk. If a valid SMART KEY FOB is found in the trunk, the SMK ECU activates SMK external buzzer (TBD) to inform the user that the trunk has been closed with a fob inside the trunk.

SMK will send the trunk open command to BCM for trunk reopening if trunk reopening bit is set(BK)For this functionality, a "valid" SMART KEY FOB means any SMART KEY FOB that belongs to the vehicle, even if it's DEACTIVATED.

NOTE

- A blind spot in the trunk similar to any RF disturbance may lead to no trunk warning. Due to the penetration of the bumper antenna into the trunk area the lid may open without an Identification Device outside.
- A blind spot in the trunk similar to any RF disturbance may lead to no trunk warning

Smart Key Reminder 1

1. Preconditions:
   All terminals OFF & at least one door open & locking status is not locked checked by SMK periodically every 100ms, as long as CAN/LIN active.
2. Event:
   At least 1 door knob status changed from unlock to lock.
3. SMK actions:
   A. IF NO FOB-IN ACTIVE
      SMK performs a search for the fobs in the interior of the vehicle. The same LF-strategy has to be used as it is defined for the ID out warning (registering only, no authentication
   B. IF FOB-IN ACTIVE
      SMK sends request toward PDM to search valid TP
   If no fob or no TP has been found, no action is required.
   If any valid fob or valid TP has been found, SMK unlocks the vehicle by sending a CAN Key Reminder unlock message with the fob number.
   If any valid fob has been found, SMK unlocks the vehicle by sending a CAN/LIN Key Reminder unlock message with the fob number.

Smart Key Reminder 2

1. Preconditions:
   All terminals OFF & any door (including trunk) open & no FOB-IN & no locking status (checked by SMK periodically every 100ms, as long as CAN/LIN active)

cardiagn.com

2. Vehicle action:
   Closing last door or trunk with knobs locked state, or with a locking in progress
3. SMK actions:
   Before elapsing 500ms after the closing if all doors are locked then:
   A. IF NO FOB-IN ACTIVE
      SMK performs a search for the fobs in the interior of the vehicle.
      The same LF-strategy has to be used as it is defined for the ID out warning (registering only, no authentication)
   B. IF FOB-IN ACTIVE
      SMK sends request toward PDM to search valid TP
   If no fob has been found, no action is required.
   If any valid fob or valid TP has been found, SMK sends unlock command via CAN and activates ext. buzzer warning.
   If any valid fob has been found, SMK sends unlock command via CAN/LIN and activates ext. buzzer warning.

Smart Key Door Lock Warning

Door Lock Warning 1

1. Preconditions:
   While (at least one door knob is unlocked) & (ACC ON or IGN ON) & (No FOB-IN) :
   A. (All doors are closed) & (trunk closed)
2. Event:
   A. User presses the push button in door handle or trunk
3. SMK actions:
   SMK performs a search for the fobs outside of the vehicle; the same LF-strategy has to be used as it is defined for "Scenario Access with I/O Distinction".

Door Lock Warning 2

1. Preconditions:
   Same as passive locking precondition but with at least one door open.
2. Event:
   User presses the door handle Push button .
3. SMK actions:
   SMK performs a search for the fobs outside of the vehicle; the same LF-strategy has to be used as it is defined for "Scenario Access with I/O Distinction".
   If no fob has been found, no action is required.
   If the preconditions are no longer valid during buzzer active time (3 seconds), the SMK ECU stops the buzzer immediately.

Door Lock Warning 3

1. Preconditions:
   Same as passive locking precondition
2. User action:
   A. User presses the door handle Push button
3. SMK ECU actions:
   A. If ATWS(Anti Theft Warning System) is in DISARM status, SMK ECU performs a search for the fob inside of the vehicle (use "Door Lock Warning 3" scenario)

If no fob has been found, the passive locking is performed.
If any valid fob has been found, SMK ECU activates the external buzzer.
If the activity timer elapsed or ACC ON or IGN1 ON or NOT All door closed or FOB-IN, the SMK ECU stops the buzzer immediately.
After searching of inside fob, SMK ECU also performs a search for fobs outside of the vehicle.

Smart Key Lamp Warning

cardiagn.com

1. SMK actions:
   As long as the preconditions are valid, the SMK ECU performs a periodical search for the fobs in the interior of the vehicle; the same LF-strategy has to be used as it is defined for the ID out warning (registering only, no authentication); periodical means, the search is done every 3 seconds.
   If no fob has been found, the SMK ECU starts Key out indicator lamp activation as all preconditions are valid and will perform another search 3 seconds later.

If any valid fob has been found, the SMK ECU stops the Key out indicator lamp and will (if one door is open) perform another search 3 seconds later; if no door is open then it's only at the next When the preconditions are still valid, the search resumes by opening of one door.

Failsafe Functions (Backup For Limp Home)

In case of a discharged battery of the SMART KEY FOB or disturbed transmission, the following functions are available:

- Unlocking / locking of doors or trunk (or tailgate depending of the vehicle configuration): use of mechanical key

User Information Functions

ID OUT Warning

1. Preconditions:
   A. (ACC or IGN1) & (any door open or trunk open)
2. Event:
   The last opened door is closed
3. SMK action:
   SMK searches for a SMART KEY FOB in the interior.
   A. If no valid SMART KEY FOB is found, the SMK activates external buzzer and also sends ID OUT warning via CAN (exterior buzzer warning and internal buzzer warning).
   B. If a door is opened and closed again during terminals on and inside valid fob, SMK re-enables the authentication and stops the warning. If the terminal is in ACC, SMK shall turn on immobilizer lamp.

NOTE

If there is a LF error (LF overheating or LF antenna failure), the system will have the same behavior as it is with no fob found.

Immobilizer Lamp

Removing the PIF from the MSL and reinserting the PIF and pushing the MSL Knob will switch the lamp on again.

Fob Battery Low Voltage Detection

To detect fob low battery condition, certain battery voltage measurement and low voltage detection strategy are implemented into fob. The measurement of the battery voltage will be done if fob button is pressed or if a LF measurement command is received.

If the fob has detected a low battery voltage, the LED will not be switched on at button press.

Learning Description

In this chapter, the learning procedure for SMK, PDM, FOBs is described.

For the learning of the SMK, PDM, FOBs, it's necessary to have a connection to the diagnostic tool.

Learning MODE

Whatever the mode, the learning procedures are managed by the SMK.

Prior to start learning service, Fob-In signal must be active and the vehicle secret code (called as PIN code) should be known.

Teaching MODE

This mode is used by the dealers in order to replace SMK and/or PDM and/or the set of keys, or to register additional keys for an existing system. That means the system already has been learnt with certain PIN Code. The PIN Code is fixed for the life time of the vehicle, therefore the same PIN Code must be used in this mode. Otherwise learning will be failed

cardiagn.com

Teaching MODE Procedure Description (Step By Step)
Objective: Key teaching procedure at service station
Initial state:

- SMK replacement: SMK is not learnt, PDM and SMART FOB are already learnt with same PIN code
- PDM replacement: PDM is not learnt, SMK and SMART FOB are already learnt with same PIN code
- Additional or new keys teaching: SMK and PDM are already learnt with same PIN code

Smart key teaching

Insert smart key #1 to key holder
↓
SMK start to learn
↓
Input the PIN code
↓
PDM start to learn
↓
ESCL start to learn
↓
Smart key #1 learnt
↓
SMK/ESCL learnt
↓
Pull out smart key #1
↓
Insert smart key #2 to holder
↓
Smart key #2 learnt

- Smart key system is learned **transponder and smart key** by once at same time.

<Smart key neutralization mode>

- Neutralization mode is for replacing Smart key unit, ESCL ECM easily.
- It is possible that smart key is learnt again, after neutralizing Smart key system.
- Virgin start (twice ignition) is impossible in neutralized condition

<Lock by timer>

- If PIN code is inputted over 3 times, it is the system is locked and cannot be learned until one hour has passed.

Starting After Replacing (Virgin Start)
Starting is possible by following process after replacing new smart key unit , PDM, FOB key.

- It is for starting at virgin condition
- All related parts are virgin condition (Smart key, IPM, PDM, ECM)
- When virgin smart key is inserted in smart key holder, possible to start, IG ON and ACC position

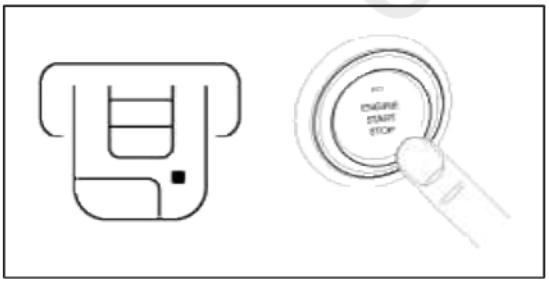

- Press brake pedal in P or N range
- After inserting virgin smart key to holder, push start button once.

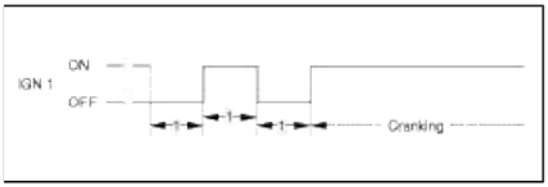

cardiagn.com

Inspection

Self Diagnosis With GDS

Smart key system defects can be quickly diagnosed with the GDS. GDS operates actuator quickly to monitor, input/output value and self diagnosis.

The following three features will be major problem in SMART KEY system.

1. Problem in SMART KEY unit input.
2. Problem in SMART KEY unit.
3. Problem in SMART KEY unit output.

The following three diagnostic solutions will be the main solution process to a majority of concerns.

1. SMART KEY unit Input problem : switch diagnosis
2. SMART KEY unit problem : communication diagnosis
3. SMART KEY unit Output problem : antenna and switch output diagnosis

Switch Diagnosis

1. Connect the cable of GDS to the data link connector in driver side crash pad lower panel, turn the power on GDS.
2. Select the vehicle model and then SMART KEY system.

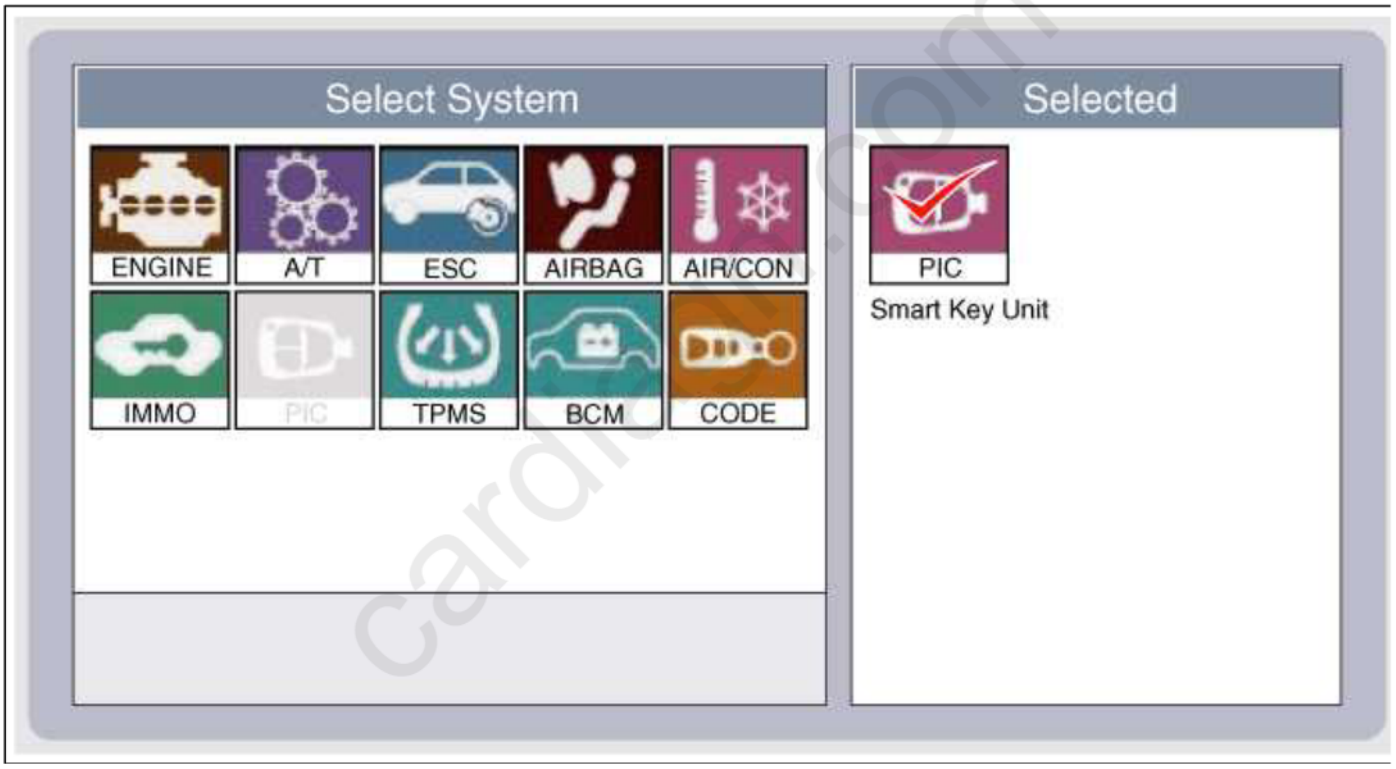

3. Select the "SMART KEY unit".

4. After IG ON, select the "Current data".

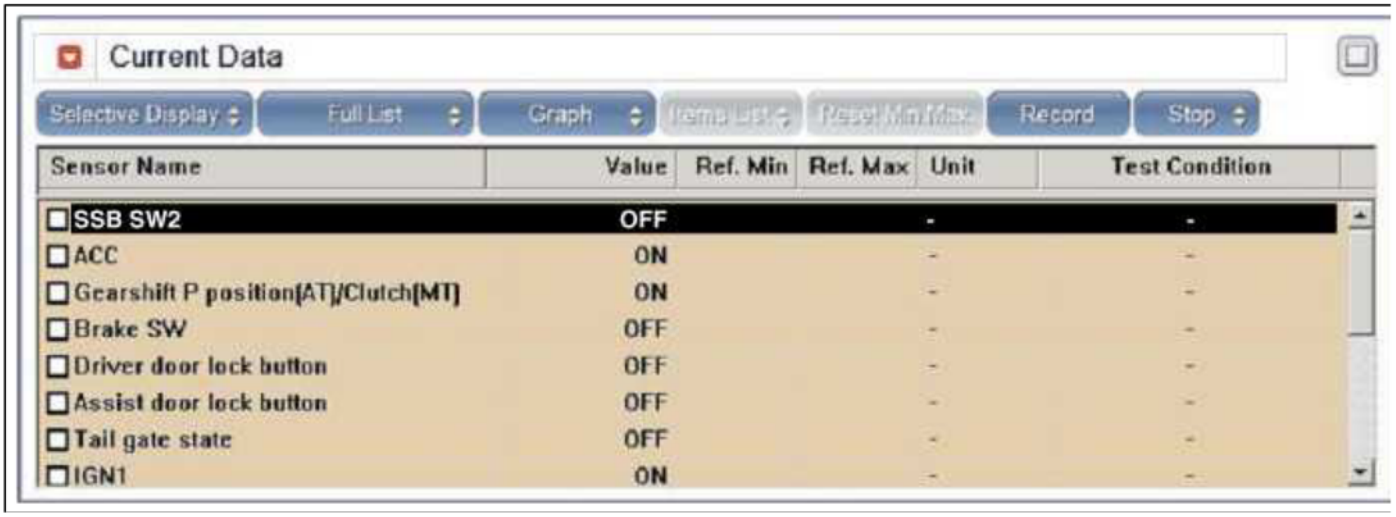

5. You can see the situation of each switch on scanner after connecting the "current data" process.

Display	Description
FL Toggle switch	ON : Push button is ON in the driver door handle.
FR Toggle switch	ON : Push button is ON in the assist door handle.
Trunk switch	ON : Trunk button is ON.
Gear P Position	ON : Shift lever is P position.
IGN 1	ON : IGN switch is IG position.
ACC	ON : IGN switch is ACC position.
Push Knob switch	ON : Push knob switch is ON.
External Buzzer	ON : Buzzer is ON.

Communication Diagnosis With GDS (Self Diagnosis)

1. Communication diagnosis checks that the each linked components operates normal.
2. Connect the cable of GDS to the data link connector in driver side crash pad lower panel.
3. After IG ON, select the "DTC".



Antenna Actuation Diagnosis

1. Connect the cable of GDS to the data link connector in driver side crash pad lower panel.

cardiagn.com

2. After IG ON, select the "ACTUATION TEST".

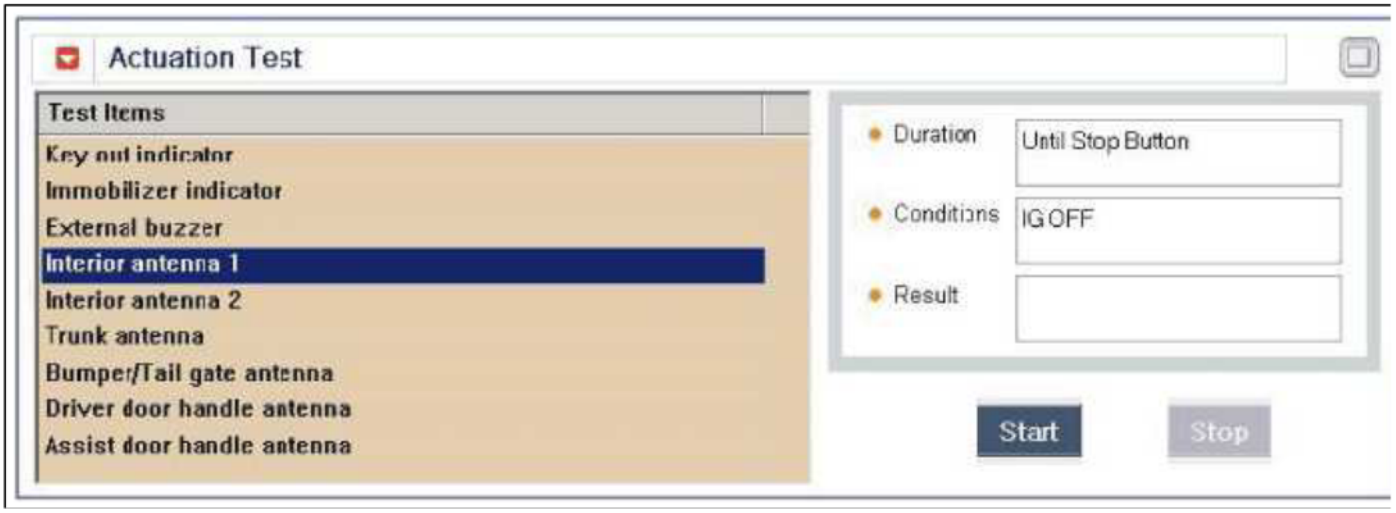

3. Set the smart key near the related antenna and operate it with a GDS.

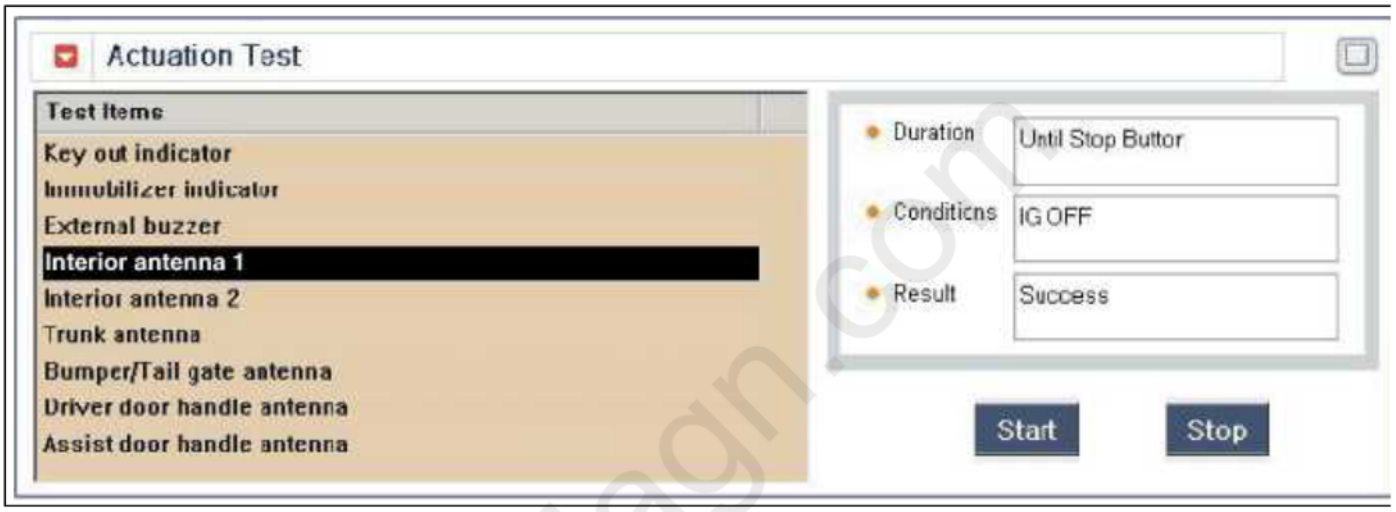

4. If the LED of smart key is blinking, the smart key is normal.
5. If the LED of smart key is not blinking, check the voltage of smart key battery.
6. Antenna actuation
   A. INTERIOR Antenna 1
   B. INTERIOR Antenna 2
   C. Trunk antenna
   D. BUMPER/Antenna
   E. DRV_DR Antenna
   F. AST_DR Antenna

Antenna Status Check

1. Connect the cable of GDS to the data link connector in driver side crash pad lower panel.

cardiagn.com

2. Select the "Antenna Status Check".

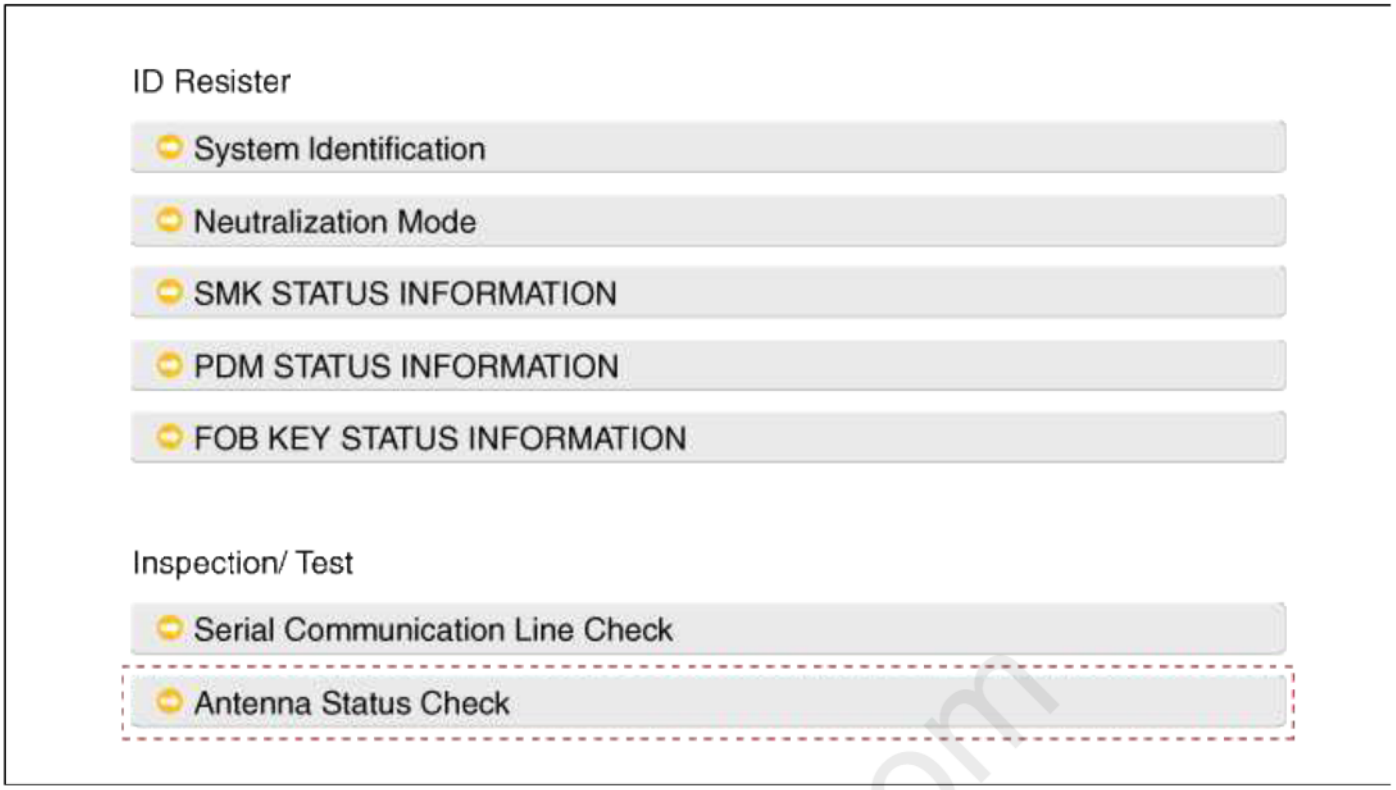

3. After IG ON, select the "Antenna Status Check".

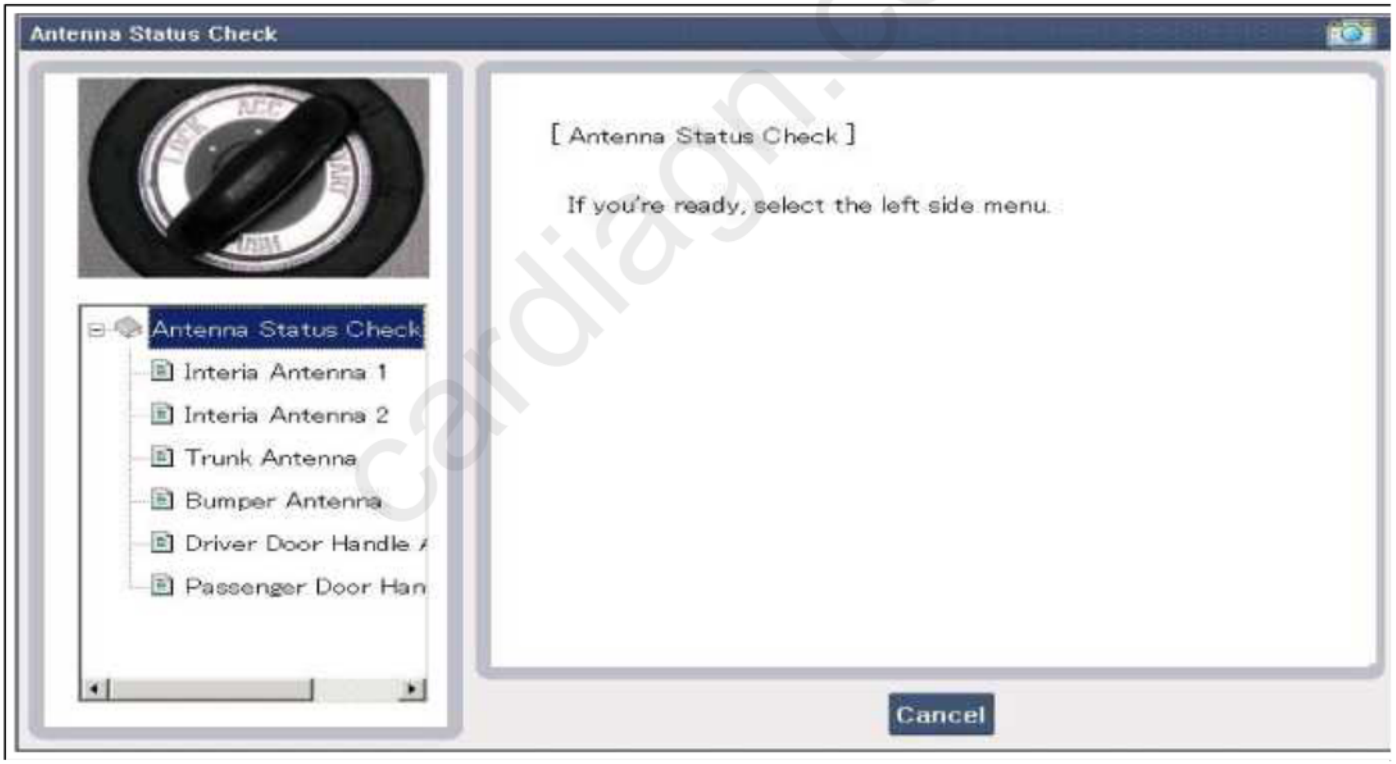

cardiagn.com

4. Set the smart key near the related antenna and operate it with a GDS.

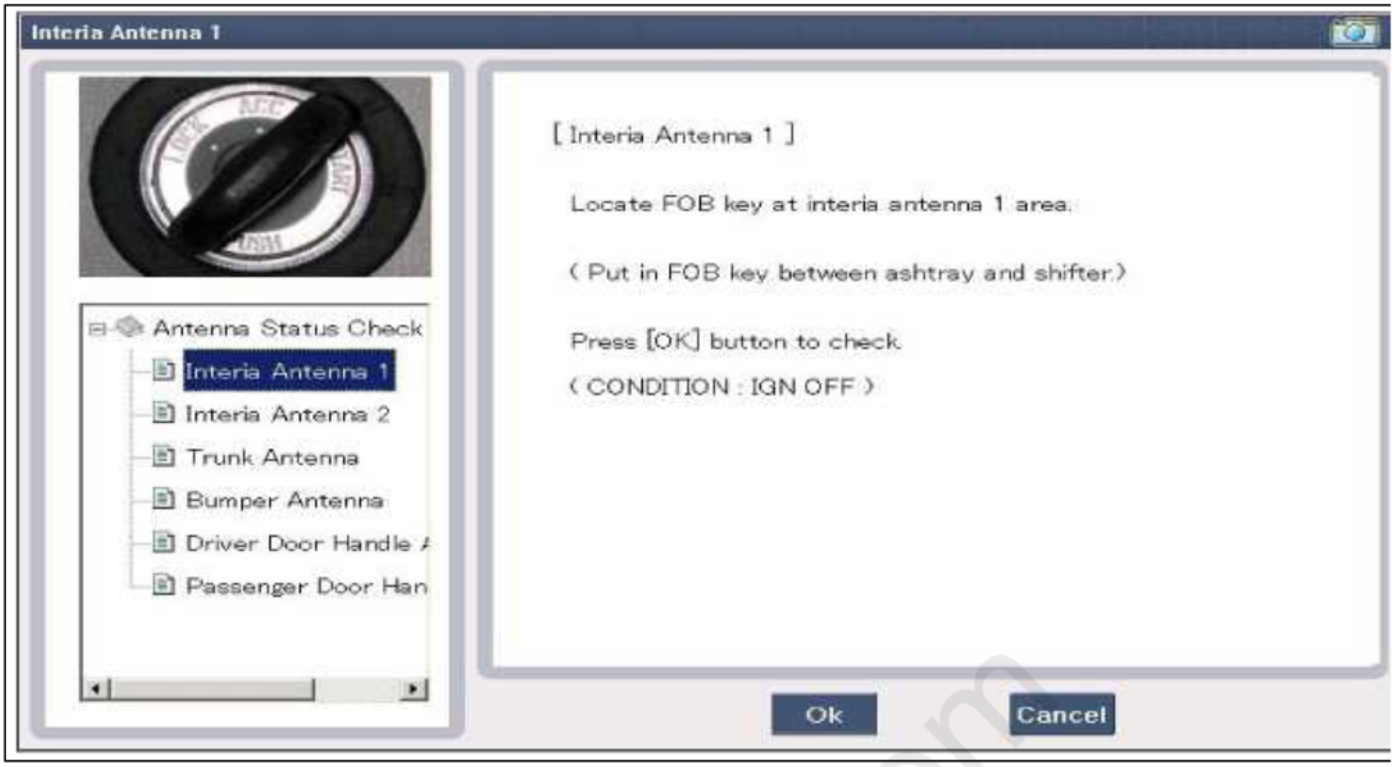

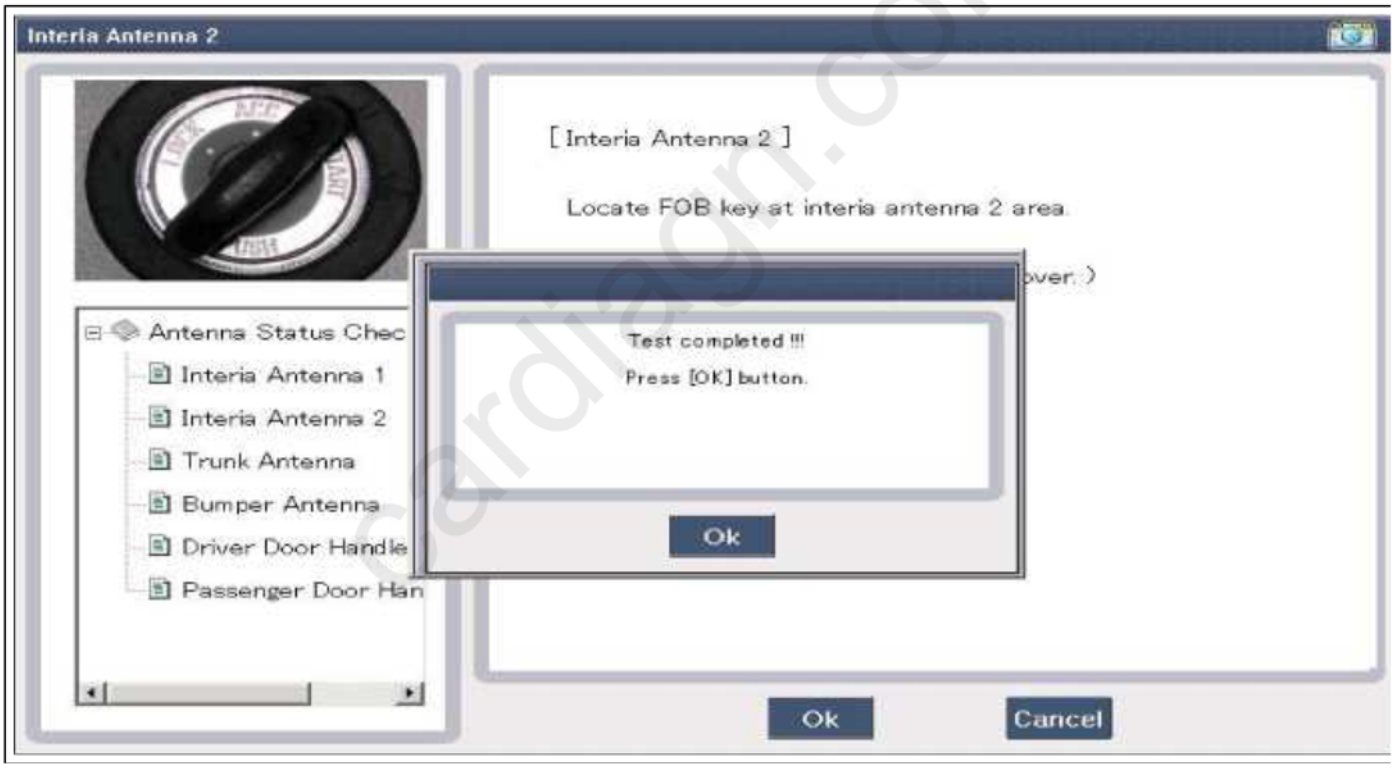

5. If the smart key runs normal , the related antenna, smart key(transmission, reception) and exterior receiver are normal.
6. Antenna status
   A. INTERIOR Antenna 1
   B. INTERIOR Antenna 2
   C. Trunk antenna
   D. BUMPER/Antenna
   E. DRV_DR Antenna
   F. AST_DR Antenna

Serial Communication Status Check

1. Connect the cable of GDS to the data link connector in driver side crash pad lower panel.

cardiagn.com

2. Select the "Serial Communication Line Check".

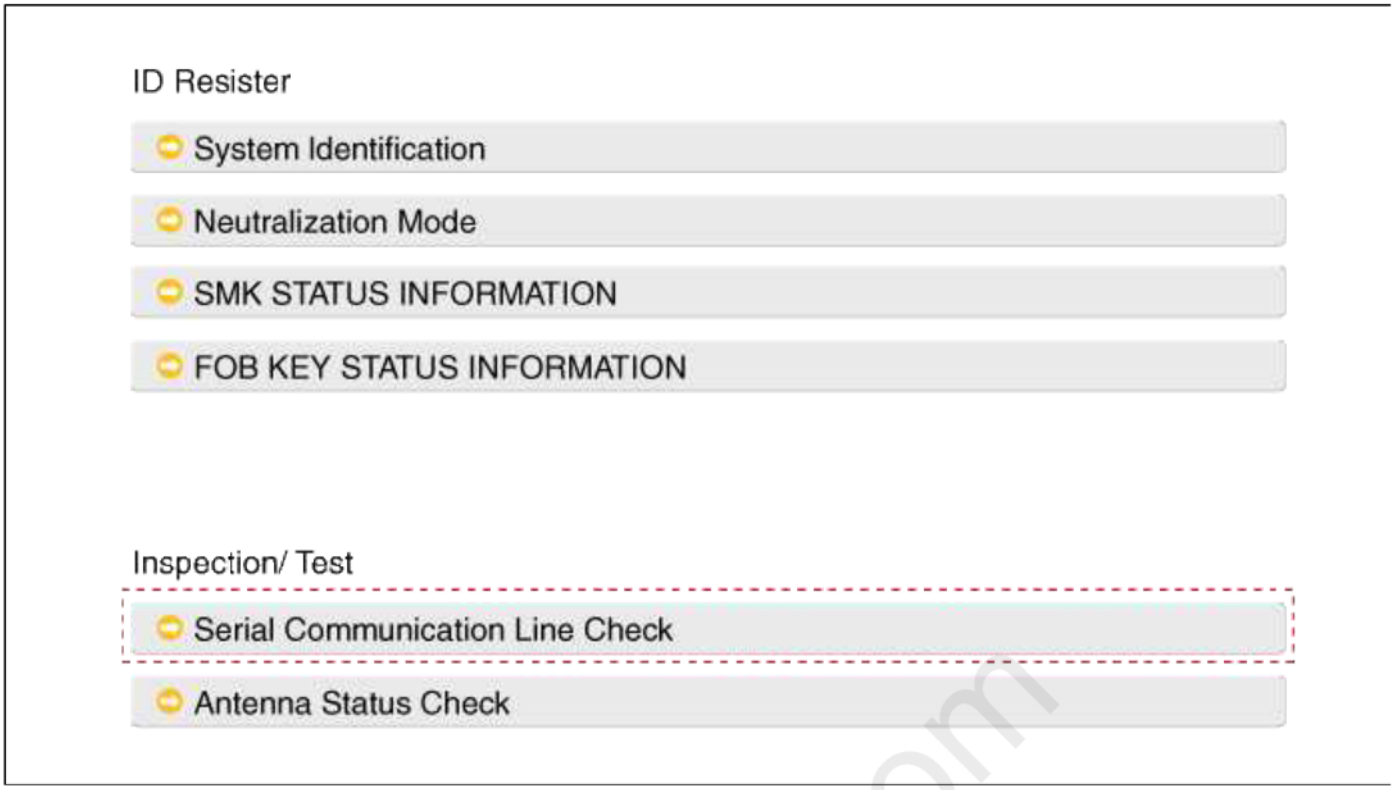

3. After IGN ON, select the "Receiver Communication Line Check".

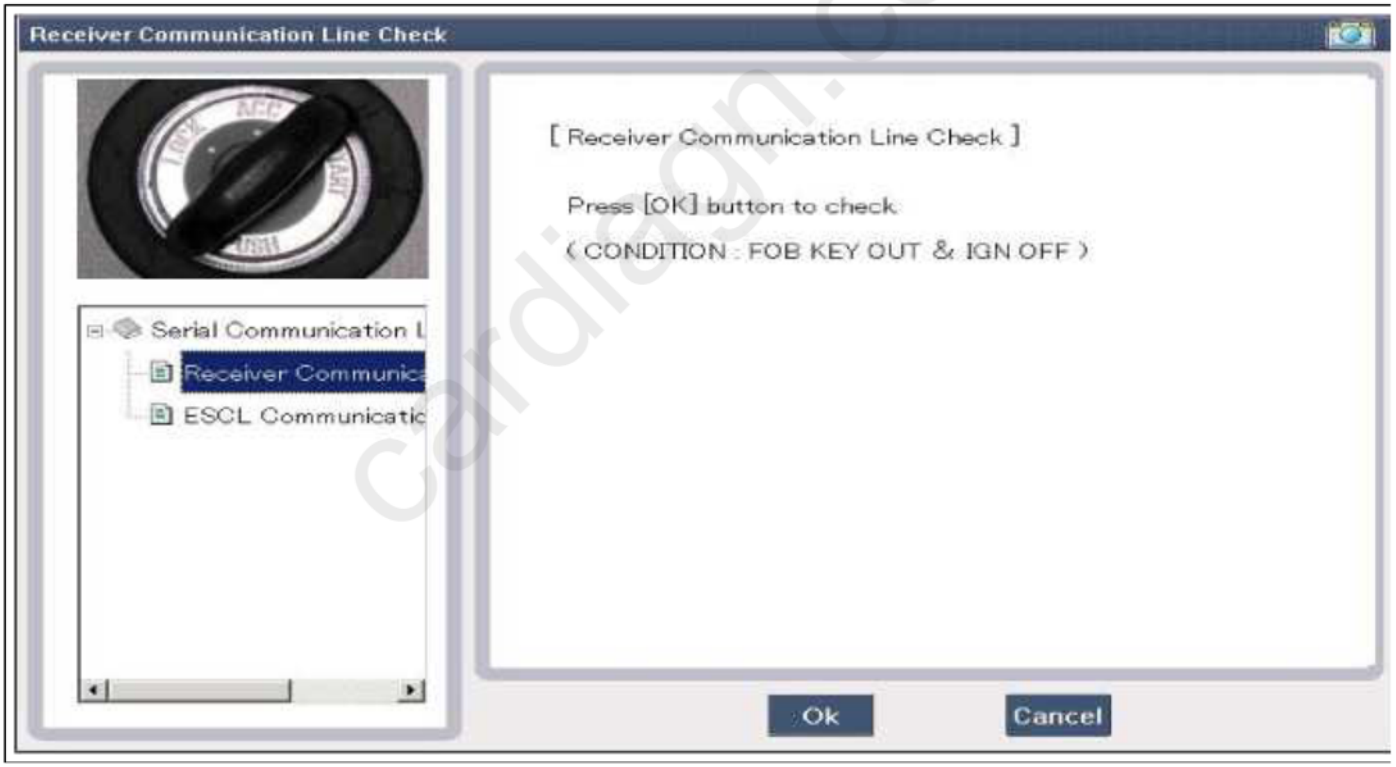

4. Check the serial communication line with a GDS.
5. If the smart key runs normal, the communication of smart key unit, exterior receiver are normal.
6. If the smart key runs abnormal, check the following items.
   A. Disconnection or no response of the exterior receiver communication line.
   B. The exterior receiver communication line disconnection and ground connection.

Interior Antenna Actuation Check

cardiag.com

1. Set the smart key in the following shade area and check the IG ON.

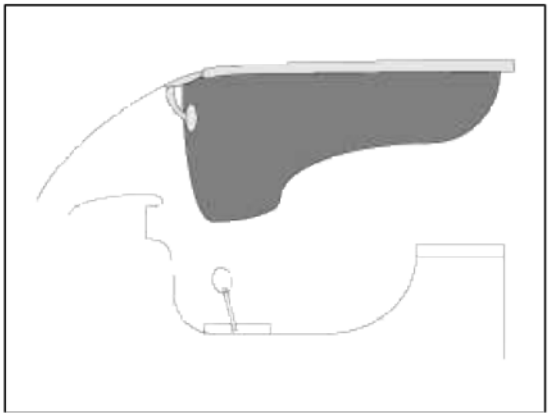

2. If the ignition is ON, the antenna runs normal.
3. Check the interior antenna ignition mode.
4. Set the smart key in the following shade area and actuate the antenna. Check the LED of smart key is blinking.

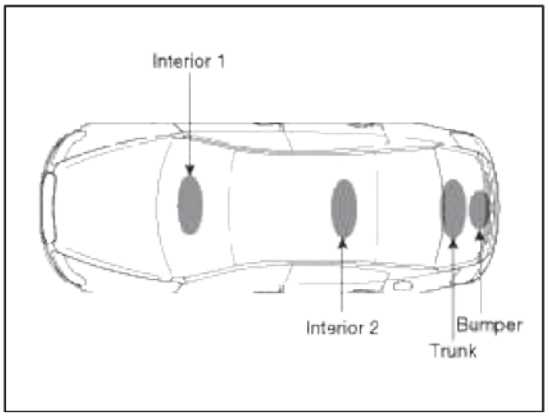

5. If the LED of smart key is not blinking, check the antenna in shade area.

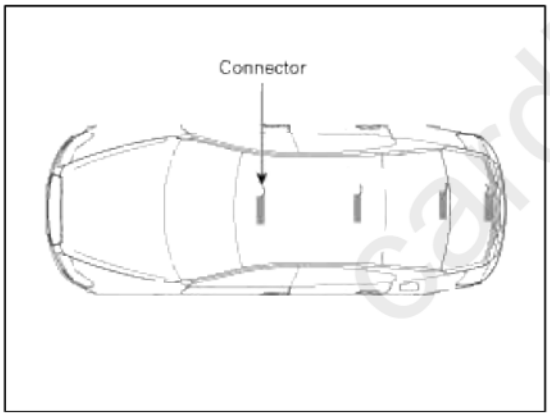

FOB Status Check

1. Connect the cable of GDS to the data link connector in driver side crash pad lower panel.

cardiagn.com

2. After IGN ON, select the "FOB KEY STATUS INFO".

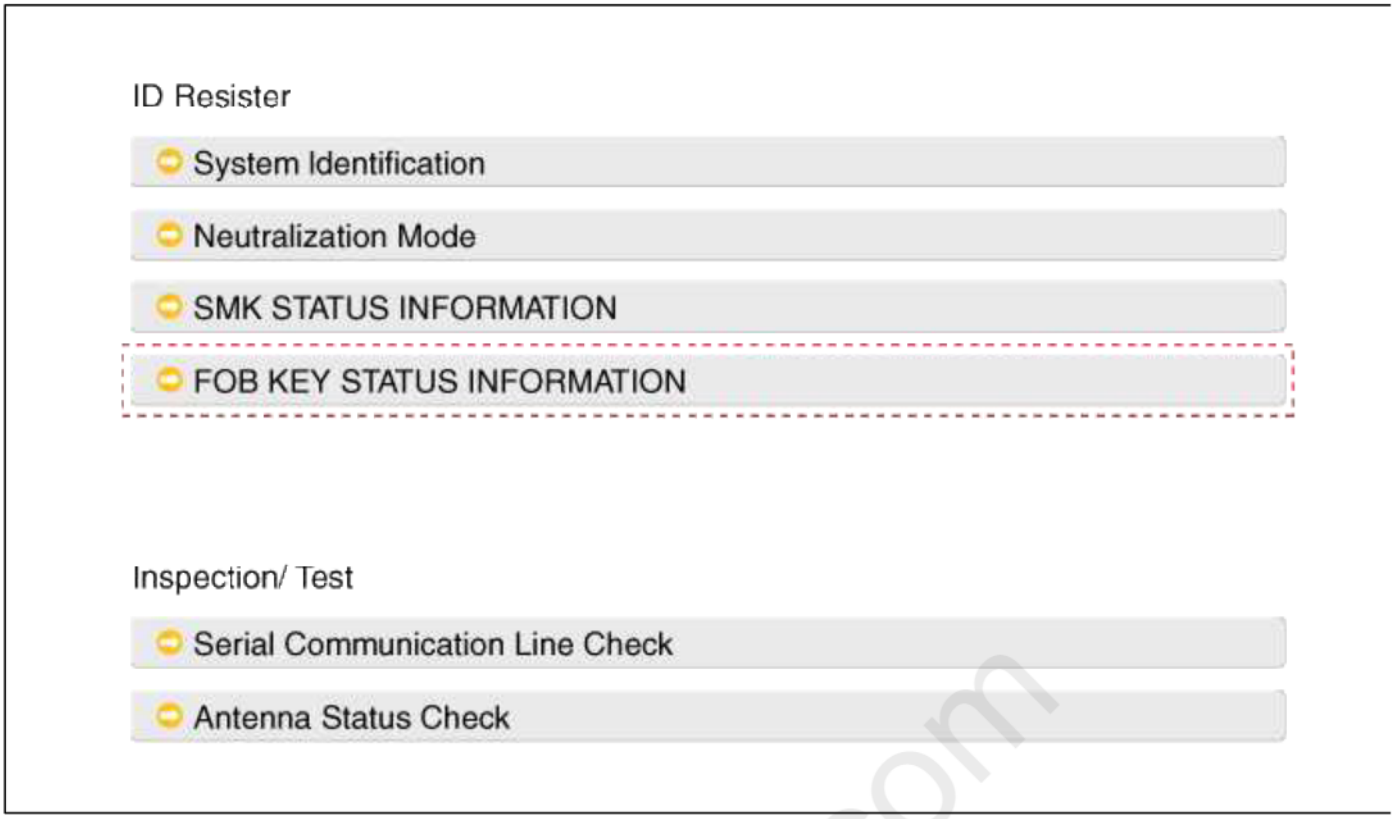

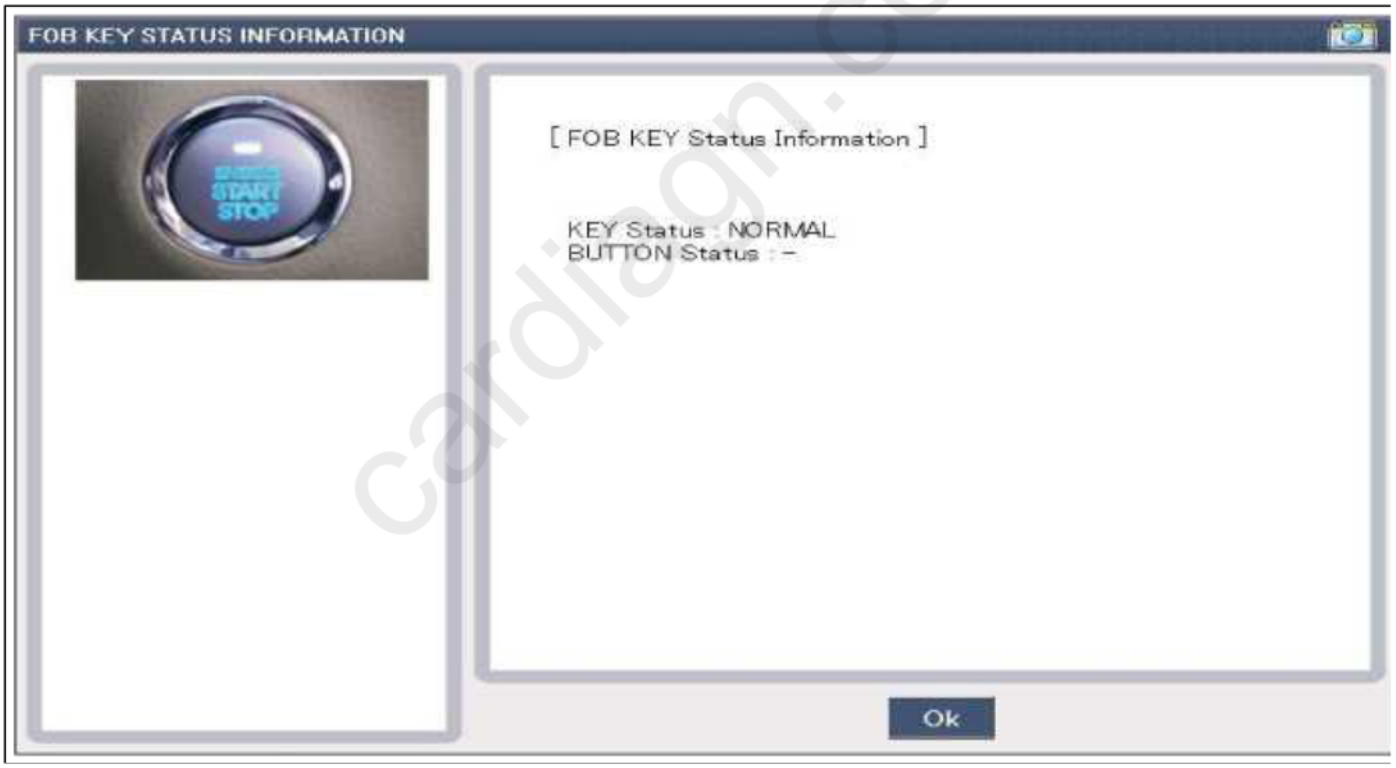

Smart Key Status Check

1. Connect the cable of GDS to the data link connector in driver side crash pad lower panel.

cardiagn.com

2. After IGN ON, select the "SMK STATUS INFO".

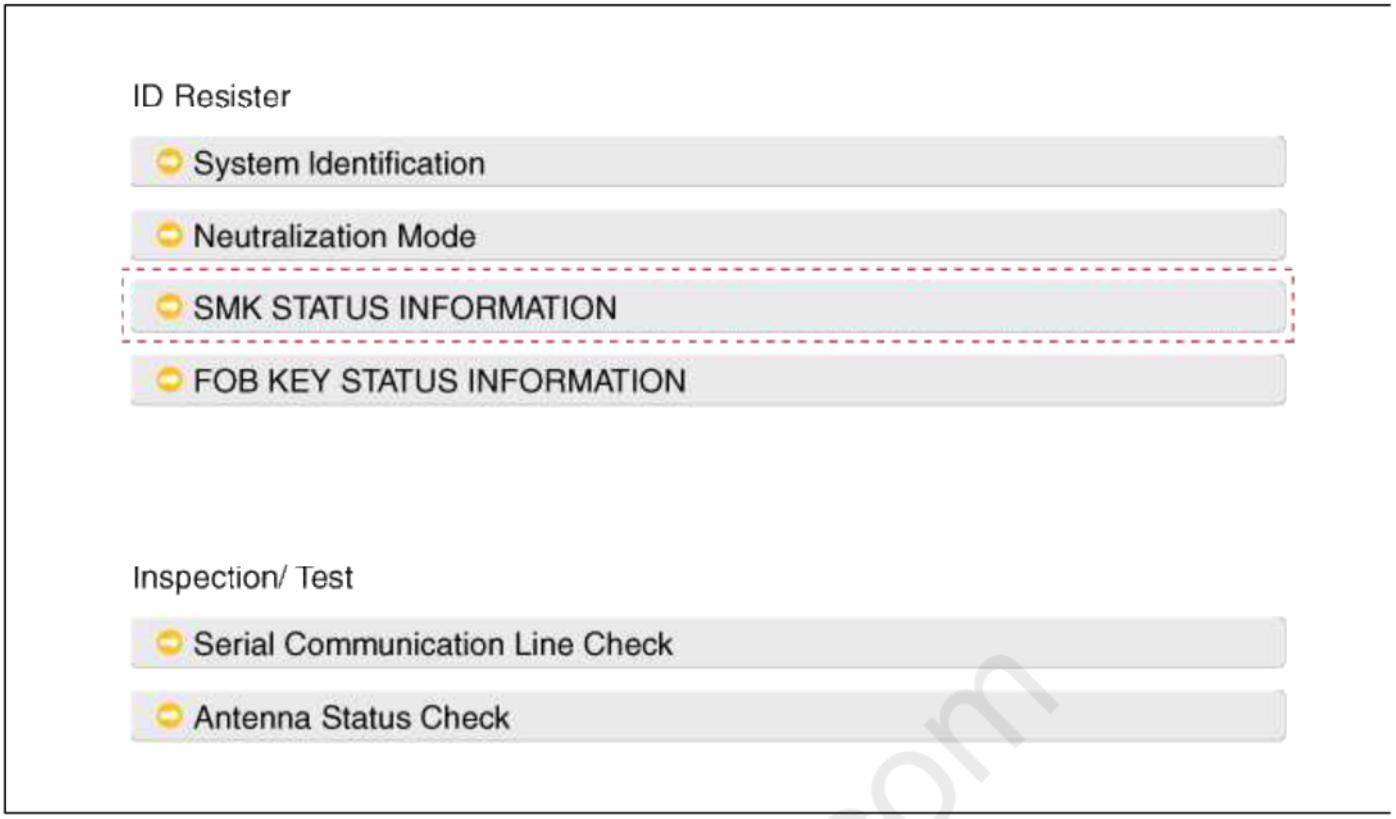



Neutralization Status Check

1. Connect the cable of GDS to the data link connector in driver side crash pad lower panel.
2. After IGN ON, select the "Neutralization mode".

cardiagn.com

ID Resister

- System Identification
- Neutralization Mode
- SMK STATUS INFORMATION
- FOB KEY STATUS INFORMATION

Inspection/ Test

- Serial Communication Line Check
- Antenna Status Check

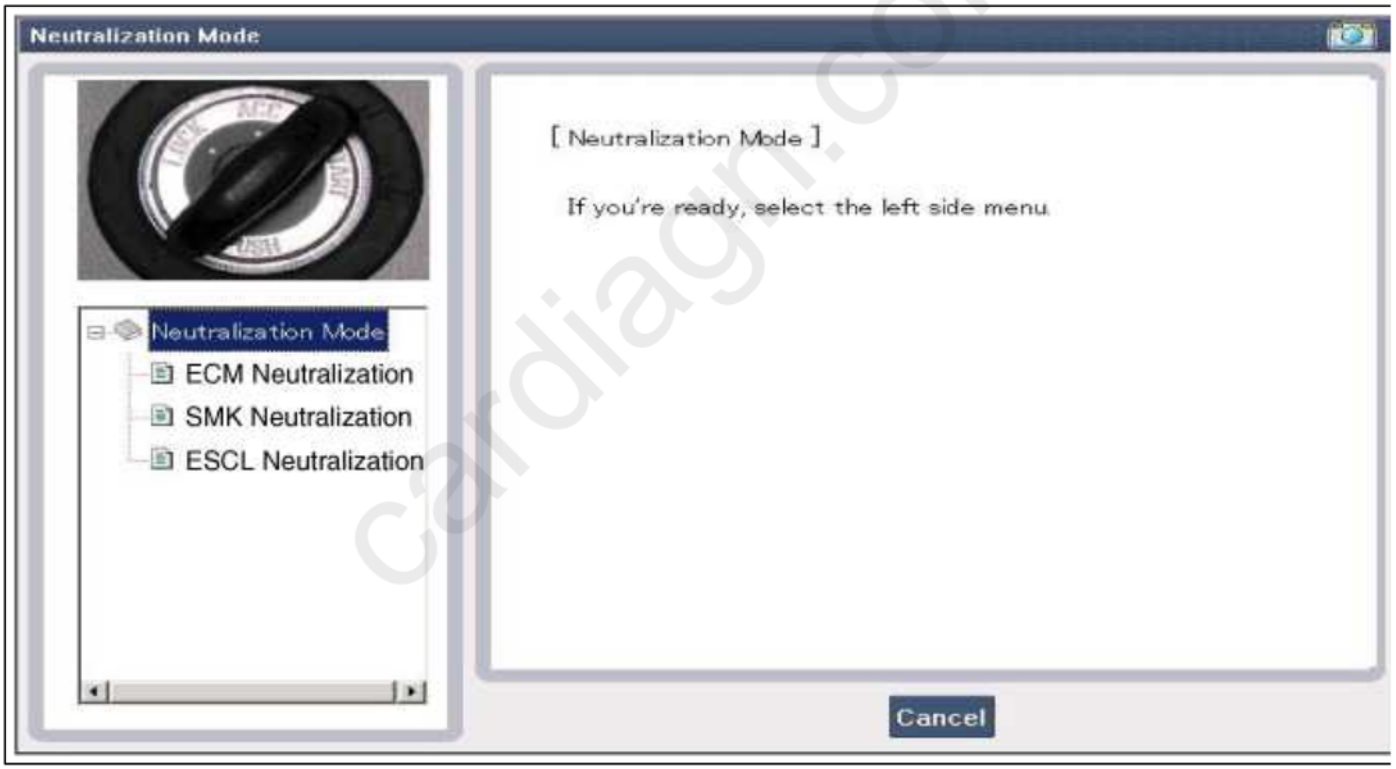

cardiagn.com

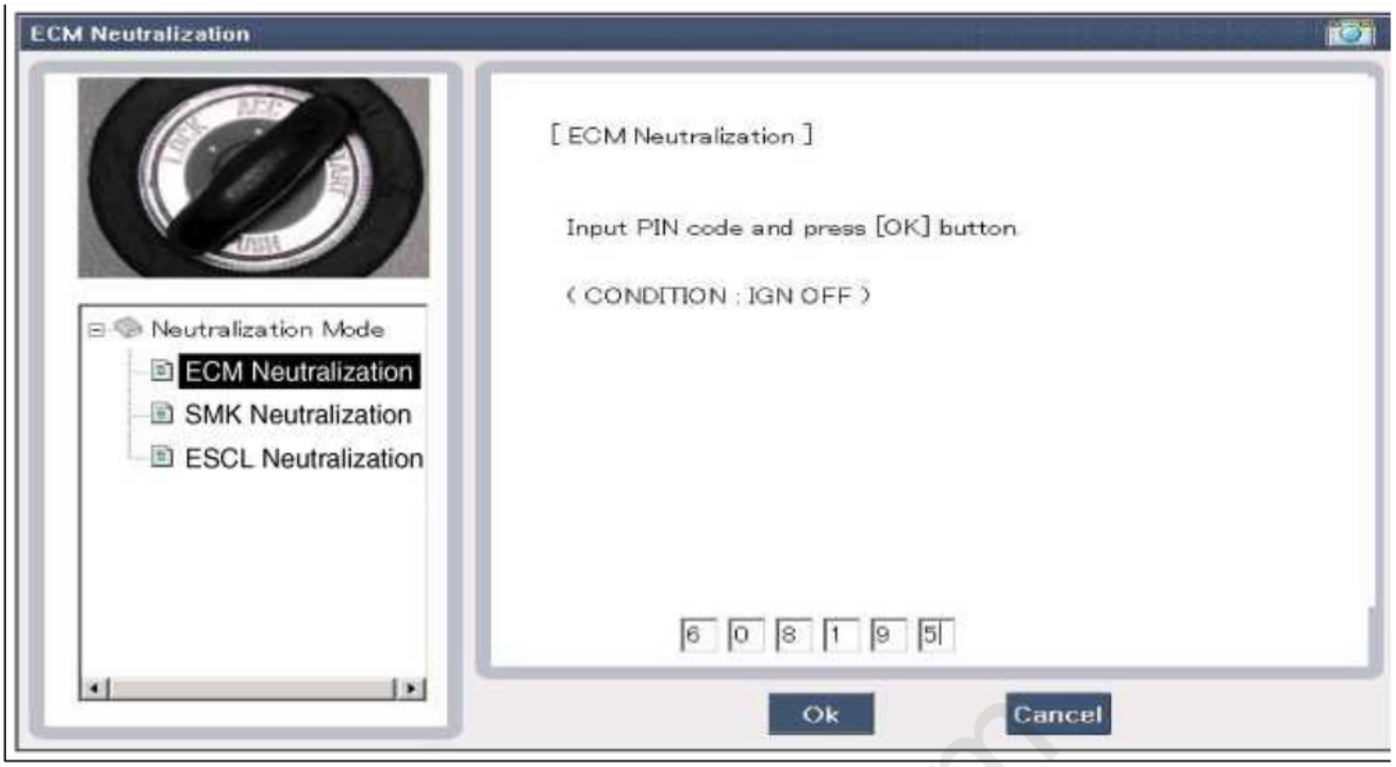

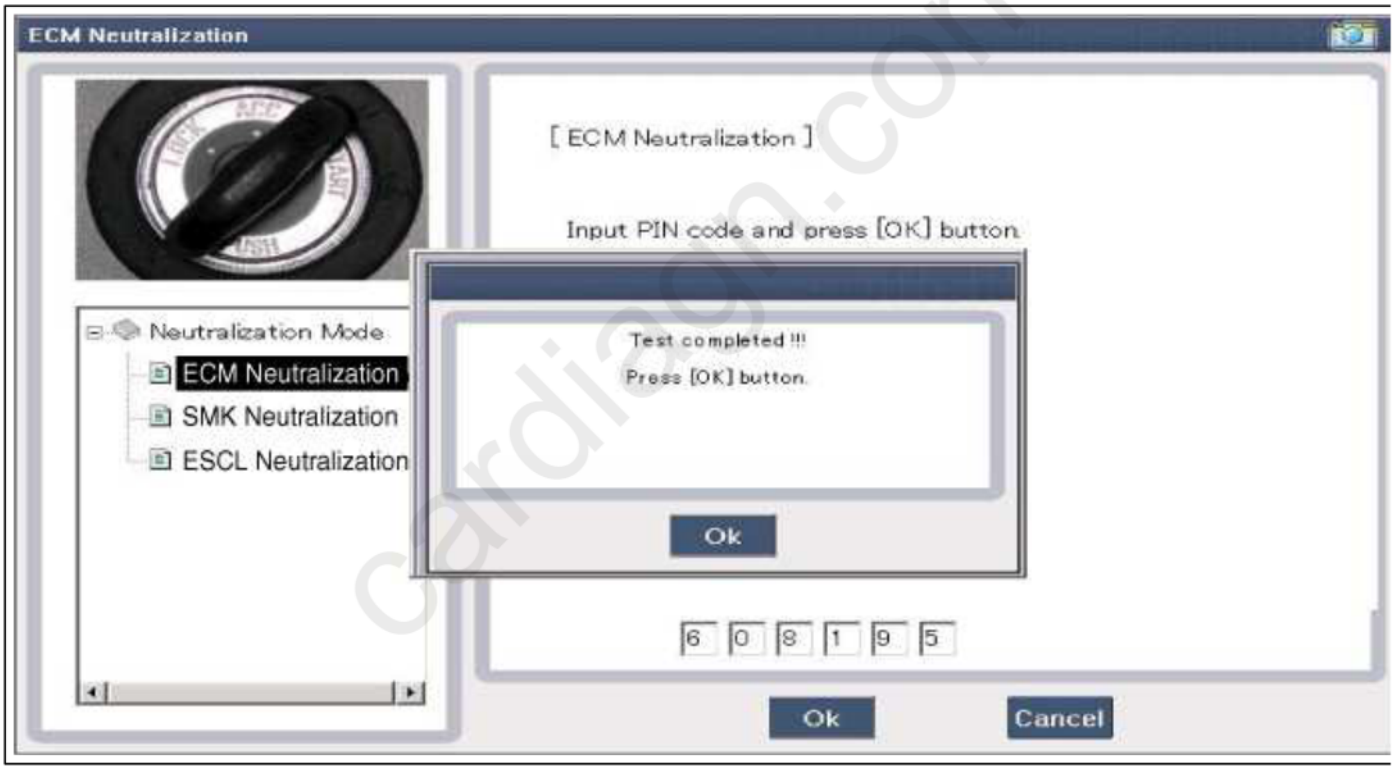

cardiagn.com

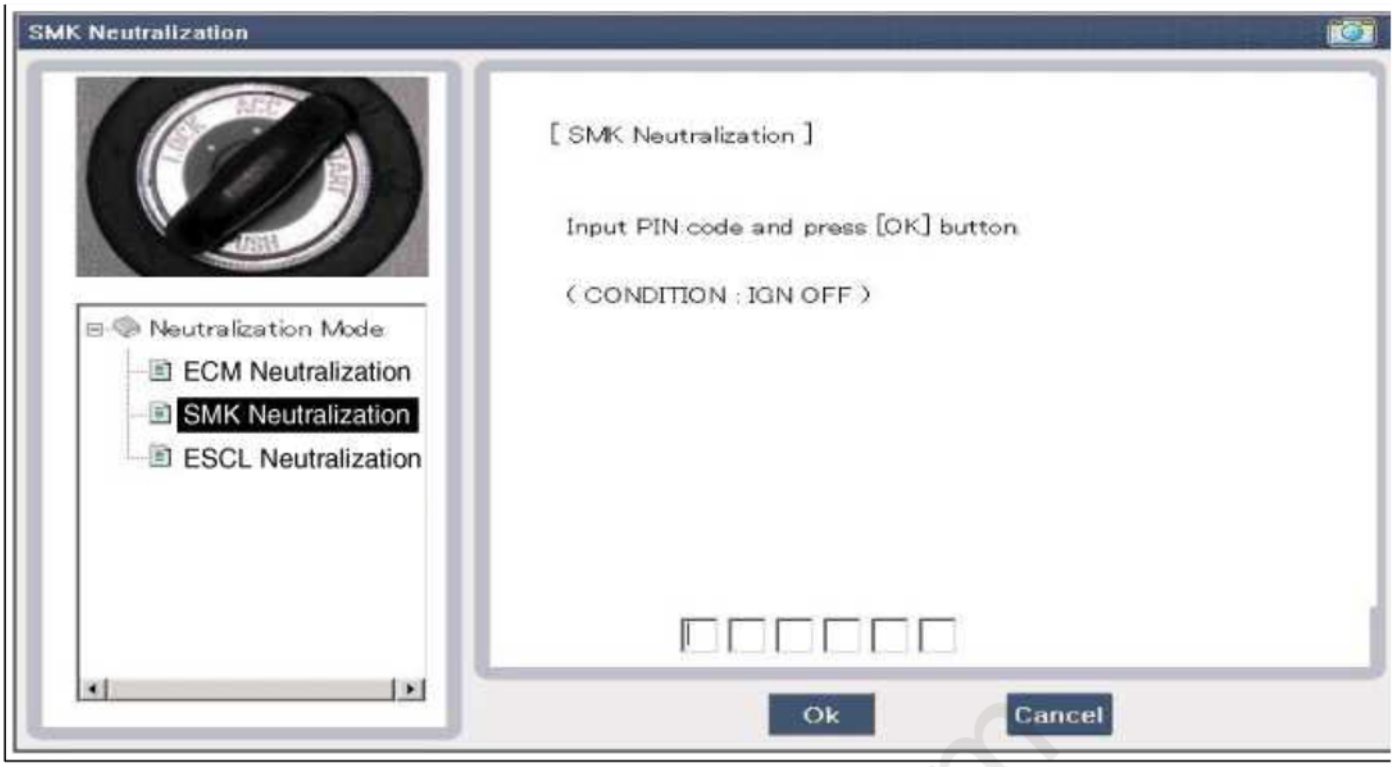



cardiagn.com

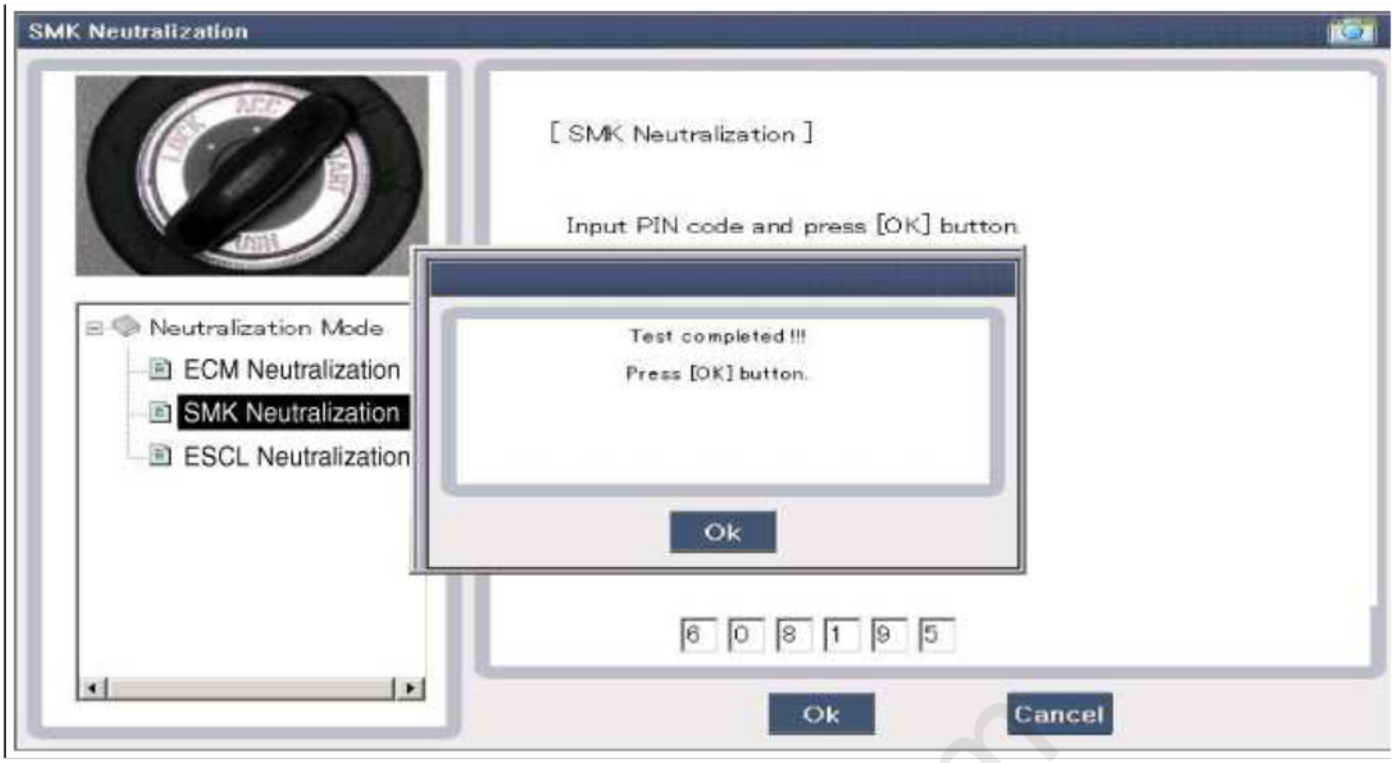

Input Switch List

No	Item name	Unit
1	SSB switch2	-
2	ACC	-
3	IGN1	-
4	Gear 'P' Position	-
5	Brake switch	-
6	FL Door Lock Button	-
7	FR Door Lock Button	-
8	Trunk Lid switch	-
9	Battery Voltage	-
10	Alternator Voltage	-
11	KEY out Indicator Lamp	-
12	Immobilizer Lamp	-
13	External Buzzer	-

Actuator List

cardiagn.com

No.	Item name	Condition
1	Immo.indicator Lamp	Ignition switch ON Engine off
2	External Buzzer	Ignition switch ON Engine off
3	Interior Antenna 1 Active	Ignition switch ON Engine off
4	Interior Antenna 2 Active	Ignition switch ON Engine off
5	Trunk Antenna Active	Ignition switch ON Engine off
6	Bumper Antenna Active	Ignition switch ON Engine off
7	DRV DR Antenna Active	Ignition switch ON Engine off
8	AST DR Antenna Active	Ignition switch ON Engine off

Body Electrical System > Smart key System > Smart key > Repair procedures

Smart Key

Smart Key Code Saving

1. Connect the DLC cable of GDS to the data link connector in driver side crash pad lower panel, turn the power on GDS.

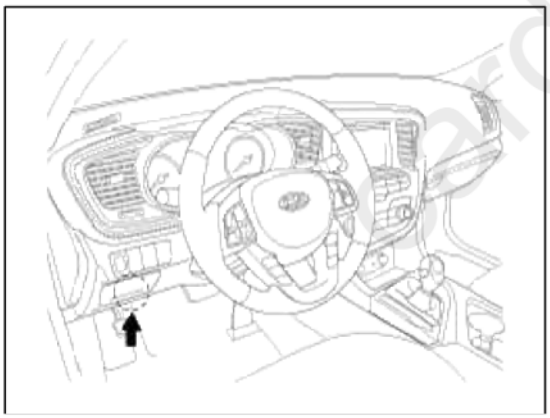

2. Select the vehicle model and then do "Smart key code saving".

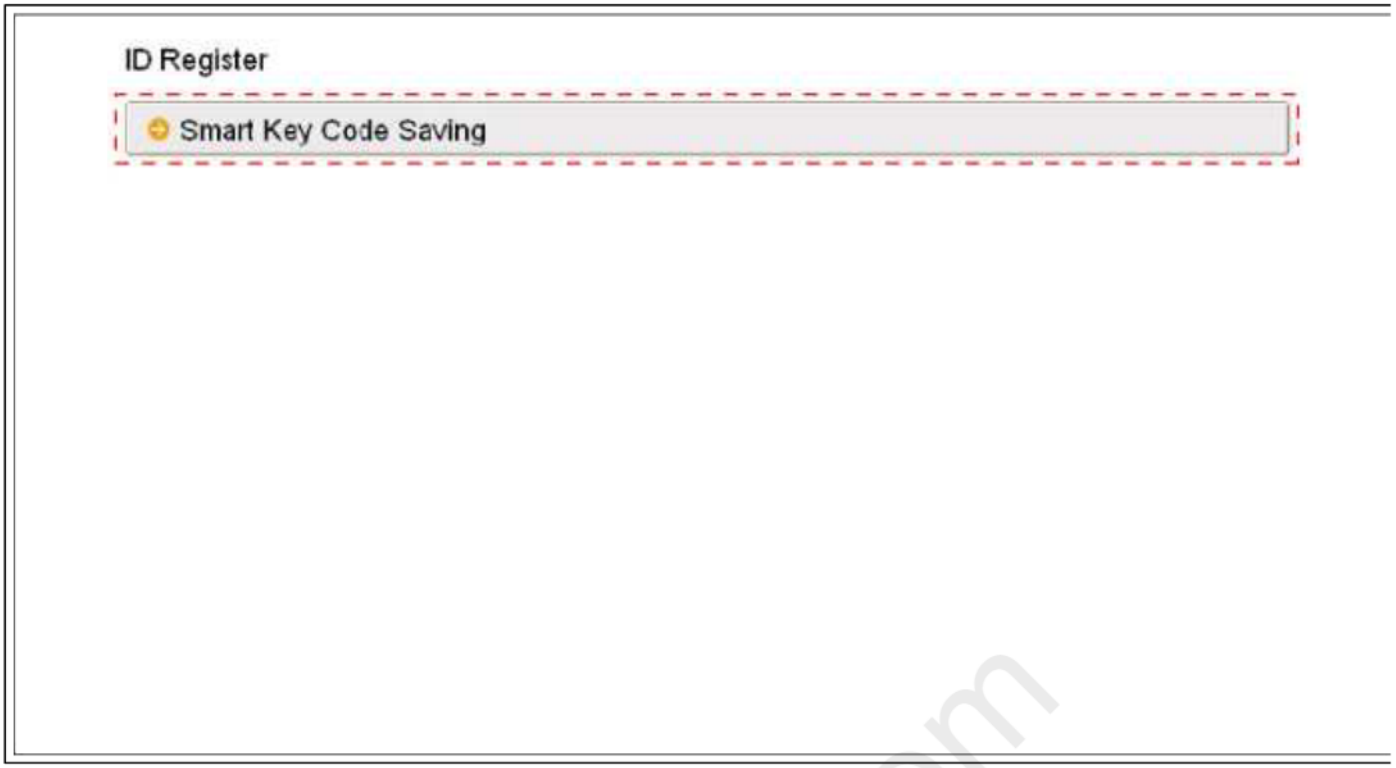

3. After selecting "Smart key teaching" menu, push "Enter" key, then the screen will be shown as below.

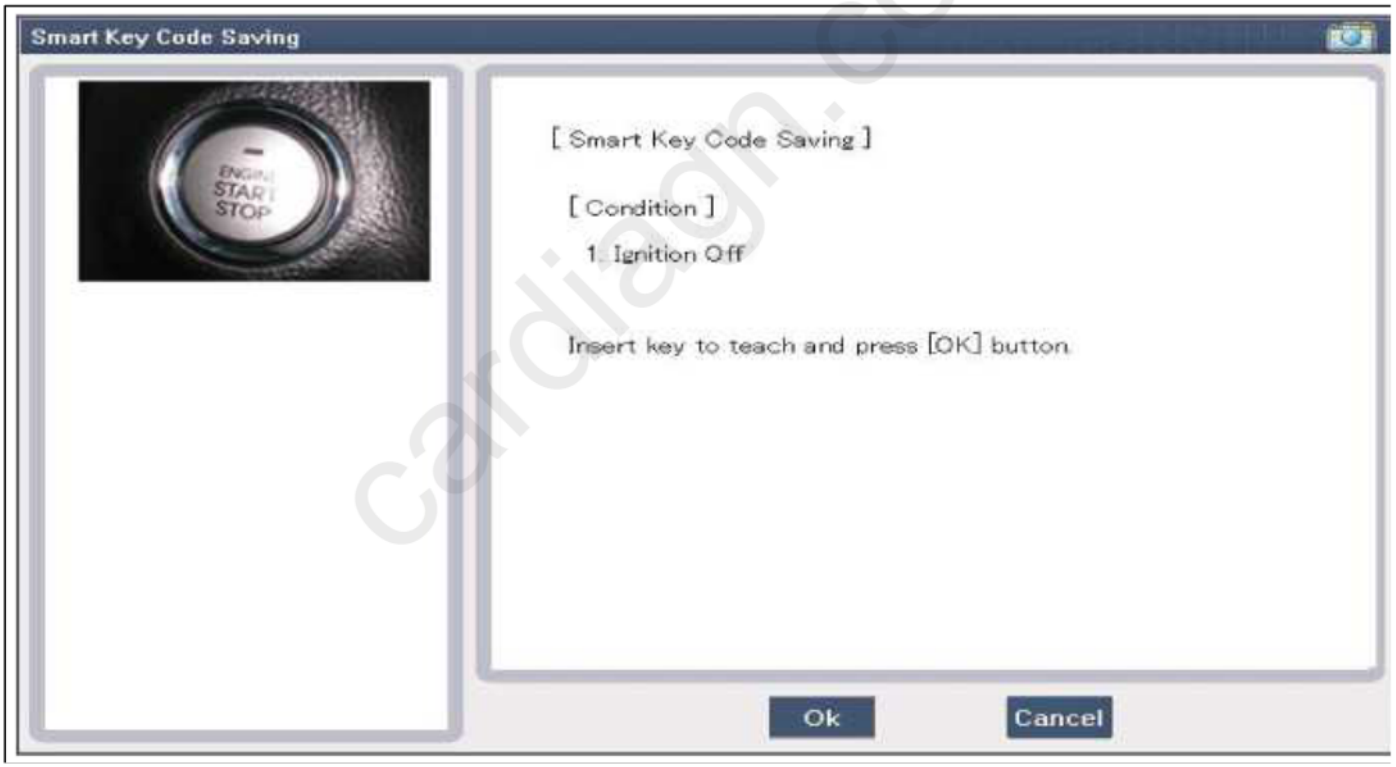

4. After inserting the teaching key, push "ENTER" key.

cardiagn.com

5. Input the "Pin code" for first key teaching.

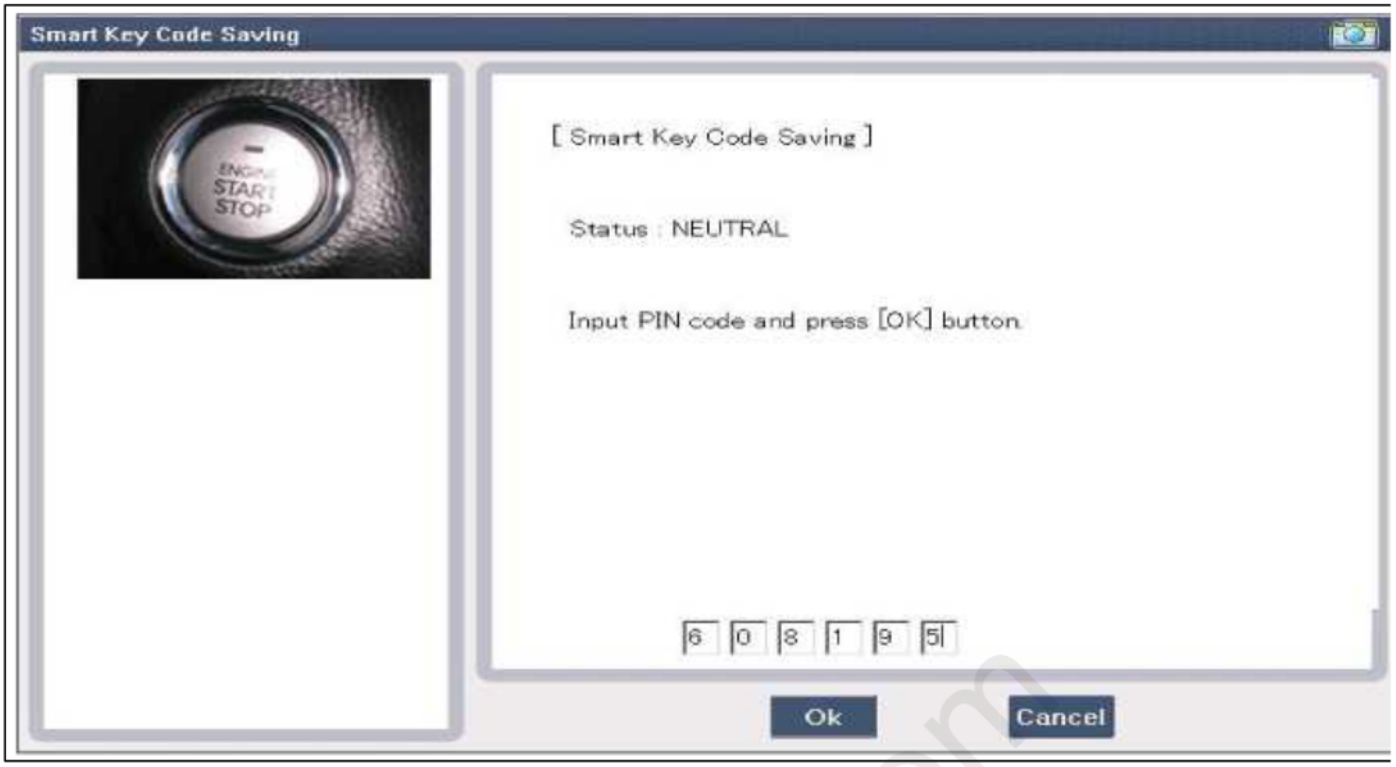

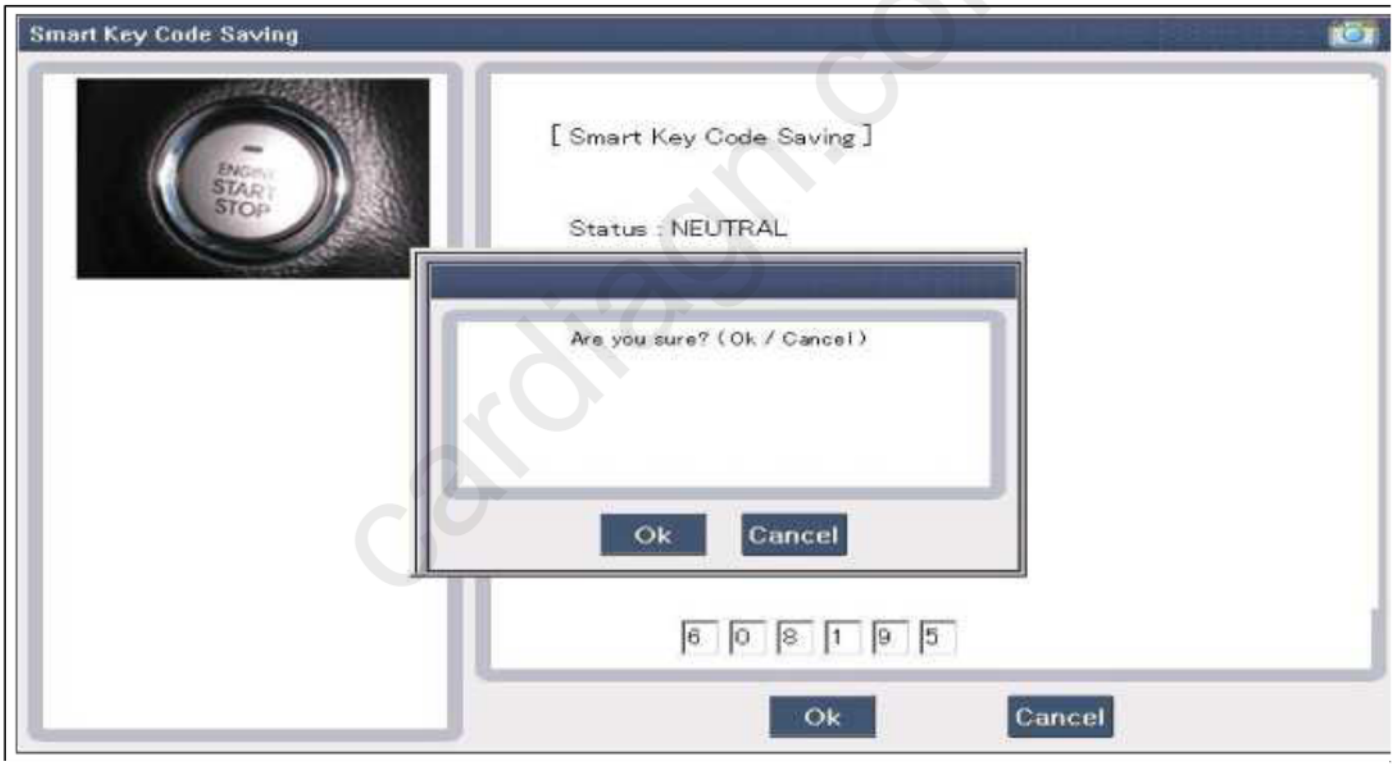

cardiagn.com

6. Confirm the message "First key teaching completed".

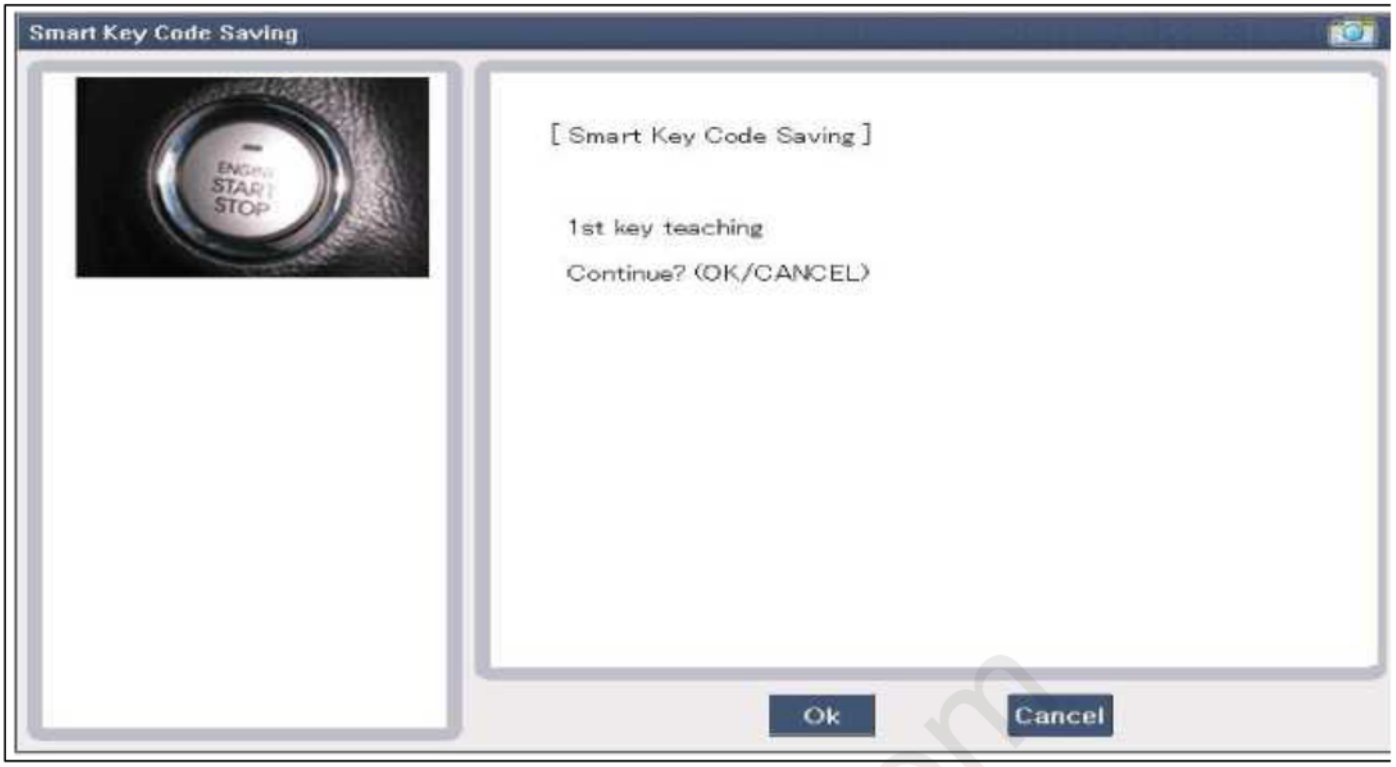

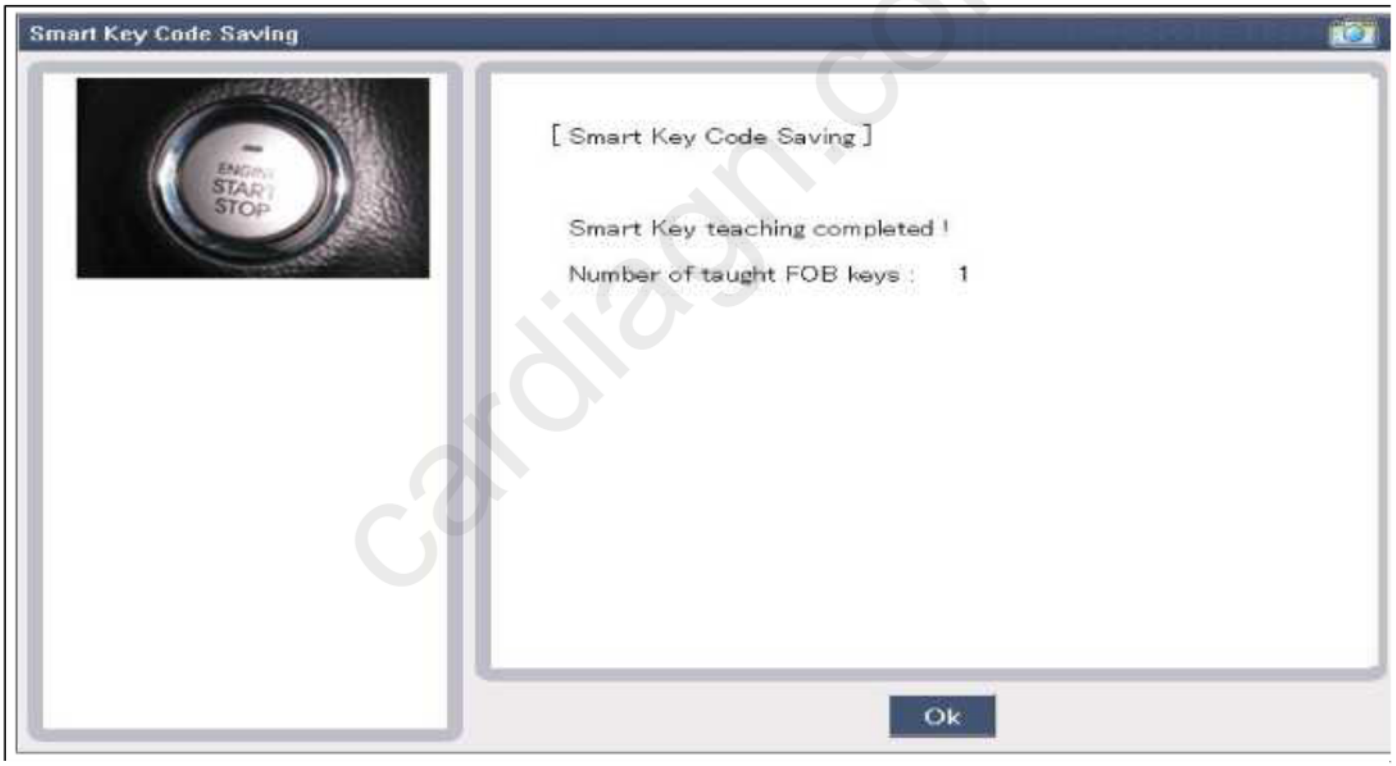

cardiagn.com

7. Input the "Pin code" for second key teaching.

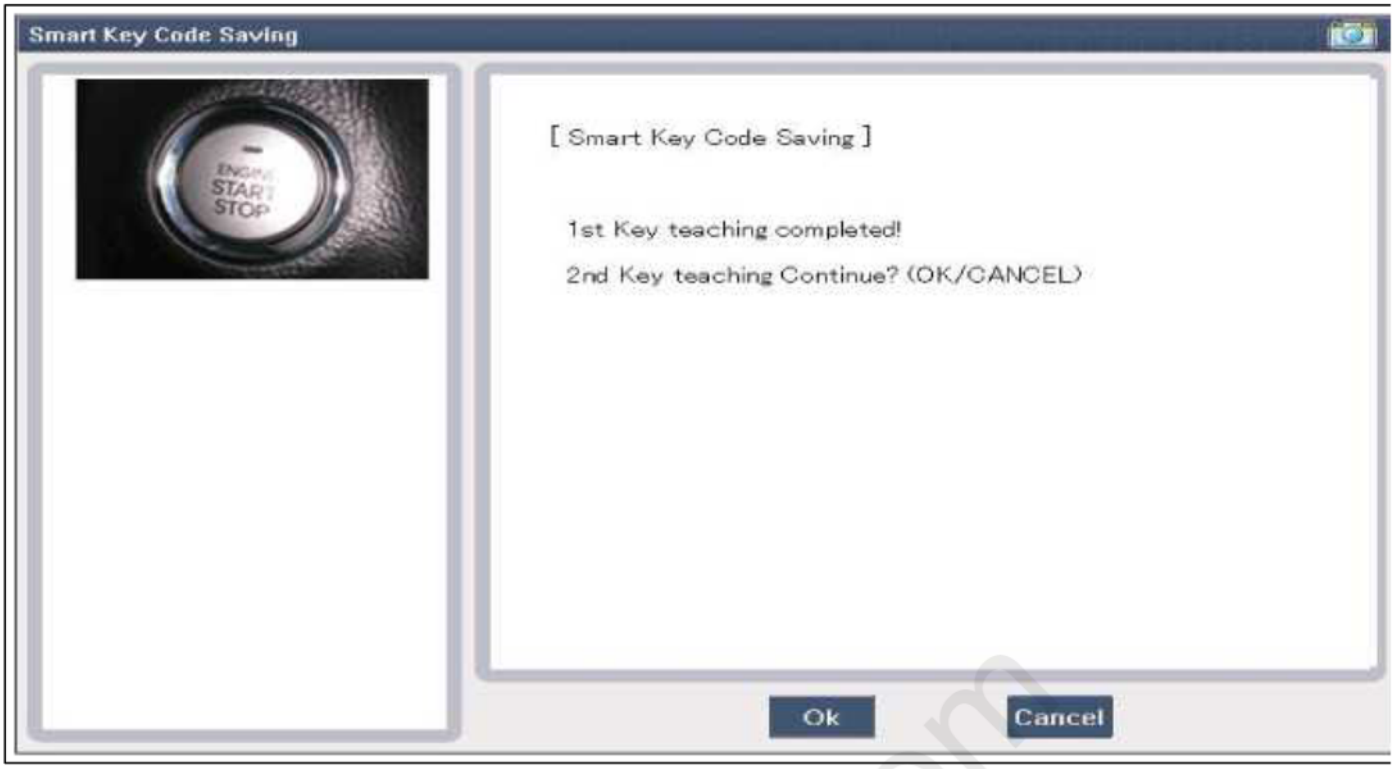

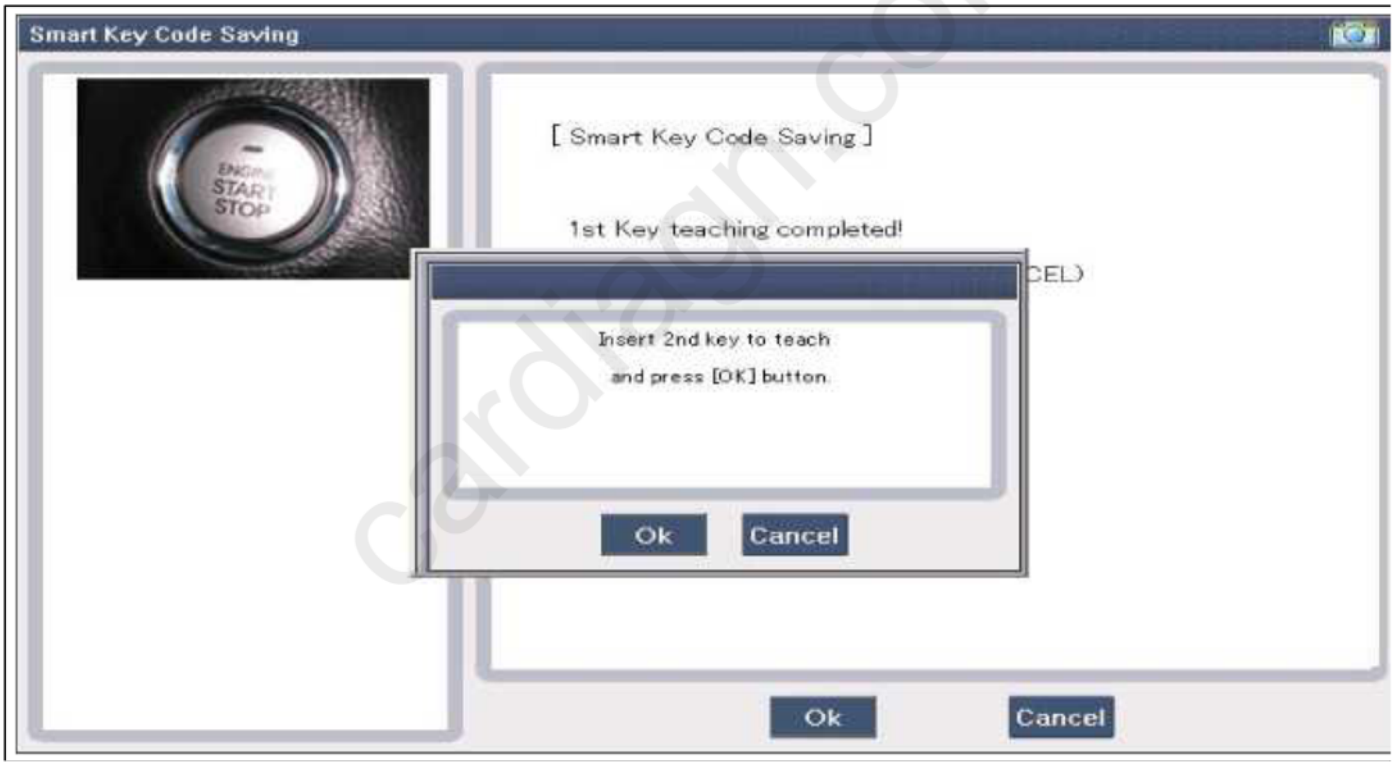

cardiagn.com

8. Confirm the message "Second key teaching completed".

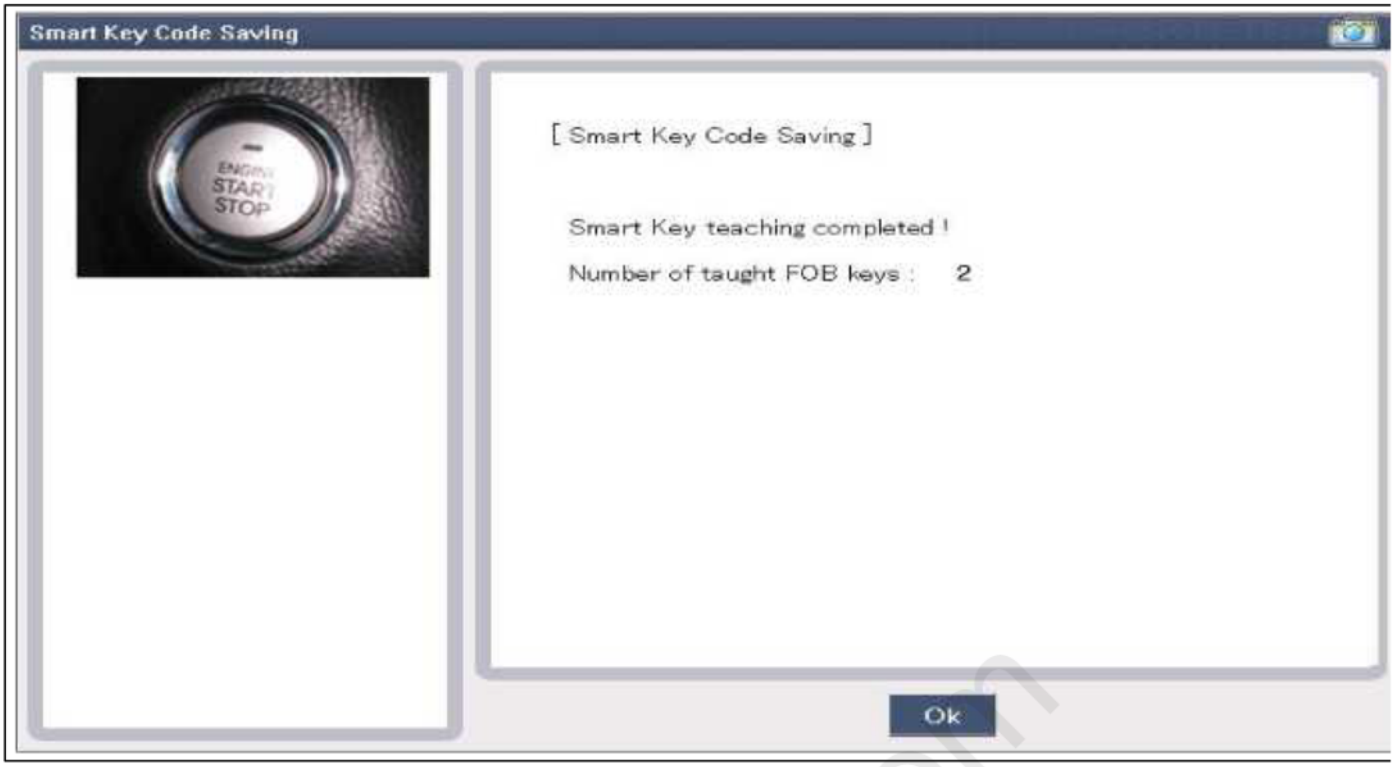

9. Then the screen will be shown as below when key teaching process is completed.

Body Electrical System > Smart key System > Smart key unit > Components and Components Location

Component (1)

cardiagn.com

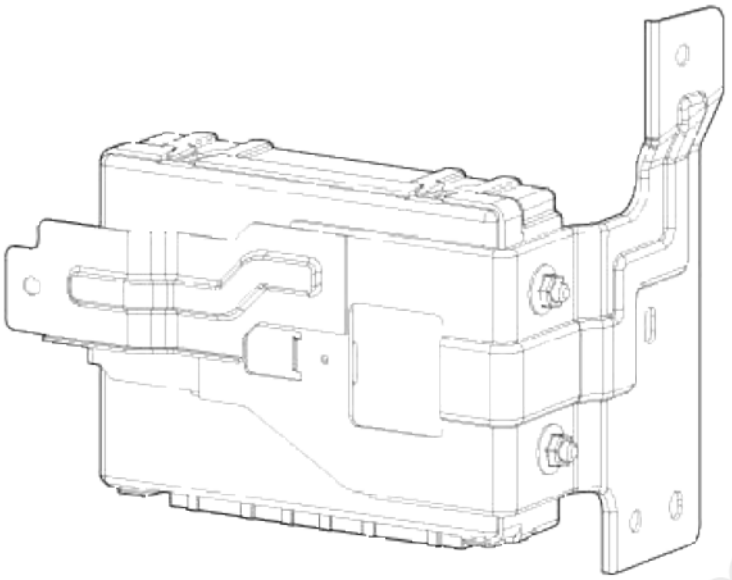

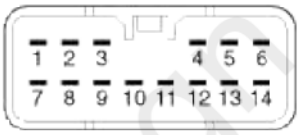

Connector A

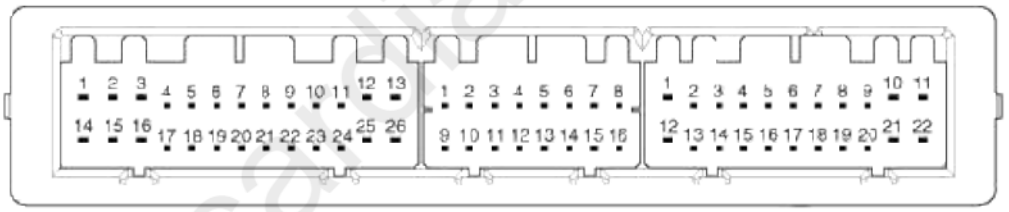

Connector B Connector C Connector D

carlabs.com

Connector Pin Information

No	Connector A (14P)	No	Connector B (26P)		
1	GND 1	1	-	15	L_assist lock button, L_assist toggle button
2	A_ACC	2	L_driver lock button, L_driver toggle button	16	-
3	A_IGN2	3	-	17	-
4	A_IGN1	4	-	18	-
5	VBAT_CPU	5	-	19	L_fob input
6	VBAT_LOAD	6	L_SSB_switch1	20	F_RPM
7	GND 2	7	F_wheel speed	21	L_Start feedback
8	-	8	L_SSB_switch2	22	-
9	O_exteriror buzzer	9	-	23	-
10	O_ACC relay	10	-	24	-
11	O_IGN1 relay	11	-	25	-
12	O_IGN2 relay	12	B_CAN_H	26	-
13	O_starter relay	13	B_CAN_L		
14	-	14	-		

No	Connector C (16P)	No	Connector D (22P)
1	C_CAN_L	1	immobilizer warning
2	C_CAN_H	2	O_SSB_LED_amber
3	-	3	O_SSB_illumination power
4	O_holder illumination	4	O_interior antenna 2 GND
5	-	5	O_interior antenna 1 GND
6	Diagnostic K	6	-
7	L_brake switch	7	-
8	Immobilizer data	8	O_interior antenna 3 power
9	RF_COM	9	O_bumper antenna power
10	EMS_COM	10	O_assist side antenna power
11	-	11	O_driver side antenna power
12	-	12	-
13	L_stop lamp fuse	13	O_SSB_LED_blue

cardiagn.com

14	-	14	O_SSB_illumination GND
15	L_P position, L_clutch switch	15	O_interior antenna 2 power
16	Immobilizer clock signal	16	O_interior antenna 1 power
		17	-
		18	-
		19	O_interior antenna 3 GND
		20	O_bumper antenna GND
		21	O_assist side antenna GND
		22	O_driver side antenna GND

Component (2)

cardiagn.com

[RF Receiver Unit]

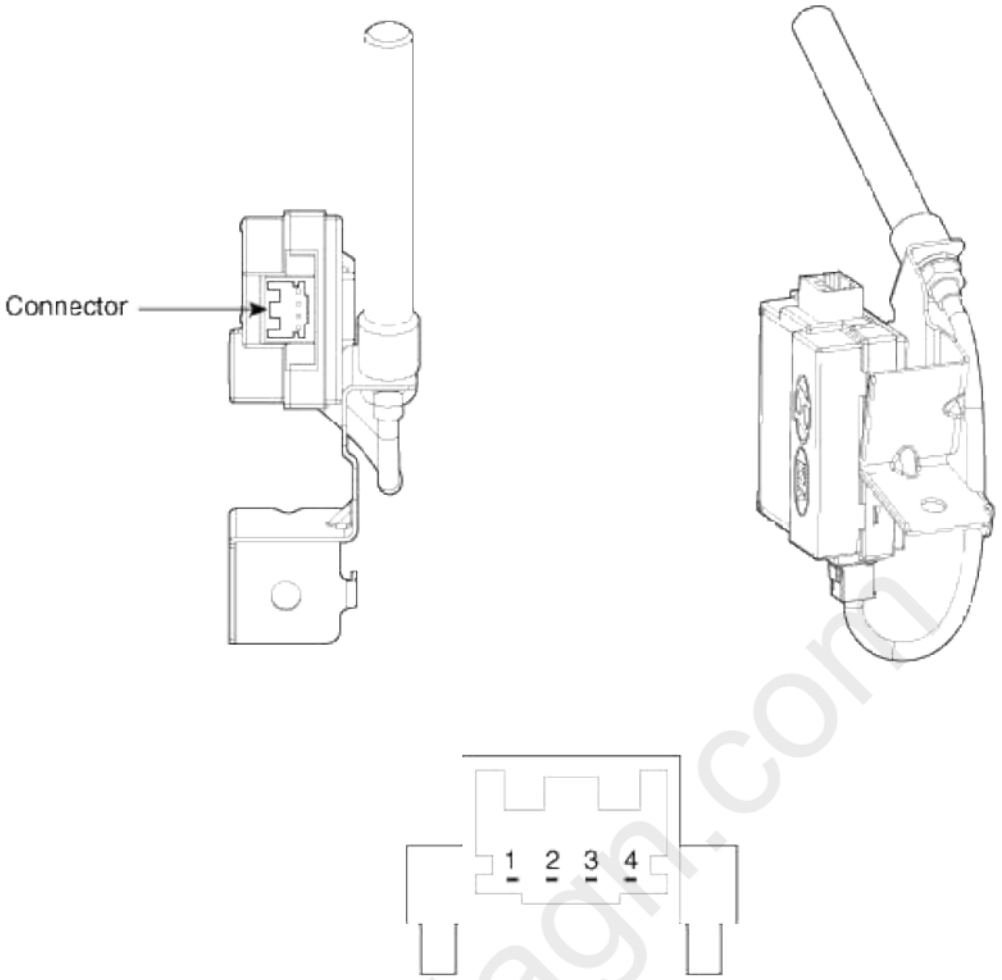

NO.	Description (4Pins)
1	Data
2	-
3	Power
4	Ground

cardiagn.com

Body Electrical System > Smart key System > Smart key unit > Schematic Diagrams

Circuit Diagram

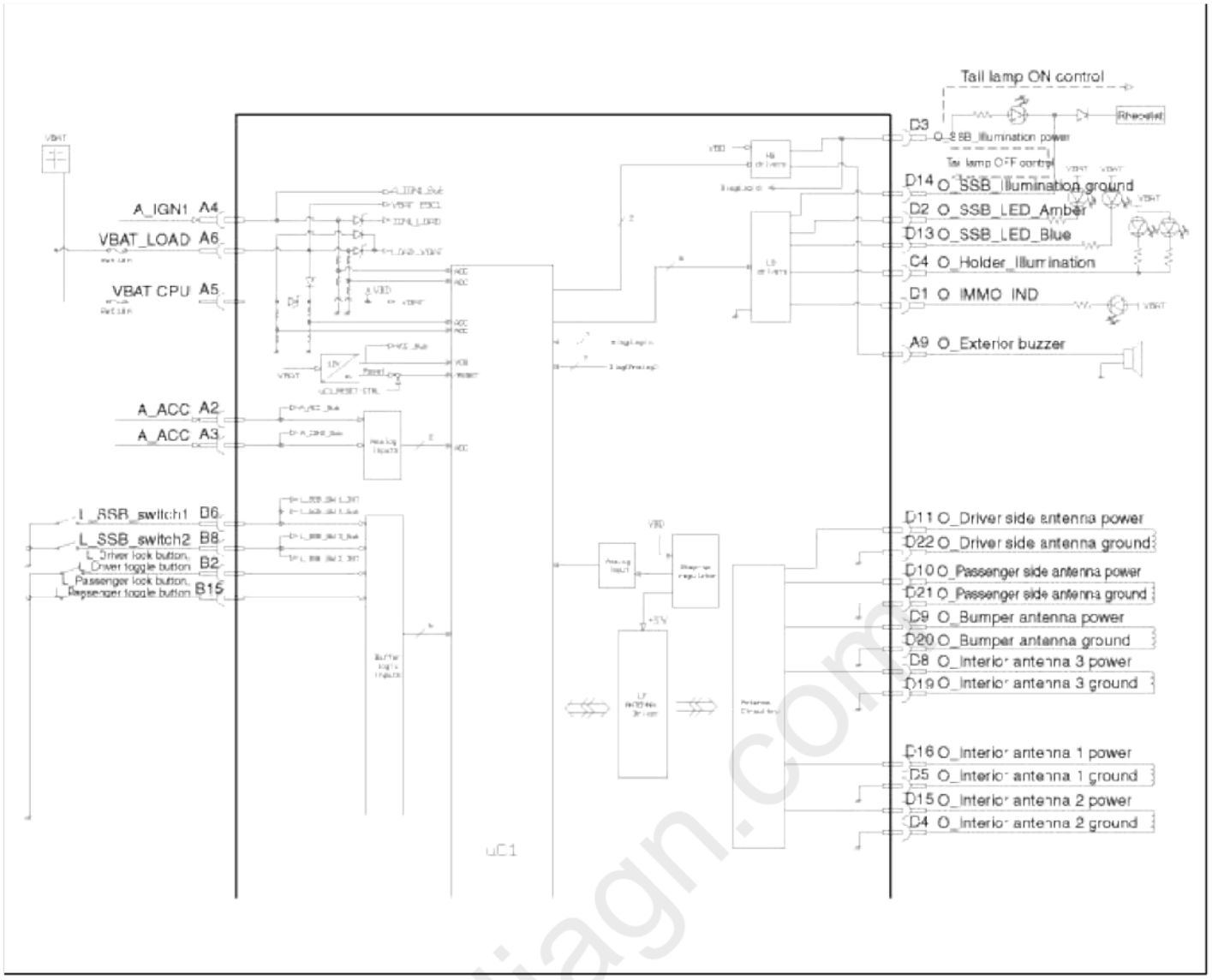

cardiagn.com

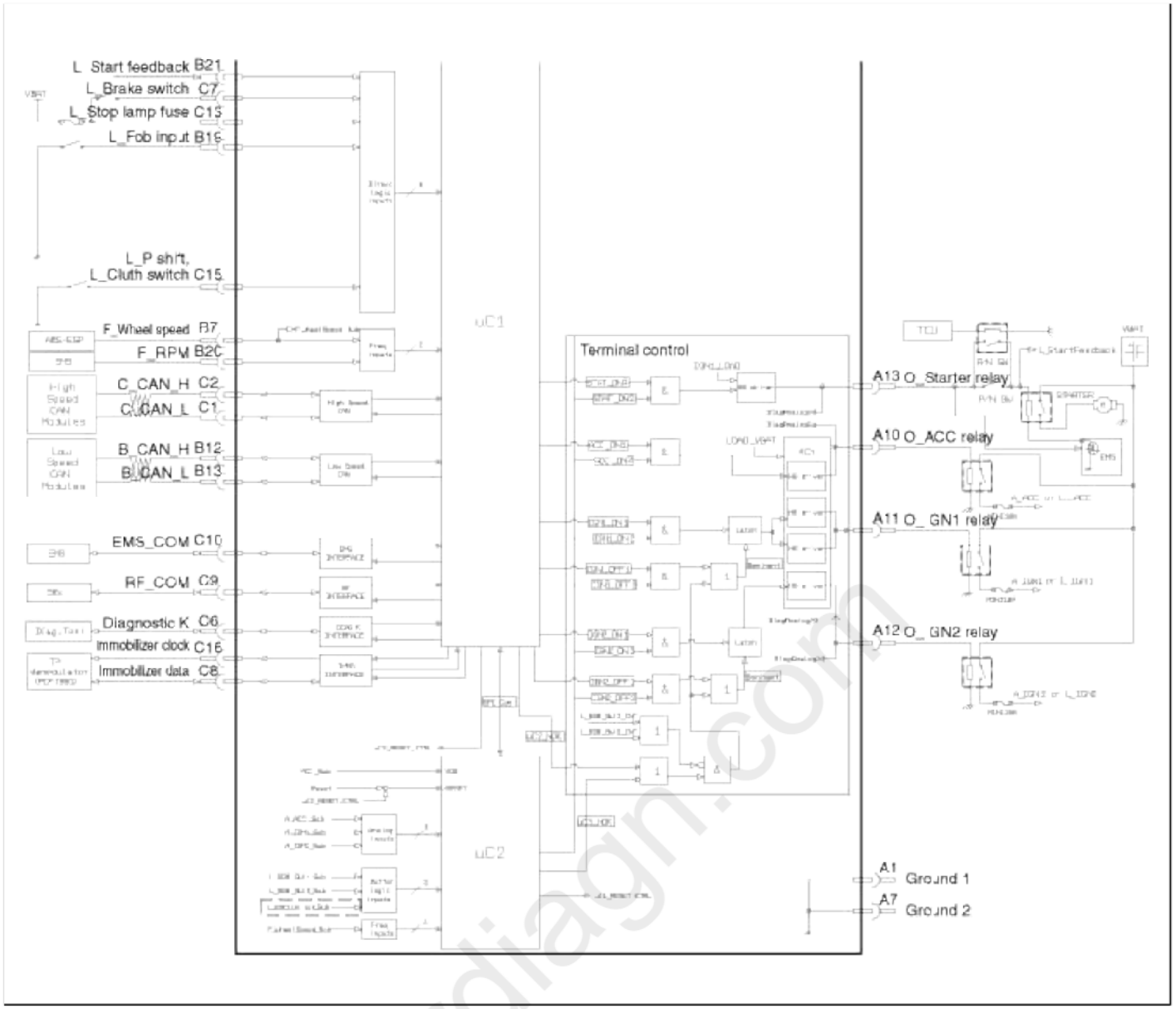

cardiagn.com

Body Electrical System > Smart key System > Smart key unit > Repair procedures

Inspection

Smart Key Unit

- Refer to the BE group - inspection / self diagnosis with GDS.

Smart Key Switch

- Refer to the BE group - inspection / self diagnosis with GDS.

Antenna

- Refer to the BE group - inspection / self diagnosis with GDS.

Trunk Lid Open Switch

1. Check for continuity between the Trunk lid open switch terminals.

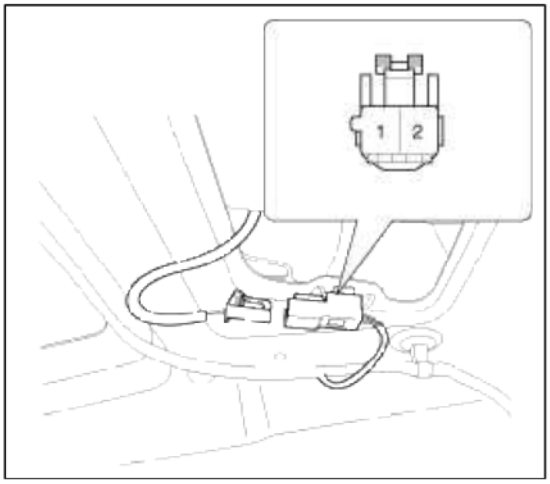

2. If continuity is not specified, inspect the switch

Position \ Terminal	1	2
OFF		
ON	○	○

Removal

NOTE

- Take care not to scratch the crash pad and related parts

Smart key unit

1. Disconnect the negative(-) battery terminal.
2. Remove the glove box.
   (Refer to the BD group - "Crash pad")
3. Remove the smart key unit (A) after disconnecting the connector and loosening the mounting nuts (2EA).

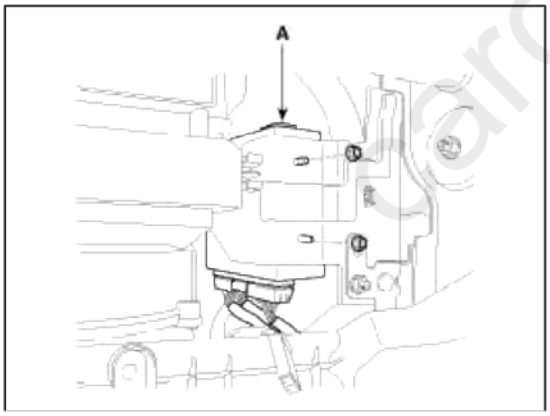

cardiagn.com

4. Remove the smart key unit (A) with bracket (B) after loosening the mounting nuts, shear bolts (C).

[CANADA]

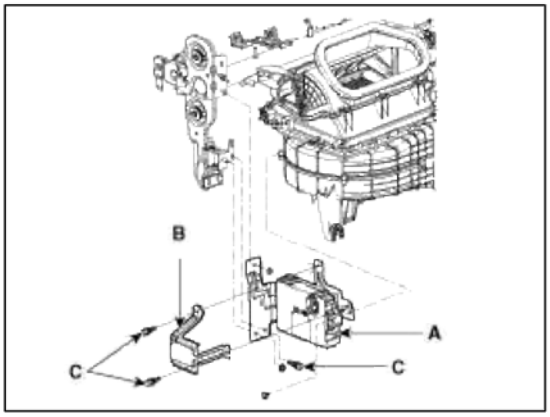

CAUTION

Do not reuse the shear bolts. When installing the new shear bolts to the smart key unit, tighten the shear bolts until its head is cut off.

RF Receiver

NOTE

- Take care not to scratch the crash pad and related parts

1. Disconnect the negative(-) battery terminal.
2. Remove the glove box.
   (Refer to the BD group - "Crash pad")
3. Remove the RF receiver (A) after loosening the mounting nuts (1EA) and disconnecting the connector.

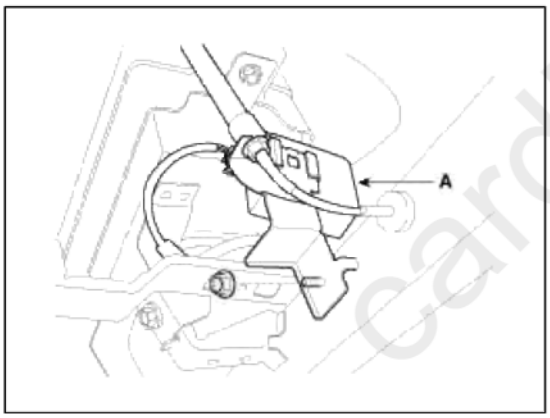

Interior 1 Antenna

NOTE

- Take care not to scratch the crash pad and related parts

1. Disconnect the negative(-) battery terminal.

cardiagn.com

2. Remove the heater control unit (A) after removing the screws.
(Refer to the BD group - "Crash pad")

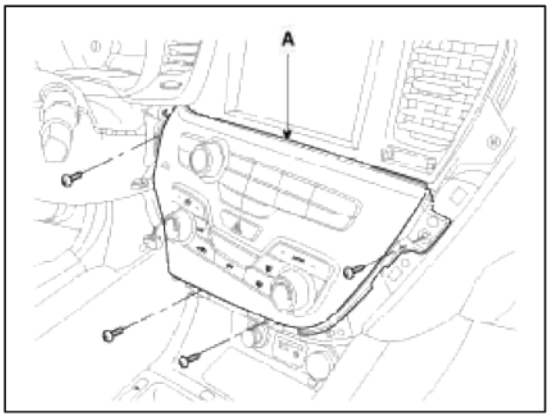

3. Remove the interior 1 antenna (A) after disconnecting the connector and loosening the mounting nuts (2EA).

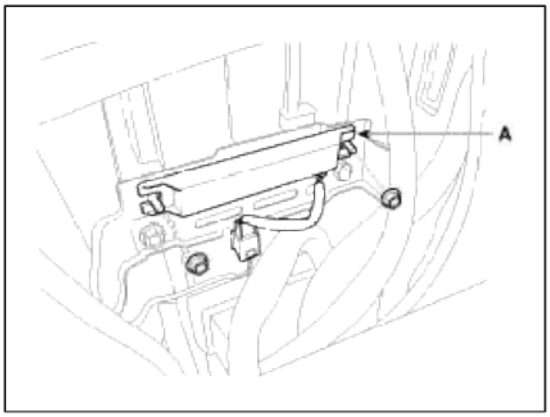

Interior 2 Antenna

1. Disconnect the negative(-) battery terminal.
2. Remove the center console rear cover (A).

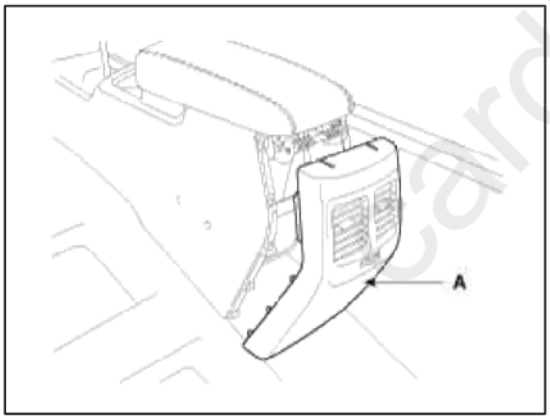

NOTE

Take care not to damage and scratch the console rear cover and its related parts.
Apply the protective tapes to the console rear cover and its related parts.

cardiagn.com

3. Disconnect the interior 2 antenna connector located at the console rear side, then remove the interior 2 antenna (A) after loosening screws (2EA).

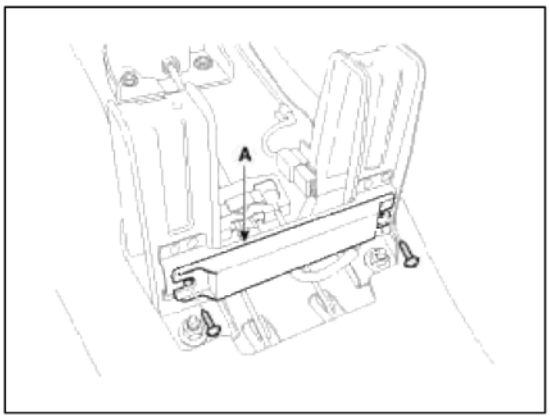

Trunk Antenna

1. Disconnect the negative(-) battery terminal.
2. Remove the trunk transverse trim.
   (Refer to the BD group - "Interior trim")
3. Disconnect the trunk antenna connector (A) and remove the trunk antenna (B) after loosening nut (2EA).

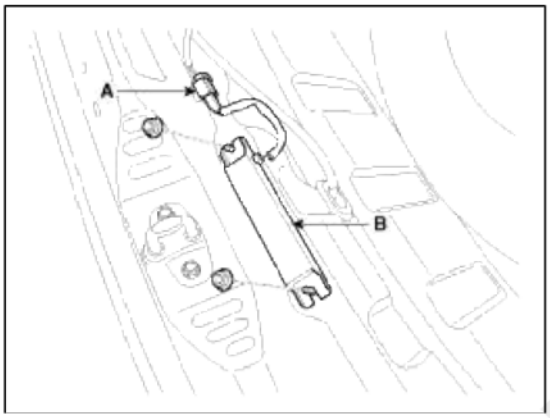

Exterior Bumper Antenna

1. Disconnect the negative(-) battery terminal.
2. Remove the rear bumper.
   (Refer to the BD group - "Rear bumper")
3. Disconnect the antenna connector (B) and remove the exterior bumper antenna (A) after loosening the screws (2EA).

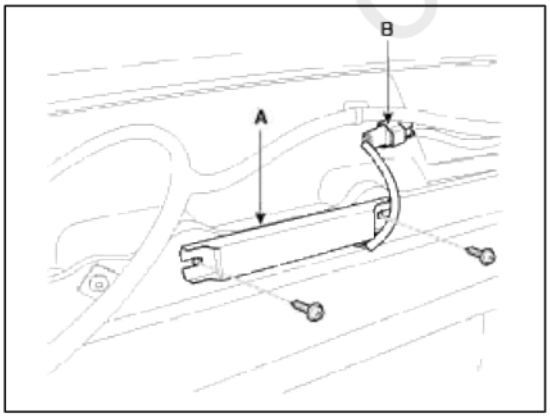

Buzzer

1. Disconnect the negative(-) battery terminal.
2. Remove the left side wheel guard.

cardiagn.com

3. Remove the external buzzer (A) after disconnecting the connector.

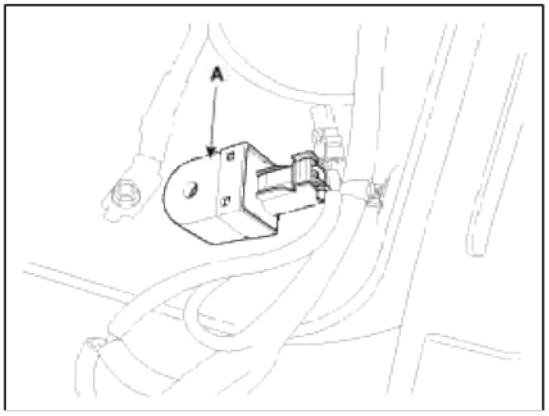

Door Outside Handle

1. Disconnect the negative (-) battery terminal.
2. Remove the front door module.
   (Refer to the BD group - "Front door")
3. Remove the hole plug (B).
4. After loosening the mounting bolt, then remove the outside handle cover (A).

Tightening torque:
0.7 ~ 0.5 N.m (0.07 ~ 0.1 kgf.m, 1.0 ~ 0.7 lb-ft)

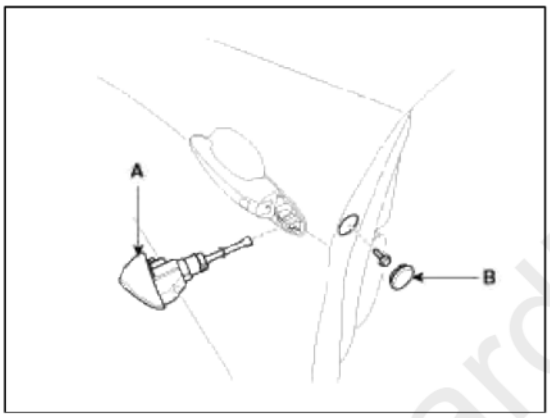

5. Remove the outside handle (A) by sliding it rearward.

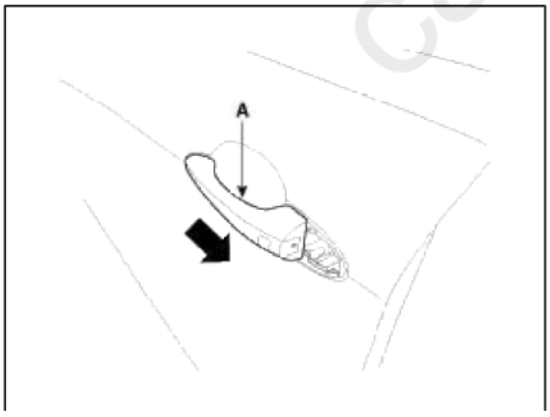

cardiagn.com

6. Disconnect the outside handle connector (A).

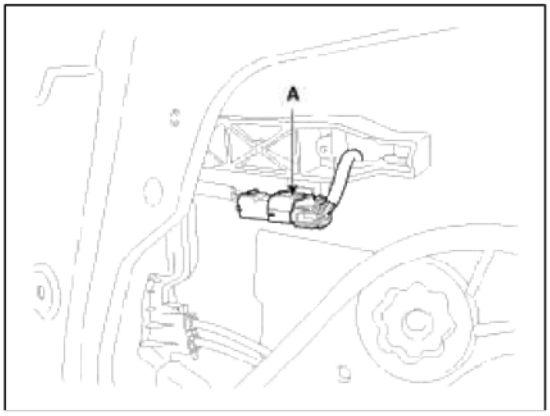

Trunk lid open switch

1. Disconnect the negative(-) battery terminal.
2. Remove the trunk door trim.
   (Refer to the BD group - "Trunk")
3. Disconnect the trunk lid open switch connector (A).

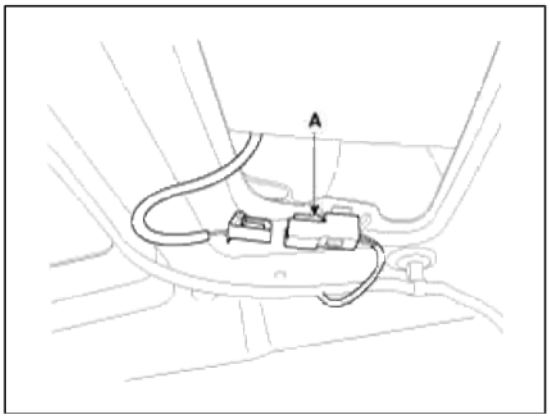

4. Remove the trunk open switch (A) from the trunk garnish after pressing the clips (B).

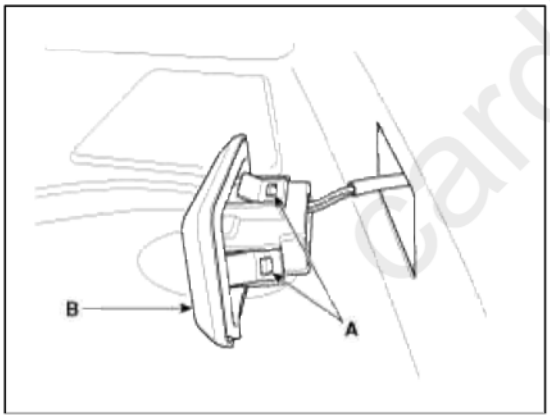

Installation

Smart Key Unit

1. Install the smart key unit.
2. Install the smart key unit mounting nuts and bolts and connector.
3. Install the glove box housing.
4. Install the glove box.
5. Install the negative (-) battery terminal and check the smart key system.

RF Receiver

1. Install the RF receiver.
2. Install the glove box housing.
3. Install the glove box.
4. Install the negative (-) battery terminal and check the smart key system.

cardiagn.com

Interior 1 Antenna
1. Install the interior 1 antenna.
2. Install the heater control unit
3. Install the negative (-) battery terminal and check the smart key system.

Interior 2 Antenna
1. Install the interior 2 antenna.
2. Install the console rear cover after connecting the connector.
3. Install the negative (-) battery terminal and check the smart key system.

Trunk Antenna
1. Install the trunk antenna.
2. Install the trunk trim.
3. Install the negative (-) battery terminal and check the smart key system.

Exterior Bumper Antenna
1. Install the exterior bumper antenna.
2. Install the rear bumper.
3. Install the negative (-) battery terminal and check the smart key system.

Buzzer
1. Install the buzzer.
2. Install the left side wheel guard.
3. Install the negative (-) battery terminal and check the smart key system.

Trunk Lid Open Switch
1. Install the trunk lid open switch.
2. Install the trunk trim.
3. Install the negative (-) battery terminal and check the smart key system.

Door Outside Handle
1. Install the outside handle.
2. Install the door trim.
3. Install the negative (-) battery terminal and check the smart key system.

Body Electrical System > Keyless Entry And Burglar Alarm > Specifications

Specification

Item	Description
Power source	3V
Operating temperature	-20°C ~ +60°C
RF Modulation	FSK
LF Modulation	ASK
RF frequency	315MHz
Battery	CR2032
Transmissible distance	10m or more
Life of battery	2years or more(at 20 times perday)
Button number	4
Function	Door lock
	Door unlock

cardiagn.com

Function	
	Trunk lid open
	Panic

Body Electrical System > Keyless Entry And Burglar Alarm > Components and Components Location

Component Location

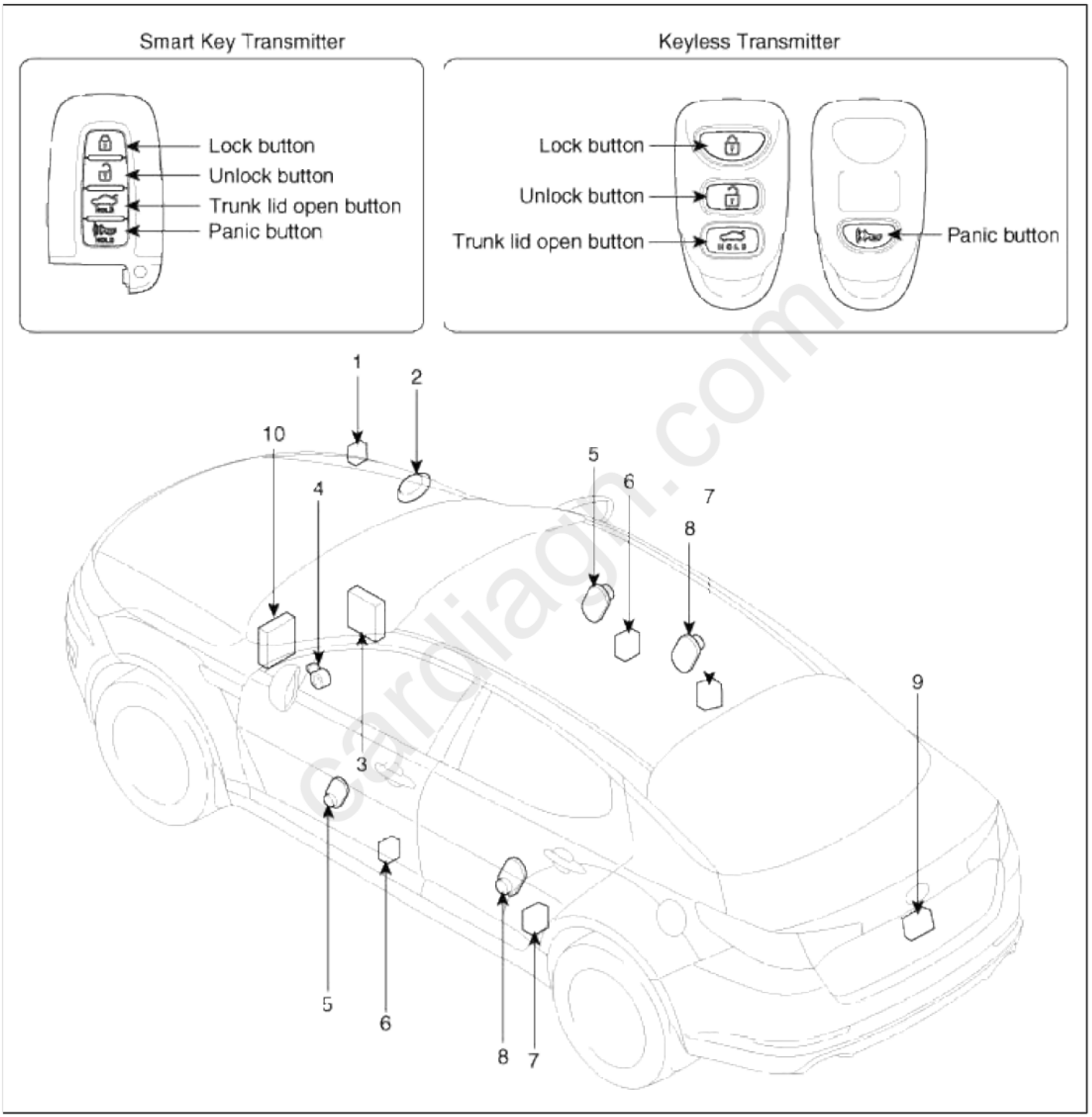

1. Hood switch 2. Burglar horn 3. BCM and RF antenna 4. Key warning switch 5. Front door switch	6. Front door lock actuator & switch 7. Rear door lock actuator & switch 8. Rear door switch 9. Trunk lid open switch

Body Electrical System > Keyless Entry And Burglar Alarm > Description and Operation

Description

Burglar Alarm System

The burglar alarm system is armed automatically after the doors, hood, and trunk lid are closed and locked. The system is set off when any of these things occur:

- A door is forced open.
- A door is unlocked without using the transmitter & key.
- The trunk lid is opened without using the key.
- The hood is opened.
- The engine starter circuit and battery circuit are bypassed by breaking the ignition switch.

When the system is set off, the alarm (horn) sounds and the hazard lamp flash for about two minutes or until the system is disarmed by unlocking the transmitter.

For the system to arm, the ignition switch must be off and the key removed. Then, the body control module must receive signals that the doors, hood, and trunk lid are closed and locked. When everything is closed and locked, none of the control unit inputs are grounded.

The door switches, hood switch and trunk lid switch are all close and lock the doors with the remote transmitter and then the system arms after 30 second.

If anything is opened or improperly unlocked after the system is armed, the body control module gets a ground signal from that switch, and the system is set off.

If one of the switches is misadjusted or there is a short in the system, the system will not arm. As long as the body control module continues to get a ground signal, it thinks the vehicle is not closed and locked and will not arm.

The receiver is integrated in the body control module.

Keyless Entry System

The burglar alarm system is integrated with the keyless entry system. The keyless entry system allows you to lock and unlock the vehicle with the remote transmitter. When you push the lock button, all doors lock. When you push the unlock button all doors unlock.

The room lamp, if its switch is in the center position, will come on when you press the unlock button. If you do not open a door, the light will go off in about 30 seconds, the doors will automatically relock, and the burglar alarm system will rearm. If you relock the doors with the remote transmitter within 30 seconds, the light will go off immediately.

You cannot lock or unlock the doors with the remote transmitter if the key is in the ignition switch.

The system will signal you when the doors lock and unlock by flashing the hazard lamp once when they lock, and twice when they unlock.

Data Flow

carmanuals.com

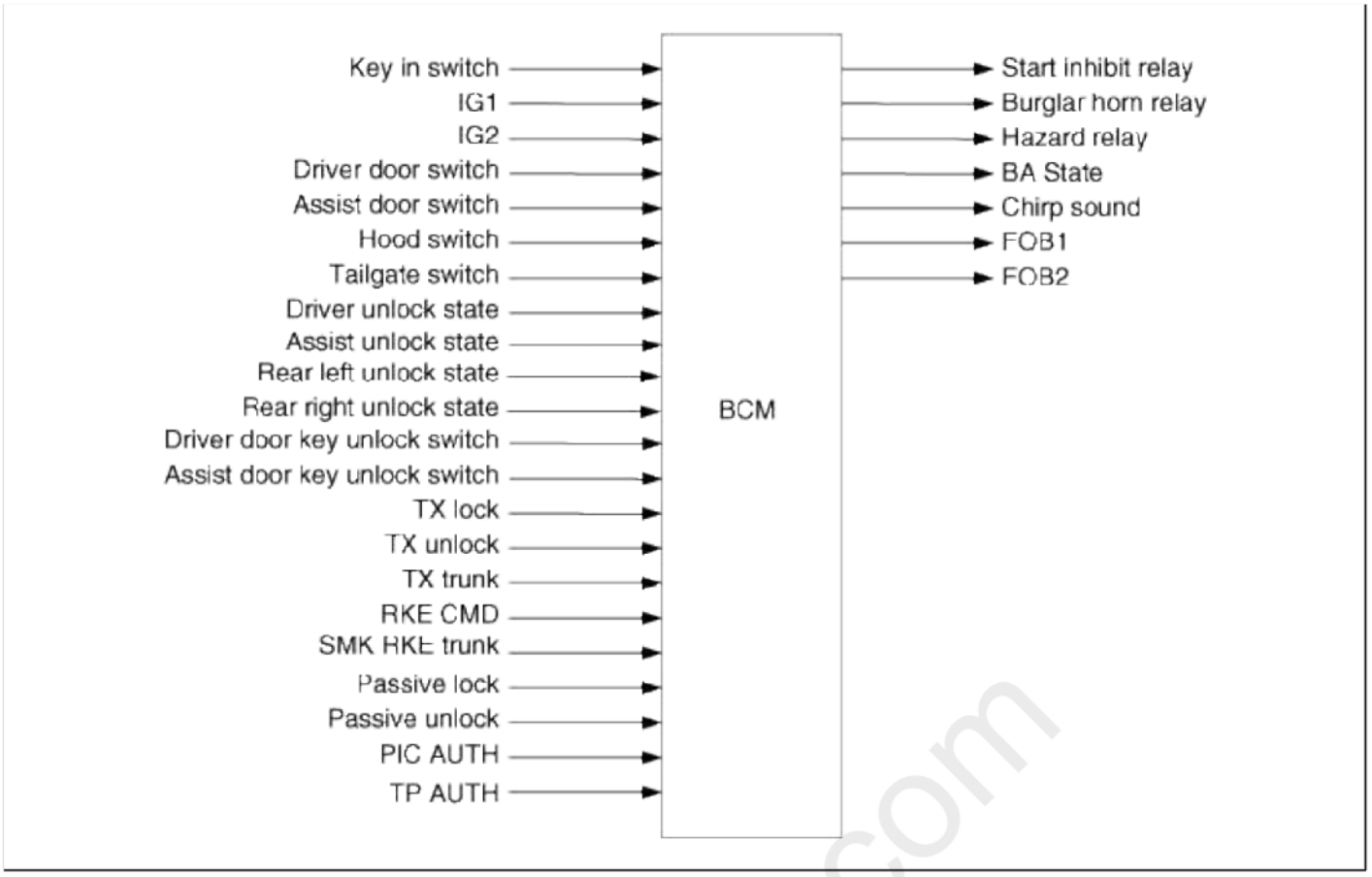

Overview Description

1. According to various input signals there are a variety of changing conditions that perform many functions.
   A. ARM
   B. ARM WAIT
   C. AUTO lock TIMER1
   D. AUTO lock TIMER2
   E. ARM HOLD
   F. REARM
   G. ALARM
   H. PREARM
   I. DISARM

   Condition 1 : At least one entrance opened
   (4Door Not Close=ON) or (Trunk Open Switch=ON) or (Hood Switch=ON)
   Condition 2 : All doors closed, but HOOD or TRUNK open
   (4Door Not Close=OFF) & (Trunk Open Switch=ON) or (Hood Switch=ON)
   Condition 3 : Close the 4DOOR with DOOR lock
   (4Doors Locked) & (4Door Not Close ON→OFF)
   Condition 2 & 3 : Close the 4DOOR with lock with HOOD or TRUNK OPEN
   (4Doors Locked) & (4Door Not Close ON→OFF) & (Trunk Open Switch=ON) or (Hood Switch=ON)
   All entrances closed : 4DOOR Switch & HOOD Switch & TRUNK OPEN Switch is CLOSE
   LOCK : Lock command by Tx
   UNLOCK : Unlock command by Tx
   LOCK : Driver key lock switch is ON
   UNLOCK : Driver key unlock switch is ON
   TRUNK : TRUNK OPEN signal or TRUNK or RKE TRUNK command by Tx
   IGN KEY ON : KEY IN Switch = ON & IGN1 = ON & IGN2 =ON
   IGN KEY OUT : KEY IN Switch = OFF & IGN1 = OFF & IGN2 =OFF

cardiagn.com

KEY IN : KEY IN Switch = ON
KEY IN 1 : KEY IN Switch = ON or IGN1 = ON or IGN2 = ON
H1 : Hazard Time is one-time(lock) 1sec on
H2 : Hazard Time is two-time(unlock) 0.5sec/on, 0.5sec/off
AUTO LOCK TIMER1 : 30sec
AUTO LOCK TIMER2 : 30sec
ARM WAIT TIMER : 30sec
TRUNK TIMER : 30sec
TRUNK MARK : Default value is clear
LOCK CONFIRM CHECK : 0.2 ~ 5sec

Security Ind Control

1. Key In switch ON or ACC ON1 ON or IGN1 ON or IGN2 ON or FOB IN is LED OFF.
2. IGN KEY OUT entry in the ARM WAIT mode, the Infinite On control of the ARM WAIT mode, the other will control the BLINKING.
3. BLINKING cycle is 2.3s.(ON during 0.3s / OFF during 2.0s)

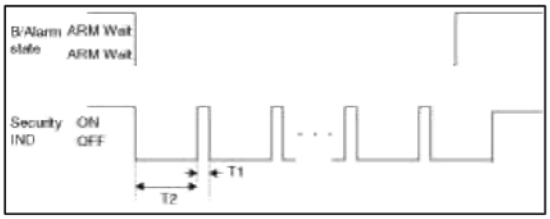

T1 : 0.3sec, T2 : 2sec

Functions

DISARM

Condition 1

State	Description
Initial Condition	**ALARM**
Event	- IGN KEY ON during 30sec or ALT "L" on
	NON SMK SPEC : - Any door open & TX unlock - TX Trunk - TX Lock & Lock confirm Failed
	SMK SPEC : - Any door open & RKE CMD Unlock/ Passive Access Unlock 1 - RKE trunk 1 - TP AUTH 1/ PIC AUTH 1 - RKE CMD Lock/ Passive Access Lock 1 & Lock confirm Failed
	Mechanical Key Option Enable : - Unlock - lock & Lock confirm Failed
Action	The state goes to **DISARM** state - Horn Relay, Hazard Relay, Start inhibit OFF - TX Unlock, RKE CMD Unlock, Passive Access Unlock 1 -> Unlock relay on for 0.5sec -> Hazard relay on (TWICE)

cardiagn.com

Lock failure : Lock attempts within 5 seconds after the Unlock door maintain at least one if
RKE CMD = Unlock : RKE CMD = Unlock & Fob1 or Unlock & Fob2
RKE CMD = Lock : RKE CMD = Lock & Fob1 or Lock & Fob2

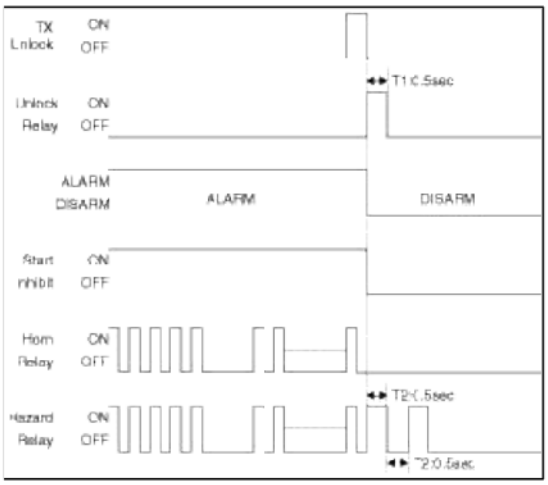

T1 : 0.5s, T2 : 0.5s +-0.1s

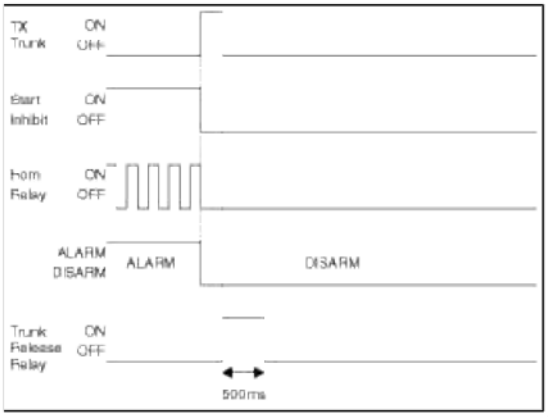

Condition 2

State	Description
Initial Condition	**DISARM** state & (IGN KEY OUT) & Any Door open
Event	NON SMK spec : - Any door open & TX UNLOCK
	SMK spec : - Any door open & RKE CMD UNLOCK / Passive Access Unlock 1 / RKE TRUNK 1 - TP AUTH 1 / PIC AUTH 1
Action	No state change - TX UNLOCK, RKE CMD UNLOCK, Passive Access Unlock 1 -> Hazard relay for 0.5s ON/OFF(twice)

Condition 3

cardiagn.com

State	Description
Initial Condition	**ARM WAIT** state
Event	- Any door open or Hood switch OPEN or Trunk switch OPEN - Any door is unlocked - Key In switch ON
	SMK spec : TP AUTH 1 / PIC AUTH 1
	Mechanical Key OPTION Enable : UNLOCK
Action	The state goes to **DISARM** state

Condition 4

State	Description
Initial Condition	**AUTOLOCK TIMER1** STATE
Event	- Any door open or Hood switch OPEN or Trunk switch OPEN - Key In switch ON - AUTO LOCK & Lock confirmation failure
	NON SMK spec : - AUTO LOCK & Lock confirmation failure
	SMK spec : - RKE CMD LOCK / Passive Access Lock 1& Lock confirmation failure - TP AUTH 1 / PIC AUTH 1
	Mechanical Key option Enable : - LOCK & Lock confirmation failure
Action	The state goes to **DISARM** state

Condition 5

cardiagn.com

State	Description
Initial Condition	**AUTOLOCK TIMER2** STATE
Event	- Any door open - Key In switch ON - AUTO LOCK & Lock confirmation failure - Hood switch Open and Memory Hood was Close - Trunk switch Open and Memory Trunk was Close
	NON SMK spec : - TX LOCK& Lock confirmation failure
	SMK spec : - RKE CMD=LOCK/ Passive Access Lock 1& Lock confirmation failure - TP AUTH 1/PIC AUTH 1
	Mechanical Key option Enable : LOCK & Lock confirmation failure
Action	The state goes to **DISARM** state

Condition 6

State	Description
Initial Condition	**ARM** STATE
Event	- IGN KEY ON
	SMK spec : - TP AUTH 1 / PIC AUTH 1
	Mechanical Key option Enable : - UNLOCK
Action	The state goes to **DISARM** state

Condition 7

cardiagn.com

State	Description
Initial Condition	**REARM** state
Event	- IGN KEY ON during 30sec or ALT"L" on
	NON SMK spec : - TX LOCK& Lock confirmation failure - TX TRUNK
	SMK spec : - TP AUTH 1 / PIC AUTH 1 - RKE CMD LOCK / Passive Access Lock 1 & Lock confirmation failure - RKE TRUNK 1
	Mechanical Key option Enable : - UNLOCK - LOCK & Lock confirmation failure
Action	The state goes to **DISARM** state Start inhibit OFF

Condition 8

State	Description
Initial Condition	**PREARM** state
Event	- Key In switch ON - All entrance closed & Any Door is unlocked - Any Door open & Tx Unlock
	NON SMK : - Any door open & TX UNLOCK
	SMK : - TP AUTH 1 / PIC AUTH 1 - Any door open & RKE CMD UNLOCK/ Passive Access Unlock 1
	Mechanical Key option Enable : - UNLOCK
Action	The state goes to **DISARM** state - TX UNLOCK, RKE CMD UNLOCK, Passive Access Unlock 1 -> Hazard relay for 0.5s ON/OFF(twice)

Condition 9

cardiagn.com

State	Description
Initial Condition	**ARMHOLD**
Event	- IGN KEY ON
	SMK : - TP AUTH 1 / PIC AUTH 1
	Mechanical Key option Enable : - UNLOCK
Action	The state goes to **DISARM** state

ARM

Condition 1

State	Description
Initial Condition	**ARM** state
Event	NON SMK : - TX LOCK
	NON SMK : - RKE CMD LOCK / Passive Access Lock 1
Action	No state change Hazard relay 1Time on(1sec)

Condition 2

State	Description
Initial Condition	**ARM WAIT** state
Event	- After ARM WAIT TIMER finished
Action	The state goes to **ARM** state

Condition 3

State	Description
Initial Condition	**ARMHOLD** state
Event	Trunk close for at least Trunk Release Time Out(default 30sec) in ARMWAIT state
Action	The state goes to **ARM** state

ALARM

Condition 1

cardiagn.com

State	Description
Initial Condition	**ARM** state
Event	Any door open or Hood switch open or Trunk switch open
Action	The state goes to **ALARM** state - Engine Start Inhibit is ON - The horn is ON one time for 27sec(±2sec) and OFF two times for 10sec(±1sec) - The hazard is driven also (During Horn driving)

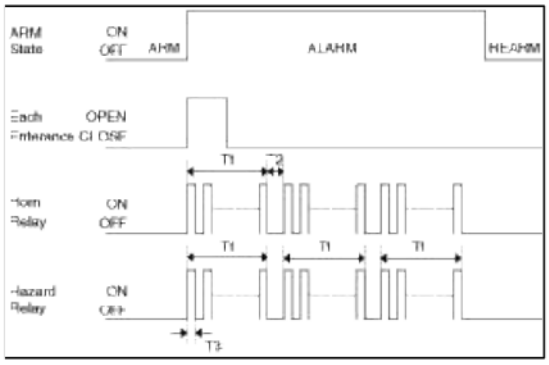

T1 : 27s(±2sec), T2 : 10s(±2sec), T3 : 0.5s ± 0.1sec
Note : Horn Output : Period : 1sec(Can be calibrated Horn Period), 50% Duty

Condition 2

State	Description
Initial Condition	**REARM** state
Event	Any door open or Hood switch OPEN or Trunk switch OPEN
Action	The state goes to **ALARM** state The horn is ON one time for 27sec(±2sec) and OFF two times for 10sec(±1sec) The hazard is driven also (During Horn driving)

Condition 3

State	Description
Initial Condition	**ARMHOLD** state
Event	Any door open or Hood switch OPEN
Action	The state goes to **ALARM** state The horn is ON one time for 27sec(±2sec) and OFF two times for 10sec(±1sec) The hazard is driven also (During Horn driving).

cardiagn.com

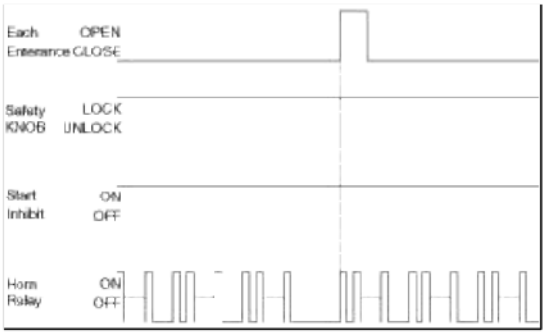

ARM WAIT MODE

Condition 1

State	Description
Initial Condition	ARMWAIT state
Event	NON SMK : - TX LOCK
	NON SMK : - RKE CMD LOCK / Passive Access Lock 1
Action	No state change Hazard relay 1Time on(1sec)

Condition 2

State	Description
Initial Condition	**DISARM** state & IGN KEY OUT & All entrances closed(DOORS, HOOD and TRUNK)
Event	NON SMK : - Tx Lock & locked confirmed
	SMK spec : - RKE CMD LOCK / Passive Access Lock 1 & locked confirmed
	Mechanical Key option Enable : - LOCK & locked confirmed - DOOR LOCK state : Any door open → All door closed
Action	- The state goes to **ARMWAIT** State - Start ARM WAIT TIMER - Hazard relay 1Time on(1sec)

Condition 3

cardiagn.com

State	Description
Initial Condition	**ALARM** state & All entrances closed(DOORS, HOOD and TRUNK)
Event	NON SMK : - Tx Lock & locked confirmed
	SMK spec : - RKE CMD LOCK / Passive Access Lock 1 & locked confirmed
	Mechanical Key option Enable : - LOCK & locked confirmed
Action	- The state goes to **ARMWAIT** State - Horn relay, Start inhibit relay OFF - Hazard relay 1Time on(1sec) (LOCK : Except) - Start ARMWAIT TIMER

Condition 4

State	Description
Initial Condition	**AUTOLOCK TIMER1** state
Event	AUTOLOCK & locked confirmed
	NON SMK : - Tx Lock & locked confirmed
	SMK : - RKE CMD LOCK / Passive Access Lock 1 & locked confirmed
	Mechanical Key option Enable : LOCK & locked confirmed
Action	- The state goes to **ARMWAIT** State - Hazard relay 1Time on(1sec) - Start ARMWAIT TIMER

Condition 5

State	Description
Initial Condition	**PREARM** state
Event	All door closed and (Trunk switch CLOSE & TRUNK MARK CLEAR) & Hood switch CLOSE & DOOR LOCK
Action	- The state goes to **ARMWAIT** State - Hazard relay 1Time on(1sec) - Start ARMWAIT TIMER

Condition 6

cardiagn.com

State	Description
Initial Condition	**REARM** state
Event	NON SMK : - TX LOCK & locked confirmed
	SMK : - RKE CMD LOCK/ Passive Access Lock 1 & locked confirmed
	Mechanical Key option Enable : - LOCK & locked confirmed
Action	- The state goes to **ARMWAIT** State - Hazard relay 1Time on(1sec) (LOCK : Except) - Start Inhibit relay OFF - Start ARMWAIT TIMER

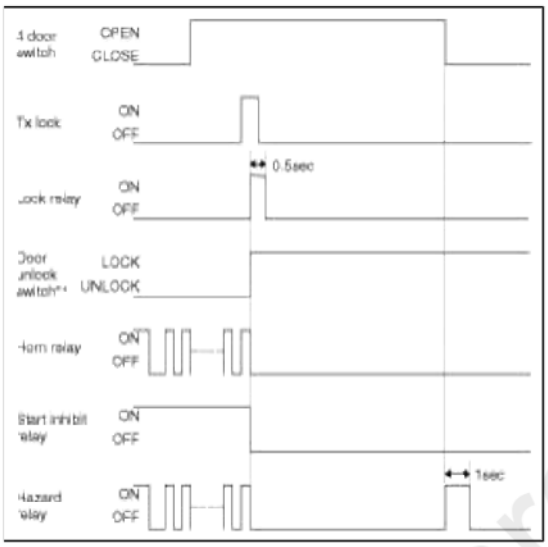

*1 : Lock : Driver Door Unlock Switch or Assist Door Unlock Switch or Rear Right Driver Unlock Switch = LOCK
Unlock : Driver Door Unlock Switch or Assist Door Unlock Switch or Rear Right Driver Unlock Switch = UNLOCK
REARM MODE
Condition 1

State	Description
Initial Condition	**ALARM** state
Event	All door closed and trunk switch close, hood switch close state, and ALARM PATTERN finished
Action	The state goes to **REARM** state

AUTO LOCK TIMER1 MODE
Condition 1

cardiagn.com

State	Description
Initial Condition	**ARM** state
Event	NON SMK : - TX UNLOCK
	SMK : - RKE CMD UNLOCK / Passive Access Unlock 1
Action	- The state goes to **AUTO LOCK TIMER1** state - Start AUTO LOCK TIMER1 - Hazard relay Twice on(0.5s ON/0.5s OFF)

Condition 2

State	Description
Initial Condition	**AUTO-LOCK TIMER1** state
Event	AUTOLOCK TIMER1 finished
	NON SMK : - TX UNLOCK
	SMK : - RKE CMD UNLOCK / Passive Access Unlock 1
Action	No change state
	CASE1: AUTO LOCK TIMER1 Finished AUTOLOCK
	CASE2: TX UNLOCK, RKE CMD UNLOCK, Passive Access Unlock 1 Hazard relay Twice on(0.5s ON/0.5s OFF) Restart AUTO LOCK TIMER1

Condition 3

State	Description
Initial Condition	**ARM WAIT** state
Event	NON SMK : TX UNLOCK
	SMK : RKE CMD UNLOCK / Passive Access Unlock 1
Action	- The state goes to AUTO LOCK TIMER1 state - Start AUTO LOCK TIMER1 - Hazard relay Twice on(0.5s ON/0.5s OFF)

Condition 4

cardiagn.com

State	Description
Initial Condition	**DISARM** state & All entrances closed(DOORS, Hood SW & Trunk SW) & IGN KEY OUT
Event	NON SMK : TX UNLOCK
	SMK : RKE CMD UNLOCK/ Passive Access Unlock 1
Action	- The state goes to **AUTO LOCK TIMER1** state - Start AUTO LOCK TIMER1 - Hazard relay Twice on(0.5s ON/0.5s OFF)

Condition 5

State	Description
Initial Condition	**ALARM** state & All door closed and Trunk switch CLOSE, Hood switch CLOSE
Event	NON SMK : TX UNLOCK
	SMK : RKE CMD UNLOCK / Passive Access Unlock 1
Action	- The state goes to AUTO LOCK TIMER1 state - Start AUTO LOCK TIMER1 - Hazard relay Twice on(0.5s ON/0.5s OFF) - Start inhibit relay off /Horn relay off

Condition 6

State	Description
Initial Condition	**REARM** state
Event	NON SMK : TX UNLOCK
	SMK : RKE CMD UNLOCK/ Passive Access Unlock 1
Action	The state goes to **AUTO LOCK TIMER1** state - Start AUTO LOCK TIMER1 - Hazard relay Twice on(0.5s ON/0.5s OFF) - Start inhibit relay off

AUTO LOCK TIMER2 MODE

Condition 1

candiagn.com

State	Description
Initial Condition	**AUTO-LOCK TIMER2** state
Event	Finished AUTO LOCK TIMER2
	NON SMK : TX UNLOCK
	SMK : RKE CMD UNLOCK/ Passive Access Unlock 1
Action	No change state
	CASE1: AUTO LOCK TIMER2 finished AUTOLOCK
	CASE2: TX UNLOCK, RKE CMD UNLOCK, Passive Access Unlock 1 - Start AUTOL OCK TIMER2 - Hazard relay Twice on(0.5s ON/0.5s OFF)

Condition 2

State	Description
Initial Condition	**DISARM** state & IGN KEY OUT & (Trunk switch OPEN or Hood switch OPEN) state
Event	NON SMK : TX UNLOCK
	SMK : RKE CMD UNLOCK/ Passive Access Unlock 1
Action	- The state goes to AUTOLOCKTIMER2 state - Start AUTOLOCKTIMER2 - Hazard relay Twice on(0.5s ON/0.5s OFF) - Memo Hood/Trunk state

Condition 3

State	Description
Initial Condition	**ALARM** state & All door closed & (Trunk switch OPEN or Hood switch OPEN) state
Event	NON SMK : TX UNLOCK
	SMK : RKE CMD UNLOCK / Passive Access Unlock 1
Action	- The state goes to AUTO LOCK TIMER2 state - Horn relay, Start inhibit relay OFF - Start AUTO LOCK TIMER2 - Hazard relay Twice on(0.5s ON/0.5s OFF) - Memo Hood/Trunk state

Condition 4

cardiagn.com

State	Description
Initial Condition	**PREARM** state & All door closed & (Trunk switch OPEN or Hood switch OPEN)state
Event	NON SMK : TX UNLOCK
	SMK : RKE CMD UNLOCK / Passive Access Unlock 1
Action	- The state goes to AUTO LOCK TIMER2 state - Start AUTO LOCK TIMER2 - Hazard relay Twice on(0.5s ON/0.5s OFF) - Memo Hood/Trunk state

Condition 5

State	Description
Initial Condition	**ARMHOLD** state
Event	NON SMK : TX UNLOCK
	SMK : RKE CMD UNLOCK / Passive Access Unlock 1
Action	- The state goes to **AUTO LOCK TIMER2** state - Start AUTO LOCK TIMER2 - Hazard relay Twice on(0.5s ON/0.5s OFF) - Memo Hood/Trunk state

PREARM MODE

Condition 1

State	Description
Initial Condition	**AUTO-LOCK TIMER2** state
Event	AUTO LOCK & locked confirmed
	NON SMK : TX LOCK& locked confirmed
	SMK : RKE CMD LOCK/ Passive Access Lock 1 & locked confirmed
	Mechanical Key option Enable : LOCK & locked confirmed
Action	The state goes to **PREARM** state

Condition 2

cardiagn.com

State	Description
Initial Condition	**DISARM** state & IGN KEY OUT
Event	NON SMK : - Any door open or Hood SW OPEN or Trunk SW OPEN state & locked confirmed
	SMK : - Any door open or Hood SW OPEN or Trunk SW OPEN state RKE CMD LOCK / Passive Access Lock 1 & locked confirmed
	Mechanical Key option Enable : LOCK & locked confirmed ALL DOOR LOCK state (Any door open → All doors closed) and (Trunk switch OPEN or Hood switch OPEN)
Action	The state goes to **PREARM** state

Condition 3

State	Description
Initial Condition	ALARM state & IGN KEY OUT and(Any door open or Hood SW OPEN or Trunk SW OPEN)
Event	NON SMK : TX LOCK& locked confirmed
	SMK : RKE CMD LOCK/ Passive Access Lock 1 & locked confirmed
	Mechanical Key option Enable : LOCK & locked confirmed
Action	The state goes to PREARM state Horn relay, Hazard relay, Start INH relay => OFF

Condition 4

State	Description
Initial Condition	**ARMHOLD** state
Event	NON SMK : TX LOCK & locked confirmed
	SMK : RKE CMD LOCK/ Passive Access Lock 1& locked confirmed
	Mechanical Key option Enable : LOCK locked confirmed
Action	The state goes to **PREARM** state

Condition 5

carmanual.com

State	Description
Initial Condition	**ARMWAIT** state
Event	NON SMK : TX TRUNK
	SMK : RKE TRUNK 1
Action	The state goes to **PREARM** state Start TRUNK TIMER TRUNK MARK Set

Condition 6

State	Description
Initial Condition	**PREARM** state
Event	Trunk switch OPEN Trunk TimeR expired(Trunk Release Time Out: 30s)
Action	No state change CASE Trunk switch OPEN : Stop to Trun Timer. TRUNK MARK Clear CASE TRUNK TIMER expired : TRUNK MARK Clear

ARMHOLD MODE

Condition 1

State	Description
Initial Condition	**ARM** state
Event	NON SMK : TX Trunk
	SMK : RKE Trunk 1
Action	The state goes to **ARMHOLD** state

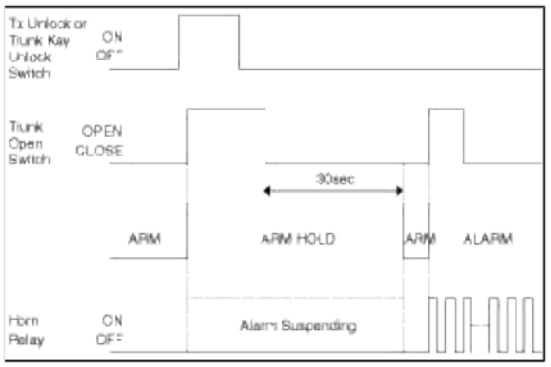

cardiagn.com

RESET

1. In case of taking the BATTERY out during the ALARM state

Condition

State	Description
Initial Condition	**ALARM, REARM** state
Event	Taking the battery out
Action	Start INH relay ON and Horn relay twice The state goes to **ALARM** mode

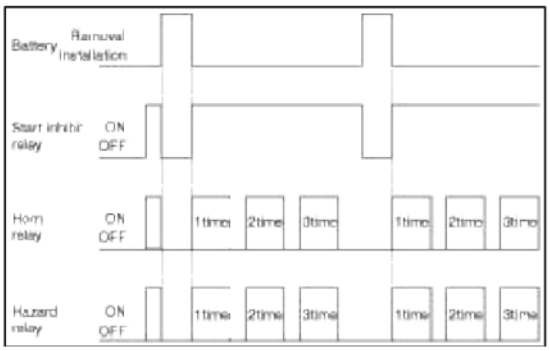

2. In case of taking the BATTERY out during ARM

Condition

State	Description
Initial Condition	ARM state
Event	Taking the battery out
Action	The state goes to ARM mode

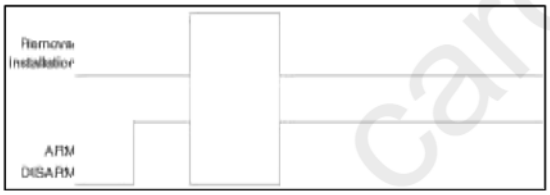

3. In case of taking the BATTERY out during the ARMHOLD state

Condition

State	Description
Initial Condition	**Except ARM, ALARM, REARM,ARMHOLD** state
Event	Taking the battery out
Action	The state goes to **DISARM** mode

Body Electrical System > Keyless Entry And Burglar Alarm > Repair procedures

Inspection

Front Door Lock Actuator Inspection

1. Remove the front door trim.
   (Refer to the BD group - "Front door")

cardiagn.com

2. Remove the front door module.
3. Disconnect the 7P connector from the actuator.

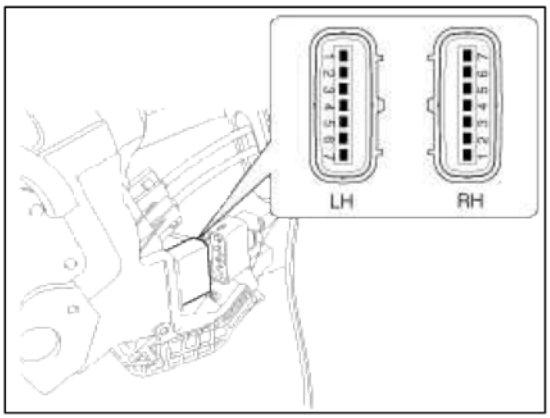

4. Check actuator operation by connecting power and ground according to the table. To prevent damage to the actuator, apply battery voltage only momentarily.

Position \ Terminal		3	4
Front left	Lock	⊕	⊖
	Unlock	⊖	⊕
Position \ Terminal		**4**	**5**
Front right	Lock	⊕	⊖
	Unlock	⊖	⊕

Rear Door Lock Actuator Inspection

1. Remove the rear door trim.
   (Refer to the BD group - "Rear door")
2. Remove the rear door module.
3. Disconnect the 7P connector from the actuator.

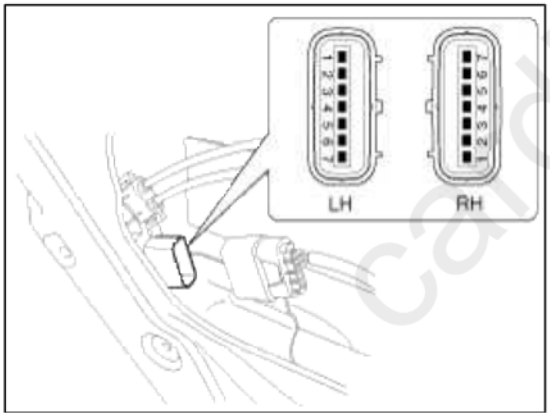

4. Check actuator operation by connecting power and ground according to the table. To prevent damage to the actuator, apply battery voltage only momentarily.

Position \ Terminal		3	4
Rear left	Lock	⊕	⊖
	Unlock	⊖	⊕
Position \ Terminal		**4**	**5**
Rear right	Lock	⊕	⊖
	Unlock	⊖	⊕

Trunk Lid Release Actuator Inspection

1. Remove the trunk lid trim panel.
   (Refer to the BD group - "Trunk lid")

cardiagn.com

2. Disconnect the 3P connector from the actuator.

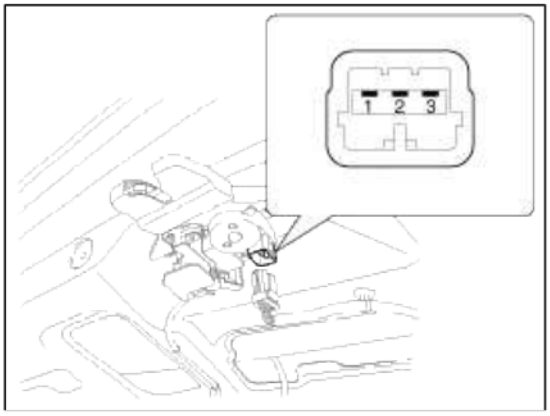

3. Check actuator operation by connecting power and ground according to the table. To prevent damage to the actuator, apply battery voltage only momentarily.

Terminal / Position	1	2
Lock release(Open)	⊖	⊕

Front Door Lock Switch Inspection

1. Remove the front door trim panel.
   (Refer to the BD group - "Front door")
2. Remove the front door module.
3. Disconnect the 7P connector from the actuator.

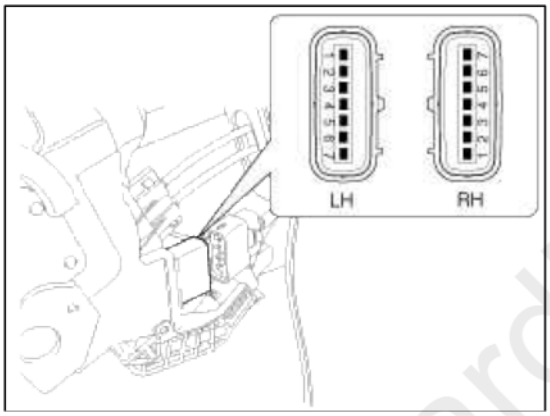

4. Check for continuity between the terminals in each switch position when inserting the key into the door according to the table.

Terminal / Position		7	6	2	1
Fron: Left	Lock	○	—	—	○
	Unlock		○	○	○
Terminal / Position		7	6	2	1
Front Right	Lock	○	—	—	○
	Unlock	○	○	○	

Rear Door Lock Switch Inspection

1. Remove the rear door trim panel.
   (Refer to the BD group - "Rear door")
2. Remove the rear door module.

cardiagn.com

3. Disconnect the 7P connector from the actuator.

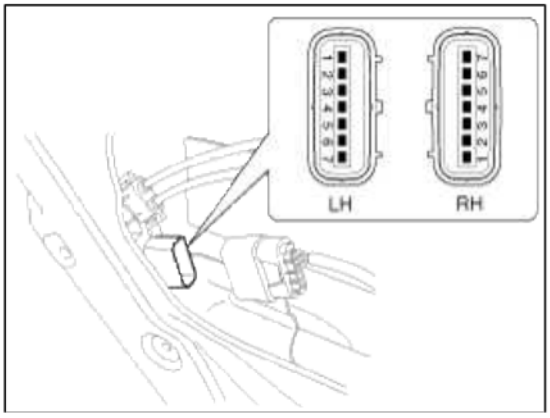

4. Check for continuity between the terminals in each switch position according to the table.

Position \ Terminal		1	2
Rear Left	Unlock	○———	———○
Position \ Terminal		**6**	**7**
Rear Right	Unlock	○———	———○

Trunk Lid Open Switch Inspection

1. Remove the trunk lid trim.
   (Refer to the BD group - "Trunk lid")
2. Disconnect the 3P connector from the actuator.

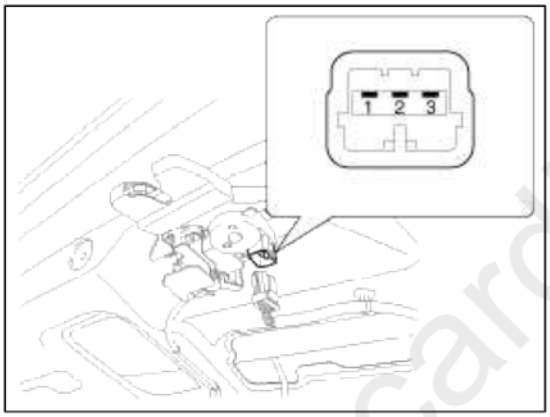

3. Check for continuity between the terminals in each switch position according to the table.

Position \ Terminal	1	3
Lock release(Open)	○	——○

Door Switch Inspection

Remove the door switch and check for continuity between the terminals.

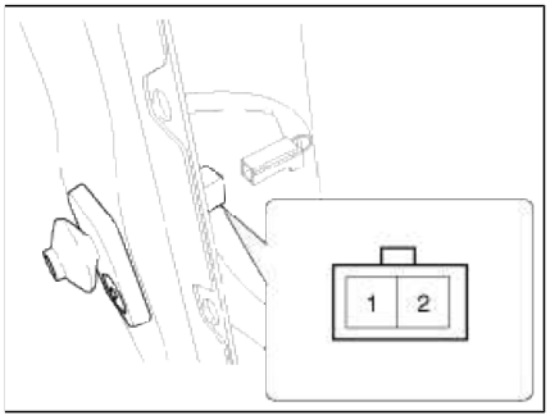

cardiagn.com

Terminal / Position	1	2	Body (Ground)
Free(Door open)	○	○	○
Push(Door close)			

Hood Switch Inspection

1. Disconnect the connector from the hood switch (A).

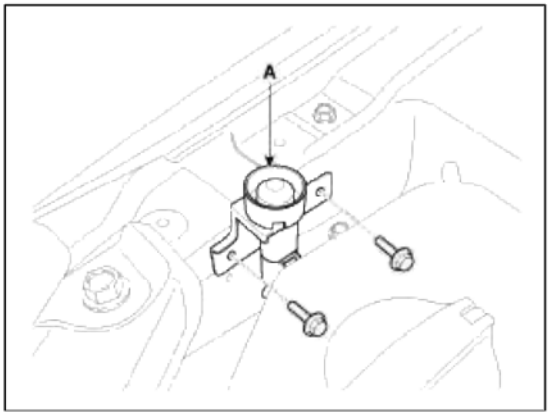

2. Check for continuity between the terminals and ground according to the table.

Terminal / Posit on	2	1
Hood open (Free)	○	○
Hooc close (Push)		

Burglar Horn Inspection

1. Remove the burglar horn (A) after removing 1 bolt and disconnect the 2P connector from the burglar horn.

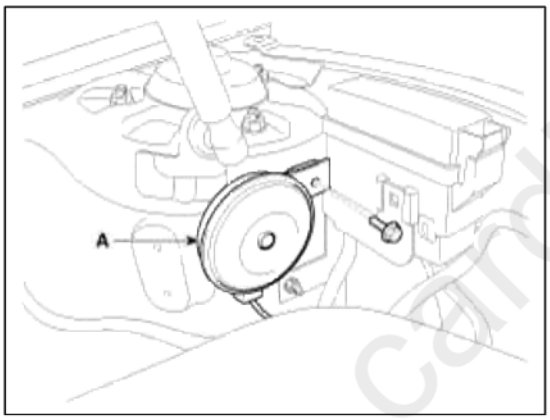

2. Test the burglar horn by connecting battery power to the terminal 1 and ground the terminal 2.
3. The burglar horn should make a sound. If the burglar horn fails to make a sound replace it.

cardiagn.com

Body Electrical System > Keyless Entry And Burglar Alarm > Transmitter > Repair procedures

Inspection

1. Check that the red light flickers when the door lock or unlock button is pressed on the transmitter.

2. Remove the battery (A) and check voltage if the red light doesn't flicker.

Standard voltage : 3V

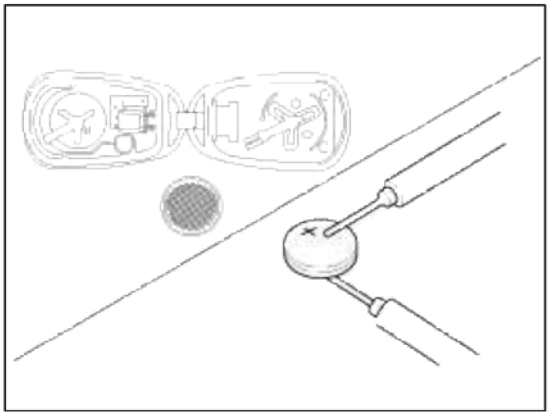

3. Insert the battery (A) into the tester (09954-2P100).

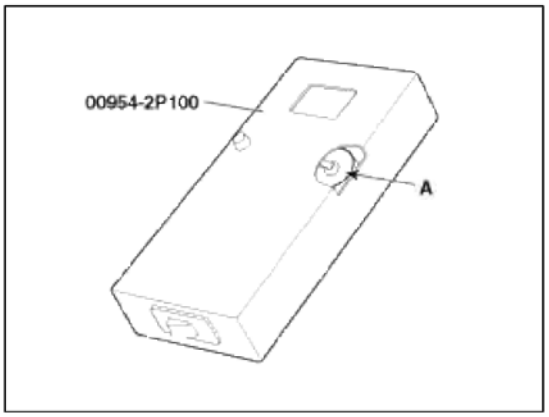

4. Push the test button and If "0.00" is displayed on screen, it means that the battery voltage is 2V or less.
5. If "L" is displayed on screen, it means that the battery is low power and it needs to replace.
6. To prevent the discharge of electricity, turn the tester power off.
7. Replace the transmitter battery with a new one, if voltage is low power then try to lock and unlock the doors with the transmitter by pressing the lock or unlock button five or six times.
8. If the doors lock and unlock, the transmitter is O.K, but if the doors don't lock and unlock, register the transmitter code, then try to lock and unlock the doors.
9. If the doors lock and unlock, the transmitter is O.K, but if the doors don't lock and unlock, replace the transmitter.

WARNING

An inappropriately disposed battery can be harmful to the environment and human health.
Dispose the battery according to your local law(s) or regulation.

Transmitter Code Registration (Using Code Saver)

1. Open Door.
2. Connect POWER (B+) and GND, signal line of Code Saver.
3. If connection is normal, signal line is activated and RED LED turns ON.
4. If switch of Code Saver turns ON, data via signal line will be transmitted.
5. BCM enters into Code Save mode when it receives data from Code Saver and send Code Save Start signal via signal line.
6. Code Saver turns Green LED ON when it receives Code Save Start signal.
7. When you press Lock or Unlock button of transmitter, BCM will save Codes.
8. If there are 2 transmitters for Code Saving, register by performing item 7).

carmanualsgn.com

9. If switch of Code Saver turns OFF or is disconnected, Code Saving mode will be finished.

Code saving method

NO	Saved code	Code to change	Changed code
1	A	C	C (A is deleted)
2	A, B, C, D	E	E (A, B, C, D are deleted)
3	A, B	C, D, E	C, D
4	A, B	C, C, D	C

Transmitter Code Registration (Using GDS)

1. Connect the DLC cable of GDS to the data link connector (16 pins) in driver side crash pad lower panel, turn the power on GDS.

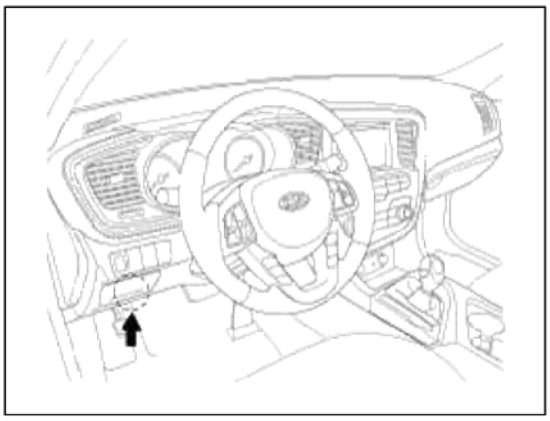

2. Select the vehicle model and then do "CODE SAVING"

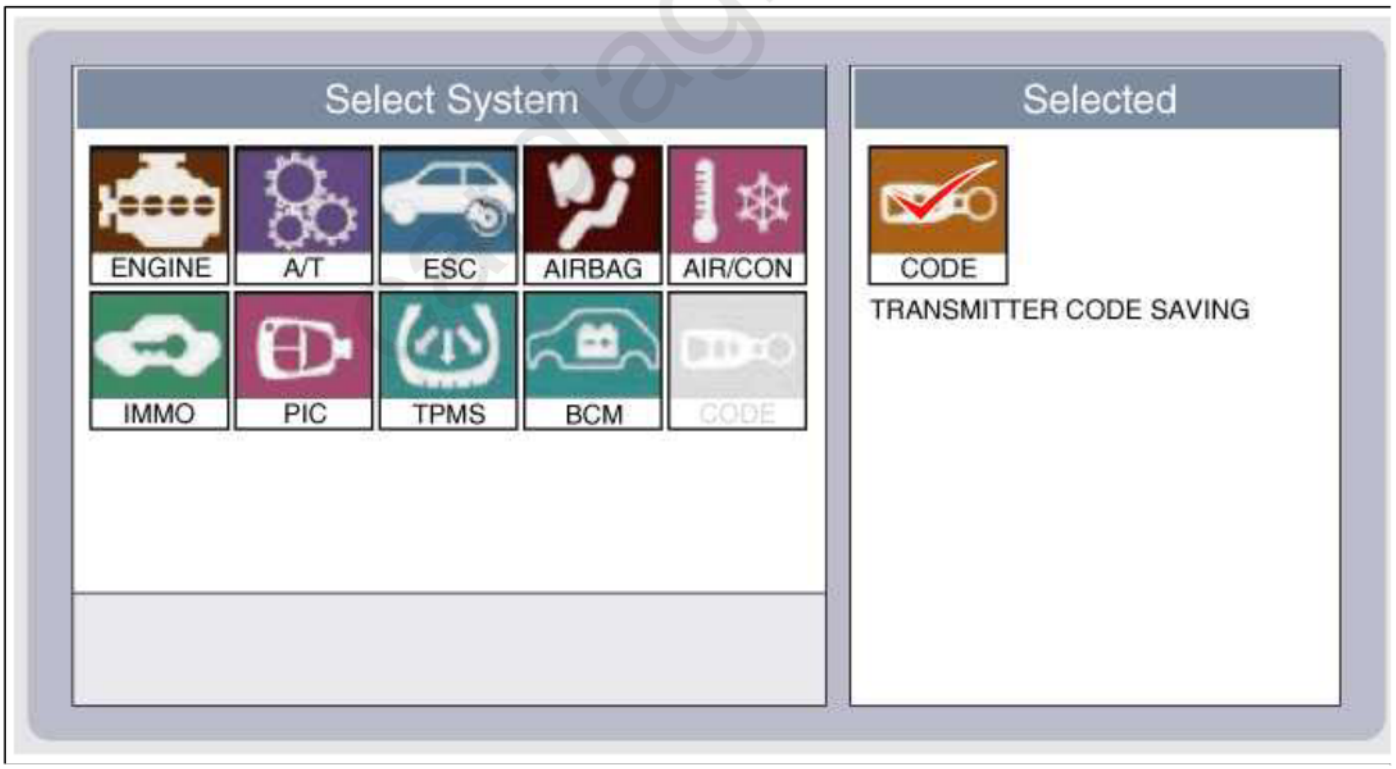

3. After selecting "CODE SAVING" menu, button "ENTER" key, then the screen will be shown as below.

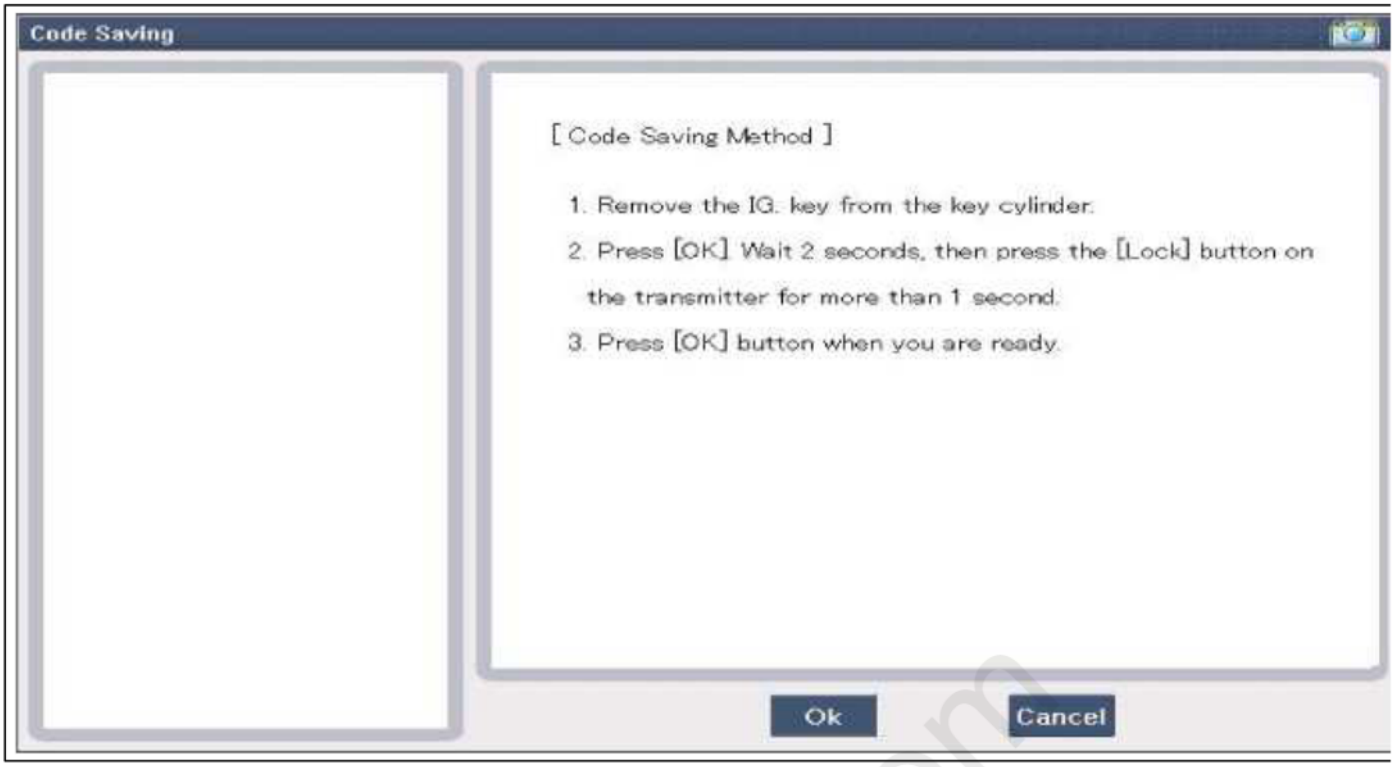

4. After removing the ignition key from key cylinder, push "ENTER" key to proceed to the next mode for code saving. Follow steps 1 to 4 and then code saving is completed.

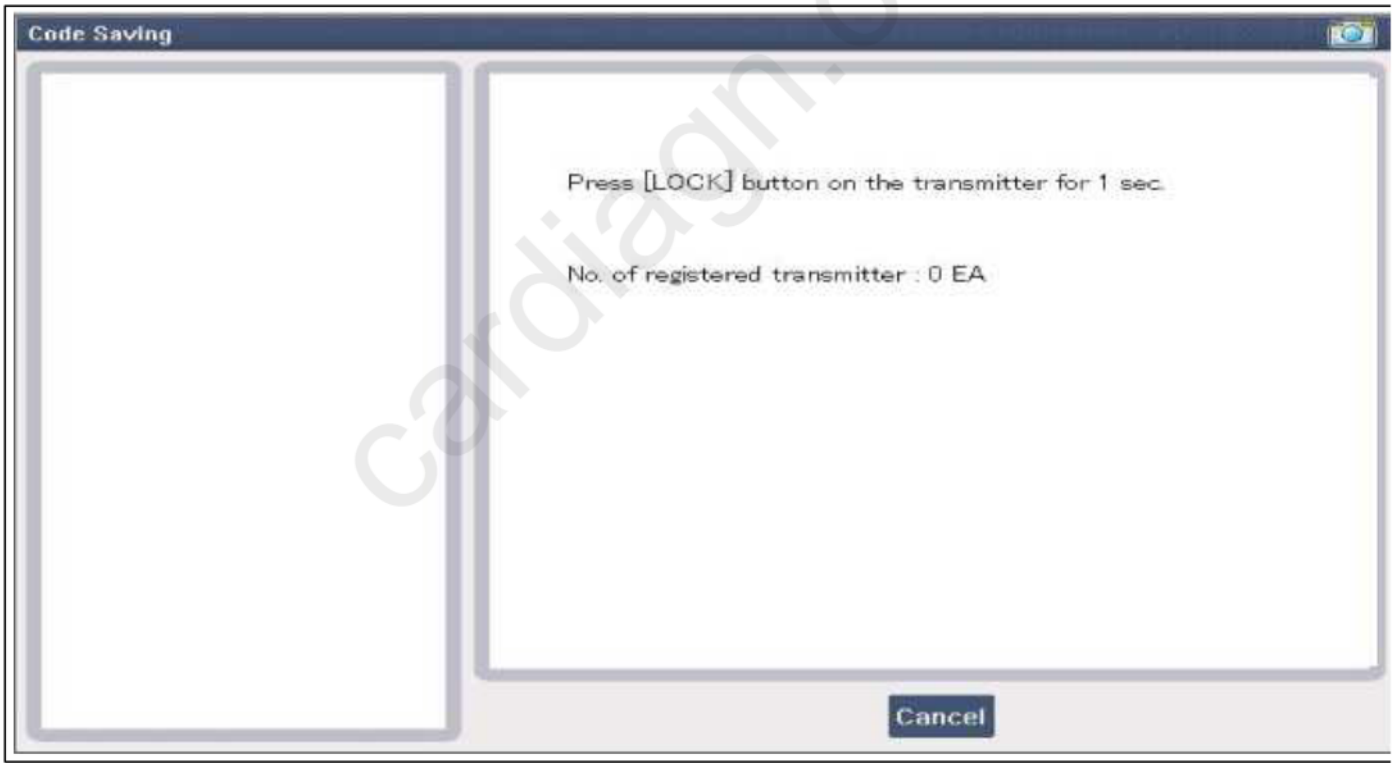

cardiagn.com

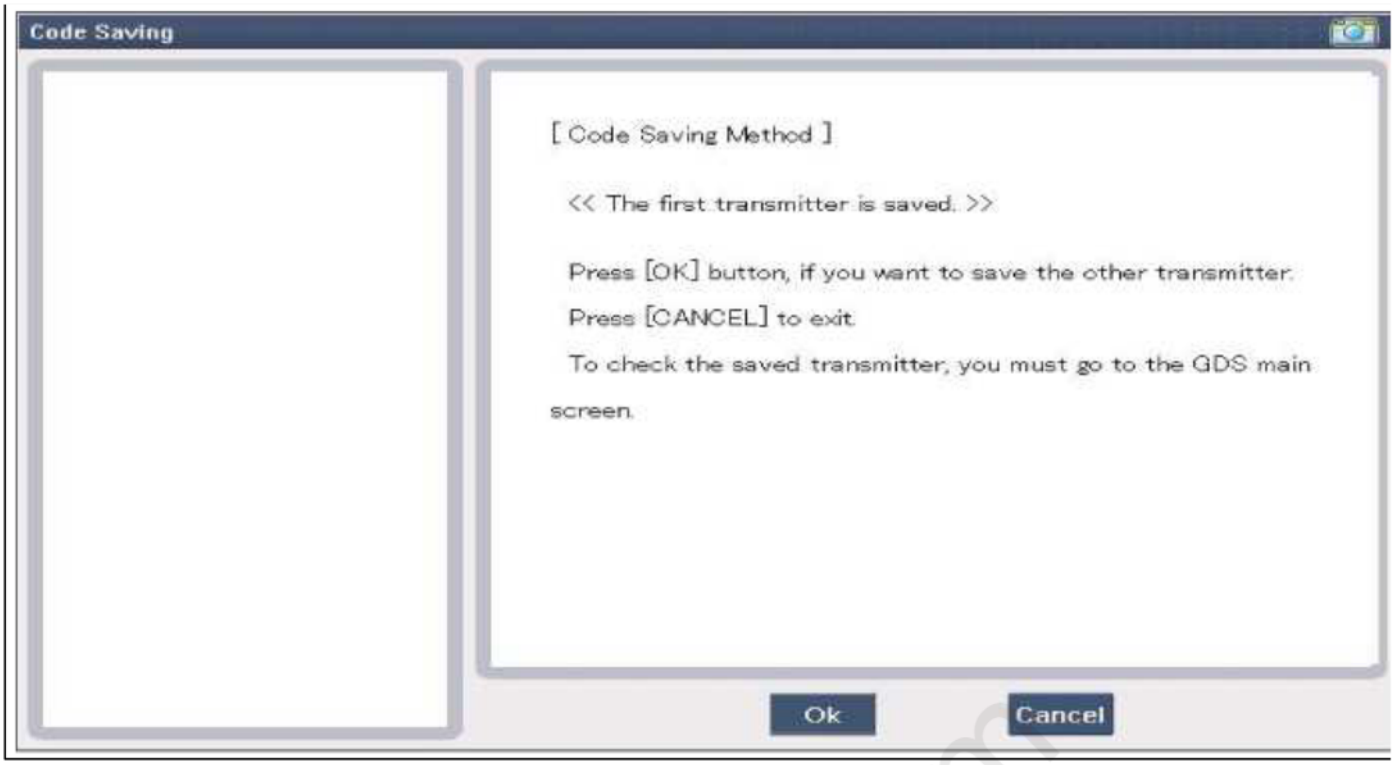

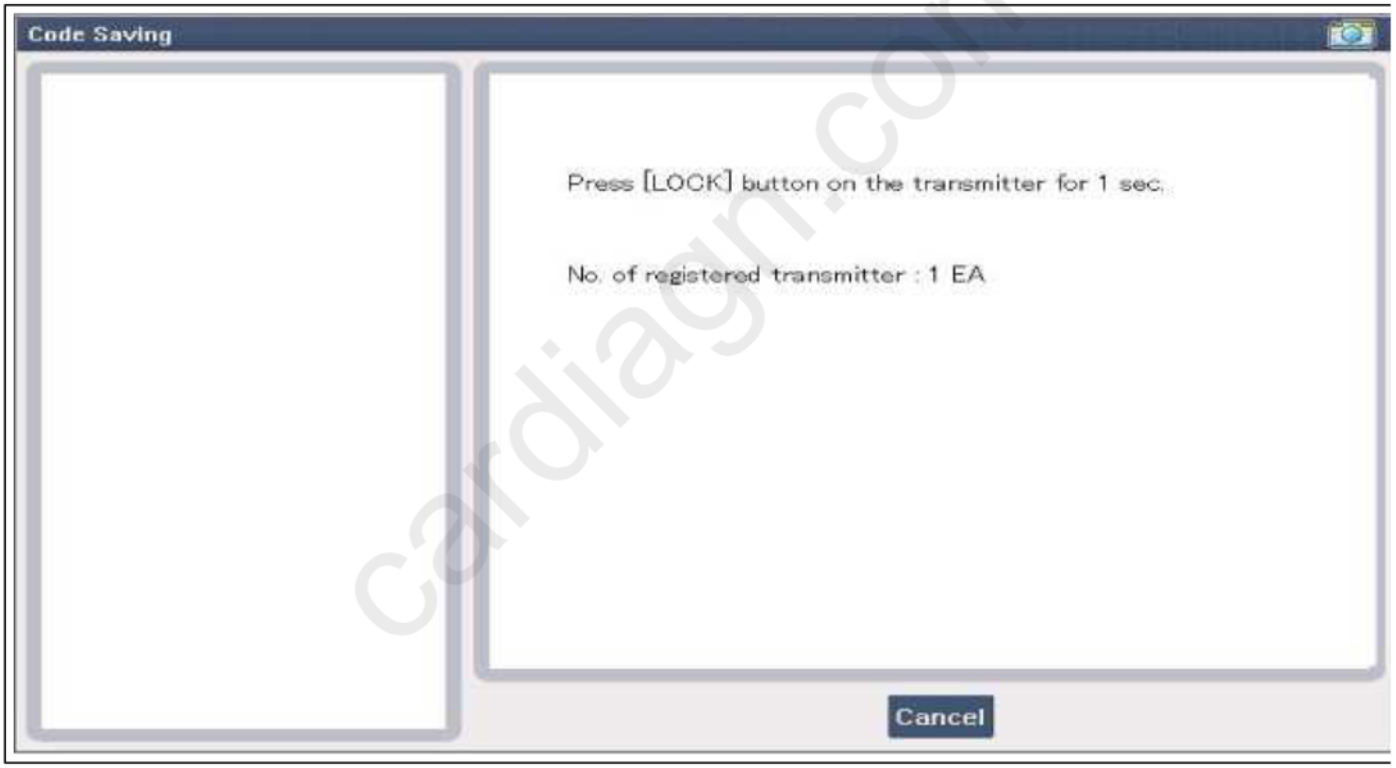

cardiagn.com

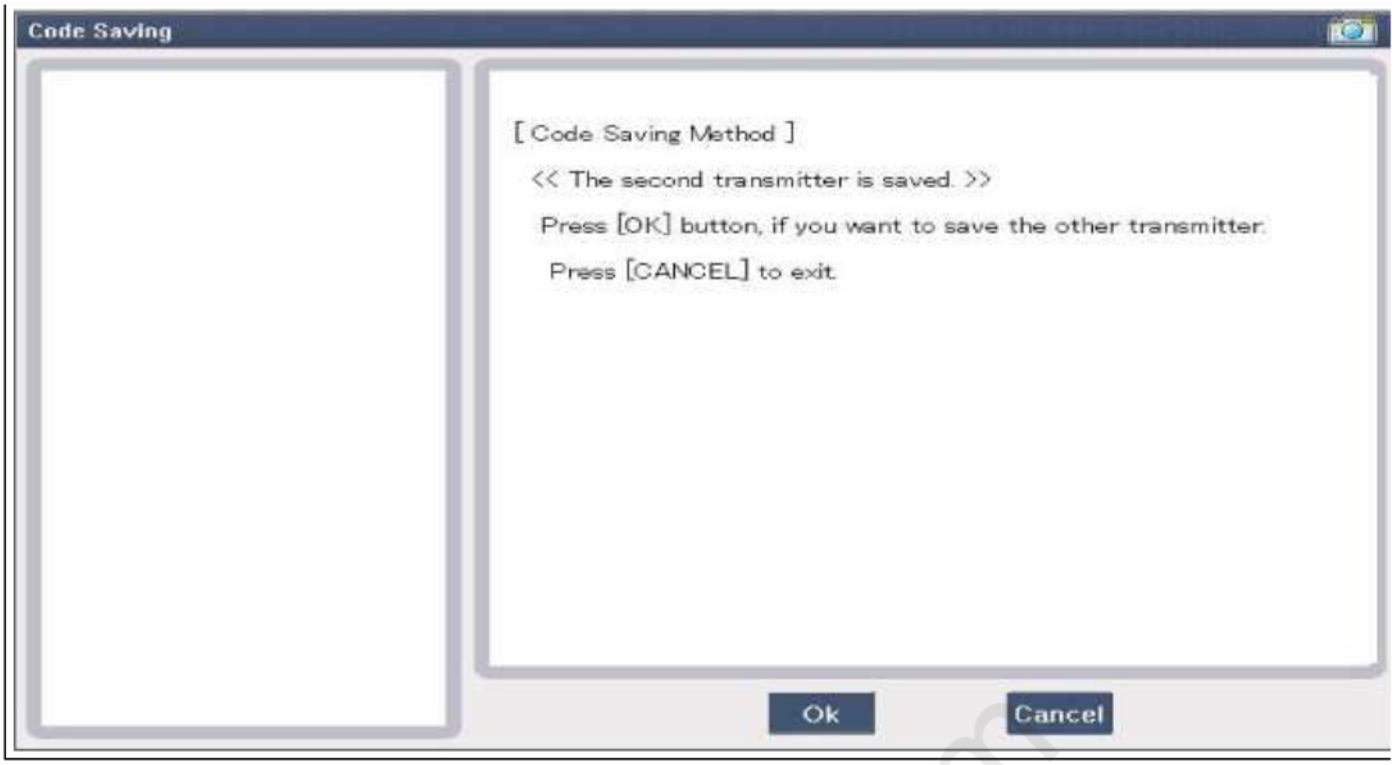

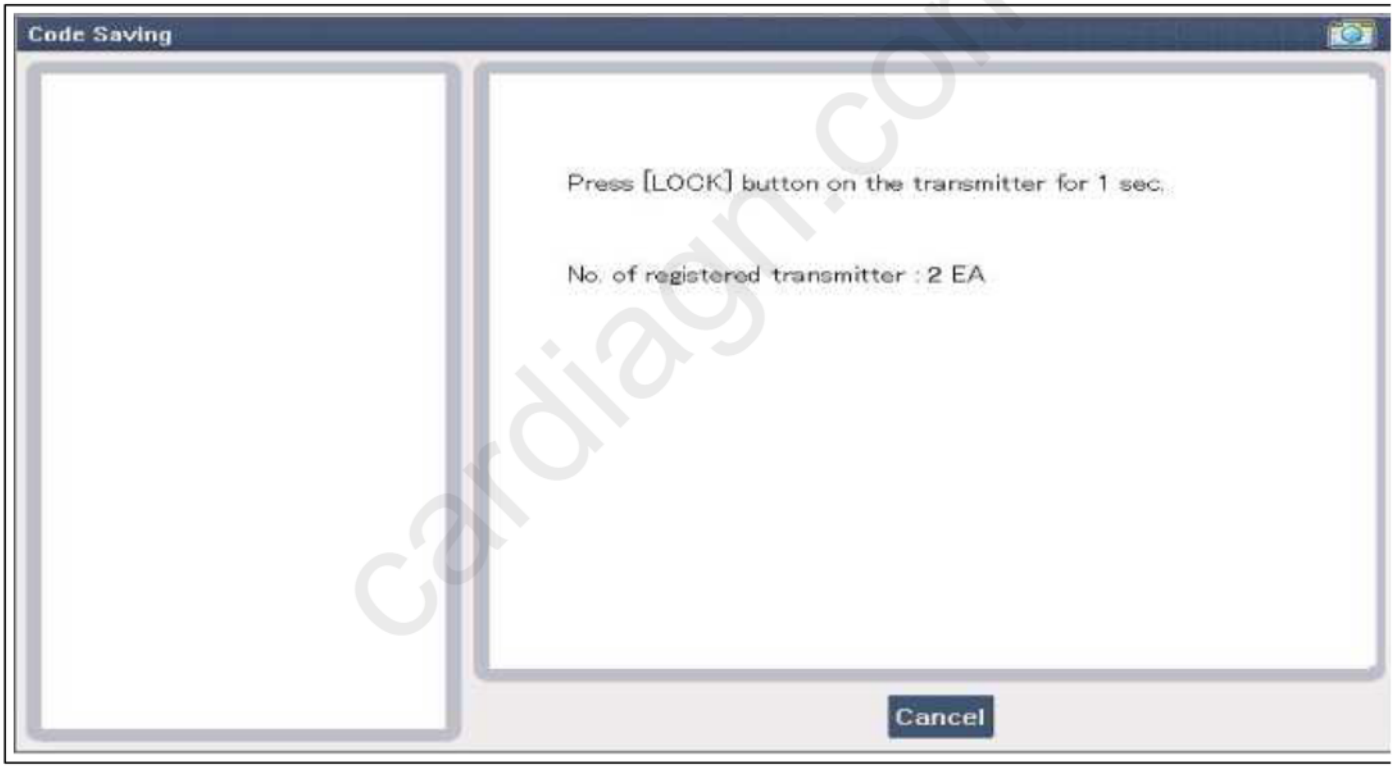

cardiagn.com

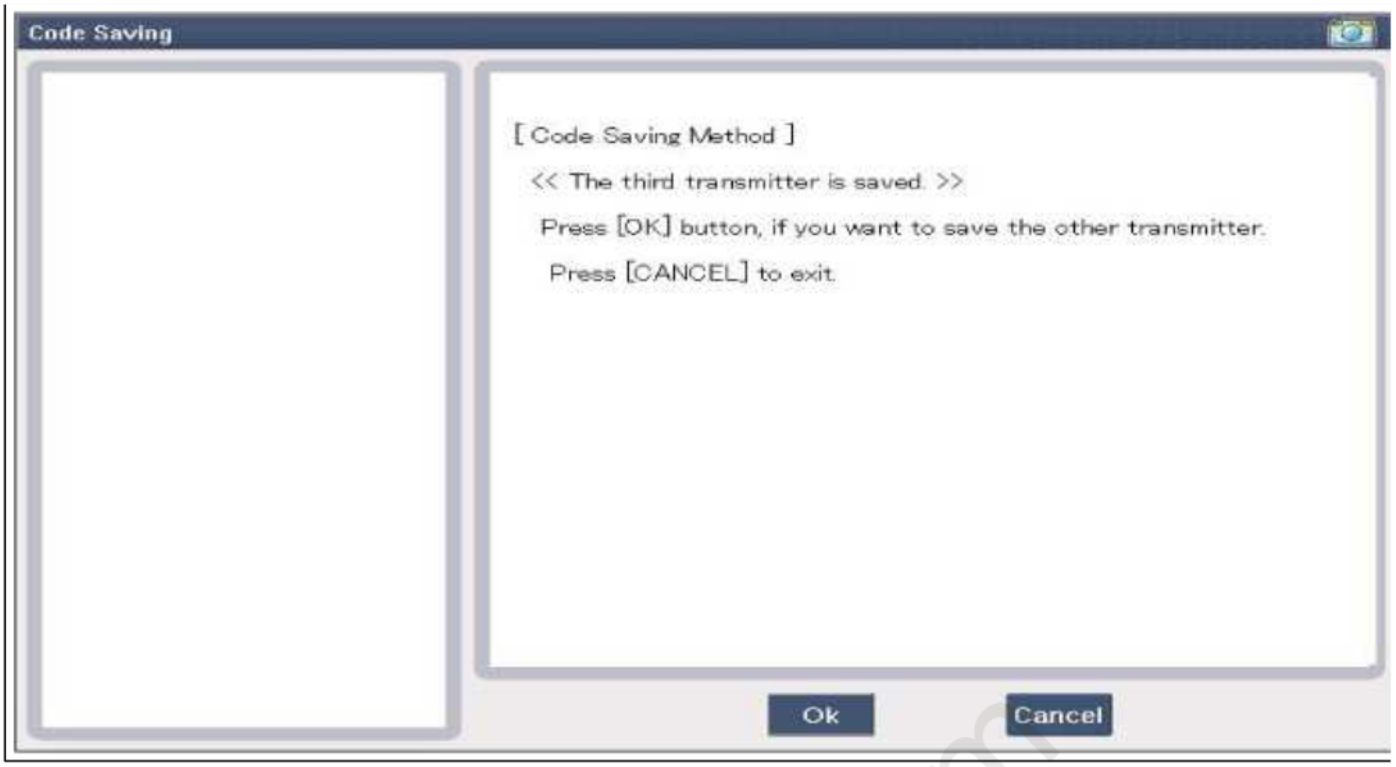

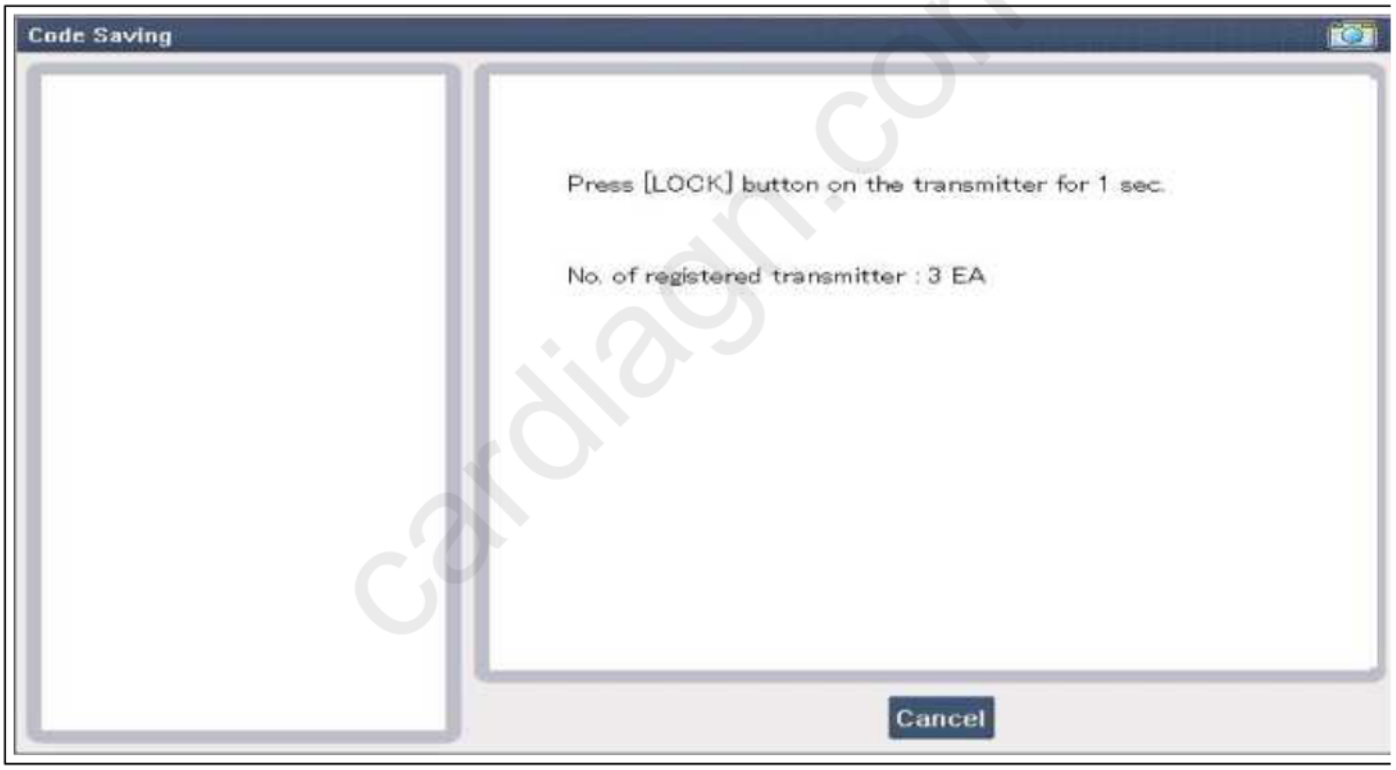

cardiagn.com

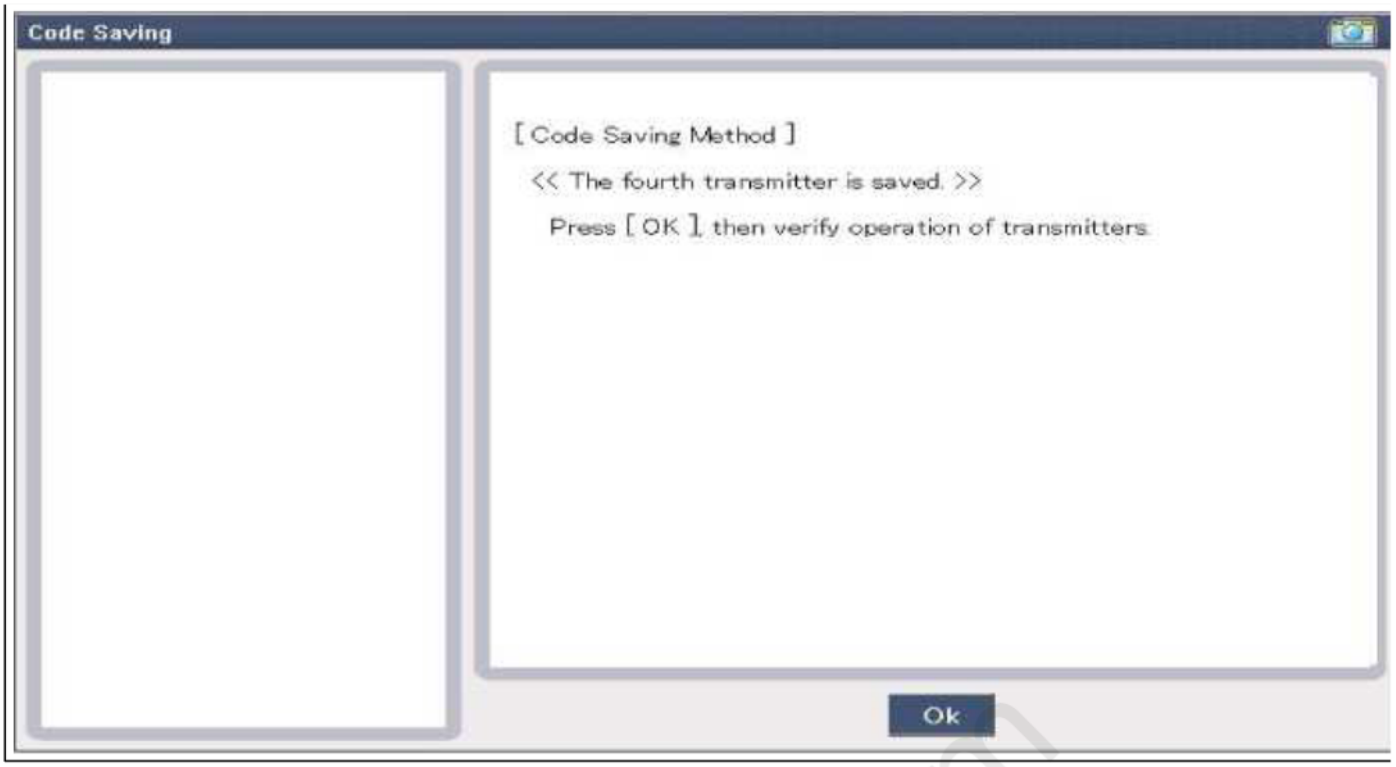

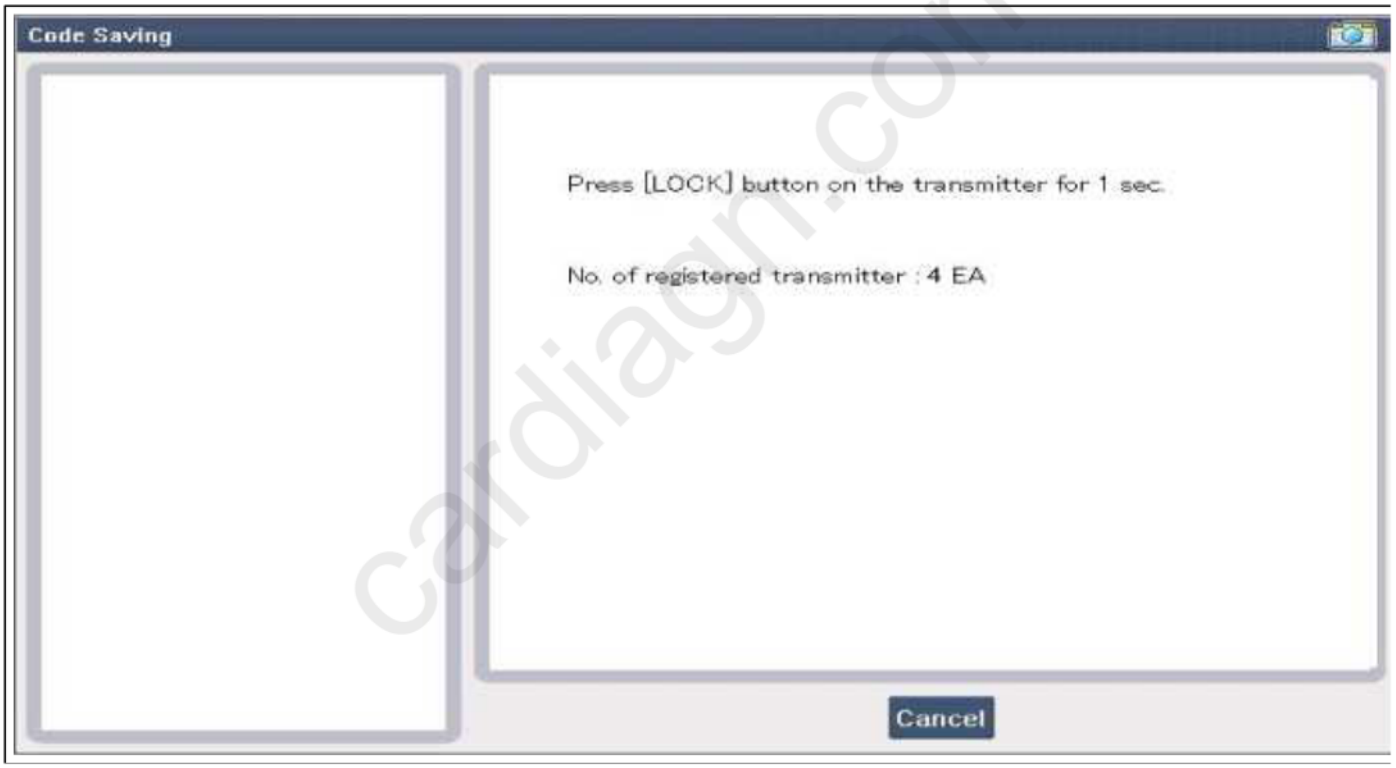

cardiagn.com

Body Electrical System > BCM (Body Control Module) > Body Control Module (BCM) > Specifications

Specifications

Items	Specifications
Rated voltage	DC 12V
Operating voltage	DC 9 ~ 16V
Operating temperature	-22°F~176°F(-30°C~ 80°C)
Insulation resistance	100MΩ or more
Dark current	BCM & Receiver : 5.5mA BCM : 4mA

Body Electrical System > BCM (Body Control Module) > Body Control Module (BCM) > Components and Components Location

Components

cardiagn.com

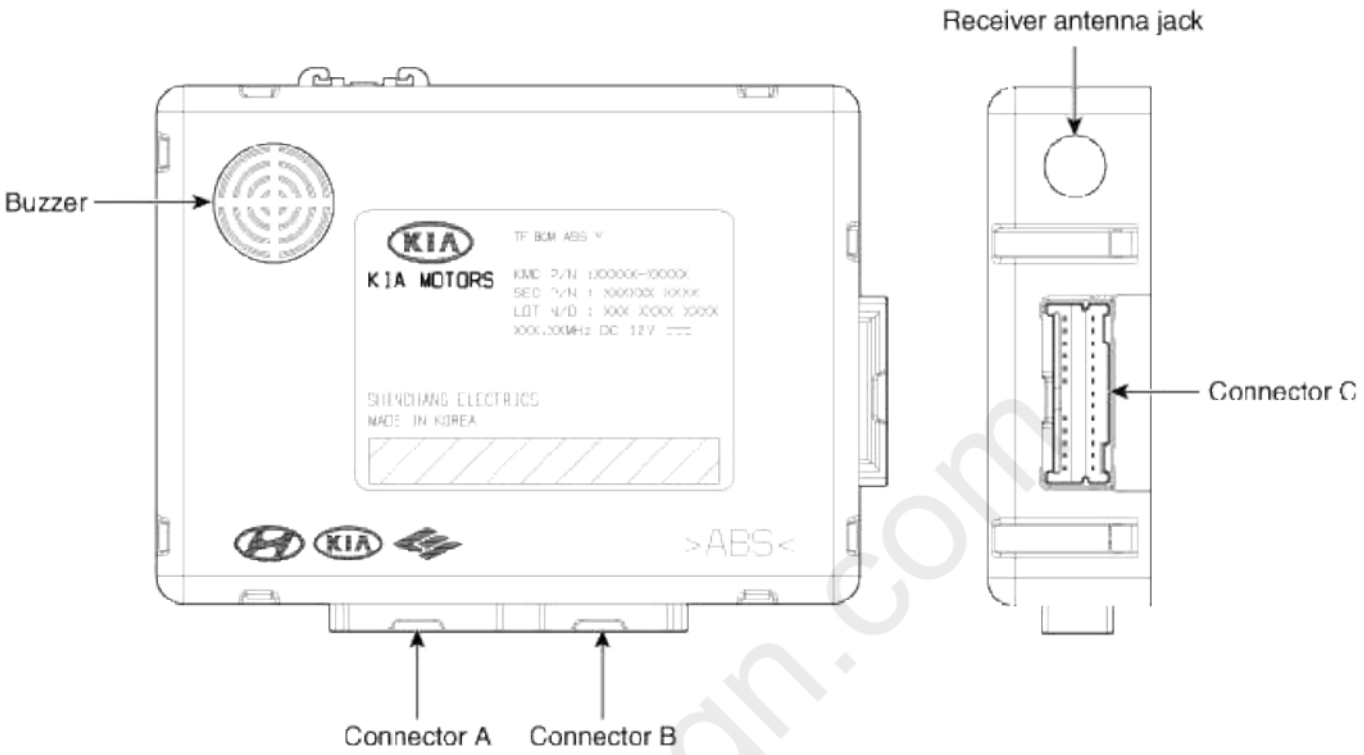

cardiagn.com

Body Electrical System > BCM (Body Control Module) > Body Control Module (BCM) > Schematic Diagrams

BCM Connector Terminals

BCM Input Signal SPEC

Signal Name	Description	Input Characteristics (determinant condition of connector base)	Power Source (Pull Up)	Input acquisition VBAT Threshold Voltage
V_B+	Supplying power	Pull down (Analog)	-	-
L_IGN1	IGN1 SW	Pull down (B+ Backup Line) (ON:VB,OFF:Open)	-	Min:7V Max17.5V

L_IGN2	IGN2 SW	Pull down (ON:VB,OFF:Open)	-	Min:7V Max17.5V
L_ACC	ACC	Pull down (ON:VB,OFF:Open)	-	Min:7V Max17.5V
L_MIST SW	Mist SW	Pull down (ON:VB,OFF:Open)	-	Min:7V Max17.5V
L_TAIL LAMP SW	Tail SW	Pull up (ON:Gnd,OFF:Open)	B+	Min:7V Max17.5V
L_KEY IN SW	Key IN SW	Pull up (ON:Gnd,OFF:Open)	B+	Min:7V Max17.5V
L_KEY INTER LOCK SW	Key Interlock SW	Pull up (ON:Gnd,OFF:Open)	B+	Min:7V Max17.5V
L_REAR DEFOGGER SW	Rear Derogger SW	Pull up (ON:Gnd,OFF:Open)	IGN1	Min:7V Max17.5V
P_CRASH UNLOCK INPUT	Crash Ulock Input	Pull up (ON:Gnd,OFF:Open)	B+	Min:7V Max17.5V
L_REAR FOG LAMP SW	Rear Fog SW	Pull up (ON:Gnd,OFF:Open)	IGN1	Min:7V Max17.5V
L_REAR WASHER SW	Washer SW	Pull down (ON:VB,OFF:Open)	-	Min:7V Max17.5V
L_REAR WIPER INT SW	Rear Wiper INT	Pull down (ON:VB,OFF:Open)	-	Min:7V Max17.5V
L_REAR WIPER ON SW	Rear Wiper SW	Pull down (ON:VB,OFF:Open)	-	Min:7V Max17.5V
L_FRONT WASHER SW	Front Washer SW	Pull down (ON:VB,OFF:Open)	-	Min:7V Max17.5V
L_FRONT INT WIPER SW	Front INT SW	Pull down (ON:VB,OFF:Open)	-	Min:7V Max17.5V
L_INH'R'	R Position	Pull down (ON:VB,OFF:Open)	-	Min:7V Max17.5V
L_BRAKE SW	Brake SW	Pull down (ON:VB,OFF:Open)	-	Min:7V Max17.5V
L_RR SBR SW	Rear Right SeatBelt SW	Pull up (ON:Gnd(Unbelt), OFF:Open(Belt))	IGN1	Min:7V Max17.5V
L_RC SBR SW	Rear Center SeatBelt SW	Pull up (ON:Gnd(Unbelt), OFF:Open(Belt))	IGN1	Min:7V Max17.5V
L_RL SBR SW	Rear Lift SeatBelt SW	Pull up (ON:Gnd(Unbelt), OFF:Open(Belt))	IGN1	Min:7V Max17.5V
L_RPAS OFF SW	RPAS Off SW	Pull up (ON:Gnd,OFF:Open)	IGN1	Min:7V Max17.5V

cardiag.com

L_DRL OPT	DRL Option SW	Pull up (ON:Gnd,OFF:Open)	B+	Min:7V Max17.5V
L_HEAD LAMP LOW SW	Head Lamp Low SW	Pull up (ON:Gnd,OFF:Open)	B+	Min:7V Max17.5V
L_HEAD LAMP HI SW	Head Lamp HI SW	Pull up (ON:Gnd,OFF:Open)	IGN1	Min:7V Max17.5V
L_FRONT FOG LAMP SW	Front Fog Lamp SW	Pull up (ON:Gnd,OFF:Open)	B+	Min:7V Max17.5V
L_AUTO LIGHT SW	Auto Light SW	Pull up (ON:Gnd,OFF:Open)	B+	Min:7V Max17.5V
L_REAR SEAT WARMER RH SW	RR Seat Warmer RH SW	Pull up (ON:Gnd,OFF:Open)	B+	Min:7V Max17.5V
L_REAR SEAT WARMER LH SW	RR Seat Warmer LH SW	Pull up (ON:Gnd,OFF:Open)	B+	Min:7V Max17.5V
A_FRONT WIPER INT VOLUME SW	Front Wiper INT Volume	Pull up (Analog)	IGN1	Min:7V Max17.5V
A_AUTO LIGHT SIGNAL	Auto Light Sensor	Pull down (Analog)	-	Min:7V Max17.5V

BCM Output Signal SPEC

Pin Name	Description	Pin Description	Load
O_SAFETY PWDW ENABLE	Safety power window enable output	Output	-
V_AutoLightPwr	Supplying Power with Auto Light Module	Output	-
V_RPASPwr	Supplying Power with RPAS Module	Output	-
O_DRUnlockOut	Door unlock output (AV Unlock)	Output (PWM)	-
O_ROOM LAMP	Room Lamp output	Output (PWM)	Lamp
O_AV TAIL SIGNAL	AV tail signal output	Output	-
O_RPASWarningBuzzer	RPAS warning buzzer output	Output (PWM)	Buzzer
O_HORN RELAY	Horn relay output	Output	Relay
O_POCKET LAMP	Pocket lamp output	Output	LED
O_RPAS OFF IND	RPAS off indicator output	Output	LED
O_HEAD LAMP WASHER RELAY	Head lamp washer relay output	Output	Relay
O_HEAD LAMP LOW SIGNAL	Head lamp low output state signal	Output	-
O_FRONT WIPER RELAY	Front wiper relay output	Output	Relay
O_REAR WIPER RELAY	Rear wiper relay output	Output	Relay
O_FOOT LAMP	Foot lamp output	Output (PWM)	Lamp
O_ATM SOLENOID	ATM shift lock solenoid output	Output	Solenoid
O_KEY SOLENOID	Key solenoid output	Output	Solenoid

cardiagn.com

O_AST SEAT BELT IND	Assist seat belt indicator output	Output	LED
O_RR SBR IND	Rear right SBR indicator output	Output	LED
O_RC SBR IND	Rear center SBR indicator output	Output	LED
O_RL SBR IND	Rear left SBR indicator output	Output	LED
O_SECURITY IND	Security led indicator output	Output	LED
O_KEY HOLE ILLUMINATION LAMP	Key hole illumination lamp output	Output	Lamp
O_REAR SEAT WARMER RH RELAY	Rear seat warmer right relay output	Output	Relay
O_REAR SEAT WARMER LH RELAY	Rear seat warmer left relay output	Output	Relay
O_RR FOG RELAY	Rear fog lamp relay output	Output	Relay

Pin Arrangement

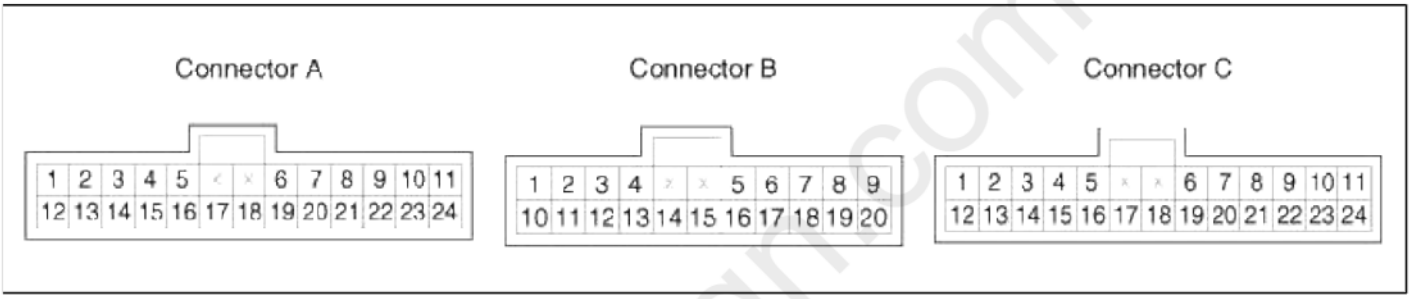

Connector A

No.	Name	Description
A1	V_B+	Supply power to BCM
A2	L_IGN1	Ignition1 voltage signal input
A3	L_IGN2	Ignition2 voltage signal input
A4	L_ACC	Accessory voltage signal input
A5	L_MIST SW	Wiper mist switch signal input
A6	L_TAIL LAMP SW	Tail switch signal input
A7	L_KEY IN SW	Key insertion signal input
A8	L_KEY INTER LOCK SW (P-position)	P-position signal input
A9	L_REAR DEFOGGER SW	Rear defogger switch signal input
A10	P_CRASH UNLOCK INPUT	Crash unlock signal input
A11	L_REAR FOG LAMP SW	Rear fog switch signal input
A12	L_REAR WASHER SW	Rear washer switch signal input
A13	L_REAR WIPER INT SW	Rear wiper intermittent switch signal input
A14	L_REAR WIPER ON SW	Rear wiper switch signal input
A15	L_FRONT WASHER SW	Front washer switch signal input
A16	L_FRONT INT WIPER SW	Front wiper intermittent switch signal input

cardiagn.com

A17	L_INH'R' (R-position, M/T)	R-position signal input
A18	L_BRAKE SW	Brake switch signal input
A19	L_RR SBR SW	Rear right seat belt reminder switch signal input
A20	L_RC SBR SW	Rear center seat belt reminder switch signal input
A21	L_RL SBR SW	Rear left seat belt reminder switch signal input
A22	L_RPAS OFF SW	RPAS off switch signal input
A23	L_DRL OPT SW	DRL option switch signal input
A24	GND	Signal(BCM) ground

Connector B

No.	Name	Description
B1	L_HEAD LAMP LOW SW	Head lamp low switch signal input
B2	L_HEAD LAMP HI SW	Head lamp passing switch signal & Head Lamp High switch signal input
B3	L_FRONT FOG LAMP SW	Front fog lamp switch signal input
B4	O_SAFETY PWDW ENABLE	Safety power window enable output
B5	DIAGNOSIS (K-LINE)	Diagnostic Communication line K for Tester
B6	V_AutoLightPwr	Auto light power output
B7	V_RPASPwr	RPAS power output
B8	LIN (RPAS1)	Lin Communication line (RPAS1)
B9	LIN (RPAS2)	Lin Communication line (RPAS2)
B10	L_AUTO LIGHT SW	Auto light switch signal input
B11	A_FRONT WIPER INT VOLUME SW	Front wiper intermittent volume switch signal input
B12	O_DRUnlockOut	Door unlock output (AV Unlock)
B13	L_REAR SEAT WARMER RH SW	Rear seat warmer right switch signal input
B14	CAN HIGH	Can network communication line(high)
B15	CAN LOW	Can network communication line(low)
B16	GND (Auto Light)	Auto light ground
B17	A_AUTO LIGHT SIGNAL	Auto light sensor signal input
B18	LIN (RPAS3)	Lin Communication line (RPAS3)
B19	LIN (RPAS4)	Lin Communication line (RPAS4)
B20	GND (RPAS)	RPAS ground

Connector C

cardiagn.com

No.	Name	Description
C1	O_ROOM LAMP	Room Lamp output
C2	O_AV TAIL SIGNAL	AV tail signal output
C3	O_RPASWarningBuzzer	RPAS warning buzzer output
C4	O_HORN RELAY	Horn relay output
C5	O_RL SBR IND	Rear left SBR indicator output
C6	L_REAR SEAT WARMER LH SW	Rear seat warmer left switch signal input
C7	O_RPAS OFF IND	RPAS off indicator output
C8	O_HEAD LAMP WASHER RELAY	Head lamp washer relay output
C9	O_HEAD LAMP LOW SIGNAL	Head lamp low output state signal
C10	O_FRONT WIPER RELAY	Front wiper relay output
C11	O_REAR WIPER RELAY	Rear wiper relay output
C12	O_FOOT LAMP	Foot lamp output
C13	O_ATM SOLENOID	ATM shift lock solenoid output
C14	O_KEY SOLENOID	Key solenoid output
C15	O_AST SEAT BELT IND	Assist seat belt indicator output
C16	GND	BCM ground
C17	O_RR SBR IND	Rear right SBR indicator output
C18	O_RC SBR IND	Rear center SBR indicator output
C19	O_POCKET LAMP	Pocket lamp output
C20	O_SECURITY IND	Security led indicator output
C21	O_KEY HOLE ILLUMINATION LAMP	Key hole illumination lamp output
C22	O_REAR SEAT WARMER RH RELAY	Rear seat warmer right relay output
C23	O_REAR SEAT WARMER LH RELAY	Rear seat warmer left relay output
C24	O_RR FOG RELAY	Rear fog lamp relay output

cardiagn.com

Circuit Diagram

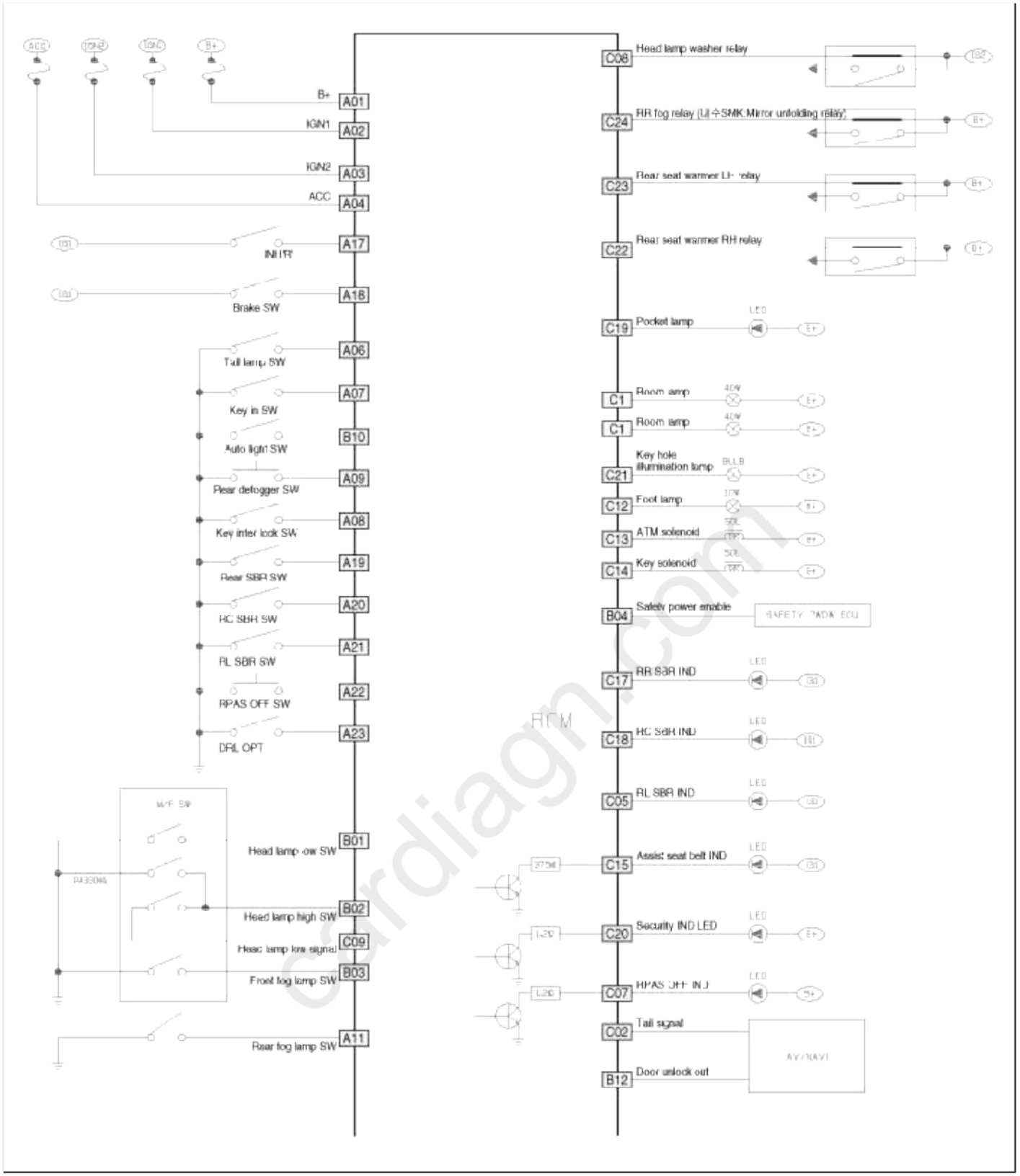

cardiagn.com

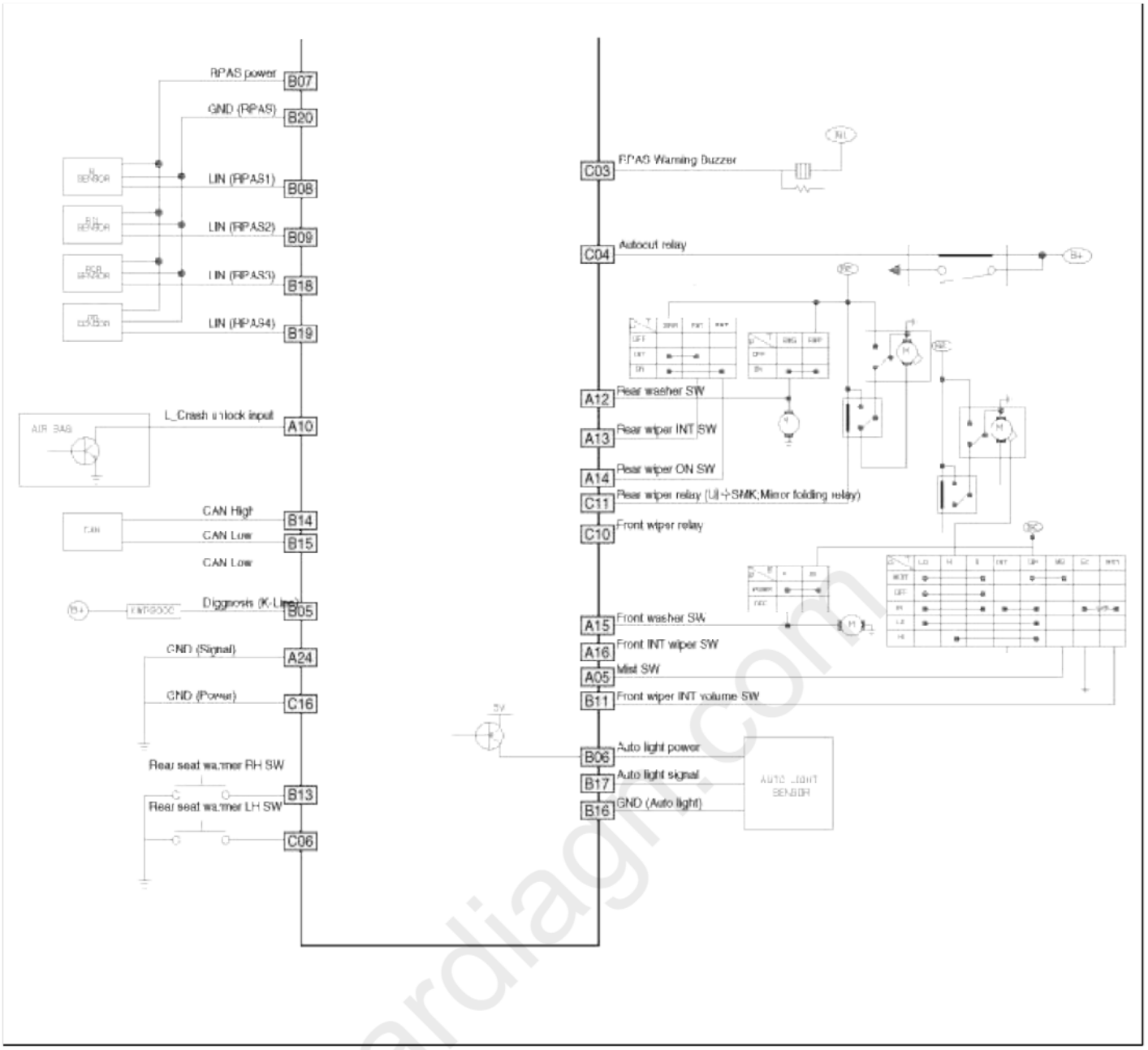

Body Electrical System > BCM (Body Control Module) > Body Control Module (BCM) > Description and Operation

Description

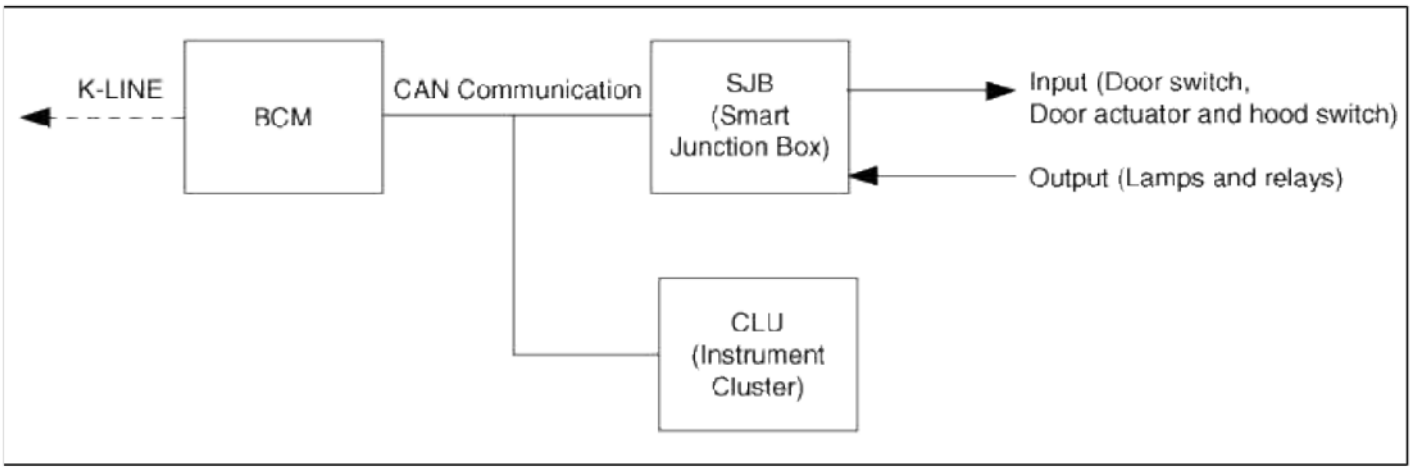

Body control module receives various input switch signals controlling time and alarm functions for the

intermittent wiper timer, washer timer, rear defogger timer, seat belts warning, central door lock, ignition key reminder, power window, door warning, tail lamp, crash door unlock, ignition key hole illumination, rear fog lamp control and keyless entry & burglar alarm.
BCM, SJB(Smart Junction Box) and CLU(Instrument Cluster) are connected by CAN line.
The nearest module with input switch or actuator receives the input data to reduce the wiring and then send input data to the others which need them via CAN lines.
In case of sending output, it is used to CAN communication, not wiring.
SJB can also control relays and IPS.
So Each module allots the current data and actuation data.

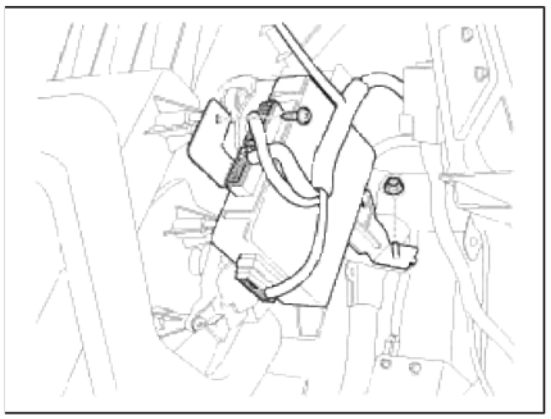

Function

Wiper Control

Washer Control Coupled With Wiper

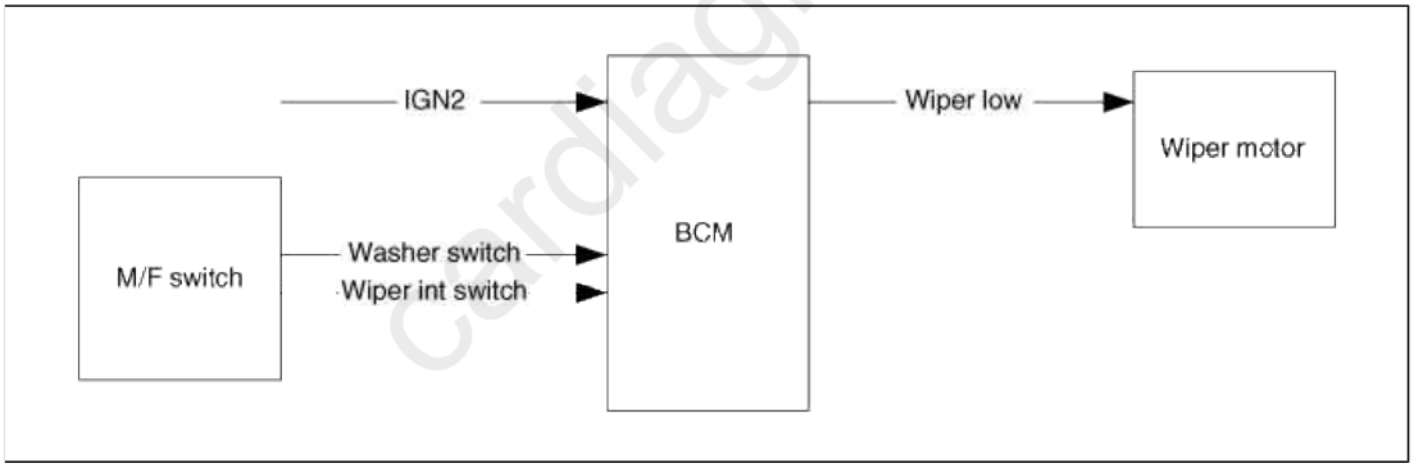

1. Under IGN2 = ON, wiper LOW relay is turned ON after T2 from Washer switch ON if washer switch is ON for T1 and wiper LOW relay is turned OFF after T3.

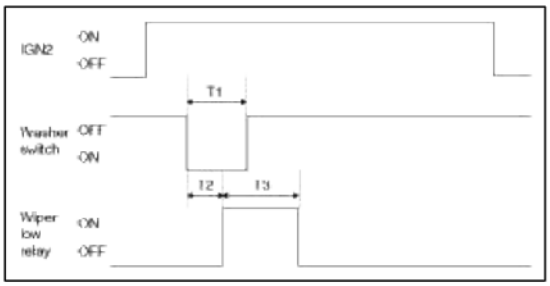

T1 0.06s~0.2s, T2 0.3s ±0.1s, T3 0.7s ±0.1s

cardiagn.com

2. Under IGN2 switch ON, wiper LOW relay is turned ON after T2 from Washer switch ON if washer switch is ON for at least T1, and wiper LOW relay is turned OFF after T3 from the moment that Washer switch is turned OFF.

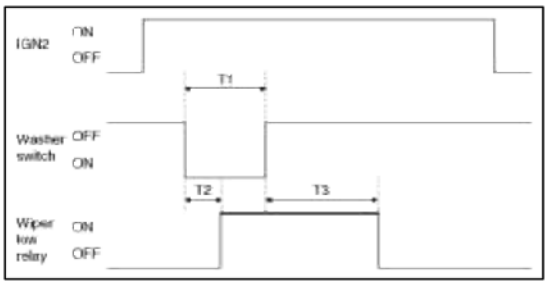

T1 0.2s(MIN), T2 0.3s ±0.1s
T3 2.5s~3.8s(2~3 Turn)

3. Operation in Item (2) is performed if Washer switch is ON for at least T1 during WIPER operation with Wiper int switch. Operation in Item (1) is performed if Washer switch is ON for T6.

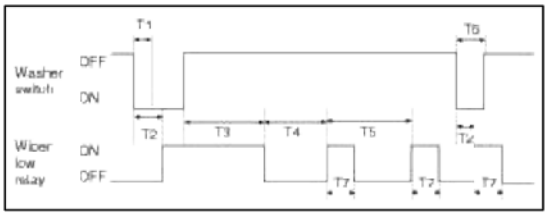

T1 0.2s(MIN) , T2 0.3s ±0.1s
T3 2.5s~3.8s(2~3 Turn), T4 T5 - 0.7s
T5 INT TIME, T6 0.06s ~0.2s, T7 0.7s ±0.1s

4. Operation is cancelled in case of IGN OFF during T3.
5. Give priority to WASHER interlocking WIPER than Speed sensing INT WIPER function.
6. Washer switch signal input shall be ignored at start-up (IGN1 ON & IGN2 OFF states).
7. Switch ON time includes chattering time

Front Wiper Mist Function Wiper

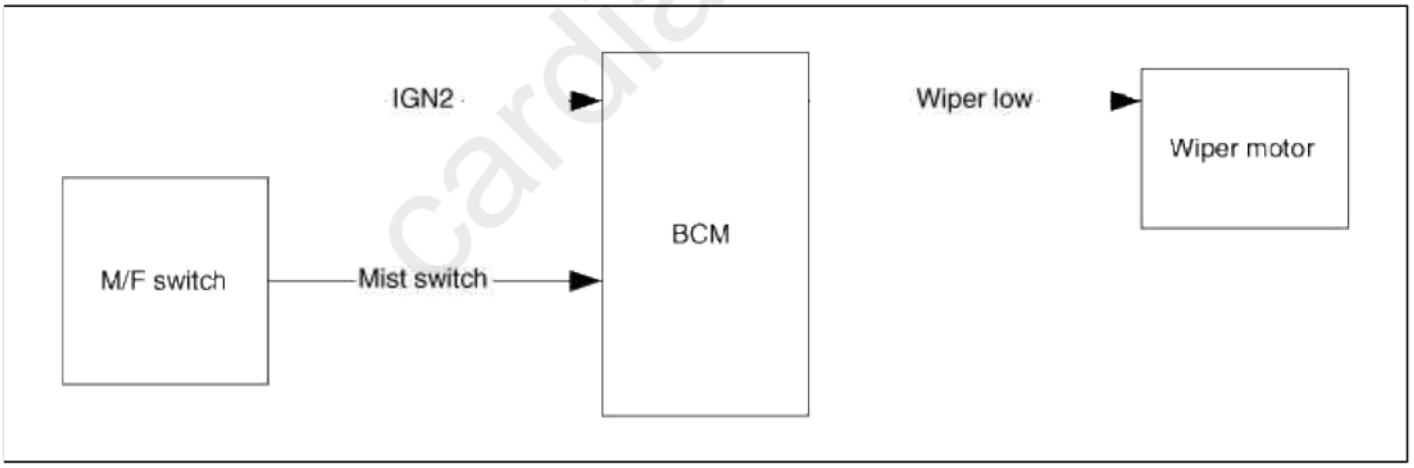

cardiagn.com

1. Function Description

In case of IGN2 On (IGN2 ON), if turning on the Wiper Mist switch(Wiper Mist switch On), then Wiper is controlled, by switch on time. Mist operation does not work at Wiper Washer.

Mist Switch On Time (TMist)	Action
TMist < 0sec	No action
0sec ≤ TMist < 0.7sec	After "Mist Out Delay Time", turn on the Wiper Low Output for "One Wiping" Time (the remaining motor operation to reach wiper park position is done by electrical wiring)
0.7sec ≤ TMist	After "Mist Out Delay Time", turn on the Wiper Low Output and after Mist switch off, Wiper Low Output is Off immediately (the remaining motor operation to reach wiper park position is done by electrical wiring)

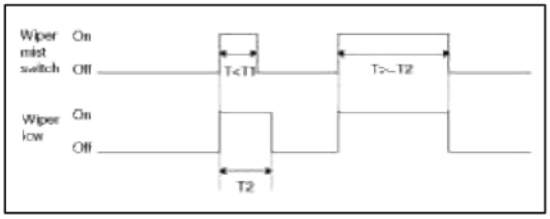

T1 : One Wiping, T2 : Mist One Time

2. Under IGN2 switch ON, Wiper LOW relay is turned ON immediately from Mist switch ON if Mist switch ON for more than T1, Wiper LOW relay is turned OFF after T2 from Mist switch OFF.

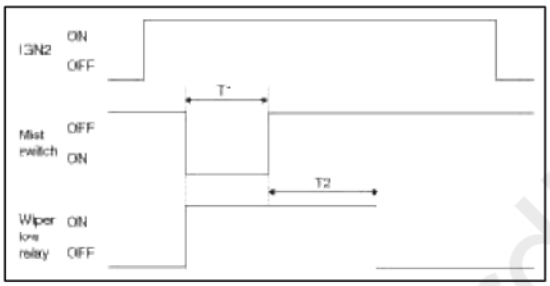

T1 : 0.7s(Min), T2 : 0.7s±0.1s

Variable Int Wiper

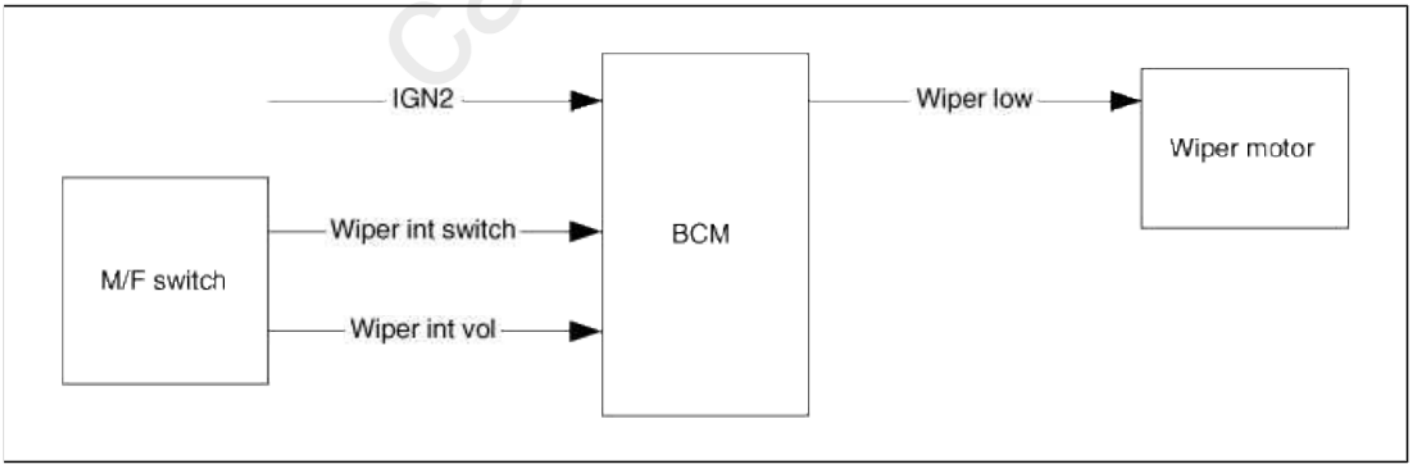

cardiagn.com

1. Under IGN2 switch ON & Wiper Int switch ON states, and wiper int volume value are acquired and intermittent time is calculated. then, wiper intermittent time is automatically converted.

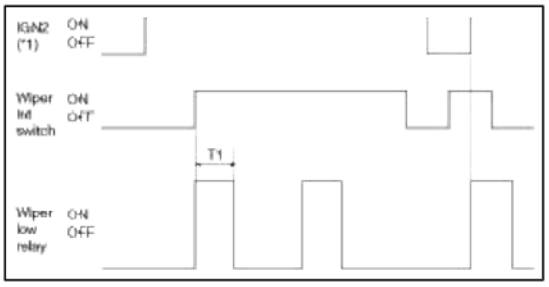

T1 : 0.7 ± 0.1s, T2 : INT Time(2.2 ± 0.2s ~ 10 ± 1s)

*1 ON : IGN2 = ON OFF: IGN2 = OFF

2. Wiper Control Precaution

(1) Variable int wiper

A. Wiper low relay time is 0.7s ±0.1s.

B. Intermittent time is from output ON to the next output ON.

C. Wiper low relay output is continued for remaining ON time if INT switch is turned OFF during output.

D. Intermittent time is restarted when IGN2 switch is ON and wiper Int switch is changed from OFF to ON.

E. Intermittent time is restarted when wiper int switch is ON and IGN2 switch is changed from OFF to ON

F. 2.5V is used when volume value is 2.5V or more.

Input voltage (Volume)	Intermittent time (sec) ±10%	Remarks
	Speed is fixed	
0.0V	2.2 Sec	
1.0V	3 Sec	
1.5V	3.8 Sec	
2.0V	5.6 Sec	
2.5V	10 Sec	

Buzzer Control

Data Flow

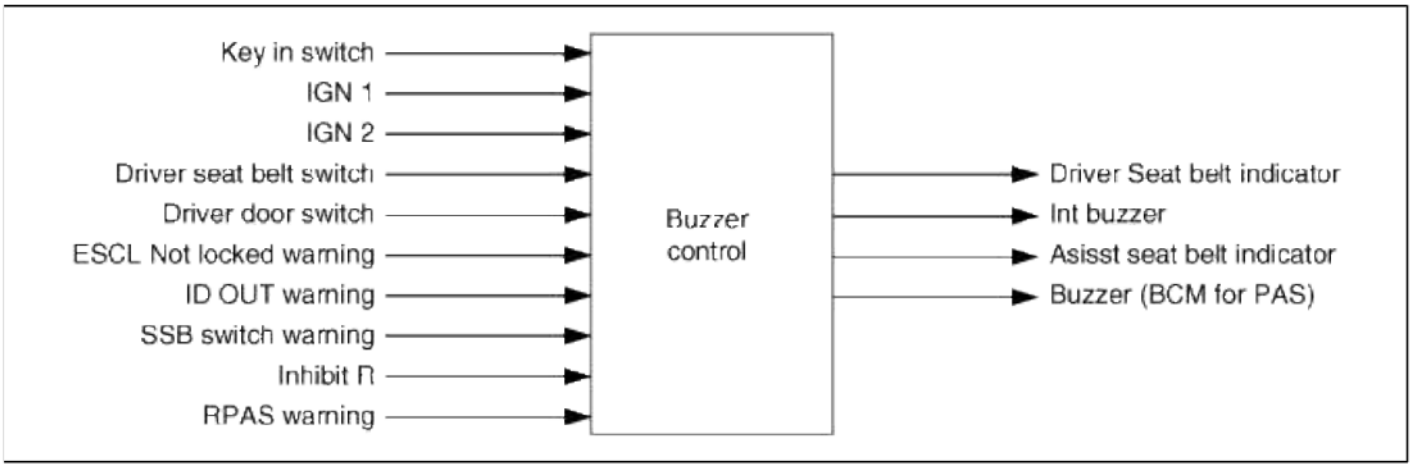

Buzzer Sound

cardiagn.com

1. Buzzer sound spec

Priority	Name	Cycle	Duration
1	RPAS warning	-	Spec
2	Seatbelt warning	1s / Reductive	Spec
3	Key operated warning	1s / Reductive	Infinite
4	Parking brake warning	0.6s / Reductive	Infinite
5	Vehicle not P warning	0.6s / Reductive	Spec
6	ID out warning	Continuous Sound	Spec
7	SSB button warning	0.6s / Reductive	Spec
8	Key battery discharge warning	0.6s / Reductive	Spec
9	Deactivation warning	Continuous Sound	Spec

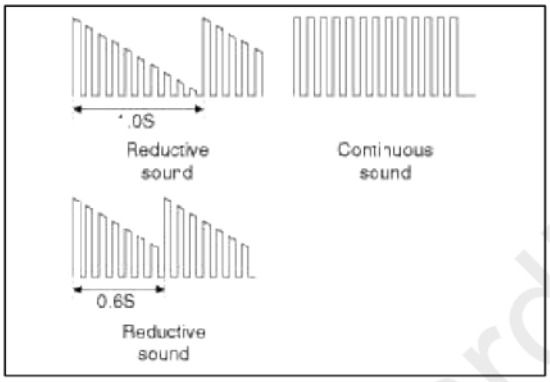

2. Buzzer output

Buzzer output to estimate BCM int buzzer in cluster, and data transmission.

Internal buzzer is used for rear parking assist system.

Seat belt reminder (Driver seat)

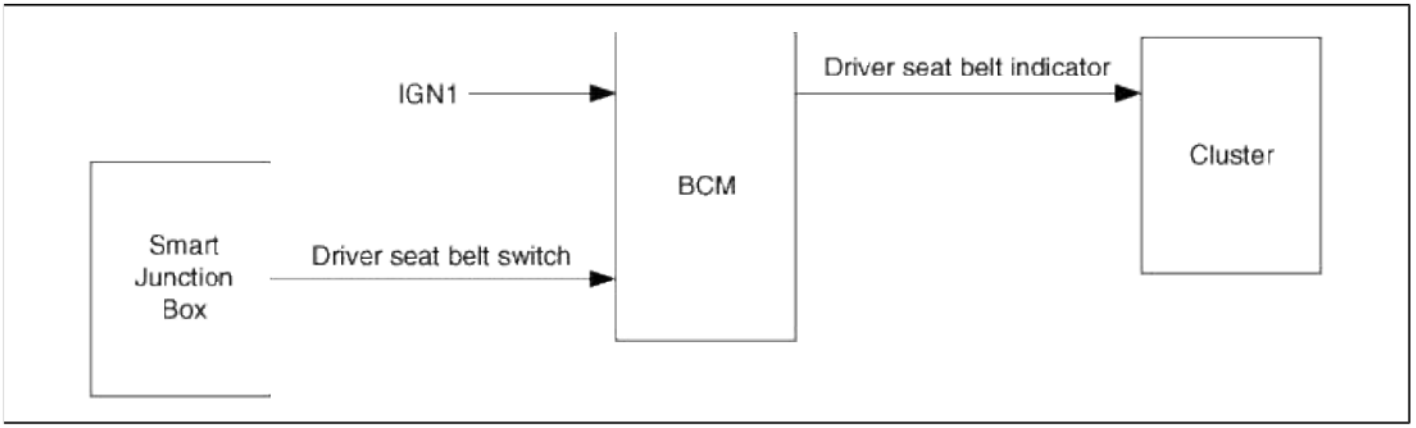

1. From IGN1 switch ON, Warning lamp for 1sec(DUTY 50%) and Chime buzzer for 6 time every 1sec. (in case of S/BELT unfastened state) But, within 6sec in the S/BELT fastened, the Chime buzzer output is stop, and Warning lamp is the remaining time.
2. Lamp and Chime buzzer become output stop when IGN1 is turned OFF within 6sec-output.

cardiagn.com

3. If vehicle speed over 10Km/h, Warning lamp and Chime buzzer are work for 1time when Seat belt unfastened after IGN ON.
4. If vehicle speed below 5Km/h or IGN OFF or seat belt fastened, pattern is stop when pattern is running.
5. Seat belt fastened→unfastened when IGN1=ON state : if vehicle speed over 10Km/h,1time output. And if vehicle speed 5~10Km/h, Warning lamp for 1s(DUTY 50%) and Chime buzzer for 6 every 1s. If vehicle speed less than 5Km/h, Warning lamp for 6 every 1s(DUTY 50%)

Seat belt reminder (Assist seat)

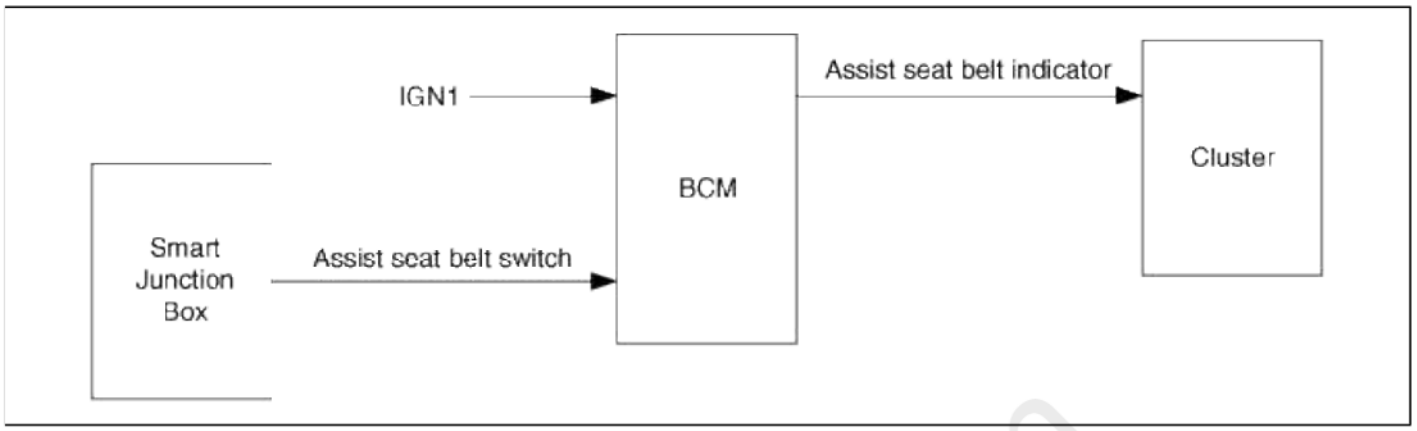

1. Warning lamp lights continuously every 1sec(DUTY 50%) for 6sec when IGN is turned ON under unfastened seat belt.
2. Warning lamp is turned OFF when IGN is turned OFF within in time.
3. When IGN is ON under unfastened seat belt, the warning lamp lights. The lamp continues to light for remaining time of 6sec when seat belt is fastened within 6sec. The lamp is OFF if seat belt is fastened after 6sec.
4. When IGN is ON and vehicle speed becomes 10Km or more and unfastened seat belt, warning lights ON continuously.
5. Under the (4)state, warning lamp is stopped when seat belt is unfastened or vehicle speed becomes under 5Km/h or IGN is turned OFF.

Key Operated Warning

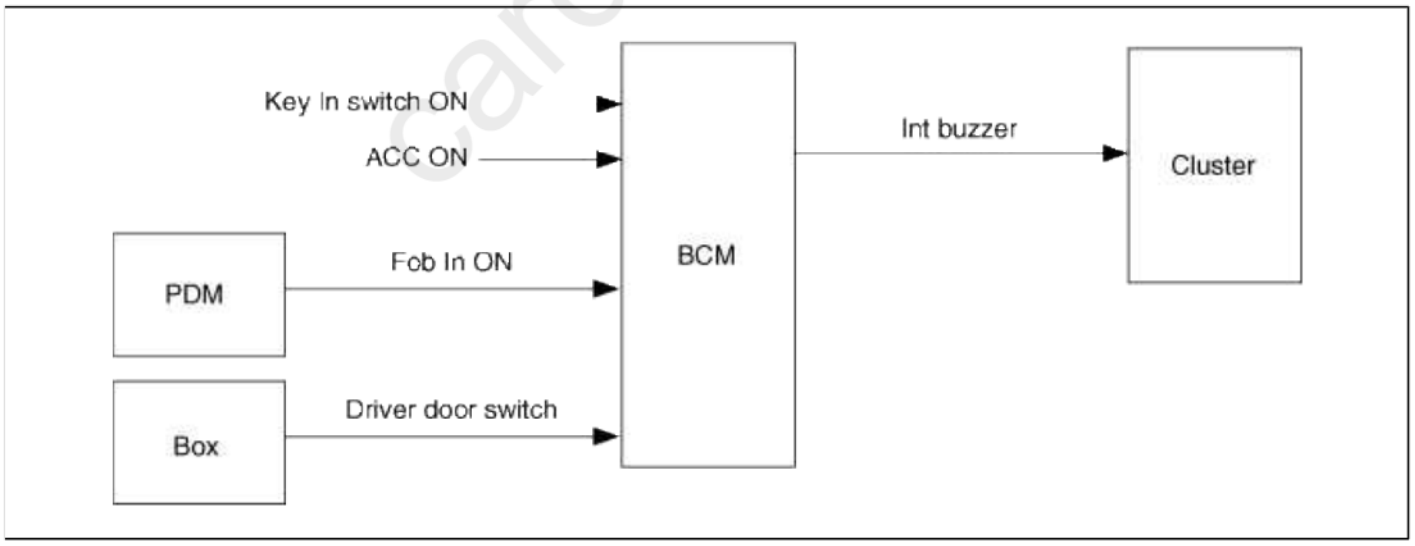

1. Int buzzer on every 1sec when driver door switch is on and key ign on.
2. Output is off if key ign is in off and driver door switch closed are met during Int buzzer output.

cardiagn.com

3. At IGN1 on, output is off.

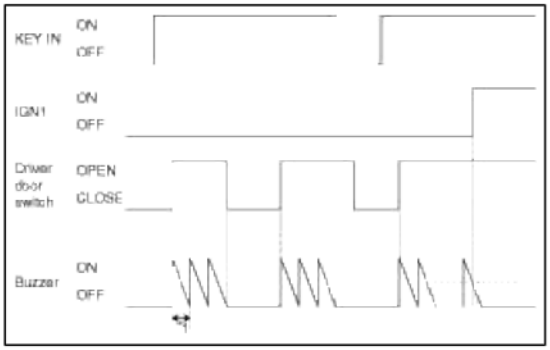

T1 : 1 ± 0.1sec

KEY IN ON : Key in switch ON or ACC ON or fob in ON

KEY IN OFF : Key in switch OFF and ACC OFF and fob in OFF

ID Out Warning (SMK)

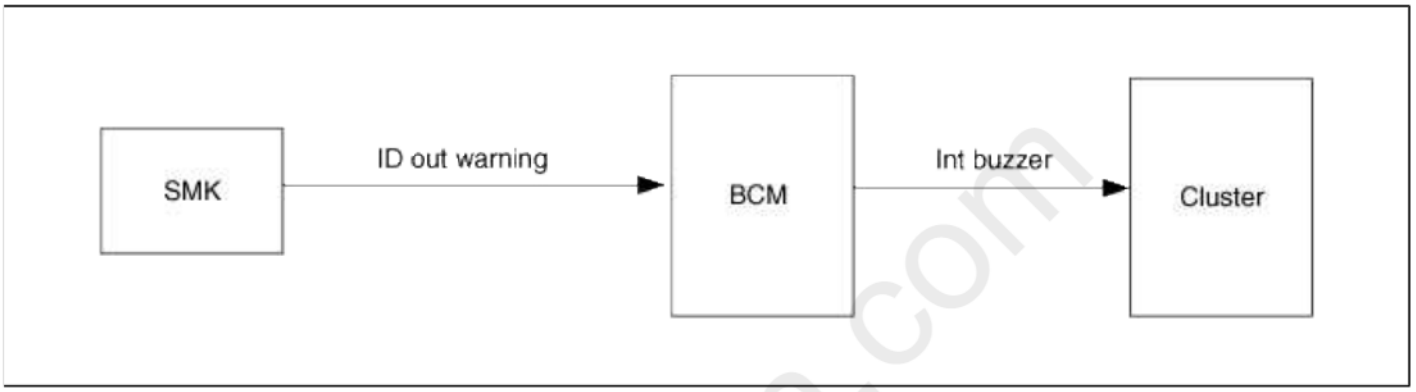

WARNING BUZZER outputs for the time of reception about ID OUT Warning(CAN) ON.

WARNING BUZZER OUTPUT STOPS when receiving OFF

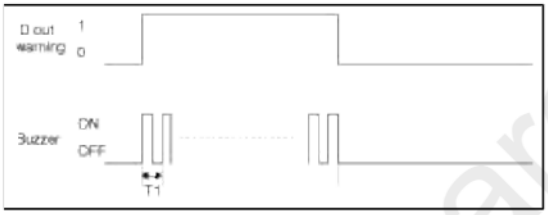

T1 : 1 ± 0.1sec

SSB Switch Warning (SMK)

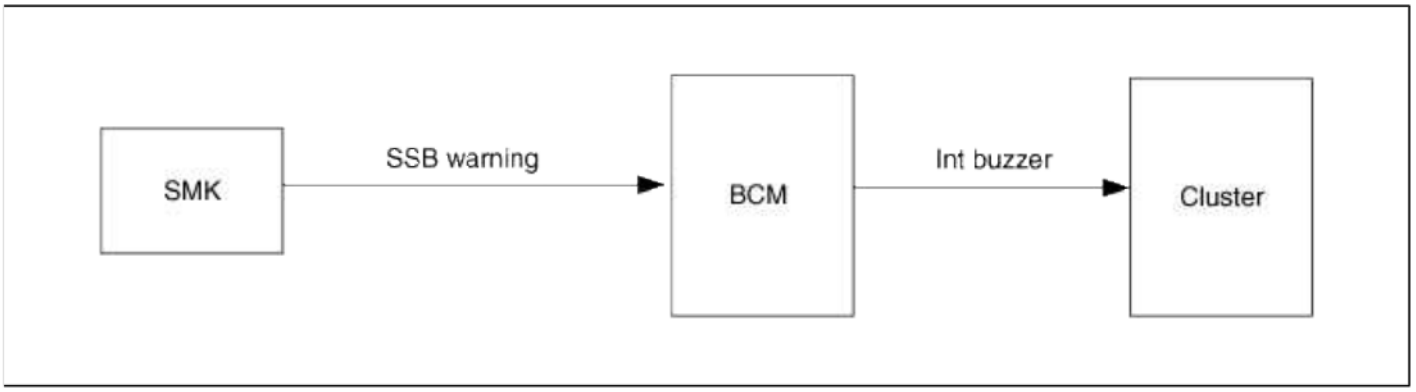

WARNING BUZZER outputs for the time of reception about SSB Warning(CAN) ON.

WARNING BUZZER OUTPUT STOPs when receiving OFF.

cardiagn.com



T1 : 0.6 ± 0.1sec

Vehicle Not P Warning (SMK)

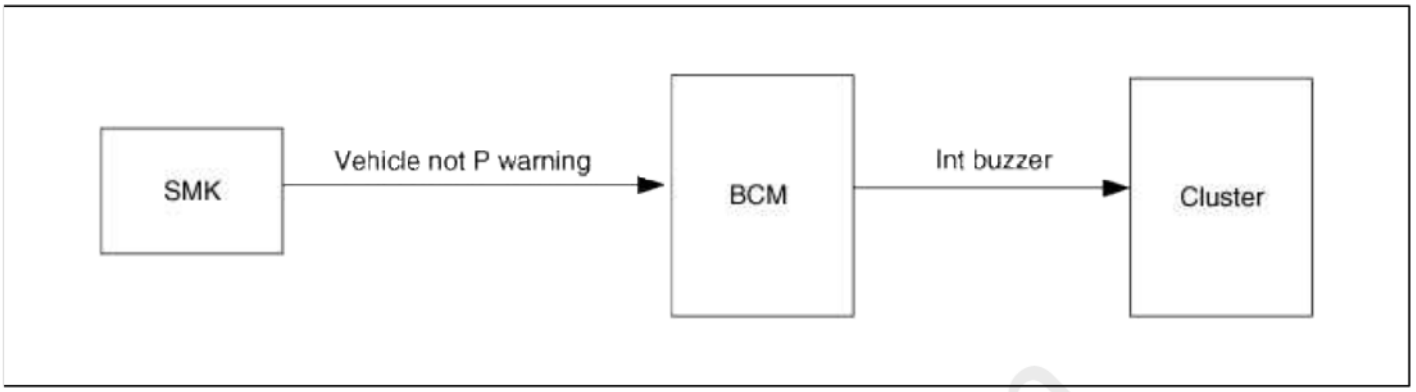

While attempting to put a alarm into effect, it'll be canceled immediately due to not receiving P Warning (CAN) ON signal.



T1 : 0.6 ± 0.1sec

IGN Key Hole Illumination

Data Flow

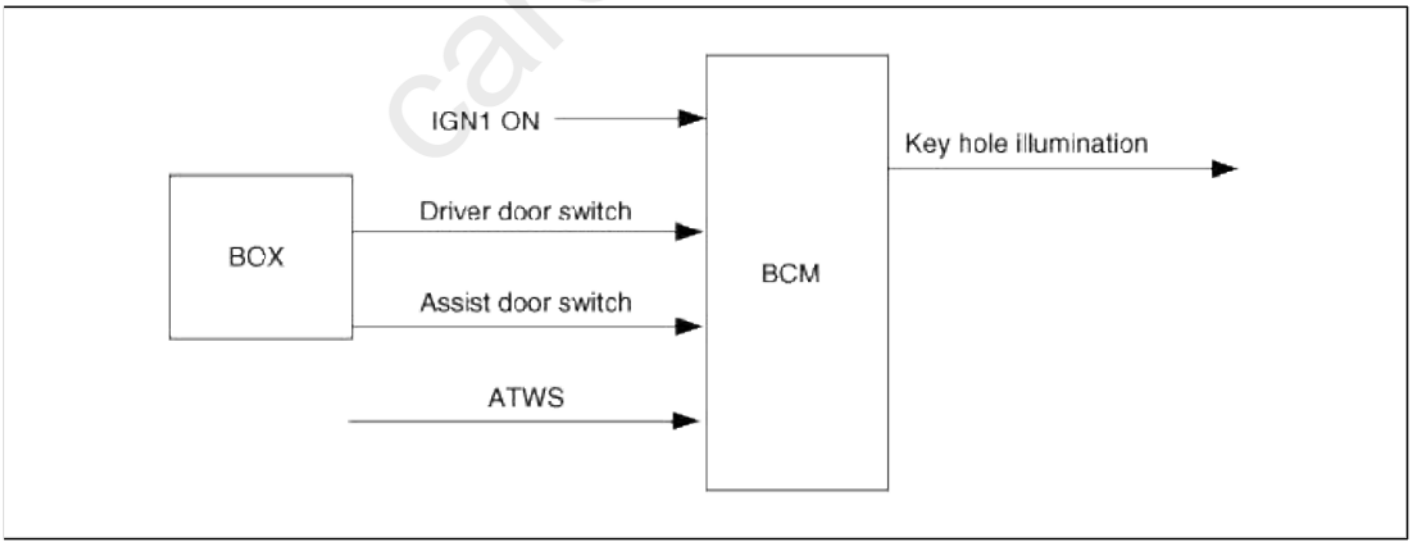

Function Description

1. Key hole illumination is turned ON at IGN1 OFF and driver door switch(or assist door switch) OPEN.
2. The output of key hole illumination is turned ON for 30s after the OFF state is delayed at (1) state and driver door switch(or assist door switch) CLOSE.
3. Key hole illumination is immediately turned OFF at IGN switch ON during output.

cardiagn.com

4. If ATWS state is ARMWAIT mode, key hole illumination is immediately turned OFF.
   ATWS ON: ARMWAIT mode

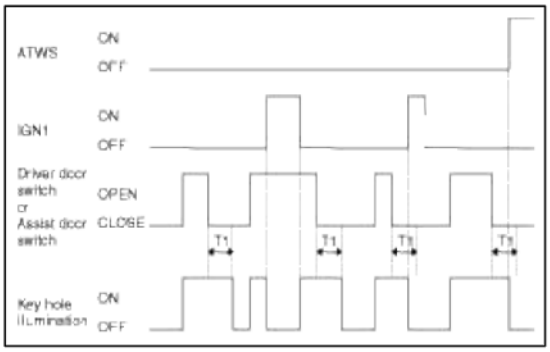

T1 : 30 ± 1sec

Defogger & Deicer Timer Control

Data Flow

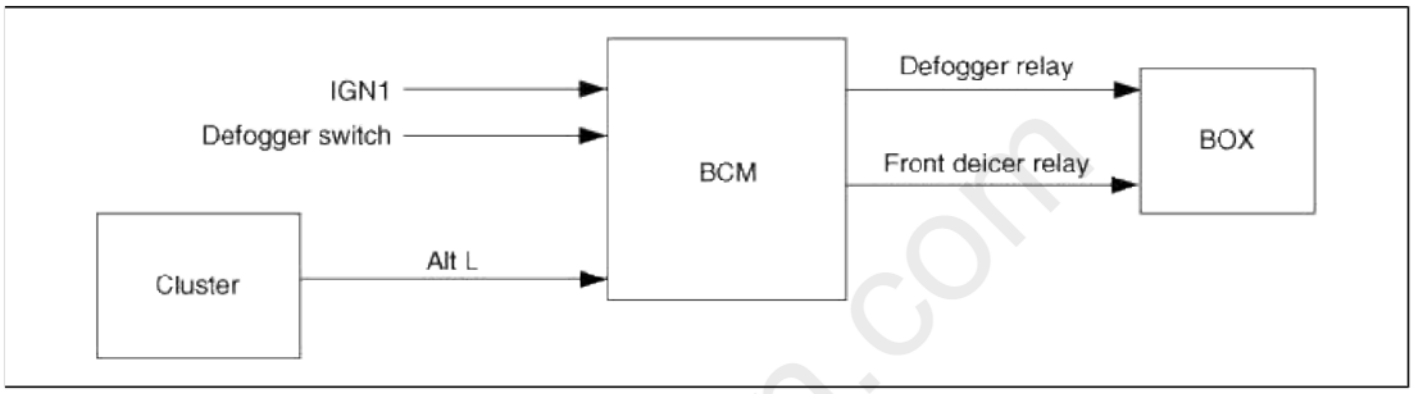

Defogger & Front Deicer Timer

1. Defogger relay & Front deicer relay is turned ON for 20min if defogger switch ON after Alt L ON & IGN1 ON.
2. Defogger relay & Front deicer relay is turned OFF if again defogger switch ON during defogger relay ON.
3. Defogger relay & Front deicer relay is turned OFF if AltL OFF or IGN1 OFF during defogger relay ON.
4. Defogger relay & Front deicer relay and OFF of the output will remain at Defogger switch ON & Alt LON.

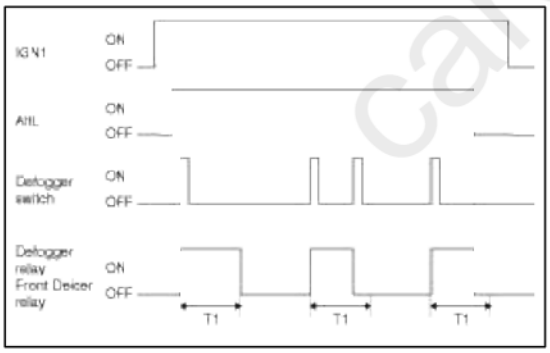

T1 : 20 ± 1min

Decayed Room Lamp & Keyless Unlock Timer

Delay Out Interior Lamp

- IGN1 off the door (Trunk excluded) will be lit to open the room lamp.
- Room lamp 4 Door closes, a 30-second delay will be lights out.

cardiagn.com

- 4 Door in closed IGN1 off & (Key in → Key out): 30-second delay will be lights out.

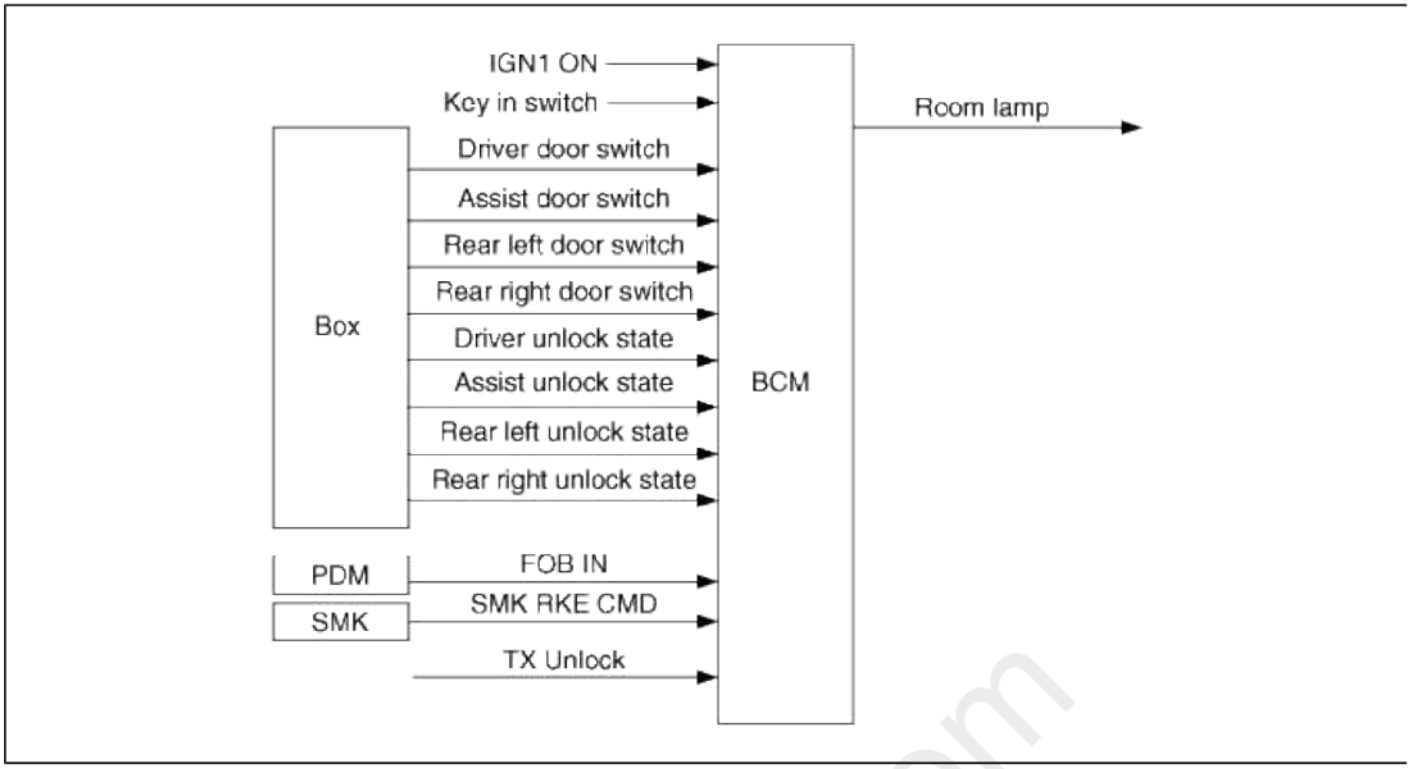

TX UNLOCK : Include Keyless or SMK by UNLOCK.

IGN KEY IN->OUT

: IGN KEY OFF -> ON or ACC OFF-> ON or IGN1 OFF-> ON or IGN2 OFF->ON(Keyless)

: FOB IN OFF-> ON or ACC OFF -> ON or IGN1 OFF-> ON or IGN2 OFF-> ON(SMK)

Description Of State

1. Room Lamp off

State	Description
Initial Condition	Room lamp decaying
Event	Decay finished
Action	Room lamp off

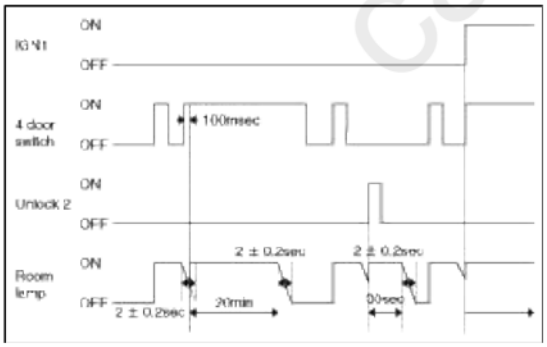

cardiagn.com

2. Room Lamp on

State	Description
Initial Condition	Room Lamp off
Event	IGN1 on & 4door switch on
Action	Room Lamp on

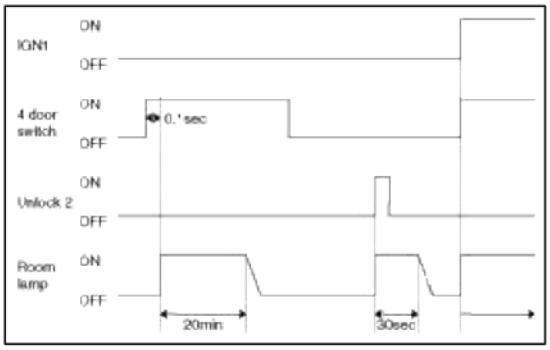

State	Description
Initial Condition	Room Lamp Decaying
Event	IGN1 on & 4door switch on
Action	Room Lamp on

State	Description
Initial Condition	Room Lamp on for 20min
Event	IGN1 on
Action	Room Lamp on

3. Room Lamp on for 30s

State	Description
Initial Condition	Room Lamp on for 30s
Event	TX Unlock or Key In switch on→off
Action	Restart Room Lamp on for 30s

State	Description
Initial Condition	Room Lamp on
Event	IGN1 off & 4door switch off
Action	Start Room Lamp on for 30s

cardiagn.com

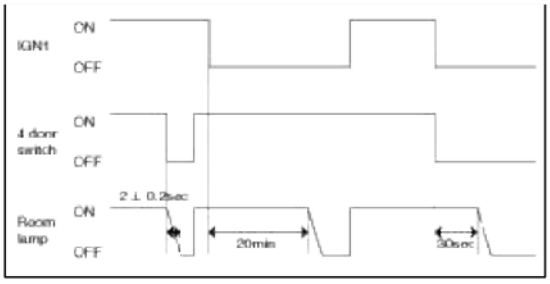

NOTE

- The flickering of lamp is not allowed even though IGN1 ON
- The resolution of Decayed Room Lamp must be more than 32 step.

State	Description
Initial Condition	Room Lamp on for 20min
Event	IGN1 off & 4door switch off
Action	Start Room Lamp on for 30s

State	Description
Initial Condition	Room Lamp Decaying
Event	IGN1 off & 4door switch off & (TX Unlock or Key In switch on→off)
Action	Start Room Lamp on for 30s

State	Description
Initial Condition	Room Lamp off
Event	IGN1 off & 4door switch off & (TX Unlock or Key In switch on→off)
Action	Start Room Lamp on for 30s

cardiagn.com

4. Room Lamp Decaying

State	Description
Initial Condition	Room Lamp on for 30s
Event	IGN1 on or 30s elapsed or Any Door Unlock→All Door Lock1
Action	Start Room Lamp Decaying

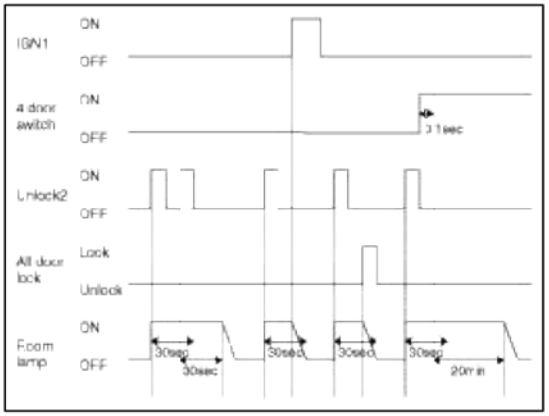

State	Description
Initial Condition	Room Lamp on
Event	IGN1 on or 4door switch off
Action	Start Room Lamp Decaying

State	Description
Initial Condition	Room Lamp on for 20min
Event	20min elapsed or (IGN1 off & 4door switch off & All Door Lock1)
Action	Start Room Lamp Decaying

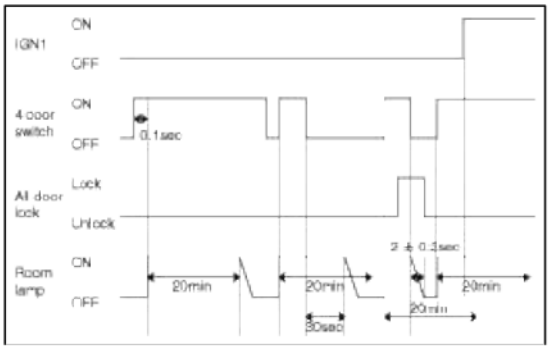

cardiagn.com

5. Room Lamp on for 20min

State	Description
Initial Condition	Room Lamp off
Event	IGN1 off & (4door switch off→on for 100ms)
Action	Start Room Lamp on for 20min

State	Description
Initial Condition	Room Lamp Decaying
Event	IGN1 off & (4door switch off→on for 100ms)
Action	Start Room Lamp on for 20min

State	Description
Initial Condition	Room Lamp on for 30s
Event	IGN1 off & (4door switch off→on for 100ms)
Action	Start Room Lamp on for 20min

State	Description
Initial Condition	Room Lamp on
Event	IGN1 off & 4door switch on
Action	Start Room Lamp on for 20min

Glove Box Lamp Control

cardiagn.com

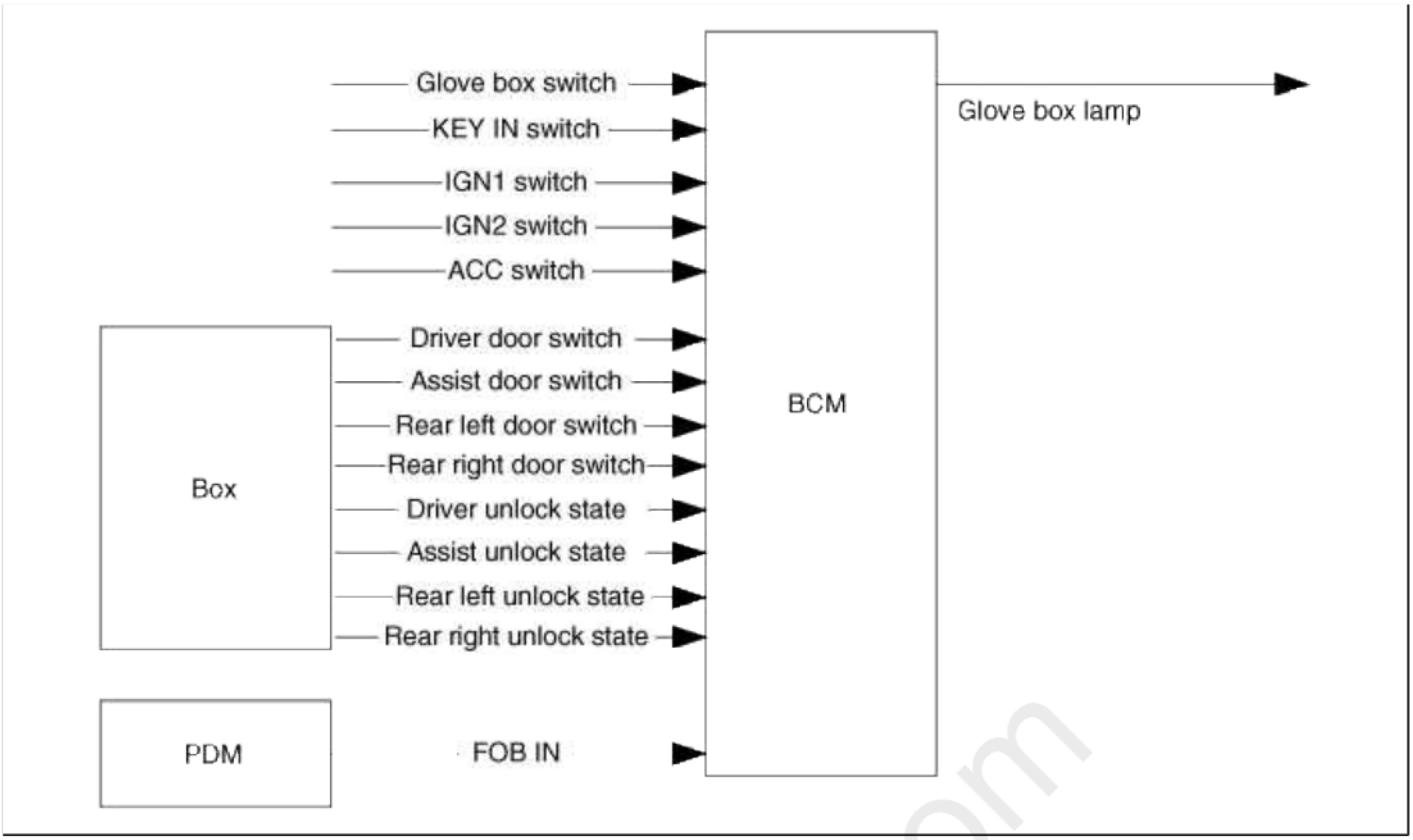

1. If GLOVE BOX is OPEN, LAMP is turned ON for 15min.
2. (1) state behavior by the conditions during the KEY IN OFF->ON to timer Reset does not.

Glove Box Lamp Off State

State	Description
Initial Condition	**GLOVE BOX LAMP OFF** State
Event	1. Glove Box OPEN Event 2. KEY IN OFF to ON & Glove Box OPEN
Action	**GLOVE BOX LAMP ON FOR 15MIN** State Glove box Lamp ON (15min.)

Glove Box Lamp On For 15Min State

State	Description
Initial Condition	**GLOVE BOX LAMP ON FOR 15MIN** State
Event	1. Glove Box CLOSE 2. KEY IN OFF & (All Door Lock Event || Central Door Lock output) & 4 DOOR CLOSE 3. 15min Timer expired
Action	**GLOVE BOX LAMP OFF** State Glove box Lamp OFF

Power Window Timer

Data Flow

cardiagn.com

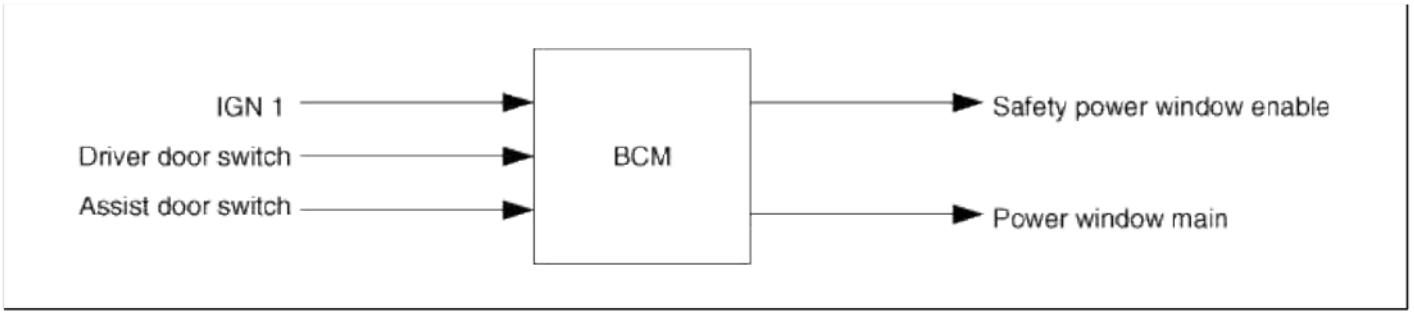

Function Description

1. Safety Power window Enable and power window main output is turned ON at IGN1 ON.
2. Maintaining output at IGN1 OFF after 30 seconds Safety Power window Enable and power window main, Safety Power window Enable and power window main output is OFF.
3. Above (2) Driver door switch or Assist door switch in protest to the conditions when you OPEN, Safety Power window Enable and power window main output will be OFF immediately.
4. IGN1 OFF when the Safety Power window Enable and power window main output is OFF at driver door switch or Assist door switch OPEN.

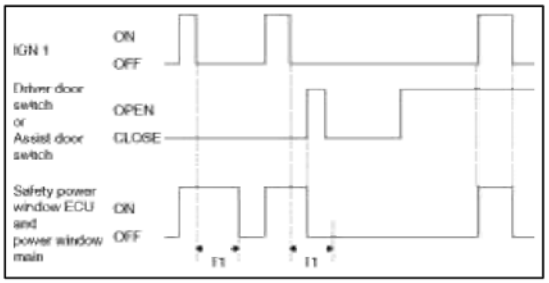

T1 : 3 ± 3sec

Door Lock/unlock Control

Data Flow

cardiagn.com

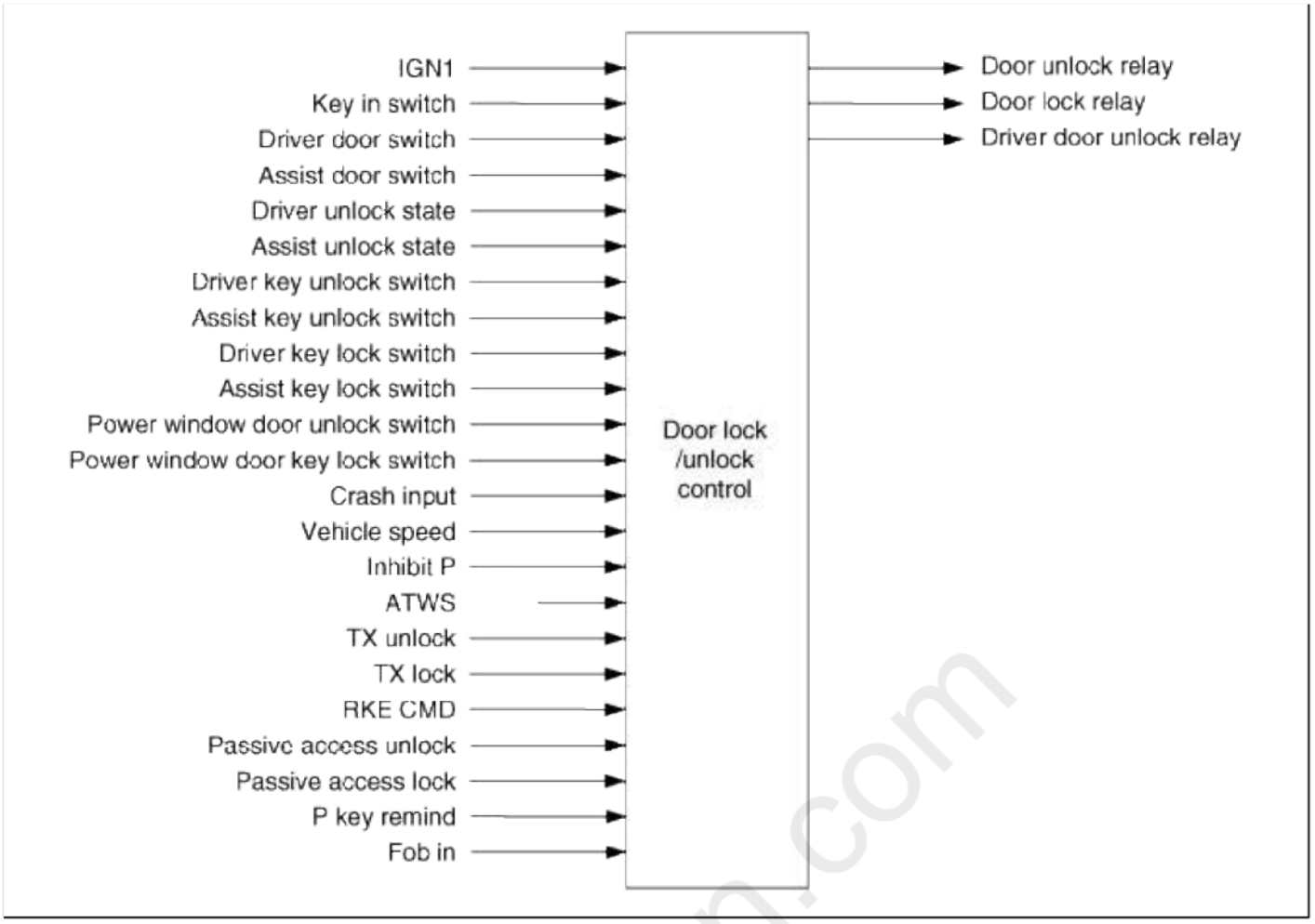

Central Door Lock/unlock

1. ALL DOOR LOCK output is ON during T1(0.5s) if Driver unlock State or Assist Unlock State is LOCK within 3sec after driver Key Lock switch(Assist Key Lock switch) is turned ON. But, IGN1 ON when output is prohibited.
2. ALL DOOR UNLOCK output is ON during T1(0.5s) if Driver Unlock State or Assist Unlock State is UNLOCK within 3sec after Driver Key Unlock switch(Assist Key Unlock switch) is turned ON.
3. ALL DOOR LOCK output is ON during T1 at TX Lock ON or SMK RKE CMD LOCK or Passive Lock ON. But, Passive Lock ON signal and will be ignored at Driver Door SW ON or Assist Door SW ON
4. ALL DOOR UNLOCK output is ON during T1 at TX Unlock ON or SMK RKE CMD UNLOCK or Passive Unlock ON.
   SMK RKE CMD = LOCK : SMK RKE CMD = Lock & No1 or Lock & No2
5. ALL DOOR LOCK output is ON during T1 at Power window door Lock switch ON.
6. ALL DOOR UNLOCK output is ON during T1 at Power window door Unlock switch ON. But, Power window door Unlock switch ON signal and will be ignored in ARM, ARMWAIT,REARM, ALARM state.
7. LOCK/UNLOCK by Driver door Unlock switch, Assist door Unlock switch operation is not interlocked. (mechanical operation)
8. Shall be no malfunction at Battery connection. (Shall be no malfunction even at Key In switch.
9. When the output of the reverse output requirements and the current output immediately OFF, 100ms delay send output to the reverse. 100ms delay is required during the output when the output needs to eventually send us the output.
10. LOCK output and UNLOCK output conditions at the same time, if the LOCK output is done, and the UNLOCK output is ignored.
11. ALL DOOR LOCK and ALL DOOR LOCK status of the output conditions, the actual output is not, and ALL DOOR UNLOCK and ALL DOOR UNLOCK status of the output conditions, the actual output is not.

cardiagn.com

12. ALL DOOR LOCK(UNLOCK) switch to LOCK(UNLOCK) to power window door Lock switch(Power window Unlock switch), TX Lock, TX Unlock, SMK RKE CMD LOCK, SMK RKE CMD UNLOCK, Driver door Key Lock switch, Driver door Key Unlock switch, Assist door Key Lock switch, Assist door Key Unlock switch, regardless of the status and needs by the LOCK(UNLOCK) should always output.

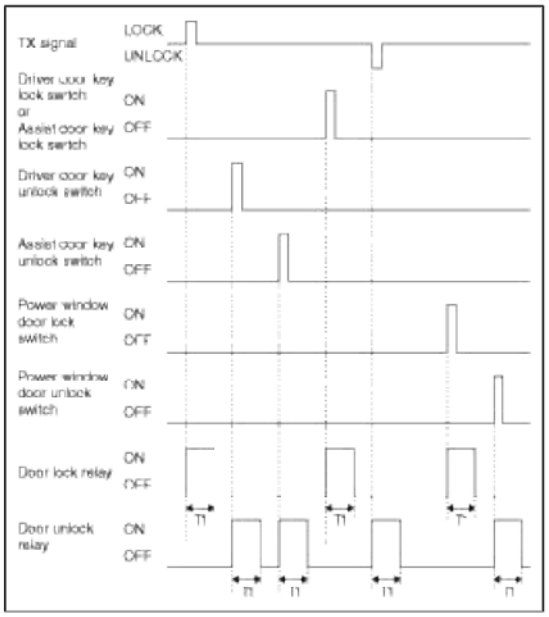

SMK RKE CMD = UNLOCK : SMK RKE CMD = UNLOCK & NO1 or UNLOCK & NO2

2-Turn Unlock

1. If Driver Door Key Unlock Switch turns OFF from ON within T1 after Driver Door Key Unlock Switch turns ON from OFF(Driver Door Unlock Switch becomes UNLOCKED mechanically and does not output BCM.), turn Driver Unlock Relay, Unlcok Relay(Central Unlock) output ON duting T2.
2. If TX UNLOCK is received within T1 after Driver Door Key Unlock Switch turns ON from OFF (Driver Door Unlcok Switch becomes UNLOCKED mechanically and does not output BCM.), turn Driver Unlock Relay and Unlock Relay(Central Unlock) output ON during T2.
3. Turn Driver Unlock Relay output ON during T2 when receiving TX UNLOCK signal. However, turn Driver Unlock Relay, Unlock Relay (Central Unlock) output duting T2 if TX UNLOCK is received within T1.
4. Also, turn Driver Unlock Relay, Unlock Relay (Central Unlock) ON during T2 in case that Driver Door Key Unlock Switch turns ON from OFF within T1 after receiving TX UNLOCK.
5. Regard as the same TX even though different signal which is registered within T1 is received.
6. If turn Lock Relay output ON by TX Lock or Driver/Assist Key lock Switch, T1 is initialized.
7. Assist Key Unlock Switch turns ON from OFF, turn Driver Unlock Relay and Unlock Relay (Central Unlock) output ON during T2.

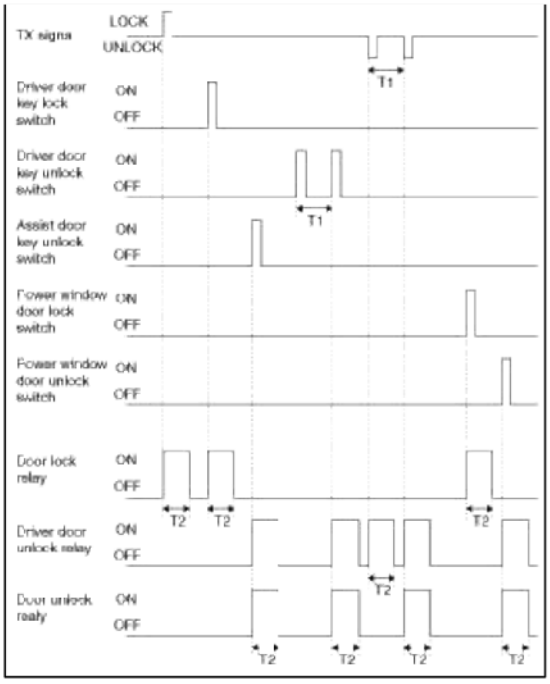

T1 : 4 ± 1sec, T2 : 0.5 ± 0.1sec

2-Turn Unlock (SMK)

1. All DOOR UNLOCK output are ON during T2 if Driver ddor unlock switch is unlock within 3s and Driver door key unlock switch is OFF→ON within T1 after Driver door key unlock switch is OFF→ON (mechanically, Driver door unlock switch is unlocked and BCM signal is not output).
2. All DOOR UNLOCK output are ON during T2 if Driver door unlock switch is UNLOCK within 3s and SMK/RKE command= UNLOCK is received within T1 after Driver door key unlock switch isOFF → ON (mechanically, Driver door unlock switch is unlocked and BCM signal is not output).
3. DRIVER DOOR UNLOCK signal is output for T2 when SMK/RKE command=UNLOCK signal is received. But, ALL DOOR UNLOCK signals are output for T2 if SMK/RKE command=UNLOCK signal is received within T1.
4. All DOOR UNLOCK output are ON during T2 if Driver door key unlock switch is OFF→ON (mechanically, Driver door unlock switch is unlocked and BCM signal is not output) within T1 and Driver door unlock switch is UNLOCK within 3s after SMK/RKE command = UNLOCK received.
5. DRIVER DOOR UNLOCK output is ON during T2 when Passive unlock ON & P_FL ON is input. But, ALL DOOR UNLOCK output are ON during T2 if Passive unlock ON & P_FL ON is input within T1.
6. DRIVER DOOR UNLOCK output is ON during T2 when Passive unlock ON & P_FL ON is input. But, ALL DOOR UNLOCK output are ON during T2 if Driver door key unlock switch is OFF → ON within T1.
7. DRIVER DOOR UNLOCK output is ON during T2 when Passive unlock ON & P_FL ON is input. But, ALL DOOR UNLOCK output are ON during T2 if SMK/RKE command = UNLOCK is received within T1.
8. Driver door unlock switch UNLOCK state of the output from the DRIVER DOOR UNLOCK does not require.
9. ALL DOOR UNLOCK output will be according to DRIVER DOOR UNLOCK output when the DRIVER DOOR UNLOCK output of the ALL DOOR UNLOCK output requirements.

IGN Key Reminder

1. This function is not performed when vehicle speed is 3km/h or more.
2. ALL DOOR UNLOCK signals are output for 1s after 0.5s from when the state becomes IGN KEY ON & Driver door SW OPEN & Driver Unlock State LOCK.
3. ALL DOOR UNLOCK signals are output for 1s after 0.5s from when the state becomes IGN KEY ON & Assist door switch OPEN & Assist Unlock State LOCK.
4. ALL DOOR UNLOCK signals are output for 1s after 0.5 form (1),(2) and anti-concurrent satisfaction, (3) paragraph pursuant

5. UNLOCK signal is output 3 times as Max (1s-output is excluded) in case LOCK state is held even when UNLOCK signal is output for 1s in (2),(3). (1s cycle: 0.5s ON/OFF)
6. (5) of Section Driver door switch is CLOSE CENTRAL UNLOCK in the LOCK state, while the one-time attempt.
7. ALL DOOR UNLOCK signal is output (only once) during 1s if Driver door switch is CLOSE within 0.5s from Driver Unlock State UNLOCK -> LOCK under IGN KEY ON.
8. ALL DOOR UNLOCK signal is output (only once) during 1s if Assist door switch is CLOSE within 0.5s from Driver Unlock State UNLOCK -> LOCK under IGN KEY ON.
9. ALL DOOR UNLOCK signal is output (only once) during 1s if Driver Unlock State is UNLOCK->LCOK within 0.5s from Driver door switch OPEN -> CLOSE under IGN KEY ON.
10. ALL DOOR UNLOCK signal is output(only once) during 1s if Assist Unlock State is UNLOCK->LCOK within 0.5s from Assist Door switch OPEN -> CLOSE under IGN KEY ON.
11. IGN KEY ON in Driver door switch or Assist Door switch is OPEN if the Power window door lock switch ON, KEY REMINDER functions to perform.
12. Judgment of the possibility of RETRY signal output is performed at RETRY signal output start. (after 1.5s from the first UNLOCK signal output
13. After the condition if UNLOCK is met, UNLOCK signal is output if the condition is not held for 0.5s. But, UNLOCK signal is not output if KEY IN is OFF at the moment that 0.5s passes after the condition is met by Driver Unlock State or Assist Unlock State change from UNLOCK to LOCK.

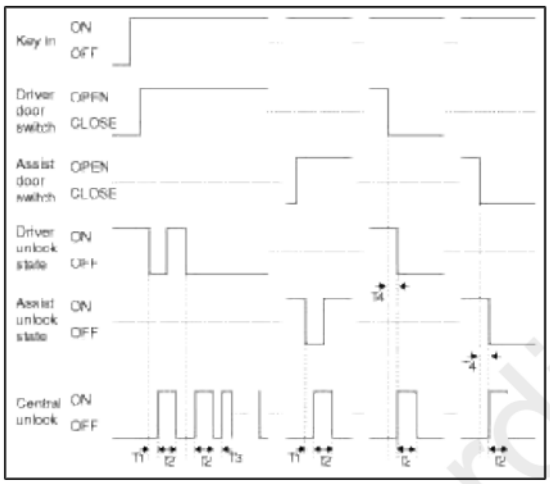

T1,T3 : 0.5 ± 0.1sec, T2 : 1 ± 0.1sec, T4 : 0.5sec Max
KEY IN ON : Key in ON or ACC = 1 or IGN1 ON or IGN2 ON
KEY IN OFF : Key in OFF and ACC =0 and IGN1 OFF and IGN2 OFF
IGN KEY ON : Key in switch(Fob in) ON or ACC ON or IGN1 ON or IGN2 ON
IGN KEY OFF : Key in switch(Fob in) OFF and ACC OFF and IGN1 OFF and IGN2 OFF

Passive Key Reminder Unlock (SMK)

1. This function is not performed when vehicle speed is 3km/h or more.
2. When the driver door switch (Assist door switch) = OPEN and driver unlock state (Assist unlock state) are lock state, passive KEY REMINDER signal received at the output ALL DOOR UNLOCK is for 1s.
3. UNLOCK signal is output 3 times as Max (1s-output is excluded) in case LOCK state is held even when UNLOCK signal is output for 1s in (2). (1s cycle: 0.5s ON/OFF)

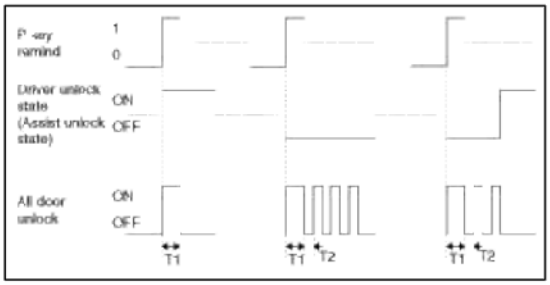

T1 : 1 ± 0.1sec, T2 : 0.5 ± 1sec

Crash Door Unlock

cardiagn.com

1. FOB IN ON or KEY IN ON or ACC ON or IGN1 ON or IGN2 ON state Crash Input ON signal is ON, T1 is performed for ALL DOOR UNLOCK output. (CRASH UNLOCK output)
   A. CRASH UNLOCK signal 16ms LOW / 4ms HIGH supposed to be 4 times the input, CRASH UNLOCK ON to be determined.
   B. BCM CRASH UNLOCK signal is input from the sleep state is ignored.
2. Above (1) Section of the IGN1 CRASH UNLOCK output is even ON → OFF CRASH UNLOCK output is maintained for the remaining time.
3. Above (1) CRASH UNLOCK output port for the T1 input CRASH UNLOCK again during the input signal is ignored.
4. ALL DOOR UNLOCK output to the UNLOCK → LOCK Assist Unlock State, Driver Unlock State or when ALL DOOR UNLOCK output is performed during T2.
5. CRASH DOOR UNLOCK AUTO DOOR LOCK in conditions does not function.
6. CRASH DOOR UNLOCK functions by other functions LOCK / UNLOCK control overrides.
7. CRASH DOOR UNLOCK output after the output of other functions, and by the LOCK / UNLOCK request is ignored. However, KEY IN OFF & ACC OFF & IGN1 OFF & IGN2 OFF when other functions by the LOCK / UNLOCK control stick.

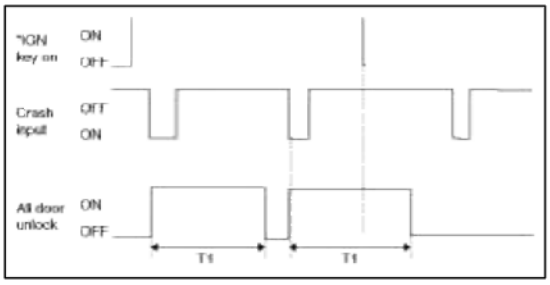

T1 = 5.0sec

* IGN KEY ON : ON - KEY IN or Fob in or ACC ON or IGN1 ON or IGN2 ON
OFF - KEY OUT or Fob OUT or ACC OFF or IGN1 OFF or IGN2 OFF

8. Crash Input for the input signal ON / OFF judging criteria are the following figure

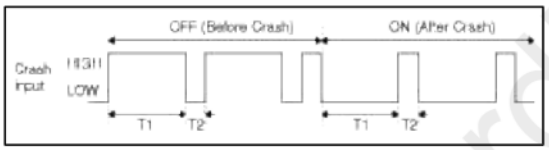

T1 : 16 ± 2msec, T2 : 4 ± 2msec

Auto Door Lock/unlock Control (User Option)

1. ALL DOOR LOCK signal is output if vehicle speed is 15km/h within T1 under IGN1 ON && Alt L ON. But ALL DOOR LOCK , All DOOR LOCK signal is not output if all DOOR is LOCK or ALL DOOR are FAIL.
2. LOCK signal is output 3 times as Max if either one DOOR is UNLOCK after LOCK signal output in (2).(1s cycle) But, DOOR, which is LOCK from UNLOCK state during 3-time output, is ignored.
3. Relevant DOOR is FAIL if the state is UNLOCK after 3-time output.
4. LOCK signal is output once if the FAIL DOOR is UNLOCK again after the DOOR is LOCK.
5. LOCK signal is output once if locked doors, which are LOCK state after LOCK signal output in (2), are unlocked again. But, LOCK signal is output once for the relevant DOOR even when UNLOCK state continues after LOCK signal output.
6. FAIL DOOR is cleared at IGN switch OFF.

cardiagn.com

7. AUTO DOOR LOCK function is not performed when CRASH UNLOCK condition is met.

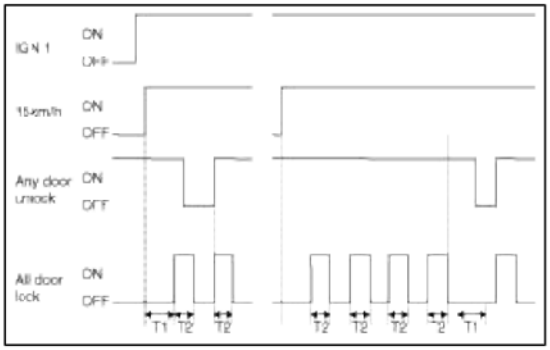

T1 : max 1.5sec, T2 : 0.5 ± 0.1sec

ANY DOOR UNLOCK ON driver Unlock State Unlock or assist Unlock State Unlock or rear left Unlock State or rear right unlock state

ANY DOOR UNLOCK OFF driver Unlock State Lock assist Unlock State Lock and rear left Unlock State and rear right unlock state

Auto Door Lock By Shift Lever Change

1. IGN1 ON & Alt L ON state of 100msec in the close future, and ANY DOOR UNLOCK ANY DOOR UNLOCK ALL DOOR (Driver door SW & Assist door SW & Rear left door SW & Rear right SW) in the conditions when Inhibit P, ON->OFF, ALL DOOR LOCK to the output.
2. AUTO DOOR LOCK function is not performed when CRASH UNLOCK condition is met.

Auto Door Unlock By Key In Condition

1. ALL DOOR UNLOCK signal is output at IGN KEY IN→OUT. But, UNLOCK state that is ALL DOOR to UNLOCK does not output.

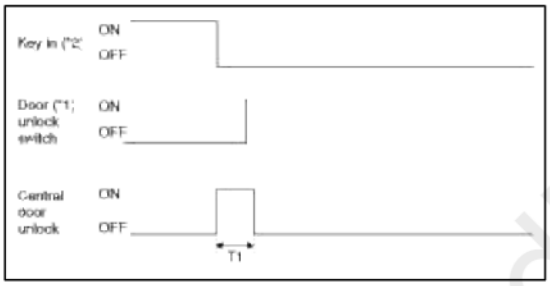

T1 : 0.5 ± 0.1sec

*1 ON(UNLOCK) : Driver Unlock State or assist Unlock State or rear left Unlock state or rear right unlock state = UNLOCK

OFF (LOCK) : Driver Unlock State & assist Unlock State & rear left Unlock state & rear right unlock state = LOCK

*2 KEY IN ON : Key in switch ON or ACC =1 or IGN1 ON or IGN2 ON

KEY IN OFF : Key in switch OFF and ACC =0 and IGN1 OFF and IGN2 OFF

Auto Door Unlock (Only SMK)

1. Under under ANY DOOR LOCK, ALL DOOR UNLOCK signal is output at ACC ON→OFF.

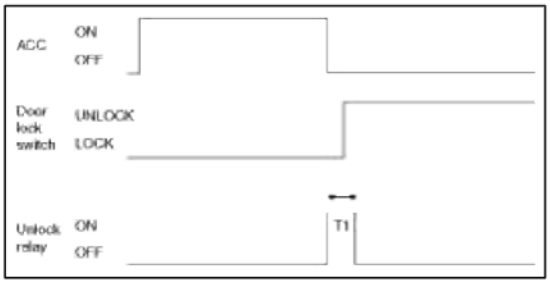

T1 0.5s ± 0.1s

Auto Door Unlock By Driver Door Unlock State (User Option)

cardiagn.com

1. ALL DOOR UNLOCK signal is output one-time during T1 if ALL DOOR(Driver Door switch & Assist door switch & Rear left door switch & Rear right door switch) is CLOSED and Driver Unlock State is Lock->Unlock.

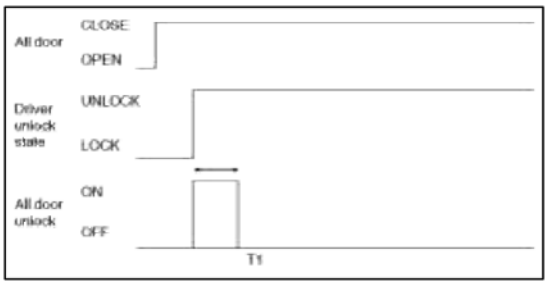

T1 0.5s ±0.1s

Auto Door Unlock By Shift Lever Change

1. ALL DOOR CLOSE & ANY DOOR LOCK state is the state of IGN1 & Alt L ON to OFF->ON when in Inhibit P after 300msec, CENTRAL DOOR UNLOCK is the output.

Trunk Release Relay Control

Trunk Release Relay Control Data Flow

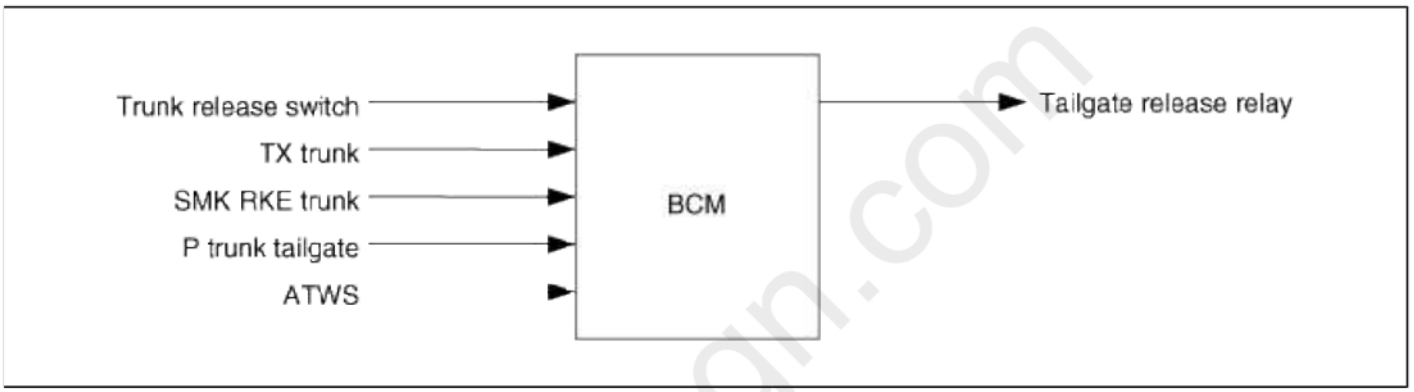

Trunk Release Relay Control

1. Trunk Release Relay is ON during T1 when TX Trunk signal received.(NON-SMK)
   Trunk Release Relay is ON during T1 when SMK RKE Trunk signal received.(NON-SMK)
2. Trunk Release Relay is ON during T1 when Trunk Release switch is OFF->ON.
   But, ARMWAIT, ARM, REARM, ALARM mode, the Trunk Release switch input of the output does not.

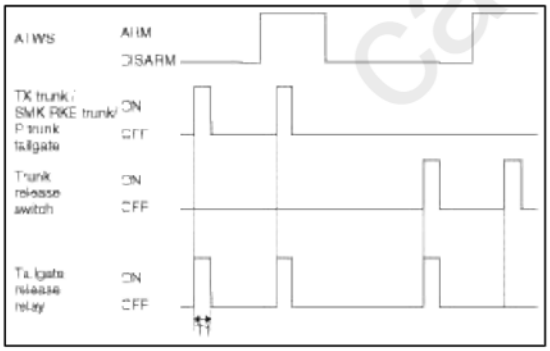

T1 : 500 ± 100msec

Key Interlock Control

Data Flow

cardiagn.com

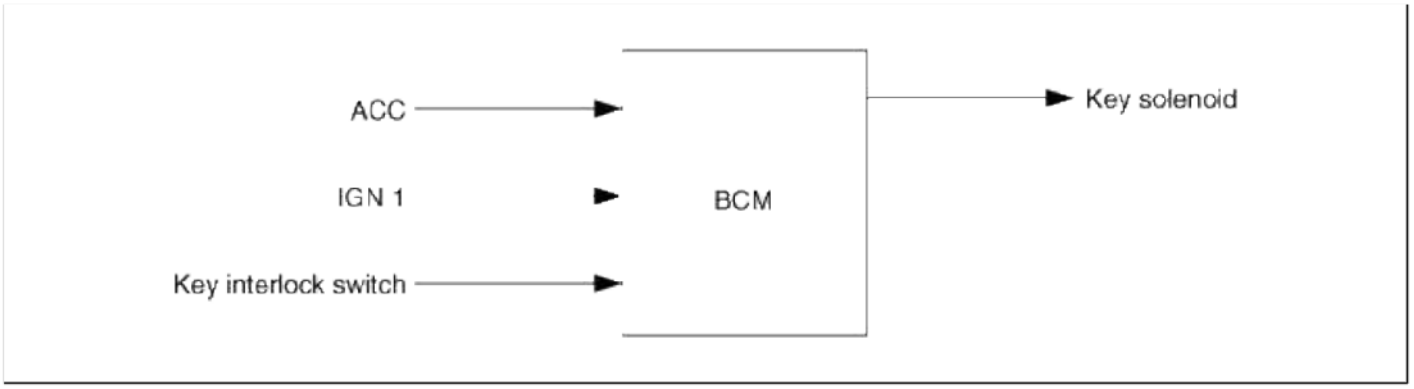

1. Key solenoid to the output of the ON KEY to make the subject does not fall. (If IGN1 ON or ACC subject to the key Interlock switch input is OFF.)
2. In addition to the above conditions, the KEY OFF key solenoid output to fall out, to make conditions.
3. Key solenoid output OFF -> ON operation, 0.9sec ~ 1.5sec for the 7 - 10V and the behavior, then the voltage 6 - 9V to maintain.

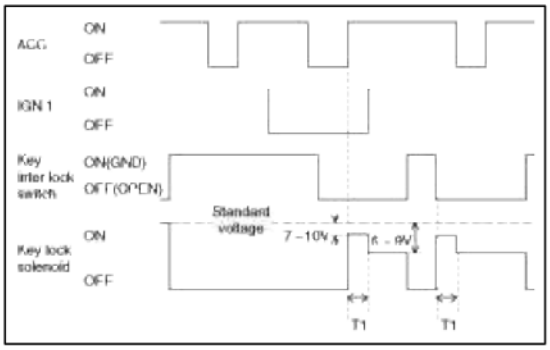

T1 : 0.9 ~ 1.5sec

Tail Lamp Function In/out

Tail Lamp Function Block Diagram

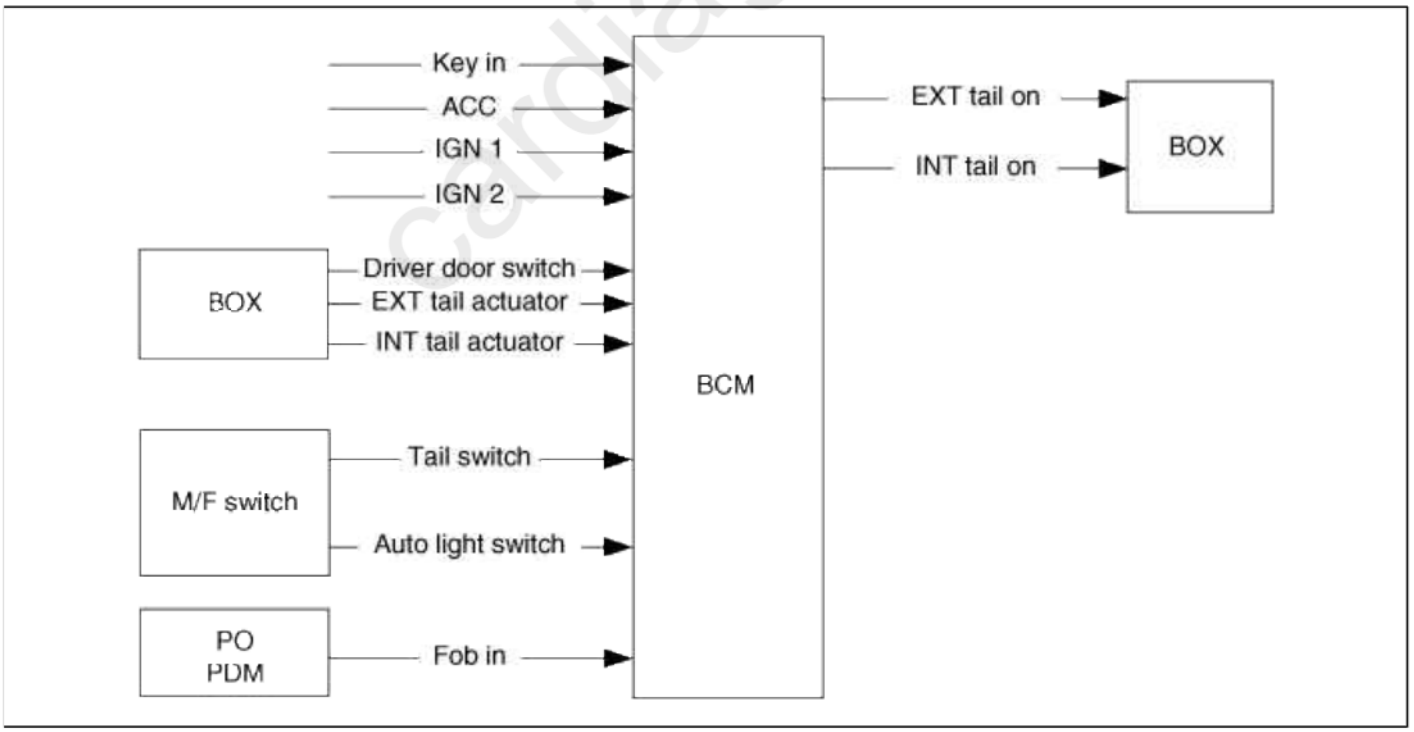

Function Description

- General Function Condition
  In BATTERY ON and Tail Lamp is off state, if user turns on the Tail Lamp switch (Tail switch ON), Tail Lamps are turned on.

cardiagn.com

1. Tail Auto Cut Function Condition

The “Tail Auto Cut” strategy ensures that Tail lamps are turned off even if a driver forgets to turn them off. When the Tail lamp is turned on by Tail lamp switch, after key insertion , and if a user removes key and opens the driver side door(or vice versa), the Tail lamps are automatically turned off. While “Tail Auto Cut” function is active, if a user turns off the Tail lamp switch or inserts key, “Tail Auto Cut” function will be deactivated and Tail lamps can be turned on.

NOTE

- “Tail Auto Cut” state is memorized in ECU, so even if battery reset, this state is not erased.
- During the activation of Escort function, no Tail Auto Cut mode is possible and it is only after escort function deactivation that Tail Auto Cut mode can be applied.

(1) CAN signal Tail Activity Condition

When tail lamp output condition is met, Tail Lamp activity CAN data (EXT Tail_Act & INT Tail Act) is also turned on. When tail lamp output condition is not met, Tail Lamp activity CAN data (EXT Tail Act & INT Tail Act) is also turned off.

(2) Internal signal Tail Activity Condition

When tail lamp output is on, internal signal Tail Lamp activity (Tail Lamp) is also turned on.When tail lamp output is off, internal signal Tail Lamp activity (Tail Lamp) is also turned off.

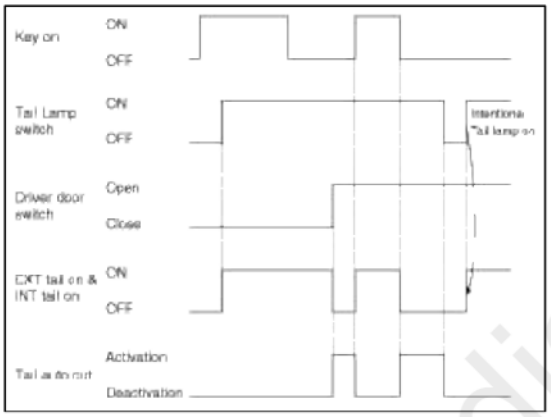

2. HEAD LAMP CONTROL

(1) Overview Description

This function describes the following features

A. Turn on and off Head Lamp Low by Head Lamp Low Switch input.
B. Turn on and off Head Lamp Low by Escort Function.
C. Turn on and off Head Lamp Low by Auto Light Control Request.
D. Turn on and off Head Lamp High by Head Lamp High Switch input.
E. Turn on and off Head Lamp High and Low by Passing Switch Input.
F. Output control of Head Lamp Low.
G. Output control of Head Lamp High.
H. Output control of Head Lamp High Indicator.
I. Output control of Head Lamp control for CANADA DRL.

Head Lamp Function IN/OUT

cardiagn.com

1. Head Lamp Function Block diagram

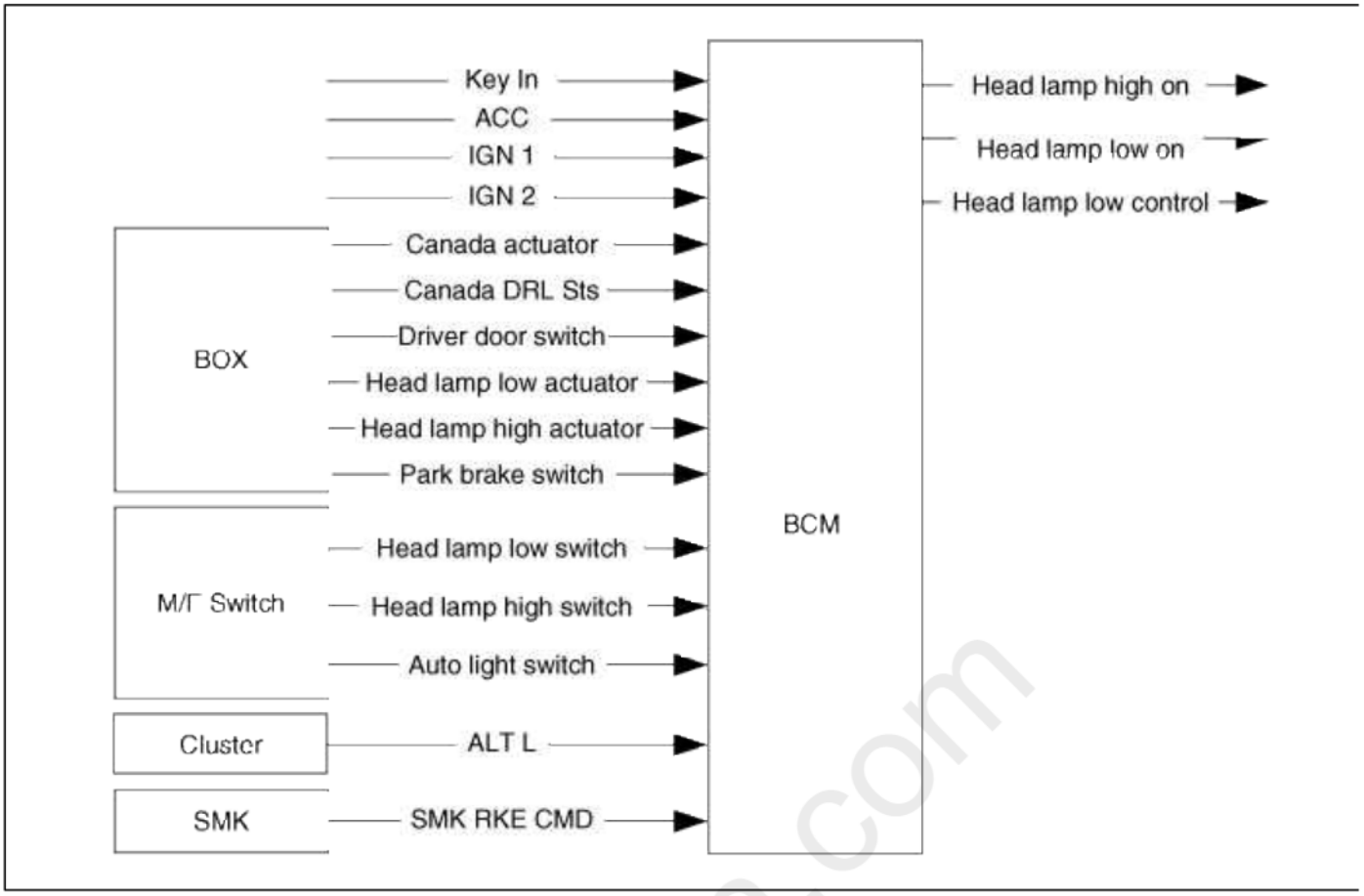

2. Head lamp low signal control
   A. Head Lamp Low control output is ON if HEAD LAMP LOW output is ON by 'Head Lamp Low switch ON ' or 'AUTO LIGHT function'.
   B. Head Lamp Low control output is OFF when HEAD LAMP LOW output is ON->OFF.
3. Head lamp high control
   Head Lamp High input and Head Lamp Passing input by M/F is Head Lamp High switch processing for single input same MULTI-FUNCTION WIRING DESCRIPTION as Head Lamp High switch only input.
   A. Head Lamp High Input When Head Lamp High switch ON that in IGN2 ON and Head Lamp Low control output is ON by IMP, Head Lamp High is consider as input.
   B. Head Lamp Passing InputWhen Head Lamp High switch ON that in IGN2 ON and Head Lamp Low control output is OFF, Head Lamp Passing is consider as input.
4. Multi-function wiring description

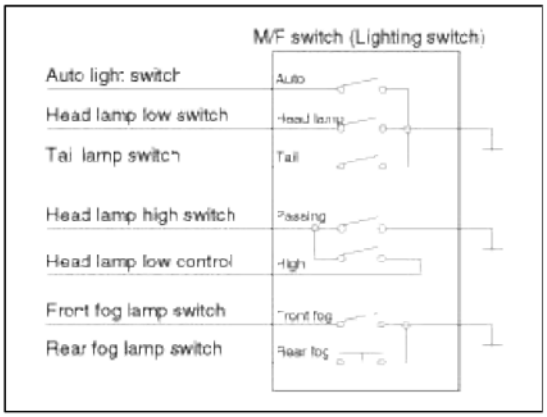

Function Description

1. Head Lamp Low Control
   In IGN terminal State (IGN ON), if turn on the Head Lamp LOW switch(Head Lamp Low switch ON), Head Lamp LOW outputs are turned on (Head Lamp Low ON).
   When Tail lamp Off and headlamp Off conditions are satisfied at the same time, Head Lamp LOW and Tail LAMP turned off simultaneous immediately.
2. Head Lamp High Control
   In IGN terminal State(IGN ON) and Head Lamp Low switch On(Head Lamp Low switch ON), if turn on the Head Lamp High switch(Head Lamp High switch ON), Head Lamp High Outputs are turned on (Head Lamp High ON).
3. Passing Control
   In IGN terminal State(IGN ON), If Head Lamp Passing switch Input(Head Lamp High switch ON & Head Lamp Low control OFF) is detected then Head Lamp High Output(Head Lamp High ON) are turned on and Head Lamp Low Output(Head Lamp Low ON) at the same time.
4. Canada DRL
   A. If alternator level is high(ALT L=On), BCM activates Canada DRL functionality and turns on the Head lamp high (CANADA DRL=On).
   B. Deactivation if:
   (1) Head lamp low On request by Head lamp switch or auto light head lamp Low control or
   (2) Head high On request by passing switch or
   (3) Parking brake switch On

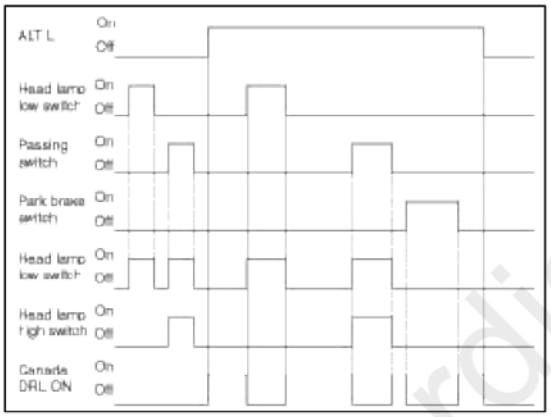

5. Escort Function
   After user generates the call of head lamp low light(Head Lamp Low switch On), if switch off ignition(IGN Off and START Off), and then keep Head Lamp Low Output On (Head Lamp Low ON)state during 20min. And after open and close driver side door(Driver door switch ON -> Driver door switch Off), user will have consequently lighting of head lamp low(Head Lamp Low ON) during only 30sec.
   During active “Escort Function”, if receive Lock request 2 times (2 LOCK) or cancel the lighting request of head lamp low (Head Lamp Low switch Off & Auto Light switch Off), this function is released.
   Lock request counting for 2 times (2 LOCK) is each follow cases:
   (1) RKE CMD == Lock
   (2) SMK RKE CMD == Lock
   (3) Passive Access Lock== Lock
   If open the Driver door(Driver door switch ON) or close(Driver door switch Off), former lock counter is cleared, and start new 2 times lock counting.

cardiagn.com

6. Head Lamp Welcome Function

"Multifunction switch head lamp or auto light position and lock stated, if remote unlock, and then keep head lamp output on state during 15second.Lighting state, if remote lock and unlock, immediately light turn off."

NOTE

- While escort function is activated, Tail lamp is keeping the turn on state and does not go to Auto cut and after finish escort state and user removes key, it can go Auto cut mode.
- While the "Escort Function" is activated by 'Head Lamp Low Switch', if change from 'Head Lamp Low Switch' to 'Lamp Auto Switch', "Escort Function" is deactivated, because Lamp Auto mode is 'Lamp Off' condition.
- While the "Escort Function" is activated by 'Lamp Auto Switch', if change from 'Lamp Auto Switch' to 'Head Lamp Low Switch', "Escort Function" is keeping the activation state, because of 'Head Lamp On' condition.
- After IGN terminal off 20 minute timers is started, but as soon as door is opened and closed then 30sec timer is engaged.

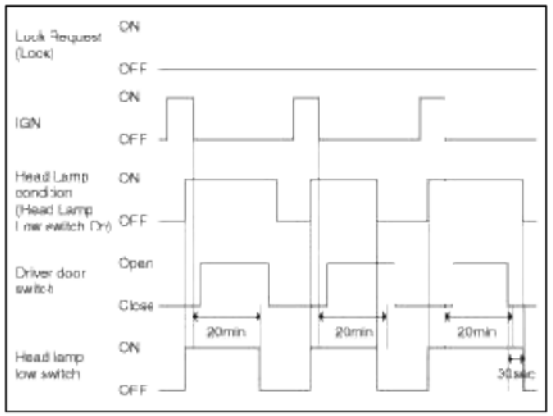

Auto Light Control

1. Overview Description

This function describes the following features.

A. Input detection by Auto Light Sensor.

B. Generate Auto Light Out Status data.

C. Send Auto Light Out Status.

D. Tail Lamp Control by Auto light Mode.

E. Head Lamp Low Control by Auto light Mode.

F. AV Tail Control by Auto Light sensor level.

Auto Light Mode State Diagram is based on Auto Light Sensor's level.

Power condition of Auto Light Action.

G. When ACC, IGN, START terminal states, Auto Light Sensor operates.

Auto Light Control Function In/out

cardiagn.com

1. Auto Light Control Function Block Diagram

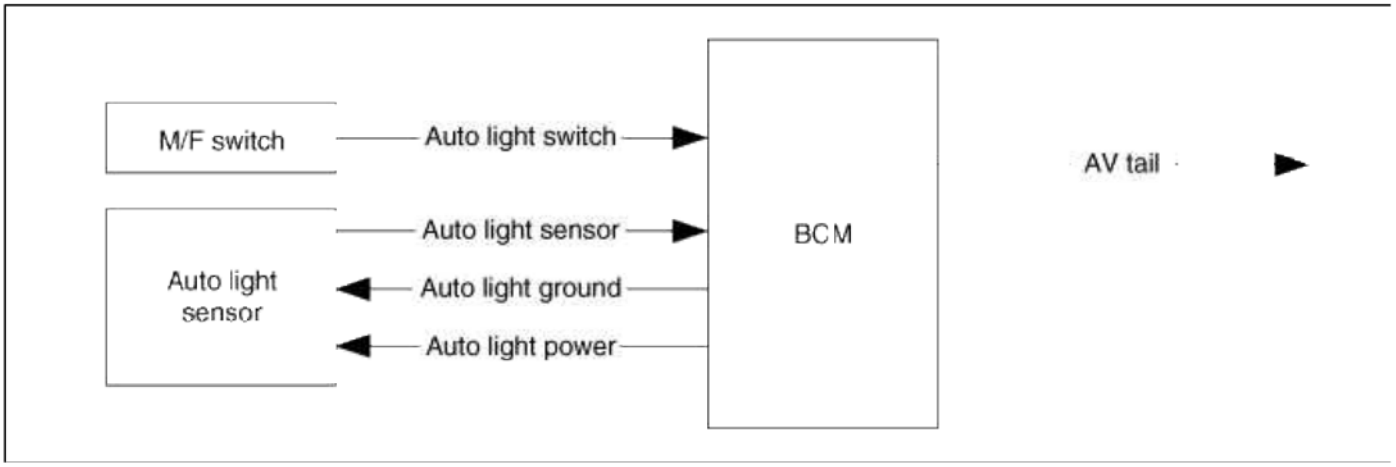

2. Function Description

In ACC, IGN, START terminal states, monitoring of the auto light sensor supply's range (Auto Light Power) is performed and a failure is raises up (Auto Light failure) when the supply's voltage is out of range(outside of range [4V:6V]).

If Auto Light failure occurs and as long as this error is present, the tailLamp and head lamp low must be turned on regardless of the sunlight level provided by the sensor.

When physical Auto Light sensor failure occurs the Lamps are turned on, because a zero voltage level is provided by the sensor when internal failure is present.

This is designed to prevent any head lamp cut off when the failure occurs during the night.

AV Tail Output Control is started In ACC, IGN,START regardless of MF switch Auto Light switch. CAN signal AV Tail is set/reset at the same time as AVTail.

	NAVI	CLUSTER
ON	0.4 +/- 0.10[V]	1.0 +/- 0.10[V]
OFF	0.75 +/- 0.10[V]	2.3 +/- 0.20[V]

Front Fog Lamp Control

1. Overview Description

This function describes the following features

A. Turn on and off Front Fog Lamp by Front Fog Lamp switch input.

B. Versus variant (NA, Non-NA), function description

Front Fog Lamp Function In/out

1. Front Fog Lamp Function Block Diagram

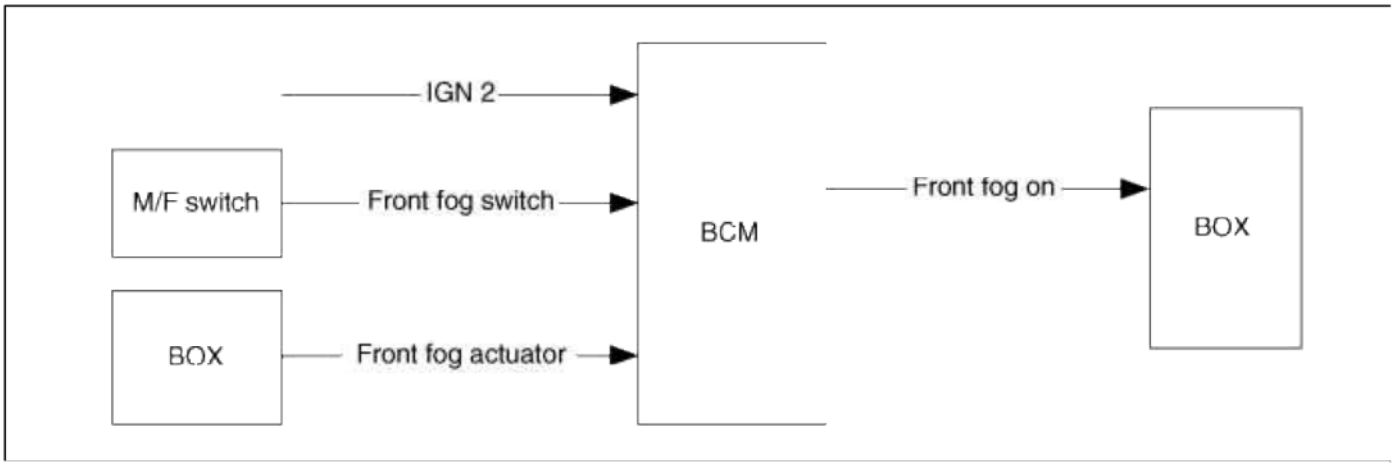

cardiagn.com

2. Function Description

(1) In case of (IGN2=ON) & (HeadLampLow=ON) & (HeadLampHigh=Off), if Front fog lamp switch input is detected (FrontFogSW=On), Front fog lamp output (FrontFogON=On) is turned ON.

(2) If fails to activate front fog lamp output, indicator (FrontFogIND) is also turn off.

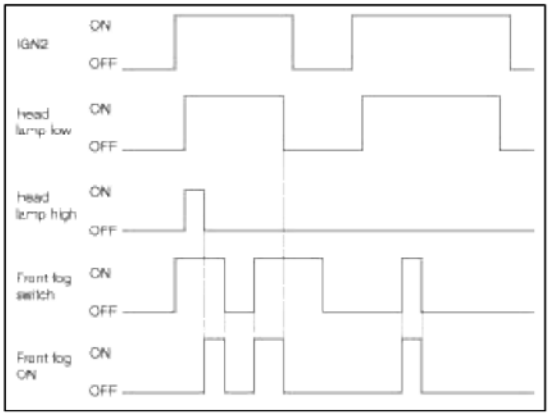

Body Electrical System > BCM (Body Control Module) > Body Control Module (BCM) > Repair procedures

Trouble Diagnostics When Using GDS

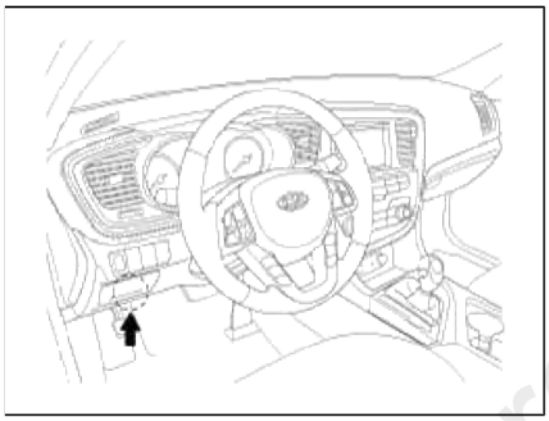

1. The body control module can diagnose by using the GDS more quickly.
   The BCM communicates with the GDS and then reads the input/output value and drives the actuator.
2. To diagnose the BCM function, select the menu of model and body control module.
3. To consult the present input/output value of BCM, "Current DATA". It provides information of BCM input/output conditions of power supply, turn signal/brake lamp, headlamp, door, locks, outside mirror, wipe auto-light and transmitters etc.

Cardiagn.com

A. BCM Service data



Current Data

Standard Display | Full List | Graph | Items List | Reset Min.Max. | Record | Stop

Sensor Name	Value	Unit
Key in switch(Manual Key Type)	OUT	-
ACC	ON	-
IGN1	ON	-
IGN2	ON	-
Tail Lamp Switch	OFF	-
Head Lamp Switch	OFF	-
Auto Light Switch	OFF	-
Head Lamp High Switch	OFF	-
Front Fog Switch	OFF	-
Washer Switch	OFF	-
INT Switch	OFF	-
Mist Switch	OFF	-
Key Inter Lock Switch(Manual Key Type)	ON	-
Stop Lamp Switch(5AT Only)	ON	-
Room Lamp Output	OFF	-
Foot Lamp Output	ON	-
Ignition Key Hole Illumination(Manual Key Type)	OFF	-
Auto Light Power	ON	-
AV Tail Output	ON	-
Key Inter Lock Solenoid(Manual Key Type)	OFF	-
Security LED	OFF	-
Assist Seat Belt Indicator	OFF	-
Navigation wakeup signal	OFF	-
Wiper low relay	OFF	-
Head lamp low signal output	OFF	-
RPAS Buzzer Output	OFF	-
DRL option Line	NONE	-
Defogger SW	OFF	-
Crash Input Signal	OFF	-
Inhibit R SW	OFF	-
ATM solenoid(Automatic Transmission)	OFF	-
Key Inter Lock Solenoid(Manual Key Type)	OFF	-
Battery Voltage Monitoring Input	11.28	V
Int Volume	5.00	V
Auto light sensor	0.59	V
Rear Left Seat Warmer Switch	OFF	-
Rear Right Seat Warmer Switch	OFF	-
Rear Left Seat Warmer Output	OFF	-
Rear Right Seat Warmer Output	OFF	-
RK RX Status	NO RX	-
Number of RK(+RK)	0	-
Auto Door Lock State	Shift Lever(A/T o...	-
Auto door unlock	SHIFT LEV.	-
2-Turn Unlock	ENABLE	-
Arm/Disarm by door key(+RK)	ENABLE	-
Horn answer back(+RK)	ENABLE	-
Head Lamp Escort	ENABLE	-
Key Reminder Status	DISABLE	-

cardiagn.com

B. CLU(Cluster) Service data

Current Data

Standard Display | Full List | Graph | Items List | Reset Min.Max. | Record | Stop

Sensor Name	Value	Unit
Ignition 1	ON	-
Ignition 2	ON	-
Cruise Main Indicator	OFF	-
Front fog Indicator	OFF	-
High Beam Indicator	OFF	-
Door open Indicator	OFF	-
P Inhibit output	ON	-
R Inhibit output	OFF	-
Seat belt indicator	OFF	-
N Inhibit ouput	OFF	-
D Inhibit output	OFF	-
FUEL_INPUT	17.0	L
Battery Voltage on CLU	12.7	V

C. SJB(Smart junction box) Service data

cardiagn.com



Sensor Name	Value	Unit
Rear Left Door Open Switch	CLOSE	-
Rear Left Door Actuator Position Switch	UNLOCK	-
Rear Right Door Open Switch	CLOSE	-
Rear Right Door Actuator Position Switch	UNLOCK	-
Assist Door Open Switch	CLOSE	-
Driver Door Open Switch	OPEN	-
Parking brake switch	PARK	-
Tailgate/Trunk Open Switch	CLOSE	-
Hood Switch	OPEN	-
Driver Seat Belt Switch	UNBUCKLED	-
Assist Seat Belt Switch(Option)	BUCKLED	-
Tailgate/Trunk Release Switch	OFF	-
Brake Fluid Switch	OFF	-
Ignition 1	ON	-
Ignition 2	ON	-
Front fog lamp relay	OFF	-
AV Tail Output	OFF	-
Tail Lamp Relay	OFF	-
Head Lamp High Output	OFF	-
Head Lamp Low Output	OFF	-
Front Deicer Relay	OFF	-
Rear defogger relay	OFF	-
Burglar Alarm Horn Relay	OFF	-
Start Inhibitor Relay	OFF	-
Tailgate/Trunk Release Relay	OFF	-
Central door lock switch	OFF	-
Power Window Relay	ON	-
Assist Door Actuator Position Switch	UNLOCK	-
Driver Door Actuator Position Switch	UNLOCK	-
Assist Door Key Unlock Switch	OFF	-
Driver Door Key Lock Switch	OFF	-
Driver Door Key Unlock Switch	OFF	-
Turn Left Switch	OFF	-
Turn Right Switch	OFF	-
Hazard Switch	OFF	-
Central door unlock switch	OFF	-
Door unlock relay	OFF	-
Door lock relay	OFF	-
HID Option	OFF	-
Static Bending Lamp LH Output	OFF	-
Static Bending Lamp RH Output	OFF	-
Trunk LID Outside Handle Switch	OFF	-

cardiagn.com

4. To perform compulsory operation on BCM input factors, select "ACTUATION TEST".

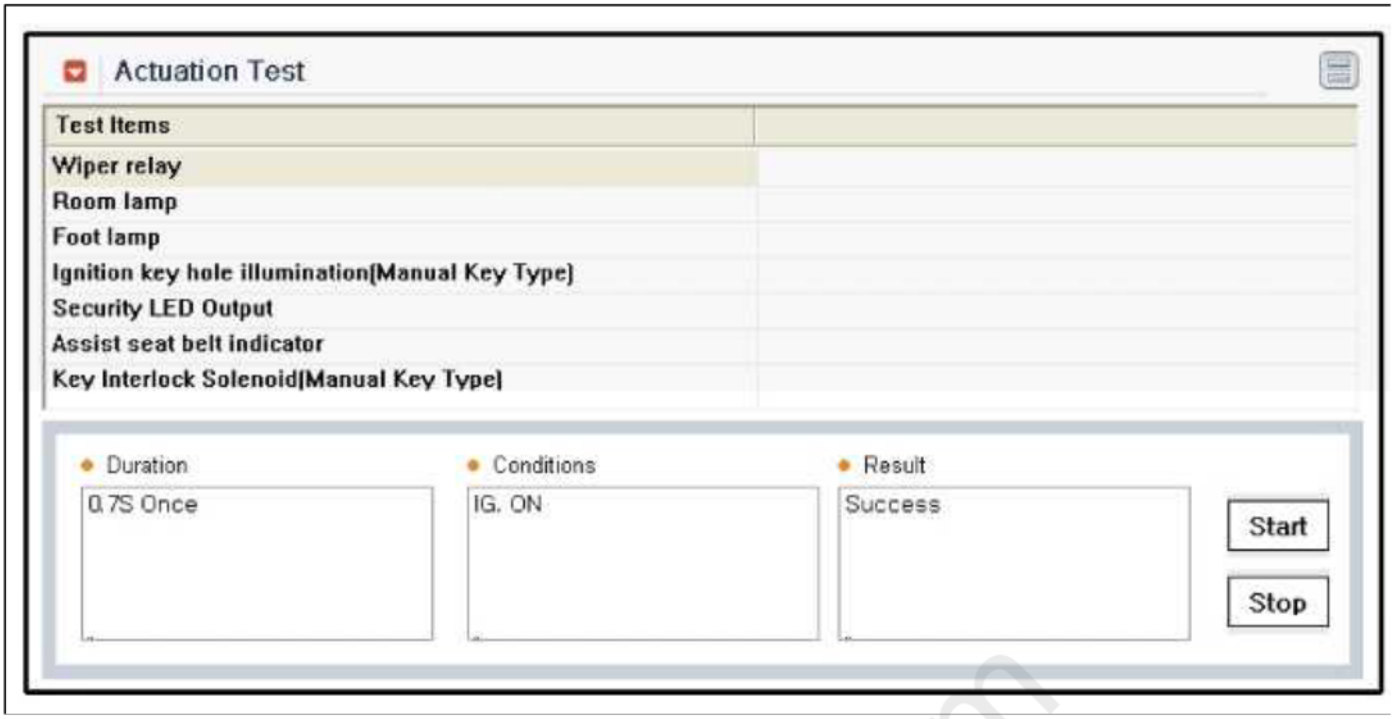

Removal

1. Disconnect the negative (-) battery terminal.
2. Remove the crash pad lower panel (A).

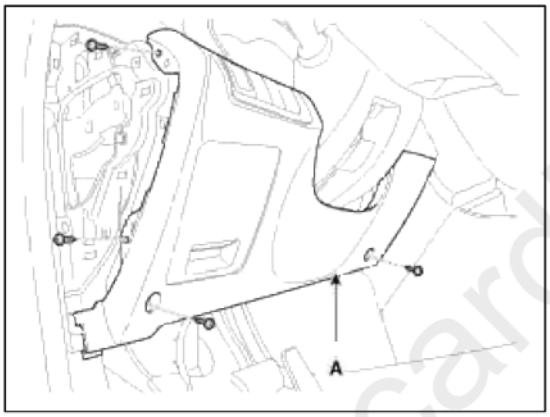

3. Remove the reinforce panel after loosening the mounting bolts.
4. Remove the duct (A) after removing the screw.

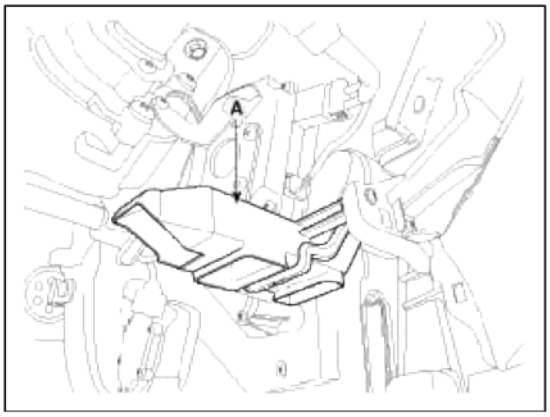

5. Remove the accelerator pedal module.
   (Refer to the FL group - "accelerator pedal")

cardiagn.com

6. Remove the body control module after loosening nut (1EA) and screw (1EA) and disconnecting the connectors (A).

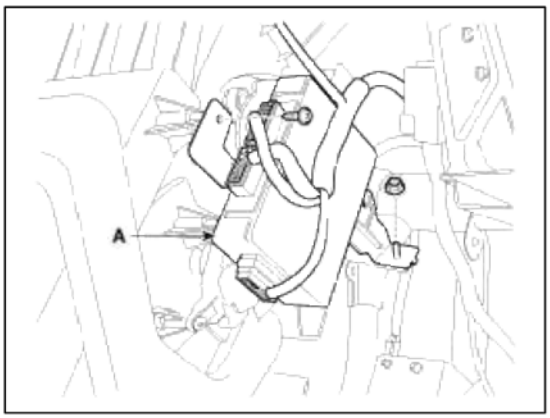

Installation

1. Install the body control module.
2. Install the accelerator.
3. Install the reinforce panel.
4. Install the crash pad lower panel.

Body Electrical System > Seat Electrical > Components and Components Location

Component Location

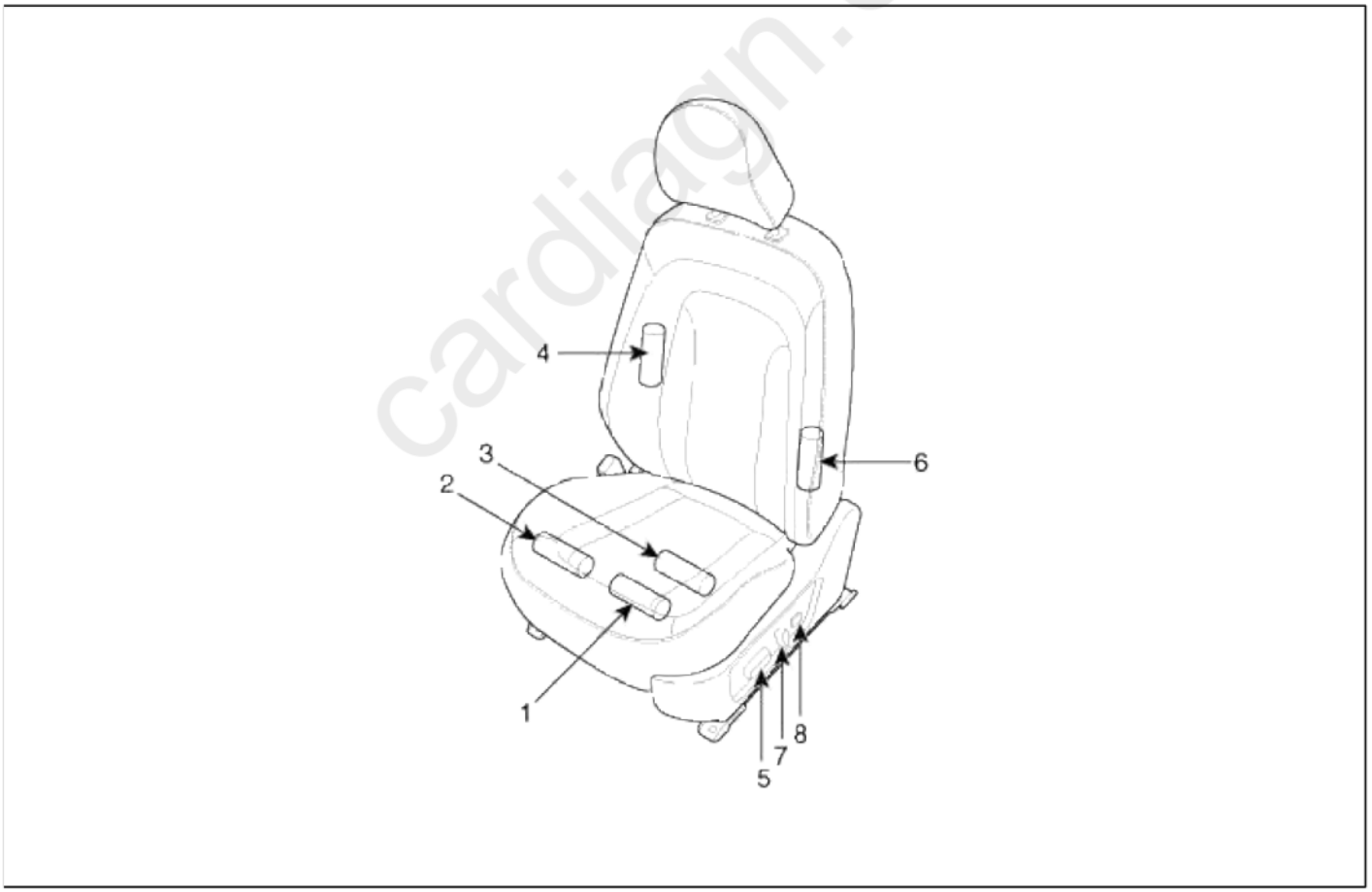

cardiagn.com

1. Slide motor 2. Front height motor 3. Rear height motor 4. Lumber support motor	5. Power seat control switch 6. Recline motor 7. Recline control switch 8. Lumber support switch

Body Electrical System > Seat Electrical > Power Seat Motor > Repair procedures

Inspection

Power Seat Motor

1. Disconnect the connectors for each motor.
   A : Front height motor
   B : Slide motor
   C : Rear height motor
   D : Recline motor
   E : Lumber support motor

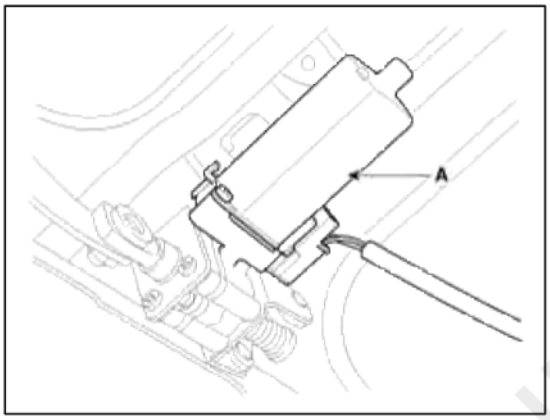

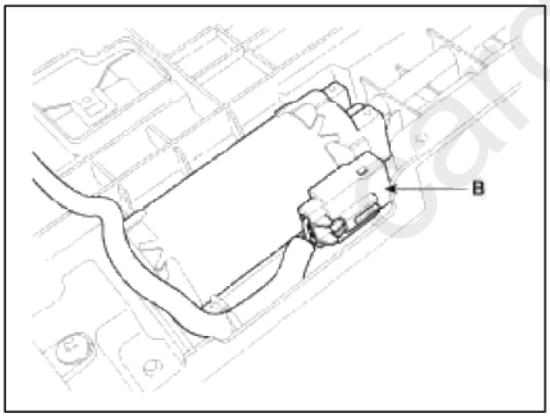

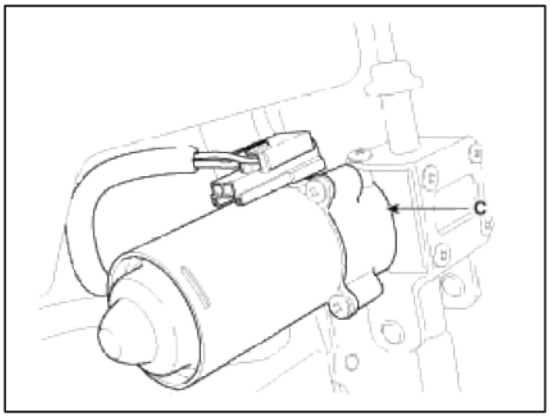

cardiagn.com

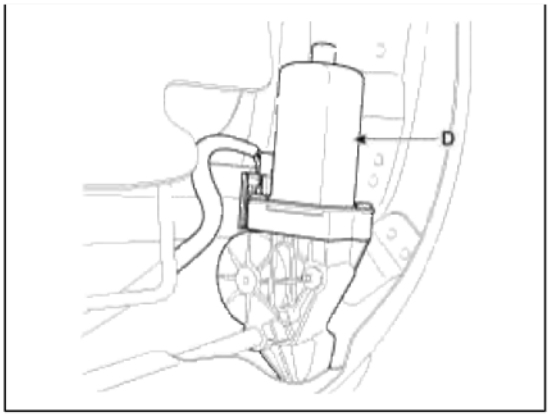

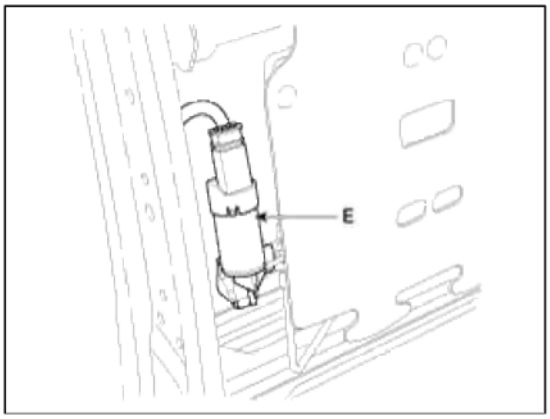

2. With the battery connected directly to the motor terminals, check if the motors run smoothly.
3. Reverse the connections and check that the motor rotates in reverse.
4. If there is an abnormality, replace the motors.

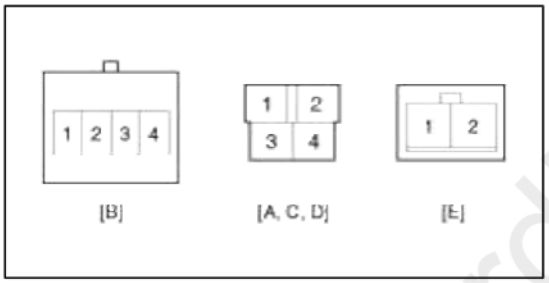

Position	Terminal NO.	+	-
Front height motor A	UP	2	1
	Down	1	2
Slide motor B	Front	1	4
	Rear	4	1
Rear height motor C	UP	1	4
	Down	4	1
Recline motor D	Front	2	1
	Rear	1	2
Lumber support E	Front	1	2
	Rear	2	1

Reclining Motor Limit Switch

1. Disconnect the limit switch and operate the limit switch.
2. Check for continuity between the terminals.
3. Make sure that the seat operation is normal in the reverse after the maximum operation.

cardiagn.com

4. If there is an abnormality, replace the limit switch.

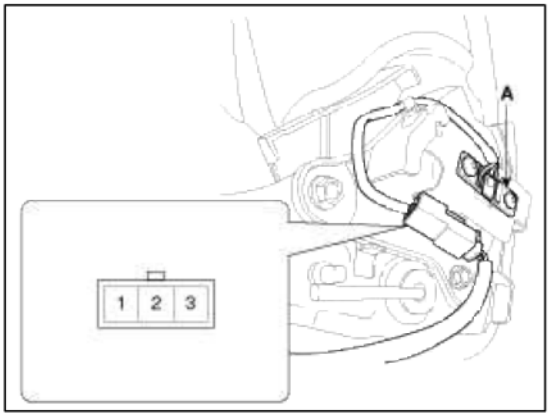

Position \ Terminal	1	2	3
Front	○——	——○	
Rear	○——	——	——○

Body Electrical System > Seat Electrical > Power Seat Control Switch > Schematic Diagrams

Circuit Diagram

cardiagn.com

[Driver-Non-IMS]

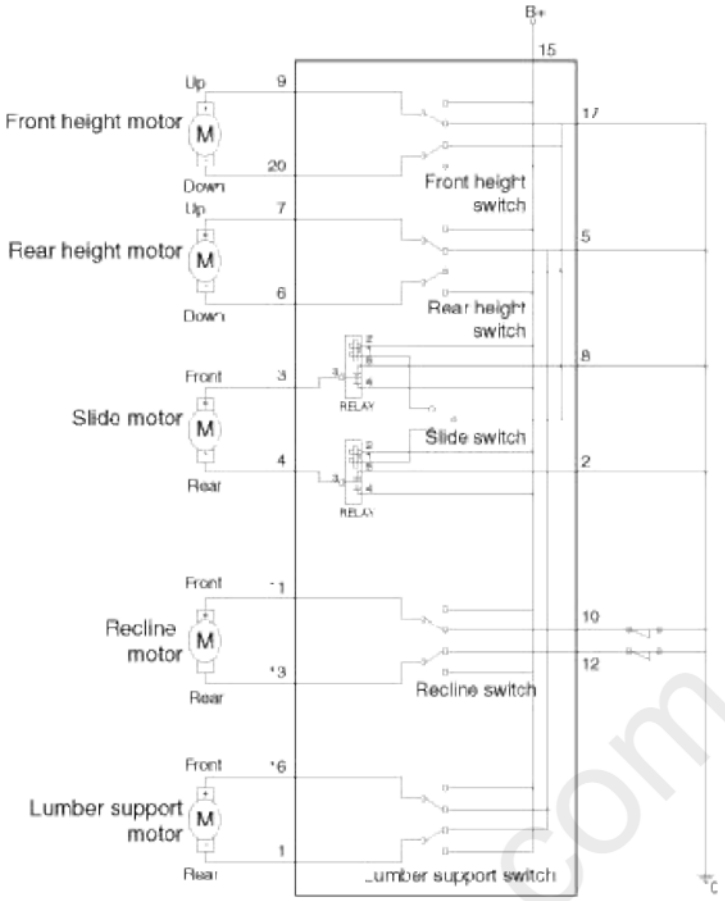

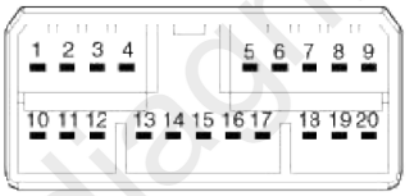

No.	Description	No.	Description
1	Lumber support motor (Rear)	11	Recline motor (Front)
2	Seat relay (-) (Front)	12	Recline limit switch (-)
3	Seat motor (Front)	13	Recline motor (Rear)
4	Seat motor (Rear)	14	-
5	GND	15	Battery (+)
6	Rear height motor (Up)	16	Lumber motor (Front)
7	Rear height motor (Down)	17	GND
8	Seat relay (-) (Rear)	18	-
9	Front height motor (Up)	19	-
10	Recline limit switch (-)	20	Front height motor (Down)

obdiagn.com

[Passenger]

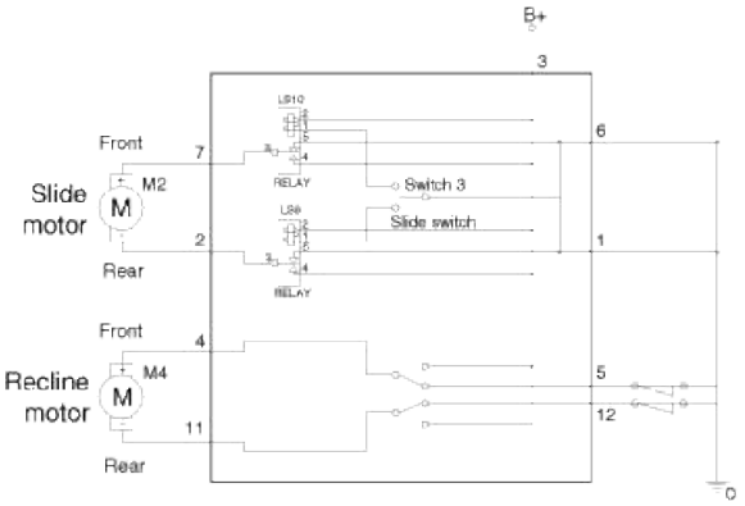

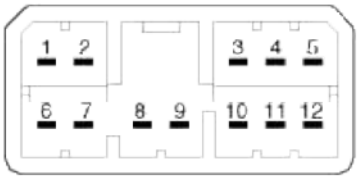

No.	Description	No.	Description
1	Seat relay (-)	7	Seat motor (Front)
2	Seat motor (Rear)	8	-
3	Battery (+)	9	-
4	Recline motor (Front)	10	-
5	Recline limit switch (-)	11	Recline motor (Rear)
6	Seat relay GND (-)	12	Recline limit switch (-)

[Lumber Support]

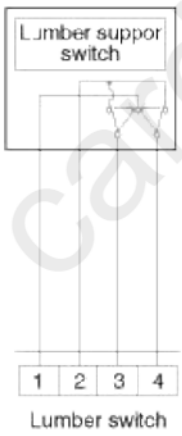

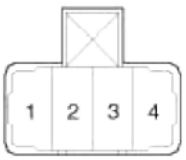

No.	Description
1	Battery (+)
2	GND
3	Lumber support motor (Front)
4	Lumber support motor (Rear)

cardiagn.com

Body Electrical System > Seat Electrical > Power Seat Control Switch > Repair procedures

Inspection

With the power seat switch in each position, make sure that continuity exists between the terminals below. If continuity is not as specified, replace the power seat switch.

A : Power seat control switch

B : Lumber support switch

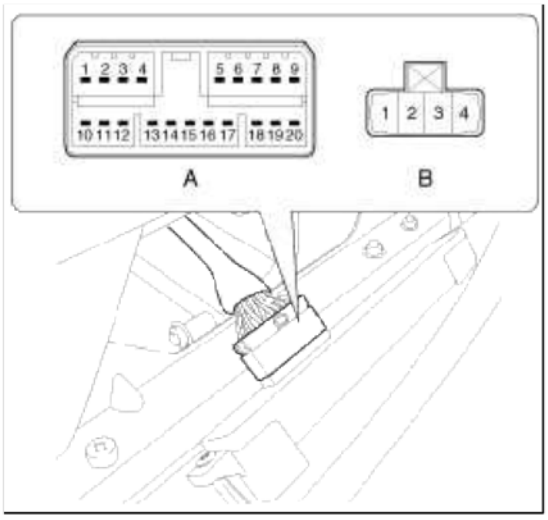

Driver power seat control switch (Non - IMS)

	Front height control switch		Slide control switch				Rear height control switch		Rear recline control switch				Lumber support control switch			Remark
	Up	Down	N		I H		Up	Down	N		I H		N	I H		
			HEI	SEAT	Front	Rear			HEI	REC	Front	Rear	–	Front	Rear	
15	○	○			○	○	○	○			○	○		○	○	Battery ⊕
17			○	○												GND ⊖
20		○	○													Front height motor
9	○			○												Front height motor
4				○		○										Seat motor
3			○		○											Seat motor
8				○												Seat relay GND ⊖
2			○													Seat relay GND ⊖
7							○		○							Rear height motor (Up)
6								○	○							Rear height motor (Down)
11										○	○					Recline motor (Front)
13										○		○				Recline motor (Rear)
12										○						Recline limit switch ⊖
10										○						Recline limit switch ⊖
1													○		○	Lumber support motor (Rear)
16													○	○		Lumber support motor (Front)
5									○	○			○	○		Lumber GND ⊖

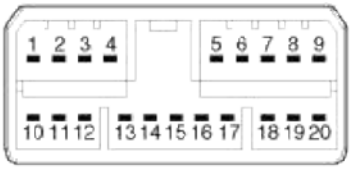

[Driver power seat control switch]

cardiagn.com

Driver Lumber Switch

	Lumber switch			Remark
	Rear	Neutral	Front	
1	○		○	
2		○ ○		
3			○	
4	○	○		

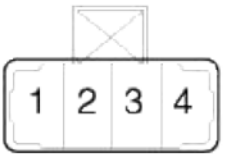

Passenger power seat control switch

	Slide control switch			Rear recline control switch			Remark
	N	RH		RH		N	
	SEAT	Front	Rear	Front	Rear	REC	
3		○	○	○	○		Battery ⊕
7	○	○					Seat motor (Front)
2	○		○				Seat motor (Rear)
4				○		○	Recline motor (Front)
11					○	○	Recline motor (Rear)
6	○						Seat relay GND ⊖
1	○						Seat relay GND ⊖
5						○	Recline limit switch ⊖
12						○	Recline limit switch ⊖



cardiagn.com

Removal

1. Disconnect the negative (-) battery terminal.
2. Remove the seat control switch (A).

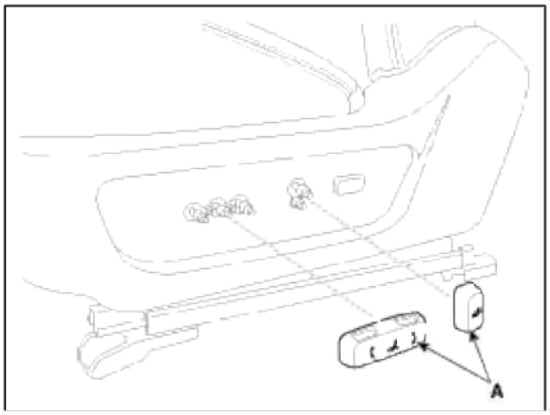

3. Remove the seat side cover (A).
   (Refer to the BD group - "Front seat")

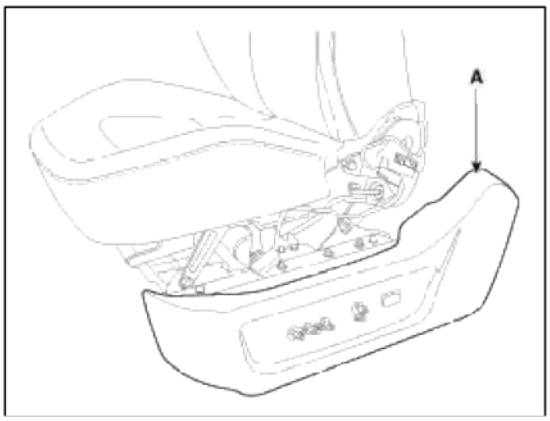

4. Disconnect the power seat control switch connector (A).

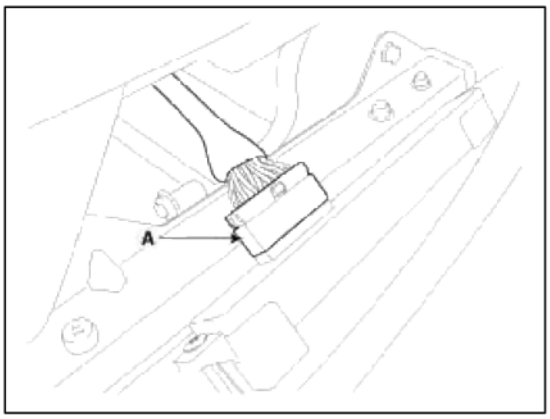

5. Remove the power seat control switch (A) after removing the mounting screws (3EA).

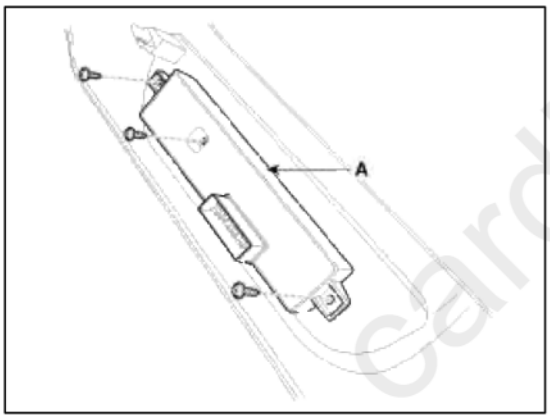

Installation

NOTE

- Make sure that the IMS control switch connectors and related connectors are plugged in properly.
- Check the IMS control switch operates normally.

1. Connect the connectors and reassemble the IMS control switch.
2. Reassemble the seat side cover.

Body Electrical System > Seat Electrical > Seat Heater Switch > Schematic Diagrams

Circuit Diagram

cardiagn.com

[Air ventilation + Seat Heater]

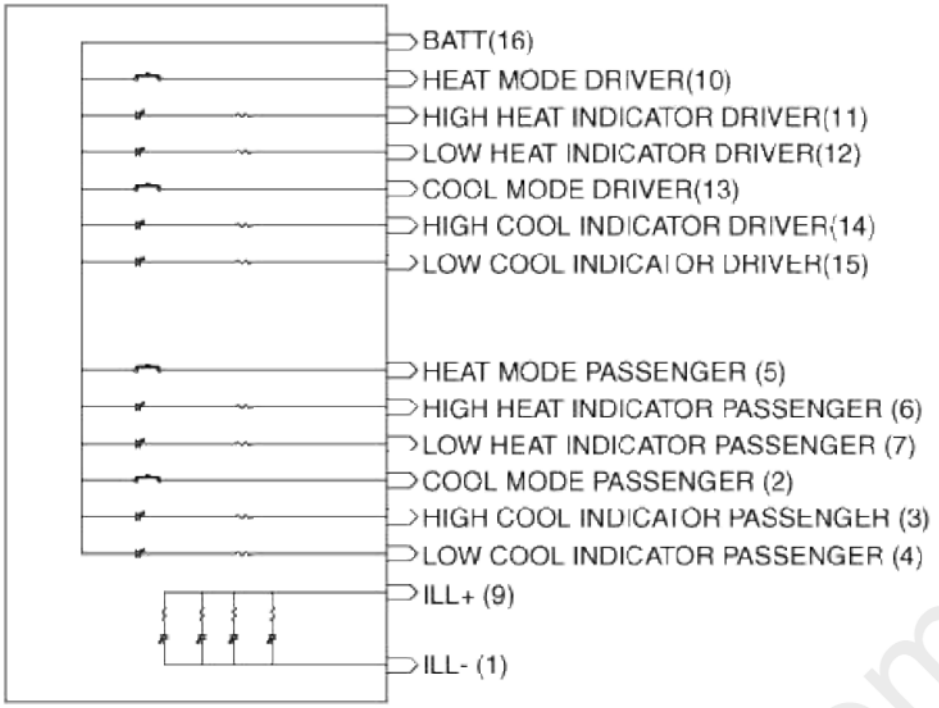

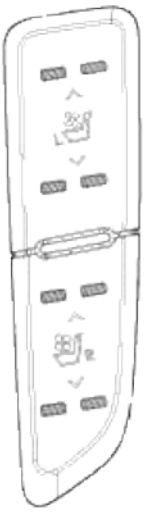

[Automatic Transmission]

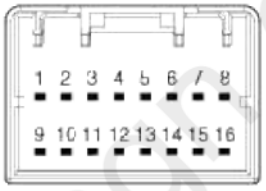

NO.	Description(Driver)	NO.	Description(Passenger)
10	Heat Mode	2	Cool Mode
11	Heat Indicator(Low)	3	Cool Indicator(Low)
12	Heat Indicator(Hi)	4	Cool Indicator(Hi)
13	Cool Mode	5	Heat Mode
14	Cool Indicator(Low)	6	Heat Indicator(Low)
15	Cool Indicator(Hi)	7	Heat Indicator(Hi)
1	Illumination -	1	Illumination -
9	Illumination +	9	Illumination +
16	Battery	16	Battery

carlagr.com

[Seat Heater]

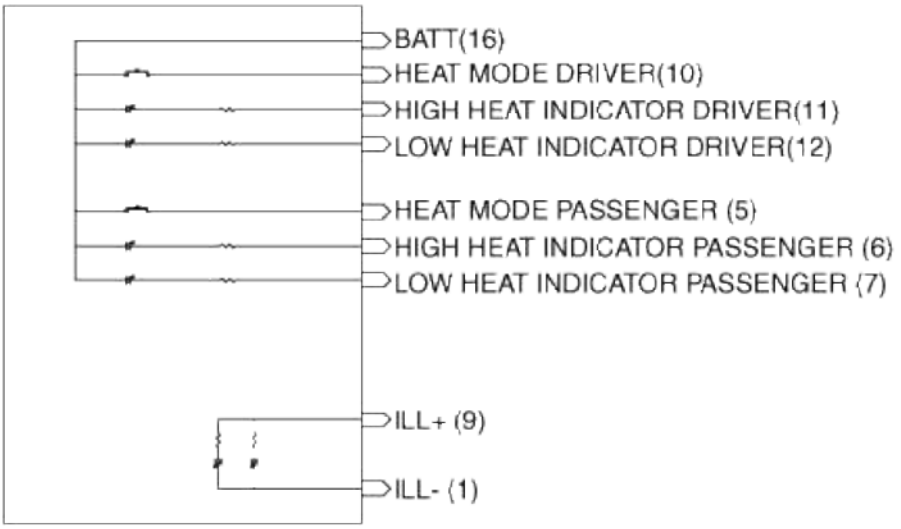

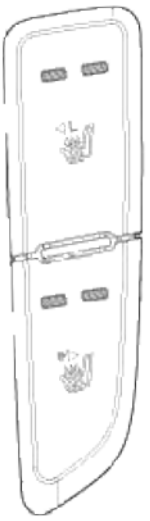

[Automatic Transmission]

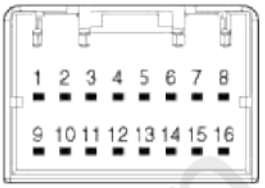

NO.	Description(Driver)	NO.	Description(Passenger)
10	Heat Mode	5	Heat Mode
11	Heat Indicator(Low)	6	Heat Indicator(Low)
12	Heat Indicator(Hi)	7	Heat Indicator(Hi)
1	Illumination -	1	Illumination -
9	Illumination +	9	Illumination +
16	Battery	16	Battery

carmagn.com

[Air ventilation + Seat Heater]

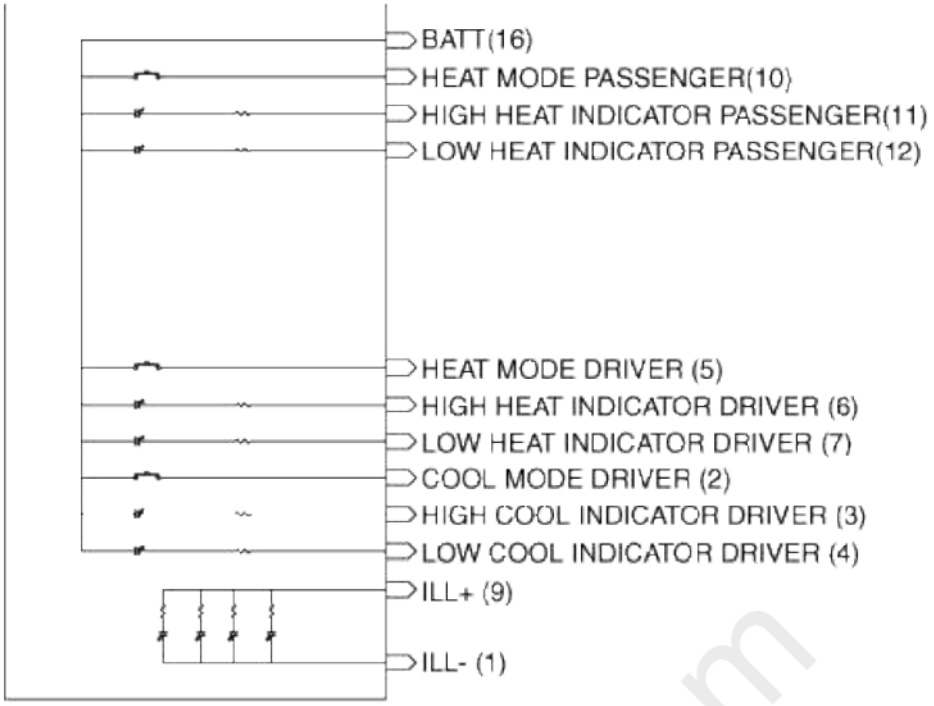

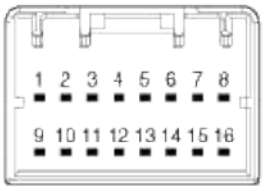

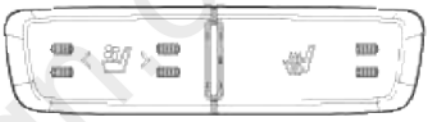

[Manual Transmission]

NO.	Description(Passenger)	NO.	Description(Driver)
10	Heat Mode	2	Cool Mode
11	Heat Indicator(Low)	3	Cool Indicator(Low)
12	Heat Indicator(Hi)	4	Cool Indicator(Hi)
13	-	5	Heat Mode
14	-	6	Heat Indicator(Low)
15	-	7	Heat Indicator(Hi)
1	Illumination -	1	Illumination -
9	Illumination +	9	Illumination +
16	Battery	16	Battery

carmanuals.com

[Seat Heater]

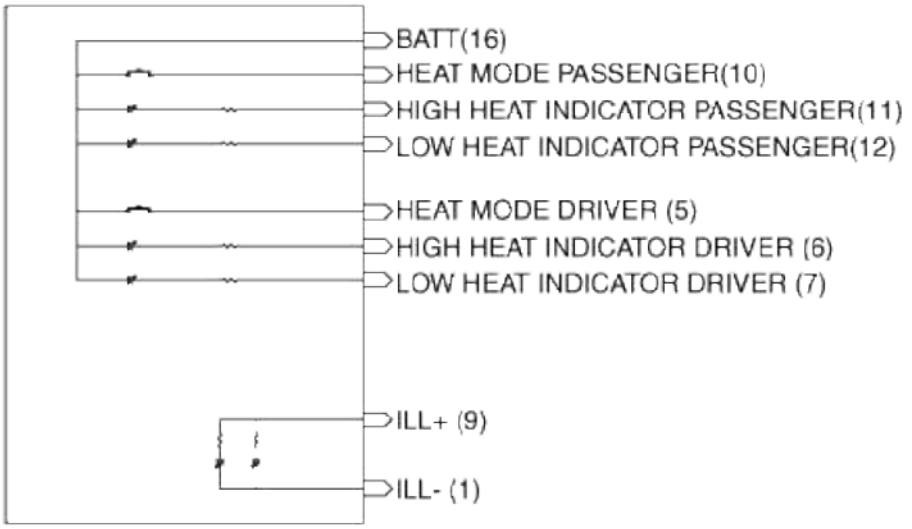

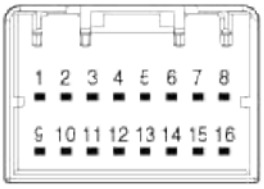

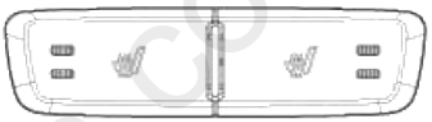

[Manual Transmission]

NO.	Description(Passenger)	NO.	Description(Driver)
10	Heat Mode	5	Heat Mode
11	Heat Indicator(Low)	6	Heat Indicator(Low)
12	Heat Indicator(Hi)	7	Heat Indicator(Hi)
1	Illumination -	1	Illumination -
9	Illumination +	9	Illumination +
16	Battery	16	Battery

carmanuals.com

Body Electrical System > Seat Electrical > Seat Heater Switch > Repair procedures

Inspection

Front Seat Heater Switch

1. Disconnect the negative (-) battery terminal.
2. Remove the floor console upper cover.
   (Refer to the BD group - "Console")

3. Remove the seat heater switch connectors from the floor console upper cover (A).

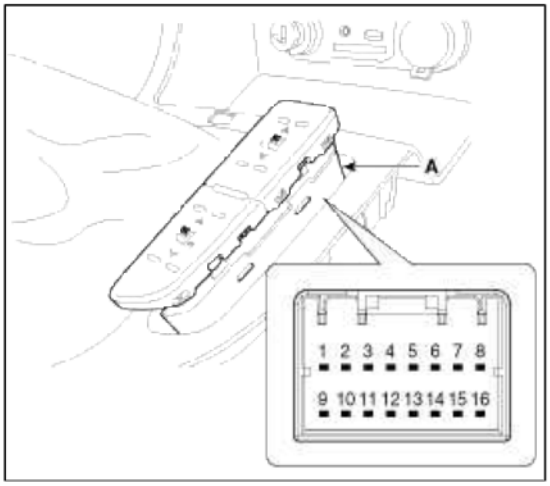

4. Operate each seat heater switch and check that continuity exists between the terminals.
   If there is no continuity, replace the seat heater switch

[A/T]

( ) : passenger

Terminal / Position	16	10(5)	11(6)	12(7)
Heat (Hi)	○	○	○	
Heat (Low)	○	○		○

[M/T]

( ) : passenger

Terminal / Position	16	5(10)	6(11)	7(12)
Heat (Hi)	○	○	○	
Heat (Low)	○	○		○

Terminal / Position	1	9
Illumination	○	○

Rear Seat Heater Switch

1. Disconnect the negative (-) battery terminal.
2. Remove the rear door trim.
   (Refer to the BD group - "Rear door")
3. Remove the power window switch(A).

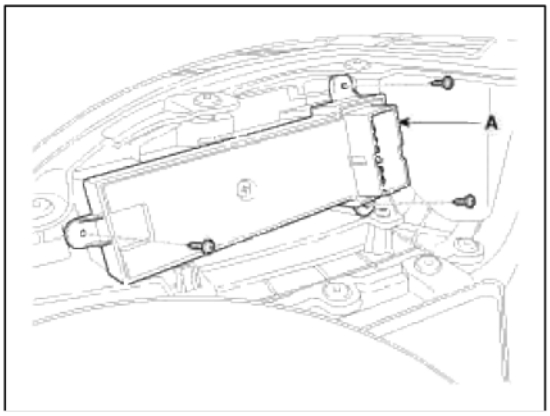

cardiagn.com

4. Turn rear seat heater switch ON and check that continuity exists between the terminals.
   If there is no continuity, replace the seat heater switch.

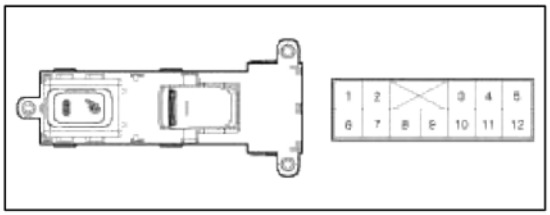

Position / Terminal	ON(Push)	OFF(Free)	Remark
6	○		SIG input
7	○		SIG output
11	○		Illumination -
10	○		Illumination +

Installation

1. Install the seat heater switch.
2. Install the power window switch.
3. Install the rear door trim.

Body Electrical System > Seat Electrical > Seat Heater > Components and Components Location

Component Location

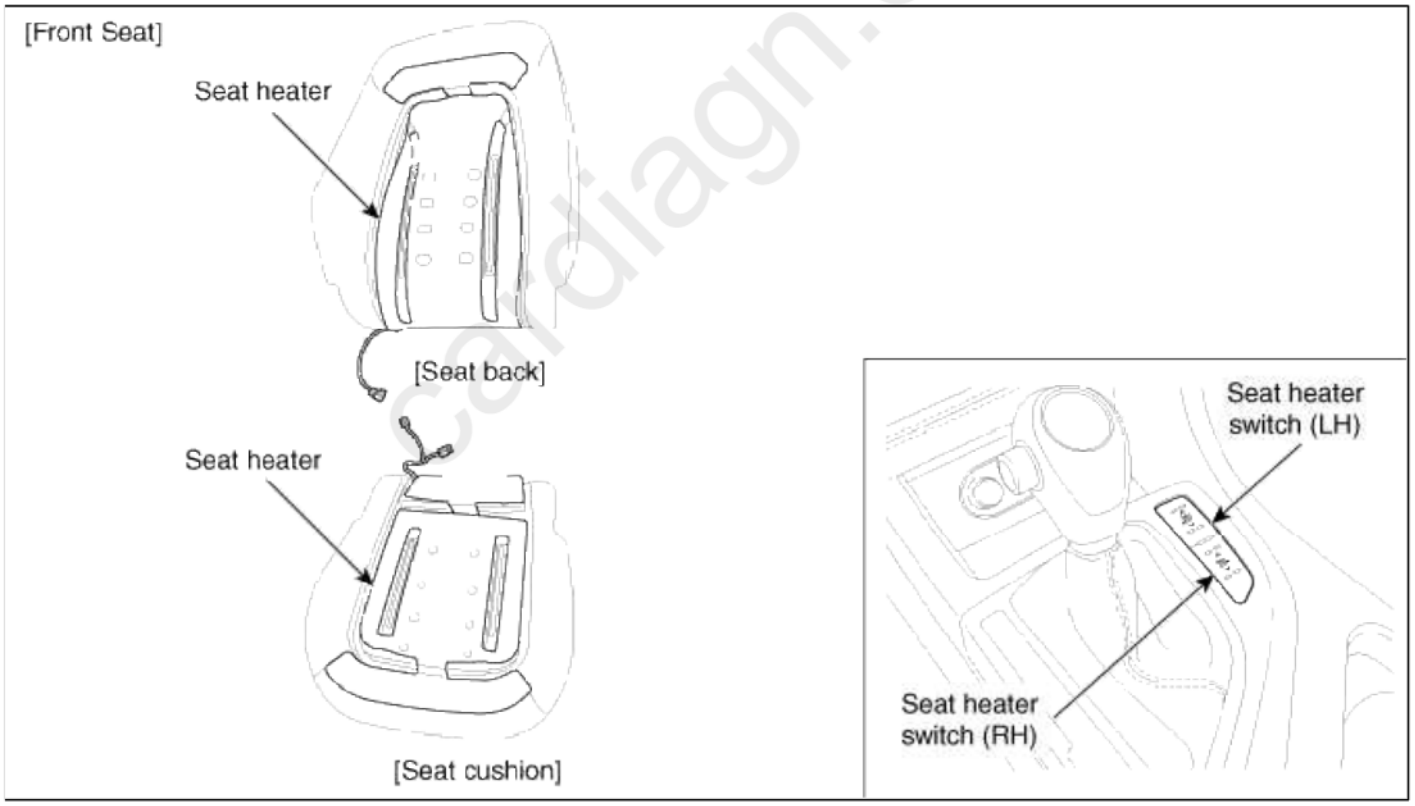

Body Electrical System > Seat Electrical > Seat Heater > Schematic Diagrams

Circuit Diagram

cardiagn.com

[Front Seat Heater]

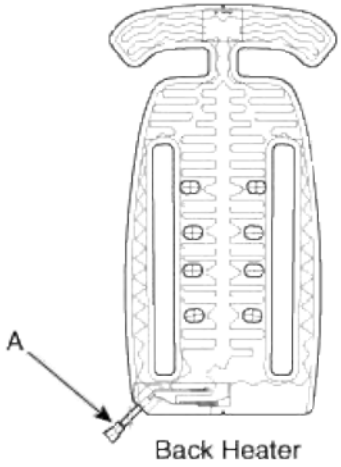

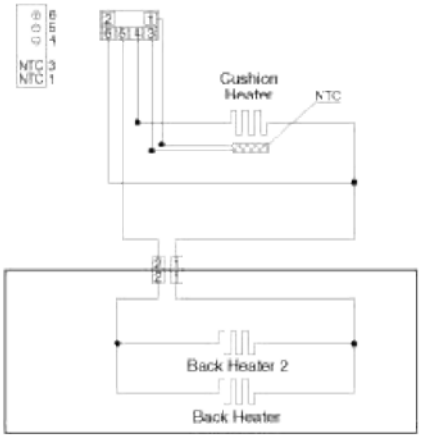

[Back Heater]

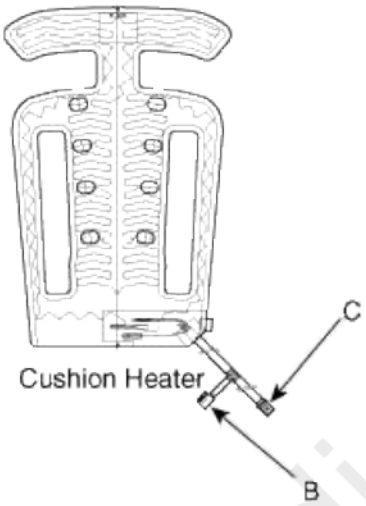

[Cushion Heater]

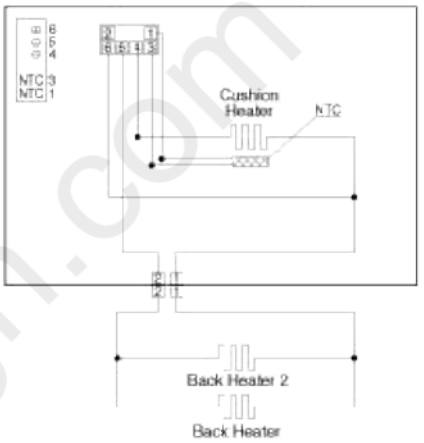

Connector A	Connector B	Connector C
	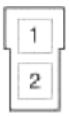	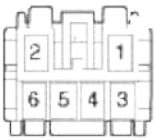

cardiagn.com

Body Electrical System > Seat Electrical > Seat Heater > Repair procedures

Inspection

First Seat Heater

1. Check for continuity and measure the resistance between No.4 and No.6 terminals.

[Cushion]

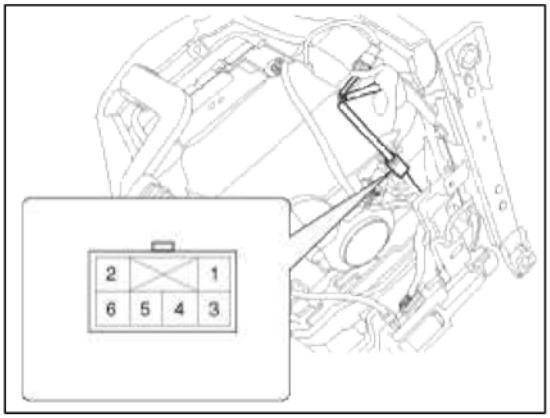

No.	Description	No.	Description
1	NTC	4	GND
2	-	5	GND
3	NTC	6	VCC

[Back]

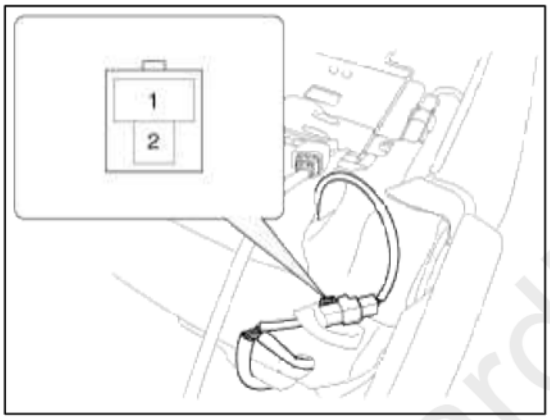

Standard value (Fabric / Leather)
Cushion : 3.89 Ω ± 10%
Back: 3.11 Ω ± 10% / 4.13 Ω ± 10%
Set : 7.0 Ω ± 10% / 8.9 Ω ± 10%

2. Operate the seat heater after connecting the connector, and then check the thermostat by measuring the temperature of seat surface.

Standard value (Fabric / Leather)
Cushion :
1 Step : 40 ± 2°C(104 ± 3.6°F)
2 Step : 42 ± 2°C(107.6 ± 3.6°F)
Back :
1 Step : 46 ± 2°C(114.8 ± 3.6°F)
2 Step : 52 ± 2°C(125.6 ± 3.6°F)

cardiagn.com

Body Electrical System > Seat Electrical > Seat Heater (Non-Air Ventilation) > Components and Components Location

Component Location

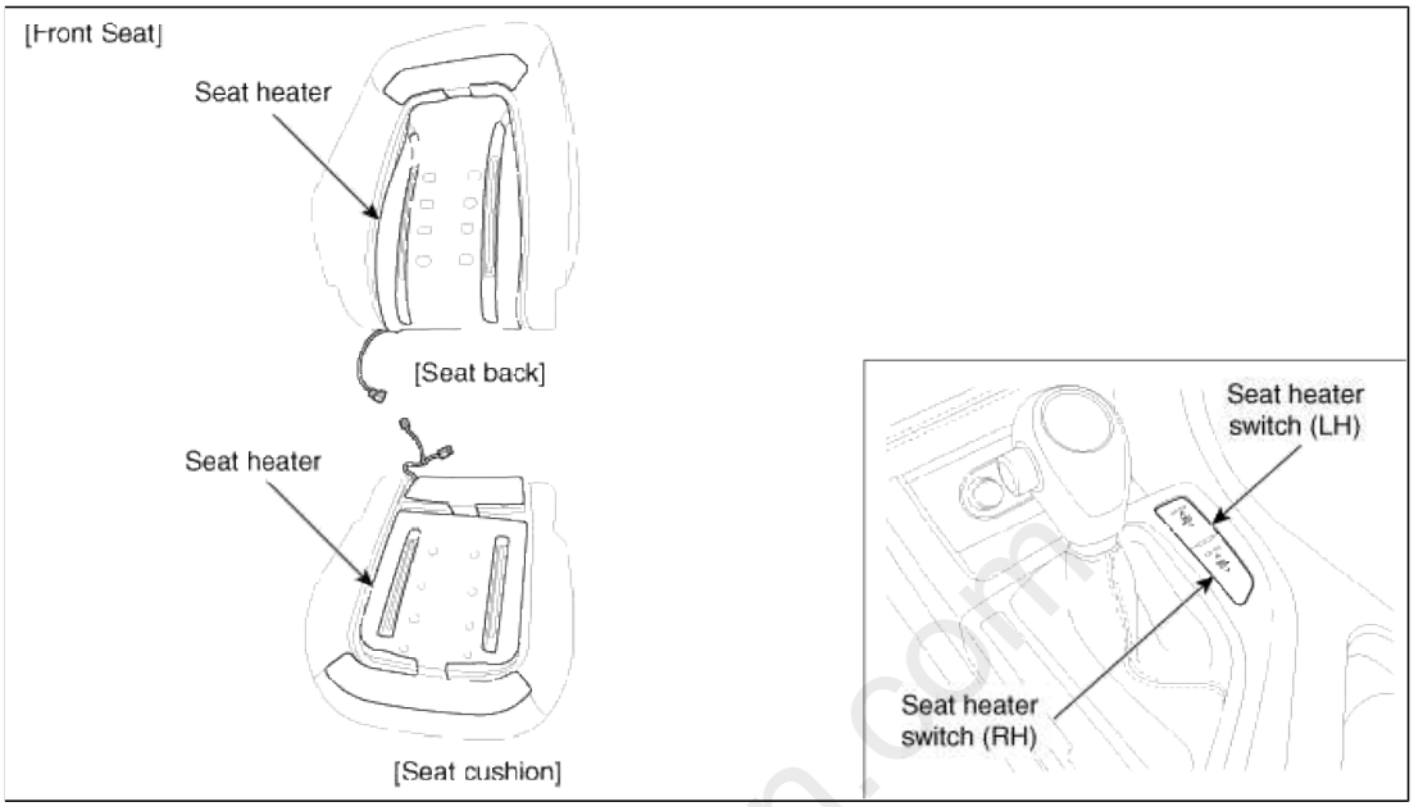

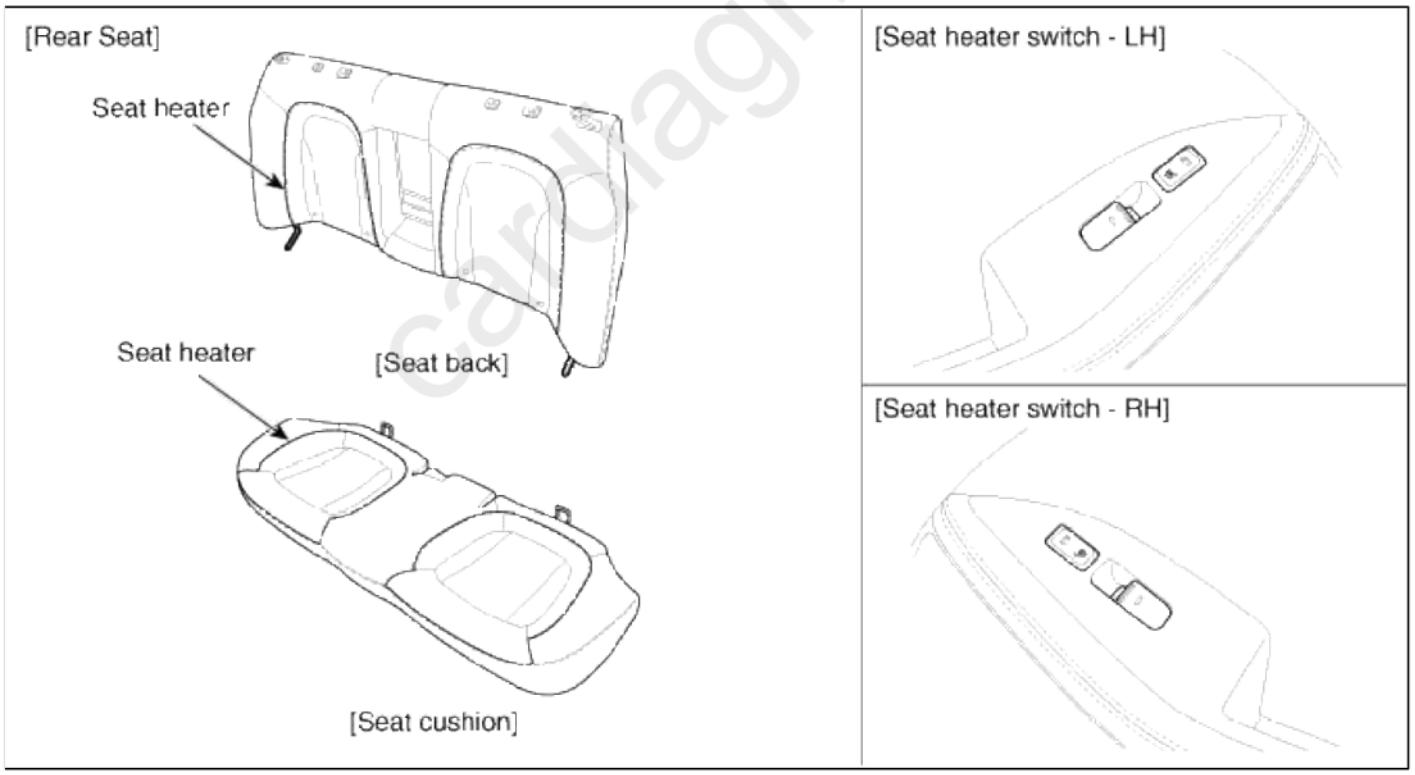

Cardiagn.com

Body Electrical System > Seat Electrical > Seat Heater (Non-Air Ventilation) > Schematic Diagrams

Circuit Diagram

[Seat Heater Unit
(Non-air ventilation)]

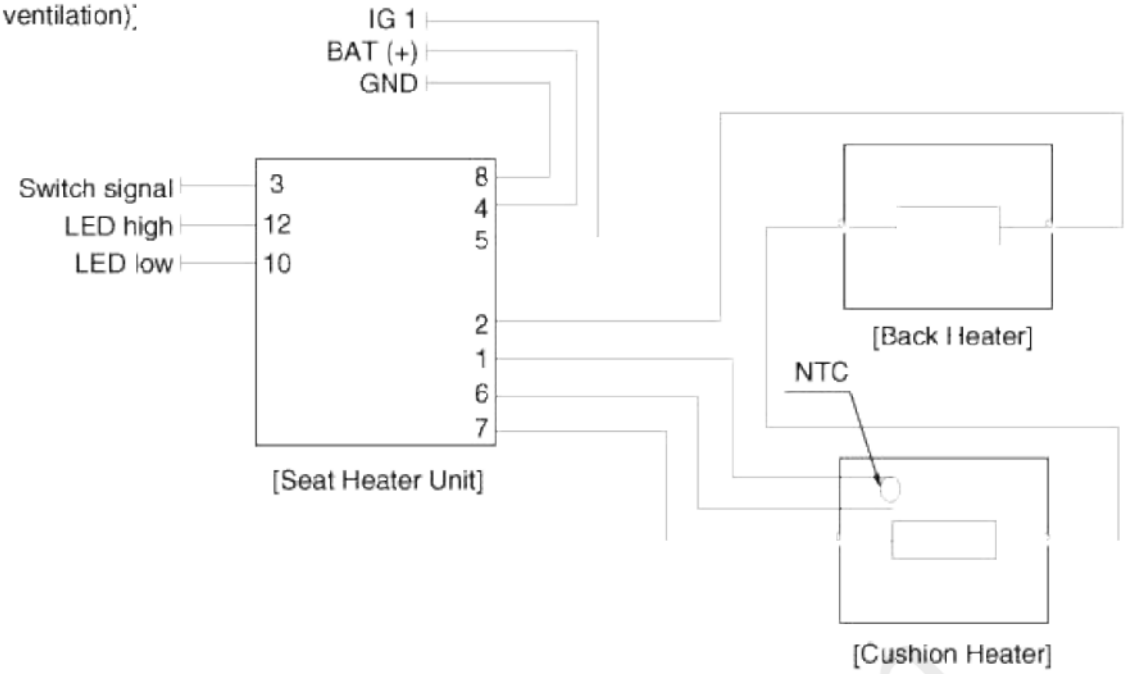

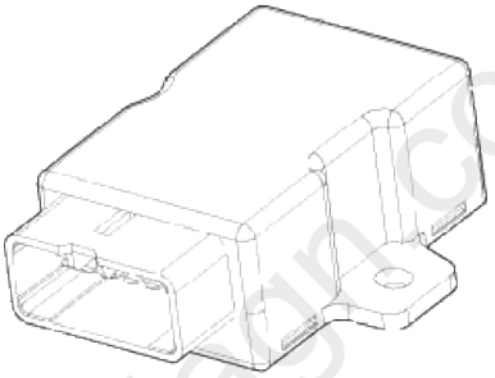

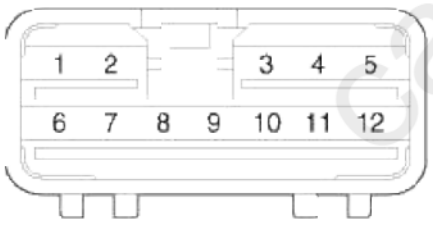

No.	Description	No.	Description
1	NTC(+)	7	Heater(-)
2	Heater(+)	8	GND
3	Switch signal	9	-
4	BAT(+)	10	LED Low
5	IGN 1	11	-
6	NTC(-)	12	LED High

cardiagn.com

[Front Seat Heater]

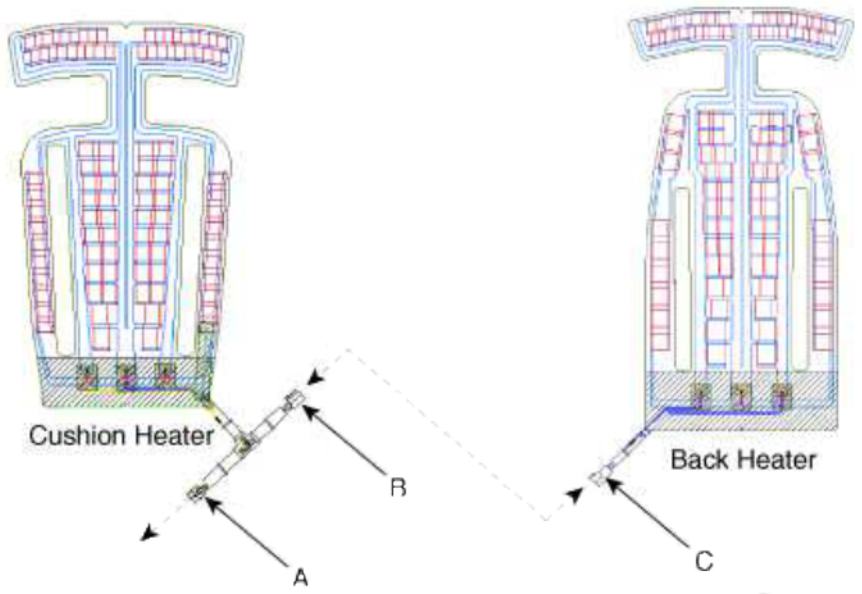

Connector A	Connector B	Connector C
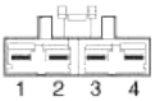		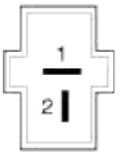

cardiagn.com

[Rear Seat Heater]

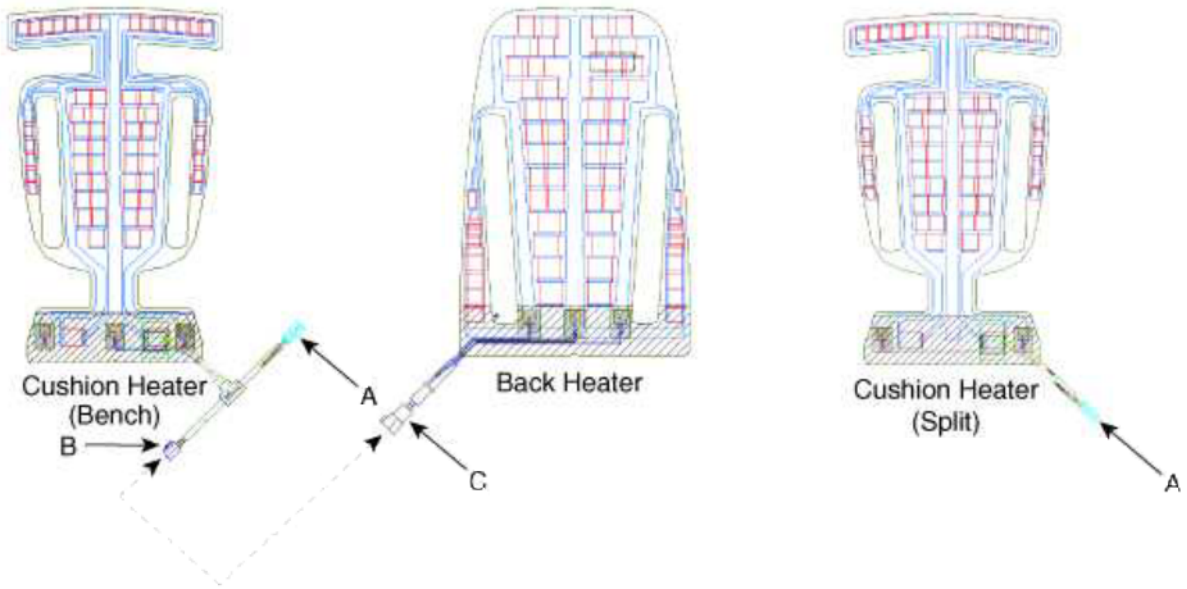

Connector A	Connector B	Connector C
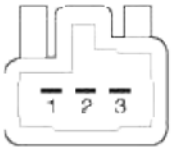		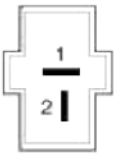

cardiagn.com

Body Electrical System > Seat Electrical > Seat Heater (Non-Air Ventilation) > Repair procedures

Inspection

First Seat Heater

1. Check for continuity and measure the resistance between No.4 and No.6 terminals.

[Cushion]

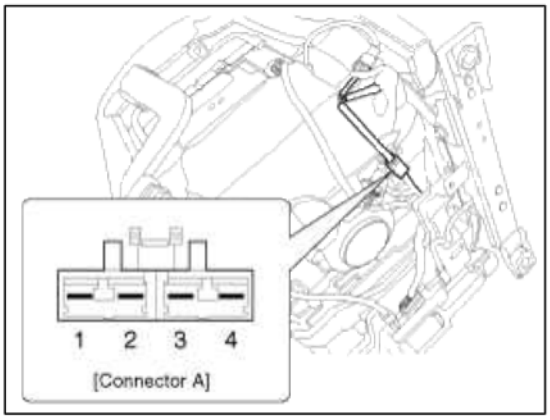

No.	Description	No.	Description
1	Heater (-)	3	NTC (+)
2	NTC (-)	4	Heater (+)

[Back]

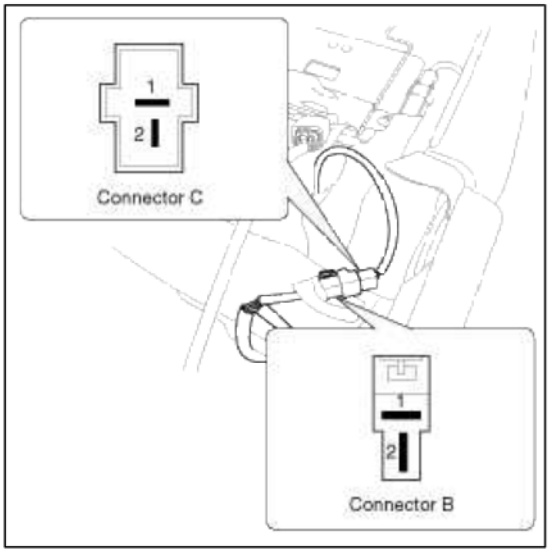

2. Measure the resistance between No.1 and No. 4 in the A connector to check the cushion and back heater.

Standard value
Set (Cushion+Back) : 2.65Ω ± 10%

3. Measure the resistance between No.4 in the A and No. 1 in the B connector to check the cushion heater.

Standard value
Cushion : 1.3Ω ± 10%

4. Measure the resistance between No.1 and No. 2 in the C connector to check the back heater.

Standard value
Back : 1.35Ω ± 10%

5. Operate the seat heater after connecting the connector, and then check the thermostat by measuring the temperature of seat surface.

Standard value (Fabric / Leather)
Cushion :
1 Step : 40 ± 2°C(104 ± 3.6°F)
2 Step : 42 ± 2°C(107.6 ± 3.6°F)
Back :
1 Step : 46 ± 2°C(114.8 ± 3.6°F)
2 Step : 52 ± 2°C(125.6 ± 3.6°F)

Rear Seat Heater

cardiagn.com

1. Check for continuity and measure the resistance between terminals as below.

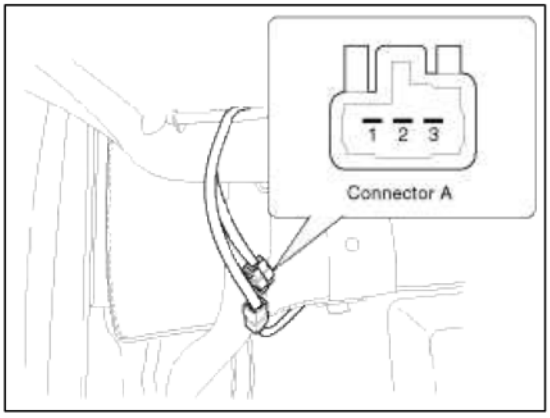

Refer to the "Circuit Diagram" to check the connector B and C.

2. Measure the resistance between No.1 and No. 2 in the A connector to check the cushion and back heater.

Standard value
Set (Cushion+Back) - Bench type : 2.90Ω ± 10%
Cushion - Split type : 8.0Ω ± 10%

3. Measure the resistance between No.3 in the A and No. 1 in the B connector to check the cushion heater.

Standard value
Cushion - Bench type : 2.2Ω ± 10%

4. Measure the resistance between No.1 and No. 2 in the C connector to check the back heater.

Standard value
Back - Bench type : 1.7Ω ± 10%

5. Operate seat warmer after connecting the 4P connector, and then check the thermostat by measuring the temperature of seat surface.

Standard value (Fabric / Leather)
Cushion :
1 Step : 40 ± 2°C(104 ± 3.6°F)
2 Step : 42 ± 2°C(107.6 ± 3.6°F)
Back :
1 Step : 46 ± 2°C(114.8 ± 3.6°F)
2 Step : 52 ± 2°C(125.6 ± 3.6°F)

cardiagn.com

Body Electrical System > Seat Electrical > Air Ventilation Seat > Components and Components Location

Components (1)

[Front Seat]

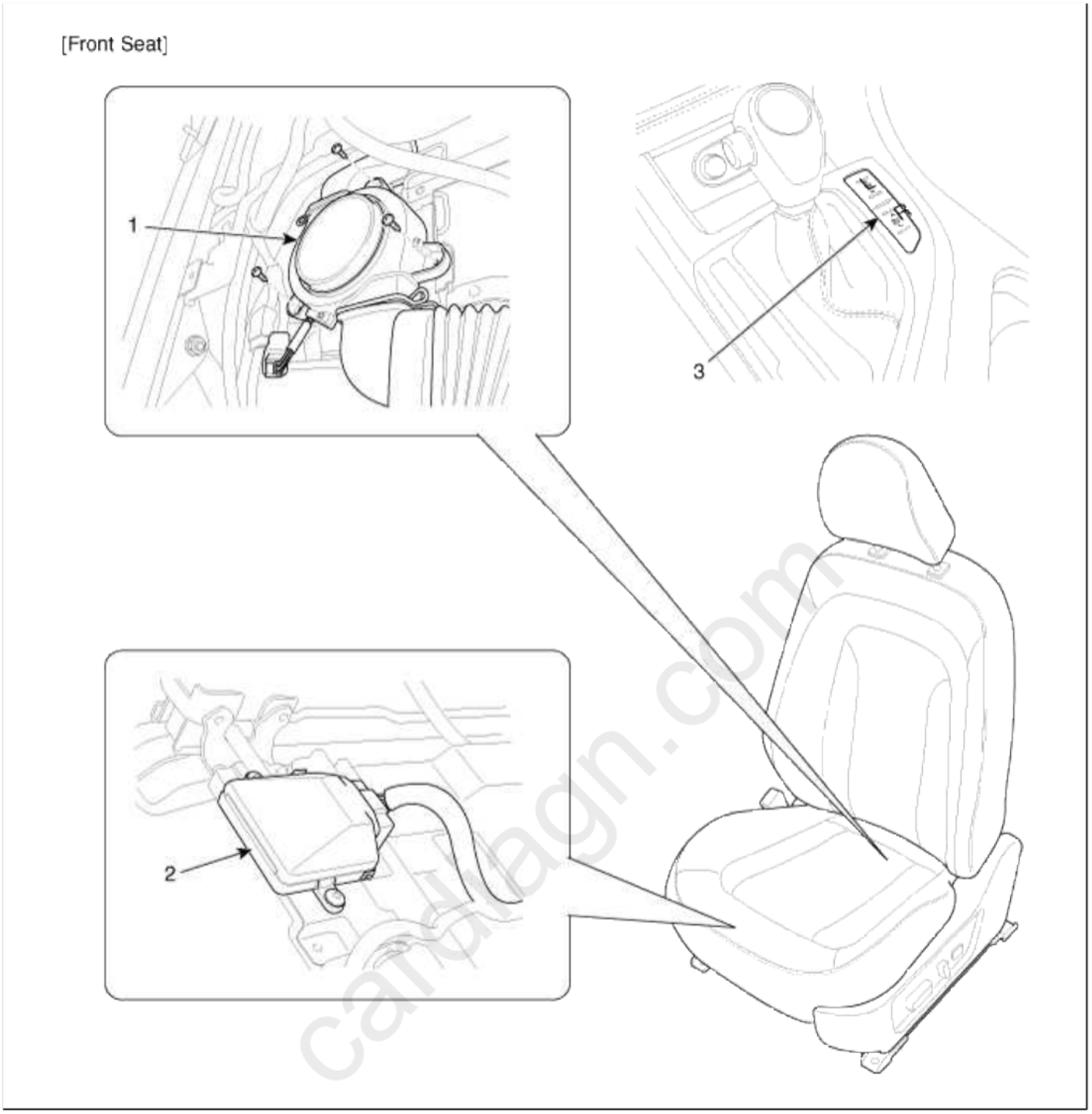

1. Ventilation blower 2. Ventilation ECU	3. Ventilation seat switch

Components (2)

[Ventilation Blower]

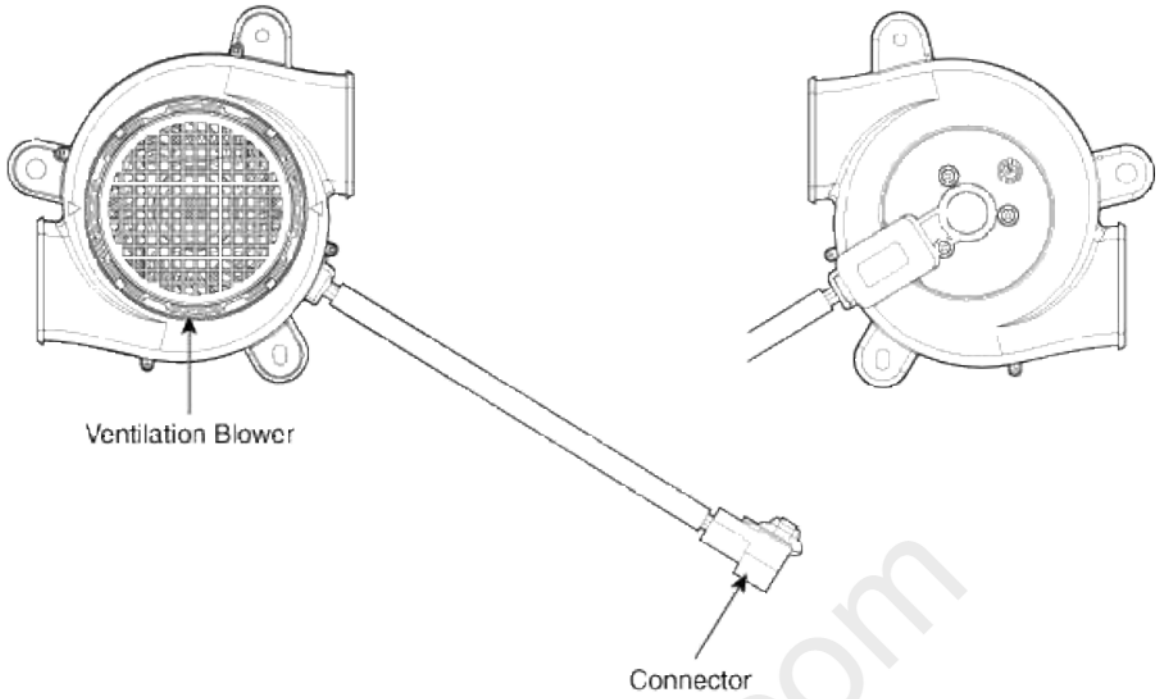

Connector	Pin	Description
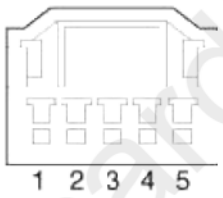 1 2 3 4 5	1	-
	2	12V
	3	RPM Control
	4	Ground
	5	-

cardiagn.com

Components (3)

[Ventilation Control Unit]

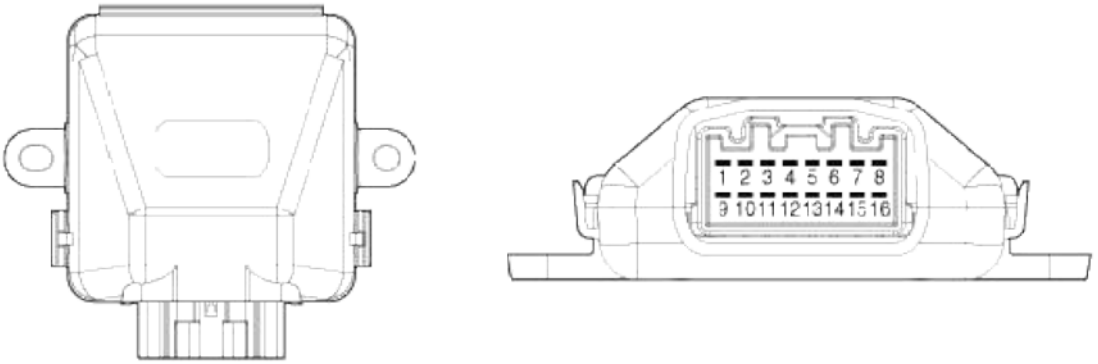

No.	Description	No.	Description
1	NTC Return	9	NTC
2	LED - Low Vent	10	LED - High Vent
3	LED - Low Heat	11	LED - High Heat
4	Blower 1 Speed Control	12	Blower 2 Speed Control
5	Momentary Vent Switch	13	Momentary Heat Switch
6	Bolwer Motor Power	14	Blower Motor Return
7	Ignition Run	15	Heater Mat 2
8	Ground	16	Heater Mat 1

cardiagn.com

Body Electrical System > Seat Electrical > Air Ventilation Seat > Schematic Diagrams

Circuit Diagram

[Front Seat]

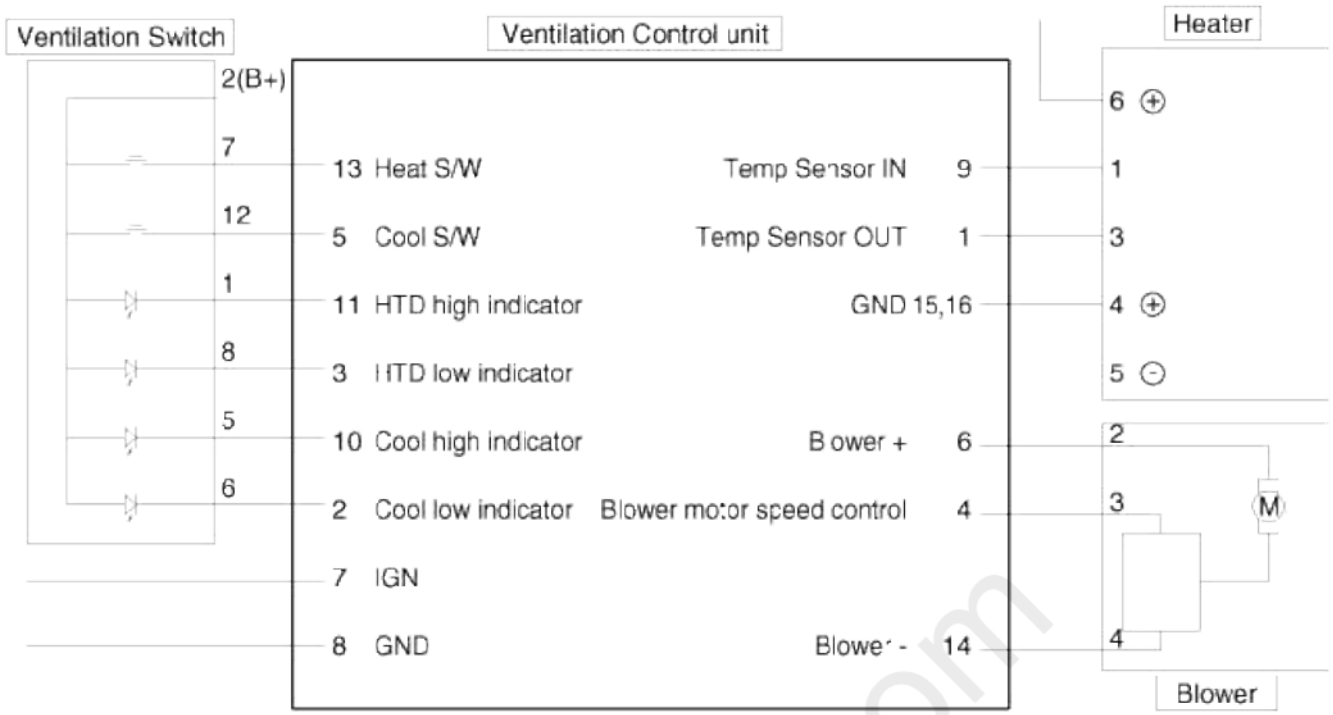

Body Electrical System > Seat Electrical > Air Ventilation Seat > Description and Operation

Description

Using the blows power of FAN on seat, remove the moisture, sweat and warmth from occupants and surface of seats.

It inhales the indoor air through the blower installed at the seat cushion lower part, and supplies the air into the seat cushion and the seat back through the duct.

It sends a slight air throughout the seat surface through the air channel set up at seat cushion and seat back.

NOTE

1. Make sure not to spoil drink or water on the seat when equipping with ventilation system seat
2. Because of inhaling the slight air, it is difficult to feel the air strength by the sense of touch.

Body Electrical System > Seat Electrical > Air Ventilation Seat > Repair procedures

Removal

[Front Seat]

1. Remove the front seat assembly.
   (Refer to Body group - "Front Seat")
2. Remove the seat back cover and cushion cover.
   (Refer to Body group - "Front Seat")

cardiagn.com

3. Remove the ventilation duct (A) after loosening screws and removing fixing hook (B).

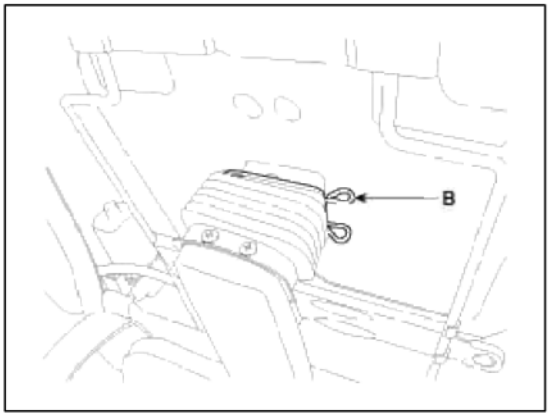

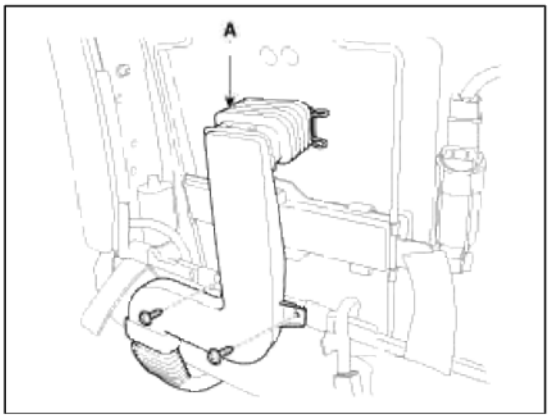

4. Remove the air ventilation panel (A) and fixing clip (B) from seat cushion.

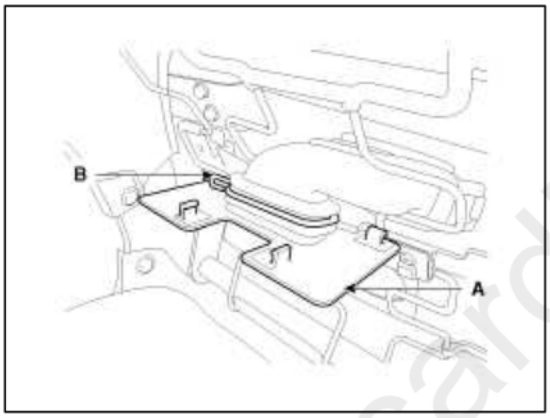

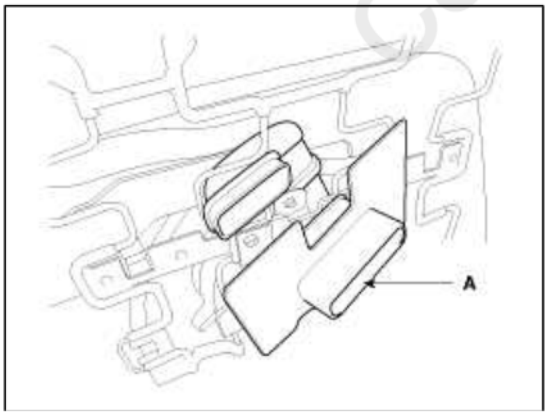

cardiagn.com

5. Remove the climate blower and duct (A) after loosening the fixing clips and screws.

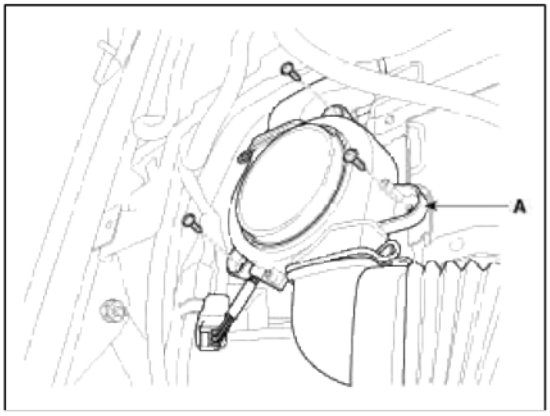

6. Remove the air ventilation control unit mounting screws.

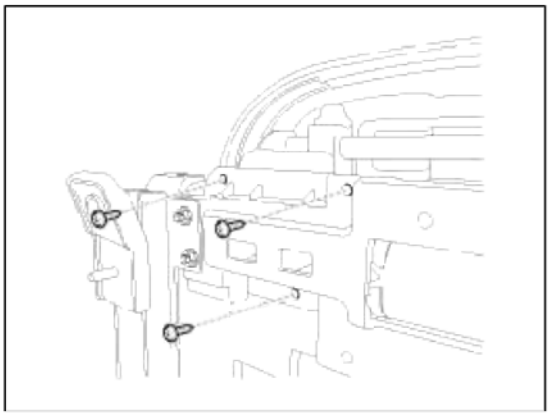

7. Disconnect the connector and remove the air ventilation control unit.

[Driver]

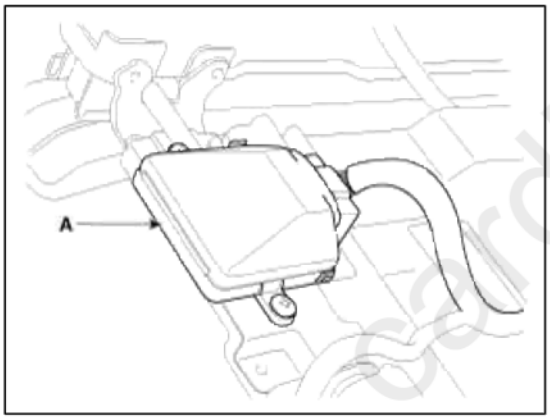

[Passenger]

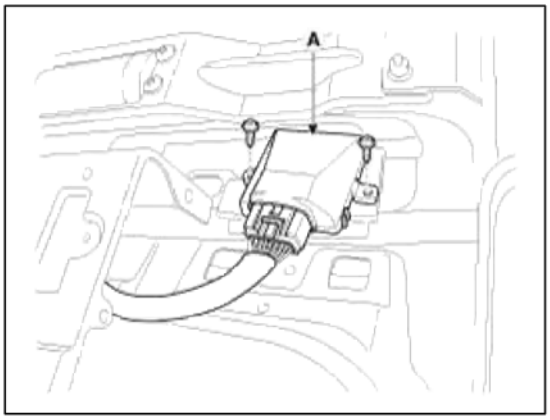

Installation

[Front Seat]

1. Install the connectors and air ventilation control unit.

cardiagn.com

2. Install the air ventilation duct and blower.
3. Install the seat back cover.
4. Install the seat assembly and seat track cover.

Body Electrical System > Fuel Filler Door > Components and Components Location

Component Location

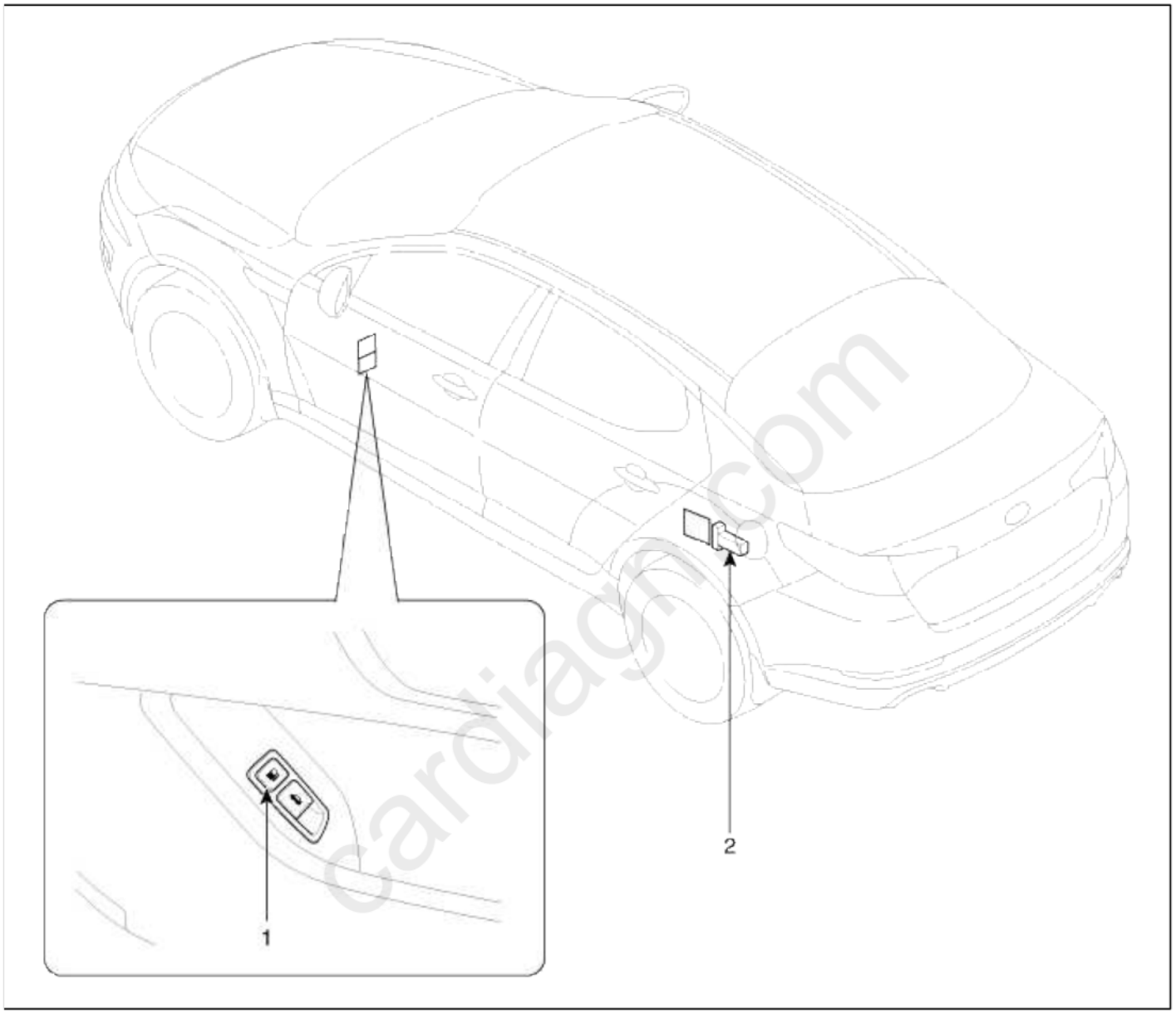

1. Fuel filler door open switch	2. Fuel filler door release actuator

Body Electrical System > Fuel Filler Door > Fuel Filler Door Release Actuator > Repair procedures

Inspection

1. Remove the trunk room left side trim.
   (Refer to the BD group - "Interior trim")

2. Remove the fuel filler door release actuator (A) after loosening the mounting bolts.

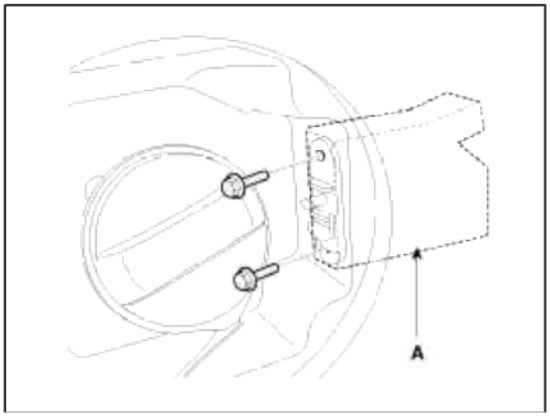

3. Disconnect the release actuator connector (A).

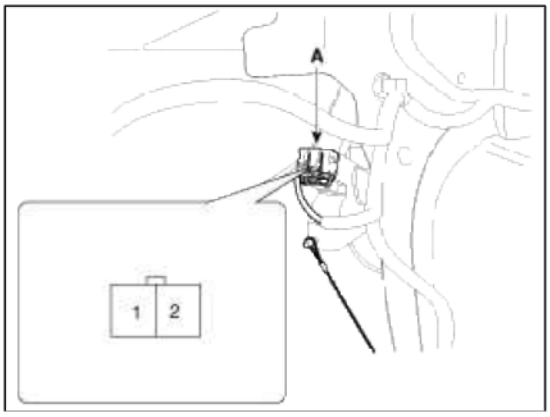

4. Check for continuity between terminal No.1 and No.2.
   If there is no continuity, replace the fuel filler door release actuator.

Body Electrical System > Fuel Filler Door > Fuel Filler Door Open Switch > Repair procedures

Inspection

1. Remove the driver door trim.
   (Refer to the BD group - "Front door")
2. Remove the switch assembly connector (A) from the door trim.

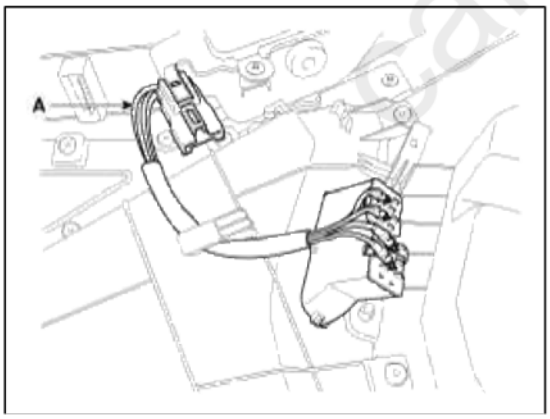

cardiagn.com

3. Check for continuity between the terminal No.1 and No.2.

NO	Description	NO	Description
1	Fuel filler door B+	3	GND
2	Fuel filler door actuator	4	Trunk lid switch

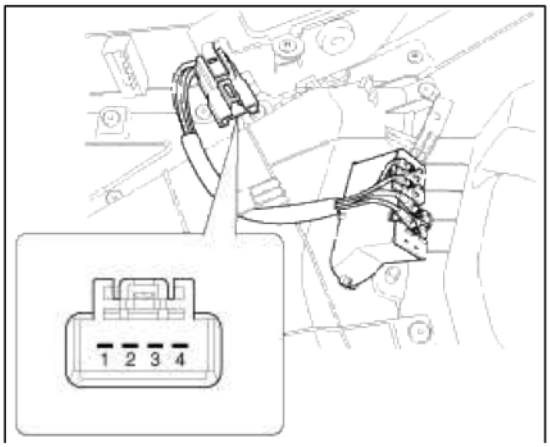

4. Remove the fuel filler door switch assembly (A) after pressing the fixing clips (B).

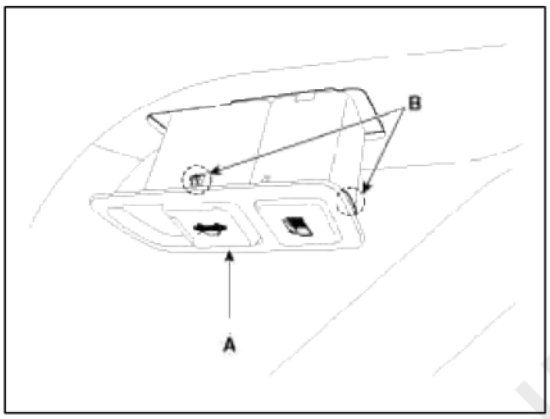

Body Electrical System > Fuses And Relays > Components and Components Location

Component Location

cardiagn.com

[Engine Room Relay Box]

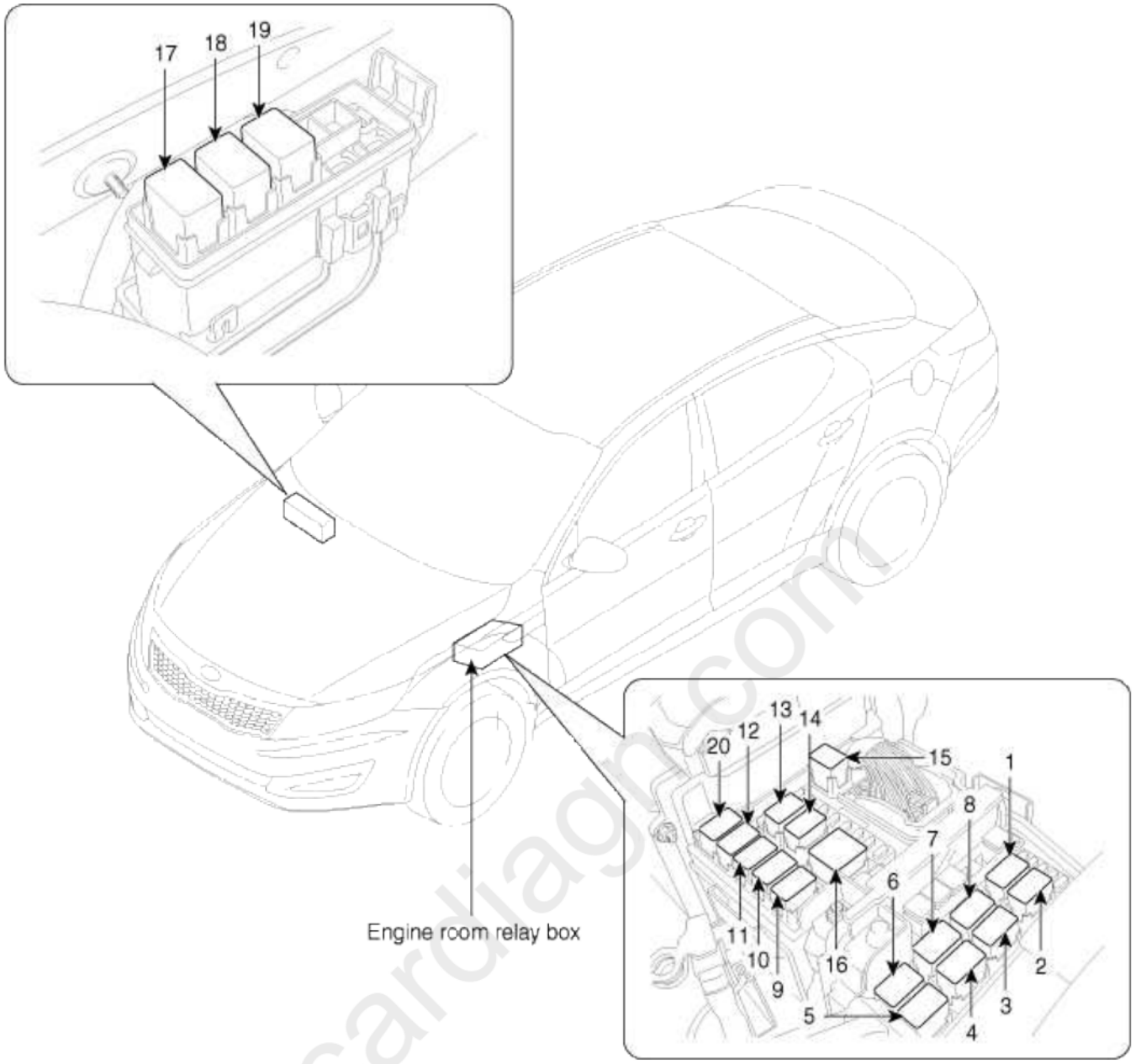

1. Deicer relay	7. Wiper relay	14. Horn relay
2. Not used	8. Not used	15. Rear defogger relay
3. HAC relay	9. Not used	16. Engine control relay
4. Rain sensor relay	10. Start relay	17. PDM (ACC)
5. Blower relay	11. C/Fan (low) relay	18. PDM (IG1)
6. B/Horn relay	12. C/Fan (hi) relay	19. PDM (IG2)
	13. Fuel pump relay	20. Head lamp washer

cardiagn.com

[SJB - Smart Junction Box]

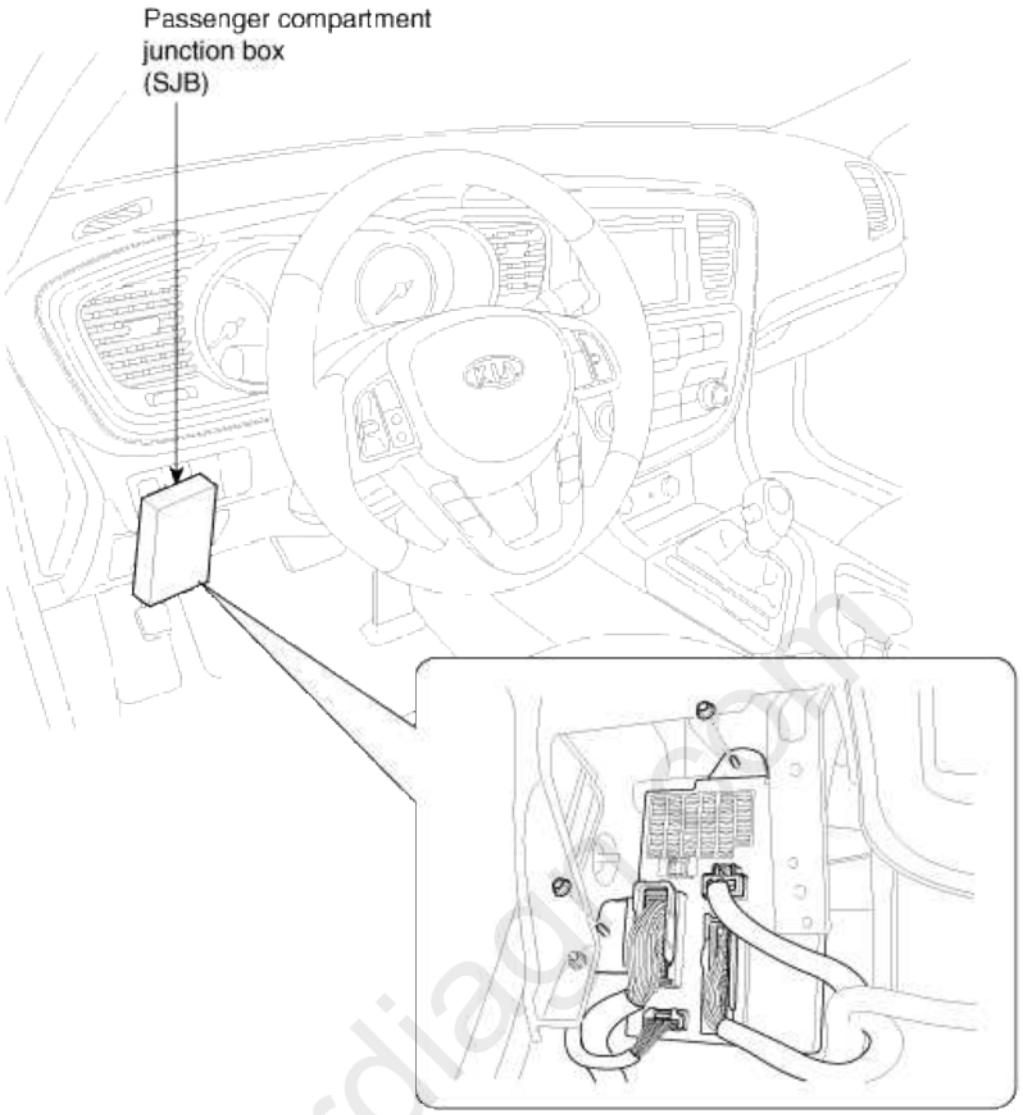

cardiagn.com

Body Electrical System > Fuses And Relays > Relay Box (Engine Compartment) > Components and Components Location

Components

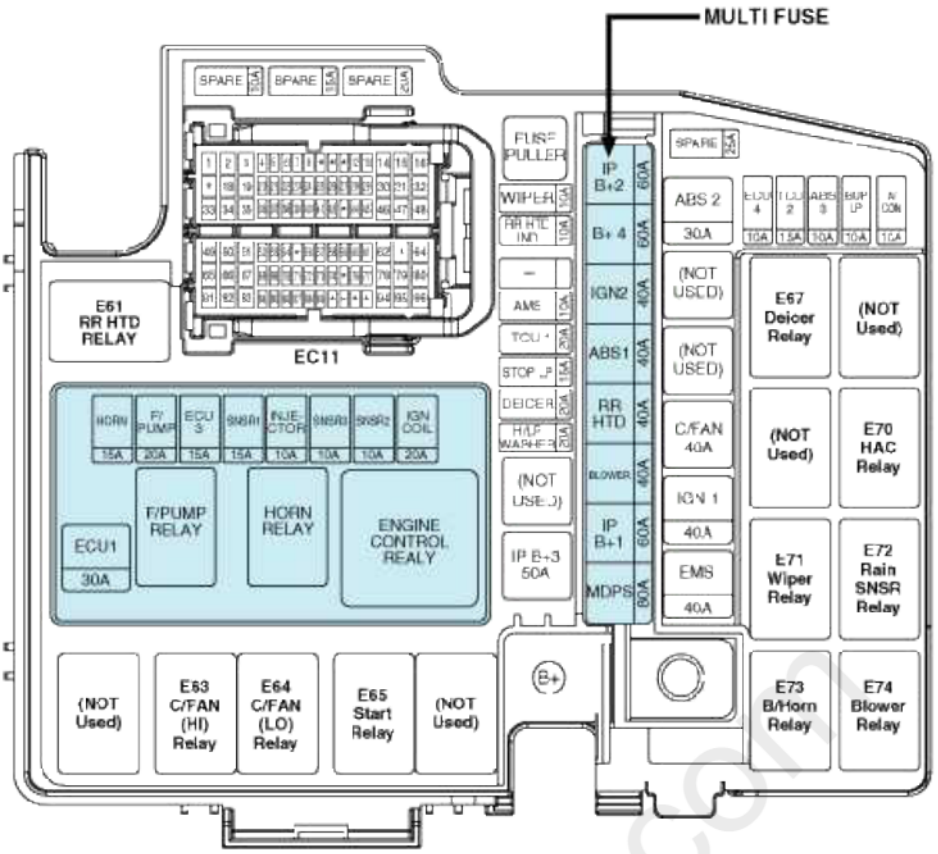

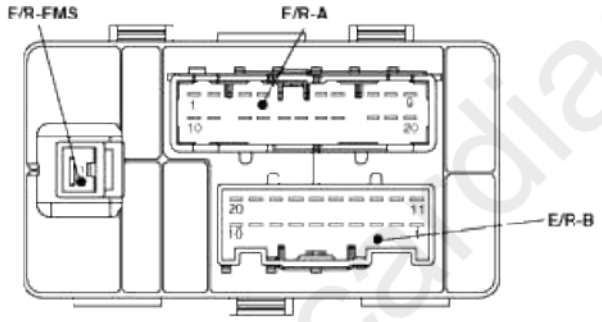

Relay NO.		Relay Name	Type
E61		RR HTD Relay	Plug Micro
E63		C/FAN (HI) Relay	Plug Micro
E64		C/FAN (LO) Relay	Plug Micro
E65		Start Relay	Plug Micro
E67		Deicer Relay	Plug Micro
E70		HAC Relay	Plug Micro
E71		Wiper Relay	Plug Micro
E72		Rain SNSR Relay	Plug Micro
E73		B/Horn Relay	Plug Micro
E74		Blower Relay	Plug Micro
EMS BOX	RLY.1	F/PUMP Relay	Plug Micro
	RLY.2	Horn Relay	Plug Micro
	RLY.3	Engine Control Realy	Plug Mini

※ USE THE DESIGNATED FUSE AND RELAY ONLY

cardiagn.com

Circuit

	Fuse Name	(A)	Circuit Protected
MULTI FUSE	IP B+ 2	60A	I/P Junction Box (P/SEAT DRV 30A, P/SEAT PASS 20A, AMP 30A, PDM 2 7.5A, IPS 5, IPS 6, ARISU 2)
	B+ 4	60A	-
	IGN 2	40A	E/R Fuse & Relay Box (Start Relay), Fuse & Relay Box (PDM 3(IG 2) Relay), Ignition Switch
	ABS 1	40A	ESC Module
	RR HTD	40A	E/R Fuse & Relay Box (RR HTD Relay)
	BLOWER	40A	E/R Fuse & Relay Box (Blower Realy)
	IP B+ 1	60A	E/R Fuse & Relay Box (PDM 1 25A, MODULE 3 7.5A, S/HEATER FRT 20A, S/HEATER RR 15A, TRUNK 10A, P/WDW LH 25A, P/WDW RH 25A, AUDIO 15A)
	MDPS	80A	EPS Control Module
FUSE	WIPER	10A	PCM
	RR HTD IND	10A	A/C Control Module
	AMS	10A	Battery Sensor
	TCU 1	20A	PCM
	STOP LP	15A	E/R Fuse & Relay Box (HAC Relay), Smart Key Control Module, Stop Lamp Switch
	DEICER	20A	E/R Fuse & Relay Box (Deicer Relay)
	H/LP WASHER	20A	-
	LDC 1	30A	-
	C/FAN	40A	E/R Fuse & Relay Box (C/Fan(HI) Relay, C/Fan(LO) Relay)
	ABS 2	30A	Multipurpose Check Connector, ESC Module
	LDC 2	30A	-
	CVVL	40A	-
	IP B+ 3	50A	E/R Fuse & Relay Box (ROOM LP 10A, SUNROOF 20A, DH LOCK 20A, IPS 1, IPS 3, ARISU 1)
	IGN 1	40A	Fuse & Relay Box (PDM 1(ACC) Relay, PDM 2(IG 1) Relay), Ignition Switch
	EMS	40A	EMS Box (HORN 15A, ECU 3 10A, ECU 1 30A, F/PUMP 20A)
	ECU 4	10A	PCM
	TCU 2	15A	Back-Up Lamp Switch, Vehicle Speed Sensor, Transaxle Range Switch
	ABS 3	10A	E/R Fuse & Relay Box (HAC Relay), Stop Lamp Switch, ESC Module, Multipurpose Check Connector
	B/UP LP	10A	A/V & Navigation Head Unit, Audio, Electro Chromic Mirror, BCM, Rear Combination Lamp(In) LH/RH
	A/CON	10A	A/C Control Module
	HORN	15A	EMS Box (Horn Relay), E/R Fuse & Relay Box (B/Horn Relay)
	F/PUMP	20A	EMS Box (F/Pump Relay)
	ECU 3	15A	PCM
	SNSR 1	15A	Oxygen Sensor (Up/Down), E/R Fuse & Relay Box (C/FAN (HI/LO) Relay)
	INJECTOR	10A	EMS Box (F/Pump Relay)
	SNSR 3	10A	Camshaft Position Sensor #1, #2, Immobilizer Module
	SNSR 2	10A	Canister Close Valve, Crankshaft Position Sensor, Variable Intake Solenoid Valve, Oil Control Valve #1, #2, Purge Control Solenoid Valve
	IGN COIL	20A	Condenser, Ignition Coil #1, #2, #3, #4
	ECU 1	30A	EMS Box (Engine Control Relay)

※ USE THE DESIGNATED FUSE AND RELAY ONLY.

Body Electrical System > Fuses And Relays > Relay Box (Engine Compartment) > Description and Operation

Description

Network Configuration

The Network of the SJB(Smart Junction Box) consists of Low speed CAN as shown in the following figure.

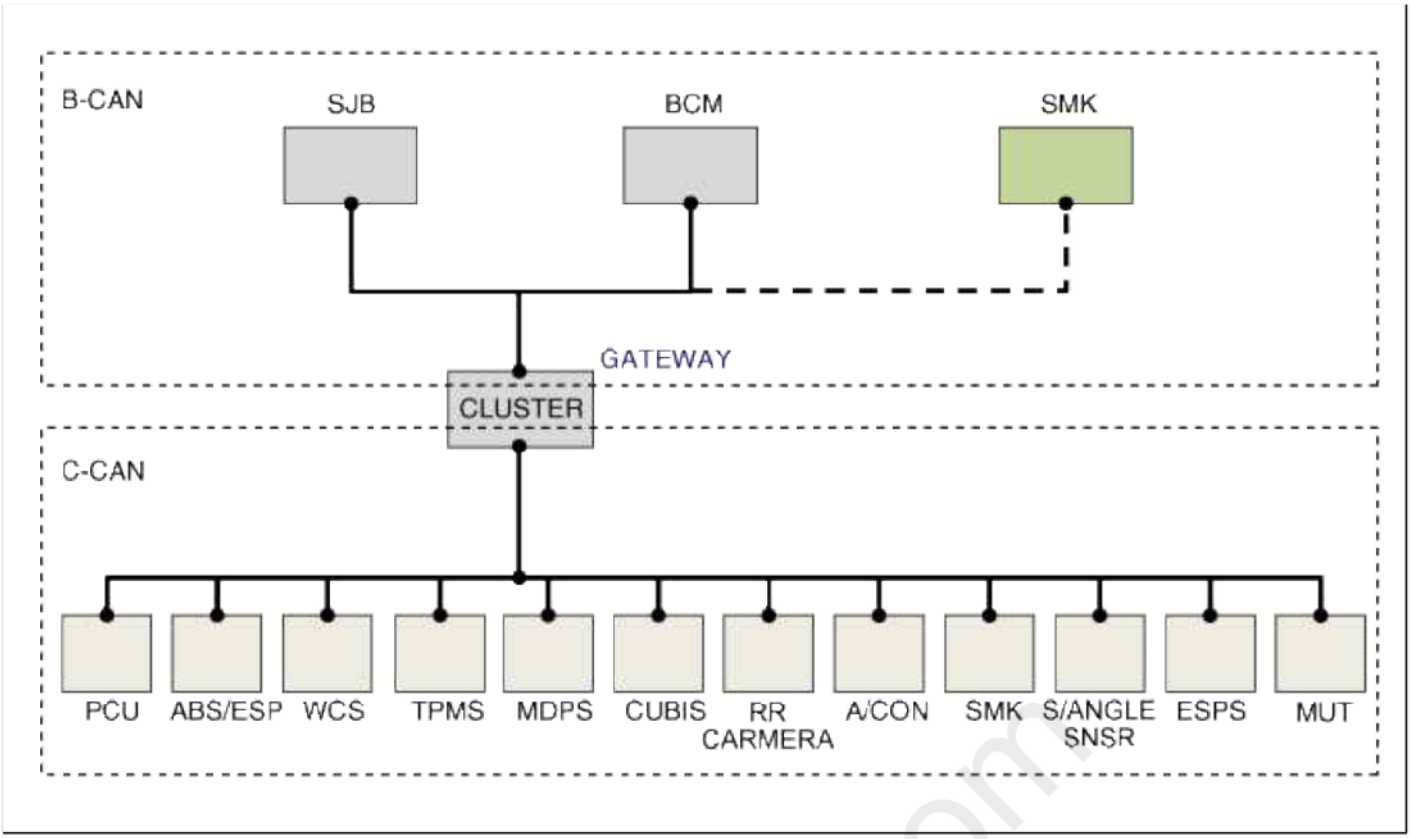

Termination Resistor

The cluster has CAN termination resistor. It is possible that CAN termination resistor value is changed by number of CAN controller. The termination resistor value of the cluster is 510 Ω.

Function

Function Requirements

The BCM controls IPS and relay on the SJB. For example, if BCM requests head lamp low beam control, then BCM requests related lamp control at one time.

Signal Flow Diagram

This chapter defines signal between SJB and peripheral electrical apparatus in the form of signal flow diagram. Control of the IPS and relay is required by BCM. Following figure expresses power source that is operating power condition

Input signal

cardiagn.com

No	Switch Input
1	IGN1
2	IGN2
3	Driver S/Beltelt switch
4	Assist S/Beltelt switch
5	Driver door unlock switch
6	Assist door unlock switch
7	RL door unlock switch
8	RR door unlock switch
9	Driver door switch
10	Assist door switch
11	RL door switch
12	RR door switch
13	Driver&Assist door key lock
14	Driver door key unlock
15	Assist door key unlock
16	Hood switch
17	P/W Driver lock switch
18	P/W Driver unlock switch
19	T/signal LH switch
20	T/signal RH switch
21	Hazard switch
22	Trunk switch
23	Trunk release switch
24	Trunk lid HDL switch
25	Brake fluid sensor
26	Parking brake switch
27	Multi function switch
28	Inhibit ‘R’
29	CANADA DRL GND
30	HID option
31	RHD option

Output signal

cardiagn.com

No	Relay Control
1	B/Alarm relay
2	B/Horn relay
3	RR HTD relay
4	Driver door unlock relay
5	Deicer relay
6	Trunk lid relay
7	Rear window main relay
8	Sound relay
9	Door lock relay
10	Door unlock relay

No	IPS Control
1	H/Lamp HI LH
2	H/Lamp HI RH
3	H/Lamp LO LH
4	H/Lamp LO RH
5	Front fog LP LH/RH
6	External Tail lamp LH
7	External Tail lamp RH
8	T/signal LP FL
9	T/signal LP FR
10	T/signal LP RL
11	T/signal LP RR
12	INT Tail lamp LP
13	S/Belt LP LH
14	S/Belt LP RH
15	DRL

Door Switch Input

cardiagn.com

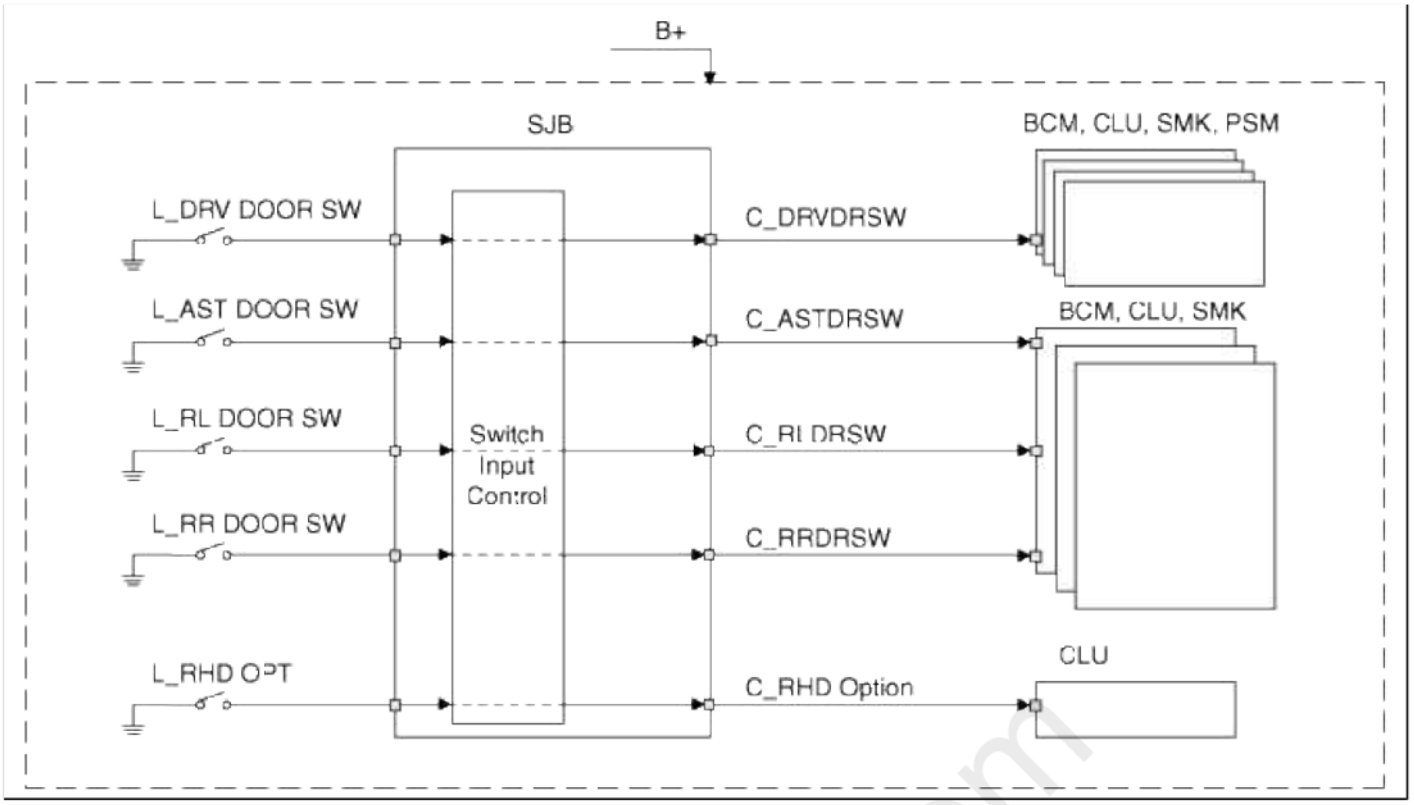

Door Lock Switch Input

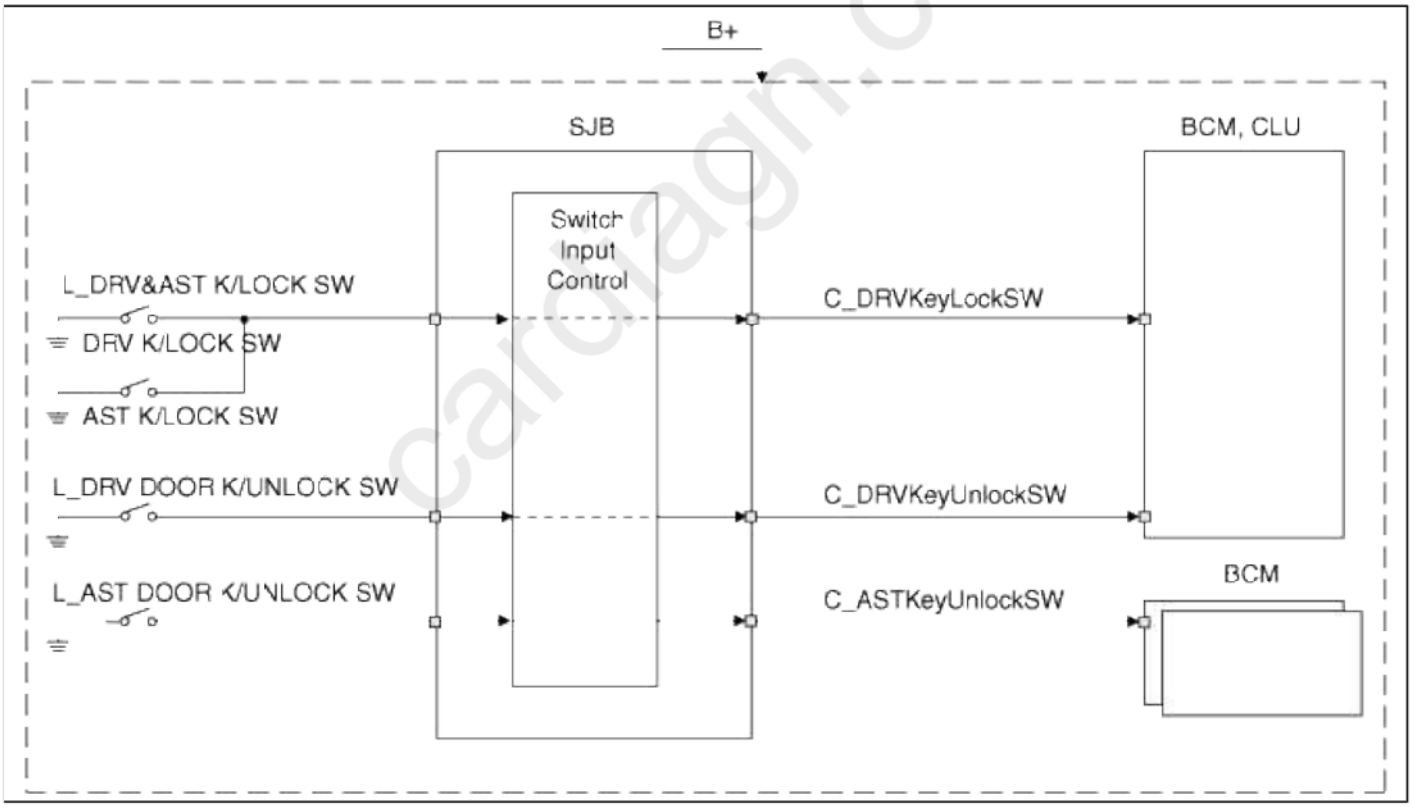

Door Unlock Status Input

cardiagn.com

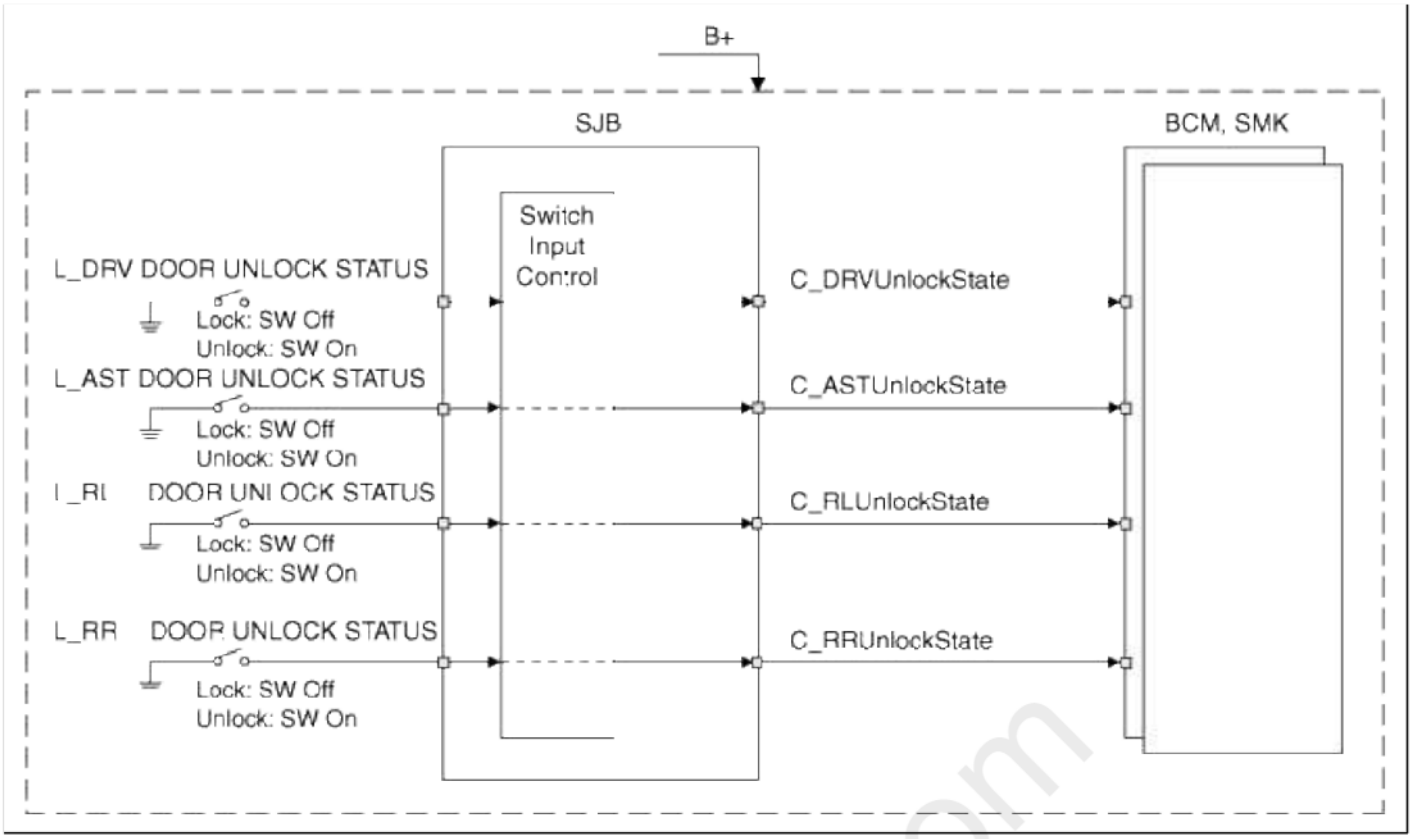

P/WDW DR Lock/Unlock Input

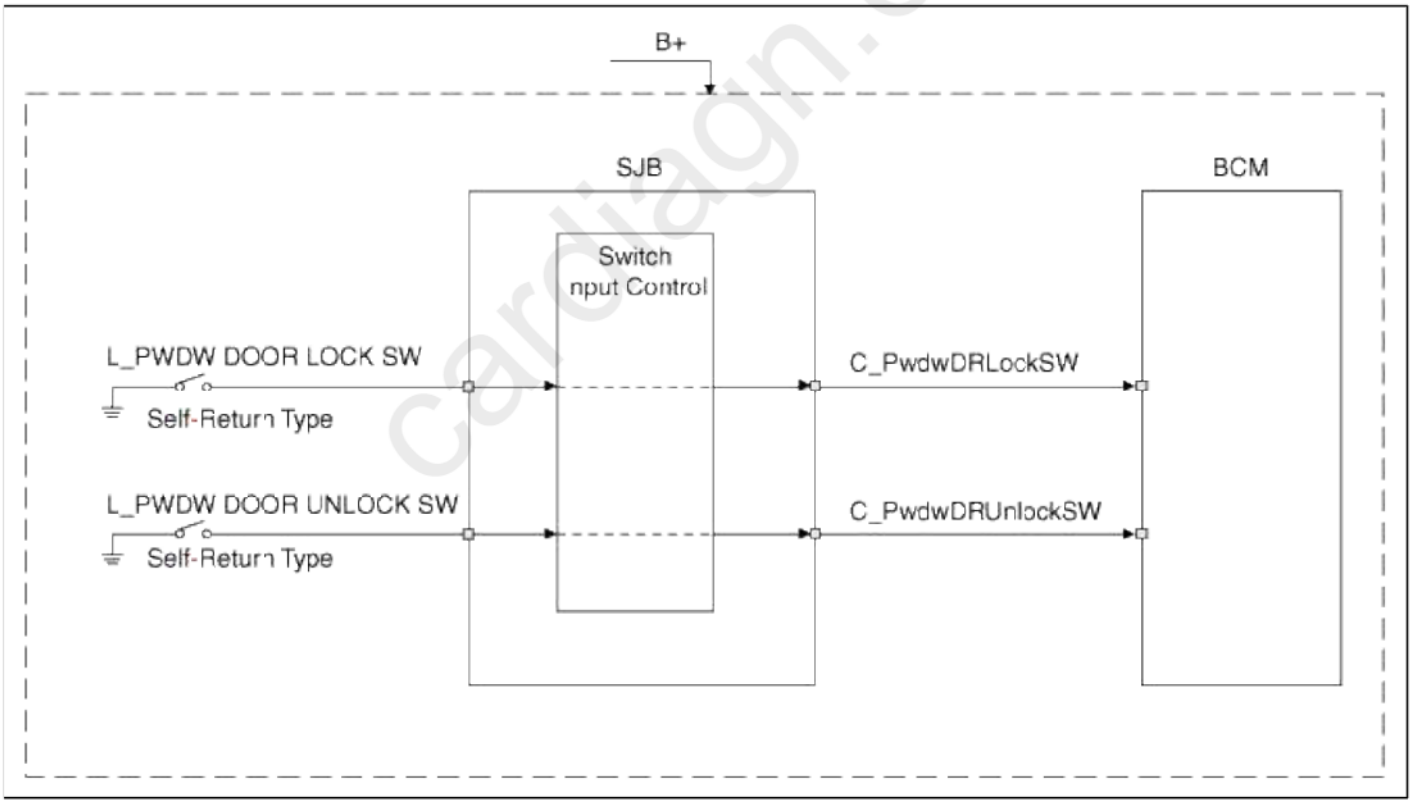

Brake Switch Input

cardiagn.com

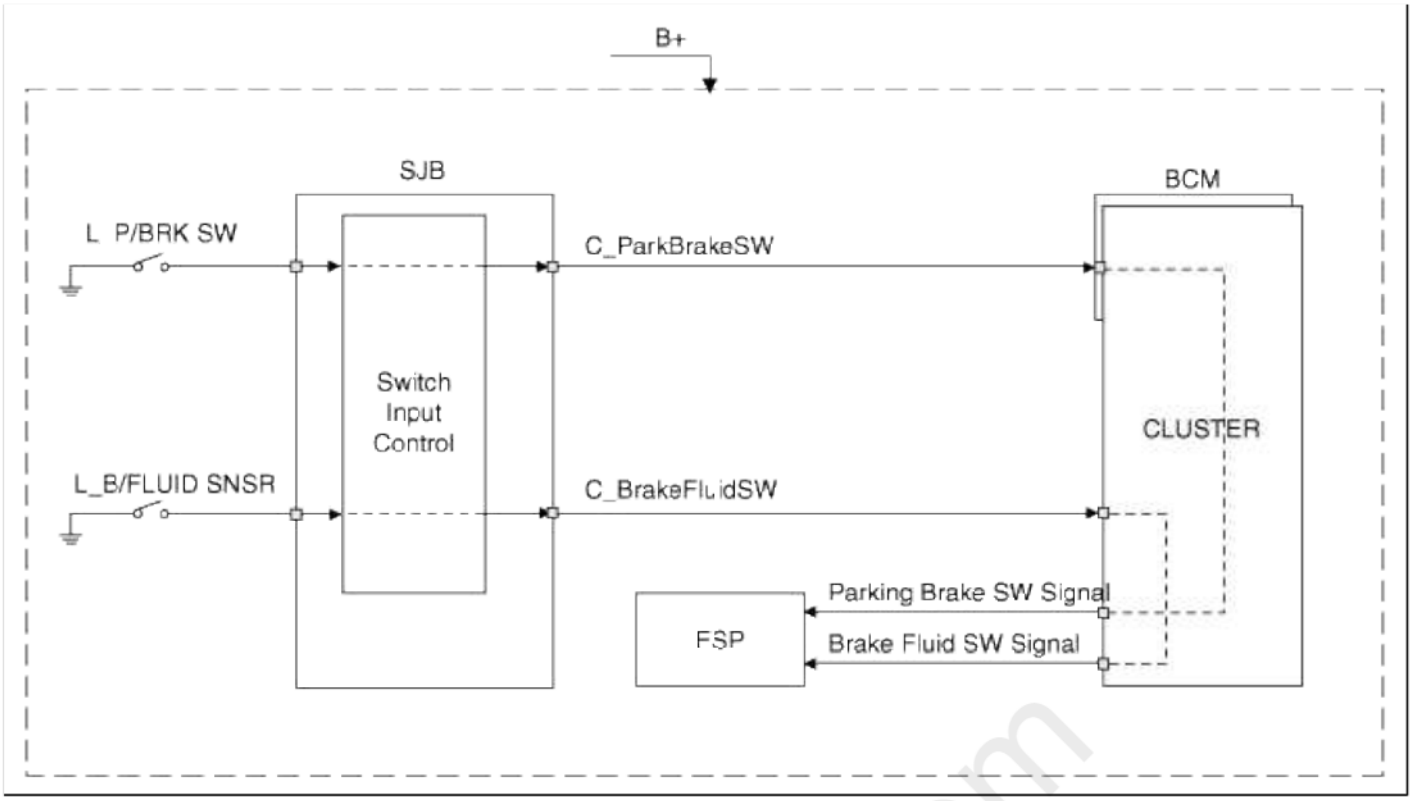

Seat Belt Switch Input

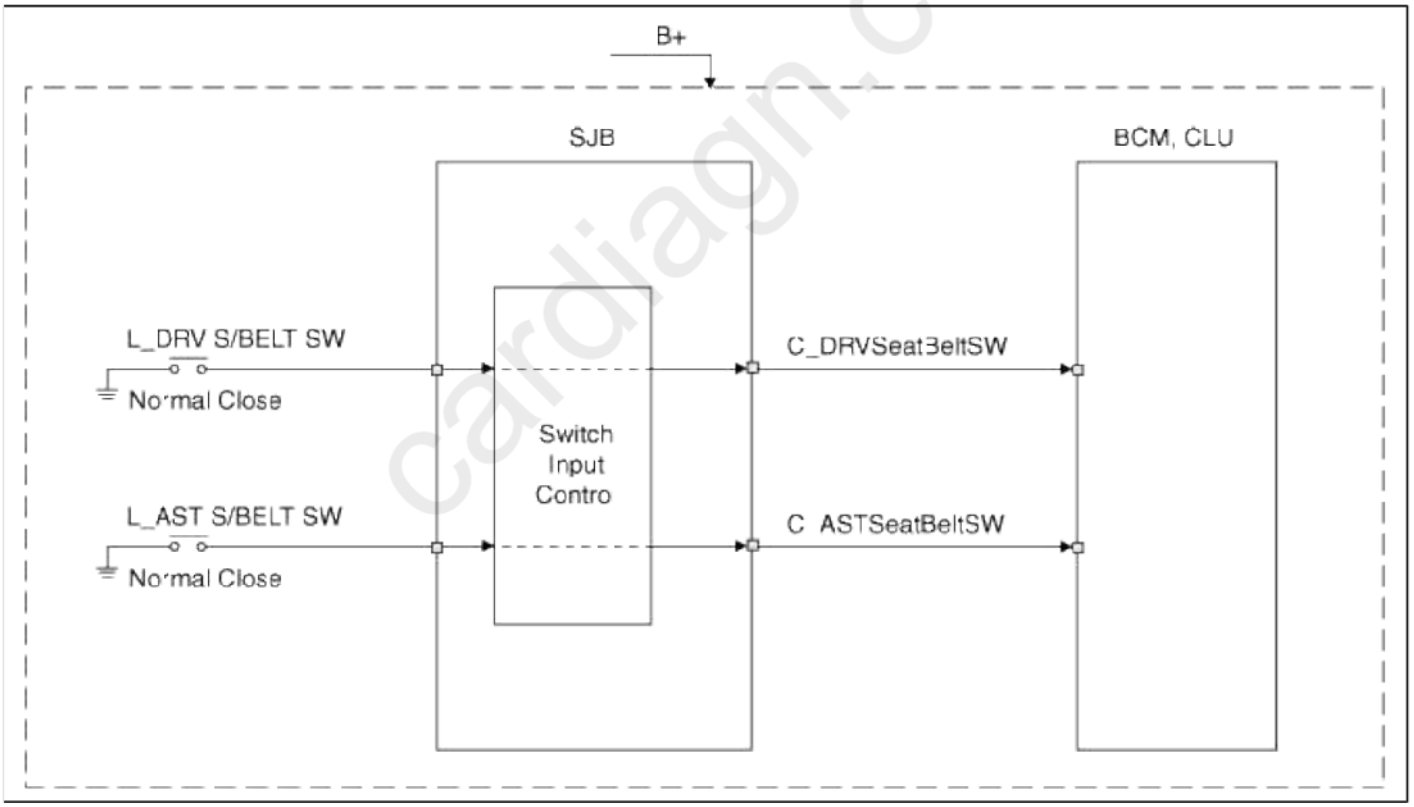

Trunk Switch Input

cardiagn.com

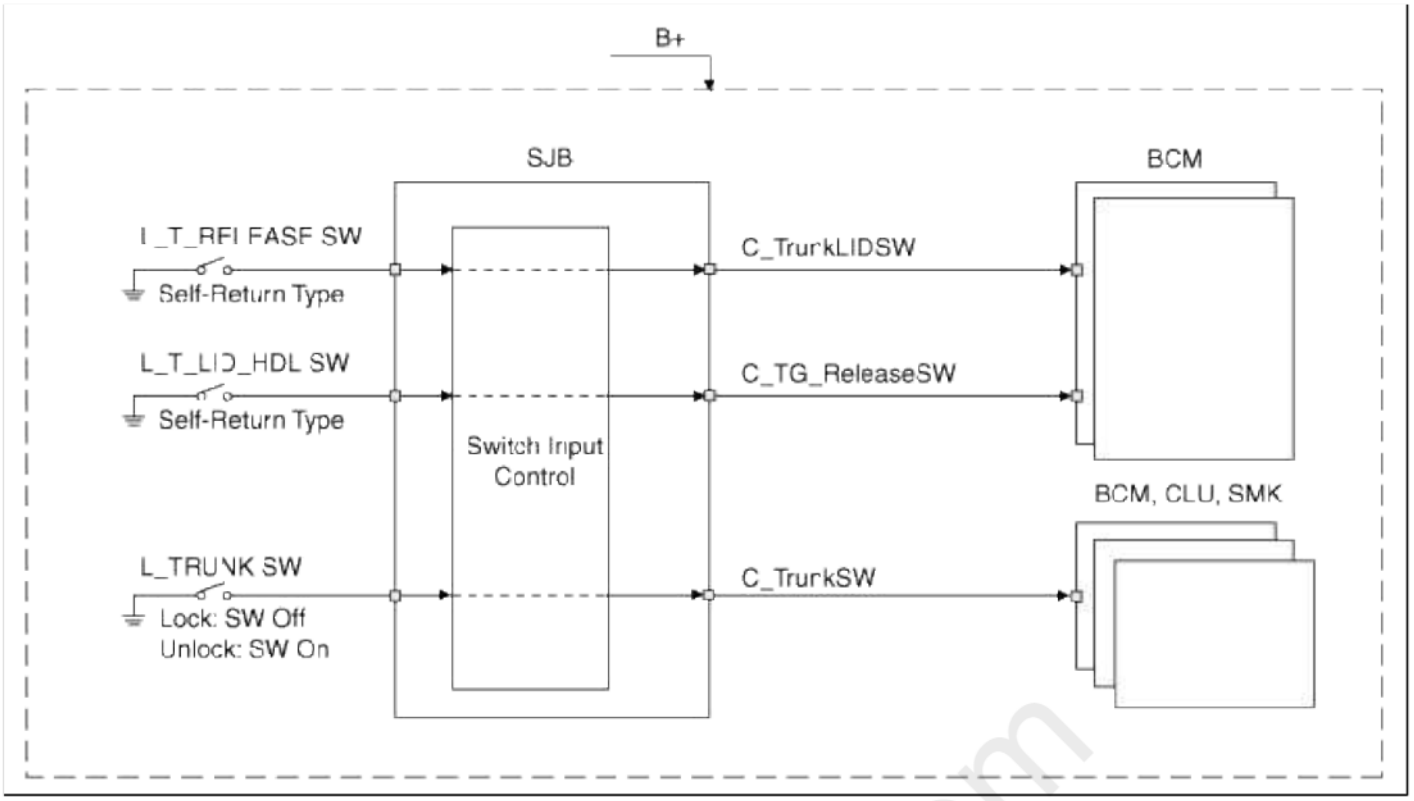

Hood Open Switch Input

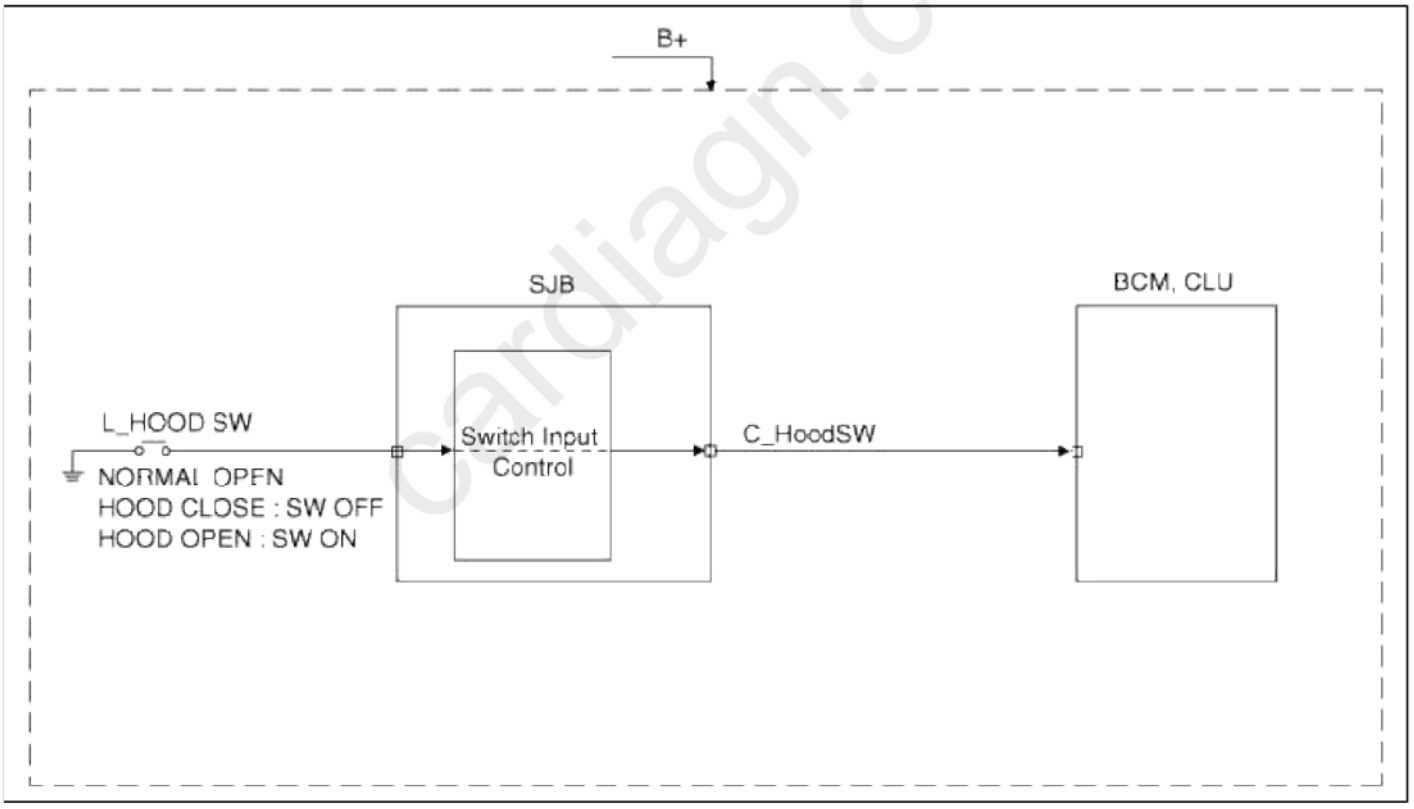

CANADA DRL Option

cardiagn.com

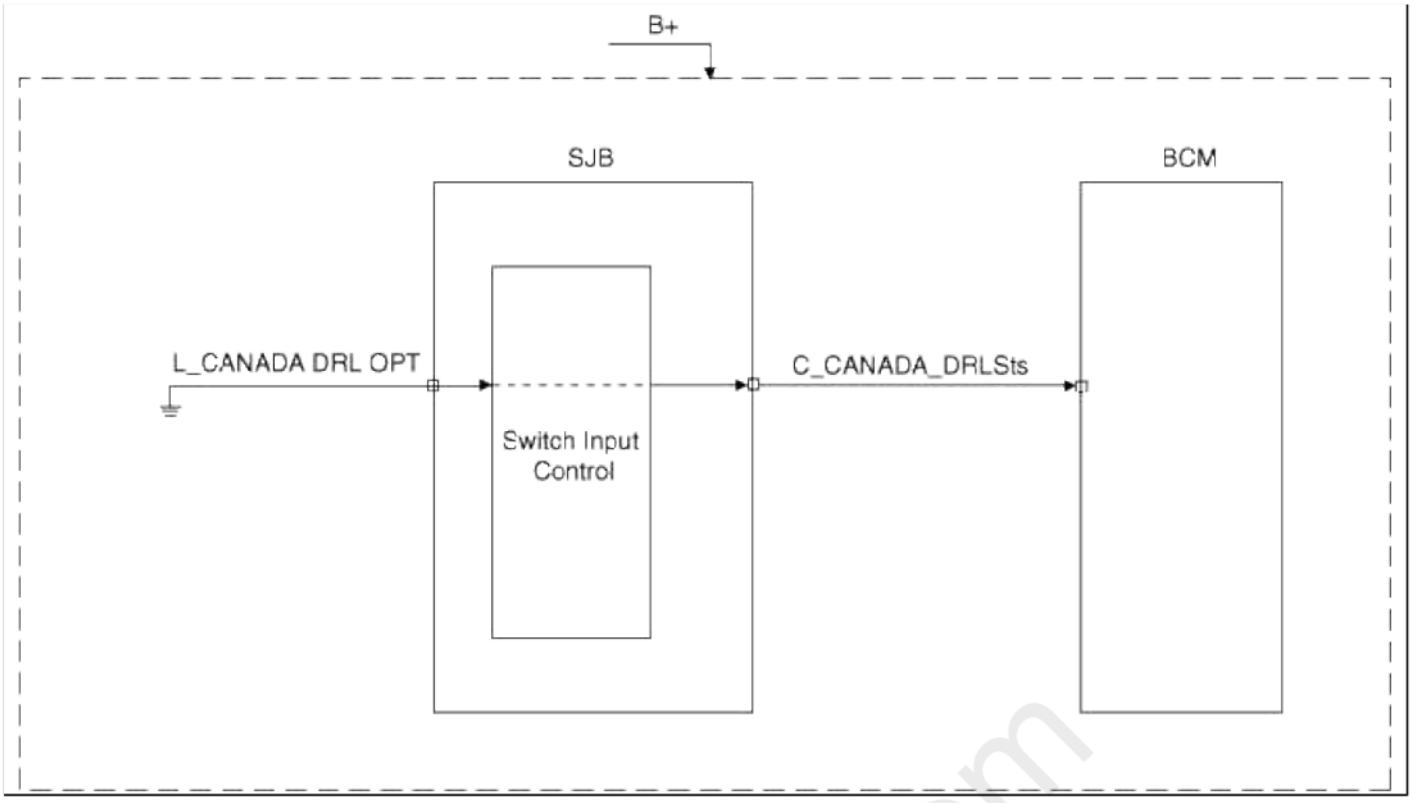

INHIBIT ‘R’ Input

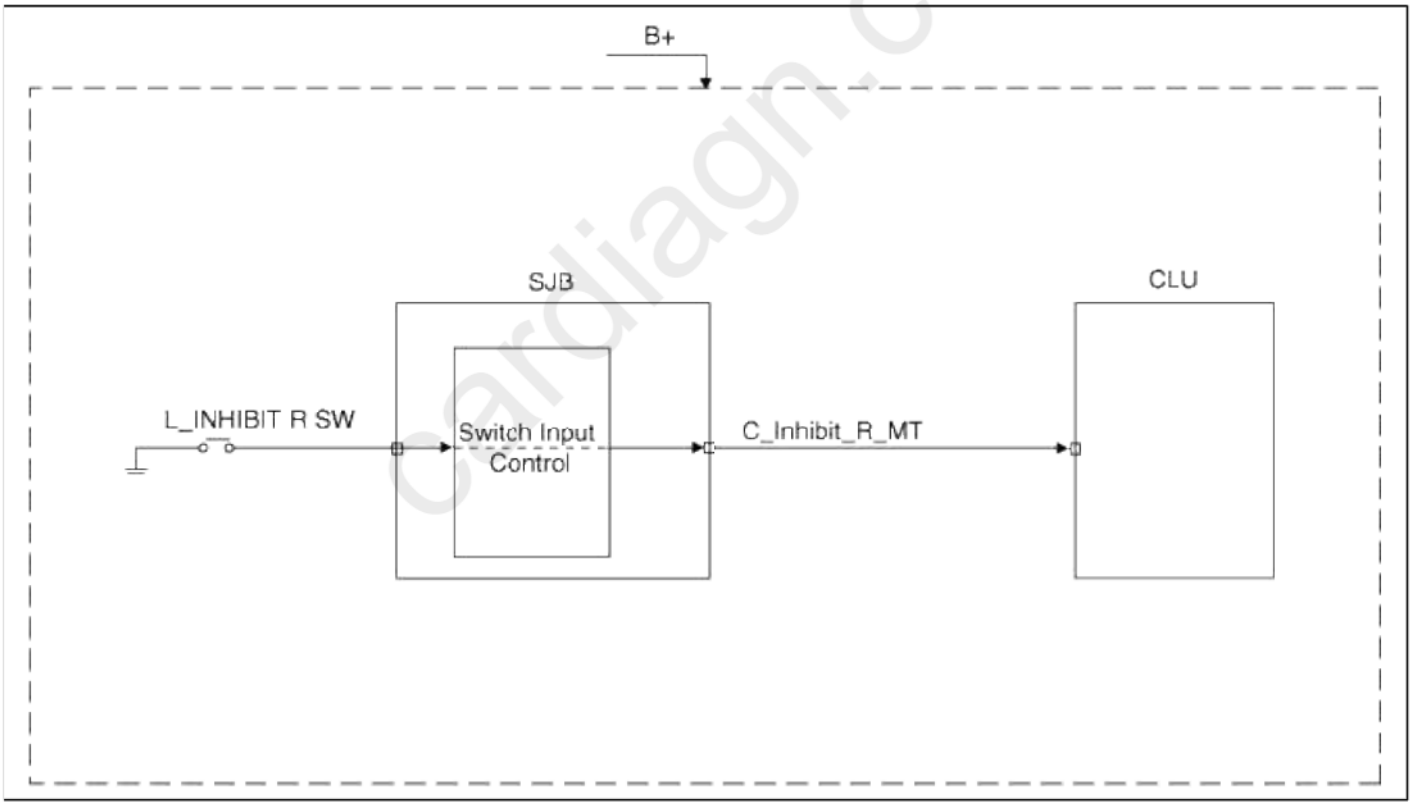

Burglar Alarm Start Relay

cardiagn.com

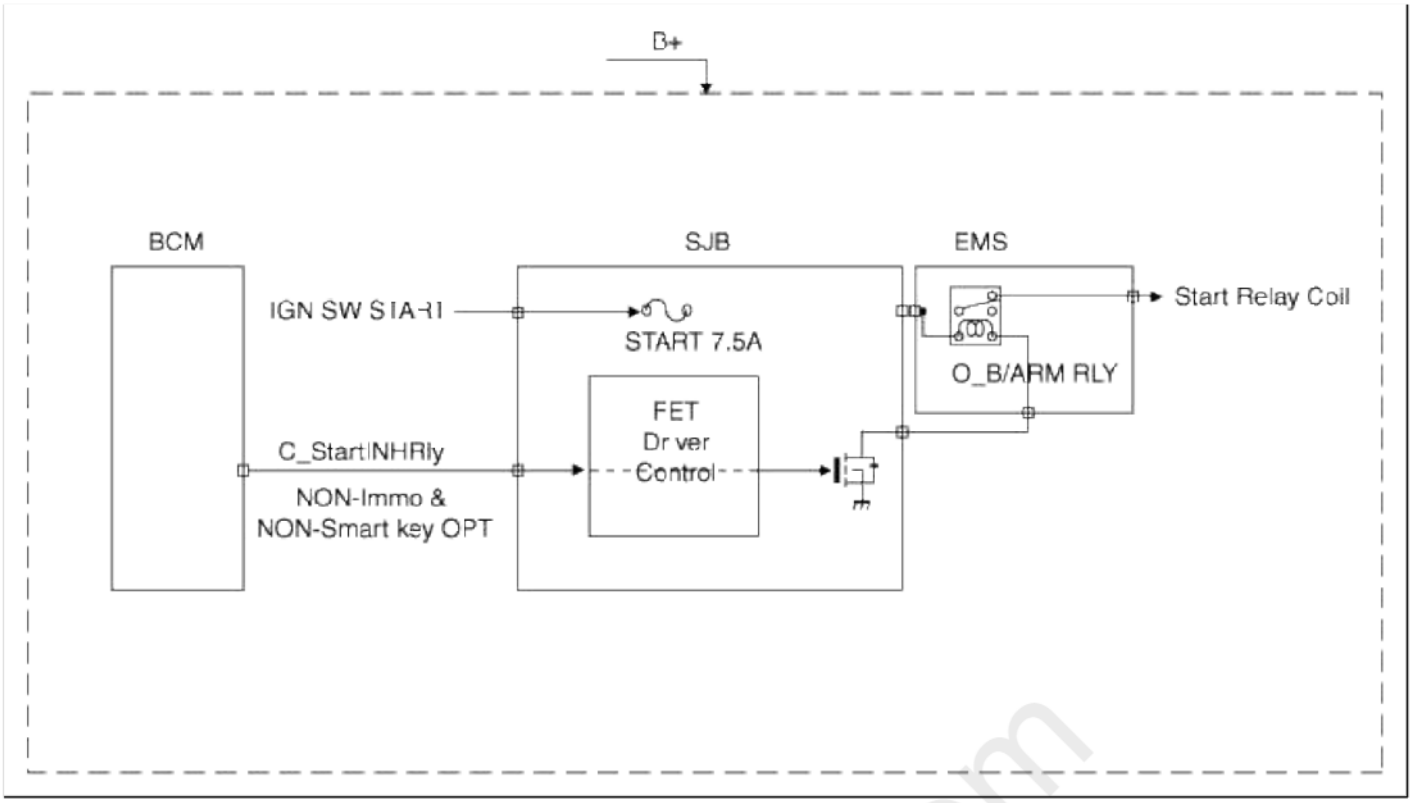

Burglar Alarm Horn Relay

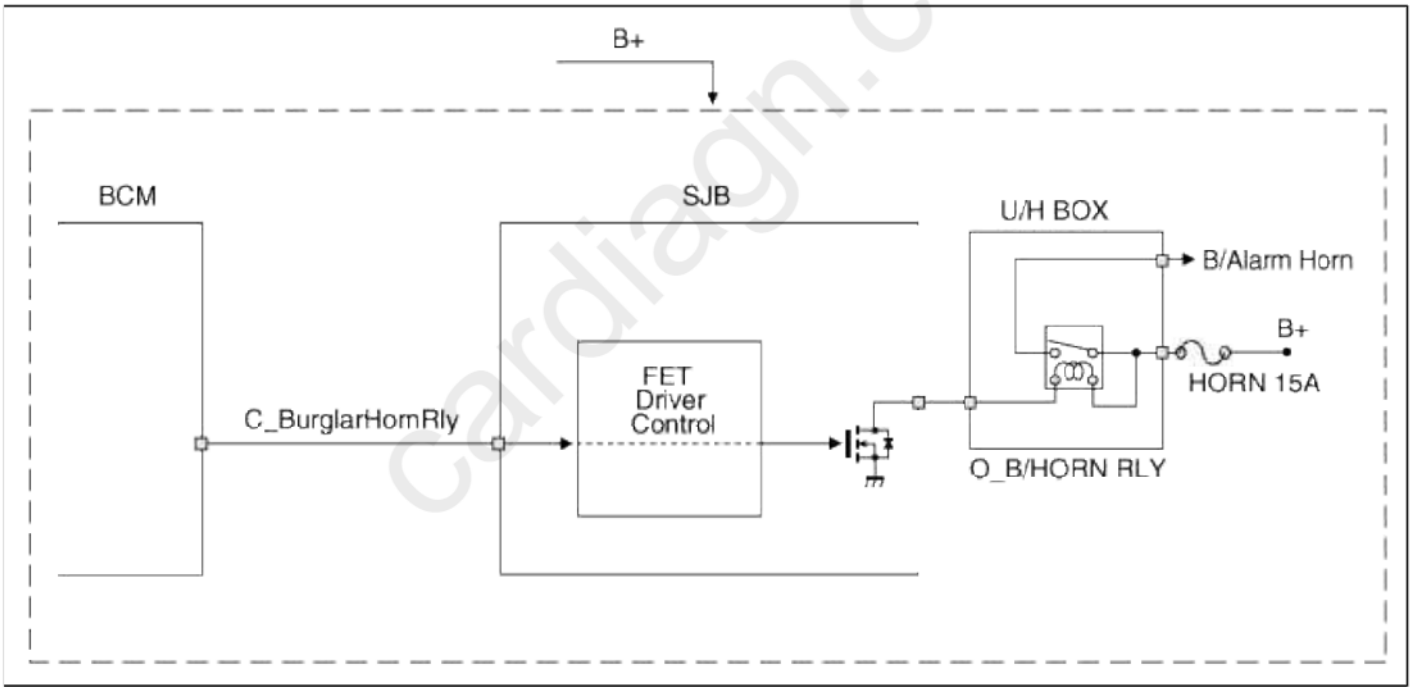

Door Lock/Unlock Relay

cardiagn.com

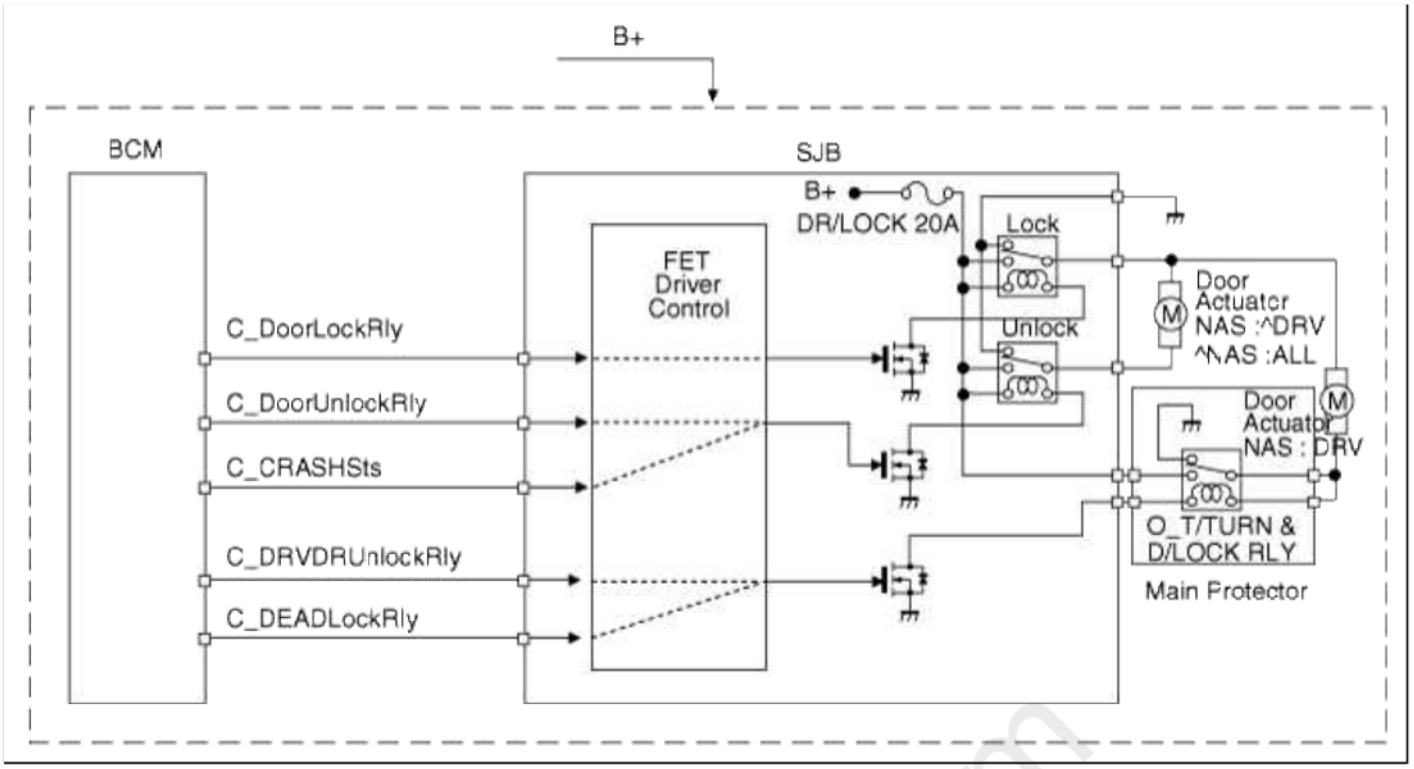

Trunk LID Release Relay Output

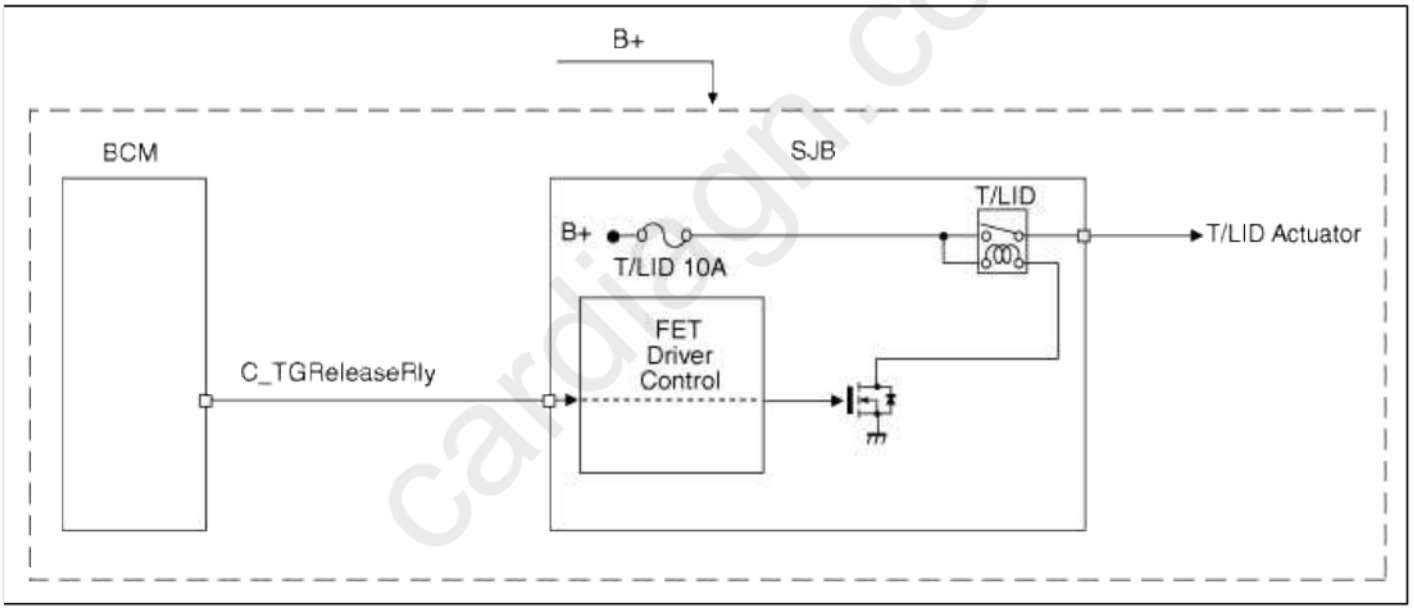

Power Window Relay Output

cardiagn.com

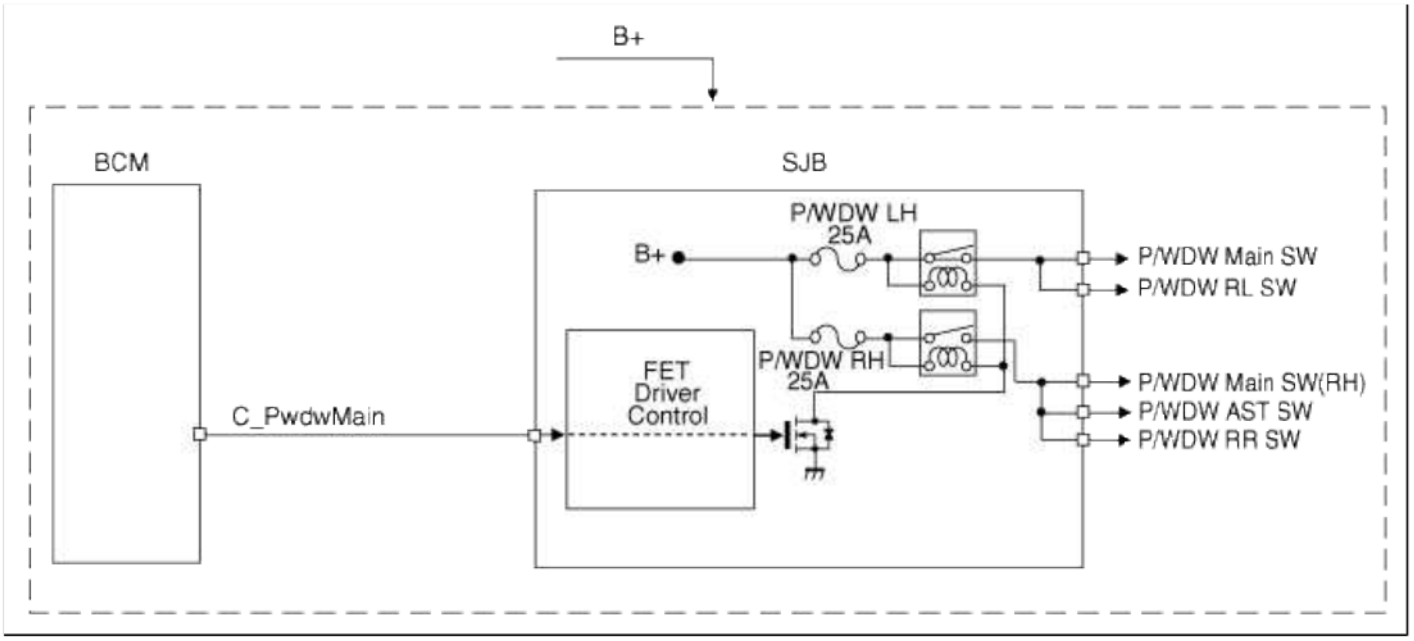

Defogger & Front Deicer Relay

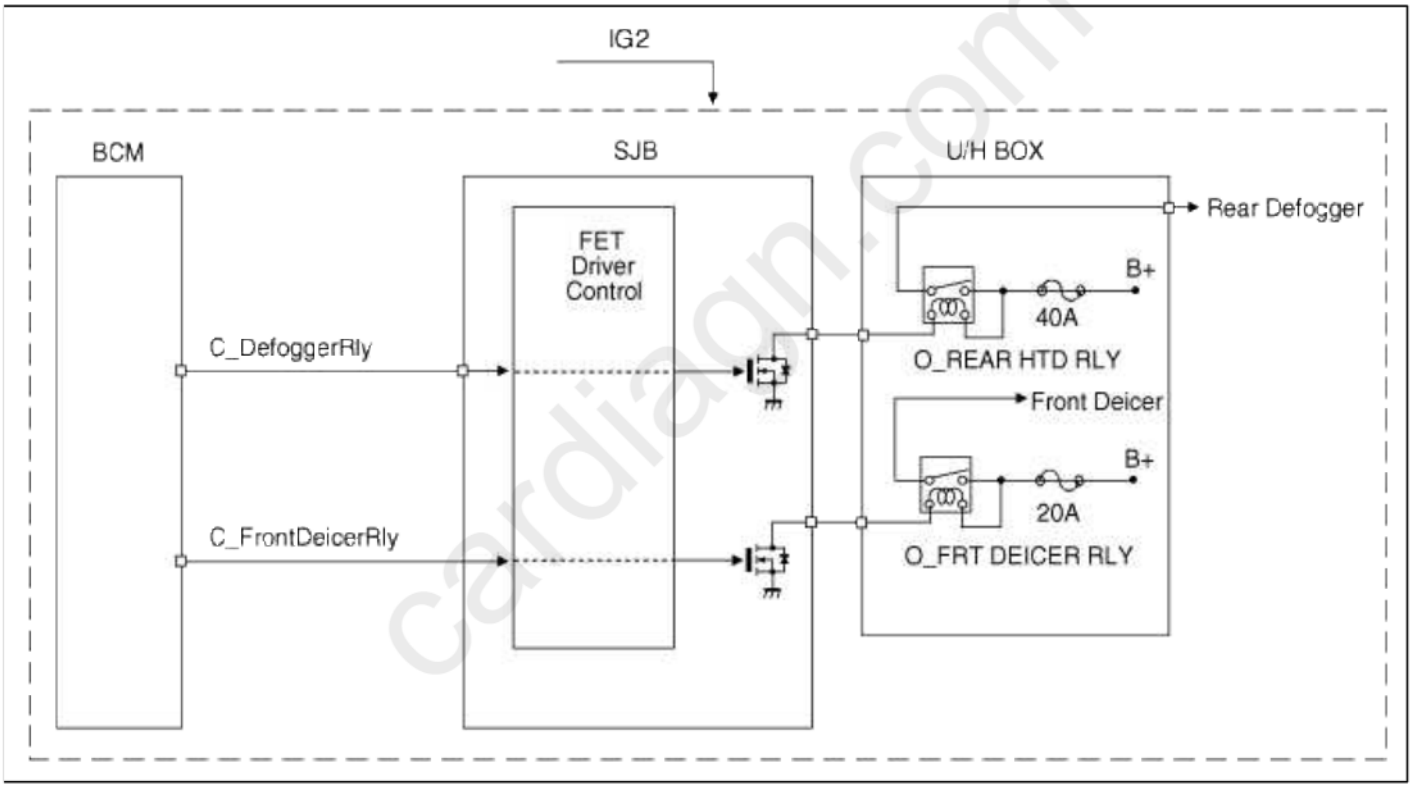

Head Lamp Control

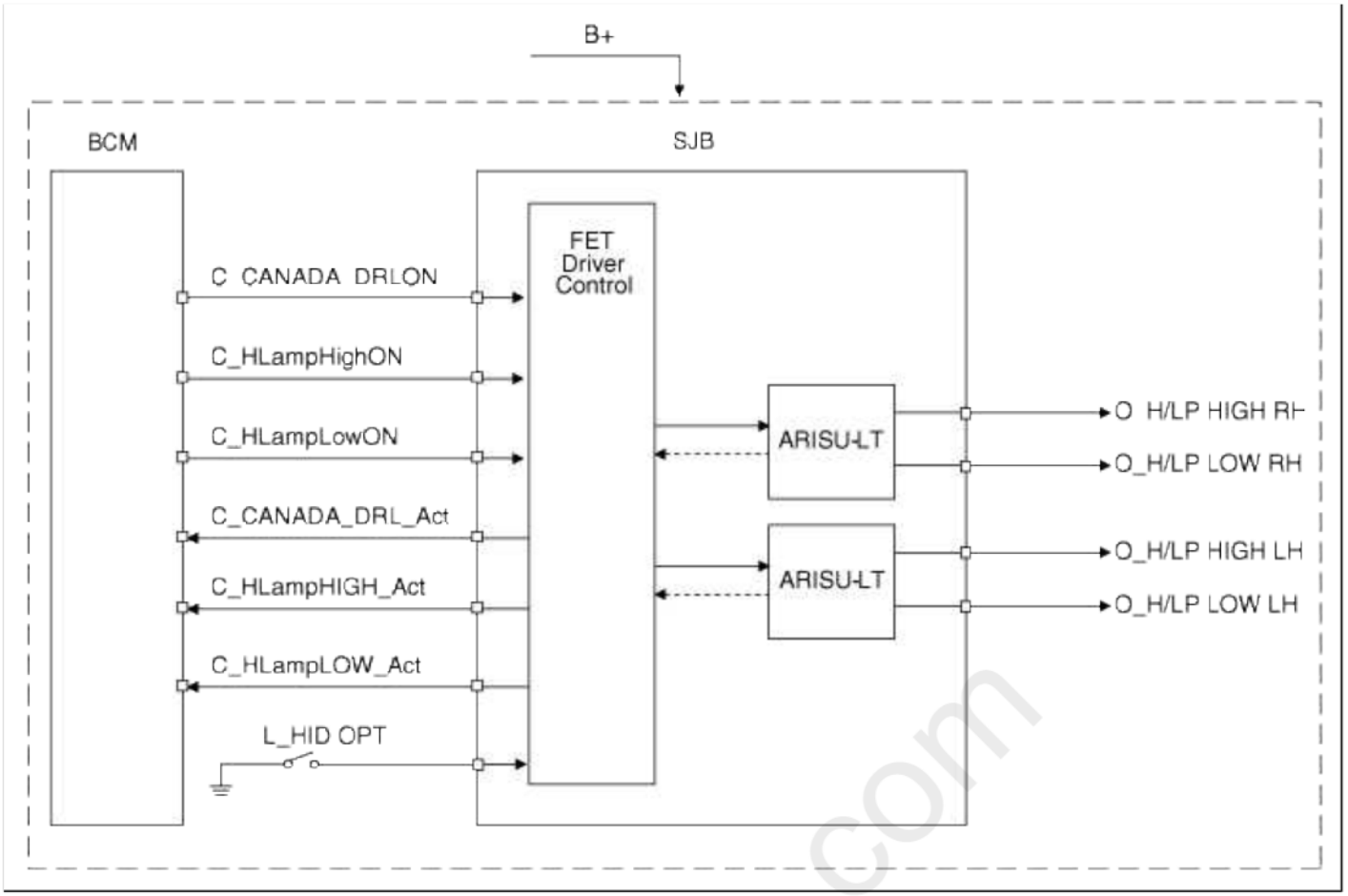

IPS Lamp Control

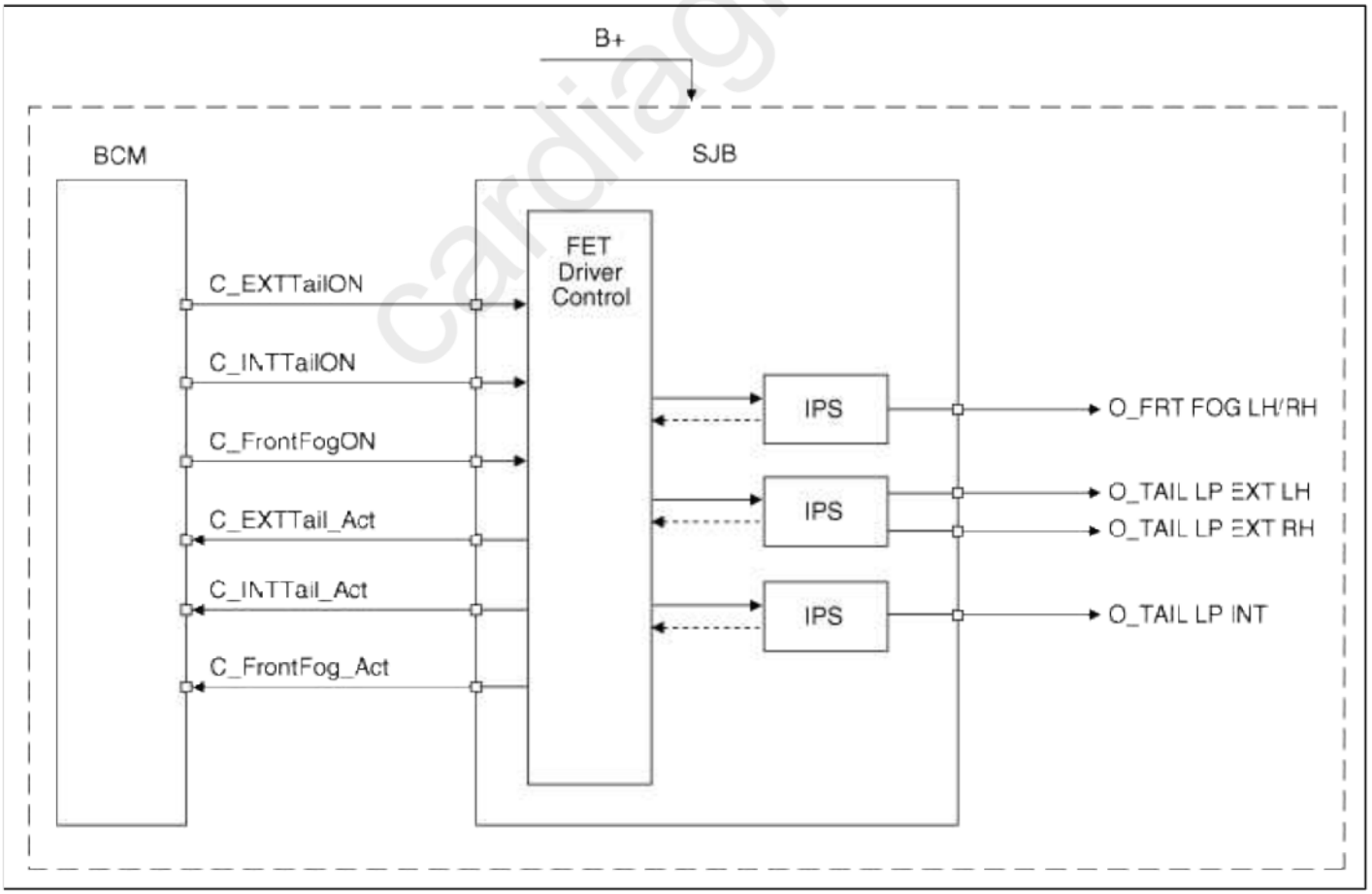

Hazard & Turn Signal

cardiagn.com

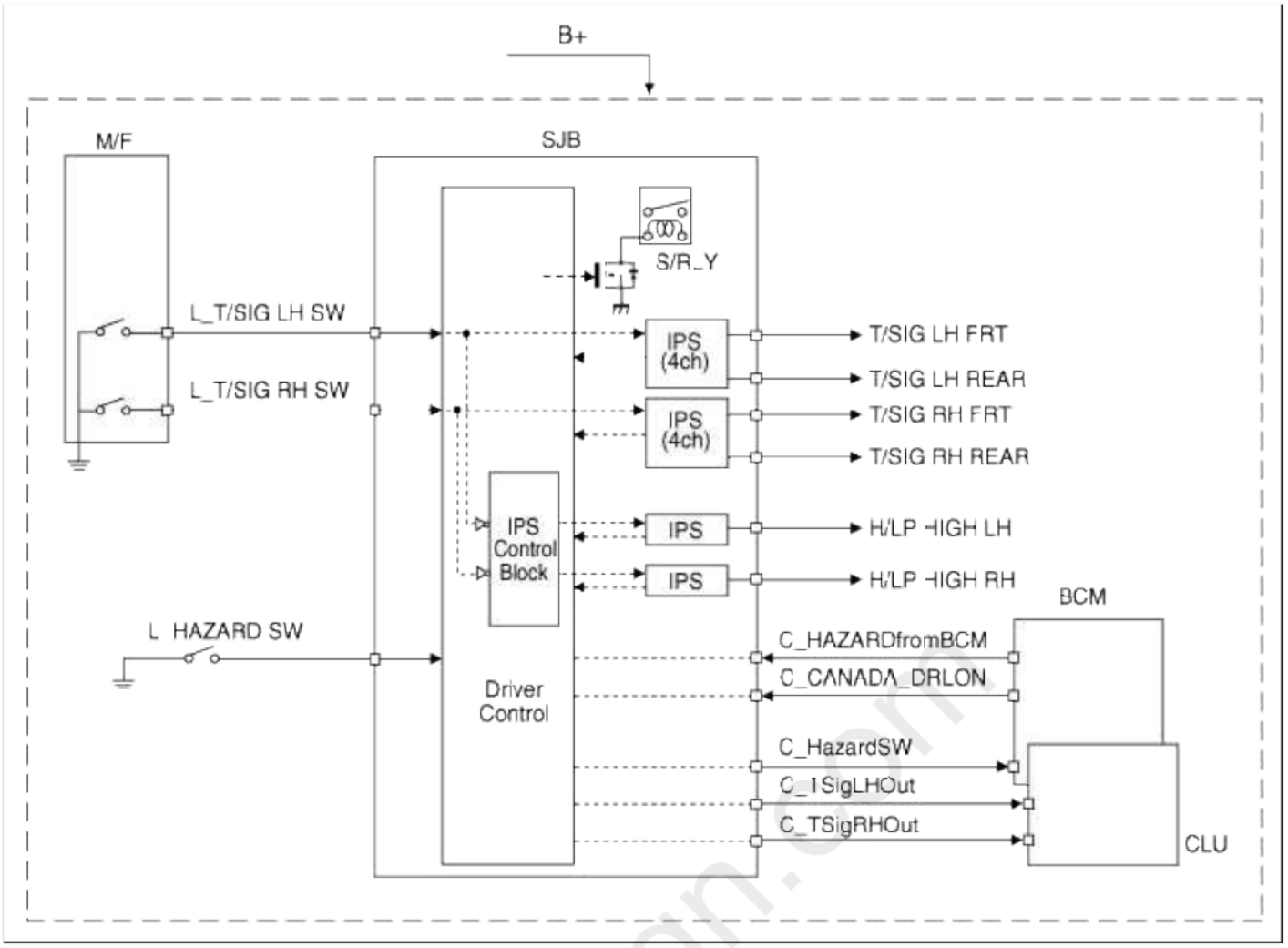

Body Electrical System > Fuses And Relays > Relay Box (Engine Compartment) > Repair procedures

Inspection

Power Relay Test (Type A)

NOTE

- Do not use pliers.
- Pliers will damage the relays, which could cause the engine to stall or not start.
- Carefully remove the relay using the relay puller.

Check for continuity between the terminals.

cardiagn.com

A. Deicer relay B. Not used C. HAC relay D. Blower relay E. B/Horn relay F. Not used G. Not used H. Start relay	I. C/Fan (low) relay J. Rear defogger relay K. Horn relay L. Fuel pump relay M. C/Fan (hi) relay N. SSB relay (ACC) O. SSB relay (IG1) P. SSB relay (IG2)

1. There should be continuity between the No.30 and No.87 terminals when power and ground are connected to the No.85 and No.86 terminals.
2. There should be no continuity between the No.30 and No.87 terminals when power is disconnected.

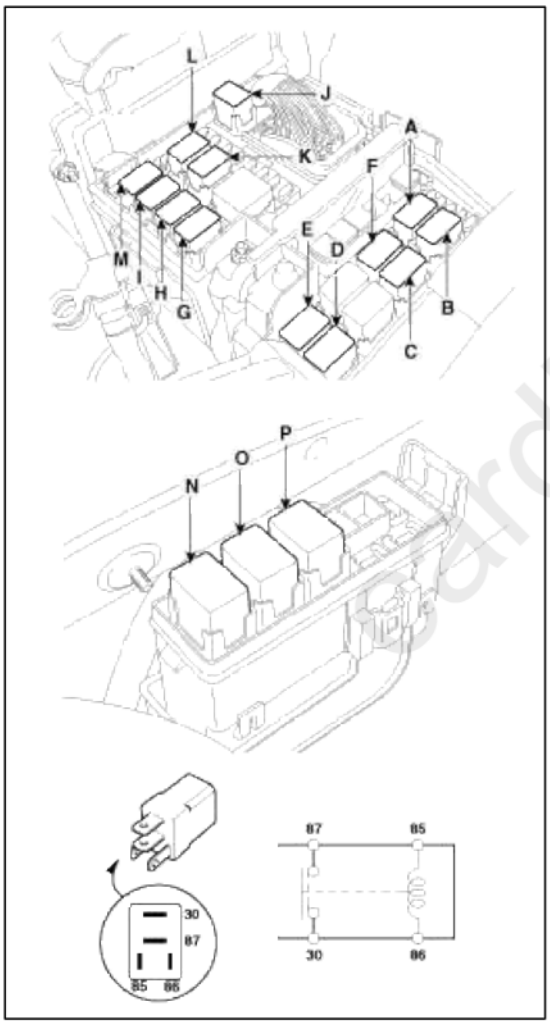

Terminal / Power	30	87	85	86
Disconnected			○	○
Connected	○	○	⊖	⊕

Power Relay Test (Type B)
Check for continuity between the terminals.
A : Rain sensor relay

cardiagn.com

B : Wiper relay

1. There should be continuity between the No.30 and No.87 terminals when power and ground are connected to the No.85 and No.86 terminals.
2. There should be continuity between the No.30 and No.87 terminals when power is disconnected.

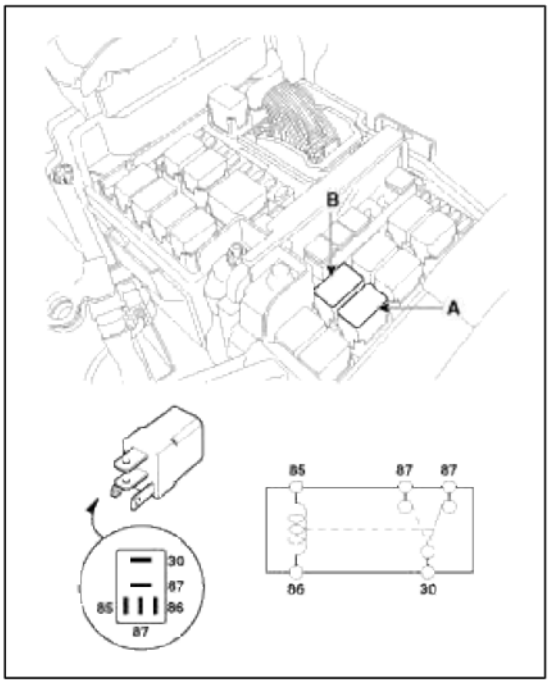

Term nal / Power	85	86	30	87	87
Disconnected			○		○
Connected	⊖	⊕	○	○	

Power Relay Test (Type C)

Check for continuity between the terminals.

A : Main relay

1. There should be continuity between the No.30, 87a and No.87 terminals when power and ground are connected to the No.85 and No.86 terminals.
2. There should be no continuity between the No.30, 87a and No.87 terminals when power is disconnected.

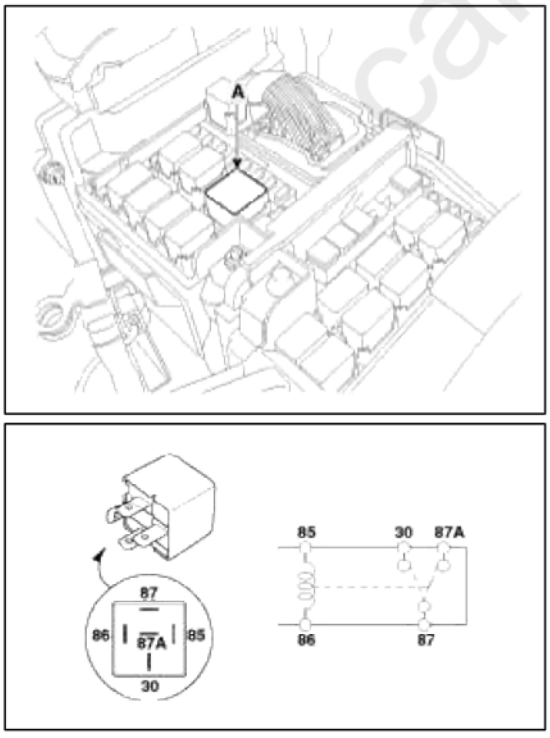

cardiagn.com

Terminal / Power	86	85	87	87a	30
Disconnected	○—○				
Connected	⊖—⊕		○	○—○	

Fuse Inspection

1. Be sure there is no play in the fuse holders, and that the fuses are held securely.
2. Are the fuse capacities for each circuit correct?
3. Are there any blown fuses?
   If a fuse is to be replaced, be sure to use a new fuse of the same capacity. Always determine why the fuse blew first and completely eliminate the problem before installing a new fuse.

Multi Fuse

Multi Fuse is for optimizing the engine room package.

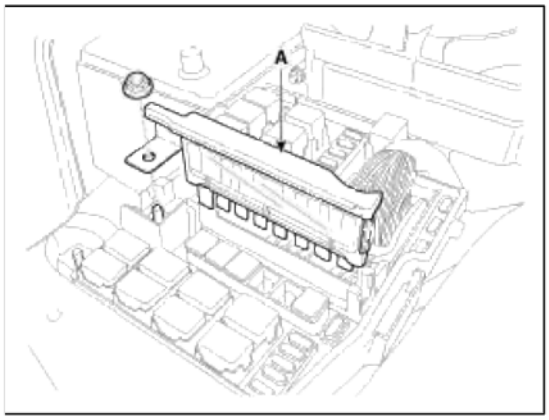

NOTE

- Multi fuse is needed to replace entirely when there is damage to only one fuse.
- When replace the multi fuse, refer to the "Engine compartment - component location" diagram exactly.
- Use the multi fuse capacities for each circuit correctly.
- Remove the nut cover (A) when removing the nut.

Body Electrical System > Fuses And Relays > Relay Box (Passenger Compartment) > Components and Components Location

Components

cardiagn.com

<FRONT>

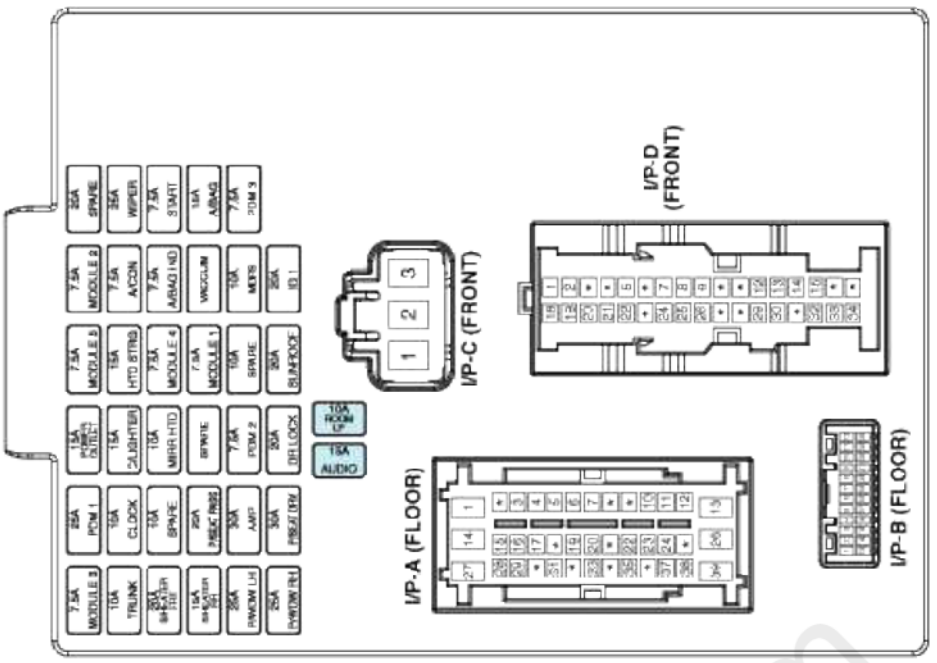

<REAR>

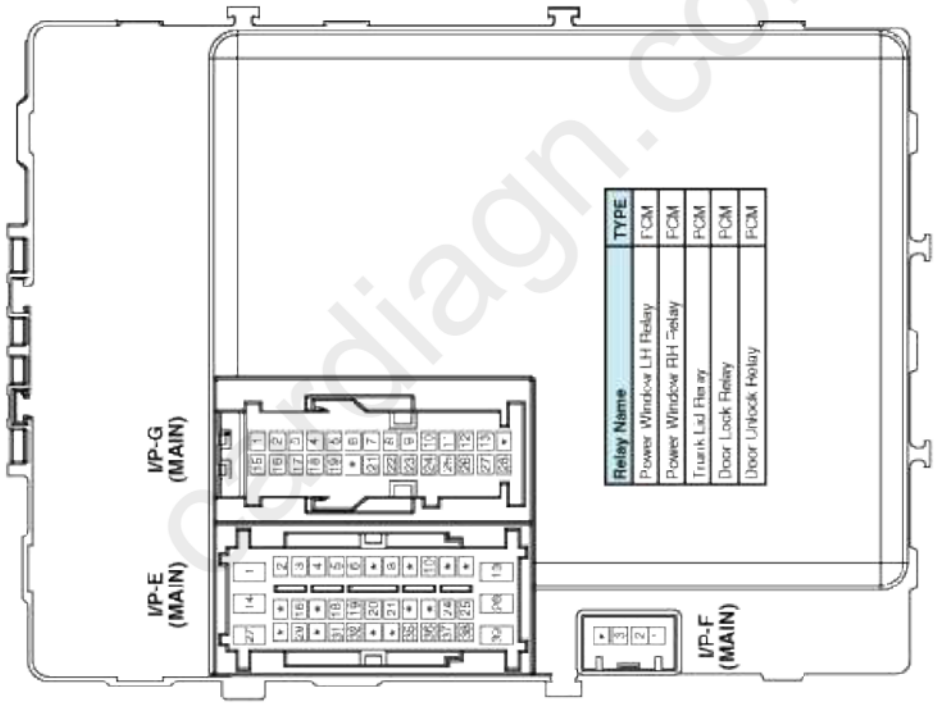

※USE THE DESIGNATED FUSE AND RELAY ONLY

obdiagn.com

Circuit (I/P Junction Box)

Fuse Name		(A)	Circuit Protected
MODULE 3		7.5A	Key Solenoid, Sport Mode Switch
PDM 1		25A	Smart Key Control Module
POWER OUTLET		15A	Front Power Outlet
MODULE 5		7.5A	Smart Key Control Module, Rear Seat Warmer Relay LH/R-I
MODULE 2		7.5A	BCM, Panorama Sunroof, Rain Sensor
TRUNK		10A	I/P Junction Box (Trunk Relay), Fuel Filler Door & Trunk Lid Switch, Trunk Room LP
CLOCK		10A	A/V & Navigation Head Unit, Audio, Smart Key Control Module, Overhead Console Lamp, Crash Pad Mood Lamp, A/C Control Module, BCM, AMP, Power Outside Mirror Switch, Driver/Passenger Door Mood Lamp
C/LIGHTER		15A	Cigar Lighter
HTD STRG		15A	Steering Wheel Heater
A/CON		7.5A	A/C Control Module, E/P Fuse & Relay Box (Blower Relay)
WIPER		25A	Multifunction Switch, Front Wiper Motor, E/R Fuse & Relay Box (Wiper Relay, Rain SNSR Relay)
S/HEATER FRT		20A	Driver/Passenger CCS Cushion Warmer, Driver/Passenger Seat Warmer Module
MIRR HTD		10A	Driver/Passenger Power Outside Mirror
MODULE 4		7.5A	Front Seat Warmer & CCS Switch, Driver/Passenger CCS Control Module, Driver/Passenger Seat Warmer Module, Tire Pressure Monitoring Module, Audio
A/BAG IND		7.5A	Instrument Cluster (Air Bag IND.)
START		7.5A	W/O Smart Key : Burglar Alarm Relay With Smart Key : PCM, Transaxle Range Switch
S/HEATER RR		15A	Rear Seat Warmer Relay LH/R-
P/SEAT PASS		20A	Passenger Seat Manual Switch
SPARE		15A	-
MODULE 1		7.5A	Head Lamp Leveling Device Actuator LH/RH, Auto Head Lamp Leveling Device Module, Driver IMS Module, ATM Lever Indicator, BCM, A/C Control Module, Electro Chromic Mirror, Lane Keeping Assist Module, Instrument Cluster
A/BAG		15A	Telltale Lamp, SRS Control Module, Passenger Weight Classification Sensor
P/WDW LH		25A	I/P Junction Box (Power Window LH Relay), Driver/Passenger Power Window Safety Module
AMP		30A	AMP
PDM 2		7.5A	Start Stop Button Switch, Smart Key Control Module Fob Holder
MDPS		10A	EPS Control Module, Crash Pad Switch
PDM 3		7.5A	Smart Key Control Module
P/WDW RH		25A	I/P Junction Box (Power Window RH Relay)
P/SEAT DRV		30A	Driver IMS Module, Driver Seat Manual Switch, Driver Lumbar Support Switch
DR LOCK		20A	Two Turn Unlock Relay, I/P Junction Box (Door Lock Relay, Door Unlock Relay, Turn Signal Lamp Sound Relay)
SUNROOF		20A	Panorama Sunroof
IG 1		20A	E/P Fuse & Relay Box (Fuse : ABS 3 10A, TCU 2 15A, ECU 4 10A)
POWER CONNECTOR	AUDIO	15A	A/V & Navigation Head Unit, Audio
	ROOM LP	10A	Driver/Passenger Smart Key Outside Handle, Driver IMS Module, Lamp Auto Cut Relay, Driver/Passenger Door Scuff Lamp, Ignition Key ILL. & Door Warning Switch, A/C Control Module, Data Link Connector, RF Receiver, BCM, Electro Chromic Mirror, Instrument Cluster, Auto Light & Photo Sensor, Tire Pressure Monitoring Module
VACCUM		20A	Vaccum Pump

※ USE THE DESIGNATED FUSE AND RELAY ONLY

Body Electrical System > Fuses And Relays > Relay Box (Passenger Compartment) > Repair procedures

Fuse Inspection

1. Be sure there is no play in the fuse holders, and that the fuses are held securely.
2. Are the fuse capacities for each circuit correct?
3. Are there any blown fuses?
   If a fuse is to be replaced, be sure to use a new fuse of the same capacity. Always determine why the fuse blew first and completely eliminate the problem before installing a new fuse.

Inspection

1. The SJB can be diagnosed by using the GDS. The SJB communicates with the GDS which then displays inputs and outputs along with codes.

cardiagn.com

2. To diagnose the SJB function, select the vehicle model, BCM and SJB.

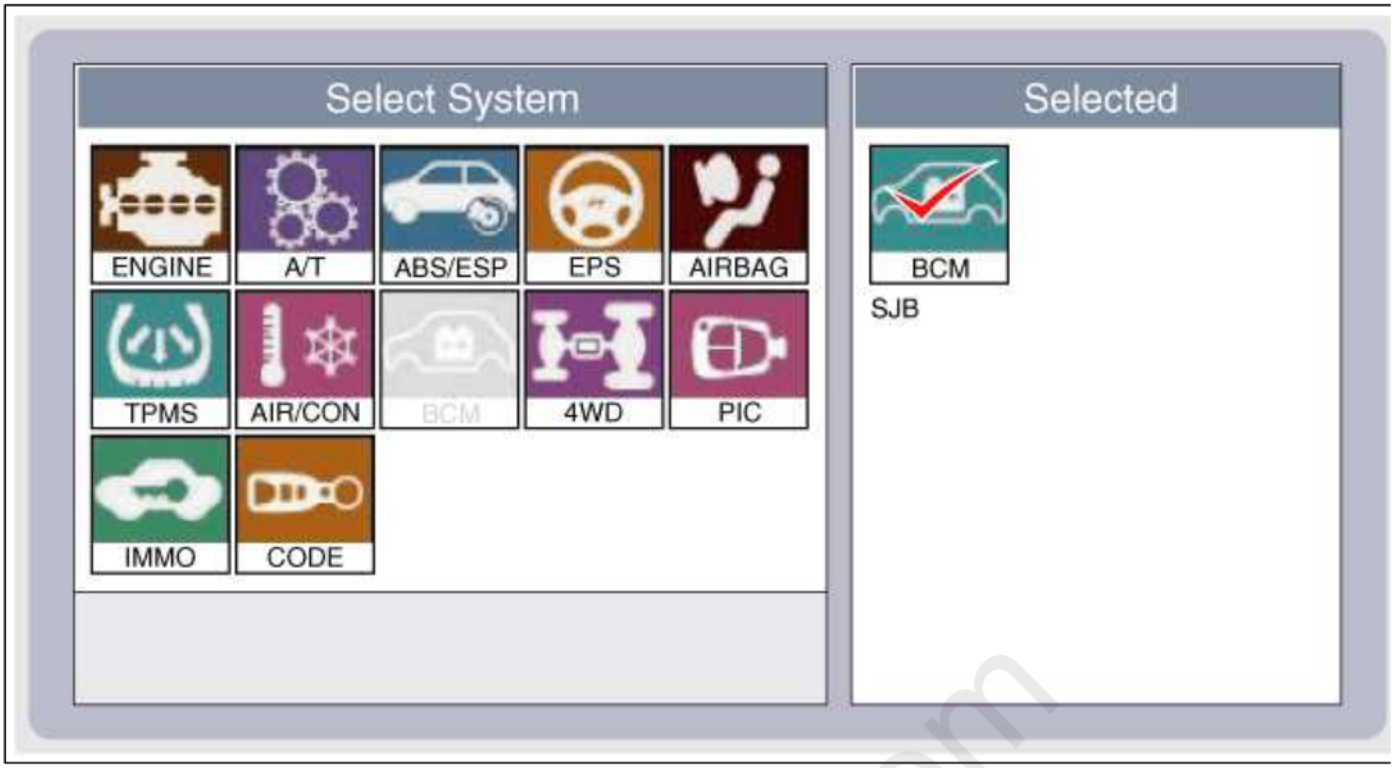

3. To consult the present input/out value of SJB, "Current DATA". It provides information of SJB input/output conditions.

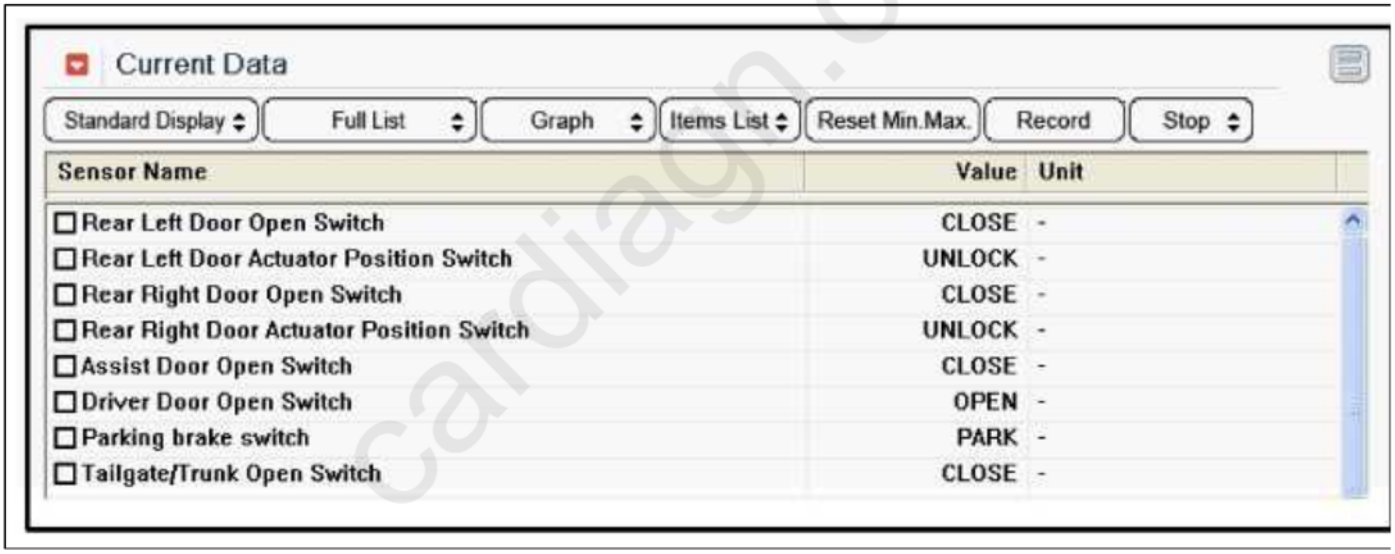

4. To perform functional test on SJB outputs, select "Actuation Test"

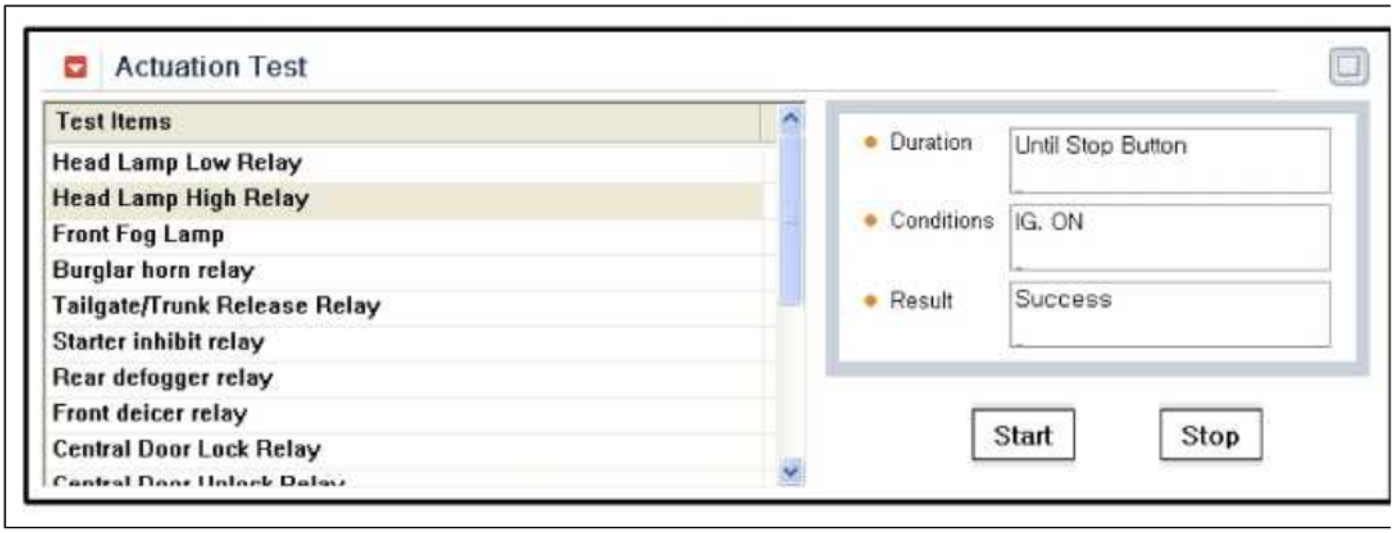

cardiagn.com

Removal

Passenger Compartment Junction Box (SJB)

1. Disconnect the negative(-) battery terminal.
2. Remove the crash pad lower panel (A).
   (Refer to the BD group - "Crash pad")

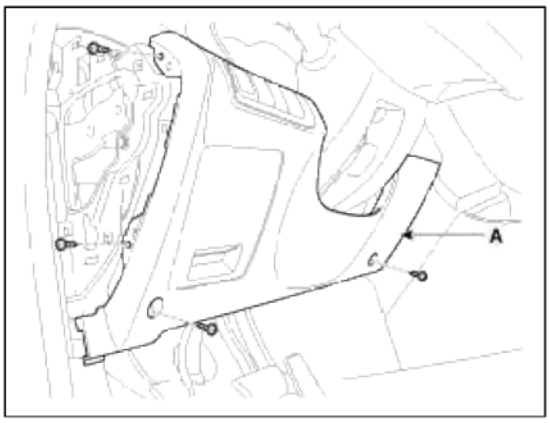

3. Disconnect the connectors (A) from the fuse side of the smart junction box.

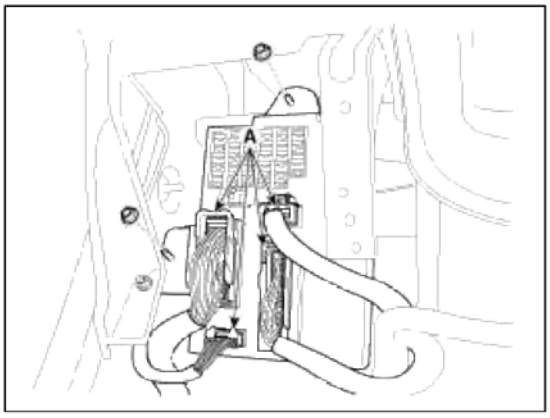

4. Remove the smart junction box after loosening the mounting nuts (2EA).
5. Disconnect the connectors from the back side of the smart junction box.

Installation

1. Install the smart junction box.
2. Install the crash pad lower panel.
3. Check that all system operates normally.

cardiagn.com

Body Electrical System > Fuses And Relays > The Other Fuses And Relays Component > Repair procedures

Inspection

Power Relay Test (Type B)

Check for continuity between the terminals.

A : Two turn unlock relay

1. There should be continuity between the No.30 and No.87 terminals when power and ground are connected to the No.85 and No.86 terminals.

2. There should be continuity between the No.30 and No.87 terminals when power is disconnected.

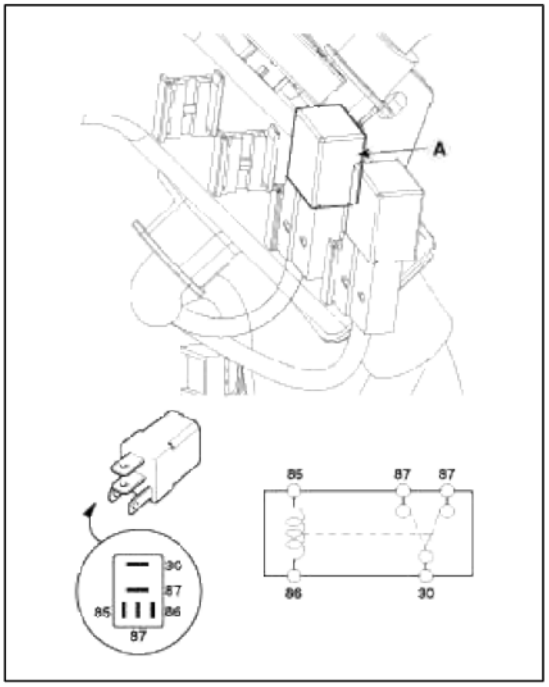

Terminal / Power	85	86	30	87	87
Disconnected			○		○
Connected	⊖	⊕	○	○	

Body Electrical System > Indicators And Gauges > Components and Components Location

Component Location

cardiagn.com

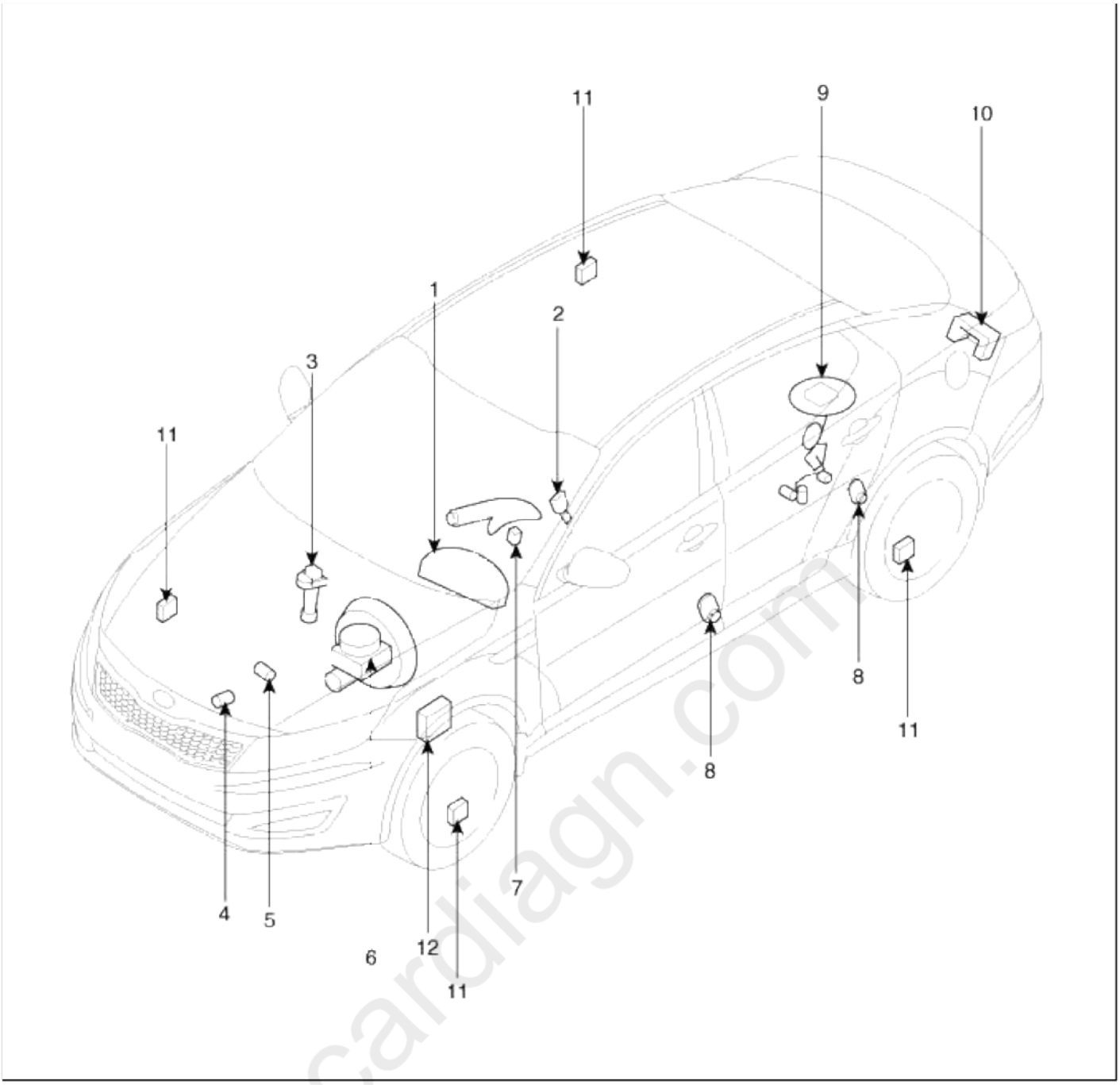

1. Instrument cluster assembly 2. Seat belt switch 3. Vehicle speed sensor 4. Engine coolant temperature sender 5. Oil pressure switch 6. Brake fluid level warning switch	7. Parking brake switch 8. Door switch 9. Fuel gauge sender 10. Trunk lid open switch 11. Wheel speed sensor 12. ABS ECU

Body Electrical System > Indicators And Gauges > Instrument Cluster > Components and Components Location

Components

cardiagn.com

[Standard]

[Front]

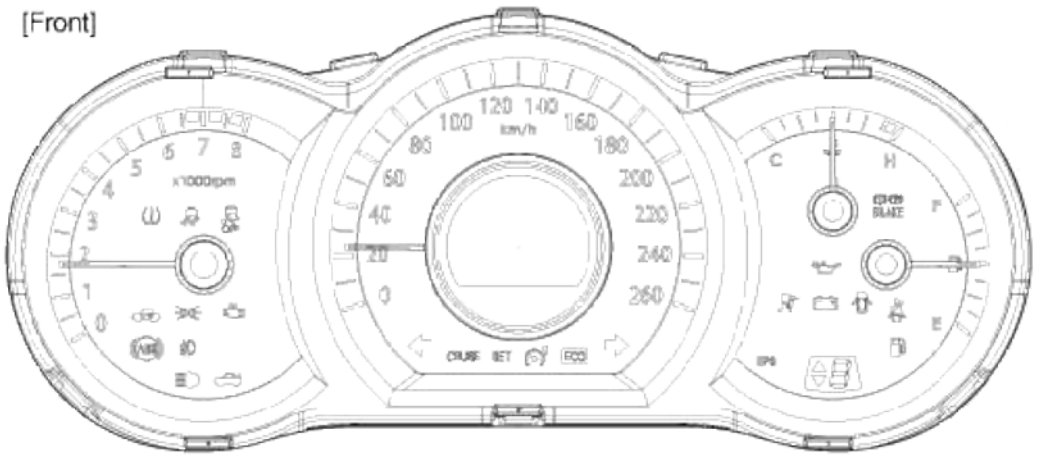



Speed meter (MPH)

[Rear]

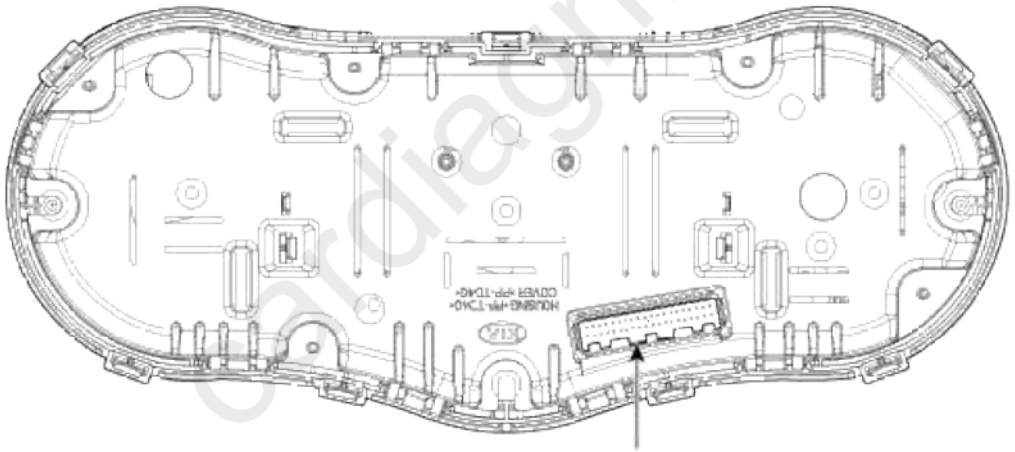

Connector A

ardiagn.com

[Super vision]

[Front]

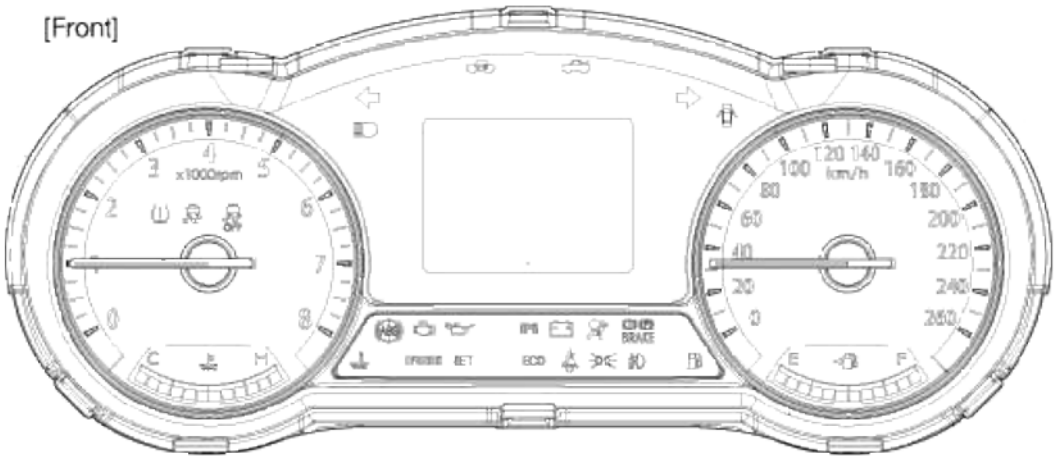



Speed meter (MPH)

[Rear]

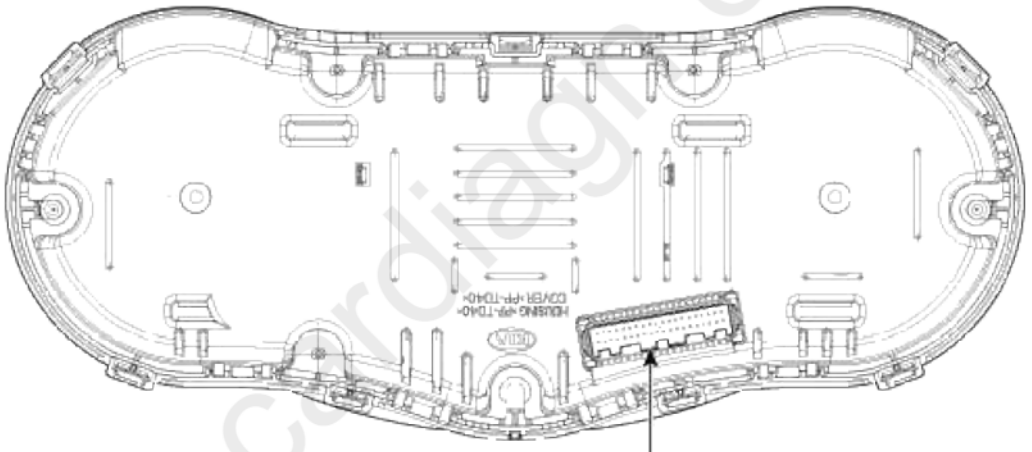

Connector A

cardiagn.com

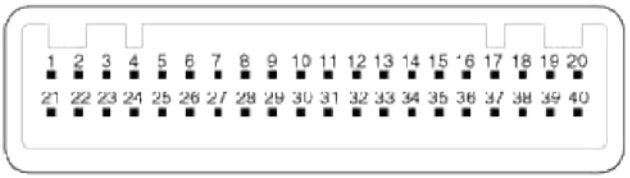

Connector A

NO	Description	NO	Description
1	Water separator	21	Immobilizer
2	-	22	Fuel
3	Airbag +	23	Analog switch input
4	4P output	24	Rheostat up
5	Oil pressure	25	Rheostat down
6	Engine check	26	Low washer
7	ALT L output	27	Battery charge
8	Active ECO input	28	Illumination +
9	-	29	C-CAN HI
10	ISG DC	30	C-CAN LOW
11	-	31	B-CAN LOW
12	-	32	B-CAN HI
13	Analog switch GND	33	Vehicle speed (MT)
14	Signal GND	34	R output (AT)
15	Fuel -	35	S output (AT)
16	-	36	D output (AT)
17	Battery +	37	P output (AT)
18	IGN +	38	N output (AT)
19	-	39	DETENT output
20	P GND	40	PWM illumination ouput

cardiagn.com

Body Electrical System > Indicators And Gauges > Instrument Cluster > Description and Operation

Description

ECO driving system

This system is designed to encourage eco-driving by providing real-time feedback to the driver.

The ECO indicator light assists you to drive in the most economical way.

The green indicator comes on when you drive with high fuel efficiency.

The fuel efficiency depends on driver's driving habit and road condition.

The system stops operation when the transaxle is in the P,R,N position or sports mode, or instantaneous fuel consumption mode is selected.

Circuit Diagram

[General]

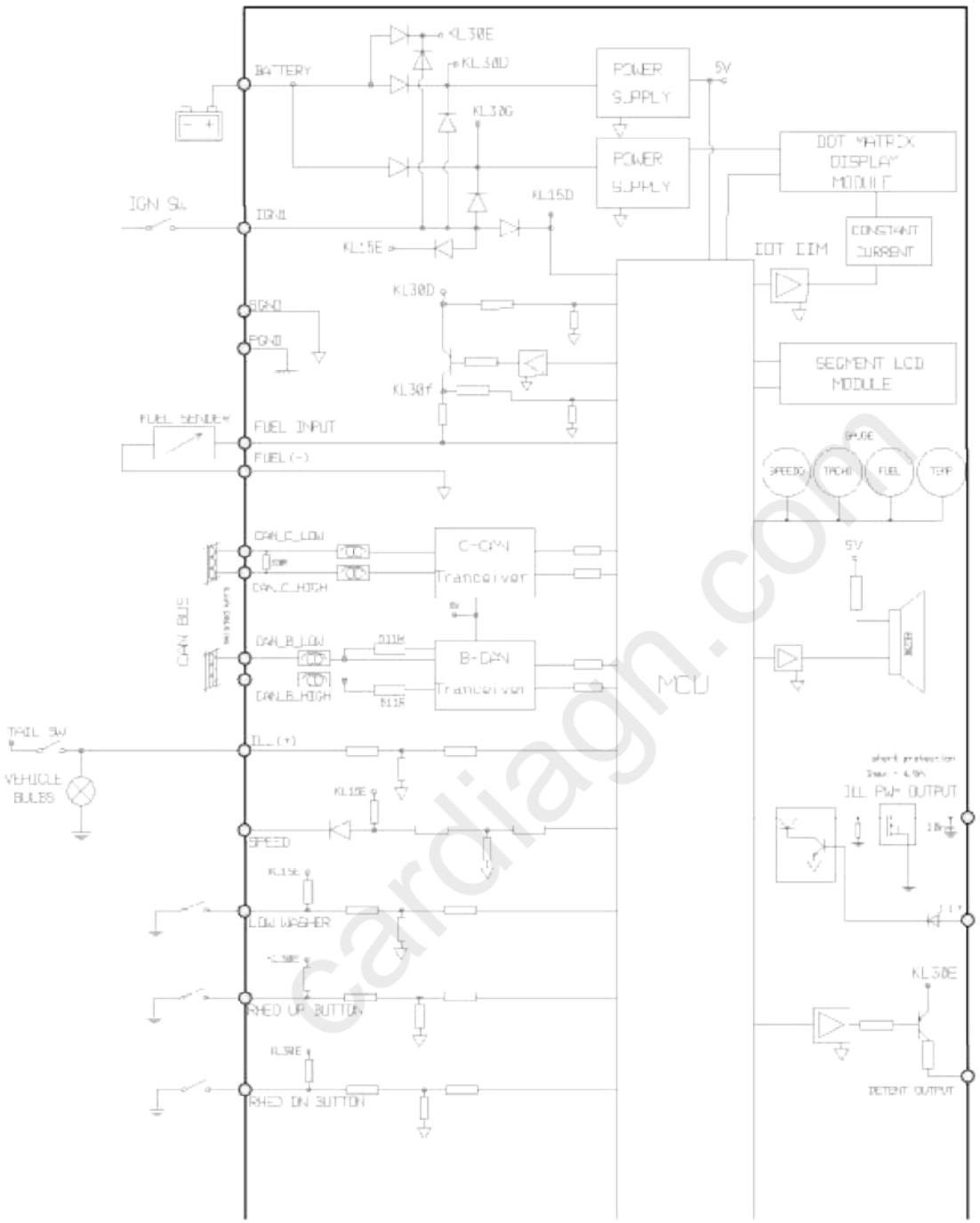

cardiagn.com

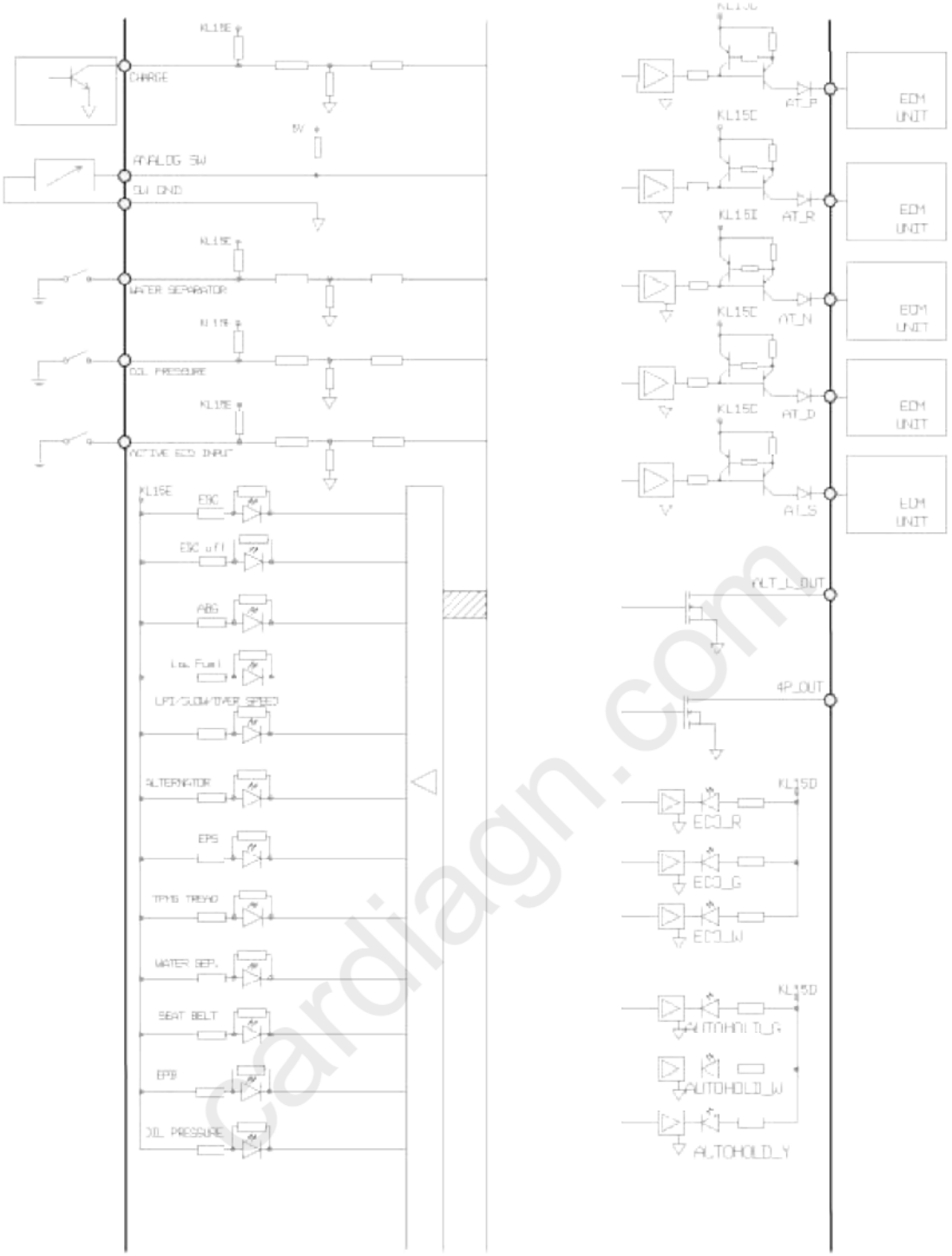

cardiagn.com

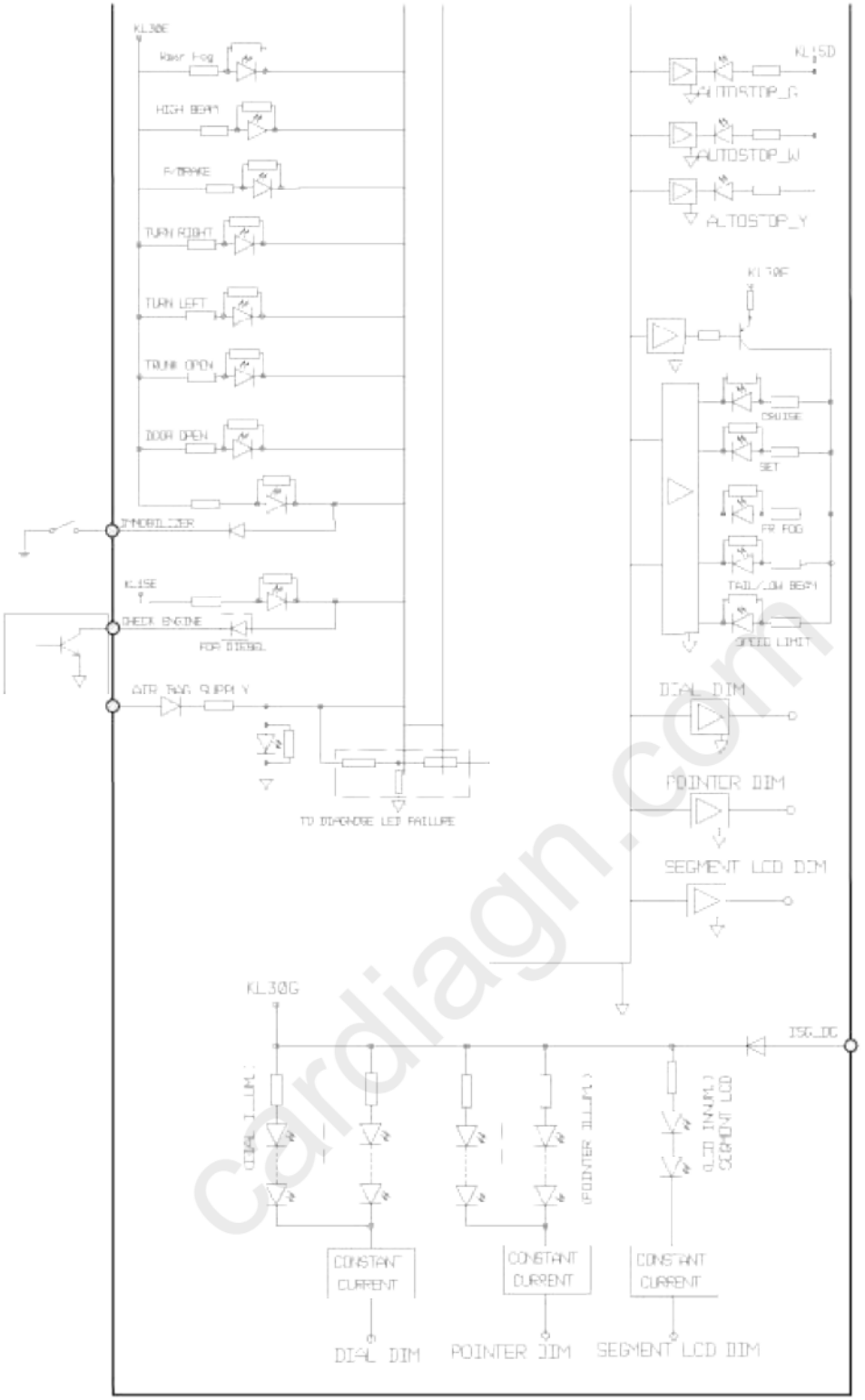

Cardiagn.com

[Super vision]

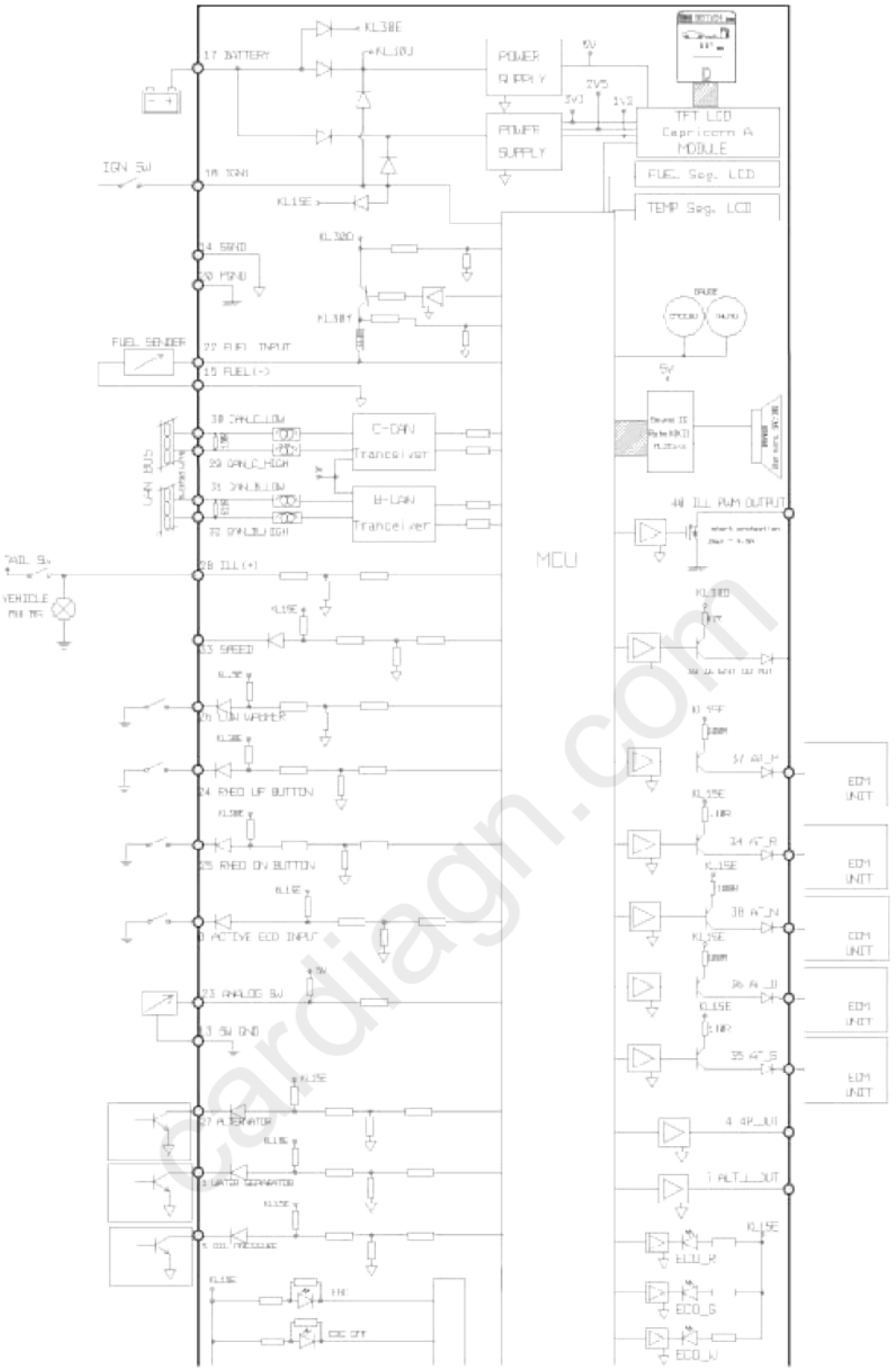

cardiagn.com

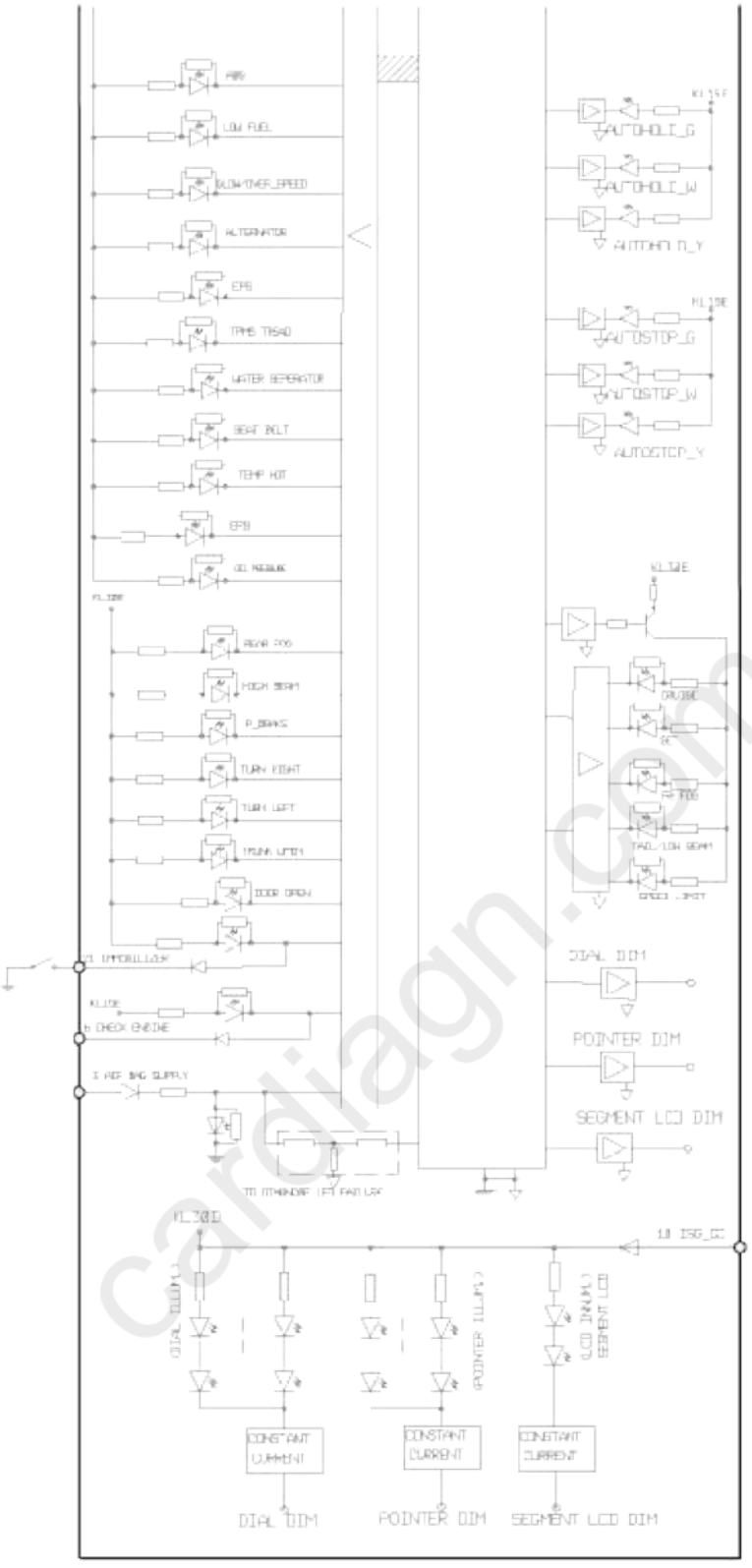

cardiagn.com

Body Electrical System > Indicators And Gauges > Instrument Cluster > Repair procedures

Inspection

Speedometer

1. Adjust the pressure of the tires to the specified level.
2. Drive the vehicle onto a speedometer tester. Use wheel chocks (A) as appropriate.
3. Check if the speedometer indicator range is within the standard values.

CAUTION

Do not operate the clutch suddenly or increase/ decrease speed rapidly while testing.

NOTE

Tire wear and tire over or under inflation will increase the indication error.

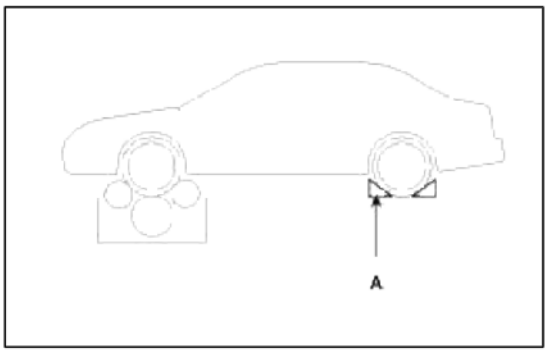

[Canada - km/h]

Velocity (km/h)	Tolerance(km/h)	
	AT	MT
20	+4.4 +0.38	+5 +1.4
40	+4.71 +0.69	+6 +2.2
60	+5.01 +0.99	+7.2 +3
80	+5.31 +1.29	+8.4 +4
100	+5.61 +1.59	+9.6 +5
120	+5.92 +1.9	+10.6 +6
140	+6.22 +2.2	+11.8 +7
160	+6.52 +2.5	+13 +8
180	+6.82 +2.8	+14 +9
200	+7.13 +3.11	+15 +10
220	+7.43 +3.41	+16 +11
240	+7.73 +3.71	+17 +12
260	+8.03 +4.01	+18 +13

cardiagn.com

[USA - MPH]

Velocity (km/h)	Tolerance(km/h)	
	A/T	M/T
20	+1.97 -0.51	+2.43 -0.05
40	+2.23 -0.24	+3.15 +0.68
60	+2.5 +0.02	+3.88 +1.4
80	+2.76 +0.29	+4.6 +2.13
100	+3.03 +0.55	+5.32 +2.85
120	+3.29 +0.82	+6.05 +3.57
140	+3.56 +1.08	+6.77 +4.3
160	+3.82 +1.35	+7.49 +5.02

Tachometer

1. Connect the GDS to the diagnostic link connector or install a tachometer.
2. With the engine started, compare the readings of the tester with that of the tachometer. Replace the tachometer if the tolerance is exceeded.

CAUTION

1. Reversing the connections of the tachometer will damage the transistor and diodes inside.
2. When removing or installing the tachometer, be careful not to drop it or subject it to severe shock.

Revolution (rpm)	Tolerance (rpm) Max 8000rpm
	Gasoline
1,000	±100
2,000	±100
3,000	±100
4,000	±100
5,000	±100
6,000	±100
7,000	±100
8,000	±100

Fuel Gauge

1. Disconnect the fuel sender connector from the fuel sender.

cardiagn.com

2. Connect a 3.4 watt, 12V test bulb to terminals 1 and 3 on the wire harness side connector.
3. Turn the ignition switch to the ON, and then check that the bulb lights up and the fuel gauge needle moves to full.

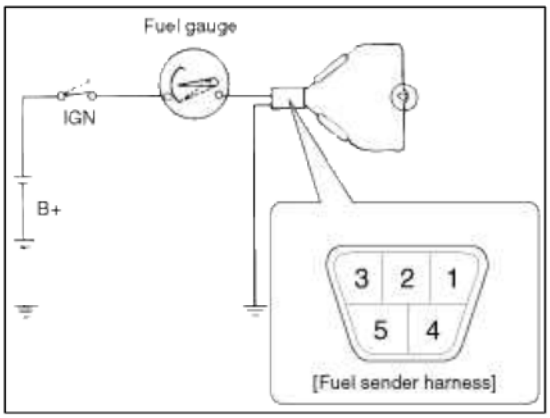

Main Fuel Gauge Sender

1. Using an ohmmeter, measure the resistance between terminals 1 and 3 of sender connector (A) at each float level.

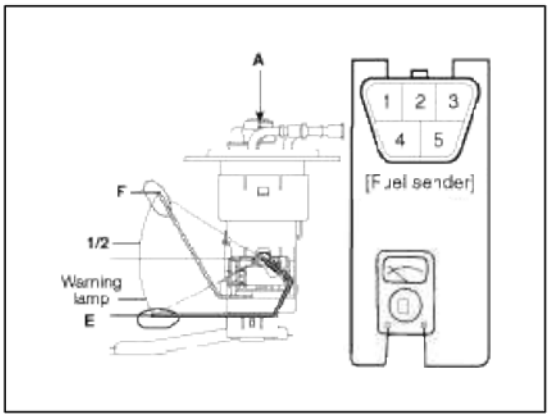

NO	Description	NO	Description
1	Gauge signal GND	4	Fuel pump (+)
2	-	5	Fuel pump GND
3	Gauge signal (+)	-	-

2. Also check that the resistance changes smoothly when the float is moved from "E" to "F"

[General]

Position	Liter (ℓ)	U.S.gal.	Resistance (Ω)
Sender (E)	5	1.32	200 +5 / -2Ω
Warning lamp ON	8.5	2.24	170 ± 2Ω
1/2	37.5	9.9	66 ± 1Ω
Sender (F)	68	17.96	8 ± 2Ω

[Supervision]

Position	Segment	Resistance (Ω)
Sender (E)	1 segment	184Ω
Warning lamp ON	2 segment	146.7Ω
1/2	6 segment	72.7Ω
Sender (F)	12 segment	15Ω

cardiagn.com

3. If the height resistance is unsatisfied, replace the fuel sender as an assembly.

> **CAUTION**
>
> After completing this test, wipe the sender dry and reinstall it in the fuel tank.

Brake Fluid Level Warning Switch

1. Remove the connector (A) from the switch located at the brake fluid reservoir.
2. Verify that continuity exists between switch terminals 1 and 2 while pressing the switch (float) down with a rod.

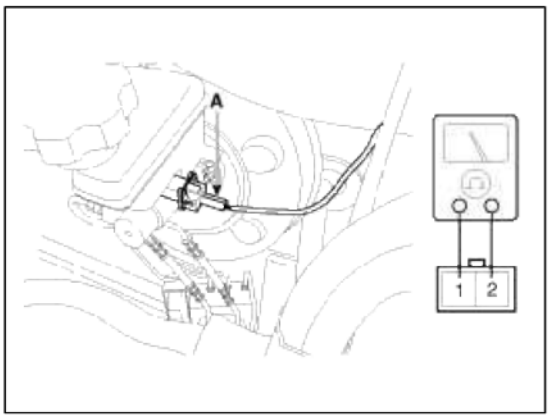

Brake Fluid Level Warning Lamp

1. Ignition "ON"
2. Release the parking brake.
3. Remove the connector from the brake fluid level warning switch.
4. Ground the connector at the harness side.
5. Verify that the warning lamp lights.

Parking Brake Switch

The parking brake switch (A) is a pulling type. It is located under the parking brake lever. To adjust, move the switch mount up and down with the parking brake lever released all the way.

1. Check that there is continuity between the terminal and switch body with the switch ON (Lever is pulled).
2. Check that there is no continuity between the terminal and switch body with the switch OFF (Lever is released).
   If continuity is not as specified, replace the switch or inspect its ground connection.

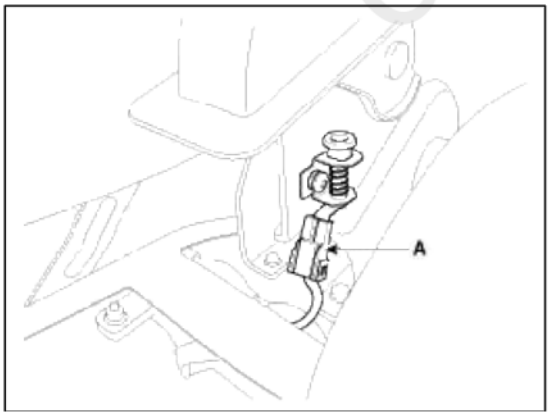

Door Switch

Remove the door switch and check for continuity between the terminals.

cardiagn.com

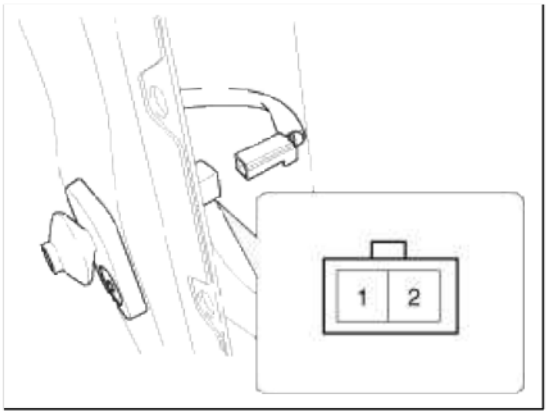

Terminal / Position	1	2	Body (Ground)
Free(Door open)	○	○	○
Push(Door close)			

Seat Belt Switch

1. Remove the connector from the switch.
2. Check for continuity between terminals.

Seat belt condition	Continuity
Fastened	Non-conductive (∞Ω)
Not fastened	Conductive (Ω)

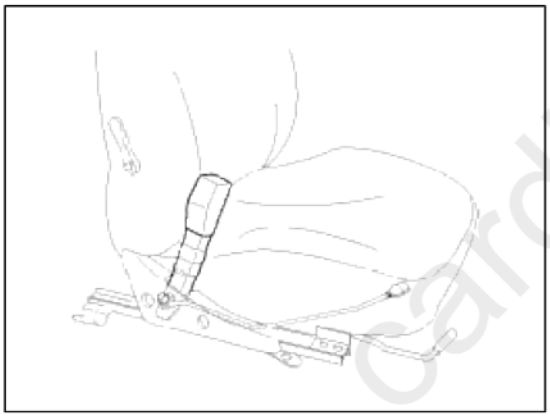

Seat Belt Warning Lamp

With the ignition switch turned ON, verify that the lamp glows.

Seat belt condition	Warning lamp
Fastened	OFF
Not fastened	ON

Removal

NOTE

- Take care not to scratch the center fascia panel and related parts.
- Eject all the disc before removing the audio unit to prevent damaging the CD player's load mechanism.

1. Disconnect the negative (-) battery terminal.

cardiagn.com

2. Using a screwdriver or remover, remove the crash pad garnish RH (A).

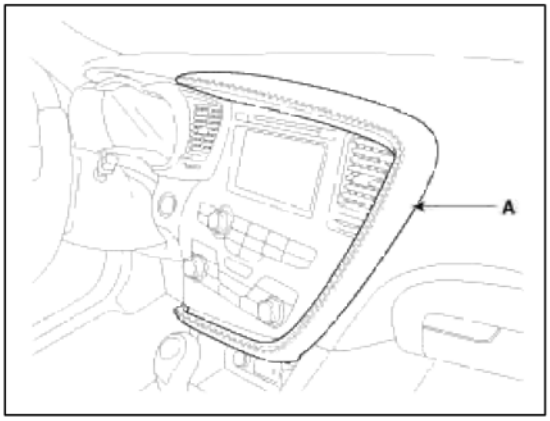

NOTE

Apply the protective tapes to crash pad garnish and its related parts.

3. Using a screwdriver or remover, remove the crash pad side cover (A).

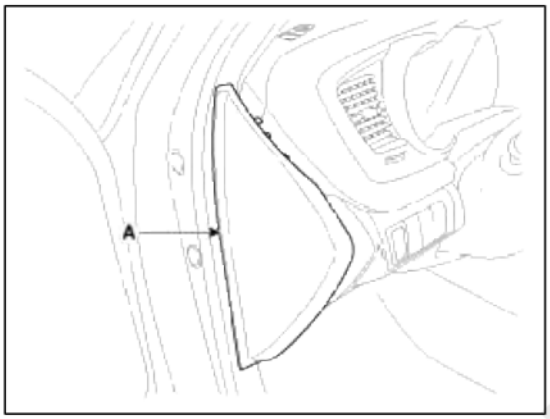

4. After loosening the crash pad lower panel mounting screws, then remove the lower panel (A).

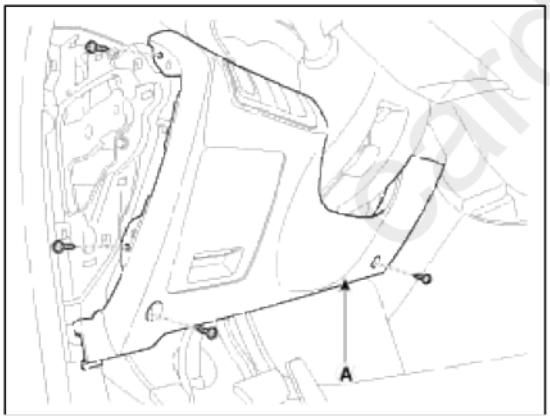

cardiagn.com

5. Remove the switch connector (A) and SSB connector (B) from crash pad lower panel.

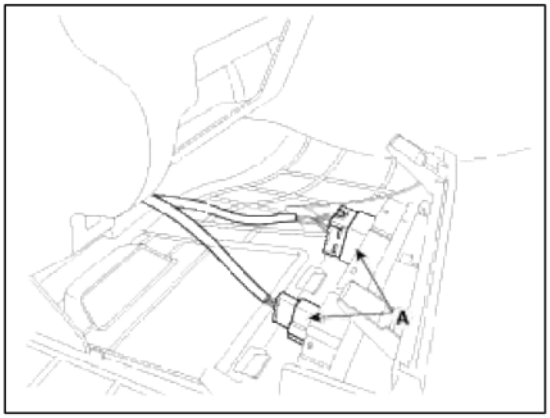

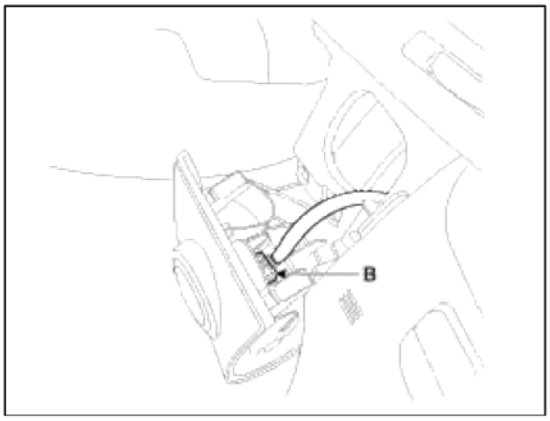

6. Remove the crash pad garnish LH (A) after removing the screws.

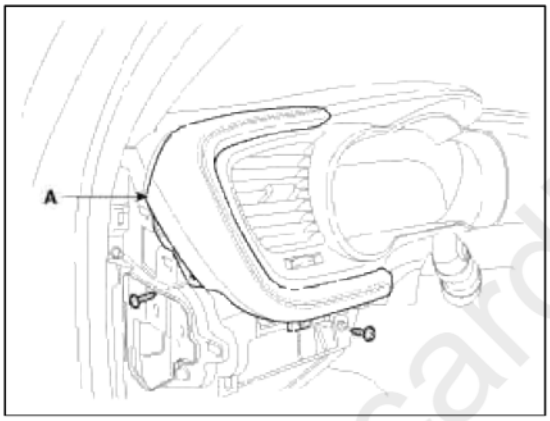

7. Remove the instrument cluster fascia panel (A) after loosening the screws.

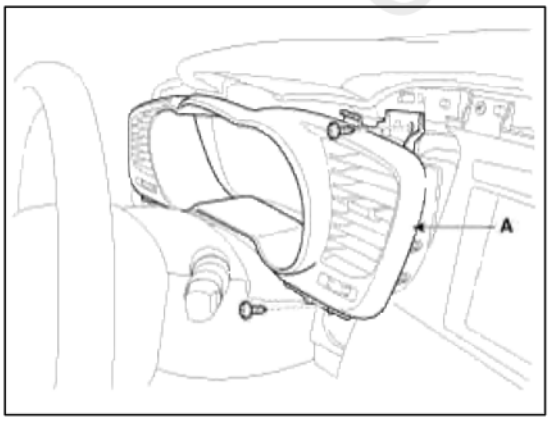

cardiagn.com

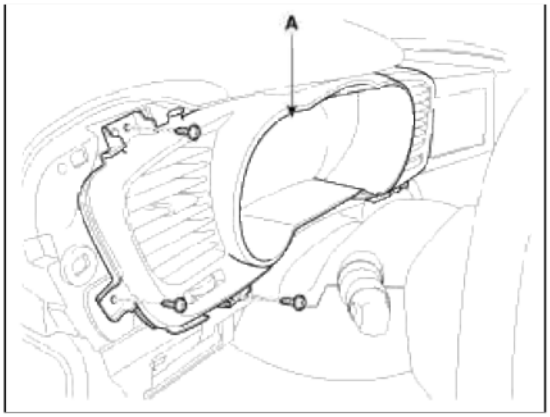

8. Remove the instrument cluster (A) after loosening the screws.

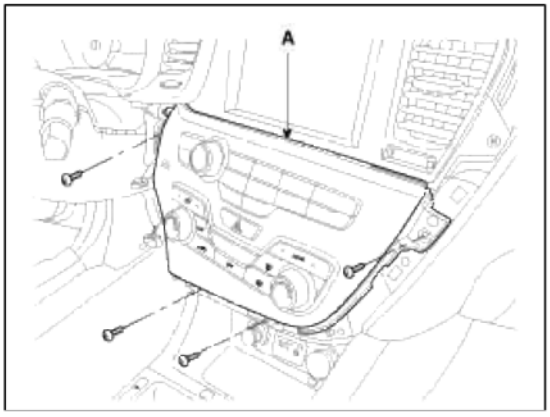

9. Disconnect the cluster connector (A), then remove the cluster.

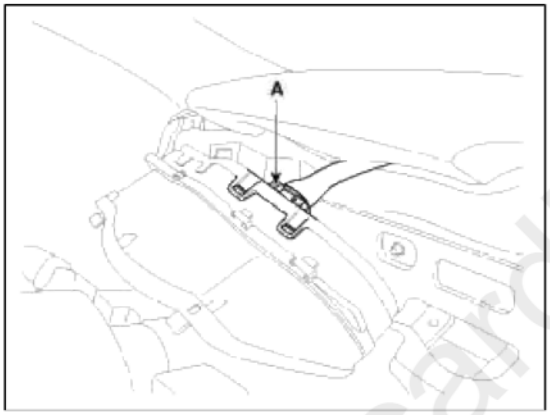

cardiagn.com

Installation

1. Install the cluster to the cluster housing.
2. Install the cluster fascia panel and crash pad side garnish [LH].
3. Install the crash pad lower pannel and side cover.
4. Install the side pad garnish [RH].

Body Electrical System > Indicators And Gauges > Trip Switch > Schematic Diagrams

Circuit Diagram

[TRIP+RESET]

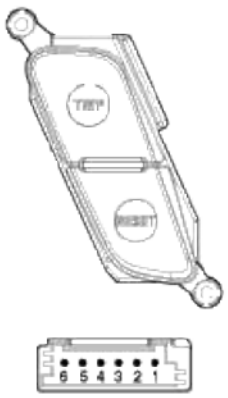

NO.	Description
1	Illumination (+)
2	Trip (+)
3	-
4	-
5	Trip (-)
6	Illumination (-)

LH (TRIP)

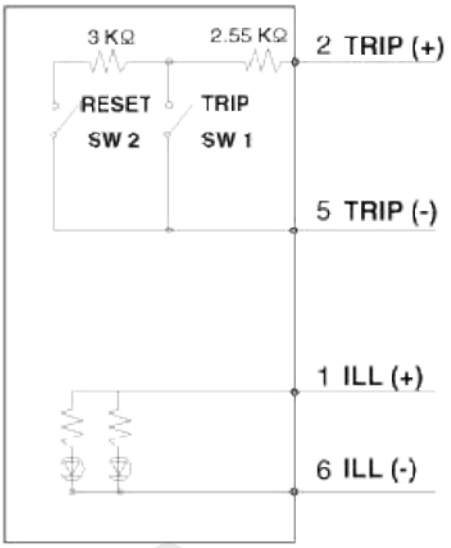

[MUTE+TRIP+RESET]

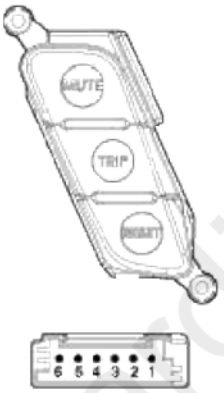

NO.	Description
1	Illumination (+)
2	Trip (+)
3	MUTE IN
4	Audio (-)
5	Trip (-)
6	Illumination (-)

LH (TRIP + MUTE)

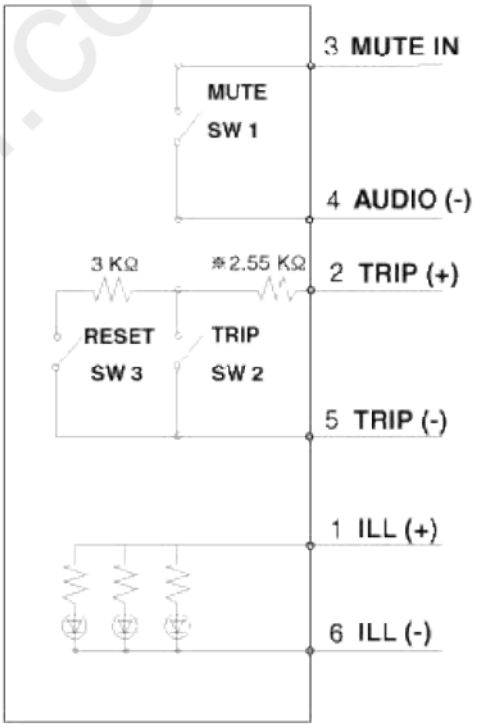

※ Cruise control option : 1.1KΩ

cardiagn.com

[ECO+TRIP+RESET]

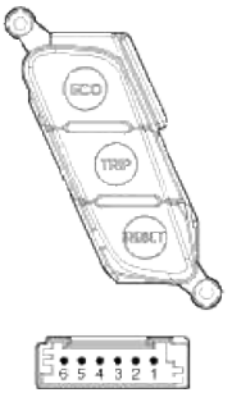

NO.	Description
1	Illumination (+)
2	Trip (+)
3	ECO (+)
4	Audio (-)
5	Trip (-)
6	Illumination (-)

LH (TRIP + ECO)

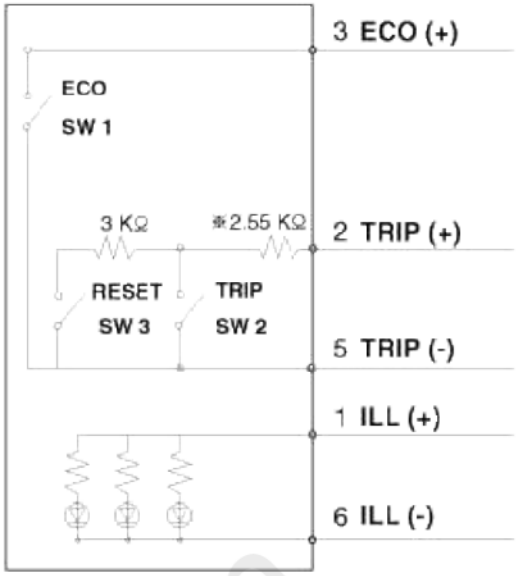

※ Cruise control option : 1.1KΩ

[BLUETOOTH+VOICE]



NO.	Description
1	Illumination (+)
2	Bluetooth (+)
3	-
4	-
5	Audio (-)
6	Illumination (-)

RH (B/T + VOICE)

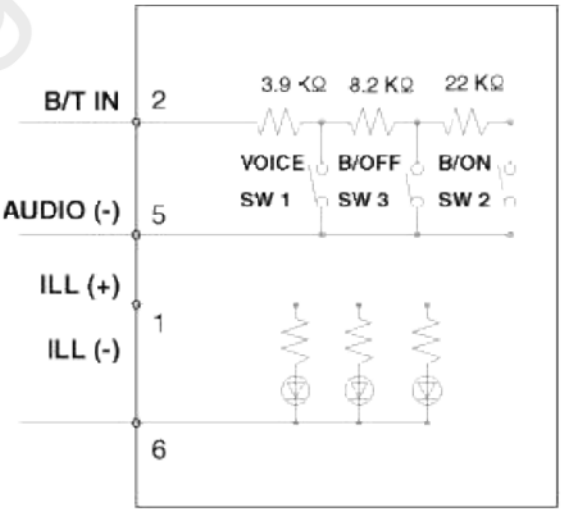

cardiagn.com

Body Electrical System > Indicators And Gauges > Trip Switch > Repair procedures

Inspection

1. Check the audio remote control switch for resistance between terminals in each switch position.

[Trip + Reset]

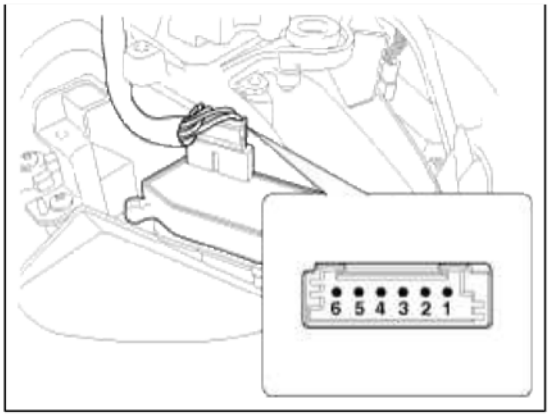

Switch	Connector terminal	Resistance (±5%)
Reset	3 - 5 (LH)	5.54 kΩ
Trip	3 - 5 (LH)	2.54 kΩ

[Trip + Mute + Reset]

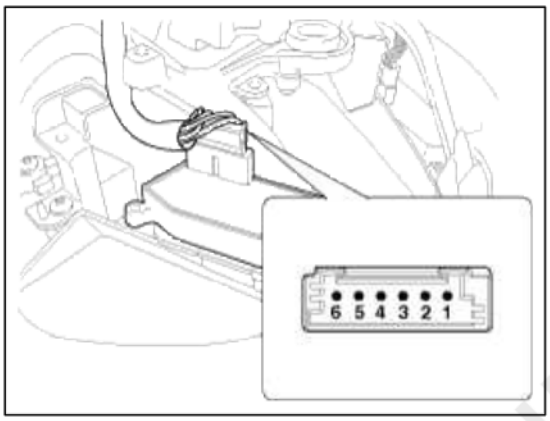

Switch	Connector terminal	Resistance (±5%)
Mute	3-4	0 Ω
Trip (General option)	2-5	2.55 kΩ
Reset (General option)	2-5	5.55 kΩ
Trip (Cruise option)	2-5	1.1 kΩ
Reset (Cruise option)	2-5	4.1 kΩ

[Trip + ECO + Reset]

cardiagn.com

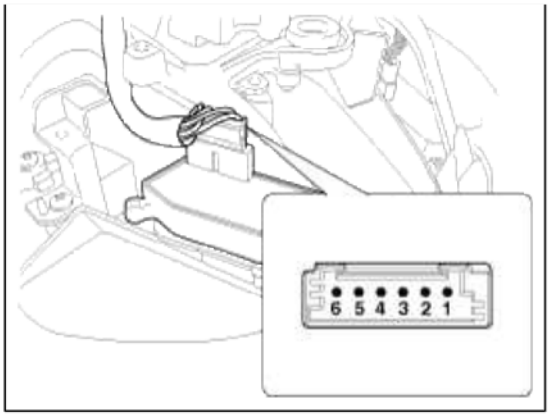

Switch	Connector terminal	Resistance (±5%)
ECO	3-5	0 Ω
Trip (General option)	2-5	2.55 kΩ
Reset (General option)	2-5	5.55 kΩ
Trip (Cruise option)	2-5	1.1 kΩ
Reset (Cruise option)	2-5	4.1 kΩ

Removal

1. Disconnect the negative (-) battery terminal.
2. Remove the driver airbag module.
   (Refer to the RT group)
3. Remove the steering wheel.
   (Refer to the ST group - "Steering column & shaft")
4. Remove the steering wheel cover (A) after loosening the screws.

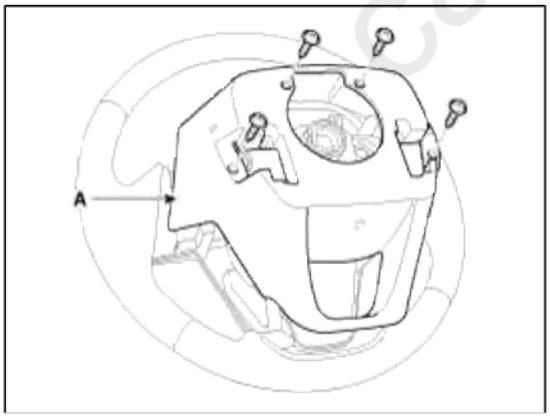

ecardiagn.com

5. Remove the steering wheel remote control switch connector (A) after loosening the mounting screws.

[LH-Mute]

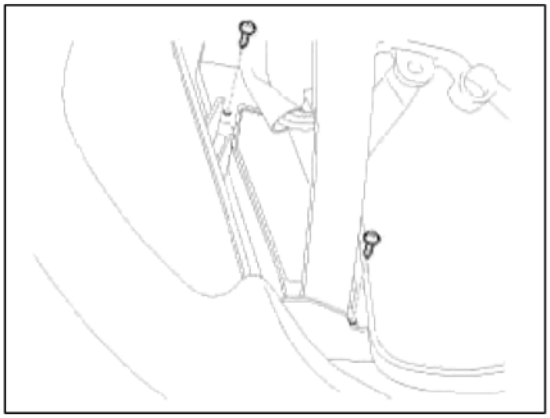

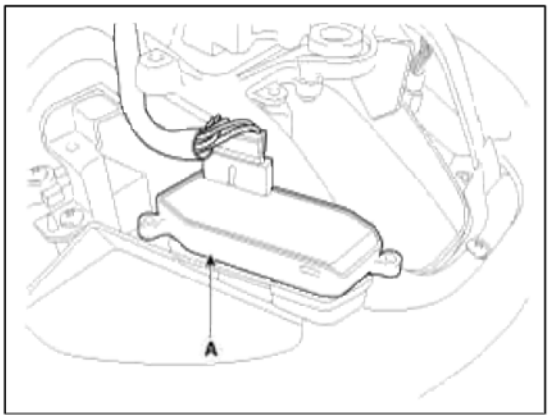

Installation

1. Reassemble the steering wheel remote control switch after connecting the connector.
2. Reassemble the steering wheel.
3. Reassemble the driver airbag module.

NOTE

Make sure the steering remote control switch and the airbag module connectors are plugged in properly.

cardiagn.com

Body Electrical System > Indicators And Gauges > Troubleshooting

Troubleshooting

Symptom	Possible cause	Remedy
Tachometer does not operate	Cluster fuse (10A) blown	Check for short and replace fuse
	CAN line faulty	Check the EMS
	Tachometer faulty	Check tachometer
	Wiring or ground faulty	Repair if necessary
Fuel gauge does not operate	Cluster fuse (10A) blown	Check for short and replace fuse
	Fuel gauge faulty	Check gauge
	Fuel sender faulty	Check fuel sender

	Wiring or ground faulty	Repair if necessary
Low fuel warning lamp does not light up	Cluster fuse (10A) blown	Check for short and replace fuse
	Bulb burned out	Replace bulb
	Fuel sender faulty	Check fuel sender
	Wiring or ground faulty	Repair if necessary
Water temperature gauge does not operate	Cluster fuse (10A) blown	Check for short and replace fuse
	Water temperature gauge faulty	Check gauge
	Water temperature sender faulty	Check sender
	CAN line faulty	Check the EMS
	Wiring or ground faulty	Repair if necessary
Oil pressure warning lamp does not light up	Cluster fuse (10A) blown	Check for short and replace fuse
	Bulb burned out	Replace bulb
	Oil pressure switch faulty	Check switch
	Wiring or ground faulty	Repair if necessary
Parking brake warning lamp does not light up	Cluster fuse (10A) blown	Check for short and replace fuse
	Bulb burned out	Replace bulb
	Brake fluid level warning switch faulty	Check switch
	Parking brake switch faulty	Check switch
	Wiring or ground faulty	Repair if necessary
	CAN line faulty	Check the TCS/ABS (EBD) Check the Smart Junction Box(SJB) (Parking brake/Brake oil switch)
Open door warning lamp and trunk warning lamp do not light up	Memory fuse (15A) blown	Check for short and replace fuse
	Bulb burned out	Replace bulb
	CAN line faulty	Check the Smart Junction Box(SJB)
	Door switch faulty	Check switch
	Wiring or ground faulty	Repair if necessary

cardiagn.com

Speedometer does not operate	Vehicle speed sensor faulty	Check the vehicle speed sensor (M/T)
	CAN line faulty	Check the EMS (A/T)
Seat belt warning lamp does not light up	Cluster fuse (10A) blown	Check for short and replace fuse
	Bulb burned out	Replace bulb
	CAN line faulty	Check the BCM
	Seat belt switch faulty	Check switch
	Wiring or ground faulty	Repair if necessary

Body Electrical System > Power Door Locks > Components and Components Location

Component Location

cardiagn.com

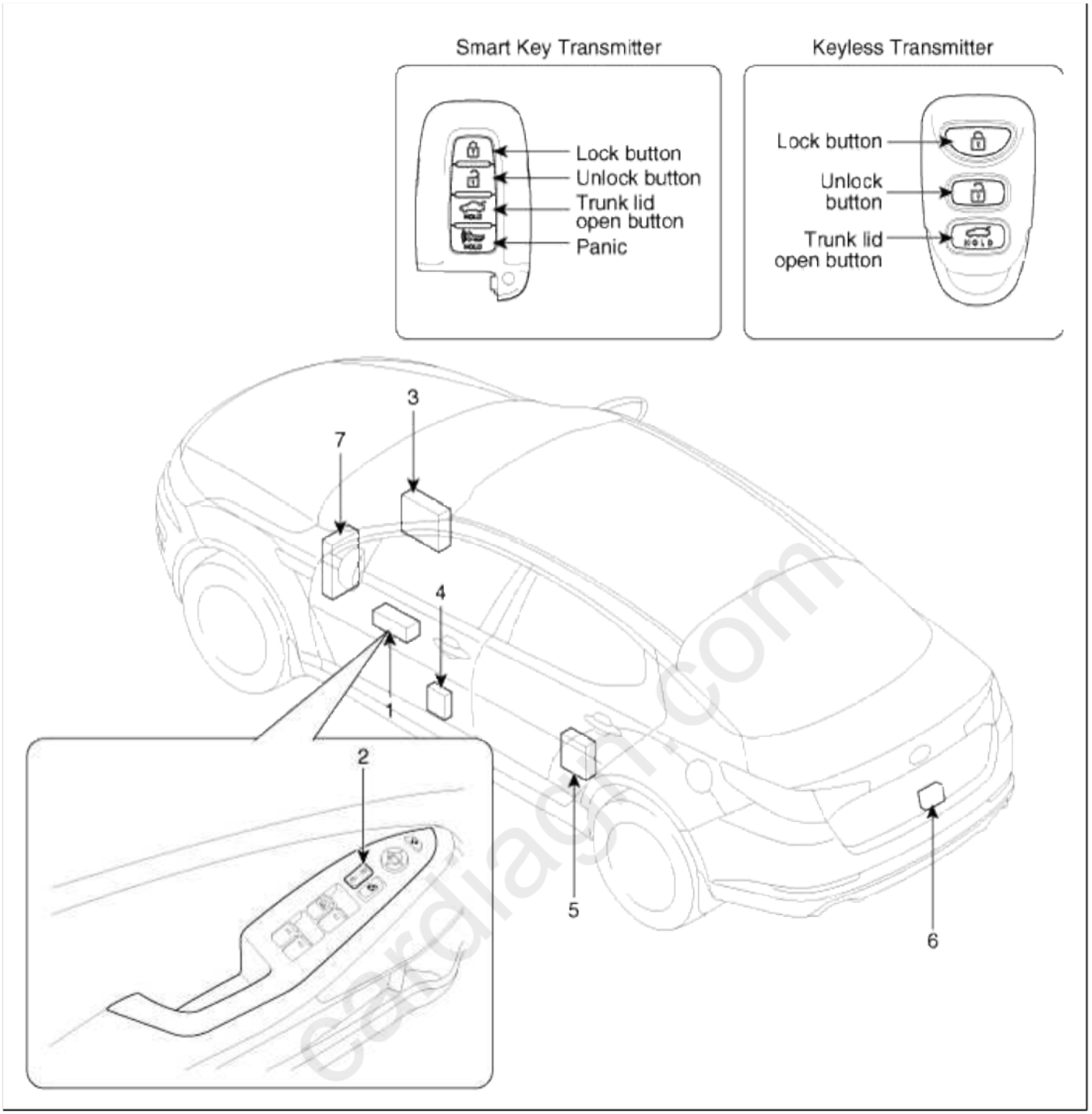

1. Driver power window switch 2. Door lock switch 3. BCM (Body Control Module) 4. Front door lock actuator	5. Rear door lock actuator 6. Trunk lid open actuator 7. SJB (Smart Junction Box) Door lock / Door unlock / Trunk lid open relay

Body Electrical System > Power Door Locks > Power Door Lock Actuators > Repair procedures

Inspection

Front Door Lock Actuator Inspection

1. Remove the front door trim.
   (Refer to the BD group - "Front door")
2. Remove the front door module.

3. Disconnect the 7P connector from the actuator.

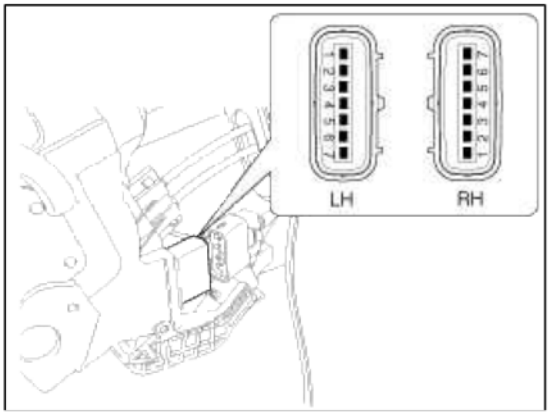

4. Check actuator operation by connecting power and ground according to the table. To prevent damage to the actuator, apply battery voltage only momentarily.

Position \ Terminal		3	4
Front left	Lock	⊕	⊖
	Unlock	⊖	⊕
Position \ Terminal		4	5
Front right	Lock	⊕	⊖
	Unlock	⊖	⊕

Rear Door Lock Actuator Inspection

1. Remove the rear door trim.
   (Refer to the BD group - "Rear door")
2. Remove the rear door module.
3. Disconnect the 7P connector from the actuator.

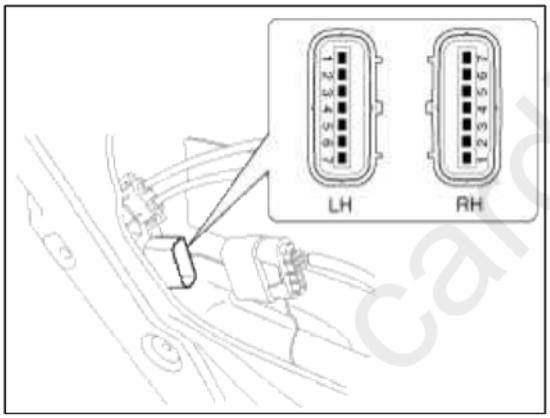

4. Check actuator operation by connecting power and ground according to the table. To prevent damage to the actuator, apply battery voltage only momentarily.

Position \ Terminal		3	4
Rear left	Lock	⊕	⊖
	Unlock	⊖	⊕
Position \ Terminal		4	5
Rear right	Lock	⊕	⊖
	Unlock	⊖	⊕

Trunk Lid Release Actuator Inspection

1. Remove the trunk lid trim panel.
   (Refer to the BD group - "Trunk lid")

cardiagn.com

2. Disconnect the 3P connector from the actuator.

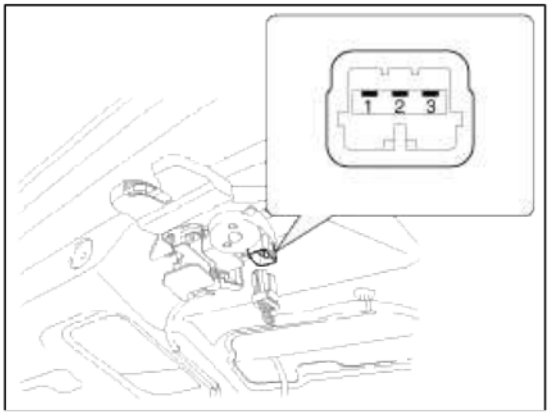

3. Check actuator operation by connecting power and ground according to the table. To prevent damage to the actuator, apply battery voltage only momentarily.

Terminal / Position	1	2
Lock release(Open)	⊖	⊕

Front Door Lock Switch Inspection

1. Remove the front door trim panel.
   (Refer to the BD group - "Front door")
2. Remove the front door module.
3. Disconnect the 7P connector from the actuator.

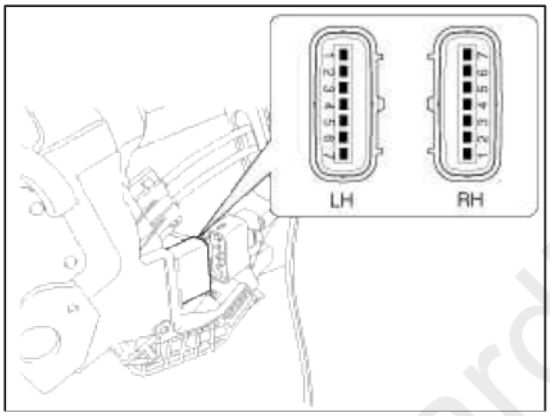

4. Check for continuity between the terminals in each switch position when inserting the key into the door according to the table.

Terminal / Position		7	6	2	1
Fron: Left	Lock	○	—	—	○
	Unlock		○	○	○
Terminal / Position		7	6	2	1
Front Right	Lock	○	—	—	○
	Unlock	○	○	○	

Rear Door Lock Switch Inspection

1. Remove the rear door trim panel.
   (Refer to the BD group - "Rear door")
2. Remove the rear door module.

cardiagn.com

3. Disconnect the 7P connector from the actuator.

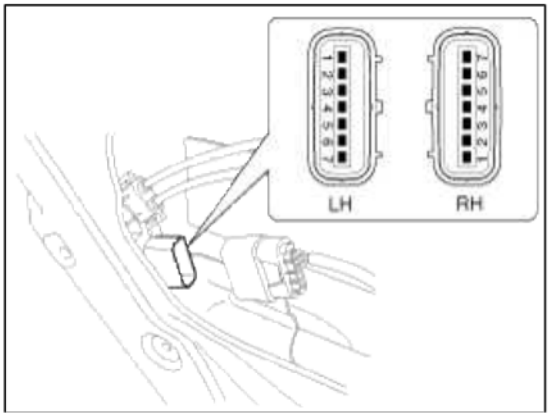

4. Check for continuity between the terminals in each switch position according to the table.

Position \ Terminal		1	2
Rear Left	Unlock	○———	———○
Position \ Terminal		6	7
Rear Right	Unlock	○———	———○

Trunk Lid Open Switch Inspection

1. Remove the trunk lid trim.
   (Refer to the BD group - "Trunk lid")
2. Disconnect the 3P connector from the actuator.

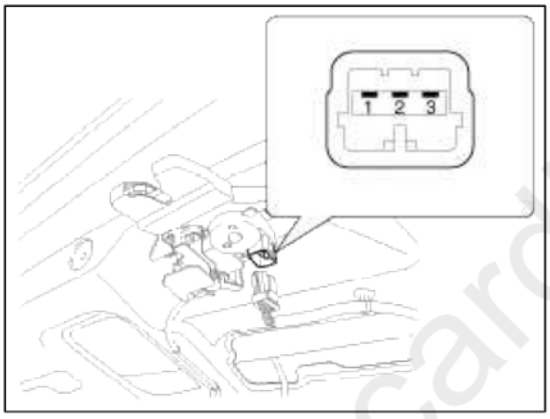

3. Check for continuity between the terminals in each switch position according to the table.

Position \ Terminal	1	3
Lock release(Open)	○———	———○

cardiagn.com

Body Electrical System > Power Door Locks > Power Door Lock Relay > Repair procedures

Inspection

Diagnosis With GDS

1. It will be able to diagnose defects of power door lock with GDS quickly. GDS can operates actuator forcefully, input/output value monitoring and self diagnosis.
2. Select model and "BCM".
3. Select the "SJB" to check.

4. Select "Current data", if you will check current data of power door lock system. It provides input/output status of SJB.

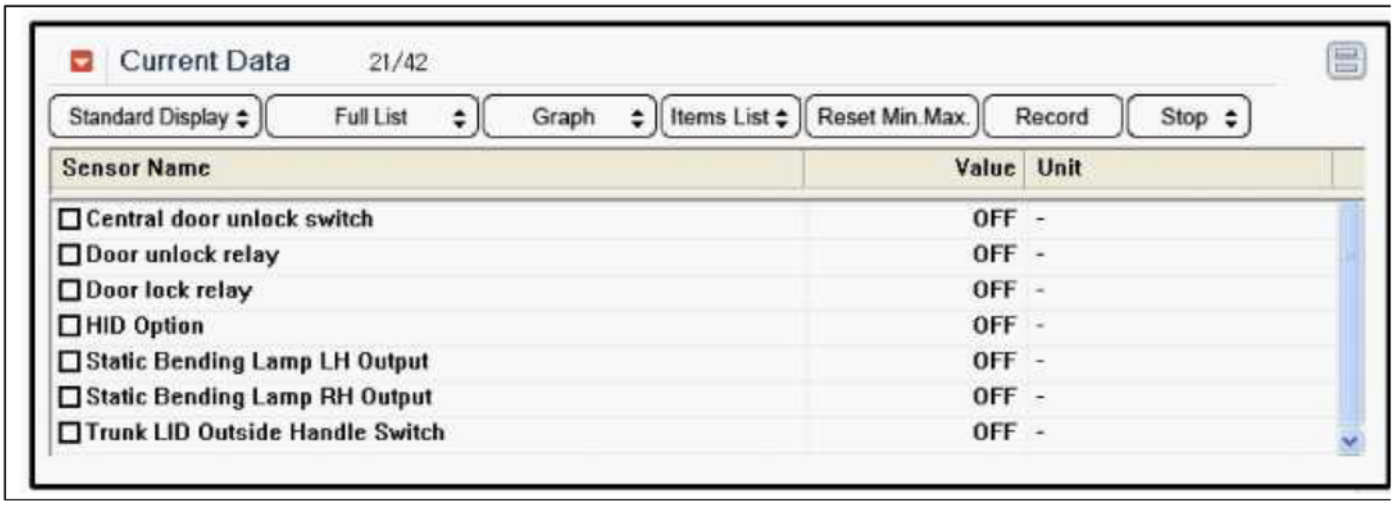

5. If you will check the power door lock operation forcefully, select "Actuation test".

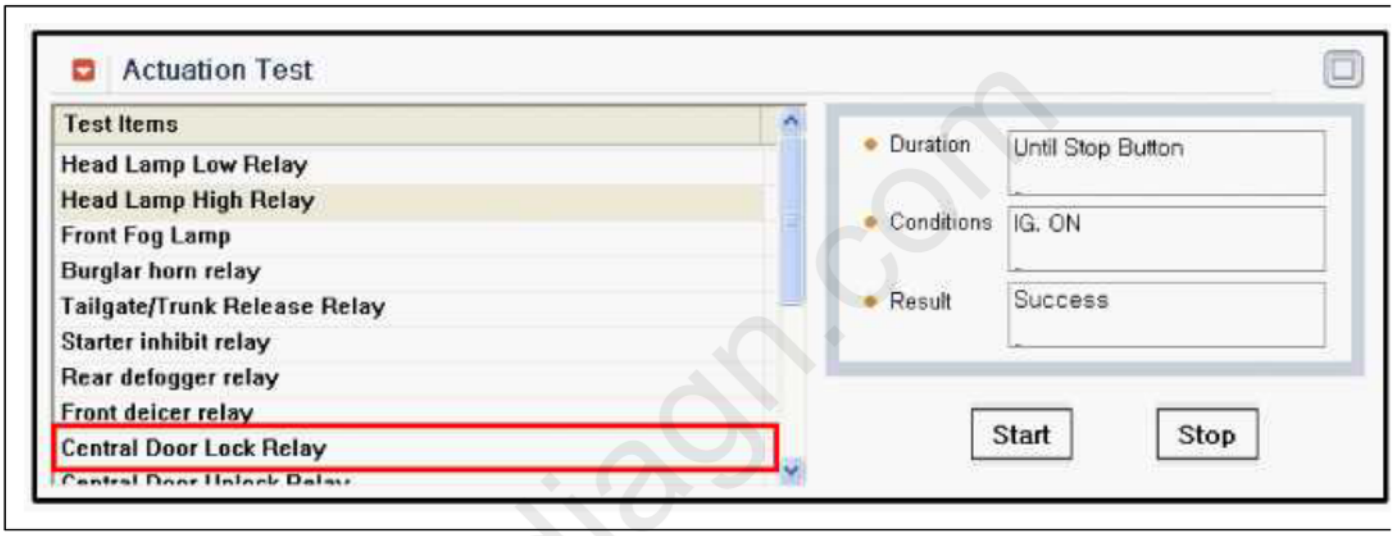

Body Electrical System > Power Door Locks > Power Door Lock Switch > Repair procedures

Inspection

Driver Door Lock Switch Inspection

1. Disconnect the negative (-) battery terminal.
2. Remove the front door trim panel.
   (Refer to the BD group - "Front door")
3. Disconnect the connector from the power window switch module.

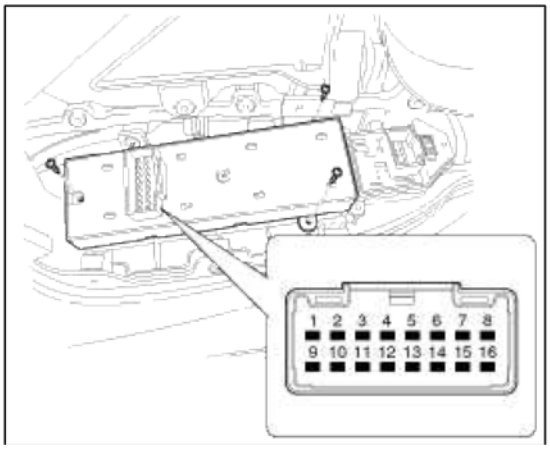

cardiagn.com

4. Check for continuity between the terminals in each switch position according to the table.

Position \ Terminal	13	5	4
Lock	○		○
Unlock		○	○

Removal

1. Disconnect the negative(-) battery terminal.
2. Remove the front door trim panel.
   (Refer to the BD group - "Front door")
3. Remove the power window switch module (A) from the door trim after loosening the mounting screws (3EA).

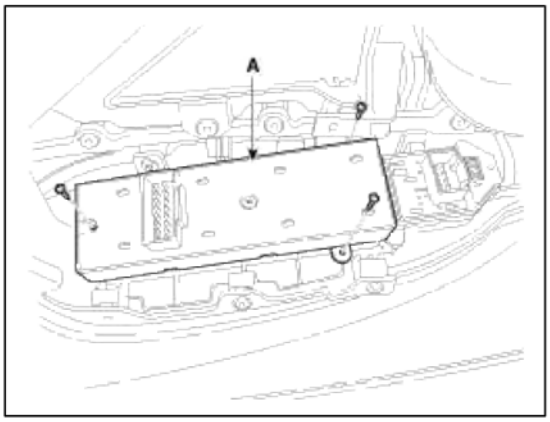

NOTE

- Be careful not to damage door trim panel and door module mounting hooks.

Installation

1. Install the power window switch module.
2. Install the door trim panel after reconnecting the relevant connectors

NOTE

- Make sure that the power window switch module connectors are plugged properly.
- Check that the power window switch and door lock switch operate normally.

cardiagn.com

Body Electrical System > Power Door Mirrors > Components and Components Location

Component Location

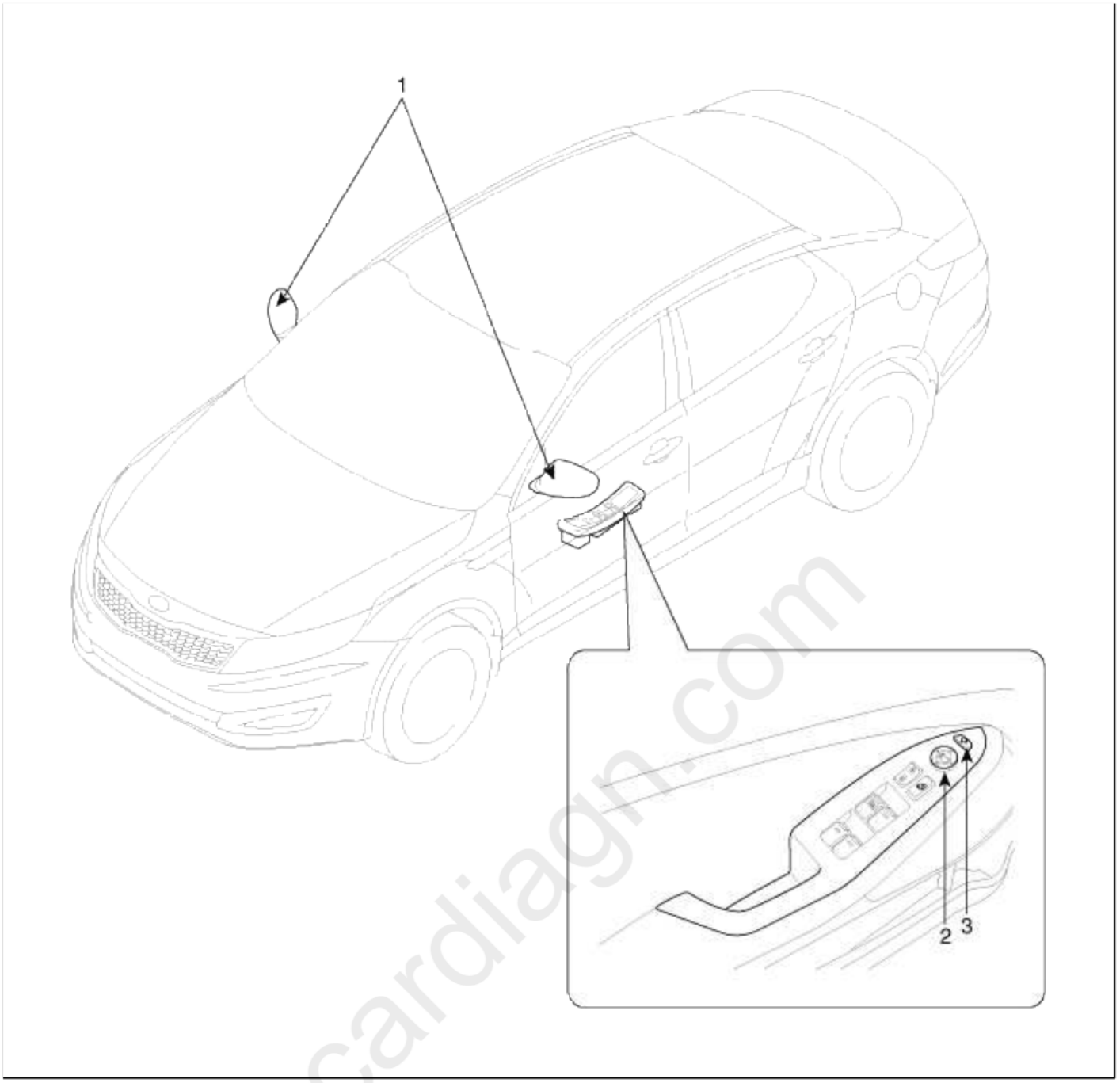

1. Power door mirror 2. Power door mirror switch	3. Power folding mirror switch

Body Electrical System > Power Door Mirrors > Power Out Side Mirror Switch > Components and Components Location

Component (1)

cardiagn.com

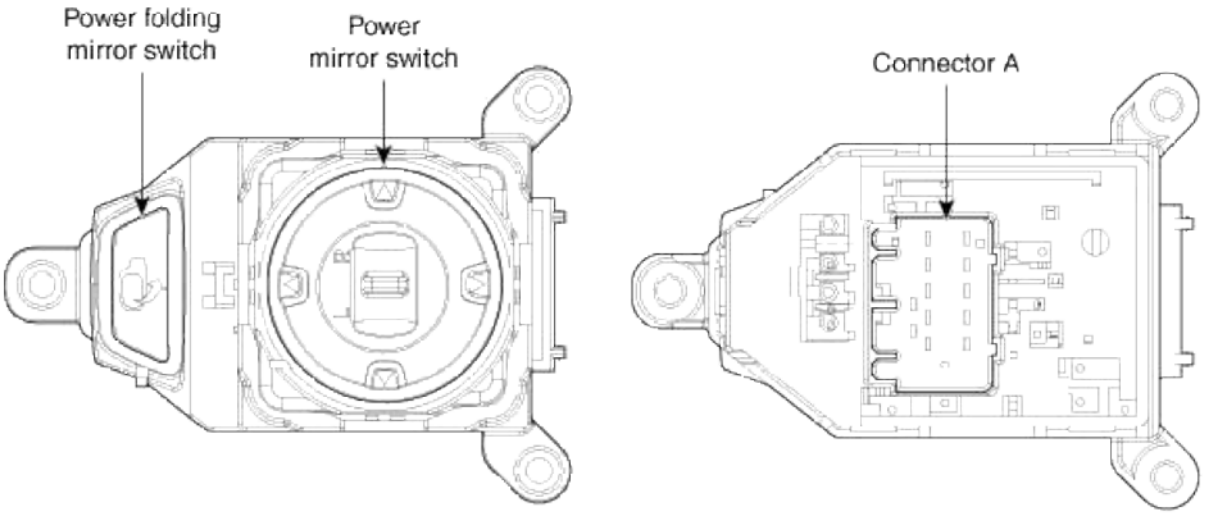

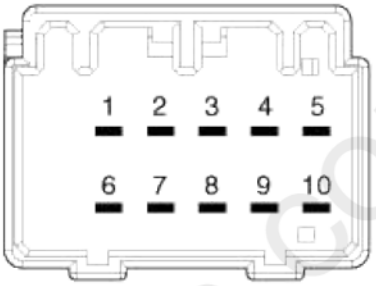

No.	Connector A	
1	Mirror unfolding	UF
2	Mirror folding	F
3	Battery + (Mirror)	B +
4	Ground	E
5	ACC	ACC
6	Driver mirror motor (Vertical)	VL
7	Driver mirror motor (Horizontal)	HL
8	C	C
9	Passenger mirror motor (Horizontal)	HR
10	Passenger mirror motor (Vertical)	VR

cardiagn.com

Component (2)

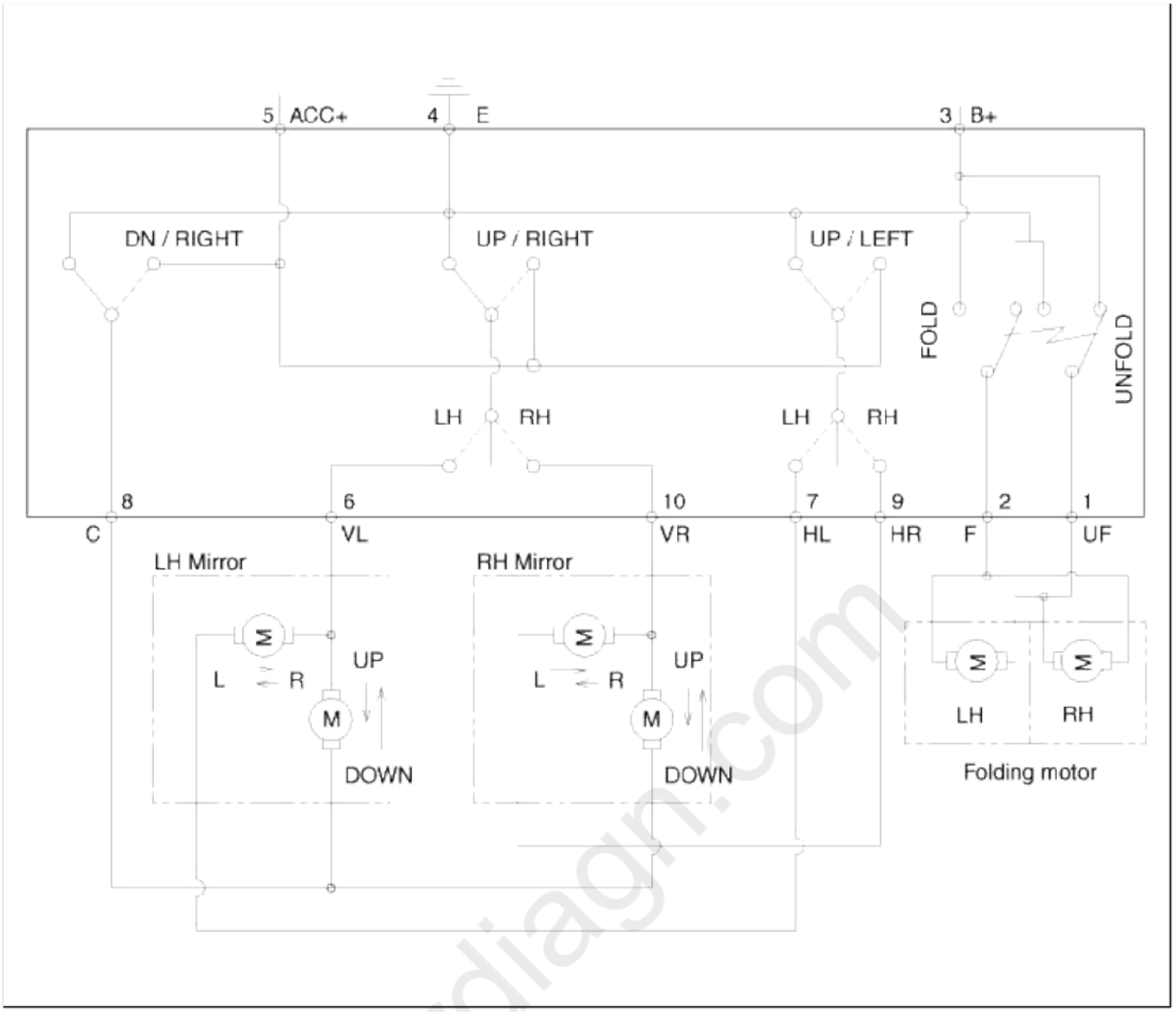

cardiagn.com

Body Electrical System > Power Door Mirrors > Power Out Side Mirror Switch > Repair procedures

Inspection

1. Disconnect the negative (-) battery terminal.
2. Remove the front door trim panel.
   (Refer to the BD group - "Front door")
3. Disconnect the connector and remove the door mirror switch (A) after removing the screws.

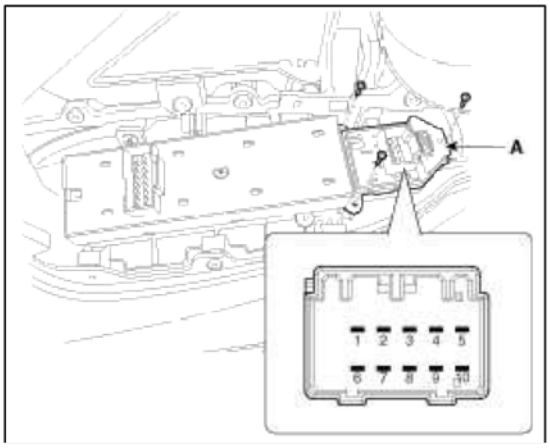

4. Check for continuity between the terminals in each switch position according to the table.

[Power Mirror Switch]

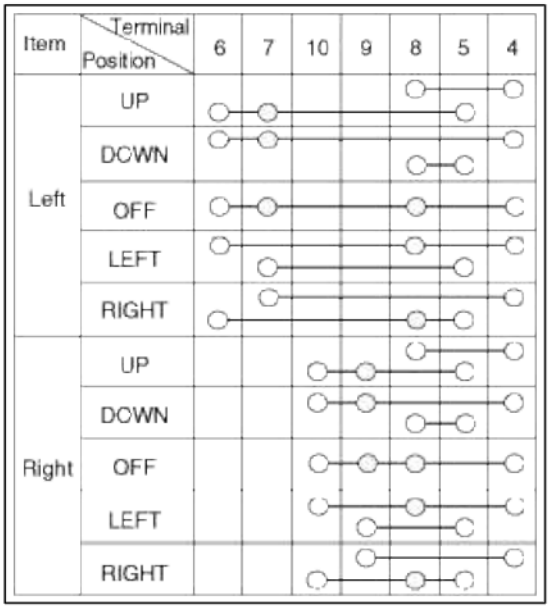

[Power folding Mirror Switch]

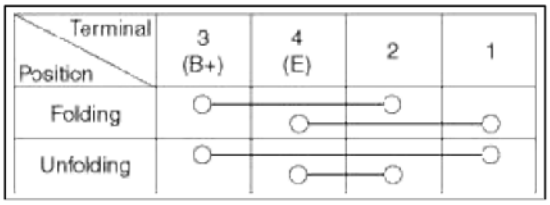

Body Electrical System > Power Door Mirrors > Power Door Mirror Actuator > Repair procedures

Inspection

1. Remove the front door quadrant delta cover.
   (Refer to the BD group - "Front door")
2. Disconnect the power door mirror connector from the harness.

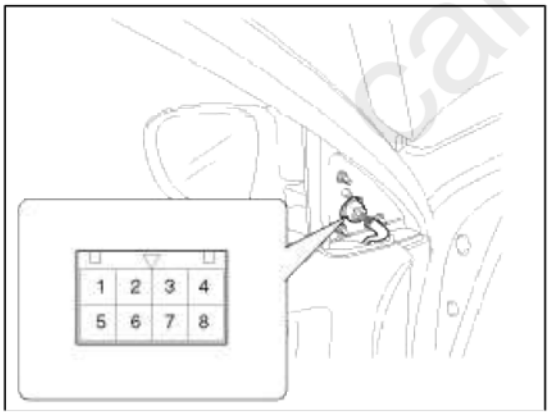

cardiagn.com

3. Apply battery voltage to each terminal as shown in the table and verify that the mirror operates properly.

	Direction	8	7	6	B+	GND
LH	Up	○	○		○	○
	Down	○	○		○	○
	OFF	○	○		○	
	Right	○		○	○	○
	Left		○	○	○	○
RH	Up	○	○		○	○
	Down	○	○		○	○
	OFF	○	○		○	
	Right	○		○	○	○
	Left		○	○	○	○

Mirror Heater Inspection

Terminal / Position	2	1
Heater	⊖	⊕

Side Repeater Lamp

Terminal / Position	5	2
Lamp	⊕	⊖

Mirror folding Inspection

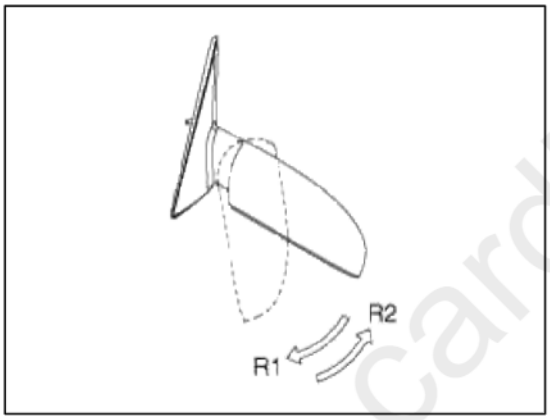

Terminal / Position	B (+)	GND (-)	3	4
Folding (R1)	○	○	○	○
Unfolding (R2)	○	○	○	○

cardiagn.com

Body Electrical System > Power Windows > Components and Components Location

Component Location

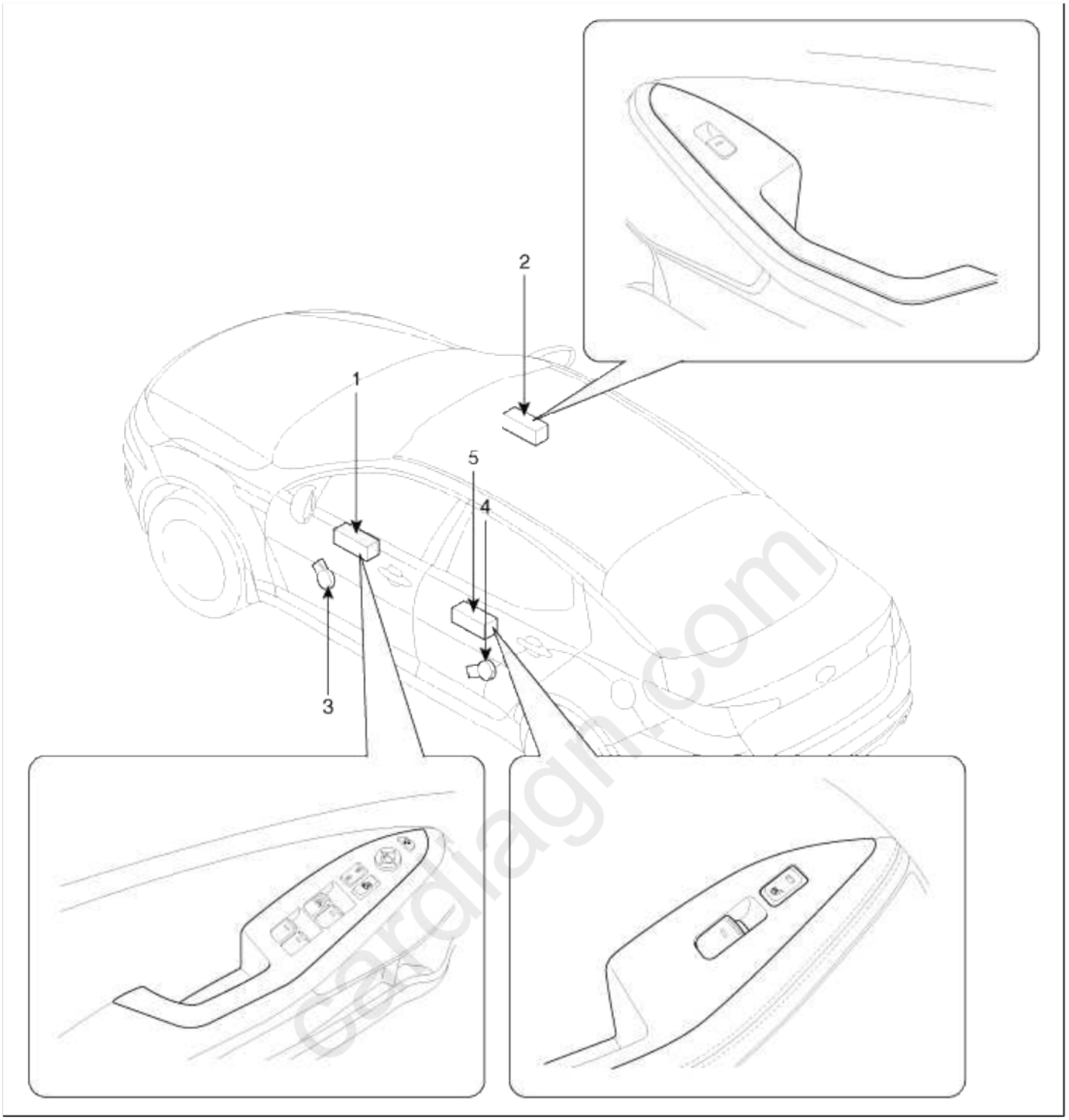

1. Driver power window main switch 2. Passenger power window switch 3. Front window motor	4. Rear window motor 5. Rear window switch

Body Electrical System > Power Windows > Description and Operation

Operation

Function Of Safety Power Window

When all door (Front, Rear) power window auto-up switch is operated, safety function is activated.

1. Safety function condition
   When detect the force of 100N during the window rising, window is reversed.
2. Length of window reversing (except holding the auto-up switch)
   A. When detect the jamming during the 4mm ~ 250mm from top of the door.
      → Window is reversed until 300mm from top of the door.

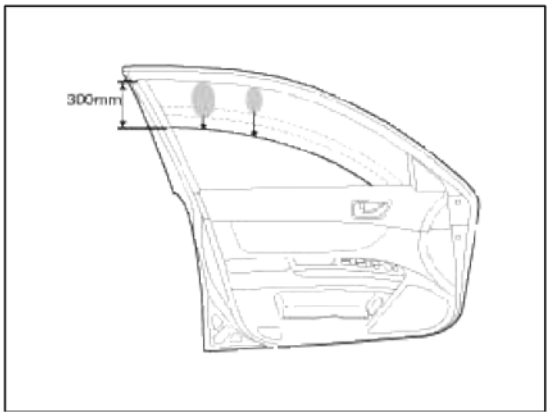

   B. When detect the jamming over the 250mm from top of the door.
      → Window is reversed until 50mm from jamming position.
      → Window is reversed 50mm or bottom position in case of 50mm reversing distance.

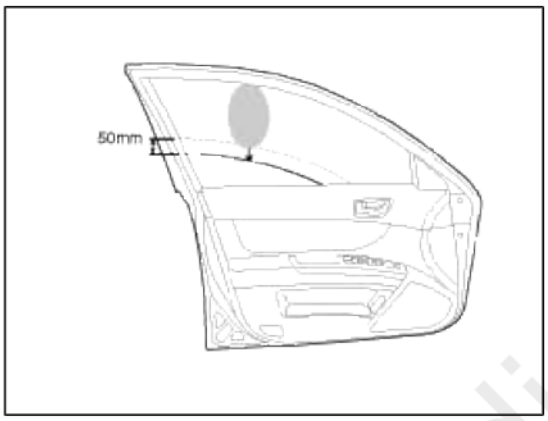

   C. When detect the jamming over 300mm from top of the door.
      → Window stops at reverse point.
3. Length of window reversing (holding the auto-up switch)
   A. When detect the jamming during holding the auto-up switch.
      → Window is reversed until 25mm from jamming position.
   B. Auto-up function is not available during the 5 seconds from above condition.
      → When holding the auto-up switch, window is operated as a manual-up function. (Safety function is not activated.)
   C. When detect the jamming during holding the auto-up switch again.
      → Window is reversed until 25mm from jamming position.

cardiagn.com

D. When holding the auto-up switch after 5 seconds from above condition.
→ Window is reverse until 25mm from jamming position.

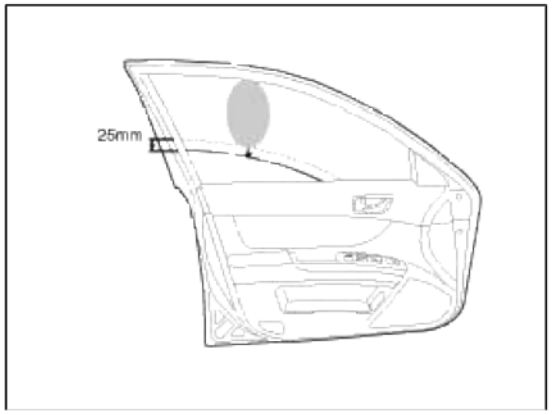

4. Safety function is not available area
Safety function is not available during the 4mm from top of the door.

Normalization (Teaching)

After power on reset or error detection, the motor has to be nomalized at the fully closed position.

How to be nomalized:

- Move the window upwards into the fully closed position. As the window reaches the fully closed position, hold the power window switch in auto for T≥2 seconds.
  If the block is reconized, the system state turns to normalized.

Recall And Storing The Normalization (teaching) Information

ECU records the normalization information into the specified location in Flash ROM. (as long as Flash ROM page is valid)

- Stroing conditions : Entering to sleep mode after valid switch input. Entering to low voltage(7.5V) after valid switch input.
- Recall conditions : Engine=ON or Power ON reset

Denormalization (Memory reset)

Under conditions below, ECU turns to denormalized status. After demormalization, auto up and safety function shall not be operated. In order to make these function active again, ECU should go through the mormalization process.

- Denormalization conditions :

1. Continuous 15 times reverses
2. Power off during motor operation
3. Driver side door opened and window glass is at the bottom (hard stop position) with IGN on, IGN off → within 2 sec, IGN on → Press Manual Down switch 3 times within 5 sec → De-normalization

Door and Glass status	IGN status	Input time	IGN status	Switch input status			Switch input times	Normalization status
				Re-input time	IGN status	Switch input		
Driver side door opened, Window glass is bottom with IGN on (Hard stop)	IGN Off	T≤2 sec	IGN On	T≤5 sec	IGN On	Press and release Manual down switch	3 times	De-normalization

Window Position Control

To detect the window position and direction of motor rotation, hall sensors are employed. ECU recognizes the fully closed position of the window and sets this relative window position value as "0". When the window goes downwards, based on the information from the hall sensor, the relative position value increments. On the contrary, when the window goes upwards, it decrements.

cardiagn.com

Thermal Protection

Thermal protection by software module is implemented to prevent from destruction of motor during overload condition. Motor temperature is estimated by integrating squared motor current as an estimate for heating power integral. When estimated motor temperature exceeds EEPROM programmable upper limit, motor is deactivated for fixed delay time (default value = 30 sec.)

Thermal shutdown during a window operation will not interrupt the operation due to safety reasons.

Operation Time Limiter

Maximal operation time of power window motor is limited to 15 sec (EEPROM programmable).

Body Electrical System > Power Windows > Power Window Motor > Schematic Diagrams

Circuit Diagram

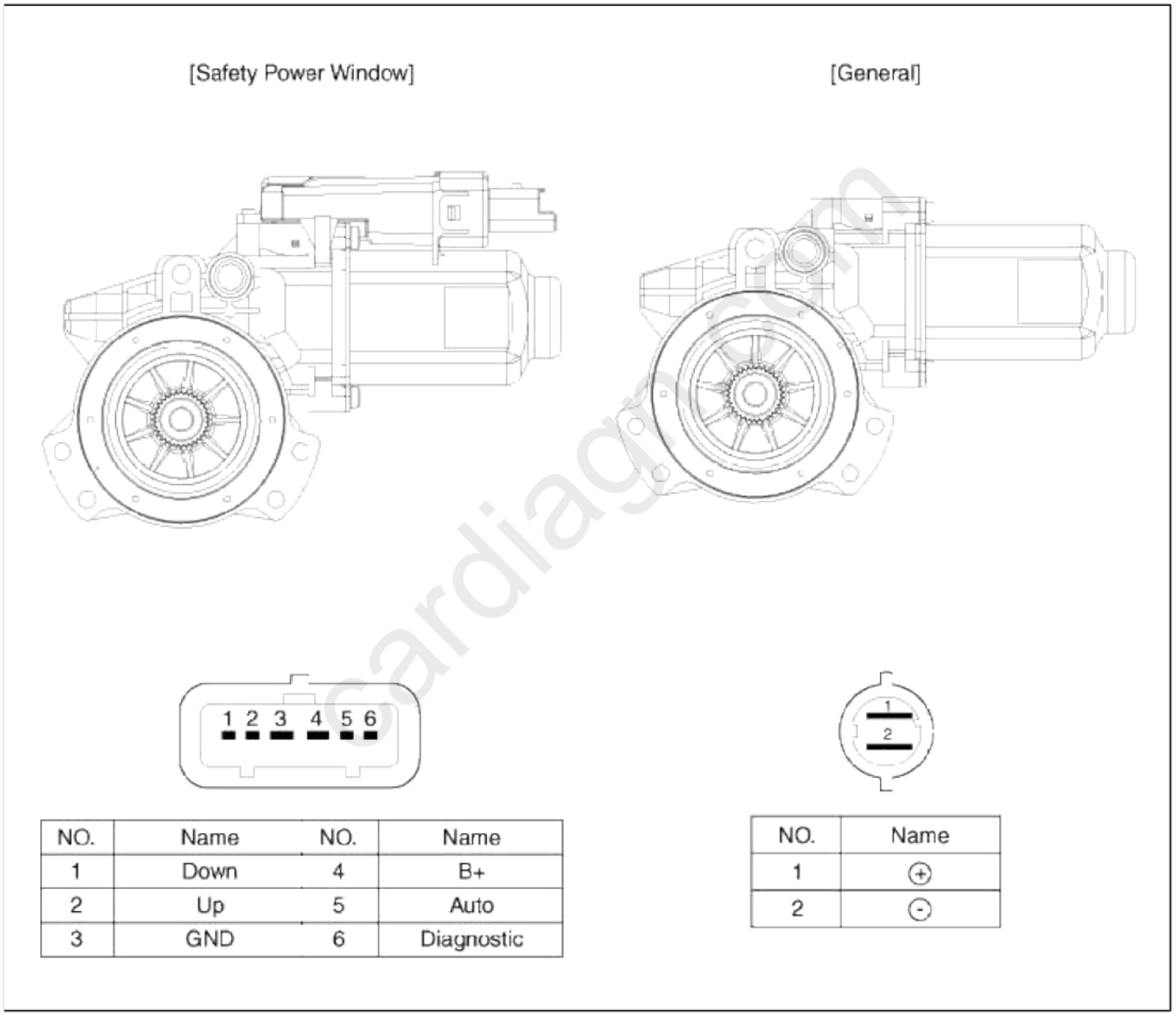

NO.	Name	NO.	Name
1	Down	4	B+
2	Up	5	Auto
3	GND	6	Diagnostic

NO.	Name
1	⊕
2	⊖

Body Electrical System > Power Windows > Power Window Motor > Repair procedures

Inspection

Front Power Window Motor Inspection

1. Remove the front door trim panel.
   (Refer to the BD group - "Front door")

2. Disconnect the connector from the motor.

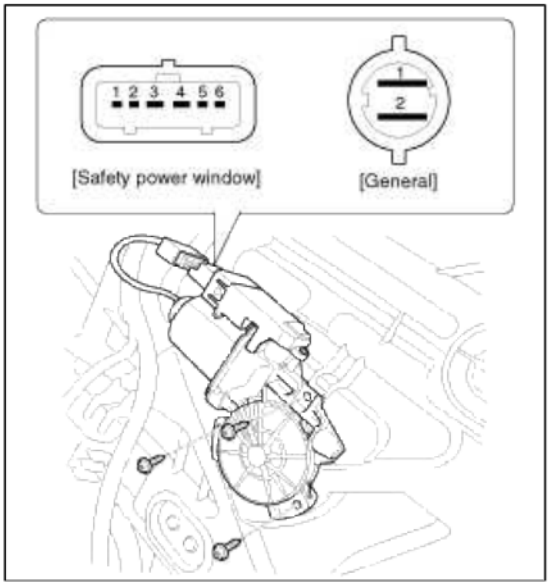

3. Connect the motor terminals No.2 and No.3 directly to battery voltage (12V) and check that the motor operates smoothly.
   If the operation is abnormal, replace the motor.

   [Safety Power Window]

Position \ Terminal		2	3	1
LH	UP	○	○	
	DOWN		○	○
RH	DOWN	○	○	
	UP		○	○

4. Connect the motor terminals directly to battery voltage (12V) and check that the motor operates smoothly. Next, reverse the polarity and check that the motor operates smoothly in the reverse direction. If the operation is abnormal, replace the motor.

Position \ Terminal			1	2
LH	UP	Clockwise	⊕	⊖
	DOWN	Counter-clockwise	⊖	⊕
RH	UP	Clockwise	⊕	⊖
	DOWN	Counter-clockwise	⊖	⊕

Rear Power Window Motor Inspection

1. Remove the rear door trim panel.
   (Refer to the BD group - "Rear door")

cardiagn.com

2. Disconnect the 2P connector from the motor.

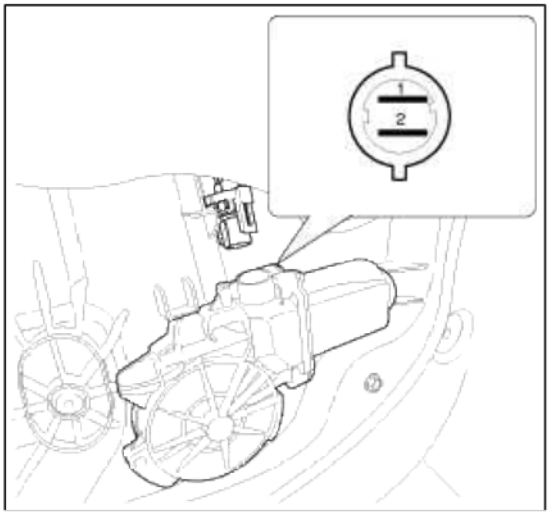

3. Connect the motor terminals directly to battery voltage (12V) and check that the motor operates smoothly. Next, reverse the polarity and check that the motor operates smoothly in the reverse direction. If the operation is abnormal, replace the motor.

Position		Terminal	1	2
LH	UP	Clockwise	⊖	⊕
	DOWN	Counter-clockwise	⊕	⊖
RH	UP	Clockwise	⊖	⊕
	DOWN	Counter-clockwise	⊕	⊖

Body Electrical System > Power Windows > Power Window Switch > Schematic Diagrams

Circuit Diagram

Driver Power Window Switch (1)

cardiagn.com

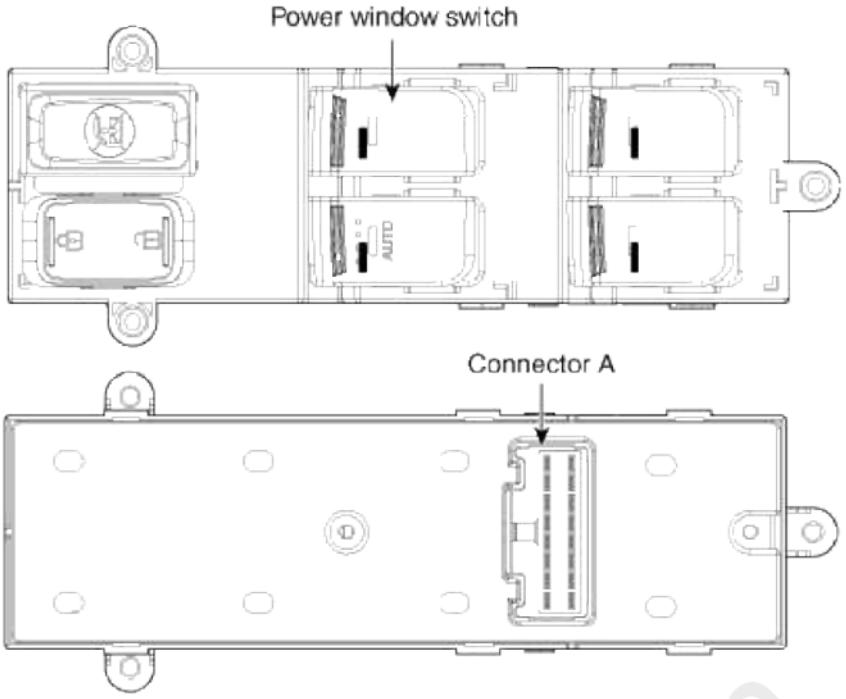

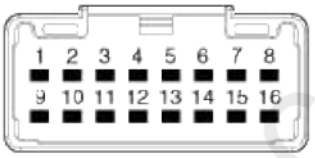

No.	Description
1	Passenger window up switch
2	Passenger window down switch
3	Tail lamp
4	Ground
5	Door unlock
6	Auto switch
7	Driver window up switch
8	Driver window down switch
9	B+ (RH)
10	Rear right window up switch
11	Rear right window down switch
12	Switch GND
13	Door lock
14	Rear left window up switch
15	Rear left window down switch
16	B+ (LH)

cardiagn.com

Driver Power Window Switch (2)

[Auto Down]

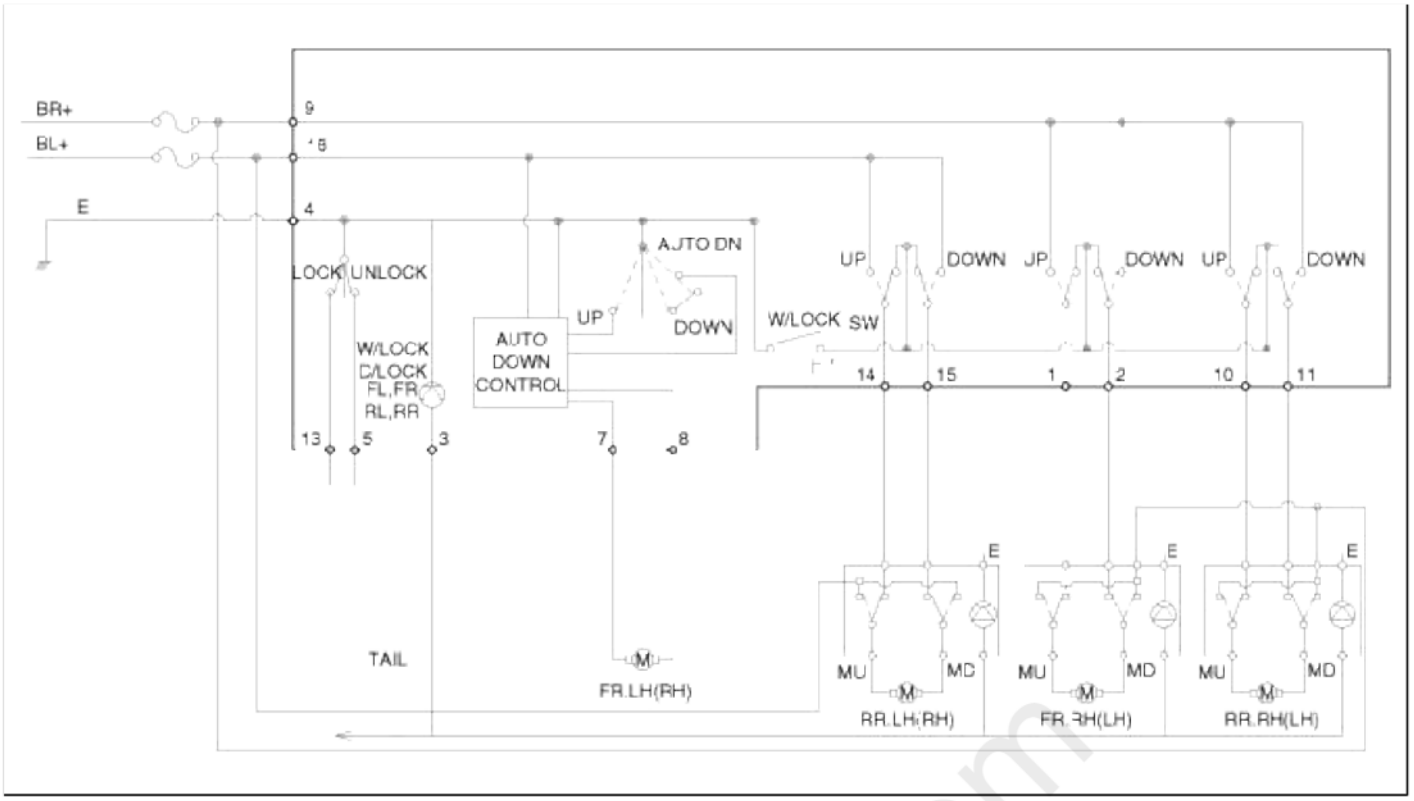

[Safety Up/Down]

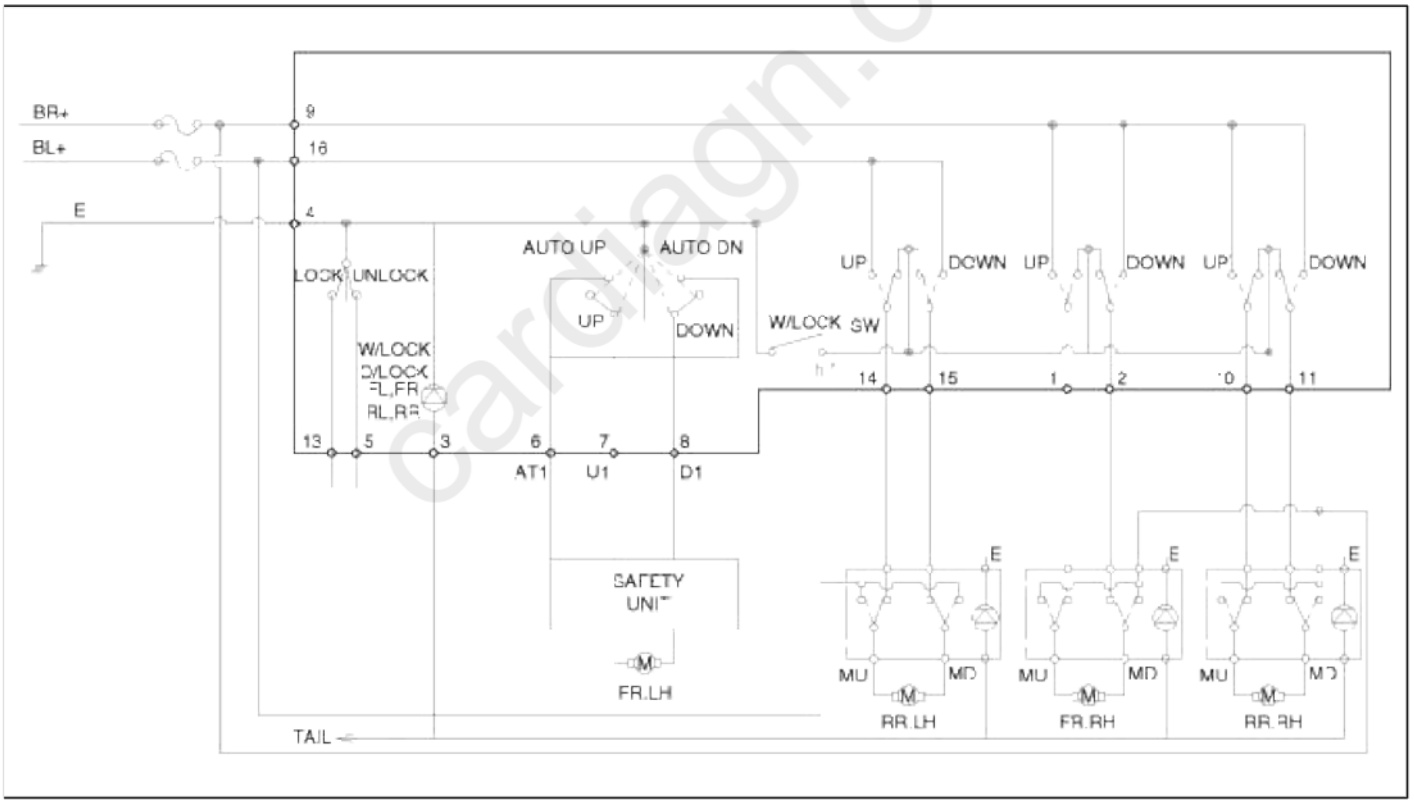

Passenger And Rear Power Window Switch

cardiagn.com

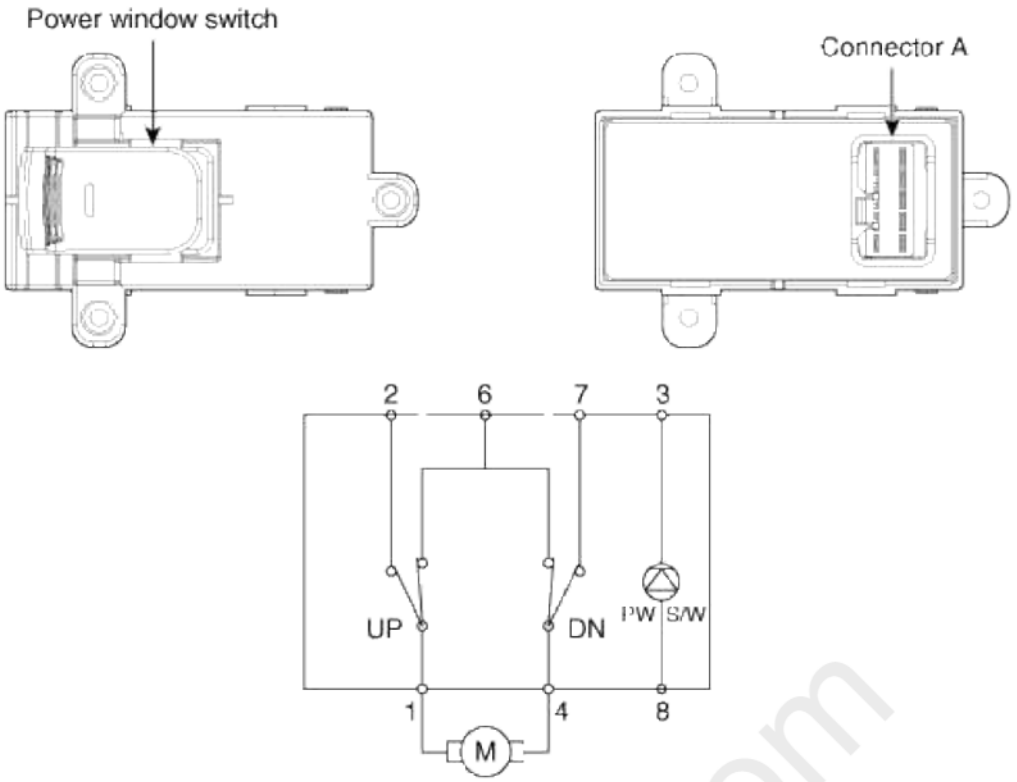

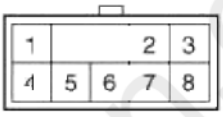

No.	Description
1	Power window motor up
2	Power window up switch
3	Ground
4	Power window motor down
5	-
6	Battery (+)
7	Power window down switch
8	Tail lamp

cardiagn.com

Rear Power Window + Seat Heater Switch

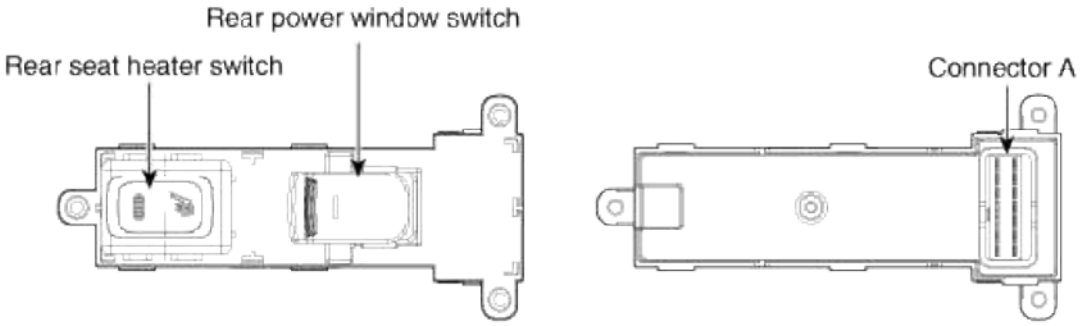

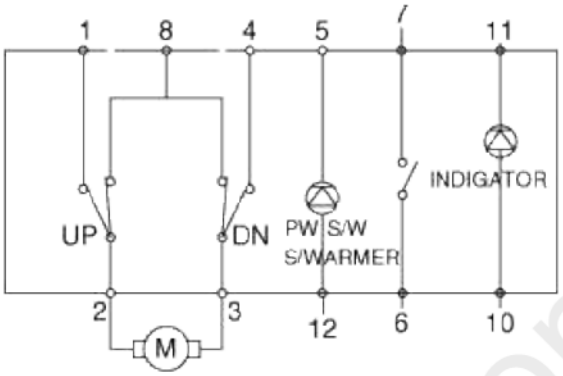

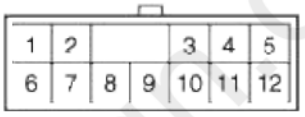

No.	Description
1	Power window up switch
2	Power window motor up
3	Power window motor down
4	Power window down switch
5	Ground
6	Signal input
7	Signal output
8	Battery (+)
9	-
10	Seat heater IND (+)
11	Seat heater IND (-)
12	Tail lamp

cardiagn.com

Body Electrical System > Power Windows > Power Window Switch > Repair procedures

Inspection

Power Window Main Switch Inspection

1. Disconnect the negative (-) battery terminal.
2. Remove the front door trim panel.
   (Refer to the BD group - "Front door")

3. Disconnect the connector from the switch.

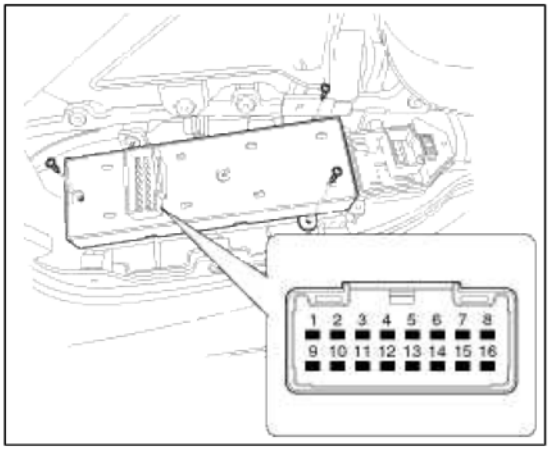

4. Check for continuity between the terminals in each switch position according to the table. If the continuity condition is not normal, replace the switch.

Terminal / Position	13	5	4
Lock	○		○
Unlock		○	○

[Auto Down]

Terminal / Position	Front left				Front right			
	4	7	8	6	9	1	2	4
Up	○	○			○	○	○	○
OFF						○	○	○
Down	○		○		○		○	○
Auto down	○		○	○				
Terminal / Position	**Rear left**				**Rear right**			
	16	14	15	4	9	10	11	4
Up	○	○	○	○	○	○	○	○
OFF		○	○	○		○	○	○
Down	○		○	○	○		○	○

[Safety Up/Down]

Terminal / Position	Front left				Front right			
	4	7	8	6	9	1	2	4
Up	○	○			○	○	○	○
Auto up	○	○		○				
OFF						○	○	○
Down	○		○		○		○	○
Auto down	○		○	○				
Terminal / Position	**Rear left**				**Rear right**			
	16	14	15	4	9	10	11	4
Up	○	○	○	○	○	○	○	○
OFF		○	○	○		○	○	○
Down	○		○	○	○		○	○

Passenger/Rear Power Window Switch Inspection

1. Disconnect the negative (-) battery terminal.
2. Remove the front door trim panel.
   (Refer to the BD group - "Front door")

cardiagn.com

3. Disconnect the connector from the switch.

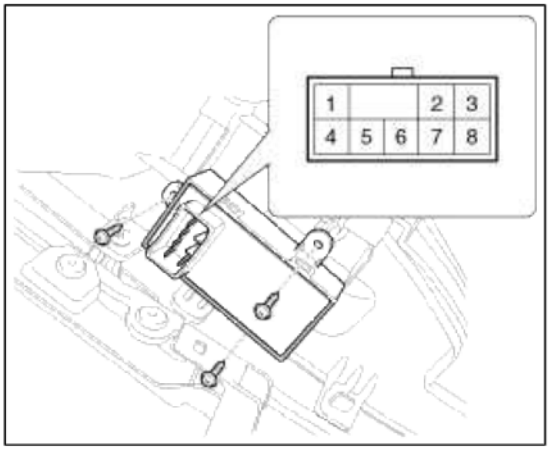

4. Check for continuity between the terminals in each switch position according to the table. If the continuity condition is not normal, replace the switch.

Terminal / Position	6	2	7	4	1
UP	○		○—○		○
OFF		○	○—○		○
DOWN	○	○	○—○		○

Rear Power Window + Seat Heater Switch Inspection

1. Disconnect the negative (-) battery terminal.
2. Remove the rear door trim panel.
   (Refer to the BD group - "Rear door")
3. Disconnect the 8P connector from the switch.

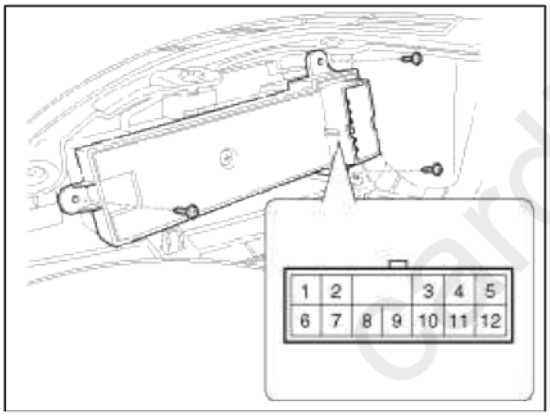

4. Check for continuity between the terminals in each switch position according to the table. If the continuity condition is not normal, replace the switch.

Terminal / Position	8	1	4	3	2
UP	○		○—○		○
OFF		○	○—○		○
DOWN	○	○	○—○		○

Body Electrical System > Power Windows > Power Window Relay > Repair procedures

Inspection

Diagnosis With GDS

1. It will be able to diagnose defects of power window with GDS quickly. GDS can operates actuator forcefully, input/output value monitoring and self diagnosis.

cardiagn.com

2. Select model and "BCM".
3. Select the "SJB" to check.
4. Select "Current data", if you will check current data of power window system. It provides input/output status of SJB.

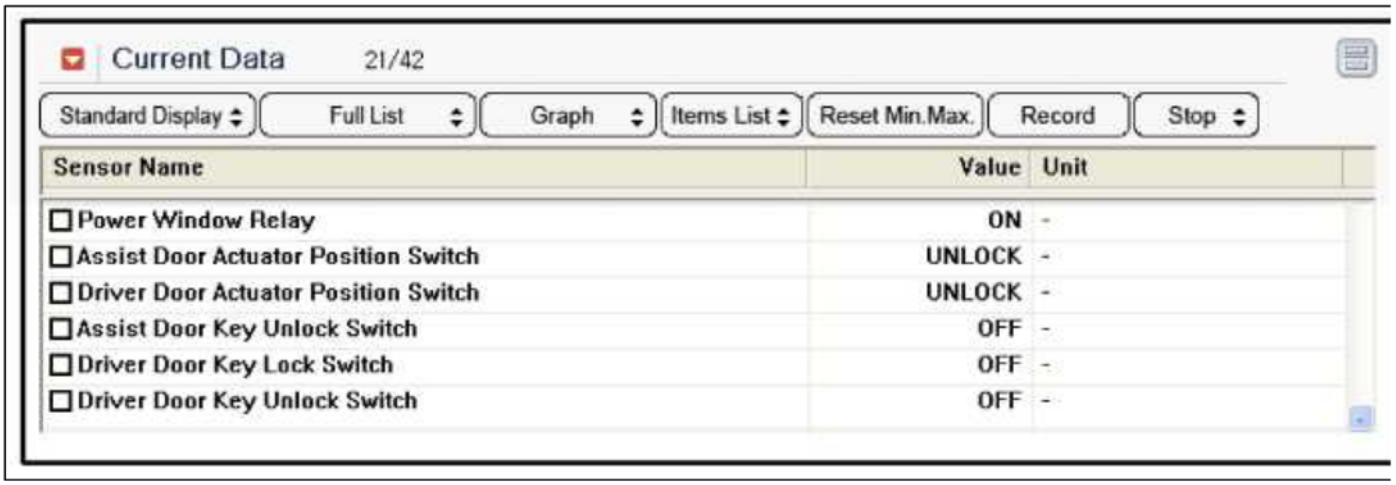

5. If you will check the power door lock operation forcefully, select "Actuation test".

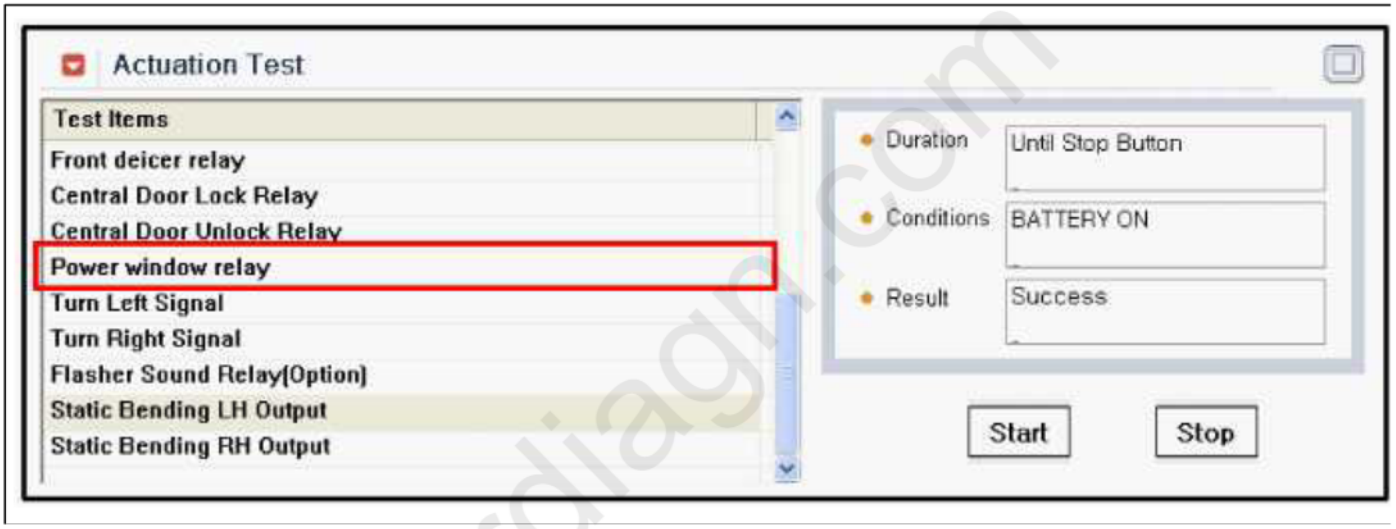

cardiagn.com

Body Electrical System > Windshield Deicer > Components and Components Location

Component Location

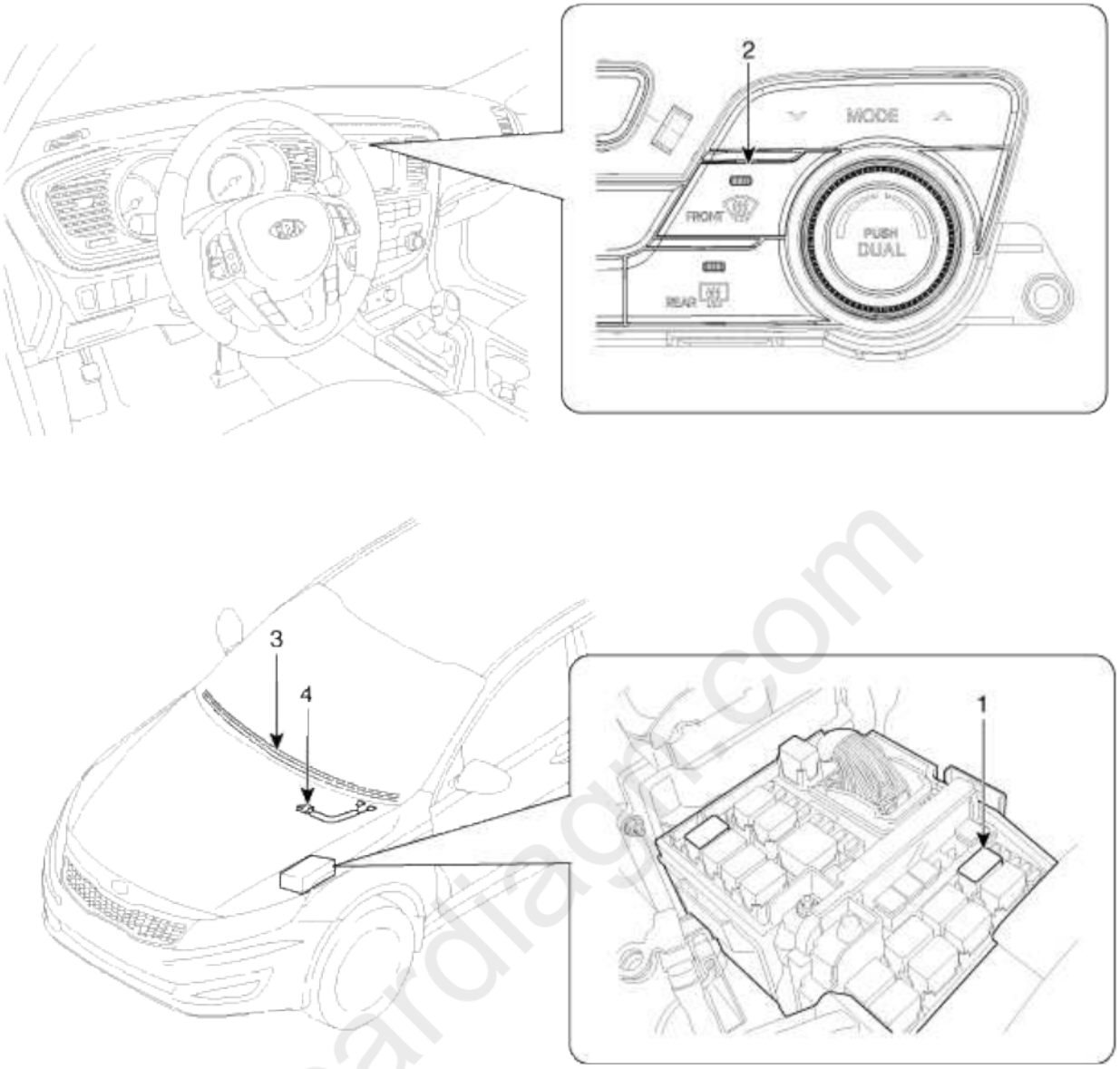

1. Windshield deicer relay (Built-in engine room relay box) 2. Windshield deicer switch	3. Windshield deicer 4. Deicer connector

Body Electrical System > Windshield Deicer > Description and Operation

Description

Windshield deicer system prevent windshield wiper from freezing in the winter season. It consists of deicer in the lower part of windshield, switch and relay. Body control module receives an input signal from the deicer switch, then controls relay. Operating condition is the same that of rear window defogger system.
Since the generator "L" is switched ON, if the deicer switch is ON, then deicer output is ON for 20 minutes.

Body Electrical System > Windshield Deicer > Windshield Deicer > Repair procedures

Inspection

1. Remove the cowl top cover. (Refer to the wiper)
2. Disconnect the windshield deicer connector (A) from the wiper motor linkage.

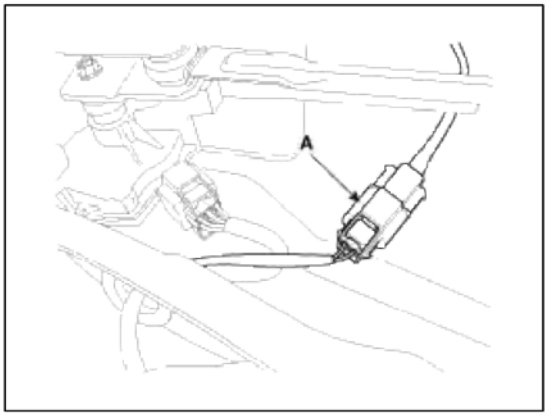

3. Check for continuity between the terminals of deicer lines.

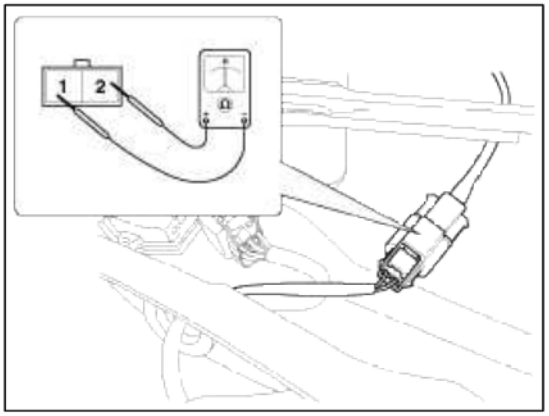

4. Turn the ignition switch ON and the windshield deicer switch ON, then measure the voltage between the terminals of harness side deicer connector.

OK : approx. Battery voltage

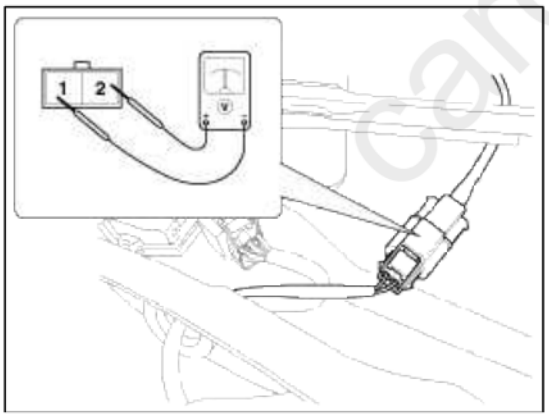

cardiagn.com

Body Electrical System > Windshield Deicer > Windshield Deicer Switch > Repair procedures

Inspection

1. The windshield deicer switch inputs can be checked using the GDS.
2. To check the input value of windshield deicer switch, select option "Body Control Module".

3. Select option "Current Data of smart junction box".

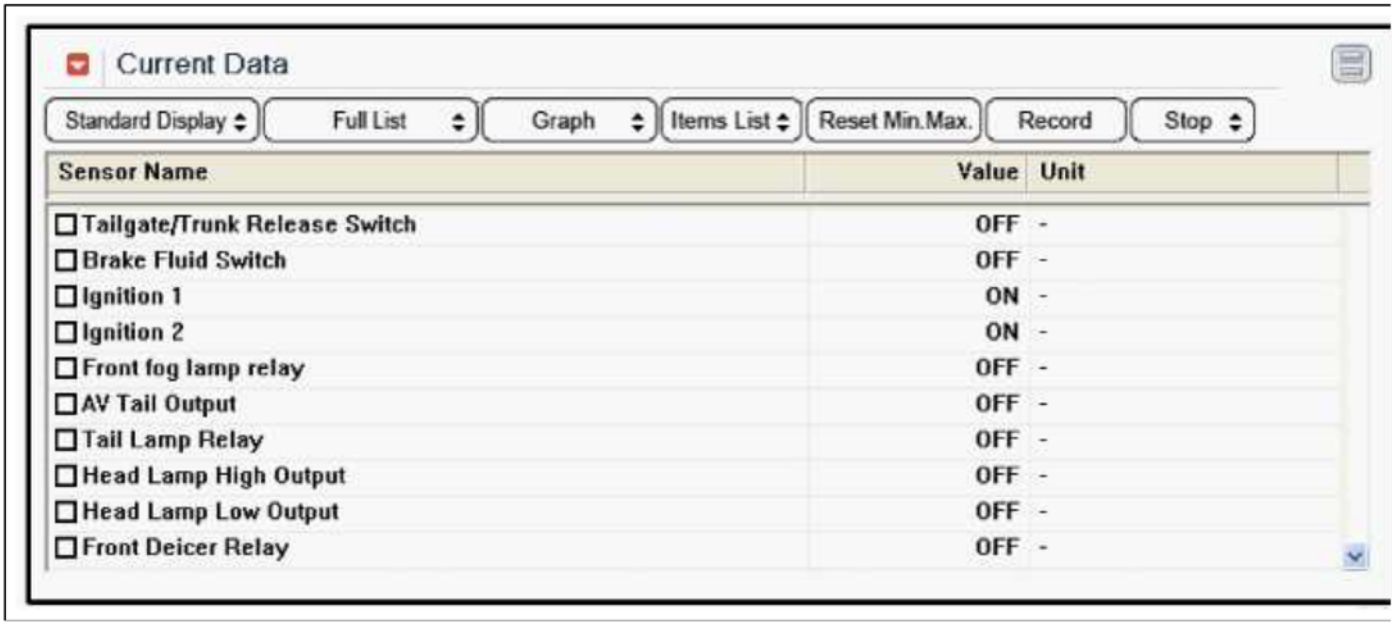

4. To check the input value of windshield deicer switch in force mode, select option "Actuation Test of smart junction box".



Removal

1. Disconnect the negative (-) battery terminal.
2. Remove the lower (A) after loosening the mounting screws.
   (Refer to the BD group - "Crash pad")

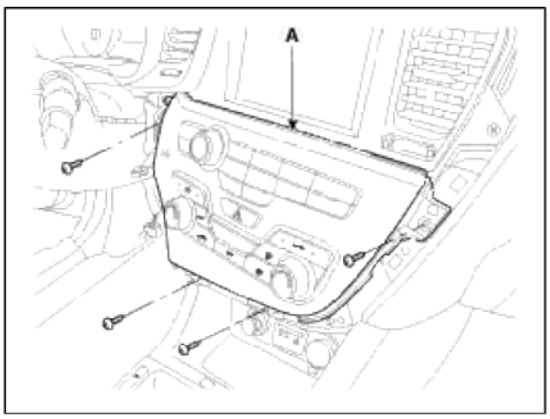

3. Remove the heater control unit contained the windshield deicer switch from the center fascia lower panel.

Installation

cardiagn.com

1. Install the heater control unit.
2. Install the center fascia lower panel.
3. Install the crash pad garnish.

Body Electrical System > Rear Glass Defogger > Components and Components Location

Component Location

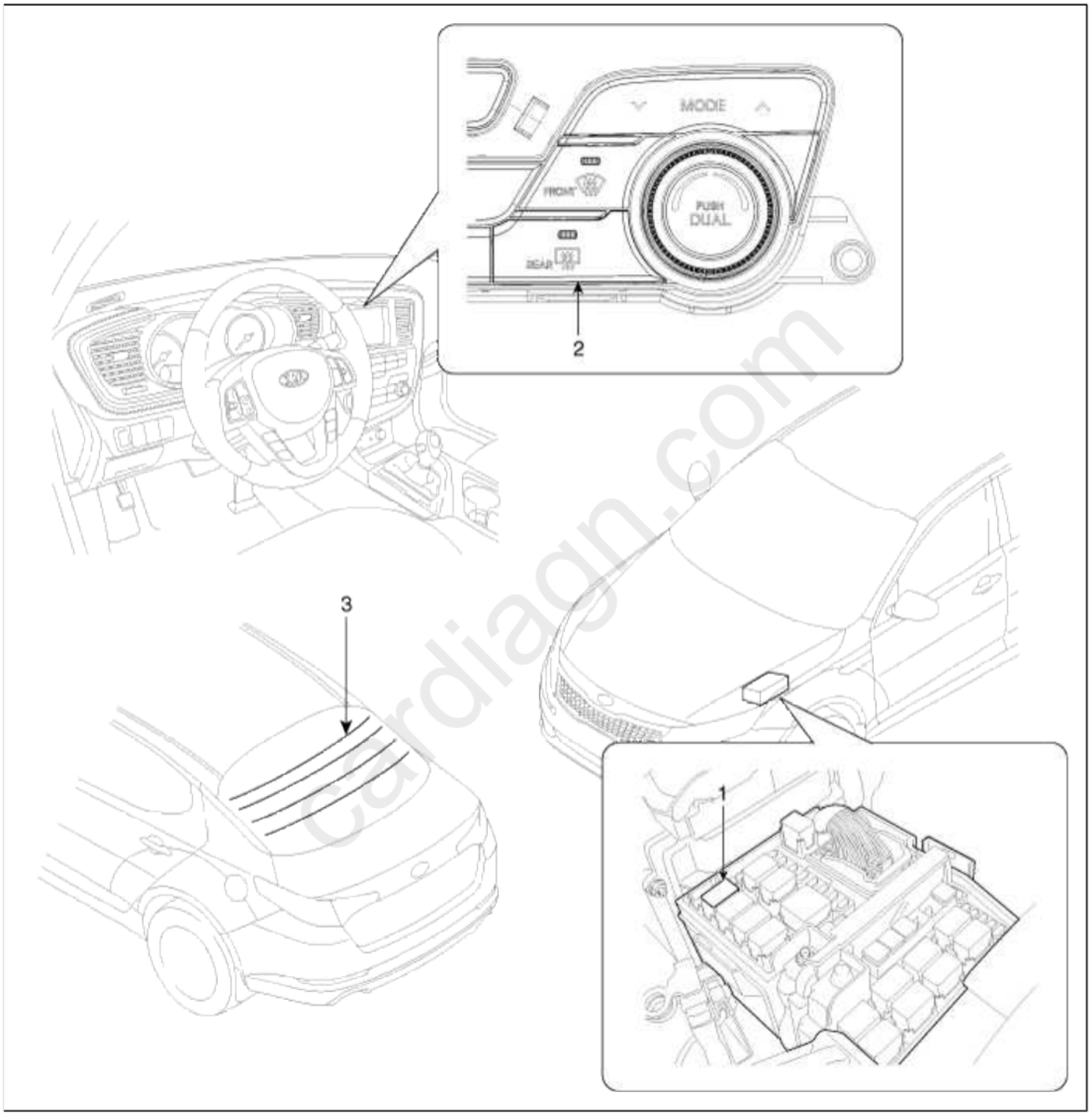

1. Rear glass defogger relay (Engine room relay box) 2. Rear glass defogger switch (A/C controller)	3. Rear glass defogger

cardiagn.com

Body Electrical System > Rear Glass Defogger > Rear Glass Defogger Printed Heater > Repair procedures

Inspection

CAUTION

Wrap tin foil around the end of the voltmeter test lead to prevent damaging the heater line. Apply finger pressure on the tin foil, moving the tin foil along the grid line to check for open circuits.

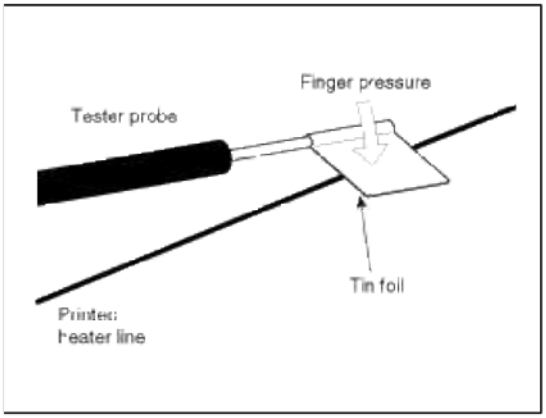

1. Turn on the defogger switch and use a voltmeter to measure the voltage of each heater line at the glass center point. If a voltage of approximately 6V is indicated by the voltmeter, the heater line of the rear window is considered satisfactory.

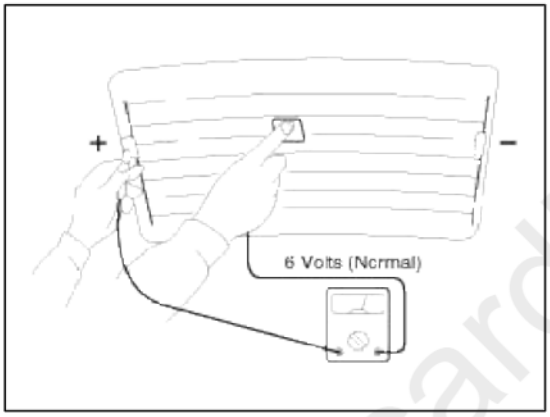

2. If a heater line is burned out between the center point and (+) terminal, the voltmeter will indicate 12V.

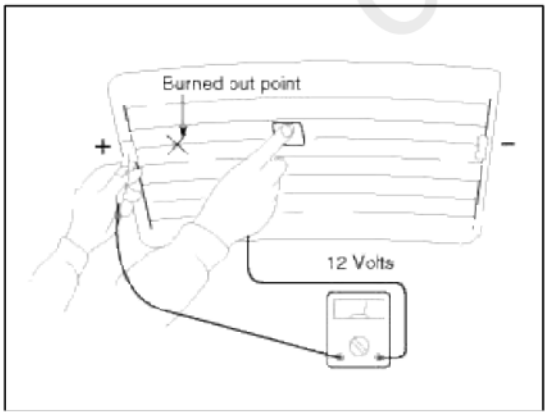

cardiagn.com

3. If a heater line is burned out between the center point and (-) terminal, the voltmeter will indicate 0V.

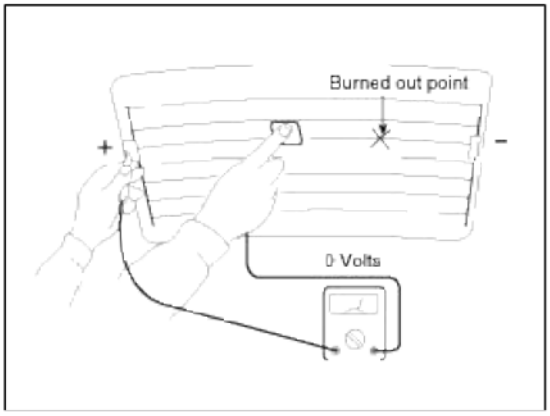

4. To check for open circuits, slowly move the test lead in the direction that the open circuit seems to exist. Try to find a point where a voltage is generated or changes to 0V. The point where the voltage has changed is the open-circuit point.

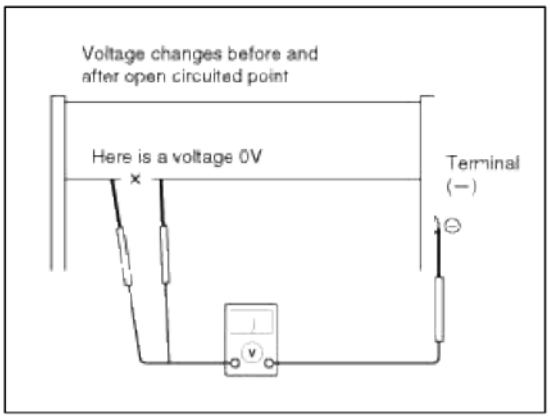

5. Use an ohmmeter to measure the resistance of each heater line between a terminal and the center of a grid line, and between the same terminal and the center of one adjacent heater line. The section with a broken heater line will have a resistance twice as that in other sections. In the affected section, move the test lead to a position where the resistance sharply changes.

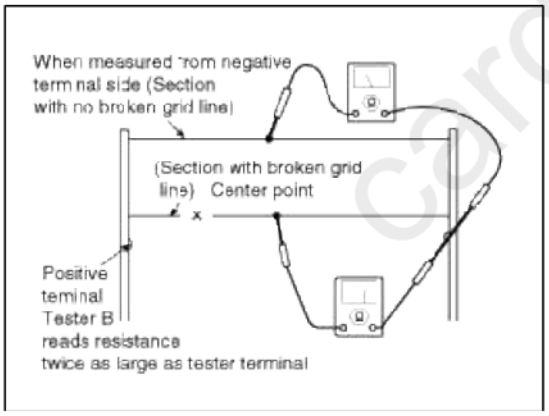

Repair Of Broken Heater Line

Prepare the following items:

1. Conductive paint.
2. Paint thinner.
3. Masking tape.
4. Silicone remover.

cardiagn.com

5. Using a thin brush:
   Wipe the glass adjacent to the broken heater line, clean with silicone remover and attach the masking tape as shown. Shake the conductive paint container well, and apply three coats with a brush at intervals of about 15 minutes apart. Remove the tape and allow sufficient time for drying before applying power. For a better finish, scrape away excess deposits with a knife after the paint has completely dried. (Allow 24 hours).

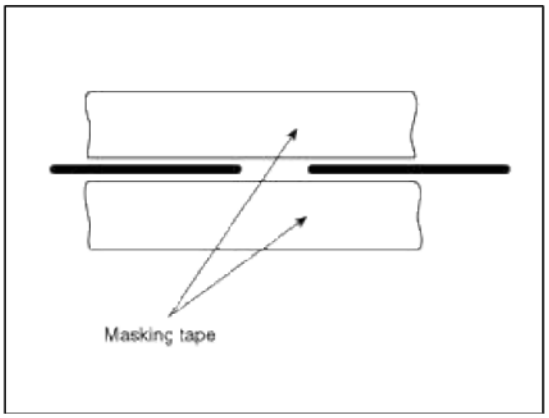

Body Electrical System > Rear Glass Defogger > Rear Glass Defogger Switch > Repair procedures

Inspection

1. The rear glass defogger switch inputs can be checked using the GDS.
2. To check the input value of rear glass defogger switch, select option "Body Control Module".
3. To consult the present input/output value of BCM, "Current DATA". It provides information of BCM input/output conditions of smart junction box.

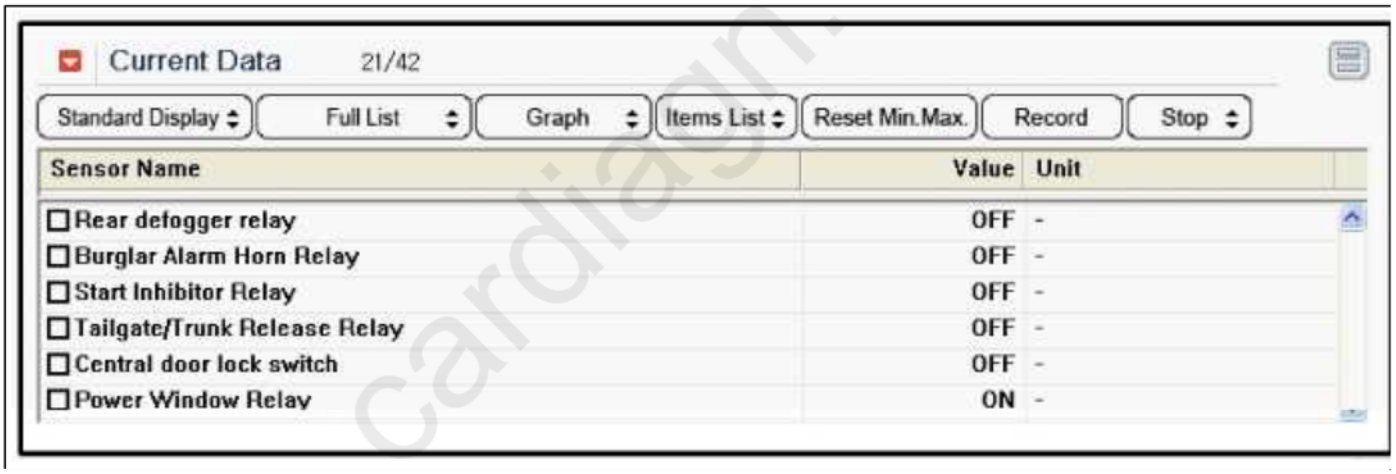

cardiagn.com

4. To check the input value of rear glass defogger switch in force mode, select option "Actuation Test of smart junction box".

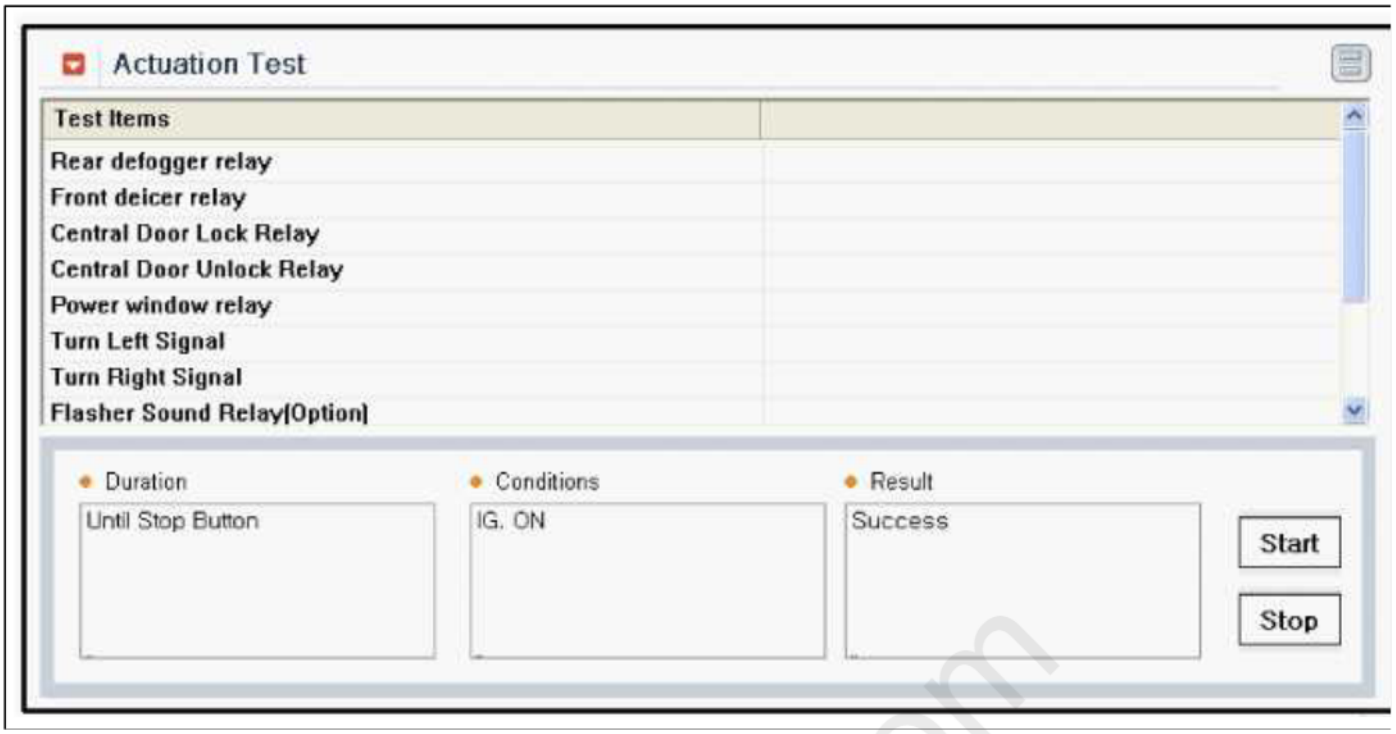

Removal

1. Disconnect the negative(-) battery terminal.
2. Remove the lower (A) after loosening the mounting screws.
   (Refer to the BD group - "Crash pad")

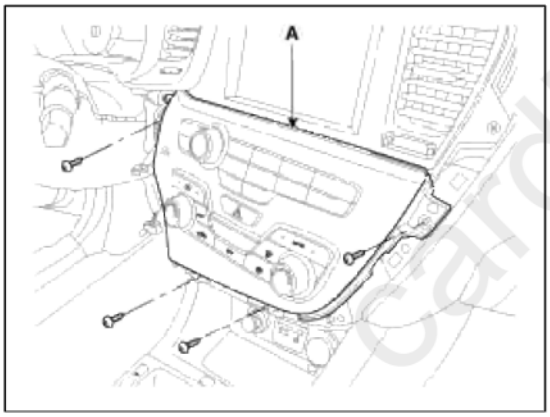

3. Remove the heater control unit contained the rear glass defogger switch from the center fascia panel.

Installation

1. Install the heater control unit.
2. Install the center fascia panel.
3. Install the crash pad garnish.

Body Electrical System > Windshield Wiper/Washer > Components and Components Location

Component Location

cardiagn.com

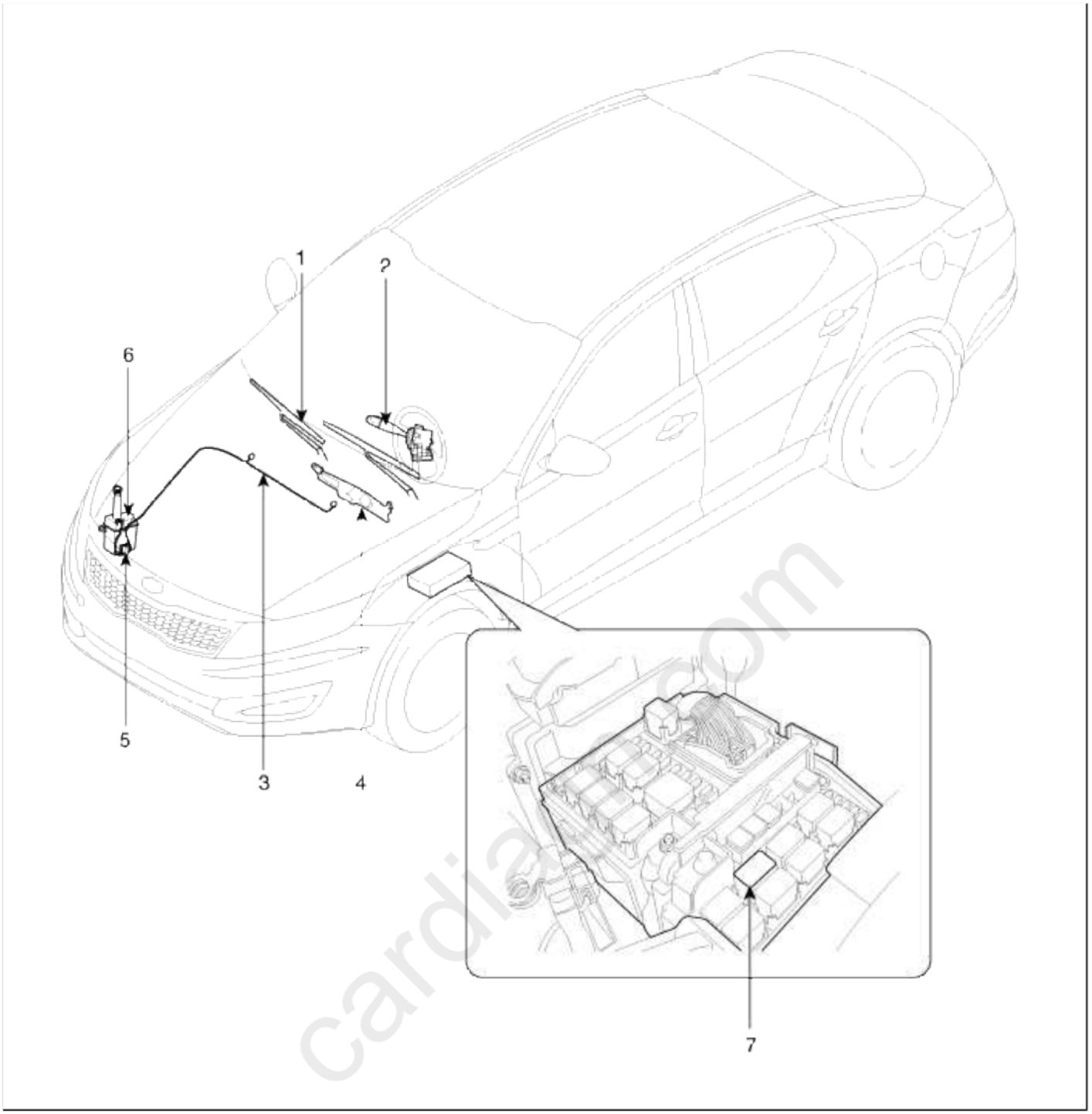

1. Windshield wiper arm & blade 2. Wiper & washer switch 3. Windshield washer hose 4. Windshield wiper motor & linkage	5. Washer motor 6. Washer reservoir 7. Wiper relay (Engine room relay box)

Body Electrical System > Windshield Wiper/Washer > Windshield Wiper-Washer Switch > Repair procedures

Inspection

Check for continuity between the terminals while operating the wiper and washer switch. If it is not normal condition, replace wiper and wiper switch.

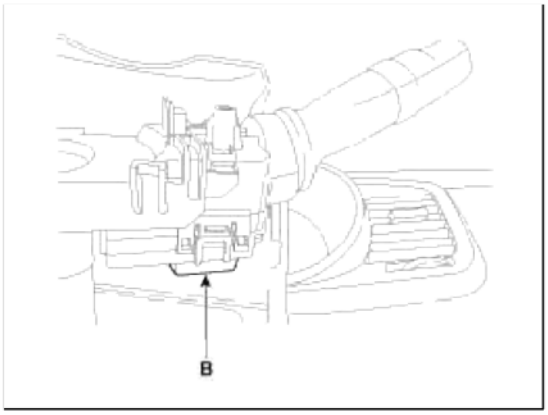

Wiper Switch

Terminal / Position	3	9	2	8	10	·	4	5
MIST	○		○		○	○		
OFF	○		○					
AUTO	○		○	○	○		○	○
LOW	○				○			
HI		○			○			

Washer Switch

Terminal / Position	11	10
OFF		
ON	○	○

Removal

1. Remove the steering column upper and lower shrouds after removing 3 screws.

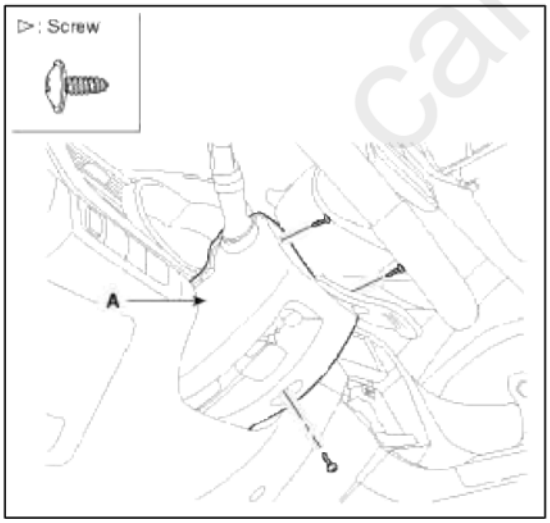

2. Remove the wiper switch (A) by releasing the part.

cardiagn.com

3. If necessary of removing the wiper & washer switch (A), release the lock of wiper switch using tool without removing the steering wheel and the clock spring.

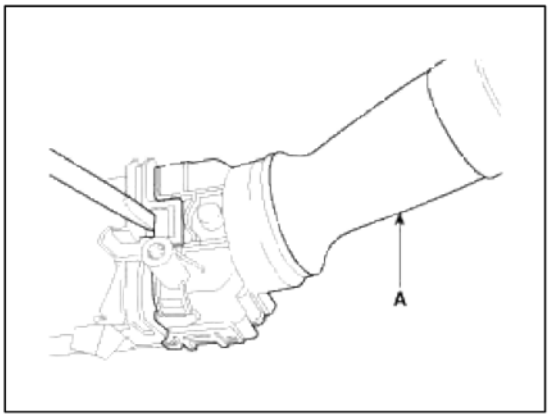

Installation

1. Install the wiper switch.
2. Install the steering column upper and lower shrouds.

Body Electrical System > Windshield Wiper/Washer > Front Wiper Motor > Components and Components Location

Component Location

cardiagn.com

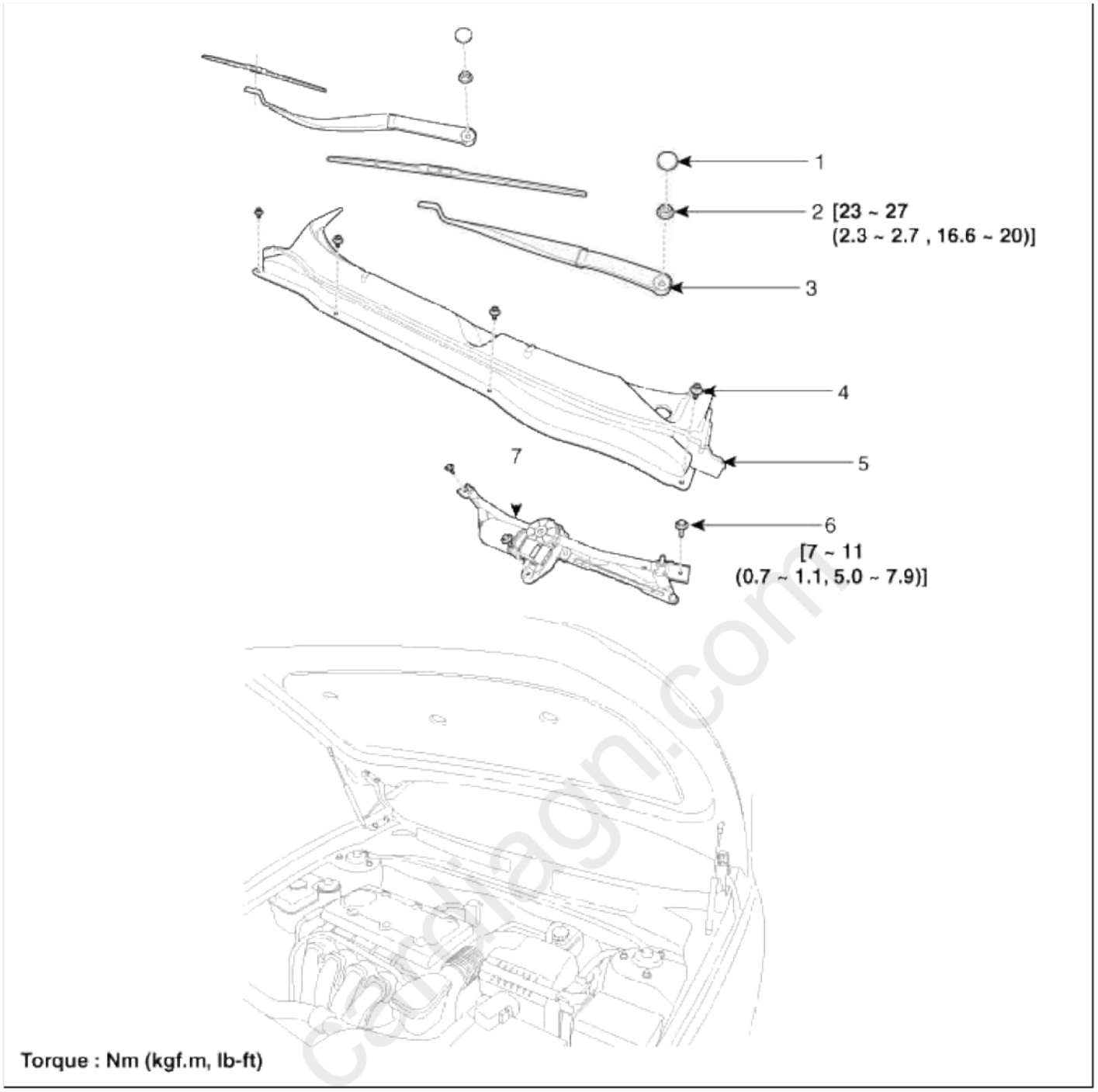

1. Cap 2. Nut 3. Wiper arm & blade 4. Rivet	5. Cowl top cover 6. Bolt 7. Wiper motor & linkage assembly

Body Electrical System > Windshield Wiper/Washer > Front Wiper Motor > Repair procedures

Removal

1. Loosen the windshield wiper arm nut (B) after removing a wiper cap (A).

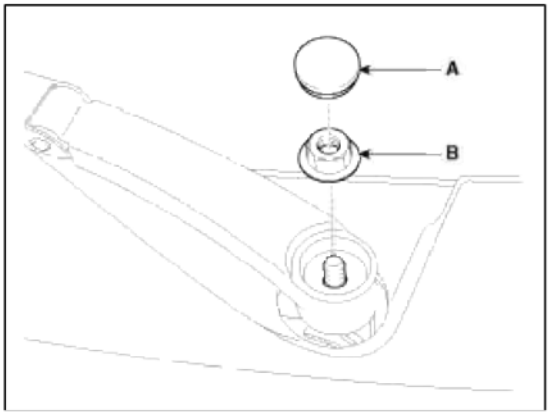

2. Remove the windshield wiper arm and blade (A).

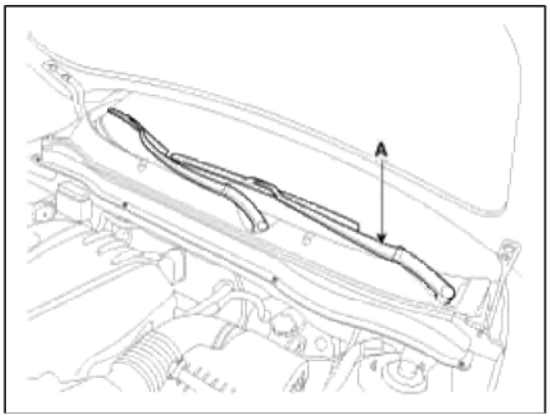

3. If necessary, release the wiper blade fixing clip by pulling up and remove the wiper blade from the inside radius of wiper arm.

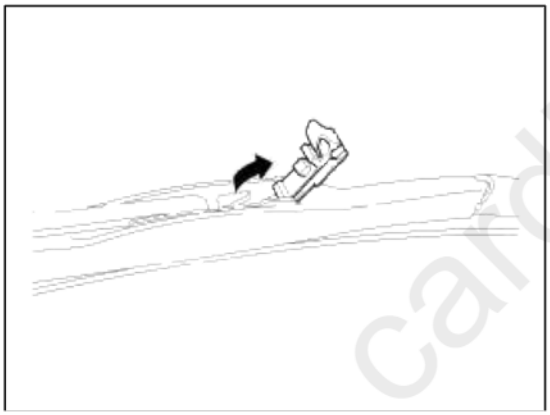

4. Disconnect the washer hose (A) connected to cowl top cover.

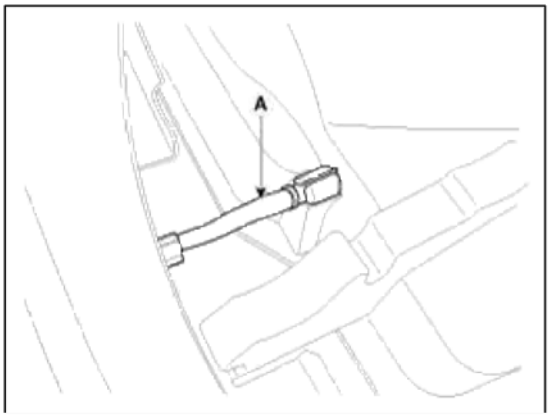

cardiagn.com

5. Remove the weather strip and the cowl top cover (A) after removing rivets.

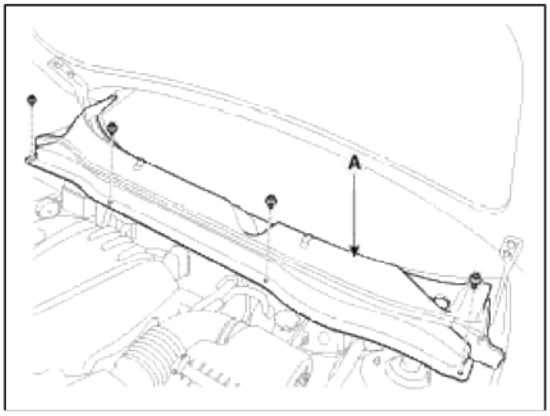

6. Disconnect the wiper motor connector (A) from the wiper motor & linkage assembly.

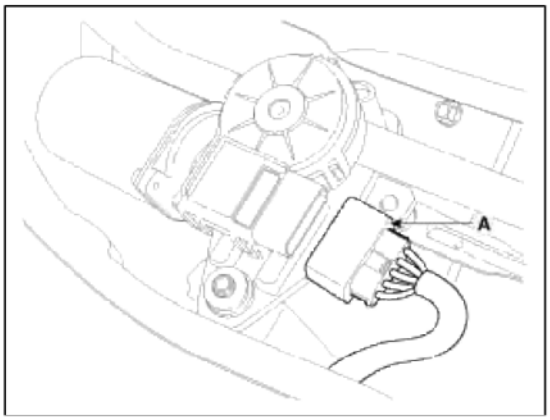

7. Remove the windshield wiper motor and linkage assembly (A) after removing 3 bolts.

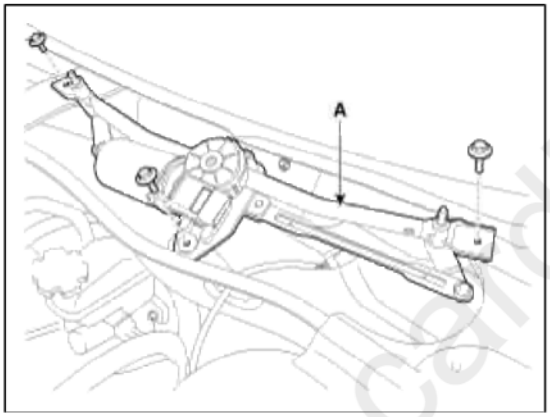

8. Hold the wiper motor crank arm and remove the upper linkage (A) from the wiper motor crank arm.

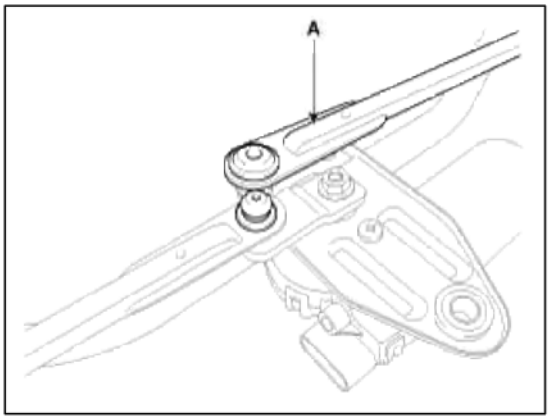

cardiagn.com

CAUTION

Before remving the wiper motor and linkage assembly, make sure that the linkage is stopped at auto stop position.

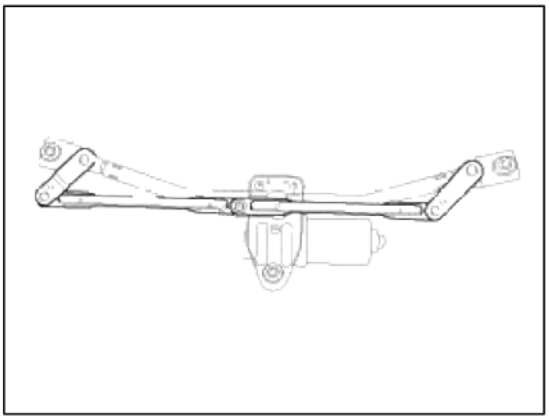

To install the wiper motor crank arm exactly, check that the linkage is aligned with the crank arm in straight line and the angle of each linkages.
Be careful not to bend the linkage.

9. Remove the lower linkage (A) from the wiper motor crank arm.

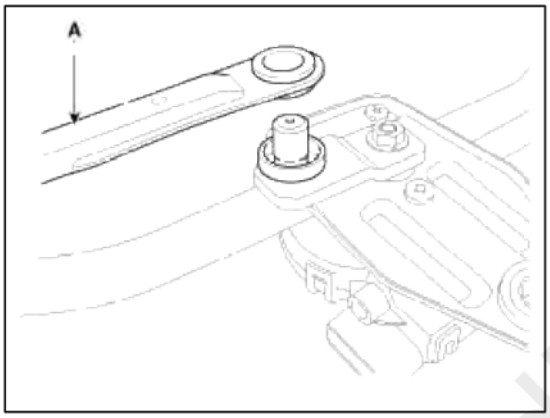

CAUTION

To install the wiper motor crank arm exactly, check that the linkage is aligned with the crank arm in straight line and the angle of each linkages.
Be careful not to bend the linkage.

10. Remove the crank arm (A) after loosening a nut.

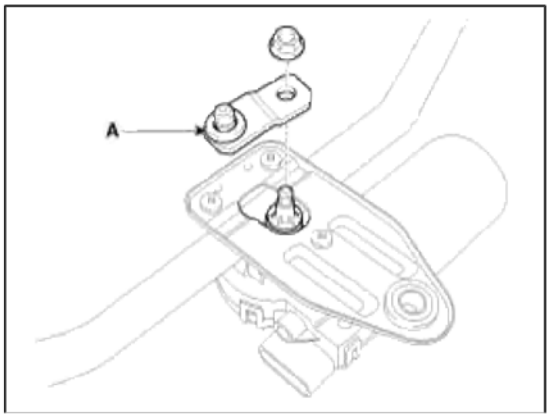

cardiagn.com

11. Remove the wiper motor bracket (A) after loosening the bolts.

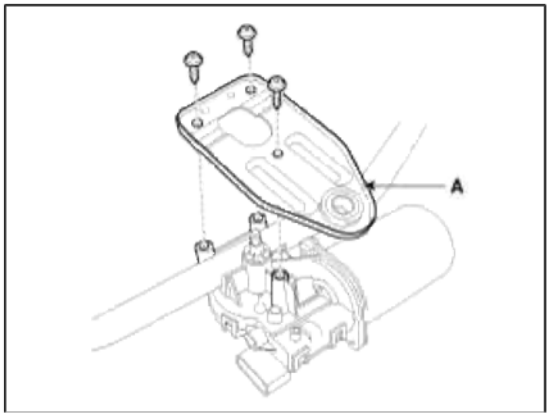

Installation

1. Install the wiper motor.
2. Install the crank arm.

Tighting torque:
24.5 ~ 26.4Nm (2.5 ~ 2.7, kgf.m, 18.0 ~ 19.5 lbf.ft)

CAUTION

To install the wiper motor crank arm, make sure that the linkage is aligned with the crank arm in straight line and set the angle of each linkages exactly.

3. Install the lower and upper linkage to the wiper motor crank arm.

CAUTION

To install the wiper motor crank arm, make sure that the linkage is aligned with the crank arm in straight line and set the angle of each linkages exactly.
Be careful not to bend the linkage.

4. Install the wiper motor and linkage assembly and then connect the wiper motor connector.

Tighting torque:
7 ~ 11Nm (0.7 ~ 1.1, kgf.m, 5.0 ~ 7.9 lbf.ft)

5. Install the cowl top cover.
6. Install the windshield wiper arm and blade.

Tighting torque:
22.5 ~ 26.4 Nm (2.3 ~ 2.7 kgf.m, 16.6 ~ 21.7 lbf.ft)

NOTE

- The windshield wiper motor must be cycled to make sure that it is in the auto stop position.
  If necessary, adjust the wiper arm and blade.

cardiagn.com

7. Install the wiper arm and blade to the auto stop position.
   A : Auto stop position (Blade)

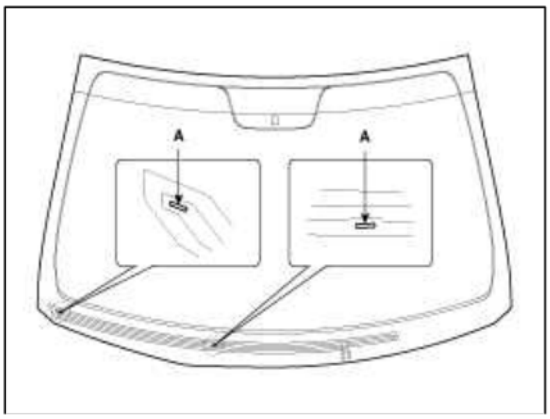

8. Set the cowl top cover on the specified spray position.

NOTE

- When you turn on the washer, confirm 50% or more of washer fluid lands within the spray area.
- If the spray area is not within the standard positions, adjust the nozzle(s).

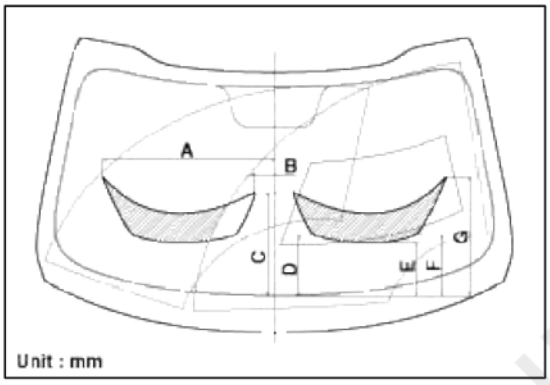

Specified position	Distance (in)	Distance (mm)
A	20.24	514.3
B	2.46	62.6
C	12.33	313.3
D	7.39	187.7
E	6.41	162.8
F	7.32	186
G	13.56	344.6

Inspection

Speed Operation Check

cardiagn.com

1. Remove the connector (A) from the wiper motor.

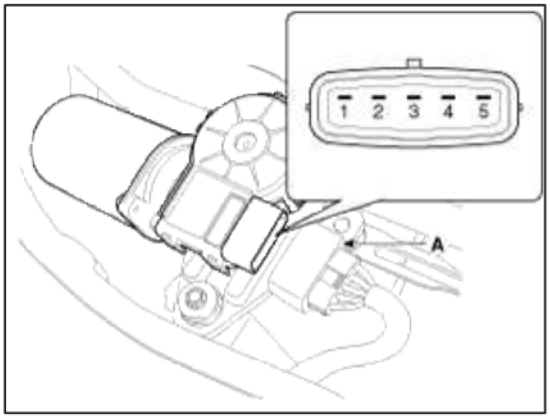

NO	Description	NO	Description
1	GND	4	LOW
2	Parking	5	HI
3	Battery (-)		

2. Attach the positive (+) lead from the battery to terminal 3 and the negative (-) lead to terminal 1.
3. Check that the motor operates at low or high speed as below table.

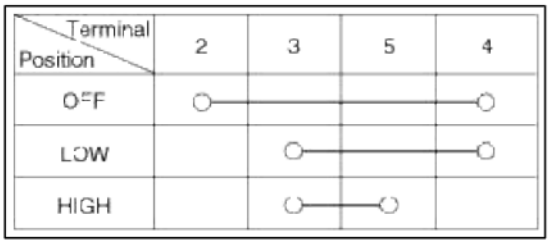

CAUTION

Common sources of contamination are insects, tree sap, and hot wax treatments used by some commercial car washes. If the blades are not wiping properly, clean both the window and the blades with a good cleaner or mild detergent, and rinse thoroughly with clean water.

Body Electrical System > Windshield Wiper/Washer > Front Washer Motor > Repair procedures

Inspection

1. With the washer motor connected to the reservoir tank, fill the reservoir tank with water.

NOTE

Before filling the reservoir tank with water, check the filter for foreign material or contamination. if necessary, clean the filter.

2. Connect positive (+) battery cables to terminal 2 and negative (-) battery cables to terminal 1 respectively.
3. Check that the motor operates normally and the washer motor runs and water sprays from the front nozzles.

cardiagn.com

4. If they are abnormal, replace the washer motor.

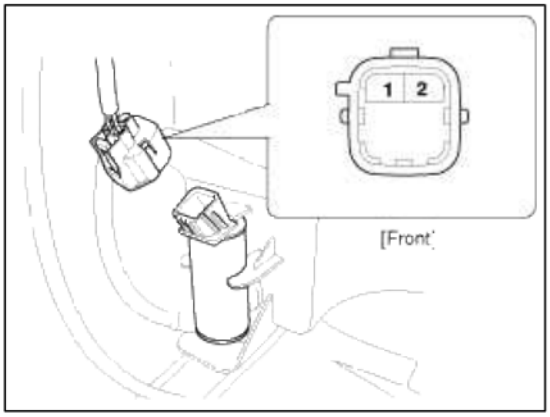

NO	Description	NO	Description
1	GND	2	Washer (+)

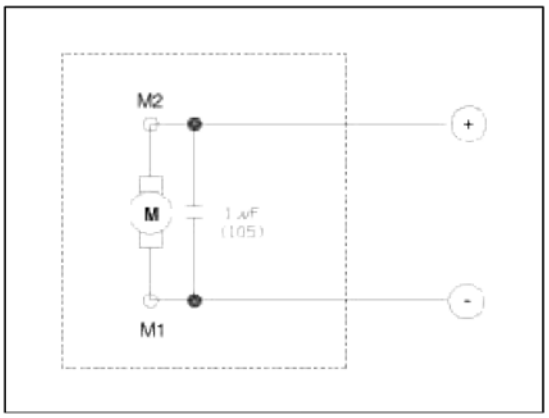

Washer Fluid Level Sensor Switch

1. Disconnect the negative(-) battery terminal.
2. Drain the washer fluid less than 650 cc.
3. Check for continuity between the No. 1 and No.2 terminal in each float position.
   There should be continuity when the float is down.
   There should be no continuity when the float is up.
4. If the continuity is not as specified, replace the washer fluid level switch.

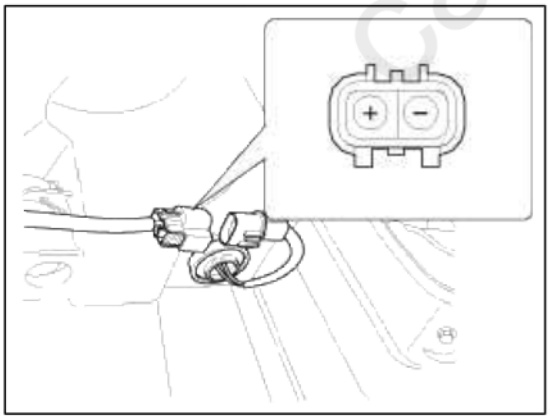

Terminal / Position	1	2
Over 650cc		
Under 650cc	○	○

(Tolerance : -50cc ~ +100cc)

Removal

cardiagn.com

CAUTION

- When servicing the washer pump, be careful not to damage the washer pump seal.
- Do not operate the washer pump before filling the washer reservoir.
  Failure to do so could result in premature pump failure.

1. Disconnect the negative (-) battery terminal.
2. Remove the front bumper.
   (Refer to the BD group - "Front bumper")
3. Remove the washer hose and disconnect the washer motor connector (A) and level sensor connector (B).

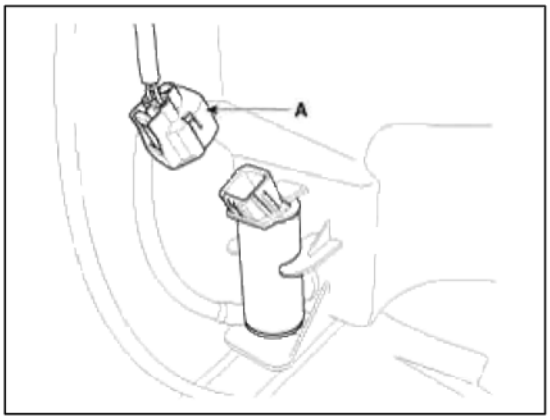

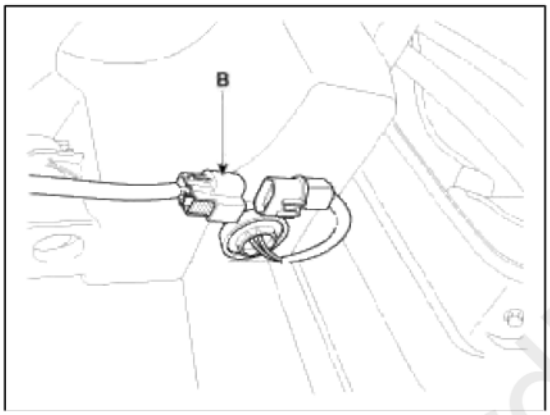

4. Remove the washer motor (A).

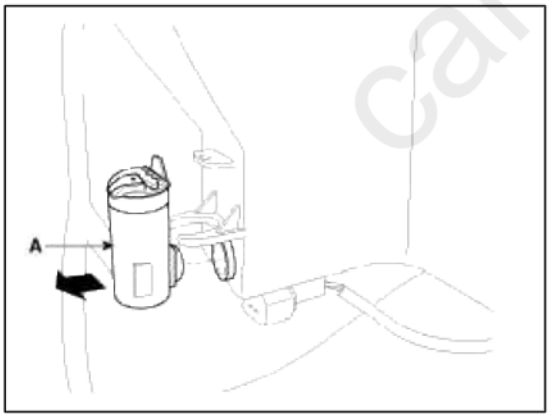

NOTE

- Washer fluid may flow out of the opening of reservior.

cardiagn.com

5. Remove the washer reservoir after removing 2 bolts (A).

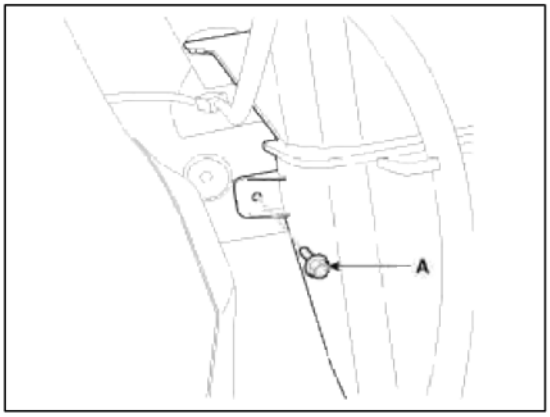

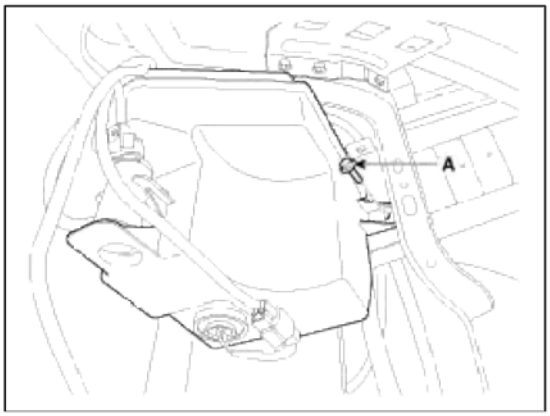

Installation

1. Install the washer reservoir.

> NOTE
>
> Before installing the pump motor, check the filter for foreign material or contamination. if necessary, clean the filter into the pump motor.

2. Install the washer motor.
3. Install the washer hose.
4. Connect the washer motor connector and level sensor connector.
5. Install the front bumper.
6. Check the washer motor operation.

cardiagn.com

Body Electrical System > Windshield Wiper/Washer > Rain Sensor > Schematic Diagrams

Circuit Diagram

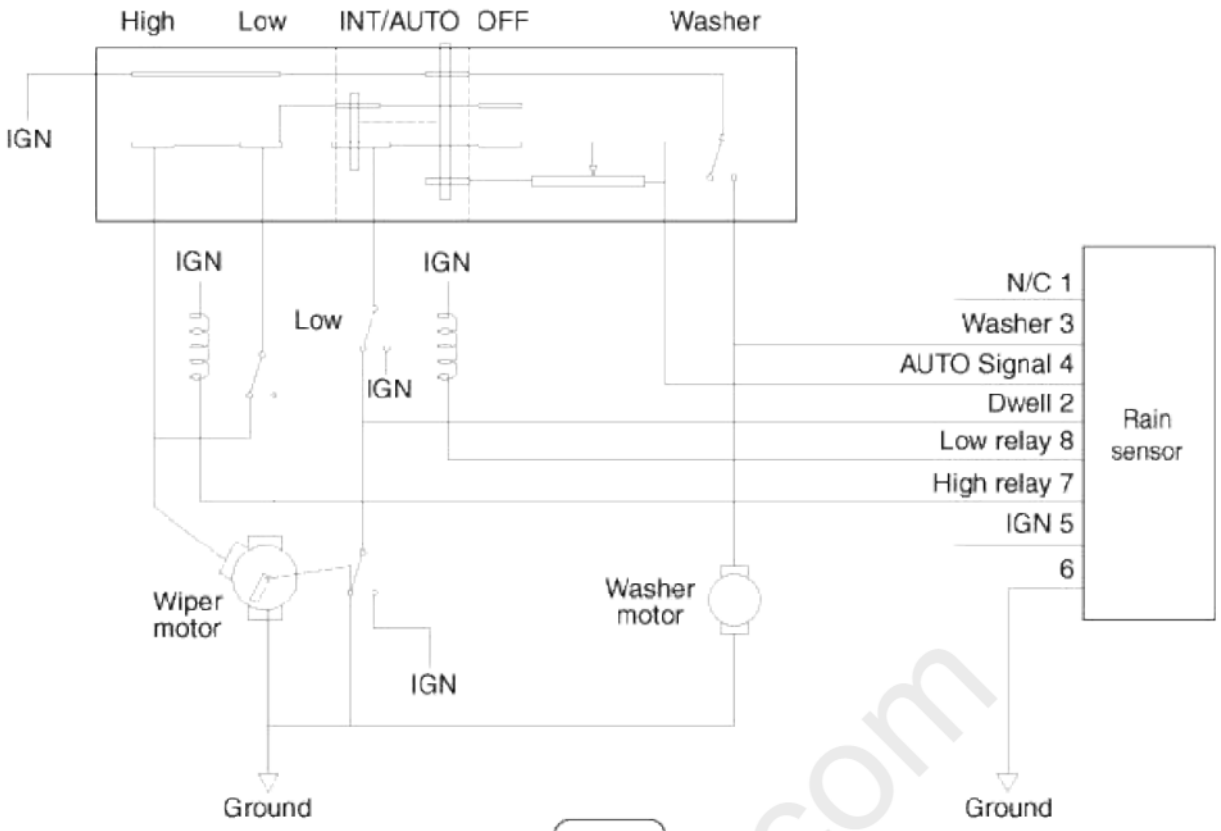

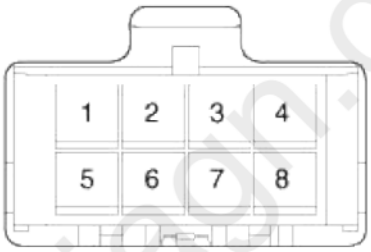

Terminal / Position	2	8	7	4	3	5
Washer					●	●
Low		●				●
High			●			●
OFF	●	●				
AUTO/INT	●	●		●		●

cardiagn.com

Body Electrical System > Windshield Wiper/Washer > Rain Sensor > Description and Operation

Description

The Rain sensing windshield wiper system is a wiper system that, in addition to providing normal wiper functions off, mist, manual low speed, manual high speed, and wash, provides automatic control of automatic intermittent automatic low, and automatic high speeds.

When the ignition key is in the ON position, the rain sensor (A) will be activated.

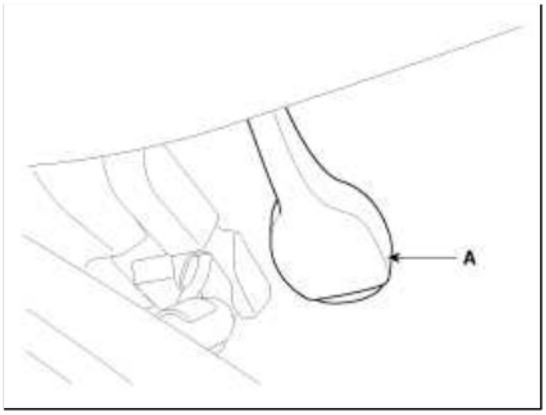

System Function

Basic Principle

Emitted Beam from luminosity diode is reflected entirely against the windshield exterior, and then turn into photo diode.

If there is water on the windshield exterior, beam separates optically, and the degree of remained beam is measured in the photo diode.

What there is water in the windshield, it means beam is not reflected all, so the degree of lost beam indicates the degree of glass surface wet.

NOTE

Rain sensor consist of two luminosity diode, two photo diode, optic fiber and coupling pad.

Operation Control

Wiper ECU transmits the signal as a rain sensor, and then the rain sensor perceives the rainwater to transmit to the wiping order wiper ECU, wiper ECU controls the wiper motor according to the signal.

Contact Influence

The rain sensor can malfunction due to following condition

- Contamination of the measurement surface.
- Air bubbles between the windshield and the coupling pad contact surface.
- The movement of coupling pad by vibration.
- Damaged wiper blade.

Operation Condition

In case that engine starts under wiper switch AUTO, rain sensor activates after once wiper operation to inform the driver that the system is under AUTO.

NOTE

In case that the rain sensor doesn't work or malfunction, it is needed manual wiper switch operation by the driver.

Body Electrical System > Windshield Wiper/Washer > Rain Sensor > Repair procedures

Inspection

Rain Sensing Wiper

1. In IGN2 ON state, if auto switch input (LIN communication) is ON then both wiper low relay and wiper high relay outputs are controlled by the rain sensor input signal.

cardiagn.com

2. If the wiper switch has been left in automatic mode with the vehicle ignition OFF, and then the vehicle ignition switch is turned on, a single wipe will be performed.

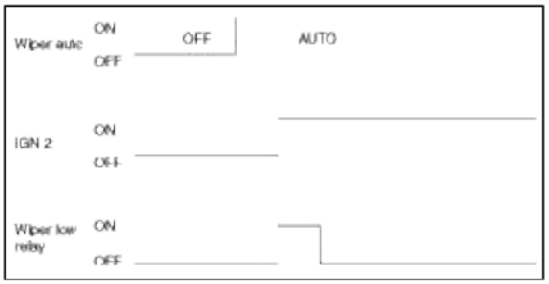

3. A single wipe will be performed whenever rain has been detected (Rain Detected signal from Rain sensor) and the wiper switch is moved to the AUTO position. But a single wipe will not be performed when the wiper switch is moved to the AUTO position and OFF signal is being received from Rain sensor. But if the wiper switch is moved to AUTO position for the first time since vehicle ignition switch is turned on then a single wipe will be performed regardless of Rain Detected or OFF signal.

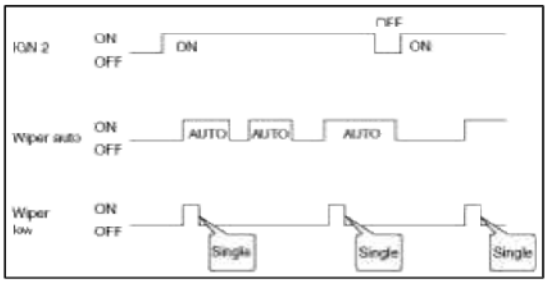

4. The drive may adjust the rain sensor performance by adjusting the sensitivity input. When in automatic mode, the BCM will perform a single wipe each time the sensitivity is adjusted upward to a more sensitive setting (downward more then one step). This single wipe will only be performed if Rain Detected signal is being received from the Rain sensor. If the sensitivity adjustment is adjusted upward more than one sensitivity, the BCM will only perform a single wipe unless the time between Increases is more than 2 seconds.

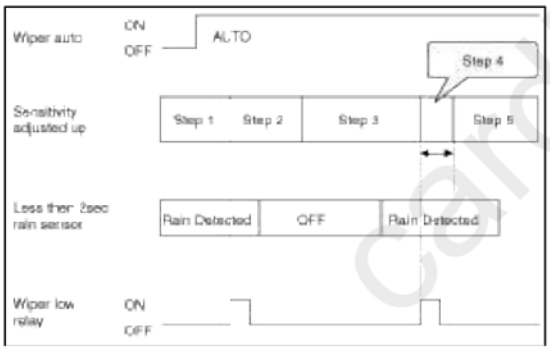

cardiagn.com

5. Fault strategy for the rain sensor

Rain Sensor Fault 1 - Internal Fault Detected

This failure is detected when the wiper is in automatic mode and the input faulty rain sensor from the rain sensor has a duty cycle corresponding to Fault 1. The confirmation delay for the failure is of 1 sec.

When this failure is detected, the wiper outputs are OFF and the wiper will also do a wipe in slow speed on the transition from sensitivity 3 to sensitivity 2 (Step 2 to 3) in order to signal the presence of this fault. If another sensitivity is set, the wiper won't make any additional wipe.

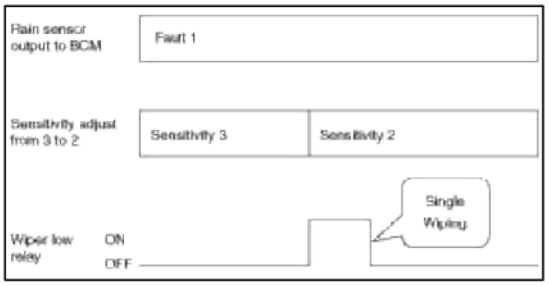

Rain Sensor Fault 2 - Glass Attachment Fault Detected

This failure is detected when the wiper is in automatic mode and the input faulty rain sensor from the rain sensor has a duty cycle corresponding to Fault 2. The confirmation delay for the failure is of 1 s.

When this failure is detected, the wiper outputs are OFF and the wiper will also do a wipe on the transition from sensitivity 4 to sensitivity 3 (Step 1 to 2) in order to signal the presence of this fault. If another sensitivity is set, the wiper won't make any additional wipe.

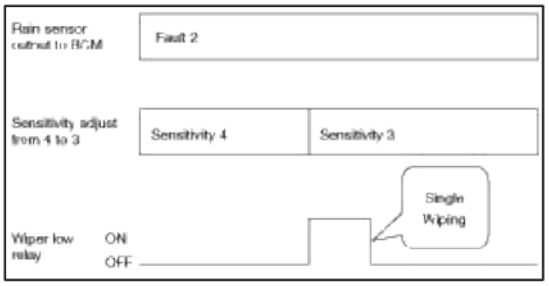

Rain Sensor Fault 3 - No Input Signal Present

This failure is detected when the wiper is in automatic mode and the input faulty rain sensor from the rain sensor has a duty cycle corresponding to Fault 3 or in case the duty cycle of the input faulty rain sensor is 0% or 100%. The confirmation delay for the failure is of 1 s.

When this failure is detected, the wiper outputs are OFF.

Removal

CAUTION

The rain sensor may not operate properly if contaminated. Protect the rain sensor surface by not removing the cover until installation time. The coupling pad on the rain sensor surface has adhesive strength. Take care when installing the sensor. If the sensor is separated from the windshield by force, the sensor or windshield may be damaged. Take care when removing the sensor.

carjiagn.com

1. Remove the rain sensor cover (A) first.
   Be careful not to damage the cover latch by applying excessive force. To remove the latch, pull aside the latch using the cover hole (B) with the little (-) screwdriver (C).

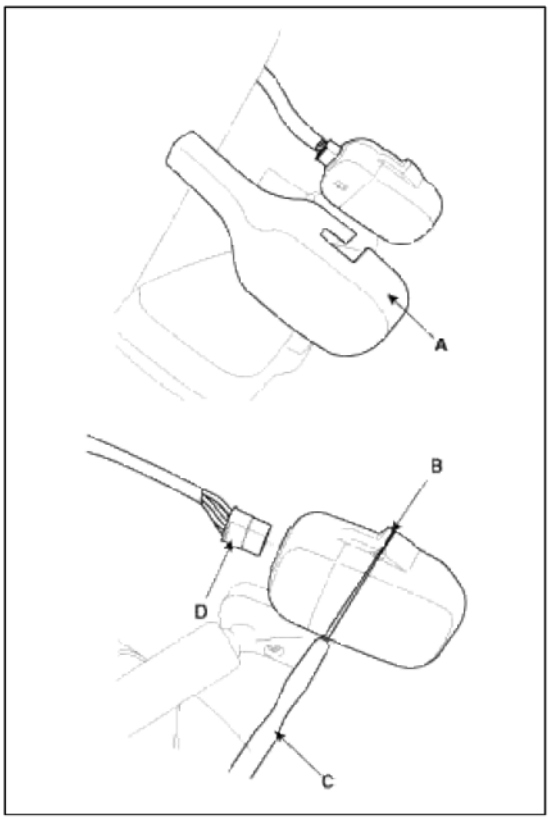

2. Remove the wiring harness connector (D) from sensor.
3. Rain sensor module is attached to the front windshield by glue replacing the front windshield, remove the rain sensor module from the existing front windshield and install on the new front windshield.

Installation

NOTE

- In case of the windshield with reflection layer which reflects the infrared rays in sensing field, remove the reflection layer from the rain sensor mounting position prior to installation.
- Avoid contamination of the sensor during installation.

1. Install the rain sensor bracket to the windshield glass using the tape.

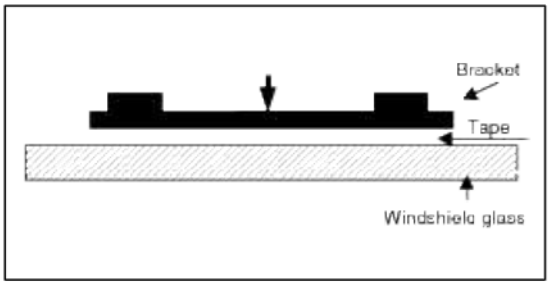

CAUTION

It is very important that the coupling pad pushes against the windshield completely to prevent bubbles from forming at the contact surface.

2. Connect the rain sensor connector, and then install the sensor cover.

Body Electrical System > Electro chromic Inside Rear View Mirror > Components and Components Location

cardiagn.com

Components

[ECM]

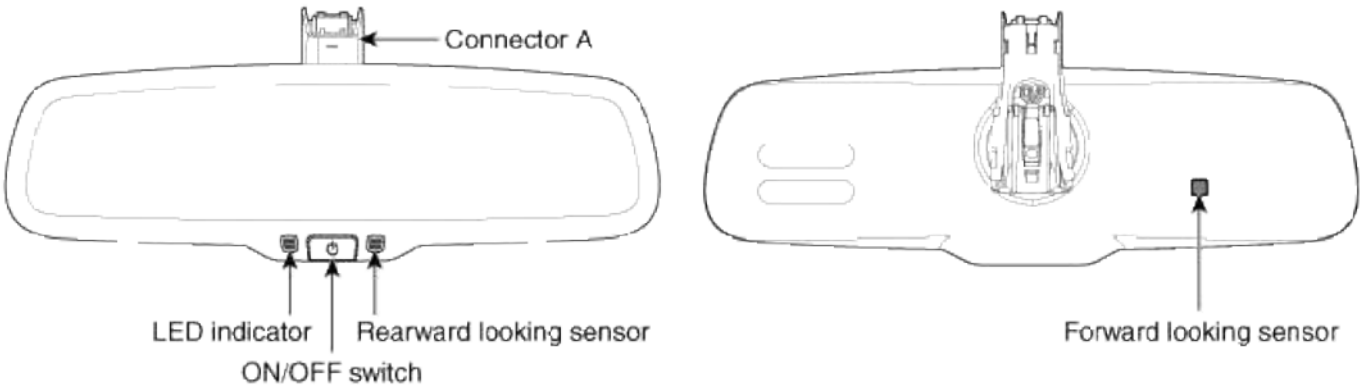

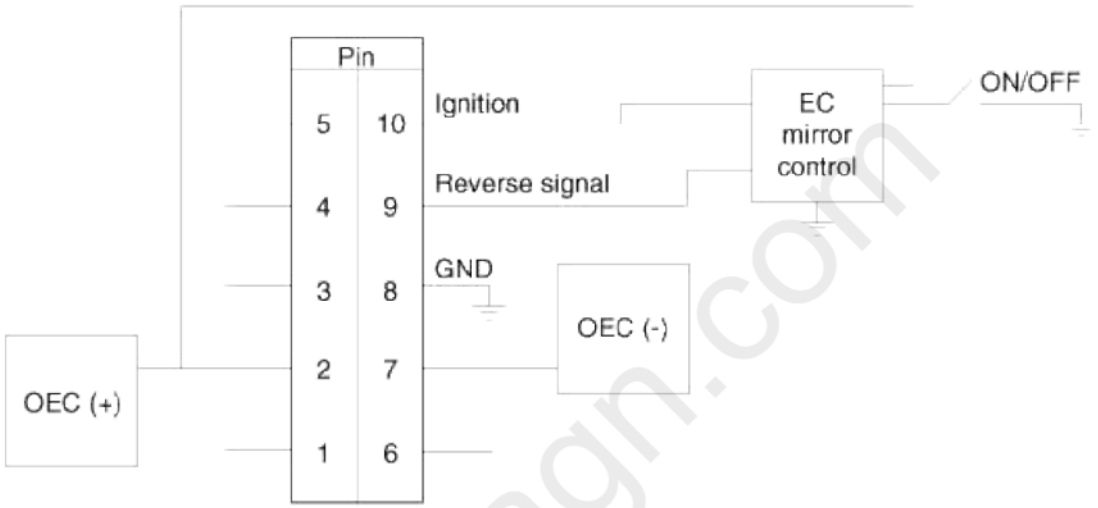

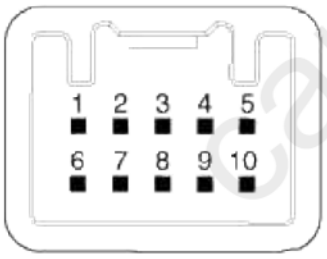

Pin	Description
1	-
2	OEC (+)
3	-
4	-
5	-
6	-
7	OEC (-)
8	GND
9	Reverse signal
10	IGN (+)

cardiagn.com

[ECM + Home Link + Compass]

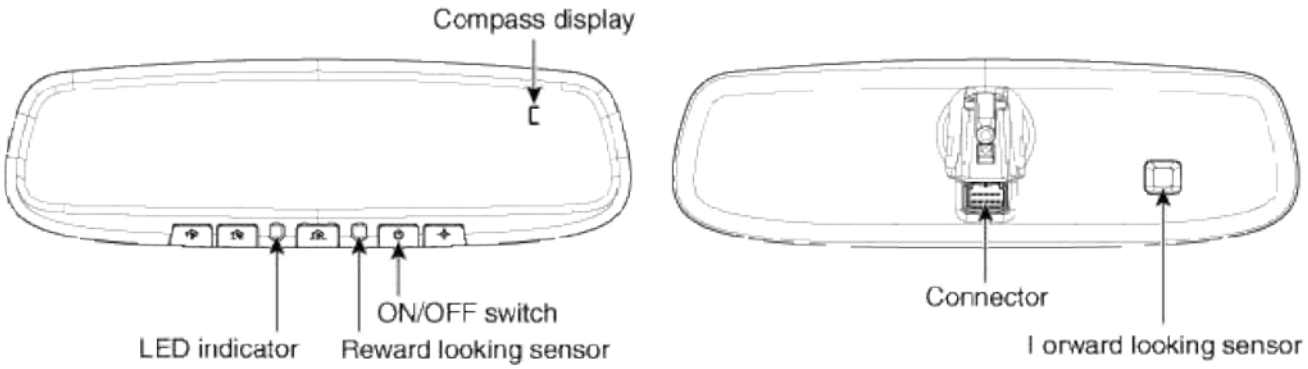

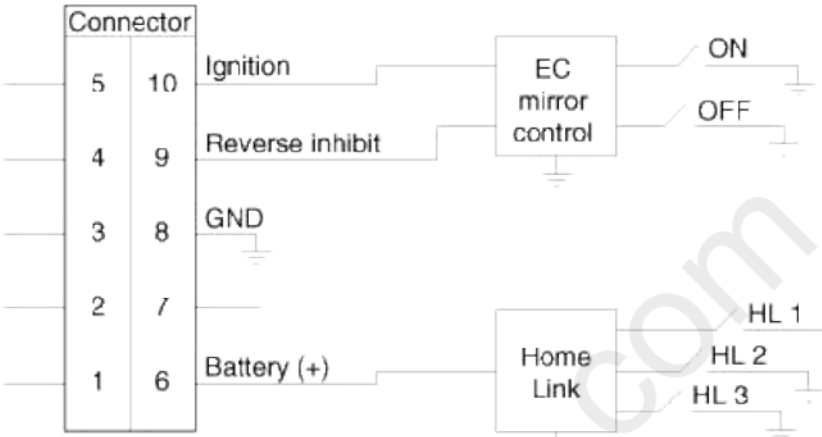

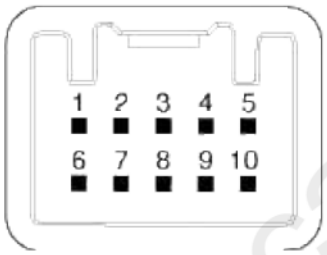

Pin	Description	Current
1	-	-
2	OEC (+)	300mA MAX
3	-	-
4	-	-
5	-	-
6	Battery (+)	150mA MAX
7	OEC (-)	300mA MAX
8	Ground	1500mA MAX
9	Reverse inhibit	15mA MAX
10	IGN (+)	150mA

cardiagn.com

Body Electrical System > Electro chromic Inside Rear View Mirror > Description and Operation

Description

The ECM (Electro Chromatic inside rear view Mirror) is for dimming the reflecting light from a vehicle behind at night, Preventing glare from the light. The forward facing sensor detects brightness of the surroundings, while the rearward looking sensor detects the strength of the reflecting light and adjusts the reflexibility of the mirror in the range of 7~85%. But, when the reverse gear is engaged, it stops functioning.

1. The forward facing sensor sees if the brightness of the surroundings is low enough for the mirror to operate its function.
2. The rearward looking sensor detects glaring of the reflecting light from a vehicle behind.

3. The ECM is darkened to the level as determined by the rearward looking sensor. When the glaring is no longer detected, the mirror stops functioning.
   1. LED indicator
   2. ON/OFF Switch
   3. Rearward looking sensor
   4. Forward looking sensor

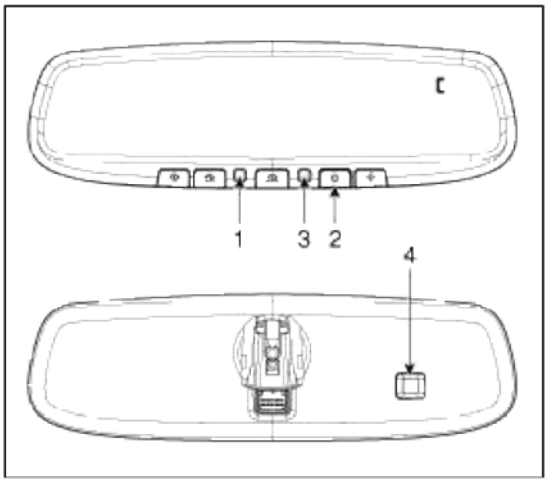

Automatic-dimming Function

To protect your vision during nighttime driving, your mirror will automatically dim upon detecting glare from the vehicles traveling behind you. The auto-dimming function can be controlled by the Dimming ON/OFF Button :

1. Pressing and holding the Feature Control button for more than 3 but less than 6 seconds turns the auto-dimming function OFF which is indicated by the green Status Indicator LED turning off.
2. Pressing and holding the Feature Control button again for more than 3 but less than 6 seconds turns the auto-dimming function ON which is indicated by the green Status Indicator LED turning on.

> NOTE
>
> The mirror defaults to the "ON" position each time the vehicle is started.

Body Electrical System > Electro chromic Inside Rear View Mirror > Repair procedures

Inspection

Check it by the procedure below to see if the function of the ECM is normal.

1. Turn the ignition key to the "ON" position.
2. Cover the front sensor to stop functioning.
3. Shine a light at the rear sensor.
4. The ECM should be darkened as soon as the rear sensor detects the light.

> NOTE
>
> If this test is performed in daytime, the ECM may be darkened as soon as the front sensor is covered.

5. When the reverse gear is engaged, the ECM should not be darkened.
6. When heading lights to both the front and rear sensors, the ECM should not be darkened.

Removal

cardiagn.com

1. Remove the mirror wiring cover (A).

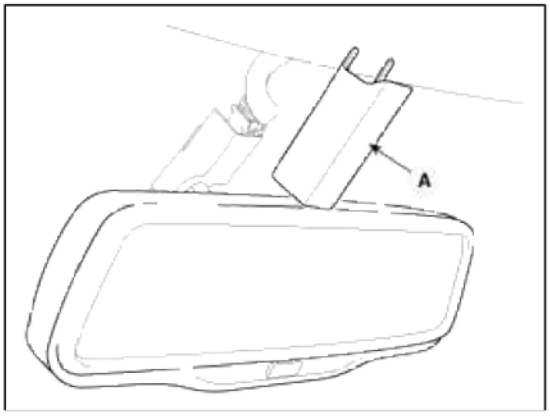

2. Disconnect the mirror connector (B) and remove the mounting screw (A).

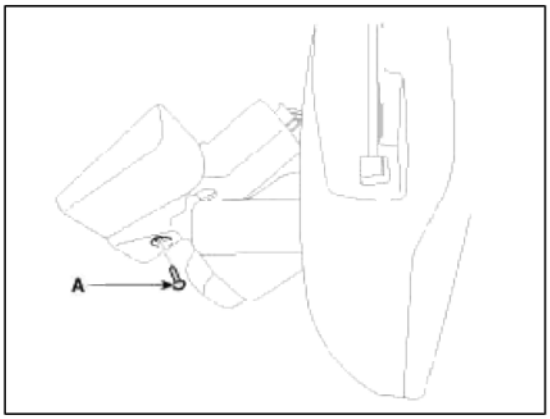

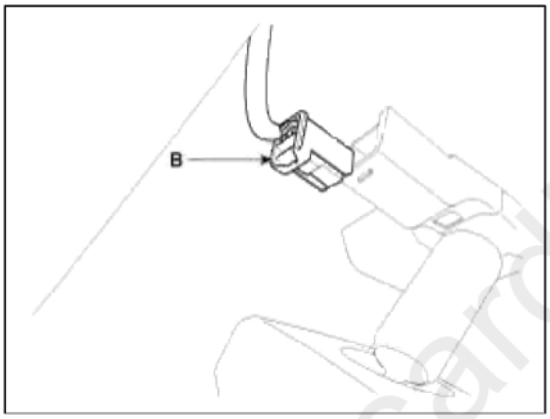

3. Slide the inside rear view mirror rearward to remove the inside rear view mirror assembly (A).

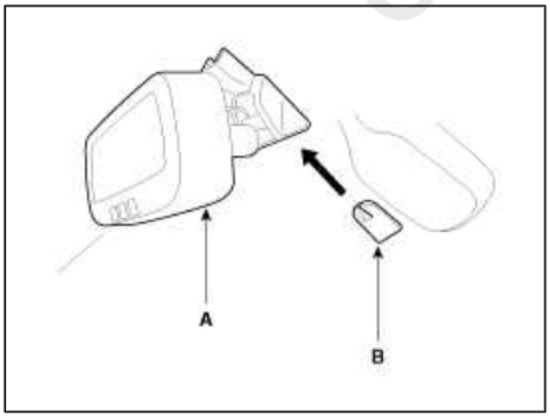

NOTE

Take care not to damage the mounting bracket during removal.

Installation

cardiagn.com

1. Install the mirror assembly.
2. Install the mirror wiring cover and connector.

> NOTE
>
> - Make sure the connector is plugged in properly.

Body Electrical System > Electro chromic Inside Rear View Mirror > Compass Mirror > Description and Operation

Function

1. Push the A button lower of the rear view mirror to turn on the function of the compass mirror so that displays a sign of a direction on the small board in the upper-right side of the mirror.
2. Push the A button again to turn off its function.

Body Electrical System > Electro chromic Inside Rear View Mirror > Compass Mirror > Repair procedures

Calibration Procedure

If the compass has been calibrated or set to variance zone number incorrectly, or you are driving in specific places (tunnel, parking lot in building, underground parking lot, near transformer substation, etc.), the below conditions may occur.

- The display read "C".
- The compass headings become inaccurate.
- The compass heading is not changed.
- Some compass headings are not displayed.
- The compass headings are inaccurate in long distance driving.

This compass automatically calibrates itself while the vehicle is driven as your route takes you in complete circles.

If the vehicle's compass headings become inaccurate continuously, the compass should be manually calibrated as follows:

1. Move the vehicle from the large steel structure or electric power supply cable.
2. Turn on the compass by pressing the A button.
3. Check the zone number by pressing the A button for more than 4 seconds until the current zone number appears in the display.
   To re-calibrate, hold the A button for 3 seconds until C is displayed. If the zone number is different for your country, set the correct zone number referring to "Setting the compass zone" and do the "calibration procedure" again.
4. Drive your vehicle in at least 2 circles at less than 5 miles per hour (8 km/h) until the compass heading appears. Driving in a circle in right-handed direction and opposite direction is possible and if possible, stops the wiper operation.
5. If the vehicle's compass headings become inaccurate as before, do the following procedure again.

> NOTE
>
> If new vehicle is first driven or if the battery has been disconnected, do the calibration procedure as above.

Setting The Compass Zone

This compass must be set to compensate for the variation between true north and magnetic north. To set variation:

carmagn.com

1. Find your current location and variance zone number on the zone map.
2. Press the A button for more than 4 seconds. The current zone number will appear in the display.
3. Release and press the A button until the new zone number appears in the display. After you stop pressing the button in, the display will show a compass direction within a few seconds.

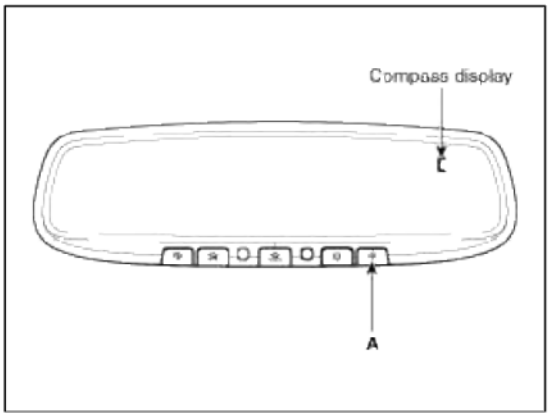

Zone Map

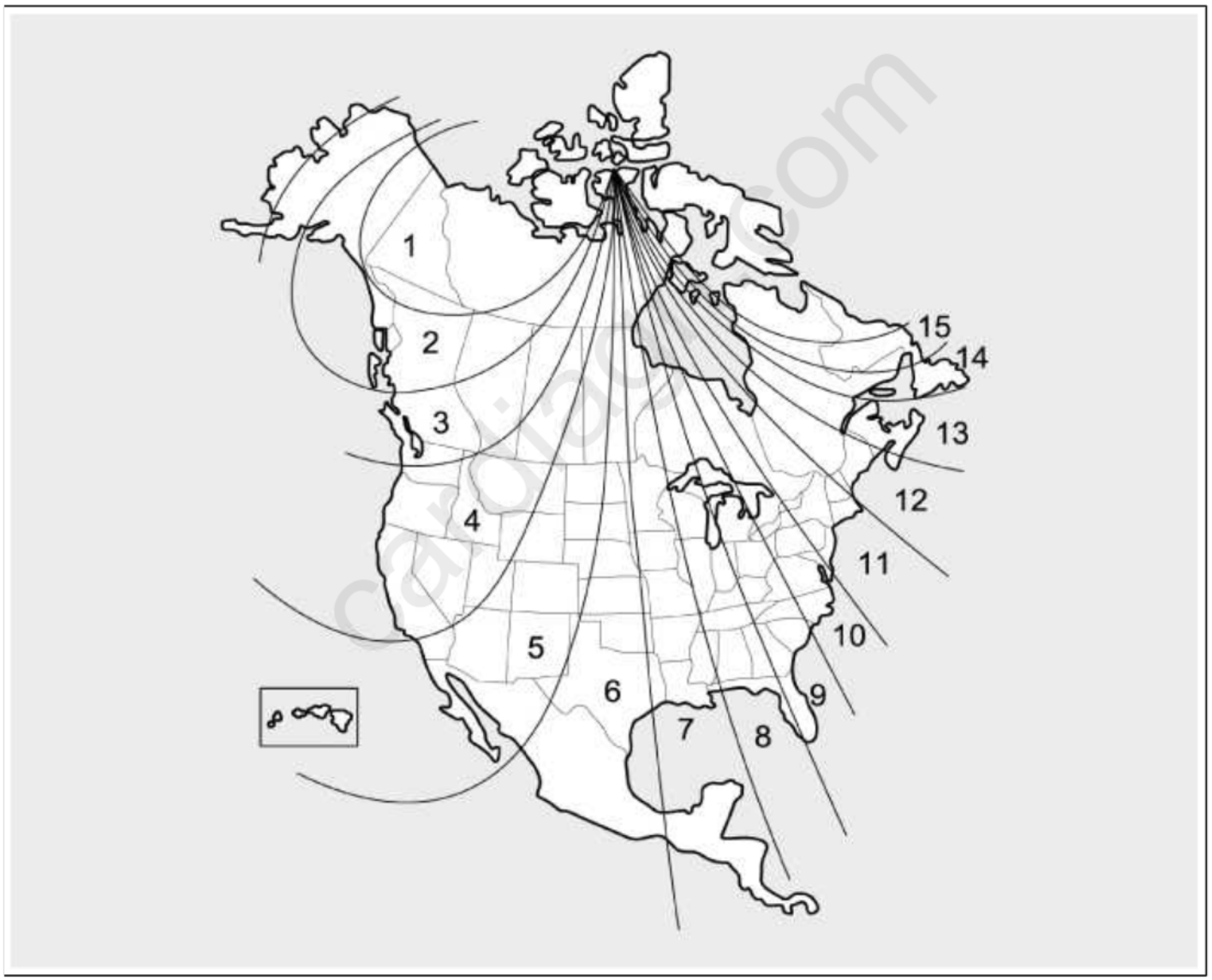

WARNING

1. Do not install the ski rack, antenna, etc. which are attached to the vehicle by means of a magnet. They affect the operation of the compass.
2. If the compass deviates from the correct indication soon after repeated adjustment, have the compass checked at an authorized dealer.
3. The compass may not indicate the correct compass point in tunnels or while driving up or down a steep hill. (The compass returns to the correct compass point when the vehicle moves to an area where the geomagnetism is stabilized.)

Body Electrical System > Hands Free System > Components and Components Location

Components

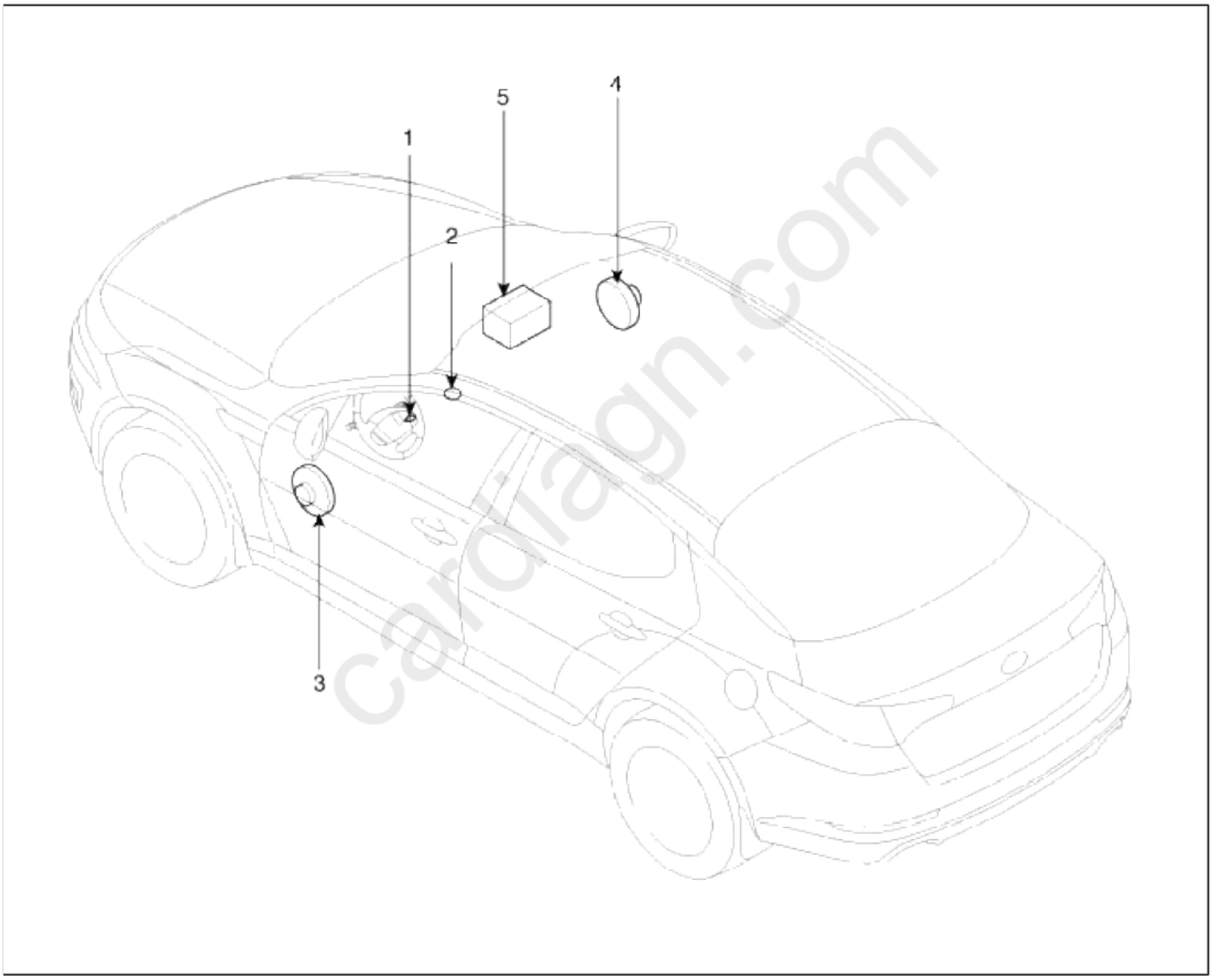

1. Hands free call switch 2. Mic 3. Front left speaker	4. Front right speaker 5. Audio head unit (hands free control)

There is no hands free jack. This system supports Bluetooth(wireless system).

Function

Audio Bluetooth System

General Feature

- This audio system supports Bluetooth®hands-free and stereo-headset features.
  - HANDS-FREE feature: Making orreceiving calls wirelessly throughvoice recognition.
- The phone must be paired to the system before using the hands-free feature.
  - STEREO-HEADSET feature: Playingmusic from cellular phones (that supportsA2DP feature) wirelessly.
- Voice recognition engine of theBluetooth® system supports 3 types oflanguages:
  - English
  - US Spanish
  - Canadian French

> CAUTION
>
> If the vehicle is moving do not use a cellular phone or connect the Bluetooth phone.

> NOTE
>
> - The phone must be paired to the systembefore using Bluetooth® features.
> - Only one selected (linked) cellularphone can be used with the system ata time.
> - Some phones are not fully compatiblewith this system.

Voice Recognition Activation

- The voice recognition engine contained in the Bluetooth System can be activated in the following conditions:
  - Button Activation
  The voice recognition system will be active when the button is pressed and after the sound of a Beep.
  - Active Listening
  The voice recognition system will beactive for a period of time when the Voice Recognition system has asked for a customer response.
- The system can recognize single digits from zero to nine while number greater than ten will not be recognized.
- If the command is not recognized, the system will announce "Pardon" or No input voice signal from microphone. (Noresponse)
- The system shall cancel voice recogntionmode in following cases : When pressing the button and saying cancel following the beep. When not making a call and pressing the button. When voice recognition has failed 3 consecutive times.
- At any time if you say "help", the system will announce what commands are available.

Menu tree

cardiagn.com

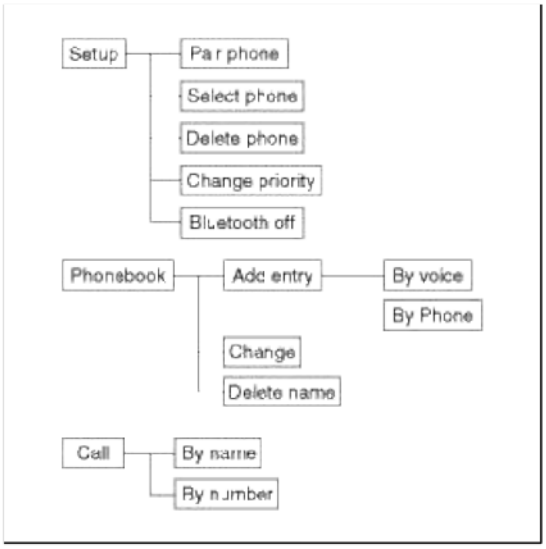

Phone Setup

All Bluetooth® related operations can beperformed by voice command or by manual operation.

- By Voice Command:

  Press button on the steering wheel to activate voice recognition.



- By Manual Operation:

1. Push the [SETUP] button to enter SETUP mode.
2. Select “PHONE” item by rotating the TUNE knob, then push the knob.

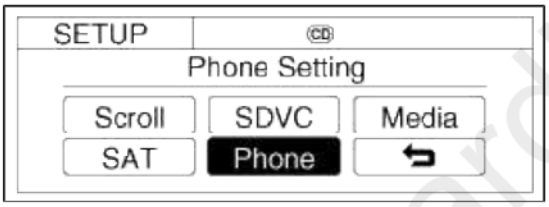

3. Select desired item by rotating the TUNE knob, then push the knob.

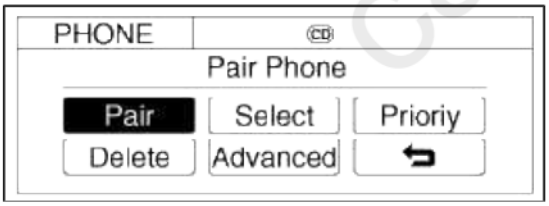

4. Select Advanced item to enter ADVANCED mode.

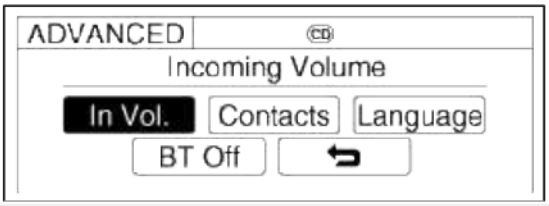

Pairing phone

Before using Bluetooth® features, thephone must be paired (registered) to theaudio system. Up to 5 phones can bepaired in the system.

1. Press button.

cardiagn.com

2. Say "Set Up".
   - The system replies with availablecommands.
   - To skip the information message, press again and then a beep isheard.
3. Say "Pair Phone".
4. Say “Yes” to proceed.
5. Say the name of your phone whenprompted.
   - Use any name to uniquely describeyour phone.
6. Bluetooth® system will repeat thename you stated.
7. Say "Yes" to confirm.

NOTE

The system may not function in the following cases:
If 5 phones have already been registered. If the system cannot communicate with the phone.

Connecting phone

When the Bluetooth® system is enabled,the phone previously used is automaticallyselected and re-connected. If youwant to select a different phone previouslypaired, the phone can be selectedthrough “Select Phone” menu.Only a selected phone can be used withthe hands-free system.

1. Press button.
2. Say "Set Up".
3. Say "Select Phone" after prompt.
   - The system lists all the registeredphone names.
4. Say the name or number of desiredphone from the list.
5. Say "Yes" to confirm.
6. By manual operation:
   - Select “SELECT” in PHONE menu,then select desired phone from thelist.

NOTE

The system may not function in the following cases:
If the phone is not found.
If the system does not recognize the voice command.

Deleting phone

The paired phone can be deleted.

- When the phone is deleted, all the informationassociated with that phone is also be deleted (including phonebook).
- If you want to use the deleted phonewith the audio system again, pairingprocedure must be completed oncemore.

1. Press button.
2. Say "Set Up".
3. Say “Delete Phone” after prompt.
   - The system lists all the registeredphone names.
4. Say the name or number of desiredphone from the list.
5. Say “Yes” to confirm.
6. By manual operation:
   - Select “DELETE” in PHONE menu,then select desired phone from the list.

Changing Priority

When several phones are paired to theaudio system, the system attempts toconnect following order when theBluetooth® system is enabled:

1) “Priority” checked phone.
2) Previously connected phone.

cardiagn.com

3) Gives up auto connection.

1. Press button.
2. Say “Set Up”.
3. Say “Change Priority” after prompt.
   - The system lists all the registeredphone names.
4. Say the name or number of desiredphone from the list.
5. Say “Yes” to confirm.
6. By manual operation:
   - Select “PRIORITY” in PHONE menu,then select desired phone from thelist.

Bluetooth AVN System

- Bluetooth allows wireless transmission of information between PC, mobile phones, headsets, PDAs, printers and other devices within close ranges by using 2.45Ghz frequency short-distance wireless telecommunication technologies."
- Within this vehicle, users can make handsfree calls, transmit mobile phonedata, and play audio streaming files by connecting a mobile phone with the system.Functions supported by Functions supported by"
- Pairing mobile phones. (Up to 5 phones)
- Connecting/disconnecting mobile phones.
- Making/Answering phone calls.
- Downloading a Phone Book.
- Downloading a Call history list.
- Playing music saved in a Bluetooth phonein the vehicleSome functions may not be supported insome mobile phone.

in the vehicle

Some functions may not be supported insome mobile phone.

Body Electrical System > Hands Free System > Hands Free Switch > Schematic Diagrams

Circuit Diagram

cardiagn.com

[Bluetooth + Voice]

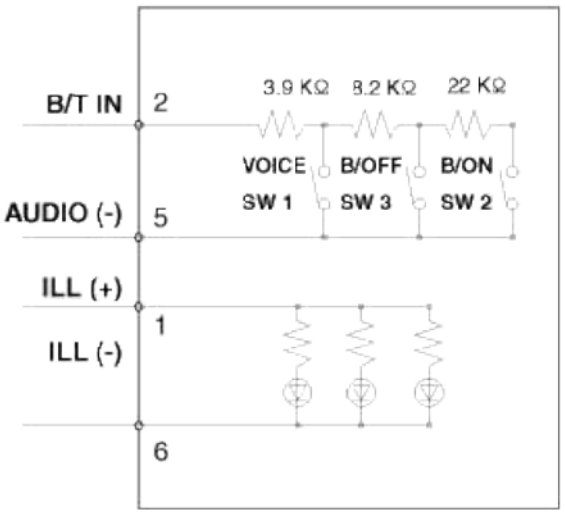

[RH]



Connector RH	
	
Pin No.	Description
1	Illumination (+)
2	Bluetooth (Signal input)
3	-
4	-
5	Audio head unit (Ground)
6	Illumination (-)

cardiagn.com

Body Electrical System > Hands Free System > Hands Free Switch > Repair procedures

Inspection

1. Check the hands free remote control switch for resistance between terminals in each switch position.

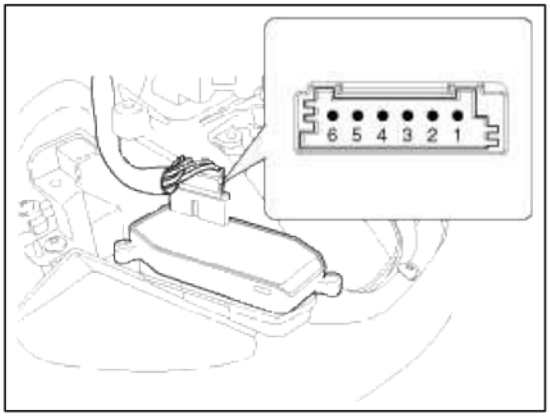

Switch	Connector terminal	Resistance (±5%)
Send	2 - 5	34.1 kΩ
End of call	2 - 5	12.1 kΩ
Voice	2 - 5	3.9 kΩ

Removal

1. Disconnect the negative (-) battery terminal.
2. Remove the driver airbag module.
   (Refer to the RT group)
3. Remove the steering wheel.
   (Refer to the ST group - "Steering column & shaft")
4. Remove the steering wheel cover (A) after loosening the screws.

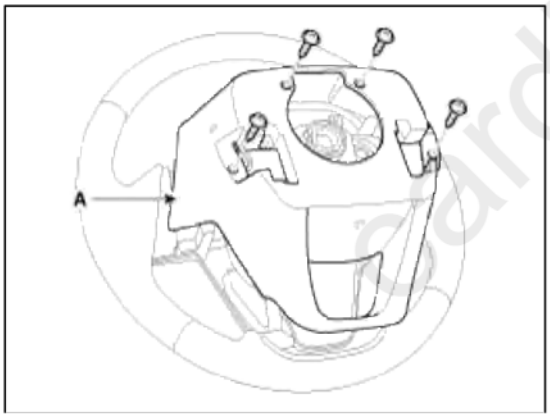

cardiagn.com

5. Remove the steering wheel remote control switch connector (A) after loosening the mounting screws.

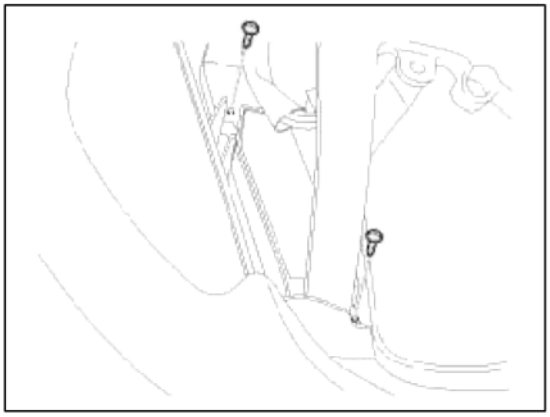

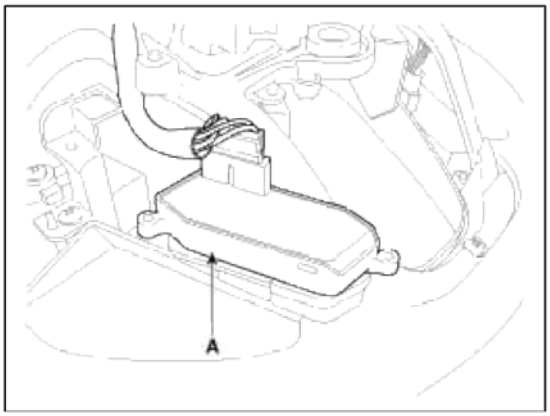

Installation

1. Reassemble the steering wheel remote control switch after connecting the connector.
2. Reassemble the steering wheel.
3. Reassemble the driver airbag module.

> NOTE
>
> Make sure the hands free remote control switch and the airbag module connectors are plugged in properly.

Body Electrical System > Hands Free System > Hands Free Mic > Repair procedures

Inspection

1. Disconnect the negative(-) battery terminal.
2. Remove the roof trim.
   (Refer to the BD group - "Roof trim")

cardiagn.com

3. Remove the handsfree mic (A) after disconnect the connector from loof top.

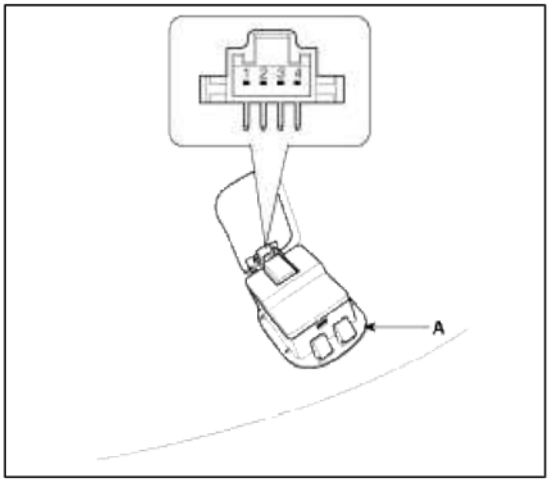

CAUTION

Be careful not to damage the roof trim when removing the hands free mic.
Do not reuse the mic unit if the fixing hook (A) is damaged.

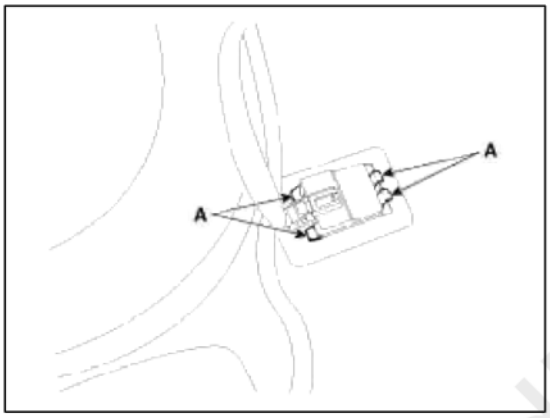

4. Check the continuity of Mic between terminals.

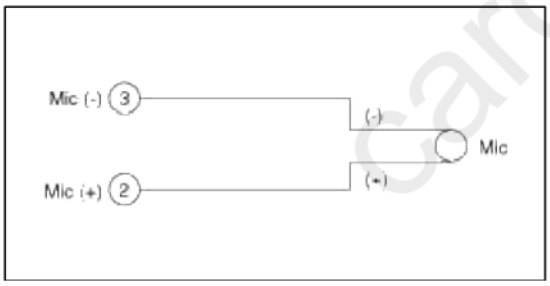

cardiagn.com

Body Electrical System > Hands Free System > Troubleshooting

Troubleshooting

Problem	Possible cause	Solution
Not pairing	Bluetooth device of Car is not discoverable mode	Enter Bluetooth pairing (searching) mode
	User's phone is Bluetooth off mode	User's phone set Bluetooth on
	Making an attempt pairing others bluetooth system	Check Bluetooth device name and address (12 word) to attempt paring Ex) 000B24FFF123
	Pass key error	Input the passkey displayed on the audio screen into the phone.
	5 phones have already been registered.	Delete paired phone list
	Bluetooth system cannot communicate with the phone.	Refer to IOP sheet IOP : Inter-operability
Not connection	User's phone or Bluetooth device of Car dose not register Bluetooth device to connect	Retry pairing
	Bluetooth system cannot communicate with the phone.	Waiting 1minute then Retry connection or phone power off/on. Refer to IOP sheet
Not redial	User phone system issue	Push the 2 times Send button
Not accept call	User phone system issue	Refer to IOP sheet
Not dialing	User's phone playing other menu (internet, mp3, game, etc..)	Stop other menu then set normal mode
	Bluetooth system cannot communicate with the phone	Refer to IOP sheet

Body Electrical System > Panoramaroof > Components and Components Location

Component Location

cardiagn.com

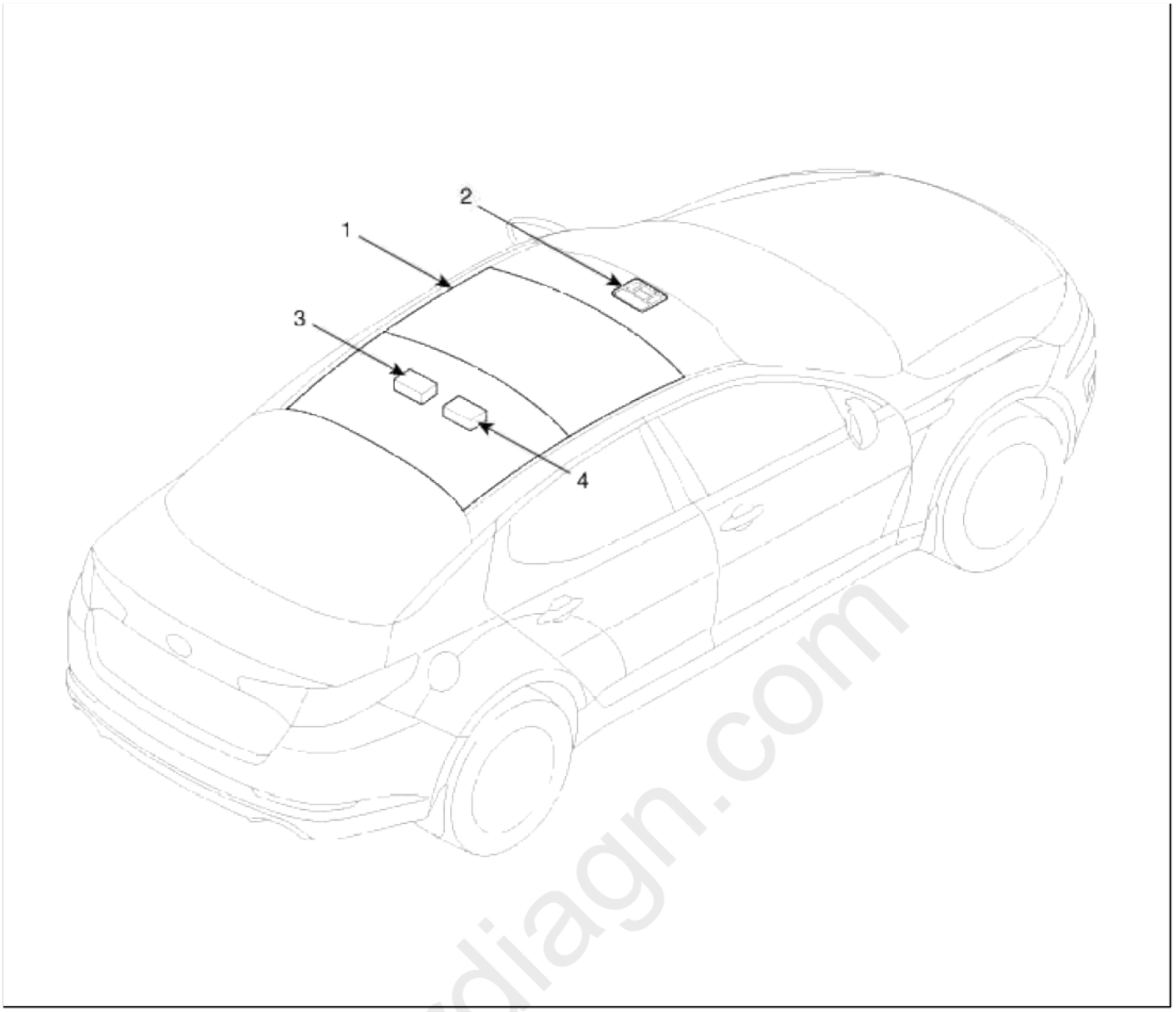

1. Panoramaroof 2. Panoramaroof switch	3. Panoramaroof motor & controller 4. Roller blind motor & slave controller

Cardiagn.com

Body Electrical System > Panoramaroof > Schematic Diagrams

Circuit Diagram (1)

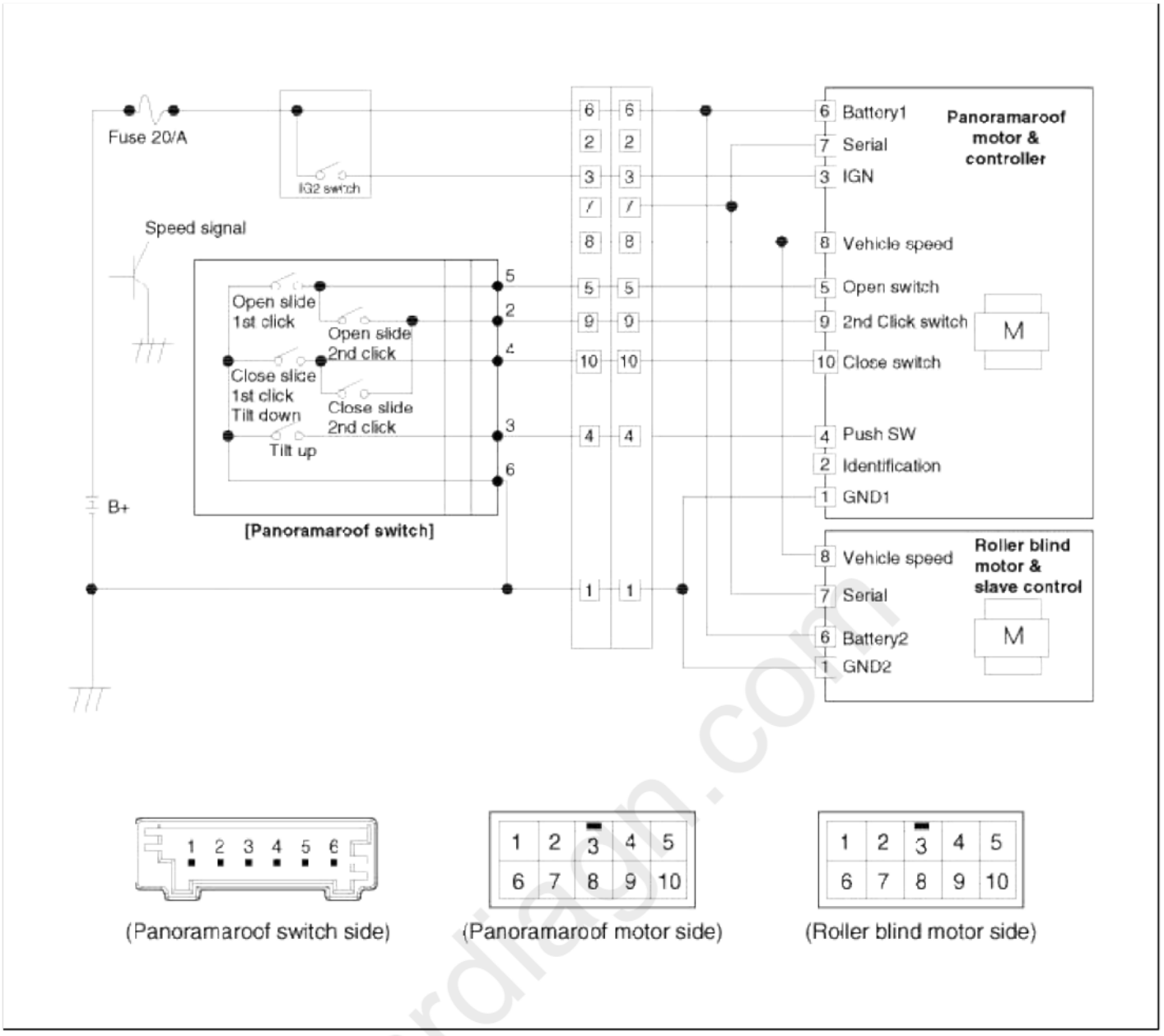

Circuit Diagram (2)

cardiagn.com

[Panoramaroof swich]

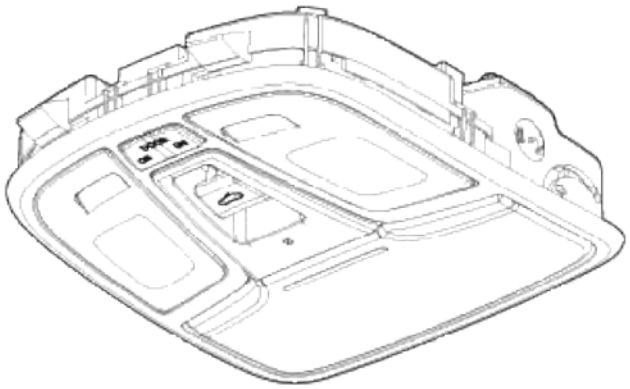

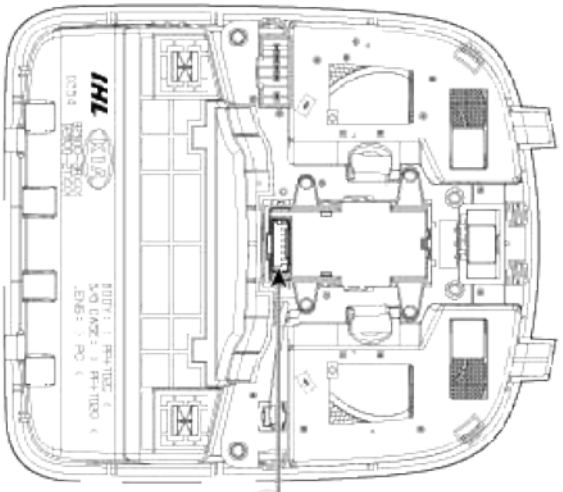

Panoramaroof swich



No.	Description
1	GND
2	-
3	Signal A
4	Signal B
5	Signal C
6	Signal D

cardiagn.com

Body Electrical System > Panoramaroof > Panoramaroof Switch > Repair procedures

Inspection

1. Disconnect the negative (-) battery terminal.
2. Remove the overhead console lamp assembly.
   (Refer to the BD group - "Roof trim")

3. Check for continuity between the terminals.

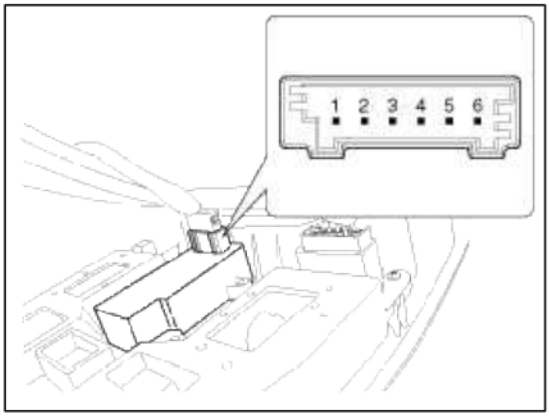

Position \ Terminal	1	3	4	5	6
Open (1st click)	○	○			
Open (2nd click)	○	○			○
Tilt up	○			○	
Tilt down	○		○		
Close (1st click)	○		○		
Close (2nd click)	○		○		○

4. If the continuity is not as specified, replace the panoramaroof switch (A).

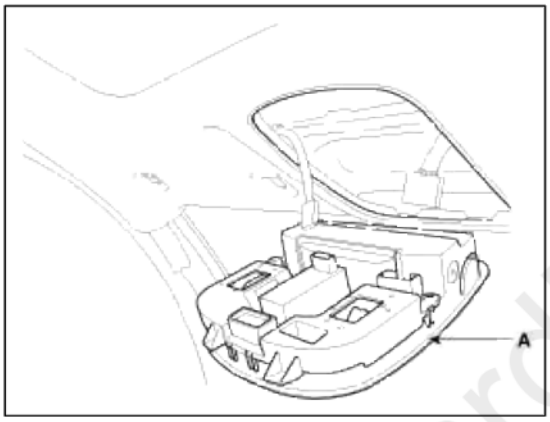

Body Electrical System > Panoramaroof > Panoramaroof Motor > Repair procedures

Inspection

1. Disconnect the negative (-) battery terminal.
2. Remove the roof trim.
   (Refer to the BD group - "Roof trim")
3. Disconnect the panoramaroof motor (A) connector.

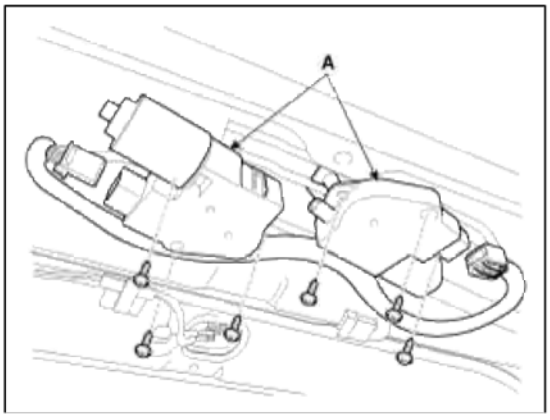

cardiagn.com

4. Ground the terminals as below table, and check that the panoramaroof unit operates.

> NOTE
>
> - When inspecting the panoramaroof motor operation, panoramaroof motor and roller blind motor always should be connected.

Terminal / Position	3	5	10	4	9
Open (1st click)	⊕	⊖			
Open (2nd click)	⊕	⊖			⊖
Tilt up	⊕			⊖	
Tilt down	⊕		⊖		
Close (1st click)	⊕		⊖		
Close (2nd click)	⊕		⊖		⊖

5. Make these input tests at the connector. If any test indicates a problem, find and correct the cause, then recheck the system. If all the input tests prove OK, the panoramaroof motor must be faulty; replace it.

Terminal	Test condition	Test: Desired result
3	IG2 ON	Check for voltage to ground: There should be battery voltage.
1	Under all conditions	Check for continuity to ground: There should be continuity.
6	Under all conditions	Check for voltage to ground: There should be battery voltage.

6. Ground the terminals as below table, and check that the roller blind motor operates.

Terminal / Position	6	1
Motor	⊕	⊖

Resetting The Panoramaroof

Whenever the vehicle battery is disconnected or discharged, or you use the emergency handle to operate the panoramaroof, you have to reset your panoramaroof system as follows :

1. Turn the ignition key to the ON position and then close the panoramaroof completely.
2. Release the panoramaroof control lever.
3. Press and hold the CLOSE button for more than 10 seconds until the panoramaroof has moved slightly.
4. Release the panoramaroof control lever.
5. Press and hold the CLOSE button once again within 3 seconds until the panoramaroof do as follows;
   A. Tilt → Slide Open → Slide Close
   Then release the lever.
6. Reset procedure of panorama system is finished.

Protecting Motor From Overheating

In order to protect the panoramaroof motor from overheating from continuous motor operation, the panoramaroof ECU controls the Run-time and Cool-time of the motor as follows:

1. The panoramaroof ECU detects the Run- time of motor
2. Motor can be operated continuously for the 1st run-time(120 ± 10sec.).
3. The continuous operation of motor stops after the 1st Run-time(120 ± 10sec.).
4. Then Motor is not operated for the 1st Cool-time(18 ± 2sec.).

cardiagn.com

5. Motor is operated for the 2nd Run-time(10 ± 2sec.) at the continued motor operation after 1st Cool-time(18 ± 2sec.)
6. The continuous operation of motor stops operating after the 2nd Run-time(10 ± 2sec.)
7. Motor is not operated for the 2nd Cool-time(18 ± 2sec.).
8. Motor repeats the 2nd run-time and 2nd cool-time at the continued motor operation.
   A. In case that motor is not operated continuously, the run-time is increased.
   B. The Run-Time of motor is initialized to "0" if the battery or fuse is reconnected after being disconnected, discharged or blown.

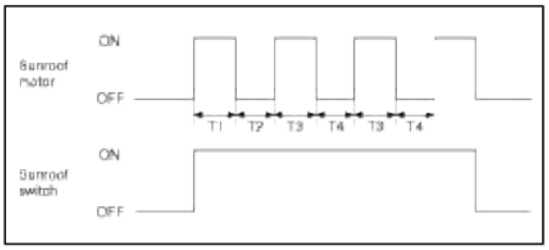

T1 : 120 ± 10 sec., T2 : 18 ± 2 sec.,
T3 : 10 ± 2 sec., T4 : 18 ± 2 sec.

Body Electrical System > Lighting System > Specifications

Specification

Item		Type	Watt (W)
Head lamp	LOW	Bulb (H7)	55
		Bulb (D1S)	35
	HIGH	Bulb (H1)	55
		Bulb (H1)	55
Side marker	FRONT	Bulb (W5W)	5
	REAR	Bulb (W5W)	5
		LED	
Turn signal	FRONT	Bulb (27W)	27
	REAR	Bulb (27W)	27
Position	FRONT	Bulb (8W)	8
Fog lamp	FRONT	Bulb (H8)	35
Tail lamp	REAR(IN)	Bulb (8W)	8
		LED	0.9
	REAR(OUT)	Bulb (8W)	8
		LED	1.6
Stop lamp	REAR(IN)	LED	5.7
	REAR(OS)	Bulb (27W)	27
		LED	7.8
	H.M.S.L	LED	LED
Back up		Bulb (16&18W)	16&18

carmanuals.com

O/Head console	MAP	Bulb (10W)	10
Room lamp	CTR	Bulb (10W)	10
	REAR	Bulb (10W)	10
Side repeater		Bulb (WY5W)	Bulb (WY5W)
		LED	LED
License lamp		Bulb (W5W)	5
Luggage lamp		Bulb(C5W)	5

Body Electrical System > Lighting System > Components and Components Location

Component Location(1)

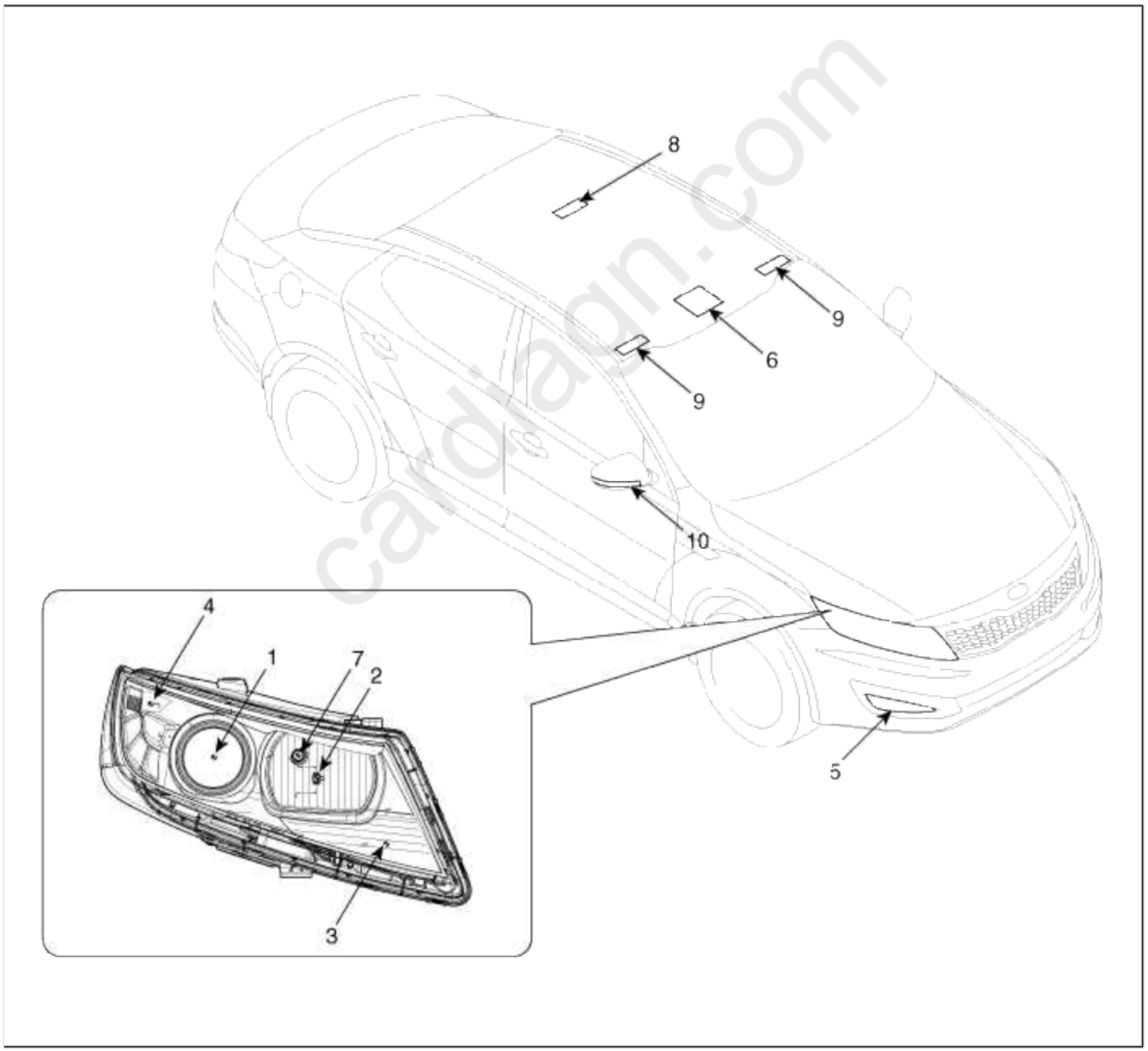

cardiagn.com

1. Head lamp (Low) 2. Head lamp (High) / Head lamp (High) & DRL in Canada 3. Turn signal & position lamp 4. Side marker 5. Front fog lamp	6. Overhead console lamp 7. Dummy 8. Room lamp 9. Vanity lamp 10. Door mirror side repeater(LED)

Component Location(2)

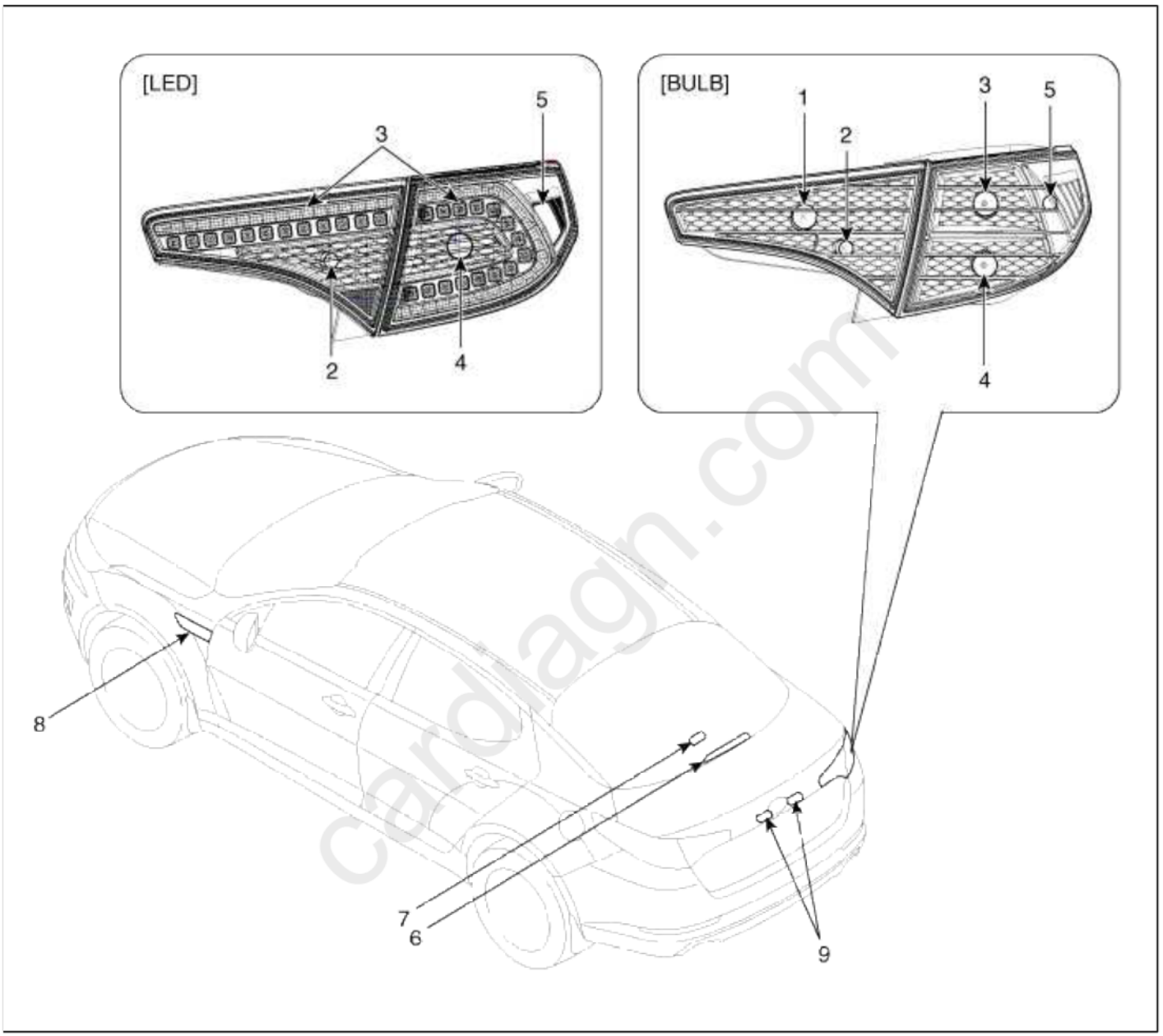

1. Tail lamp 2. Back up lamp 3. Stop/Tail lamp 4. Rear turn signal lamp 5. Side marker	6. High mounted stop lamp 7. Luggage lamp 8. Side repeater 9. License plate lamp

Body Electrical System > Lighting System > Head Lamps > Components and Components Location

Component(1)

[General]

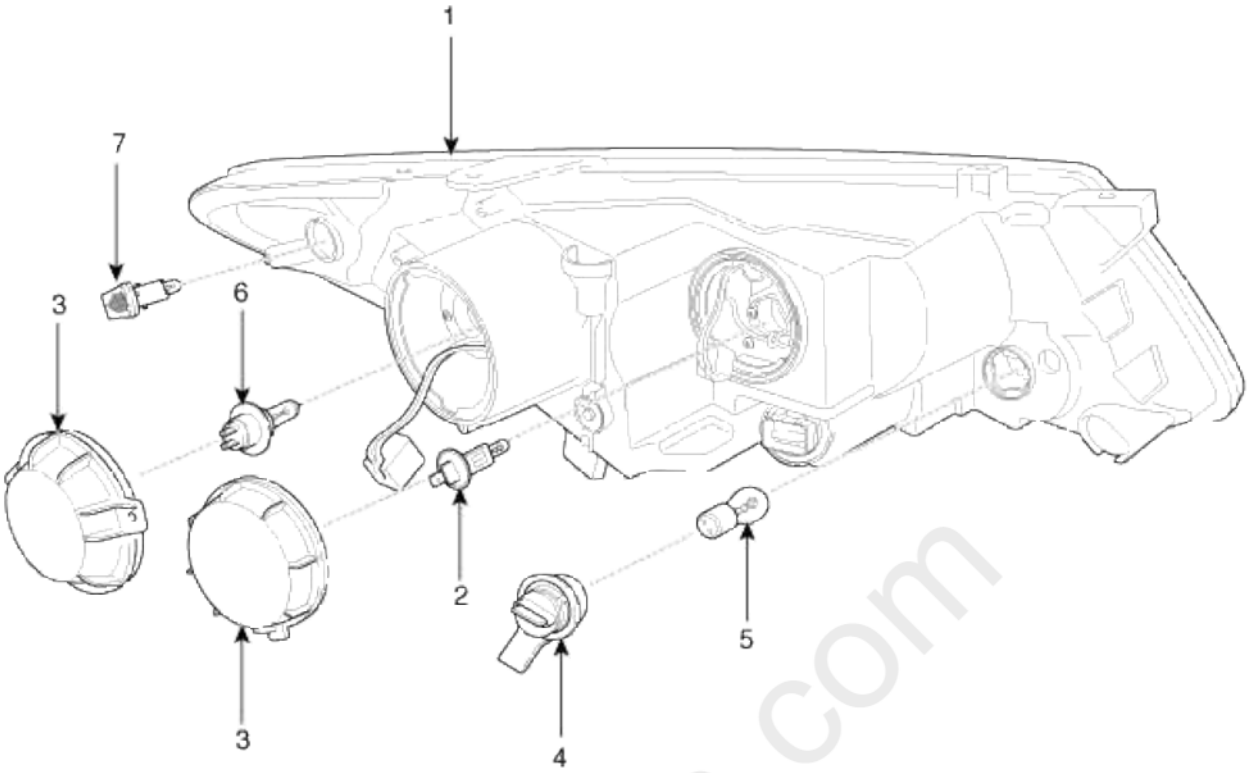

1. Head lamp assembly lens & housing 2. Head lamp (High) lamp 3. Dust cap 4. Socket	5. Turn signal/ Position lamp 6. Head lamp (Low) lamp 7. Side marker

Component(2)

cardiagn.com

[HID]

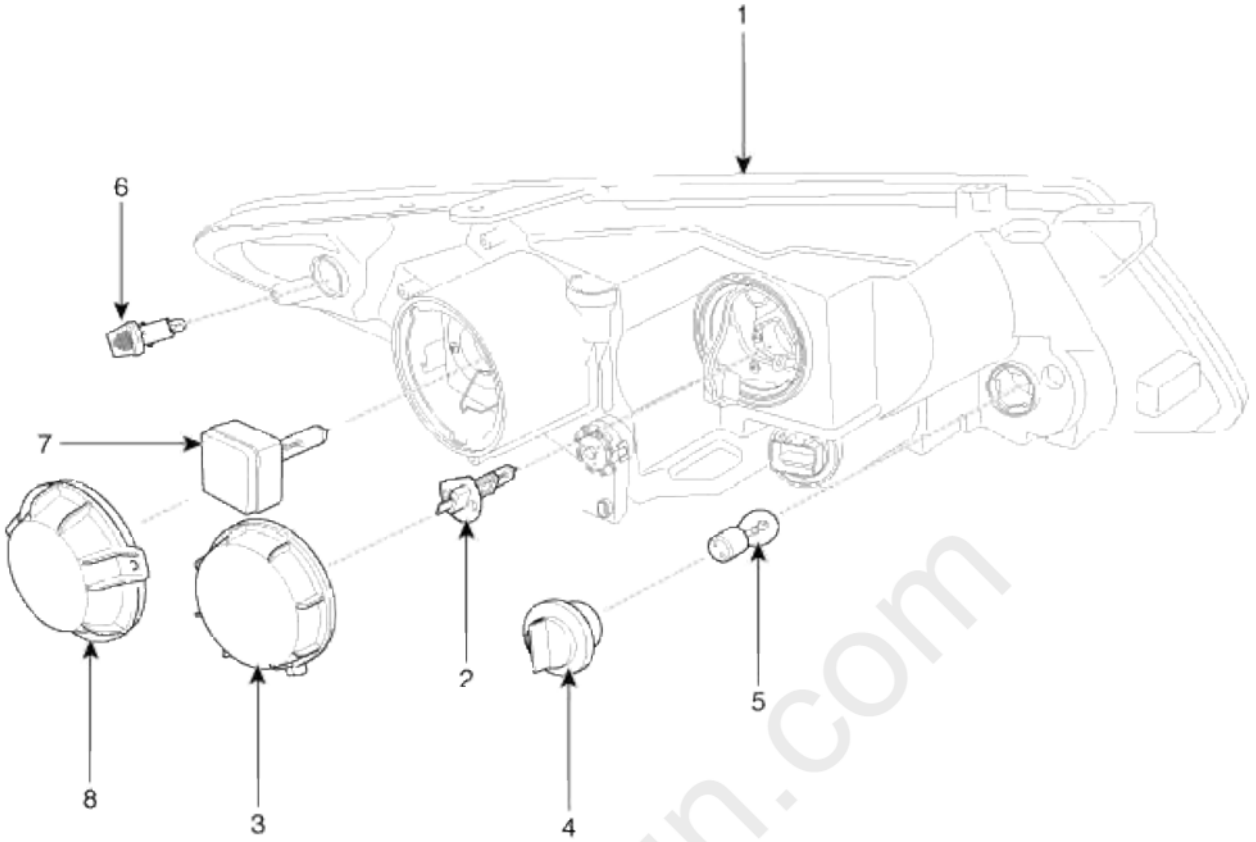

1. Head lamp assembly lens & housing 2. Head lamp (High) lamp 3. Dust cap 4. Socket	5. Turn signal/ Position lamp 6. Side marker 7. Head lamp(LOW) bulb (HID) & Ignitor 8. Dust cover(LOW)

cardiagn.com

Body Electrical System > Lighting System > Head Lamps > Description and Operation

HID Head Lamp

1. Bulb
   (1) Elements
   Xenon gas: Xenon gas activates the initial reaction for rapid illuminating.
   Molybdenum electrode: anode arcing
   Metal halide salts: color composing component
   (2) Lightening principle
   When Xenon gas and metal halide salt will discharge the molybdenum anode in a capsule, it emits light.

2. Ignitor

Ignitor (A) is an electromagnetic transformer that receives current from ballast and boost voltage to light on the arc light source in any environment.

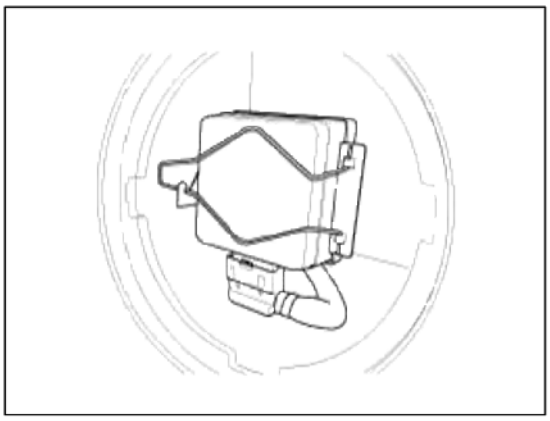

3. Ballast

(1) Ballast (A) delivers an instant high voltage pulse to the ignitor electrode, to initialize discharge in the source.

(2) Ballast supplies the stable power to the bulb and the ignitor during initialization and normal state of arc.

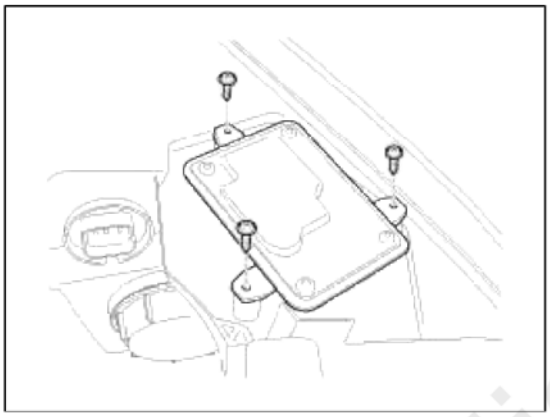

4. Stability

(1) Durable for vibration as there is no filament.

(2) Does not operate if polarity are changed.

(3) Doesn't operate if the input voltage is not in the range of 10-16V.

(4) Doesn't operate if the circuit is short.

(5) Doesn't operate if the bulb burnt out.

cardiagn.com

Body Electrical System > Lighting System > Head Lamps > Repair procedures

Inspection

1. Check-points upon head lamp failure (HID)
   (1) Check the battery voltage. (Low beam will be on when the battery voltage above 9V.)
   (2) Check the fuse and relay.
   (3) Check the polarity of ballast. (If the polarity are changed, low beam doesn't lighten)
   (4) Check the bulb connector securely.
   (5) Visually bulb checking (no filament): damaged glass, damaged for upper parts and lower parts of glass tube.
   (6) After (1)~(5), replace the ballast and the ignitor. (ballast assembly).

> **CAUTION**
>
> If a headlamp goes out after a period of operation but will immediately relights when the headlamp switch is cycled it is likely the HID lamp needs to be replaced.

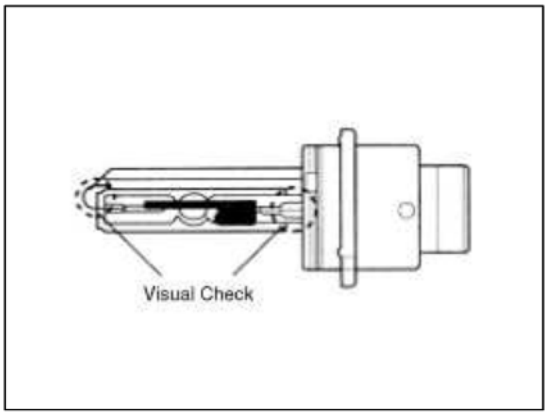

2. Service procedure and warning (HID)

No.	Item	Service procedures	Warning	Remarks
1	Replacement of lamp assembly	1. Disconnect the power connector from the lamp. 2. Remove and replace the lamp assembly. 3. Connect the power connector.	• Disconnect the head lamp power connector to avoid high voltage.	• Other description is the same as the halogen bulbs.
2	Replacement of the Bulb	1. Disconnect the power connector from the lamp. (head lamp, turn signal, head lamp leveling device) 2. Remove the lamp assembly. 3. Remove the ballast and dust cover. 4. Remove the bulb socket and replace the bulb. 5. Installation is the reverse of removal.	• Disconnect the head lamp power connector to avoid high voltage. • Be careful not to damage the bulb and use genuine bulbs only. • Do not apply excessive force and fit it correctly.	
		1. Disconnect the power connector from the lamp.		

cardiagn.com

3	Replacement of the Ballast (with built-in ignitor)	2. Remove the lamp and then the ballast and the dust cover. 3. Remove the head lamp leveling device and then the bulb socket. 4. Connect the bulb socket on the replacement ballast and install the leveling device. 5. Installation is the reverse of removal.	• Disconnect the head lamp power connector to avoid high voltage.	• Replace the ballast only and install the used lamp. • Replace the sub assembly except the ballast.
4	Others	1. Power supply should be according to the rated capacity. 2. Use the rated fuse and wire. 3. Bulb socket shall be free from moisture or dirt. 4. Do not apply the ballast severe shock, water, or extreme	• All parts should be serviced only at specified service centers.	• HID lamp should not be installed on other cars (Dangerous, fire may occur.)

CAUTION

HID lamp shall not be used on other cars.(Fire may occur.)
Fire may occur when HID lamp initially lights due to the fact that arc-discharge generates high voltage (max. 30,000V) and high current (12-13A), and are different from the halogen lamp specification.

3. Understanding of color change by replacement of HID bulb.
   (1) The cause of HID color change.
   (Change of color is HID feature)
   A. The change of color occur during mixing three Elements in the HID bulb.

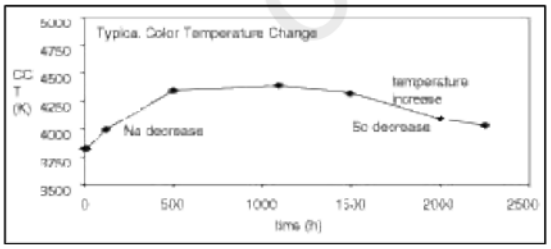

   B. Color Coordinates by Lifetime

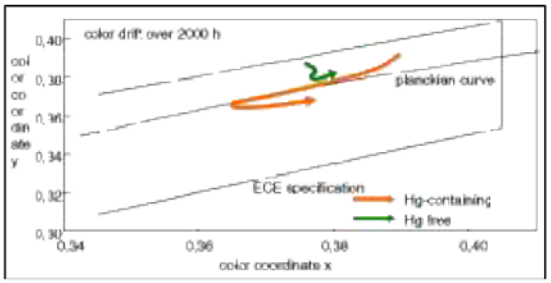

   C. Chemical compounds in an arc tube :
   1. Xenon gas(an inert gas , protection of arc tube)
   2. Mercury(increase voltage, protection of arc tube, blue in the first 3 second)

carorigin.com

3. Metal halide
   - Natrium(Yellow) : 0.12mg
   - Scandium(Blue) : 0.06mg
   - Iodine(Halogen) : 0.02mg

(2) Change of Color by Lighting Up Time

A. It needs 4 seconds at least for stabilization.
   At first, you can see the blue for 3 seconds because of Mercury.

B. After stabilization, change of color occur by metal halide.
   - 0 Hour : Yellow(Na is more than Sc.)
   - 10 Hour : Bright Blue (Na and Sc are similar ratio.)
   - 1000Hour more : Blue (Sc is more than Na.)

C. The end of lifetime : When HID used up Natrium and Scandium, a beam of light will be dark suddenly.
   so you can see the red, purple and turn on and off.

Characteristic

1. Durable for vibration as there is no filament.
2. HID lamp had a more long life than halogen lamp.
3. Does not operate if polarity is changed.
4. Operating input voltage : 9-16V

Removal

1. Disconnect the negative (-) battery terminal.
2. Remove the front bumper.
   (Refer to the BD group - "Front bumper")
3. Loosening the head lamp mounting bolts (A) (2EA) and disconnect the head lamp connector (B). Then, remove the head lamp assembly (C).

NOTE

- Take care not to scratch the head lamp lens or fender.

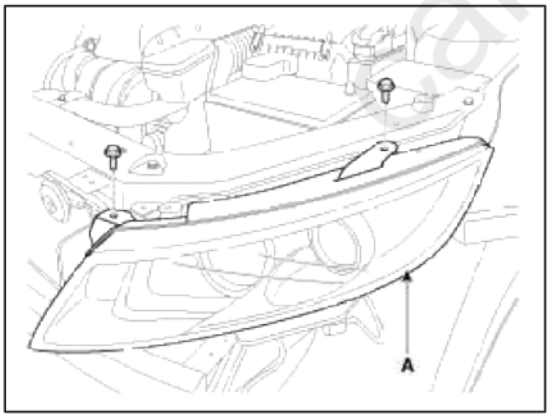

cardiagn.com

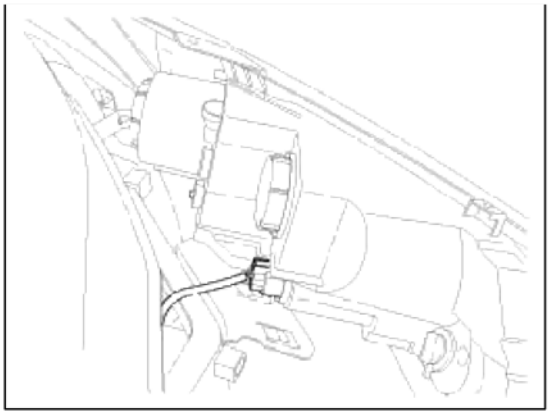

NOTE

Take care that holding clip (A) is not to be damaged.

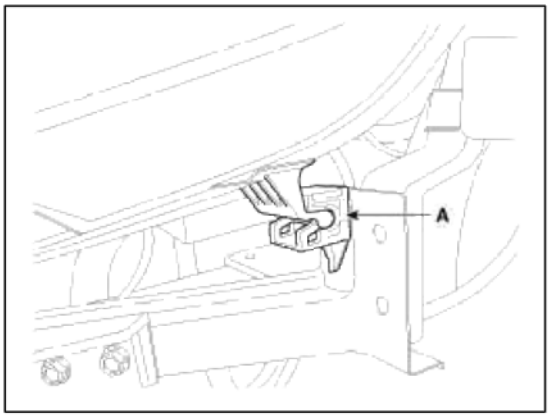

4. In case of HID type, disconnect the head lamp leveling actuator connector (A).

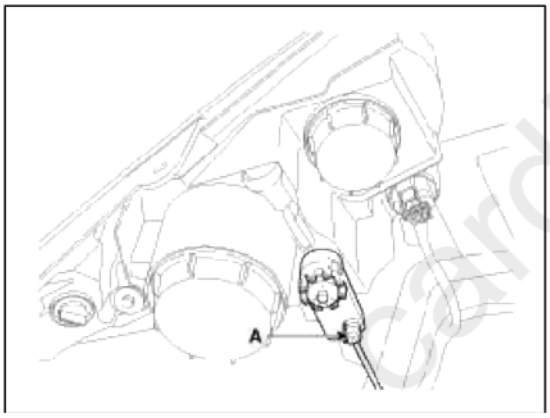

cardiagn.com

5. Remove the dust caps from the head lamp assembly after turning in the counter clock-wise direction.
   A : Head Lamp (High) Cap
   B : Head Lamp (Low) Cap

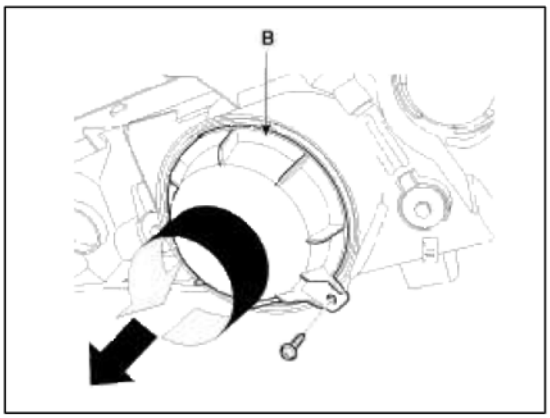

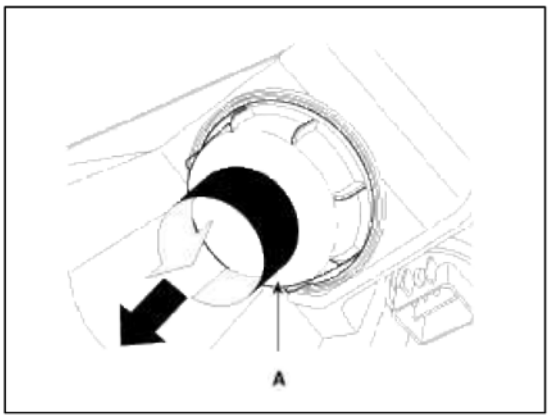

Installation

1. Install the head lamp bulbs.
2. Connect the connectors.
3. Install the head lamp bolts (2EA).
4. Connect the negative (-) battery terminal.

Head Lamp Aiming Instructions

<Mechanical aiming>

The head lamps should be aimed with the proper beam-setting equipment, and in accordance with the equipment manufacturer's instructions.

NOTE

If there are any regulations pertinent to the aiming of head lamps in the area where the vehicle is to be used, adjust so as to meet those requirements.

Alternately turn the adjusting gear to adjust the head lamp aiming. If beam-setting equipment is not available, proceed as follows:

1. Inflate the tires to the specified pressure and remove any loads from the vehicle except the driver, spare tire, and tools.
2. The vehicle should be placed on a flat floor.
3. Draw vertical lines (Vertical lines passing through respective head lamp centers) and a horizontal line (Horizontal line passing through center of head lamps) on the screen.

cardiagn.com

4. With the head lamp and battery in normal condition, aim the head lamps so the brightest portion falls on the horizontal and vertical lines.
   A : Horizontal (HI & LOW)

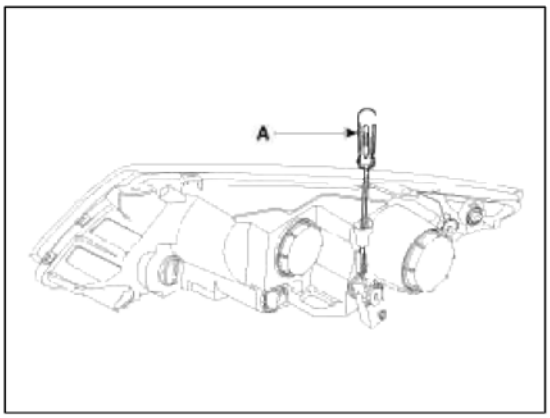

Front Fog Lamp Aiming

The front fog lamps should be aimed as the same manner of the head lamps aiming.

With the front fog lamps and battery normal condition, aim the front fog lamps by turning the adjusting screw (A) with a driver.

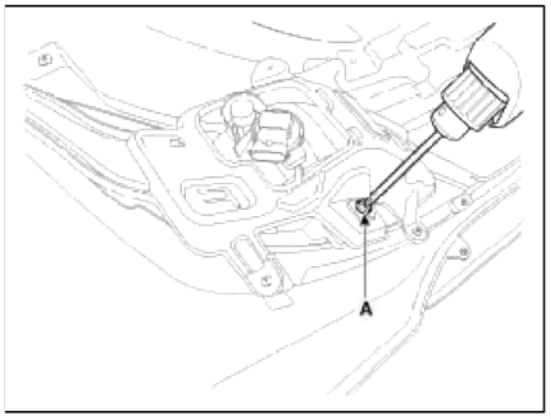

Head Lamp And Fog Lamp Aiming Point

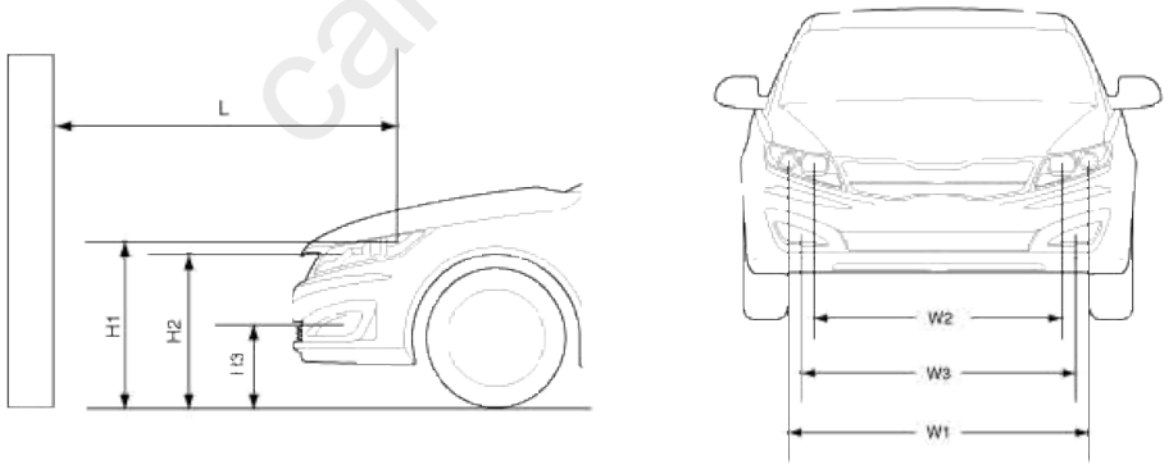

H1 : Height between the head lamp bulb center and ground (Low beam)
H2 : Height between the head lamp bulb center and ground (High beam)
H3 : Height between the fog lamp bulb center and ground
W1 : Distance between the two head lamp bulbs centers (Low beam)
W2 : Distance between the two head lamp bulbs centers (High beam)
W3 : Distance between the two fog lamp bulbs centers
L : Distance between the head lamp bulb center and screen

cardiagn.com

Unit : in(mm)

Vehicle condition	H1	H2	H3	W1	W2	W3	L
Without driver	28.1(715)	27.1(690)	13.6(347)	53.4(1,356)	44.3(1,126)	52.1(1,323)	Refer to aiming condition
With driver	27.9(710)	26.9(685)	13.4(342)				

1. Head Lamp (Low beam)
   A. Turn the low beam on without driver aboard.
   B. The cut-off line should be projected in the cut-off line shown in the picture.
   C. If head lamp leveling device is equipped, adjust the head lamp leveling device switch with 0 positions.

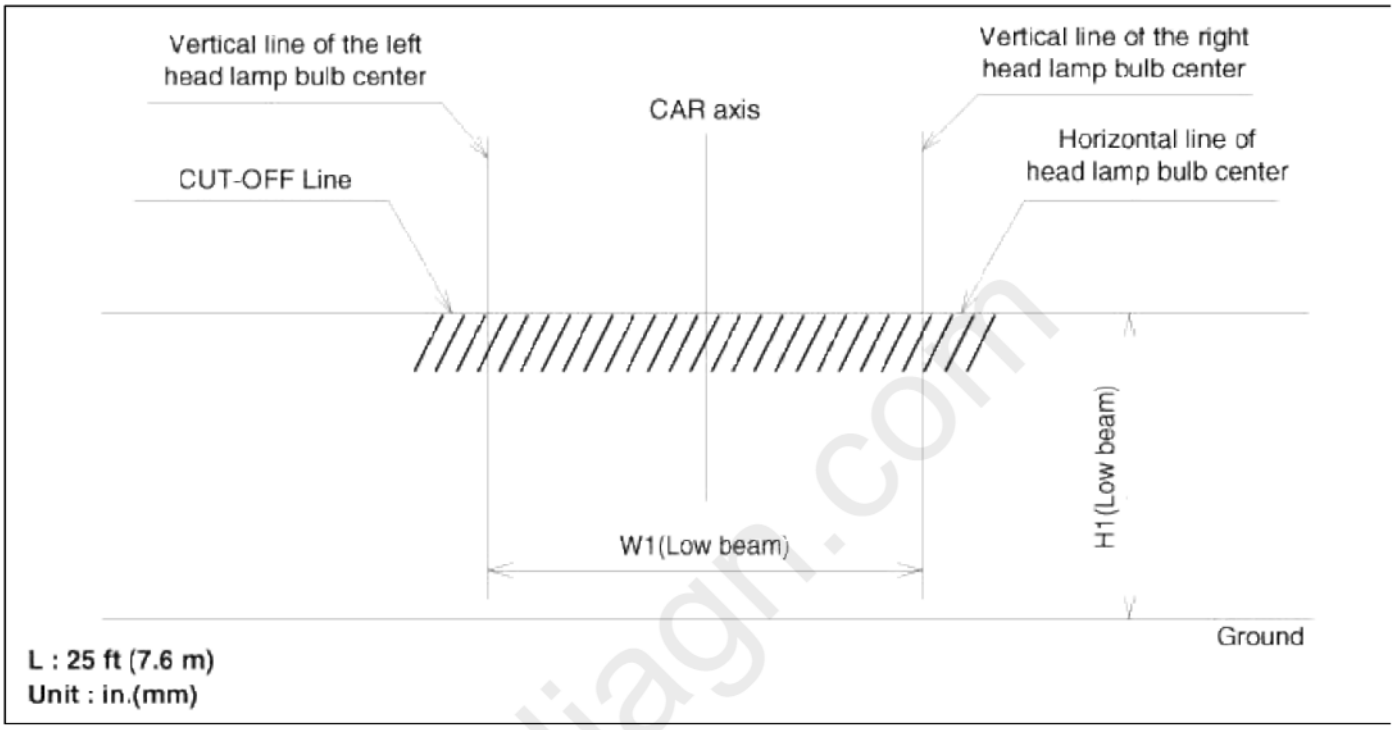

L : 25 ft (7.6 m)
Unit : in.(mm)

2. Turn the front fog lamp on without the driver aboard.
   The cut-off line should be projected in the allowable range (shaded region)

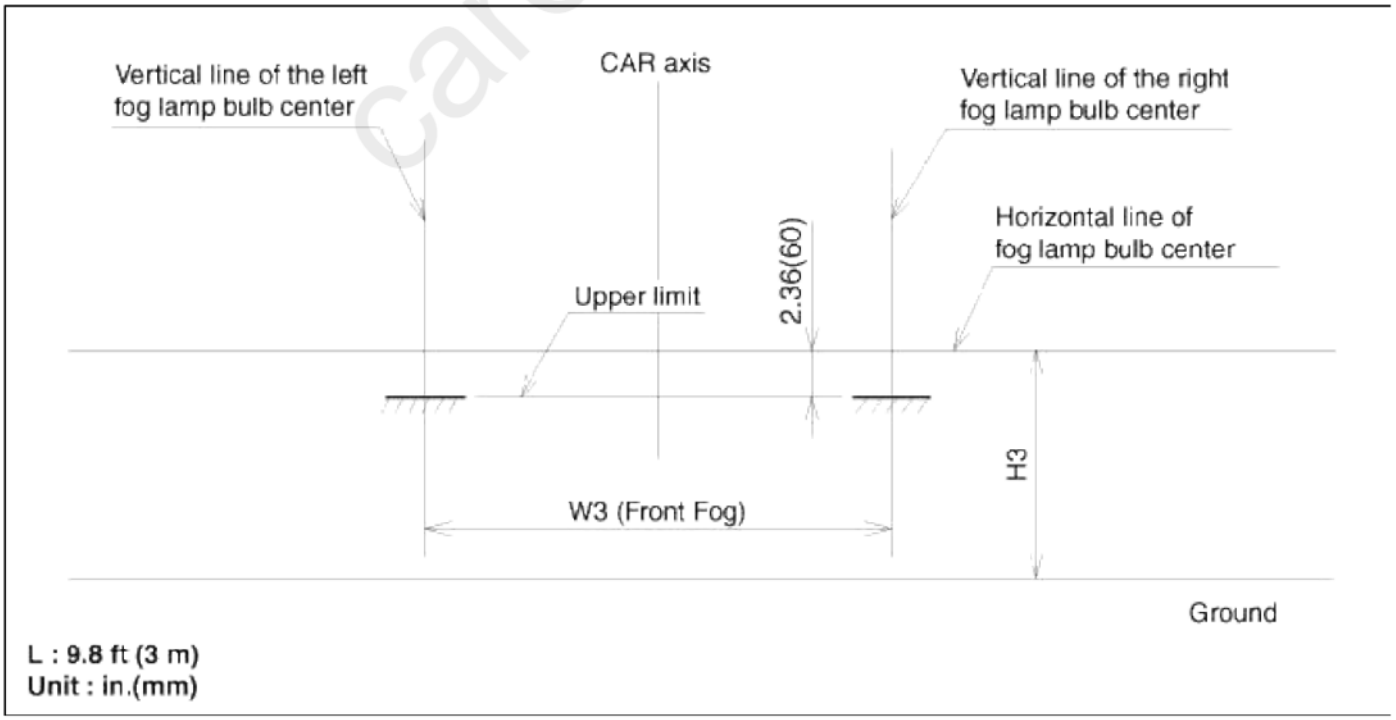

L : 9.8 ft (3 m)
Unit : in.(mm)

Replacement

cardiagn.com

Head Lamp (Low)

[General type]

1. Turn the head lamp switch off.
2. Disconnect the power connector from the lamp.
3. Remove the head lamp (Low) cap.
4. Disconnect the connector (A).
5. Turn the bulb and socket (A) counter clockwise to remove the turn signal bulb.

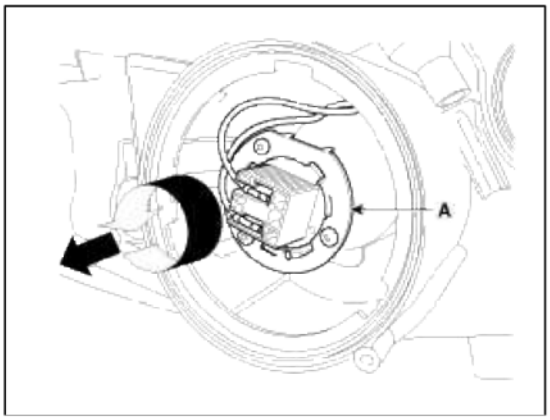

6. Installation is the reverse of removal.

Head Lamp (Low)

[HID type]

1. Turn the head lamp switch off.
2. Disconnect the power connector from the lamp.
3. Remove the head lamp (Low) cap.
4. Remove the clip (B) and ignitor connector (A) from the lamp assembly.

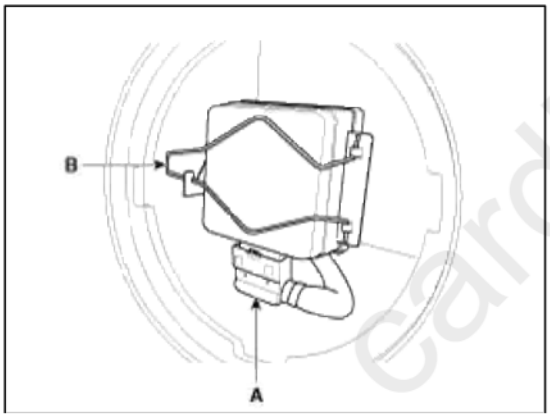

5. Remove the head lamp (Low) ignitor.
6. Installation is the reverse of removal.

> CAUTION
>
> Turn the head lamp switch off to avoid high voltage
> Be careful not to damage the bulb and use genuine bulbs only
> - Do not apply excessive force and fit it correctly.
> - Confirm the bulb locking

Ballast

1. Turn the head lamp switch off.
2. Remove the head lamp assembly.
3. Disconnect the power connector from the lamp.

cardiagn.com

4. Remove the ballast (A) after removing the screws (3EA) and connector.

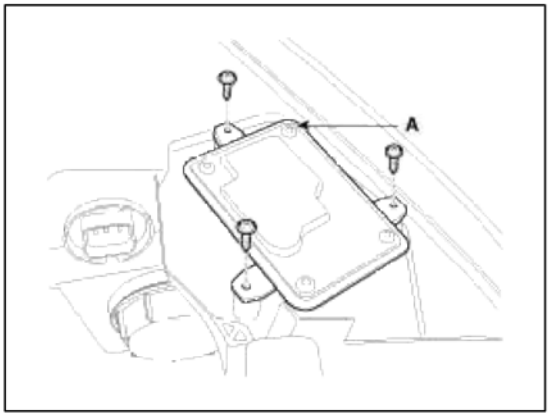

NOTE

Be careful not to be damaged when disconnecting the ballast connector.

5. Installation is the reverse of removal.

NOTE

- Turn the head lamp switch off to avoid high voltage.

CAUTION

- HID lamp shall not be used on other cars.(Fire may occur.)
- Fire may occur when HID lamp initially lights due to the fact that arc-discharge generates high voltage (max. 20,000V) and high current (12-13A), and are different from the halogen lamp specification.
- Install the dust cover after confirming the locking state between bulb and bulb holder.
- When testing the HID head lamp, turn the power on or off with switch between power supply and lamp because of high voltage.
- Do not operate the head lamp switch with the bulb not installed, because it generates spark momently.

Head lamp(High) bulb

1. Turn the head lamp power off.
2. Disconnect the power connector from the lamp.
3. Remove the head lamp (High) cap.
4. Remove the connector (A) and fixing clip (B).

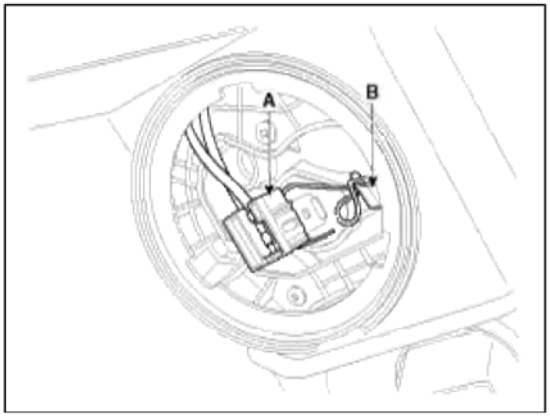

5. Remove the head lamp (High) bulb.
6. Installation is the reverse of removal.

Side Marker Lamp

cardiagn.com

1. Turn the head lamp power off.
2. Remove the lamp assembly.
3. Turn the bulb socket (A) counterclockwise to remove the bulb (B).

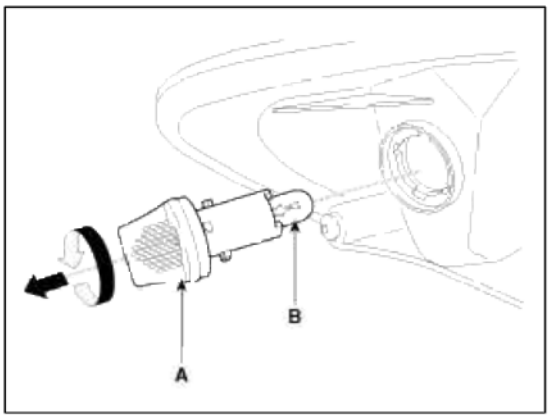

4. Installation is the reverse of removal.

Body Electrical System > Lighting System > Room Lamp > Repair procedures

Inspection

Room Lamp

1. Check that the switch operates properly after disconnecting the room lamp connector (A).

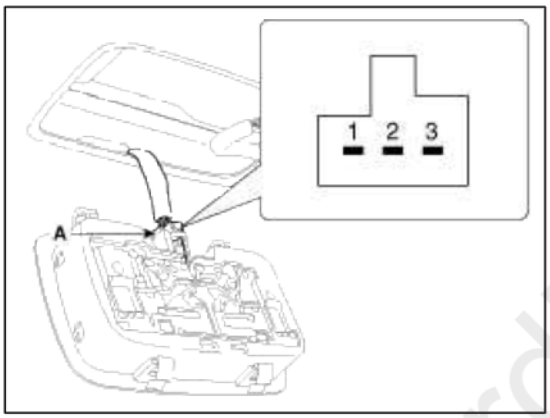

[A type]

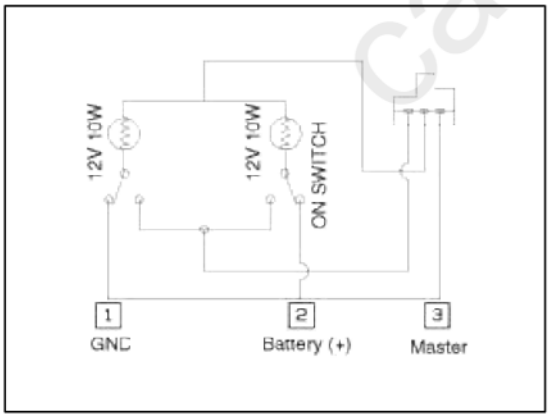

[B type]

cardiagn.com

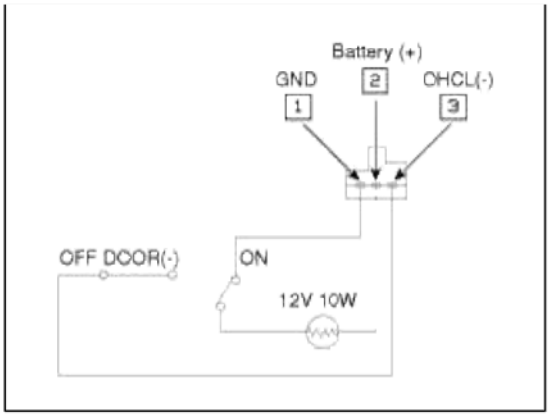

Terminal / Position	1	2
ON	○	○
OFF		

Removal

Room Lamp

1. Disconnect the negative(-) battery terminal.
2. Carefully remove the lamp lens (A) from the room lamp with a flat-tip screwdriver.

> NOTE
>
> Take care not to damage the part (B)

[A type]

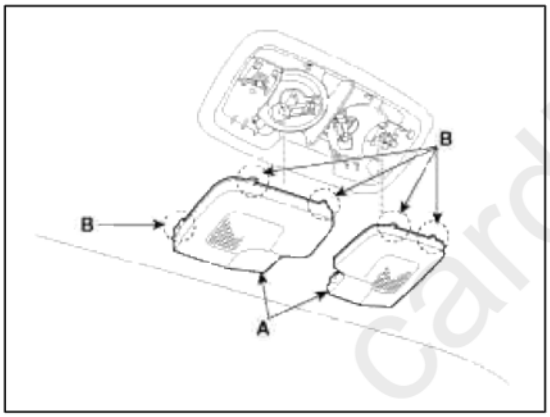

[B type]

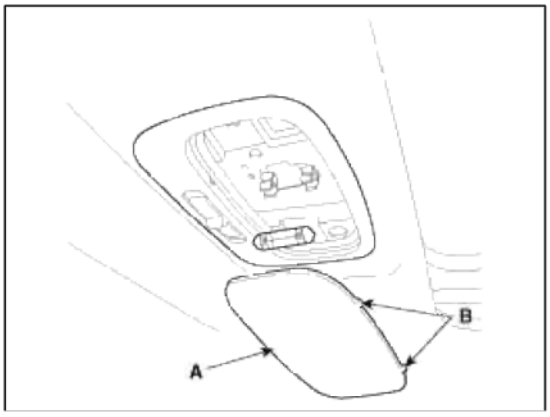

cardiagn.com

3. Replace the bulbs (A) and remove the screws if it is necessary.

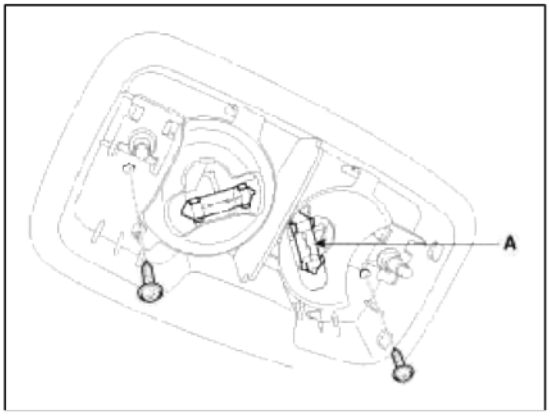

4. Remove the room lamp assembly (A) after disconnecting the connector (B).

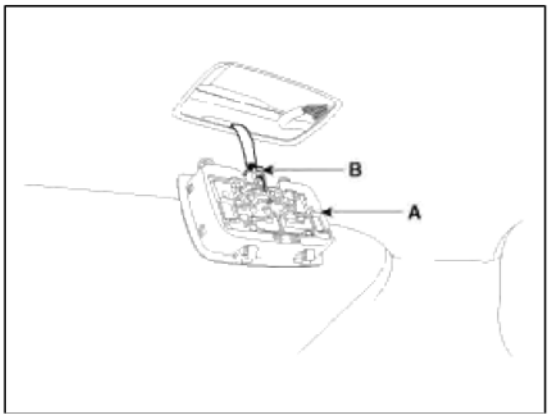

Vanity Lamp

1. Disconnect the negative (-) battery terminal.
2. Remove the vanity lamp (A) by pressing the clip (B) with a small screwdriver.

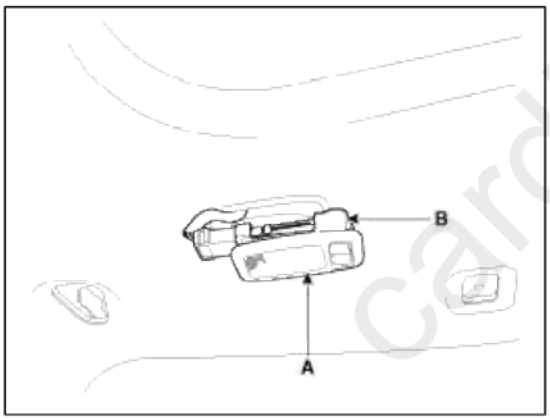

3. Remove the vanity lamp assembly after disconnecting the connector.

Installation

Room Lamp

1. Reconnect the connector.
2. Install the room lamp assembly.
3. Install the lens.

Vanity Lamp

1. Reconnect the vanity lamp connector.
2. Install the vanity lamp.

Body Electrical System > Lighting System > Overhead Console Lamp > Schematic Diagrams

Circuit Diagram

cardiagn.com

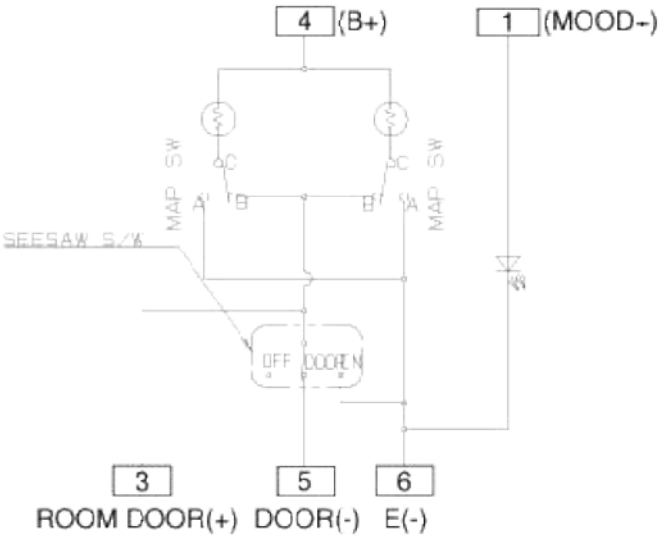

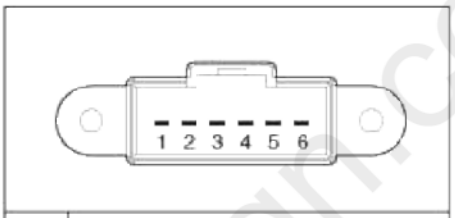

No.	Description
1	Mood (+)
2	-
3	Room door (+)
4	B (+)
5	Door (-)
6	GND

cardiagn.com

Body Electrical System > Lighting System > Overhead Console Lamp > Repair procedures

Inspection

Remove the overhead console lamp assembly then check for continuity between terminals. If the continuity is not as specified, replace the map lamp switch.

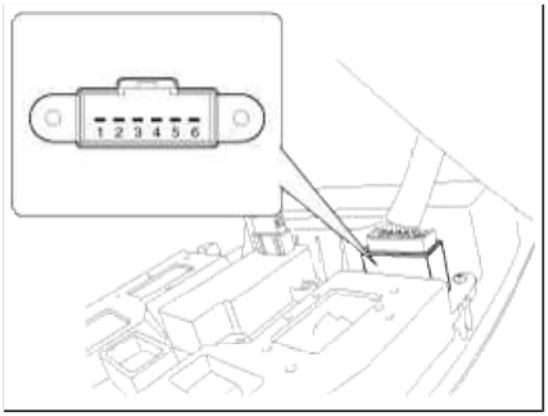

Item / Position / Terminal	Map lamp switch			
	Left		Righ:	
	ON	OFF	ON	OFF
6	●		●	
4	●		●	

Removal

1. Disconnect the negative (-) battery terminal.
2. Loosen 2 screws holding the overhead console (A).

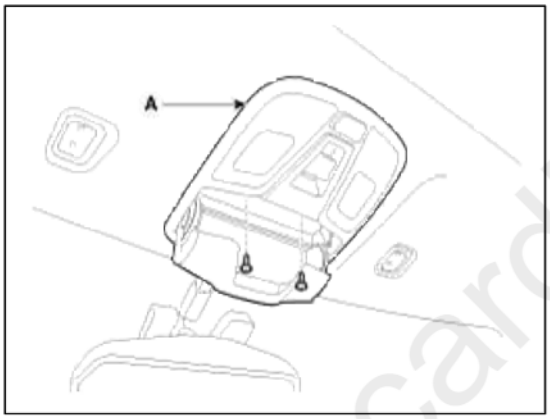

3. Disconnect the connectors of sunroof switch (A) and lamp switch (B) then remove the overhead console lamp assembly.

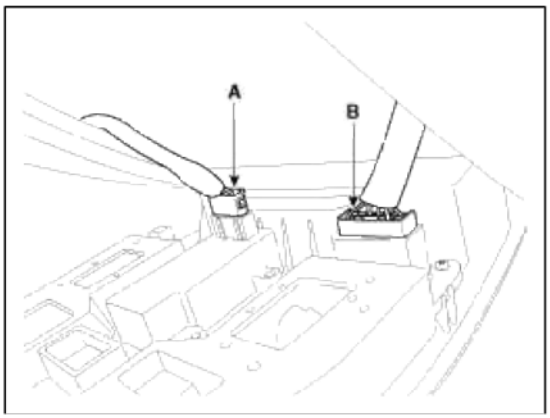

cardiagn.com

4. If necessary to replace the bulb, replace the bulb (C) after disconnecting the connectors.

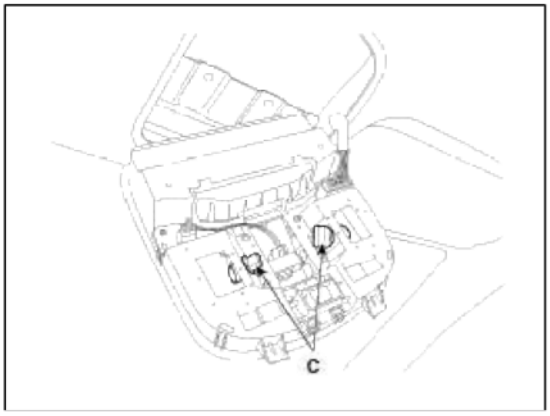

Installation

1. Install the overhead console lamp after connecting the sunroof switch connector and lamp connector.
2. Install the lens after tightening 2 screws.

Body Electrical System > Lighting System > License Lamp > Repair procedures

Removal

1. Disconnect the negative(-) battery terminal.
2. Remove the lens trunk trim.
   (Refer to the BD group - "Trunk")
3. Replace the bulb (A) by turning it counterclock wise.

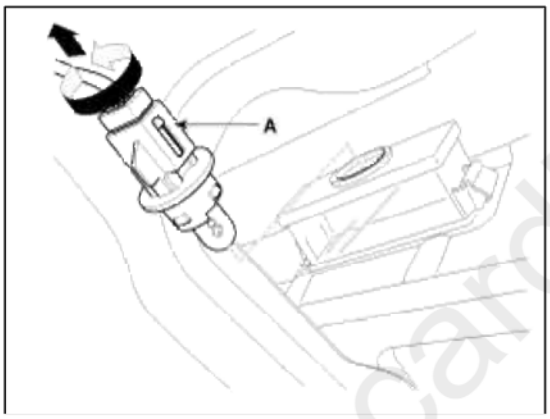

Installation

1. Install the bulb.
2. Install the trunk trim.

Body Electrical System > Lighting System > Hazard Lamp Switch > Repair procedures

Inspection

1. It will be able to diagnose defects of hazard switch with GDS quickly. GDS can operates actuator forcefully, input/output value monitoring and self diagnosis.
2. Select model and "BCM".
3. Select the "SJB" to check.

cardiagn.com

4. Select "Current data", if you will check current data of hazard switch. It provides input/output status of SJB.

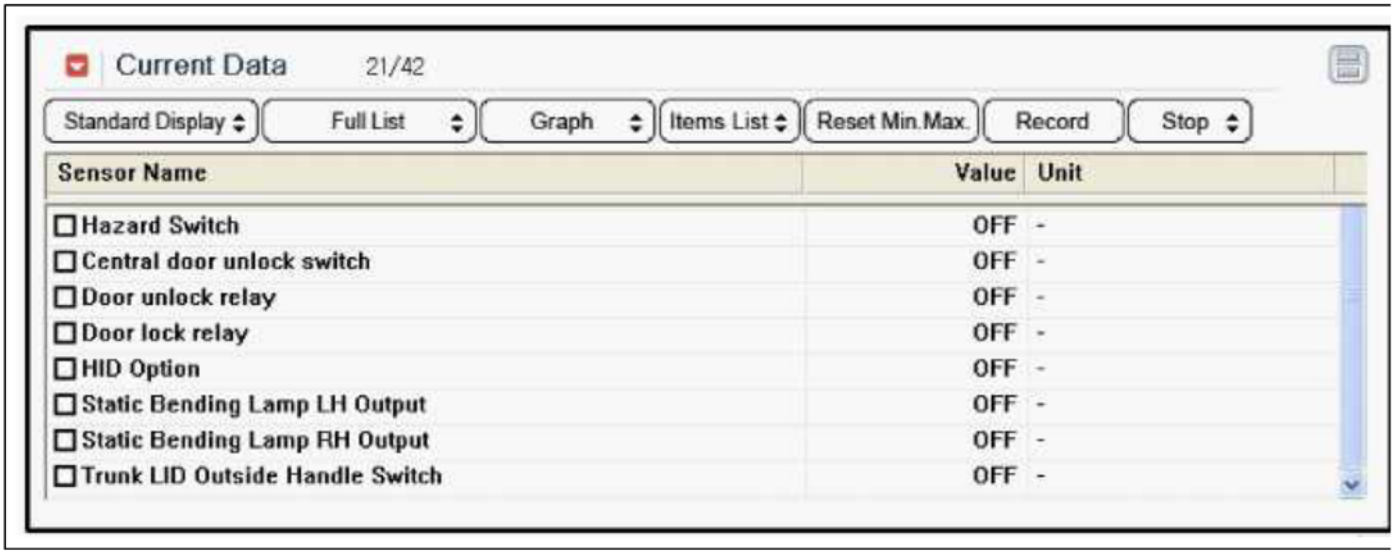

Removal

1. Disconnect the negative(-) battery terminal.
2. Remove the heater comtral module.
   (Refer to the HA group - "Controller")

Installation

1. Install the heater control module.

Body Electrical System > Lighting System > Rheostat > Repair procedures

Inspection

1. Disconnect the negative (-) battery terminal.
2. Remove the crash pad lower panel.
   (Refer to the BD group - "Crash pad")
3. Remove the crash pad side switch assembly (A) as shown below picture.

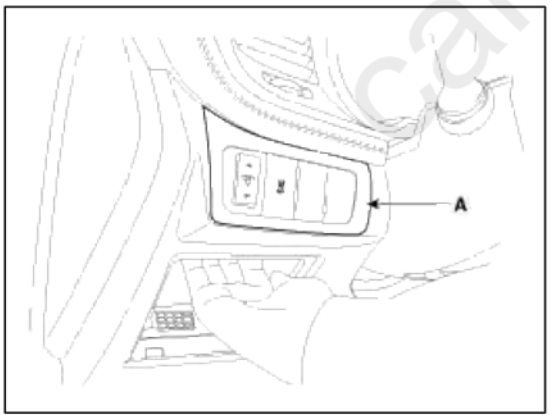

NOTE

Put on gloves to protect your hands.

cardiagn.com

4. Disconnect the rheostat connector (A) from lower crash pad switch.

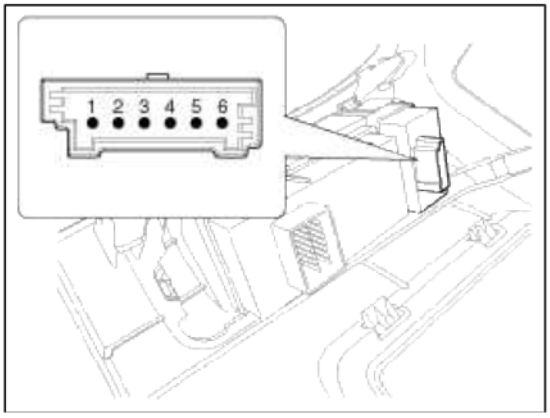

5. Operate the rheostat switch and check for continuity between terminals.

Terminal / Position	Up	Down	Remark
2	○	○	GND
6	|	○	Down
5	○		Up
1	○		ILL (-)
4	○ ~		ILL (+)

Body Electrical System > Lighting System > Front Fog Lamps > Repair procedures

Inspection

1. Disconnect the negative(-) battery terminal.
2. Remove the lighting switch of the multi-function switch. (Refer to the multi-function switch)
3. With the front fog lamp switch, make sure that continuity exists between the terminals below. If continuity is not as specified, replace the multi-function switch.

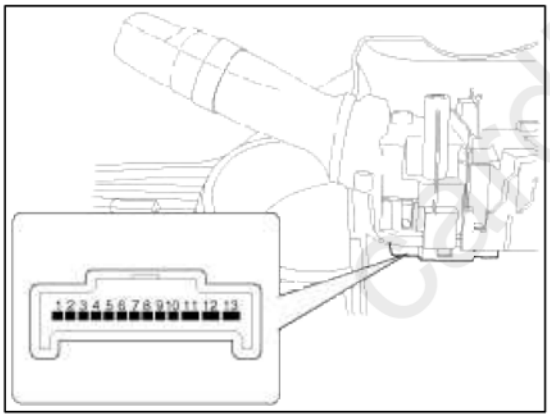

Front Fog Lamp

Terminal / Position	5	6
OFF		
ON	○	○

Removal

1. Disconnect the negative (-) battery terminal.
2. Remove the front wheel guard clip(2EA). (Refer to the BD group - "Front bumper")

cardiagn.com

3. Disconnect the front fog lamp connector (A).

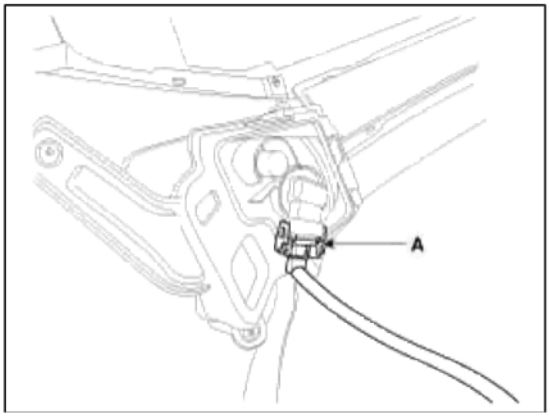

4. Replace the front fog bulb (A) turning it in the counter clock-wise direction.

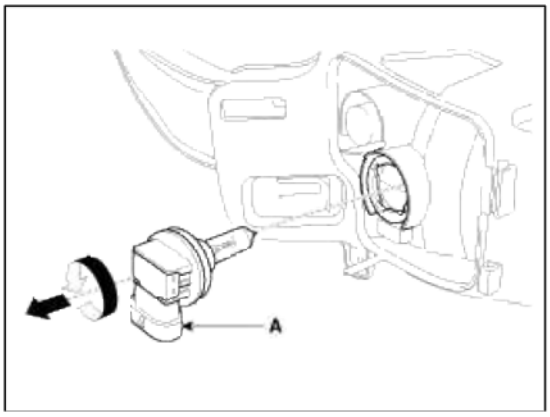

Installation

1. Install the front fog bulb.
2. Reconnect the lamp connector.
3. Install the front bumper.

Body Electrical System > Lighting System > High Mounted stop lamp > Repair procedures

Removal

1. Disconnect the negative(-) battery terminal.
2. Remove the rear seat.
   (Refer to the BD group - "Rear seat")
3. Remove the package tray trim (A).
   (Refer to the BD group -"Interior trim")



cardiagn.com

4. Remove the soundproofing felt (A) to remove the wiring.

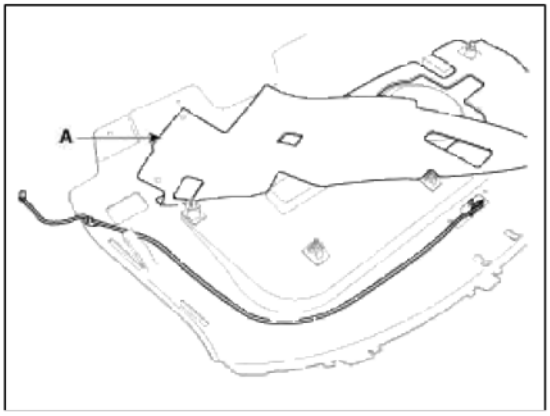

5. Remove the high mounted stop lamp after removing screws and hook (A) carefully.

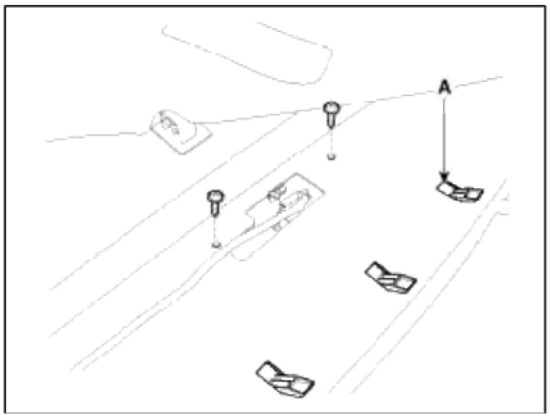

Installation

1. Install the high mounted stop lamp to the rear package tray.
2. Install the rear package tray trim.
3. Install the rear seat.

Body Electrical System > Lighting System > Rear combination lamp > Repair procedures

Removal

Rear Combination lamp (Outside)

1. Disconnect the negative (-) battery terminal.
2. Remove the rear combination lamp cover (A).

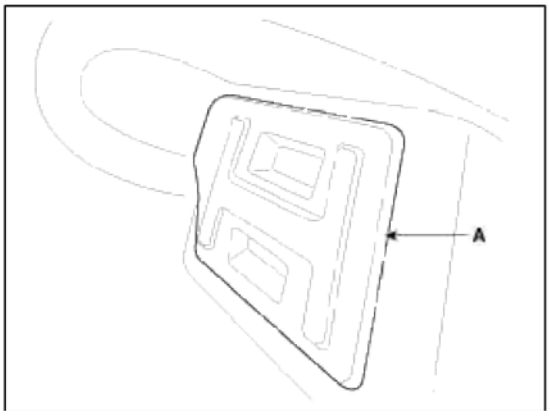

cardiagn.com

3. Replace the tail/stop lamp and turn signal lamp bulbs (A) by turning it counterclockwise.

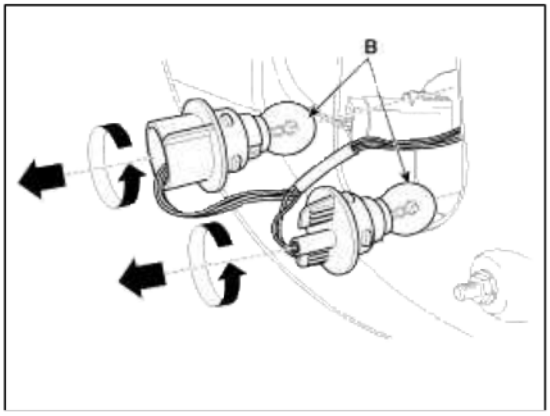

4. Remove the mounting nuts (4EA).

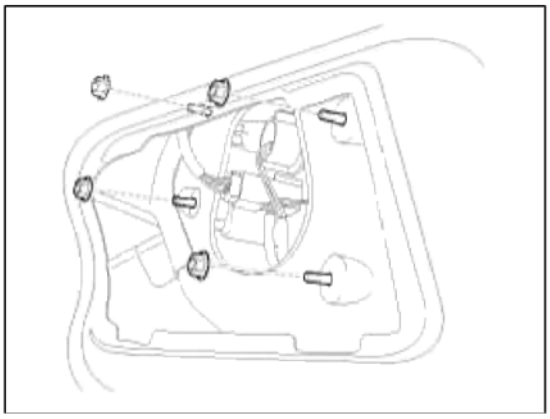

5. Remove the rear combination lamp (A) after disconnecting the connector (B).

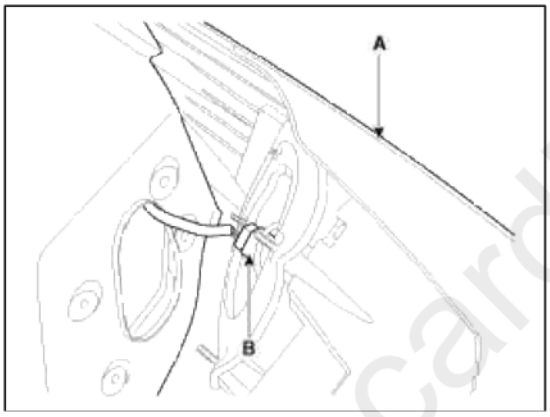

6. Replace the tail/stop lamp and turn signal lamp bulbs (A) by turning the sockets (B) counterclockwise.

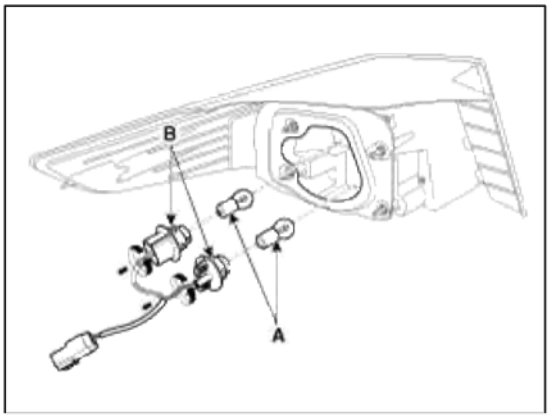

Rear Combination Lamp (Inside)

1. Disconnect the negative (-) battery terminal.
2. Remove the trunk trim.
   (Refer to the BD group - "Trunk")

cardiagn.com

3. If the tail lamp bulb should be only replaced without removing lamp assembly, replace the tail lamp bulb (A) after removing the trim cover in the trunk.

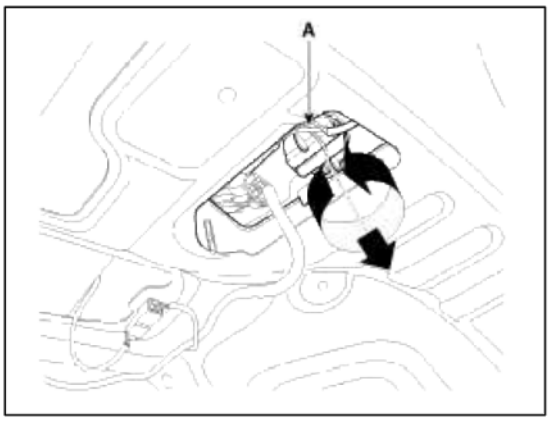

NOTE

Back up lamp bulb is removed after removing the rear lamp assembly.

4. Remove the rear lamp assembly (A) after removing the nuts (3EA) and connector.

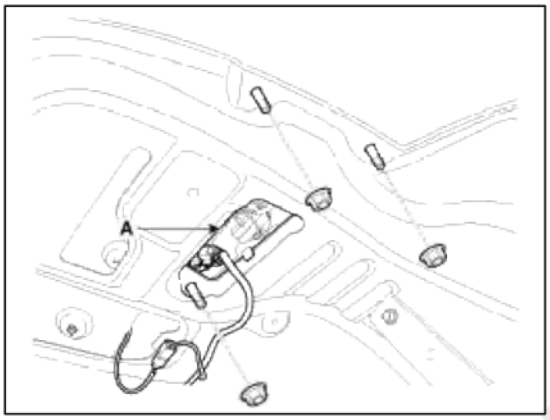

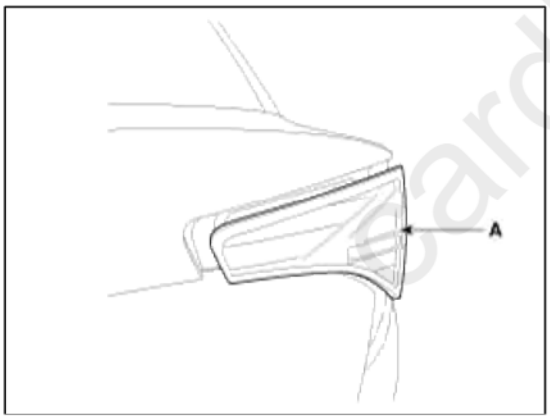

5. Replace the tail lamp and back up lamp bulbs (A) by turning the sockets (B) counterclockwise.

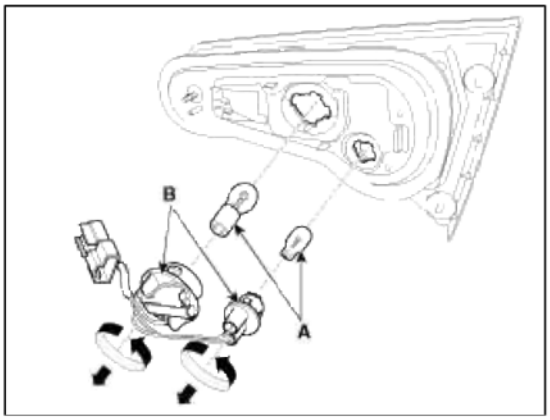

cardiagn.com

Installation

1. Install the rear combination lamp (Inside) assembly.
2. Install the rear combination lamp (outside) assembly.

Body Electrical System > Lighting System > Turn Signal Lamp > Repair procedures

Removal

Side Repeater Lamp

1. Disconnect the negative (-) battery terminal.
2. Open the front door.
3. Remove the side repeater lamp assembly by using the a flat-tip screwdriver.

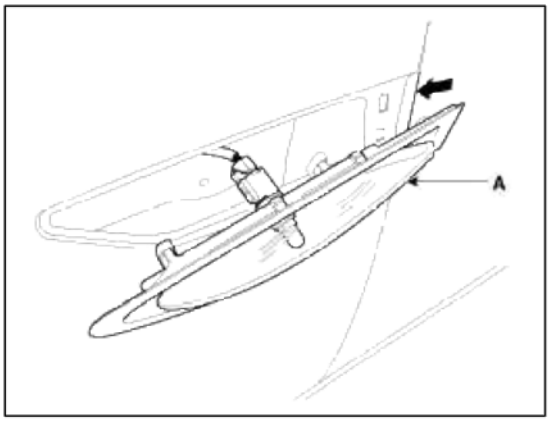

NOTE

Apply the protective tapes on the arrow area and its related parts.

4. Replace the bulb if it is necessary.

Door Mirror Turn Signal Lamp

1. Disconnect the negative (-) battery terminal.
2. Remove the door mirror and door mirror cover (A) after removing the screw.

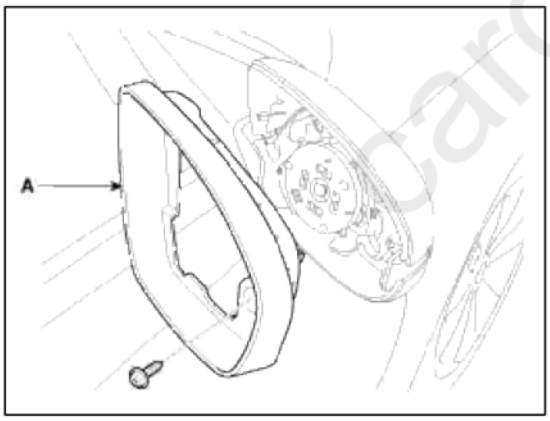

NOTE

Take care not to damage the mirror holder fixing clip.

Cardiagn.com

3. Remove the door mirror cover (A) after removing the fixing clip.

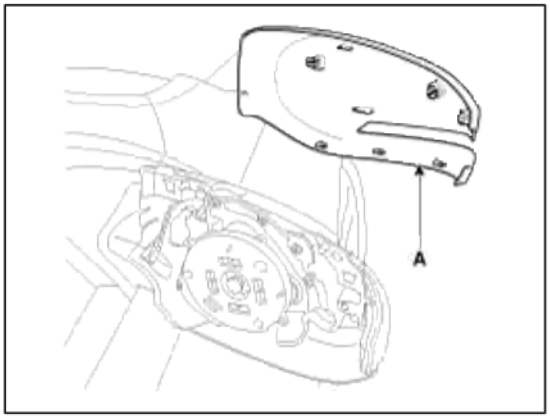

NOTE

Take care not to damage the mirror cover fixing clip.

4. Remove the door mirror turn signal lamp (B) after removing the screw and connector (A).

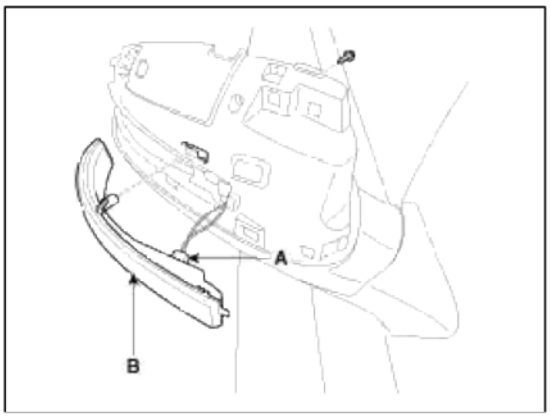

Installation

Side Repeater Lamp

1. Install the bulb to the side repeater lamp assembly.
2. Install the side repeater lamp.

Door Mirror Turn Signal Lamp

1. Install the door mirror turn signal lamp to the door mirror.
2. Install the door mirror.
3. Connect the battery terminal (-).

cardiagn.com

Body Electrical System > Lighting System > Troubleshooting

Troubleshooting

1. The lamp switch inputs can be checked using the GDS.
2. To check the input value of lamp switch, select option "Body Control Module".

3. To consult the present input/output value of BCM, "Current DATA". It provides information of BCM input/output conditions of power supply, turn signal/brake lamp, headlamp, door, locks, outside mirror, wipe auto-light and transmitters etc.

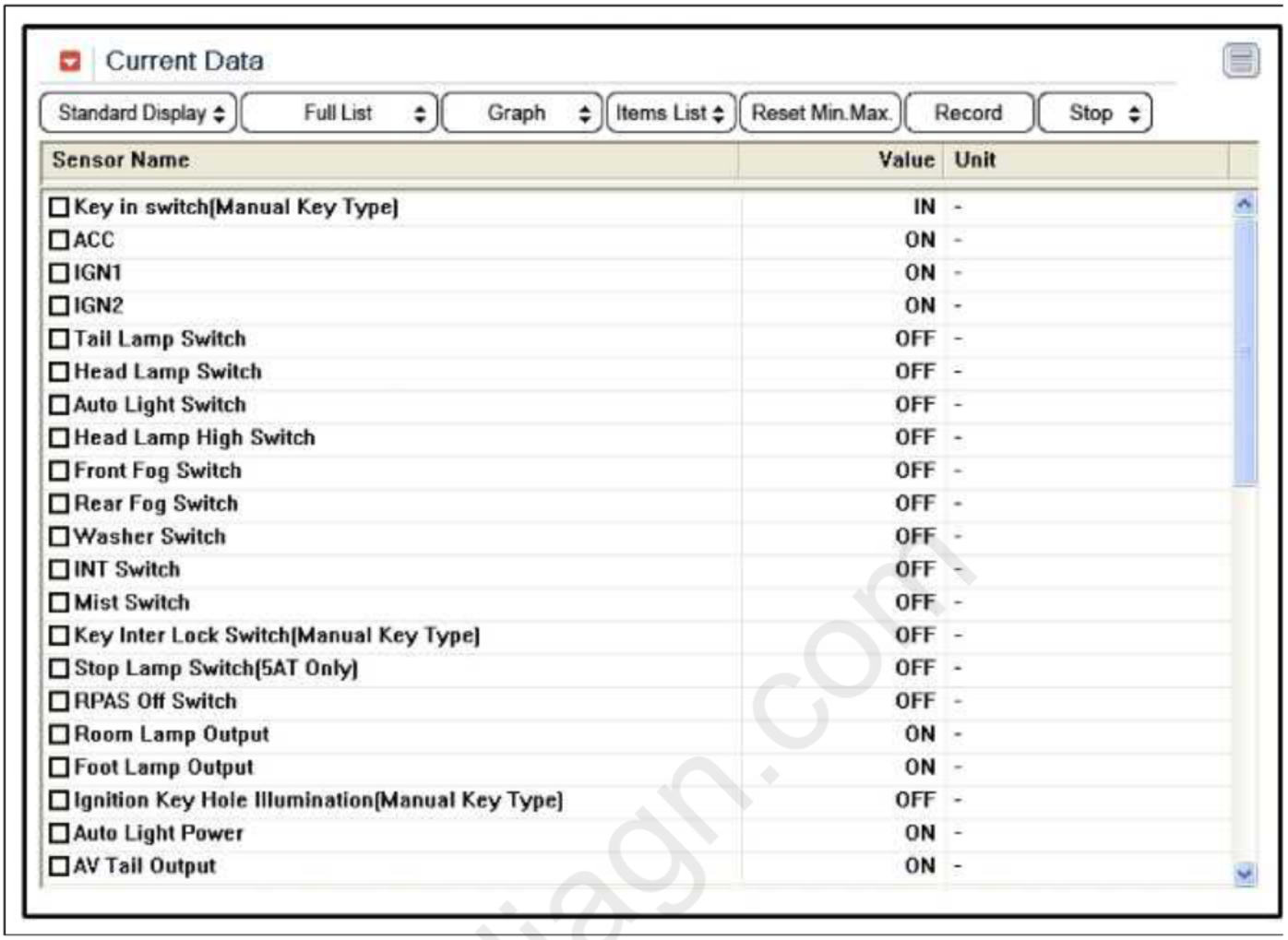

4. To check the input value of lamp switch in force mode, select option "Actuation Test".

cardiagn.com

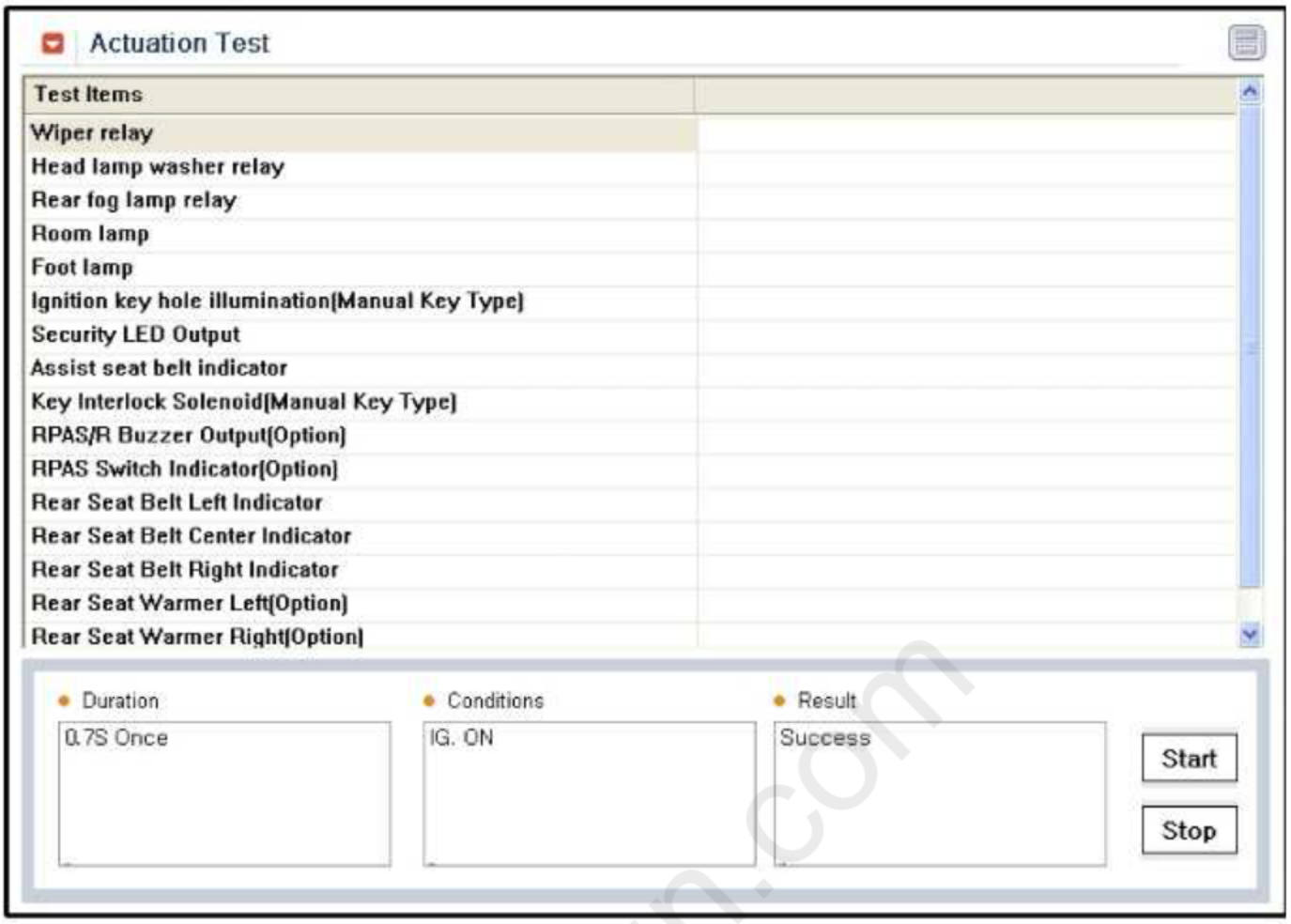

Symptom	Possible cause	Remedy
One lamp does not light (all exterior)	Bulb burned out	Replace bulb
	Socket, wiring or ground faulty	Repair if necessary
Stop lamps do not light	Bulb burned out	Replace bulb
	Stop lamp fuse (15A) blown	Check for short and replace fuse
	Stop lamp switch faulty	Adjust or replace switch
	Wiring or ground faulty	Repair if necessary
Stop lamps do not turn off	Stop lamp switch faulty	Repair or replace switch
Instrument lamps do not light (Tail lamps light)	Rheostat faulty	Check rheostat
	Wiring or ground faulty	Repair if necessary
Back up lamps do not light	Bulb burned out	Replace bulb
	Back up lamp fuse (10A) blown	Check for short and replace fuse
	Back up lamp switch (M/T) faulty	Check switch
	Transaxle range switch (A/T) faulty	Check switch
	Wiring or ground faulty	Repair if necessary
Map lamp does not light	Bulb burned out	Replace bulb
	Room lamp fuse (10A) blown	Check for short and replace fuse
	Map lamp switch faulty	Check switch

carmanualdiagn.com

	Wiring or ground faulty	Repair if necessary
Luggage room lamp does not light	Bulb burned out	Replace bulb
	Trunk lamp fuse (10A) blown	Check for short and replace fuse
	Luggage room lamp switch faulty	Check switch
	Wiring or ground faulty	Repair if necessary

Body Electrical System > Auto Lighting Control System > Specifications

Specifications

Items		Specifications
Rated voltage		5V
Load		Max. 1mA (When head lamp lighting)
Illuminations (LUX)	50	1.42 ± 0.31V
	100	2.63 ± 0.58V
	150	3.84 ± 0.84V

Body Electrical System > Auto Lighting Control System > Components and Components Location

Component Location

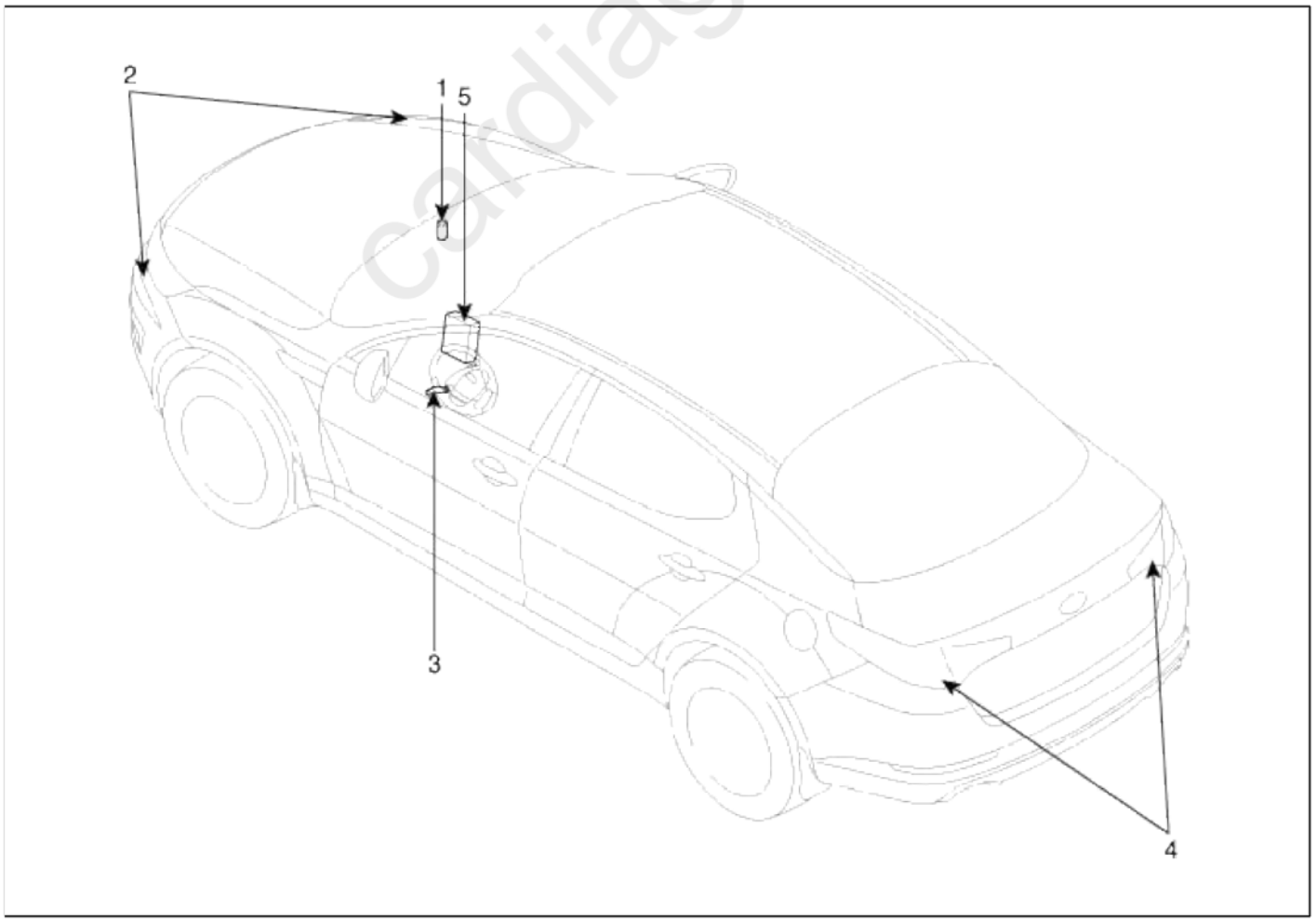

cardiagn.com

1. Auto light sensor 2. Head lamps 3. Lighting switch (Auto)	4. Tail lamps 5. Body control module (BCM)

Body Electrical System > Auto Lighting Control System > Schematic Diagrams

Circuit Diagram

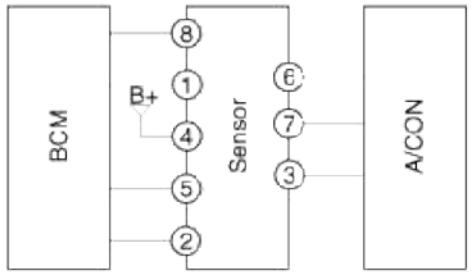

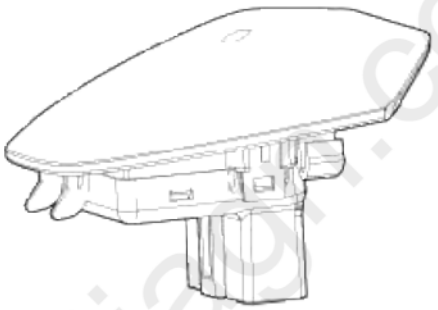



[Auto Light Connector]

No.	Description
1	Auto light signal
2	Auto light GND
3	Photo signal (RH)
4	LED power (B+)
5	LED GND (To BCM)
6	Photo signal (LH)
7	Photo power (SW)
8	Auto light power (5V)

cardiagn.com

Body Electrical System > Auto Lighting Control System > Auto Light Switch > Repair procedures

Inspection

Lighting Switch Inspection

With the multi function switch in each position, make sure that continuity exists between the terminals below. If continuity is not as specified, replace the multi-function switch.

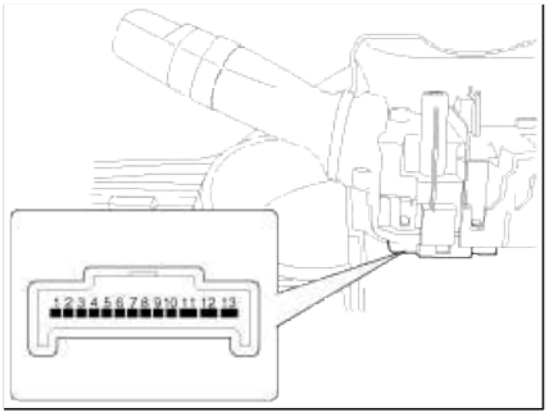

Lighting Switch (Auto Light)

Terminal / Position	1	2	4	3
OFF				
Tail	○	○		
H/Lamp	○	○	○	
AUTO	○			○

Body Electrical System > Auto Lighting Control System > Auto Light Sensor > Repair procedures

Inspection

In the state of IGN1 ON, when multi function switch module detects auto light switch on, tail lamp relay output and head lamp low relay output are controlled according to auto light sensor's input.
The auto light control doesn't work if the pin sunlight supply (5V regulated power from Ignition 1 power to sunlight sensor) is in short circuit with the ground.
If IGN1 ON, The BCM monitors the range of this supply and raises up a failure as soon as the supply's voltage is out of range. Then this failure occurs and as long as this is present, the head lamp must be turned on without taking care about the sunlight level provided by the sensor.
This is designed to prevent any head lamp cut off when the failure occurs during the night.

Removal

1. Disconnect the negative (-) battery terminal.
2. Remove the auto light sensor (A) from crash pad upper side by using screw (-) driver.

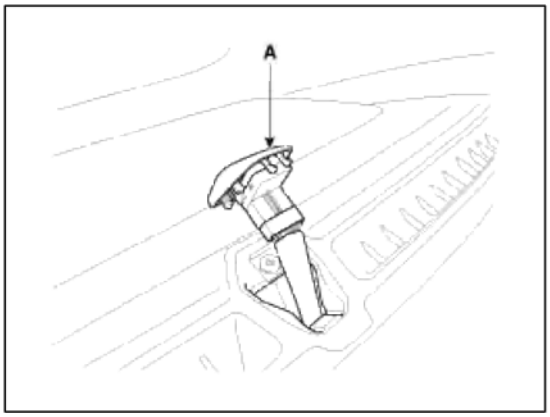

NOTE

Apply the protective tapes to auto light sensor and its related parts.

3. Remove the auto light connector.

cardiagn.com

Installation

1. Reconnect the auto light connector.
2. Install the auto light sensor.

Body Electrical System > Auto Head Lamp Leveling Device > Components and Components Location

Component Location

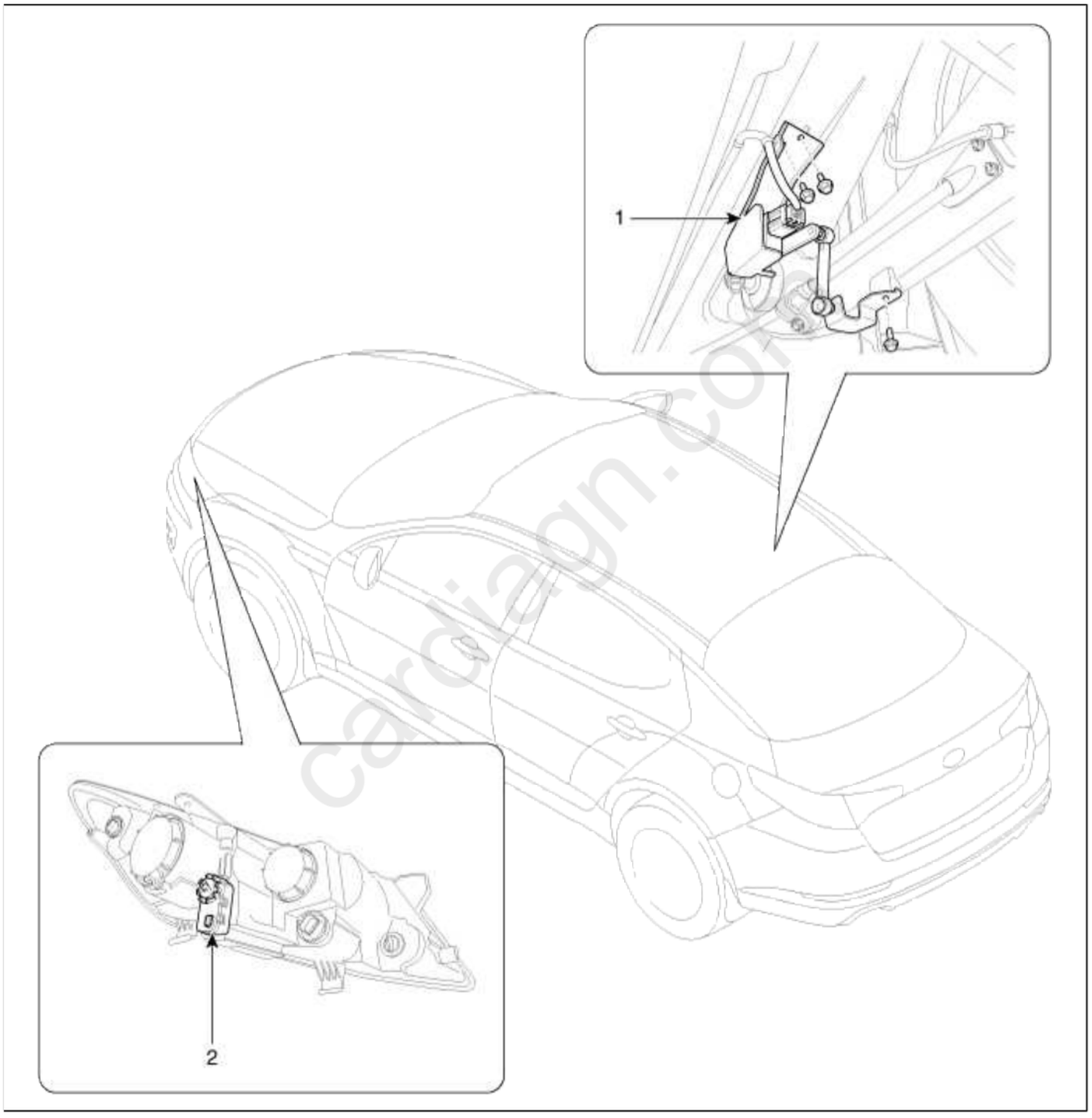

1. Head lamp leveling unit	2. Head lamp leveling actuator

cardiagn.com

Body Electrical System > Auto Head Lamp Leveling Device > Head Lamp Leveling Actuator > Repair procedures

Inspection with GDS

Initialization and diagnosis sequence by using GDS equipment.
Below content summarize the procedure for A/S using GDS.

No.	Procedure
1	Locate vehicle to flat plane
2	Tire check
3	IGN1 ON
4	Head lamp Low Beam ON
5	Connection with diagnostic tool
6	Initial command by diagnostic tool
7	Clear DTC Code
8	IGN1 OFF → ON
9	Re- Connection with diagnostic tool
10	Checking of HLLD output value as 15% and DTC Code
11	HLLD actuating by diagnostic tool command
12	Head lamp mechanical Initial Aiming

NOTE

1. There's no loads in vehicle and vehicle should be on flat plane.
2. Should check of HLLD output value after initial setting.
3. Should do first electrical initial setting by diagnostic tool and then mechanical aiming afterward.

1. Select the vehicle model and "Head lamp leveling".

carmagn.com

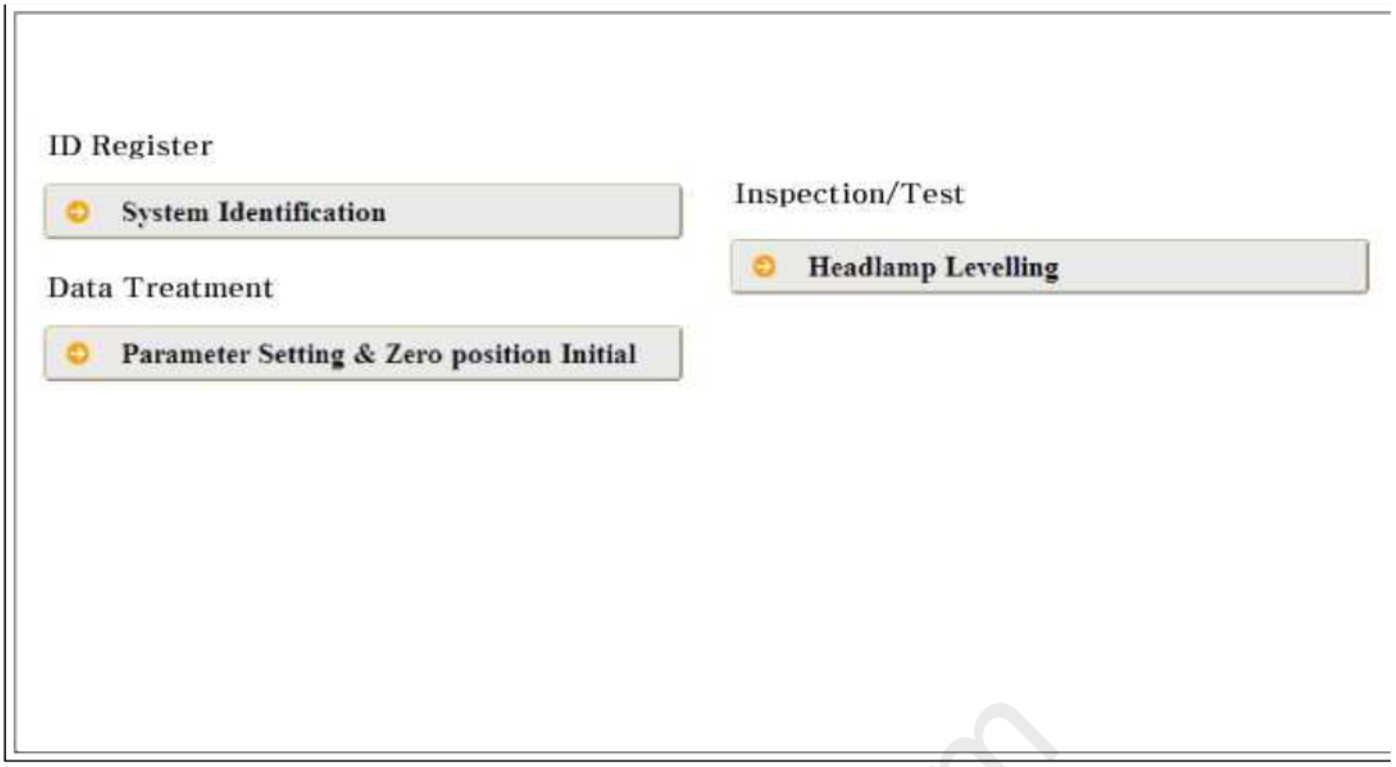

2. GDS can operates actuator forcefully, input/output value monitoring and self diagnosis.

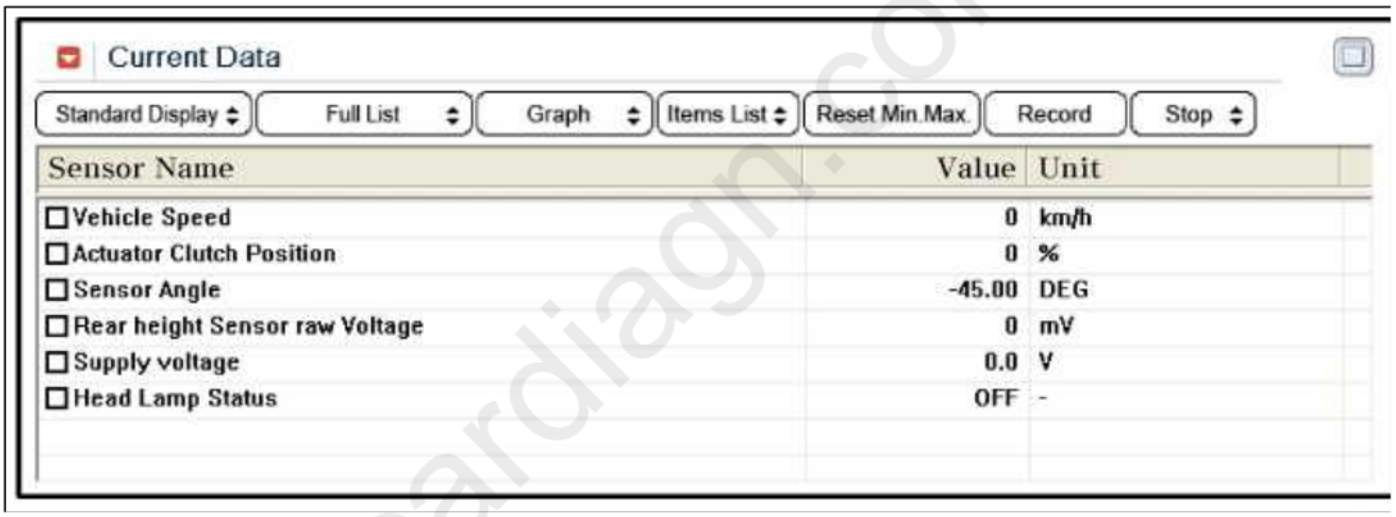

3. To perform functional test on AHLS outputs, select "Actuation Test".

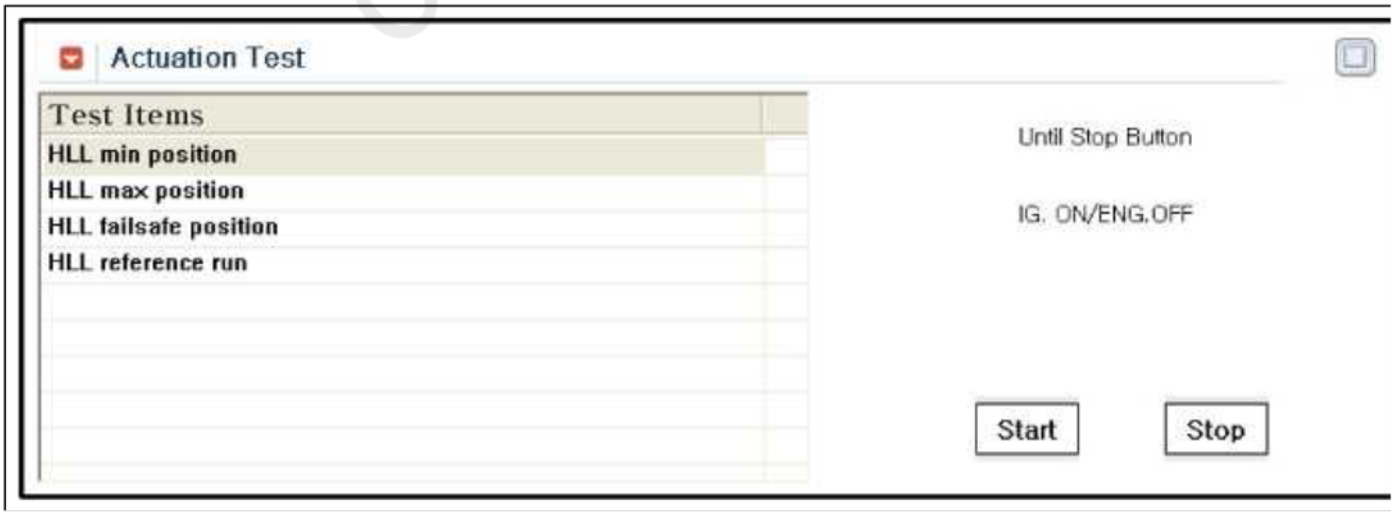

cardiagn.com

4. Select " Parameter setting & Zero position Initial".

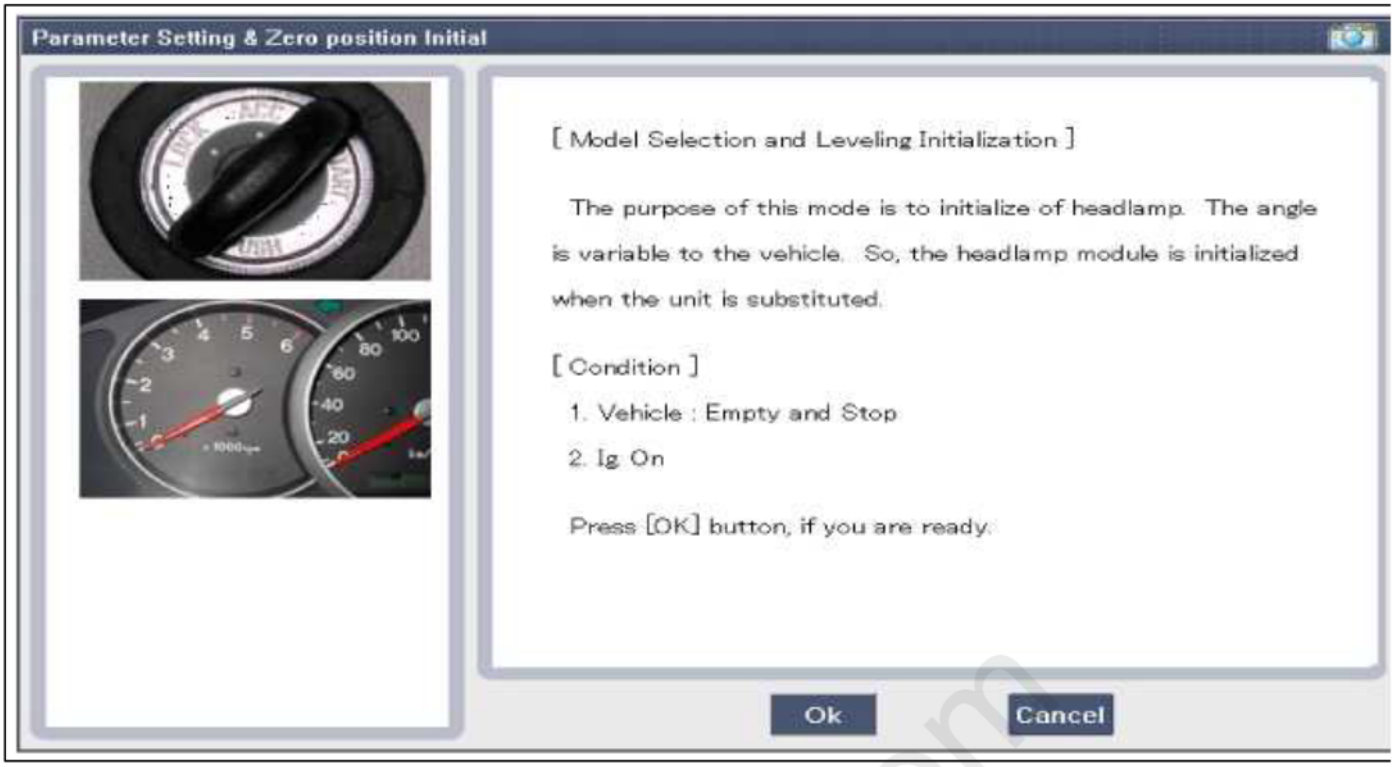

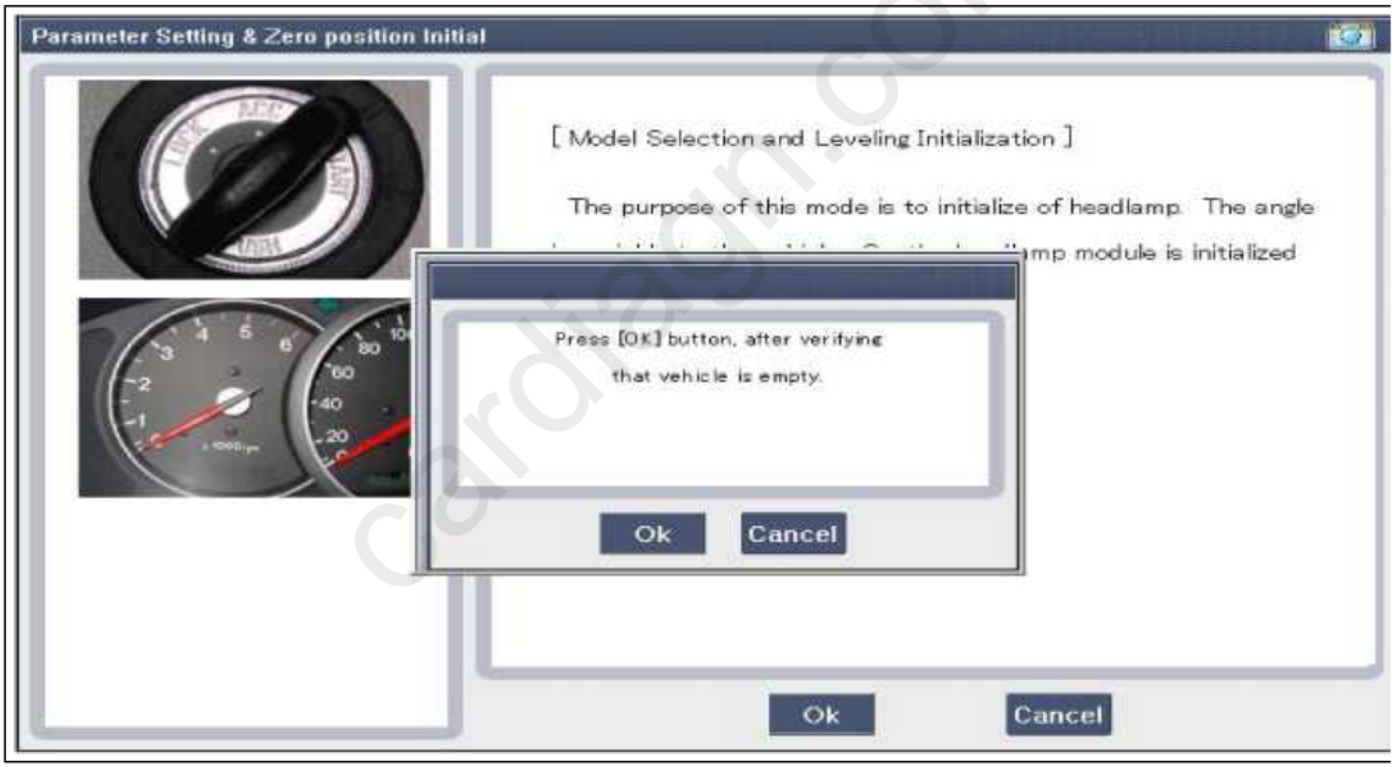

5. Confirm that AHLS operate forcefully in "Head lamp leveling" menu.

Headlamp Levelling





[Auto Headlamp Level Control]

The purpose is to check the actuation of headlamp. The angle is changed by input value that user can control.

[Condition]

1. Vehicle : Stop
2. Ig On

Press [DOWN/UP] button for changing the angle. Press [SET] button, if you want to initialize the angle of headlamp.

Current Value : 0 %

Press [START] button, if you start to test.

Start Cancel

Headlamp Levelling





[Auto Headlamp Level Control]

The purpose is to check the actuation of headlamp. The angle is changed by input value that user can control.

[Condition]

1. Vehicle : Stop
2. Ig On

Press [DOWN/UP] button for changing the angle. Press [SET] button, if you want to initialize the angle of headlamp.

Output Value : 0 %

Input Set Value : 15 %

Up Down Cancel Set

cardiagn.com

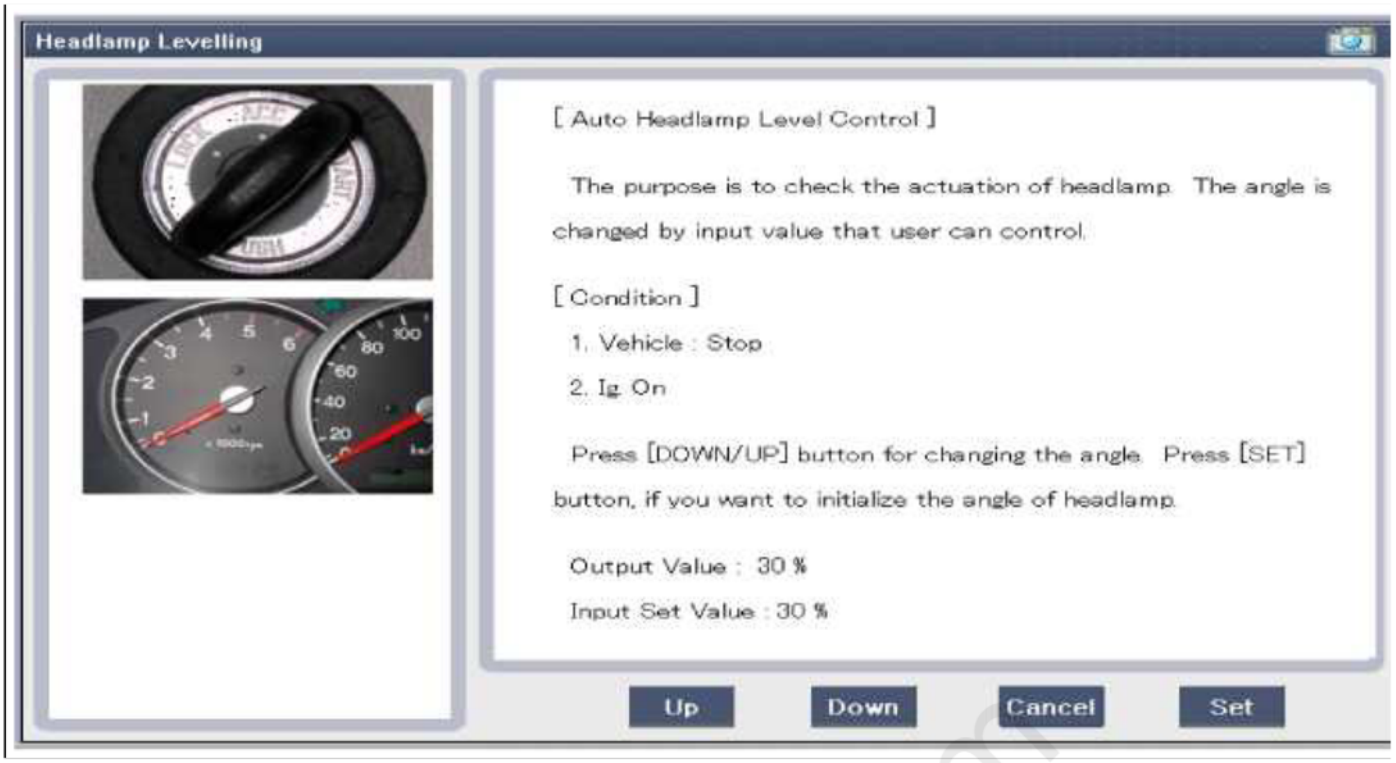

6. To check the DTC of the head lamp leveling system, select "Diagnostic trouble codes"

Replacement

1. Disconnect the negative (-) battery terminal.
2. Remove the head lamp assembly.
   (Refer to the head lamp)
3. Remove the head lamp leveling actuator (A) by loosening the adjusting bolt (B) after rotating it to an arrow direction.

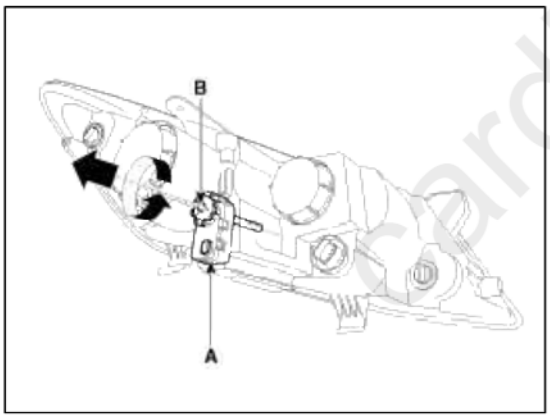

4. Installation is the reverse of removal procedure.

Body Electrical System > Auto Head Lamp Leveling Device > Auto Head Lamp Leveling Unit > Schematic Diagrams

Circuit Diagram

cardiagn.com



CONNECTOR PIN LAYOUT	
PIN	DEFINITION
1	GND
2	N.C
3	N.C
4	DIAGNOSIS K-LINE
5	IGN
6	VEHICLE SPEED
7	HEAD LAMP ON/OFF
8	HLLD SIGNAL
9	N.C
10	N.C

BLOCK DIAGRAM

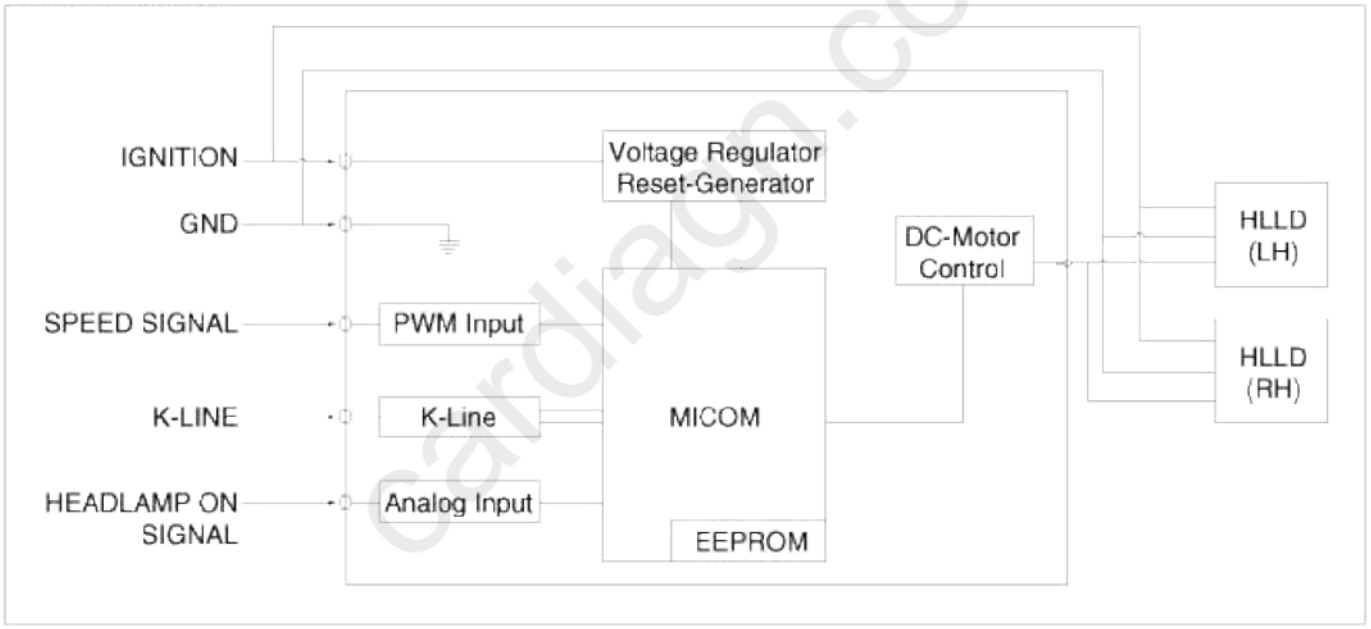

cardiagn.com

Body Electrical System > Auto Head Lamp Leveling Device > Auto Head Lamp Leveling Unit > Description and Operation

Description

According to driving environment and loading state of vehicle, head lamp lighting direction is changed to keep the driver's visibility range and to protect the driver's vision from glare, aiming at safety driving.
Sensor integrated ECU mounting on the rear center arm drives the actuator mounting on the head lamp since sensing the input signal following the vehicle's statically changes.
Head lamp beam is automatically operated by chassis tilt.

Operation

Operating Procedure

1. Suspension angle change resulted from vehicle's load change.
2. Sensor angle change.
3. Microprocessor calculates necessary head lamp angle change amount.
4. Sending a proper signal to head lamp leveling device and driving actuator.

Operating Condition

1. Ignition on
2. Low beam on
3. On stop : If sensor lever change is 2° and above, head lamp is operated after max. 1.5 sec.
4. On driving : If vehicle velocity is over 4km/h(2.48mile/h), velocity change is not over 0.8-1.6km/h(0.5 ~ 1.0mile/h) per second, and loading condition is changed, then head lamp is operated.

Components

1. Auto head lamp leveling unit
   1. Leveling unit & sensor
   2. Sensor mounting bracket
   3. Sensor linkage

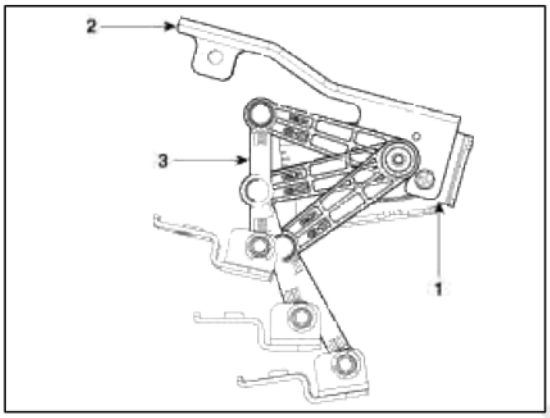

   A. Using a Micro-processor, percept the operation lever's mechanical angle change or speed signal.

   B. As an actuator control device of inner control program, mounting on the rear center arm.

2. Actuator

   A. Change the head lamp lighting direction up or down since automatic head lamp leveling unit sensing the input signal following the vehicle's statically changes.

cardiagn.com

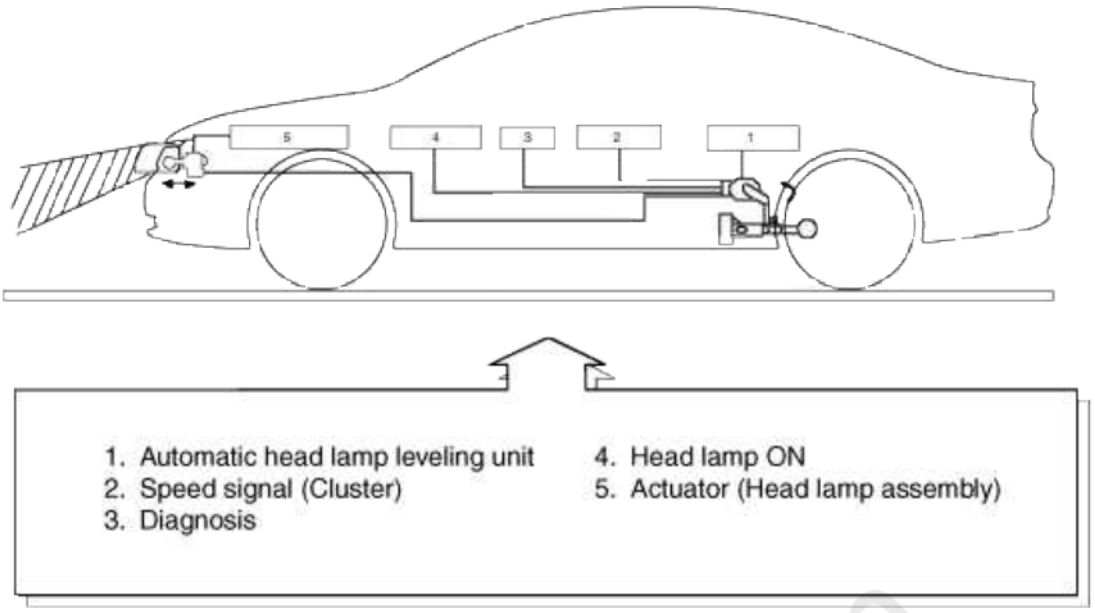

Body Electrical System > Auto Head Lamp Leveling Device > Auto Head Lamp Leveling Unit > Repair procedures

Inspection

1. Ignition "ON".
2. Turn on the head lamp switch.
3. Check for operation. If the aim of the head lamps changes smoothly when the head lamp leveling switch is turned.
4. If the operation does not work well, inspect the connector and terminals to be sure they are all making good contact.
   If the terminals are bent, loose or corroded, repair them as necessary, and recheck the system.
   If the terminals look OK, go to step 5.
5. Substitute with a known-good head lamp assembly and check for proper operation.

Removal

1. Remove the head lamp leveling unit connector (A).

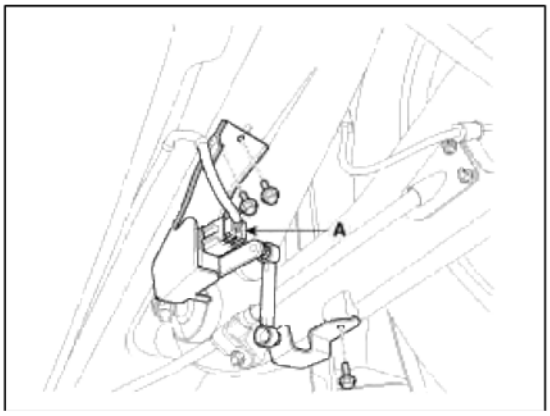

cardiagn.com

2. Loosen the mounting bolts (3EA) of automatic head lamp leveling unit assembly.

Tighting torque :
6.86±1.96 Nm (0.7±0.2 kgf.m, 5.06±1.44 lbf.ft)

3. Remove the head lamp leveling unit assembly.

Installation

1. Install the head lamp leveling unit.
2. Reconnect the head lamp leveling unit connector.

Body Electrical System > Immobilizer System > Components and Components Location

Components

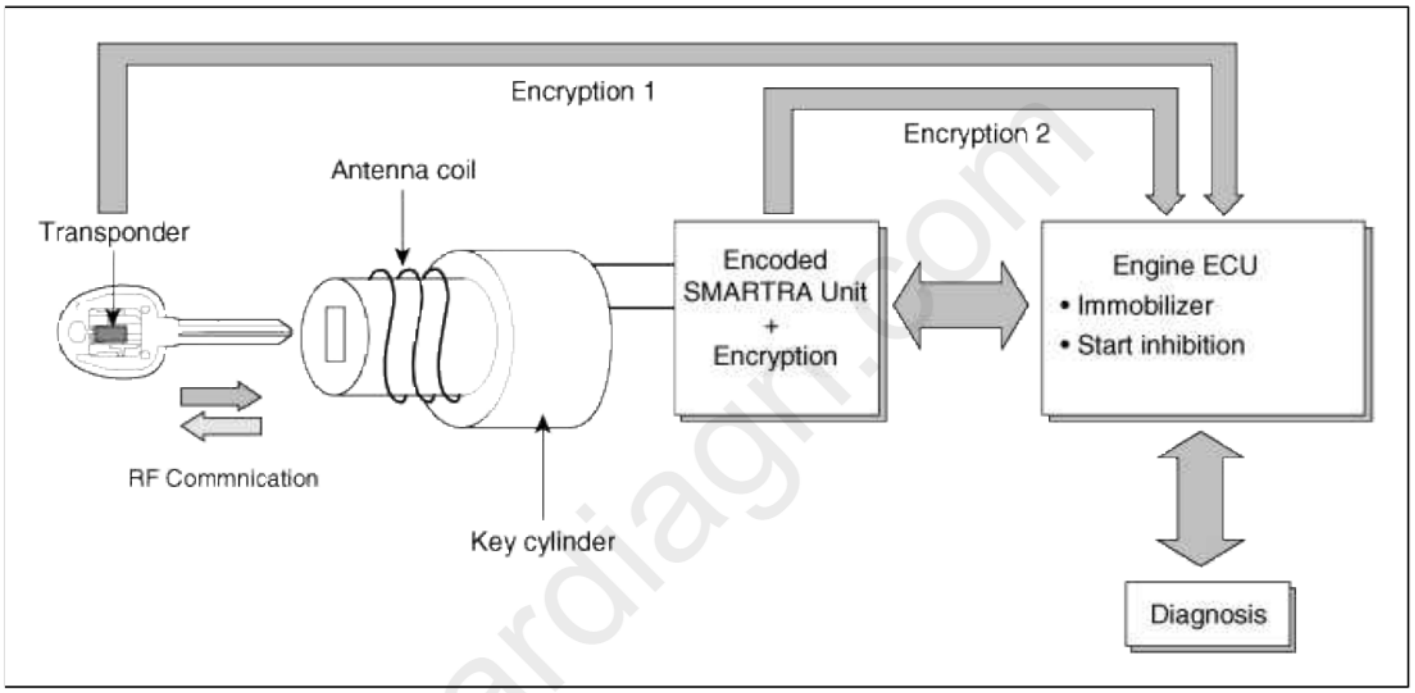

cardiagn.com

Body Electrical System > Immobilizer System > Schematic Diagrams

Circuit Diaram

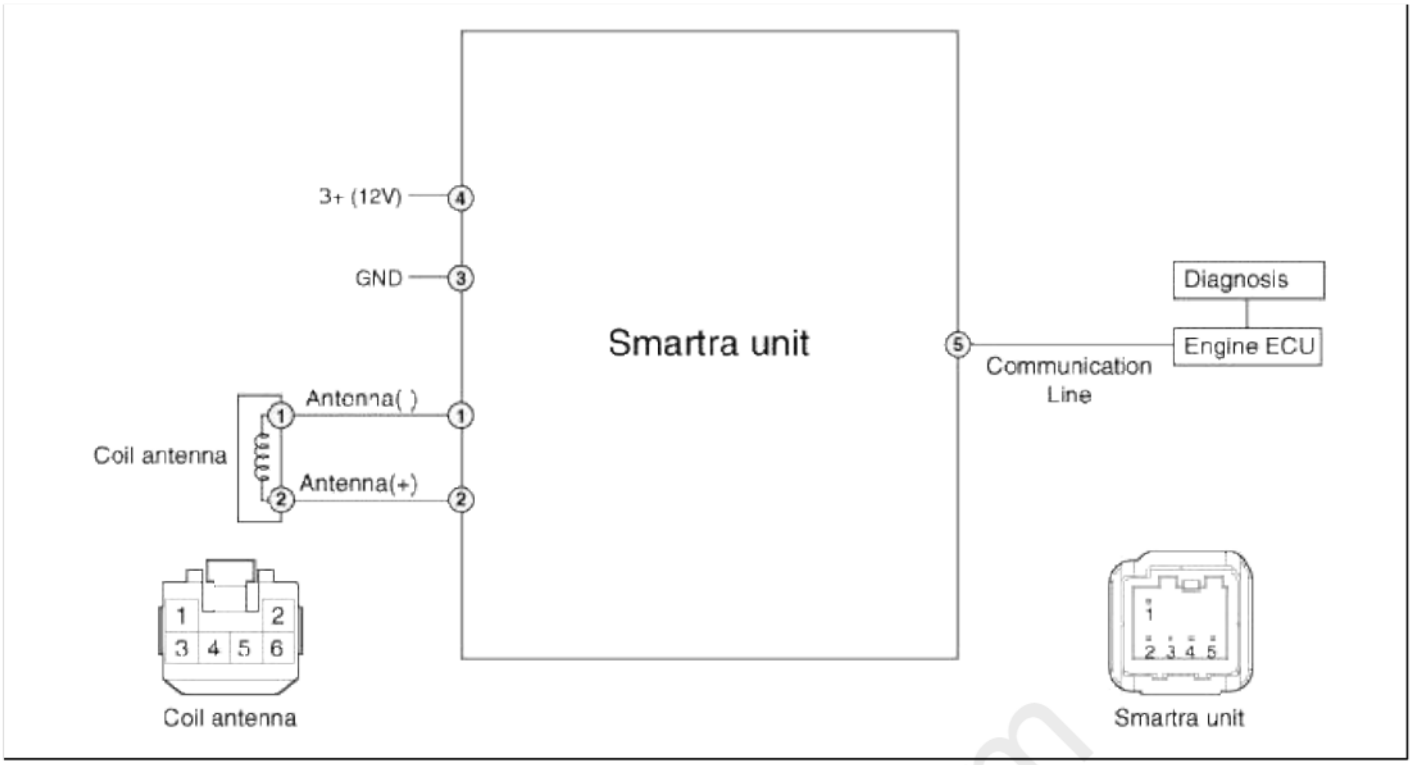

Body Electrical System > Immobilizer System > Description and Operation

Description

The immobilizer system will disable the vehicle unless the proper ignition key is used. In addition to the currently available anti-theft systems such as car alarms, the immobilizer system aims to drastically reduce the rate of auto theft.

1. Encrypted SMARTRA type immobilizer
   A. The SMARTRA system consists of a passive challenge - response (mutual authentication)transponder located in the ignition key, an antenna coil, a encoded SMARTRA unit, an indicator light and the PCM(ECM).
   B. The SMARTRA communicates to the PCM(ECM) (Engine Control Module) via a dedicated communications line. Since the vehicle engine management system is able to control engine mobilization, it is the most suitable unit to control the SMARTRA.
   C. When the key is inserted in the ignition and turned to the ON position, the antenna coil sends power to the transponder in the ignition key. The transponder then sends a coded signal back through the SMARTRA unit to the PCM(ECM).
   D. If the proper key has been used, the PCM(ECM) will energize the fuel supply system. The immobilizer indicator light in the cluster will simultaneously come on for more than five seconds, indicating that the SMARTRA unit has recognized the code sent by the transponder.
   E. If the wrong key has been used and the code was not received or recognized by the PCM(ECM) the indicator light will continue blinking for about five seconds until the ignition switch is turned OFF.
   F. If it is necessary to rewrite the PCM(ECM) to learn a new key, the dealer needs the customer's vehicle, all its keys and the GDS equipped with an immobilizer program card. Any key that is not learned during rewriting will no longer start the engine.
   G. The immobilizer system can store up to eight key codes.
   H. If the customer has lost his key, and cannot start the engine, contact Kia motor service station.

Components Operations

PCM (Power Train Control Module)

cardiagn.com

1. The PCM(ECM) (A) carries out a check of the ignition key using a special encryption algorithm, which is programmed into the transponder as well as the PCM(ECM) simultaneously. Only if the results are equal, the engine can be started. The data of all transponders, which are valid for the vehicle, are stored in the PCM(ECM).
   ERN (Encrypted Randorn Number) value between EMS and encrypted smartra unit is checked and the validity of coded key is decided by EMS.

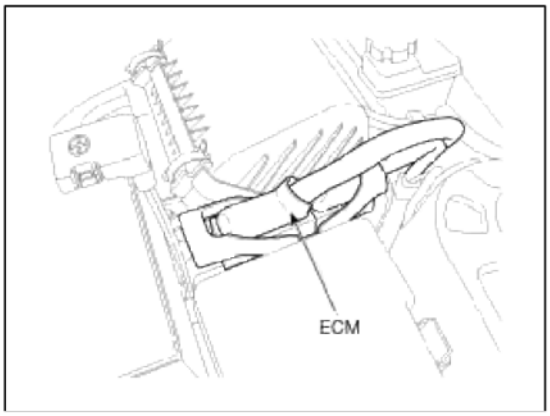

ENCRYPTED SMARTRA unit (A)

The SMARTRA carries out communication with the built-in transponder in the ignition key. This wireless communication runs on RF (Radio frequency of 125 kHz). The SMARTRA is mounted behind of the crash pad close to center cross bar.

The RF signal from the transponder, received by the antenna coil, is converted into messages for serial communication by the SMARTRA device. And, the received messages from the PCM(ECM) are converted into an RF signal, which is transmitted to the transponder by the antenna.

The SMARTRA does not carry out the validity check of the transponder or the calculation of encryption algorithm. This device is only an advanced interface, which converts the RF data flow of the transponder into serial communication to the PCM(ECM) and vice versa.

[USA]

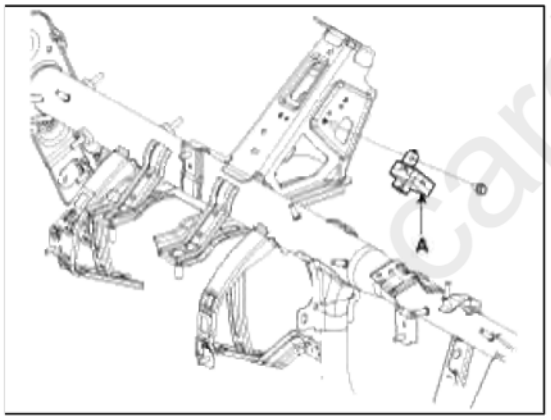

[CANADA]

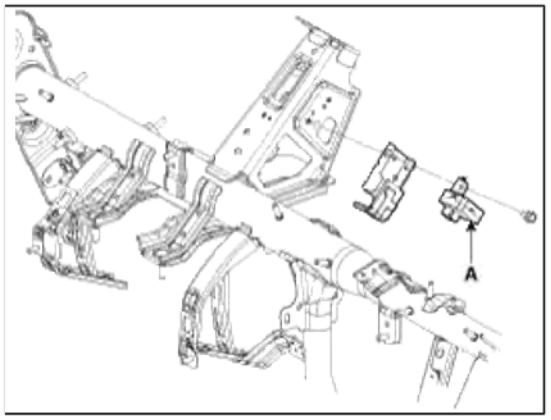

ecardiagn.com

TRANSPONDER (Built-in keys)
The transponder (A) has an advanced encryption algorithm. During the key teaching procedure, the transponder will be programmed with vehicle specific data. The vehicle specific data are written into the transponder memory. The write procedure is once only; therefore, the contents of the transponder can never be modified or changed.

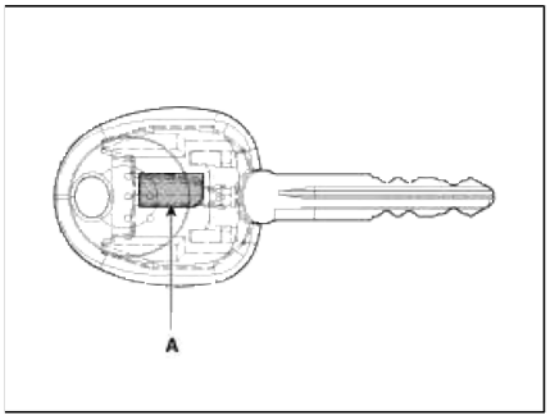

Antenna coil
The antenna coil (A) has the following functions.
- The antenna coil supplies energy to the transponder.
- The antenna coil receives signal from the transponder.
- The antenna coil sends transponder signal to the SMARTRA.
  It is located directly in front of the steering handle lock.

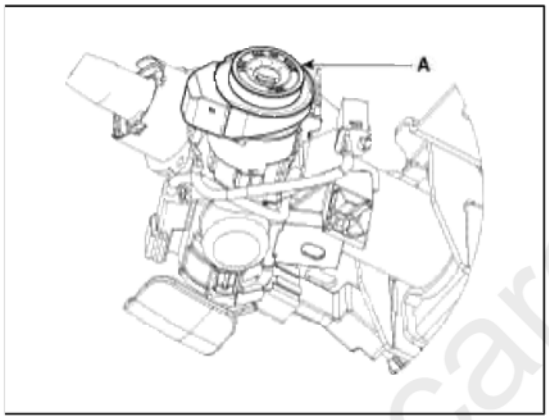

cardiagn.com

Body Electrical System > Immobilizer System > Repair procedures

Teaching Procedures

1. Key Teaching Procedure
   Key teaching must be done after replacing a defective PCM(ECM) or when providing additional keys to the vehicle owner.
   The procedure starts with an PCM(ECM) request for vehicle specific data (PIN code: 6digits) from the teste "virgin" PCM(ECM) stores the vehicle specific data and the key teaching can be started. The "learnt" PCM(E compares the vehicle specific data from the tester with the stored data. If the data are correct, the teaching ca proceed.
   If incorrect vehicle specific data have been sent to the PCM(ECM) three times, the PCM(ECM) will reject th request of key teaching for one hour. This time cannot be reduced by disconnecting the battery or any other manipulation. After reconnecting the battery, the timer starts again for one hour.
   The key teaching is done by ignition on with the key and additional tester commands. The PCM(ECM) stores relevant data in the EEPROM and in the transponder. Then the PCM(ECM) runs the authentication required confirmation of the teaching process. The successful programming is then confirmed by a message to the test

If the key is already known to the PCM(ECM) from a previous teaching, the authentication will be accepted a the EEPROM data are updated. There is no changed transponder content (this is impossible for a learnt transponder).
The attempt to repeatedly teach a key, which has been taught already during the same teaching cycle, is recognized by the PCM(ECM). This rejects the key and a message is sent to the tester.
The PCM(ECM) rejects invalid keys, which are presented for teaching. A message is sent to the tester. The k can be invalid due to faults in the transponder or other reasons, which result from unsuccessful programming data. If the PCM(ECM) detects different authenticators of a transponder and an PCM(ECM), the key is considered to be invalid.
The maximum number of taught keys is 8
If an error occurs during the Immobilizer Service Menu, the PCM(ECM) status remains unchanged and a spe fault code is stored.
If the PCM(ECM) status and the key status do not match for teaching of keys, the tester procedure will be stopped and a specific fault code will be stored at PCM(ECM).

NOTE

When teaching the 1st key, Smartra registers at the same time.

cardiagn.com

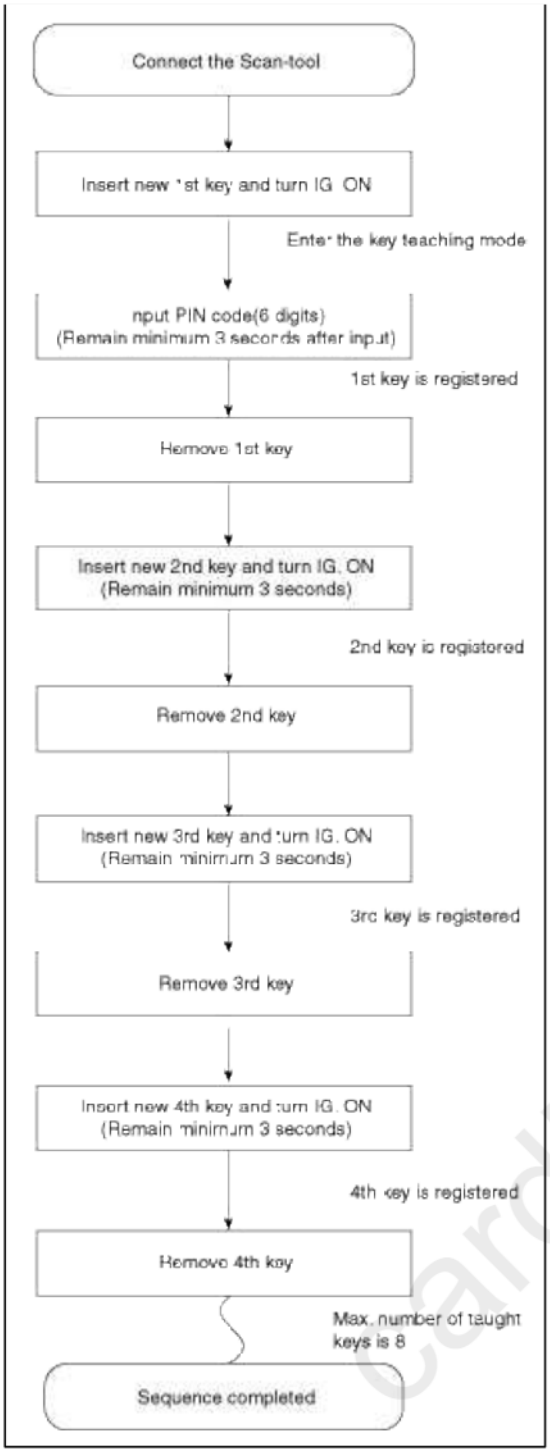

(1) PCM(ECM) learnt status.

cardiagn.com

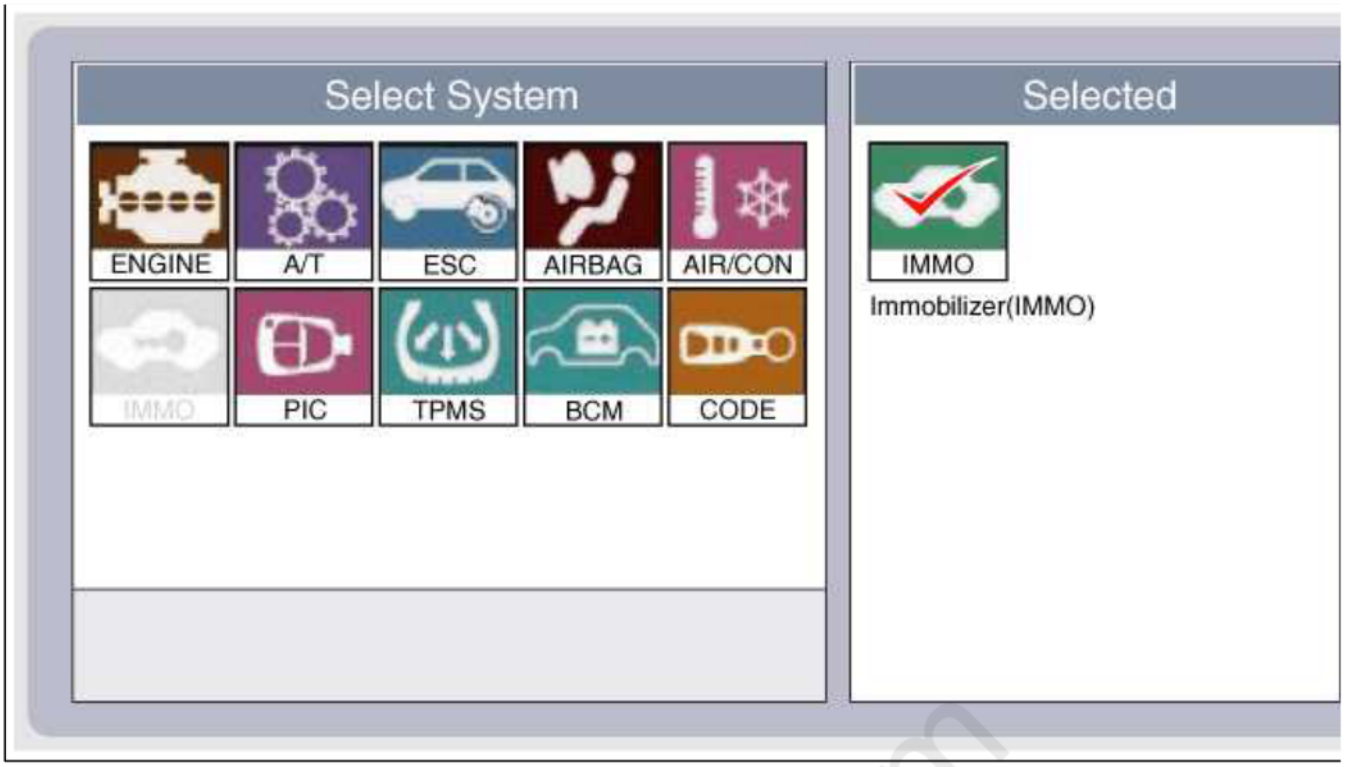

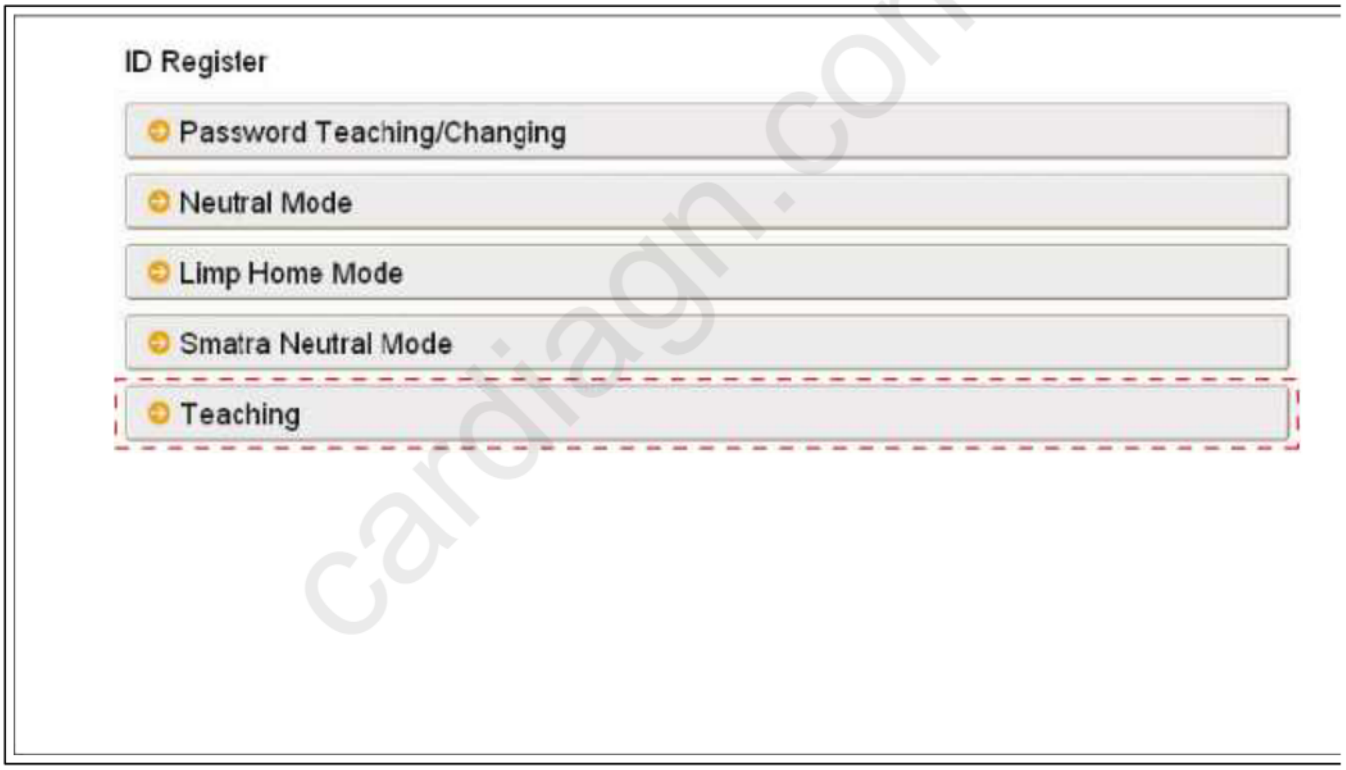

cardiagn.com

Teaching



[Teaching]

Status : NEUTRAL

Input PIN code and press [OK] button

4 5 5 0 7 2

Ok Cancel

Teaching



[Teaching]

1st key teaching

Continue? (OK/CANCEL)

Ok Cancel

cardiagn.com

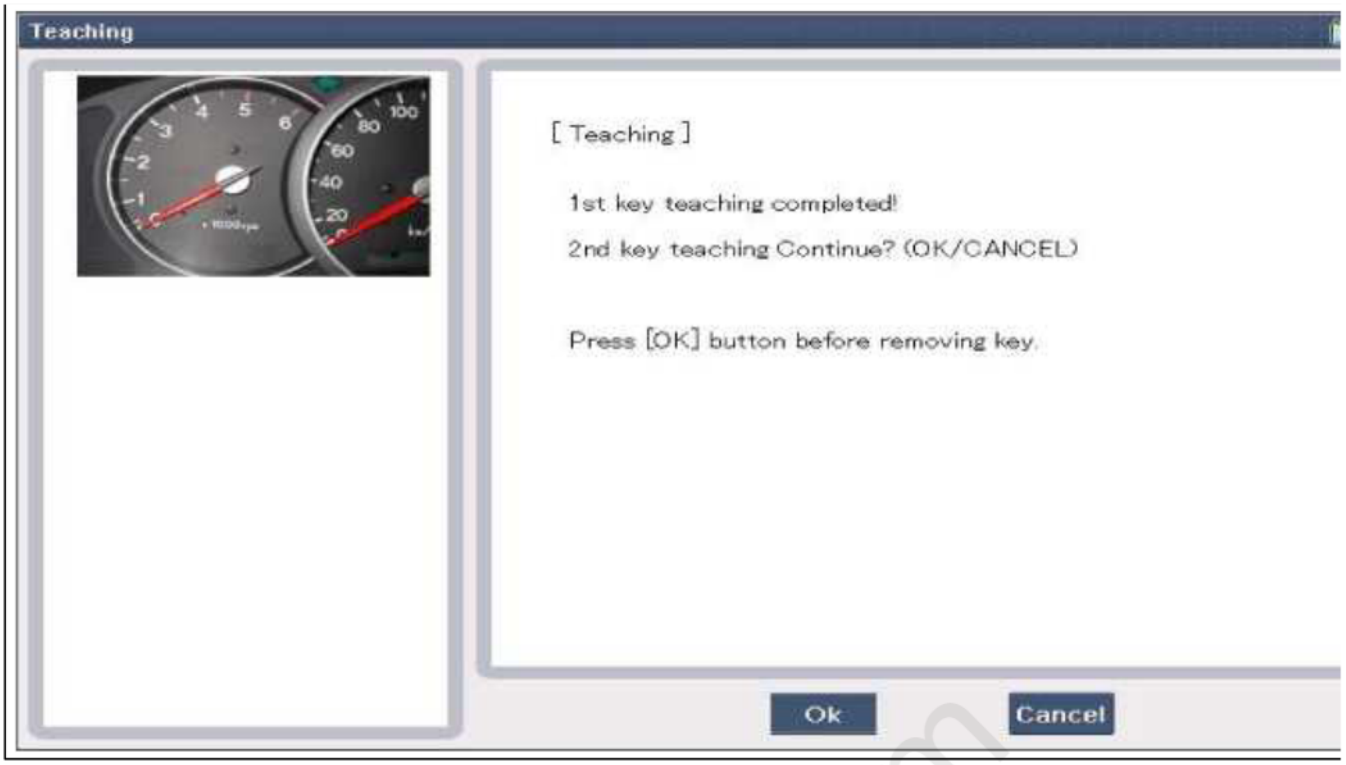

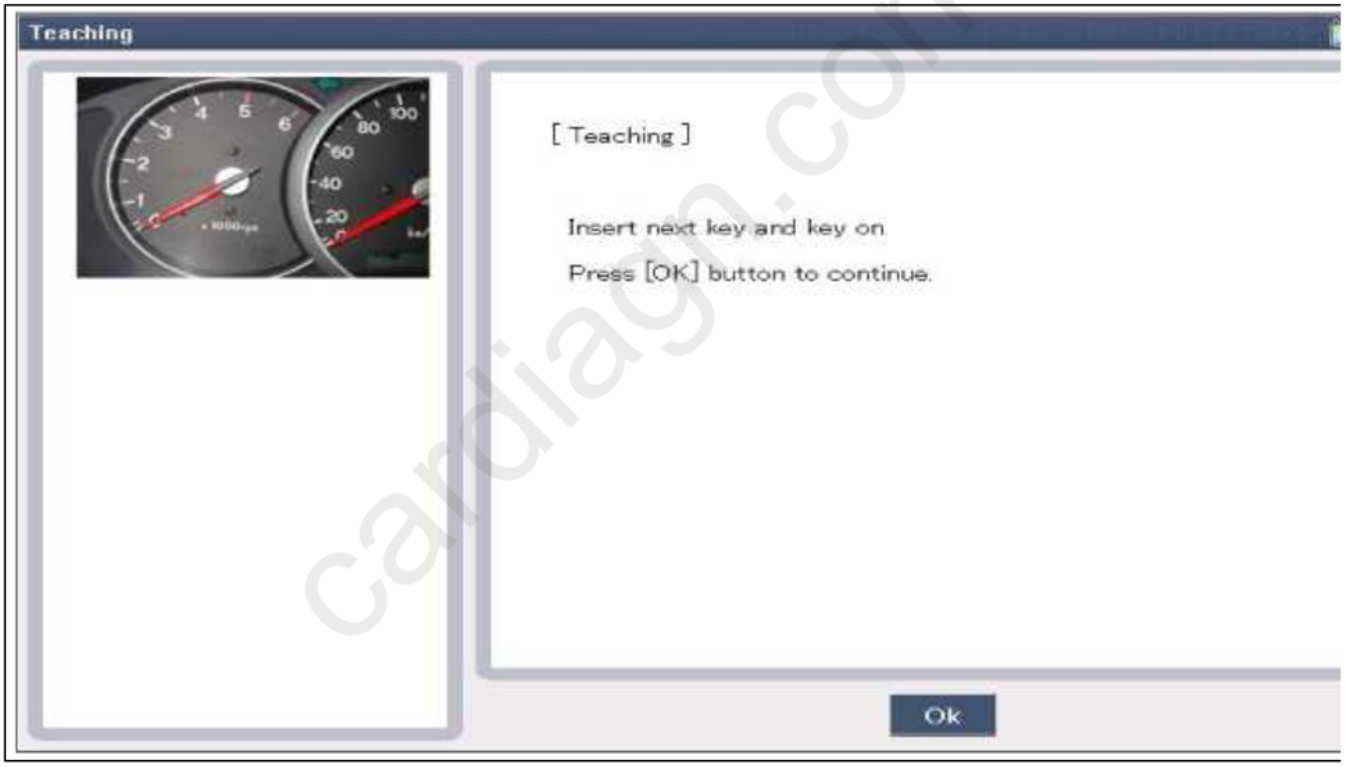

cardiagn.com

Teaching



[Teaching]

2nd key teaching completed!

3rd key teaching Continue? (OK/CANCEL)

Press [OK] button before removing key.

Ok Cancel

Teaching



[Teaching]

Insert next key and key on.

Press [OK] button to continue.

Ok

cardiagn.com

Teaching



[Teaching]

3rd key teaching completed!

4th key teaching Continue? (OK/CANCEL)

Press [OK] button before removing key.

Ok Cancel

Teaching



[Teaching]

Insert next key and key on.

Press [OK] button to continue.

Ok

cardiagn.com

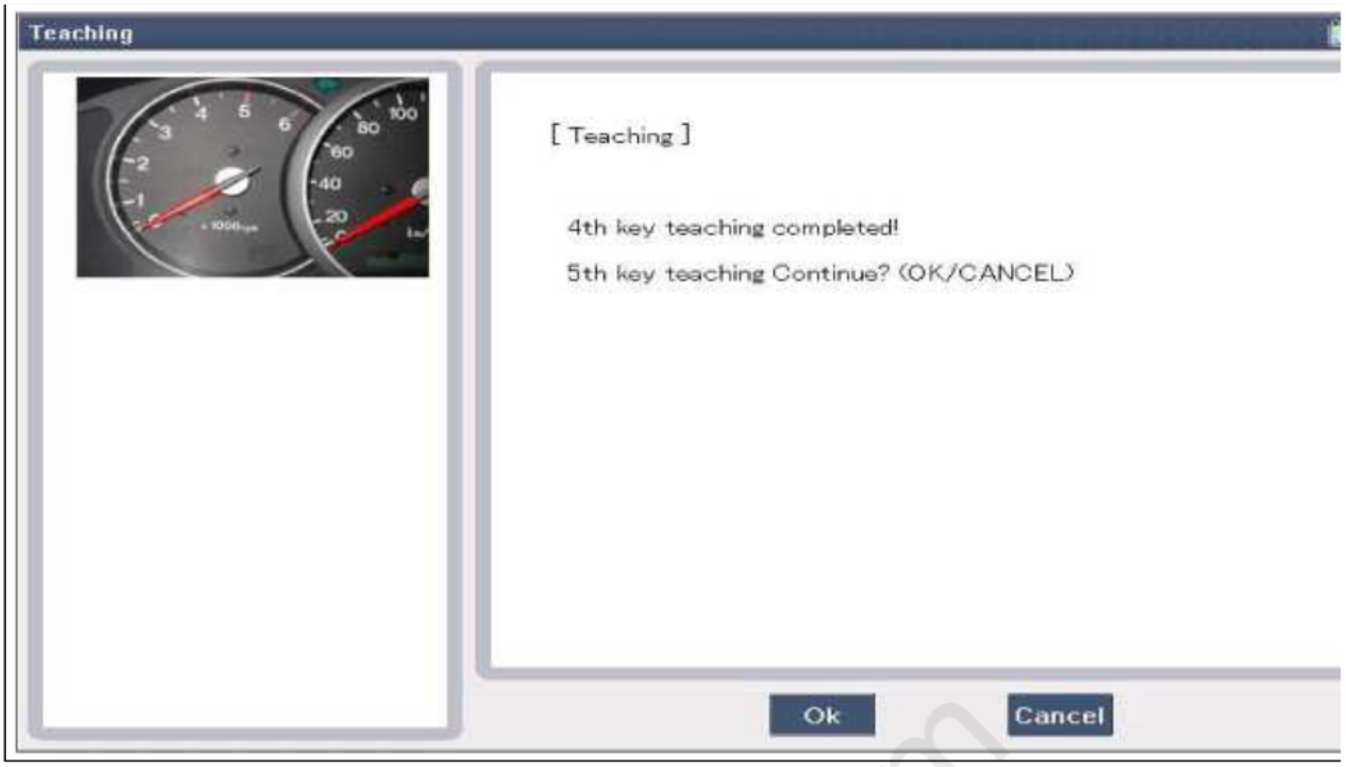

(2) PCM(ECM) virgin status.

After replacing new "PCM(ECM)" GDS displays that PCM(ECM) is virgin status in Key Teaching mode "VIRGIN" status means that PCM(ECM) has not matched any PIN code before.

2. User Password Teaching Procedure

The user password for limp home is taught at the service station. The owner of the vehicle can select a numbe with four digits.

The user password teaching is only accepted by a "learnt" PCM(ECM). Before first teaching of user passwor an PCM(ECM), the status of the password is "virgin" No limp home function is possible.

The teaching is started by ignition on, with a valid key(learnt key) and sending the user password by tester. A successful teaching, the status of the user password changes from "virgin" to "learnt"

The learnt user password can also be changed. This can be done if the user password status is "learnt" and the tester sends authorization of access, either the old user password or the vehicle specific data. After correct authorization, the PCM(ECM) requests the new user password. The status remains "learnt" and the new user password will be valid for the next limp home mode.

If wrong user passwords or wrong vehicle specific data have been sent to the PCM(ECM) three times continuously or intermittently, the PCM(ECM) will reject the request to change the password for one hour. T time cannot be reduced by disconnecting the battery or any other actions. After reconnecting the battery, the starts again for one hour.

(1) User password teaching

cardiagn.com

ID Register

- Password Teaching/Changing
- Neutral Mode
- Limp Home Mode
- Smatra Neutral Mode
- Teaching

Password Teaching/Changing



[Password Teaching/Changing]

Password Status : Virgin

Input new password and press [OK] button.

Ok Cancel

cardiagn.com

Password Teaching/Changing



[Password Teaching/Changing]

Password Status : Virgin

Input new password and press [OK] button.

1 1 1 1

Ok Cancel

Password Teaching/Changing



[Password Teaching/Changing]

Password Status : Virgin

tton.

Are you sure? (Ok/Cancel)

[Condition : IG. On, ENG. Off]

Ok Cancel

cardiagn.com

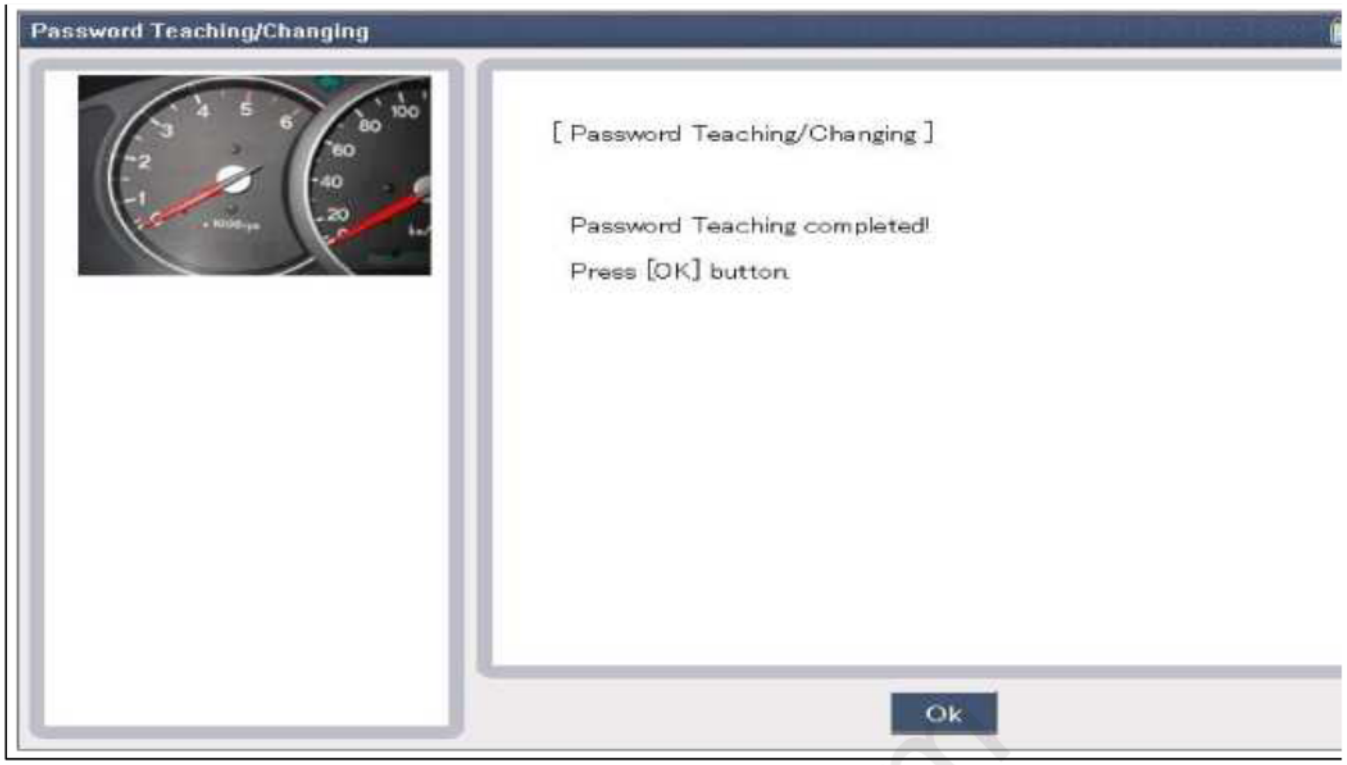

In case of putting wrong password, retry from first step after 10 seconds.

(2) User password changing

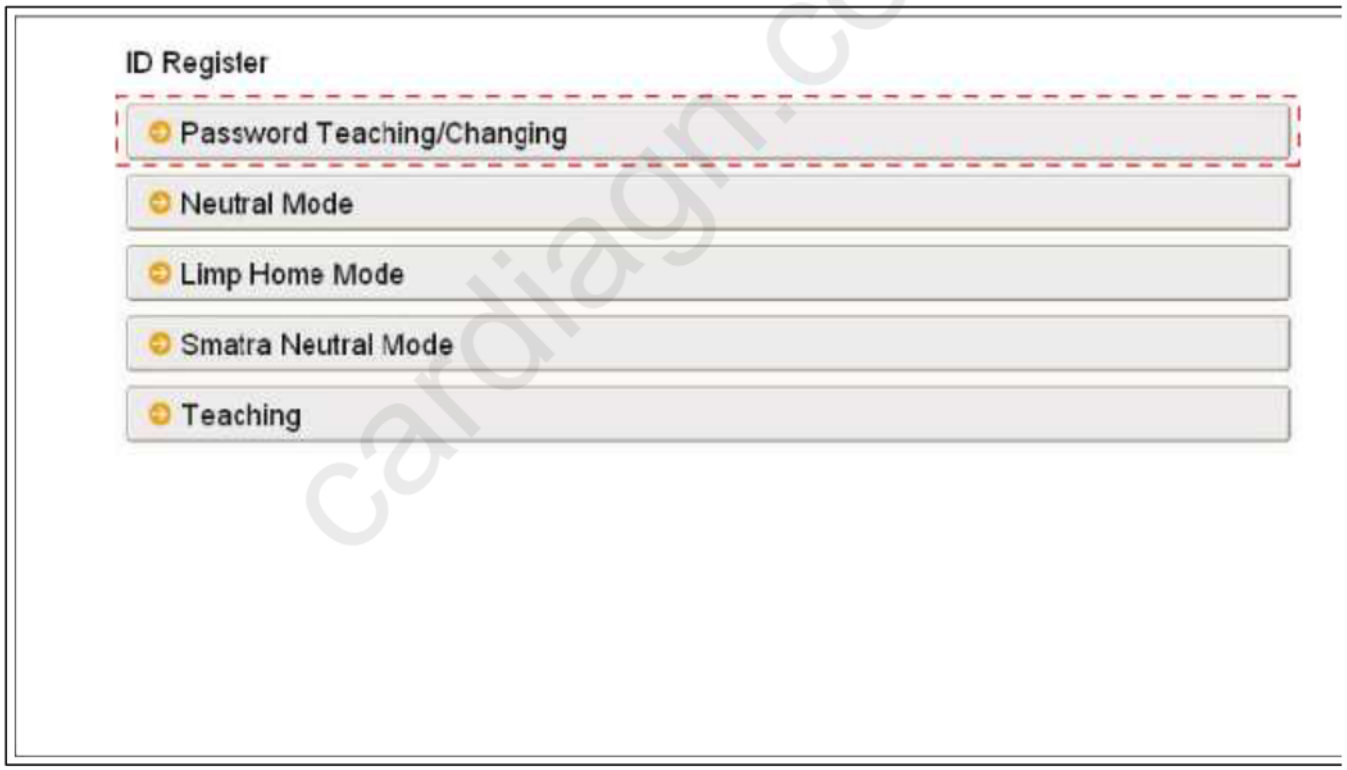

cardiagn.com

Password Teaching/Changing



[Password Teaching/Changing]

Password Status : Learnt

Input old password and press [OK] button.

[ ] [ ] [ ] [ ]

Ok Cancel

Password Teaching/Changing



[Password Teaching/Changing]

Password Status : Learnt

Input old password and press [OK] button.

[1] [1] [1] [1]

Ok Cancel

cardiagn.com

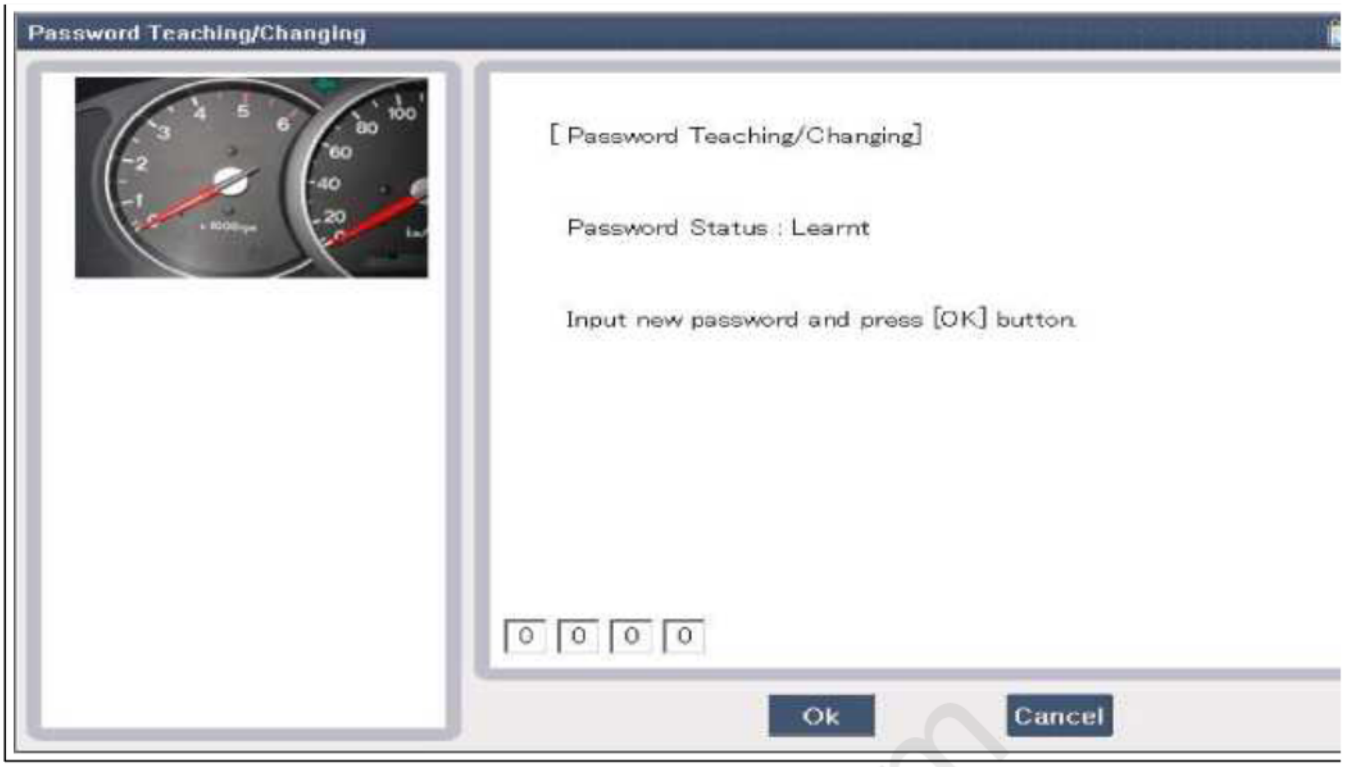



cardiagn.com

Limp Home Function

1. Limp Home By Tester

   If the PCM(ECM) detects the fault of the SMARTRA or transponder, the PCM(ECM) will allow limp home function of the immobilizer. Limp home is only possible if the user password (4 digits) has been given to the PCM(ECM) before. This password can be selected by the vehicle owner and is programmed at the service station.

   The user password can be sent to the PCM(ECM) via the special tester menu.

   Only if the PCM(ECM) is in status "learnt" and the user password status is "learnt" and the user password is correct, the PCM(ECM) will be unlocked for a period of time (30 sec.). The engine can only be started durin this time. After the time has elapsed, engine start is not possible.

   If the wrong user password is sent, the PCM(ECM) will reject the request of limp home for one hour.

Disconnecting the battery or any other action cannot reduce this time. After connecting the battery to the PCM(ECM), the timer starts again for one hour.

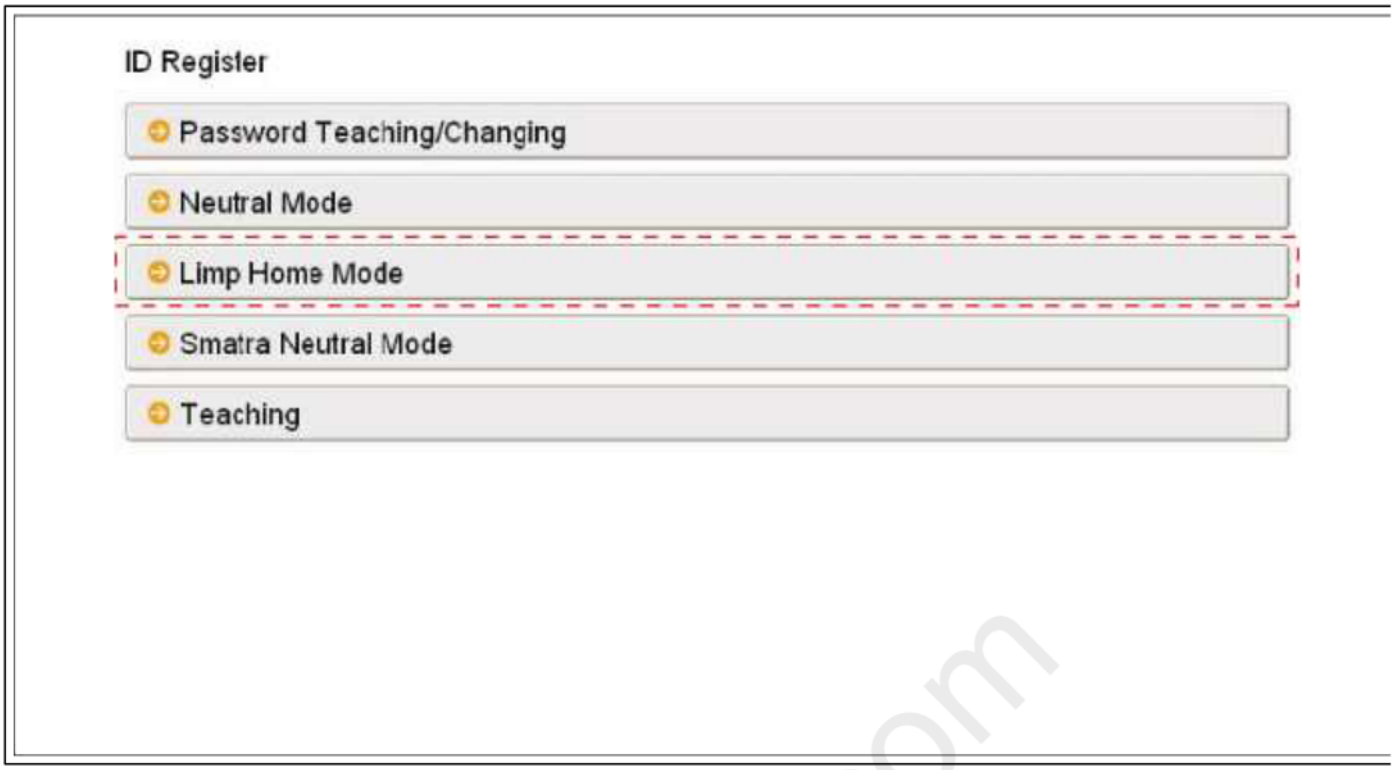

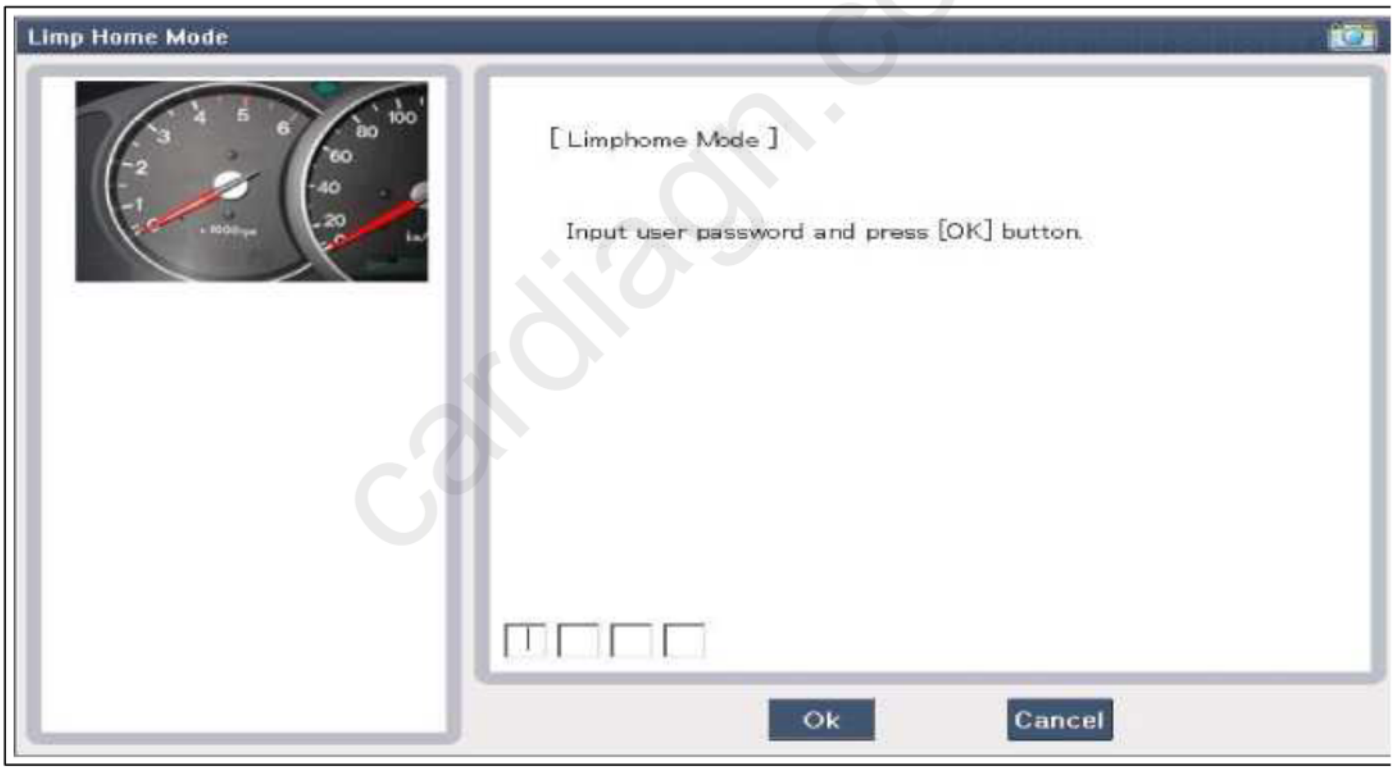

cardiagn.com

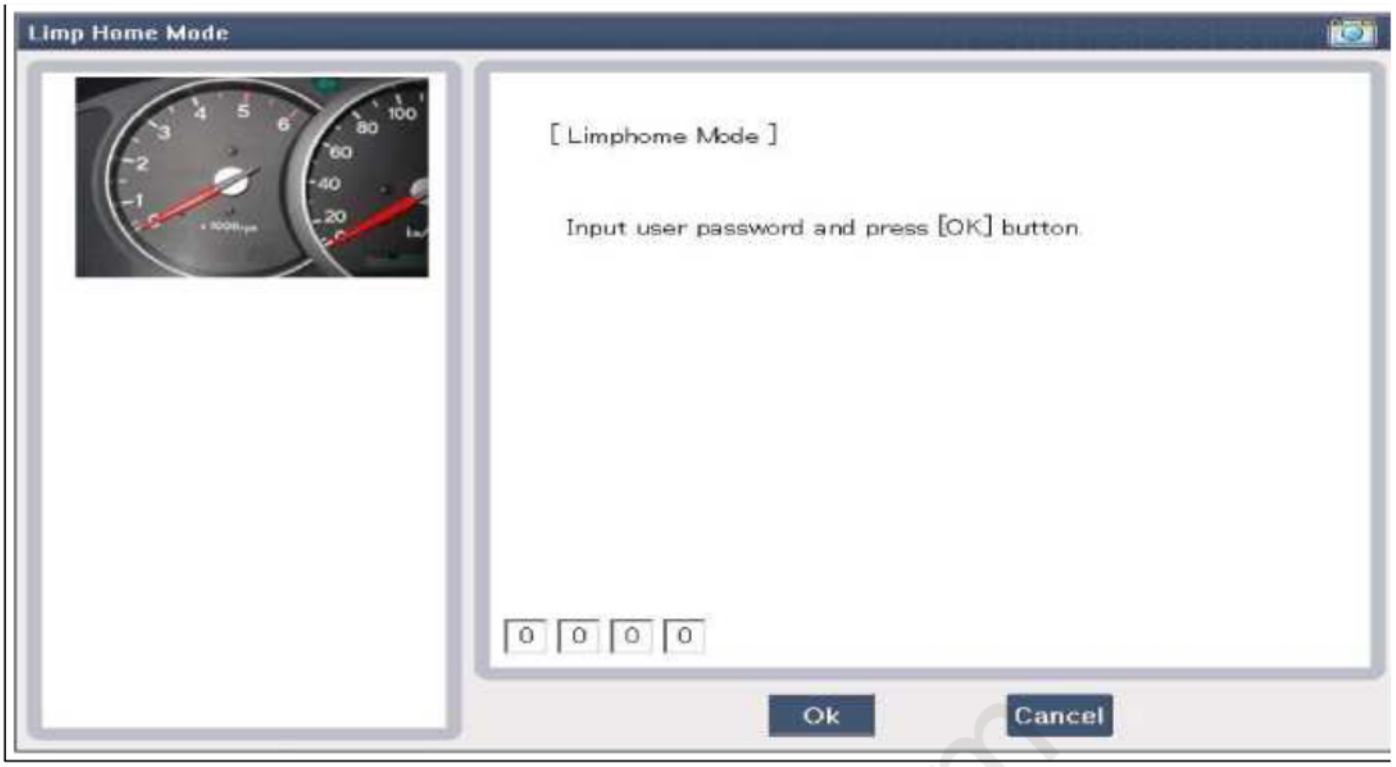

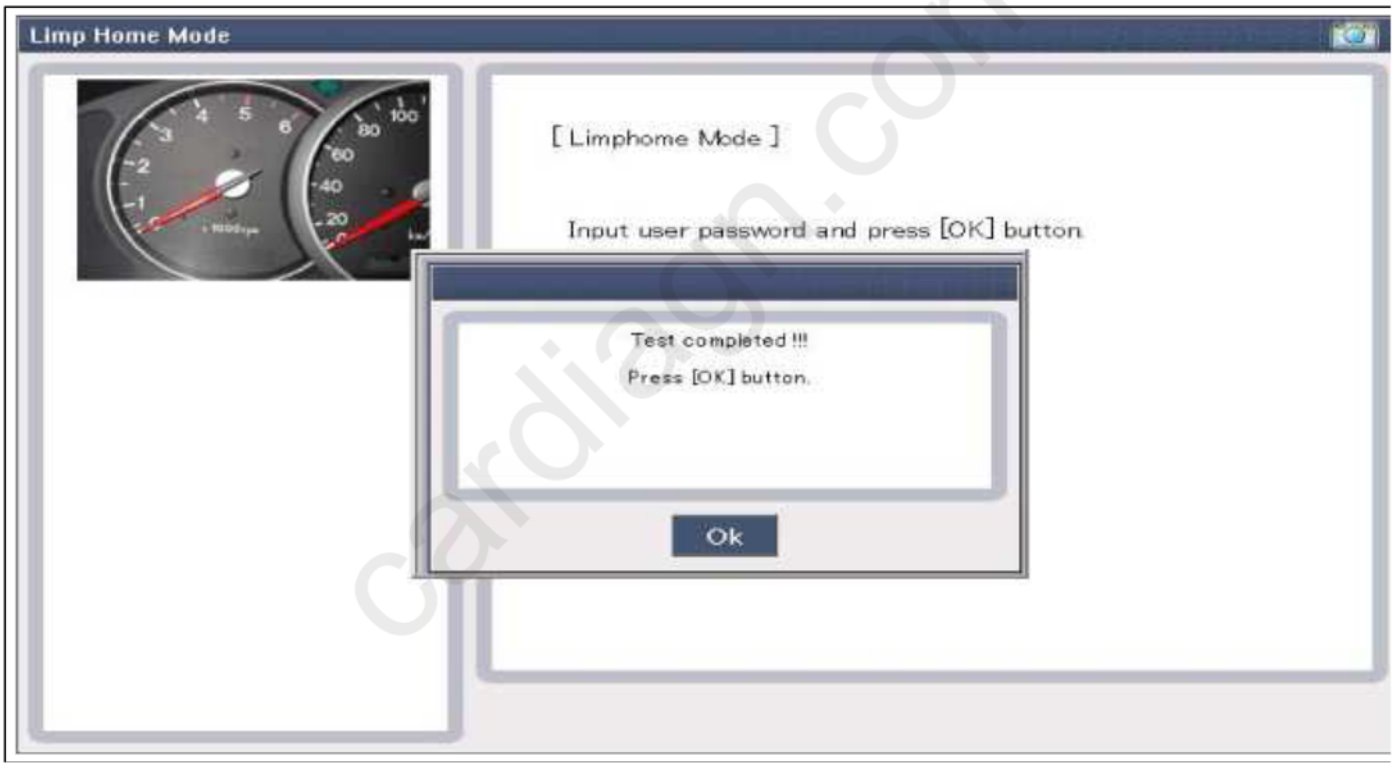

2. Limp Home By Ignition Key

The limp home can be activated also by the ignition key. The user password can be input to the PCM(ECM) by a special sequence of ignition on/off.

Only if the PCM(ECM) is in status "learnt" and the user password status is "learnt" and the user password is correct, the PCM(ECM) will be unlocked for a period of time (30 sec.).

The engine can be started during this time. After the time has elapsed, engine start is not possible. After a new password has been input, the timer (30 sec.) will start again.

After ignition off, the PCM(ECM) is locked if the timer has elapsed 8 seconds. For the next start, the input of the user password is requested again.

cardiagn.com

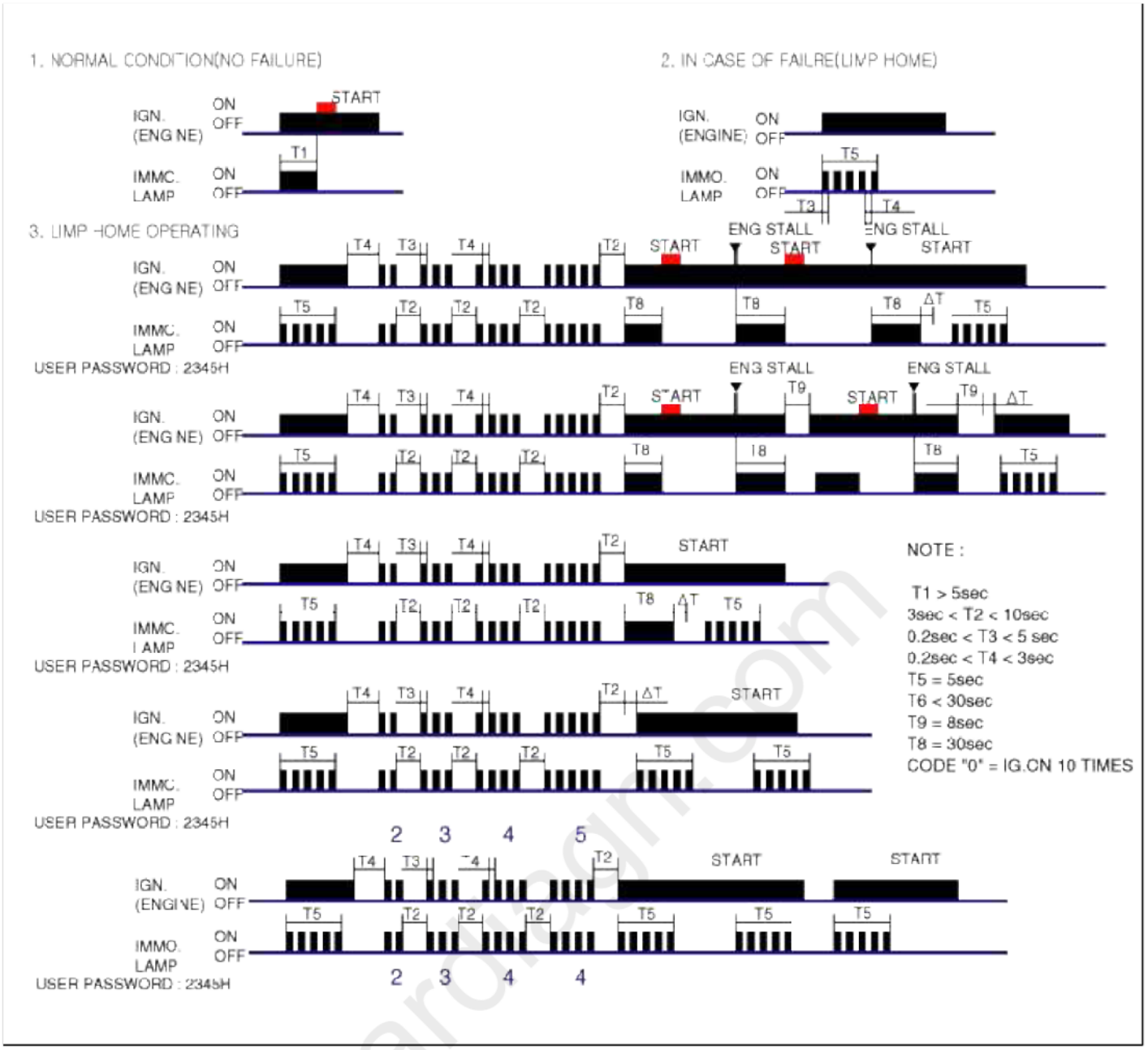

Replacement

Problems And Replacement Parts:

Problem	Part set	GDS required?
All keys have been lost	Blank key (4)	YES
Antenna coil unit does not work	Antenna coil unit	NO
ECM does not work	PCM(ECM)	YES
Ignition switch does not work	Ignition switch with Antenna coil unit	YES
Unidentified vehicle specific data occurs	Key, PCM(ECM)	YES
SMARTRA unit does not work	SMARTRA unit	YES

Replacement Of Ecm And Smartra

In case of a defective ECM, the unit has to be replaced with a "virgin" or "neutral" ECM. All keys have to be taught to the new ECM. Keys, which are not taught to the ECM, are invalid for the new ECM (Refer to key

teaching procedure). The vehicle specific data have to be left unchanged due to the unique programming of transponder.
In case of a defective SMARTRA, it needs teaching the smartra. A new SMARTRA device replaces the old one and smartra need teaching.

1. Things to remember before a replacement (PCM(ECM))

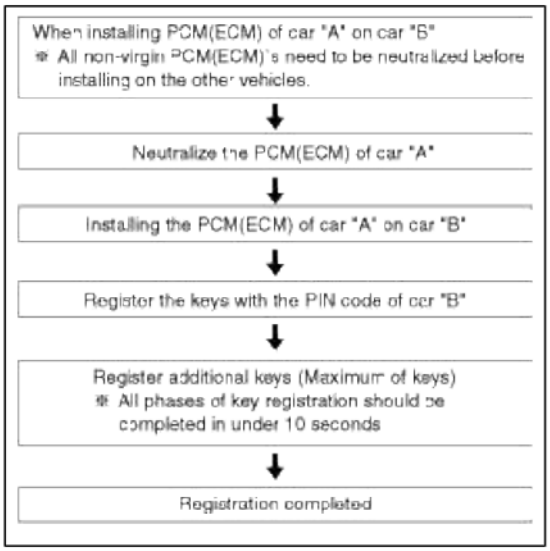

2. Things to remember before a replacement (Keys & Additional registration)

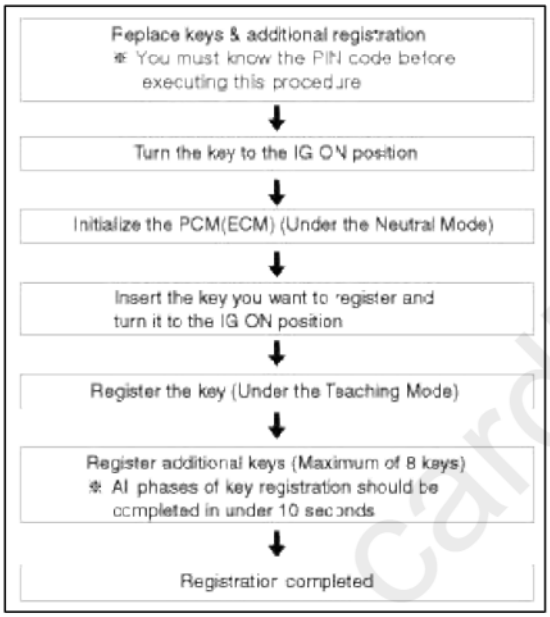

cardiagn.com

NOTE

1. When there is only one key registered and you wish to register another key, you need to re-register the key which was already registered.
2. When the key #1 is registered and master key #2 is not registered, Put the key #1 in the IG/ON or the start position and remove it. The engine can be started with the unregistered key #2.
   (Note that key #2 must be used within 10 seconds of removing key #1)
3. When the key #1 is registered and key #2 is not registered, put the unregistered master key #2 in the IG/ON or the start position.
   The engine cannot be started even with the registered key #1.
4. When you inspect the immobilizer system, refer to the above paragraphs 1, 2 and 3.
   Always remember the 10 seconds zone.
5. If the pin code & password are entered incorrectly on three consecutive inputs, the system will be locked for one hour.
6. Be cautious not to overlap the transponder areas.
7. Problems can occur at key registration or vehicle starting if the transponders should overlap.

Neutralizing Of ECM

The PCM(ECM) can be set to the "neutral" status by a tester.

A valid ignition key is inserted and after ignition on is recorded, the PCM(ECM) requests the vehicle specific data from the tester. The communication messages are described at "Neutral Mode" After successfully receiving the data, the PCM(ECM) is neutralized.

The ECM remains locked. Neither the limp home mode nor the "twice ignition on" function, is accepted by the PCM(ECM).

The teaching of keys follows the procedure described for the virgin PCM(ECM). The vehicle specific data have to be unchanged due to the unique programming of the transponder. If data should be changed, new keys with a virgin transponder are requested.

This function is for neutralizing the PCM(ECM) and Key. Ex) when lost key, Neutralize the PCM(ECM) then teach keys.

(Refer to the Things to do when Key & PIN Code the PCM(ECM) can be set to the "neutral" status by a scanner. If wrong vehicle specific data have been sent to SMATRA three times continuously or intermittently, the SMATRA will reject the request to enter neutral mode for one hour. Disconnecting the battery or other manipulation cannot reduce this time. After connecting the battery the timer starts again for one hour.

NOTE

- Neutralizing setting condition
  - In case of PCM(ECM) status "Learnt" regardless of user password "Virgin or Learnt"
  - Input correct PIN code by scanner.
  - Neutralizing meaning .
    : PIN code (6) & user password (4) deletion.
    : Locking of ECM (except key teaching permission)
- Neutralizing meaning:
  - PIN Code(6) & User P/Word(4) deletion
  - Locking of EMS(except Key Learning permission)

Function / EMS	Engine Running			Learning	
	Learnt Key	Limp home	Twice Ignition	Key	User Password
Neutral	No	No	No	Yes	No

cardiagn.com

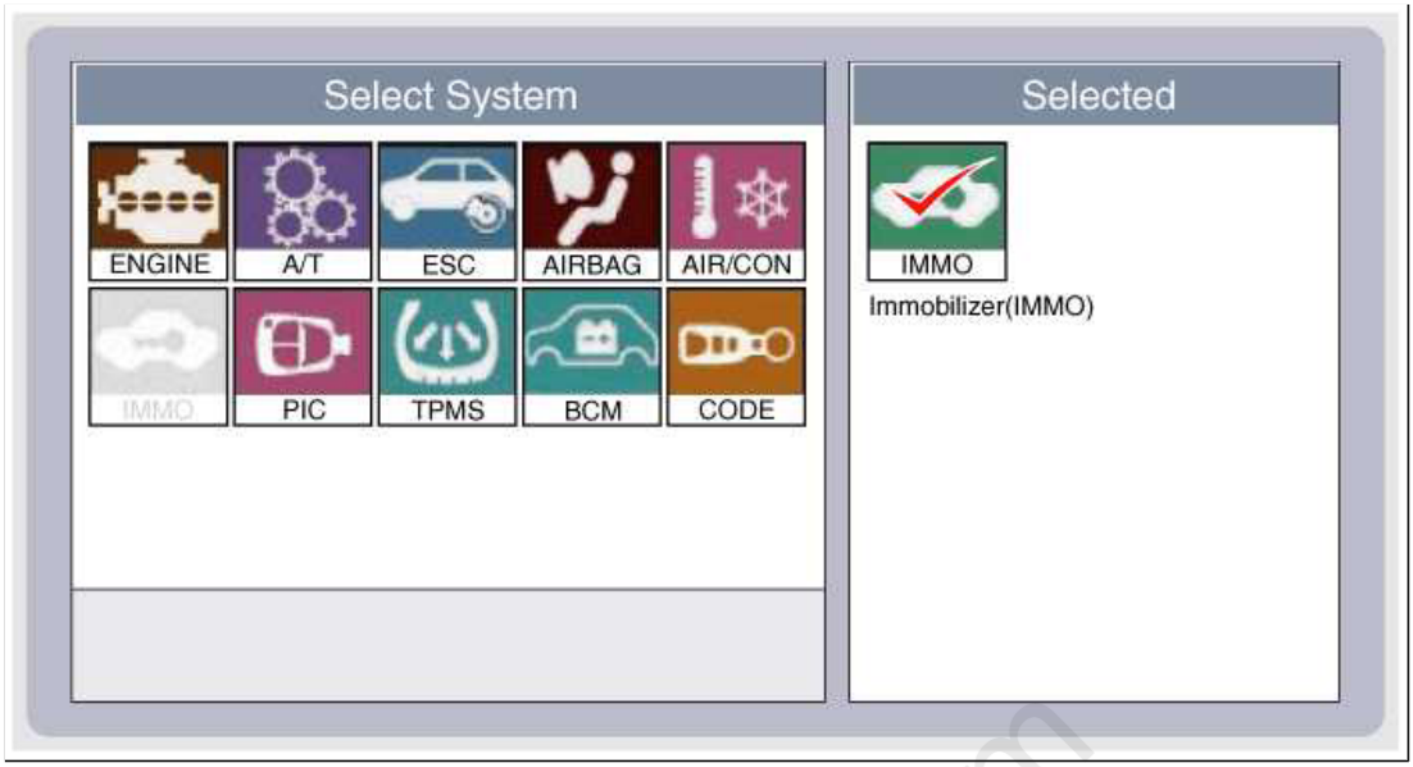

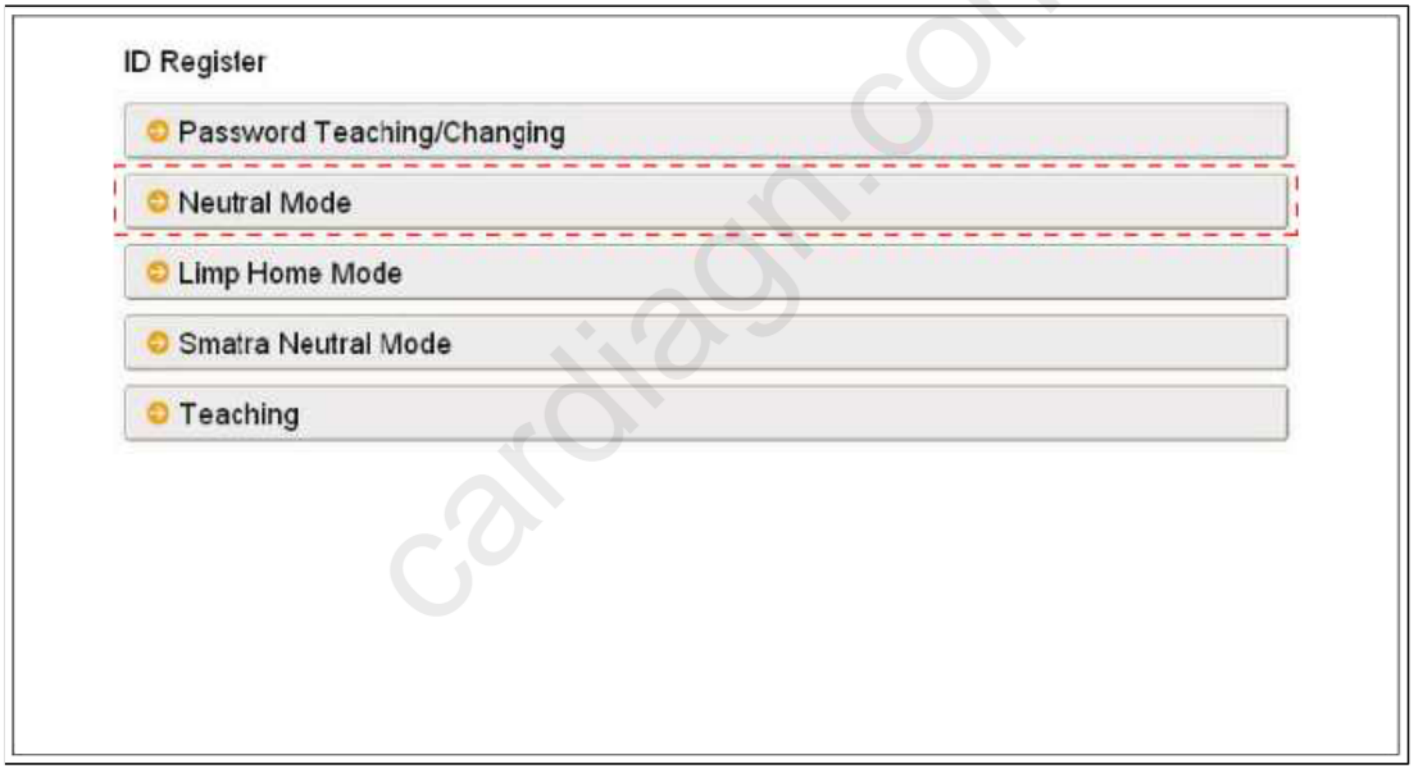

cardiagn.com

Neutral Mode



[Neutral Mode]

Input PIN code and press [OK] button.

Ok Cancel

Neutral Mode



[Neutral Mode]

Input PIN code and press [OK] button.

0 9 8 7 6 5

Ok Cancel

cardiagn.com

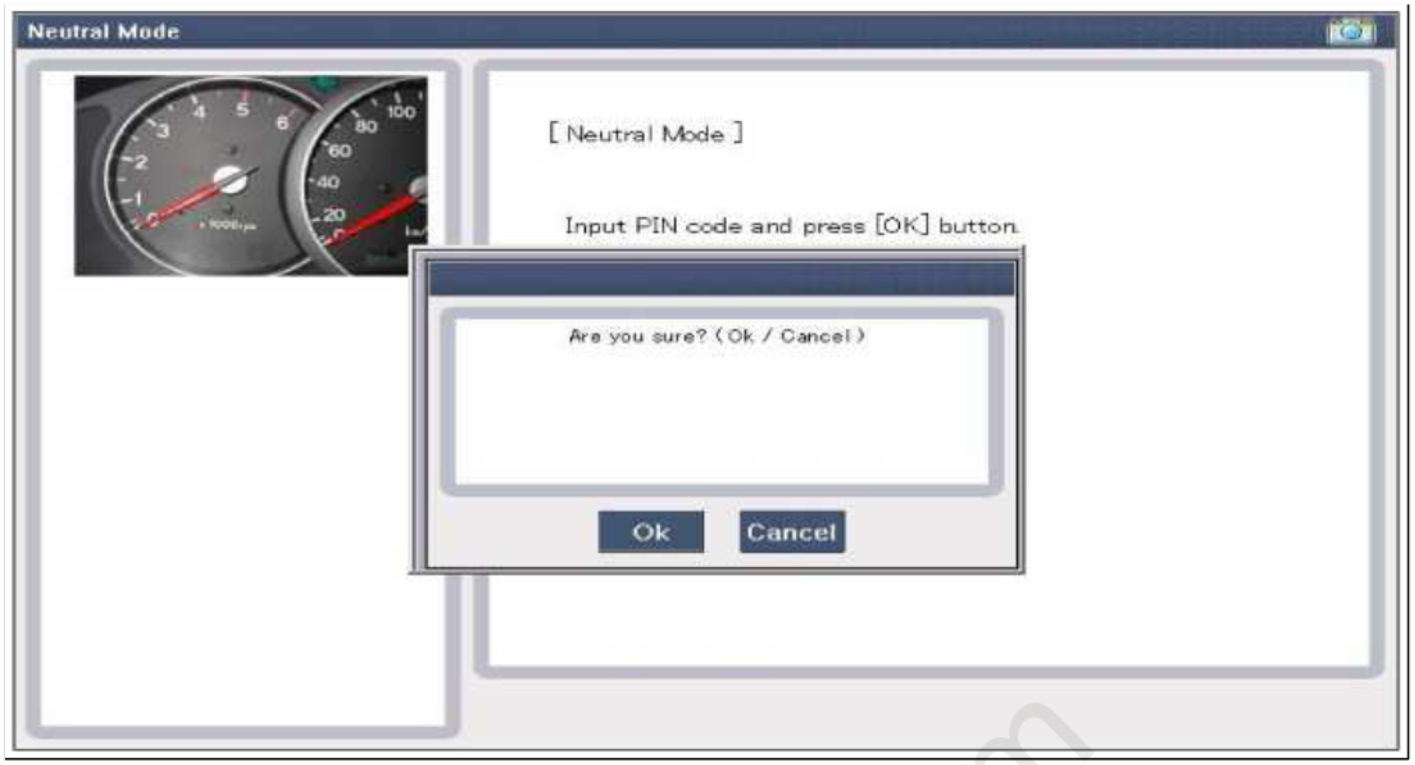



cardiagn.com



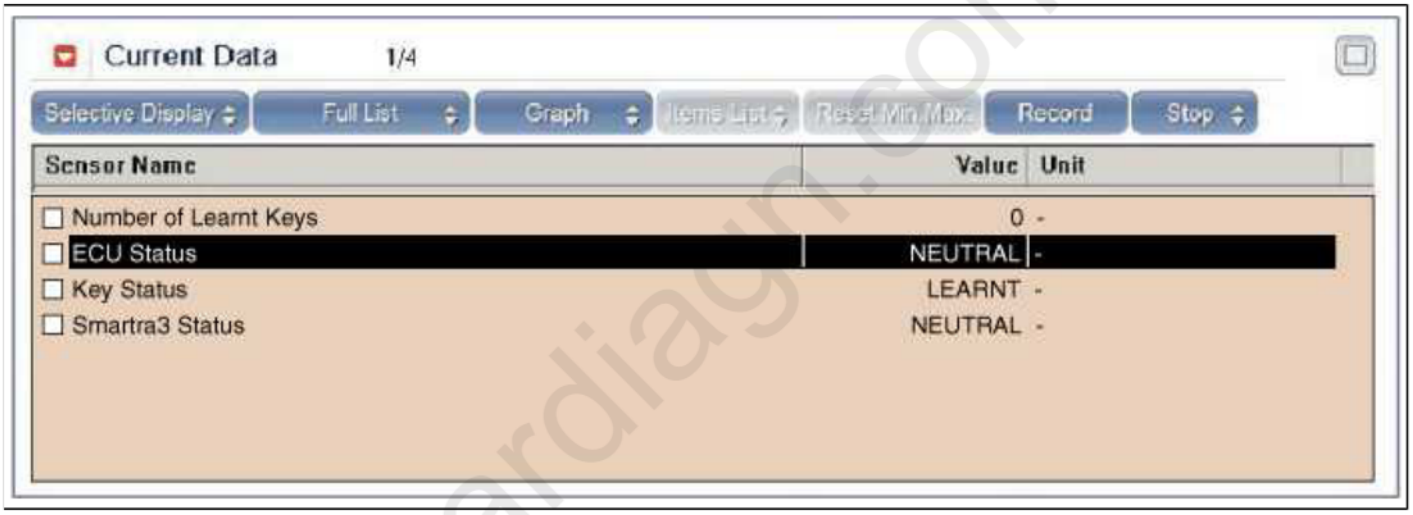

Neutralizing Of SMARTRA

The EMS can be set to the status "neutral" by tester

Ignition key (regardless of key status) is inserted and after IGN ON. If receiving the correct vehicle password from GST, SMARTRA can be neutralized. The neutralization of SMARTRA is possible if DPN is same as the value inputted by GST.

In case that the SMARTRA status is neutral, the EMS keeps the lock state. And the start is not possible by "twice ignition".

In case of changing the vehicle password, new virgin transponder must be only used. And in case of virgin key, after Learning the key of vehicle password, it can be used.

If wrong vehicle specific data have been sent to SMATRA three times continuously or intermittently, the SMATRA will reject the request to enter neutral mode for one hour. Disconnecting the battery or other manipulation cannot reduce this time. After connecting the battery the timer starts again for one hour.

cardiagn.com

NOTE

- Neutralizing Setting condition :
  - In case of "SMARTRA status", "Learned"
  - Input correct Pin code by tester
- Neutralizing meaning :
  - Vehicle password(DPN Code) & SEK Code deletion.
  - Permission of New DPN Learning.

Function / SMARTRA	Engine Running			Learning	
	Learnt Key	Limp home	Twice Ignition	Key	User Password
Neutral	No	Yes (EMS learnt)	No	Yes	No

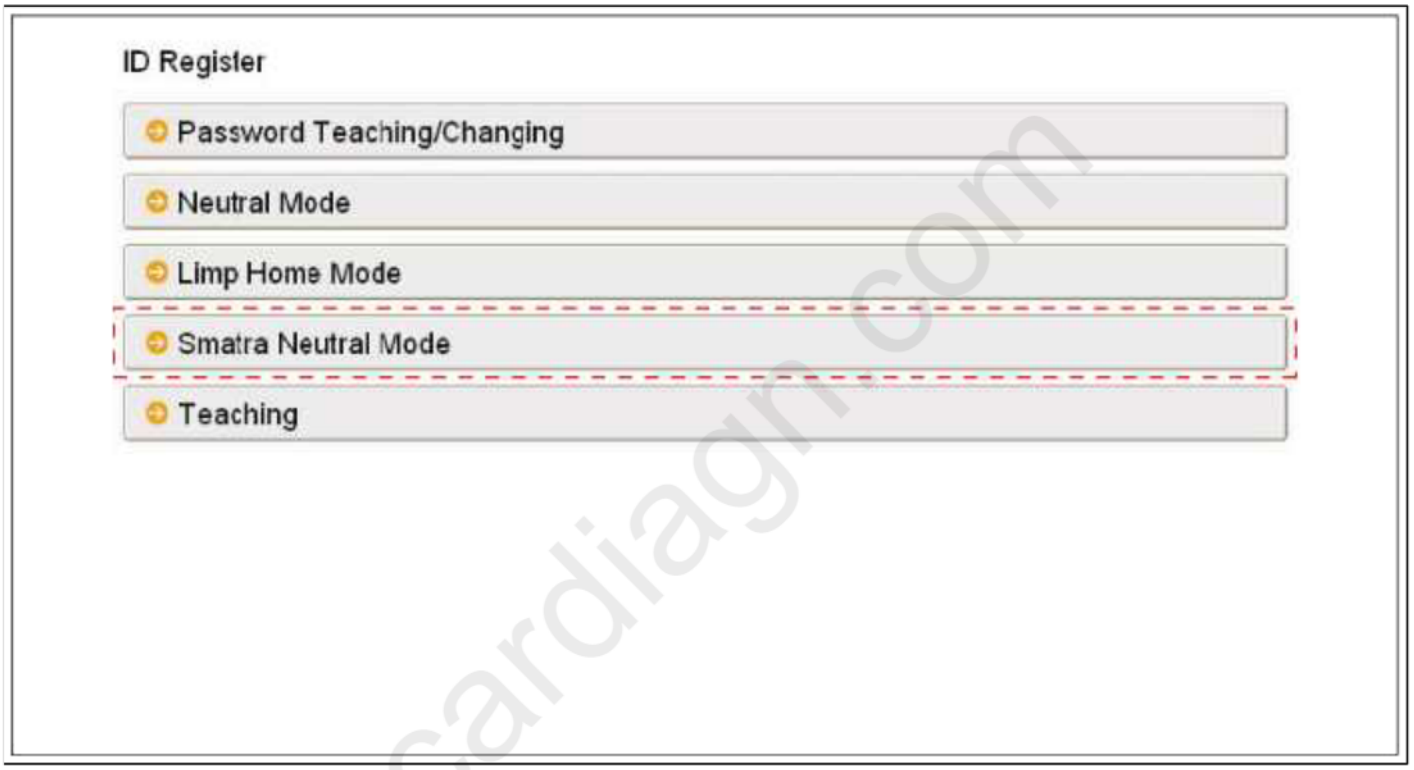

cardiagn.com

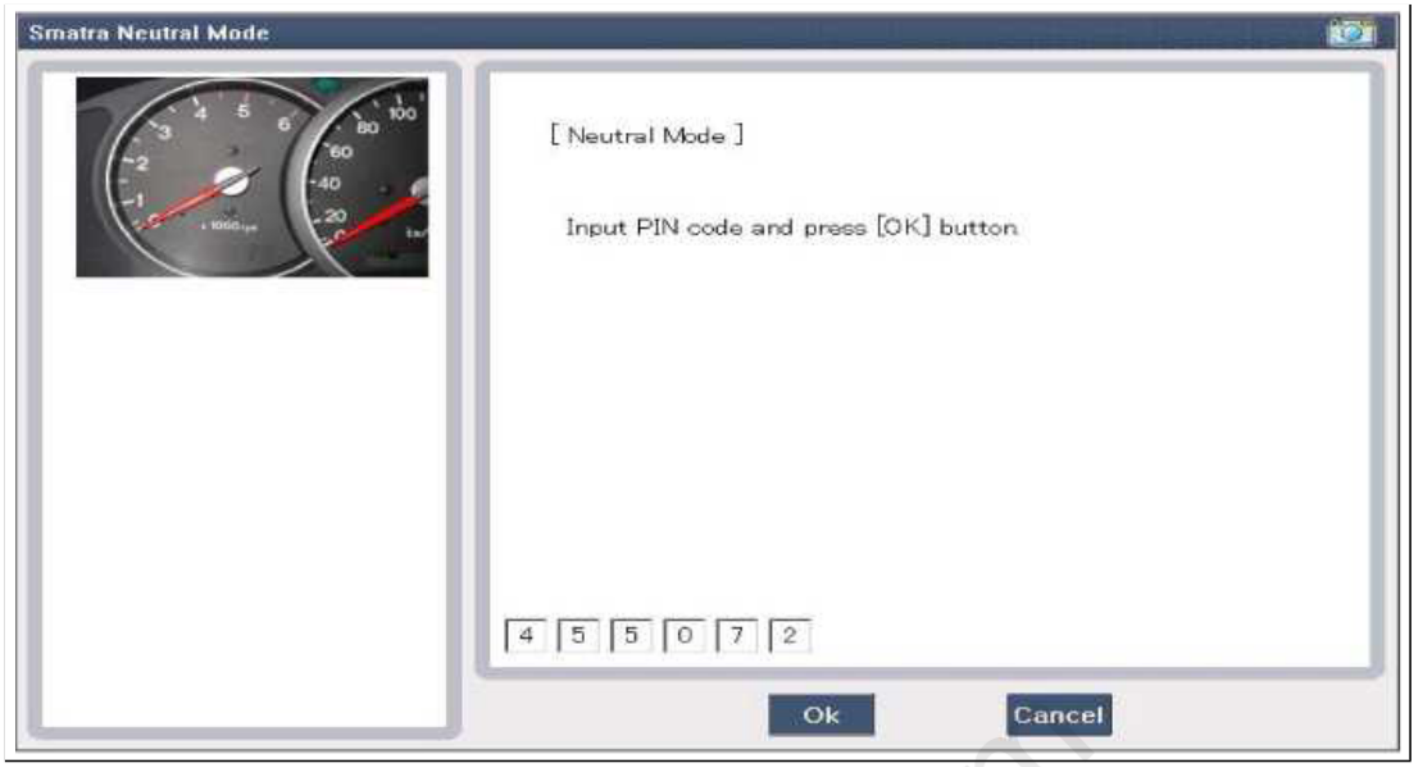



cardiagn.com



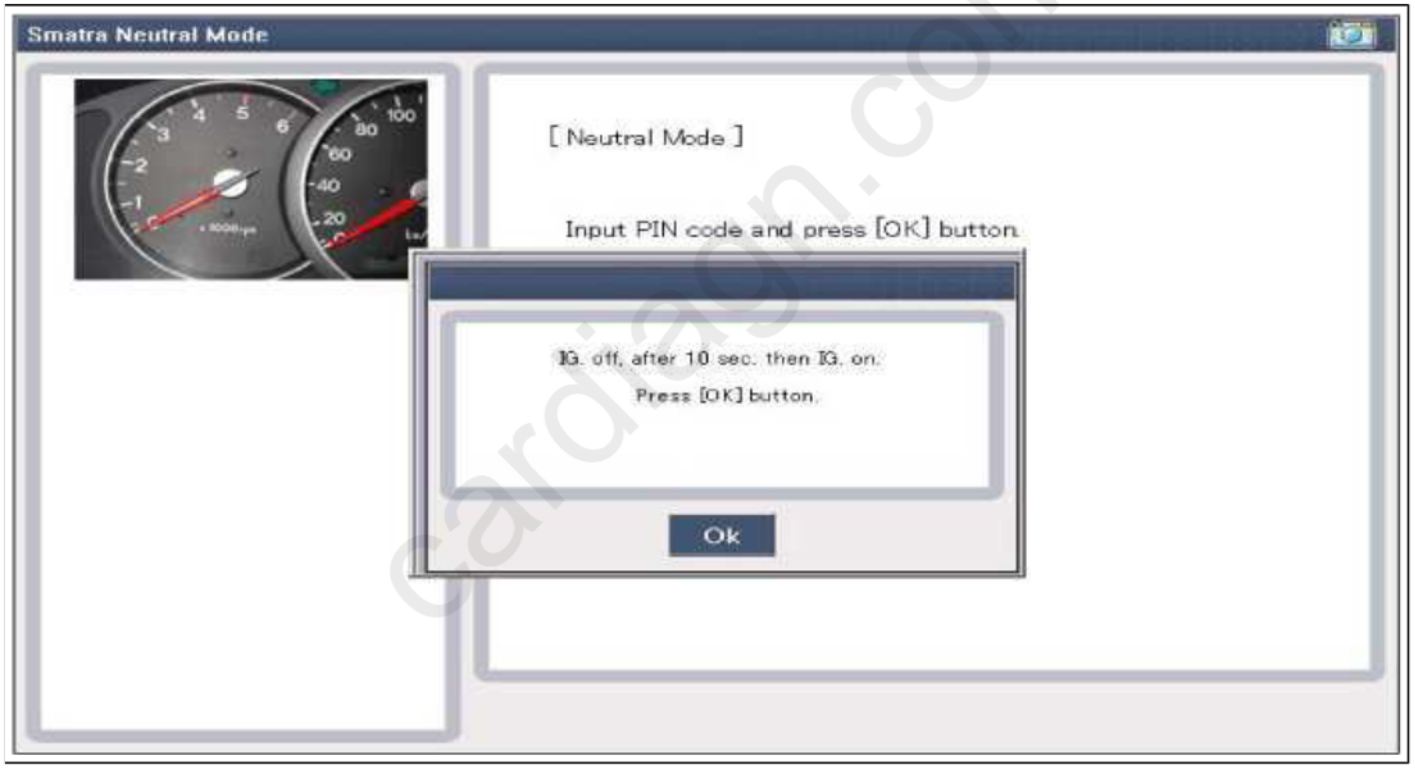

cardiagn.com

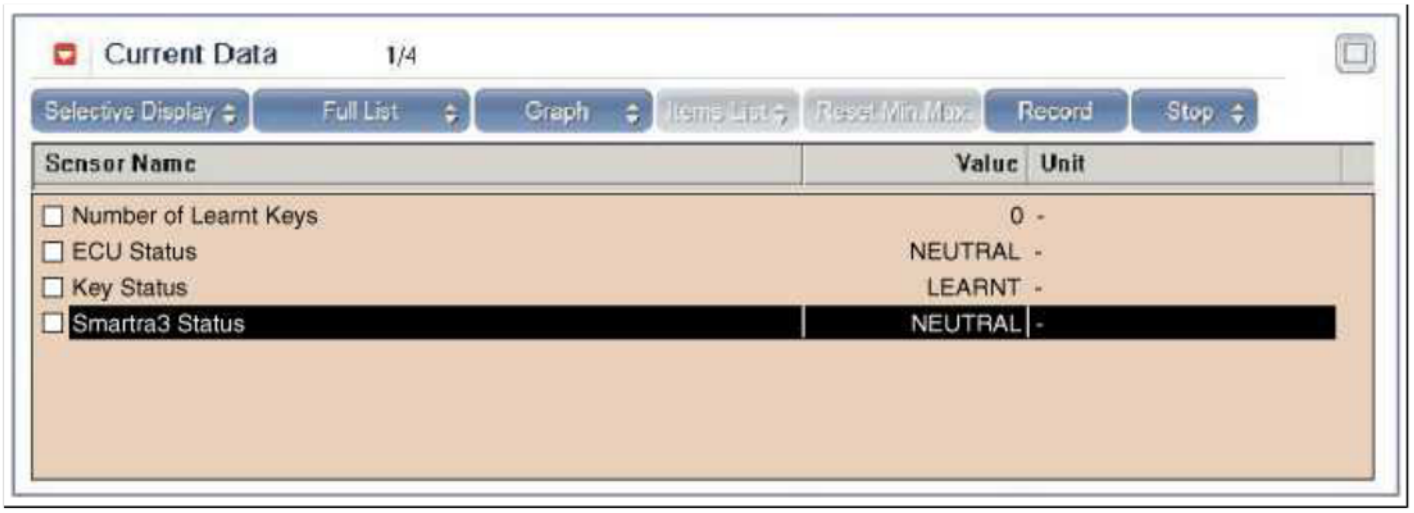

Body Electrical System > Immobilizer System > Immobilizer Control Unit > Repair procedures

Replacement

1. Disconnect the negative (-) battery terminal.
2. Remove the crash pad lower panel.
   (Refer to the BD group - "Crash pad")
3. Disconnect the 5P connector of the SMARTRA unit and then remove the SMARTRA unit (A) after loosening the bolt.

   [USA]

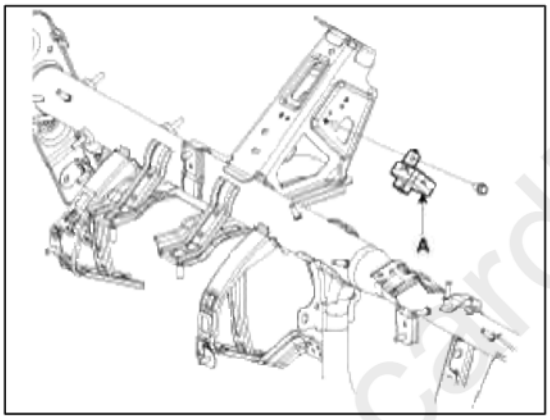

4. Disconnect the immobilizer unit connector and then remove the immobilizer unit(A) and bracket after loosening a shear bolt or removing the unit from the mounting bracket (B) using a flat-up screwdriver.

> NOTE
>
> - When removing the shear bolt, punch the shear bolt using a centering punch.
> - And drill its head off with a drill bit.
> - Be careful not to damage the SMARTRA unit.

   [CANADA]

Cardiagn.com

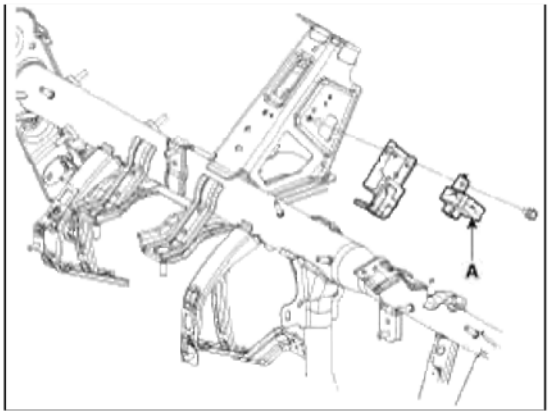

5. Installation is the reverse of removal procedure.

Body Electrical System > Immobilizer System > Antenna Coil > Repair procedures

Replacement

1. Disconnect the negative (-) battery terminal.
2. Remove the steering column upper and lower shrouds after loosening the screws (3EA).

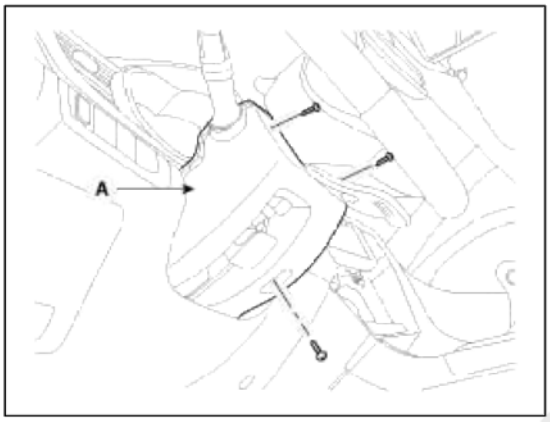

3. Disconnect the 6P connector (B) of the coil antenna and then remove the coil antenna (A) after loosening the screw.

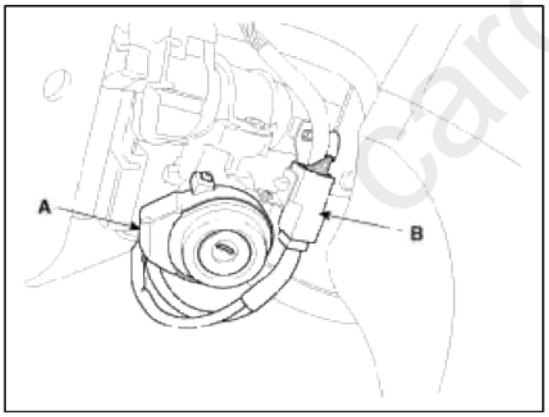

4. Installation is the reverse of removal procedure.

Body Electrical System > Rear Parking Assist System > Specifications

Specification

cardiagn.com

Item		Specification
Ultrasonic sensor	Voltage rating	DC 8.5 V
	Detecting range	40 cm ~ 120 cm
	Operation voltage	DC 8 ~ 10 V
	Operation current	MAX 100 mA
	Operation temperature	-30°C ~ +80°C (-22°C ~ +176°C)
	Operation frequency	48 ± 3 KHz
	Number of sensors	4 (Left side, Left center, Right center, Right side)
Piezo buzzer	Voltage rating	DC 12 V
	Operation voltage	DC 7.5 ~ 14.5 V
	Operation temperature	-30°C ~ +80°C (-22°C ~ +176°C)
	Rated current	Below MAX 50 mA
	Sound, tone	Oscillation frequency : 2,000 ± 40 Hz
		Sound level : Min : 83 dB (DC 13V /m, 1m)

Rear parking assist control unit function and buzzer are built in BCM (body control unit).

Body Electrical System > Rear Parking Assist System > Components and Components Location

Component Location

cardiagn.com

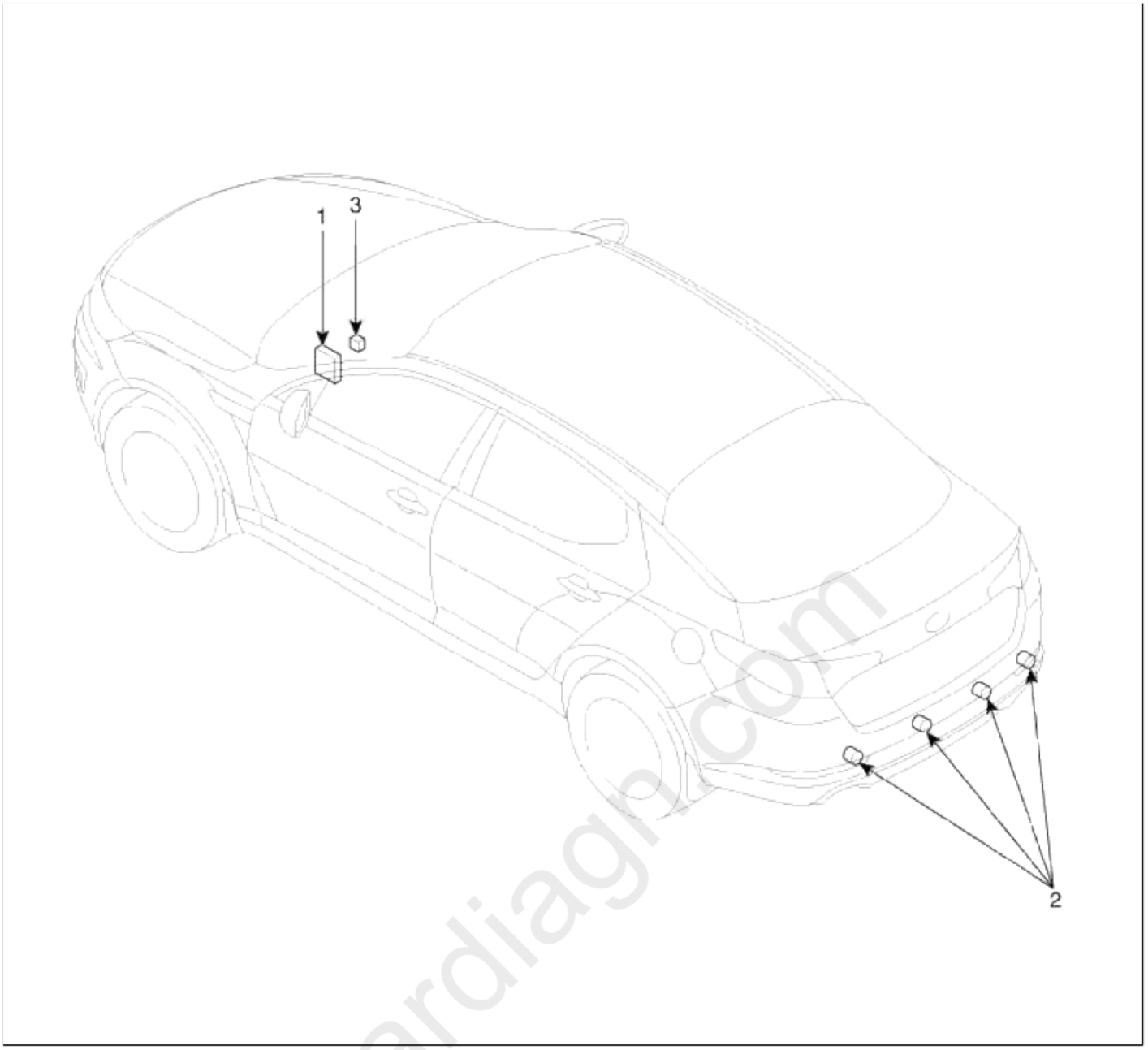

1. BCM 2. Ultrasonic sensor	3. Buzzer

Rear parking assist control unit function and buzzer are built in BCM (body control unit).

Body Electrical System > Rear Parking Assist System > Description and Operation

System Overview

RPAS(Rear Parking Assist System) is an electronic driving aid device warning driver to be cautious when they park or speed low after detecting an object on side and behind of vehicle by using the feature of ultrasonic waves.

RPAS consists of four RPS sensors which are detecting the obstacles and transmit the result separated into three warning levels, the first, second and third to BCM by Lin communication.BCM decides the alarm level by the transmitted communication message from the slave sensors, then operate the buzzer or transmits the data for display.

cardiagn.com

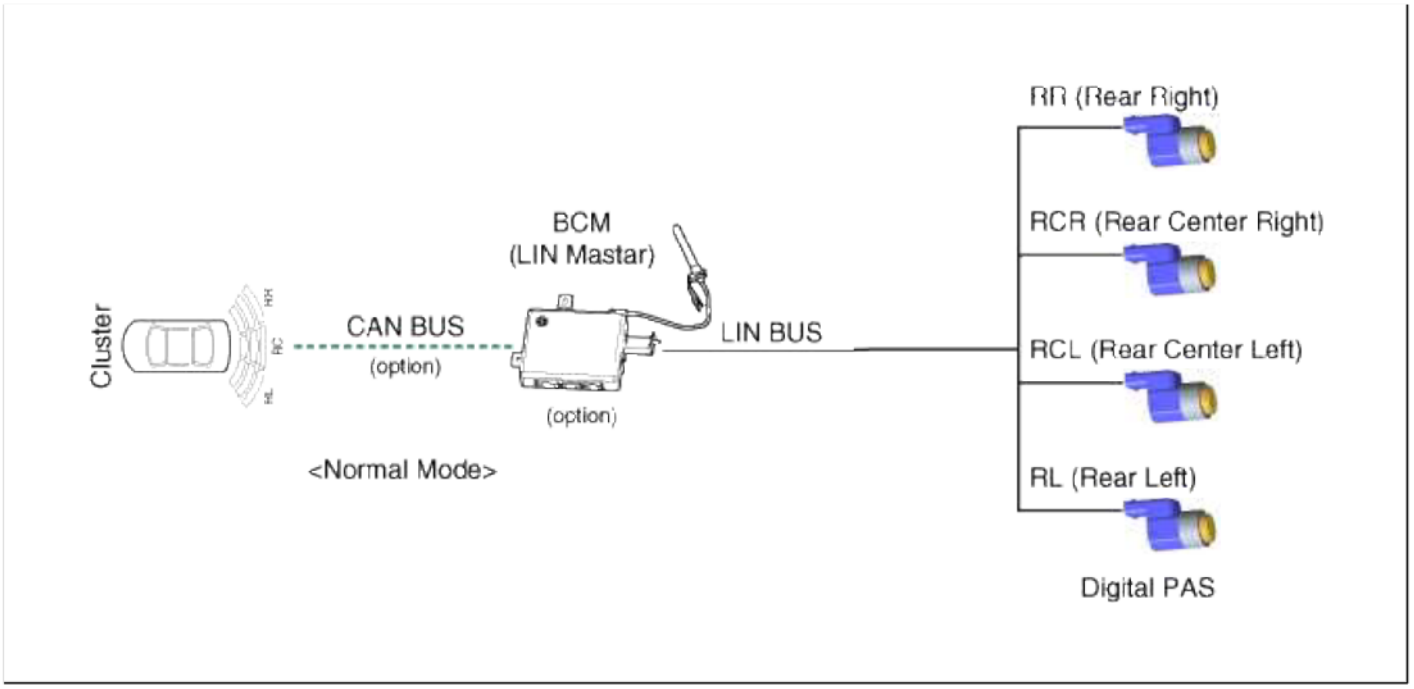

System Block Diagram

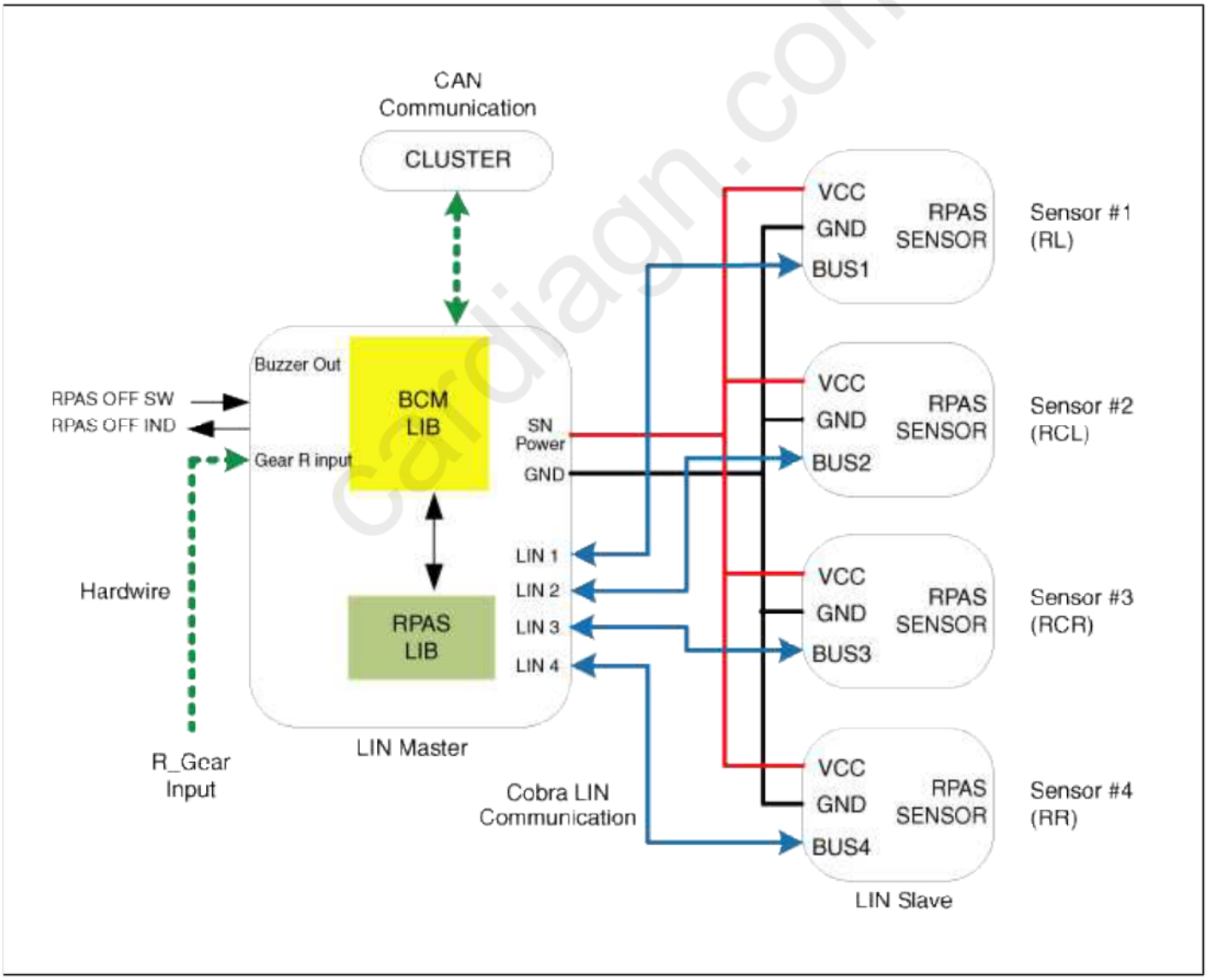

System Operation

Initial Mode

1. RPAS checks the ID and Reference (shaping table) during the initialization using LIN communication.
2. If sensor ID or sensor parameter is same with expected value, RPAS system is initialized within 500ms after turning IGN1 and shifting R gear.
3. If Sensor ID or sensor parameter is different with expected value, initial mode can take about 1.2 second after turning IGN1 and shifting R gear because of teaching sensor ID or sensor parameter.
4. RPAS executes the diagnosis of each sensor during the initialization.

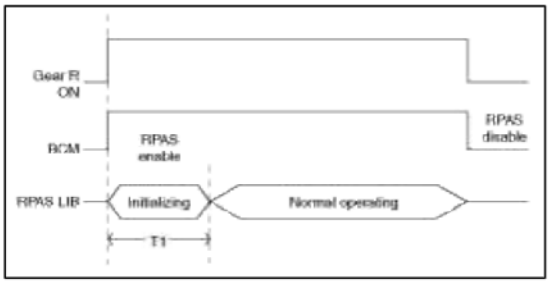

T1 : RPAS initializing time

(1) In case of sensor teaching, T1 : within 1.2 second

(2) In case of normal condition, T1 : 500ms ± 10%

Normal Mode

Normal mode of RPAS can divide as two steps.

First step is a mode to inform the driver of the RPAS system ON and diagnosis results which is executed during the initialization.

Second step is the obstacle detection mode to give driver warning when detecting the obstacle.

1. Driver info mode for RPAS ON

(1) If there aren't any diagnosis messages from sensors, the normal RPAS ON sound with ON-period 300ms warn after initializing time since R gear is shifted. The obstacle detection warning starts after the delay of 100ms since finishing the normal RPAS ON warning sound.

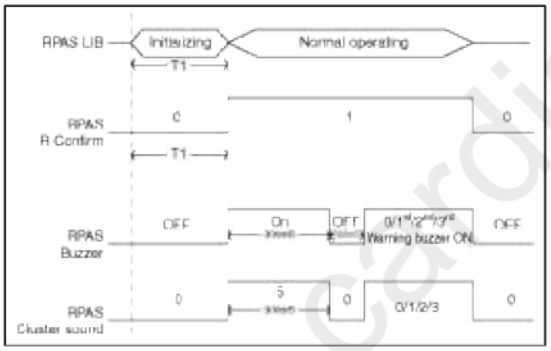

cardiagn.com

(2) If there are any failure sensor, "Warning of sensor fail" sound is driven during the fixed period and if there is any display unit, it displays the diagnosis.
Refer to the Diagnosis buzzer sound for more detail Information.

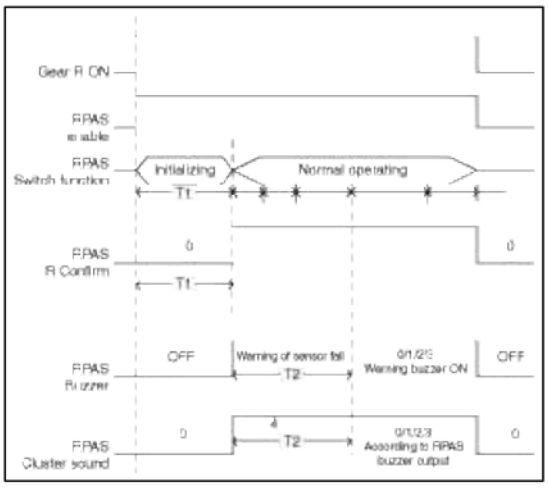

T1 : RPAS initializing time

(1) In case of sensor teaching, T1 : within 1.2 second

(2) In case of normal condition, T1 : 500ms ± 10%

T2 : Refer to the spec for warning of fail

(3) "Diagnosis-buzzer" is driven only one time but the display unit continue to display the diagnosis according each failure sensor's location.

2. Obstacle detection mode

(1) There are 3 kinds of warning sound for detecting the obstacle, the 1st warning and the 2nd warning are the intermittent sound and the 3rd warning is the continuous sound.

(2) The vehicle speed for the operation of RPAS is below 10Km/h .

(3) There are 2 kinds of detection mode. One is for normal operating mode using normal 4 sensors. Even if any sensor is on failure condition, the RPAS system will be entered to degrade mode excepting a failure sensor.

(4) Operating procedure

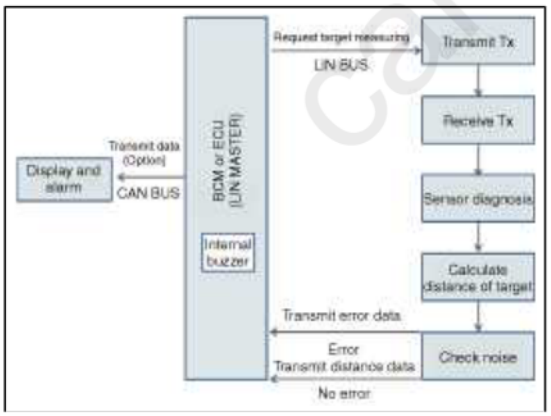

Detection Area

1. Test condition – PVC pole(Diameter 75mm, Length 1m) & At the room temperature
2. Distance tolerance (measured at the front of sensor)
   81 cm ~ 120 cm : ± 15 cm
   41 cm ~ 80 cm : ± 10 cm
   Below 40 cm : ± 10 cm
3. Below 30 cm may not be detected.

cardiagn.com

4. Sensing zone specification
   Sound pulse has a fixed duration.
   Pause between pulses is related to the distance from the obstacle and is not variable.
   Although the position of the obstacle is not moving during sometime, the buzzer should keep warning. And although an obstacle that is currently warned is getting far, the buzzer should keep warning according to obstacle distance.
   The warning sound is generated by the algorithm of ECU which measures the distance of the obstacle from the sensor.
   The distance is divided into three detection ranges. Obstacles below 30cm from the sensor may not be detected.

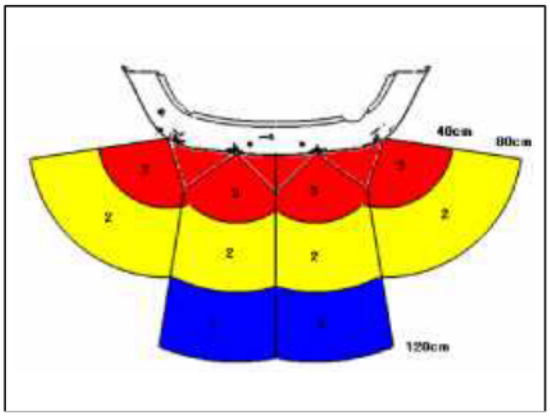

Each Warning Zone Hysteresis Function for buzzer and display.

Condition	1st Warning (120cm)	2nd Warning (80cm)	3rd Warning (40cm)
the distance between vehicle and obstacle is getting close	Immediately warning		
the distance between vehicle and obstacle is getting far	2sec warning delay	2sec warning delay	1sec warning delay

Warning method of RPAS

If RPAS sensor detects the obstacle, the acoustic device makes warning sound and the display module (Cluster) indicates each warning level as like followings.
RPAS sensor sends the distance data to BCM through LIN communication and BCM received the distance data from each sensor.
BCM has the responsibility of the acoustic function.
BCM has the responsibility of the gateway function that BCM sends the warning data to Cluster as like below timing diagram.

cardiagn.com

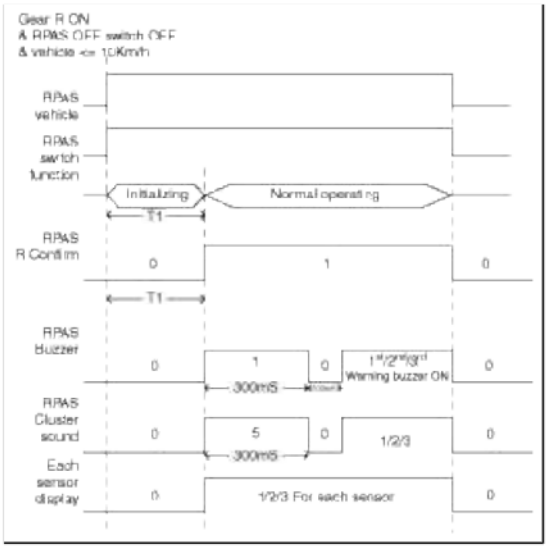

When change from a warning area to the different zone, after finishing one cycle of warning output, the next warning sound has to start for different zone necessarily.

Timing Chart for RPAS Warning Sound

If Power is supplied to the system (turning IGN1 and shifting R gear), BCM checks the channel of each sensor and if no problems, the buzzer sound with turn-on period 300ms is generated after 500ms, but even if one sensor has a problem, the buzzer sound not for “Start-buzzer of RPAS” but for “Diagnosis-buzzer of RPAS”, The next action for Normal mode is like followings.

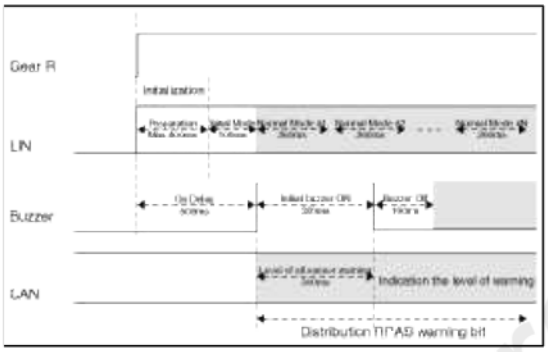

After R gear is armed, the system operation is like followings.

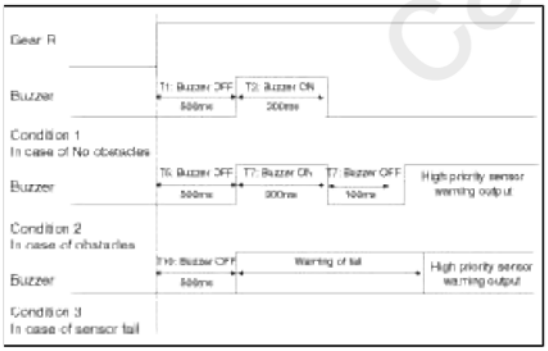

Time tolerance: ±10%

After R gear is disarmed, the system operation is like followings.

cardiagn.com

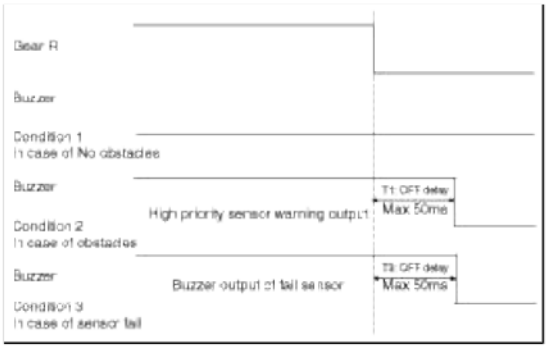

Time tolerance: ±10%

Sensor interval distance dividing alarm output specification

The condition logic is as below according to phase logic in priority. (In same sensor)

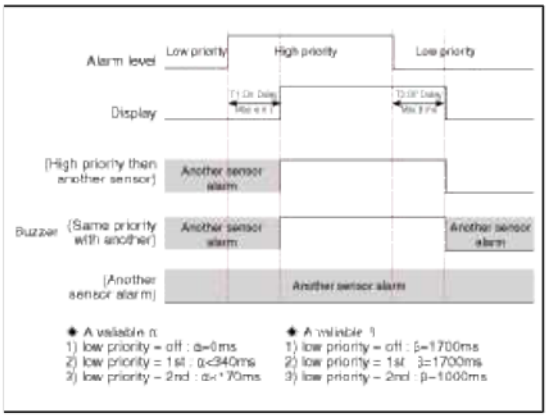

RPAS operation ranges according to distance are as below.

1. First alarm (81 cm ~ 120 cm)

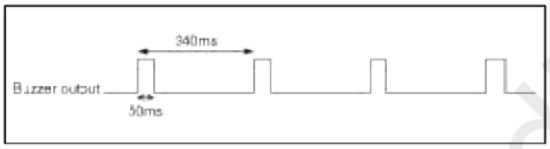

2. Secondary alarm (41 cm ~ 80 cm)

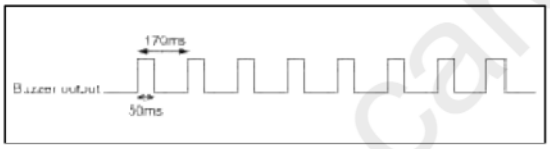

3. Third alarm (40 cm or less)



cardiagn.com

4. Failure alarm cycle

When the system starts and sensor has errors, the warning sound as the sensor position is like following.

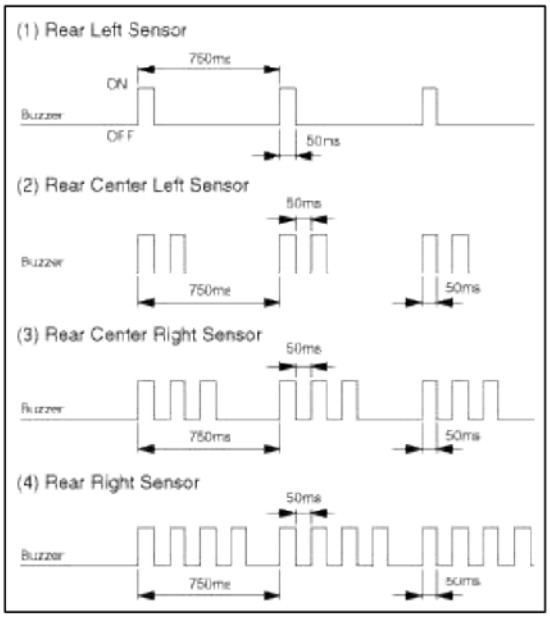

In the case that the multiple sensors have errors, the sequence of sensor's warning is like followings.

RL → RCL → RCR → RR

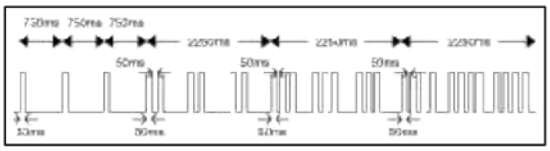

After the warning sound for diagnosis is generated, the other normal sensors execute the normal function such as the detection and the transmission of distance data.

NOTE

1. Time tolerance of the above waveform : Time ± 10%
2. At nearer distance than 30cm, detection may not occur.
3. Alarm will be generated with vehicle reversing speed 10km/h or less.
4. For moving target, maximum operation speed shall be target approach speed of 10km/h.
5. When the vehicle or the target is moving, sequential alarm generation or effective alarm may be failed.
6. False alarm, or failure of the alarm to trigger may occur in the following conditions.
   - Irregular road surface, gravel road, reversing toward grass.
   - Horn, motor cycle engine noise, large vehicle air brake, or other object generating ultrasonic wave is near.
   - When a wireless transmitter is used near to the sensor.
   - Dirt on the sensor.
   - Sequential alarm may not occur due to the reversing speed or the target shape.

Method of error handling

■ LIN BUS Off error

Division	Condition for error	Condition for the disarmed
Initial routine	Detecting LIN BUS OFF one time	Disarmed (if LIN BUS ON is detected 4 consecutive times in general routine)
Normal routine	Detecting LIN BUS OFF 4 consecutive times	Disarmed (if LIN BUS ON is detected 4 consecutive times)

cardiagn.com

Remarks

1. LIN BUS OFF means no response from sensors when BCM send request to sensors.
2. In the case that error happens to the initial routine, diagnosis warning sound + display for error
3. In the case that error happens to the Normal routine, the only display for error
4. If error happens to the direct condition of each sensor, after that, error is transmitted at the indirect condition (sensor side).

■ **In the case of sensor error**

Division	Condition for error	Condition for the disarmed
Initial routine	Detecting the message of sensor error	Disarmed(if the message which sensor is normal is detected 4 consecutive times , but it is impossible to be disarmed in the initial routine)
General routine	Detecting the message of sensor error 4 consecutive times	Disarmed(if the message which sensor is normal is detected 4 consecutive times)

Remarks

1. In the case of fault counting output message or signal with last valid should be transmitted.
2. In the case that error happens to the initial routine, diagnosis warning sound + display for error
3. In the case that error happens to the general routine, the only display for error

Body Electrical System > Rear Parking Assist System > Parking Assist Sensor > Components and Components Location

Component

cardiagn.com

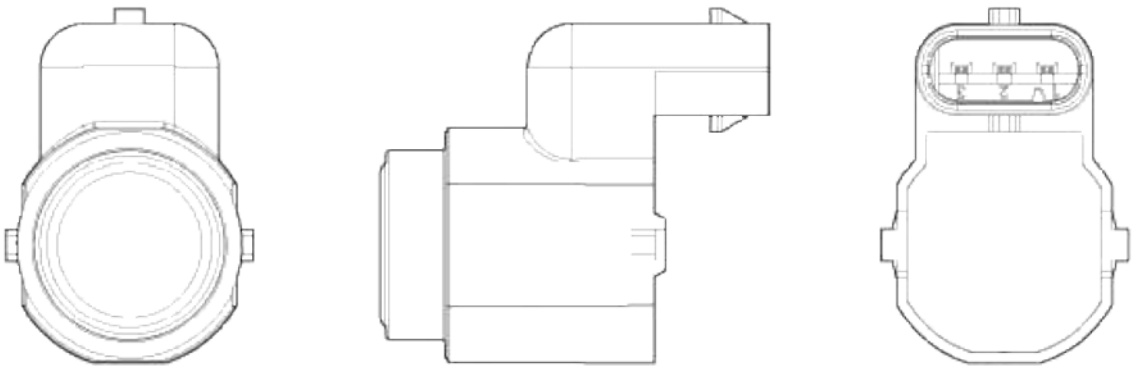

Circuit Diagram

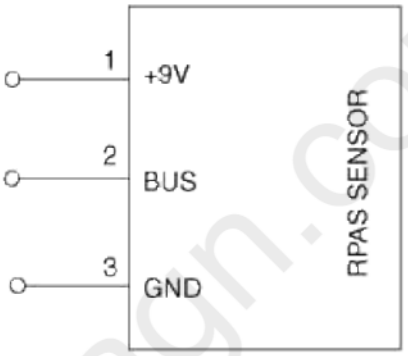

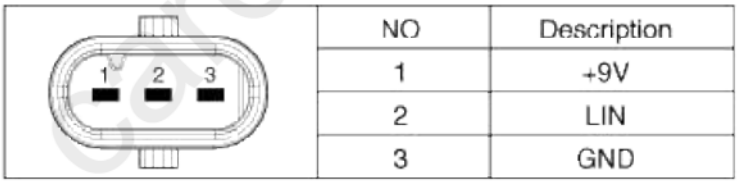

NO	Description
1	+9V
2	LIN
3	GND

cardiagn.com

Body Electrical System > Rear Parking Assist System > Parking Assist Sensor > Repair procedures

Removal

Parking Assist Sensor

1. Disconnect the negative (-) battery terminal.
2. Remove the rear bumper.
   (Refer to the BD group - "Rear bumper")

3. Disconnect the connector (A) connected to the rear bumper.

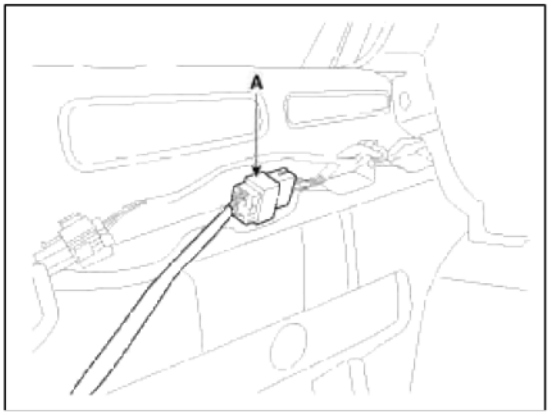

4. Pull out the sensor (A) by opening the sensor holder (B) out.

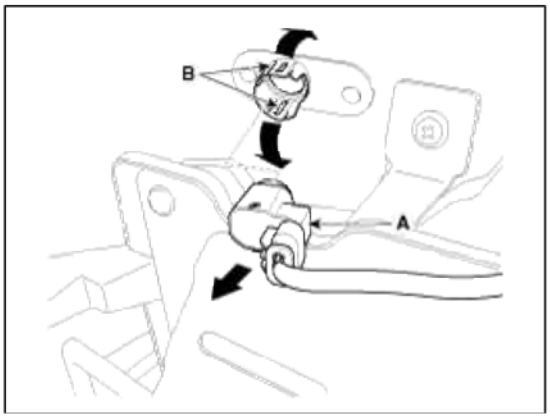

5. Disconnect the sensor connector (B) from the sensor (A) inside of the rear bumper.

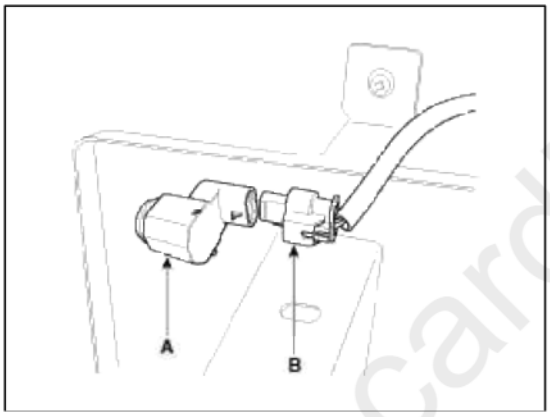

Buzzer

1. Disconnect the negative (-) battery terminal.
2. Remove the crash pad lower panel.
   (Refer to the BD group - "Crash pad")
3. Remove the steering column assembly.
   (Refer to the ST group - "Steering column and shaft")
4. Remove the BCM.
   (Refer to the "Body control module")

cardiagn.com

5. Remove the buzzer (A) after loosening the bolt and disconnecting the 2P connector.

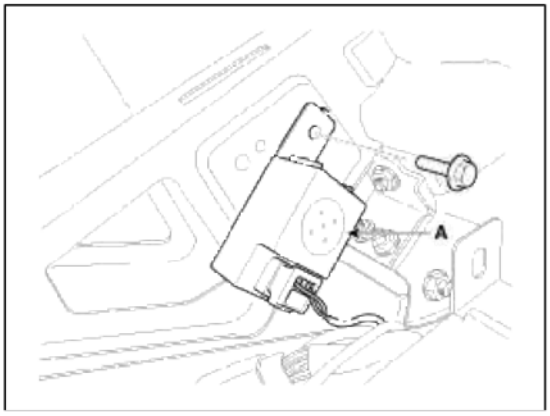

RPAS switch

1. Disconnect the negative (-) battery terminal.
2. Remove the crash pad lower panel.
   (Refer to the BD group - "Crash pad")
3. Remove the crash pad side switch assembly (A) as shown below picture.

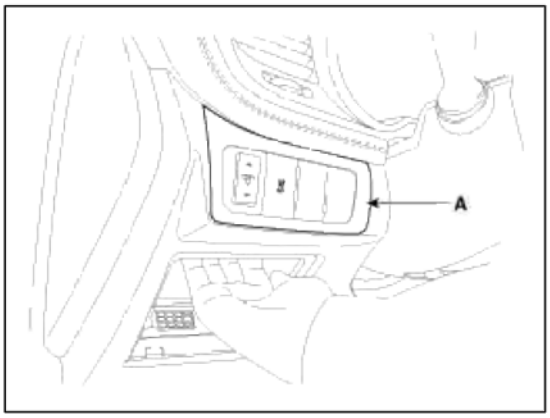

NOTE

Put on gloves to protect your hands.

4. Remove the RPAS switch (A) after disconnecting the connector.

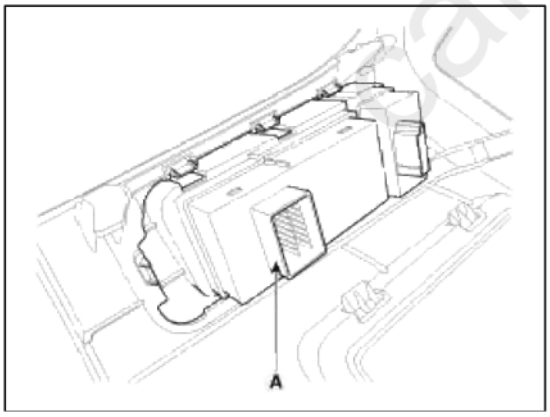

Installation

Parking Assist Sensor

1. Connect the connector, and then install the sensor.
2. Install the rear bumper.

Buzzer

1. Install the buzzer.
2. Install the BCM and steering column assembly.
3. Install the crash pad lower panel.

cardiagn.com

RPAS switch

1. Install the RPAS switch and crash pad switch assembly.
2. Connect the negative (-) battery terminal.

Body Electrical System > Button Engine Start System > Components and Components Location

Component Location

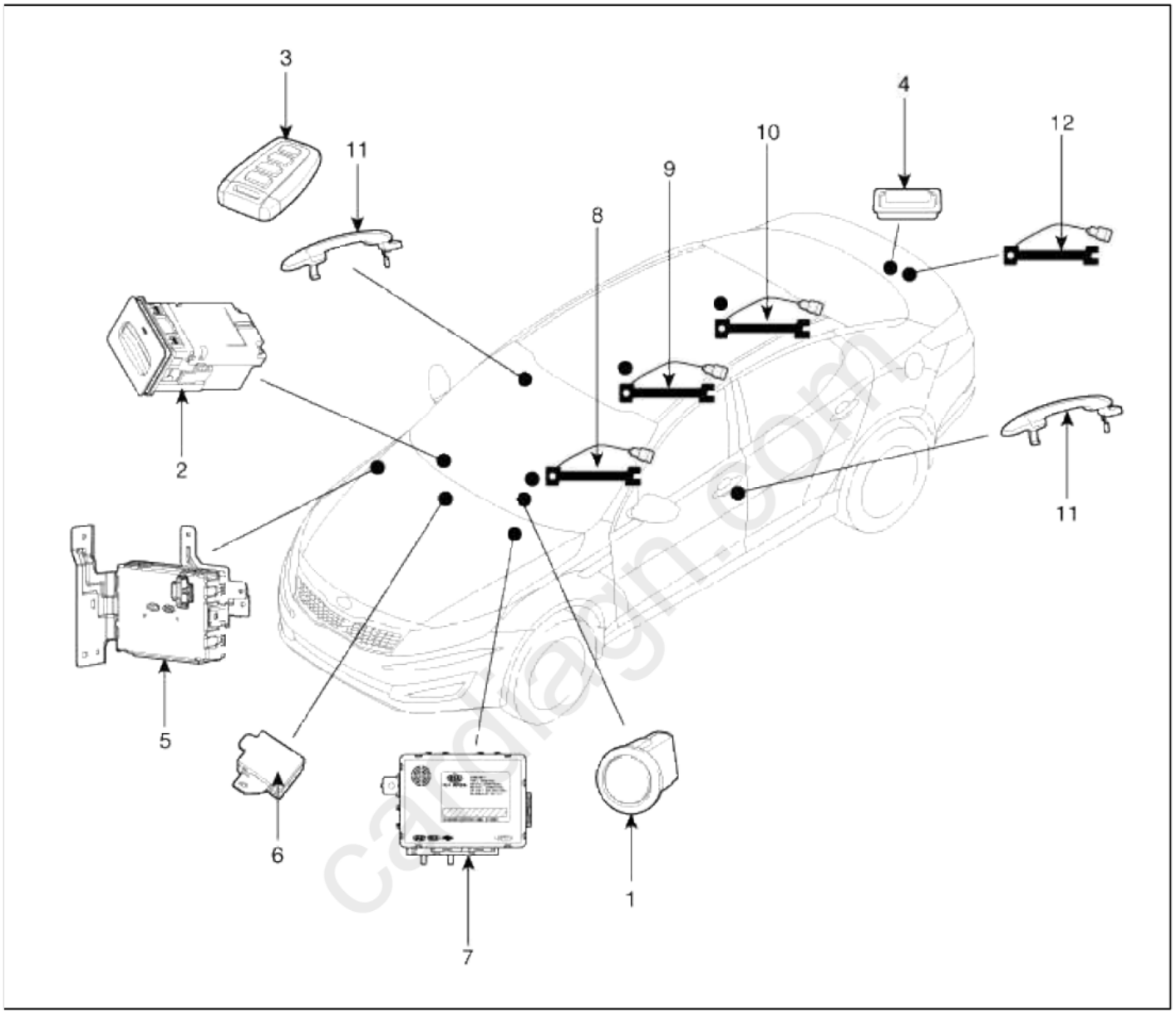

1. Start Stop Button(SSB) 2. FOB key holder 3. FOB key 4. Trunk lid open switch 5. Smart key unit 6. RF receiver	7. Body control module 8. Interior antenna 1 9. Interior antenna 2 10. Trunk antenna 11. Door handle & door antenna 12. Bumper antenna

Body Electrical System > Button Engine Start System > Schematic Diagrams

Circuit Diagram (1)

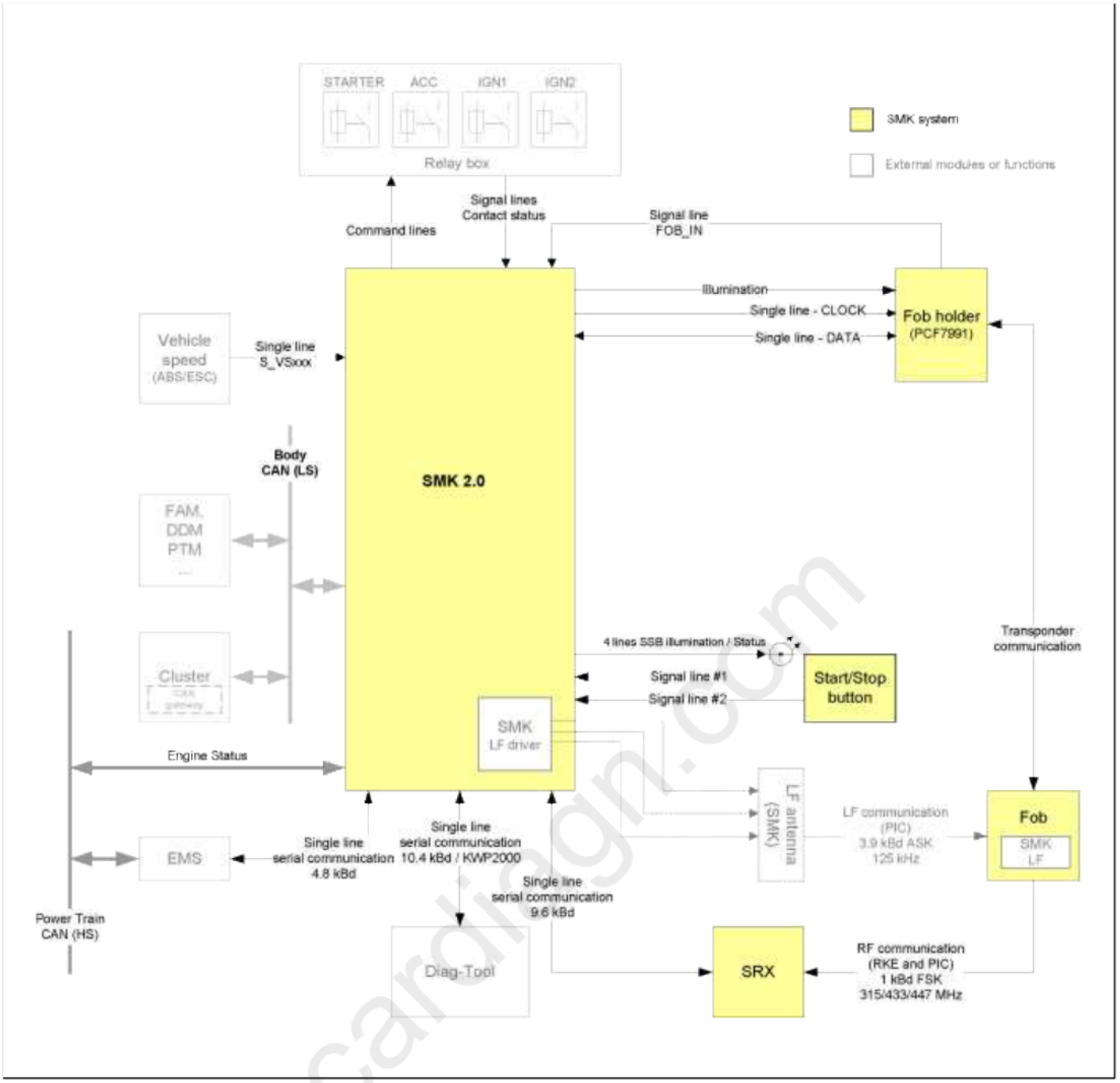

Circuit Diagram (2)

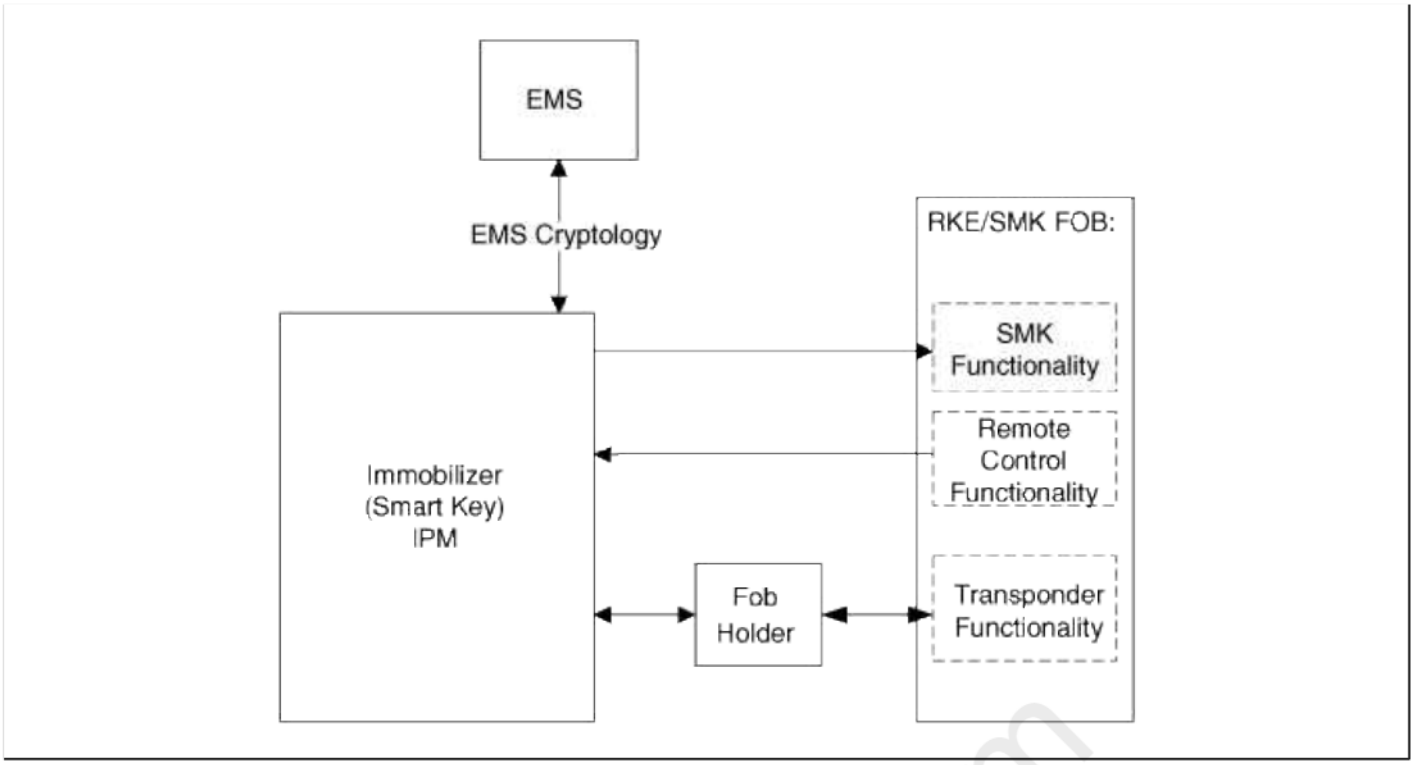

Body Electrical System > Button Engine Start System > Description and Operation

Description

System Overview

The System offers the following features:

- Human machine interface through a 1-stage button, for terminal switching and engine start.
- Control of external relays for ACC / IGN1 / IGN2 terminal switching and STARTER, without use of mechanical ignition switch.
- Indication of vehicle status through LED or explicit messages on display.
- Immobilizer function by LF transponder communication between fob and fob holder.
- Redundant architecture for high system dependability .
- Interface with Low Speed CAN vehicle communication network.
- Interface with LIN vehicle communication network depending on platform .

The RKE and SMART KEY functions are not considered part of this Button Engine Start system and are specified in separated system.

System Main Function

- Switching of ACC / IGN1 / IGN2 terminals.
- Control of the STARTER relay BAT line (high side) based on communication with EMS ECU.
- Management of the Immobilizer function.
- Management of BES warning function.

Button Engine Start System

The Button Start System allows the driver to operate the vehicle by simply pressing a button (called as SSB) instead of using a standard mechanical key.

If the driver press the SSB while prerequisites on brakes, fob authentication and transmission status are satisfied, the BES System will proceed with the locking/unlocking of the steering column, the control of the terminal, and the cranking of the engine.

The driver can release the SSB as soon as this sequence initiated. After positive response from immobilizer interrogation, the system will activate the starter motor and communicate with the EMS to check the engine running status for starter release.

The driver will be able to stop the engine by a short push on the SSB if the vehicle is already in standstill.

cardiagn.com

Emergency engine stop will be possible by a long press of the SSB or 3 consecutive presses in case the vehicle is in ENGINE RUNNING.
If the conditions for engine cranking are not satisfied while a push on the SSB is detected and a valid fob authenticated, the system will unlock the steering column and switch the terminals to IGN. Another push on the SSB will be necessary to start the engine.
In case of a vehicle equipped with SMART KEY system, fob authentication will not require any action from the driver. For limp home start or in case of vehicle without SMART KEY, the driver will have to insert the fob into the fob holder.

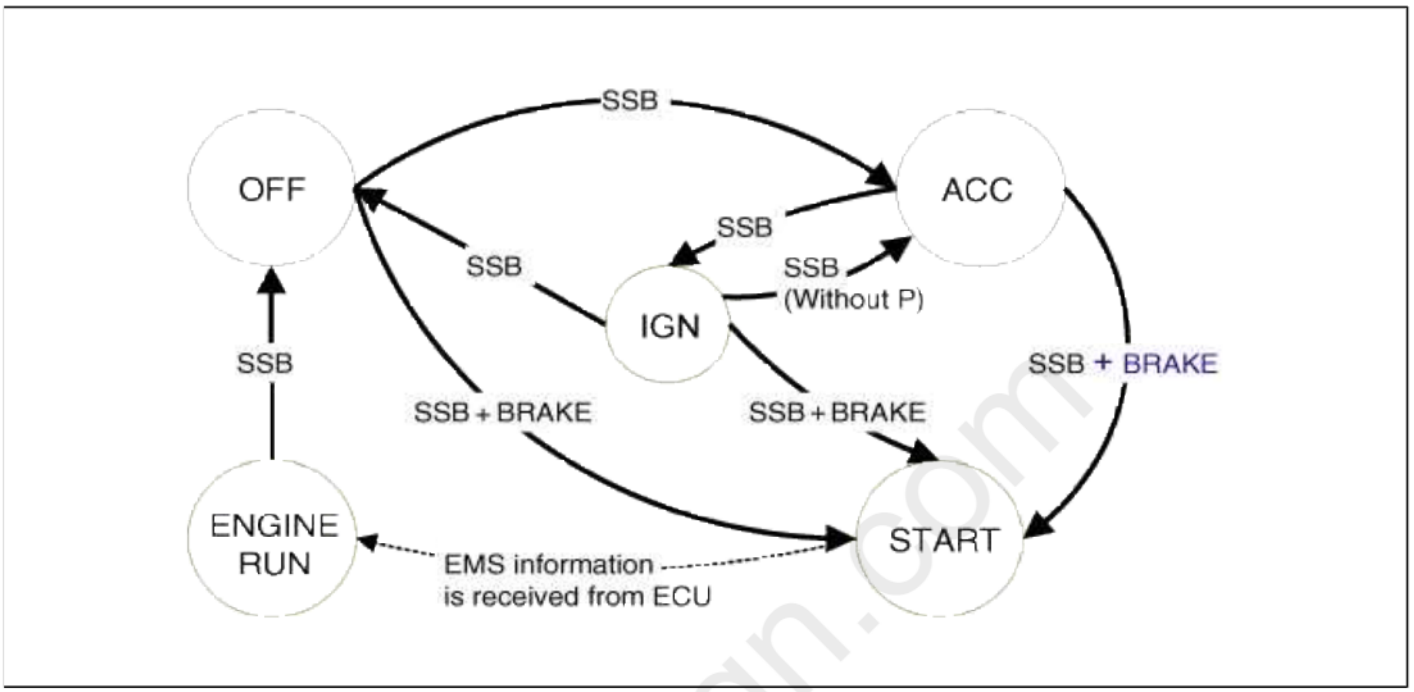

- Control Ignition and engine ON/OFF by Sending signal to IPM.
- Display status by LED Lamp ON/OFF. (Amber or Green)

Indicator ON/OFF Condition At Ignition Key Off Condition

No.	Character lamp	Conditions
1	Indicator Lamp ON	Door open, Tail lamp ON, ACC, IG ON
2	Indicator Lamp 30sec ON → Lamp OFF	Door close, Tail lamp OFF, IG OFF
3	Indicator Lamp OFF	Remote LOCK, Passive LOCK
4	Rheostat at tail lamp ON (Illumination lamp)	

Indicator ON/OFF Condition According To Ignition Key's Position

No.	Ignition conditions	Start Button LED status
1	IG OFF	LED OFF
2	IG ACC	Amber color LED ON
3	IG ON (Engine OFF)	Green color LED ON
4	Cranking	Maintain LED status before cranking
5	Engine running	LED OFF

cardiagn.com

Smart Key Unit

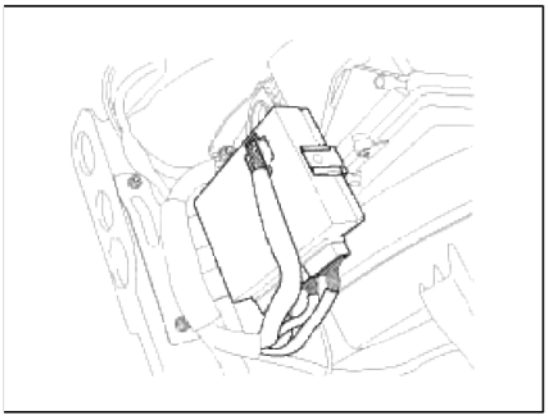

The SMK manages all function related to:

- "Start Stop Button (SSB) monitoring",
- "Immobilizer communication" (with Engine Management System unit for immobilizer release),
- "Authentication server" (Validity of Transponder and in case of Smart Key option Passive Fob authentication),
- "System consistency monitoring",
- "System diagnosis",
- Control of display message / warning buzzer .

The unit behaves as Master role in the whole system.
In case of SMART KEY application, for example “Passive Access”, “Passive Locking” and “Passive Authorization are integrated for Terminal switching Operations”.
It collects information about vehicle status from other modules (vehicle speed, alarm status, driver door open...), reads the inputs (e.g. SSB, Capacitive Sensor / Lock Button, PARK position Switch), controls the outputs (e.g. exterior and interior antennas), and communicates with others devices via the CAN network as well as a single line interfaces.
The diagnosis and learning of the components of the BES System are also handled by the SMK.
The SMK manages the functions related to the "terminal control" by activating external relays for ACC, IGN1 and IGN2. This unit is also responsible for the control of the STARTER relay.
The SMK is also controlling the illumination of the SSB as well as the "system status indicator", which consists of 2 LEDs of different color. The illumination of the fob holder is also managed by the SMK.
The SMK reads the inputs (Engine fob in, vehicle speed, relays contact status), controls the outputs (Engine relay output drivers), and communicates with others devices via the CAN.
The internal architecture of the SMK is defined in a way that the control of the terminal is secured even in case of failure of one of the two microcontrollers, system inconsistency or interruption of communication on the CAN network.
In case, failure of one of the two controllers, the remaining controller shall disable the starter relay. The IGN1 and IGN2 terminals relays shall be maintained in the state memorized before the failure and the driver shall be able to switch those IGN terminals off by pressing the SSB with EMERGENCY_STOP pressing sequence. However, engine restart will not be allowed. The state of the ACC relay will depend on the type of failure.
The main functions of the SMK are:

- Control of Terminal relays
- Monitoring of the Vehicle speed received from sensor or ABS/ESC ECU.
- Control of SSB LEDs (illumination, clamp state) and FOB HOLDER illumination.
- Control of the base station located in fob holder through direct serial interface.
- System consistency monitoring to diagnose SMK failure and to switch to relevant limp home mode.
- Providing vehicle speed information
- Start Stop Button (SSB) monitoring

• Starter power control

Fob Holder

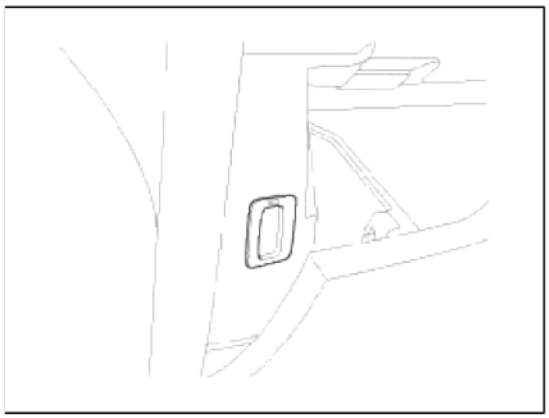

This unit is used for transponder authentication. In case of a vehicle equipped with Smart key, this transponder authentication is necessary in case of failure of the passive fob authentication (Engine loss of RF or LF link with the fob).

The Fob holder module integrates a slot where to insert the fob. The fob is maintained in position with a push-push mechanical locking (not electrically driven) and a signal (FOB IN) is sent back to the SMK as soon as its insertion is detected.

The power supply of the fob holder is active only if a communication is initiated by the SMK.

The insertion of the fob into the holder and the communication with the transponder should be possible regardless of the insertion direction of fob to the holder (buttons facing up or bottom).

A lighting device is also integrated for illumination of the Fob Holder and it is driven directly by the SMK.

The main functions of the Fob holder are:

• Transponder base station

• Fob mechanical lock

• Illumination

Transponder

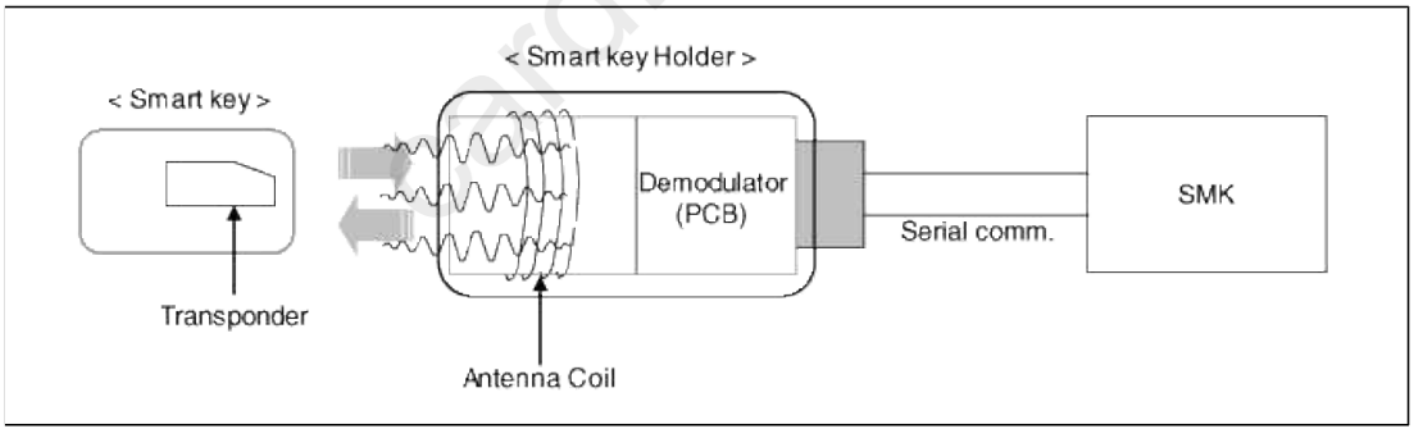

External Receiver(SRX)

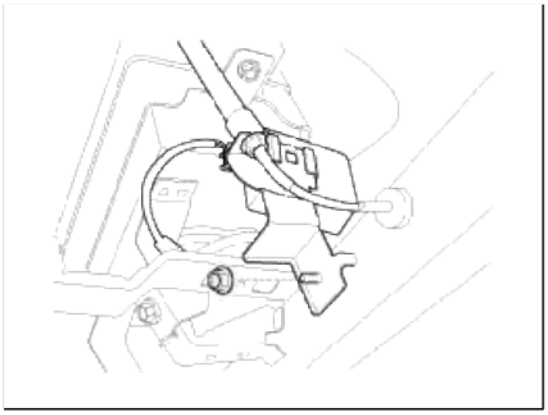

The data transmitted by the RKE or Smart key Fob is received by an external RF receiver called as SRX. This receiver will be same as that one for the SMK applications, with respect to electronics, housing, connector and software.
This receiver is connected to the SMK via a serial communication line.
Terminal And Starter Relays
Relays will be used to switch the terminals ACC / IGN1 / IGN2. Those normally-open relays will be driven by the SMK and located either in the passenger or engine compartment depending on the vehicle architecture.
Only one relay coil is connected to the terminal outputs of the SMK.
Those relays should integrate a resistor connected in parallel to the coil in order to reduce the transients during commutation.
Start/Stop Button (SSB)
A single stage push button is used for the driver to operate the vehicle. Pressing this button allows:

- To activate the power modes ‘Off’, ’Accessory’, ‘Ignition’ and 'Start' by switching the corresponding terminals
- To start the engine
- To stop the engine

The contact will be insured by a micro-switch and a backlighting is provided to highlight the marking of the button whenever necessary.
Two (2) LED colors are located in the center of the button to display of the status of the system. Another illumination LED is also integrated into the SSB for the lighting of the "Engine Start/Stop" characters.

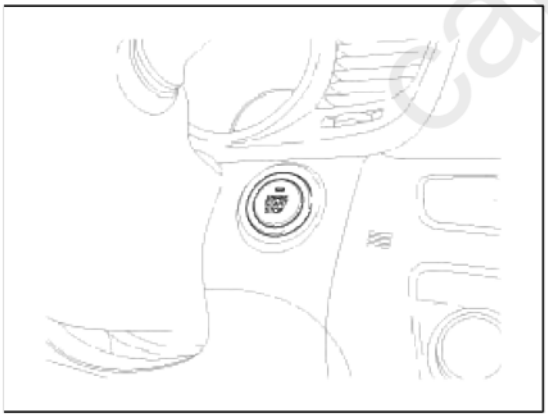

BES(Button Engine Start) System State Chart
System STATES in LEARNT MODE
In learnt mode, the BES System can be set in 6 different sates, depending on the status of the terminals and Engine status:

cardiagn.com

System State	Terminal Status	Engine status
1. OFF - Locked	OFF	Stopped
2. OFF - Unlocked	OFF	Stopped
3. ACC	ACC	Stopped
4. IGN	IGN1, IGN2, ACC	Stopped
5. Start	IGN1, Start	Cranking
6. IGN - Engine	IGN1, IGN2, ACC	Running (means "self-running")

Referring to the terminals, the system states described in the table above are same as those one found in a system based on a mechanical ignition switch.
The one of distinction with Mechanical-Ignition-Switch based system is that the BES system allows specific transition from [OFF] to [START] without going through [ACC] and [IGN] states.
System STATES IN VIRGIN MODE
The BES System can be set in 5 different states (OFF LOCKED is not available in virgin mode), depending on the status of the terminals and Engine status :

System State	Terminal Status	Engine status
1. OFF - UNLOCKED	OFF	Stopped
2. ACC	ACC	Stopped
3. IGN	IGN1, IGN2, ACC	Stopped
4. Start	IGN1, START with special pattern of activation	Cranking
5. IGN - Engine	IGN1, IGN2, ACC	Running (means "self-running")

Referring to the terminals, the system states described in the table above are same as those one found in a system based on a mechanical ignition switch.
The one of distinction with Mechanical-Ignition-Switch based system is that the BES system allows specific transition from [OFF] to [START] without going through [ACC] and [IGN] states.

cardiagn.com

Body Electrical System > Button Engine Start System > Start/Stop Button > Components and Components Location

Component

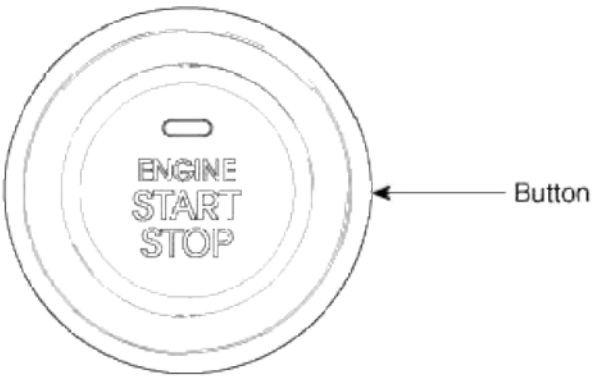

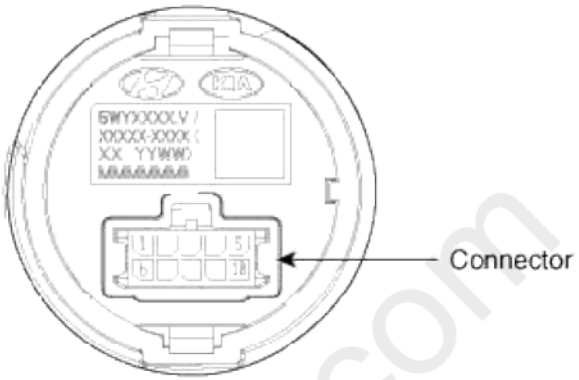

Connector (10 pins)			
Pin No.	Description	Pin No.	Description
1	Start stop button switch1	6	Ground
2	LED illumination power	7	Start stop button switch 2
3	Amber LED	8	Green LED
4	Start stop button illumination GND	9	Rheostat
5	Start stop button illumination Power	10	-

carmanual.com

Body Electrical System > Button Engine Start System > Start/Stop Button > Repair procedures

Removal

1. Disconnect the negative(-) battery terminal.
2. Remove the crash pad lower panel.
   (Refer to the BD group - "Crash pad")

3. Disconnect the start/stop button connector (A).

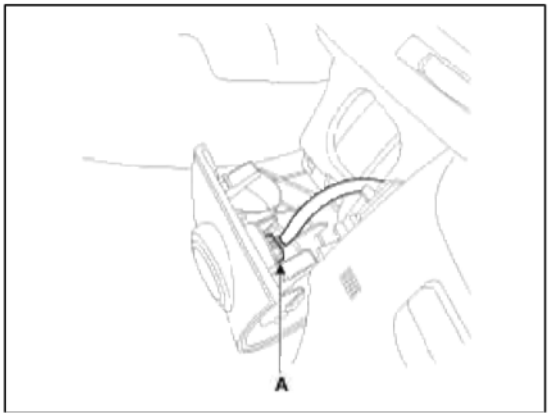

4. Remove the start/stop button (A) after removing the screws.

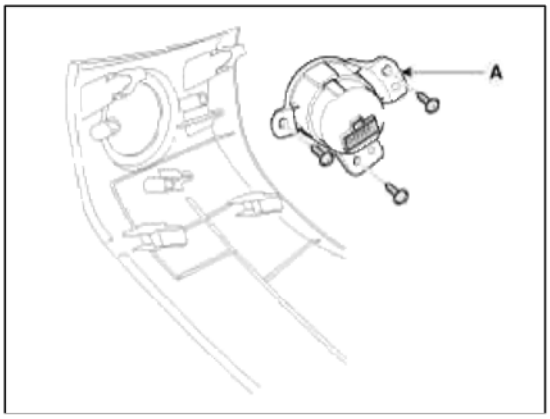

Installation

1. Install the start/stop button.
2. Install the crash pad lower panel.

Body Electrical System > Button Engine Start System > Fob Holder > Components and Components Location

Components

cardiagn.com

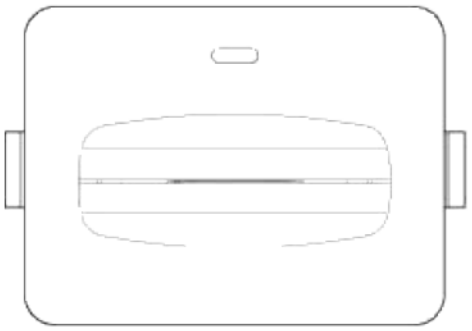

Connector (10 pins)	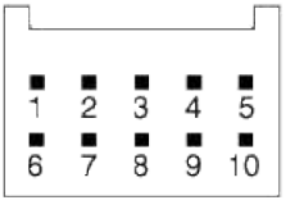		
Pin No.	Description	Pin No.	Description
1	-	6	Battery
2	Immobilizer clock	7	Immobilizer data
3	Holder illumination	8	Illumination battery
4	GND	9	Fob in
5	GND	10	-

cardiagn.com

Body Electrical System > Button Engine Start System > Fob Holder > Repair procedures

Removal

1. Disconnect the negative(-) battery terminal.
2. Remove the glove box.
   (Refer to the BD group - "Crash pad")
3. Disconnect the fob holder connector (A).

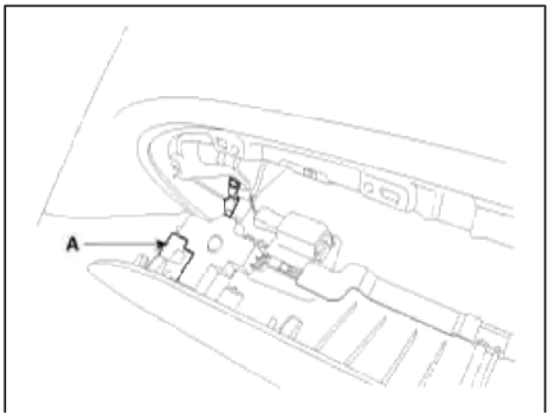

4. Remove the fob holder (A) after removing the screws.

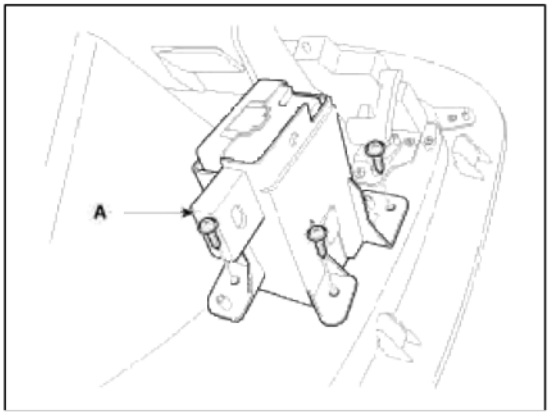

Installation

1. Install the fob holder.
2. Install the glove box.

Body Electrical System > Ignition Switch Assembly > Repair procedures

Removal

1. Disconnect the negative (-) battery terminal.
2. Remove the driver crash pad lower panel.
   (Refer to the BD group - "Crash pad")
3. Remove the steering column upper and lower shrouds.
   (Refer to the BD group - "Crash pad")
4. Remove the wiper switch.
   (Refer to the BE group - "Multifunction switch")
5. Remove the ignition switch after disconnecting the ignition switch 6P connector (A)

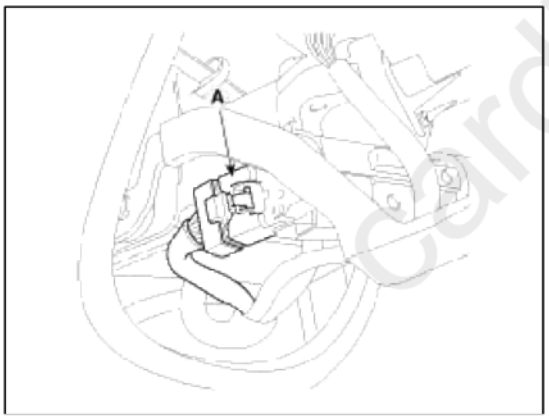

6. Remove the key warning/immobilizer connector (A).

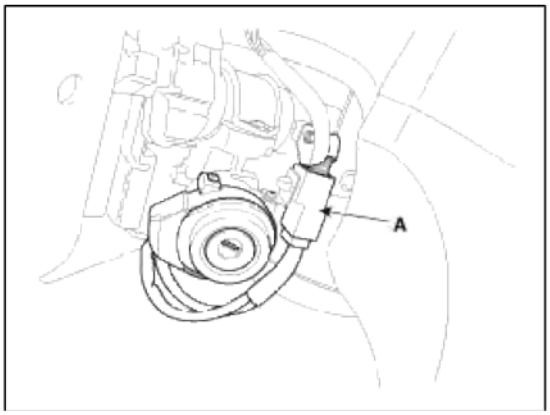

cardiagn.com

7. After loosening the screw, remove the key warning switch and key Illumination (A).

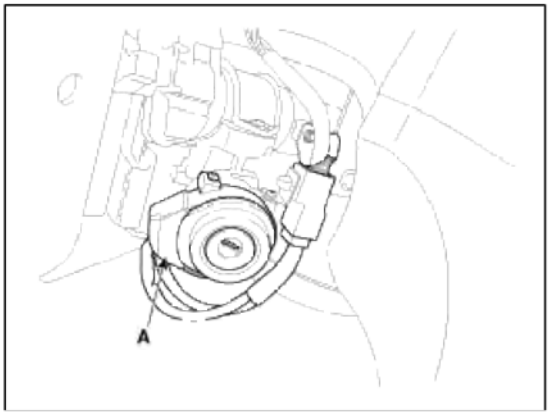

8. Pushing lock pin with key ACC.

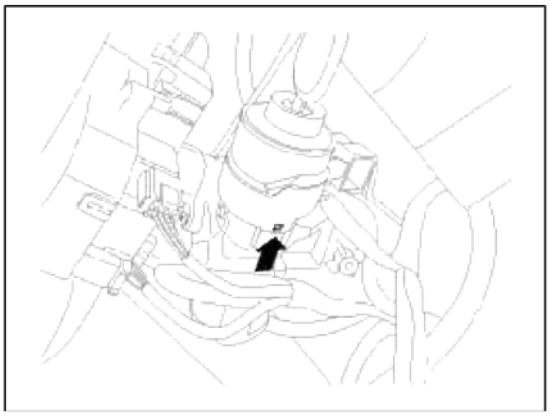

9. Remove the key lock cylinder (A).

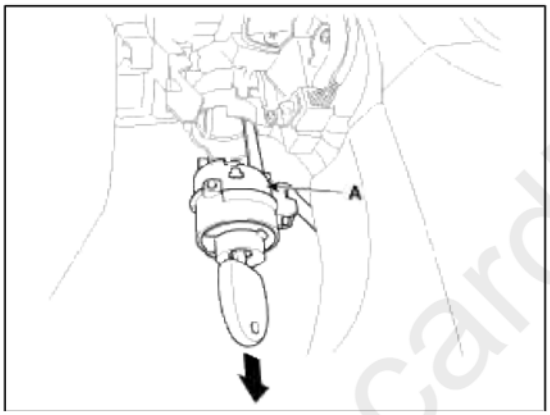

Installation

1. Install the key lock cylinder.
2. Install the key warning switch and key Illumination.
3. Install the key warning/immobilizer connector.
4. Connect the ignition switch connector after Install the ignition switch.
5. Install the wiper switch.
6. Install the steering column shrouds.
7. Install the driver crash pad lower panel.

Inspection

cardiagn.com

1. Disconnect the ignition switch connector (A) and key warning switch connector (B) from the steering column.

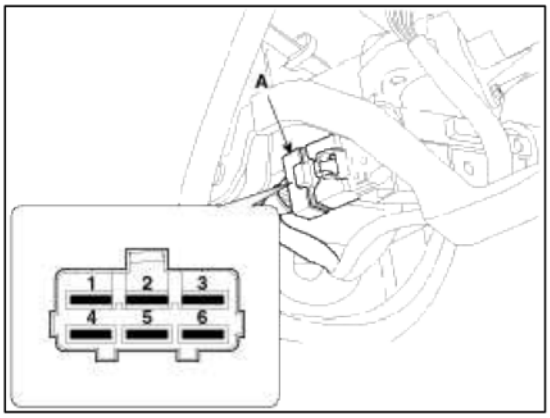

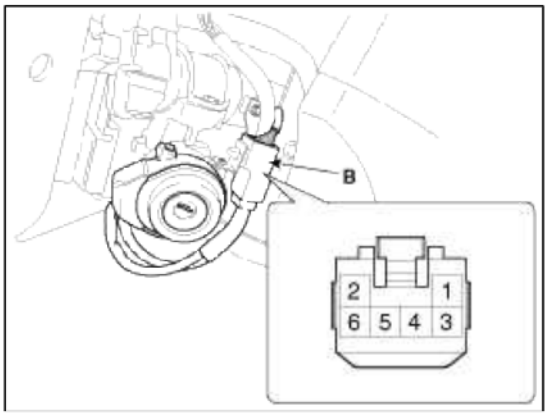

2. Check for continuity between the terminals.
3. If continuity is not specified, replace the switch.

Position	Key	Ignition switch (B) 5	6	4	1	2	3	Key warning switch (A) Immobilizer antenna 1	2	Key warning switch 3	4	Key Illumination 5	6
LOCK	Key out (Off) removal												
	Key in (On) insert												
ACC		○	○										
ON		○	○	○	○	○		⊖	⊕	○	○	⊖	⊕
START		○		○	○		○						

cardiagn.com