Please rate this document after reviewing at the bottom of this page.

Safety
Precaution

Precautions to take before servicing high voltage system

Hybrid vehicles have high voltage batteries. Incorrect handling of high voltage system or vehicle may lead to serious accident including electric shock and electric leakage.

- Be sure to shut off the high voltage by removing the safety plug before performing inspection or repairing the high voltage system.
  (Refer to "High Voltage Shut-off Procedures")
- Keep the safety plug completely removed to prevent the plug from being connected by mistake.
- Do not wear metallic objects (watch, ring etc.) while working on the high voltage system, due to risk of serious accidents like electric shock.
- Whenever working on the high voltage system, wear personal protective equipment to prevent accidents.
  (Refer to "Personal Protective Equipment")
- Technicians not wearing personal protective equipment must not be allowed to work on high voltage systems. Cover high voltage components with an insulated sheet to prevent accidents.
- Use insulation tools when working on the high voltage system.
- Put the removed high voltage components on the insulation mat.

- All the high voltage wiring and connectors are orange.
- A caution label for high voltage is attached to the high voltage components.
- High voltage components include:
  High Voltage Battery Pack Assembly, Power Relay Assembly (PRA), BMS ECU, Hybrid Power Control Unit (HPCU), Hybrid Drive Motor, HSG, Electric A/C Compressor, Low DC/DC Converter (LDC), On-Board Charger (OBC), Power Cable, Electric Compressor, etc.

- To prevent injury to technician, place "High Voltage" caution sign as shown.

cardiagn.com

DANGER

High Voltage : Do not touch during operation.

Person in charge : _____

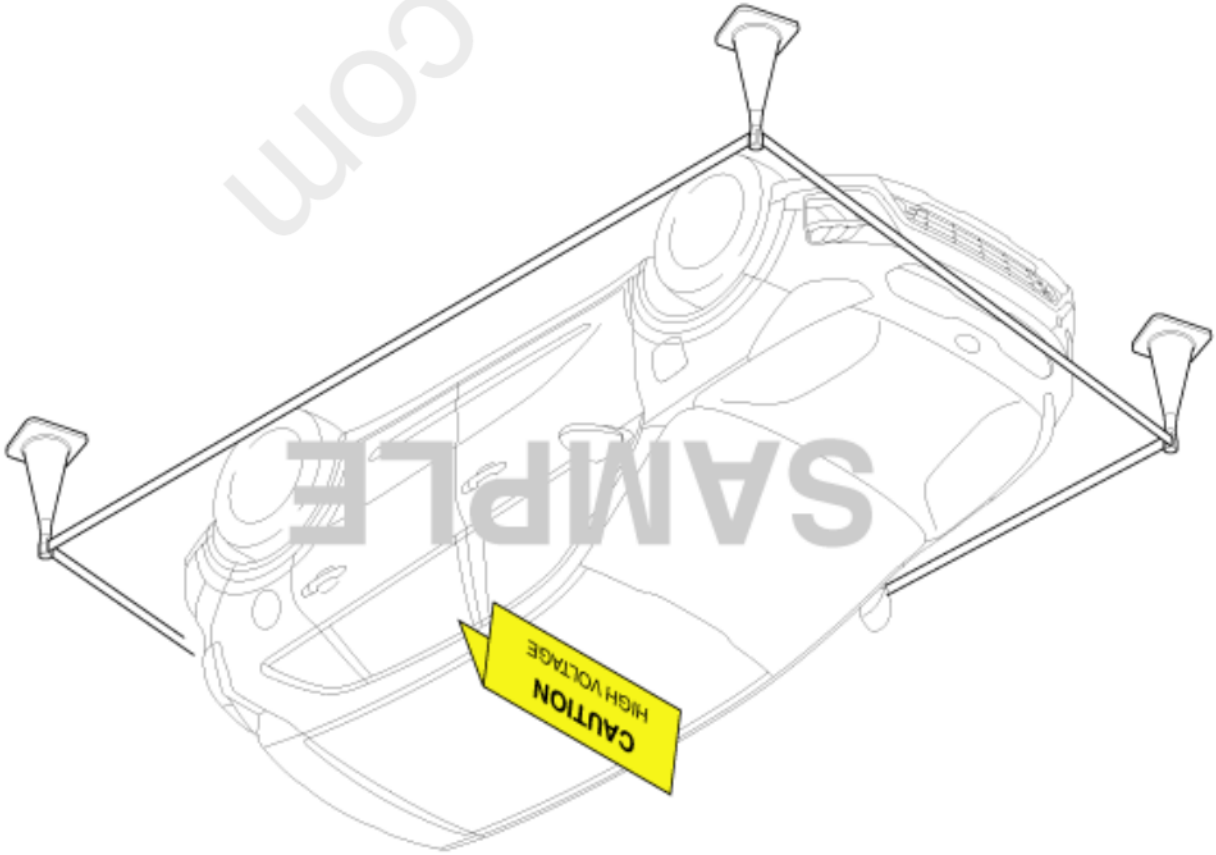

SAMPLE
cardiagn.com

DANGER

High Voltage : Do not touch during operation.

Person in charge : _____

Print out this page, fold in half, and place it on top of vehicle in service.

Personal Protective Equipment

Name	Illustration	Description
Insulation gloves		Used when inspecting or working on the high voltage components [Insulation performance : 1000V / 300A or above]
Insulation shoes		Used when inspecting or working on the high voltage components
Insulation clothes		

cardiagn.com

Insulation helmet	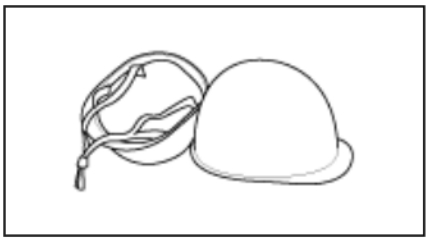	
Safety glasses		Used in the following cases : • During removal & installation or inspection of the high voltage battery terminals or wiring, where spark might happen. • When working on the high voltage battery pack assembly.
Face shield	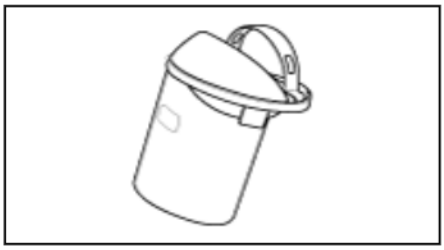	
Insulation mat	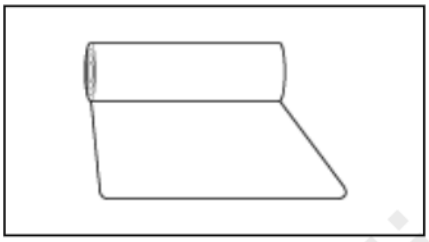	All removed high voltage components are placed on an insulation mat to prevent accident.
Insulation sheet	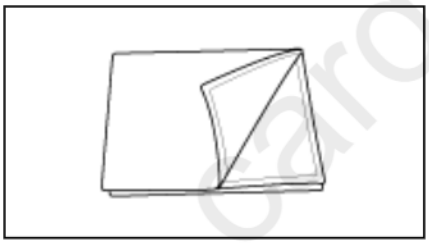	Insulation sheet is used to cover high voltage components to protect people not wearing personal protective equipment from accident.
Warning tape	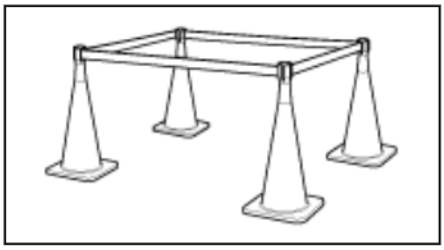	Used for informing that it is dangerous past this line.

cardiagn.com

Personal Protective Equipment Inspection

- Check that the personal protective equipment is not damaged.
- Check that the insulation gloves are not torn or damaged.
- Wear the insulation glove after removing moisture.

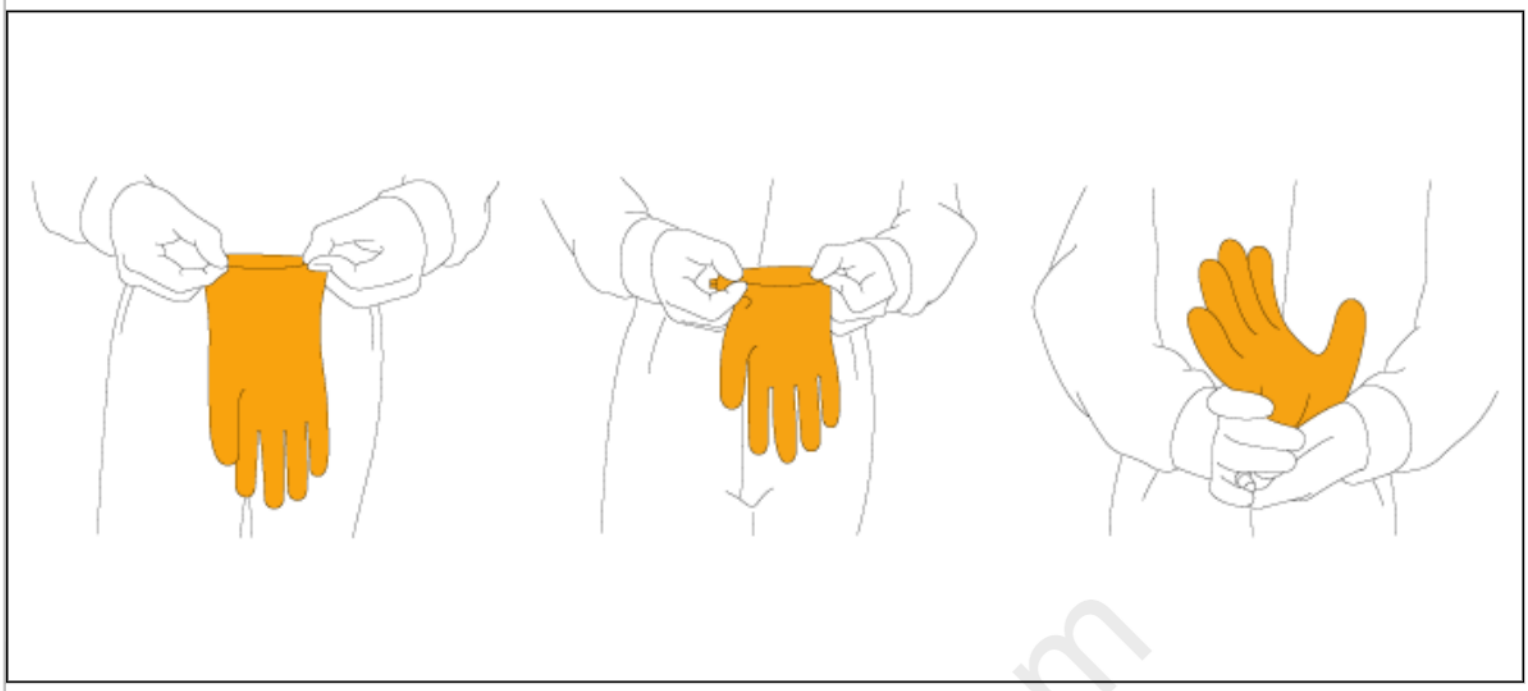

① Fold the insulation glove as above.
② Fold again 3~4 times to make it airtight.
② Squeeze the inflated glove to see if the glove is torn or damaged.

Precautions to take when handling power cable

- Immediately insulate the high voltage terminal after reconnecting the terminal (use insulation tape).
- Tighten the high voltage terminal screw to torque specifications.
- Be careful that (+) and (-) terminals do not come in contact when connecting or disconnecting power cable and busbar.

Precautions to take when handling high voltage battery

- When transporting high voltage battery, be sure to keep it flat and leveled. Failure to do so may decrease the battery performance and/or its life-span.
- High voltage battery's performance may decrease if it is exposed to high temperature for a lengthy period. As a result, heat-treatment after painting must not exceed 70°C (158°F) / 30 minutes, or 80°C (176°F) / 20 minutes.

Precautions in case of fire on high voltage battery system

- If the fire occurs indoor, ventilate the area to let out hydrogen gas.
- ABC fire extinguisher is recommended for putting out the fire. (water may also be used).

Precautions in case of high voltage battery gas or electrolyte leakage

- Turn OFF the Start button. Keep the Smart Key at least 2 meters (78.7 inch, 6.5 feet) away from the vehicle to prevent unintended engine start.
- Gas is hydrogen and alkaline vapor. If the leakage is indoor, ventilate the area immediately and evacuate to a safe location.
- If the leaked liquid comes in contact with skin, immediately neutralize the affected area with boric acid solution, then clean with tap water or saline solution.
- If the leaked vapor or liquid gets in the eye, immediately clean the affected eye with water then get medical attention.
- If the gas leakage is caused by high temperature, then do NOT use the battery until the high voltage battery fully cools down to room temperature.

cardiagn.com

Precautions when handling the vehicle after an accident

- Be sure to wear insulated gloves (or rubber gloves), protective goggles, insulated suit, and insulated boots.
- Do NOT touch bare cable under any condition
  (refer to "Precautions when handling power cable.")
- In case of vehicle fire, put out the fire with ABC extinguisher. Do NOT use water (usage of large volume of water is okay, but small volume can worsen the situation).
- If more than half of the vehicle is submerged, then do NOT go near the Safety Switch or other high voltage related components. If such a component must be accessed, then move the vehicle to the safe location first before handling the component.
- Gas is hydrogen and alkaline vapor. If the leakage is indoor, ventilate the area immediately and evacuate to a safe location.
- If the leaked liquid comes in contact with skin, immediately neutralize the affected area with boric acid solution, then clean with tap water or saline solution.
- Refer to "High voltage cut-off procedure" if the high voltage needs to be cut off.

Preparations when servicing the accident vehicle

- Be sure to wear insulated gloves (or rubber gloves), protective goggles, insulated suit, and insulated boots.
- Boric acid power or solution
- ABC Extinguisher
- Towel for cleaning electrolyte
- Vinyl tape (for insulating terminal)
- Mega ohm tester (for checking high voltage)

Precautions in case HEV is left unattended for a lengthy period

- Turn OFF the Start button. Keep the Smart Key at least 2 meters (78.7 inch, 6.5 feet) away from the vehicle to prevent unintended engine start.
- We recommend that HEV is driven at least 1 time for over 30 minutes every 2 months to protect and manage the high voltage battery (inquire at relevant team in HMC).
- When inspecting or exchanging the auxiliary battery, check high voltage battery SOC reset related problems.

cardiagn.com

Please rate this document after reviewing at the bottom of this page.

High Voltage Shut-off
Procedures

- Be sure to read and follow the “General Safety Information and Caution” before doing any work related with the high voltage system. Failure to follow the safety instructions may result in serious electrical injuries.
- Be sure to read and follow the “High Voltage Shut-off Procedures” before doing any work related with the high voltage system. Failure to follow the safety instructions may result in serious electrical injuries.

High voltage components:
High Voltage Battery Pack Assembly, Power Relay Assembly (PRA), BMS ECU, Hybrid Power Control Unit (HPCU), Hybrid Drive Motor, HSG, Electric A/C Compressor, Low DC/DC Converter (LDC), On-Board Charger (OBC), Power Cable, Electric Compressor etc.

1. Turn the ignition switch OFF.
2. Remove the auxiliary 12V battery cover (A).

3. Disconnect the auxiliary 12V battery negative (-) terminal.

4. Remove the luggage board (A).

5. Remove the safety plug cover (A) after loosening the mounting bolts.

6. Unfasten the hook (A) in the direction of arrow.

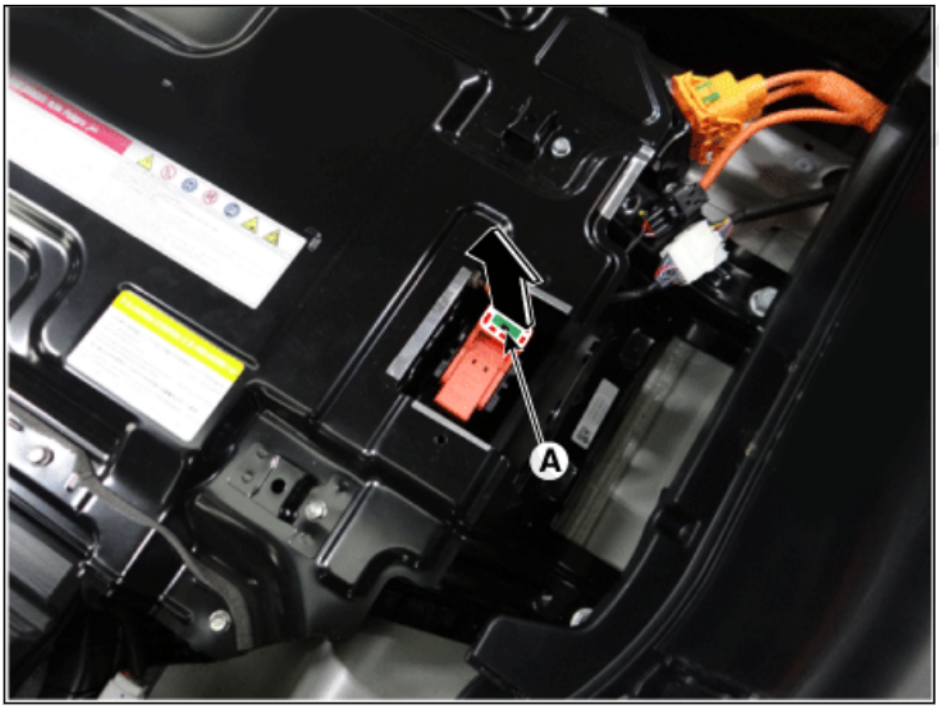

7. Unfasten the lever (A) in the direction of arrow.

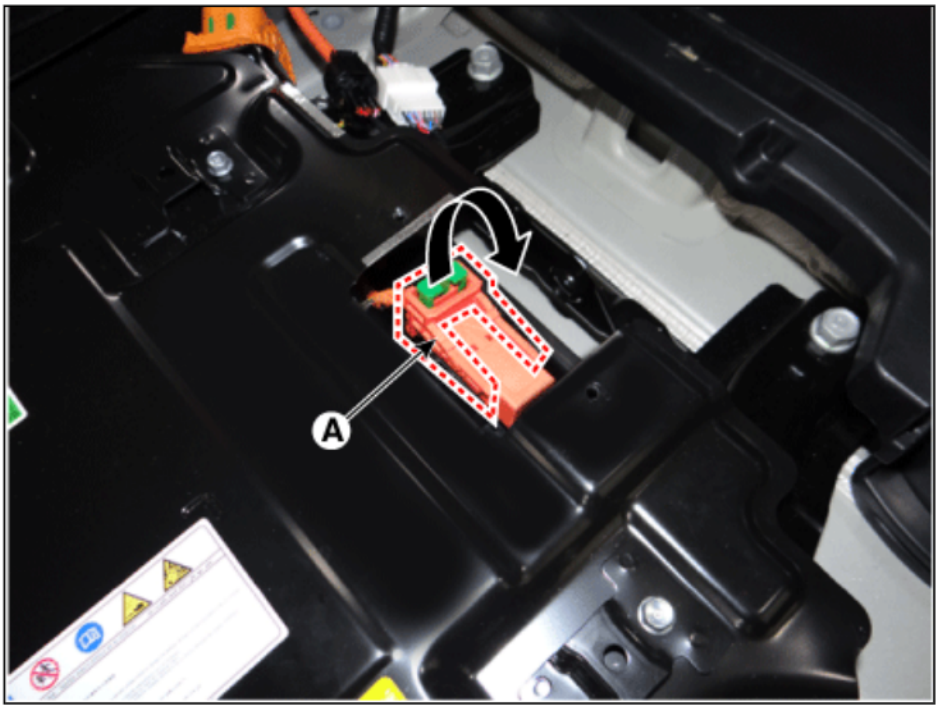

8. Remove the safety plug (A).

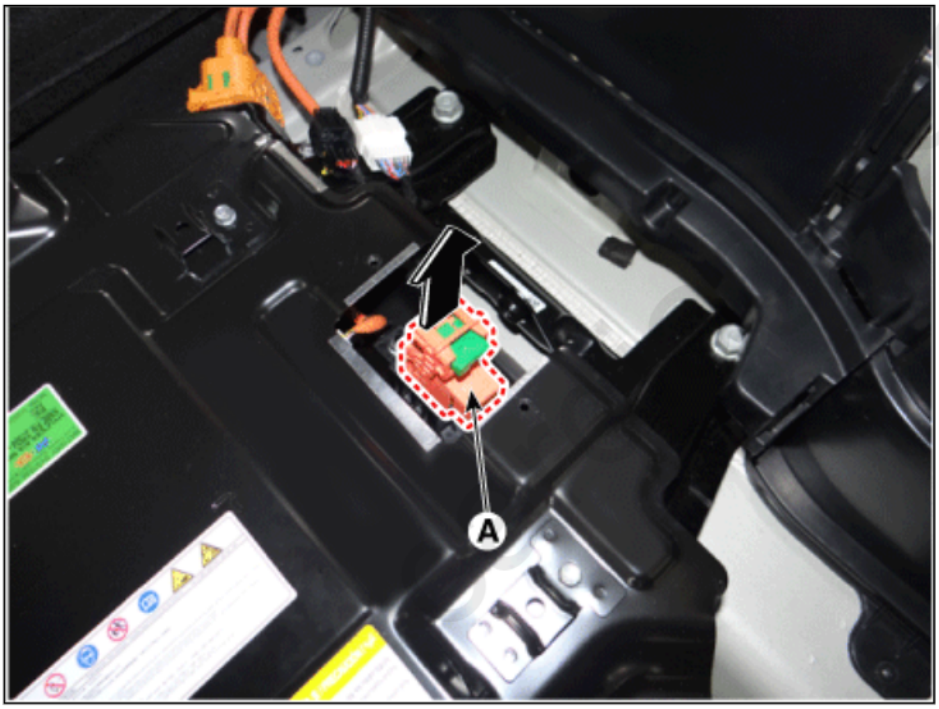

9. Wait at least 5 minutes or until the capacitor in the high voltage system is fully discharged.
10. Measure the voltage between the inverter terminals to check that the capacitor in the inverter is discharged completely.
    (1) Remove air cleaner assembly and air duct.
    (Refer to Engine Mechanical System – "Air Cleaner")

(2) Disconnect the inverter power cable (A).

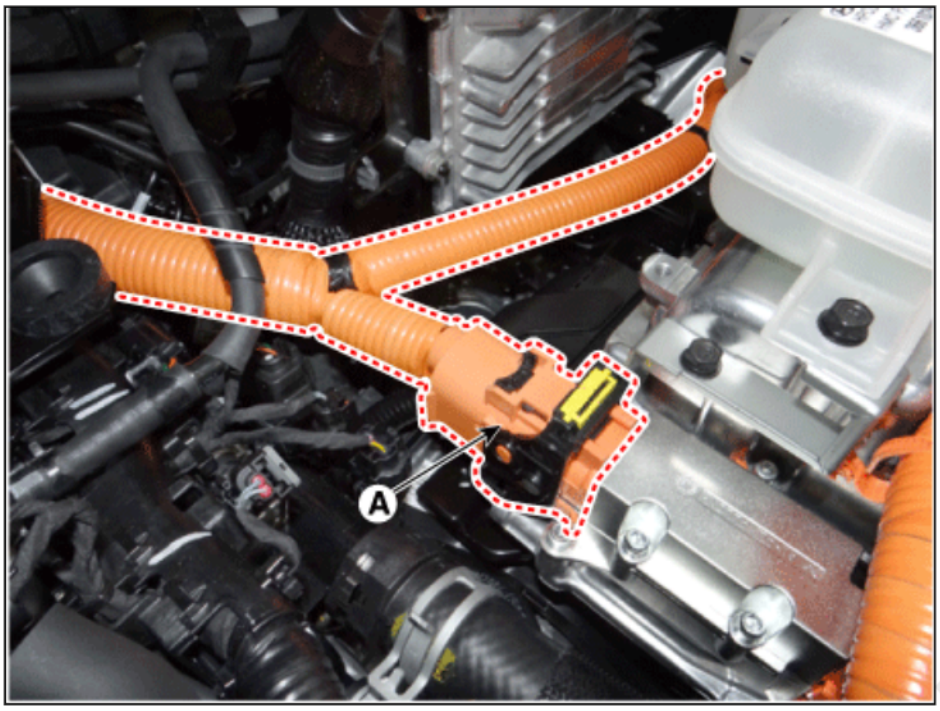

Disconnect the inverter power cable as shown below.

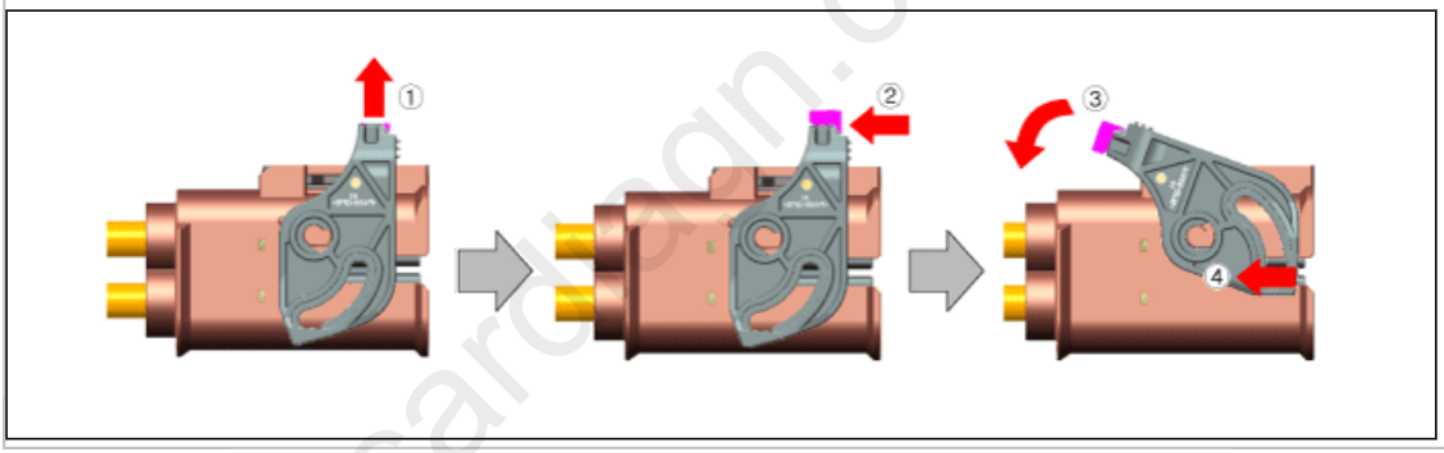

(3) Measure the voltage between the inverter (+) terminal and the inverter (-) terminal.

Less than 30V : High voltage circuit properly shut
More than 30V : Fault on high voltage circuit

cardiagn.com

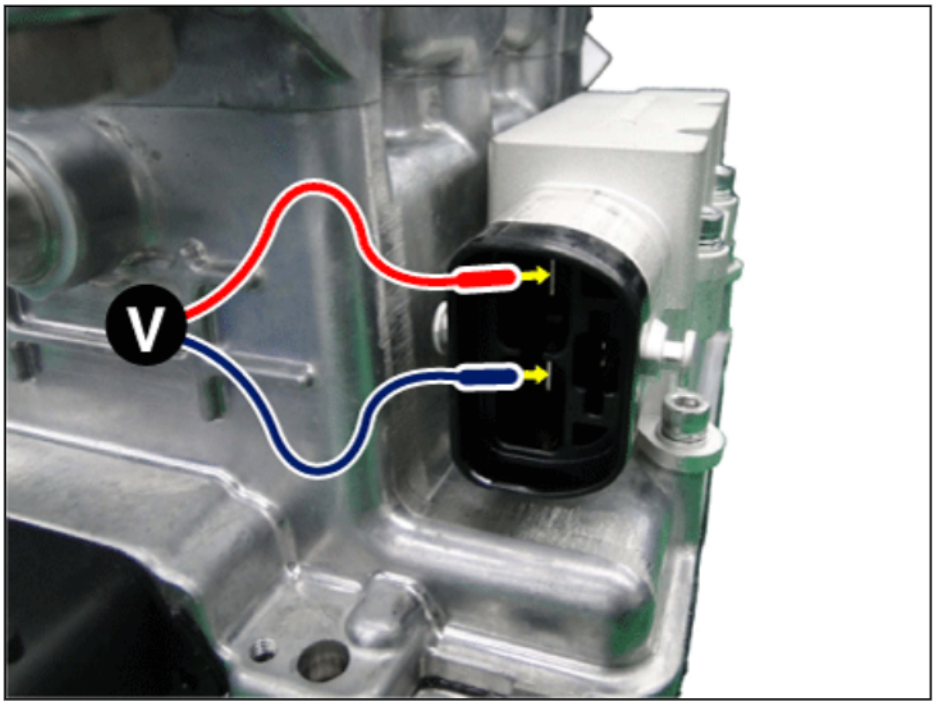

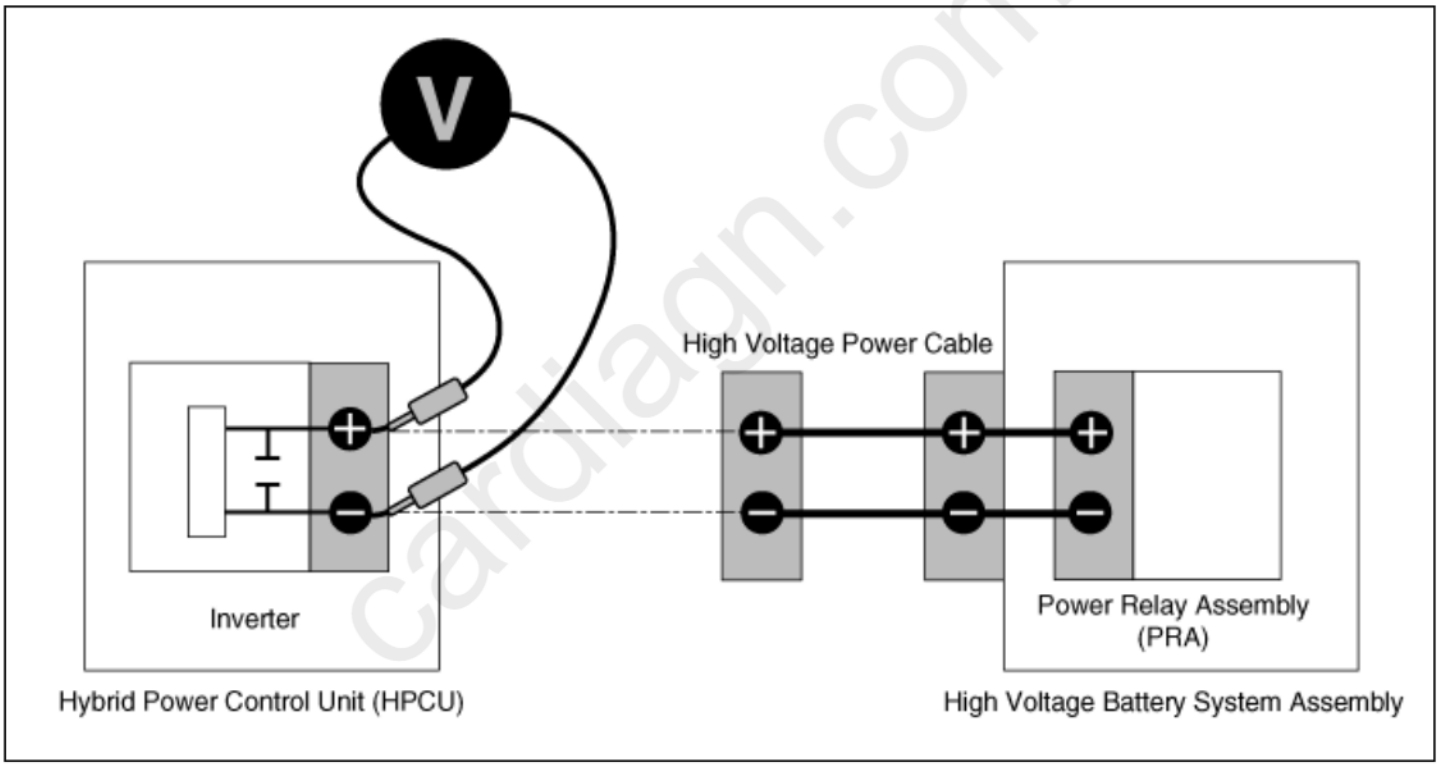

cardiagn.com

If voltage over 30V is measured, reconfirm that the safety plug has been removed. If voltage over 30V is measured even though the safety plug has been removed, there can be serious problem with the high voltage circuit. In this case, check DTC and do not touch the high voltage system circuits.

Please rate this document after reviewing at the bottom of this page.

Service
Data

Ignition System

Ignition Coil

Item	Specification						
Engine Time (RPM)	1000	2000	3000	4000	5000	6000	7000
Dwell Time (ms)	5.18	4.19	3.49	3.05	2.74	2.50	2.31
Secondary Coil Voltage (kV)	44	44	43	42	41	40	39

Spark Plug

Item	Specification
Type	ELR9ISP8+
Gap	0.7 - 0.8 mm (0.0276 - 0.0314 in.)
Electrode Material	Iridium

Charging System

Battery
▷ CMF45L-DIN

Item	Specification
Type	CMF45L-DIN
Capacity [20 HR / 5 HR] (AH)	45/36
Cold Cranking Amperage (A)	410 (SAE) / 410 (EN)
Reserve Capacity (Min)	80
Specific Gravity	1.27 - 1.29 (25°C)

cardiagn.com

•Model type description

• Battery type notation : □□□ □□ □ - □□□

① ② ③ ④

① : Battery specification
- CMF : Closed Maintenance Free
- MF : Maintenance Free
- AGM : Absorbent Glass Mat

② : Battery capacity (20HR)
- 68 : 68AH

③ : Terminal location
- L : Positive terminal is left
- R : Positive terminal is right

④ : Battery type
- DIN: Deutsche Industric Normen
- BCI: Battery Council International

•Cold Cranking Ampere (CCA): Cold Cranking Amps is a rating used in the battery industry to define a battery's ability to start an engine in cold temperatures.

–The rating is the number of amps a new, fully charged battery can deliver at -18°C(-0.4°F) for 30 seconds, while maintaining a voltage of at least 7.2 volts for a 12 volt battery.

–The higher the CCA rating, the greater the starting power of the battery.

•RESERVE CAPACITY (RC) : Reserve Capacity is a battery industry rating, defining a battery's ability to power a vehicle with an inoperative alternator or fan belt.

–The rating is the number of minutes a battery at 26.7 °C(80 °F) can be discharged at 25 amps and maintain a voltage of 10.5 volts for a 12 volt battery.

–The higher the reserve rating, the longer your vehicle can operate should your alternator or fan belt fail.

cardiagn.com

BCI Type

Capacity (5 hr / 20 hr)	Length	Width	Height	Total Height
	L (mm)	W (mm)	H (mm)	TH (mm)
28/35	188 - 192	126 - 130	198 - 202	218 - 222
32/40	194 - 198	133 - 137	199 - 203	223 - 227
36/45	203 - 207	173 - 177	200 - 204	221 - 225
44/55	213 - 217	173 - 177	198 - 202	218 - 222
48/60	228 - 232	173 - 177	200 - 204	221 - 225
54/68	258 - 262	173 - 177	198 - 202	220 - 224
56/70	258 - 262	173 - 177	198 - 202	223 - 227
64/80	274 - 278	170 - 174	198 - 202	221 - 225
70/88	349 - 353	172 - 176	186 - 200	183 - 187
72/90	300 - 304	170 - 174	200 - 204	221 - 225
76/95	294 - 298	172 - 176	198 - 202	220 - 224
80/100	326 - 330	170 - 174	203 - 207	225 - 229

cardiagn.com

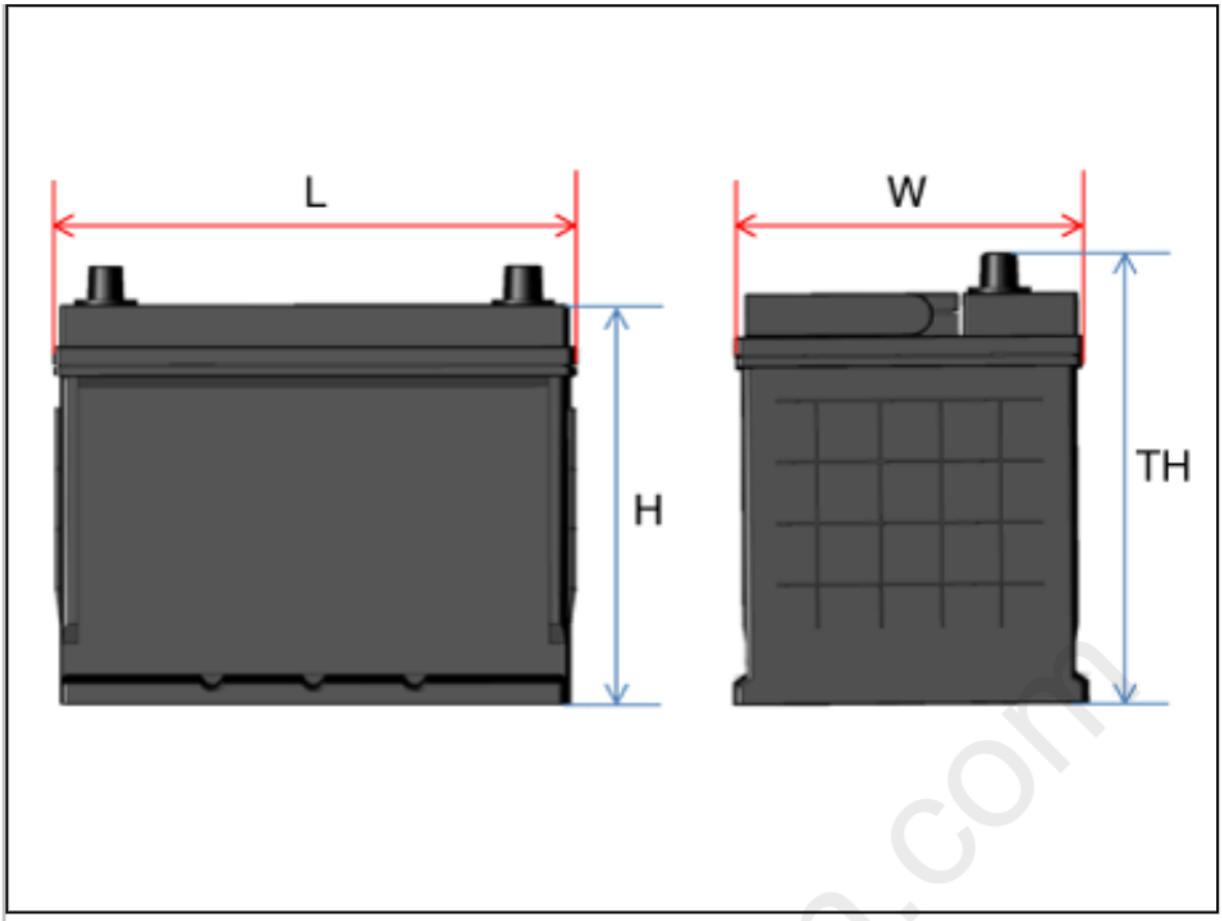

DIN Type

Capacity (5 hr / 20 hr)	Length	Width	Height	Total Height
	L (mm)	W (mm)	H (mm)	TH (mm)
36/45	205 - 207	173 - 175	164 - 168	188 - 190
48/60	240 - 242	173 - 175	164 - 168	188 - 190
54/68	276 - 278	173 - 175	164 - 168	188 - 190
64/80	313 - 315	173 - 175	164 - 168	188 - 190
72/90	351 - 353	173 - 175	164 - 168	188 - 190
80/100	351 - 353	173 - 175	164 - 168	188 - 190
88/110	392 - 394	173 - 175	164 - 168	188 - 190

cardiagn.com

AGM DIN Type

Capacity (5 hr / 20 hr)	Length	Width	Height	Total Height
	L (mm)	W (mm)	H (mm)	TH (mm)
40/50	205 - 207	173 - 175	164 - 168	188 - 190
48/60	227 - 229	173 - 175	164 - 168	188 - 190
56/70	276 - 278	173 - 175	164 - 168	188 - 190
64/80	312 - 314	173 - 175	164 - 168	188 - 190
72/90	351 - 353	173 - 175	164 - 168	188 - 190
84/105	392 - 394	173 - 175	164 - 168	188 - 190

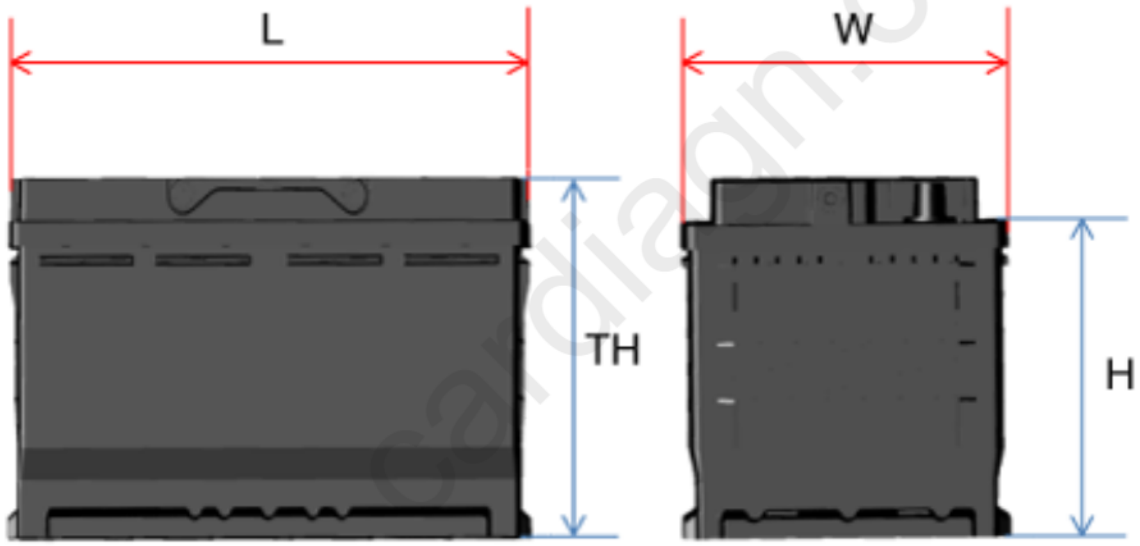

cardiagn.com

Battery Sensor

Item	Specification
Rated Voltage (V)	12 - 14
Quiescent Current (uA)	175

Pin	2 (B+, LIN)

cardiagn.com

Please rate this document after reviewing at the bottom of this page.

Tightening
Torques

Item	N·m	kgf·m	lb·ft
Ignition coil mounting bolt	9.8 - 11.8	1.0 - 1.2	7.2 - 8.7
Spark plug	19.6 - 24.5	2.0 - 2.5	14.5 - 18.1
Battery (+) terminal tightening nut	7.8 - 9.8	0.8 - 1.0	5.8 - 7.2
Battery (-) terminal tightening nut	7.8 - 9.8	0.8 - 1.0	5.8 - 7.2
Battery mounting bracket bolt	19.6 - 29.4	2.0 - 3.0	14.5 - 21.7
Battery tray mounting bolt	19.6 - 29.4	2.0 - 3.0	14.5 - 21.7
Battery sensor cable mounting bolt (Chassis ground)	10.8 - 13.7	1.1 - 1.4	8.0 - 10.1

cardiagn.com

Please rate this document after reviewing at the bottom of this page.

Trouble
Shooting

Ignition System

Symptom	Suspect area	Remedy
Vehicle indicates Ready in dash, but engine will not run when requested by the HPCU (HEV module).	Ignition coil	Inspect ignition coil, or replace as required
	Spark plugs	Inspect spark plugs, or replace as required
	Ignition wiring disconnected or broken	Repair wiring, or replace as required
Rough idle	Ignition wiring	Repair wiring, or replace as required
	Ignition coil	Inspect ignition coil, or replace as required
Engine hesitates/poor acceleration	Spark plugs and spark plug cables	Inspect spark plugs / cable, or replace as required
	Ignition wiring	Repair wiring, or replace as required
Poor mileage	Spark plugs and spark plug cables	Inspect spark plugs / cable, or replace as required

cardiagn.com

Charging System

Symptom	Suspect area	Remedy
Charging warning indicator does not light with Start/Stop Button "ON" and Hybrid System off.	Fuse blown	Check fuses
	Light burned out	Replace light
	Wiring connection loose	Tighten loose connection
	LDC problem	Check the LDC. Refer to HC group

Charging warning indicator does not go out with Hybrid System on. (Battery requires frequent recharging)	Battery cable loose, corroded or worn	Inspect cable connection, repair or replace cable
	LDC problem	Check the LDC. Refer to HC group
	Wiring	Repair or replace wiring
Overcharge	LDC problem	Check the LDC. Refer to HC group
	Voltage sensing wire	Repair or replace wiring
Discharge	Wiring connection loose or short circuit	Inspect wiring connection, repair or replace wiring
	LDC problem	Check the LDC. Refer to HC group
	Poor grounding	Inspect ground or repair
	Worn battery	Replace battery
	Abnormal parasitic draw from the vehicle	Install a current probe to measure current. It should be less than 0.05A (50mA) after Hybrid System off and waiting 10 minutes. Make sure trunk light is removed for this test.

Starting System

Symptom	Suspect area	Remedy
Vehicle will not indicate Ready in dash at Hybrid System on.	Auxiliary 12V battery charge low	Charge or replace auxiliary 12V battery
	Auxiliary 12V battery cables loose, corroded or worn out	Repair or replace cables
	Transaxle range switch (Vehicle with automatic transaxle only)	Refer to AT group-automatic transaxle
	Fuse blown	Replace fuse
	Ignition switch faulty	Replace

cardiagn.com

Please rate this document after reviewing at the bottom of this page.

On-vehicle
Inspection

- Check that the auxiliary 12V battery cables are connected to the correct terminals.
- Disconnect the auxiliary 12V battery cables when the battery is given a quick charge.
- Never disconnect the auxiliary 12V battery while the engine is running.

Check The Auxiliary 12V Battery Terminals And Fuses

1. Check that the auxiliary 12V battery terminals are not loose or corroded.
2. Check the fuses for continuity.

Check Discharge Warning Light Circuit

1. Warm up the engine and then turn it off.
2. Turn off all accessories.
3. Turn the ignition switch "ON". Check that the discharge warning light is lit.
4. Start the engine and Check that the light goes off.
   If the light does not go off as specified, then refer to the LDC diagnostics section for further diagnosis of auxiliary 12V battery charging system problem.

cardiagn.com

Please rate this document after reviewing at the bottom of this page.

Description

1. The CMF(Closed Maintenance Free) battery is, as the name implies, totally maintenance free and has no removable battery cell caps.
2. The CMF(Closed Maintenance Free) battery does not require water replenishment for the repair.
3. The battery is completely sealed, except for small vent holes in the cover.

After disconnecting then reconnecting the battery negative cable, reset some parts that require the reset procedures.
(Refer to Body Electrical System - "General Information")

cardiagn.com

Please rate this document after reviewing at the bottom of this page.

Removal

Auxiliary 12V Battery

1. Open the trunk.
2. Remove the luggage side trim [RH] side cover (A).

3. Turn the ignition switch OFF and disconnect the battery negative (-) terminal (A).
4. Disconnect the vent hose (B).

Battery (-) terminal tightening nut :
7.8 - 9.8 N·m (0.8 - 1.0 kgf·m, 5.2 - 8.7 lb·ft)

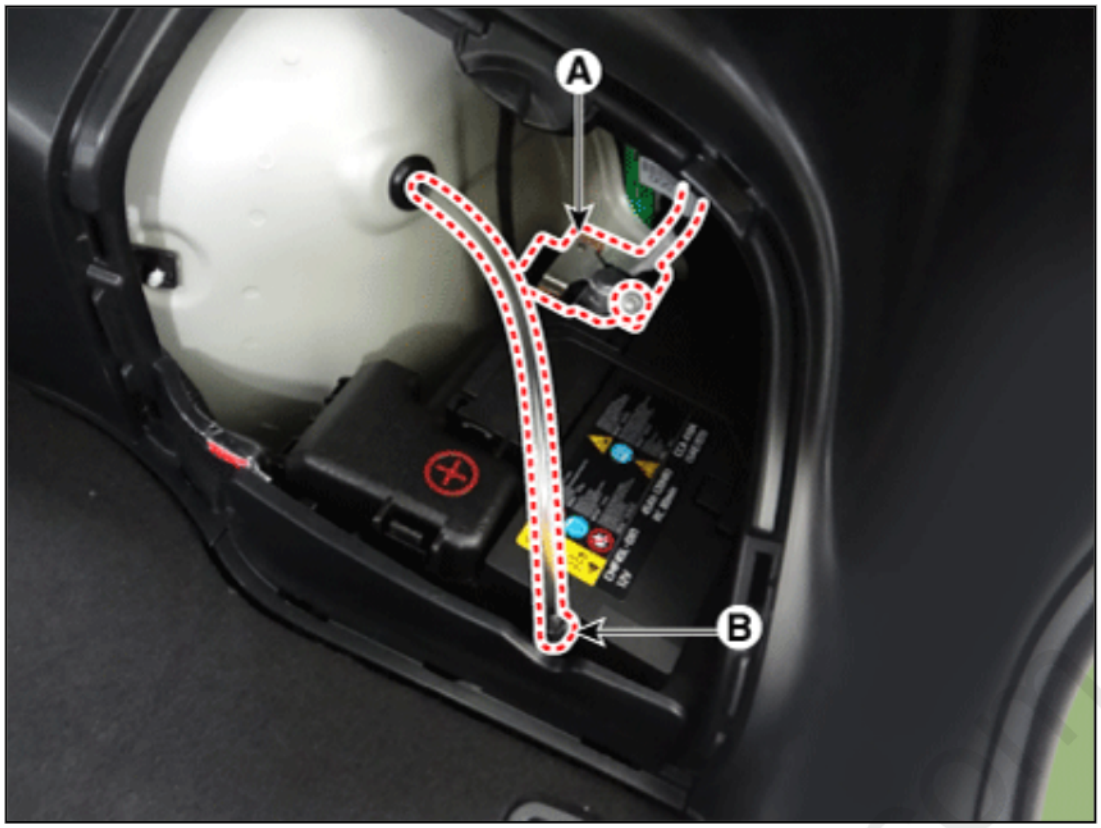

5. Disconnect the battery positive (+) terminal (A).

Battery (+) terminal tightening nut :
7.8 - 9.8 N·m (0.8 - 1.0 kgf·m, 5.2 - 8.7 lb·ft)

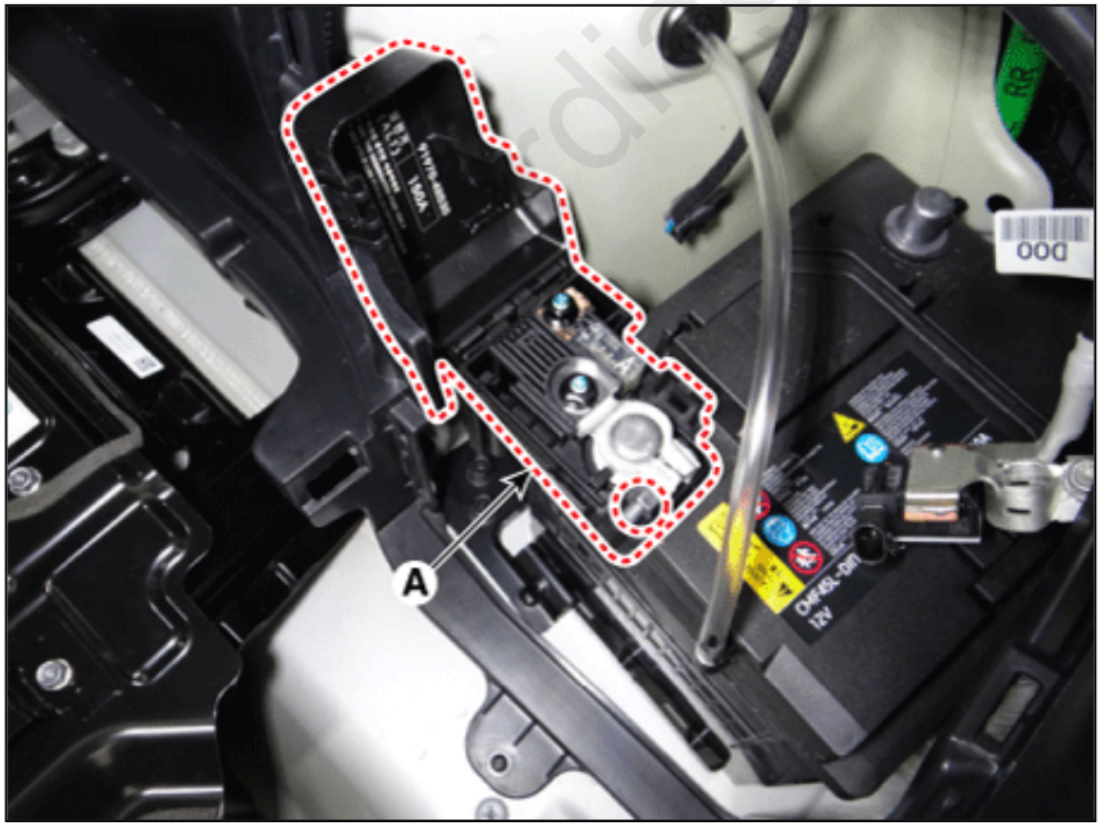

6. Remove the battery upper bracket (A) after loosening the mounting bolt.

7. Remove the auxiliary 12V battery.

Battery mounting bracket bolt :
19.6 - 29.4 N·m (2.0 - 3.0 kgf·m, 14.5 - 21.7 lb·ft)

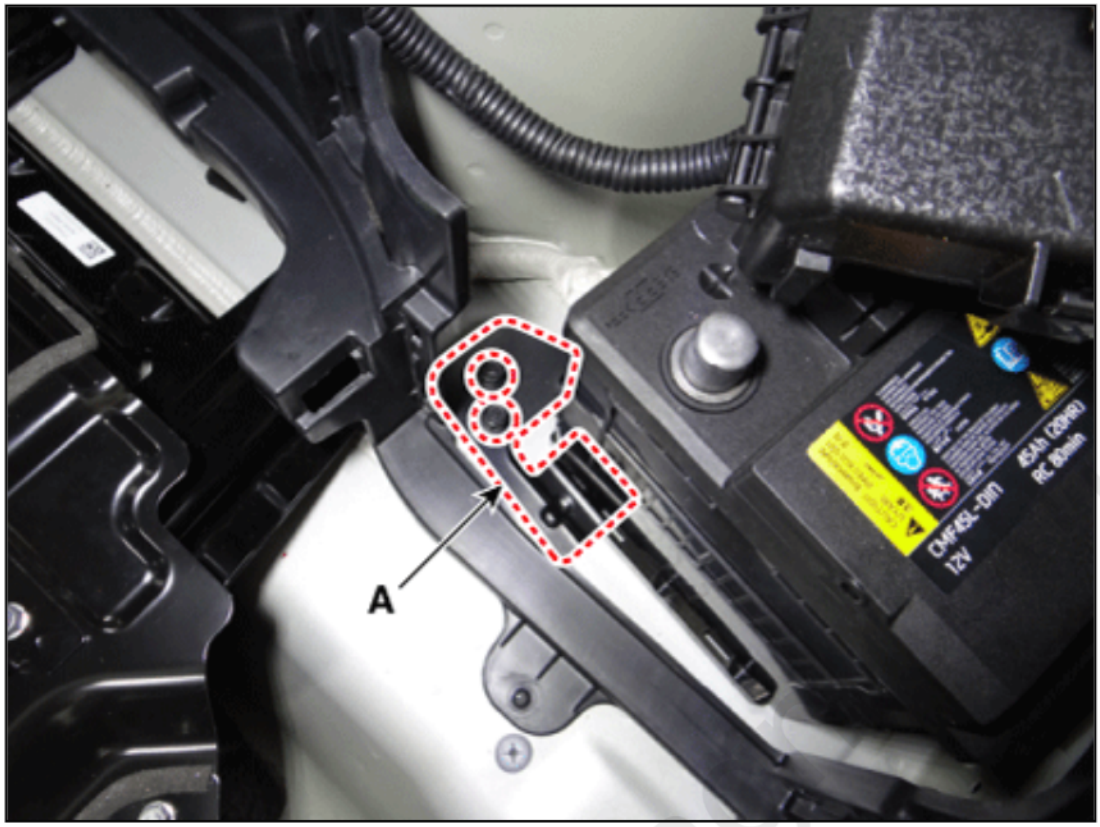

Inspection

Battery Voltage and Status

Check the battery voltage and status using the battery tester.

Battery Terminal

1. Move back and forth to check that the battery terminals (A) are loose or corroded.If the terminals are corroded, clean them.

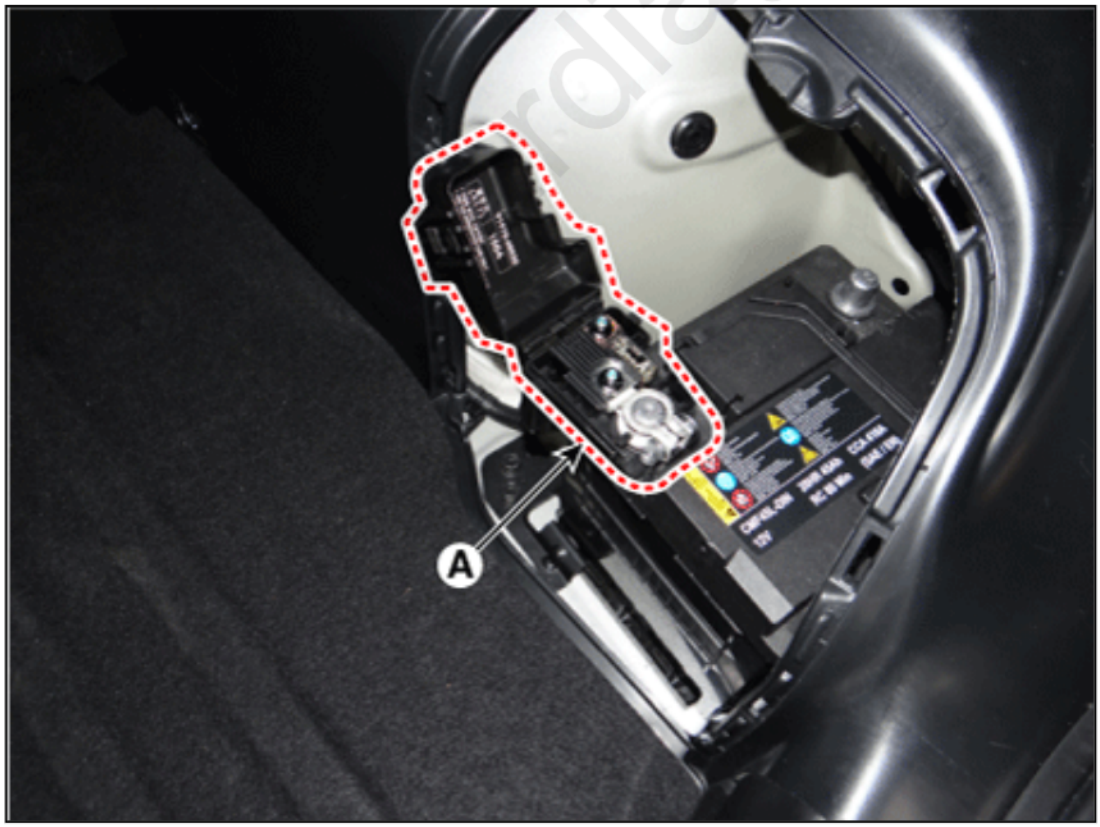

If battery positive connection is loose, disconnect ground(GND) cable first before attempting to remove or

tighten plus connection, to prevent personal injury.

2. If the battery clamp on battery positive (+) terminal is not seated securely:
   (1) Turn ignition switch OFF and disconnect the battery negative (-) terminal.
   (2) Tighten battery clamp (A) on battery positive (+) terminal

---

Battery positive (+) terminal tightening nut :
7.8 - 9.8 N·m (0.8 - 1.0 kgf·m, 5.8 - 7.2 lb·ft)

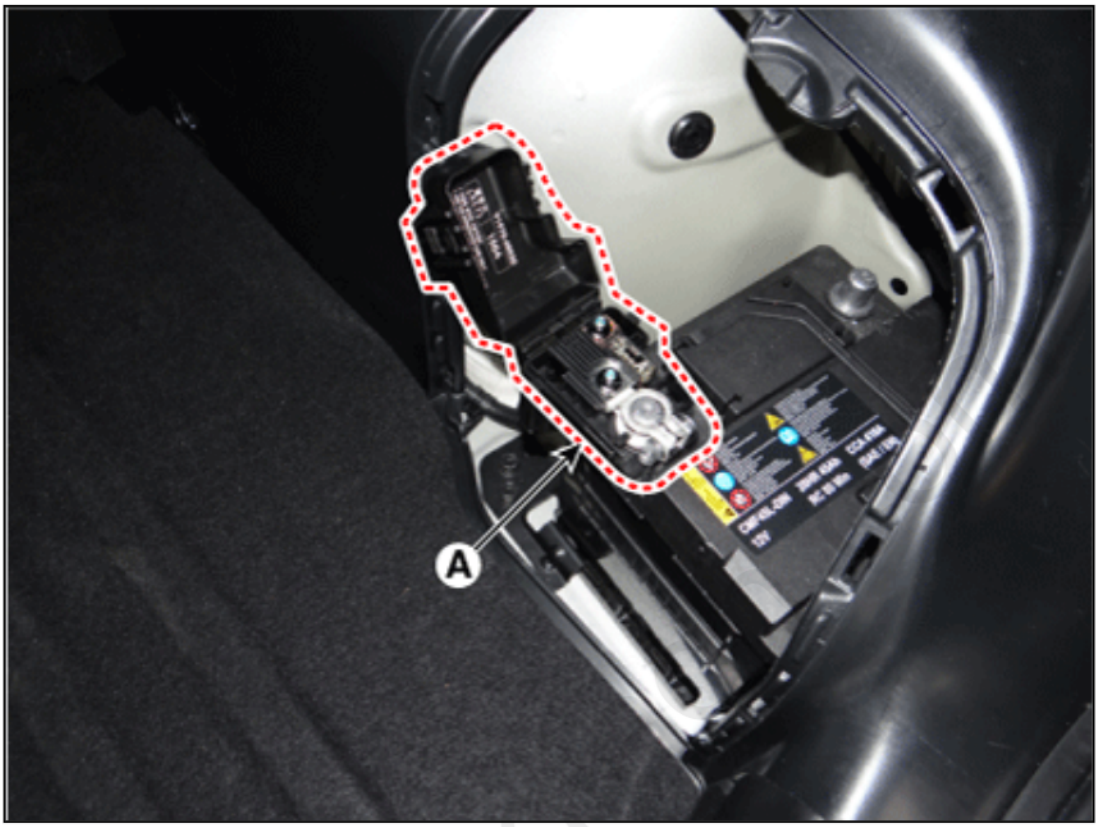

3. If the battery clamp on battery negative (-) terminal is not seated securely:
   (1) Tighten battery clamp (A) on battery negative (-) terminal.

Battery negative (-) terminal tightening nut :
7.8 - 9.8 N·m (0.8 - 1.0 kgf·m, 5.8 - 7.2 lb·ft)

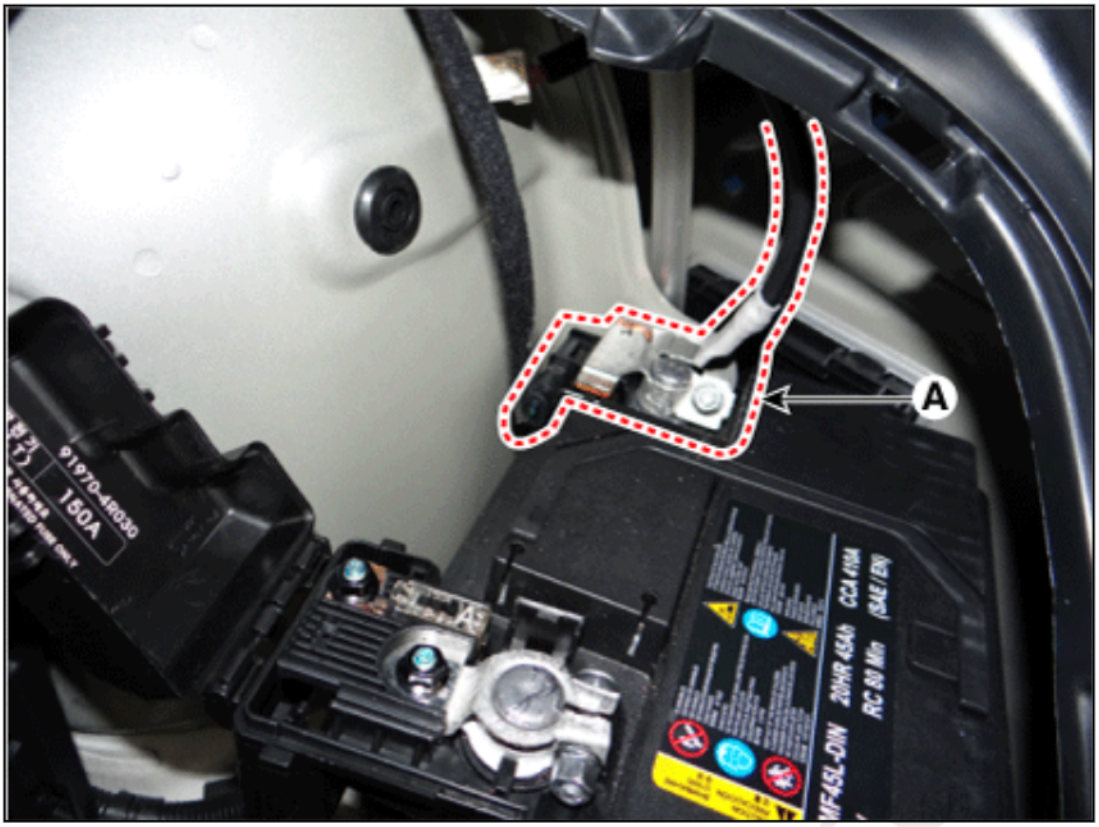

Battery Condition
Check the battery for damage or deformation. If severe damage, deformation or leakage is found, replace the battery.

Vehicle parasitic current inspection
[Using the Ammeter]

1. Turn the all electric devices OFF, and then turn the ignition switch OFF.
2. Close all doors except the tailgate, and then lock all doors.
3. Disconnect the tailgate latch connector.
4. Wait a few minutes until the vehicle's electrical systems go to sleep mode.

> •For an accurate measurement of a vehicle parasitic current, all electrical systems should go to sleep mode. (It takes at least one hour or at most one day.) However, an approximate vehicle parasitic current can be measured after 10-20 minutes.

5. Connect an ammeter in series between the battery (-) terminal and the ground cable, and then disconnect the clamp from the battery (-) terminal slowly.

- Be careful that the lead wires of an ammeter do not come off from the battery (-) terminal and the ground cable to prevent the battery from being reset. In case the battery is reset, connect the battery cable again, and then start the engine or turn the ignition switch ON for more than 10 sec. Repeat the procedure from No. 1.

  To prevent the battery from being reset during the inspection,

1) Connect a jump cable between the battery (-) terminal and the ground cable.
2) Disconnect the ground cable from the battery (-) terminal.
3) Connect an ammeter between the battery (-) terminal and the ground cable.
4) After disconnecting the jump cable, read the current value of the ammeter.

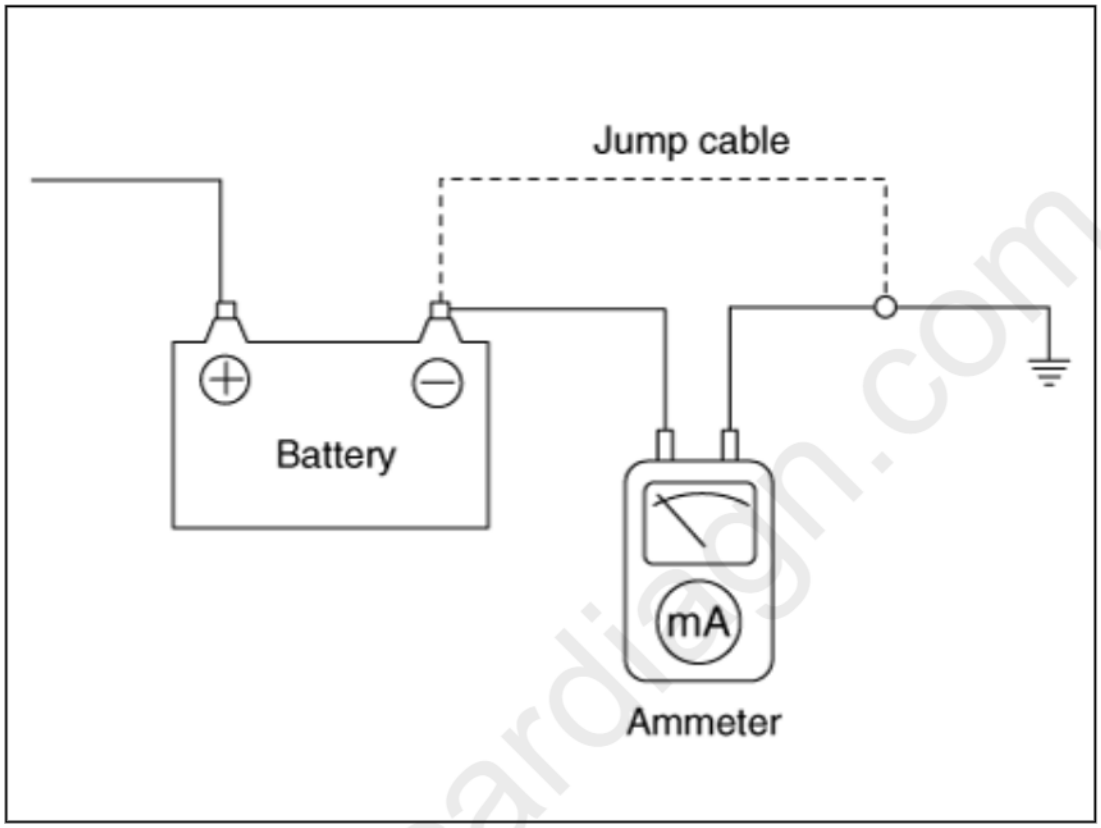

6. Read the current value of the ammeter.
   - If the parasitic current is over the limit value, search for abnormal circuit by removing a fuse one by one and checking the parasitic current.
   - Reconnect the suspected parasitic currentdraw circuit fuse only and search for suspectedunit by removing the component connected with thecircuit one by one until the parasitic draw dropsbelow limit value.

Limit value (after 10-20 min.) : Below 50mA

[Using the Clamp type Ammeter]

1. Turn the all electric devices OFF, and then turn the ignition switch OFF.
2. Close all doors except the tailgate, and then lock all doors.
3. Disconnect the tailgate latch connector.

cardiagn.com

4. Wait a few minutes until the vehicle's electrical systems go to sleep mode.

- For an accurate measurement of a vehicle parasitic current, all electrical systems should go to sleep mode. (It takes at least one hour or at most one day.) However, an approximate vehicle parasitic current can be measured after 10 - 20 minutes.

5. Install the clamp type ammerter on battery negative (-) terminal.

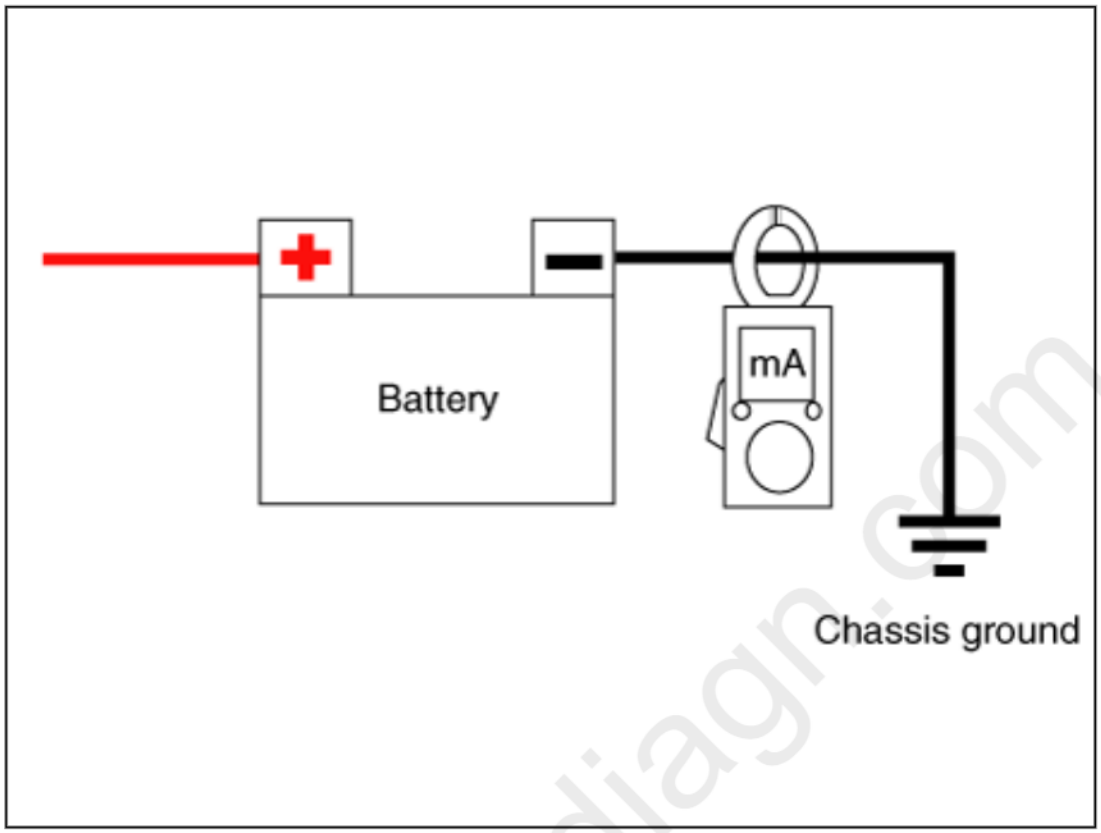

6. Read the current value of the ammeter.
   - If the parasitic current is over the limit value, search for abnormal circuit by removing a fuse one by one and checking the parasitic current.
   - Reconnect the suspected parasitic currentdraw circuit fuse only and search for suspectedunit by removing the component connected with thecircuit one by one until the parasitic draw dropsbelow limit value.

Limit value (after 10-20 min.) : Below 50mA

Battery
Tester

The Micro 570 Analyzer

The Micro 570 Analyzer provides the ability to test the charging and starting systems, including the battery, starter and alternator.

cardiagn.com

※ Because of the possibility of personal injury, always use extreme caution and appropriate eye protection when working with batteries.
※ When charging battery by test result, Battery must be fully charged.
To get accurate test result, battery surface voltage must have subsided ahead before test when you test battery after charged. (See following Battery Test Results)

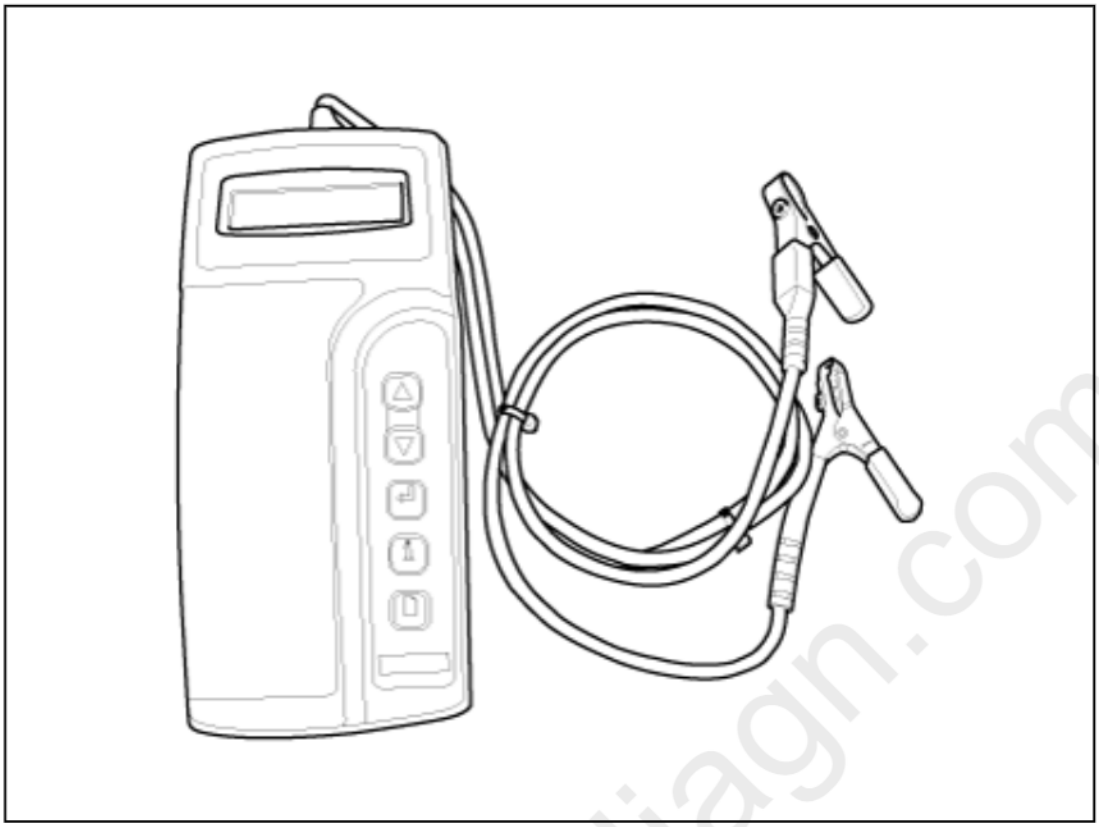

Keypad
The Micro 570 button on the key pad provide the following functions :

cardiagn.com

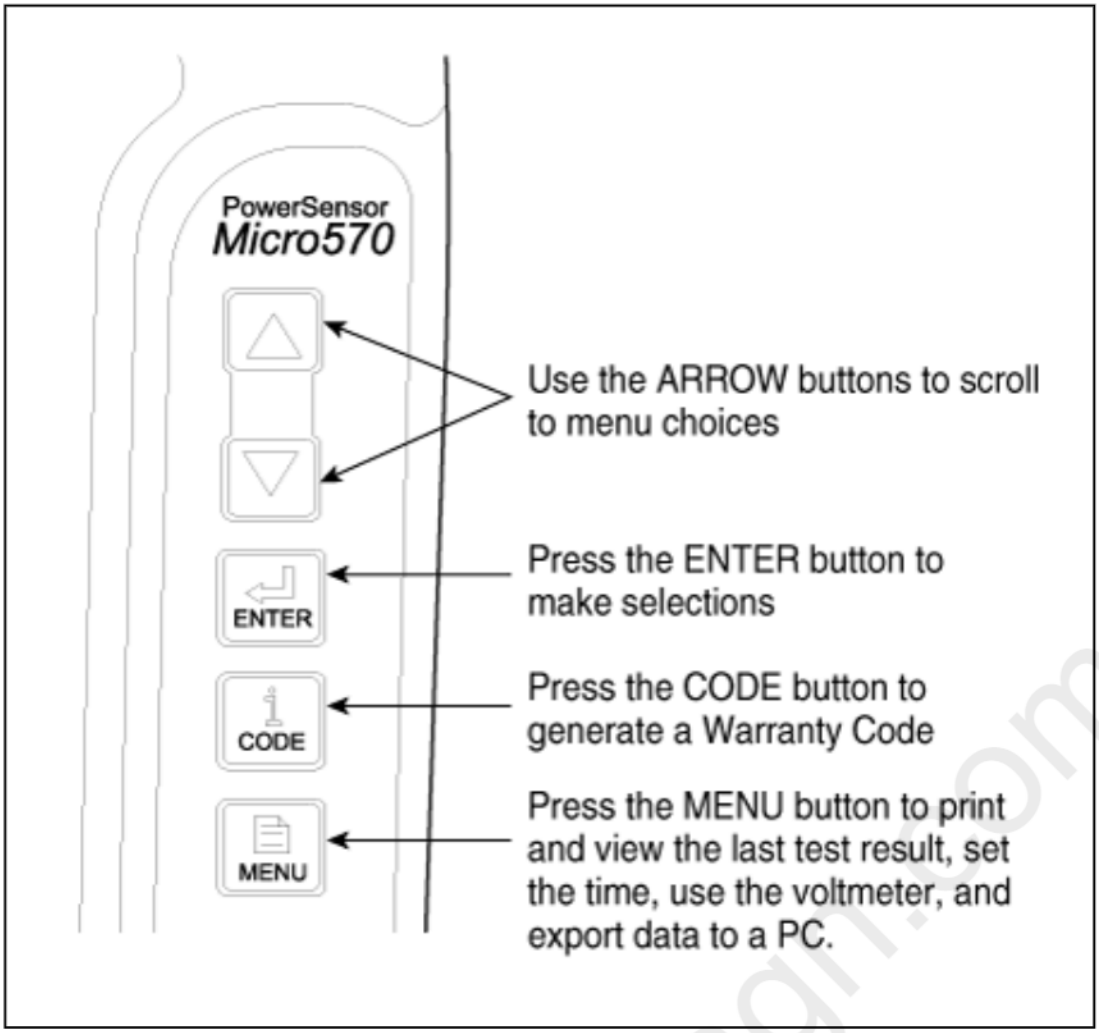

Battery Test Procedure

1. Connect the tester to the battery.
   - Red clamp to battery positive (+) terminal.
   - Black clamp to battery negative (-) terminal.

cardiagn.com

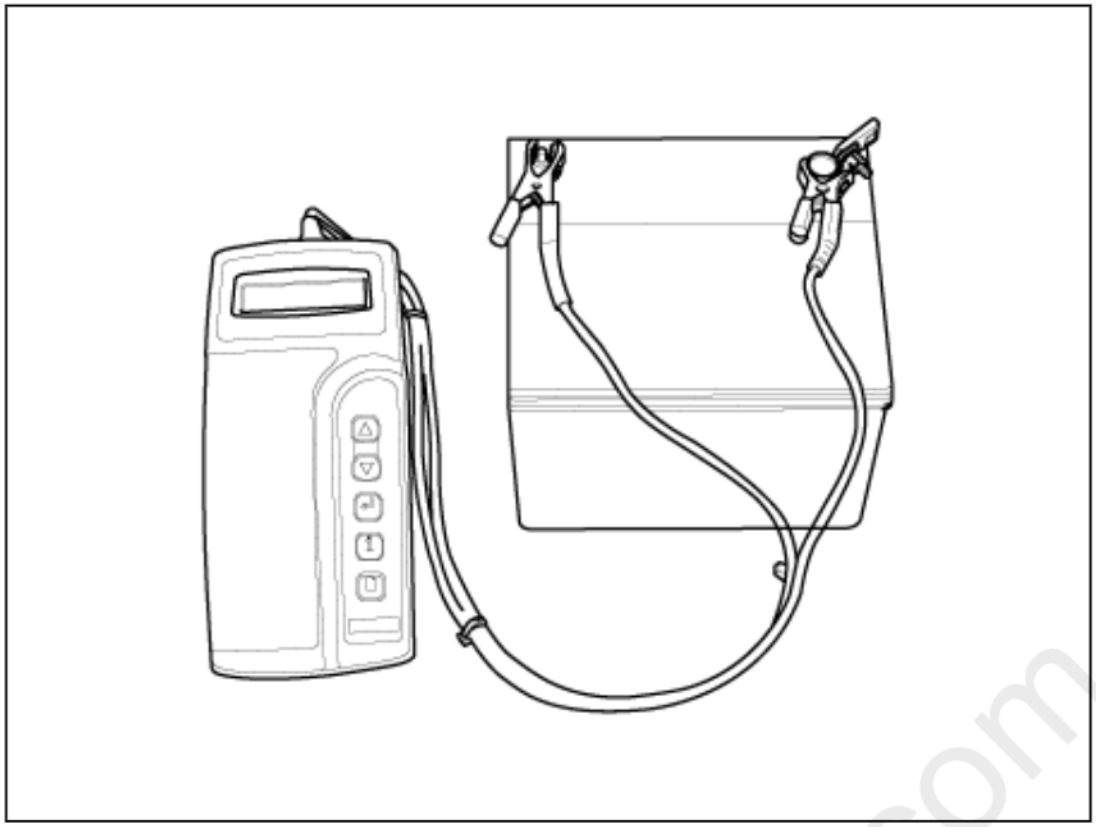

Connect clamps securely. If "CHECK CONNECTION" message is displayed on the screen, reconnect clamps securely.

2. The tester will ask if the battery is connected "IN-VEHICLE" or "OUT-OF-VEHICLE". Make your selection by pressing the arrow buttons; then press ENTER.

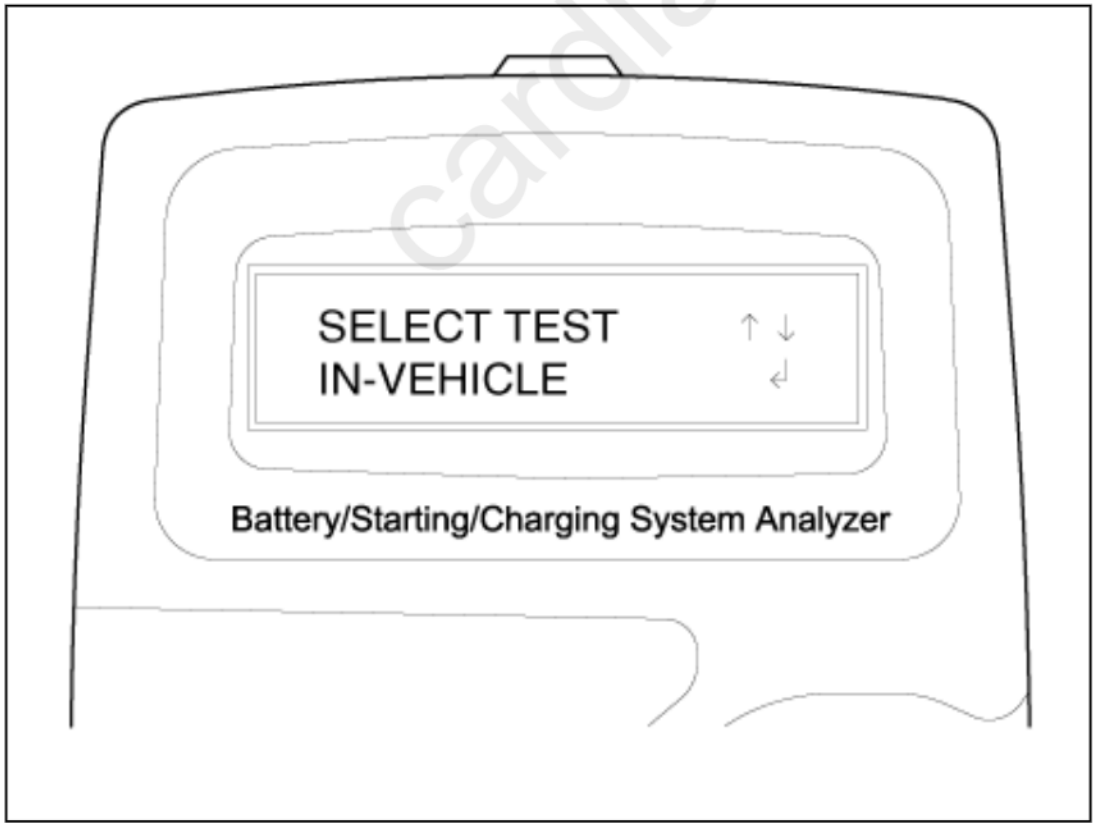

cardiagn.com

3. Select CCA and press the ENTER button.

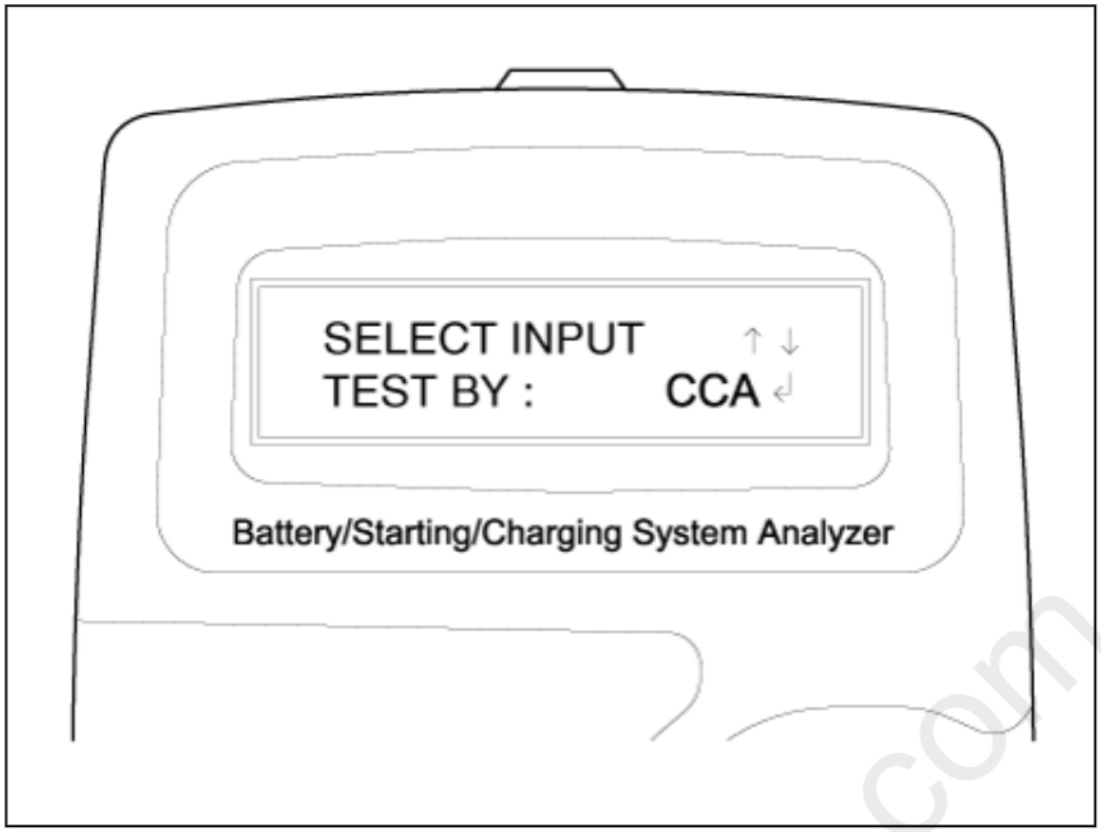

CCA : Cold cranking amps, is an SAE specification for cranking batteried at -0.4°F (-18°C).

4. Set the CCA value displayed on the screen to the CCA value marked on the battery label by pressing up and down buttons and press ENTER.

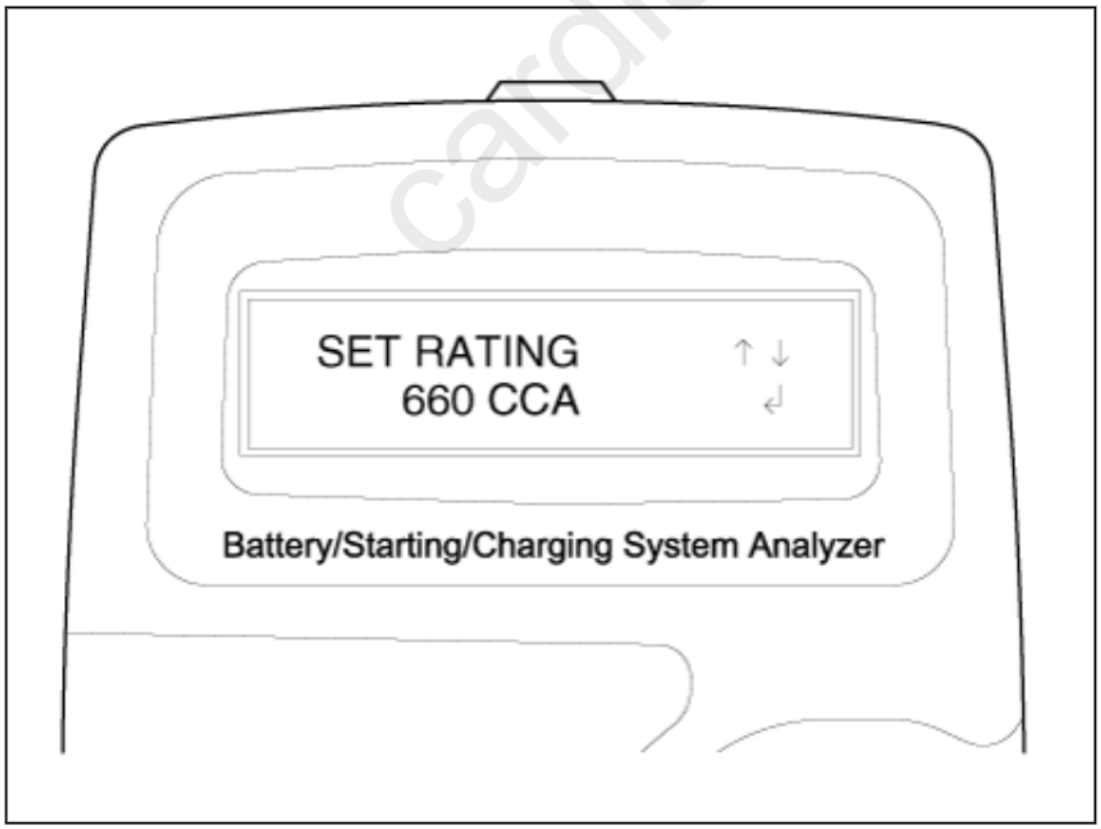

cardiagn.com

The battery ratings(CCA) displayed on the tester must be identical to the ratings marked on battery label.

5. The tester will conduct battery test.

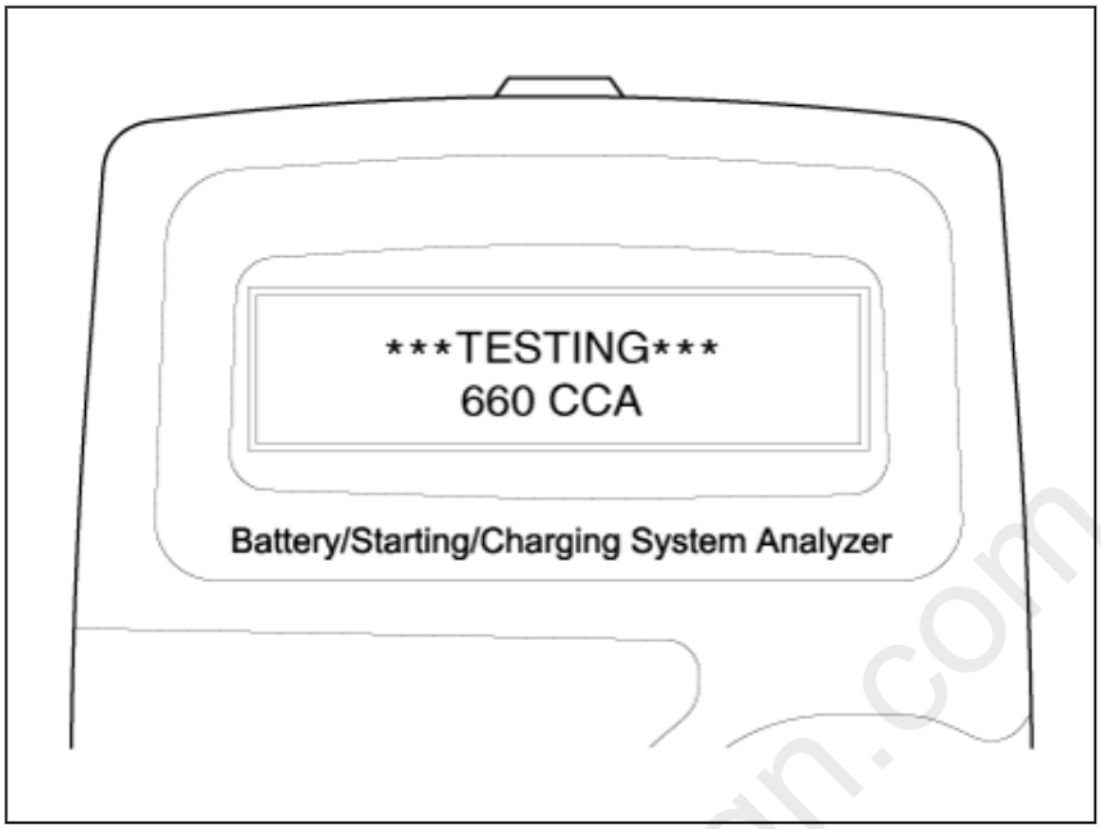

6. The tester displays battery test results including voltage and battery ratings.
   Refer to the following table and take the appropriate action as recommended by the Micro 570.

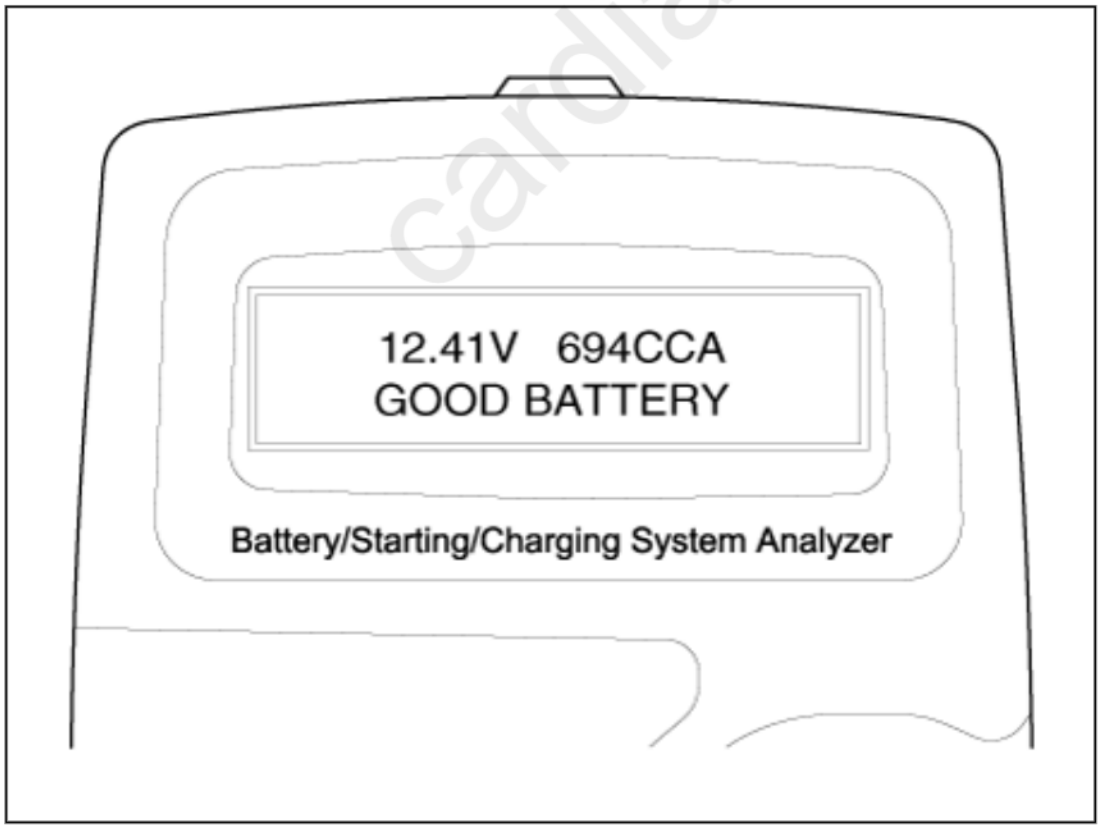

cardiagn.com

Battery Test Results

Result On Printer	Remedy
GOOD BATTERY	No action is required.
GOOD RECHARGE	Battery is in a good state. Recharge the battery and use. ※ You have to follow instruction below when you charge battery and retest, otherwise test result can be inaccurate. (See 'Charge and Retest method after battery charge' below.)
CHARGE & RETEST	Battery is not charged properly. –Charge and test the battery again. ※ You have to follow instruction below when you charge battery and retest, otherwise test result can be inaccurate. (See 'Charge and Retest method after battery charge' below.)
REPLACE BATTERY	Replace battery and recheck the charging system. –Improper connection between battery and vehicle cables may cause "REPLACE BATTERY". Retest the battery after removing cables and connecting the tester to the battery terminal directly prior to replacing the battery.
BAD CELL-REPLACE	Charge and retest the battery. –If the Micro 570 recommends "REPLACE BATTERY", replace the battery and recheck the charging system.

[Charge and Retest method after battery charge]

Battery charge

Set battery charger to 'Auto Mode' (The Mode that charging current drops as the battery charges.) and charge battery until charging current down close to zero or the charger alerts you with an alarm when charge is complete.

(Minimum charging time recommended: More than 3 hours with Auto Mode that explained above)

- If battery is not fully charged, battery surface voltage will be high while the amount of current charged (CCA) in battery is low. If you measure the battery under this condition, tester may misjudge that battery sulfation occurred because the amount of current in battery is too low in comparison with battery voltage.
  * Surface voltage: When battery is charged electrolyte temperature increases and chemical reaction become active resulting in an excessive increase of battery voltage.
  It is known that it takes approximate one day to subside this increased surface voltage completely.

Battery Test after charge

Do not test battery right after the charge. Test battery after battery surface voltage has subsided as instructed in the following procedure.

(1) When battery charge is complete, install the battery in the vehicle.
(2) Put IG key to ON position and turn on head lamp with low beam, and wait 5 minutes. (Discharge for 5 minutes)
(3) Turn off the head lamp and IG key, and wait 5 minutes. (Waiting for 5 minutes)
(4) Remove +, - cable from the battery and test battery.

cardiagn.com

Whenever filing a claim for battery, the print out of the battery test results must be attached.

Starter Test Procedure

7. After the battery test, press ENTER immediately for the starter test.

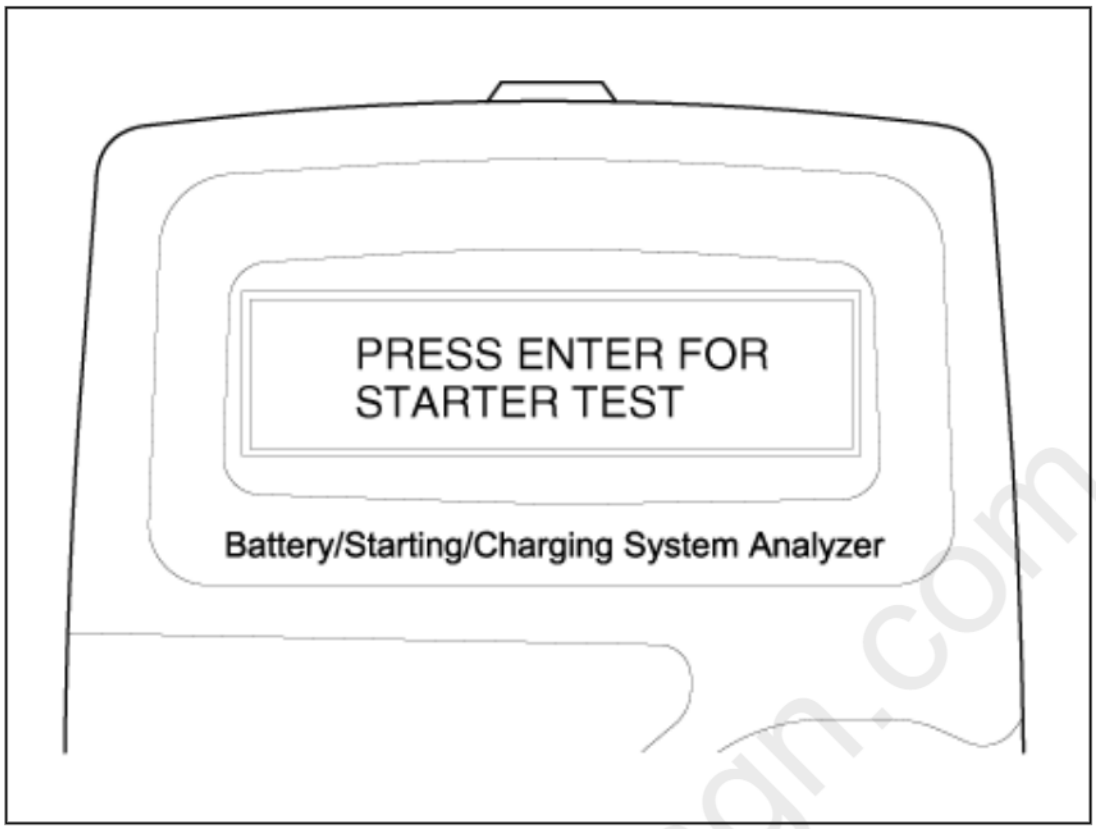

8. Start the engine.

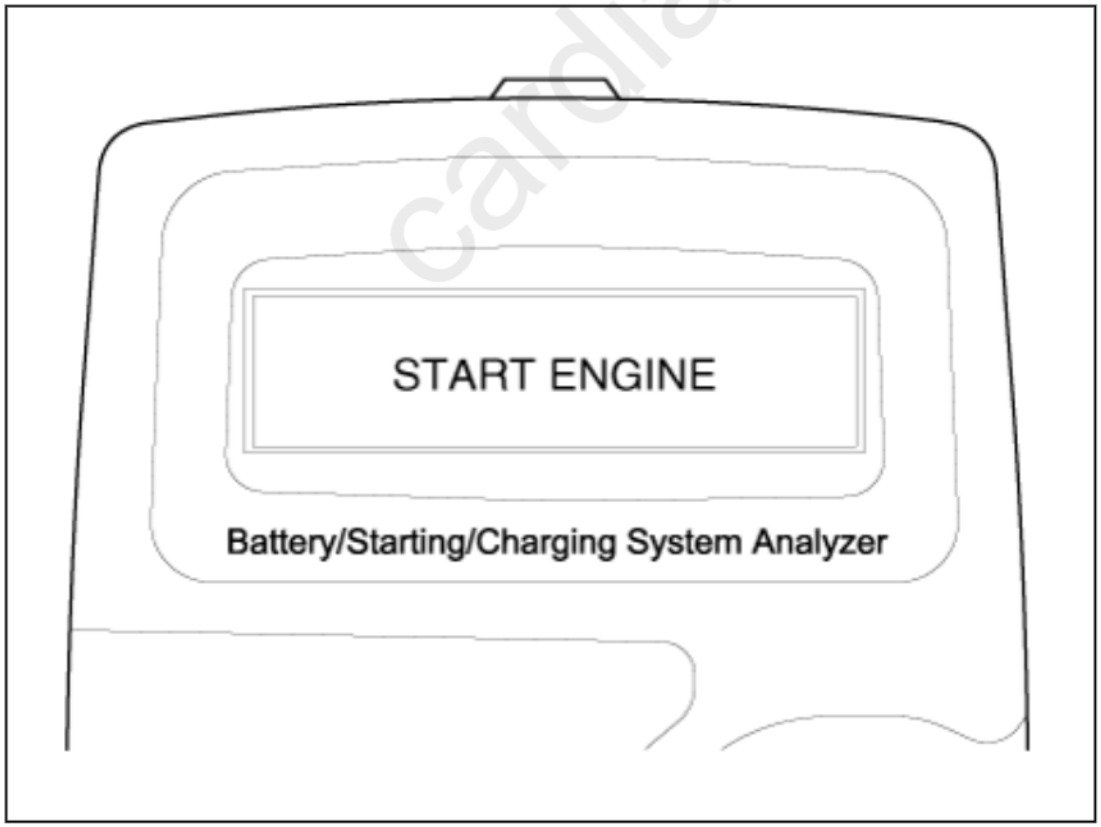

cardiagn.com

9. Cranking voltage and starter test results will be displayed on the screen.
   Refer to the following table and take the appropriate action as recommended by the Micro 570.

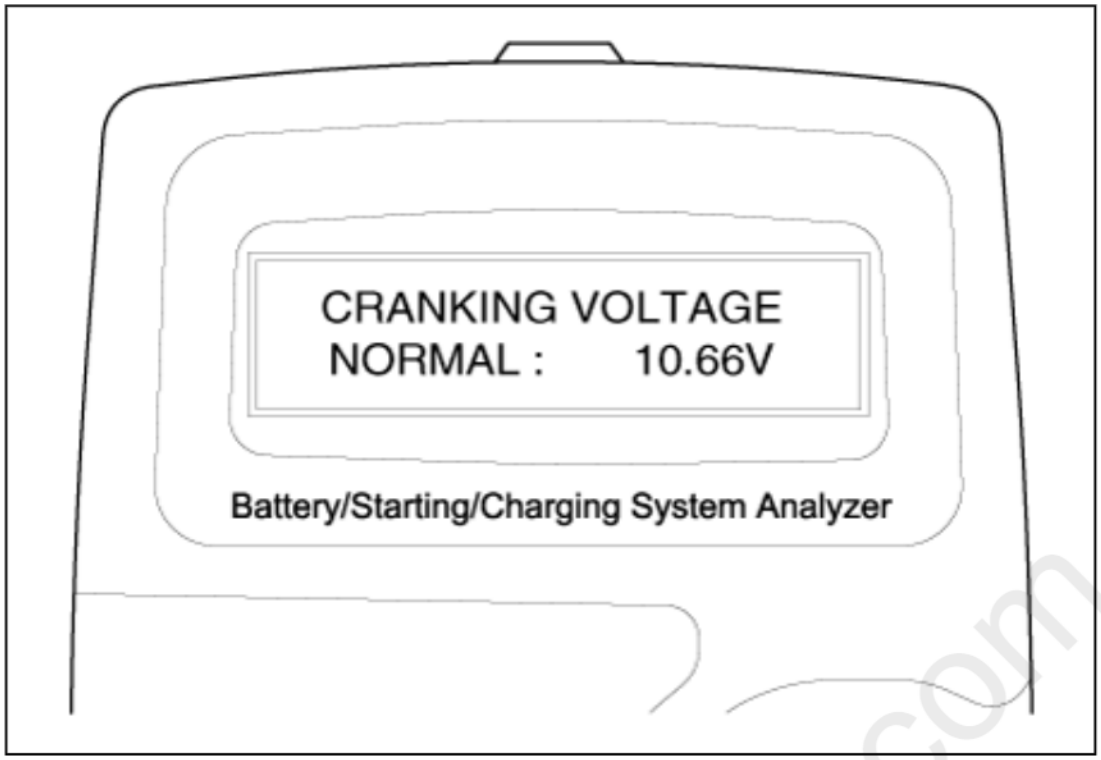

Starter Test Results

Result On Printer	Remedy
CRANKING VOLTAGE NORMAL	System shows a normal starter draw.
CRANKING VOLTAGE LOW	Cranking voltage is lower than normal level. –Check starter.
CHARGE BATTERY	The state of battery charge is too low to test. –Charge the battery and retest.
REPLACE BATTERY	Replace battery. –If the vehicle is not started though the battery condition of "GOOD BATTERY" is displayed, check wiring for open circuit, battery cable connection, starter and repair or replace as necessary. –If the engine does crank, check fuel system.

When testing the vehicle with old diesel engines, the test result will not be favorable if the glow plug is not heated. Conduct the test after warming up the engine for 5 minutes.

Charging System Test Procedure

cardiagn.com

10. Press ENTER to begin charging system test.

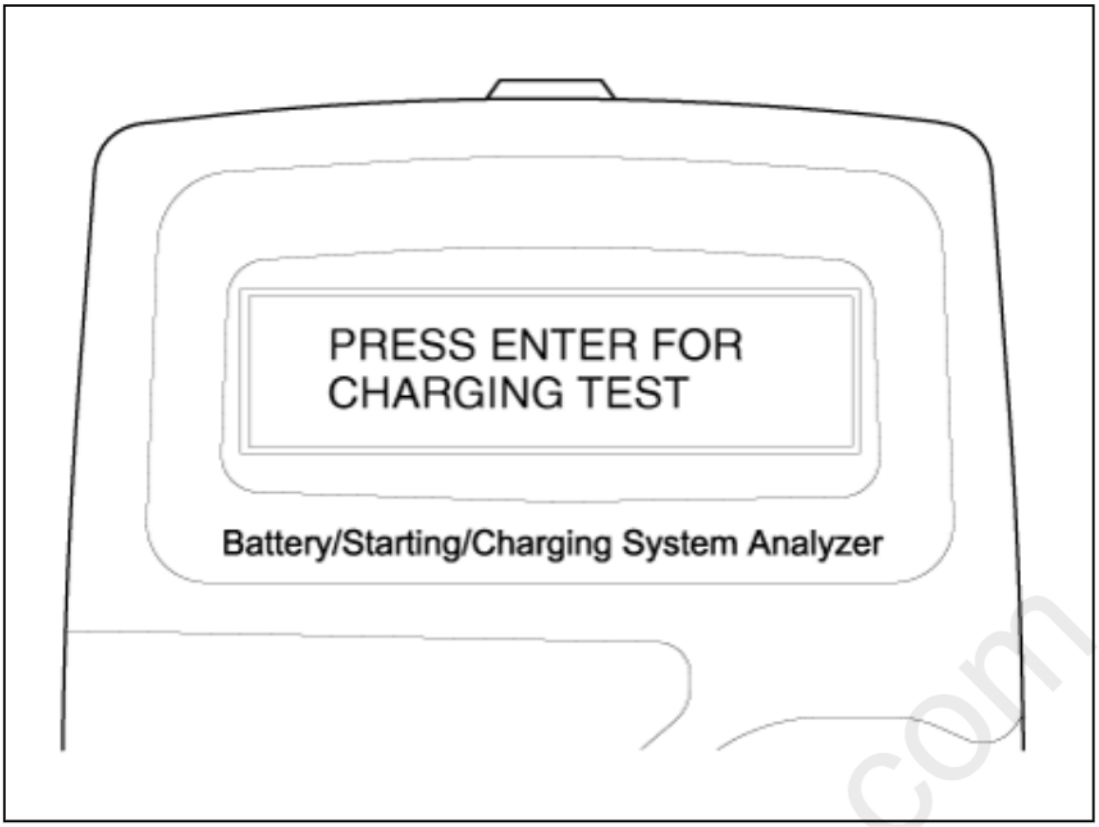

11. The tester displays the actual voltage of alternator.
Press ENTER to continue.

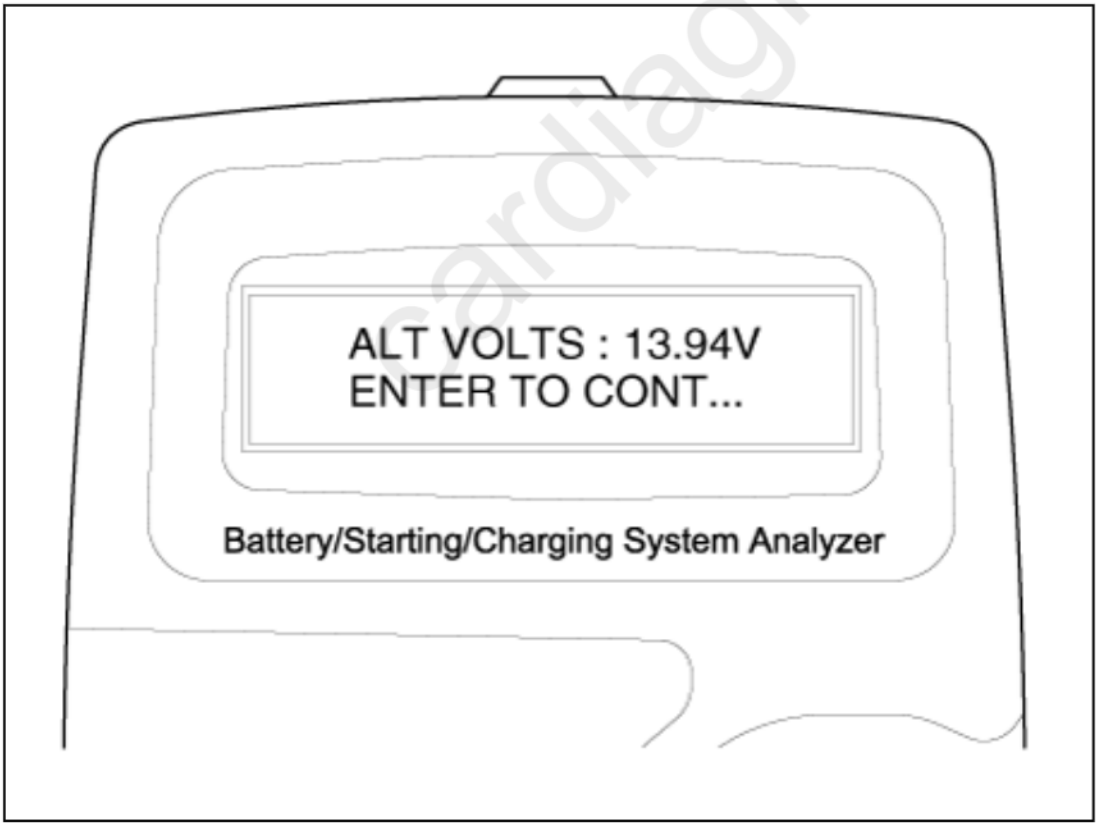

cardiagn.com

12. Turn off all electrical load and rev engine for 5 seconds with pressing the accelerator pedal. (Follow the instructions on the screen)

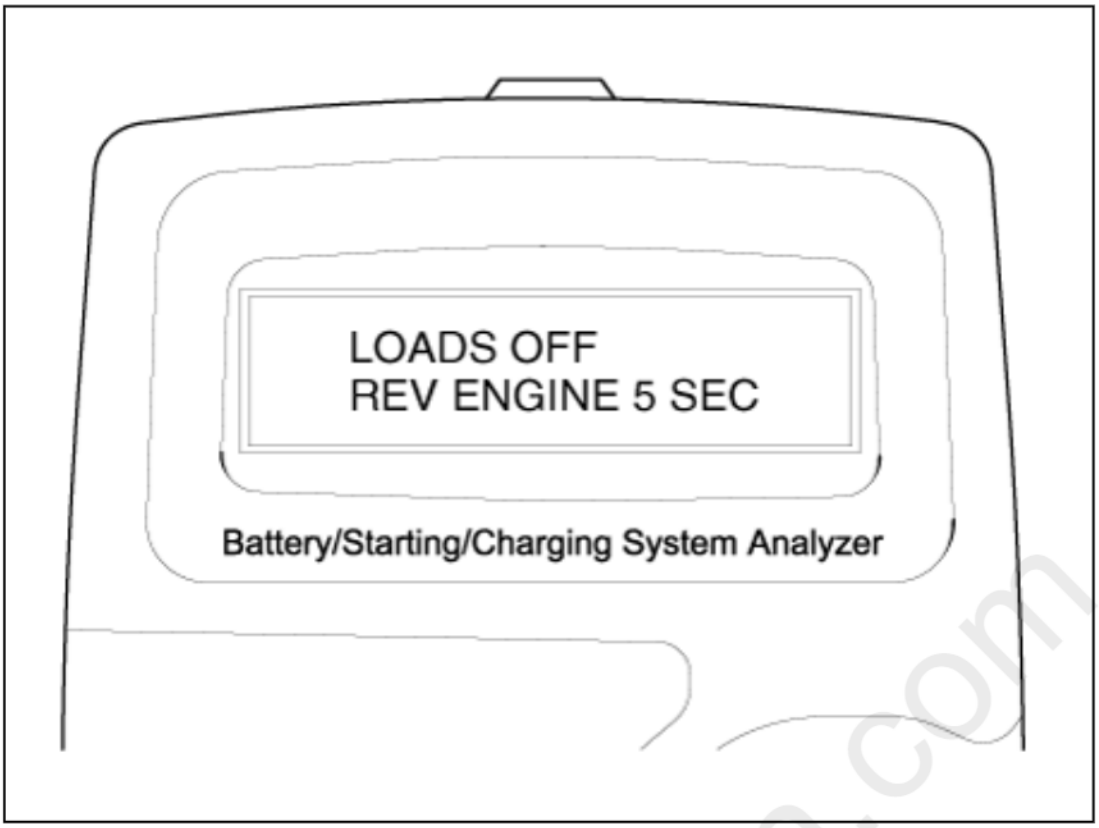

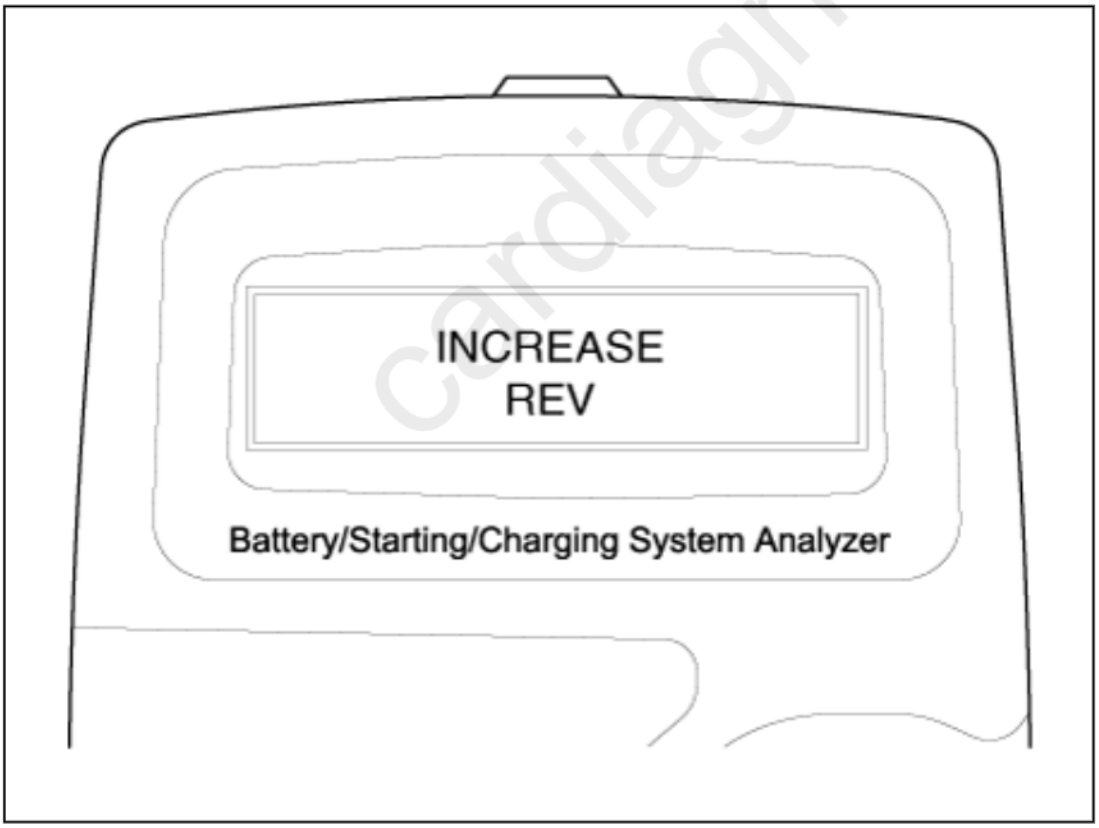

cardiagn.com

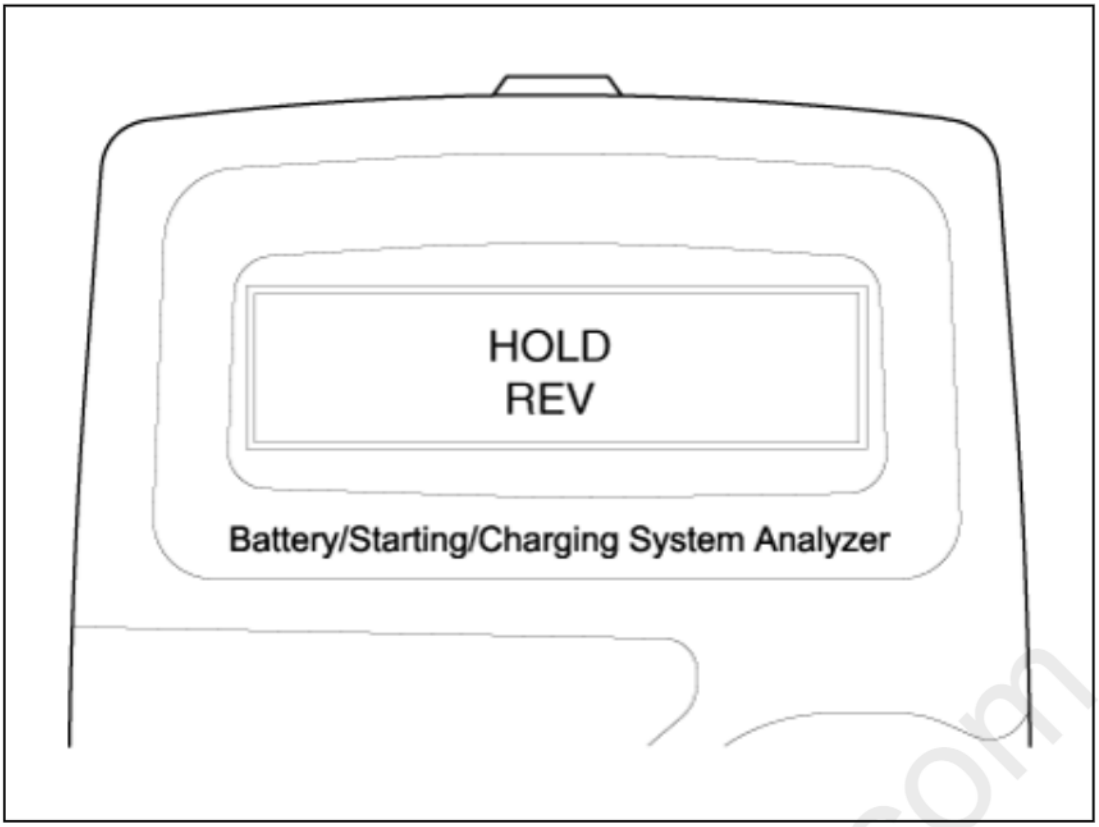

13. The message that engine RPM is detected will be displayed on the screen. Press ENTER to continue.

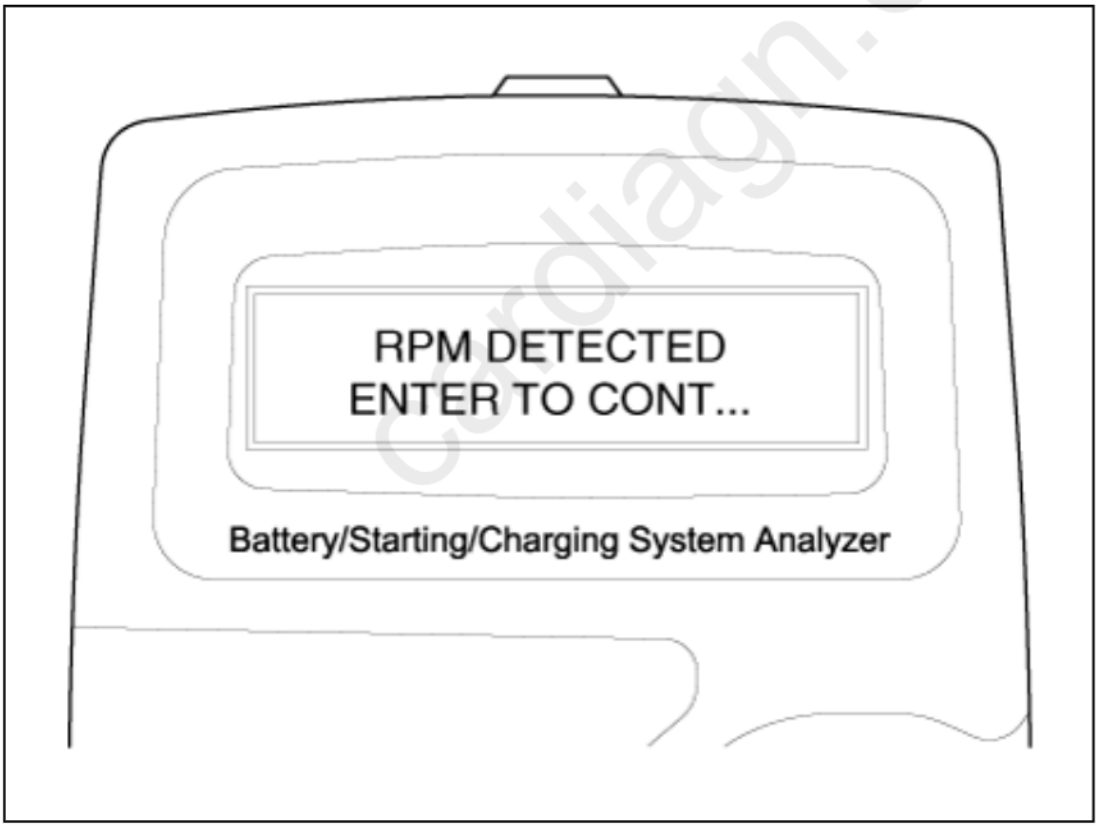

cardiagn.com

14. If the engine RPM is not detected, press ENTER after revving engine.

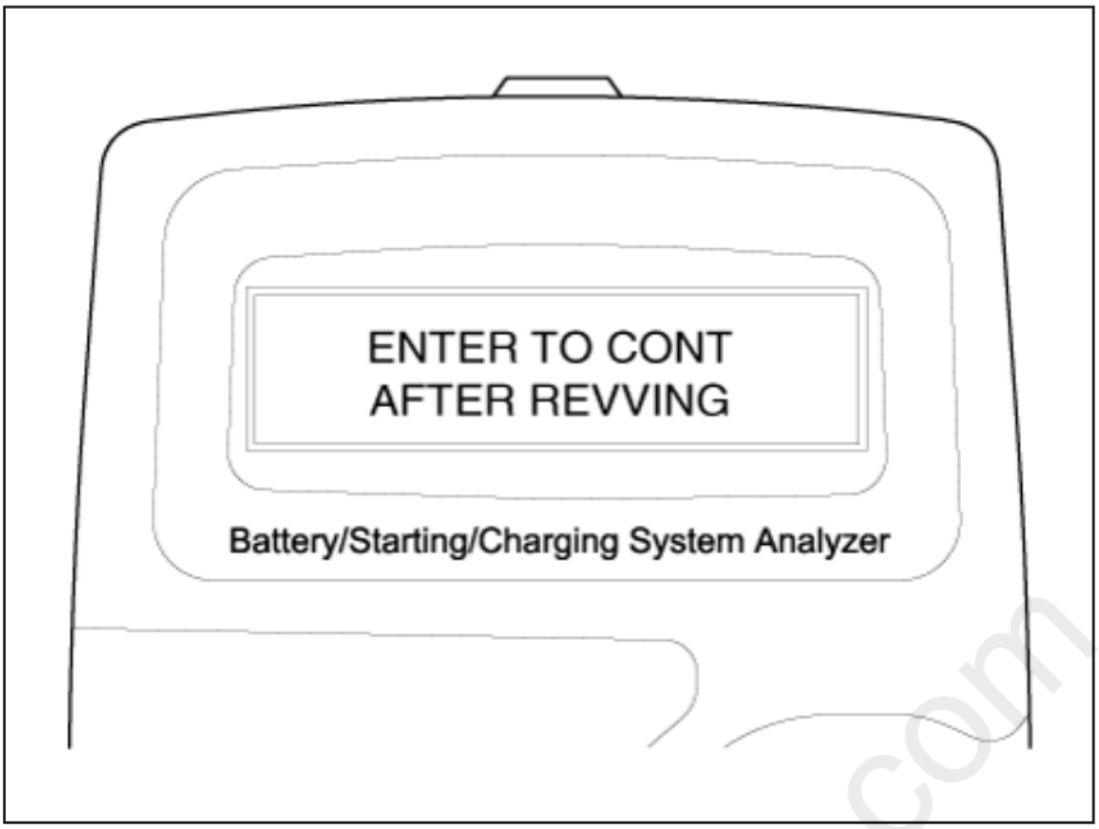

15. The tester will conduct charging system test during loads off.

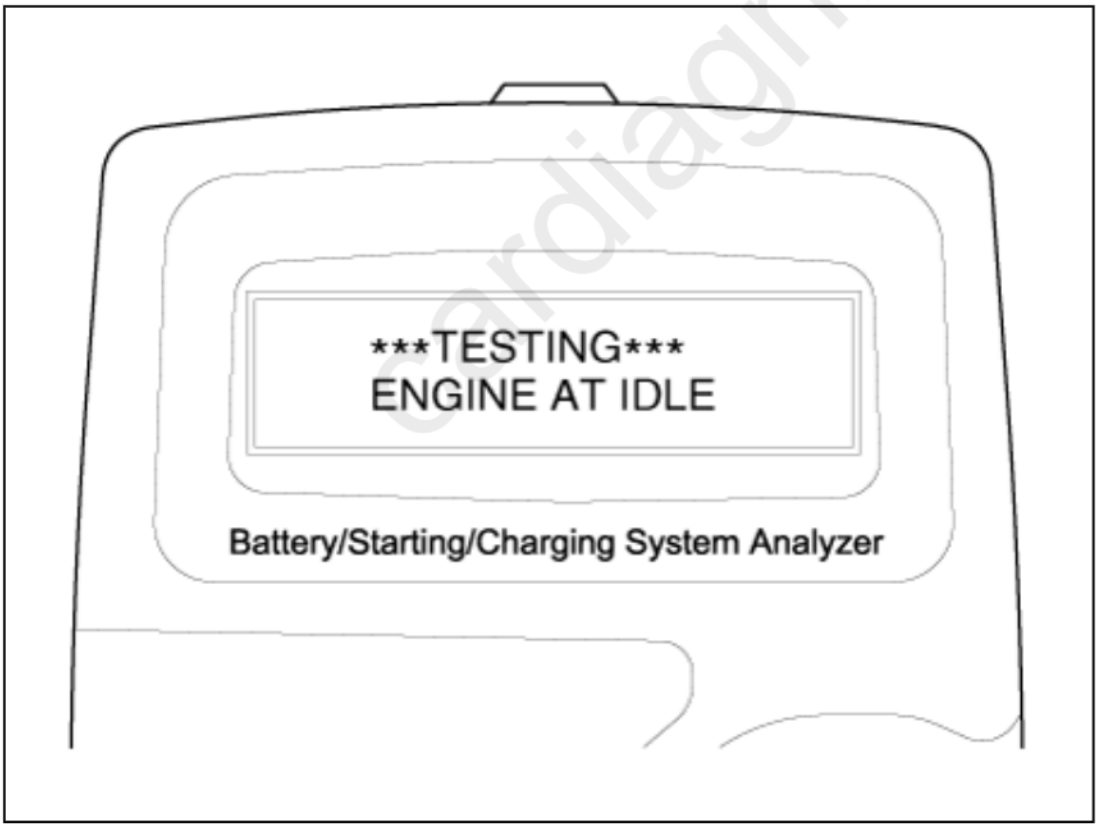

cardiagn.com

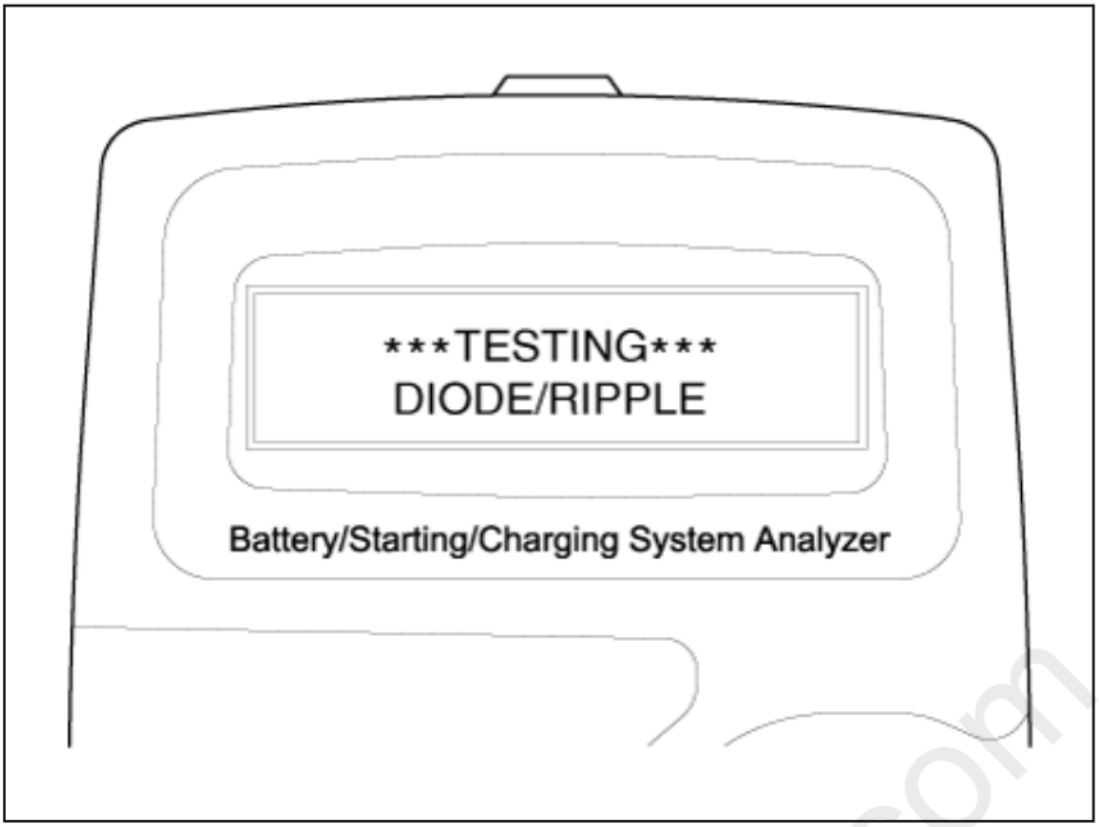

16. Turn on electrical loads (air conditioner, lamps, audio and etc). Press ENTER to continue.

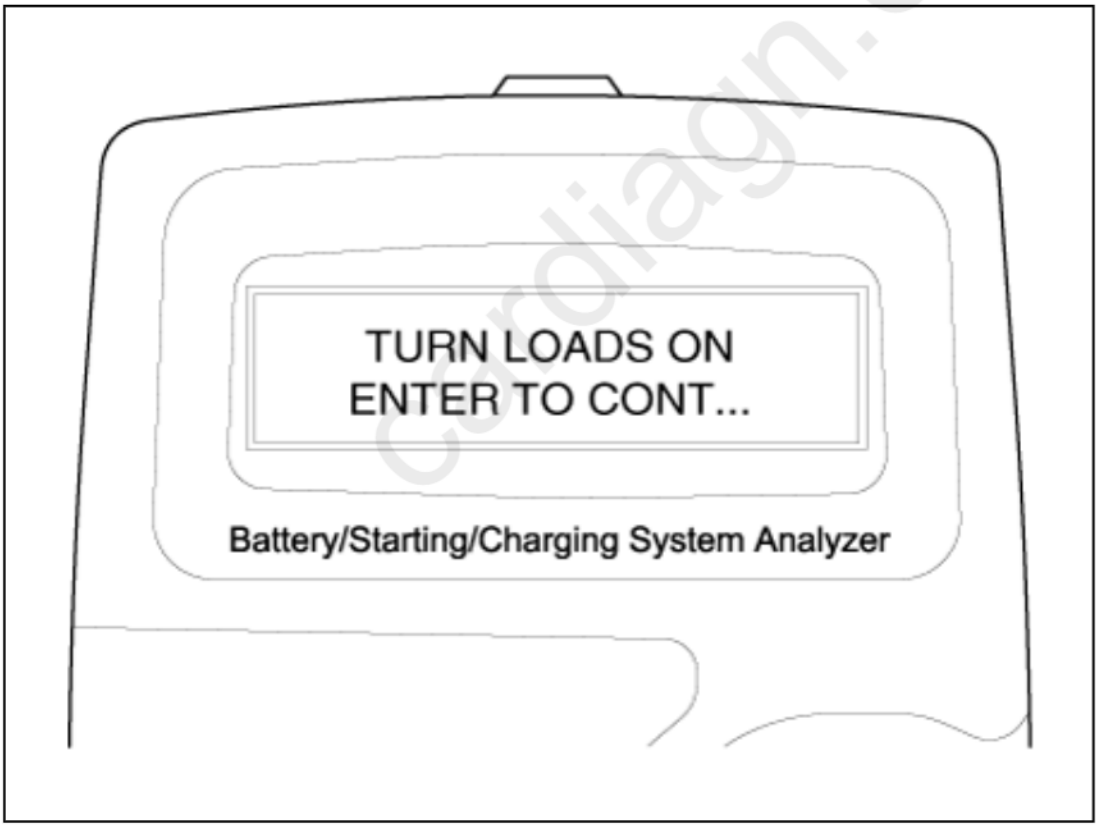

cardiagn.com

17. The tester will conduct charging system test during loads on.

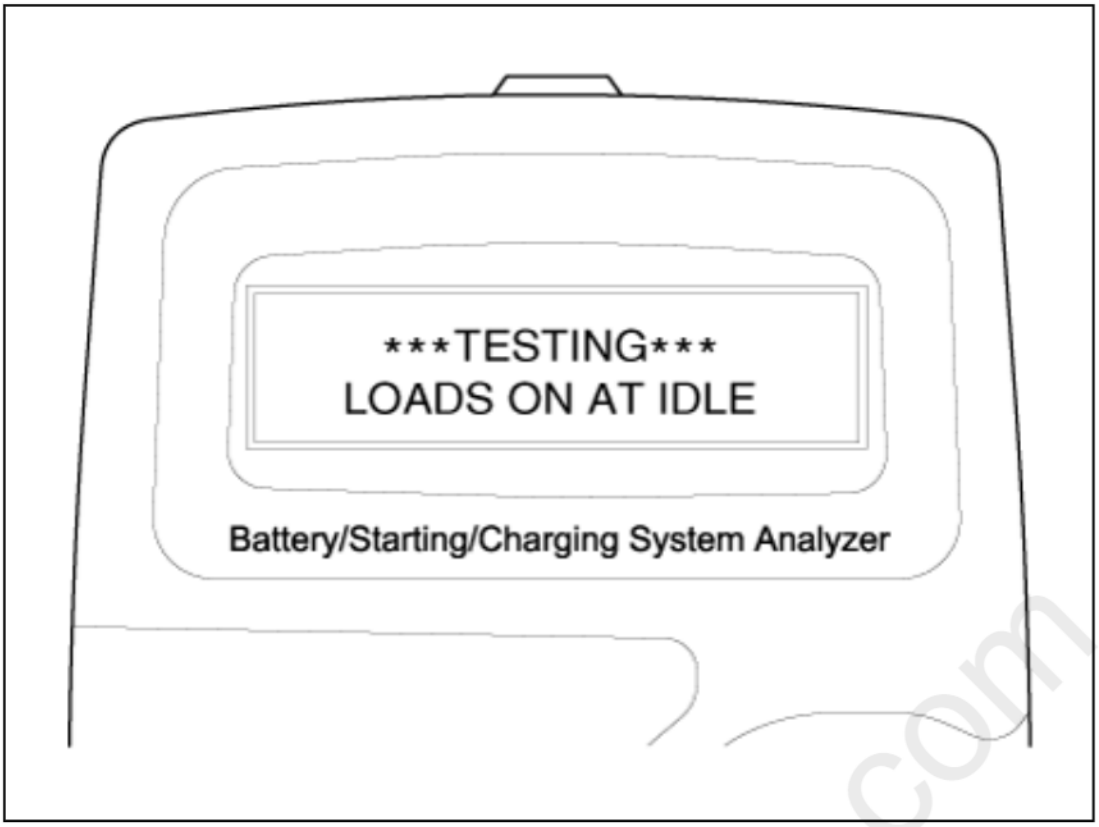

18. Rev engine for 5 seconds with pressing the accelerator pedal. (Follow the instructions on the screen)

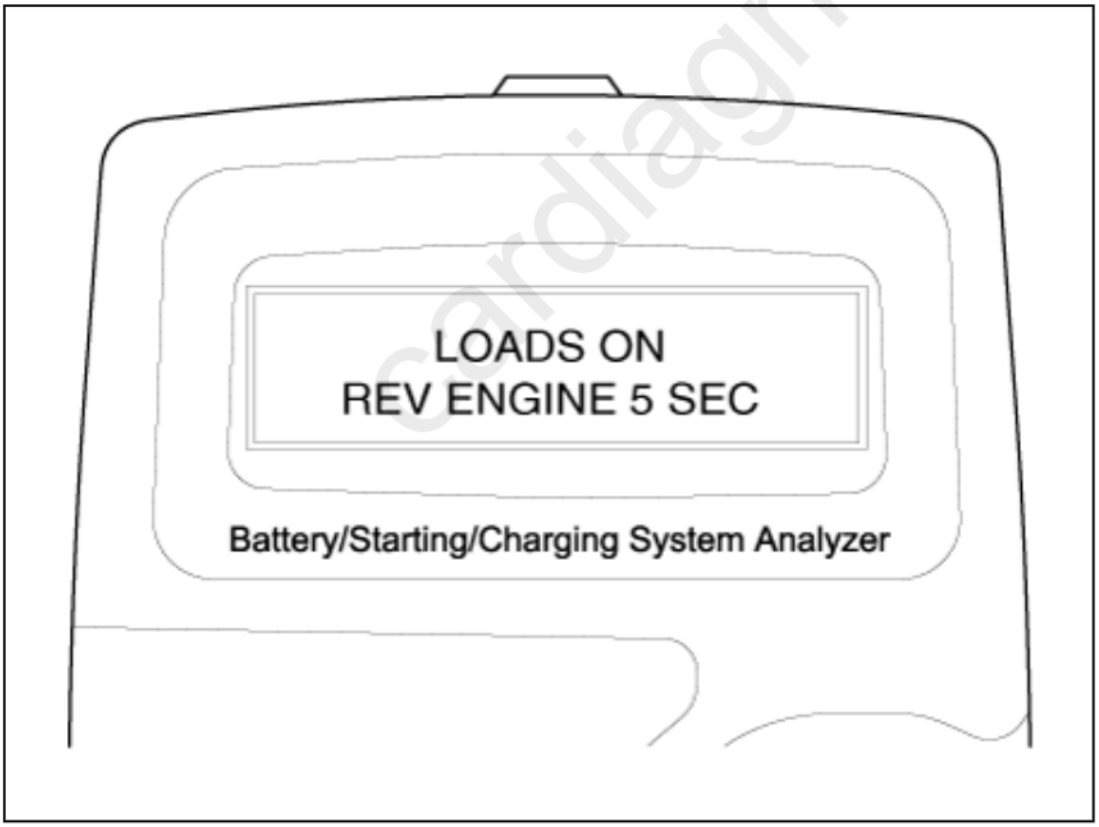

cardiagn.com

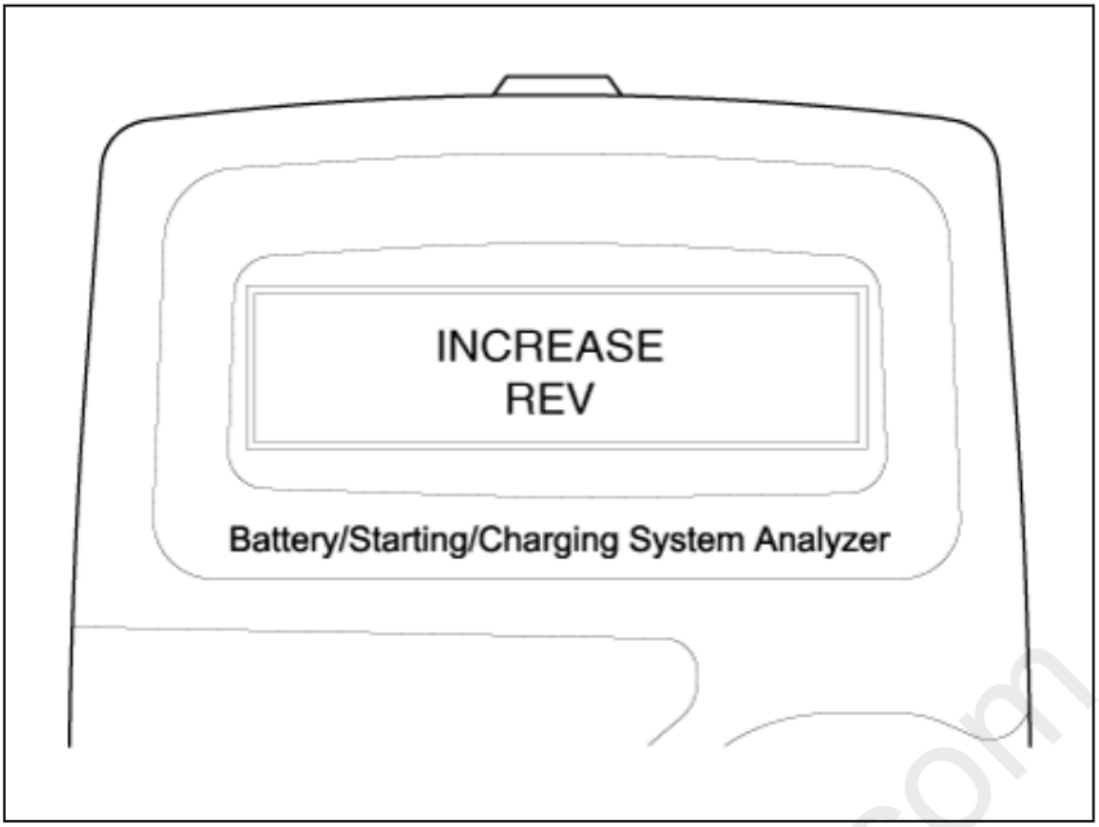

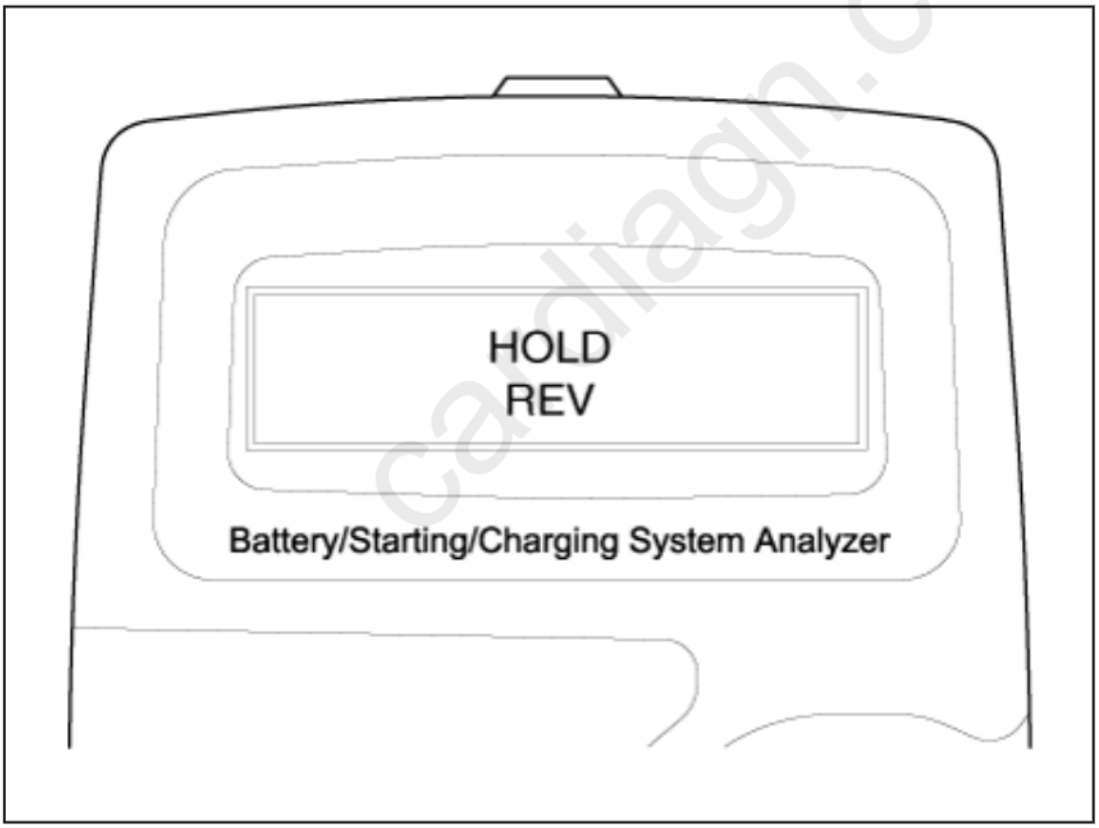

cardiagn.com

19. The message that engine RPM is detected will be displayed on the screen. Press ENTER to continue.

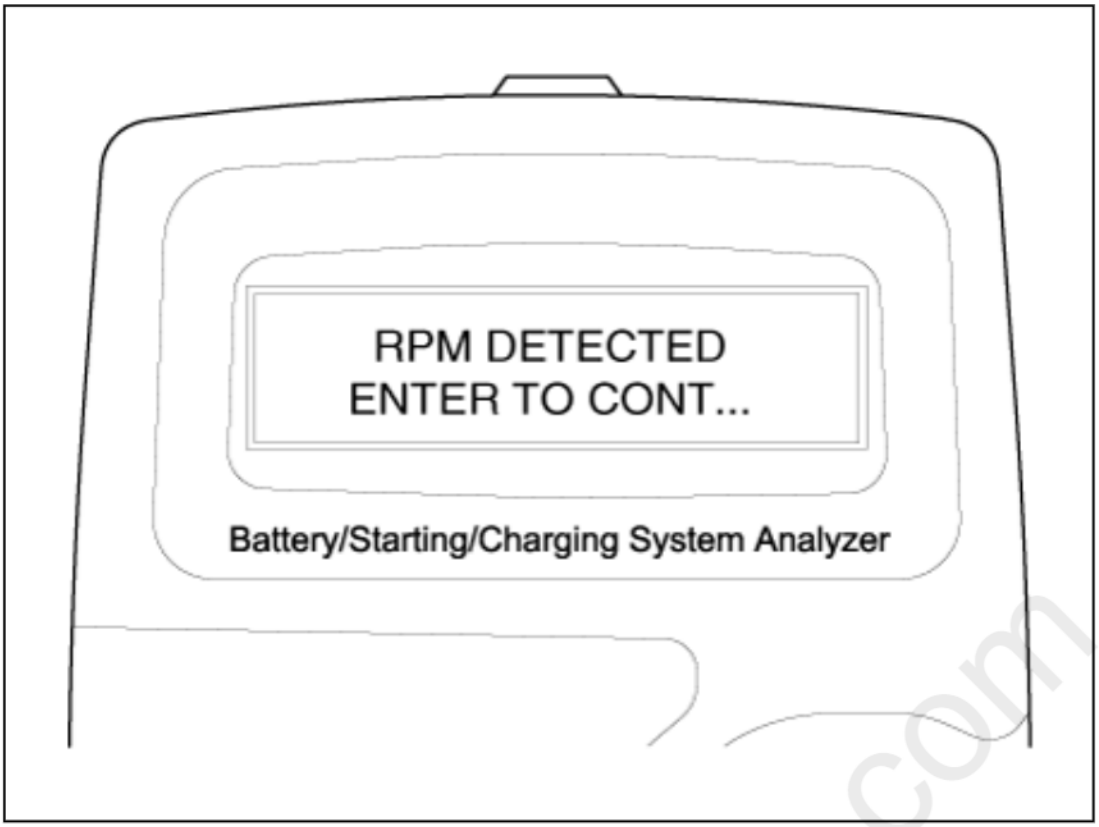

20. If the engine RPM is not detected, press ENTER after revving engine.

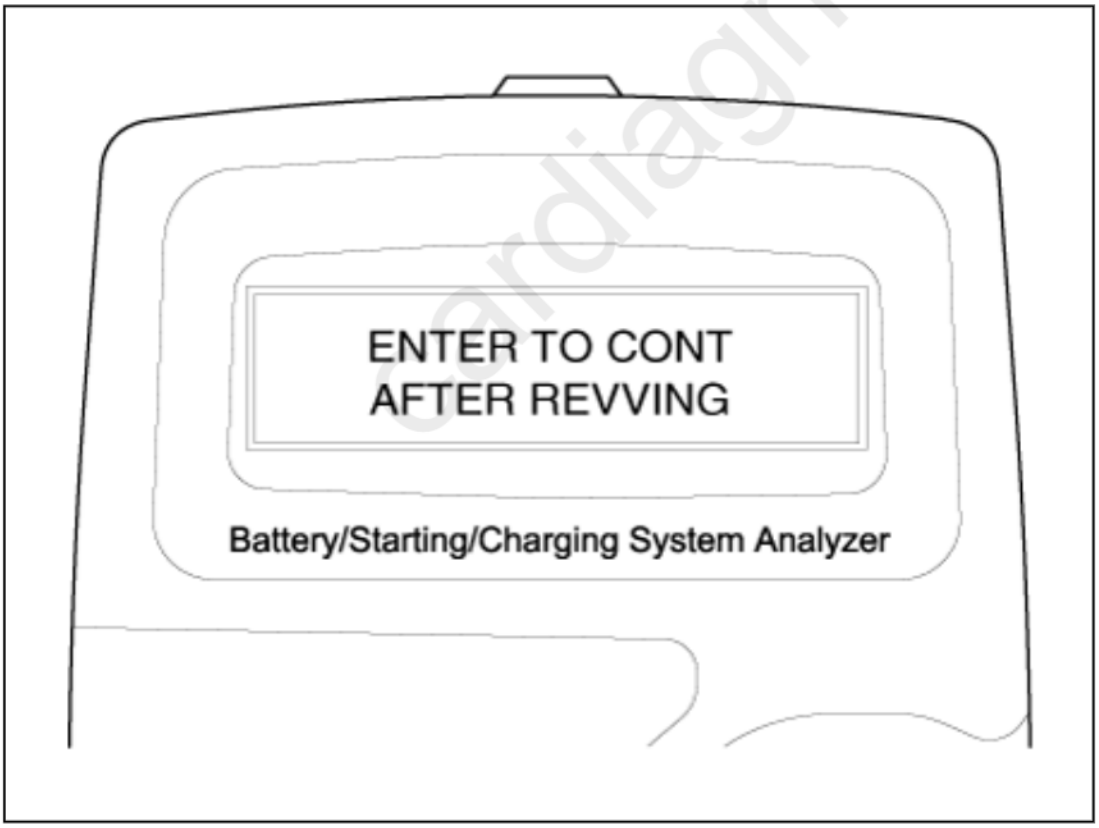

cardiagn.com

21. Turn off electrical loads (air conditioner, lamps, audio and etc). Turn the engine off.

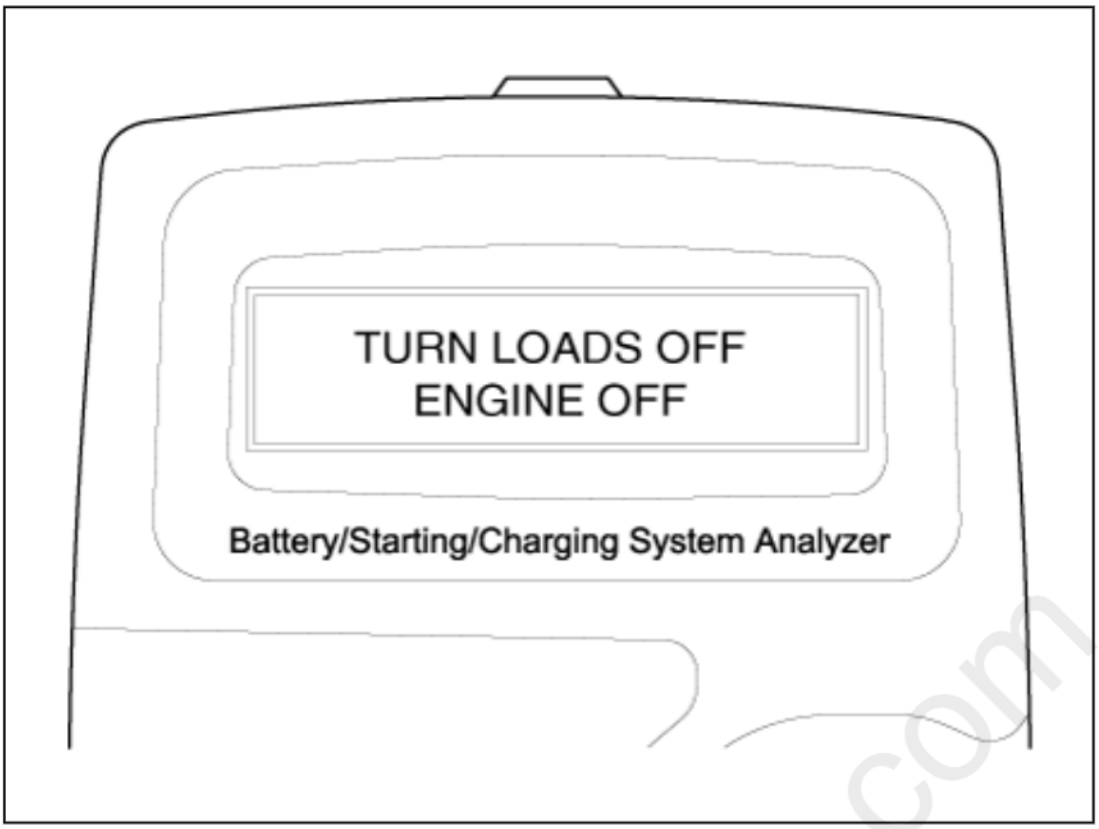

22. Charging voltage and charging system test results will be displayed on the screen.
Shut off engine end disconnect the tester clamps from the battery. Refer to the following table and take the appropriate action as recommended by the Micro 570.

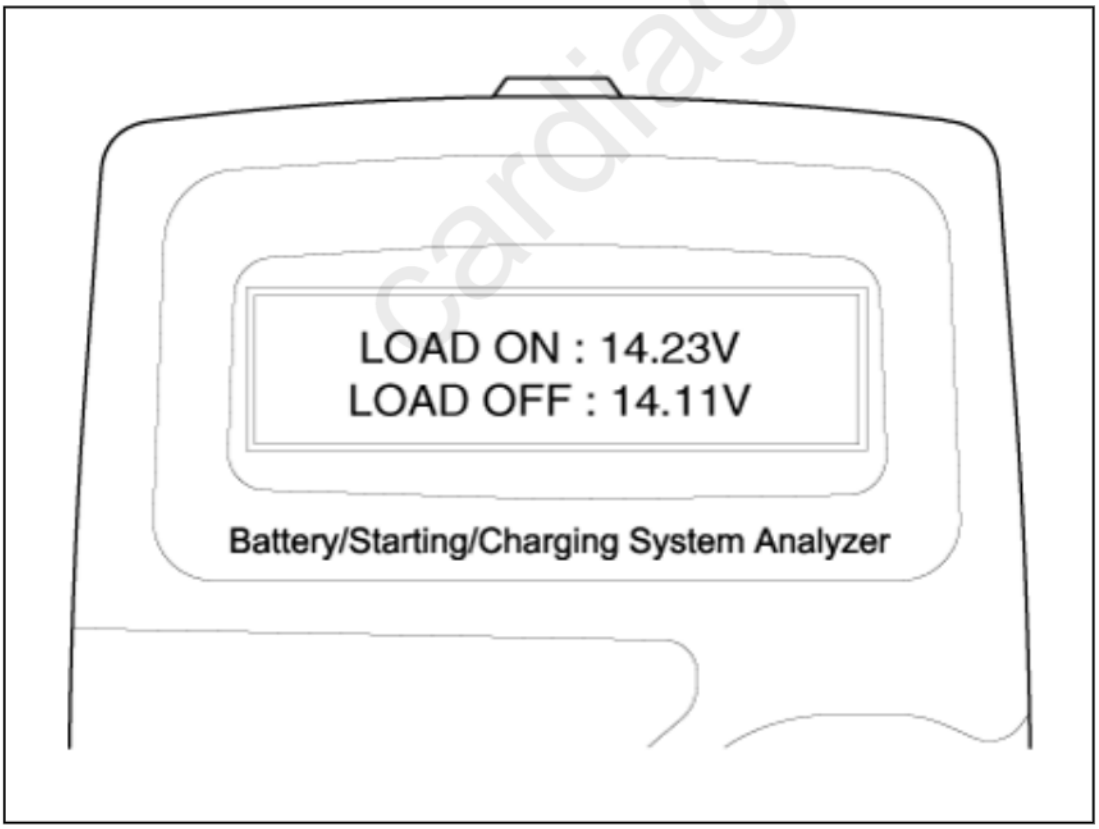

cardiagn.com

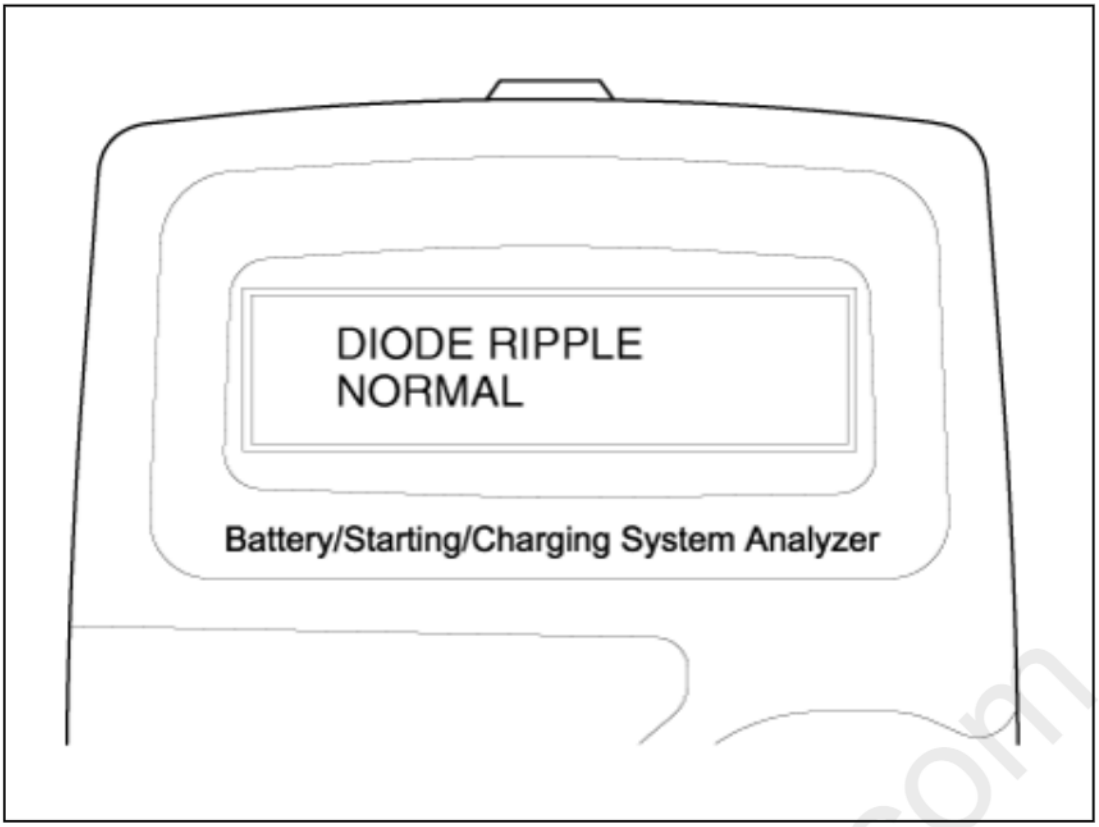

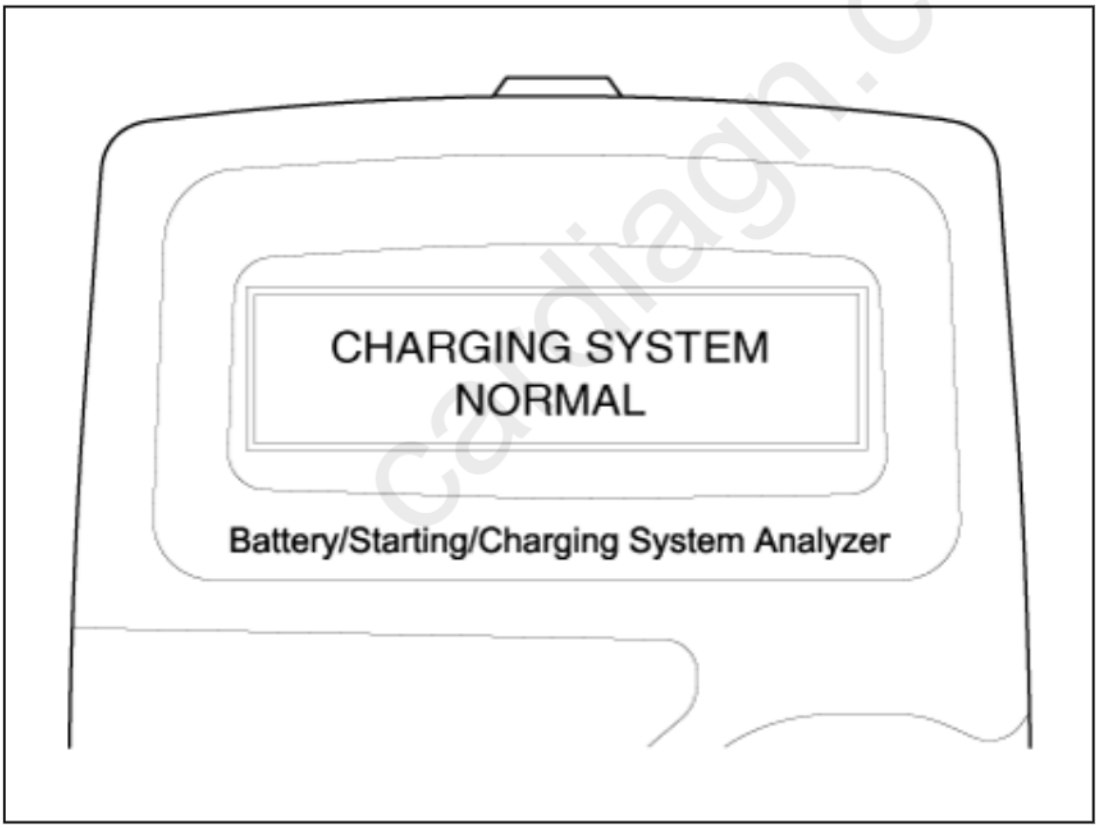

cardiagn.com

Charging System Test Results

Result On Printer	Remedy
CHARGING SYSTEM NORMAL / DIODE RIPPLE NORMAL	Charging system is normal.

NO CHARGING VOLTAGE	Alternator does not supply charging current to battery. –Check belts, connection between alternator and battery and replace belts or cable or alternator as necessary.
LOW CHARGING VOLTAGE	Alternator does not supply charging current to battery and electrical load to system fully. –Check belts and alternator and replace as necessary.
HIGH CHARGING VOLTAGE	The voltage from alternator to battery is higher than normal limit during voltage regulating. –Check connection and ground and replace regulator as necessary. –Check electrolyte level in the battery.
EXCESS RIPPLE DETECTED	One or more diodes in the alternator is not functioning properly. –Check alternator mounting and belts and replace as necessary.

The MDX-670P Analyzer

The MDX-670P battery conductance and electrical system analyzer tests batteries as well as starting and charging systems for vehicle.

It displays the test results in seconds and features a built-in printer to provide a copy of the results.

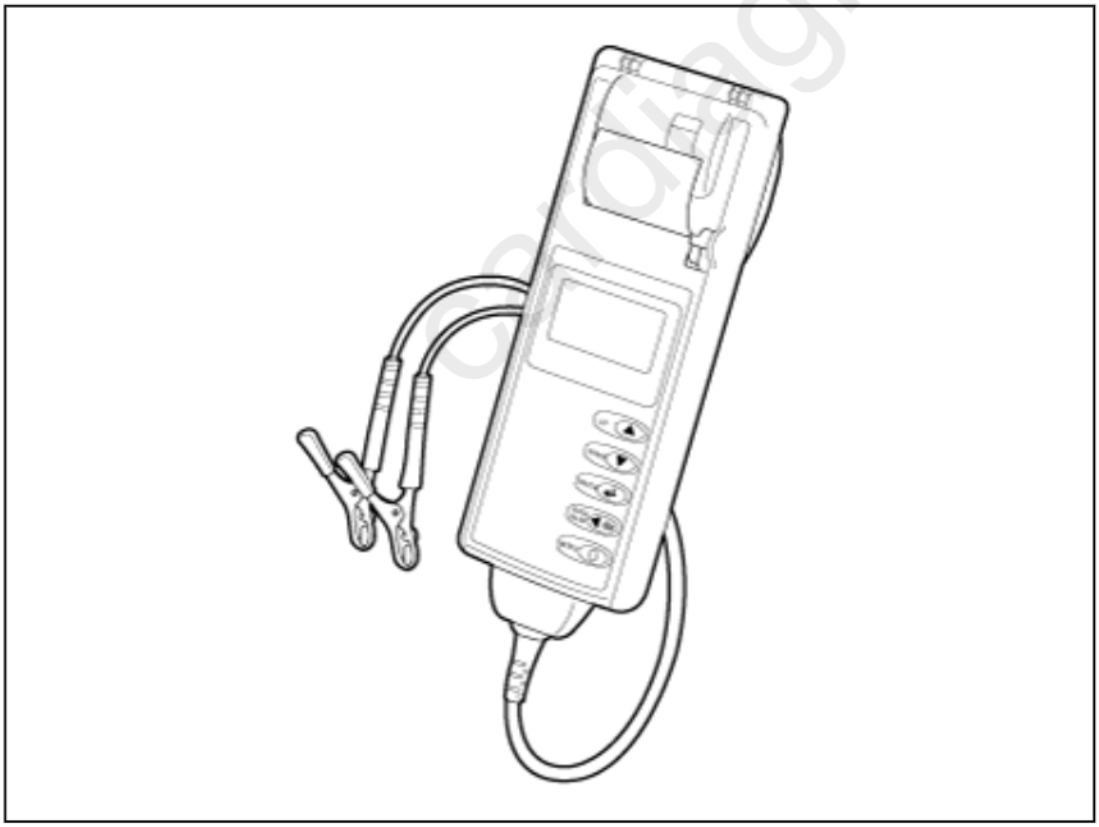

eetdiagn.com

1) Because of the possibility of personal injury, always use extreme caution and appropriate eye protection when working with batteries.
2) When charging battery by test result, Battery must be fully charged. To get accurate test result, battery surface voltage must have subsided ahead before test when you test battery after charged. (See following Battery Test Results)

When testing the vehicle with old diesel engines, the test result will not be favorable if the glow plug is not heated. Conduct the test after warming up the engine for 5 minutes.

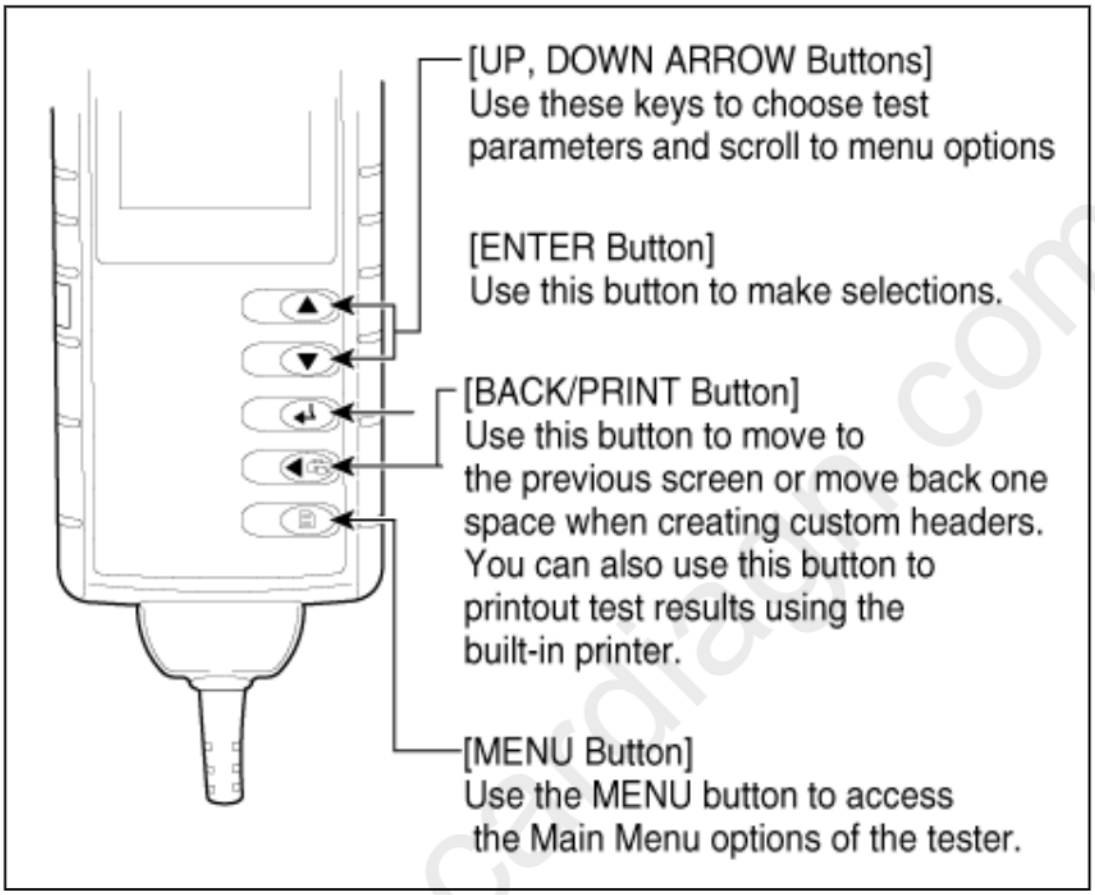

1. Connect the red clamp to the positive (+) terminal and the black clamp to the negative (–) terminal.

For a proper connection, rock the clamps back and forth. The tester requires that both sides of each clamp be firmly connected before testing. A poor connection will produce a CHECK CONNECTION or WIGGLE CLAMPS message. If the message appears, clean the terminals and reconnect the clamps.

2. Scroll to and select IN VEHICLE or OUT OF VEHICLE for a battery not connected to a vehicle.

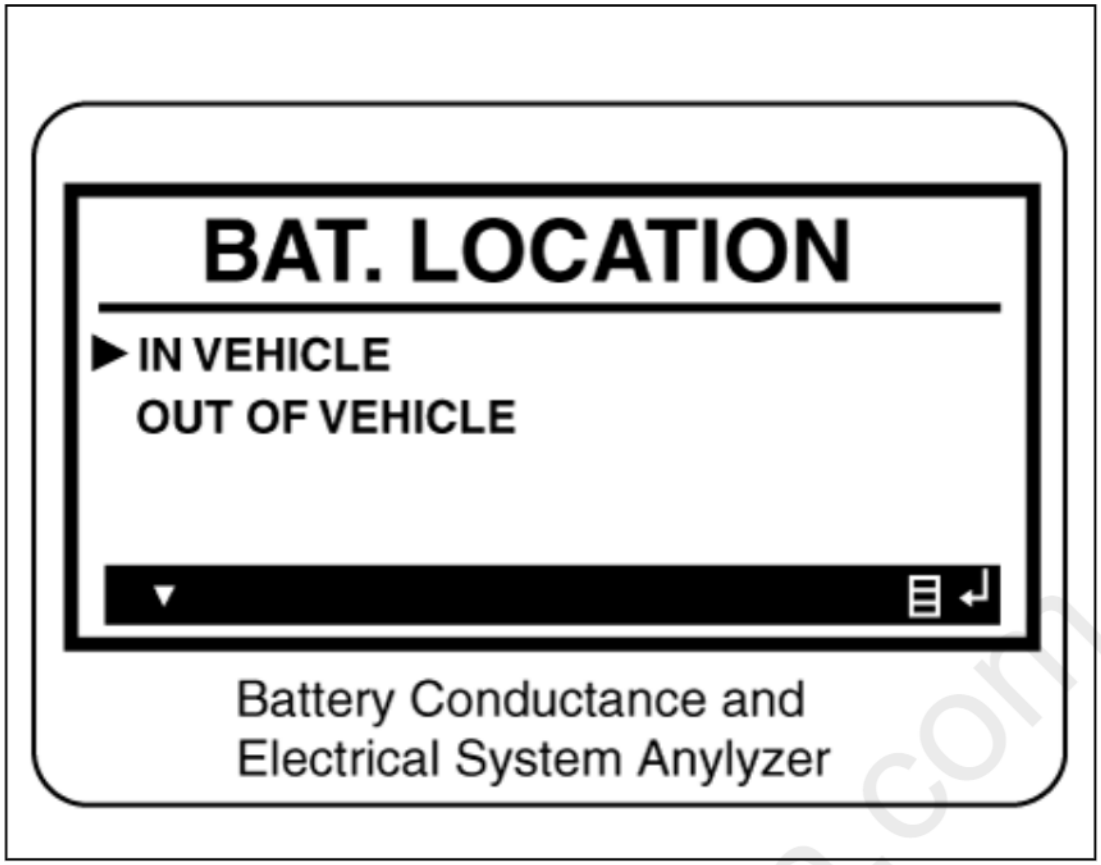

Following an IN VEHICLE test you will be prompted to test the starting and charging systems.

3. Scroll to and select REGULAR FLOODED, AGM FLAT PLATE, or AGM SPIRAL where applicable.

cardiagn.com

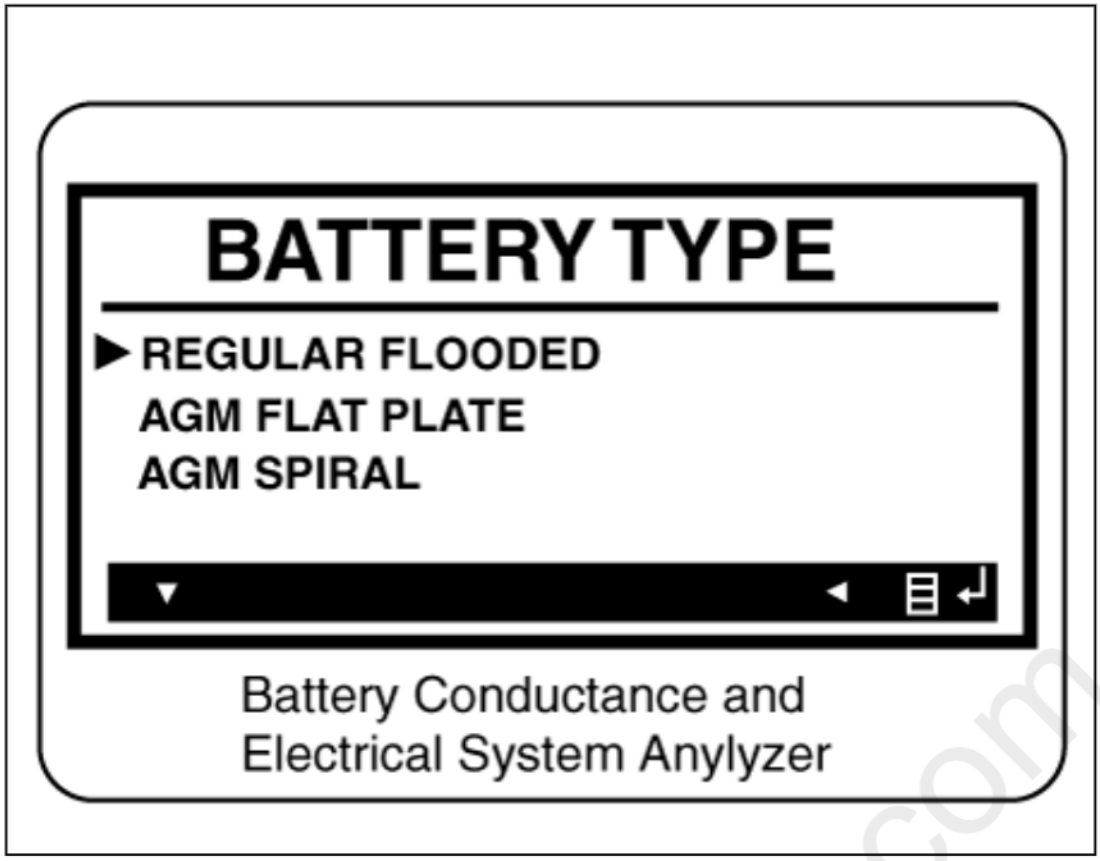

If the vehicle equipped with ISG function, select the AGM FLAT PLATE.

4. Scroll to and select the battery's rating system.

Mostly, the CCA value is marked on the battery label, but sometimes marked EN or SEA value. Select one of them.

cardiagn.com

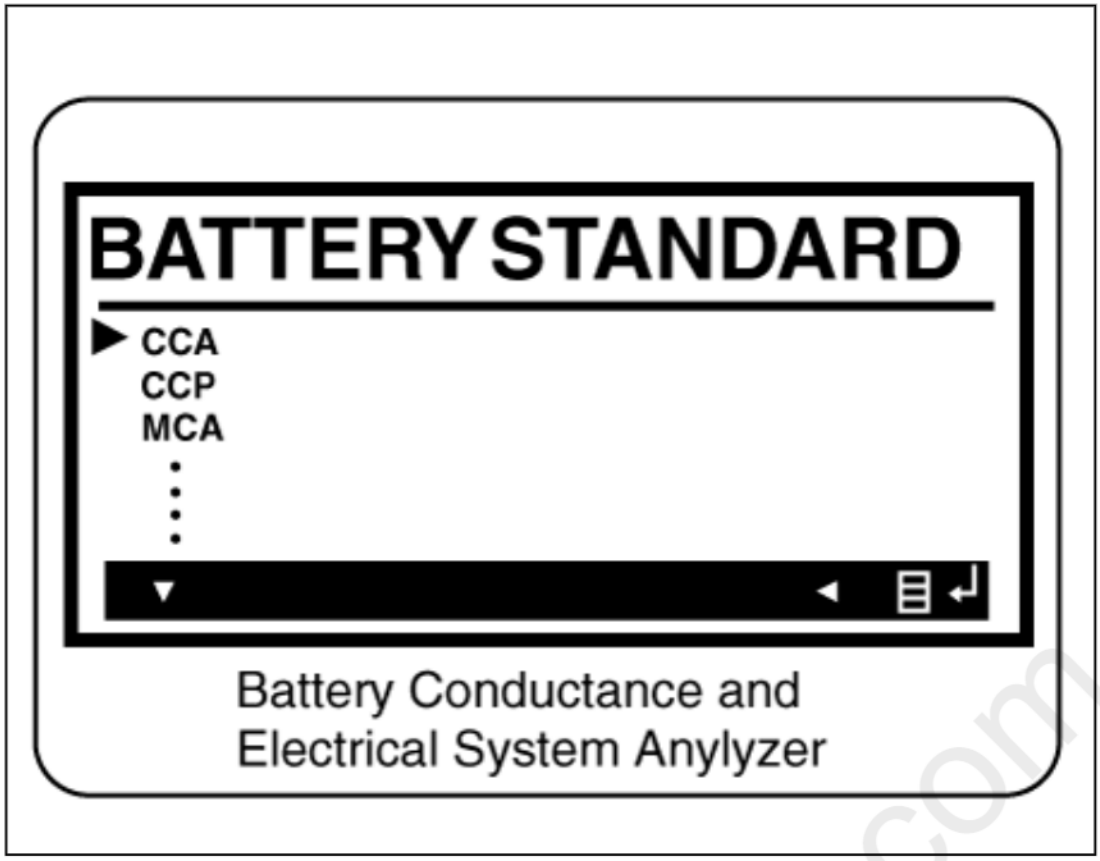

– CCA: Cold Cranking Amps, as specified by SAE. The most common rating for cranking batteries at 0 ºF (–17.8 ºC).
– EN: Europe-Norm
– SAE: Society of Automotive Engineers, the European labeling of CCA

5. Set the selected rating value displayed on the screen to the value marked on the battery label by pressing up and down arrow buttons.

cardiagn.com

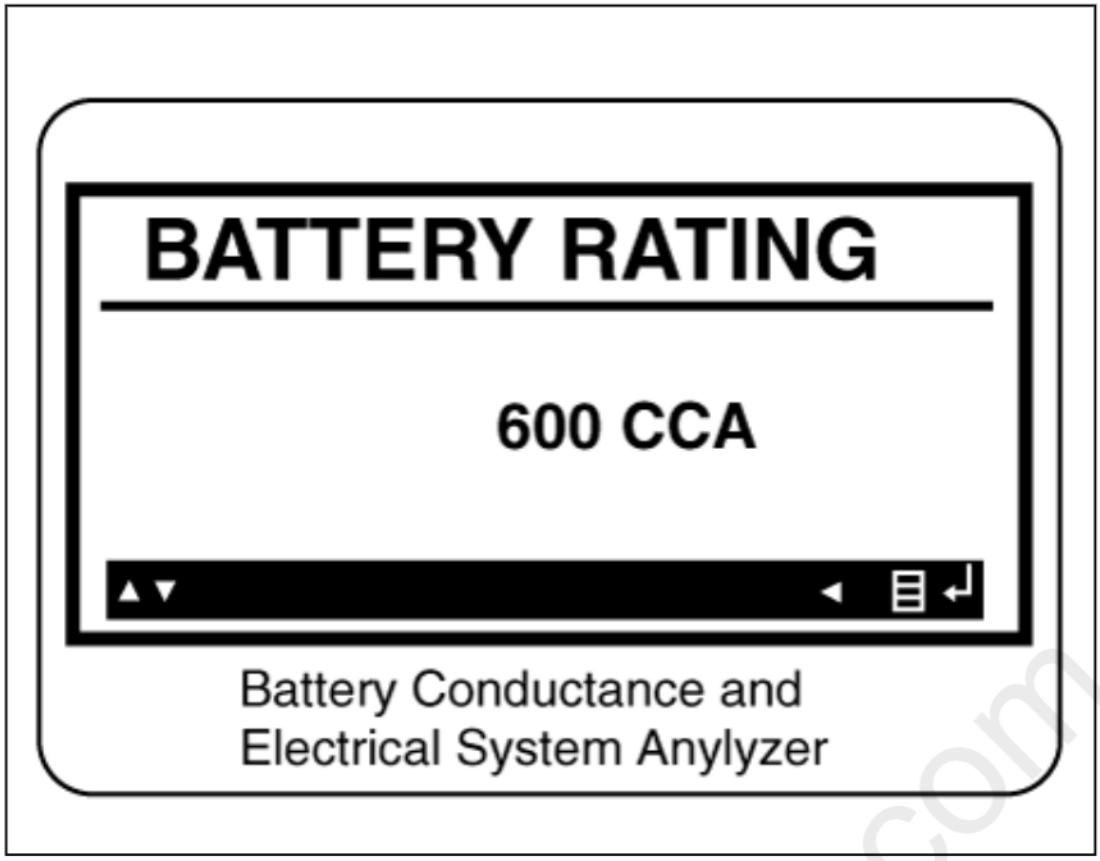

6. Press ENTER to start test.

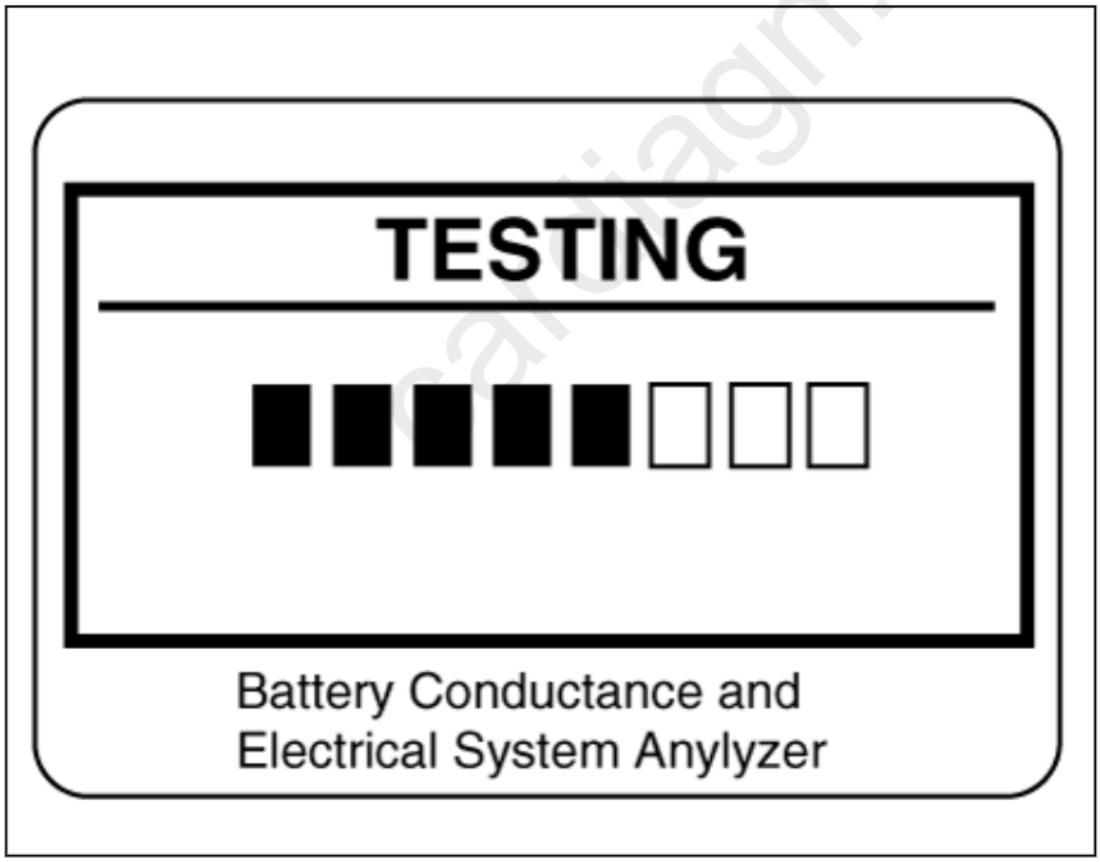

cardiagn.com

7. After several seconds the tester displays the decision on the battery's condition and the measured voltage. The tester also displays your selected battery rating and the rating units.

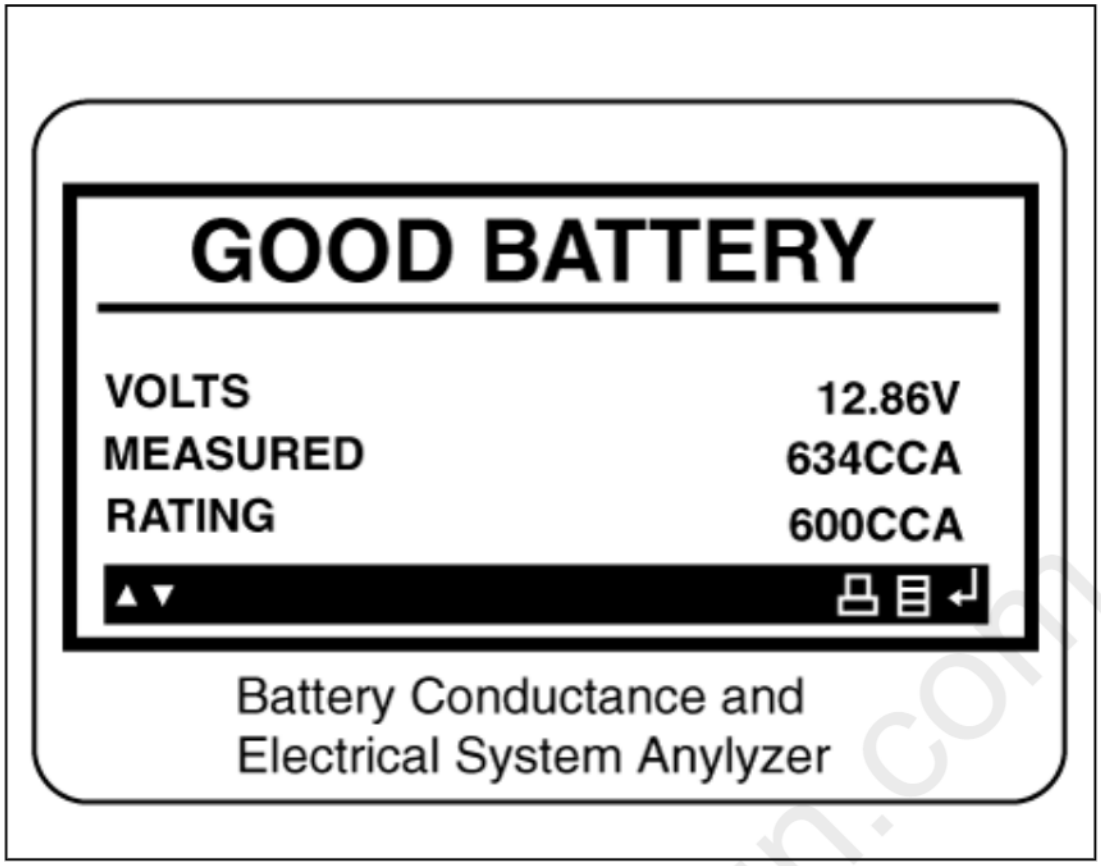

Battery Test Results

Result On Printer	Remedy
GOOD BATTERY	No action is required.
GOOD RECHARGE	Battery is in a good state. Recharge the battery and use. ※ You have to follow instruction below when you charge battery and retest, otherwise test result can be inaccurate. (See 'Charge and Retest method after battery charge' below.)
CHARGE & RETEST	Battery is not charged properly. –Charge and test the battery again. ※ You have to follow instruction below when you charge battery and retest, otherwise test result can be inaccurate. (See 'Charge and retest method after battery charge' below.)
REPLACE BATTERY	Replace battery and recheck the charging system. –Improper connection between battery and vehicle cables may cause "REPLACE BATTERY", retest the battery after removing cables and connecting the tester to the battery terminal directly prior to replacing the battery.

cardiagn.com

BAD CELLREPLACE	Charge and retest the battery. –If recommends "REPLACE BATTERY", replace the battery and recheck the charging system.

[Charge and Retest method after battery charge]

Battery charge

Set battery charger to 'Auto Mode' (The Mode that charging current drops as the battery charges.) and charge battery until charging current down close to zero or the charger alerts you with an alarm when charge is complete.(Minimum charging time recommended: More than 3 hours with Auto Mode that explained above)

- If battery is not fully charged, battery surface voltage will be high while the amount of current charged (CCA) in battery is low. If you measure the battery under this condition, tester may misjudge that battery sulfation occurred because the amount of current in battery is too low in comparison with battery voltage.
  * Surface voltage: When battery is charged electrolyte temperature increases and chemical reaction become active resulting in an excessive increase of battery voltage.
  It is known that it takes approximate one day to subside this increased surface voltage completely.

Battery Test after charge

Do not test battery right after the charge. Test battery after battery surface voltage has subsided as instructed in the following procedure.

(1) When battery charge is complete, install the battery in the vehicle.
(2) Put IG key to ON position and turn on head lamp with low beam, and wait 5 minutes. (Discharge for 5 minutes)
(3) Turn off the head lamp and IG key, and wait 5 minutes. (Waiting for 5 minutes)
(4) Remove +, - cable from the battery and test battery.

For an in-vehicle test, the display alternates between the test results and the message "PRESS FOR STARTER TEST.

Before starting the test, inspect the alternator drive belt. A belt that is glazed or worn, or lacks the proper tension, will prevent the en¬gine from achieving the rpm levels needed for the test.

8. Press the ENTER button to proceed with the starter test.

cardiagn.com

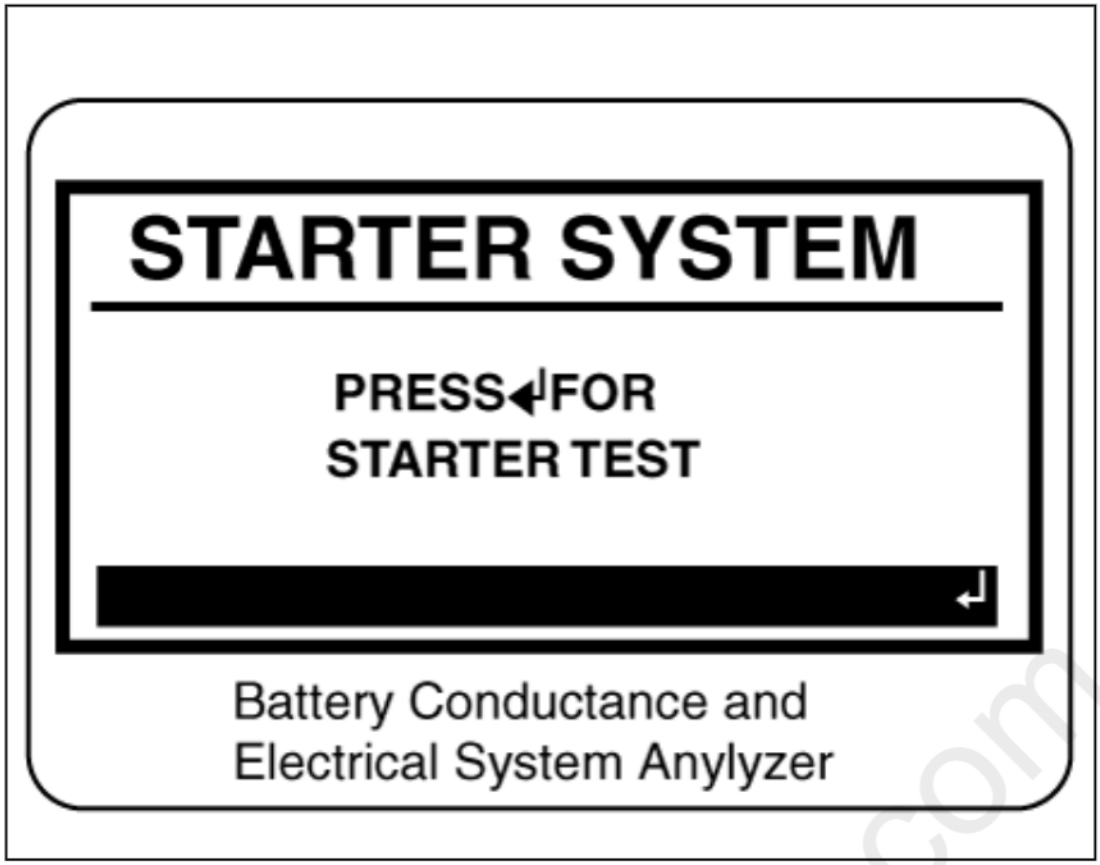

9. Start the engine when prompted.

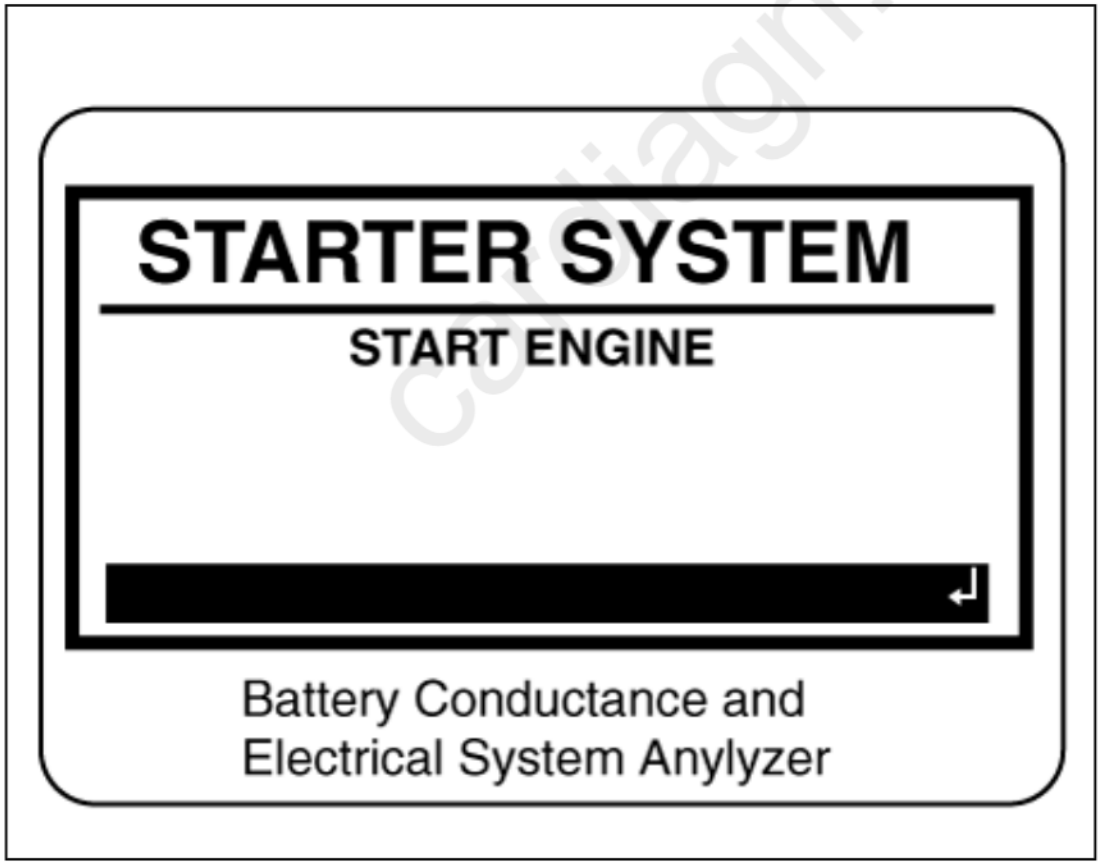

cardiagn.com

10. The tester displays the decision on the starter system, cranking voltage, and cranking time in milliseconds.

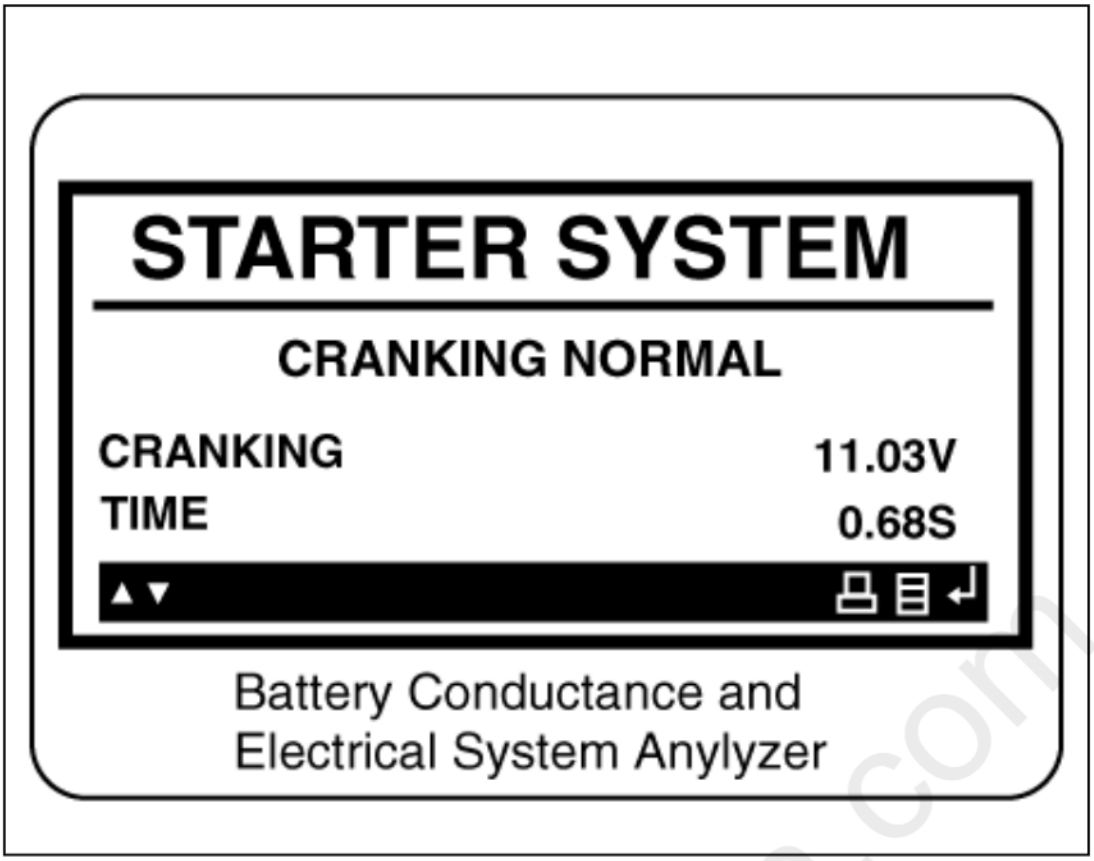

Starter Test Results

Result On Printer	Remedy
CRANKING VOLTAGE NORMAL	System shows a normal starter draw.
CRANKING VOLTAGE LOW	Cranking voltage is lower than normal level. –Check starter.
CHARGE BATTERY	The state of battery charge is too low to test. –Charge the battery and retest.
REPLACE BATTERY	Replace battery. –If the vehicle is not started though the battery condition of "GOOD BATTERY" is displayed, check wiring for open circuit, battery cable connection, starter and repair or replace as necessary. –If the engine does crank, check fuel system.

For an in-vehicle test, the display alternates between the test results and the message “PRESS FOR CHARGING TEST.

Step 3: Charging System Test

cardiagn.com

11. Press the ENTER button to proceed with the charging test.

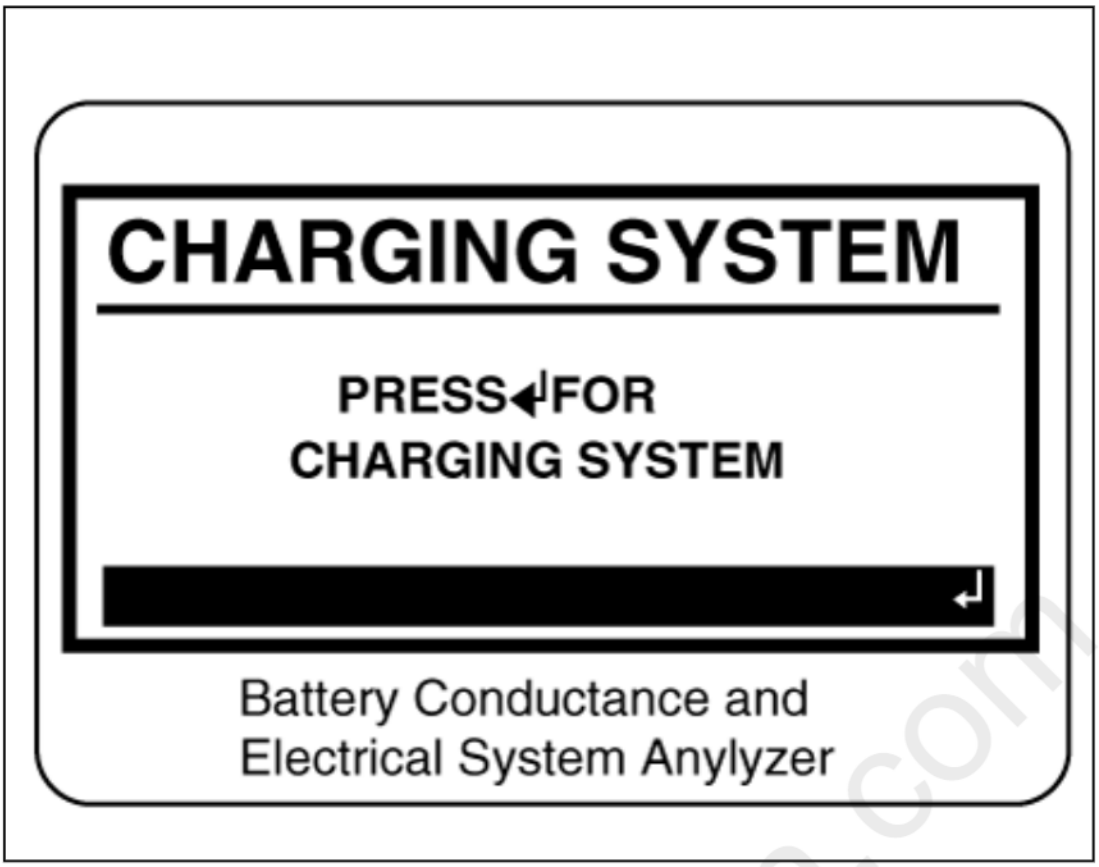

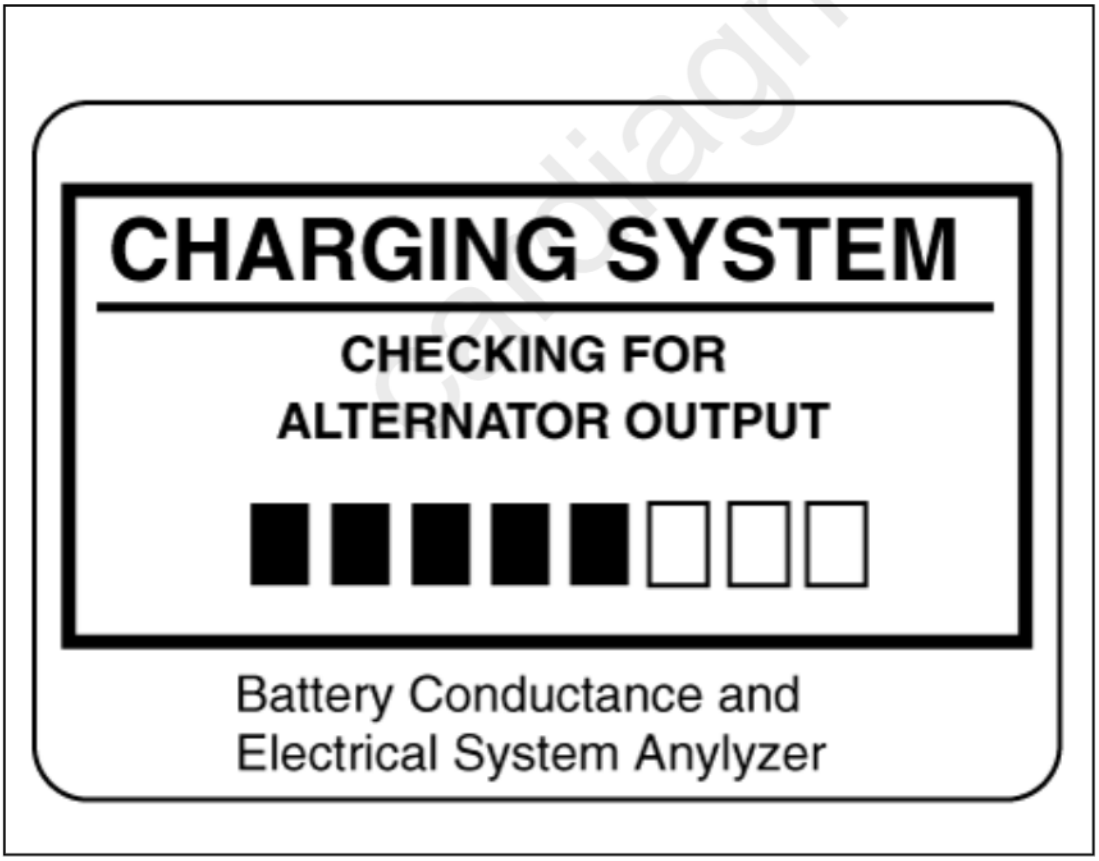

cardiagn.com

12. Rev the engine with loads off. (Following the on-screen prompts)

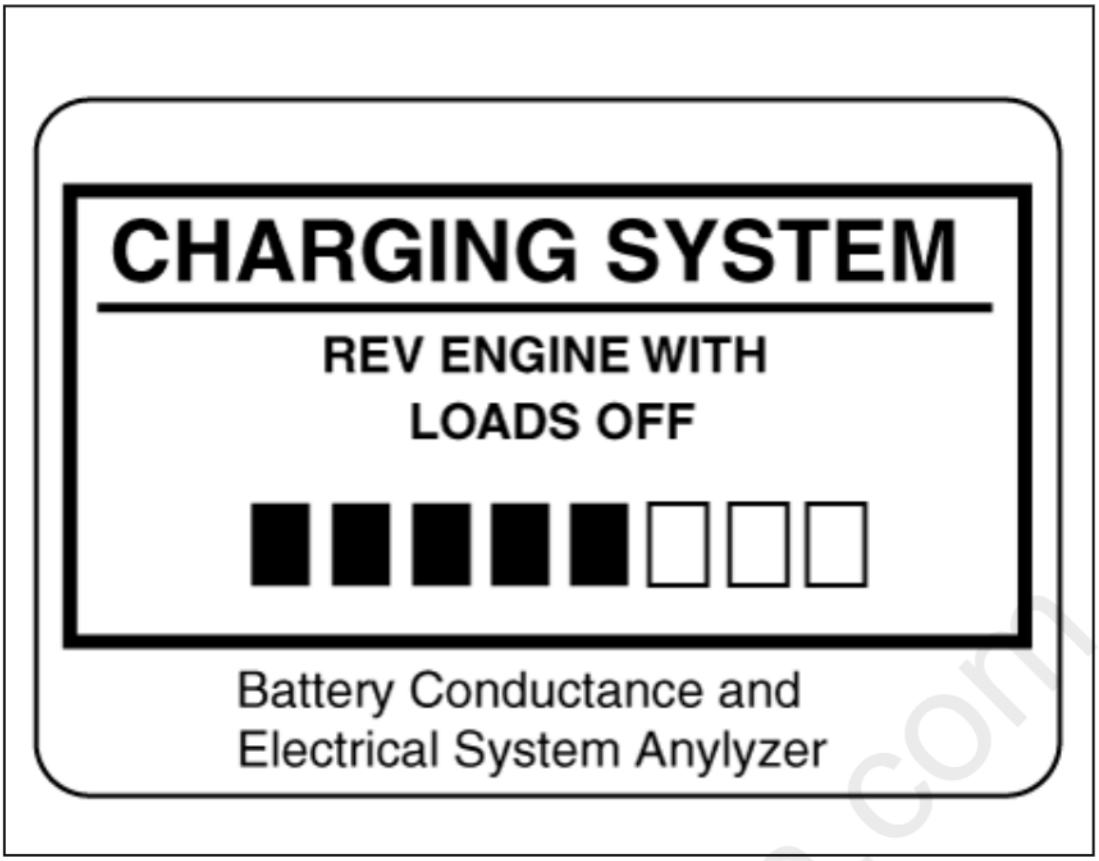

13. The message that engine RPM is detected will be displayed on the screen, idle the engine.

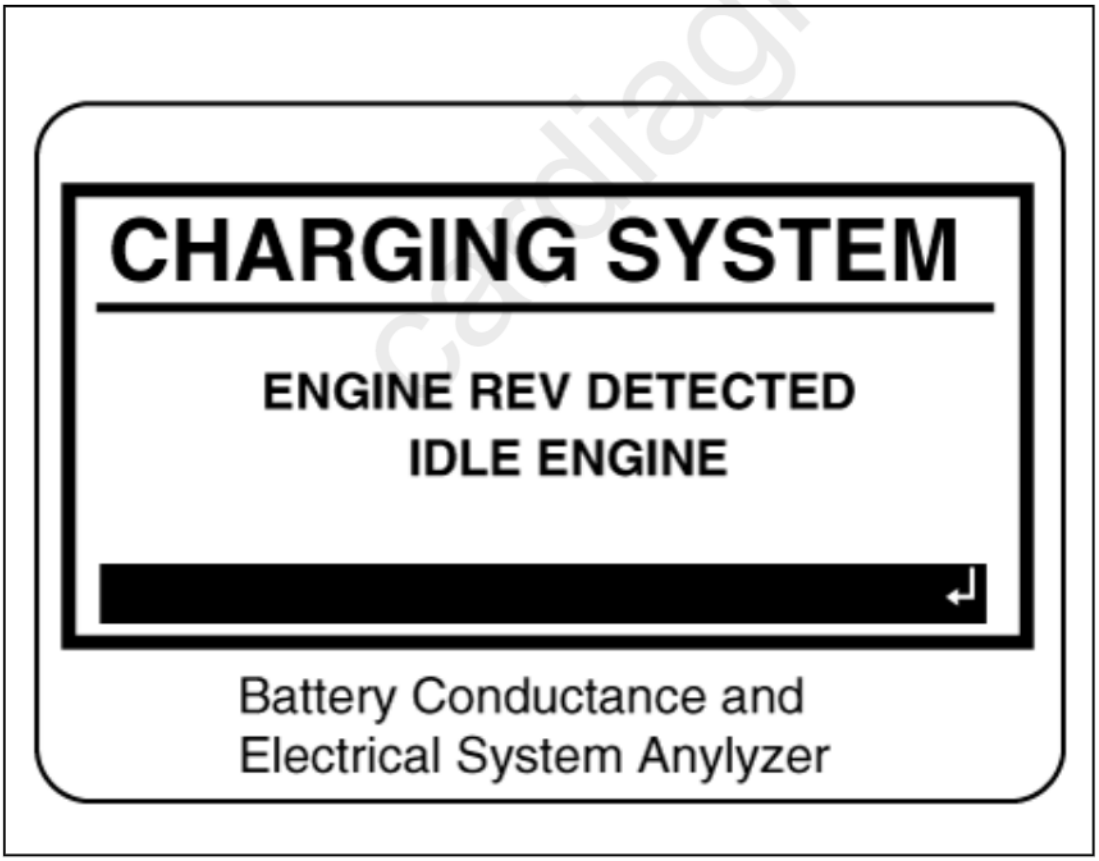

cardiagn.com

14. Turn on electrical loads (air conditioner, lamps, audio and etc). Press ENTER to continue.

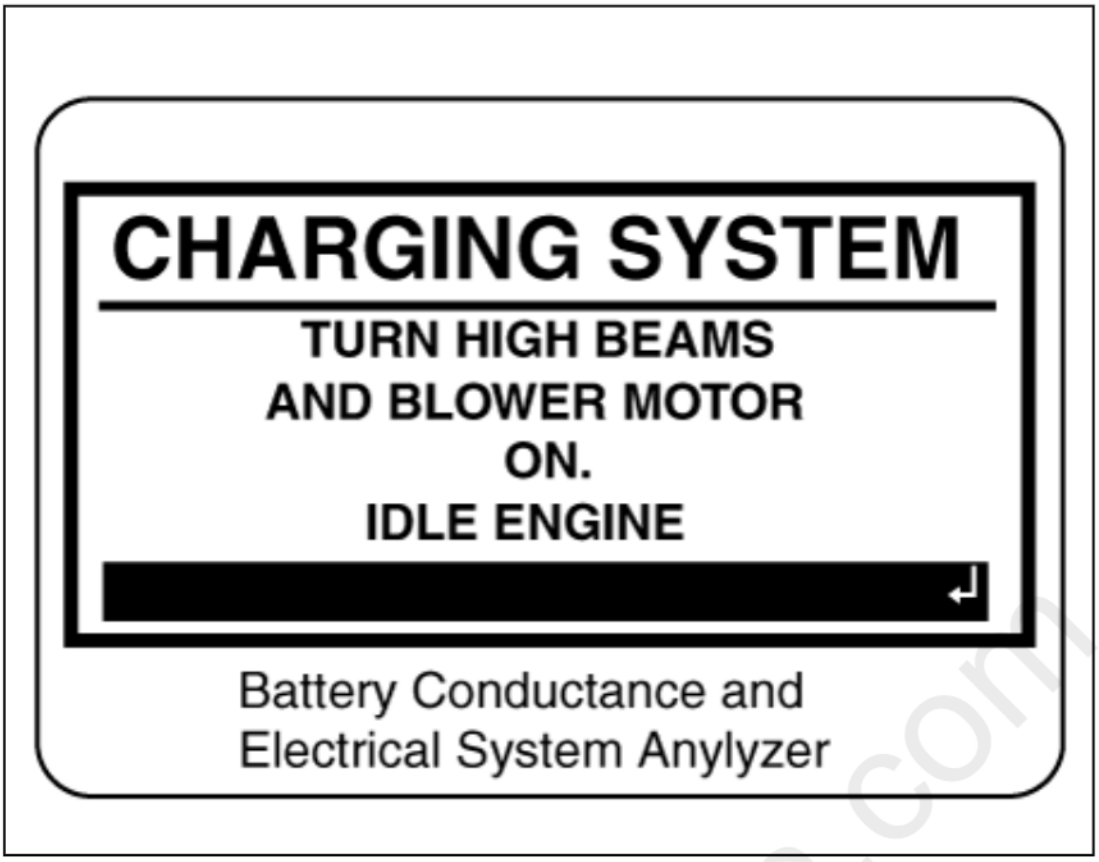

15. Turn on electrical loads (air conditioner, lamps, audio and etc). Press ENTER to continue.

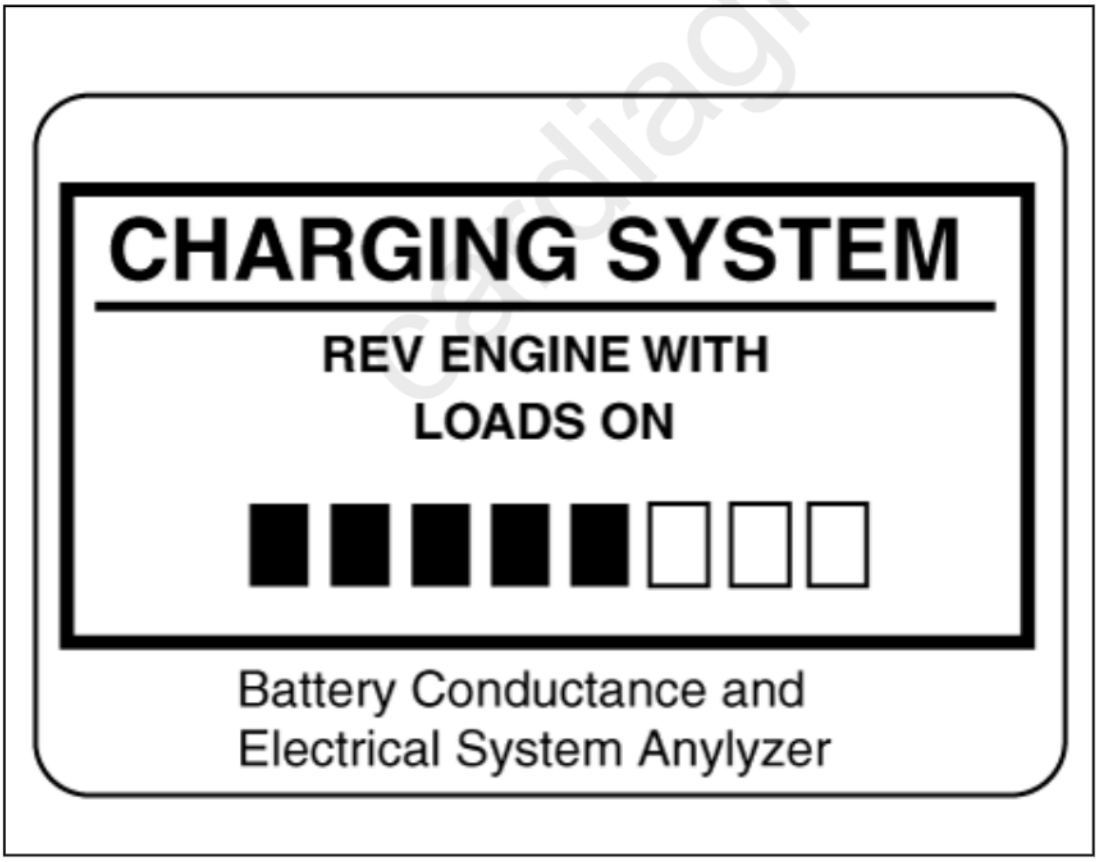

cardiagn.com

16. The message that engine RPM is detected will be displayed on the screen, idle the engine.

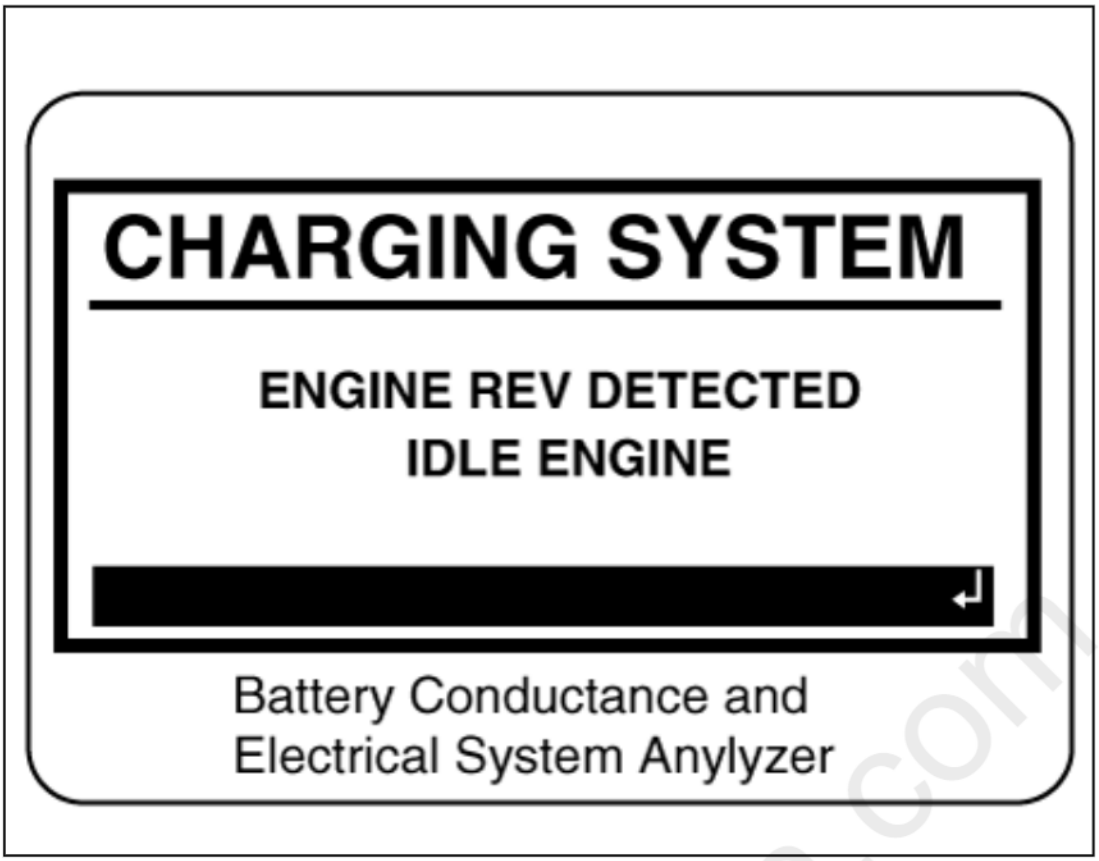

17. Turn off loads and engine.

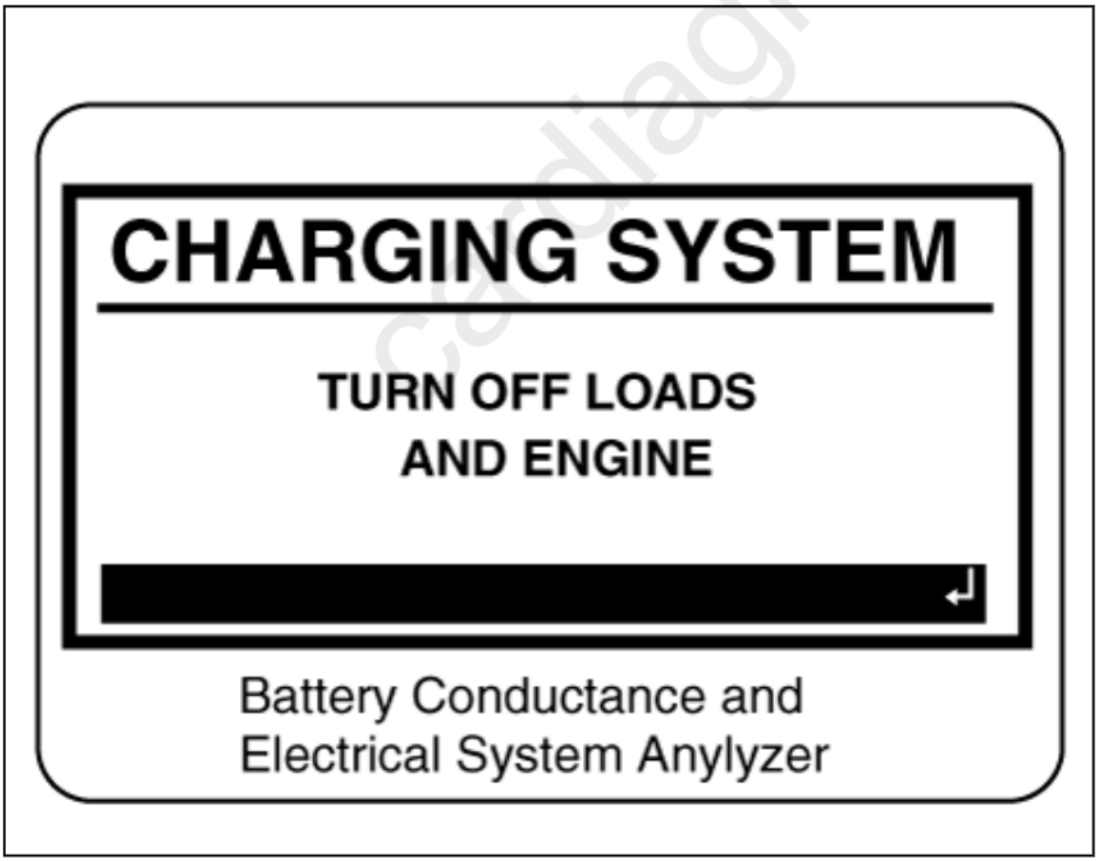

cardiagn.com

18. The Charging System decision is displayed at the end of the procedure.

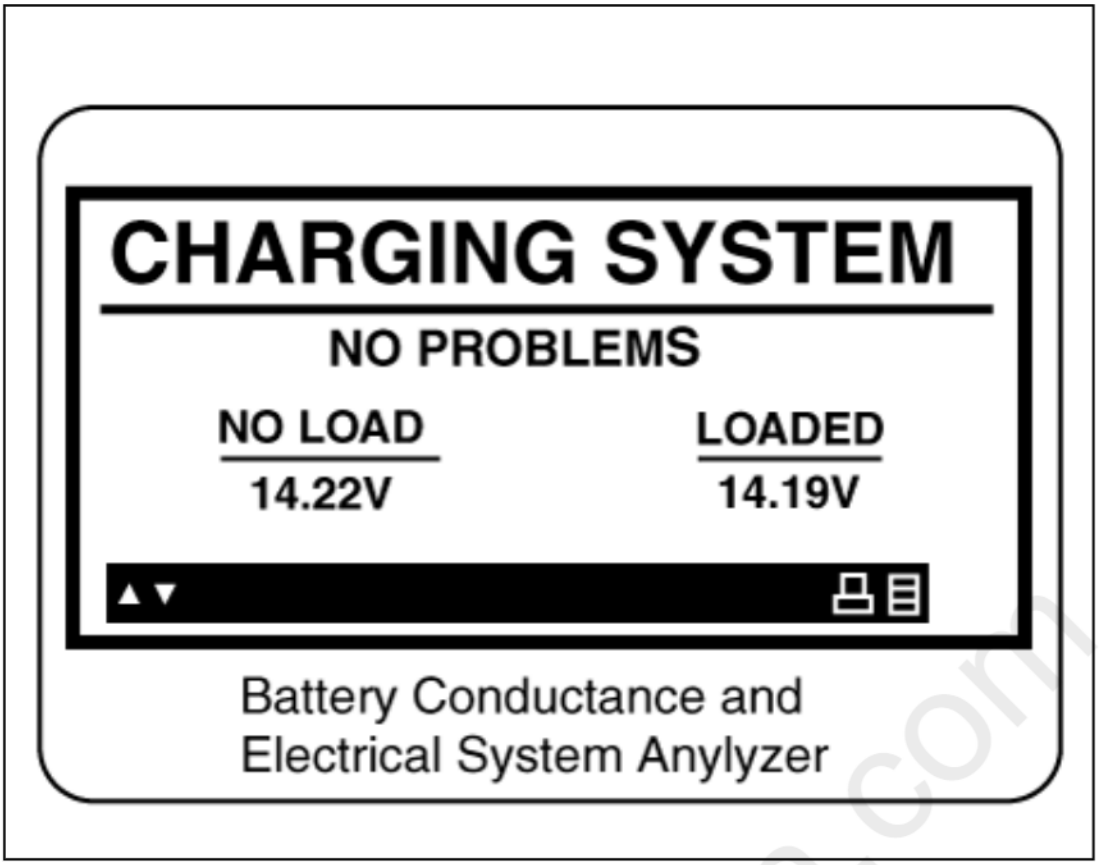

Result On Printer	Remedy
NO PROBLEMS	System is showing normal output from the alternator.
NO OUTPUT	No alternator output detected. –Check all connections to and from the alternator, especially the connection to the battery. If the connection is loose or heavily corroded, clean or replace the cable and retest. –If the belts and connections are in good working condition, replace the alternator. (Older vehicles use external voltage regulators, which may require only replacement of the voltage regulator.)
LOW OUTPUT	Alternator does not supply charging current to battery and electrical load to system fully. –Check belts and alternator and replace as necessary.
HIGH OUTPUT	The voltage from alternator to battery is higher than normal limit during voltage regulating. –Check connection and ground and replace regulator as necessary. –Check electrolyte level in the battery.

cardiagn.com

EXCESSIVE RIPPLE	The voltage from alternator to battery is higher than normal limit during voltage regulating. –Check alternator mounting and belts and replace as necessary.
CHARGE BATTERY	The starter voltage is low and the battery is discharged. Fully charge the battery and repeat the starter system test.
REPLACE BATTERY	Battery must be replaced before the starting system can be tested.

19. Press the BACK/PRINT button to print the test results or MENU to return to the Options Menu.

Installation

1. Install in the reverse order of removal.

- When installing the battery, fix the mounting bracket on the tray correctly.

- After disconnecting then reconnecting the battery negative cable, reset some parts that require the reset procedures.
  (Refer to Body Electrical System - "General Information")

Cleaning

1. Make sure the ignition switch and all accessories are in the OFF position.
2. Remove the battery from the vehicle.
   (Refer to Charging System - "Battery")

Care should be taken in the event the battery case is cracked or leaking, to protect your skin from the electrolyte.
Heavy rubber gloves (not the household type) should be worn when removing the battery.

cardiagn.com

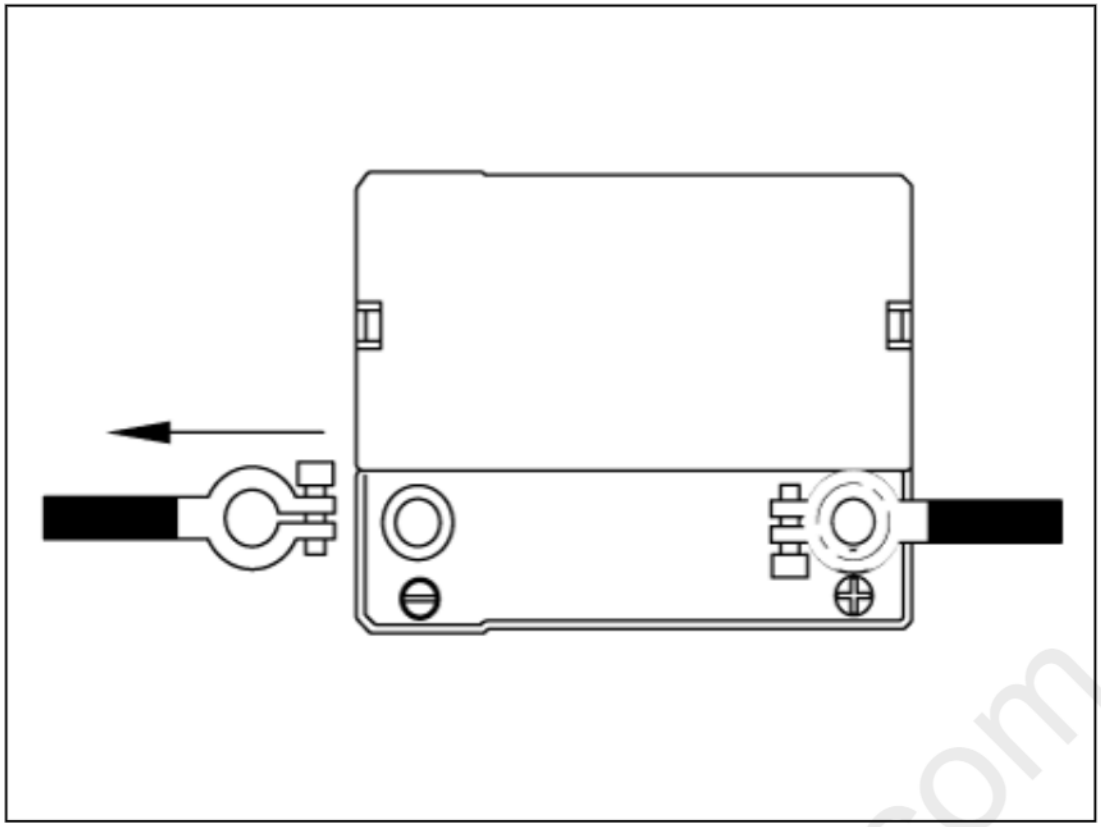

3. Inspect the battery tray for damage caused by the loss of electrolyte. If acid damage is present, it will be necessary to clean the area with a solution of clean warm water and baking soda. Scrub the area with a stiff brush and wipe off with a cloth moistened with baking soda and water.
4. Clean the top of the battery with the same solution as described above.
5. Inspect the battery case and cover for cracks. If cracks are present, the battery must be replaced.
6. Clean the battery posts with a suitable battery post tool.
7. Clean the inside surface of the terminal clamps with a suitable battery cleaning tool. Replace damaged or frayed cables and broken terminal clamps.
8. Install the battery in the vehicle.
9. Connect the cable terminals to the battery post, making sure tops of the terminals are flush with the tops of the posts.
10. Tighten the terminal nuts securely.
11. Coat all connections with light mineral grease after tightening.

When batteries are being charged, an explosive gas forms beneath the cover of each cell. Do not smoke near batteries being charged or which have recently been charged. Do not break live circuit at the terminals of batteries being charged.
A spark will occur when the circuit is broken. Keep open flames away from battery.

cardiagn.com

Please rate this document after reviewing at the bottom of this page.

Specifications

Item	Specification
Rated Voltage (V)	12 - 14
Quiescent Current (uA)	175
Pin	2 (B+, LIN)

cardiagn.com

Please rate this document after reviewing at the bottom of this page.

Description

Vehicles have many control units that use more electricity. These units control their own system based on information from diverse sensors. It is important to have a stable power supply as there diverse sensors giving a variety of information. Battery sensor (A) is mounted on battery (-) terminal. It transmits battery voltage, current, temperature information to ECM. ECM controls generating voltage by duty cycle based on these signals.

cardiagn.com

Please rate this document after reviewing at the bottom of this page.

Removal

1. Open the trunk.
2. Remove the luggage side trim [RH] side cover (A).

3. Turn the ignition switch OFF and disconnect the battery negative (-) terminal (A).
4. Disconnect the battery sensor connector (B).

Battery (-) terminal tightening nut :
7.8 - 9.8 N·m (0.8 - 1.0 kgf·m, 5.2 - 8.7 lb·ft)

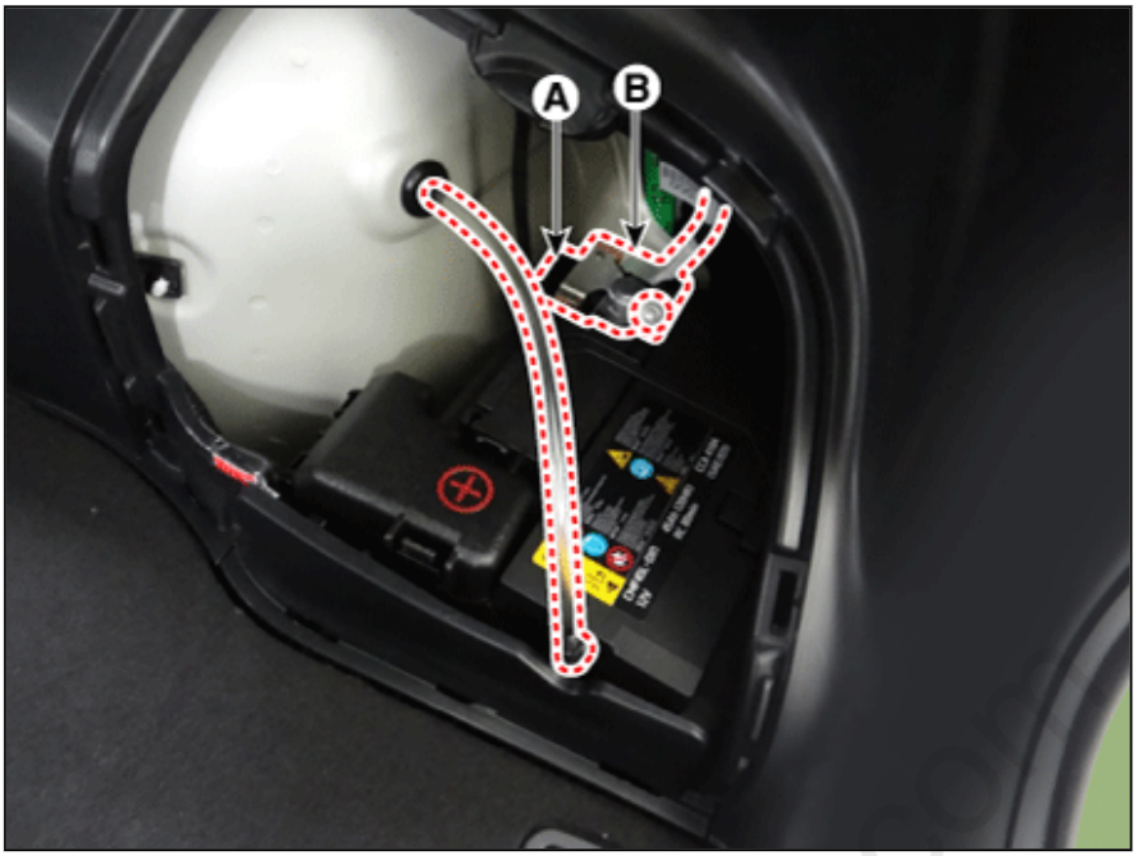

5. Remove the luggage side trim [RH].
   (Refer to Body - "Luggage Side Trim")
6. Remove the battery sensor by loosening the mounting bolt (A).

Battery sensor cable flange mounting bolt(Chassis ground) :
10.8 - 13.7 N·m (1.1 - 1.4 kgf·m, 8.0 - 10.1 lb·ft)

---

cardiagn.com

Installation

1. Install in the reverse order of removal.

When battery sensor signal fault occurs, inspect the vehicle parasitic draw in advance after inspecting the sensor because the sensor will behave abnormally when the parasitic draw is more than 100mA. (Refer to vehicle parasitic current inspection)

After reconnecting the battery negative cable, AMS function does not operates until the system is stabilized, about 4 hours.
If disconnecting the negative (-) battery cable from the battery during repair work for the vehicle equipped with AMS function, Battery sensor recalibration procedure should be performed after finishing the repair work. (Refer to Battery Sensor Recalibration Procedure)

For the vehicle equipped with a battery sensor, be careful not to damage the battery sensor when the battery is replaced or recharged.

1) When replacing the battery, it should be same one (type, capacity and brand) that is originally installed on your vehicle. If a battery of a different type is replaced, the battery sensor may recognize the battery to be abnormal.
2) When installing the ground cable on the negative post of battery, tighten the clamp with specified torque. An excessive tightening torque can damage the PCB internal circuit and the battery terminal .
3) When recharging the battery, ground the negative terminal of the booster battery to the vehicle body.

Battery Sensor Recalibration Procedure

After reconnecting the battery negative cable, AMS function does not operates until the system is stabilized, about 4 hours. If disconnecting the negative (-) battery cable from the battery during repair work for the vehicle equipped with AMS function, Battery sensor recalibration procedure should be performed after finishing the repair work.

1. Turn the Iginition switch ON and OFF.
2. Park the vehicle for about 4 hours with the hood and all doors closed.

cardiagn.com

Please rate this document after reviewing at the bottom of this page.

Description

Ignition timing is controlled by the electronic control ignition timing system. The standard reference ignition timing data for the engine operating conditions are preprogrammed in the memory of the ECM (Engine Control Module).

The engine operating conditions (speed, load, warm-up condition, etc.) are detected by the various sensors. Based on these sensor signals and the ignition timing data, signals to interrupt the primary current are sent to the ECM. The ignition coil is activated, and timing is controlled.

cardiagn.com

Please rate this document after reviewing at the bottom of this page.

On-vehicle
Inspection

Inspect ignition coil assembly and Perform spark test

1. Check for DTCs.

If a DTC is present, perform troubleshooting in accordance with the procedure for that DTC. (Refer to DTC guide)

2. Check if sparks occur.
   (1) Remove the engine cover.
   (2) Remove the ignition coils.
   (Refer to Ignition System - "Ignition Coil")
   (3) Using a spark plug wrench, remove the spark plugs.
   (4) Disconnect the injector extension connectors.
   (5) Ground the spark plug to the engine.

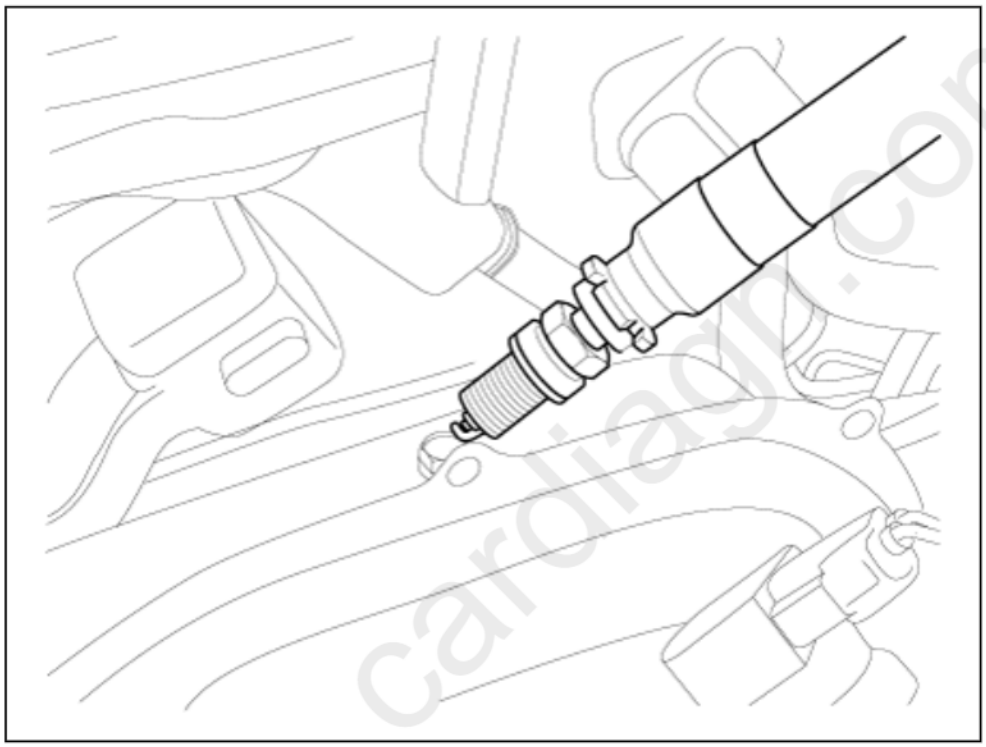

   (6) Check if sparks occur at each spark plug while engine is being cranked.

Do not crank the engine for more then 5 seonds.

3. If sparks do not occur, perform the following test.

cardiagn.com

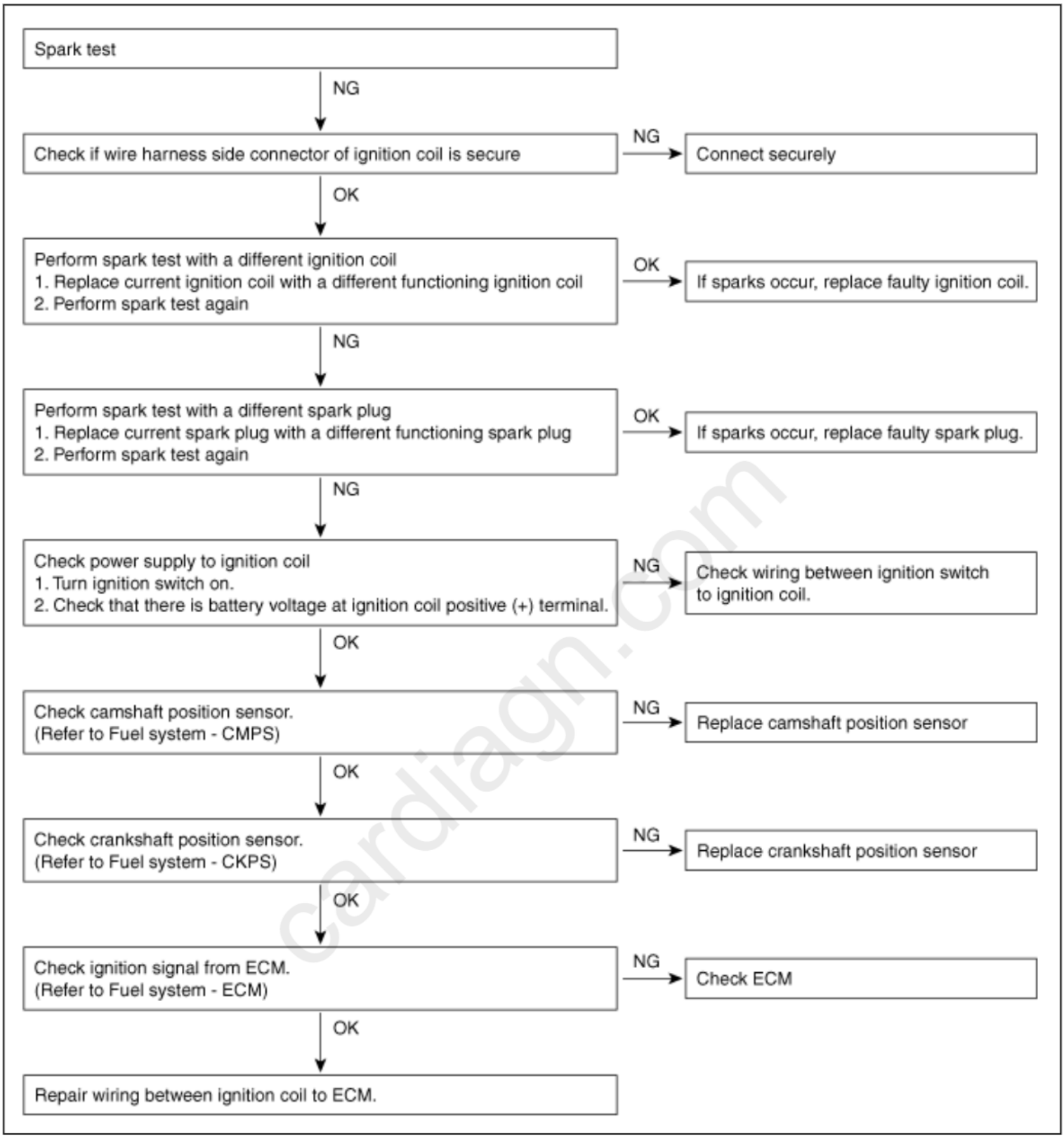

4. Using a spark plug wrench, install spark plugs.
5. Install the ignition coils.
6. Install the engine cover.

Please rate this document after reviewing at the bottom of this page.

Specification

Item	Specification						
Engine Time (RPM)	1000	2000	3000	4000	5000	6000	7000
Dwell Time (ms)	5.18	4.19	3.49	3.05	2.74	2.50	2.31
Secondary Coil Voltage (kV)	44	44	43	42	41	40	39

cardiagn.com

Please rate this document after reviewing at the bottom of this page.

Description

An ignition coil is an induction coil in an engine's ignition system which transforms the battery's low voltage to the high voltage needed to create an electric spark in the spark plugs to ignite the fuel. Coils have an internal resistor while others rely on a resistor wire or an external resistor to limit the current flowing into the coil from the battery 12 V supply.

cardiagn.com

Please rate this document after reviewing at the bottom of this page.

Circuit
Diagram

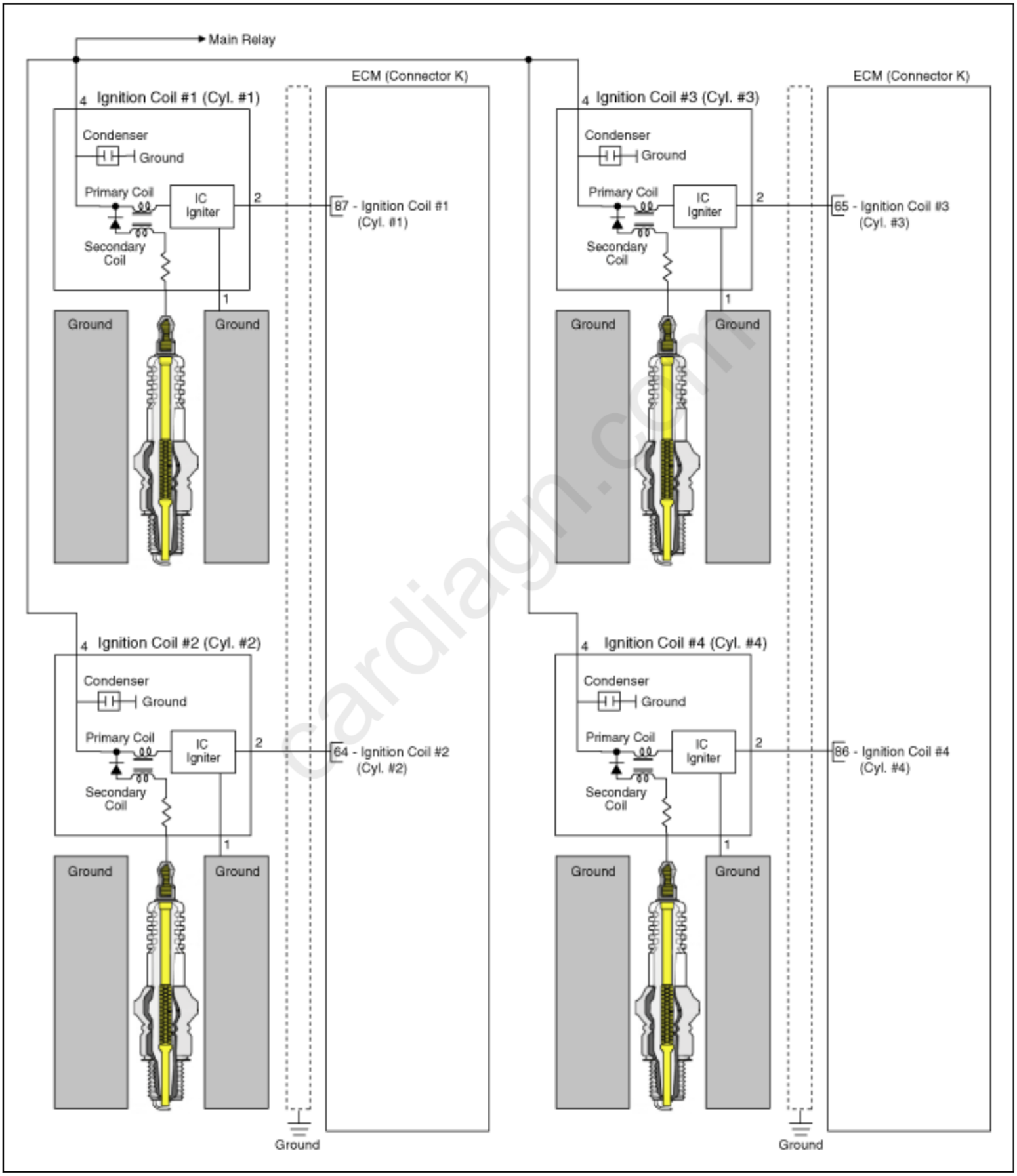

Ignition Coil Connector Terminal Function

Connector View

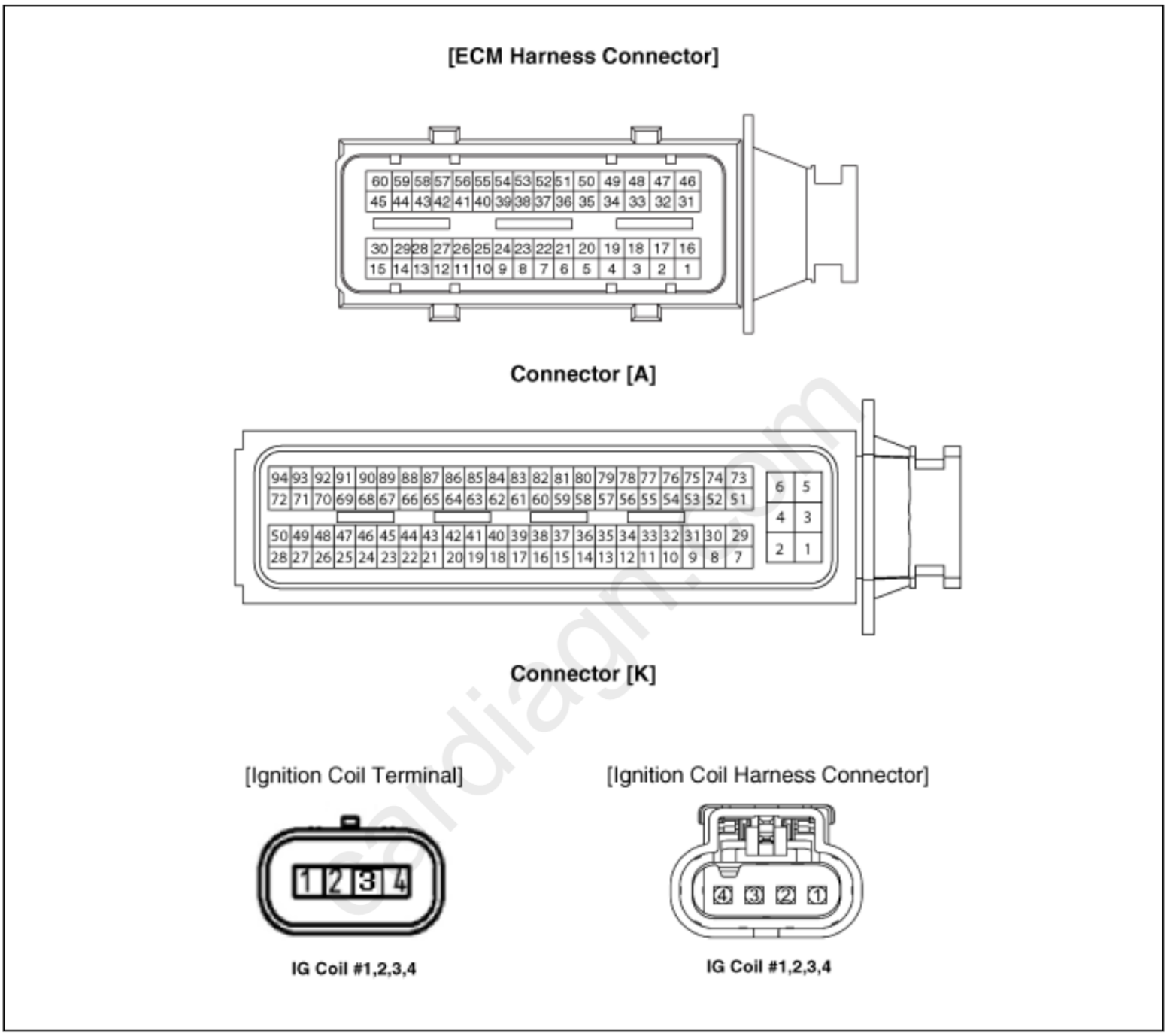

Ignition Coil Terminal Function

Ignition Coil (Cylinder #1)

Pin No.	Description	Connected to
1	Ground	Chassis
2	ignition Coil #1 Control	ECM Connector [K] (87)
3	-	
4	Battery power (B+)	Main Relay

Ignition Coil (Cylinder #2)

Pin No.	Description	Connected to
1	Ground (-)	Chassis
2	ignition Coil #2 Control	ECM Connector [K] (64)
3	-	
4	Battery power (B+)	Main Relay

Ignition Coil (Cylinder #3)

Pin No.	Description	Connected to
1	Ground (-)	Chassis
2	ignition Coil #3 Control	ECM Connector [K] (65)
3	-	
4	Battery power (B+)	Main Relay

Ignition Coil (Cylinder #4)

Pin No.	Description	Connected to
1	Ground (-)	Chassis
2	ignition Coil #4 Control	ECM Connector [K] (86)
3	-	
4	Battery power (B+)	Main Relay

cardiagn.com

Please rate this document after reviewing at the bottom of this page.

Troubleshooting

Connector assembly status test

1. Remove the connector (A) and reinstall it.

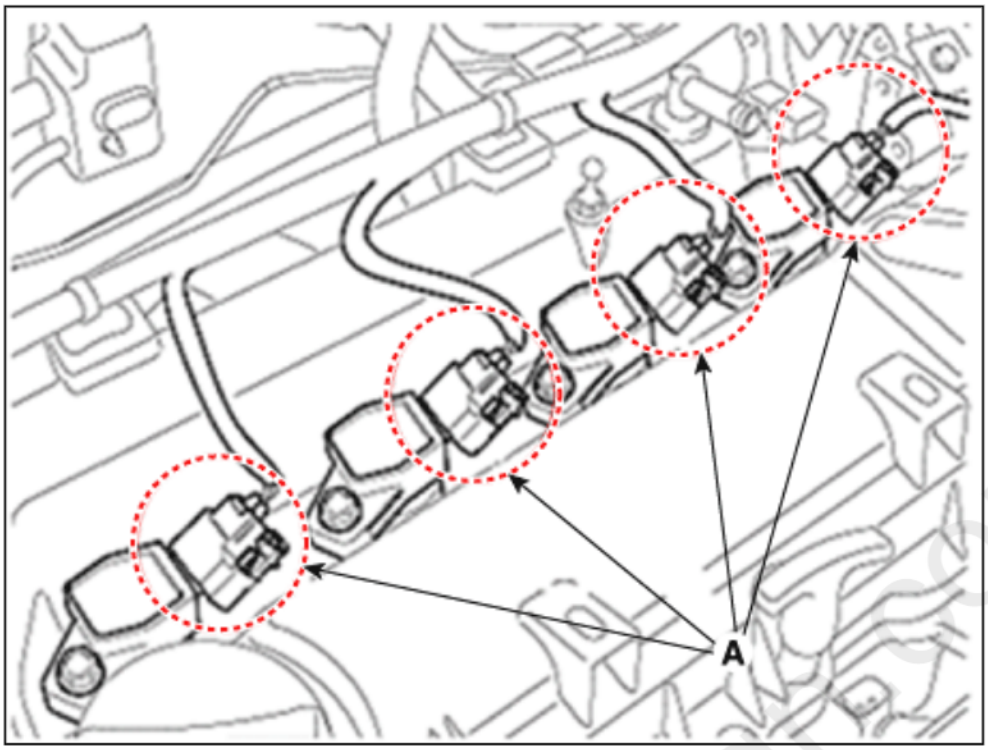

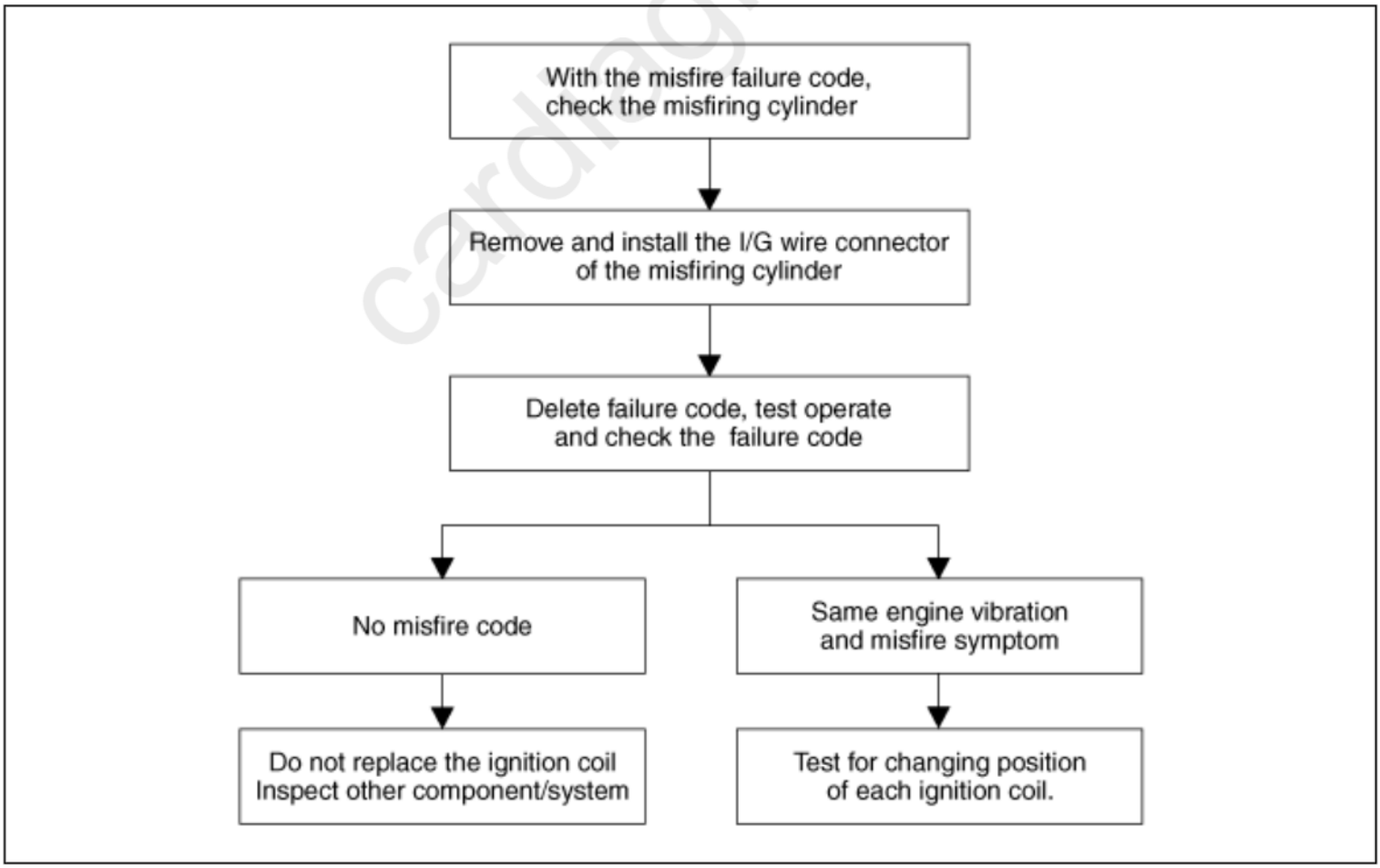

cardiag.com

Test for changing position of each ignition coil
A : Ignition coil w/ misfire code
B : Ignition coil w/o misfire code

Do not move with spark plug at the same time (move the ignition coil only)

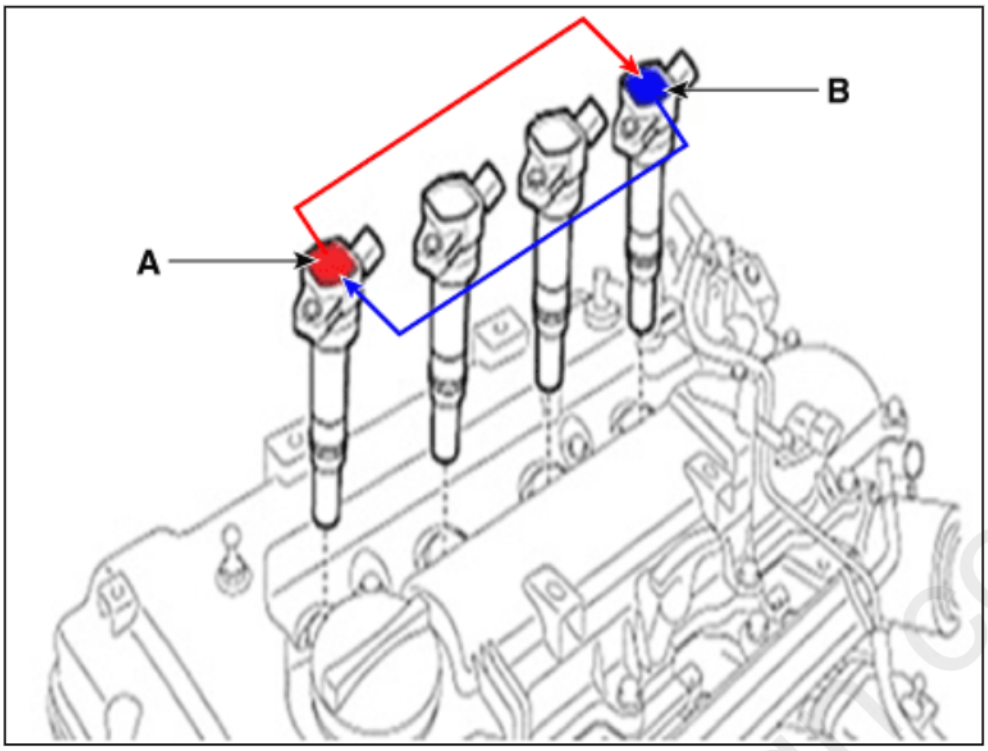

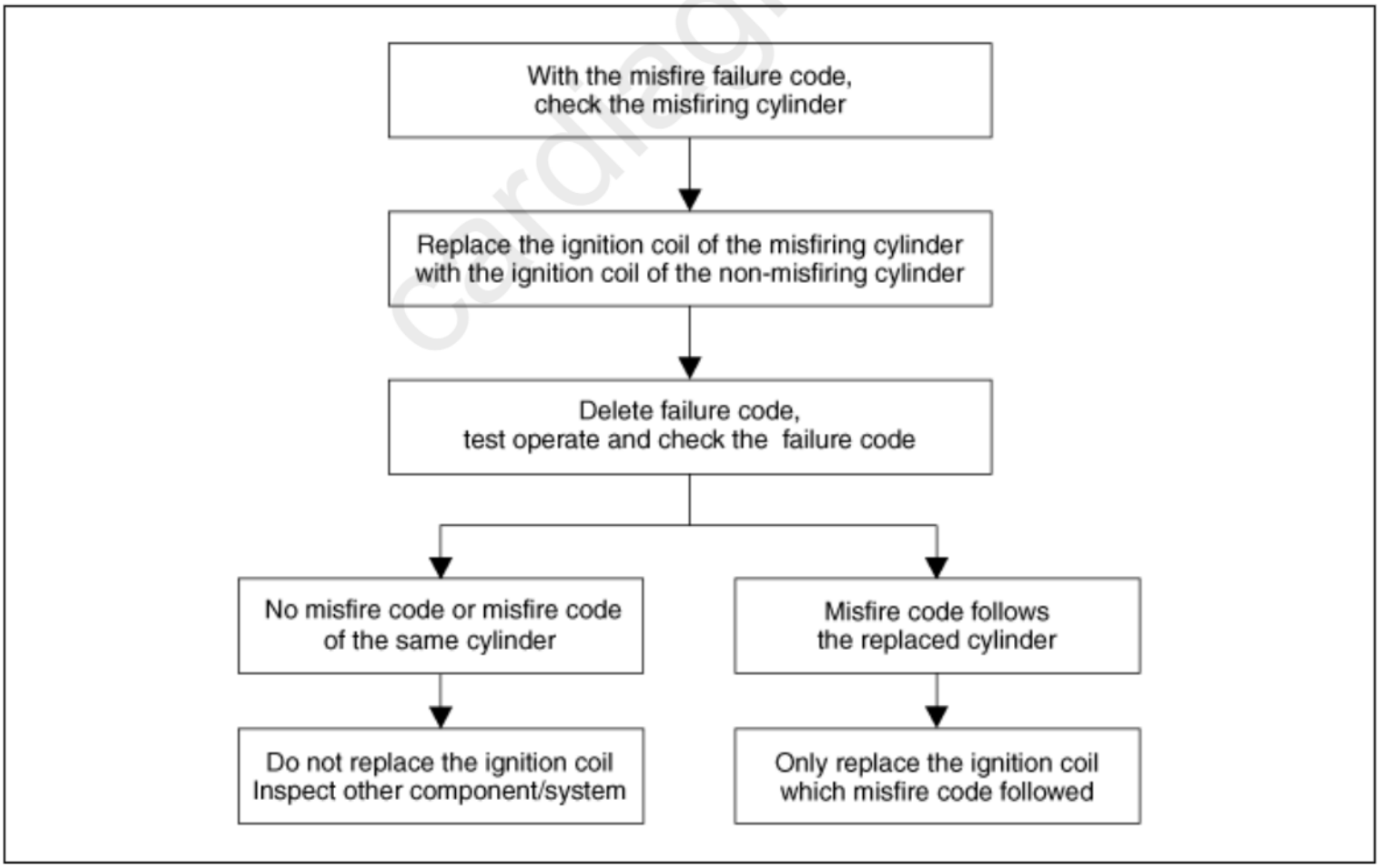

cardiagn.com

Please rate this document after reviewing at the bottom of this page.

Removal

1. Turn ignition switch OFF and disconnect the battery negative (-) terminal.
2. Remove the engine cover.
3. Disconnect the ignition coil connector (A).

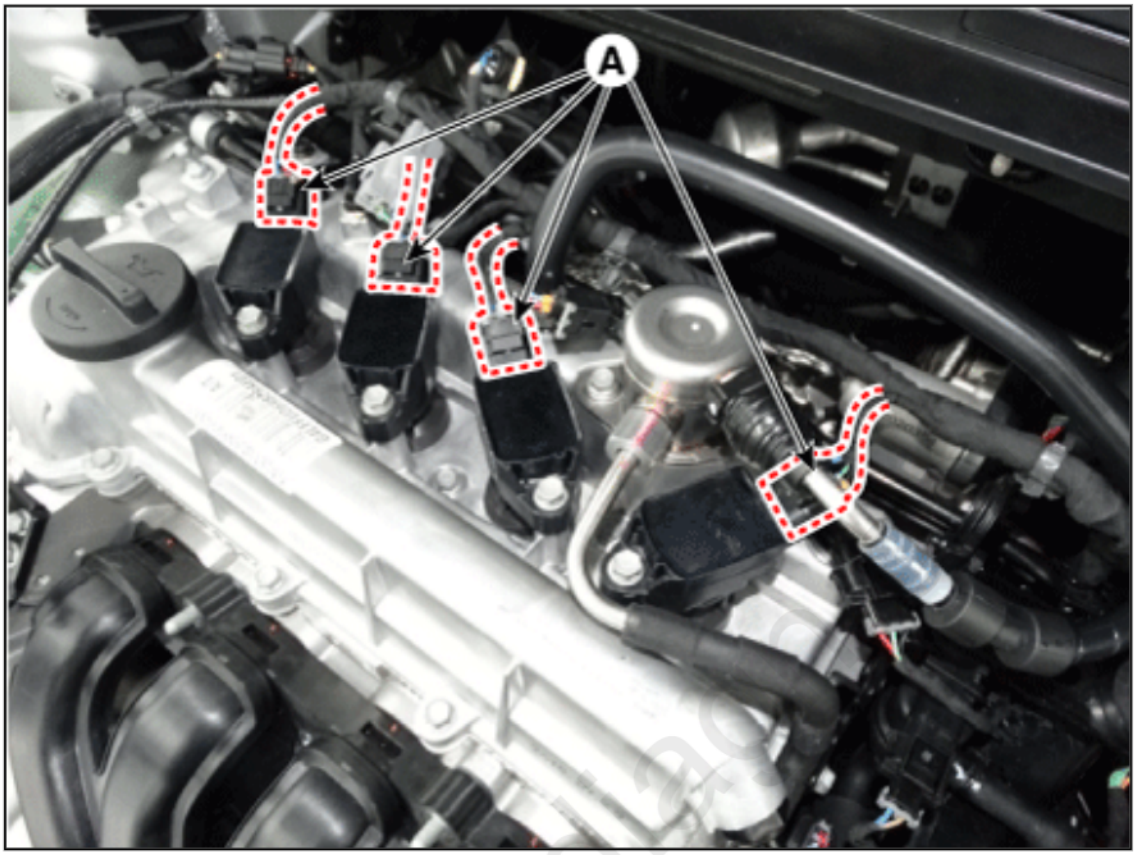

4. Remove the ignition coil (A) after loosening the mounting bolt.

Ignition coil mounting bolt :
9.8 - 11.8 N·m (1.0 - 1.2 kgf·m, 7.2 - 8.7 Ib·ft)

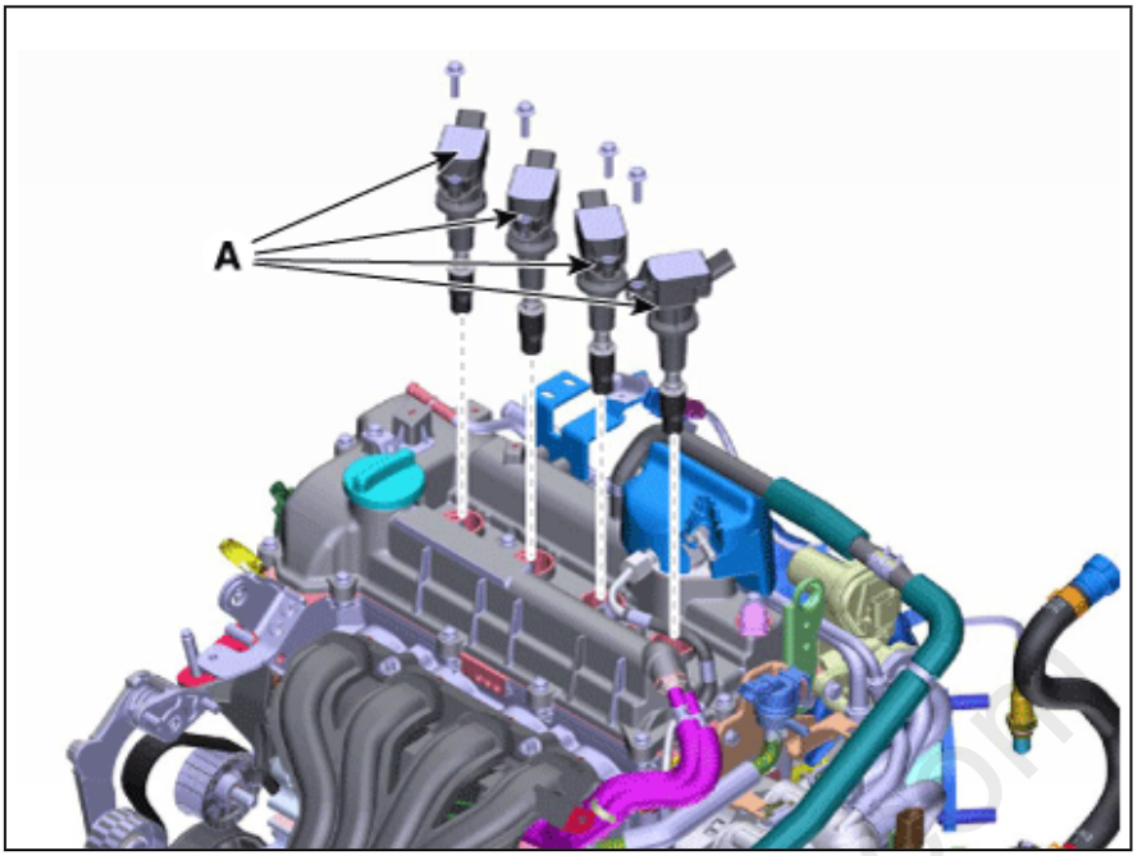

When removing the ignition coil connector, pull the lock pin (A) and push the clip (B).

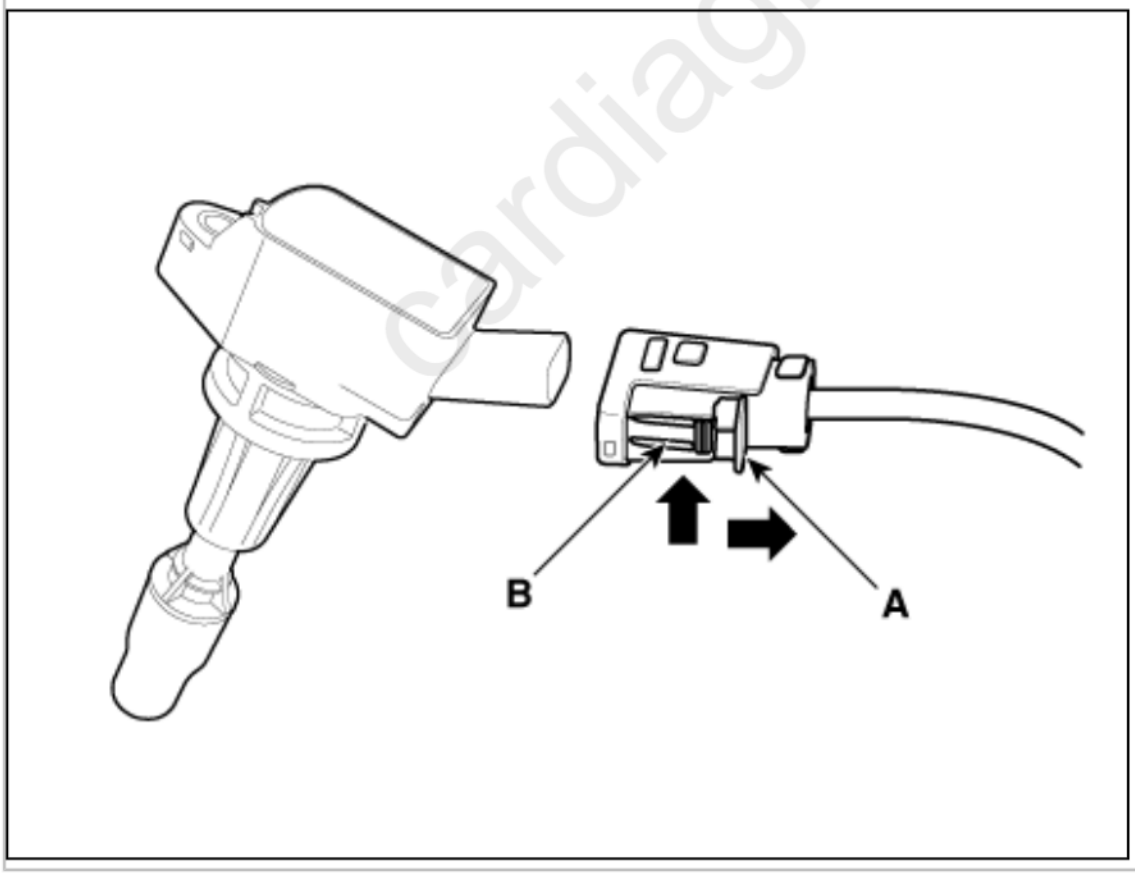

Installation

cardiagn.com

1. Install in the reverse order of removal.

- Install the ignition coil with the specified torque.
- If ignition coil is dropped, it may cause internal damage. Do not use it.
- When assembling the parts, clean the contaminated area (A) with the cloth.
  - The cloth should be clean, free of contaminants, and soft enough to not damage the parts.
  (When replacing ignition coil and spark plug together, cleaning is not required.)

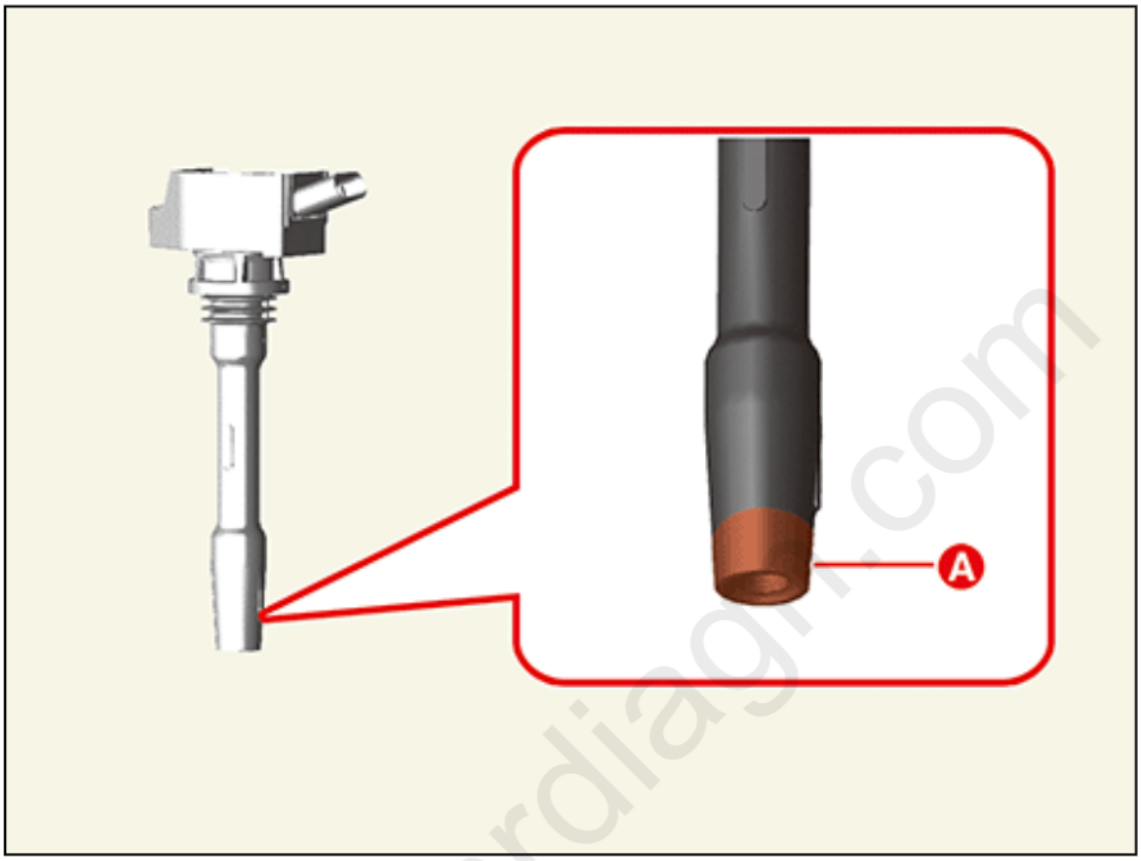

cardiagn.com

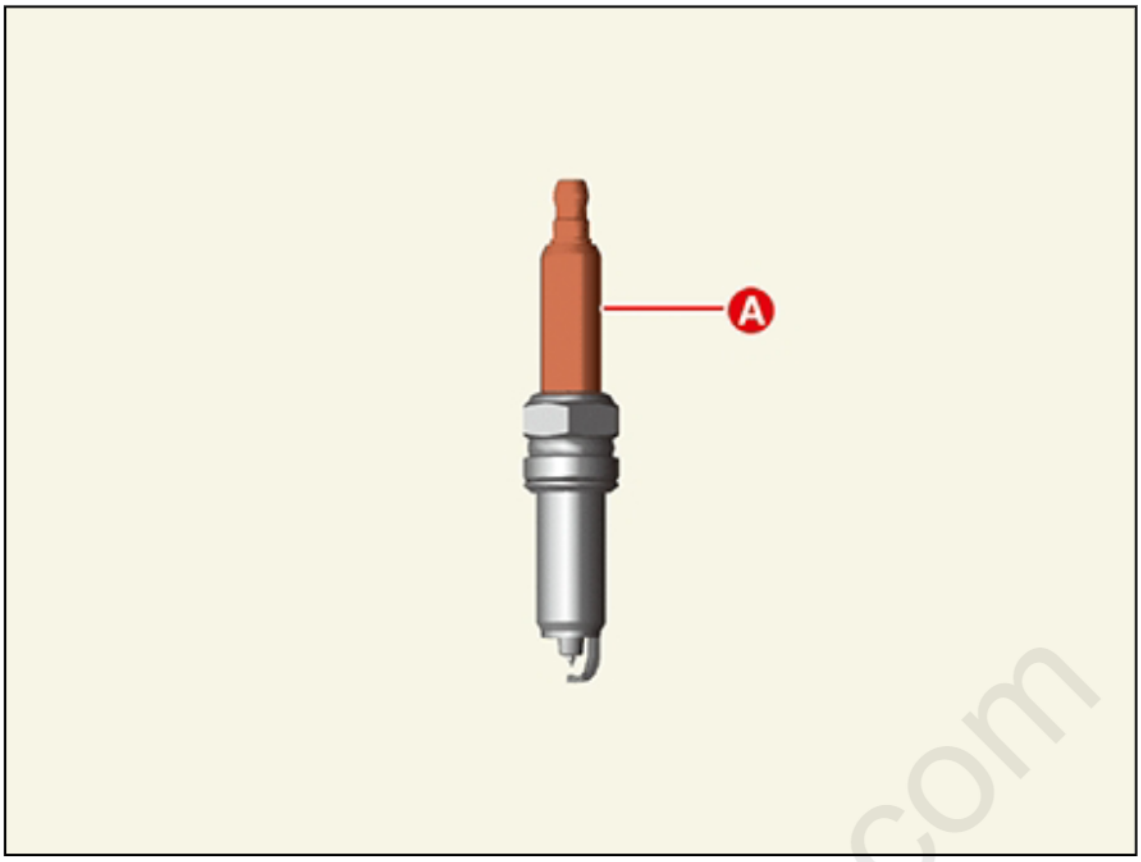

cardiagn.com

Please rate this document after reviewing at the bottom of this page.

Specification

Item	Specification
Type	ELR9ISP8+
Gap	0.7 - 0.8 mm (0.0276 - 0.0314 in.)
Electrode Material	Iridium

cardiagn.com

Please rate this document after reviewing at the bottom of this page.

Description

An ignition coil is an induction coil in an engine's ignition system which transforms the battery's low voltage to the high voltage needed to create an electric spark in the spark plugs to ignite the fuel. Coils have an internal resistor while others rely on a resistor wire or an external resistor to limit the current flowing into the coil from the battery 12 V supply.

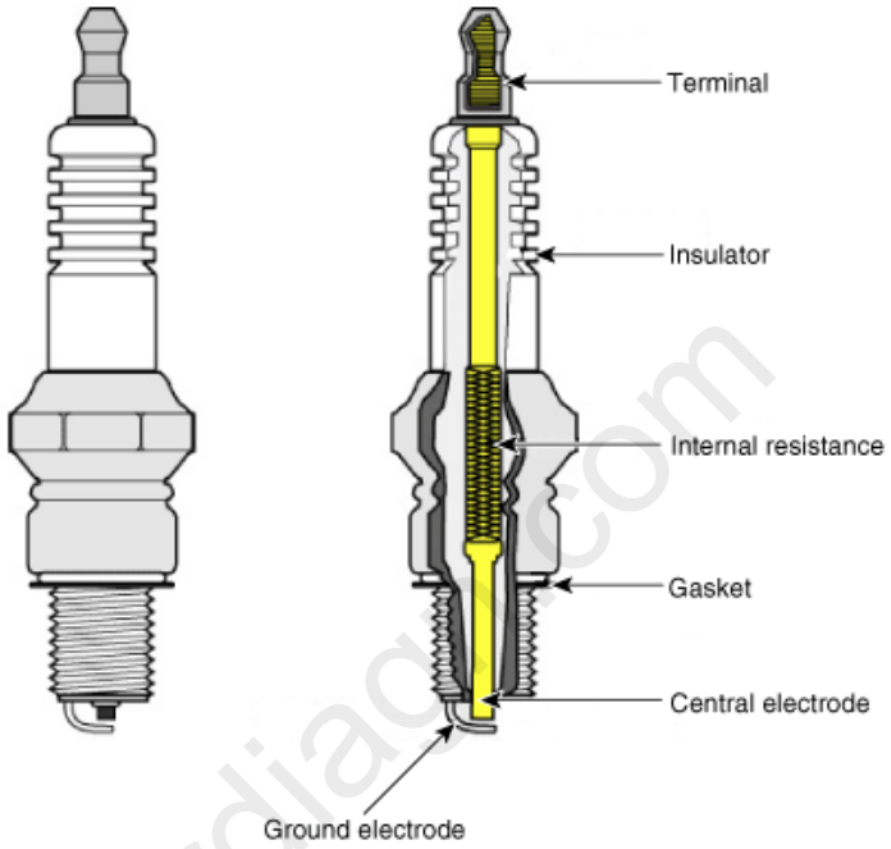

cardiagn.com

Please rate this document after reviewing at the bottom of this page.

Inspection

[On vehicle inspection]

1. Accelerate the engine to about 3,000 rpm 3 times or more.
2. Remove the spark plug.
3. Check the spark plug visually.
   If the electrode is dry, the spark plug is normal.
   If the electrode is wet, check the damage and electrode gap as below.

[Component Inspection]

1. Check the spark plug for any damage on its thread and insulator.
   If there is damage, replace the spark plug.
2. Check the electrode. Measure the insulation resistance with an ohmmeter.
   If the resistance is less than the specified value, adjust the electrode gap.

Specification: 10 MΩ or more

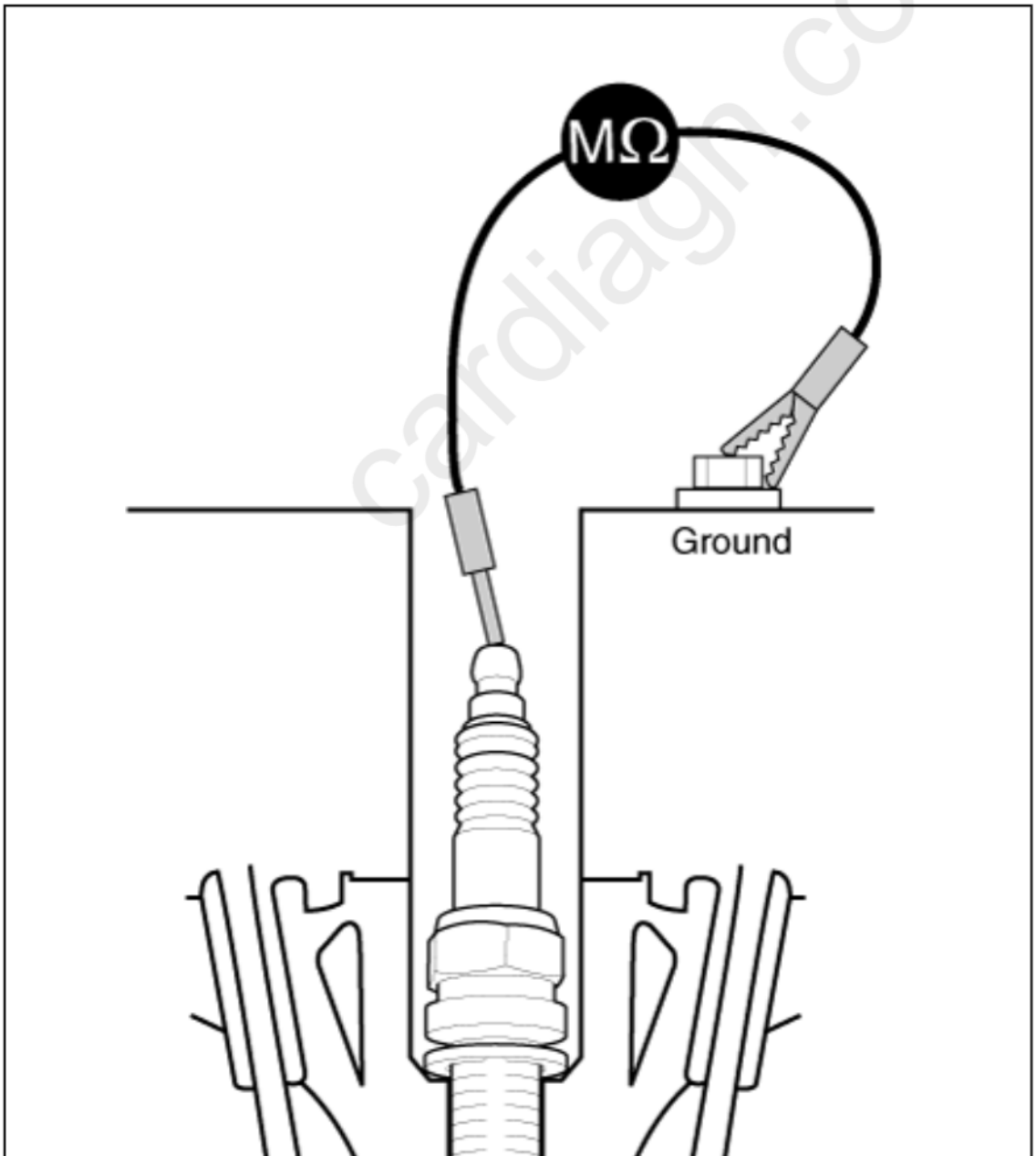

cardiagn.com

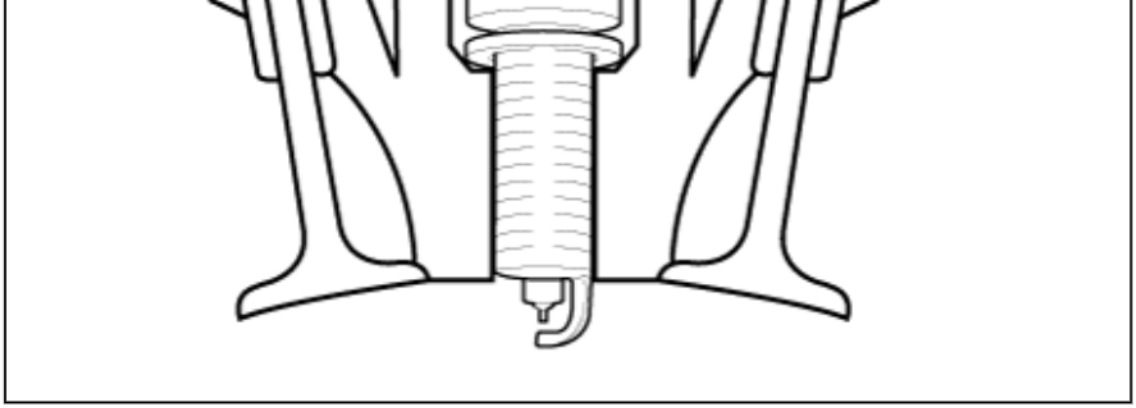

3. Check the spark plug electrode gap.
   If the gap is greater than the maximum, replace the spark plug.

Specification: 0.7 - 0.8 mm (0.0276 - 0.0314 in.)

If adjusting the gap of a new spark plug, bend only the base of the ground electrode. Do not touch the tip.
Never attempt to adjust the gap on a used plug.

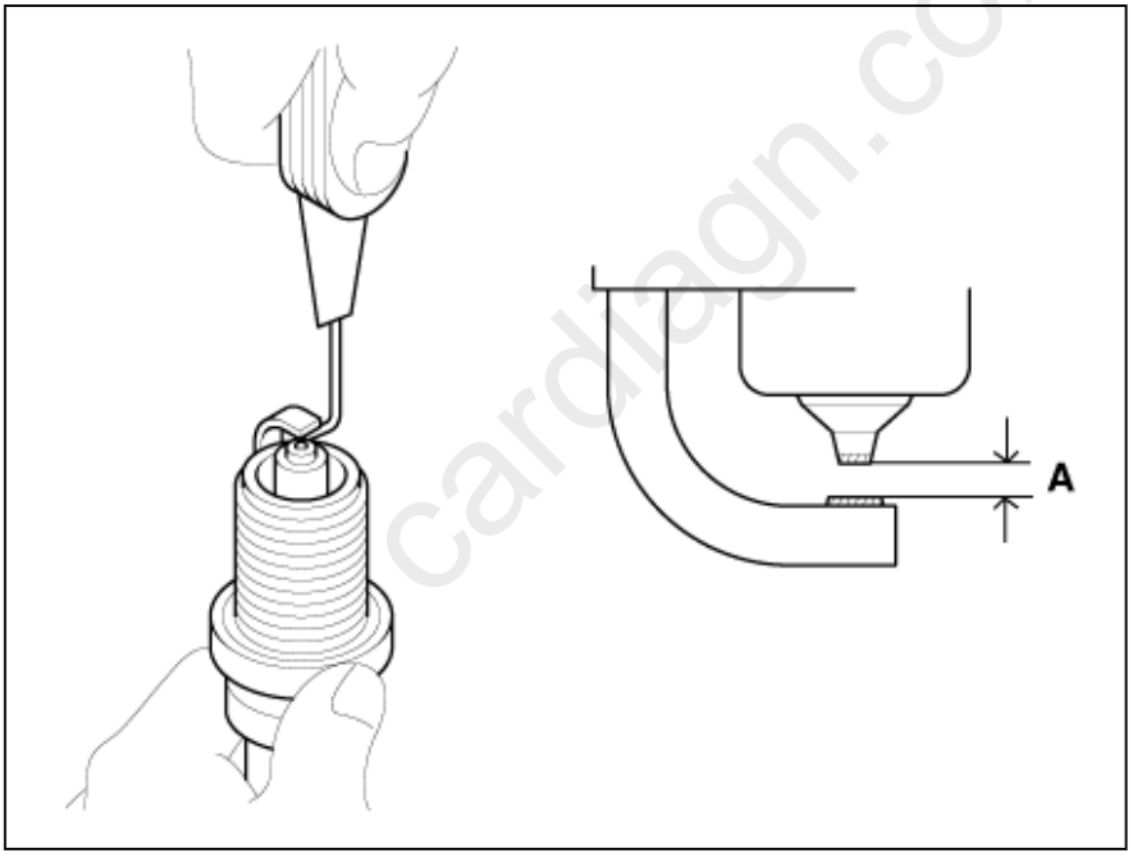

Cleaning

The combustion temporarily becomes unstable, due to the aged fuel and the carbon deposits accumulated on the spark plug(s) after long-term storage.

[1st Method]

1. Start the engine and keep the engine running at idle for 2 minutes.
2. Step on the accelerator pedal and hold it steady at 4500 rpm with the shift lever in N position to warm up the engine until the temperature of the engine coolant reaches 80°C.

cardiagn.com

3. Keep the engine running at 2500 - 3000 rpm in the N position for 15 minutes.

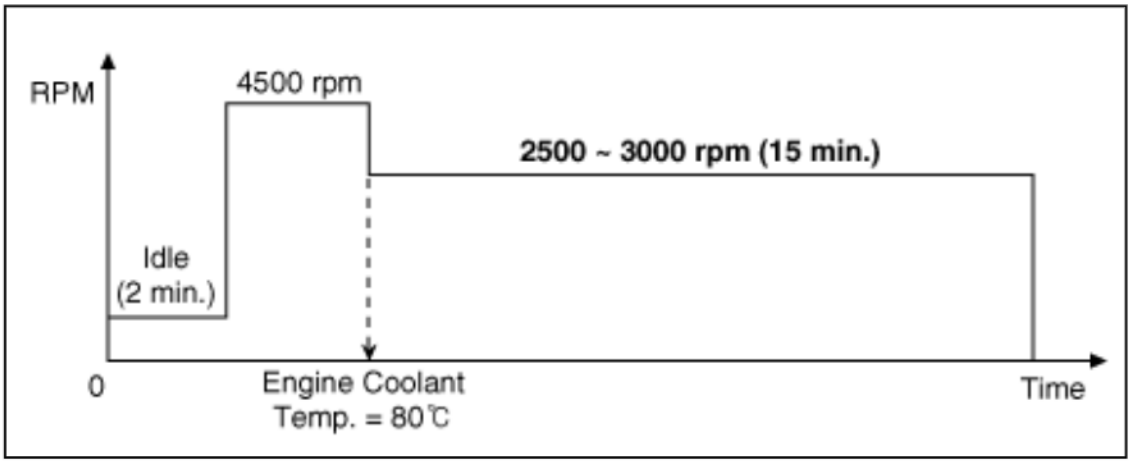

[2nd Method]

The 2nd method should be performed only if the 1st method fails (the misfire-related codes recur).

1. Start the engine and keep the engine running at idle for 2 minutes.
2. Drive the vehicle for over 20 minutes, keeping the engine speed above 3500 rpm.

If equipped with manual transaxle, shift the gear properly for keeping the engine speed above 3500 rpm.

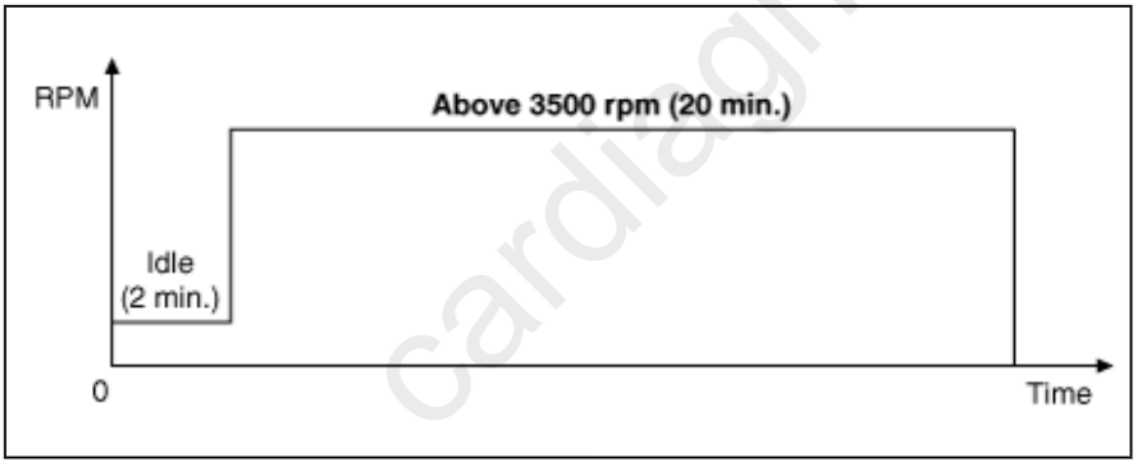

Removal

1. Remove the ignition coil.
   (Refer to Ignition System - "Ignition Coil")

cardiagn.com

2. Using a spark plug wrench, remove the spark plug (A).

spark plug :
19.6 - 24.5 N·m (2.0 - 2.5 kgf·m, 14.5 - 18.0 lb·ft)

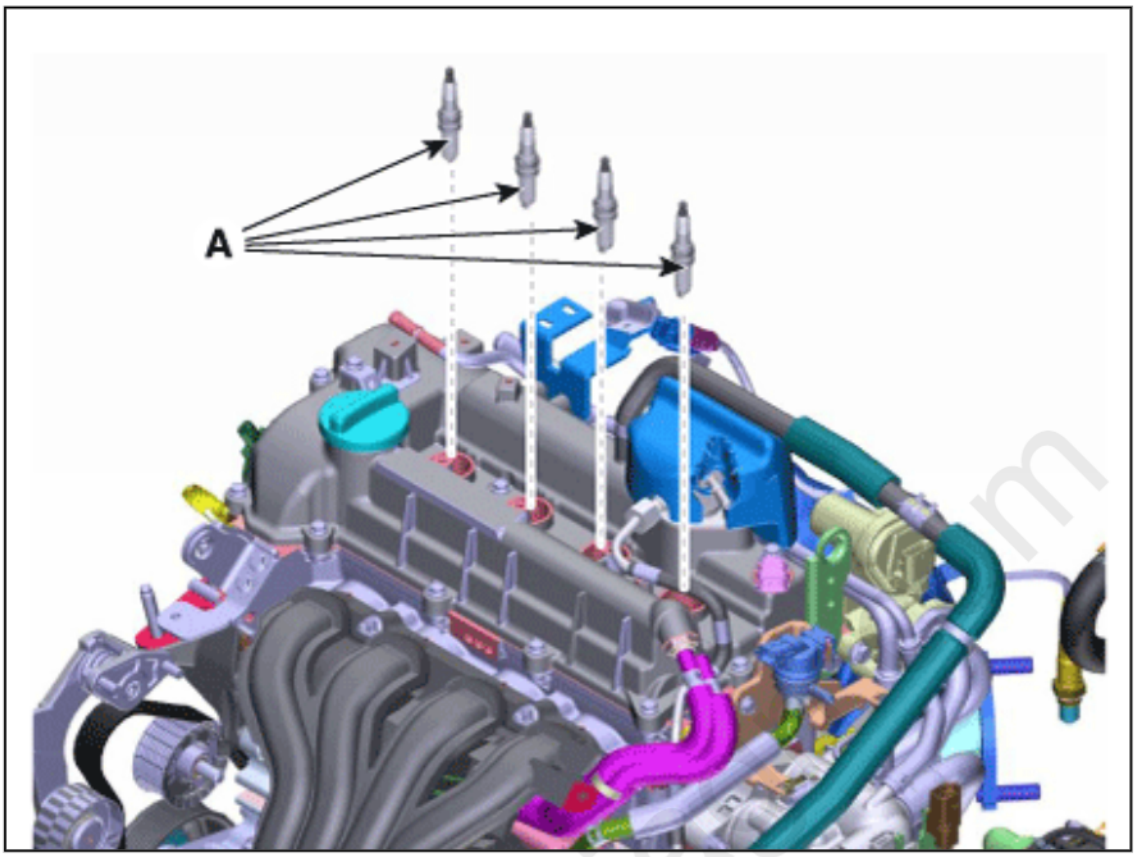

Be careful that no contaminates enter into spark plug holes.

Installation

1. Install in the reverse order of removal.

- Install the spark plug with the specified torque.
- Be careful not to damage external electrode when installing the spark plug.
- If spark plug is dropped, it may cause internal damage. Do not use it.

• When assembling the ignition plug, clean the contaminated area (A) with the cloth.
- The cloth should be clean, free of contaminants, and soft enough to not damage the parts.
(When replacing ignition coil and spark plug together, cleaning is not required.)

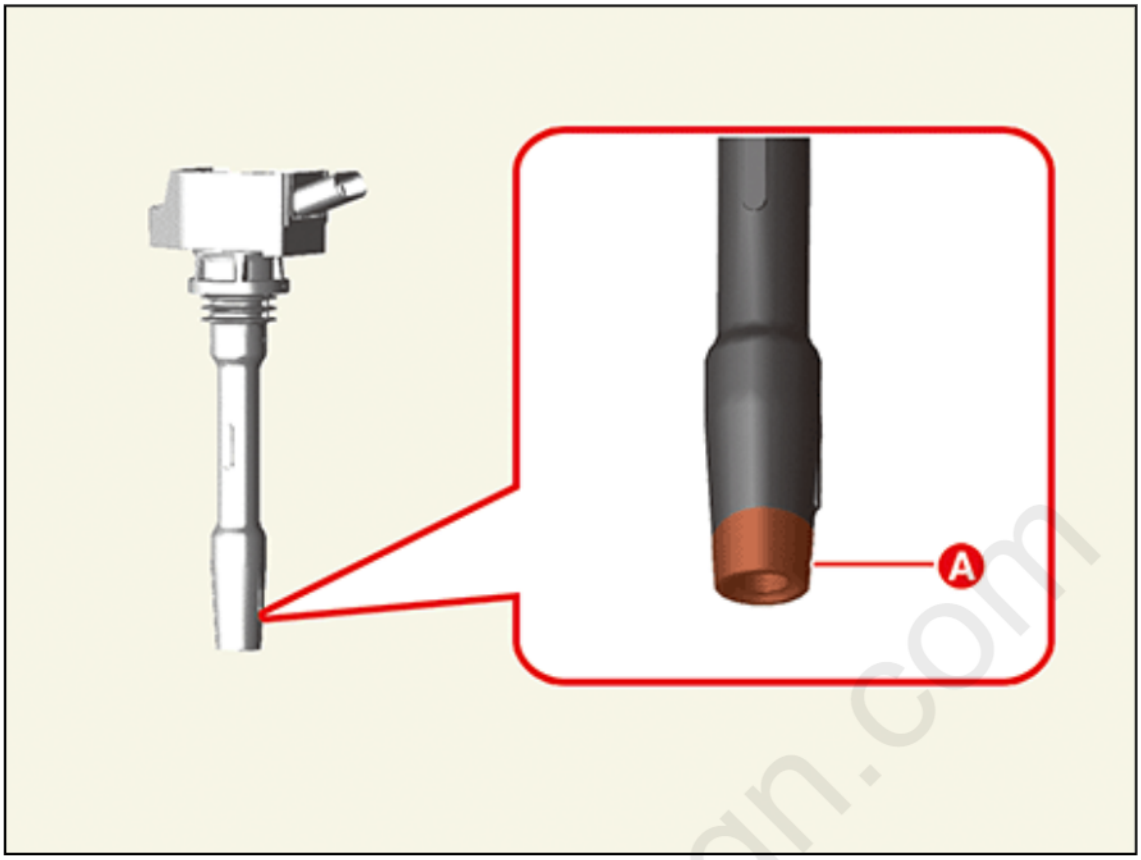

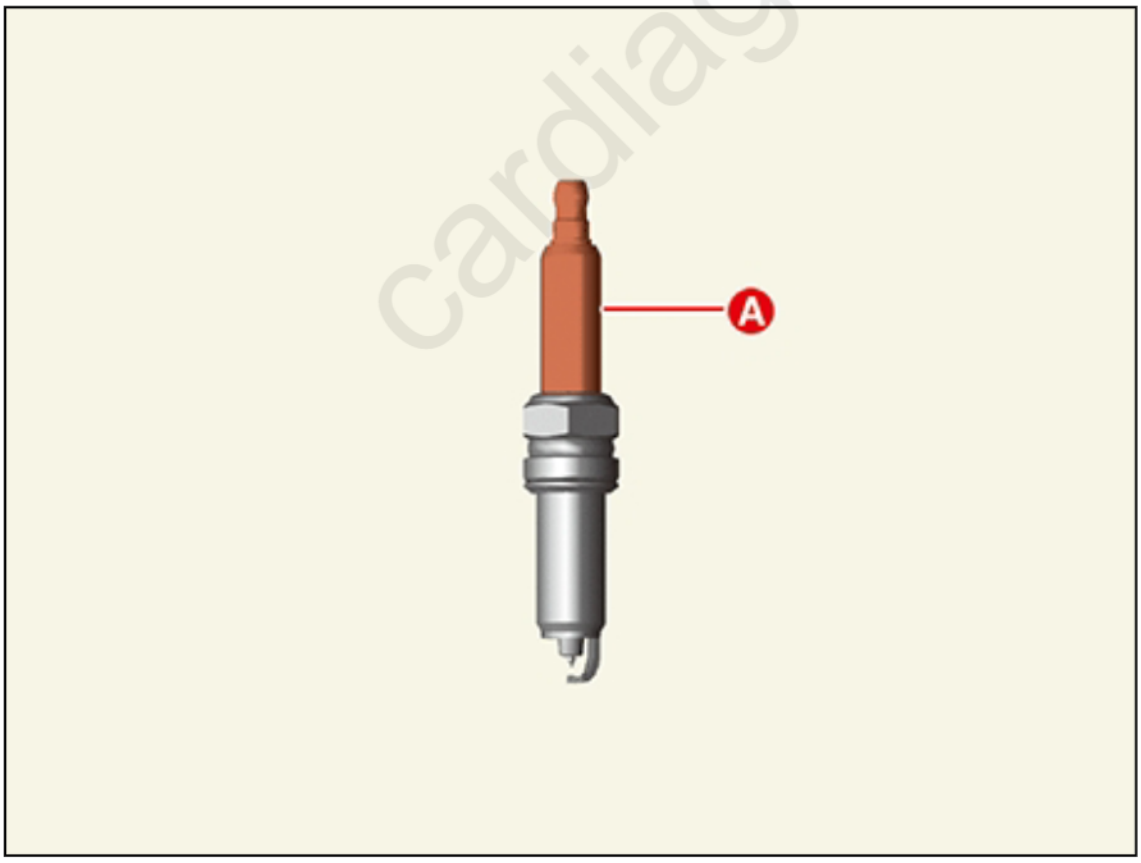

cardiagn.com