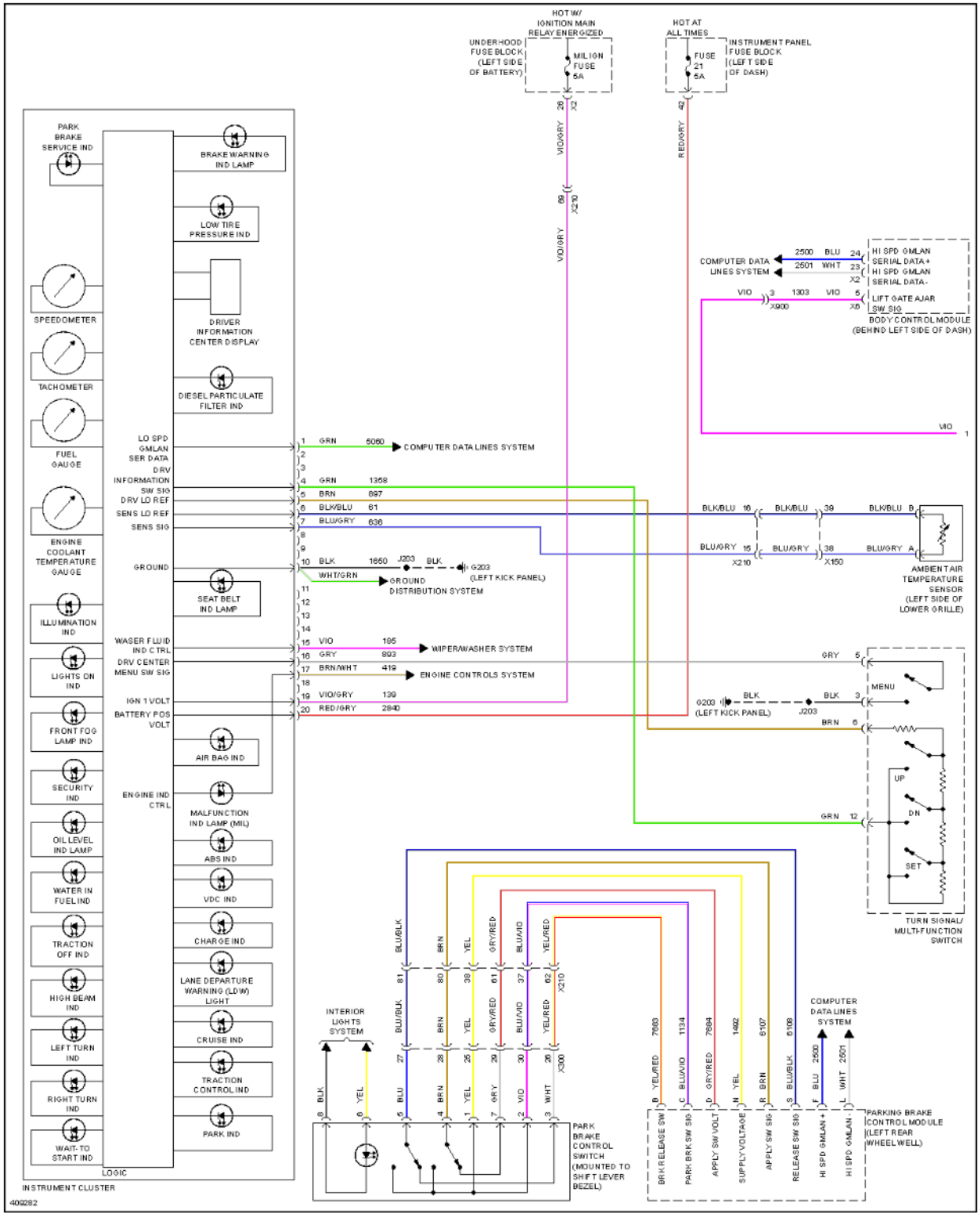

Fig. 66: Instrument Cluster Circuit (1 of 2)

Cardiagn.com

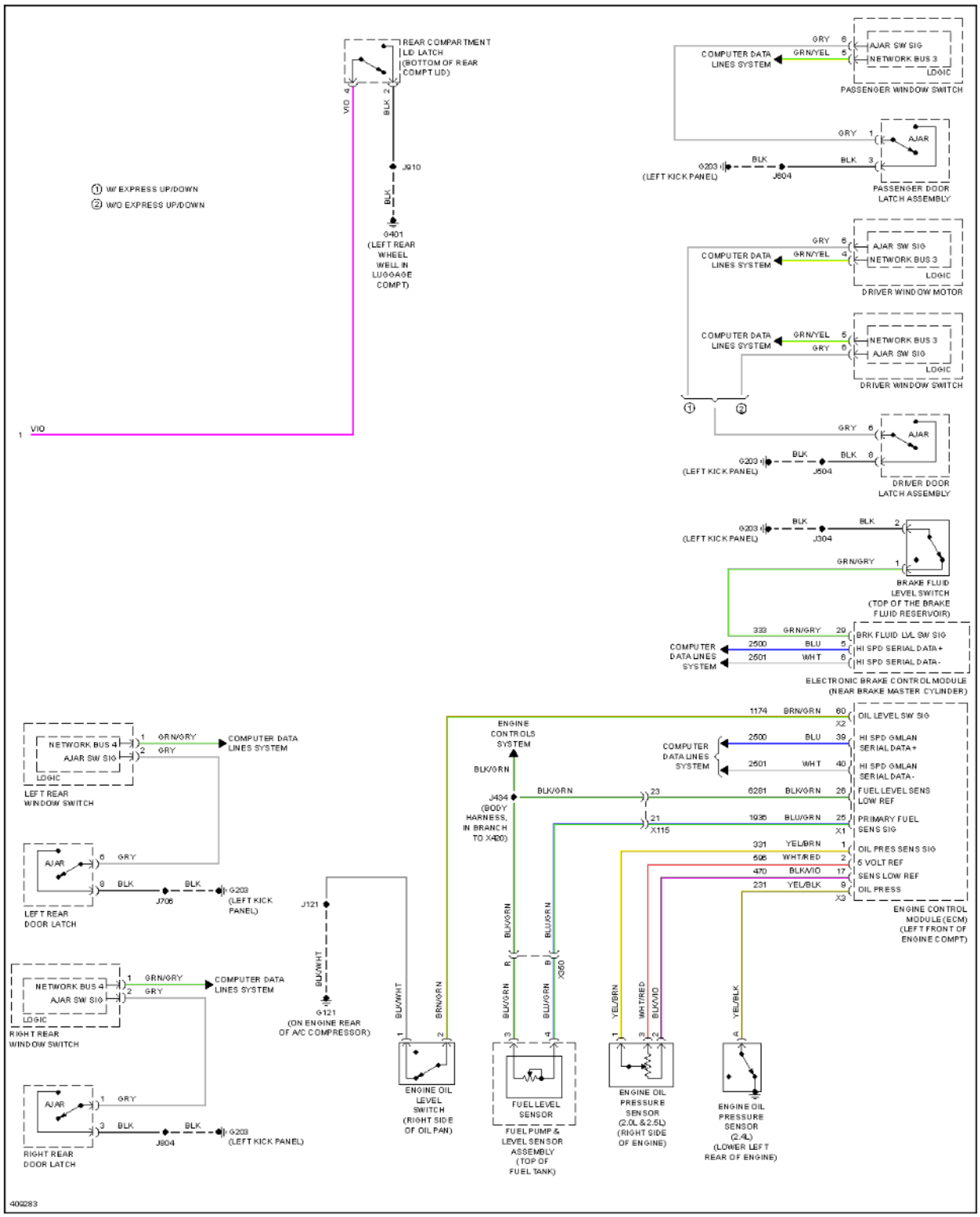

Fig. 67: Instrument Cluster Circuit (2 of 2)

Cardiagn.com

INTERIOR LIGHTS

Cardiagn.com