2007 ENGINE

Engine Mechanical - 4.8L, 5.3L, 6.0L and 6.2L - Avalanche, Escalade, Suburban, Tahoe & Yukon

SPECIFICATIONS

FASTENER TIGHTENING SPECIFICATIONS

Fastener Tightening Specifications

Application	Specification	
	Metric	English
Accessory Drive Belt Idler Pulley Bolt	50 N.m	37 lb ft
Accessory Drive Belt Tensioner Bolts	50 N.m	37 lb ft
Active Fuel Management Oil Pressure Relief Valve	27 N.m	20 lb ft
Air Conditioning Drive Belt Tensioner Bolts	50 N.m	37 lb ft
Automatic Transmission Flex Plate Bolts - First Pass	20 N.m	15 lb ft
Automatic Transmission Flex Plate Bolts - Second Pass	50 N.m	37 lb ft
Automatic Transmission Flex Plate Bolts - Final Pass	100 N.m	74 lb ft
Battery Cable Channel Bolt	12 N.m	106 lb in
Camshaft Position (CMP) Actuator Magnet Bolts	12 N.m	106 lb in
Camshaft Position (CMP) Actuator Solenoid Valve - First Pass	65 N.m	48 lb ft
Camshaft Position (CMP) Actuator Solenoid Valve - Final Pass	90 degrees	
Camshaft Position (CMP) Sensor Bolt	12 N.m	106 lb in
Camshaft Position (CMP) Sensor Wire Harness Bolt	12 N.m	106 lb ft
Camshaft Retainer Bolts - Hex Head Bolts	25 N.m	18 lb ft
Camshaft Retainer Bolts - TORX Head Bolts	15 N.m	11 lb ft
Camshaft Sprocket Bolt - First Pass	90 N.m	66 lb ft
Camshaft Sprocket Bolt - Final Pass	40 degrees	
Connecting Rod Bolts - First Pass	20 N.m	15 lb ft
Connecting Rod Bolts - Final Pass	70 degrees	
Coolant Air Bleed Pipe and Cover Bolts	12 N.m	106 lb in
Coolant Temperature Sensor	20 N.m	15 lb ft
Crankshaft Balancer Bolt - Installation Pass - to Ensure the Balancer is Completely Installed	330 N.m	240 lb ft
Crankshaft Balancer Bolt - First Pass - Install a NEW Bolt After the Installation Pass and Tighten as Described in the First and Final Passes	50 N.m	37 lb ft
Crankshaft Balancer Bolt - Final Pass	140 degrees	
Crankshaft Bearing Cap M8 Bolts	25 N.m	18 lb ft

cardiagn.com

Crankshaft Bearing Cap M10 Bolts - First Pass in Sequence	20 N.m	15 lb ft
Crankshaft Bearing Cap M10 Bolts - Final Pass in Sequence	80 degrees	
Crankshaft Bearing Cap M10 Studs - First Pass in Sequence	20 N.m	15 lb ft
Crankshaft Bearing Cap M10 Studs - Final Pass in Sequence	51 degrees	
Crankshaft Oil Deflector Nuts	25 N.m	18 lb ft
Crankshaft Position (CKP) Sensor Bolt	25 N.m	18 lb ft
Crankshaft Rear Oil Seal Housing Bolts	30 N.m	22 lb ft
Crossbar Bolts/Nuts - 1500 Series	100 N.m	74 lb ft
Crossbar Bolts/Nuts - 2500 Series	120 N.m	89 lb ft
Cylinder Head M8 Bolts - in Sequence	30 N.m	22 lb ft
Cylinder Head M11 Bolts - First Pass in Sequence	30 N.m	22 lb ft
Cylinder Head M11 Bolts - Second Pass in Sequence	90 degrees	
Cylinder Head M11 Bolts - Final Pass in Sequence	70 degrees	
Cylinder Head Plug	20 N.m	15 lb ft
Differential Carrier-to-Crossbar Nuts	100 N.m	74 lb ft
Engine Block Coolant Drain Hole Plug	60 N.m	44 lb ft
Engine Block Coolant Heater	50 N.m	37 lb ft
Engine Block Oil Gallery Plugs	60 N.m	44 lb ft
Engine Harness Ground Strap Bolt/Stud	16 N.m	12 lb ft
Engine Harness-to-Generator Bracket Bolt	9 N.m	80 lb in
Engine Harness Retainer-to-Intake Manifold Nut	5 N.m	44 lb in
Engine Mount Bracket Through Bolt	100 N.m	74 lb ft
Engine Mount-to-Engine Block Bolts	50 N.m	37 lb ft
Engine Mount-to-Frame Bolts	65 N.m	48 lb ft
Engine Shield-to-Crossbar Bolts	20 N.m	15 lb ft
Evaporative (EVAP) Emission Pipe Bracket Nut	20 N.m	15 lb ft
Exhaust Manifold Bolts - First Pass	15 N.m	11 lb ft
Exhaust Manifold Bolts - Final Pass	20 N.m	15 lb ft
Exhaust Manifold Heat Shield Bolts	9 N.m	80 lb in
Exhaust Manifold Studs	20 N.m	15 lb ft
Flex Plate-to-Torque Converter Bolts - 4L60-E/4L70-E/6L80 Transmission	63 N.m	47 lb ft
Flex Plate-to-Torque Converter Bolts - 4L80-E Transmission	60 N.m	44 lb ft
Flywheel Bolts - First Pass	20 N.m	15 lb ft
Flywheel Bolts - Second Pass	50 N.m	37 lb ft
Flywheel Bolts - Final Pass	100 N.m	74 lb ft
Front Cover Bolts	25 N.m	18 lb ft
Front Drive Axle Bracket Bolts	90 N.m	67 lb ft
Fuel Injection Fuel Rail Bolts	10 N.m	89 lb in
Fuel Injection Fuel Rail Crossover Tube Bolts	3.8 N.m	34 lb in

cardiagn.com

Fuel Rail Stop Bracket Bolt	50 N.m	37 lb ft
Generator Bracket Bolts	50 N.m	37 lb ft
Heater Hose Bracket Nut	9 N.m	80 lb in
Ignition Coil Bracket-to-Valve Rocker Arm Cover Studs	12 N.m	106 lb in
Ignition Coil-to-Bracket Bolts	10 N.m	89 lb in
Intake Manifold Bolts - First Pass in Sequence	5 N.m	44 lb in
Intake Manifold Bolts - Final Pass in Sequence	10 N.m	89 lb in
Intake Manifold Sight Shield Retainer Bolts	5 N.m	44 lb in
J 41798 M8 Bolt	25 N.m	18 lb ft
J 41798 M10 Bolts	50 N.m	37 lb ft
Knock Sensor Bolts	25 N.m	18 lb ft
Negative Battery Cable Stud	25 N.m	18 lb ft
Oil Filter	30 N.m	22 lb ft
Oil Filter Fitting	55 N.m	40 lb ft
Oil Level Indicator Switch	20 N.m	15 lb ft
Oil Level Indicator Tube Bolt	25 N.m	18 lb ft
Oil Pan Baffle Bolts	9 N.m	80 lb in
Oil Pan Closeout Cover Bolt - Left Side	9 N.m	80 lb in
Oil Pan Closeout Cover Bolt - Right Side	9 N.m	80 lb in
Oil Pan Cover Bolts	9 N.m	80 lb in
Oil Pan Drain Plug	25 N.m	18 lb ft
Oil Pan M6 Bolts - Oil Pan-to-Rear Housing	12 N.m	106 lb in
Oil Pan M8 Bolts - Oil Pan-to-Engine Block and Oil Pan-to-Front Cover	25 N.m	18 lb ft
Oil Pan Skid Plate Bolts	28 N.m	21 lb ft
Oil Pressure Sensor	35 N.m	26 lb ft
Oil Pump Cover Bolts	12 N.m	106 lb in
Oil Pump Relief Valve Plug	12 N.m	106 lb in
Oil Pump Screen Nuts	25 N.m	18 lb ft
Oil Pump Screen-to-Oil Pump Bolts	12 N.m	106 lb in
Oil Pump-to-Engine Block Bolts	25 N.m	18 lb ft
Power Steering Pump-to-Engine Block Bolts	50 N.m	37 lb ft
Spark Plugs	15 N.m	11 lb ft
Throttle Body Bolts	10 N.m	89 lb in
Throttle Body Nuts	10 N.m	89 lb in
Throttle Body Studs	6 N.m	53 lb in
Timing Chain Tensioner Bolts	25 N.m	18 lb ft
Transfer Case Vent Hose Bracket Nut	20 N.m	15 lb ft
Transmission Housing-to-Engine Bolts/Studs	50 N.m	37 lb ft
Transmission Oil Cooler Line Clip Bolt	9 N.m	80 lb in
Transmission Oil Level Indicator Tube Nut	18 N.m	13 lb ft

cardiagn.com

Valley Cover Bolts	25 N.m	18 lb ft
Valve Lifter Guide Bolts	12 N.m	106 lb in
Valve Lifter Oil Manifold Bolts	25 N.m	18 lb ft
Valve Rocker Arm Bolts	30 N.m	22 lb ft
Valve Rocker Arm Cover Bolts	12 N.m	106 lb in
Water Inlet Housing Bolts	15 N.m	11 lb ft
Water Pump Bolts - First Pass	15 N.m	11 lb ft
Water Pump Bolts - Final Pass	30 N.m	22 lb ft

ENGINE MECHANICAL SPECIFICATIONS (RPO LY2 VIN C)

Engine Mechanical Specifications (RPO LY2 VIN C)

Application	Specification	
	Metric	English
General		
• Bore	96.0-96.018 mm	3.779-3.78 in
• Compression Ratio	9.08:1	
• Displacement	4.8L	293 CID
• Engine Type	V8	
• Firing Order	1-8-7-2-6-5-4-3	
• RPO	LY2	
• Stroke	83.0 mm	3.27 in
• VIN	C	
• Spark Plug Gap	1.02 mm	0.04 in
Block		
• Camshaft Bearing Bore 1 and 5 Diameter	59.58-59.63 mm	2.345-2.347 in
• Camshaft Bearing Bore 2 and 4 Diameter	59.08-59.13 mm	2.325-2.327 in
• Camshaft Bearing Bore 3 Diameter	58.58-58.63 mm	2.306-2.308 in
• Crankshaft Main Bearing Bore Diameter	69.871-69.889 mm	2.75-2.751 in
• Crankshaft Main Bearing Bore Out-of-Round	0.006 mm	0.0002 in
• Cylinder Bore Diameter	96.0-96.018 mm	3.779-3.78 in
• Cylinder Head Deck Height - Measuring from the Centerline of Crankshaft to the Deck Face	234.57-234.82 mm	9.235-9.245 in
• Cylinder Head Deck Surface Flatness - Measured Within a 152.4 mm (6.0 in) Area	0.11 mm	0.004 in
• Cylinder Head Deck Surface Flatness - Measuring the Overall Length of the Block Deck	0.22 mm	0.008 in

cardiagn.com

• Valve Lifter Bore Diameter	21.417-21.443 mm	0.843-0.844 in
Camshaft		
• Camshaft End Play	0.025-0.305 mm	0.001-0.012 in
• Camshaft Journal Diameter	54.99-55.04 mm	2.164-2.166 in
• Camshaft Journal Out-of-Round	0.025 mm	0.001 in
• Camshaft Lobe Lift - Exhaust	7.2 mm	0.283 in
• Camshaft Lobe Lift - Intake	7.2 mm	0.283 in
• Camshaft Runout - Measured at the Intermediate Journals	0.05 mm	0.002 in
Connecting Rod		
• Connecting Rod Bearing Clearance - Production	0.023-0.065 mm	0.0009-0.0025 in
• Connecting Rod Bearing Clearance - Service	0.023-0.076 mm	0.0009-0.003 in
• Connecting Rod Bore Diameter - Bearing End	56.505-56.525 mm	2.224-2.225 in
• Connecting Rod Bore Out-of-Round - Bearing End - Production	0.004-0.008 mm	0.00015-0.0003 in
• Connecting Rod Bore Out-of-Round - Bearing End - Service	0.004-0.008 mm	0.00015-0.0003 in
• Connecting Rod Side Clearance	0.11-0.51 mm	0.00433-0.02 in
Crankshaft		
• Connecting Rod Journal Diameter - Production	53.318-53.338 mm	2.0991-2.0999 in
• Connecting Rod Journal Diameter - Service	53.308 mm	2.0987 in
• Connecting Rod Journal Out-of-Round - Production	0.005 mm	0.0002 in
• Connecting Rod Journal Out-of-Round - Service	0.01 mm	0.0004 in
• Connecting Rod Journal Taper - Maximum for 1/2 of Journal Length - Production	0.005 mm	0.0002 in
• Connecting Rod Journal Taper - Maximum for 1/2 of Journal Length - Service	0.02 mm	0.00078 in
• Crankshaft End Play	0.04-0.2 mm	0.0015-0.0078 in
• Crankshaft Main Bearing Clearance - Production	0.02-0.052 mm	0.0008-0.0021 in
• Crankshaft Main Bearing Clearance - Service	0.02-0.065 mm	0.0008-0.0025 in
• Crankshaft Main Journal Diameter - Production	64.992-65.008 mm	2.558-2.559 in
• Crankshaft Main Journal Diameter - Service	64.992 mm	2.558 in
• Crankshaft Main Journal Out-of-Round - Production	0.003 mm	0.000118 in
• Crankshaft Main Journal Out-of-Round - Service	0.008 mm	0.0003 in
• Crankshaft Main Journal Taper - Production	0.01 mm	0.0004 in

cardiagn.com

• Crankshaft Main Journal Taper - Service	0.02 mm	0.00078 in
• Crankshaft Rear Flange Runout	0.05 mm	0.002 in
• Crankshaft Reluctor Ring Runout - Measured 1.0 mm (0.04 in) Below Tooth Diameter	0.7 mm	0.028 in
• Crankshaft Thrust Surface - Production	26.14-26.22 mm	1.029-1.0315 in
• Crankshaft Thrust Surface - Service	26.22 mm	1.0315 in
• Crankshaft Thrust Surface Runout	0.025 mm	0.001 in
Cylinder Head		
• Cylinder Head Height/Thickness - Measured from the Cylinder Head Deck to the Valve Rocker Arm Cover Seal Surface	120.2 mm	4.732 in
• Surface Flatness - Block Deck - Measured Within a 152.4 mm (6.0 in) Area	0.08 mm	0.003 in
• Surface Flatness - Block Deck - Measuring the Overall Length of the Cylinder Head	0.1 mm	0.004 in
• Surface Flatness - Exhaust Manifold Deck	0.13 mm	0.005 in
• Surface Flatness - Intake Manifold Deck	0.08 mm	0.0031 in
• Valve Guide Installed Height - Measured from the Spring Seat Surface to the Top of the Guide	17.32 mm	0.682 in
Intake Manifold		
• Surface Flatness - Measured at Gasket Sealing Surfaces and Measured Within a 200 mm (7.87 in) Area that Includes 2 Runner Port Openings	0.3 mm	0.118 in
Lubrication System		
• Oil Capacity - with Filter	5.68 liters	6.0 quarts
• Oil Capacity - without Filter	5.2 liters	5.5 quarts
• Oil Pressure - Minimum - Hot	41 kPa at 1,000 engine RPM 124 kPa at 2,000 engine RPM 165 kPa at 4,000 engine RPM	6 psig at 1,000 engine RPM 18 psig at 2,000 engine RPM 24 psig at 4,000 engine RPM
• Active Fuel Management Relief Valve Oil Pressure - as Measured at Oil Pressure Sensor Location	379-517 kPa Maximum	55-75 psig Maximum
Oil Pan		
• Front Cover Alignment - at Oil Pan Surface	0.0-0.5 mm	0.0-0.02 in
• Crankshaft Rear Oil Seal Housing Alignment - at Oil Pan Surface	0.0-0.5 mm	0.0-0.02 in

cardiagn.com

• Oil Pan Alignment - to Rear of Engine Block at Transmission Bell Housing Mounting Surface	0.0-0.1 mm	0.0-0.004 in
Piston Rings		
• Piston Ring End Gap - First Compression Ring - Measured in Cylinder Bore - Production	0.23-0.44 mm	0.009-0.017 in
• Piston Ring End Gap - First Compression Ring - Measured in Cylinder Bore - Service	0.23-0.5 mm	0.009-0.0196 in
• Piston Ring End Gap - Second Compression Ring - Measured in Cylinder Bore - Production	0.44-0.7 mm	0.017-0.027 in
• Piston Ring End Gap - Second Compression Ring - Measured in Cylinder Bore - Service	0.44-0.76 mm	0.0173-0.03 in
• Piston Ring End Gap - Oil Control Ring - Measured in Cylinder Bore - Production	0.18-0.75 mm	0.007-0.029 in
• Piston Ring End Gap - Oil Control Ring - Measured in Cylinder Bore - Service	0.18-0.81 mm	0.007-0.032 in
• Piston Ring-to-Groove Clearance - First Compression Ring - Production	0.04-0.085 mm	0.00157-0.00335 in
• Piston Ring-to-Groove Clearance - First Compression Ring - Service	0.04-0.085 mm	0.00157-0.00335 in
• Piston Ring-to-Groove Clearance - Second Compression Ring - Production	0.04-0.078 mm	0.00157-0.0031 in
• Piston Ring-to-Groove Clearance - Second Compression Ring - Service	0.04-0.078 mm	0.00157-0.0031 in
• Piston Ring-to-Groove Clearance - Oil Control Ring - Production	0.012-0.2 mm	0.0005-0.0078 in
• Piston Ring-to-Groove Clearance - Oil Control Ring - Service	0.012-0.2 mm	0.0005-0.0078 in
Pistons and Pins		
• Pin - Piston Pin Clearance-to-Piston Pin Bore - Production	0.002-0.01 mm	0.00008-0.0004 in
• Pin - Piston Pin Clearance-to-Piston Pin Bore - Service	0.002-0.015 mm	0.00008-0.0006 in
• Pin - Piston Pin Diameter	23.952-23.955 mm	0.943-0.943 in
• Pin - Piston Pin Fit in Connecting Rod Bore - Production	0.007-0.02 mm	0.00027-0.00078 in
• Pin - Piston Pin Fit in Connecting Rod Bore - Service	0.007-0.022 mm	0.00027-0.00086 in
• Piston - Piston Diameter - Measured Over Skirt Coating	96.002-96.036 mm	3.779-3.78 in

cardiagn.com

• Piston - Piston to Bore Clearance - Production	-0.036 to +0.016 mm	-0.0014 to +0.0006 in
• Piston - Piston to Bore Clearance - Service Limit with Skirt Coating Worn Off	0.071 mm	0.0028 in
Valve System		
• Valves - Valve Face Angle	45 degrees	
• Valves - Valve Face Width	1.25 mm	0.05 in
• Valves - Valve Lash	Net Lash - No Adjustment	
• Valve Lift - Exhaust	12.24 mm	0.488 in
• Valve Lift - Intake	12.24 mm	0.488 in
• Valves - Valve Seat Angle	46 degrees	
• Valves - Valve Seat Runout	0.05 mm	0.002 in
• Valves - Valve Seat Width - Exhaust	1.78 mm	0.07 in
• Valves - Seat Width - Intake	1.02 mm	0.04 in
• Valves - Valve Stem Diameter - Production	7.955-7.976 mm	0.313-0.314 in
• Valves - Valve Stem Diameter - Service	7.95 mm	0.313 in
• Valves - Valve Stem-to-Guide Clearance - Production - Exhaust	0.025-0.066 mm	0.001-0.0026 in
• Valves - Valve Stem-to-Guide Clearance - Service - Exhaust	0.093 mm	0.0037 in
• Valves - Valve Stem-to-Guide Clearance - Production - Intake	0.025-0.066 mm	0.001-0.0026 in
• Valves - Valve Stem-to-Guide Clearance - Service - Intake	0.093 mm	0.0037 in
• Rocker Arms - Valve Rocker Arm Ratio	1.70:1	
• Valve Springs - Valve Spring Free Length	52.9 mm	2.08 in
• Valve Springs - Valve Spring Installed Height	45.75 mm	1.8 in
• Valve Springs - Valve Spring Load - Closed	340 N at 45.75 mm	76 lb at 1.8 in
• Valve Springs - Valve Spring Load - Open	980 N at 33.55 mm	220 lb at 1.32 in

ENGINE MECHANICAL SPECIFICATIONS (RPO LMG VIN 0)

Engine Mechanical Specifications (RPO LMG VIN 0)

Application	Specification	
	Metric	English
General		
• Engine Type	V8	

cardiagn.com

• Displacement	5.3L	325 CID
• RPO	LMG	
• VIN	0	
• Bore	96.0-96.018 mm	3.779-3.78 in
• Stroke	92.0 mm	3.622 in
• Compression Ratio	9.95:1	
• Firing Order	1-8-7-2-6-5-4-3	
• Active Fuel Management Cylinders	1-4-6-7	
• Spark Plug Gap	1.02 mm	0.04 in
Block		
• Camshaft Bearing Bore 1 and 5 Diameter	59.58-59.63 mm	2.345-2.347 in
• Camshaft Bearing Bore 2 and 4 Diameter	59.08-59.13 mm	2.325-2.327 in
• Camshaft Bearing Bore 3 Diameter	58.58-58.63 mm	2.306-2.308 in
• Crankshaft Main Bearing Bore Diameter	69.871-69.889 mm	2.75-2.751 in
• Crankshaft Main Bearing Bore Out-of-Round	0.006 mm	0.0002 in
• Cylinder Bore Diameter	96.0-96.018 mm	3.779-3.78 in
• Cylinder Head Deck Height - Measuring from the Centerline of Crankshaft to the Deck Face	234.57-234.82 mm	9.235-9.245 in
• Cylinder Head Deck Surface Flatness - Measured Within a 152.4 mm (6.0 in) Area	0.11 mm	0.004 in
• Cylinder Head Deck Surface Flatness - Measuring the Overall Length of the Block Deck	0.22 mm	0.008 in
• Valve Lifter Bore Diameter	21.417-21.443 mm	0.843-0.844 in
Camshaft		
• Camshaft End Play	0.025-0.305 mm	0.001-0.012 in
• Camshaft Journal Diameter	54.99-55.04 mm	2.164-2.166 in
• Camshaft Journal Out-of-Round	0.025 mm	0.001 in
• Camshaft Lobe Lift - Exhaust - Non Active Fuel Management Cylinders	7.2 mm	0.283 in
• Camshaft Lobe Lift - Exhaust - Active Fuel Management Cylinders	7.33 mm	0.289 in
• Camshaft Lobe Lift - Intake - Non Active Fuel Management Cylinders	7.2 mm	0.283 in
• Camshaft Lobe Lift - Intake - Active Fuel Management Cylinders	7.33 mm	0.289 in

cardiagn.com

• Camshaft Runout - Measured at the Intermediate Journals	0.05 mm	0.002 in
Connecting Rod		
• Connecting Rod Bearing Clearance - Production	0.023-0.065 mm	0.0009-0.0025 in
• Connecting Rod Bearing Clearance - Service	0.023-0.076 mm	0.0009-0.003 in
• Connecting Rod Bore Diameter - Bearing End	56.505-56.525 mm	2.224-2.225 in
• Connecting Rod Bore Out-of-Round - Bearing End - Production	0.004-0.008 mm	0.00015-0.0003 in
• Connecting Rod Bore Out-of-Round - Bearing End - Service	0.004-0.008 mm	0.00015-0.0003 in
• Connecting Rod Side Clearance	0.11-0.51 mm	0.00433-0.02 in
Crankshaft		
• Connecting Rod Journal Diameter - Production	53.318-53.338 mm	2.0991-2.0999 in
• Connecting Rod Journal Diameter - Service	53.308 mm	2.0987 in
• Connecting Rod Journal Out-of-Round - Production	0.005 mm	0.0002 in
• Connecting Rod Journal Out-of-Round - Service	0.01 mm	0.0004 in
• Connecting Rod Journal Taper - Maximum for 1/2 of Journal Length - Production	0.005 mm	0.0002 in
• Connecting Rod Journal Taper - Maximum for 1/2 of Journal Length - Service	0.02 mm	0.00078 in
• Crankshaft End Play	0.04-0.2 mm	0.0015-0.0078 in
• Crankshaft Main Bearing Clearance - Production	0.02-0.052 mm	0.0008-0.0021 in
• Crankshaft Main Bearing Clearance - Service	0.02-0.065 mm	0.0008-0.0025 in
• Crankshaft Main Journal Diameter - Production	64.992-65.008 mm	2.558-2.559 in
• Crankshaft Main Journal Diameter - Service	64.992 mm	2.558 in
• Crankshaft Main Journal Out-of-Round - Production	0.003 mm	0.000118 in
• Crankshaft Main Journal Out-of-Round - Service	0.008 mm	0.0003 in
• Crankshaft Main Journal Taper - Production	0.01 mm	0.0004 in
• Crankshaft Main Journal Taper - Service	0.02 mm	0.00078 in
• Crankshaft Rear Flange Runout	0.05 mm	0.002 in
• Crankshaft Reluctor Ring Runout - Measured 1.0 mm (0.04 in) Below Tooth Diameter	0.7 mm	0.028 in
• Crankshaft Thrust Surface - Production	26.14-26.22 mm	1.029-1.0315 in
• Crankshaft Thrust Surface - Service	26.22 mm	1.0315 in
• Crankshaft Thrust Surface Runout	0.025 mm	0.001 in

cardiagn.com

Cylinder Head		
• Cylinder Head Height/Thickness - Measured from the Cylinder Head Deck to the Valve Rocker Arm Cover Seal Surface	120.2 mm	4.732 in
• Surface Flatness - Block Deck - Measured Within a 152.4 mm (6.0 in) Area	0.08 mm	0.003 in
• Surface Flatness - Block Deck - Measuring the Overall Length of the Cylinder Head	0.1 mm	0.004 in
• Surface Flatness - Exhaust Manifold Deck	0.13 mm	0.005 in
• Surface Flatness - Intake Manifold Deck	0.08 mm	0.0031 in
• Valve Guide Installed Height - Measured from the Spring Seat Surface to the Top of the Guide	17.32 mm	0.682 in
Intake Manifold		
• Surface Flatness - Measured at Gasket Sealing Surfaces and Measured Within a 200 mm (7.87 in) Area that Includes 2 Runner Port Openings	0.3 mm	0.118 in
Lubrication System		
• Oil Capacity - with Filter	5.68 liters	6.0 quarts
• Oil Capacity - without Filter	5.2 liters	5.5 quarts
• Oil Pressure - Minimum - Hot	41 kPa at 1,000 engine RPM 124 kPa at 2,000 engine RPM 165 kPa at 4,000 engine RPM	6 psig at 1,000 engine RPM 18 psig at 2,000 engine RPM 24 psig at 4,000 engine RPM
• Active Fuel Management Relief Valve Oil Pressure - as Measured at Oil Pressure Sensor Location	379-517 kPa Maximum	55-75 psig Maximum
Oil Pan		
• Front Cover Alignment - at Oil Pan Surface	0.0-0.5 mm	0.0-0.02 in
• Crankshaft Rear Oil Seal Housing Alignment - at Oil Pan Surface	0.0-0.5 mm	0.0-0.02 in
• Oil Pan Alignment - to Rear of Engine Block at Transmission Bell Housing Mounting Surface	0.0-0.1 mm	0.0-0.004 in
Piston Rings		
• Piston Ring End Gap - First Compression Ring - Measured in Cylinder Bore - Production	0.23-0.44 mm	0.009-0.017 in
• Piston Ring End Gap - First Compression Ring - Measured in Cylinder Bore - Service	0.23-0.5 mm	0.009-0.0196 in
• Piston Ring End Gap - Second Compression Ring -	0.44-0.7 mm	0.017-0.027 in

cardiagn.com

Measured in Cylinder Bore - Production		
• Piston Ring End Gap - Second Compression Ring - Measured in Cylinder Bore - Service	0.44-0.76 mm	0.0173-0.03 in
• Piston Ring End Gap - Oil Control Ring - Measured in Cylinder Bore - Production	0.18-0.75 mm	0.007-0.029 in
• Piston Ring End Gap - Oil Control Ring - Measured in Cylinder Bore - Service	0.18-0.81 mm	0.007-0.032 in
• Piston Ring-to-Groove Clearance - First Compression Ring - Production	0.04-0.085 mm	0.00157-0.00335 in
• Piston Ring-to-Groove Clearance - First Compression Ring - Service	0.04-0.085 mm	0.00157-0.00335 in
• Piston Ring-to-Groove Clearance - Second Compression Ring - Production	0.04-0.078 mm	0.00157-0.0031 in
• Piston Ring-to-Groove Clearance - Second Compression Ring - Service	0.04-0.078 mm	0.00157-0.0031 in
• Piston Ring-to-Groove Clearance - Oil Control Ring - Production	0.012-0.2 mm	0.0005-0.0078 in
• Piston Ring-to-Groove Clearance - Oil Control Ring - Service	0.012-0.2 mm	0.0005-0.0078 in
Pistons and Pins		
• Pin - Piston Pin Clearance-to-Piston Pin Bore - Production	0.002-0.01 mm	0.00008-0.0004 in
• Pin - Piston Pin Clearance-to-Piston Pin Bore - Service	0.002-0.015 mm	0.00008-0.0006 in
• Pin - Piston Pin Diameter	23.952-23.955 mm	0.943-0.943 in
• Pin - Piston Pin Fit in Connecting Rod Bore - Production	0.007-0.02 mm	0.00027-0.00078 in
• Pin - Piston Pin Fit in Connecting Rod Bore - Service	0.007-0.022 mm	0.00027-0.00086 in
• Piston - Piston Diameter - Measured Over Skirt Coating	96.002-96.036 mm	3.779-3.78 in
• Piston - Piston to Bore Clearance - Production	-0.036 to +0.016 mm	-0.0014 to +0.0006 in
• Piston - Piston to Bore Clearance - Service Limit with Skirt Coating Worn Off	0.071 mm	0.0028 in
Valve System		
• Valves - Valve Face Angle	45 degrees	
• Valves - Valve Face Width	1.25 mm	0.05 in
• Valves - Valve Lash	Net Lash - No Adjustment	
• Valve Lift - Exhaust - Non Active Fuel Management	12.24 mm	0.488 in

cardiagn.com

• Valve Lift - Exhaust - Active Fuel Management	12.46 mm	0.491 in
• Valve Lift - Intake - Non Active Fuel Management	12.24 mm	0.488 in
• Valve Lift - Intake - Active Fuel Management	12.46 mm	0.491 in
• Valves - Valve Seat Angle	46 degrees	
• Valves - Valve Seat Runout	0.05 mm	0.002 in
• Valves - Valve Seat Width - Exhaust	1.78 mm	0.07 in
• Valves - Seat Width - Intake	1.02 mm	0.04 in
• Valves - Valve Stem Diameter - Production	7.955-7.976 mm	0.313-0.314 in
• Valves - Valve Stem Diameter - Service	7.95 mm	0.313 in
• Valves - Valve Stem-to-Guide Clearance - Production - Exhaust	0.025-0.066 mm	0.001-0.0026 in
• Valves - Valve Stem-to-Guide Clearance - Service - Exhaust	0.093 mm	0.0037 in
• Valves - Valve Stem-to-Guide Clearance - Production - Intake	0.025-0.066 mm	0.001-0.0026 in
• Valves - Valve Stem-to-Guide Clearance - Service - Intake	0.093 mm	0.0037 in
• Rocker Arms - Valve Rocker Arm Ratio	1.70:1	
• Valve Springs - Valve Spring Free Length	52.9 mm	2.08 in
• Valve Springs - Valve Spring Installed Height	45.75 mm	1.8 in
• Valve Springs - Valve Spring Load - Closed	340 N at 45.75 mm	76 lb at 1.8 in
• Valve Springs - Valve Spring Load - Open	980 N at 33.55 mm	220 lb at 1.32 in

ENGINE MECHANICAL SPECIFICATIONS (RPO LY5 VIN J)

Engine Mechanical Specifications (RPO LY5 VIN J)

Application	Specification	
	Metric	English
General		
• Engine Type	V8	
• Displacement	5.3L	325 CID
• RPO	LY5	
• VIN	J	
• Bore	96.0-96.018 mm	3.779-3.78 in
• Stroke	92.0 mm	3.622 in
• Compression Ratio	9.95:1	

cardiagn.com

• Firing Order	1-8-7-2-6-5-4-3	
• Active Fuel Management Cylinders	1-4-6-7	
• Spark Plug Gap	1.02 mm	0.04 in
Block		
• Camshaft Bearing Bore 1 and 5 Diameter	59.58-59.63 mm	2.345-2.347 in
• Camshaft Bearing Bore 2 and 4 Diameter	59.08-59.13 mm	2.325-2.327 in
• Camshaft Bearing Bore 3 Diameter	58.58-58.63 mm	2.306-2.308 in
• Crankshaft Main Bearing Bore Diameter	69.871-69.889 mm	2.75-2.751 in
• Crankshaft Main Bearing Bore Out-of-Round	0.006 mm	0.0002 in
• Cylinder Bore Diameter	96.0-96.018 mm	3.779-3.78 in
• Cylinder Head Deck Height - Measuring from the Centerline of Crankshaft to the Deck Face	234.57-234.82 mm	9.235-9.245 in
• Cylinder Head Deck Surface Flatness - Measured Within a 152.4 mm (6.0 in) Area	0.11 mm	0.004 in
• Cylinder Head Deck Surface Flatness - Measuring the Overall Length of the Block Deck	0.22 mm	0.008 in
• Valve Lifter Bore Diameter	21.417-21.443 mm	0.843-0.844 in
Camshaft		
• Camshaft End Play	0.025-0.305 mm	0.001-0.012 in
• Camshaft Journal Diameter	54.99-55.04 mm	2.164-2.166 in
• Camshaft Journal Out-of-Round	0.025 mm	0.001 in
• Camshaft Lobe Lift - Exhaust - Non Active Fuel Management Cylinders	7.2 mm	0.283 in
• Camshaft Lobe Lift - Exhaust - Active Fuel Management Cylinders	7.33 mm	0.289 in
• Camshaft Lobe Lift - Intake - Non Active Fuel Management Cylinders	7.2 mm	0.283 in
• Camshaft Lobe Lift - Intake - Active Fuel Management Cylinders	7.33 mm	0.289 in
• Camshaft Runout - Measured at the Intermediate Journals	0.05 mm	0.002 in
Connecting Rod		
• Connecting Rod Bearing Clearance - Production	0.023-0.065 mm	0.0009-0.0025 in
• Connecting Rod Bearing Clearance - Service	0.023-0.076 mm	0.0009-0.003 in
• Connecting Rod Bore Diameter - Bearing End	56.505-56.525 mm	2.224-2.225 in
• Connecting Rod Bore Out-of-Round - Bearing End -		

cardiagn.com

Production	0.004-0.008 mm	0.00015-0.0003 in
• Connecting Rod Bore Out-of-Round - Bearing End - Service	0.004-0.008 mm	0.00015-0.0003 in
• Connecting Rod Side Clearance	0.11-0.51 mm	0.00433-0.02 in
Crankshaft		
• Connecting Rod Journal Diameter - Production	53.318-53.338 mm	2.0991-2.0999 in
• Connecting Rod Journal Diameter - Service	53.308 mm	2.0987 in
• Connecting Rod Journal Out-of-Round - Production	0.005 mm	0.0002 in
• Connecting Rod Journal Out-of-Round - Service	0.01 mm	0.0004 in
• Connecting Rod Journal Taper - Maximum for 1/2 of Journal Length - Production	0.005 mm	0.0002 in
• Connecting Rod Journal Taper - Maximum for 1/2 of Journal Length - Service	0.02 mm	0.00078 in
• Crankshaft End Play	0.04-0.2 mm	0.0015-0.0078 in
• Crankshaft Main Bearing Clearance - Production	0.02-0.052 mm	0.0008-0.0021 in
• Crankshaft Main Bearing Clearance - Service	0.02-0.065 mm	0.0008-0.0025 in
• Crankshaft Main Journal Diameter - Production	64.992-65.008 mm	2.558-2.559 in
• Crankshaft Main Journal Diameter - Service	64.992 mm	2.558 in
• Crankshaft Main Journal Out-of-Round - Production	0.003 mm	0.000118 in
• Crankshaft Main Journal Out-of-Round - Service	0.008 mm	0.0003 in
• Crankshaft Main Journal Taper - Production	0.01 mm	0.0004 in
• Crankshaft Main Journal Taper - Service	0.02 mm	0.00078 in
• Crankshaft Rear Flange Runout	0.05 mm	0.002 in
• Crankshaft Reluctor Ring Runout - Measured 1.0 mm (0.04 in) Below Tooth Diameter	0.7 mm	0.028 in
• Crankshaft Thrust Surface - Production	26.14-26.22 mm	1.029-1.0315 in
• Crankshaft Thrust Surface - Service	26.22 mm	1.0315 in
• Crankshaft Thrust Surface Runout	0.025 mm	0.001 in
Cylinder Head		
• Cylinder Head Height/Thickness - Measured from the Cylinder Head Deck to the Valve Rocker Arm Cover Seal Surface	120.2 mm	4.732 in
• Surface Flatness - Block Deck - Measured Within a 152.4 mm (6.0 in) Area	0.08 mm	0.003 in
• Surface Flatness - Block Deck - Measuring the Overall Length of the Cylinder Head	0.1 mm	0.004 in

cardiagn.com

• Surface Flatness - Exhaust Manifold Deck	0.13 mm	0.005 in
• Surface Flatness - Intake Manifold Deck	0.08 mm	0.0031 in
• Valve Guide Installed Height - Measured from the Spring Seat Surface to the Top of the Guide	17.32 mm	0.682 in
Intake Manifold		
• Surface Flatness - Measured at Gasket Sealing Surfaces and Measured Within a 200 mm (7.87 in) Area that Includes 2 Runner Port Openings	0.3 mm	0.118 in
Lubrication System		
• Oil Capacity - with Filter	5.68 liters	6.0 quarts
• Oil Capacity - without Filter	5.20 liters	5.5 quarts
• Oil Pressure - Minimum - Hot	41 kPa at 1,000 engine RPM 124 kPa at 2,000 engine RPM 165 kPa at 4,000 engine RPM	6 psig at 1,000 engine RPM 18 psig at 2,000 engine RPM 24 psig at 4,000 engine RPM
• Active Fuel Management Relief Valve Oil Pressure - as Measured at Oil Pressure Sensor Location	379-517 kPa Maximum	55-75 psig Maximum
Oil Pan		
• Front Cover Alignment - at Oil Pan Surface	0.0-0.5 mm	0.0-0.02 in
• Crankshaft Rear Oil Seal Housing Alignment - at Oil Pan Surface	0.0-0.5 mm	0.0-0.02 in
• Oil Pan Alignment - to Rear of Engine Block at Transmission Bell Housing Mounting Surface	0.0-0.1 mm	0.0-0.004 in
Piston Rings		
• Piston Ring End Gap - First Compression Ring - Measured in Cylinder Bore - Production	0.23-0.44 mm	0.009-0.017 in
• Piston Ring End Gap - First Compression Ring - Measured in Cylinder Bore - Service	0.23-0.5 mm	0.009-0.0196 in
• Piston Ring End Gap - Second Compression Ring - Measured in Cylinder Bore - Production	0.44-0.7 mm	0.017-0.027 in
• Piston Ring End Gap - Second Compression Ring - Measured in Cylinder Bore - Service	0.44-0.76 mm	0.0173-0.03 in
• Piston Ring End Gap - Oil Control Ring - Measured in Cylinder Bore - Production	0.18-0.75 mm	0.007-0.029 in
• Piston Ring End Gap - Oil Control Ring - Measured in Cylinder Bore - Service	0.18-0.81 mm	0.007-0.032 in
• Piston Ring-to-Groove Clearance - First Compression	0.04-0.085 mm	0.00157-0.00335 in

cardiagn.com

Ring - Production		
• Piston Ring-to-Groove Clearance - First Compression Ring - Service	0.04-0.085 mm	0.00157-0.00335 in
• Piston Ring-to-Groove Clearance - Second Compression Ring - Production	0.04-0.078 mm	0.00157-0.0031 in
• Piston Ring-to-Groove Clearance - Second Compression Ring - Service	0.04-0.078 mm	0.00157-0.0031 in
• Piston Ring-to-Groove Clearance - Oil Control Ring - Production	0.012-0.2 mm	0.0005-0.0078 in
• Piston Ring-to-Groove Clearance - Oil Control Ring - Service	0.012-0.2 mm	0.0005-0.0078 in
Pistons and Pins		
• Pin - Piston Pin Clearance-to-Piston Pin Bore - Production	0.002-0.01 mm	0.00008-0.0004 in
• Pin - Piston Pin Clearance-to-Piston Pin Bore - Service	0.002-0.015 mm	0.00008-0.0006 in
• Pin - Piston Pin Diameter	23.952-23.955 mm	0.943-0.943 in
• Pin - Piston Pin Fit in Connecting Rod Bore - Production	0.007-0.02 mm	0.00027-0.00078 in
• Pin - Piston Pin Fit in Connecting Rod Bore - Service	0.007-0.022 mm	0.00027-0.00086 in
• Piston - Piston Diameter - Measured Over Skirt Coating	96.002-96.036 mm	3.779-3.78 in
• Piston - Piston to Bore Clearance - Production	-0.036 to +0.016 mm	-0.0014 to +0.0006 in
• Piston - Piston to Bore Clearance - Service Limit with Skirt Coating Worn Off	0.071 mm	0.0028 in
Valve System		
• Valves - Valve Face Angle	45 degrees	
• Valves - Valve Face Width	1.25 mm	0.05 in
• Valves - Valve Lash	Net Lash - No Adjustment	
• Valve Lift - Exhaust - Non Active Fuel Management	12.24 mm	0.488 in
• Valve Lift - Exhaust - Active Fuel Management	12.46 mm	0.491 in
• Valve Lift - Intake - Non Active Fuel Management	12.24 mm	0.488 in
• Valve Lift - Intake - Active Fuel Management	12.46 mm	0.491 in
• Valves - Valve Seat Angle	46 degrees	
• Valves - Valve Seat Runout	0.05 mm	0.002 in
• Valves - Valve Seat Width - Exhaust	1.78 mm	0.07 in

cardiagn.com

• Valves - Seat Width - Intake	1.02 mm	0.04 in
• Valves - Valve Stem Diameter - Production	7.955-7.976 mm	0.313-0.314 in
• Valves - Valve Stem Diameter - Service	7.95 mm	0.313 in
• Valves - Valve Stem-to-Guide Clearance - Production - Exhaust	0.025-0.066 mm	0.001-0.0026 in
• Valves - Valve Stem-to-Guide Clearance - Service - Exhaust	0.093 mm	0.0037 in
• Valves - Valve Stem-to-Guide Clearance - Production - Intake	0.025-0.066 mm	0.001-0.0026 in
• Valves - Valve Stem-to-Guide Clearance - Service - Intake	0.093 mm	0.0037 in
• Rocker Arms - Valve Rocker Arm Ratio	1.70:1	
• Valve Springs - Valve Spring Free Length	52.9 mm	2.08 in
• Valve Springs - Valve Spring Installed Height	45.75 mm	1.8 in
• Valve Springs - Valve Spring Load - Closed	340 N at 45.75 mm	76 lb at 1.8 in
• Valve Springs - Valve Spring Load - Open	980 N at 33.55 mm	220 lb at 1.32 in

ENGINE MECHANICAL SPECIFICATIONS (RPO LC9 VIN 3)

Engine Mechanical Specifications (RPO LC9 VIN 3)

Application	Specification	
	Metric	English
General		
• Engine Type	V8	
• Displacement	5.3L	325 CID
• RPO	LC9	
• VIN	3	
• Bore	96.0-96.018 mm	3.779-3.78 in
• Stroke	92.0 mm	3.622 in
• Compression Ratio	9.95:1	
• Firing Order	1-8-7-2-6-5-4-3	
• Active Fuel Management Cylinders	1-4-6-7	
• Spark Plug Gap	1.02 mm	0.04 in
Block		
• Camshaft Bearing Bore 1 and 5 Diameter	59.58-59.63 mm	2.345-2.347 in
• Camshaft Bearing Bore 2 and 4 Diameter	59.08-59.13 mm	2.325-2.327 in

cardiagn.com

• Camshaft Bearing Bore 3 Diameter	58.58-58.63 mm	2.306-2.308 in
• Crankshaft Main Bearing Bore Diameter	69.871-69.889 mm	2.75-2.751 in
• Crankshaft Main Bearing Bore Out-of-Round	0.006 mm	0.0002 in
• Cylinder Bore Diameter	96.0-96.018 mm	3.779-3.78 in
• Cylinder Head Deck Height - Measuring from the Centerline of Crankshaft to the Deck Face	234.57-234.82 mm	9.235-9.245 in
• Cylinder Head Deck Surface Flatness - Measured Within a 152.4 mm (6.0 in) Area	0.11 mm	0.004 in
• Cylinder Head Deck Surface Flatness - Measuring the Overall Length of the Block Deck	0.22 mm	0.008 in
• Valve Lifter Bore Diameter	21.417-21.443 mm	0.843-0.844 in
Camshaft		
• Camshaft End Play	0.025-0.305 mm	0.001-0.012 in
• Camshaft Journal Diameter	54.99-55.04 mm	2.164-2.166 in
• Camshaft Journal Out-of-Round	0.025 mm	0.001 in
• Camshaft Lobe Lift - Exhaust - Non Active Fuel Management Cylinders	7.2 mm	0.283 in
• Camshaft Lobe Lift - Exhaust - Active Fuel Management Cylinders	7.33 mm	0.289 in
• Camshaft Lobe Lift - Intake - Non Active Fuel Management Cylinders	7.2 mm	0.283 in
• Camshaft Lobe Lift - Intake - Active Fuel Management Cylinders	7.33 mm	0.289 in
• Camshaft Runout - Measured at the Intermediate Journals	0.05 mm	0.002 in
Connecting Rod		
• Connecting Rod Bearing Clearance - Production	0.023-0.065 mm	0.0009-0.0025 in
• Connecting Rod Bearing Clearance - Service	0.023-0.076 mm	0.0009-0.003 in
• Connecting Rod Bore Diameter - Bearing End	56.505-56.525 mm	2.224-2.225 in
• Connecting Rod Bore Out-of-Round - Bearing End - Production	0.004-0.008 mm	0.00015-0.0003 in
• Connecting Rod Bore Out-of-Round - Bearing End - Service	0.004-0.008 mm	0.00015-0.0003 in
• Connecting Rod Side Clearance	0.11-0.51 mm	0.00433-0.02 in
Crankshaft		
• Connecting Rod Journal Diameter - Production	53.318-53.338 mm	2.0991-2.0999 in

cardiagn.com

• Connecting Rod Journal Diameter - Service	53.308 mm	2.0987 in
• Connecting Rod Journal Out-of-Round - Production	0.005 mm	0.0002 in
• Connecting Rod Journal Out-of-Round - Service	0.01 mm	0.0004 in
• Connecting Rod Journal Taper - Maximum for 1/2 of Journal Length - Production	0.005 mm	0.0002 in
• Connecting Rod Journal Taper - Maximum for 1/2 of Journal Length - Service	0.02 mm	0.00078 in
• Crankshaft End Play	0.04-0.2 mm	0.0015-0.0078 in
• Crankshaft Main Bearing Clearance - Production	0.02-0.052 mm	0.0008-0.0021 in
• Crankshaft Main Bearing Clearance - Service	0.02-0.065 mm	0.0008-0.0025 in
• Crankshaft Main Journal Diameter - Production	64.992-65.008 mm	2.558-2.559 in
• Crankshaft Main Journal Diameter - Service	64.992 mm	2.558 in
• Crankshaft Main Journal Out-of-Round - Production	0.003 mm	0.000118 in
• Crankshaft Main Journal Out-of-Round - Service	0.008 mm	0.0003 in
• Crankshaft Main Journal Taper - Production	0.01 mm	0.0004 in
• Crankshaft Main Journal Taper - Service	0.02 mm	0.00078 in
• Crankshaft Rear Flange Runout	0.05 mm	0.002 in
• Crankshaft Reluctor Ring Runout - Measured 1.0 mm (0.04 in) Below Tooth Diameter	0.7 mm	0.028 in
• Crankshaft Thrust Surface - Production	26.14-26.22 mm	1.029-1.0315 in
• Crankshaft Thrust Surface - Service	26.22 mm	1.0315 in
• Crankshaft Thrust Surface Runout	0.025 mm	0.001 in
Cylinder Head		
• Cylinder Head Height/Thickness - Measured from the Cylinder Head Deck to the Valve Rocker Arm Cover Seal Surface	120.2 mm	4.732 in
• Surface Flatness - Block Deck - Measured Within a 152.4 mm (6.0 in) Area	0.08 mm	0.003 in
• Surface Flatness - Block Deck - Measuring the Overall Length of the Cylinder Head	0.1 mm	0.004 in
• Surface Flatness - Exhaust Manifold Deck	0.13 mm	0.005 in
• Surface Flatness - Intake Manifold Deck	0.08 mm	0.0031 in
• Valve Guide Installed Height - Measured from the Spring Seat Surface to the Top of the Guide	17.32 mm	0.682 in
Intake Manifold		

cardiagn.com

• Surface Flatness - Measured at Gasket Sealing Surfaces and Measured Within a 200 mm (7.87 in) Area that Includes 2 Runner Port Openings	0.3 mm	0.118 in
Lubrication System		
• Oil Capacity - with Filter	5.68 liters	6.0 quarts
• Oil Capacity - without Filter	5.20 liters	5.5 quarts
• Oil Pressure - Minimum - Hot	41 kPa at 1,000 engine RPM 124 kPa at 2,000 engine RPM 165 kPa at 4,000 engine RPM	6 psig at 1,000 engine RPM 18 psig at 2,000 engine RPM 24 psig at 4,000 engine RPM
• Active Fuel Management Relief Valve Oil Pressure - as Measured at Oil Pressure Sensor Location	379-517 kPa Maximum	55-75 psig Maximum
Oil Pan		
• Front Cover Alignment - at Oil Pan Surface	0.0-0.5 mm	0.0-0.02 in
• Crankshaft Rear Oil Seal Housing Alignment - at Oil Pan Surface	0.0-0.5 mm	0.0-0.02 in
• Oil Pan Alignment - to Rear of Engine Block at Transmission Bell Housing Mounting Surface	0.0-0.1 mm	0.0-0.004 in
Piston Rings		
• Piston Ring End Gap - First Compression Ring - Measured in Cylinder Bore - Production	0.23-0.44 mm	0.009-0.017 in
• Piston Ring End Gap - First Compression Ring - Measured in Cylinder Bore - Service	0.23-0.5 mm	0.009-0.0196 in
• Piston Ring End Gap - Second Compression Ring - Measured in Cylinder Bore - Production	0.44-0.7 mm	0.017-0.027 in
• Piston Ring End Gap - Second Compression Ring - Measured in Cylinder Bore - Service	0.44-0.76 mm	0.0173-0.03 in
• Piston Ring End Gap - Oil Control Ring - Measured in Cylinder Bore - Production	0.18-0.75 mm	0.007-0.029 in
• Piston Ring End Gap - Oil Control Ring - Measured in Cylinder Bore - Service	0.18-0.81 mm	0.007-0.032 in
• Piston Ring-to-Groove Clearance - First Compression Ring - Production	0.04-0.085 mm	0.00157-0.00335 in
• Piston Ring-to-Groove Clearance - First Compression Ring - Service	0.04-0.085 mm	0.00157-0.00335 in
• Piston Ring-to-Groove Clearance - Second Compression Ring - Production	0.04-0.078 mm	0.00157-0.0031 in

cardiagn.com

• Piston Ring-to-Groove Clearance - Second Compression Ring - Service	0.04-0.078 mm	0.00157-0.0031 in
• Piston Ring-to-Groove Clearance - Oil Control Ring - Production	0.012-0.2 mm	0.0005-0.0078 in
• Piston Ring-to-Groove Clearance - Oil Control Ring - Service	0.012-0.2 mm	0.0005-0.0078 in
Pistons and Pins		
• Pin - Piston Pin Clearance-to-Piston Pin Bore - Production	0.002-0.01 mm	0.00008-0.0004 in
• Pin - Piston Pin Clearance-to-Piston Pin Bore - Service	0.002-0.015 mm	0.00008-0.0006 in
• Pin - Piston Pin Diameter	23.952-23.955 mm	0.943-0.943 in
• Pin - Piston Pin Fit in Connecting Rod Bore - Production	0.007-0.02 mm	0.00027-0.00078 in
• Pin - Piston Pin Fit in Connecting Rod Bore - Service	0.007-0.022 mm	0.00027-0.00086 in
• Piston - Piston Diameter - Measured Over Skirt Coating	96.002-96.036 mm	3.779-3.78 in
• Piston - Piston to Bore Clearance - Production	-0.036 to +0.016 mm	-0.0014 to +0.0006 in
• Piston - Piston to Bore Clearance - Service Limit with Skirt Coating Worn Off	0.071 mm	0.0028 in
Valve System		
• Valves - Valve Face Angle	45 degrees	
• Valves - Valve Face Width	1.25 mm	0.05 in
• Valves - Valve Lash	Net Lash - No Adjustment	
• Valve Lift - Exhaust - Non Active Fuel Management	12.24 mm	0.488 in
• Valve Lift - Exhaust - Active Fuel Management	12.46 mm	0.491 in
• Valve Lift - Intake - Non Active Fuel Management	12.24 mm	0.488 in
• Valve Lift - Intake - Active Fuel Management	12.46 mm	0.491 in
• Valves - Valve Seat Angle	46 degrees	
• Valves - Valve Seat Runout	0.05 mm	0.002 in
• Valves - Valve Seat Width - Exhaust	1.78 mm	0.07 in
• Valves - Seat Width - Intake	1.02 mm	0.04 in
• Valves - Valve Stem Diameter - Production	7.955-7.976 mm	0.313-0.314 in
• Valves - Valve Stem Diameter - Service	7.95 mm	0.313 in
• Valves - Valve Stem-to-Guide Clearance - Production - Exhaust	0.025-0.066 mm	0.001-0.0026 in

cardiagn.com

• Valves - Valve Stem-to-Guide Clearance - Service - Exhaust	0.093 mm	0.0037 in
• Valves - Valve Stem-to-Guide Clearance - Production - Intake	0.025-0.066 mm	0.001-0.0026 in
• Valves - Valve Stem-to-Guide Clearance - Service - Intake	0.093 mm	0.0037 in
• Rocker Arms - Valve Rocker Arm Ratio	1.70:1	
• Valve Springs - Valve Spring Free Length	52.9 mm	2.08 in
• Valve Springs - Valve Spring Installed Height	45.75 mm	1.8 in
• Valve Springs - Valve Spring Load - Closed	340 N at 45.75 mm	76 lb at 1.8 in
• Valve Springs - Valve Spring Load - Open	980 N at 33.55 mm	220 lb at 1.32 in

ENGINE MECHANICAL SPECIFICATIONS (RPO L76 VIN Y)

Engine Mechanical Specifications (RPO L76 VIN Y)

Application	Specification	
	Metric	English
General		
• Engine Type	V8	
• Displacement	6.0L	364 CID
• RPO	L76	
• VIN	Y	
• Bore	101.618-101.636 mm	4.0007-4.0017 in
• Stroke	92.0 mm	3.622 in
• Compression Ratio	9.67:1	
• Firing Order	1-8-7-2-6-5-4-3	
• Active Fuel Management Cylinders	1-4-6-7	
• Spark Plug Gap	1.02 mm	0.04 in
Block		
• Camshaft Bearing Bore 1 and 5 Diameter	59.58-59.63 mm	2.345-2.347 in
• Camshaft Bearing Bore 2 and 4 Diameter	59.08-59.13 mm	2.325-2.327 in
• Camshaft Bearing Bore 3 Diameter	58.58-58.63 mm	2.306-2.308 in
• Crankshaft Main Bearing Bore Diameter	69.871-69.889 mm	2.75-2.751 in
• Crankshaft Main Bearing Bore Out-of-Round	0.006 mm	0.0002 in
• Cylinder Bore Diameter	101.618-101.636 mm	4.0007-4.0017 in

cardiagn.com

• Cylinder Head Deck Height - Measuring from the Centerline of Crankshaft to the Deck Face	234.57-234.82 mm	9.235-9.245 in
• Cylinder Head Deck Surface Flatness - Measured Within a 152.4 mm (6.0 in) Area	0.11 mm	0.004 in
• Cylinder Head Deck Surface Flatness - Measuring the Overall Length of the Block Deck	0.22 mm	0.008 in
• Valve Lifter Bore Diameter	21.417-21.443 mm	0.843-0.844 in
Camshaft		
• Camshaft End Play	0.025-0.305 mm	0.001-0.012 in
• Camshaft Journal Diameter	54.99-55.04 mm	2.164-2.166 in
• Camshaft Journal Out-of-Round	0.025 mm	0.001 in
• Camshaft Lobe Lift - Exhaust - Non Active Fuel Management Cylinders	7.17 mm	0.282 in
• Camshaft Lobe Lift - Exhaust - Active Fuel Management Cylinders	7.3 mm	0.287 in
• Camshaft Lobe Lift - Intake - Non Active Fuel Management Cylinders	7.08 mm	0.279 in
• Camshaft Lobe Lift - Intake - Active Fuel Management Cylinders	7.2 mm	0.283 in
• Camshaft Runout - Measured at the Intermediate Journals	0.05 mm	0.002 in
Connecting Rod		
• Connecting Rod Bearing Clearance - Production	0.023-0.065 mm	0.0009-0.0025 in
• Connecting Rod Bearing Clearance - Service	0.023-0.076 mm	0.0009-0.003 in
• Connecting Rod Bore Diameter - Bearing End	56.505-56.525 mm	2.224-2.225 in
• Connecting Rod Bore Out-of-Round - Bearing End - Production	0.004-0.008 mm	0.00015-0.0003 in
• Connecting Rod Bore Out-of-Round - Bearing End - Service	0.004-0.008 mm	0.00015-0.0003 in
• Connecting Rod Side Clearance	0.11-0.51 mm	0.00433-0.02 in
Crankshaft		
• Connecting Rod Journal Diameter - Production	53.318-53.338 mm	2.0991-2.0999 in
• Connecting Rod Journal Diameter - Service	53.308 mm	2.0987 in
• Connecting Rod Journal Out-of-Round - Production	0.005 mm	0.0002 in
• Connecting Rod Journal Out-of-Round - Service	0.01 mm	0.0004 in
• Connecting Rod Journal Taper - Maximum for 1/2 of Journal Length - Production	0.005 mm	0.0002 in

cardiagn.com

• Connecting Rod Journal Taper - Maximum for 1/2 of Journal Length - Service	0.02 mm	0.00078 in
• Crankshaft End Play	0.04-0.2 mm	0.0015-0.0078 in
• Crankshaft Main Bearing Clearance - Production	0.02-0.052 mm	0.0008-0.0021 in
• Crankshaft Main Bearing Clearance - Service	0.02-0.065 mm	0.0008-0.0025 in
• Crankshaft Main Journal Diameter - Production	64.992-65.008 mm	2.558-2.559 in
• Crankshaft Main Journal Diameter - Service	64.992 mm	2.558 in
• Crankshaft Main Journal Out-of-Round - Production	0.003 mm	0.000118 in
• Crankshaft Main Journal Out-of-Round - Service	0.008 mm	0.0003 in
• Crankshaft Main Journal Taper - Production	0.01 mm	0.0004 in
• Crankshaft Main Journal Taper - Service	0.02 mm	0.00078 in
• Crankshaft Rear Flange Runout	0.05 mm	0.002 in
• Crankshaft Reluctor Ring Runout - Measured 1.0 mm (0.04 in) Below Tooth Diameter	0.7 mm	0.028 in
• Crankshaft Thrust Surface - Production	26.14-26.22 mm	1.029-1.0315 in
• Crankshaft Thrust Surface - Service	26.22 mm	1.0315 in
• Crankshaft Thrust Surface Runout	0.025 mm	0.001 in
Cylinder Head		
• Cylinder Head Height/Thickness - Measured from the Cylinder Head Deck to the Valve Rocker Arm Cover Seal Surface	120.2 mm	4.732 in
• Surface Flatness - Block Deck - Measured Within a 152.4 mm (6.0 in) Area	0.08 mm	0.003 in
• Surface Flatness - Block Deck - Measuring the Overall Length of the Cylinder Head	0.1 mm	0.004 in
• Surface Flatness - Exhaust Manifold Deck	0.13 mm	0.005 in
• Surface Flatness - Intake Manifold Deck	0.08 mm	0.0031 in
• Valve Guide Installed Height - Measured from the Spring Seat Surface to the Top of the Guide	17.32 mm	0.682 in
Intake Manifold		
• Surface Flatness - Measured at Gasket Sealing Surfaces and Measured Within a 200 mm (7.87 in) Area that Includes 2 Runner Port Openings	0.3 mm	0.118 in
Lubrication System		
• Oil Capacity - with Filter	5.68 liters	6.0 quarts
• Oil Capacity - without Filter	5.20 liters	5.5 quarts

cardiagn.com

• Oil Pressure - Minimum - Hot	41 kPa at 1,000 engine RPM 124 kPa at 2,000 engine RPM 165 kPa at 4,000 engine RPM	6 psig at 1,000 engine RPM 18 psig at 2,000 engine RPM 24 psig at 4,000 engine RPM
• Active Fuel Management Relief Valve Oil Pressure - as Measured at Oil Pressure Sensor Location	379-517 kPa Maximum	55-75 psig Maximum
Oil Pan		
• Front Cover Alignment - at Oil Pan Surface	0.0-0.5 mm	0.0-0.02 in
• Crankshaft Rear Oil Seal Housing Alignment - at Oil Pan Surface	0.0-0.5 mm	0.0-0.02 in
• Oil Pan Alignment - to Rear of Engine Block at Transmission Bell Housing Mounting Surface	0.0-0.1 mm	0.0-0.004 in
Piston Rings		
• Piston Ring End Gap - First Compression Ring - Measured in Cylinder Bore - Production	0.23-0.44 mm	0.009-0.017 in
• Piston Ring End Gap - First Compression Ring - Measured in Cylinder Bore - Service	0.23-0.5 mm	0.009-0.0196 in
• Piston Ring End Gap - Second Compression Ring - Measured in Cylinder Bore - Production	0.44-0.7 mm	0.017-0.027 in
• Piston Ring End Gap - Second Compression Ring - Measured in Cylinder Bore - Service	0.44-0.76 mm	0.0173-0.03 in
• Piston Ring End Gap - Oil Control Ring - Measured in Cylinder Bore - Production	0.18-0.75 mm	0.007-0.029 in
• Piston Ring End Gap - Oil Control Ring - Measured in Cylinder Bore - Service	0.18-0.81 mm	0.007-0.032 in
• Piston Ring-to-Groove Clearance - First Compression Ring - Production	0.04-0.085 mm	0.00157-0.00335 in
• Piston Ring-to-Groove Clearance - First Compression Ring - Service	0.04-0.085 mm	0.00157-0.00335 in
• Piston Ring-to-Groove Clearance - Second Compression Ring - Production	0.04-0.078 mm	0.00157-0.0031 in
• Piston Ring-to-Groove Clearance - Second Compression Ring - Service	0.04-0.078 mm	0.00157-0.0031 in
• Piston Ring-to-Groove Clearance - Oil Control Ring - Production	0.012-0.2 mm	0.0005-0.0078 in
• Piston Ring-to-Groove Clearance - Oil Control Ring - Service	0.012-0.2 mm	0.0005-0.0078 in
Pistons and Pins		

cardiagn.com

• Pin - Piston Pin Clearance- to-Piston Pin Bore - Production	0.002-0.01 mm	0.00008-0.0004 in
• Pin - Piston Pin Clearance-to-Piston Pin Bore - Service	0.002-0.015 mm	0.00008-0.0006 in
• Pin - Piston Pin Diameter	23.952-23.955 mm	0.943-0.943 in
• Pin - Piston Pin Fit in Connecting Rod Bore - Production	0.007-0.02 mm	0.00027-0.00078 in
• Pin - Piston Pin Fit in Connecting Rod Bore - Service	0.007-0.022 mm	0.00027-0.00086 in
• Piston - Piston Diameter - Measured Over Coating	96.002-96.036 mm	3.779-3.78 in
• Piston - Piston to Bore Clearance - Production	-0.036 to +0.016 mm	-0.0014 to +0.0006 in
• Piston - Piston to Bore Clearance - Service Limit With Skirt Coating Worn Off	0.071 mm	0.0028 in
Valve System		
• Valves - Valve Face Angle	45 degrees	
• Valves - Valve Face Width	1.25 mm	0.05 in
• Valves - Valve Lash	Net Lash - No Adjustment	
• Valve Lift - Exhaust - Non Active Fuel Management	12.19 mm	0.480 in
• Valve Lift - Exhaust - Active Fuel Management	12.41 mm	0.489 in
• Valve Lift - Intake - Non Active Fuel Management	12.04 mm	0.474 in
• Valve Lift - Intake - Active Fuel Management	12.24 mm	0.488 in
• Valves - Valve Seat Angle	46 degrees	
• Valves - Valve Seat Runout	0.05 mm	0.002 in
• Valves - Valve Seat Width - Exhaust	1.78 mm	0.07 in
• Valves - Valve Seat Width - Intake	1.02 mm	0.04 in
• Valves - Valve Stem Diameter - Production	7.955-7.976 mm	0.313-0.314 in
• Valves - Valve Stem Diameter - Service	7.95 mm	0.313 in
• Valves - Valve Stem-to-Guide Clearance - Production - Exhaust	0.025-0.066 mm	0.001-0.0026 in
• Valves - Valve Stem-to-Guide Clearance - Service - Exhaust	0.093 mm	0.0037 in
• Valves - Valve Stem-to-Guide Clearance - Production - Intake	0.025-0.066 mm	0.001-0.0026 in
• Valves - Valve Stem-to-Guide Clearance - Service - Intake	0.093 mm	0.0037 in
• Rocker Arms - Valve Rocker Arm Ratio	1.70:1	

cardiagn.com

• Valve Springs - Valve Spring Free Length	52.9 mm	2.08 in
• Valve Springs - Valve Spring Installed Height	45.75 mm	1.8 in
• Valve Springs - Valve Spring Load - Closed	340 N at 45.75 mm	76 lb at 1.8 in
• Valve Springs - Valve Spring Load - Open	980 N at 33.55 mm	220 lb at 1.32 in

ENGINE MECHANICAL SPECIFICATIONS (RPO LY6 VIN K)

Engine Mechanical Specifications (RPO LY6 VIN K)

Application	Specification	
	Metric	English
General		
• Engine Type	V8	
• Displacement	6.0L	364 CID
• RPO	LY6	
• VIN	K	
• Bore	101.618-101.636 mm	4.0007-4.0017 in
• Stroke	92.0 mm	3.622 in
• Compression Ratio	9.67:1	
• Firing Order	1-8-7-2-6-5-4-3	
• Spark Plug Gap	1.02 mm	0.04 in
Block		
• Camshaft Bearing Bore 1 and 5 Diameter	59.58-59.63 mm	2.345-2.347 in
• Camshaft Bearing Bore 2 and 4 Diameter	59.08-59.13 mm	2.325-2.327 in
• Camshaft Bearing Bore 3 Diameter	58.58-58.63 mm	2.306-2.308 in
• Crankshaft Main Bearing Bore Diameter	69.871-69.889 mm	2.75-2.751 in
• Crankshaft Main Bearing Bore Out-of-Round	0.006 mm	0.0002 in
• Cylinder Bore Diameter	101.618-101.636 mm	4.0007-4.0017 in
• Cylinder Head Deck Height - Measuring from the Centerline of Crankshaft to the Deck Face	234.57-234.82 mm	9.235-9.245 in
• Cylinder Head Deck Surface Flatness - Measured Within a 152.4 mm (6.0 in) Area	0.11 mm	0.004 in
• Cylinder Head Deck Surface Flatness - Measuring the Overall Length of the Block Deck	0.22 mm	0.008 in
• Valve Lifter Bore Diameter	21.417-21.443 mm	0.843-0.844 in
Camshaft		
• Camshaft End Play	0.025-0.305 mm	0.001-0.012 in

cardiagn.com

• Camshaft Journal Diameter	54.99-55.04 mm	2.164-2.166 in
• Camshaft Journal Out-of-Round	0.025 mm	0.001 in
• Camshaft Lobe Lift - Exhaust	7.13 mm	0.281 in
• Camshaft Lobe Lift - Intake	6.96 mm	0.274 in
• Camshaft Runout - Measured at the Intermediate Journals	0.05 mm	0.002 in
Connecting Rod		
• Connecting Rod Bearing Clearance - Production	0.023-0.065 mm	0.0009-0.0025 in
• Connecting Rod Bearing Clearance - Service	0.023-0.076 mm	0.0009-0.003 in
• Connecting Rod Bore Diameter - Bearing End	56.505-56.525 mm	2.224-2.225 in
• Connecting Rod Bore Out-of-Round - Bearing End - Production	0.004-0.008 mm	0.00015-0.0003 in
• Connecting Rod Bore Out-of-Round - Bearing End - Service	0.004-0.008 mm	0.00015-0.0003 in
• Connecting Rod Side Clearance	0.11-0.51 mm	0.00433-0.02 in
Crankshaft		
• Connecting Rod Journal Diameter - Production	53.318-53.338 mm	2.0991-2.0999 in
• Connecting Rod Journal Diameter - Service	53.308 mm	2.0987 in
• Connecting Rod Journal Out-of-Round - Production	0.005 mm	0.0002 in
• Connecting Rod Journal Out-of-Round - Service	0.01 mm	0.0004 in
• Connecting Rod Journal Taper - Maximum for 1/2 of Journal Length - Production	0.005 mm	0.0002 in
• Connecting Rod Journal Taper - Maximum for 1/2 of Journal Length - Service	0.02 mm	0.00078 in
• Crankshaft End Play	0.04-0.2 mm	0.0015-0.0078 in
• Crankshaft Main Bearing Clearance - Production	0.02-0.052 mm	0.0008-0.0021 in
• Crankshaft Main Bearing Clearance - Service	0.02-0.065 mm	0.0008-0.0025 in
• Crankshaft Main Journal Diameter - Production	64.992-65.008 mm	2.558-2.559 in
• Crankshaft Main Journal Diameter - Service	64.992 mm	2.558 in
• Crankshaft Main Journal Out-of-Round - Production	0.003 mm	0.000118 in
• Crankshaft Main Journal Out-of-Round - Service	0.008 mm	0.0003 in
• Crankshaft Main Journal Taper - Production	0.01 mm	0.0004 in
• Crankshaft Main Journal Taper - Service	0.02 mm	0.00078 in
• Crankshaft Rear Flange Runout	0.05 mm	0.002 in
• Crankshaft Reluctor Ring Runout - Measured 1.0 mm		

cardiagn.com

(0.04 in) Below Tooth Diameter	0.7 mm	0.028 in
• Crankshaft Thrust Surface - Production	26.14-26.22 mm	1.029-1.0315 in
• Crankshaft Thrust Surface - Service	26.22 mm	1.0315 in
• Crankshaft Thrust Surface Runout	0.025 mm	0.001 in
Cylinder Head		
• Cylinder Head Height/Thickness - Measured from the Cylinder Head Deck to the Valve Rocker Arm Cover Seal Surface	120.2 mm	4.732 in
• Surface Flatness - Block Deck - Measured Within a 152.4 mm (6.0 in) Area	0.08 mm	0.003 in
• Surface Flatness - Block Deck - Measuring the Overall Length of the Cylinder Head	0.1 mm	0.004 in
• Surface Flatness - Exhaust Manifold Deck	0.13 mm	0.005 in
• Surface Flatness - Intake Manifold Deck	0.08 mm	0.0031 in
• Valve Guide Installed Height - Measured from the Spring Seat Surface to the Top of the Guide	17.32 mm	0.682 in
Intake Manifold		
• Surface Flatness - Measured at Gasket Sealing Surfaces and Measured Within a 200 mm (7.87 in) Area that Includes 2 Runner Port Openings	0.3 mm	0.118 in
Lubrication System		
• Oil Capacity - with Filter	5.68 liters	6.0 quarts
• Oil Capacity - without Filter	5.20 liters	5.5 quarts
• Oil Pressure - Minimum - Hot	41 kPa at 1,000 engine RPM 124 kPa at 2,000 engine RPM 165 kPa at 4,000 engine RPM	6 psig at 1,000 engine RPM 18 psig at 2,000 engine RPM 24 psig at 4,000 engine RPM
• Active Fuel Management Relief Valve Oil Pressure - as Measured at Oil Pressure Sensor Location	379-517 kPa Maximum	55-75 psig Maximum
Oil Pan		
• Front Cover Alignment - at Oil Pan Surface	0.0-0.5 mm	0.0-0.02 in
• Crankshaft Rear Oil Seal Housing Alignment - at Oil Pan Surface	0.0-0.5 mm	0.0-0.02 in
• Oil Pan Alignment - to Rear of Engine Block at Transmission Bell Housing Mounting Surface	0.0-0.1 mm	0.0-0.004 in
Piston Rings		
• Piston Ring End Gap - First Compression Ring -		

cardiagn.com

Measured in Cylinder Bore - Production	0.23-0.44 mm	0.009-0.017 in
• Piston Ring End Gap - First Compression Ring - Measured in Cylinder Bore - Service	0.23-0.5 mm	0.009-0.0196 in
• Piston Ring End Gap - Second Compression Ring - Measured in Cylinder Bore - Production	0.44-0.7 mm	0.017-0.027 in
• Piston Ring End Gap - Second Compression Ring - Measured in Cylinder Bore - Service	0.44-0.76 mm	0.0173-0.03 in
• Piston Ring End Gap - Oil Control Ring - Measured in Cylinder Bore - Production	0.18-0.75 mm	0.007-0.029 in
• Piston Ring End Gap - Oil Control Ring - Measured in Cylinder Bore - Service	0.18-0.81 mm	0.007-0.032 in
• Piston Ring-to-Groove Clearance - First Compression Ring - Production	0.04-0.085 mm	0.00157-0.00335 in
• Piston Ring-to-Groove Clearance - First Compression Ring - Service	0.04-0.085 mm	0.00157-0.00335 in
• Piston Ring-to-Groove Clearance - Second Compression Ring - Production	0.04-0.078 mm	0.00157-0.0031 in
• Piston Ring-to-Groove Clearance - Second Compression Ring - Service	0.04-0.078 mm	0.00157-0.0031 in
• Piston Ring-to-Groove Clearance - Oil Control Ring - Production	0.012-0.2 mm	0.0005-0.0078 in
• Piston Ring-to-Groove Clearance - Oil Control Ring - Service	0.012-0.2 mm	0.0005-0.0078 in
Pistons and Pins		
• Pin - Piston Pin Clearance-to-Piston Pin Bore - Production	0.002-0.01 mm	0.00008-0.0004 in
• Pin - Piston Pin Clearance-to-Piston Pin Bore - Service	0.002-0.015 mm	0.00008-0.0006 in
• Pin - Piston Pin Diameter	23.952-23.955 mm	0.943-0.943 in
• Pin - Piston Pin Fit in Connecting Rod Bore - Production	0.007-0.02 mm	0.00027-0.00078 in
• Pin - Piston Pin Fit in Connecting Rod Bore - Service	0.007-0.022 mm	0.00027-0.00086 in
• Piston - Piston Diameter - Measured Over Skirt Coating	96.002-96.036 mm	3.779-3.78 in
• Piston - Piston-to-Bore Clearance - Production	-0.036 to +0.016 mm	-0.0014 to +0.0006 in
• Piston - Piston-to-Bore Clearance - Service Limit with Skirt Coating Worn Off	0.071 mm	0.0028 in
Valve System		

cardiagn.com

• Valves - Valve Face Angle	45 degrees	
• Valves - Valve Face Width	1.25 mm	0.05 in
• Valves - Valve Lash	Net Lash - No Adjustment	
• Valve Lift - Exhaust	12.12 mm	0.477 in
• Valve Lift - Intake	11.83 mm	0.466 in
• Valves - Valve Seat Angle	46 degrees	
• Valves - Valve Seat Runout	0.05 mm	0.002 in
• Valves - Valve Seat Width - Exhaust	1.78 mm	0.07 in
• Valves - Valve Seat Width - Intake	1.02 mm	0.04 in
• Valves - Valve Stem Diameter - Production	7.955-7.976 mm	0.313-0.314 in
• Valves - Valve Stem Diameter - Service	7.95 mm	0.313 in
• Valves - Valve Stem-to-Guide Clearance - Production - Exhaust	0.025-0.066 mm	0.001-0.0026 in
• Valves - Valve Stem-to-Guide Clearance - Service - Exhaust	0.093 mm	0.0037 in
• Valves - Valve Stem-to-Guide Clearance - Production - Intake	0.025-0.066 mm	0.001-0.0026 in
• Valves - Valve Stem-to-Guide Clearance - Service - Intake	0.093 mm	0.0037 in
• Rocker Arms - Valve Rocker Arm Ratio	1.70:1	
• Valve Springs - Valve Spring Free Length	52.9 mm	2.08 in
• Valve Springs - Valve Spring Installed Height	45.75 mm	1.8 in
• Valve Springs - Valve Spring Load - Closed	340 N at 45.75 mm	76 lb at 1.8 in
• Valve Springs - Valve Spring Load - Open	980 N at 33.55 mm	220 lb at 1.32 in

ENGINE MECHANICAL SPECIFICATIONS (RPO L92 VIN 8)

Engine Mechanical Specifications (RPO L92 VIN 8)

Application	Specification	
	Metric	English
General		
• Engine Type	V8	
• Displacement	6.2L	376 CID
• RPO	L92	
• VIN	8	
• Bore	103.241-103.259 mm	4.065-4.065 in

cardiagn.com

• Stroke	92.0 mm	3.622 in
• Compression Ratio	10.5:1	
• Firing Order	1-8-7-2-6-5-4-3	
• Active Fuel Management Cylinders - First Design Engine	1-4-6-7	
• Spark Plug Gap	1.02 mm	0.04 in
Block		
• Camshaft Bearing Bore 1 and 5 Diameter	59.58-59.63 mm	2.345-2.347 in
• Camshaft Bearing Bore 2 and 4 Diameter	59.08-59.13 mm	2.325-2.327 in
• Camshaft Bearing Bore 3 Diameter	58.58-58.63 mm	2.306-2.308 in
• Crankshaft Main Bearing Bore Diameter	69.871-69.889 mm	2.75-2.751 in
• Crankshaft Main Bearing Bore Out-of-Round	0.006 mm	0.0002 in
• Cylinder Bore Diameter	103.241-103.259 mm	4.065-4.065 in
• Cylinder Head Deck Height - Measuring from the Centerline of Crankshaft to the Deck Face	234.57-234.82 mm	9.235-9.245 in
• Cylinder Head Deck Surface Flatness - Measured Within a 152.4 mm (6.0 in) Area	0.11 mm	0.004 in
• Cylinder Head Deck Surface Flatness - Measuring the Overall Length of the Block Deck	0.22 mm	0.008 in
• Valve Lifter Bore Diameter	21.417-21.443 mm	0.843-0.844 in
Camshaft		
• Camshaft End Play	0.025-0.305 mm	0.001-0.012 in
• Camshaft Journal Diameter	54.99-55.04 mm	2.164-2.166 in
• Camshaft Journal Out-of-Round	0.025 mm	0.001 in
• Camshaft Lobe Lift - Exhaust - Non Active Fuel Management Cylinders	7.48 mm	0.294 in
• Camshaft Lobe Lift - Exhaust - Active Fuel Management Cylinders	7.61 mm	0.300 in
• Camshaft Lobe Lift - Intake - Non Active Fuel Management Cylinders	7.48 mm	0.294 in
• Camshaft Lobe Lift - Intake - Active Fuel Management Cylinders	7.61 mm	0.300 in
• Camshaft Runout - Measured at the Intermediate Journals	0.05 mm	0.002 in
Connecting Rod		
• Connecting Rod Bearing Clearance - Production	0.023-0.065 mm	0.0009-0.0025 in

cardiagn.com

• Connecting Rod Bearing Clearance - Service	0.023-0.076 mm	0.0009-0.003 in
• Connecting Rod Bore Diameter - Bearing End	56.505-56.525 mm	2.224-2.225 in
• Connecting Rod Bore Out-of-Round - Bearing End - Production	0.004-0.008 mm	0.00015-0.0003 in
• Connecting Rod Bore Out-of-Round - Bearing End - Service	0.004-0.008 mm	0.00015-0.0003 in
• Connecting Rod Side Clearance	0.11-0.51 mm	0.00433-0.02 in
Crankshaft		
• Connecting Rod Journal Diameter - Production	53.318-53.338 mm	2.0991-2.0999 in
• Connecting Rod Journal Diameter - Service	53.308 mm	2.0987 in
• Connecting Rod Journal Out-of-Round - Production	0.005 mm	0.0002 in
• Connecting Rod Journal Out-of-Round - Service	0.01 mm	0.0004 in
• Connecting Rod Journal Taper - Maximum for 1/2 of Journal Length - Production	0.005 mm	0.0002 in
• Connecting Rod Journal Taper - Maximum for 1/2 of Journal Length - Service	0.02 mm	0.00078 in
• Crankshaft End Play	0.04-0.2 mm	0.0015-0.0078 in
• Crankshaft Main Bearing Clearance - Production	0.02-0.052 mm	0.0008-0.0021 in
• Crankshaft Main Bearing Clearance - Service	0.02-0.065 mm	0.0008-0.0025 in
• Crankshaft Main Journal Diameter - Production	64.992-65.008 mm	2.558-2.559 in
• Crankshaft Main Journal Diameter - Service	64.992 mm	2.558 in
• Crankshaft Main Journal Out-of-Round - Production	0.003 mm	0.000118 in
• Crankshaft Main Journal Out-of-Round - Service	0.008 mm	0.0003 in
• Crankshaft Main Journal Taper - Production	0.01 mm	0.0004 in
• Crankshaft Main Journal Taper - Service	0.02 mm	0.00078 in
• Crankshaft Rear Flange Runout	0.05 mm	0.002 in
• Crankshaft Reluctor Ring Runout - Measured 1.0 mm (0.04 in) Below Tooth Diameter	0.7 mm	0.028 in
• Crankshaft Thrust Surface - Production	26.14-26.22 mm	1.029-1.0315 in
• Crankshaft Thrust Surface - Service	26.22 mm	1.0315 in
• Crankshaft Thrust Surface Runout	0.025 mm	0.001 in
Cylinder Head		
• Cylinder Head Height/Thickness - Measured from the Cylinder Head Deck to the Valve Rocker Arm Cover Seal Surface	120.2 mm	4.732 in

cardiagn.com

• Surface Flatness - Block Deck - Measured Within a 152.4 mm (6.0 in) Area	0.08 mm	0.003 in
• Surface Flatness - Block Deck - Measuring the Overall Length of the Cylinder Head	0.1 mm	0.004 in
• Surface Flatness - Exhaust Manifold Deck	0.13 mm	0.005 in
• Surface Flatness - Intake Manifold Deck	0.08 mm	0.0031 in
• Valve Guide Installed Height - Measured from the Spring Seat Surface to the Top of the Guide	17.32 mm	0.682 in
Intake Manifold		
• Surface Flatness - Measured at Gasket Sealing Surfaces and Measured Within a 200 mm (7.87 in) Area that Includes 2 Runner Port Openings	0.3 mm	0.118 in
Lubrication System		
• Oil Capacity - with Filter	5.68 liters	6.0 quarts
• Oil Capacity - without Filter	5.20 liters	5.5 quarts
• Oil Pressure - Minimum - Hot	41 kPa at 1,000 engine RPM 124 kPa at 2,000 engine RPM 165 kPa at 4,000 engine RPM	6 psig at 1,000 engine RPM 18 psig at 2,000 engine RPM 24 psig at 4,000 engine RPM
• Active Fuel Management Relief Valve Oil Pressure - as Measured at Oil Pressure Sensor Location	379-517 kPa Maximum	55-75 psig Maximum
Oil Pan		
• Front Cover Alignment - at Oil Pan Surface	0.0-0.5 mm	0.0-0.02 in
• Crankshaft Rear Oil Seal Housing Alignment - at Oil Pan Surface	0.0-0.5 mm	0.0-0.02 in
• Oil Pan Alignment - to Rear of Engine Block at Transmission Bell Housing Mounting Surface	0.0-0.1 mm	0.0-0.004 in
Piston Rings		
• Piston Ring End Gap - First Compression Ring - Measured in Cylinder Bore - Production	0.23-0.44 mm	0.009-0.017 in
• Piston Ring End Gap - First Compression Ring - Measured in Cylinder Bore - Service	0.23-0.5 mm	0.009-0.0196 in
• Piston Ring End Gap - Second Compression Ring - Measured in Cylinder Bore - Production	0.44-0.7 mm	0.017-0.027 in
• Piston Ring End Gap - Second Compression Ring - Measured in Cylinder Bore - Service	0.44-0.76 mm	0.0173-0.03 in
• Piston Ring End Gap - Oil Control Ring - Measured	0.18-0.75 mm	0.007-0.029 in

cardiagn.com

in Cylinder Bore - Production		
• Piston Ring End Gap - Oil Control Ring - Measured in Cylinder Bore - Service	0.18-0.81 mm	0.007-0.032 in
• Piston Ring-to-Groove Clearance - First Compression Ring - Production	0.04-0.085 mm	0.00157-0.00335 in
• Piston Ring-to-Groove Clearance - First Compression Ring - Service	0.04-0.085 mm	0.00157-0.00335 in
• Piston Ring-to-Groove Clearance - Second Compression Ring - Production	0.04-0.078 mm	0.00157-0.0031 in
• Piston Ring-to-Groove Clearance - Second Compression Ring - Service	0.04-0.078 mm	0.00157-0.0031 in
• Piston Ring-to-Groove Clearance - Oil Control Ring - Production	0.012-0.2 mm	0.0005-0.0078 in
• Piston Ring-to-Groove Clearance - Oil Control Ring - Service	0.012-0.2 mm	0.0005-0.0078 in
Pistons and Pins		
• Pin - Piston Pin Clearance-to-Piston Pin Bore - Production	0.002-0.01 mm	0.00008-0.0004 in
• Pin - Piston Pin Clearance-to-Piston Pin Bore - Service	0.002-0.015 mm	0.00008-0.0006 in
• Pin - Piston Pin Diameter	23.952-23.955 mm	0.943-0.943 in
• Pin - Piston Pin Fit in Connecting Rod Bore - Production	0.007-0.02 mm	0.00027-0.00078 in
• Pin - Piston Pin Fit in Connecting Rod Bore - Service	0.007-0.022 mm	0.00027-0.00086 in
• Piston - Piston Diameter - Measured Over Coating	96.002-96.036 mm	3.779-3.78 in
• Piston - Piston to Bore Clearance - Production	-0.036 to +0.016 mm	-0.0014 to +0.0006 in
• Piston - Piston to Bore Clearance - Service Limit With Skirt Coating Worn Off	0.071 mm	0.0028 in
Valve System		
• Valves - Valve Face Angle	45 degrees	
• Valves - Valve Face Width	1.25 mm	0.05 in
• Valves - Valve Lash	Net Lash - No Adjustment	
• Valve Lift - Exhaust - Non Active Fuel Management	12.72 mm	0.501 in
• Valve Lift - Exhaust - Active Fuel Management	12.94 mm	0.509 in
• Valve Lift - Intake - Non Active Fuel Management	12.72 mm	0.501 in
• Valve Lift - Intake - Active Fuel Management	12.94 mm	0.509 in
• Valves - Valve Seat Angle	46 degrees	

cardiagn.com

• Valves - Valve Seat Runout	0.05 mm	0.002 in
• Valves - Valve Seat Width - Exhaust	1.78 mm	0.07 in
• Valves - Valve Seat Width - Intake	1.02 mm	0.04 in
• Valves - Valve Stem Diameter - Production	7.955-7.976 mm	0.313-0.314 in
• Valves - Valve Stem Diameter - Service	7.95 mm	0.313 in
• Valves - Valve Stem-to-Guide Clearance - Production - Exhaust	0.025-0.066 mm	0.001-0.0026 in
• Valves - Valve Stem-to-Guide Clearance - Service - Exhaust	0.093 mm	0.0037 in
• Valves - Valve Stem-to-Guide Clearance - Production - Intake	0.025-0.066 mm	0.001-0.0026 in
• Valves - Valve Stem-to-Guide Clearance - Service - Intake	0.093 mm	0.0037 in
• Rocker Arms - Valve Rocker Arm Ratio	1.70:1	
• Valve Springs - Valve Spring Free Length	52.9 mm	2.08 in
• Valve Springs - Valve Spring Installed Height	45.75 mm	1.8 in
• Valve Springs - Valve Spring Load - Closed	340 N at 45.75 mm	76 lb at 1.8 in
• Valve Springs - Valve Spring Load - Open	980 N at 33.55 mm	220 lb at 1.32 in

ENGINE CONTENT SPECIFICATIONS

Engine Content Specifications

RPO	VIN	Displacement	Camshaft Position (CMP) Actuator Control System	Active Fuel Management Control System	E85 Capable	Block Material
LY2	C	4.8L	No	No	No	Iron
LC9	3	5.3L	No	Yes	Yes	Aluminum
LY5	J	5.3L	No	Yes	No	Iron
LMG	0	5.3L	No	Yes	Yes	Iron
LY6	K	6.0L	Yes	No	No	Iron
L76	Y	6.0L	Yes	Yes	No	Aluminum
L92	8	6.2L	Yes	Yes	No	Aluminum

- First design L92 engines contain active fuel management hardware to include: valve lifters, lifter guides, camshaft, and valve lifter oil manifold. The system is inactive for the 2007 model year.
- Second design L92 engines DO NOT contain active fuel management hardware and contain: non-active fuel management valve lifters, lifter guides, camshaft, and a valley cover to replace the valve

cardiagn.com

lifter oil manifold.

SEALERS, ADHESIVES, & LUBRICANTS

Sealers, Adhesives, and Lubricants

Application	Type of Material	GM Part Number	
		United States	Canada
Coolant Temperature Sensor Threads	Sealant	12346004	10953480
Cylinder Head Core Hole Plug	Threadlock	12345382	10953489
Cylinder Head Plug	Threadlock	12345382	10953489
Engine Block Coolant Drain Hole Plug Sealing Washer	Sealant	12346004	10953480
Engine Block Front Oil Gallery Plug	Threadlock	12345382	10953489
Engine Block Oil Gallery Plug Sealing Washers	Sealant	12346004	10953480
Engine Oil Pressure Sensor Threads	Sealant	12346004	10953480
Engine Oil Supplement	Fluorescent Dye	12345795	10953470
Exhaust Manifold Bolts	Threadlock	12345493	10953488
Flywheel/Flex Plate Bolts	Threadlock	12345382	10953489
Fuel Injection Fuel Rail Bolts	Threadlock	12345382	10953489
Ignition Coil Bracket-to-Valve Cover Studs	Threadlock	12345382	10953489
Ignition Coil-to-Bracket Bolts	Threadlock	12345382	10953489
Intake Manifold Bolts	Threadlock	12345382	10953489
Oil Pan Oil Gallery Plug Threads	Sealant	12346004	10953480
Oil Pan Surface at Front Cover and Rear Housing	Sealant	12378521	88901148
Thread Repair Component Cleaner	Cleaner	12346139	10953463
Thread Repair Component Cleaner	Cleaner	12377981	10953463
Thread Repair Cutting Oil	Lubricant	1052864	992881

THREAD REPAIR SPECIFICATIONS

Engine Block - Front/Rear Views

cardiagn.com

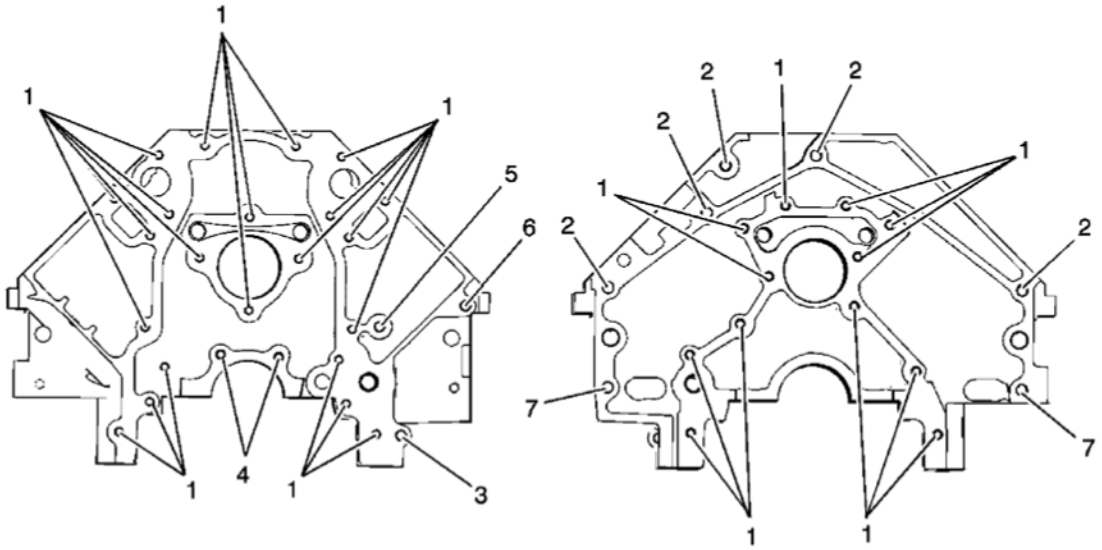

Fig. 1: Engine Block - Front/Rear Views
Courtesy of GENERAL MOTORS CORP.

Engine Block - Front/Rear Views

Hole	Thread Size	Insert	Drill	Counterbore Tool	Tap	Driver	Drill Depth - Maximum mm (in)	Tap Depth - Maximum mm (in)
				J 42385-				
1	M8 x 1.25	210	206	207	208	209	22.5 (0.885)	17.5 (0.688)
2	M10 x 1.5	215	211	212	213	214	27.5 (1.08)	22.0 (0.866)
3	M10 x 1.5	215	211	212	213	214	Thru	Thru
4	M8 x 1.25	210	206	207	208	209	Thru	Thru
5	M10 x 1.5	215	211	212	213	214	25.0 (0.984)	19.5 (0.767)
6	M10 x 1.5	215	211	212	213	214	32.5 (1.279)	25.0 (0.984)
7	M10 x 1.5	215	211	212	213	214	Thru	Thru
Bolt hole 6 is drilled and tapped for aluminum block applications only.								

Engine Block - Left/Right Side Views

cardiagn.com

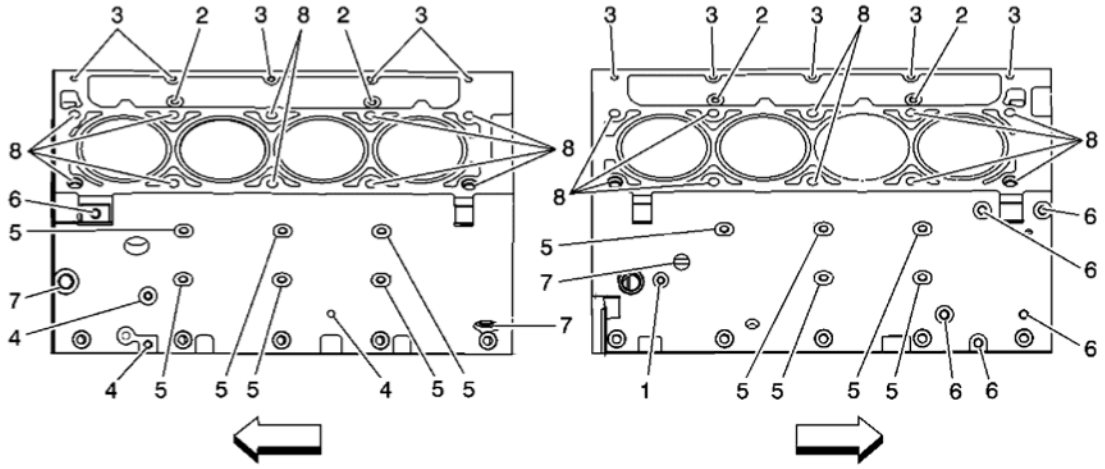

Fig. 2: Engine Block - Left/Right Side Views
Courtesy of GENERAL MOTORS CORP.

Engine Block - Left/Right Side Views

Hole	Thread Size	Insert	Drill	Counterbore Tool	Tap	Driver	Drill Depth - Maximum mm (in)	Tap Depth - Maximum mm (in)
				J 42385-				
1	M8 x 1.25	210	206	207	208	209	22.5 (0.885)	17.5 (0.688)
2	M8 x 1.25	210	206	207	208	209	28.5 (1.122)	23.0 (0.905)
3	M8 x 1.25	210	206	207	208	209	21.5 (0.846)	16.0 (0.629)
4	M10 x 1.25	215	211	212	213	214	29.0 (1.141)	23.0 (0.905)
5	M10 x 1.5	215	211	212	213	214	27.0 (1.062)	21.5 (0.846)
6	M16 x 1.5	N/A	N/A	N/A	N/A	N/A	N/A	N/A
7	M11 x 2.0	108	105	N/A	106	107	69.0 (2.72)	60.0 (2.36)
8	M28 x 1.25	N/A	N/A	N/A	N/A	N/A	N/A	N/A
Bolt hole 7 has a 30 mm (1.18 in) counterbore included in the 69.0 mm (2.72 in) drill depth. Use sleeve J 42385-315 with the drill and tap.								

Engine Block - Top/Bottom Views

cardiagn.com

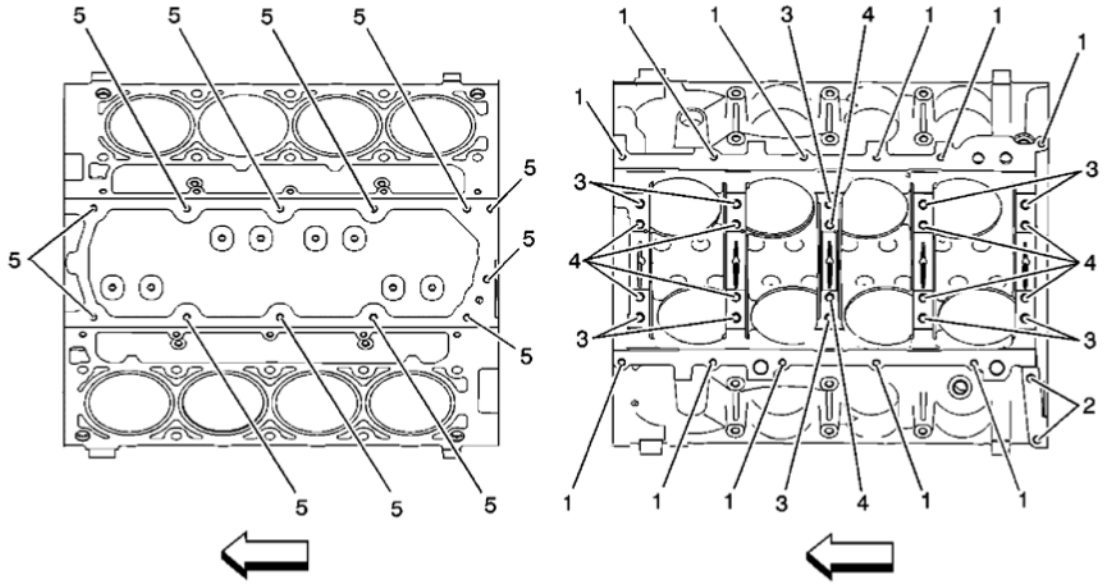

Fig. 3: Engine Block - Top/Bottom Views
Courtesy of GENERAL MOTORS CORP.

Engine Block - Top/Bottom Views

Hole	Thread Size	Insert	Drill	Counterbore Tool	Tap	Driver	Drill Depth - Maximum mm (in)	Tap Depth - Maximum mm (in)
				J 42385-				
1	M8 x 1.25	210	206	207	208	209	22.5 (0.885)	17.5 (0.688)
2	M10 x 1.5	215	211	212	213	214	42.5 (1.67)	37.0 (1.45)
3	M10 x 2.0	104	101	N/A	102	103	31.0 (1.22)	25.5 (1.0)
4	M10 x 2.0	104	101	N/A	102	103	53.5 (2.10)	44.0 (1.73)
5	M8 x 1.25	210	206	207	208	209	26.5 (1.043)	19.0 (0.748)

- Bolt hole 2 has an 11.5 mm (0.452 in) counterbore included in the 42.5 mm (1.67 in) drill depth. Use sleeve J 42385-311 with the drill and tap.
- Bolt hole 3 has a 1.5 mm (0.059 in) counterbore included in the 31.0 mm (1.22 in) drill depth. Use sleeve J 42385-316 with the drill and tap.
- Bolt hole 4 has a 20.5 mm (0.807 in) counterbore included in the 53.5 mm (2.10 in) drill depth.

Cylinder Head - Top/End Views

cardiagn.com

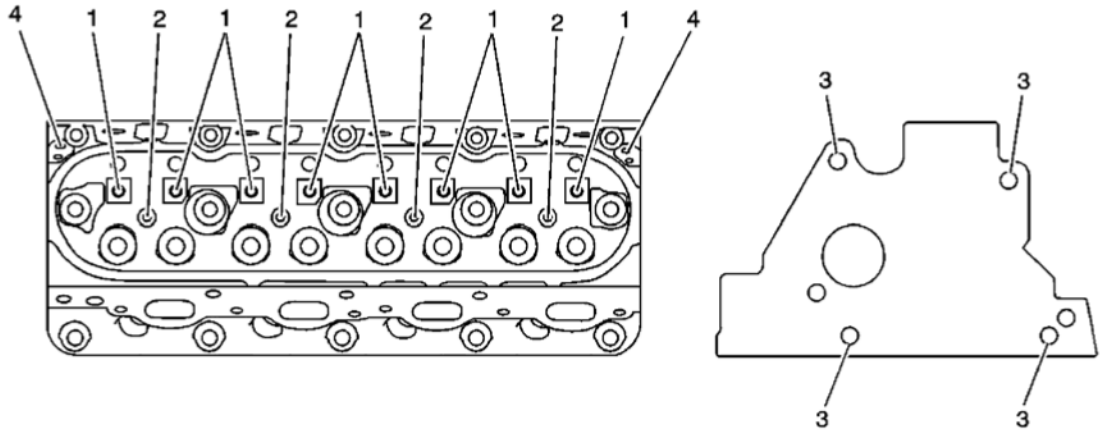

Fig. 4: Cylinder Head - Top/End Views
Courtesy of GENERAL MOTORS CORP.

Cylinder Head - Top/End Views

Hole	Thread Size	Insert	Drill	Counterbore Tool	Tap	Driver	Drill Depth - Maximum mm (in)	Tap Depth - Maximum mm (in)
J 42385-								
1	M8 x 1.25	210	206	207	208	209	26.5 (1.04)	19.0 (0.784)
2	M6 x 1.0	205	201	202	203	204	20.05 (0.789)	16.05 (0.632)
3	M10 x 1.5	215	211	212	213	214	28.0 (1.10)	20.0 (0.787)
4	M6 x 1.0	205	201	202	203	204	22.5 (0.885)	15.0 (0.688)

Cylinder Head - Intake/Exhaust Side Views

cardiagn.com

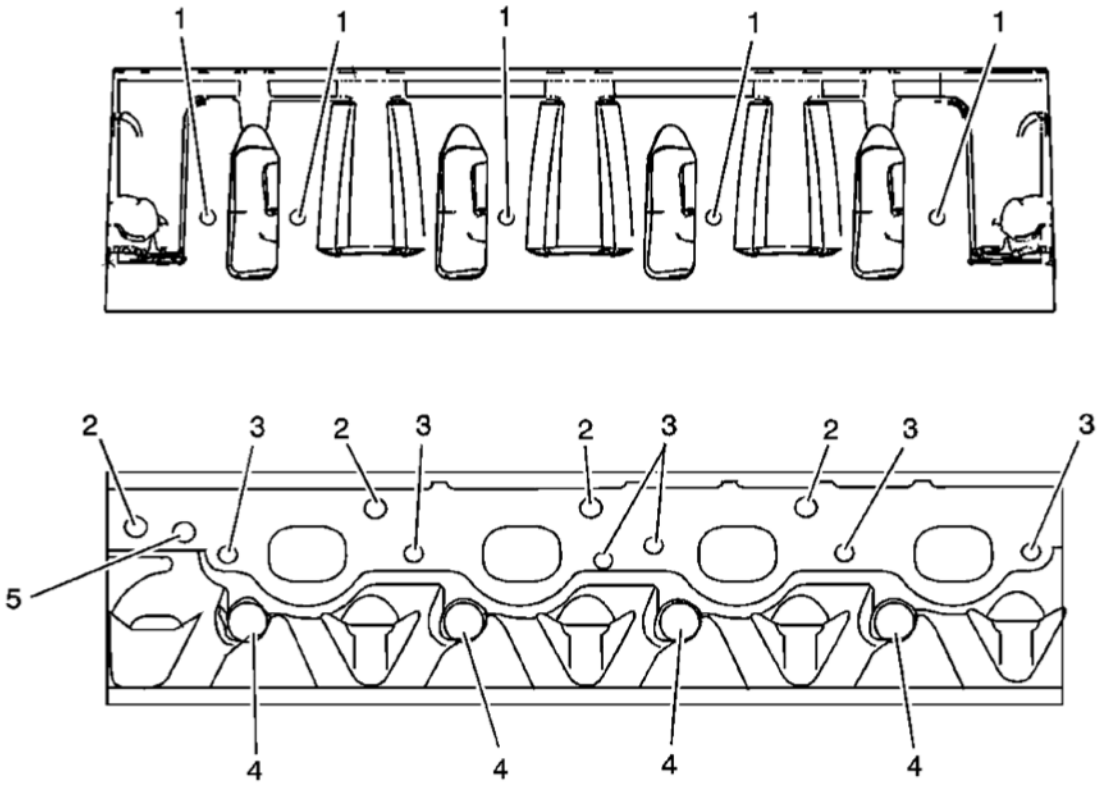

Fig. 5: Cylinder Head - Intake/Exhaust Side Views
Courtesy of GENERAL MOTORS CORP.

Cylinder Head - Intake/Exhaust Side Views

Hole	Thread Size	Insert	Drill	Counterbore Tool	Tap	Driver	Drill Depth - Maximum mm (in)	Tap Depth - Maximum mm (in)
				J 42385-				
1	M6 x 1.0	205	201	202	203	204	Thru	Thru
2	M10 x 1.5	215	211	212	213	214	28.0 (1.10)	20.0 (0.787)
3	M8 x 1.25	210	206	207	208	209	21.0 (0.826)	16.0 (0.629)
4	M14 x 1.25	N/A	N/A	N/A	N/A	N/A	N/A	N/A
5	M12 x 1.5	N/A	N/A	N/A	N/A	N/A	N/A	N/A

COMPONENT LOCATOR

DISASSEMBLED VIEWS

cardiagn.com

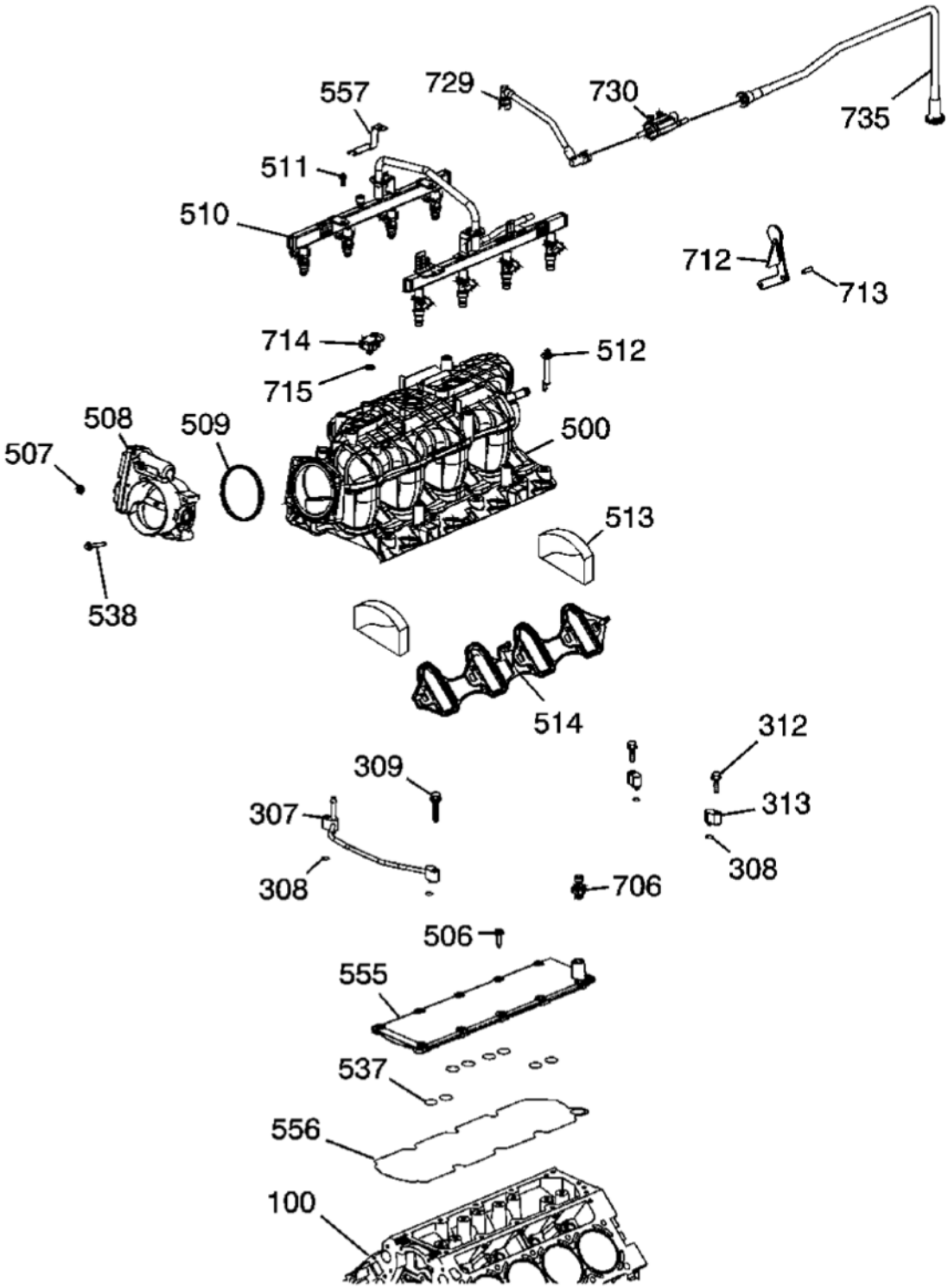

Fig. 6: Intake Manifold/Upper Engine - RPO LY2/LY6
Courtesy of GENERAL MOTORS CORP.

cardiagn.com

Callouts For Fig. 6

Callout	Component Name
100	Engine Block
307	Engine Coolant Air Bleed Pipe
308	Engine Coolant Air Bleed Pipe O-Ring Seal
308	Engine Coolant Air Bleed Pipe O-Ring Seal
309	Bolt
312	Bolt
313	Engine Coolant Air Bleed Pipe Hole Cover
500	Intake Manifold
506	Bolt
507	Nut
508	Throttle Body
509	Throttle Body Seal
510	Sequential Multi-Port Fuel Injector Assembly with Fuel Rail
511	Bolt
512	Bolt
513	Intake Manifold Seal
514	Intake Manifold Gasket
537	O-Ring Seal
538	Bolt
555	Engine Valley Cover
556	Gasket
557	Fuel Injection Fuel Rail Bracket
706	Engine Oil Pressure Sensor
712	Fuel Injection Fuel Rail Stop
713	Bolt
714	Manifold Absolute Pressure (MAP) Sensor
715	MAP Sensor O-Ring Seal
729	Evaporative (EVAP) Emission Canister Purge Tube
730	EVAP Emission Canister Purge Solenoid Valve
731	EVAP Emission Canister Port Cap
734	EVAP Emission Service Valve
735	EVAP Emission Canister Purge Tube

cardiagn.com

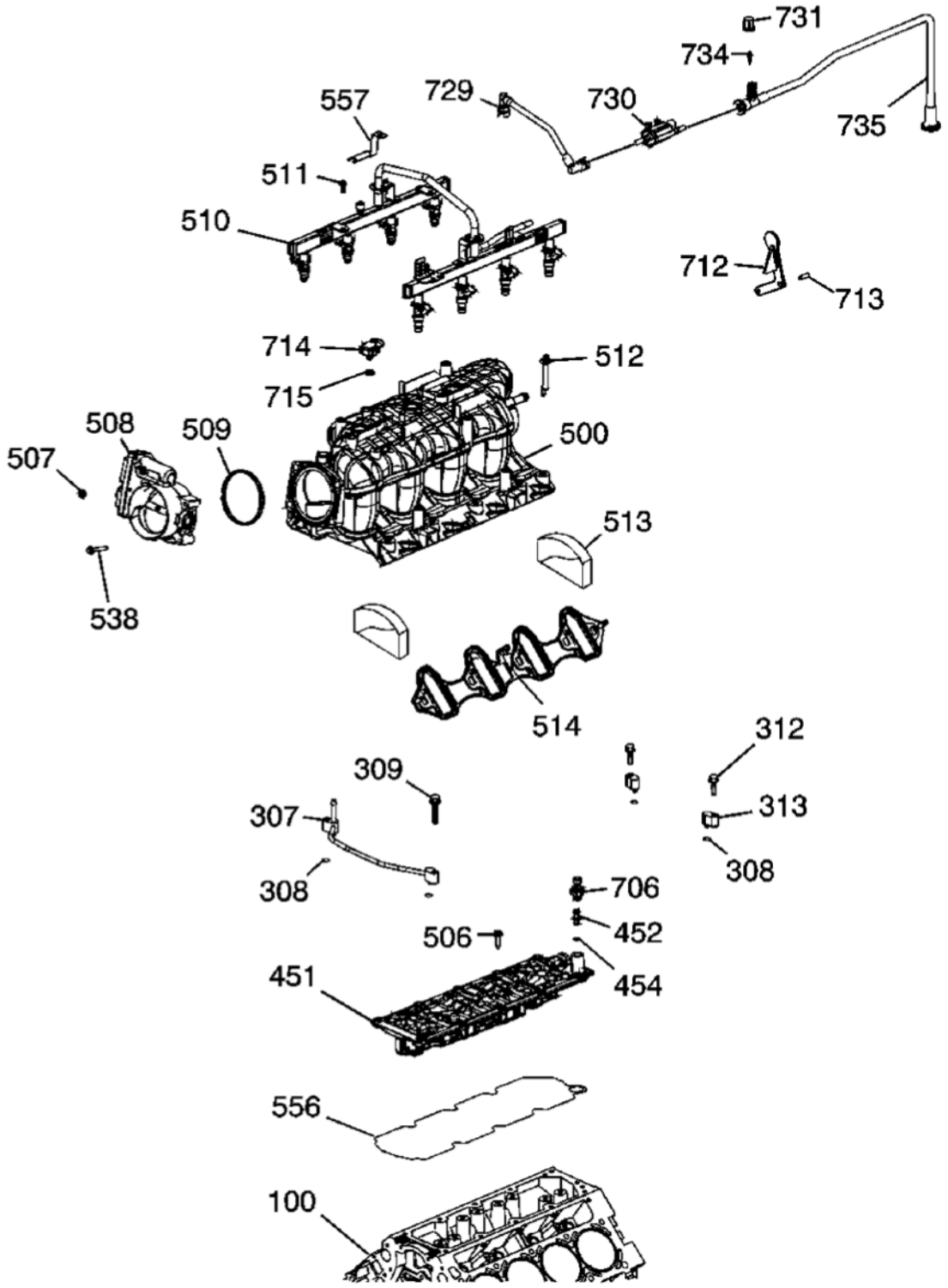

Fig. 7: Intake Manifold/Upper Engine - RPO LC9/LY5/LMG/L76
Courtesy of GENERAL MOTORS CORP.

cardiagn.com

Callouts For Fig. 7

Callout	Component Name
100	Engine Block
307	Engine Coolant Air Bleed Pipe
308	Engine Coolant Air Bleed Pipe O-Ring Seal
308	Engine Coolant Air Bleed Pipe O-Ring Seal
309	Bolt
312	Bolt
313	Engine Coolant Air Bleed Pipe Hole Cover
451	Valve Lifter Oil Manifold
452	Valve Lifter Oil Filter
454	Valve Lifter Oil Filter Seal
500	Intake Manifold
506	Bolt
507	Throttle Body Nut
508	Throttle Body
509	Throttle Body Seal
510	Sequential Multi-Port Fuel Injector Assembly with Fuel Rail
511	Fuel Injection Fuel Rail Bracket Bolt
512	Intake Manifold Bolt
513	Intake Manifold Seal
514	Intake Manifold Gasket
538	Throttle Body Bolt
556	Gasket
557	Fuel Injection Fuel Rail Bracket
706	Engine Oil Pressure Sensor
712	Fuel Injection Fuel Rail Stop
713	Bolt
714	Manifold Absolute Pressure (MAP) Sensor
715	MAP Sensor O-Ring Seal
729	Evaporative (EVAP) Emission Canister Purge Tube
730	EVAP Emission Canister Purge Solenoid Valve
731	EVAP Emission Canister Port Cap
734	EVAP Emission Service Valve
735	EVAP Emission Canister Purge Tube

cardiagn.com

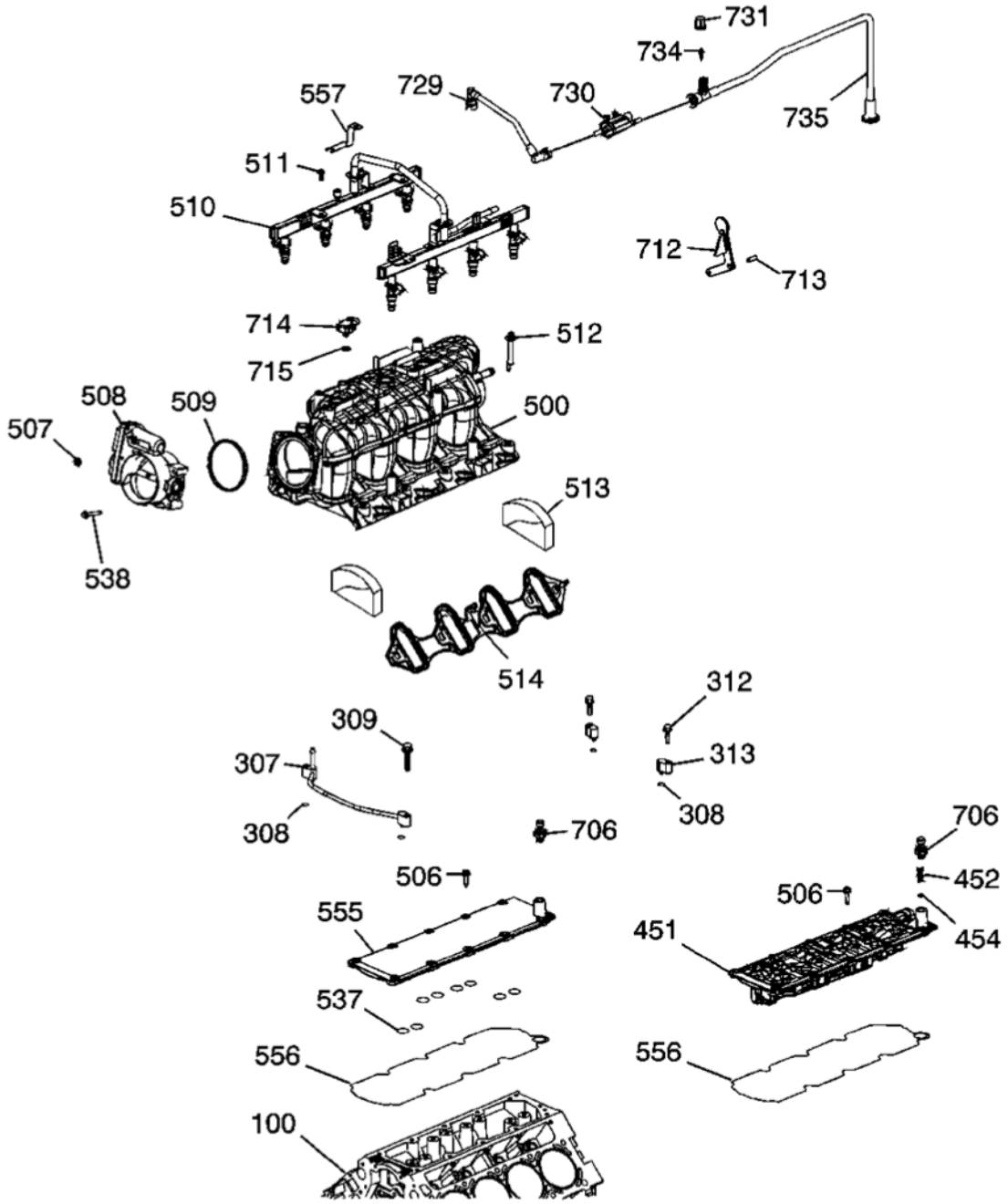

Fig. 8: Intake Manifold/Upper Engine - RPO L92
Courtesy of GENERAL MOTORS CORP.

Callouts For Fig. 8

Callout	Component Name
100	Engine Block
307	Engine Coolant Air Bleed Pipe

cardiagn.com

308	Engine Coolant Air Bleed Pipe O-Ring Seal
308	Engine Coolant Air Bleed Pipe O-Ring Seal
309	Bolt
312	Bolt
313	Engine Coolant Air Bleed Pipe Hole Cover
451	Valve Lifter Oil Manifold
452	Valve Lifter Oil Filter
454	Valve Lifter Oil Filter Seal
500	Intake Manifold
506	Bolt
506	Bolt
507	Throttle Body Nut
508	Throttle Body
509	Throttle Body Seal
510	Sequential Multi-Port Fuel Injector Assembly with Fuel Rail
511	Fuel Injection Fuel Rail Bracket Bolt
512	Intake Manifold Bolt
513	Intake Manifold Seal
514	Intake Manifold Gasket
537	Seal
538	Throttle Body Bolt
555	Valley Cover
556	Gasket
556	Gasket
557	Fuel Injection Fuel Rail Bracket
706	Engine Oil Pressure Sensor
706	Engine Oil Pressure Sensor
712	Fuel Injection Fuel Rail Stop
713	Bolt
714	Manifold Absolute Pressure (MAP) Sensor
715	MAP Sensor O-Ring Seal
729	Evaporative (EVAP) Emission Canister Purge Tube
730	EVAP Emission Canister Purge Solenoid Valve
731	EVAP Emission Canister Port Cap
734	EVAP Emission Service Valve
735	EVAP Emission Canister Purge Tube

cardiagn.com

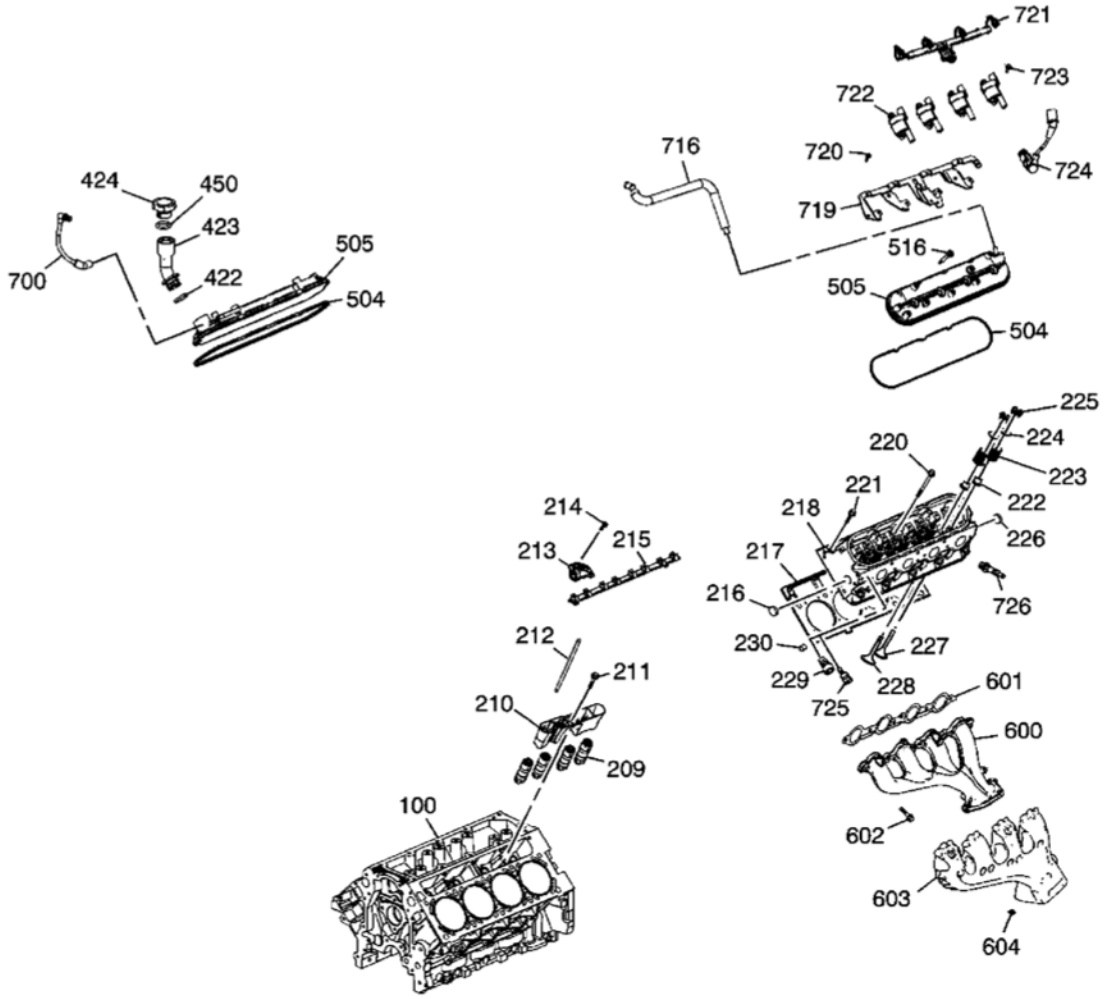

Fig. 9: Cylinder Head/Upper Engine - RPO LY2/LY6
Courtesy of GENERAL MOTORS CORP.

Callouts For Fig. 9

Callout	Component Name
100	Engine Block
209	Valve Lifter
210	Valve Lifter Guide
211	Valve Lifter Guide Bolt
212	Valve Push Rod
213	Valve Rocker Arm
214	Valve Rocker Arm Pivot Support Bolt
215	Valve Rocker Arm Pivot Support
216	Cylinder Head Core Hole Plug
217	Cylinder Head Gasket

cardiagn.com

218	Cylinder Head
220	Cylinder Head Bolt - M10
221	Cylinder Head Bolt - M8
222	Valve Stem Oil Seal
223	Valve Spring
224	Valve Spring Cap
225	Valve Stem Key
226	Cylinder Head Core Hole Plug
227	Intake Valve
228	Exhaust Valve
229	Cylinder Head Plug
230	Cylinder Head Locating Pin
422	Oil Fill Tube O-Ring Seal
423	Oil Fill Tube
424	Oil Fill Cap
450	Oil Fill Cap O-Ring Seal
504	Valve Rocker Arm Cover Gasket
504	Valve Rocker Arm Cover Gasket
505	Valve Rocker Arm Cover
505	Valve Rocker Arm Cover
516	Valve Rocker Arm Cover Bolt
600	Exhaust Manifold
601	Exhaust Manifold Gasket
602	Exhaust Manifold Flange Bolt
603	Exhaust Manifold Heat Shield
604	Exhaust Manifold Heat Shield Bolt
700	Positive Crankcase Ventilation (PCV) Hose - Fresh Air
716	PCV Hose - Dirty Air
719	Ignition Coil Bracket
720	Ignition Coil Bracket Stud
721	Ignition Coil Wire Harness Assembly
722	Ignition Coil
723	Ignition Coil Bolt
724	Spark Plug Wire
725	Engine Coolant Temperature Sensor
726	Spark Plug

cardiagn.com

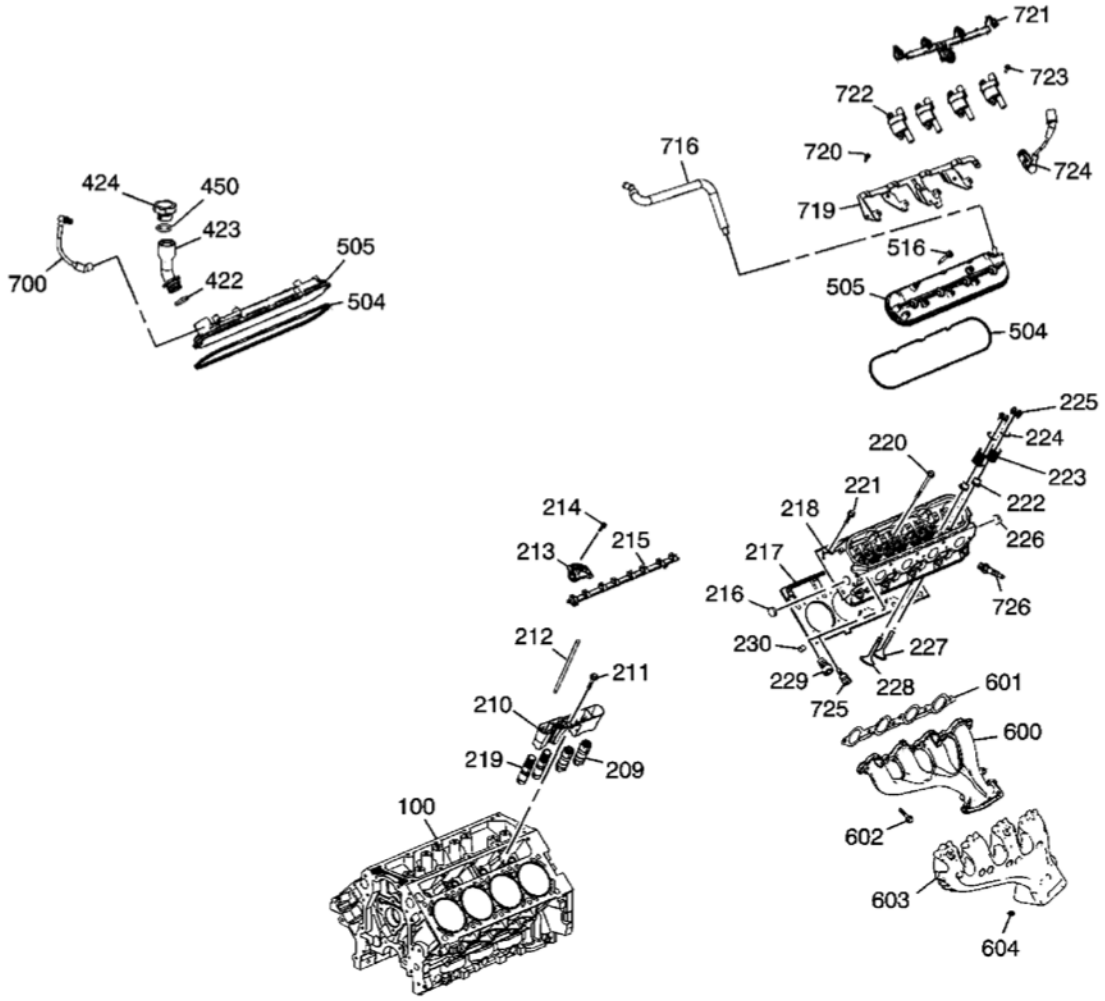

Fig. 10: Cylinder Head/Upper Engine - RPO LC9/LY5/LMG/L76
Courtesy of GENERAL MOTORS CORP.

Callouts For Fig. 10

Callout	Component Name
100	Engine Block
209	Valve Lifter - Non-Active Fuel Management
210	Valve Lifter Guide
211	Valve Lifter Guide Bolt
212	Valve Push Rod
213	Valve Rocker Arm
214	Valve Rocker Arm Pivot Support Bolt
215	Valve Rocker Arm Pivot Support
216	Cylinder Head Core Hole Plug
217	Cylinder Head Gasket

cardiagn.com

218	Cylinder Head
219	Valve Lifter - Active Fuel Management
220	Cylinder Head Bolt - M10
221	Cylinder Head Bolt - M8
222	Valve Stem Oil Seal
223	Valve Spring
224	Valve Spring Cap
225	Valve Stem Key
226	Cylinder Head Core Hole Plug
227	Intake Valve
228	Exhaust Valve
229	Cylinder Head Plug
230	Cylinder Head Locating Pin
422	Oil Fill Tube O-Ring Seal
423	Oil Fill Tube
424	Oil Fill Cap
450	Oil Fill Cap O-Ring Seal
504	Valve Rocker Arm Cover Gasket
504	Valve Rocker Arm Cover Gasket
505	Valve Rocker Arm Cover
505	Valve Rocker Arm Cover
516	Valve Rocker Arm Cover Bolt
600	Exhaust Manifold
601	Exhaust Manifold Gasket
602	Exhaust Manifold Flange Bolt
603	Exhaust Manifold Heat Shield
604	Exhaust Manifold Heat Shield Bolt
700	Positive Crankcase Ventilation (PCV) Hose - Fresh Air
716	PCV Hose - Dirty Air
719	Ignition Coil Bracket
720	Ignition Coil Bracket Bolt
721	Ignition Coil Wire Harness Assembly
722	Ignition Coil
723	Ignition Coil Bolt
724	Spark Plug Wire
725	Engine Coolant Temperature Sensor
726	Spark Plug

cardiagn.com

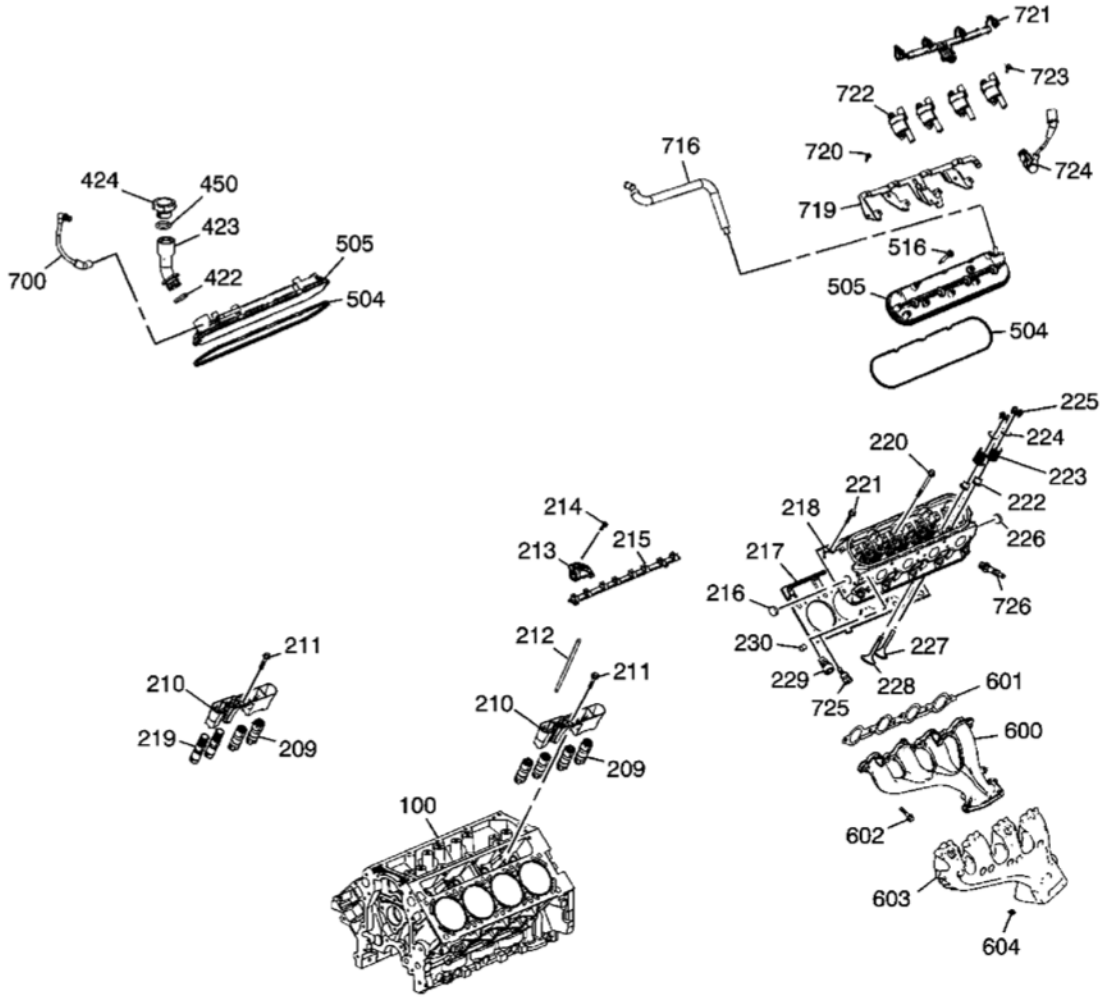

Fig. 11: Cylinder Head/Upper Engine - RPO L92
Courtesy of GENERAL MOTORS CORP.

Callouts For Fig. 11

Callout	Component Name
100	Engine Block
209	Valve Lifter - Non-Active Fuel Management
209	Valve Lifter - Non-Active Fuel Management
210	Valve Lifter Guide
210	Valve Lifter Guide
211	Valve Lifter Guide Bolt
211	Valve Lifter Guide Bolt
212	Valve Push Rod
213	Valve Rocker Arm
214	Valve Rocker Arm Pivot Support Bolt

cardiagn.com

215	Valve Rocker Arm Pivot Support
216	Cylinder Head Core Hole Plug
217	Cylinder Head Gasket
218	Cylinder Head
219	Valve Lifter - Active Fuel Management
220	Cylinder Head Bolt - M10
221	Cylinder Head Bolt - M8
222	Valve Stem Oil Seal
223	Valve Spring
224	Valve Spring Cap
225	Valve Stem Key
226	Cylinder Head Core Hole Plug
227	Intake Valve
228	Exhaust Valve
229	Cylinder Head Plug
230	Cylinder Head Locating Pin
422	Oil Fill Tube O-Ring Seal
423	Oil Fill Tube
424	Oil Fill Cap
450	Oil Fill Cap O-Ring Seal
504	Valve Rocker Arm Cover Gasket
504	Valve Rocker Arm Cover Gasket
505	Valve Rocker Arm Cover
505	Valve Rocker Arm Cover
516	Valve Rocker Arm Cover Bolt
600	Exhaust Manifold
601	Exhaust Manifold Gasket
602	Exhaust Manifold Flange Bolt
603	Exhaust Manifold Heat Shield
604	Exhaust Manifold Heat Shield Bolt
700	Positive Crankcase Ventilation (PCV) Hose - Fresh Air
716	PCV Hose - Dirty Air
719	Ignition Coil Bracket
720	Ignition Coil Bracket Bolt
721	Ignition Coil Wire Harness Assembly
722	Ignition Coil
723	Ignition Coil Bolt
724	Spark Plug Wire
725	Engine Coolant Temperature Sensor
726	Spark Plug

cardiagn.com

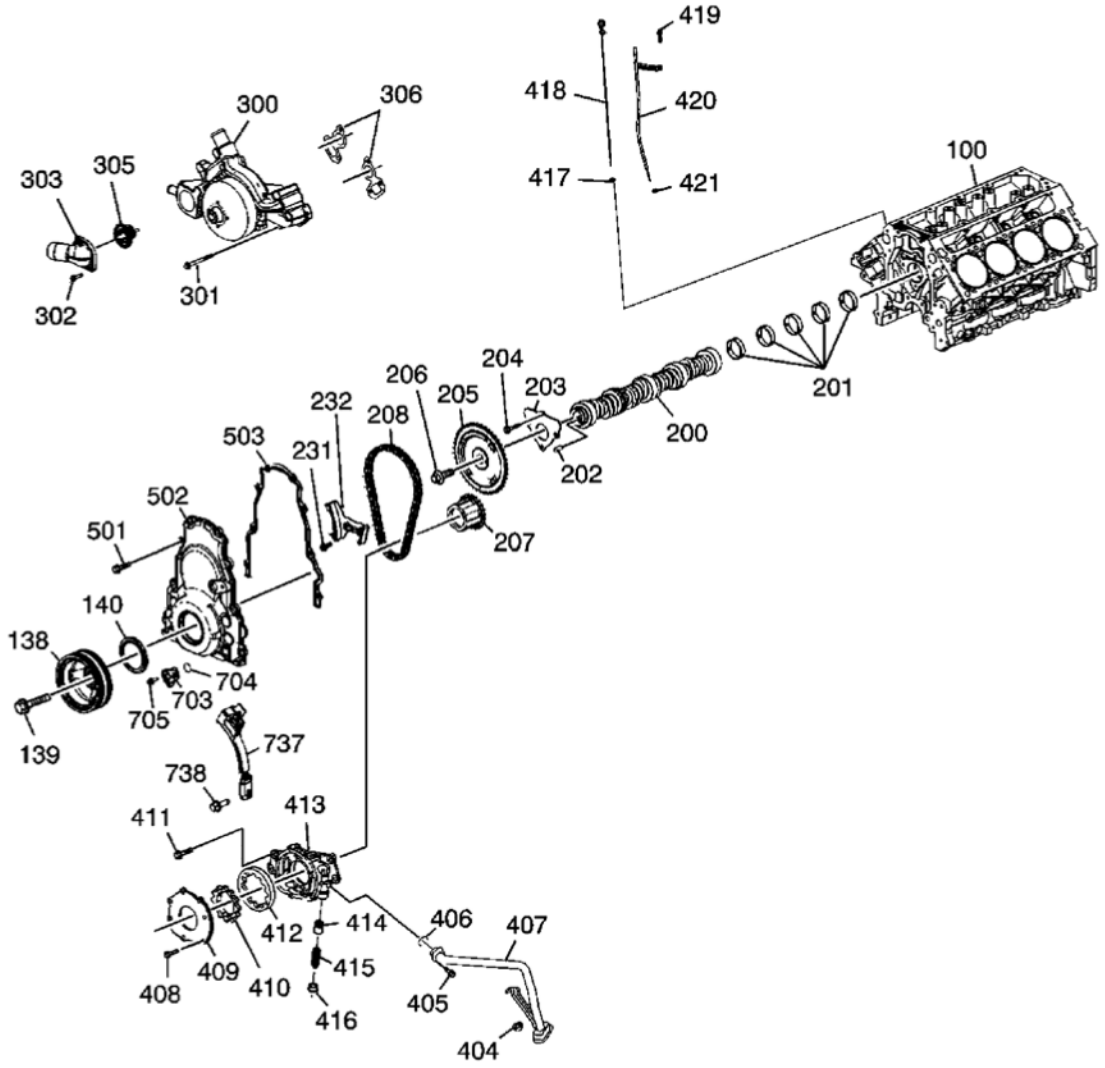

Fig. 12: Front of Engine - RPO LY2/LC9/LY5/LMG
Courtesy of GENERAL MOTORS CORP.

Callouts For Fig. 12

Callout	Component Name
100	Engine Block
138	Crankshaft Balancer
139	Crankshaft Balancer Bolt
140	Crankshaft Front Oil Seal
200	Camshaft
201	Camshaft Bearing
202	Camshaft Sprocket Locating Pin
203	Camshaft Retainer
204	Camshaft Retainer Bolt

cardiagn.com

205	Camshaft Sprocket
206	Camshaft Sprocket Bolt
207	Crankshaft Sprocket
208	Timing Chain
231	Timing Chain Tensioner Bolt
232	Timing Chain Tensioner
300	Water Pump
301	Water Pump Bolt
302	Water Pump Inlet Bolt
303	Water Pump Inlet
305	Engine Coolant Thermostat
306	Water Pump Gasket
404	Oil Pump Suction Pipe Nut
405	Oil Pump Suction Pipe Bolt
406	Oil Pump O-Ring Seal
407	Oil Pump Suction Pipe
408	Oil Pump Cover Bolt
409	Oil Pump Cover
410	Oil Pump Drive Gear
411	Oil Pump Bolt
412	Oil Pump Driven Gear
413	Oil Pump
414	Oil Pressure Relief Valve
415	Oil Pressure Relief Valve Spring
416	Oil Pressure Relief Valve Bore Plug
417	Oil Level Indicator O-Ring Seal
418	Oil Level Indicator
419	Oil Level Indicator Tube Bolt
420	Oil Level Indicator Tube
421	O-Ring
501	Engine Front Cover Bolt
502	Engine Front Cover
503	Engine Front Cover Gasket
703	Camshaft Position (CMP) Sensor
704	CMP Sensor O-Ring Seal
705	CMP Sensor Bolt
737	CMP Sensor Wire Harness Assembly
738	CMP Sensor Wire Harness Assembly Bolt

cardiagn.com

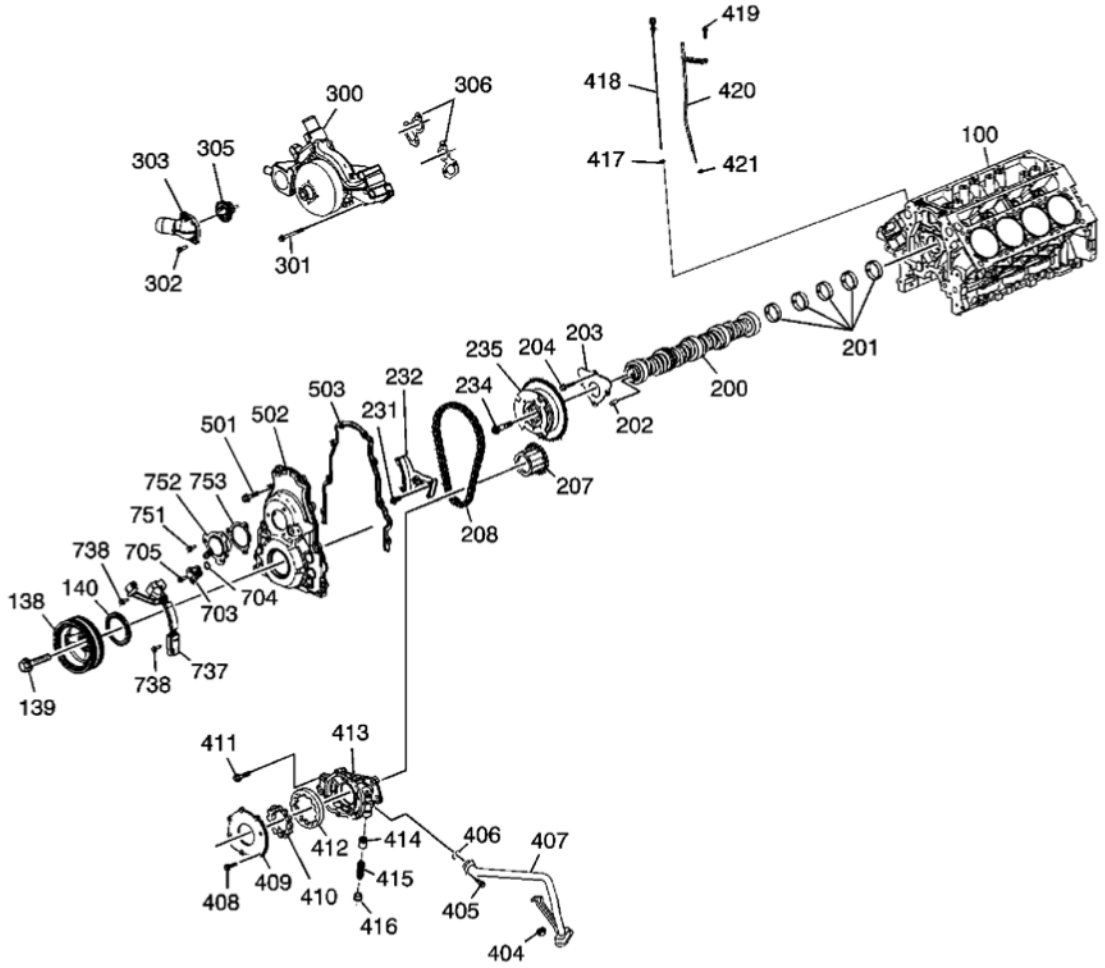

Fig. 13: Front of Engine - RPO LY6/L76/L92
Courtesy of GENERAL MOTORS CORP.

Callouts For Fig. 13

Callout	Component Name
100	Engine Block
138	Crankshaft Balancer
139	Crankshaft Balancer Bolt
140	Crankshaft Front Oil Seal
200	Camshaft
201	Camshaft Bearing
202	Camshaft Sprocket Locating Pin
203	Camshaft Retainer
204	Camshaft Retainer Bolt
207	Crankshaft Sprocket
208	Timing Chain

231	Timing Chain Tensioner Bolt
232	Timing Chain Tensioner
234	Camshaft Position (CMP) Actuator Solenoid Valve
235	CMP Actuator
300	Water Pump
301	Water Pump Bolt
302	Water Pump Inlet Bolt
303	Water Pump Inlet
305	Engine Coolant Thermostat
306	Water Pump Gasket
404	Oil Pump Suction Pipe Nut
405	Oil Pump Suction Pipe Bolt
406	Oil Pump O-Ring Seal
407	Oil Pump Suction Pipe
408	Oil Pump Cover Bolt
409	Oil Pump Cover
410	Oil Pump Drive Gear
411	Oil Pump Bolt
412	Oil Pump Driven Gear
413	Oil Pump
414	Oil Pressure Relief Valve
415	Oil Pressure Relief Valve Spring
416	Oil Pressure Relief Valve Bore Plug
417	Oil Level Indicator O-Ring Seal
418	Oil Level Indicator
419	Oil Level Indicator Tube Bolt
420	Oil Level Indicator Tube
421	O-Ring
501	Engine Front Cover Bolt
502	Engine Front Cover
503	Engine Front Cover Gasket
703	CMP Sensor
704	CMP Sensor O-Ring Seal
705	CMP Sensor Bolt
737	CMP Sensor Wire Harness Assembly
738	CMP Sensor Wire Harness Assembly Bolt
738	CMP Sensor Wire Harness Assembly Bolt
751	CMP Actuator Hub Cover Bolt
752	CMP Actuator Magnet
753	CMP Actuator Magnet Gasket

cardiagn.com

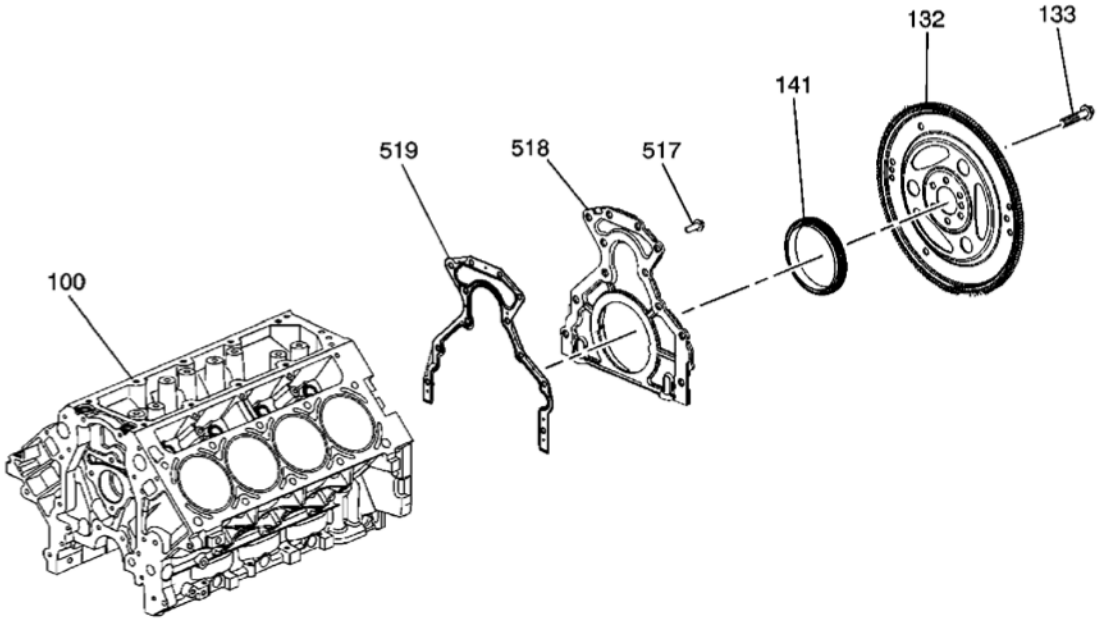

Fig. 14: Rear of Engine
Courtesy of GENERAL MOTORS CORP.

Callouts For Fig. 14

Callout	Component Name
100	Engine Block
132	Flex Plate - Automatic Transmission
133	Flywheel Bolt
141	Crankshaft Rear Oil Seal
517	Crankshaft Rear Oil Seal Housing Bolt
518	Crankshaft Rear Oil Seal Housing
519	Crankshaft Rear Oil Seal Housing Gasket

cardiagn.com

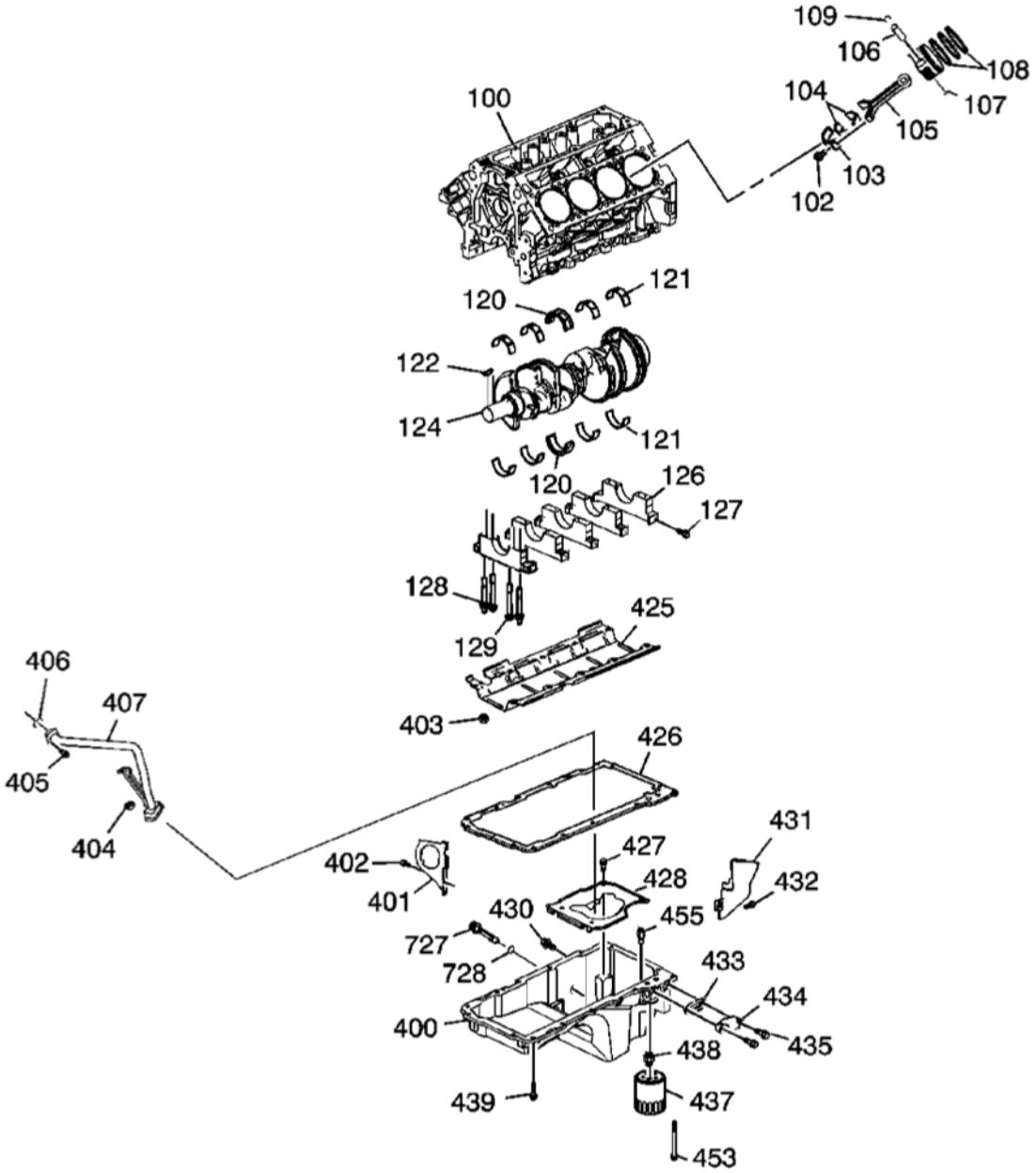

Fig. 15: Lower Engine Assembly
Courtesy of GENERAL MOTORS CORP.

Callouts For Fig. 15

Callout	Component Name
100	Engine Block
102	Connecting Rod Bolt
103	Connecting Rod Cap
104	Connecting Rod Bearing

cardiagn.com

105	Connecting Rod
106	Piston Pin
107	Piston
108	Piston Ring Set
109	Piston Pin Retainer
120	Crankshaft Thrust Bearing
120	Crankshaft Thrust Bearing
121	Crankshaft Bearing
121	Crankshaft Bearing
122	Crankshaft Balancer Key
124	Crankshaft
126	Crankshaft Bearing Cap
127	Crankshaft Bearing Cap Bolt - M8
128	Crankshaft Bearing Cap Stud - M10
129	Crankshaft Bearing Cap Bolt - M10
400	Oil Pan
401	Oil Pan Closeout Cover
402	Oil Pan Closeout Cover Bolt
403	Crankshaft Oil Deflector Nut
404	Oil Pump Suction Pipe Nut
405	Oil Pump Suction Pipe Bolt
406	Oil Pump O-Ring Seal
407	Oil Pump Suction Pipe
425	Crankshaft Oil Deflector
426	Oil Pan Gasket
427	Oil Pan Baffle Bolt
428	Oil Pan Baffle
430	Oil Pan Drain Plug
431	Oil Pan Closeout Cover
432	Oil Pan Closeout Cover Bolt
433	Oil Pan Cover Gasket
434	Oil Pan Cover
435	Oil Pan Cover Bolt
437	Oil Filter
438	Oil Filter Fitting
439	Oil Pan Bolt
453	Oil Pan Bolt
455	Active Fuel Management Oil Pressure Relief Valve
727	Engine Oil Level Indicator Switch
728	O-Ring

cardiagn.com

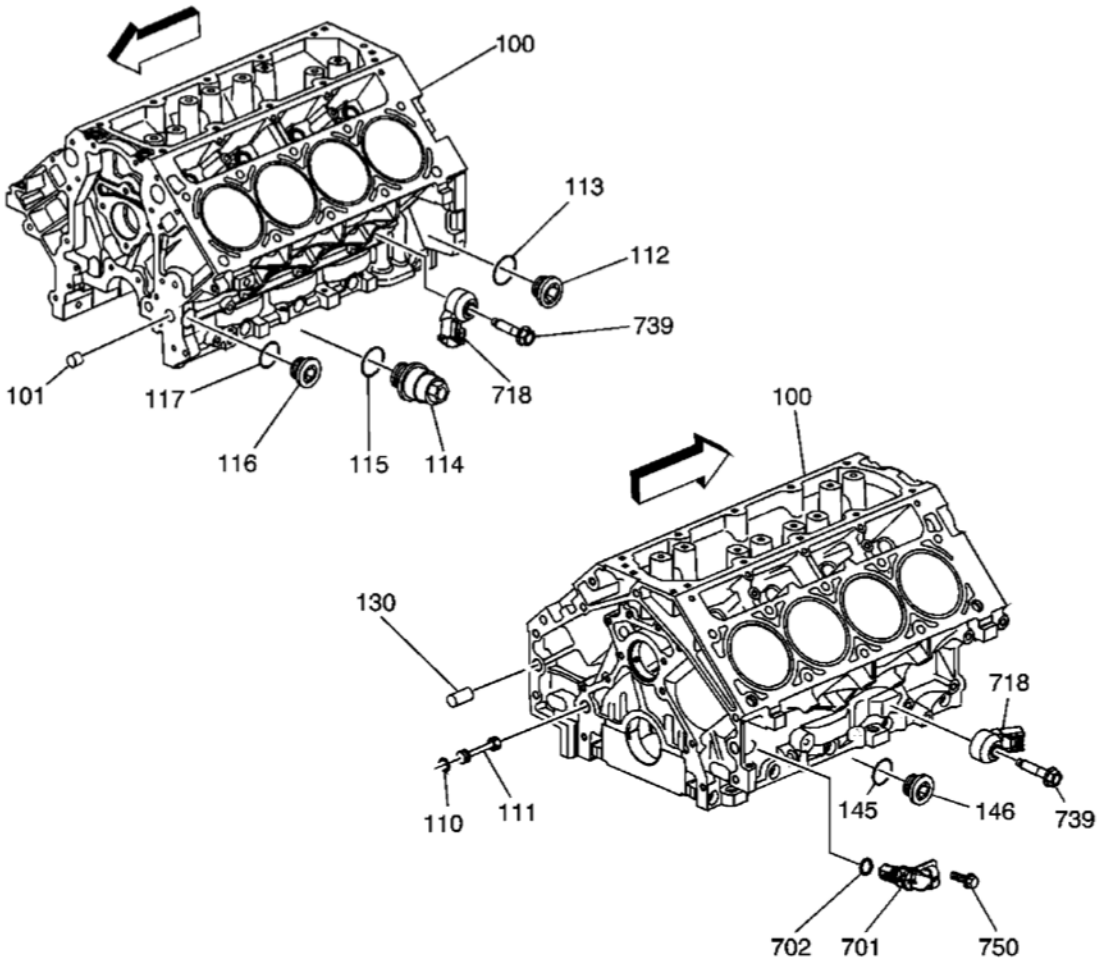

Fig. 16: Exploded View Of Engine Block Plugs/Sensors Components
Courtesy of GENERAL MOTORS CORP.

Callouts For Fig. 16

Callout	Component Name
100	Engine Block
100	Engine Block
101	Oil Gallery Plug - Front
110	O-Ring
111	Oil Gallery Plug - Rear
112	Oil Gallery Plug - Side
113	Washer
114	Engine Coolant Heater
115	Washer
116	Oil Gallery Plug - Side
117	Washer

cardiagn.com

130	Transmission Housing Locating Pin
145	Washer
146	Engine Block Coolant Drain Hole Plug
701	Crankshaft Position (CKP) Sensor
702	O-Ring
718	Knock Sensor
718	Knock Sensor
739	Bolt
739	Bolt
750	CKP Sensor Bolt

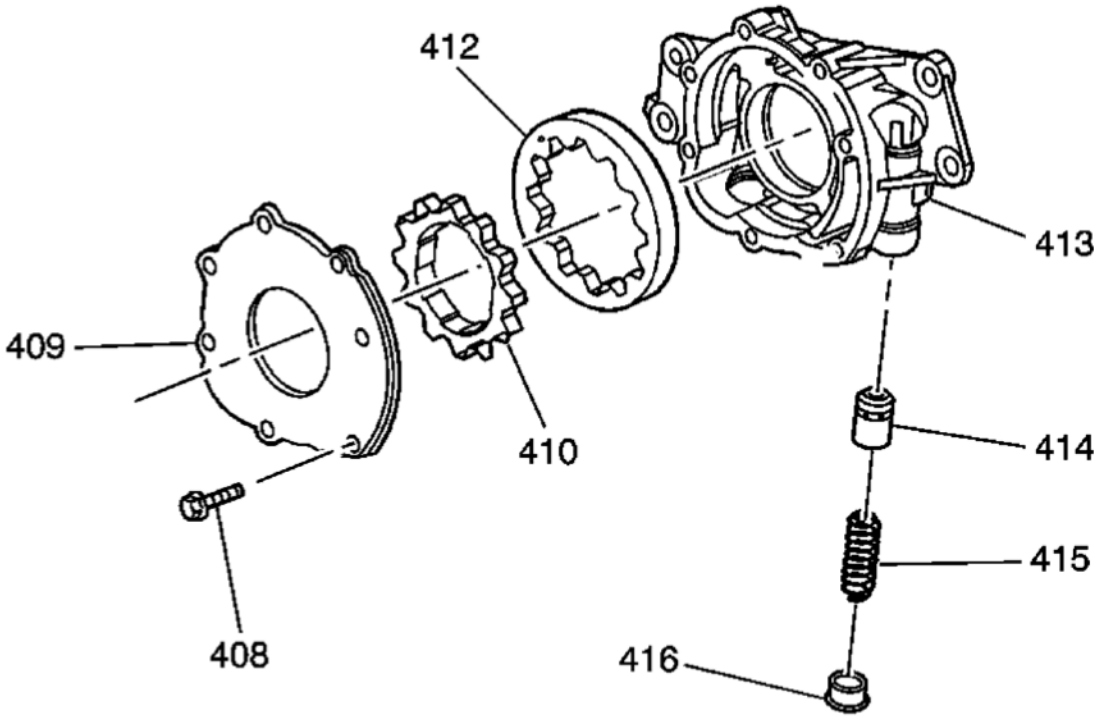

Fig. 17: Exploded View Of Oil Pump Assembly
Courtesy of GENERAL MOTORS CORP.

Callouts For Fig. 17

Callout	Component Name
408	Bolt
409	Oil Pump Housing Cover
410	Oil Pump Drive Gear
412	Oil Pump Driven Gear
413	Oil Pump
414	Oil Pump Pressure Relief Valve

cardiagn.com

415	Oil Pump Pressure Relief Valve Spring
416	Oil Pump Housing Plug

ENGINE IDENTIFICATION

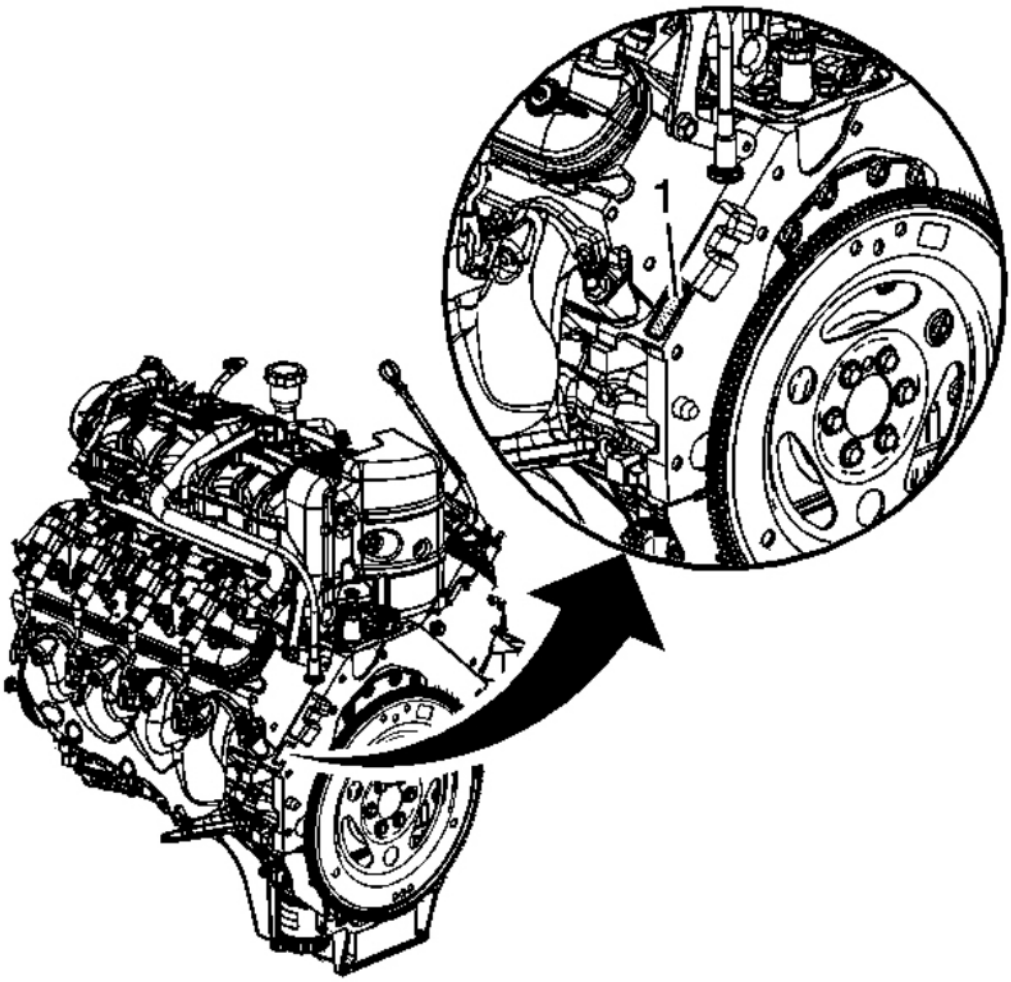

Fig. 18: Locating 9 Digit VIN Number
Courtesy of GENERAL MOTORS CORP.

The vehicle identification number (VIN) is located on the left side rear of the engine block (1) and is typically a 9 digit number stamped or laser-etched onto the engine at the vehicle assembly plant.

- The first digit identifies the division.

cardiagn.com

- The second digit identifies the model year.
- The third digit identifies the assembly plant.
- The fourth through ninth digits are the last 6 digits of the VIN.

DIAGNOSTIC INFORMATION AND PROCEDURES

DIAGNOSTIC STARTING POINT - ENGINE MECHANICAL

Begin the system diagnosis by reviewing the **Disassembled Views**, **Engine Content Specifications**, **Engine Component Description**, **Lubrication Description (RPO LY2)** or **Lubrication Description (RPO LC9/LY5/LMG)** or **Lubrication Description (RPO LY6)** or **Lubrication Description (RPO L76)** or **Lubrication Description (RPO L92)**, **Camshaft Position Actuator and Solenoid Valve Description**, and **Cylinder Deactivation (Active Fuel Management) System Description**. Reviewing the description and operation information helps you determine the correct symptom diagnostic procedure when a malfunction exists. Reviewing the description and operation information also helps you determine if the condition described by the customer is normal operation. Refer to **Symptoms - Engine Mechanical** in order to identify the correct procedure for diagnosing the system and where the procedure is located.

SYMPTOMS - ENGINE MECHANICAL

Strategy Based Diagnostics

1. Perform the **Diagnostic System Check - Vehicle** before using the symptom tables.
2. Review the system operations in order to familiarize yourself with the system functions. Refer to **Disassembled Views**, **Engine Content Specifications**, **Engine Component Description**, **Lubrication Description (RPO LY2)** or **Lubrication Description (RPO LC9/LY5/LMG)** or **Lubrication Description (RPO LY6)** or **Lubrication Description (RPO L76)** or **Lubrication Description (RPO L92)**, **Camshaft Position Actuator and Solenoid Valve Description**, and **Cylinder Deactivation (Active Fuel Management) System Description**.

All diagnosis on a vehicle should follow a logical process. Strategy based diagnostics is a uniform approach for repairing all systems. The diagnostic flow may always be used in order to resolve a system condition. The diagnostic flow is the place to start when repairs are necessary. For a detailed explanation, refer to **Strategy Based Diagnosis** .

Visual/Physical Inspection

- Inspect for aftermarket devices which could affect the operation of the engine. Refer to **Checking Aftermarket Accessories** .
- Inspect the easily accessible or visible system components for obvious damage or conditions which could cause the symptom.
- Inspect for the correct oil level, proper oil viscosity, and correct filter application.
- Verify the exact operating conditions under which the concern exists. Note factors such as engine RPM, ambient temperature, engine temperature, amount of engine warm-up time, and other specifics.
- Compare the engine sounds, if applicable, to a known good engine and make sure you are not trying to

cardiagn.com

correct a normal condition.

Intermittent

Test the vehicle under the same conditions that the customer reported in order to verify the system is operating properly.

Symptom List

Refer to a symptom diagnostic procedure from the following list in order to diagnose the symptom:

- **Base Engine Misfire without Internal Engine Noises**
- **Base Engine Misfire with Abnormal Internal Lower Engine Noises**
- **Base Engine Misfire with Abnormal Valve Train Noise**
- **Base Engine Misfire with Coolant Consumption**
- **Base Engine Misfire with Excessive Oil Consumption**
- **Engine Noise on Start-Up, but Only Lasting a Few Seconds**
- **Upper Engine Noise, Regardless of Engine Speed**
- **Lower Engine Noise, Regardless of Engine Speed**
- **Engine Noise Under Load**
- **Engine Will Not Crank - Crankshaft Will Not Rotate**
- **Coolant in Combustion Chamber**
- **Coolant in Engine Oil**
- **Cylinder Deactivation (Active Fuel Management) System Diagnosis**
- **Engine Compression Test**
- **Cylinder Deactivation (Active Fuel Management) System Compression Test**
- **Cylinder Leakage Test**
- **Oil Consumption Diagnosis**
- **Oil Pressure Diagnosis and Testing**
- **Cylinder Deactivation (Active Fuel Management) Oil Pressure Relief Valve Diagnosis and Testing**
- **Cylinder Deactivation (Active Fuel Management) Valve Lifter Oil Manifold Diagnosis and Testing**
- **Camshaft Position Actuator and Solenoid Valve Diagnosis and Testing**
- **Oil Leak Diagnosis**
- **Crankcase Ventilation System Inspection/Diagnosis**
- **Drive Belt Chirping, Squeal, and Whine Diagnosis**
- **Drive Belt Rumbling and Vibration Diagnosis**
- **Drive Belt Falls Off and Excessive Wear Diagnosis**
- **Drive Belt Tensioner Diagnosis**

BASE ENGINE MISFIRE WITHOUT INTERNAL ENGINE NOISES

cardiagn.com

Base Engine Misfire without Internal Engine Noises

Cause	Correction
Fuel injector harness connectors are connected to the incorrect fuel injectors/cylinders	Relocate the fuel injector harness connectors, as necessary.
Abnormalities, such as severe cracking, bumps, or missing areas in the accessory drive belt Abnormalities in the accessory drive system and/or components may cause engine RPM variations and lead to a misfire diagnostic trouble code (DTC). A misfire code may be present without an actual misfire condition.	Replace the drive belt. Refer to **Drive Belt Replacement - Accessory** .
Worn, damaged, or mis-aligned accessory drive components or excessive pulley runout May lead to a misfire DTC. A misfire code may be present without an actual misfire condition.	Inspect the components and repair or replace, as required.
Loose or improperly installed engine flex plate or crankshaft balancer A misfire code may be present without an actual misfire condition.	Repair or replace the flex plate and/or balancer, as required. Refer to **Automatic Transmission Flex Plate Replacement** , or **Crankshaft Balancer Replacement** .
Restricted exhaust system A severe restriction in the exhaust flow can cause significant loss of engine performance and may set a DTC. Possible causes of restrictions include collapsed or dented pipes or plugged mufflers and/or catalytic converters.	Repair or replace, as required.
Improperly installed or damaged vacuum hoses	Repair or replace, as required.
Improper sealing between the intake manifold and cylinder heads or throttle body	Replace the intake manifold, gaskets, cylinder heads, and/or throttle body, as required.
Improperly installed or damaged manifold absolute pressure (MAP) sensor The sealing grommet of the MAP sensor should not be torn or damaged.	Repair or replace the MAP sensor, as required.
Worn or loose rocker arms The rocker arm bearing end caps and/or needle bearings should be intact and in the proper position.	Replace the valve rocker arms, as required.
Worn or bent pushrods	• Replace the pushrods. • Inspect the top of the pistons for valve contact. If the top of the piston shows valve contact, replace the piston and pin assembly.
Stuck valves Carbon buildup on the valve stem can cause the valve to not close properly.	Repair or replace, as required.
Excessively worn or mis-aligned timing chain	Replace the timing chain and sprockets, as required.
Worn camshaft lobes	Replace the camshaft and valve lifters.

cardiagn.com

Excessive oil pressure A lubrication system with excessive oil pressure may lead to excessive valve lifter pump-up and loss of compression.	1. Perform an oil pressure test. Refer to **Oil Pressure Diagnosis and Testing**. 2. Repair or replace the oil pump, as required.
Faulty cylinder head gaskets and/or cracking or other damage to the cylinder heads and engine block cooling system passages Coolant consumption may or may not cause the engine to overheat.	1. Inspect for spark plugs saturated by coolant. Refer to **Spark Plug Inspection** . 2. Inspect the cylinder heads, engine block, and/or head gaskets. Refer to **Coolant in Combustion Chamber**. 3. Repair or replace, as required.
Worn piston rings Oil consumption may or may not cause the engine to misfire.	1. Inspect the spark plugs for oil deposits. Refer to **Spark Plug Inspection** . 2. Inspect the cylinders for a loss of compression. Refer to **Engine Compression Test**. 3. Perform cylinder leak down and compression testing to identify the cause. Refer to **Cylinder Leakage Test**. 4. Repair or replace, as required.
A damaged crankshaft reluctor wheel A damaged crankshaft reluctor wheel can result in different symptoms depending on the severity and location of the damage. • Systems with electronic communications, DIS or coil per cylinder, and severe reluctor ring damage may exhibit periodic loss of crankshaft position, stop delivering a signal, and then sync the crankshaft position. • Systems with electronic communication, DIS or coil per cylinder, and slight reluctor ring damage may exhibit no loss of crankshaft position and no misfire may occur. However, a P0300 DTC may be set. • Systems with mechanical communications, high voltage switch, and severe reluctor ring damage may cause additional pulses and effect fuel and spark delivery to the point of generating a P0300 DTC or P0336.	Replace the sensor and/or crankshaft, as required.
Improper operation of the active fuel management system	Repair, as required. Refer to **Cylinder Deactivation (Active Fuel Management) System Diagnosis**.
Improper operation of the camshaft position (CMP) actuator and/or control system	Repair, as required. Refer to **Camshaft Position Actuator and Solenoid Valve Diagnosis and Testing**.

cardiagn.com

BASE ENGINE MISFIRE WITH ABNORMAL INTERNAL LOWER ENGINE NOISES

Base Engine Misfire with Abnormal Internal Lower Engine Noises

Cause	Correction
Abnormalities, such as severe cracking, bumps or missing areas in the accessory drive belt Abnormalities in the accessory drive system and/or components may cause engine RPM variations, noises similar to a faulty lower engine and also lead to a misfire condition. A misfire code may be present without an actual misfire condition.	Replace the drive belt. Refer to **Drive Belt Replacement - Accessory** .
Worn, damaged, or mis-aligned accessory drive components or excessive pulley runout A misfire code may be present without an actual misfire condition.	Inspect the components and repair or replace, as required.
Loose or improperly installed engine flex plate or crankshaft balancer A misfire code may be present without an actual misfire condition.	Repair or replace the flex plate and/or balancer, as required. Refer to **Automatic Transmission Flex Plate Replacement** , or **Crankshaft Balancer Replacement** .
Worn piston rings Oil consumption may or may not cause the engine to misfire.	1. Inspect the spark plugs for oil deposits. Refer to **Spark Plug Inspection** . 2. Inspect the cylinders for a loss of compression. Refer to **Engine Compression Test**. 3. Perform cylinder leak down and compression testing to determine the cause. Refer to **Cylinder Leakage Test**. 4. Repair or replace, as required.
Worn crankshaft thrust bearings Severely worn thrust surfaces on the crankshaft and/or thrust bearing may permit fore and aft movement of the crankshaft and create a DTC without an actual misfire condition.	Replace the crankshaft and bearings, as required.

BASE ENGINE MISFIRE WITH ABNORMAL VALVE TRAIN NOISE

Base Engine Misfire with Abnormal Valve Train Noise

Cause	Correction
Worn or loose rocker arms The rocker arm bearing end caps and/or needle bearings should be intact within the rocker arm assembly.	Replace the valve rocker arms, as required.
Worn or bent pushrods	• Replace the pushrods.

cardiagn.com

	• Inspect the top of the pistons for valve contact. If the top of the piston shows valve contact, replace the piston and pin assembly.
Stuck valves Carbon buildup on the valve stem can cause the valve to not close properly.	Repair or replace, as required.
Excessively worn or mis-aligned timing chain	Replace the timing chain and sprockets, as required.
Worn camshaft lobes	Replace the camshaft and valve lifters.
Sticking lifters	Replace, as required.
Cut or damaged oil pump screen O-ring seal which may cause aeration of the engine oil	Repair, as required. Refer to **Oil Pressure Diagnosis and Testing**.
Improper operation of the active fuel management oil pressure relief valve	Repair, as required. Refer to **Cylinder Deactivation (Active Fuel Management) Oil Pressure Relief Valve Diagnosis and Testing**.
Improper operation of the active fuel management system	Repair, as required. Refer to **Cylinder Deactivation (Active Fuel Management) System Diagnosis**.
Improper operation of the camshaft position (CMP) actuator and/or control system	Repair, as required. Refer to **Camshaft Position Actuator and Solenoid Valve Diagnosis and Testing**.

BASE ENGINE MISFIRE WITH COOLANT CONSUMPTION

Base Engine Misfire with Coolant Consumption

Cause	Correction
Faulty cylinder head gaskets and/or cracking or other damage to the cylinder heads and engine block cooling system passages Coolant consumption may or may not cause the engine to overheat.	1. Inspect for spark plugs saturated by coolant. Refer to **Spark Plug Inspection** . 2. Perform a cylinder leak down test. Refer to **Cylinder Leakage Test**. 3. Inspect the cylinder heads and engine block for damage to the coolant passages and/or a faulty head gasket. Refer to **Coolant in Combustion Chamber**. 4. Repair or replace, as required.

BASE ENGINE MISFIRE WITH EXCESSIVE OIL CONSUMPTION

Base Engine Misfire with Excessive Oil Consumption

Cause	Correction
Worn valves, valve guides and/or valve stem oil seals	1. Inspect the spark plugs for oil deposits. Refer to **Spark Plug Inspection** . 2. Repair or replace, as required.
Worn piston rings Oil consumption may or may not cause the engine	1. Inspect the spark plugs for oil deposits. Refer

cardiagn.com

to misfire.	to **Spark Plug Inspection** . 2. Inspect the cylinders for a loss of compression. Refer to **Engine Compression Test**. 3. Perform cylinder leak down and compression testing to determine the cause. Refer to **Cylinder Leakage Test**. 4. Repair or replace, as required.

ENGINE NOISE ON START-UP, BUT ONLY LASTING A FEW SECONDS

Engine Noise on Start-Up, but Only Lasting a Few Seconds

Cause	Correction
Incorrect oil filter without anti-drainback feature	Install the correct oil filter.
Incorrect oil viscosity	1. Drain the oil. 2. Install the correct viscosity oil.
High valve lifter leak down rate	Replace the lifters, as required.
Worn crankshaft thrust bearing	1. Inspect the crankshaft end play. 2. Inspect the thrust bearing and crankshaft. 3. Repair or replace, as required.
Damaged or faulty oil filter bypass valve The bypass valve is now internal to the oil filter.	1. Inspect the oil filter bypass valve for proper operation. 2. Repair or replace, as required.

UPPER ENGINE NOISE, REGARDLESS OF ENGINE SPEED

Upper Engine Noise, Regardless of Engine Speed

Cause	Correction
Low oil pressure	1. Perform an oil pressure test. Refer to **Oil Pressure Diagnosis and Testing**. 2. Repair or replace, as required.
Loose and/or worn valve rocker arm attachments	1. Inspect the valve rocker arm, bolt, and pedestal. 2. Repair or replace, as required.
Worn or damaged valve rocker arm	1. Inspect the rocker arm for wear or missing needle bearings 2. Replace the valve rocker arms, as required.
Bent or damaged push rod	Inspect the following components and replace, as required:

cardiagn.com

	• The valve rocker arm • The valve push rod • The valve lifter • The valve lifter guide • The piston Inspect the top of the pistons for valve contact. If the top of the piston shows valve contact, replace the piston and pin assembly.
Improper lubrication to the valve rocker arms	Inspect the following components and repair or replace, as required: • The valve rocker arm • The valve push rod • The valve lifter • The oil filter bypass valve • The oil pump and pump screen • Improper operation of the active fuel management oil pressure relief valve • The engine block oil galleries
Broken valve spring	Replace the valve spring and spring shim.
Worn or dirty valve lifters	Replace the valve lifters, as required.
Active fuel management valve lifter with a broken spring	Replace the valve lifters, as required.
Improper operation of the active fuel management oil pressure relief valve	Repair, as required. Refer to **Cylinder Deactivation (Active Fuel Management) Oil Pressure Relief Valve Diagnosis and Testing**.
Improper operation of the camshaft position (CMP) actuator and/or control system	Repair, as required. Refer to **Camshaft Position Actuator and Solenoid Valve Diagnosis and Testing**.
Stretched or broken timing chain and/or damaged sprocket teeth	Replace the timing chain and sprockets.
Worn engine camshaft lobes	1. Inspect the engine camshaft lobes. 2. Replace the camshaft and valve lifters, as required.
Worn valve guides or valve stems	Inspect the following components and repair, as required: • The valves • The valve guides
	Inspect the following components and repair, as

cardiagn.com

Stuck valves Carbon on the valve stem or valve seat may cause the valve to stay open.	required: • The valves • The valve guides
Cut or damaged oil pump screen O-ring seal which may cause aeration of the engine oil	Repair, as required. Refer to **Oil Pressure Diagnosis and Testing**.

LOWER ENGINE NOISE, REGARDLESS OF ENGINE SPEED

Lower Engine Noise, Regardless of Engine Speed

Cause	Correction
Low oil pressure	1. Perform an oil pressure test. Refer to **Oil Pressure Diagnosis and Testing**. 2. Repair or replace damaged components, as required.
Worn accessory drive components Abnormalities such as severe cracking, bumps or missing areas in the accessory drive belt and/or misalignment of system components.	1. Inspect the accessory drive system. 2. Repair or replace, as required.
Loose or damaged crankshaft balancer	1. Inspect the crankshaft balancer. 2. Repair or replace, as required.
Detonation or spark knock	Verify the correct operation of the ignition controls system. Refer to **Symptoms - Engine Controls** .
Loose torque converter bolts	1. Inspect the torque converter bolts and flex plate. 2. Repair or replace, as required.
Loose or damaged flywheel or flex plate	Repair or replace the flywheel or flex plate.
Oil pump screen loose, damaged, or restricted	1. Inspect the oil pump screen. 2. Repair or replace, as required.
Excessive piston-to-cylinder bore clearance	1. Inspect the piston and cylinder bore. 2. Repair, as required.
Excessive piston pin-to-bore clearance	1. Inspect the piston, pin, and connecting rod. 2. Replace the piston and pin as an assembly, as required.
Excessive connecting rod bearing clearance	Inspect the following components and repair, as required: • The connecting rod bearings • The connecting rods • The crankshaft

cardiagn.com

	• The crankshaft journals
Excessive crankshaft bearing clearance	Inspect the following components and repair, as required: • The crankshaft bearings • The crankshaft journals
Incorrect piston, piston pin, and connecting rod installation Pistons must be installed with the mark or dimple on the top of the piston facing the front of the engine. Piston pins must be centered in the connecting rod pin bore.	1. Verify the pistons, piston pins and connecting rods are installed correctly. Refer to **Piston, Connecting Rod, and Bearing Installation** . 2. Repair, as required.

ENGINE NOISE UNDER LOAD

Engine Noise Under Load

Cause	Correction
Low oil pressure	1. Perform an oil pressure test. Refer to **Oil Pressure Diagnosis and Testing**. 2. Repair or replace, as required.
Detonation or spark knock	Verify the correct operation of the ignition controls. Refer to **Symptoms - Engine Controls** .
Loose torque converter bolts	1. Inspect the torque converter bolts and flex plate. 2. Repair, as required.
Cracked flex plate - automatic transmission	1. Inspect the flex plate bolts and flex plate. 2. Repair, as required.
Excessive connecting rod bearing clearance	Inspect the following components and repair, as required: • The connecting rod bearings • The connecting rods • The crankshaft
Excessive crankshaft bearing clearance	Inspect the following components and repair, as required: • The crankshaft bearings • The crankshaft journals • The cylinder block crankshaft bearing bore

ENGINE WILL NOT CRANK - CRANKSHAFT WILL NOT ROTATE

cardiagn.com

Engine Will Not Crank - Crankshaft Will Not Rotate

Cause	Correction
Seized accessory drive system component	1. Remove the accessory drive belts. 2. Confirm that the engine will rotate. Rotate the crankshaft by hand at the crankshaft balancer or flex plate location. 3. Repair or replace the components, as required.
Seized automatic transmission torque converter	1. Remove the torque converter-to-flex plate bolts. 2. Confirm that the engine will rotate. Rotate the crankshaft by hand at the crankshaft balancer or flex plate location. 3. Repair or replace the components, as required.
Broken timing chain	1. Inspect the timing chain and sprockets. 2. Repair or replace the components, as required.
Seized timing chain or timing sprockets	1. Inspect the timing chain and sprockets for foreign material or a seized chain. 2. Repair or replace the components, as required.
Seized or broken camshaft	1. Inspect the camshaft and the camshaft bearings. 2. Repair or replace the components, as required.
Bent valve in the cylinder head	1. Inspect the valves and the cylinder heads. 2. Repair or replace the components, as required.
Seized oil pump	1. Inspect the oil pump assembly. 2. Repair or replace, as required.
Hydraulically locked cylinder • Coolant/antifreeze in the cylinder • Oil in the cylinder • Fuel in the cylinder	1. Remove the spark plugs and inspect for fluid in the cylinder. When rotating the engine with the spark plugs removed, the piston, on compression stroke, will push fluid from the combustion chamber. Refer to **Coolant in Combustion Chamber**. 2. Inspect for failed/broken head gaskets. 3. Inspect for a cracked engine block or cylinder head.

cardiagn.com

	4. Inspect for a sticking fuel injector. 5. Repair or replace the components, as required.
Material in the cylinder • Broken valve • Broken piston rings • Piston material • Foreign material	1. Inspect the cylinder for damaged components and/or foreign materials. 2. Repair or replace the components, as required.
Seized crankshaft or connecting rod bearings	1. Inspect crankshaft and connecting rod bearings. 2. Repair or replace the components, as required.
Bent or broken connecting rod	1. Inspect the connecting rods. 2. Replace the piston and pin as an assembly, as required.
Broken crankshaft	1. Inspect the crankshaft. 2. Repair or replace the components, as required.

COOLANT IN COMBUSTION CHAMBER

Coolant in Combustion Chamber

Cause	Correction
DEFINITION: Excessive white smoke and/or coolant type odor coming from the exhaust pipe may indicate coolant in the combustion chamber. Low coolant levels, an inoperative cooling fan, or a faulty thermostat may lead to an overtemperature condition, which may cause engine component damage. 1. A slower than normal cranking speed may indicate coolant entering the combustion chamber. Refer to **Engine Will Not Crank - Crankshaft Will Not Rotate**. 2. Remove the spark plugs and inspect for spark plugs saturated by coolant or coolant in the cylinder bore. 3. Inspect by performing a cylinder leak-down test. During this test, excessive air bubbles within the coolant may indicate a faulty gasket or damaged component. 4. Inspect by performing a cylinder compression test. 2 cylinders side-by-side on the engine block, with low compression, may indicate a failed cylinder head gasket. Refer to **Engine Compression Test**.	
Cracked intake manifold or failed gasket	Replace the components, as required.
Faulty cylinder head gasket	Replace the head gasket and components, as required. Refer to **Cylinder Head Cleaning and Inspection** and **Cylinder Head Replacement - Left Side** or **Cylinder Head Replacement - Right Side** .

cardiagn.com

Warped cylinder head	Machine the cylinder head to the proper flatness, if applicable and replace the cylinder head gasket. Refer to **Cylinder Head Cleaning and Inspection** .
Cracked cylinder head	Replace the cylinder head and gasket.
Cracked cylinder liner or engine block	Replace the components, as required.
Cylinder head or engine block porosity	Replace the components, as required.

COOLANT IN ENGINE OIL

Coolant in Engine Oil

Cause	Correction
DEFINITION: Foamy or discolored oil or an engine oil overfill condition may indicate coolant entering the engine crankcase. Low coolant levels, an inoperative cooling fan, or a faulty thermostat may lead to an overtemperature condition which may cause engine component damage. Contaminated engine oil and oil filter should be changed. 1. Inspect the oil for excessive foaming or an overfill condition. Oil diluted by coolant may not properly lubricate the crankshaft bearings and may lead to component damage. Refer to **Lower Engine Noise, Regardless of Engine Speed**. 2. Inspect by performing a cylinder leak-down test. During this test, excessive air bubbles within the cooling system may indicate a faulty gasket or damaged component. 3. Inspect by performing a cylinder compression test. 2 cylinders side-by-side on the engine block with low compression may indicate a failed cylinder head gasket. Refer to **Engine Compression Test**.	
Faulty external engine oil cooler	Replace the components, as required.
Faulty cylinder head gasket	Replace the head gasket and components, as required. Refer to **Cylinder Head Cleaning and Inspection** and **Cylinder Head Replacement - Left Side** or **Cylinder Head Replacement - Right Side** .
Warped cylinder head	Machine the cylinder head to proper flatness, if applicable, and replace the cylinder head gasket. Refer to **Cylinder Head Cleaning and Inspection** .
Cracked cylinder head	Replace the cylinder head and gasket.
Cracked cylinder liner or engine block	Replace the components, as required.
Cylinder head, block, or manifold porosity	Replace the components, as required.

CYLINDER DEACTIVATION (ACTIVE FUEL MANAGEMENT) SYSTEM DIAGNOSIS

IMPORTANT:

- **Active Fuel Management System Diagnosis is applicable for RPO LC9/LY5/LMG/L76.**
- **Active fuel management hardware is present in first design L92 engines. The system is inactive for the 2007 model year.**

1. Measure the engine oil level. Fill, as required.

cardiagn.com

2. Using the scan tool, inspect for diagnostic codes within the engine control module (ECM). Refer to **Diagnostic System Check - Vehicle** . Repair, as required.
3. Verify proper engine oil pressure and operation of the active fuel management oil pressure relief valve. Refer to **Oil Pressure Diagnosis and Testing**.
4. Verify proper operation of the active fuel management system components. Refer to **Cylinder Deactivation (Active Fuel Management) System Compression Test**.
5. Remove the valve lifter oil manifold. Refer to **Valve Lifter Oil Manifold Replacement** .
6. Verify proper operation of the valve lifter oil manifold. Refer to **Cylinder Deactivation (Active Fuel Management) Valve Lifter Oil Manifold Diagnosis and Testing**.
7. Replace the active fuel management valve lifters, as required. Both intake and exhaust lifters should be replaced in pairs. Refer to **Valve Lifter Replacement (RPOs LC9/LMG/LY5/L76/L92)** or **Valve Lifter Replacement (RPOs LY2/LY6)** .

ENGINE COMPRESSION TEST

1. Charge the battery if the battery is not fully charged.
2. Disable the ignition system.
3. Disable the fuel injection system.
4. Remove all spark plugs.
5. Turn the ignition to the ON position.
6. Depress the accelerator pedal to position the throttle plate wide open.
7. Start with the compression gage at zero and crank the engine through 4 compression strokes, 4 puffs.
8. Measure the compression for each cylinder. Record the readings.
9. If a cylinder has low compression, inject approximately 15 ml (1 tablespoon) of engine oil into the combustion chamber through the spark plug hole. Measure the compression again and record the reading.
10. The minimum compression in any 1 cylinder should not be less than 70 percent of the highest cylinder. No cylinder should read less than 690 kPa (100 psi). For example, if the highest pressure in any 1 cylinder is 1 035 kPa (150 psi), the lowest allowable pressure for any other cylinder would be 725 kPa (105 psi). (1 035 x 70% = 725) (150 x 70% = 105).
    - Normal - Compression builds up quickly and evenly to the specified compression for each cylinder.
    - Piston Rings Leaking - Compression is low on the first stroke. Compression builds up with the following strokes, but does not reach normal. Compression improves considerably when you add oil.
    - Valves Leaking - Compression is low on the first stroke. Compression usually does not build up on the following strokes. Compression does not improve much when you add oil.
    - If 2 adjacent cylinders have lower than normal compression, and injecting oil into the cylinders does not increase the compression, the cause may be a head gasket leaking between the cylinders.

CYLINDER DEACTIVATION (ACTIVE FUEL MANAGEMENT) SYSTEM COMPRESSION TEST

IMPORTANT:

- **Active Fuel Management System Compression Test is applicable for RPO LC9/LY5/LMG/L76.**

cardiagn.com

- **Active fuel management hardware is present in first design L92 engines. The system is inactive for the 2007 model year.**

The Active Fuel Management System Compression Test is a functional test of the valve lifter oil manifold and valve lifters. Using a compression gage, the technician can monitor the specific cylinders ability to go into and out of active fuel management as commanded by the scan tool. The actual pressure values on the compression gage are not as critical as is observing the on-off switching action of the solenoid and valve lifters.

1. Measure the engine oil level. Fill, as required.
2. Perform the Diagnostic System Check - Vehicle. Refer to **Diagnostic System Check - Vehicle** .
3. Disable the ignition system for the cylinder to be tested, by disconnecting the electrical wire harness to the ignition coil.
4. Disable the fuel injection system for the cylinder to be tested, by disconnecting the electrical wire harness to the fuel injector.
5. Remove the spark plug and wire for the cylinder to be tested.
6. Install a 0-1 378 kPa (0-200 psi) compression gage.
7. Start the engine.
8. Using the scan tool output controls, command the solenoid ON, for the cylinder to be deactivated.
9. Depress the Schrader valve on the compression gage, in order to release the pressure and zero the gage. With the engine running and the cylinder in active fuel management mode, the compression reading should be less than 172 kPa (25 psi).
10. Using the scan tool, de-energize the solenoid while observing the reading on the compression gage. With the engine running and the cylinder NOT in active fuel management mode, the compression gage reading should increase quickly to greater than 345 kPa (50 psi).

IMPORTANT: Only 1 cylinder can be tested at a time. When testing has been completed on a specific cylinder, the wire harness electrical connectors, spark plug, and spark plug wire must be installed prior to testing of each additional cylinder.

11. Test each of the 4 active fuel management cylinders, 1 at a time. If the readings are not within specifications, remove and test the valve lifter oil manifold, as required. Refer to **Valve Lifter Oil Manifold Replacement** and **Cylinder Deactivation (Active Fuel Management) Valve Lifter Oil Manifold Diagnosis and Testing**.
12. If the compression test has been performed and all active fuel management cylinders are operating within specifications, the active fuel management system is performing as designed and no repairs are required.
13. Clear the DTCs with a scan tool.

CYLINDER LEAKAGE TEST

Tools Required

J 35667-A Cylinder Head Leakdown Tester, or equivalent. See **Special Tools**.

cardiagn.com

IMPORTANT: A leakage test may be performed in order to measure cylinder/combustion chamber leakage. High cylinder leakage may indicate one or more of the following conditions:

- **Worn or burnt valves**
- **Broken valve springs**
- **Stuck valve lifters**
- **Incorrect valve lash**
- **Damaged piston**
- **Worn piston rings**
- **Worn or scored cylinder bore**
- **Damaged cylinder head gasket**
- **Cracked or damaged cylinder head**
- **Cracked or damaged engine block**

CAUTION: Refer to Battery Disconnect Caution .

1. Disconnect the battery ground negative cable.
2. Remove the spark plugs. Refer to **Spark Plug Replacement** .
3. Rotate the crankshaft to place the piston in the cylinder being tested at top dead center (TDC) of the compression stroke.
4. Install the **J 35667-A** , or equivalent. See **Special Tools**.

IMPORTANT: It may be necessary to hold the crankshaft balancer bolt to prevent the crankshaft from rotating.

5. Apply shop air pressure to the **J 35667-A** and adjust according to the manufacturers instructions. See **Special Tools**.
6. Record the cylinder leakage value. Cylinder leakage that exceeds 25 percent is considered excessive and may require component service. In excessive leakage situations, inspect for the following conditions:
   - Air leakage noise at the throttle body or air inlet hose that may indicate a worn or burnt intake valve or a broken valve spring.
   - Air leakage noise at the exhaust system tailpipe that may indicate a worn or burnt exhaust valve or a broken valve spring.
   - Air leakage noise from the crankcase, oil level indicator tube, or oil fill tube that may indicate worn piston rings, a damaged piston, a worn or scored cylinder bore, a damaged engine block or a damaged cylinder head.
   - Air bubbles in the cooling system may indicate a damaged cylinder head or a damaged cylinder head gasket.
7. Perform the leakage test on the remaining cylinders and record the values.

cardiagn.com

OIL CONSUMPTION DIAGNOSIS

Oil Consumption Diagnosis

Checks	Causes
Excessive oil consumption, not due to leaks, is the use of 1 L (1 qt) or more of engine oil within 3 200 kilometers (2,000 miles).	
Preliminary	The causes of excessive oil consumption may include the following conditions: • External oil leaks Refer to **Oil Leak Diagnosis**. • Incorrect oil level or improper reading of the oil level indicator With the vehicle on a level surface, run the engine for a few minutes, allow adequate drain down time, 2-3 minutes, and measure for the correct engine oil level. • Improper oil viscosity Refer to the vehicle owners manual and use the recommended SAE grade and viscosity for the prevailing temperatures. • Continuous high speed driving and/or severe usage • Crankcase ventilation system restrictions or malfunctioning components • Worn valve guides and/or valve stems • Worn or improperly installed valve stem oil seals • Piston rings broken, worn, or not seated properly Allow adequate time for the rings to seat. Replace worn piston rings, as necessary. • Piston and rings improperly installed or not fitted to the cylinder bore

OIL PRESSURE DIAGNOSIS AND TESTING

Tools Required

- **EN-47971** Oil Pressure Gage Adapter. See **Special Tools**.
- **J 21867** Pressure Gage. See **Special Tools**.

cardiagn.com

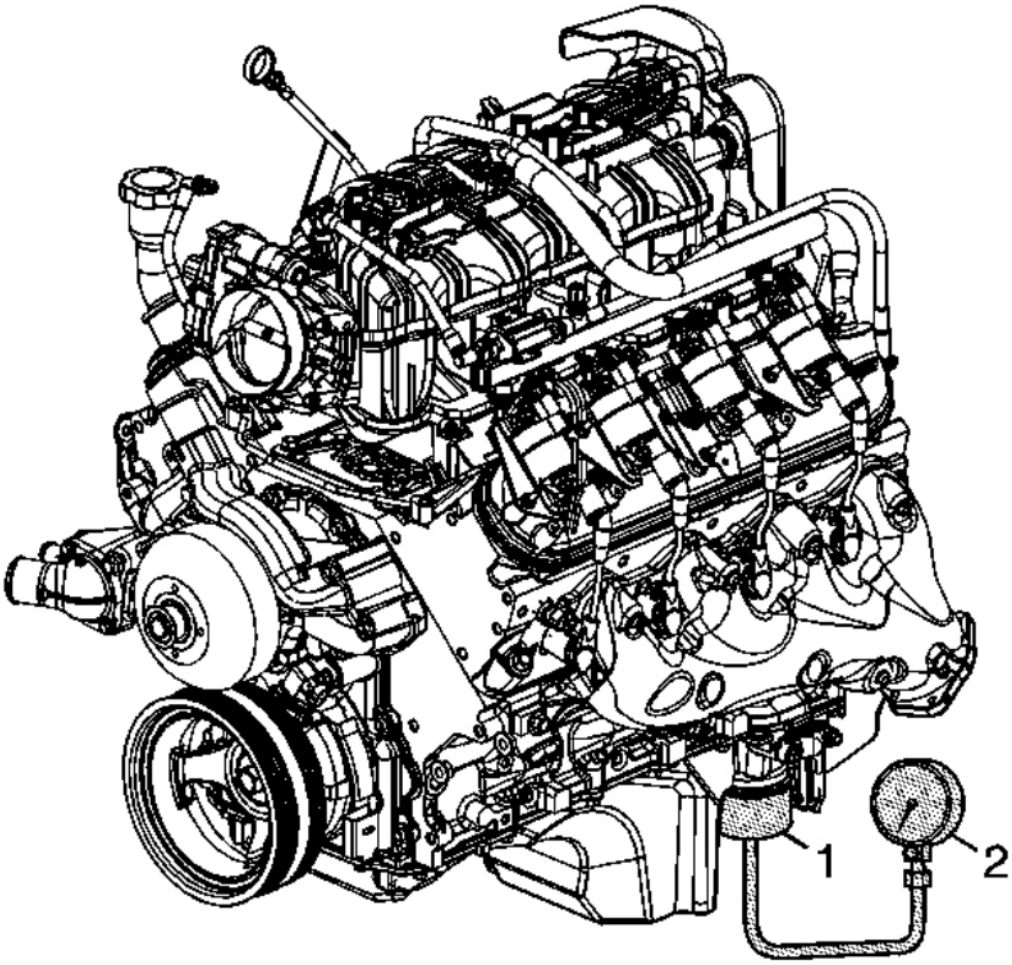

Fig. 19: View Of Special Tools Oil Pressure Gage & Adapter
Courtesy of GENERAL MOTORS CORP.

1. With the vehicle on a level surface, run the vehicle for a few minutes. Allow adequate drain down time, 2-3 minutes, and measure the oil level.
2. If required, add the recommended grade engine oil and fill the crankcase until the oil level measures full on the oil level indicator.
3. Run the engine briefly, 10-15 seconds, and verify low or no oil pressure on the vehicle gage or light.
4. Listen for a noisy valve train or a knocking noise.
5. Inspect for the following conditions:
    - Oil diluted by water or glycol antifreeze

cardiagn.com

Refer to **Coolant in Engine Oil** .

- Foamy oil, which may be caused by a cut or damaged oil pump screen O-ring seal

6. Remove the oil filter and install the **EN-47971** (1). See **Special Tools**.
7. Install the **J 21867** (2), or equivalent to the **EN-47971** (1). See **Special Tools**.
8. Run the engine and measure the engine oil pressure.
9. Compare the readings to **Engine Mechanical Specifications (RPO LY2 VIN C)** or **Engine Mechanical Specifications (RPO LMG VIN 0)** or **Engine Mechanical Specifications (RPO LY5 VIN J)** or **Engine Mechanical Specifications (RPO LC9 VIN 3)** or **Engine Mechanical Specifications (RPO L76 VIN Y)** or **Engine Mechanical Specifications (RPO LY6 VIN K)** or **Engine Mechanical Specifications (RPO L92 VIN 8)**.
10. If the engine oil pressure is below specifications, inspect the engine for 1 or more of the following conditions:
    - Oil pump worn or dirty

      Refer to **Oil Pump Cleaning and Inspection** .

    - Oil pump-to-engine block bolts loose

      Refer to **Oil Pump, Screen and Crankshaft Oil Deflector Installation (RPO LY2/LC9/LY5/LMG)** **Oil Pump, Screen and Crankshaft Oil Deflector Installation (RPO LY6/L76/L92)** .

    - Oil pump screen loose, plugged, or damaged
    - Oil pump screen O-ring seal missing or damaged
    - Malfunctioning oil pump pressure relief valve
    - Excessive bearing clearance
    - Cracked, porous, or restricted oil galleries
    - Oil gallery plugs missing or incorrectly installed

      Refer to **Engine Block Plug Installation** .

    - Improper operation of the active fuel management oil pressure relief valve

      Refer to **Cylinder Deactivation (Active Fuel Management) Oil Pressure Relief Valve Diagnosis and Testing** .

CYLINDER DEACTIVATION (ACTIVE FUEL MANAGEMENT) OIL PRESSURE RELIEF VALVE DIAGNOSIS AND TESTING

Tools Required

- **EN-47971** Oil Pressure Gage Adapter. See **Special Tools**.
- **J 21867** Pressure Gage. See **Special Tools**.

cardiagn.com

- **J-21867-16** Oil Pressure Adapter. See **Special Tools**.

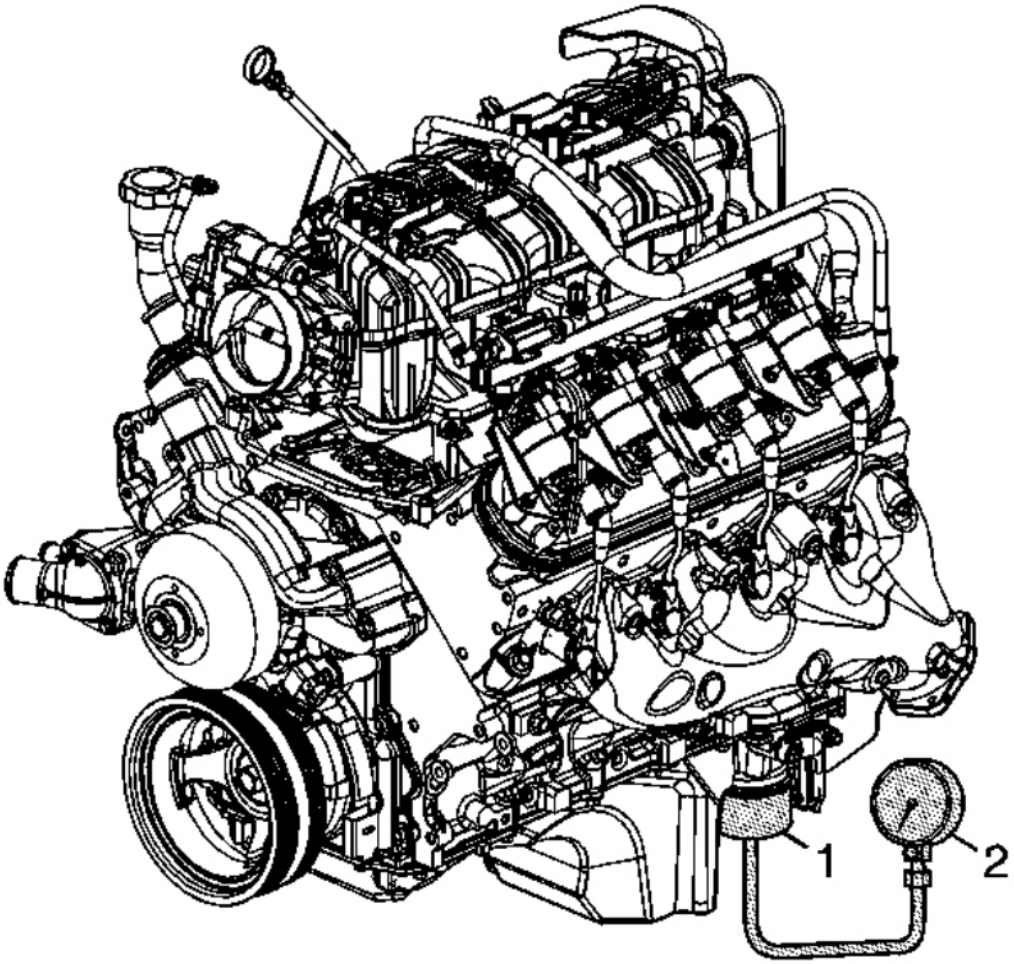

Fig. 20: View Of Special Tools Oil Pressure Gage & Adapter
Courtesy of GENERAL MOTORS CORP.

IMPORTANT:

- **Active Fuel Management Oil Pressure Relief Valve Diagnosis and Testing is applicable for RPO LY2/LC9/LY5/LMG/LY6/L76/L92.**
- **This test is performed to verify the operation of the active fuel management oil pressure relief valve located in the oil pan. Refer to Cylinder Deactivation (Active Fuel Management) System Description andLubrication Description (RPO LY2) or Lubrication Description (RPO LC9/LY5/LMG) or Lubrication Description (RPO LY6) or**

cardiagn.com

Lubrication Description (RPO L76) or Lubrication Description (RPO L92).

1. Remove the oil filter and install the **EN-47971** (1). See **Special Tools**.
2. Install the **J 21867** (2), or equivalent to the **EN-47971** (1). See **Special Tools**.

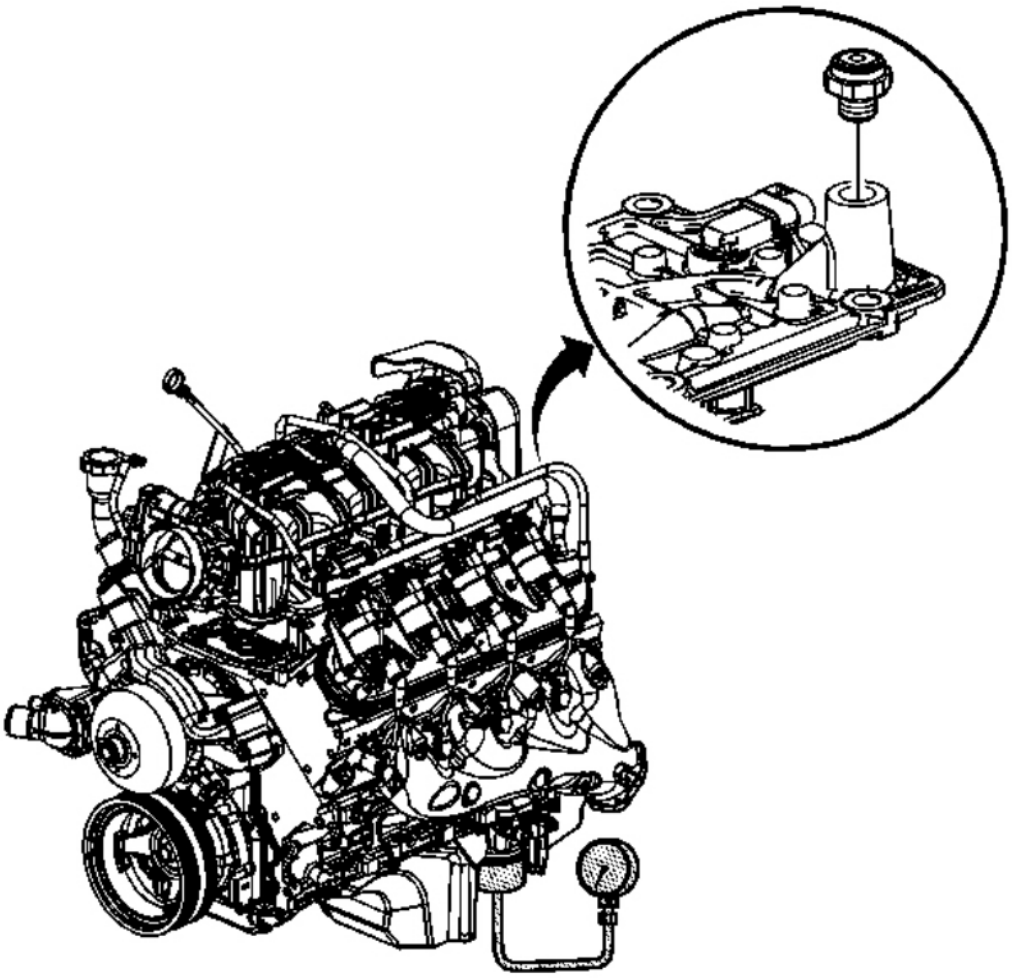

Fig. 21: View Of Oil Pressure Sensor
Courtesy of GENERAL MOTORS CORP.

3. Remove the oil pressure sensor and install the **J-21867-16** . See **Special Tools**.

cardiagn.com

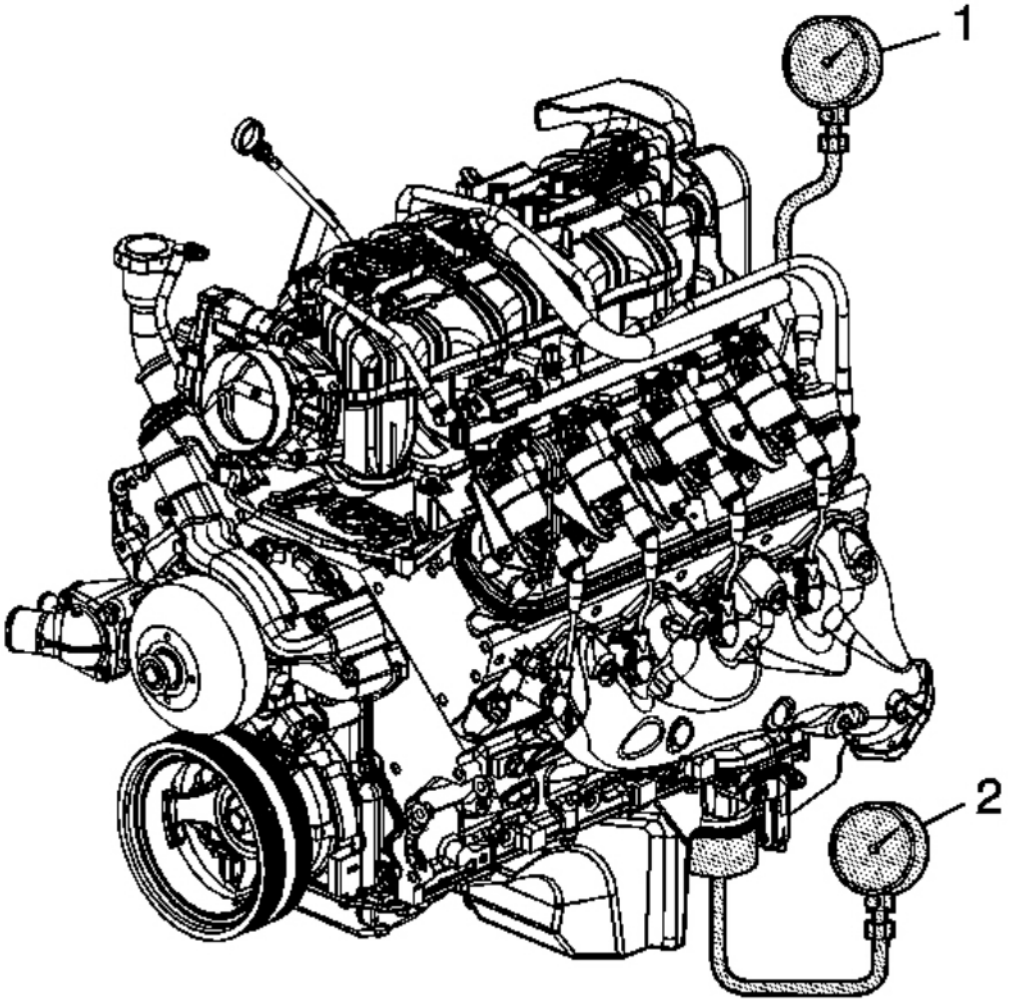

Fig. 22: Measuring Oil Pressure While Observing Both Gages
Courtesy of GENERAL MOTORS CORP.

4. Install the **J 21867** (1), or equivalent to the **J-21867-16** (2). See **Special Tools**.
5. Run the engine and measure the engine oil pressure while observing both gages.

   Operate the throttle, as required, to increase and decrease the engine oil pressure.

   - With the engine running and the lower pressure gage (2) measuring below 379 kPa (55 psi), both gages should display the same pressure reading. If the readings are not the same and the lower gage (2) has a higher reading, the active fuel management oil pressure relief valve is stuck in the open position or the valve lifter oil manifold filter is plugged.

cardiagn.com

- With the engine running and the lower pressure gage (2) measuring above 379 kPa (55 psi), the upper gage (1) should display no greater than 379-517 kPa (55-75 psi). If the reading on the upper gage (1) is greater than 517 kPa (75 psi), the active fuel management oil pressure relief valve is stuck in the closed position.

6. Repair, as required.

CYLINDER DEACTIVATION (ACTIVE FUEL MANAGEMENT) VALVE LIFTER OIL MANIFOLD DIAGNOSIS AND TESTING

Tools Required

- **EN-46999** Active Fuel Management Tester. See **Special Tools**.
- **EN-46999-1** Active Fuel Management Tester Air Adapter. See **Special Tools**.
- **EN-46999-5** Active Fuel Management Tester Harness - Small Block V8. See **Special Tools**.

IMPORTANT:

- **Active Fuel Management Valve Lifter Oil Manifold Diagnosis and Testing is applicable for RPO LC9/LY5/LMG/L76/L92.**
- **Active fuel management hardware is present in first design L92 engines. The system is inactive for the 2007 model year.**
- **A minimum shop air source of 206 kPa (30 psi) is required for manifold testing.**
- **A water bleed is located on the side of the EN-46999 . See Special Tools. Occasionally, depress the valve in order to remove excess water from the tool.**

cardiagn.com

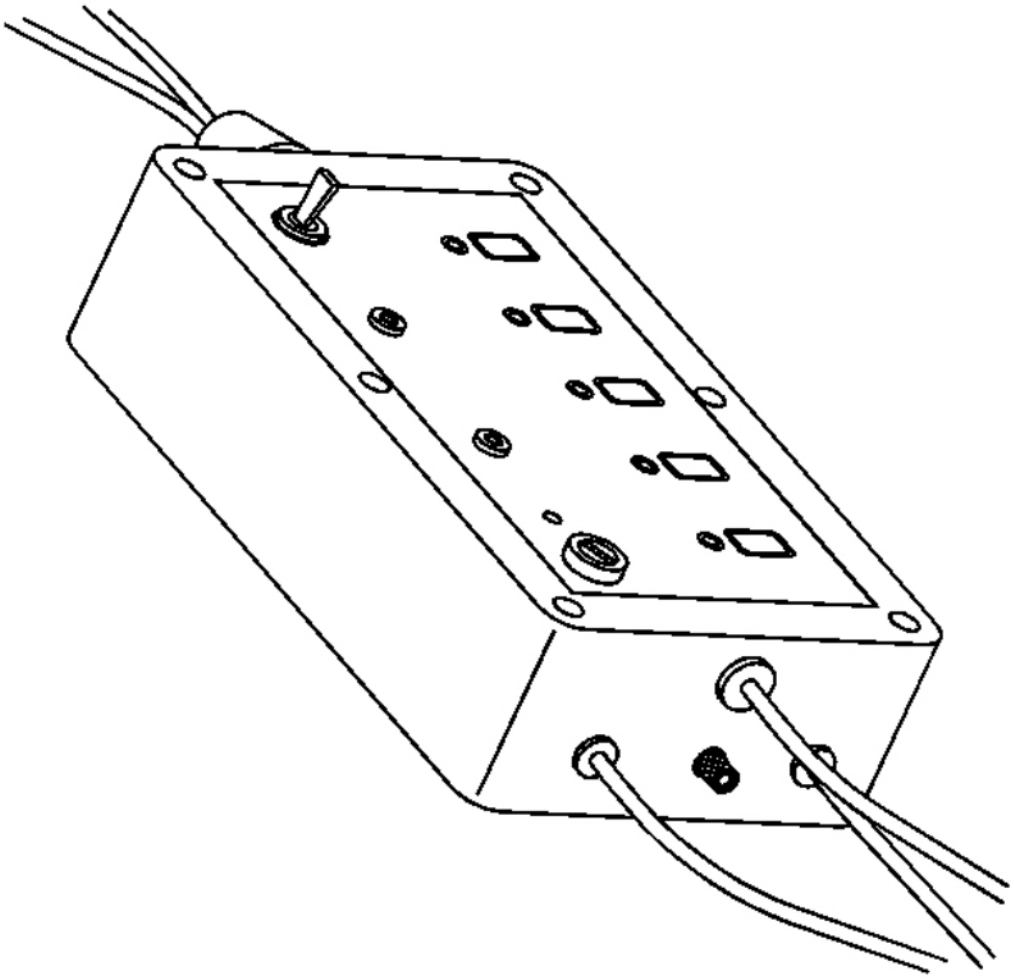

Fig. 23: Identifying Displacement On-Demand Tester
Courtesy of GENERAL MOTORS CORP.

The manifold bench test provides a maximum 206 kPa (30 psi) of filtered shop air to the manifold and will test each solenoid/valve for the following conditions:

- Proper operation
- A stuck open condition - constant air flow
- A stuck closed condition - no air flow
- A flow restriction within the manifold

1. Individually depress each of the buttons 1-4 on the **EN-46999** in order to activate each of the

cardiagn.com

solenoid/valves. See **Special Tools**. When activating each solenoid/valve, a loud click should be heard from the solenoid and an increased amount of air will exit the outlet ports.

- Button 1 will energize the solenoid/valve 1 for engine cylinder number 1.
- Button 2 will energize the solenoid/valve 2 for engine cylinder number 4.
- Button 3 will energize the solenoid/valve 3 for engine cylinder number 6.
- Button 4 will energize the solenoid/valve 4 for engine cylinder number 7.

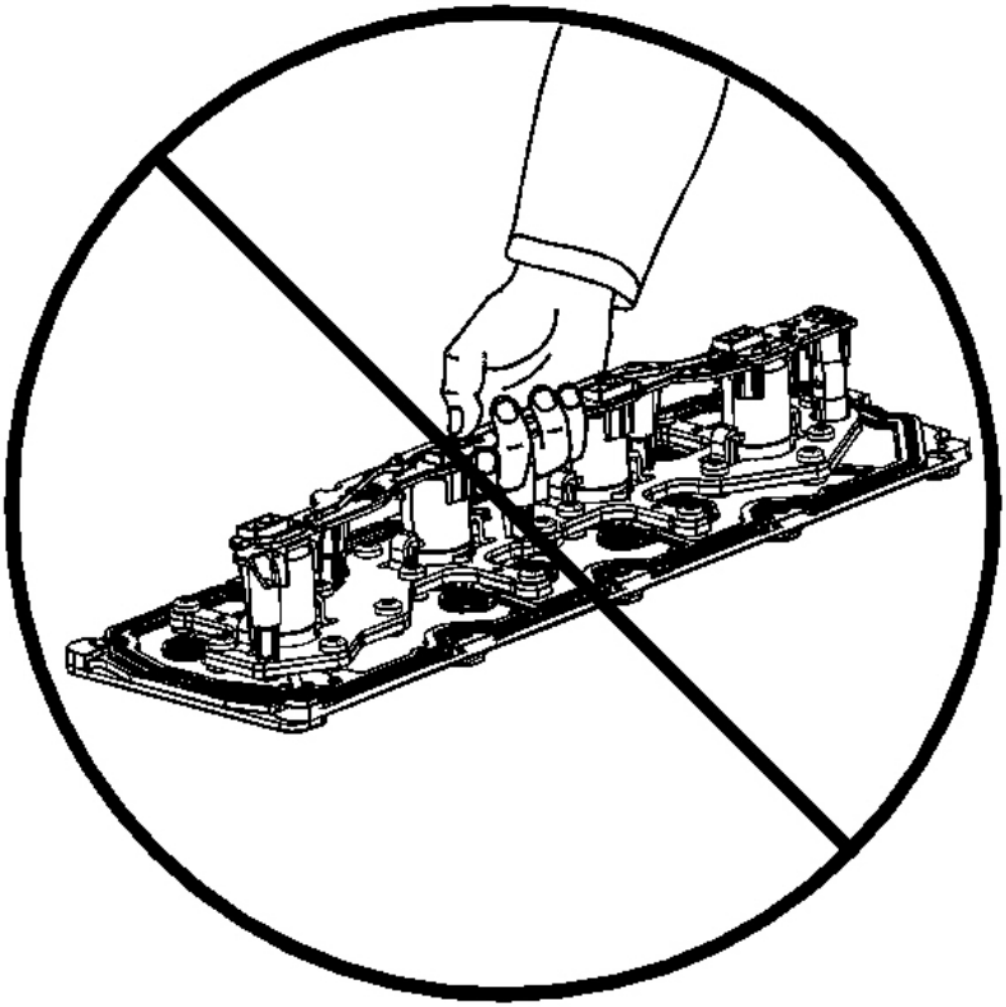

Fig. 24: Valve Lifter Oil Manifold
Courtesy of GENERAL MOTORS CORP.

2. Do not lift the manifold assembly by the electrical lead frame.

cardiagn.com

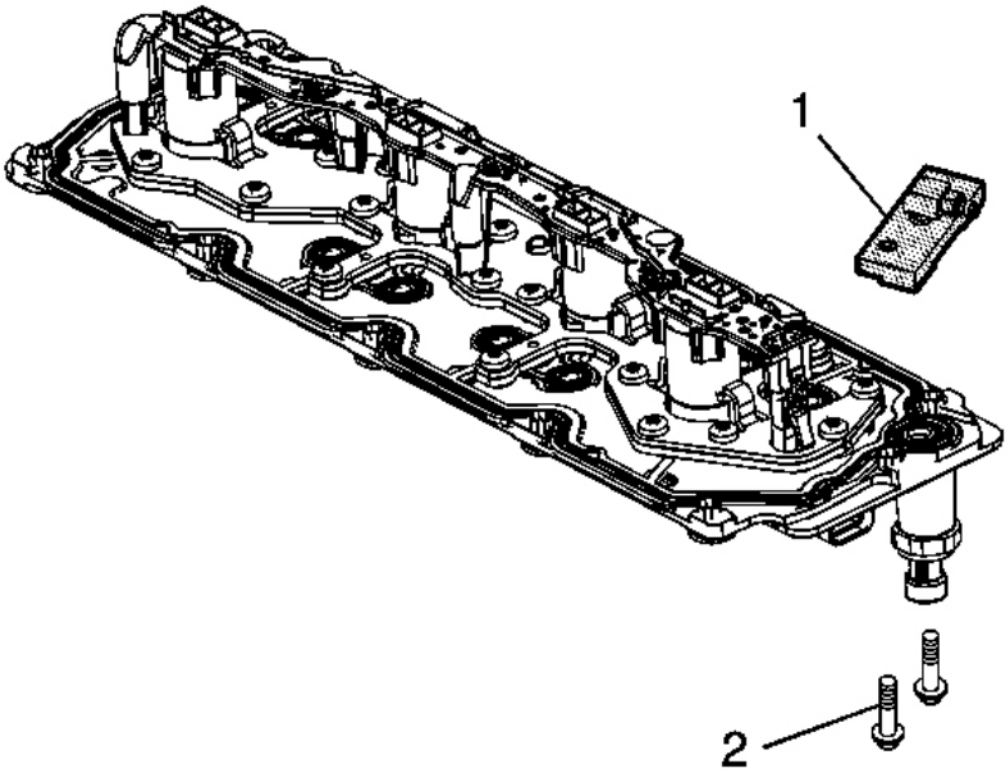

Fig. 25: Displacement-On-Demand Tester Air Adapter
Courtesy of GENERAL MOTORS CORP.

3. Install the **EN-46999-1** (1) to the manifold. See **Special Tools**.

NOTE: **Refer to Fastener Notice in Cautions and Notices.**

4. Install 2 of the manifold bolts (2) to the **EN-46999-1** . See **Special Tools**.

Tighten: Tighten the bolts to 25 N.m (18 lb ft).

cardiagn.com

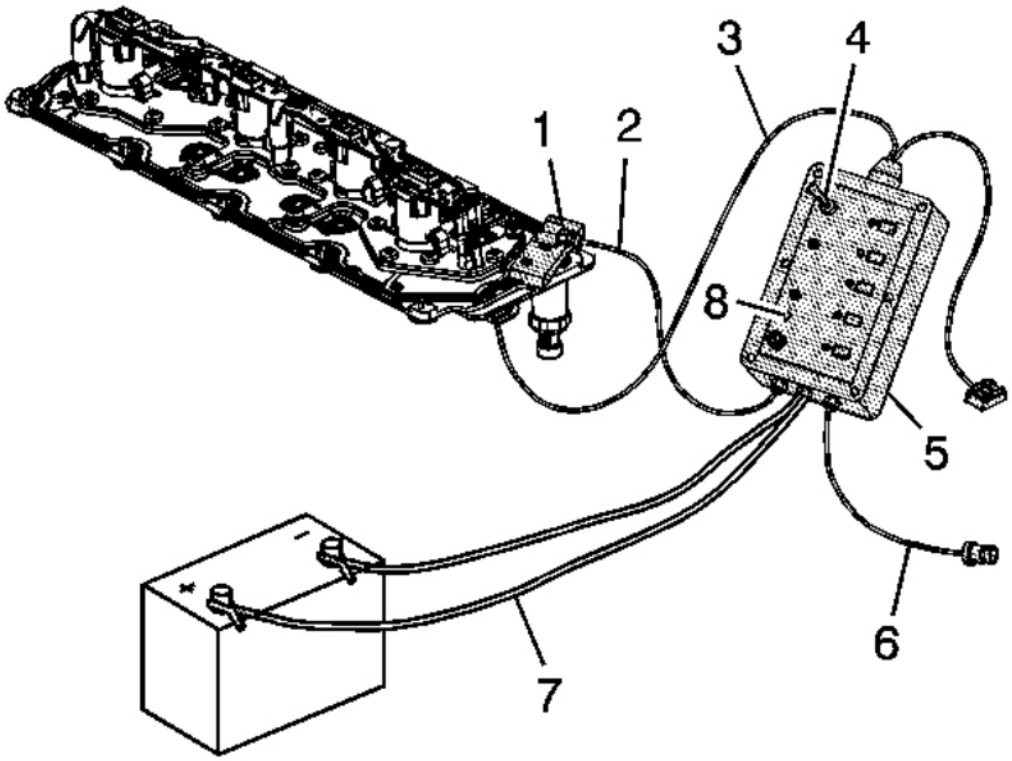

Fig. 26: Connecting Air Out Hose
Courtesy of GENERAL MOTORS CORP.

5. Connect the air out hose (2) of the **EN-46999** (5) to the **EN-46999-1** (1). See **Special Tools**. Verify the air supply switch (4) is in the off position.
6. Connect the air in hose (6) of the **EN-46999** (5) to a shop air source. See **Special Tools**.
7. Connect the 12 volt power supply connectors (7) of the **EN-46999** (5) to a 12 volt power supply. See **Special Tools**. Verify the Power light (8) on the tool is illuminated. If the light on the tool is not illuminated when connected to a 12 volt power supply, test and/or replace the 3 amp fuse.
8. Connect the **EN-46999-5** power cable (3) to the electrical connector of the manifold. See **Special Tools**.

cardiagn.com

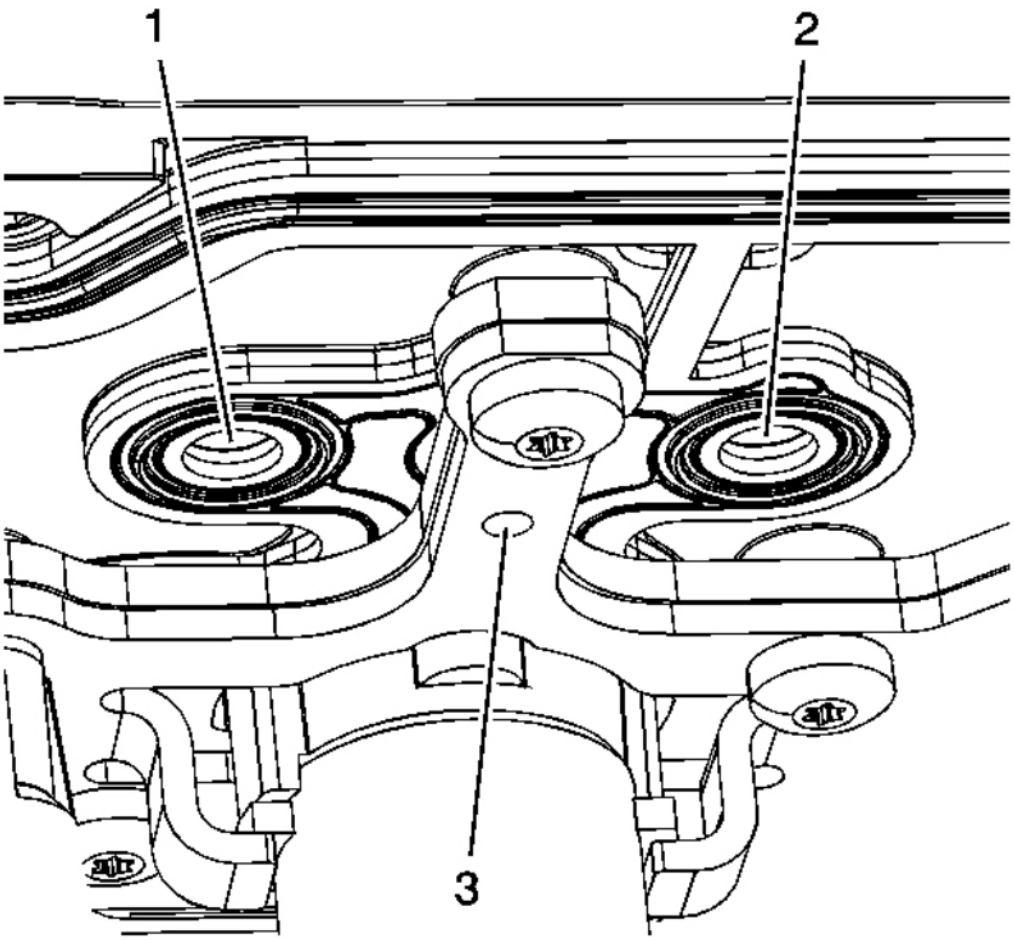

Fig. 27: Bleed Holes & Outlet Ports
Courtesy of GENERAL MOTORS CORP.

9. Turn the air supply switch of the **EN-46999** to the ON position. See **Special Tools**. With the air supply connected to the manifold assembly and the solenoid/valves in the closed position, a limited amount of air will exit each of the bleed holes (3) and outlet ports (1, 2) of the manifold.

cardiagn.com

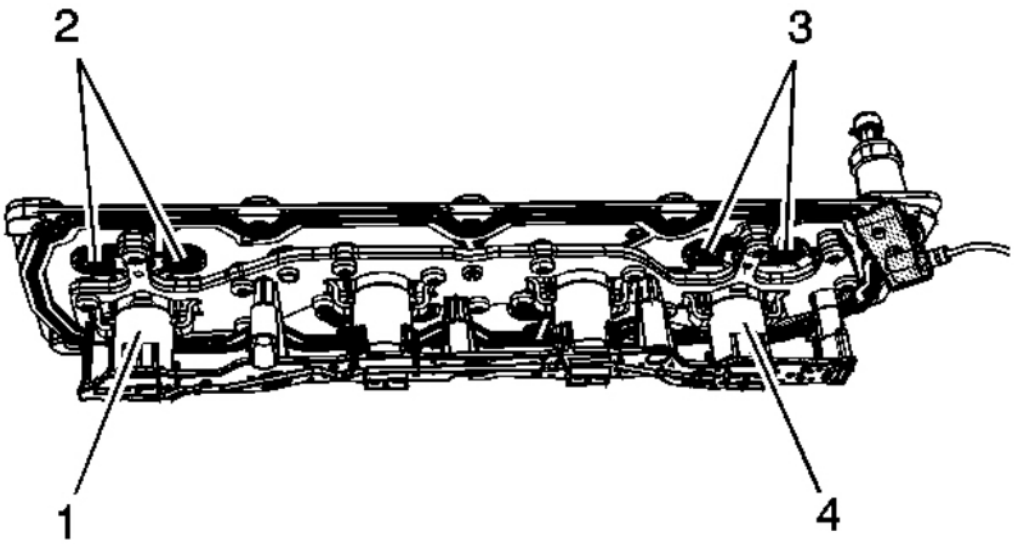

Fig. 28: Testing Solenoid/Valves
Courtesy of GENERAL MOTORS CORP.

IMPORTANT: The manifold must be tested in the proper position to ensure the solenoid/valves operate as designed.

10. Position the manifold assembly onto a bench at a 45 degree angle in order to test solenoid/valves 1 and 4.
11. Depress button number 1 on the tool to activate solenoid/valve 1. With button 1 depressed, the solenoid/valve (1) should open, allowing an increased amount of air to exit the outlet ports (2) of the manifold.
12. Depress button number 4 on the tool to activate solenoid/valve 4. With button 4 depressed, the solenoid/valve (4) should open, allowing an increased amount of air to exit the outlet ports (3) of the manifold.

cardiagn.com

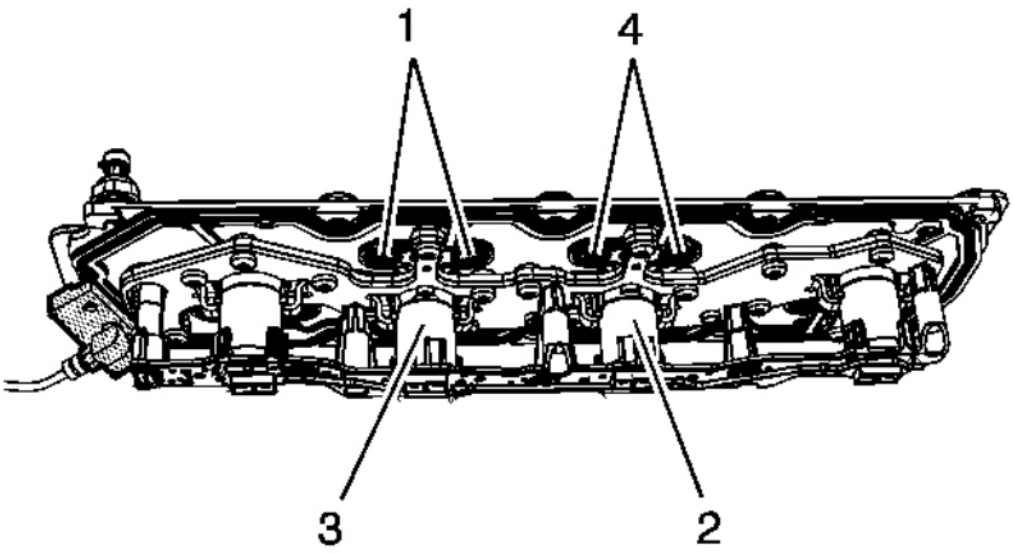

Fig. 29: View Of Solenoid/Valves 2 & 3
Courtesy of GENERAL MOTORS CORP.

13. Reposition the manifold assembly onto a bench at a 45 degree angle in order to test solenoid/valves 2 and 3.
14. Depress button number 2 on the tool to activate solenoid/valve 2. With button 2 depressed, the solenoid/valve (2) should open, allowing an increased amount of air to exit the outlet ports (4) of the manifold.
15. Depress button number 3 on the tool to activate solenoid/valve 3. With button 3 depressed, the solenoid/valve (3) should open, allowing an increased amount of air to exit the outlet ports (1) of the manifold.
16. When the test is completed, turn the air source switch on the **EN-46999** to the off position and disconnect the tool from the 12 volt power supply, shop air source and manifold assembly. See **Special Tools**.
17. If after testing, it has been determined that one or more of the solenoid/valves is not functioning properly, replace the manifold as an assembly.
18. If after testing, it has been determined that the solenoid/valves are functioning properly, replace the valve lifters as required. Both intake and exhaust lifters should be replaced in pairs.

CAMSHAFT POSITION ACTUATOR AND SOLENOID VALVE DIAGNOSIS AND TESTING

IMPORTANT: Camshaft Position (CMP) Actuator and Solenoid Valve Diagnosis and Testing is applicable for RPO LY6/L76/L92.

cardiagn.com

1. Measure the engine oil level. Fill, as required.
2. Using the scan tool, inspect for diagnostic codes within the engine control module (ECM). Refer to **Diagnostic System Check - Vehicle** . Repair, as required.
3. Verify proper engine oil pressure and operation of the active fuel management oil pressure relief valve. Refer to **Oil Pressure Diagnosis and Testing**.
4. Inspect the CMP actuator solenoid valve for proper operation. Refer to **Camshaft Position Actuator Solenoid Valve Inspection (On-Vehicle)** or **Camshaft Position Actuator Solenoid Valve Inspection (Off-Vehicle)** .
   - If valve inspection confirms proper movement of the spool, replace the CMP actuator and CMP valve.
   - If valve inspection confirms improper movement of the spool, replace only the CMP valve.
5. Verify proper operation of the CMP actuator control system. Refer to **Diagnostic Starting Point - Engine Controls** .

OIL LEAK DIAGNOSIS

Oil Leak Diagnosis

Step	Action	Yes	No
IMPORTANT: **You can repair most fluid leaks by first visually locating the leak, repairing or replacing the component, or by resealing the gasket surface. Once the leak is identified, determine the cause of the leak. Repair the cause of the leak as well as the leak itself.**			
1	1. Operate the vehicle until it reaches normal operating temperature. 2. Park the vehicle on a level surface, over a large sheet of paper or other clean surface. 3. Wait 15 minutes. 4. Inspect for drippings. Are drippings present?	Go to **Step 2**	System OK
2	Can you identify the type of fluid and the approximate location of the leak?	Go to **Step 10**	Go to **Step 3**
3	1. Visually inspect the suspected area. Use a small mirror to assist in looking at hard to see areas. 2. Inspect for leaks at the following locations: • Sealing surfaces • Fittings • Cracked or damaged components Can you identify the type of fluid and the approximate location of the leak?	Go to **Step 10**	Go to **Step 4**

cardiagn.com

4	1. Completely clean the entire engine and surrounding components. 2. Operate the vehicle for several kilometers, miles, at normal operating temperature and at varying speeds. 3. Park the vehicle on a level surface, over a large sheet of paper or other clean surface. 4. Wait 15 minutes. 5. Identify the type of fluid, and the approximate location of the leak. Can you identify the type of fluid and the approximate location of the leak?	Go to **Step 10**	Go to **Step 5**
5	1. Visually inspect the suspected area. Use a small mirror to assist in looking at hard to see areas. 2. Inspect for leaks at the following locations: • Sealing surfaces • Fittings • Cracked or damaged components Can you identify the type of fluid and the approximate location of the leak?	Go to **Step 10**	Go to **Step 6**
6	1. Completely clean the entire engine and surrounding components. 2. Apply an aerosol-type powder, baby powder, foot powder, etc., to the suspected area. 3. Operate the vehicle for several kilometers, miles, at normal operating temperature and at varying speeds. 4. Identify the type of fluid, and the approximate location of the leak, from the discolorations in the powder surface. Can you identify the type of fluid and the approximate location of the leak?	Go to **Step 10**	Go to **Step 7**
7	1. Visually inspect the suspected area. Use a small mirror to assist in looking at hard to see areas. 2. Inspect for leaks at the following locations: • Sealing surfaces • Fittings • Cracked or damaged components		

cardiagn.com

	Can you identify the type of fluid and the approximate location of the leak?	Go to **Step 10**	Go to **Step 8**
8	Use the **J 28428-E** high-intensity black light kit in order to identify the type of fluid, and the approximate location of the leak. See **Special Tools**. Refer to the manufacturer's instructions when using the tool. Can you identify the type of fluid and the approximate location of the leak?	Go to **Step 10**	Go to **Step 9**
9	1. Visually inspect the suspected area. Use a small mirror to assist in looking at hard to see areas. 2. Inspect for leaks at the following locations: • Sealing surfaces • Fittings • Cracked or damaged components Can you identify the type of fluid and the approximate location of the leak?	Go to **Step 10**	System OK
10	1. Inspect the engine for mechanical damage. Special attention should be shown to the following areas: • Higher than recommended fluid levels • Higher than recommended fluid pressures • Plugged or malfunctioning fluid filters or pressure bypass valves • Plugged or malfunctioning engine ventilation system • Improperly tightened or damaged fasteners • Cracked or porous components • Improper sealants or gaskets, where required • Improper sealant or gasket installation • Damaged or worn gaskets or seals • Damaged or worn sealing surfaces 2. Inspect the engine for customer modifications. Is there mechanical damage, or customer modifications to the engine?	Go to **Step 11**	System OK
11	Repair or replace all damaged or modified components. Does the engine still leak oil?	Go to **Step 1**	System OK

CRANKCASE VENTILATION SYSTEM INSPECTION/DIAGNOSIS

cardiagn.com

Crankcase Ventilation System Inspection/Diagnosis

Symptom	Correction
External oil leak	Inspect for any of the following conditions: • Restricted or kinked positive crankcase ventilation (PCV) hose or engine vent hose • Damaged, incorrect, or incorrectly installed PCV hose • Excessive crankcase pressure
Rough Idle	Inspect for any of the following conditions: • Restricted or kinked PCV hose or engine vent hose • Leaking (damaged) PCV hose • Vacuum hoses worn or not properly installed
Stalling or slow idle speed	Inspect for any of the following conditions: • Restricted or kinked engine vent hose • Leaking (damaged) PCV hose
High idle speed	Inspect for a leaking (damaged) PCV hose
Sludge in the engine	Inspect for restricted or kinked PCV hose or engine vent hose

DRIVE BELT CHIRPING, SQUEAL, AND WHINE DIAGNOSIS

Diagnostic Aids

- A chirping or squeal noise may be intermittent due to moisture on the drive belts or the pulleys. It may be necessary to spray a small amount of water on the drive belts in order to duplicate the customers concern. If spraying water on the drive belt duplicates the symptom, cleaning the belt pulleys may be the probable solution.
- If the noise is intermittent, verify the accessory drive components by varying their loads making sure they are operated to their maximum capacity. An overcharged A/C system, power steering system with a pinched hose or wrong fluid, or a generator failing are suggested items to inspect.
- A chirping, squeal or whine noise may be caused by a loose or improper installation of a body or suspension component. Other items of the vehicle may also cause the noise.
- The drive belts will not cause a whine noise.

Test Description

The numbers below refer to the step numbers on the diagnostic table.

2: The noise may not be engine related. This step is to verify that the engine is making the noise. If the engine is not making the noise do not proceed further with this table.

3: The noise may be an internal engine noise. Removing the drive belts one at a time and operating the engine for a brief period will verify the noise is related to the drive belt. When removing the drive belt the water pump may not be operating and the engine may overheat. Also DTCs may set when the engine is

cardiagn.com

operating with the drive belts removed.

4: Inspect all drive belt pulleys for pilling. Pilling is the small balls or pills or it can be strings in the drive belt grooves from the accumulation of rubber dust.

6: Misalignment of the pulleys may be caused from improper mounting of the accessory drive component, incorrect installation of the accessory drive component pulley, or the pulley bent inward or outward from a previous repair. Test for a misaligned pulley using a straight edge in the pulley grooves across two or three pulleys. If a misaligned pulley is found refer to that accessory drive component for the proper installation procedure for that pulley.

10: Inspecting of the fasteners can eliminate the possibility that a wrong bolt, nut, spacer, or washer was installed.

12: Inspecting the pulleys for being bent should include inspecting for a dent or other damage to the pulleys that would prevent the drive belt from not seating properly in all of the pulley grooves or on the smooth surface of a pulley when the back side of the belt is used to drive the pulley.

14: This test is to verify that the drive belt tensioner operates properly. If the drive belt tensioner is not operating properly, proper belt tension may not be achieved to keep the drive belt from slipping which could cause a squeal noise.

15: This test is to verify that the drive belt is not too long, which would prevent the drive belt tensioner from working properly. Also if an incorrect length drive belt was installed, it may not be routed properly and may be turning an accessory drive component in the wrong direction.

16: Misalignment of the pulleys may be caused from improper mounting of the accessory drive component, incorrect installation of the accessory drive component pulley, or the pulley bent inward or outward from a previous repair. Test for a misaligned pulley using a straight edge in the pulley grooves across two or three pulleys. If a misaligned pulley is found refer to that accessory drive component for the proper installation procedure for that pulley.

17: This test is to verify that the pulleys are the correct diameter or width. Using a known good vehicle compare the pulley sizes.

19: Replacing the drive belt when it is not damaged or there is not excessive pilling will only be a temporary repair.

Drive Belt Chirping, Squeal, and Whine Diagnosis

Step	Action	Yes	No
NOTE: **Refer to Belt Dressing Notice .** DEFINITION: The following items are indications of chirping: • A high pitched noise that is heard once per revolution of the drive belt or a pulley. • Chirping may occur on cold damp start-ups and will subside once the vehicle reaches normal operating temp. DEFINITION: The following items are indications of drive belt squeal: • A loud screeching noise that is caused by a slipping drive belt. This is unusual for a drive belt with multiple ribs.			

cardiagn.com

- The noise occurs when a heavy load is applied to the drive belt, such as an air conditioning compressor engagement snapping the throttle, or slipping on a seized pulley or a faulty accessory drive component.

DEFINITION: The following items are indications of drive belt whine:

- A high pitched continuous noise.
- The noise may be caused by an accessory drive component failed bearing.

1	Did you review the Drive Belt Symptom operation and perform the necessary inspections?	Go to **Step 2**	Go to **Symptoms - Engine Mechanical**
2	Verify that there is a chirping, squeal or whine noise. Does the engine make the chirping squeal or whine noise?	Go to **Step 3**	Go to Diagnostic Aids
3	1. Remove the drive belt. If the engine has multiple drive belts, remove the belts one at a time and perform the test below each time a belt is removed. 2. Operate the engine for no longer than 30-40 seconds. 3. Repeat this test if necessary by removing the remaining belt(s). Does the chirping, squeal or whine noise still exist?	Go to **Symptoms - Engine Mechanical**	Go to **Step 4**
4	• If diagnosing a chirping noise, inspect for severe pilling exceeding 1/3 of the belt groove depth. • If diagnosing a squeal or whine noise, proceed to step 13. Do the belt grooves have pilling?	Go to **Step 5**	Go to **Step 6**
5	Clean the drive belt pulleys with a suitable wire brush. Did you complete the repair?	Go to **Step 20**	Go to **Step 6**
6	Inspect for misalignment of the pulleys. Are any of the pulleys misaligned?	Go to **Step 7**	Go to **Step 8**
7	Replace or repair any misaligned pulleys. Did you complete the repair?	Go to **Step 20**	Go to **Step 8**
8	Inspect for bent or cracked brackets. Did you find any bent or cracked brackets?	Go to **Step 9**	Go to **Step 10**
9	Replace any bent or cracked brackets. Did you complete the repair?	Go to **Step 20**	Go to **Step 10**
10	Inspect for improper, loose or missing fasteners. Did you find the condition?	Go to **Step 11**	Go to **Step 12**

cardiagn.com

11	**NOTE:** **Refer to Fastener Notice .** 1. Tighten any loose fasteners. Refer to **Fastener Tightening Specifications**. 2. Replace any improper or missing fasteners. Did you complete the repair?	Go to **Step 20**	Go to **Step 12**
12	Inspect for a bent pulley. Did you find the condition?	Go to **Step 18**	Go to **Step 13**
13	Inspect for an accessory drive component seized bearing or a faulty accessory drive component. If diagnosing a whine noise and the condition still exist, proceed to Diagnostic Aids. Did you find and correct the condition?	Go to **Step 20**	Go to **Step 14**
14	Test the drive belt tensioner for proper operation. Refer to **Drive Belt Tensioner Diagnosis**. Did you find and correct the condition?	Go to **Step 20**	Go to **Step 15**
15	Inspect for the correct drive belt length. Did you find and correct the condition?	Go to **Step 20**	Go to **Step 16**
16	Inspect for misalignment of a pulley. Did you find and correct the condition?	Go to **Step 20**	Go to **Step 17**
17	Inspect for the correct pulley size. Did you find and correct the condition?	Go to **Step 20**	Go to Diagnostic Aids
18	Replace the bent pulley. Did you complete the repair?	Go to **Step 20**	Go to **Step 19**
19	Replace the drive belt. Refer to **Drive Belt Replacement - Accessory** or **Drive Belt Replacement - Air Conditioning** . Did you complete the repair?	Go to **Step 20**	Go to Diagnostic Aids
20	Operate the system in order to verify the repair. Did you correct the condition?	System OK	Go to **Step 3**

DRIVE BELT RUMBLING AND VIBRATION DIAGNOSIS

Diagnostic Aids

The accessory drive components can have an affect on engine vibration. Vibration from the engine operating may cause a body component or another part of the vehicle to make rumbling noise. Vibration can be caused by, but not limited to the air conditioning (A/C) system over charged, the power steering system restricted or the incorrect fluid, or an extra load on the generator. To help identify an intermittent or an improper condition, vary the loads on the accessory drive components.

The drive belt may have a rumbling condition that can not be seen or felt. Sometimes replacing the drive belt may be the only repair for the symptom.

cardiagn.com

If replacing the drive belt, completing the diagnostic table, and the noise is only heard when the drive belts are installed, there might be an accessory drive component with a failure. Varying the load on the different accessory drive components may aid in identifying which component is causing the rumbling noise.

Test Description

The numbers below refer to the step numbers on the diagnostic table.

2: This test is to verify that the symptom is present during diagnosing. Other vehicle components may cause a similar symptom.

3: This test is to verify that one of the drive belts is causing the rumbling noise or vibration. Rumbling noise may be confused with an internal engine noise due to the similarity in the description. Remove only one drive belt at a time if the vehicle has multiple drive belts. When removing the drive belts the water pump may not be operating and the engine may overheat. Also DTCs may set when the engine is operating with the drive belts removed.

4: Inspecting the drive belts is to ensure that they are not causing the noise. Small cracks across the ribs of the drive belt will not cause the noise. Belt separation is identified by the plys of the belt separating and may be seen at the edge of the belt or felt as a lump in the belt.

5: Small amounts of pilling is normal condition and acceptable. When the pilling is severe the drive belt does not have a smooth surface for proper operation.

9: Inspecting of the fasteners can eliminate the possibility that the wrong bolt, nut, spacer, or washer was installed.

11: This step should only be performed if the water pump is driven by the drive belt. Inspect the water pump shaft for being bent. Also inspect the water pump bearings for smooth operation and excessive play. Compare the water pump with a known good water pump.

12: Accessory drive component brackets that are bent, cracked, or loose may put extra strain on that accessory component causing it to vibrate.

Drive Belt Rumbling and Vibration Diagnosis

Step	Action	Yes	No

NOTE:
Refer to Belt Dressing Notice .
 	
DEFINITION: The following items are indications of drive belt rumbling:
 	
• A low pitch tapping, knocking, or thumping noise heard at or just above idle.
• Heard once per revolution of the drive belt or a pulley.
• Rumbling may be caused from:
  ○ Pilling, the accumulation of rubber dust that forms small balls (pills) or strings in the drive belt pulley groove
  ○ The separation of the drive belt
  ○ A damaged drive belt
 	
DEFINITION: The following items are indications of drive belt vibration:			

cardiagn.com

- The vibration is engine-speed related.
- The vibration may be sensitive to accessory load.

1	Did you review the Drive Belt Symptom operation and perform the necessary inspections?	Go to **Step 2**	Go to **Symptoms - Engine Mechanical**
2	Verify that there is a rumbling noise or that the vibration is engine related. Does the engine make the rumbling noise or vibration?	Go to **Step 3**	Go to Diagnostic Aids
3	**IMPORTANT:** **If the engine has multiple drive belts, remove the belts one at a time and perform the test below each time a belt is removed.** 1. Remove the drive belt. 2. Operate the engine for no longer than 30-40 seconds. 3. Repeat this test if necessary by removing the remaining belt(s). Does the rumbling or vibration still exist?	Go to **Symptoms - Engine Mechanical** or **Vibration Analysis - Engine**	Go to **Step 4**
4	Inspect the drive belts for wear, damage, separation, sections of missing ribs, and debris build-up. Did you find any of these conditions?	Go to **Step 7**	Go to **Step 5**
5	Inspect for severe pilling of more than 1/3 of the drive belt pulley grooves. Did you find severe pilling?	Go to **Step 6**	Go to **Step 7**
6	1. Clean the drive belt pulleys using a suitable wire brush. 2. Reinstall the drive belts. Refer to **Drive Belt Replacement - Accessory** or **Drive Belt Replacement - Air Conditioning** . Did you correct the condition?	Go to **Step 8**	Go to **Step 7**
7	Install a new drive belt. Refer to **Drive Belt Replacement - Accessory** or **Drive Belt Replacement - Air Conditioning** . Did you complete the replacement?	Go to **Step 8**	Go to **Step 9**
8	Operate the system in order to verify the repair. Did you correct the condition?	System OK	Go to **Step 9**
9	Inspect for improper, loose or missing fasteners. Did you find any of these conditions?	Go to **Step 10**	Go to **Step 11**
	NOTE: **Refer to Fastener Notice .**		

cardiagn.com

10	1. Tighten any loose fasteners. Refer to **Fastener Tightening Specifications**. 2. Replace improper or missing fasteners. Did you complete the repair?	Go to **Step 13**	Go to **Step 11**
11	Inspect for a bent water pump shaft. Refer to **Water Pump Replacement (RPOs LY2/LC9/LY5/LMG)** or **Water Pump Replacement (RPOs LY6/L76/L92)** . Did you find and correct the condition?	Go to **Step 13**	Go to **Step 12**
12	Inspect for bent or cracked brackets. Did you find and correct the condition?	Go to **Step 13**	Go to Diagnostic Aids
13	Operate the system in order to verify the repair. Did you correct the condition?	System OK	Go to **Step 3**

DRIVE BELT FALLS OFF AND EXCESSIVE WEAR DIAGNOSIS

Diagnostic Aids

If the drive belt repeatedly falls off the drive belt pulleys, this is because of pulley misalignment.

An extra load that is quickly applied on released by an accessory drive component may cause the drive belt to fall off the pulleys. Verify the accessory drive components operate properly.

If the drive belt is the incorrect length, the drive belt tensioner may not keep the proper tension on the drive belt.

Excessive wear on a drive belt is usually caused by an incorrect installation or the wrong drive belt for the application.

Minor misalignment of the drive belt pulleys will not cause excessive wear, but will probably cause the drive belt to make a noise or to fall off.

Excessive misalignment of the drive belt pulleys will cause excessive wear but may also make the drive belt fall off.

Test Description

The numbers below refer to the step numbers on the diagnostic table.

2: This inspection is to verify the condition of the drive belt. Damage may of occurred to the drive belt when the drive belt fell off. The drive belt may of been damaged, which caused the drive belt to fall off. Inspect the belt for cuts, tears, sections of ribs missing, or damaged belt plys.

4: Misalignment of the pulleys may be caused from improper mounting of the accessory drive component, incorrect installation of the accessory drive component pulley, or the pulley bent inward or outward from a previous repair. Test for a misaligned pulley using a straight edge in the pulley grooves across two or three pulleys. If a misaligned pulley is found refer to that accessory drive component for the proper installation procedure of that pulley.

cardiagn.com

5: Inspecting the pulleys for being bent should include inspecting for a dent or other damage to the pulleys that would prevent the drive belt from not seating properly in all of the pulley grooves or on the smooth surface of a pulley when the back side of the belt is used to drive the pulley.

6: Accessory drive component brackets that are bent or cracked will let the drive belt fall off.

7: Inspection of the fasteners can eliminate the possibility that a wrong bolt, nut, spacer, or washer was installed. Missing, loose, or the wrong fasteners may cause pulley misalignment from the bracket moving under load. Over tightening of the fasteners may cause misalignment of the accessory component bracket.

13: The inspection is to verify the drive belt is correctly installed on all of the drive belt pulleys. Wear on the drive belt may be caused by mis-positioning the drive belt by one groove on a pulley.

14: The installation of a drive belt that is too wide or too narrow will cause wear on the drive belt. The drive belt ribs should match all of the grooves on all of the pulleys.

15: This inspection is to verify the drive belt is not contacting any parts of the engine or body while the engine is operating. There should be sufficient clearance when the drive belt accessory drive components load varies. The drive belt should not come in contact with an engine or a body component when snapping the throttle.

Drive Belt Falls Off and Excessive Wear Diagnosis

Step	Action	Yes	No
NOTE: **Refer to Belt Dressing Notice .** DEFINITION: The drive belt falls off the pulleys or may not ride correctly on the pulleys.DEFINITION: Wear at the outside ribs of the drive belt due to an incorrectly installed drive belt.			
1	Did you review the Drive Belt Symptom operation and perform the necessary inspections?	Go to **Step 2**	Go to **Symptoms - Engine Mechanical**
2	• If diagnosing excessive wear, proceed to step 13. • If diagnosing a drive belt that falls off, inspect for a damaged drive belt. Did you find the condition?	Go to **Step 3**	Go to **Step 4**
3	Install a new drive belt. Refer to **Drive Belt Replacement - Accessory** or **Drive Belt Replacement - Air Conditioning** . Does the drive belt continue to fall off?	Go to **Step 4**	System OK
4	Inspect for misalignment of the pulleys. Did you find and repair the condition?	Go to **Step 12**	Go to **Step 5**
5	Inspect for a bent or dented pulley. Did you find and repair the condition?	Go to **Step 12**	Go to **Step 6**
6	Inspect for a bent or a cracked bracket. Did you find and repair the condition?	Go to **Step 12**	Go to **Step 7**
7	Inspect for improper, loose or missing fasteners. Did you find loose or missing fasteners?	Go to **Step 8**	Go to **Step 9**
	NOTE:		

cardiagn.com

8	**Refer to Fastener Notice .** 1. Tighten any loose fasteners. Refer to **Fastener Tightening Specifications**. 2. Replace improper or missing fasteners. Does the drive belt continue to fall off?	Go to **Step 9**	System OK
9	Test the drive belt tensioner for operating correctly. Refer to **Drive Belt Tensioner Diagnosis**. Does the drive belt tensioner operate correctly?	Go to **Step 11**	Go to **Step 10**
10	Replace the drive belt tensioner. Refer to **Drive Belt Tensioner Replacement - Accessory** or **Drive Belt Tensioner Replacement - Air Conditioning** . Does the drive belt continue to fall off?	Go to **Step 11**	System OK
11	Inspect for failed drive belt idler and drive belt tensioner pulley bearings. Did you find and repair the condition?	Go to **Step 12**	Go to Diagnostic Aids
12	Operate the system in order to verify the repair. Did you correct the condition?	System OK	Go to **Step 13**
13	Inspect the drive belt for the proper installation. Refer to **Drive Belt Replacement - Accessory** or **Drive Belt Replacement - Air Conditioning** . Did you find this condition?	Go to **Step 16**	Go to **Step 14**
14	Inspect for the proper drive belt. Did you find this condition?	Go to **Step 16**	Go to **Step 15**
15	Inspect for the drive belt rubbing against a bracket, hose, or wiring harness. Did you find and repair the condition?	Go to **Step 17**	Go to Diagnostic Aids
16	Replace the drive belt. Refer to **Drive Belt Replacement - Accessory** or **Drive Belt Replacement - Air Conditioning** . Did you complete the replacement?	Go to **Step 17**	-
17	Operate the system in order to verify the repair. Did you correct the condition?	System OK	-

DRIVE BELT TENSIONER DIAGNOSIS

Drive Belt Tensioner Diagnosis

Step	Action	Yes	No
1	Remove the drive belt. Refer to **Drive Belt Replacement - Accessory** or **Drive Belt Replacement - Air Conditioning** . Inspect the drive belt tensioner pulley. Is the drive belt tensioner pulley loose or misaligned?	Go to **Step 4**	Go to **Step 2**

cardiagn.com

2	Rotate the drive belt tensioner. Does the tensioner rotate without any unusual resistance or binding?	Go to **Step 3**	Go to **Step 4**
3	1. Use a torque wrench in order to measure the torque required to move the tensioner off of the stop. 2. Use a torque wrench on a known good tensioner in order to measure the torque required to move the tensioner off of the stop. Is the first torque reading within 10% of the second torque reading?	System OK	Go to **Step 4**
4	Replace the drive belt tensioner. Refer to **Drive Belt Tensioner Replacement - Accessory** or **Drive Belt Tensioner Replacement - Air Conditioning** . Is the repair complete?	System OK	-

DESCRIPTION AND OPERATION

CRANKCASE VENTILATION SYSTEM DESCRIPTION

A closed crankcase ventilation system is used in order to provide a more complete scavenging of the crankcase vapors. Fresh air from the throttle body is supplied to the crankcase, mixed with blow-by gases, and then passed through a crankcase ventilation valve into the intake manifold.

The primary control is through the crankcase ventilation valve which meters the flow at a rate depending on manifold vacuum. To maintain idle quality, the crankcase ventilation valve restricts the flow when intake manifold vacuum is high. If abnormal operating conditions arise, the system is designed to allow excessive amounts of blow-by gases to back flow through the crankcase vent tube into the engine air inlet to be consumed by normal combustion.

Filtered fresh air is routed from up-stream of the throttle blade to the front of the right rocker arm cover via a formed rubber hose. To reduce the potential of oil pullover into the throttle bore area due to back flow of the ventilation system, the fitting in the right rocker arm cover is shielded from the rocker arms. From there fresh air and gases are routed through the crankcase and up to the opposite rocker arm cover where the positive crankcase ventilation (PCV) valve is located. Gases are then routed through a hose to the intake manifold.

DRIVE BELT SYSTEM DESCRIPTION

The drive belt system consists of the following components:

- The drive belt
- The drive belt tensioner
- The drive belt idler pulley
- The crankshaft balancer pulley

cardiagn.com

- The accessory drive component mounting brackets
- The accessory drive components
  - The power steering pump, if belt driven
  - The generator
  - The A/C compressor, if equipped
  - The engine cooling fan, if belt driven
  - The water pump, if belt driven
  - The vacuum pump, if equipped
  - The air compressor, if equipped

The drive belt system may use 1 belt or 2 belts. The drive belt is thin so that it can bend backwards and has several ribs to match the grooves in the pulleys. The drive belts are made of different types of rubbers, chloroprene or EPDM, and have different layers or plys containing either fiber cloth or cords for reinforcement.

Both sides of the drive belt may be used to drive the different accessory drive components. When the back side of the drive belt is used to drive a pulley, the pulley is smooth.

The drive belt is pulled by the crankshaft balancer pulley across the accessory drive component pulleys. The spring loaded drive belt tensioner keeps constant tension on the drive belt to prevent the drive belt from slipping. The drive belt tensioner arm will move when loads are applied to the drive belt by the accessory drive components and the crankshaft.

The drive belt system may have an idler pulley, which is used to add wrap to the adjacent pulleys. Some systems use an idler pulley in place of an accessory drive component when the vehicle is not equipped with the accessory.

ENGINE COMPONENT DESCRIPTION

The 4.8, 5.3, 6.0, and 6.2 Liter V8 Engines

cardiagn.com

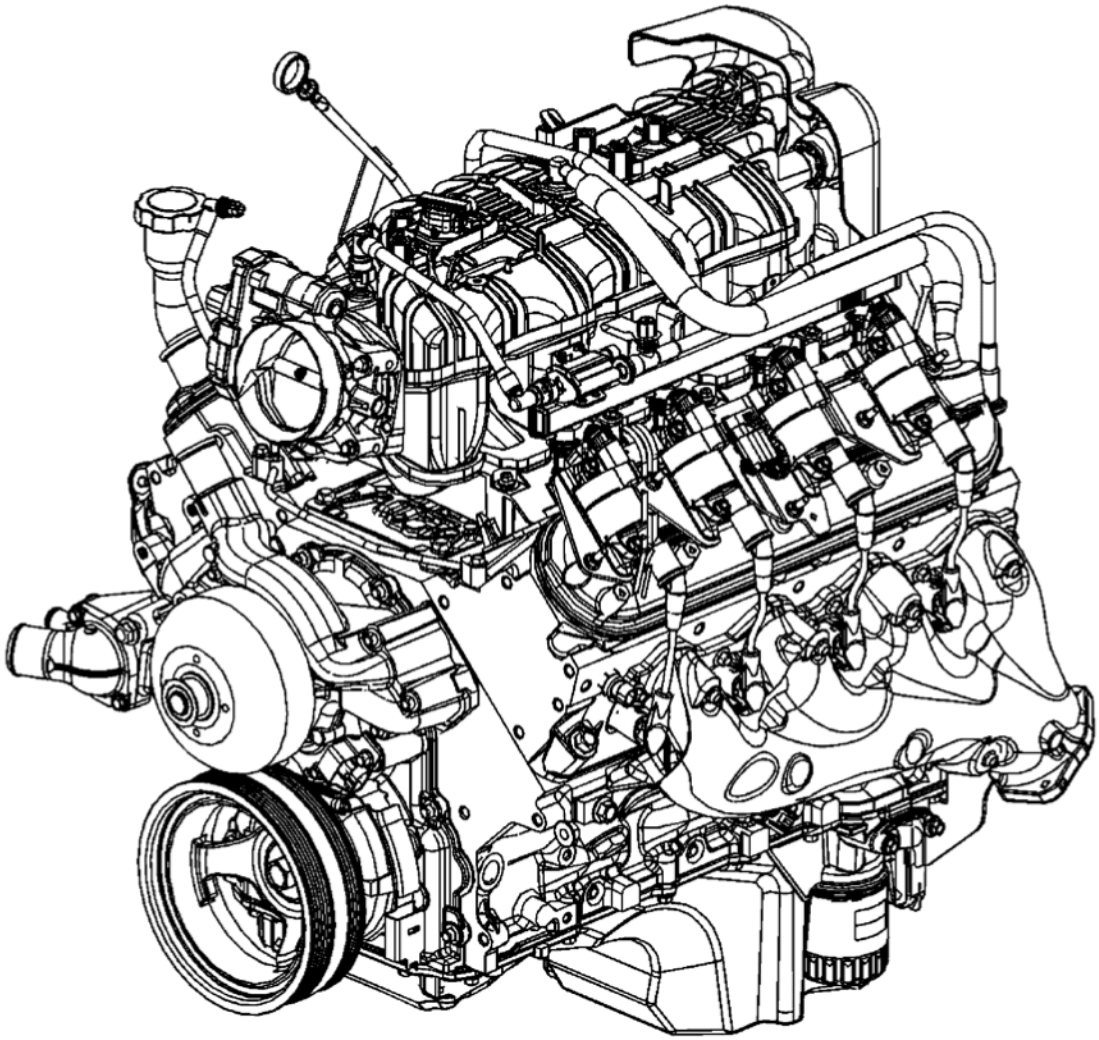

Fig. 30: View Of Engine
Courtesy of GENERAL MOTORS CORP.

To assist in determining the applicable hardware and control system for each engine RPO, refer to **Engine Content Specifications**.

Camshaft and Drive System - RPO LY2/LC9/LY5/LMG

A billet steel 1 piece camshaft is supported by 5 bearings pressed into the engine block. The camshaft timing sprocket is mounted to the front of the camshaft and is driven by the crankshaft sprocket through the camshaft timing chain. The camshaft position (CMP) sensor lobes are incorporated into the front face of the camshaft sprocket with the CMP sensor mounted in the engine front cover. A timing chain tensioner is mounted to the front of the engine block above the crankshaft sprocket. The externally splined crankshaft sprocket is positioned to the crankshaft by a key and keyway. The crankshaft sprocket external splines drive the oil pump drive gear. A retaining plate mounted to the front of the engine block maintains camshaft location.

cardiagn.com

Camshaft and Drive System - RPO LY6/L76/L92

A billet steel 1 piece camshaft is supported by 5 bearings pressed into the engine block. The camshaft position (CMP) actuator is mounted to the front of the camshaft and retained by the CMP solenoid valve. The CMP actuator is driven by the crankshaft sprocket through the camshaft timing chain. The CMP sensor wheel is incorporated into the front face of the CMP actuator with the CMP sensor and CMP actuator magnet mounted in the engine front cover. A timing chain tensioner is mounted to the front of the engine block above the crankshaft sprocket. The externally splined crankshaft sprocket is positioned to the crankshaft by a key and keyway. The crankshaft sprocket external splines drive the oil pump drive gear. A retaining plate mounted to the front of the engine block maintains camshaft location. Refer to **Camshaft Position Actuator and Solenoid Valve Description**.

Crankshaft

The crankshaft is cast nodular iron. The crankshaft is supported by 5 crankshaft bearings. The bearings are retained by crankshaft bearing caps which are machined with the engine block for proper alignment and clearance. The crankshaft journals are undercut and rolled. The center main journal is the thrust journal. A crankshaft position (CKP) reluctor ring is press fit mounted at the rear of the crankshaft. The reluctor ring is not serviceable separately.

Cylinder Heads

The cylinder heads are cast aluminum and have pressed in place powdered metal valve guides and valve seats. Passages for the engine coolant air bleed system are at the front of each cylinder head. The valve rocker arm covers are retained to the cylinder head by 4 center mounted rocker arm cover bolts.

Engine Block - RPO LC9/L76/L92

The engine block is a cam-in-block deep skirt 90 degree V configuration with 5 crankshaft bearing caps. The engine block is cast aluminum. The 5 crankshaft bearing caps each have 4 vertical M10 and 2 horizontal M8 mounting bolts. The camshaft is supported by 5 camshaft bearings pressed into the block.

Engine Block - RPO LY2/LY5/LMG/LY6

The engine block is a cam-in-block deep skirt 90 degree V configuration with 5 crankshaft bearing caps. The engine block is cast iron. The 5 crankshaft bearing caps each have 4 vertical M10 and 2 horizontal M8 mounting bolts. The camshaft is supported by 5 camshaft bearings pressed into the block.

Exhaust Manifolds

The exhaust manifolds are a 1 piece cast iron design. The exhaust manifolds direct exhaust gasses from the combustion chambers to the exhaust system. Each manifold also has an externally mounted heat shield that is retained by bolts.

Intake Manifold

The intake manifold is a 1 piece composite design that incorporates brass threaded inserts for mounting the fuel rail, throttle body, and wire harness studs. Each side of the intake manifold is sealed to the cylinder head by a

cardiagn.com

non-reusable silicone sealing gasket/nylon carrier assembly. The electronically actuated throttle body bolts to the front of the intake manifold. The throttle body is sealed by a 1 piece push in place silicone gasket. The fuel rail assembly, with 8 separate fuel injectors, is retained to the intake by 4 bolts. The injectors are seated into their individual manifold bores with O-ring seals to provide sealing. A fuel rail stop bracket is retained to the rear of the left cylinder head by a mounting bolt. The manifold absolute pressure (MAP) sensor is installed and retained to the top front of the intake manifold and sealed by an O-ring seal. The evaporative emission (EVAP) canister purge solenoid valve is mounted to the fuel rail at the left front of the intake manifold. There are no coolant passages within the intake manifold.

Oil Pan

The structural rear-sump oil pan is cast aluminum. Incorporated into the design is the oil filter mounting boss, drain plug opening, baffle, and oil level sensor. The oil filter bypass valve is now incorporated into the new design oil filter assembly and is no longer part of the oil pan assembly as in earlier design applications. The active fuel management oil pressure relief valve is also internal to the oil pan. Alignment of the structural oil pan to the rear of the engine block and transmission housing is critical.

Piston and Connecting Rod Assembly

The pistons are cast aluminum. The pistons use 2 compression rings and 1 oil control ring assembly. The piston is a low friction, lightweight design with a flat or recessed top and barrel shaped skirt. The piston pins are chromium steel and are a full-floating design. The connecting rods are powdered metal. The connecting rods are fractured at the connecting rod journal and then machined for the proper clearance. All applications use a piston with a graphite coated skirt. The piston and pin are to be serviced as an assembly.

Valve Rocker Arm Cover Assemblies

The valve rocker arm covers are cast aluminum and use a pre-molded silicon gasket for sealing. Mounted to each rocker cover are the coil and bracket assemblies. Incorporated into the left cover is the positive crankcase ventilation (PCV) system dirty air passage. Incorporated into the right cover is the oil fill tube and the PCV fresh air passage.

Valve Train - RPO LY2/LY6

Motion is transmitted from the camshaft through the hydraulic roller valve lifters and tubular pushrods to the roller type rocker arms. The nylon valve lifter guides position and retain the valve lifters. The valve rocker arms for each bank of cylinders are mounted on pedestals or pivot supports. Each rocker arm is retained on the pivot support and cylinder head by a bolt. Valve lash is net build.

Valve Train - RPO LC9/LY5/LMG/L76

Motion is transmitted from the camshaft through the hydraulic roller valve lifters and tubular pushrods to the roller type rocker arms. The nylon valve lifter guides position and retain the valve lifters. The valve rocker arms for each bank of cylinders are mounted on pedestals or pivot supports. Each rocker arm is retained on the pivot support and cylinder head by a bolt. Valve lash is net build. Cylinders 1, 4, 6, and 7 are active fuel management. For RPO L92, active fuel management hardware present in the engine system is inactive for the 2007 model year. Refer to **Cylinder Deactivation (Active Fuel Management) System Description**.

cardiagn.com

Valve Train - RPO L92

First design engines are built to contain the following active fuel management components:

- Active fuel management valve lifters
- Active fuel management valve lifter guides
- Valve lifter oil manifold assembly
- Camshaft with active fuel management specifications

Second design engines are built to contain the following non-active fuel management components:

- Non-active fuel management valve lifters
- Non-active fuel management valve lifter guides
- Engine valley cover
- Camshaft with non-active fuel management specifications

First design engines with active fuel management components: Motion is transmitted from the camshaft through the hydraulic roller valve lifters and tubular pushrods to the roller type rocker arms. The nylon valve lifter guides position and retain the valve lifters. The valve rocker arms for each bank of cylinders are mounted on pedestals or pivot supports. Each rocker arm is retained on the pivot support and cylinder head by a bolt. Valve lash is net build. Cylinders 1, 4, 6, and 7 contain active fuel management components. For first design RPO L92 engines, active fuel management hardware is present in the engine. The system is inactive for the 2007 model year. Refer to **Cylinder Deactivation (Active Fuel Management) System Description**.

Second design engines without active fuel management components: Motion is transmitted from the camshaft through the hydraulic roller valve lifters and tubular pushrods to the roller type rocker arms. The nylon valve lifter guides position and retain the valve lifters. The valve rocker arms for each bank of cylinders are mounted on pedestals or pivot supports. Each rocker arm is retained on the pivot support and cylinder head by a bolt. Valve lash is net build. For second design RPO L92 engines, active fuel management hardware is not present in the engine.

CYLINDER DEACTIVATION (ACTIVE FUEL MANAGEMENT) SYSTEM DESCRIPTION

System Operation

General Motors Active Fuel Management engine control system has the ability, under certain light load driving conditions, to provide maximum fuel economy by deactivating 4 of the engines 8 cylinders. The engine will normally operate on 8 cylinders in V8 mode during starting, idling, and medium or heavy throttle conditions. When commanded ON, the engine control module (ECM) will direct the active fuel management system and deactivate cylinders 1 and 7 on the left bank and cylinders 4 and 6 on the right bank, forcing V4 mode. Refer to **Lubrication Description (RPO LY2)** or **Lubrication Description (RPO LC9/LY5/LMG)** or **Lubrication Description (RPO LY6)** or **Lubrication Description (RPO L76)** or **Lubrication Description (RPO L92)** and **Cylinder Deactivation (Active Fuel Management) System Description** .

Valve Lifter Oil Manifold Assembly

cardiagn.com

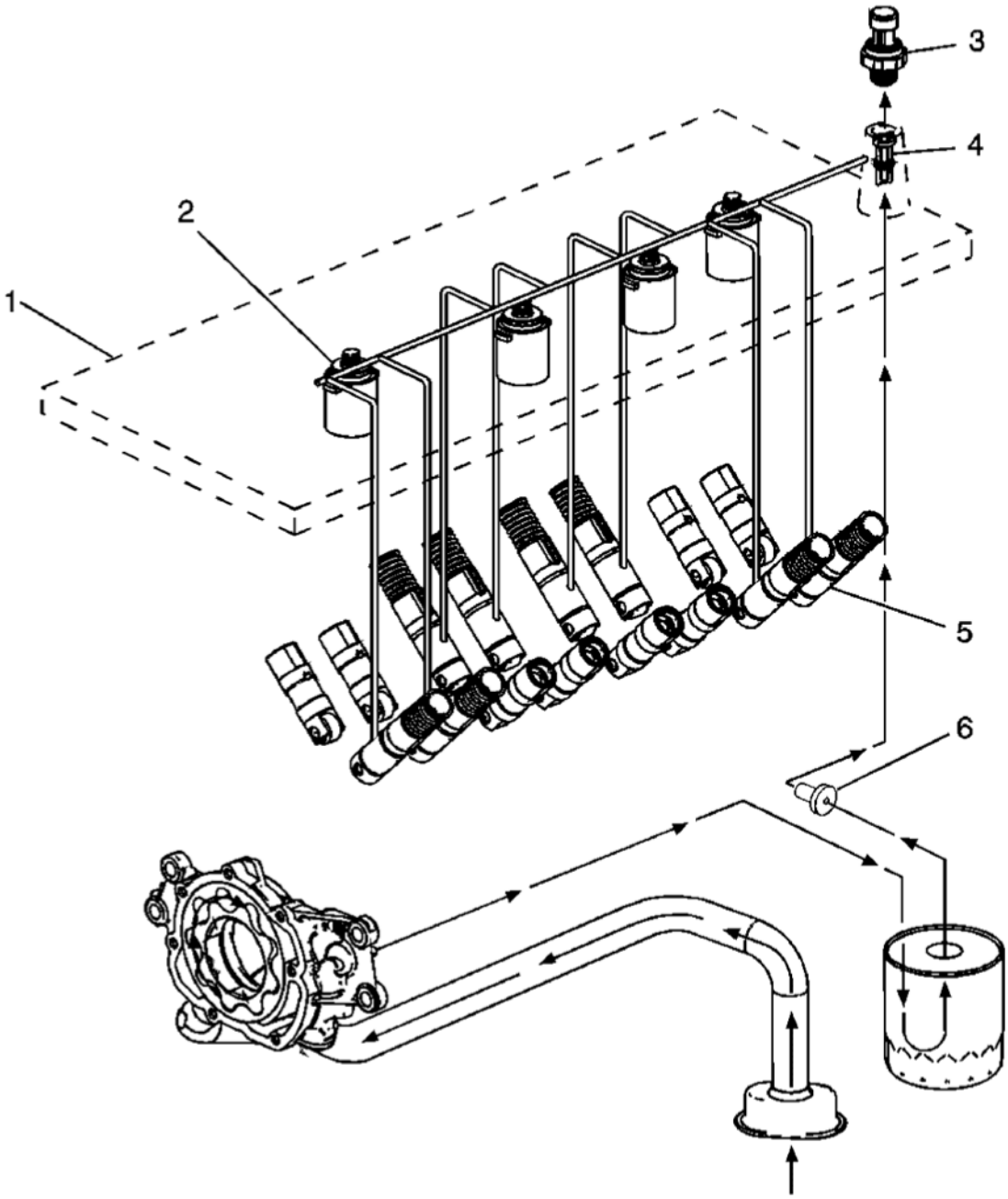

Fig. 31: View Of Engine Oil Flow
Courtesy of GENERAL MOTORS CORP.

The valve lifter oil manifold assembly (1) is bolted to the top of the engine block beneath the intake manifold assembly. The oil manifold consists of 4 electrically operated and normally-closed solenoids (2). Each solenoid directs the flow of pressurized engine oil to the active fuel management intake and exhaust valve lifters (5). The active fuel management oil pressure relief valve (6), located in the oil pan, regulates engine oil pressure to the lubrication system and the oil manifold.

cardiagn.com

When enabling conditions are met for active fuel management operation, the ECM will ground each solenoid control circuit in firing order sequence, allowing current to flow through the solenoid windings. With the windings energized, the solenoid valves open and direct pressurized engine oil through the valve lifter oil manifold into 8 vertical passages in the engine block lifter valley. The 8 vertical passages, 2 per cylinder, direct pressurized oil to the valve lifter bores of the cylinders to be deactivated. When vehicle operating conditions require a return to V8 mode, the ECM will turn OFF the ground circuit for the solenoids, allowing the solenoid valves to close. When the solenoid valves are closed, remaining oil pressure is exhausted through the bleed passages of the valve lifter oil manifold into the engine block lifter valley. The housing of the oil manifold incorporates several oil bleed passages that continually purge trapped air from the manifold and engine block.

To help control contamination within the active fuel management hydraulic system, a small replaceable oil filter (4) is located in the valve lifter oil manifold oil inlet passage. The oil pressure sensor (3) monitors engine oil pressure and provides information to the ECM.

Active Fuel Management Valve Lifters

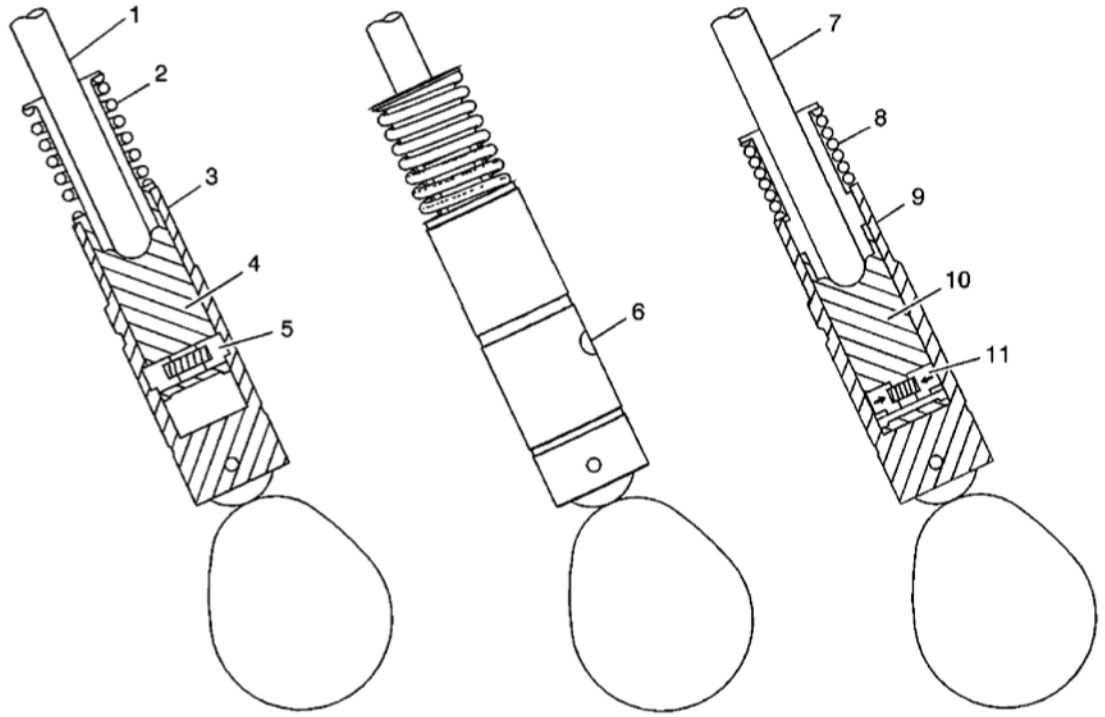

Fig. 32: Displacement On Demand Valve Lifters
Courtesy of GENERAL MOTORS CORP.

When operating in V8 mode, the active fuel management valve lifters function similar to the non-active fuel management valve lifters. The active fuel management oil manifold solenoids are in the closed position, with no pressurized oil directed to the valve lifters. The pushrod (1) travels upward and downward to actuate the rocker arm and valve. The spring loaded locking pins (5) of the lifter are extended outward and mechanically lock the pin housing (4) to the outer body of the valve lifter (3).

cardiagn.com

When the active fuel management system is commanded ON, the ECM will direct the solenoids of the oil manifold to open and direct pressurized oil to the valve lifters. Oil travels through the valve lifter oil manifold and engine block oil galleries and enters the inlet port (6) of the valve lifter.

When operating in V4 mode, pressurized oil forces the locking pins (11) inward. The pushrod (7) remains in a constant position and does not travel upward and downward. The outer body of the lifter (9) moves upward and downward independently from the pin housing (10). The valve lifter spring (8) retains tension on the valve train components to eliminate valve train noise.

When the active fuel management system is commanded OFF, the ECM directs the solenoids of the oil manifold to close, stopping the flow of pressurized oil to the valve lifters. The oil pressure within the lifter will decrease and the locking pins will move outward to mechanically lock the pin housing and outer body.

Engine Block

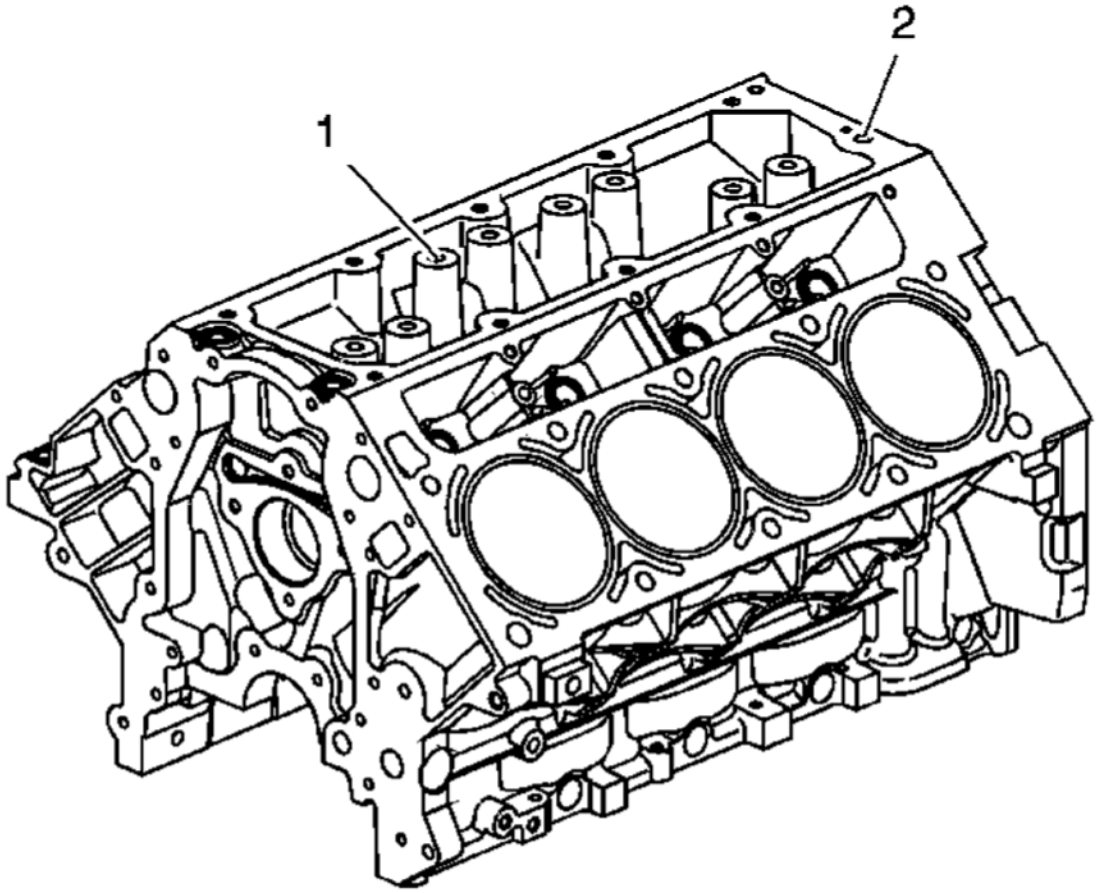

Fig. 33: DOD Engine Block
Courtesy of GENERAL MOTORS CORP.

The active fuel management engine block incorporates additional features to support active fuel management system operation. Engine oil pressure is routed to the valve lifter oil manifold assembly from an oil gallery (2)

cardiagn.com

in the rear of the cylinder block. Cylinders 1, 4, 6, and 7 each have 2 vertical, cast-in-block oil passages (1). The vertical oil passages permit oil flow from the manifold assembly to the valve lifter bores.

Engine Control Module (ECM)

Refer to **Cylinder Deactivation (Active Fuel Management) System Description** .

CAMSHAFT POSITION ACTUATOR AND SOLENOID VALVE DESCRIPTION

Camshaft

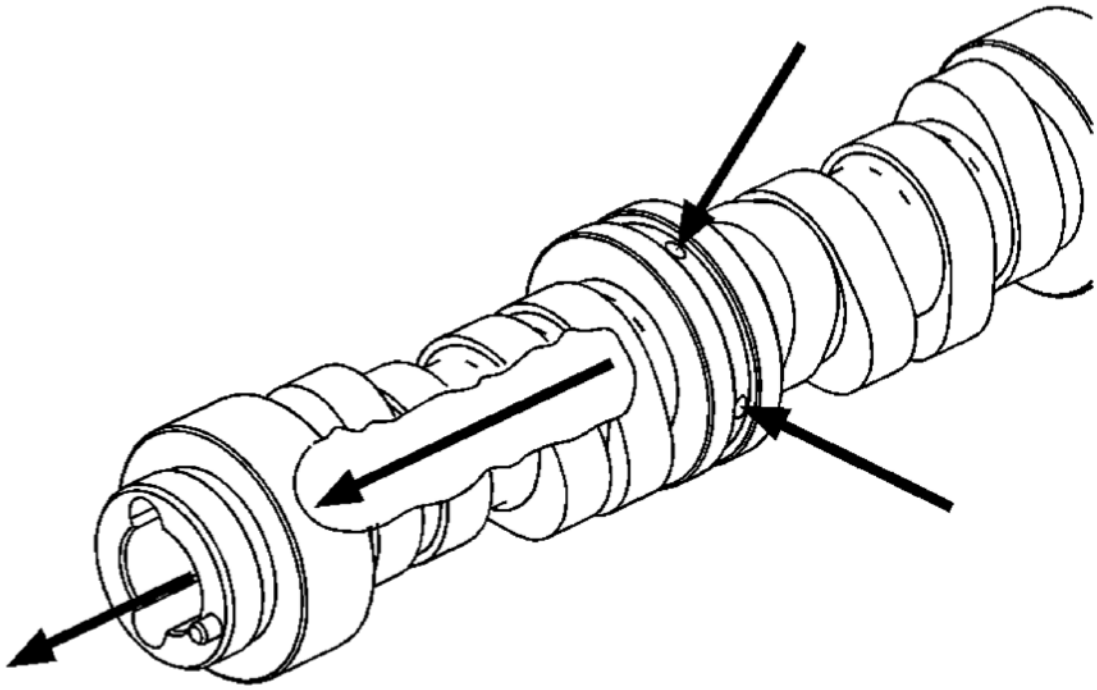

Fig. 34: Camshaft Lubrication Path
Courtesy of GENERAL MOTORS CORP.

The camshaft is designed to provide a lubrication path for pressurized engine oil to flow to the camshaft position (CMP) actuator. Pressurized engine oil enters the camshaft at bearing journal location number 2. Oil travels through the camshaft, out the front, and into the CMP actuator solenoid valve.

Camshaft Position (CMP) Actuator Solenoid Valve

cardiagn.com

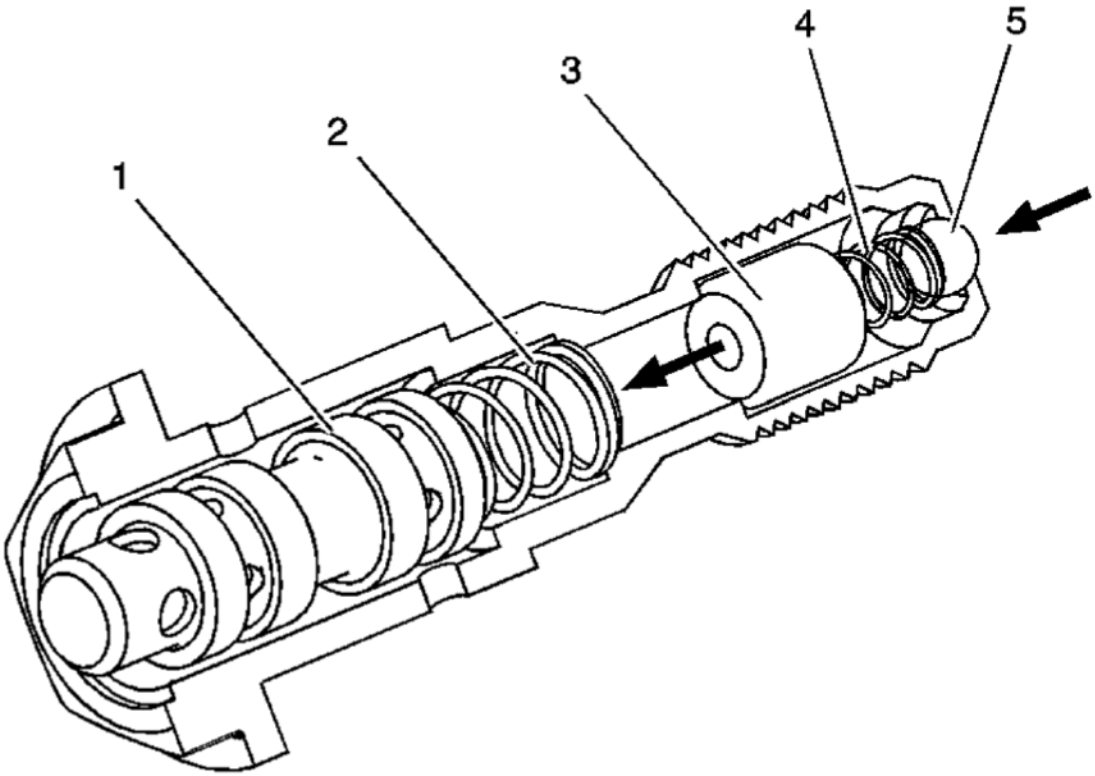

Fig. 35: CMP Actuator Solenoid Valve Components
Courtesy of GENERAL MOTORS CORP.

The CMP actuator solenoid valve consists of a housing, spool valve (1), spool return spring (2), oil filter (3), inlet check ball return spring (4), and inlet check ball (5). Pressurized engine oil enters the valve and travels through the filter to the spool. Spool position is controlled by the CMP magnet and engine control module (ECM). When the spool is moved to the proper position, oil flow is directed through the valve and into the CMP actuator assembly. The CMP solenoid valve is a torque-to-yield design and should be replaced each time it is removed.

CMP Actuator Magnet

cardiagn.com

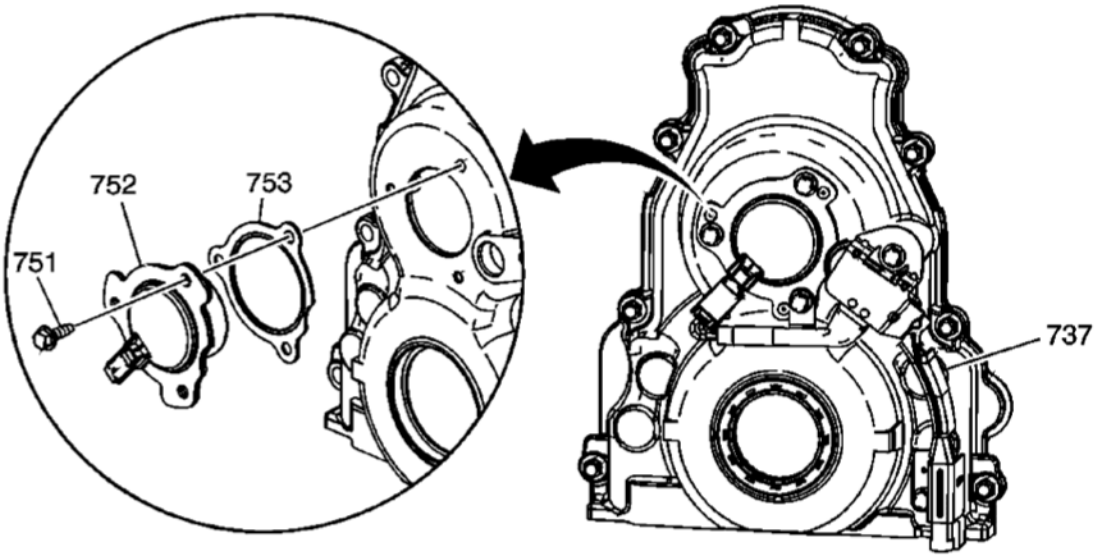

Fig. 36: View Of CMP Actuator Magnet & Components
Courtesy of GENERAL MOTORS CORP.

The CMP actuator magnet (752) is located in the engine front cover and is sealed by a gasket (753). The CMP actuator magnet is controlled by a 12-volt pulse width modulated signal from the ECM. When energized, the solenoid uses electromagnetic force on the magnet pintle to position the spool valve of the CMP solenoid valve.

CMP Actuator

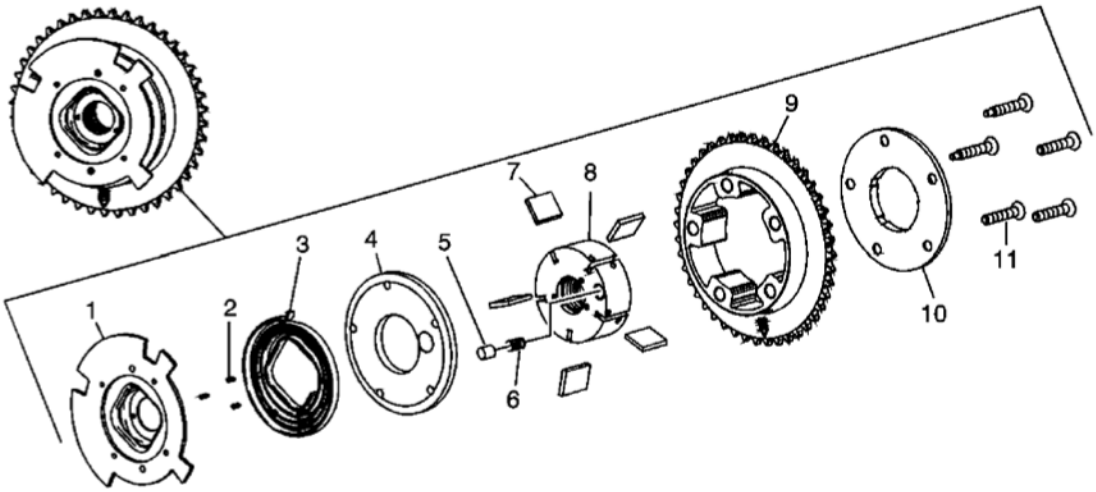

Fig. 37: View Of CMP Actuator Components
Courtesy of GENERAL MOTORS CORP.

The CMP actuator is a vane type design that hydraulically changes angle or timing of the camshaft relative to crankshaft position. The CMP actuator allows earlier or later intake and exhaust valve opening during the 4-

cardiagn.com

stroke engine cycle. The CMP actuator cannot vary the duration of valve opening or valve lift. The CMP actuator is to be serviced as an assembly. For system operation, refer to **Camshaft Actuator System Description** .

The CMP actuator consists of the CMP reluctor wheel (1), pins (2), return spring (3), front cover (4), locking pin (5), locking pin spring (6), vanes and vane springs (7), rotor (8), stator (9), sealing cover/thrust plate (10), and bolts (11).

LUBRICATION DESCRIPTION (RPO LY2)

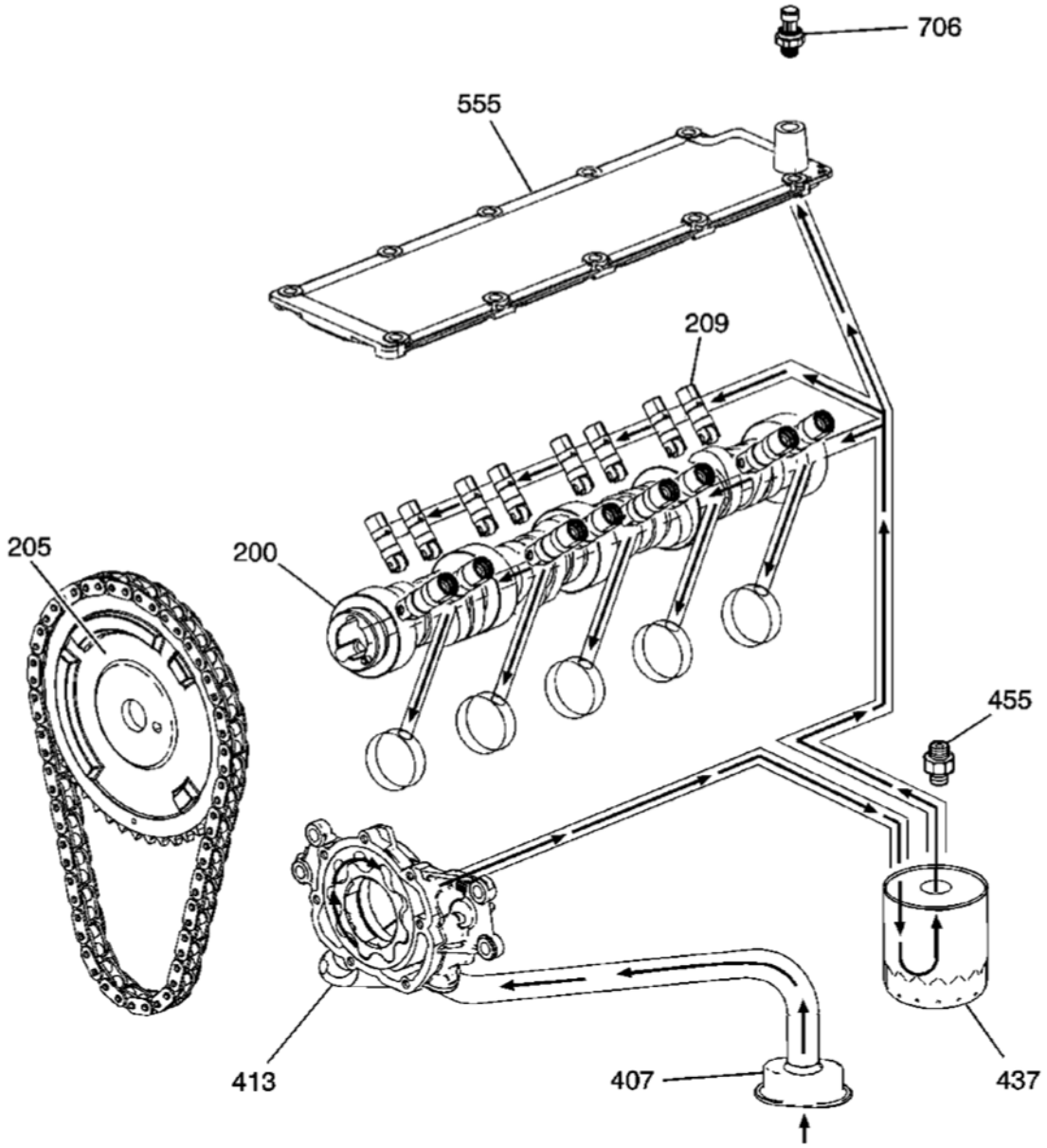

Fig. 38: View Of Lubrication System Components

cardiagn.com

Courtesy of GENERAL MOTORS CORP.

Callouts For Fig. 38

Callout	Component Name
200	Camshaft
205	Camshaft Sprocket
209	Valve Lifter - Non-Active Fuel Management
407	Oil Pump Screen
413	Oil Pump
437	Oil Filter
455	Oil Pressure Relief Valve
555	Valley Cover
706	Oil Pressure Sensor

Engine lubrication is supplied by a gerotor type oil pump assembly. The oil pump is mounted on the front of the engine block and driven directly by the crankshaft sprocket. The pump gears rotate and draw oil from the oil pan sump through a pick-up screen and pipe. The oil is pressurized as it passes through the pump and is sent through the engine block lower oil gallery. Contained within the oil pump assembly is a pressure relief valve that maintains oil pressure within a specified range.

Pressurized oil is directed through the engine block lower oil gallery to the full flow oil filter where harmful contaminants are removed. A bypass valve is incorporated into the oil filter, which permits oil flow in the event the filter becomes restricted. A second valve, the oil pressure relief valve is incorporated into the oil pan. The oil pressure relief valve limits oil pressure directed to the upper oil galleries and oil manifold assembly to 379-517 kPa (55-75 psi) maximum. When main oil pressure exceeds 379 kPa (55 psi), the oil pressure relief valve exhausts excess oil to the sump.

Oil is then directed from the filter to the upper main oil galleries. Oil from the left upper oil gallery is directed to the crankshaft and camshaft bearings. Oil that has entered both the upper main oil galleries also pressurizes the valve lifter assemblies and is then pumped through the pushrods to lubricate the valve rocker arms and valve stems. Oil returning to the pan is directed by the crankshaft oil deflector. The oil pressure sensor is located at the top rear of the engine.

LUBRICATION DESCRIPTION (RPO LC9/LY5/LMG)

cardiagn.com

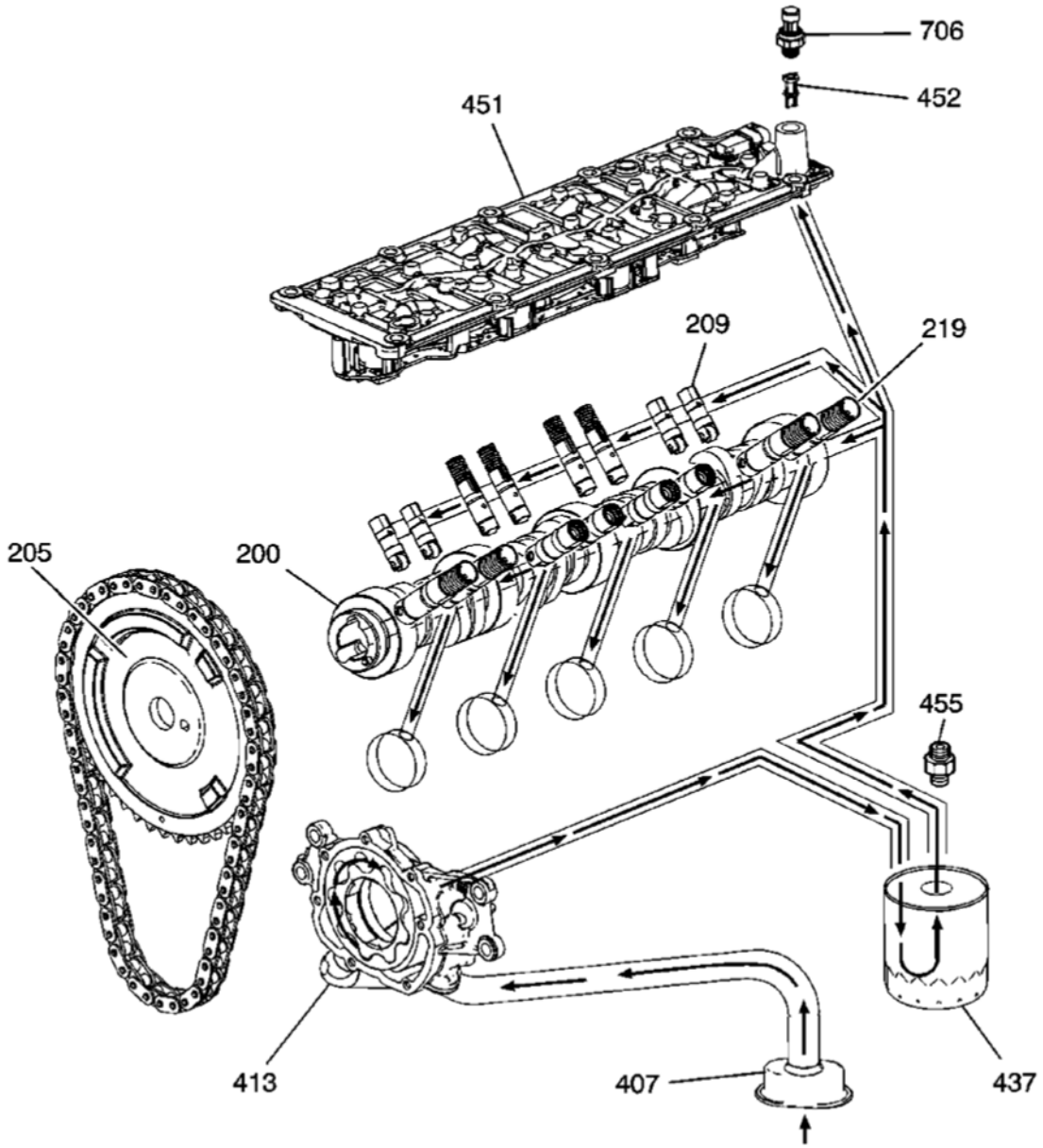

Fig. 39: View Of Lubrication System Components
Courtesy of GENERAL MOTORS CORP.

Callouts For Fig. 39

Callout	Component Name
200	Camshaft
205	Camshaft Sprocket
209	Valve Lifter - Non-Active Fuel Management
219	Valve Lifter - Active Fuel Management
407	Oil Pump Screen

cardiagn.com

413	Oil Pump
437	Oil Filter
451	Valve Lifter Oil Manifold
452	Valve Lifter Oil Filter
455	Active Fuel Management Oil Pressure Relief Valve
706	Oil Pressure Sensor

Engine lubrication is supplied by a gerotor type oil pump assembly. The oil pump is mounted on the front of the engine block and driven directly by the crankshaft sprocket. The pump gears rotate and draw oil from the oil pan sump through a pick-up screen and pipe. The oil is pressurized as it passes through the pump and is sent through the engine block lower oil gallery. Contained within the oil pump assembly is a pressure relief valve that maintains oil pressure within a specified range.

Pressurized oil is directed through the engine block lower oil gallery to the full flow oil filter where harmful contaminants are removed. A bypass valve is incorporated into the oil filter, which permits oil flow in the event the filter becomes restricted. A second valve, the active fuel management oil pressure relief valve is incorporated into the oil pan. The active fuel management oil pressure relief valve limits oil pressure directed to the upper oil galleries and valve lifter oil manifold assembly to 379-517 kPa (55-75 psi) maximum. When main oil pressure exceeds 379 kPa (55 psi), the oil pressure relief valve exhausts excess oil to the sump.

Oil is then directed from the filter to the upper main oil galleries and the valve lifter oil manifold assembly. Oil from the left upper oil gallery is directed to the crankshaft and camshaft bearings. Oil that has entered both the upper main oil galleries also pressurizes the valve lifter assemblies and is then pumped through the pushrods to lubricate the valve rocker arms and valve stems. Oil returning to the pan is directed by the crankshaft oil deflector. The oil pressure sensor is located at the top rear of the engine.

With active fuel management activated, the engine control module (ECM) commands the 4 solenoids to open, directing oil through the engine block oil galleries to the intake and exhaust valve lifters for cylinders 1, 4, 6, and 7. Refer to **Cylinder Deactivation (Active Fuel Management) System Description**.

LUBRICATION DESCRIPTION (RPO LY6)

cardiagn.com

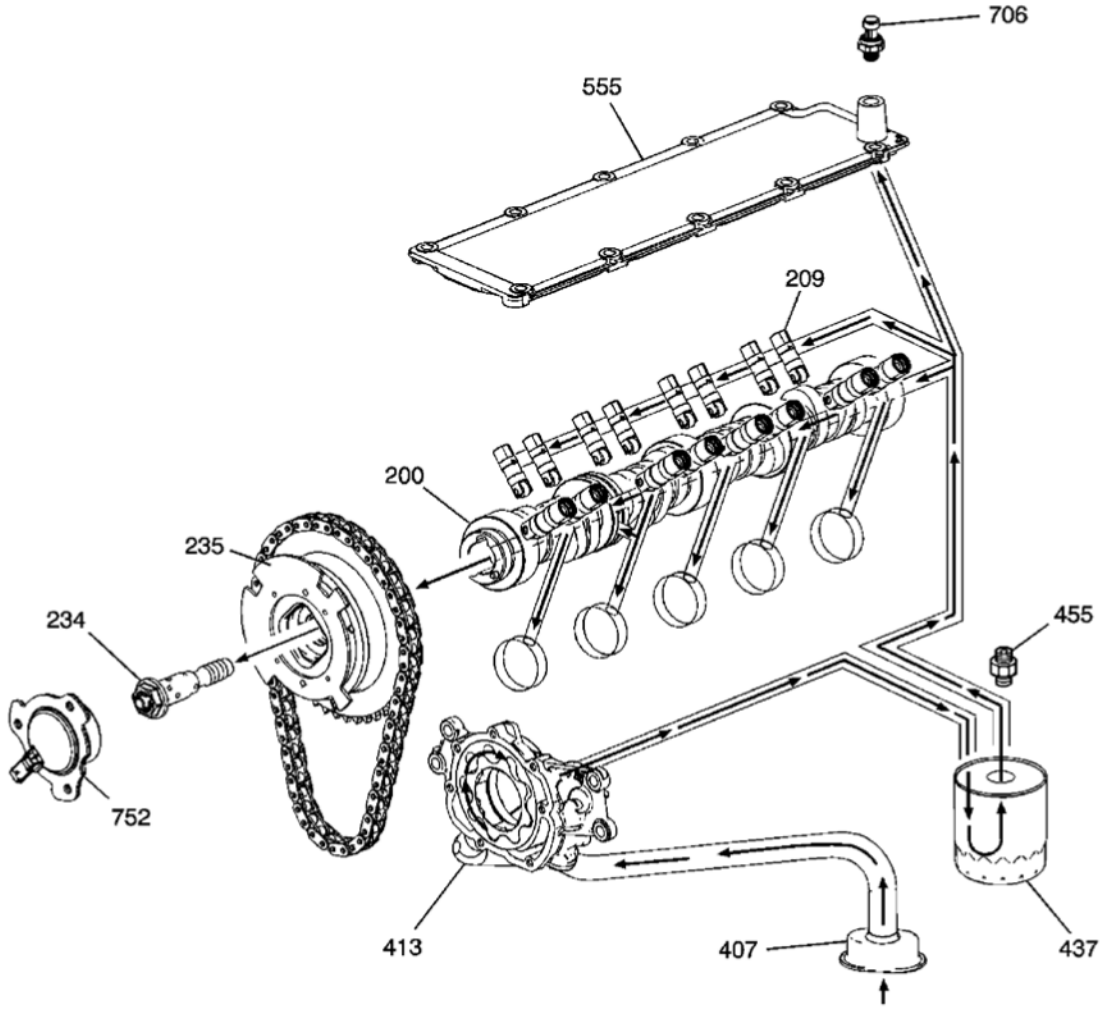

Fig. 40: View Of Lubrication System Components
Courtesy of GENERAL MOTORS CORP.

Callouts For Fig. 40

Callout	Component Name
200	Camshaft
209	Valve Lifter - Non-Active Fuel Management
234	Camshaft Position (CMP) Actuator Solenoid Valve
235	CMP Actuator
407	Oil Pump Screen
413	Oil Pump
437	Oil Filter
455	Oil Pressure Relief Valve
555	Valley Cover
706	Oil Pressure Sensor

cardiagn.com

752	CMP Magnet

Engine lubrication is supplied by a gerotor type oil pump assembly. The oil pump is mounted on the front of the engine block and driven directly by the crankshaft sprocket. The pump gears rotate and draw oil from the oil pan sump through a pick-up screen and pipe. The oil is pressurized as it passes through the pump and is sent through the engine block lower oil gallery. Contained within the oil pump assembly is a pressure relief valve that maintains oil pressure within a specified range.

Pressurized oil is directed through the engine block lower oil gallery to the full flow oil filter where harmful contaminants are removed. A bypass valve is incorporated into the oil filter, which permits oil flow in the event the filter becomes restricted. A second valve, the oil pressure relief valve is incorporated into the oil pan. The oil pressure relief valve limits oil pressure directed to the upper oil galleries to 379-517 kPa (55-75 psi) maximum. When main oil pressure exceeds 379 kPa (55 psi), the oil pressure relief valve exhausts excess oil to the sump.

Oil is then directed from the filter to the upper main oil galleries. Oil from the left upper oil gallery is directed to the crankshaft and camshaft bearings. Oil that has entered both the upper main oil galleries also pressurizes the valve lifter assemblies and is then pumped through the pushrods to lubricate the valve rocker arms and valve stems.

An oil passage at camshaft bearing location 2 permits oil flow into the center of the camshaft. Oil enters the camshaft exiting at the front and into the camshaft position (CMP) actuator solenoid valve. The CMP valve spool position is controlled by the engine control module (ECM) and CMP magnet (752). When commanded by the ECM, the CMP magnet repositions the CMP actuator solenoid valve spool directing pressurized oil into the CMP actuator to control valve timing. Refer to **Camshaft Actuator System Description** .

Oil returning to the pan is directed by the crankshaft oil deflector. The oil pressure sensor is located at the top rear of the engine.

LUBRICATION DESCRIPTION (RPO L76)

cardiagn.com

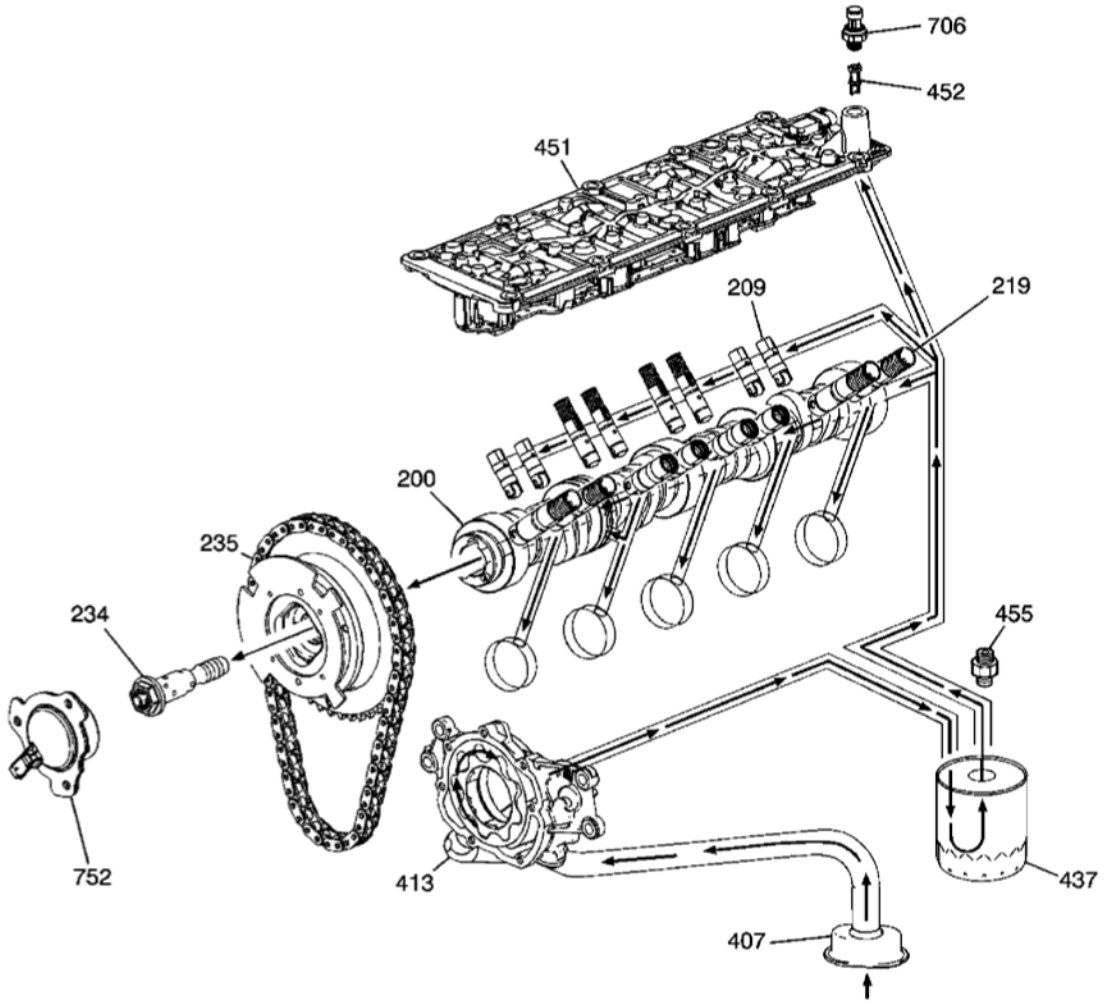

Fig. 41: View Of Lubrication System Components
Courtesy of GENERAL MOTORS CORP.

Callouts For Fig. 41

Callout	Component Name
200	Camshaft
209	Valve Lifter - Non-Active Fuel Management
219	Valve Lifter - Active Fuel Management
234	Camshaft Position (CMP) Actuator Solenoid Valve
235	CMP Actuator
407	Oil Pump Screen
413	Oil Pump
437	Oil Filter
451	Valve Lifter Oil Manifold
452	Valve Lifter Oil Filter

cardiagn.com

455	Active Fuel Management Oil Pressure Relief Valve
706	Oil Pressure Sensor
752	CMP Magnet

Engine lubrication is supplied by a gerotor type oil pump assembly. The oil pump is mounted on the front of the engine block and driven directly by the crankshaft sprocket. The pump gears rotate and draw oil from the oil pan sump through a pick-up screen and pipe. The oil is pressurized as it passes through the pump and is sent through the engine block lower oil gallery. Contained within the oil pump assembly is a pressure relief valve that maintains oil pressure within a specified range.

Pressurized oil is directed through the engine block lower oil gallery to the full flow oil filter where harmful contaminants are removed. A bypass valve is incorporated into the oil filter, which permits oil flow in the event the filter becomes restricted. A second valve, the active fuel management oil pressure relief valve is incorporated into the oil pan. The active fuel management oil pressure relief valve limits oil pressure directed to the upper oil galleries and valve lifter oil manifold assembly to 379-517 kPa (55-75 psi) maximum. When main oil pressure exceeds 379 kPa (55 psi), the oil pressure relief valve exhausts excess oil to the sump.

Oil is then directed from the filter to the upper main oil galleries and the valve lifter oil manifold assembly. Oil from the left upper oil gallery is directed to the crankshaft and camshaft bearings. Oil that has entered both the upper main oil galleries also pressurizes the valve lifter assemblies and is then pumped through the pushrods to lubricate the valve rocker arms and valve stems. Oil returning to the pan is directed by the crankshaft oil deflector. The oil pressure sensor is located at the top rear of the engine.

An oil passage at camshaft bearing location 2 permits oil flow into the center of the camshaft. Oil enters the camshaft exiting at the front and into the camshaft position (CMP) actuator solenoid valve. The CMP valve spool position is controlled by the engine control module (ECM) and CMP magnet. When commanded by the ECM, the CMP magnet repositions the CMP actuator solenoid valve spool directing pressurized oil into the CMP actuator to control valve timing. Refer to **Camshaft Actuator System Description** .

With active fuel management activated, the ECM commands the 4 solenoids to open, directing oil through the engine block oil galleries to the intake and exhaust valve lifters for cylinders 1, 4, 6, and 7.

LUBRICATION DESCRIPTION (RPO L92)

First Design Engines with Active Fuel Management Components

cardiagn.com

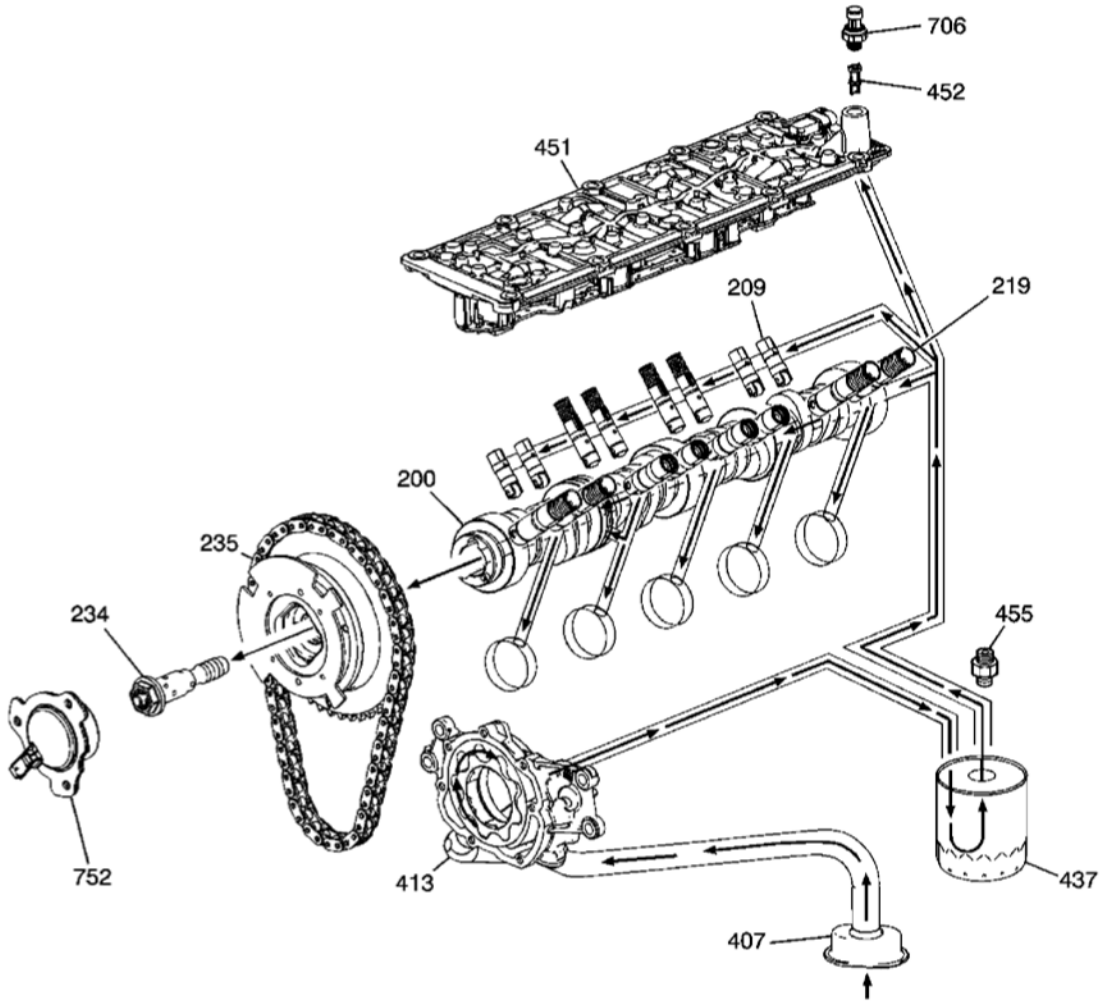

Fig. 42: View Of Lubrication System Components
Courtesy of GENERAL MOTORS CORP.

Callouts For Fig. 42

Callout	Component Name
200	Camshaft
209	Valve Lifter - Non-Active Fuel Management
219	Valve Lifter - Active Fuel Management
234	Camshaft Position (CMP) Actuator Solenoid Valve
235	CMP Actuator
407	Oil Pump Screen
413	Oil Pump
437	Oil Filter
451	Valve Lifter Oil Manifold
452	Valve Lifter Oil Filter

cardiagn.com

455	Active Fuel Management Oil Pressure Relief Valve
706	Oil Pressure Sensor
752	CMP Magnet

Engine lubrication is supplied by a gerotor type oil pump assembly. The oil pump is mounted on the front of the engine block and driven directly by the crankshaft sprocket. The pump gears rotate and draw oil from the oil pan sump through a pick-up screen and pipe. The oil is pressurized as it passes through the pump and is sent through the engine block lower oil gallery. Contained within the oil pump assembly is a pressure relief valve that maintains oil pressure within a specified range.

Pressurized oil is directed through the engine block lower oil gallery to the full flow oil filter where harmful contaminants are removed. A bypass valve is incorporated into the oil filter, which permits oil flow in the event the filter becomes restricted. A second valve, the active fuel management oil pressure relief valve is incorporated into the oil pan. The active fuel management oil pressure relief valve limits oil pressure directed to the upper oil galleries and valve lifter oil manifold assembly to 379-517 kPa (55-75 psi) maximum. When main oil pressure exceeds 379 kPa (55 psi), the oil pressure relief valve exhausts excess oil to the sump.

Oil is then directed from the filter to the upper main oil galleries and the valve lifter oil manifold assembly. Oil from the left upper oil gallery is directed to the crankshaft and camshaft bearings. Oil that has entered both the upper main oil galleries also pressurizes the valve lifter assemblies and is then pumped through the pushrods to lubricate the valve rocker arms and valve stems. Oil returning to the pan is directed by the crankshaft oil deflector. The oil pressure sensor is located at the top rear of the engine.

An oil passage at camshaft bearing location 2 permits oil flow into the center of the camshaft. Oil enters the camshaft exiting at the front and into the CMP actuator solenoid valve. The CMP valve spool position is controlled by the engine control module (ECM) and CMP magnet. When commanded by the ECM, the CMP magnet repositions the CMP actuator solenoid valve spool directing pressurized oil into the CMP actuator to control valve timing. Refer to **Camshaft Actuator System Description** .

Active fuel management hardware is present in first design L92 engines. The system is inactive for the 2007 model year.

Second Design Engines without Active Fuel Management Components

cardiagn.com

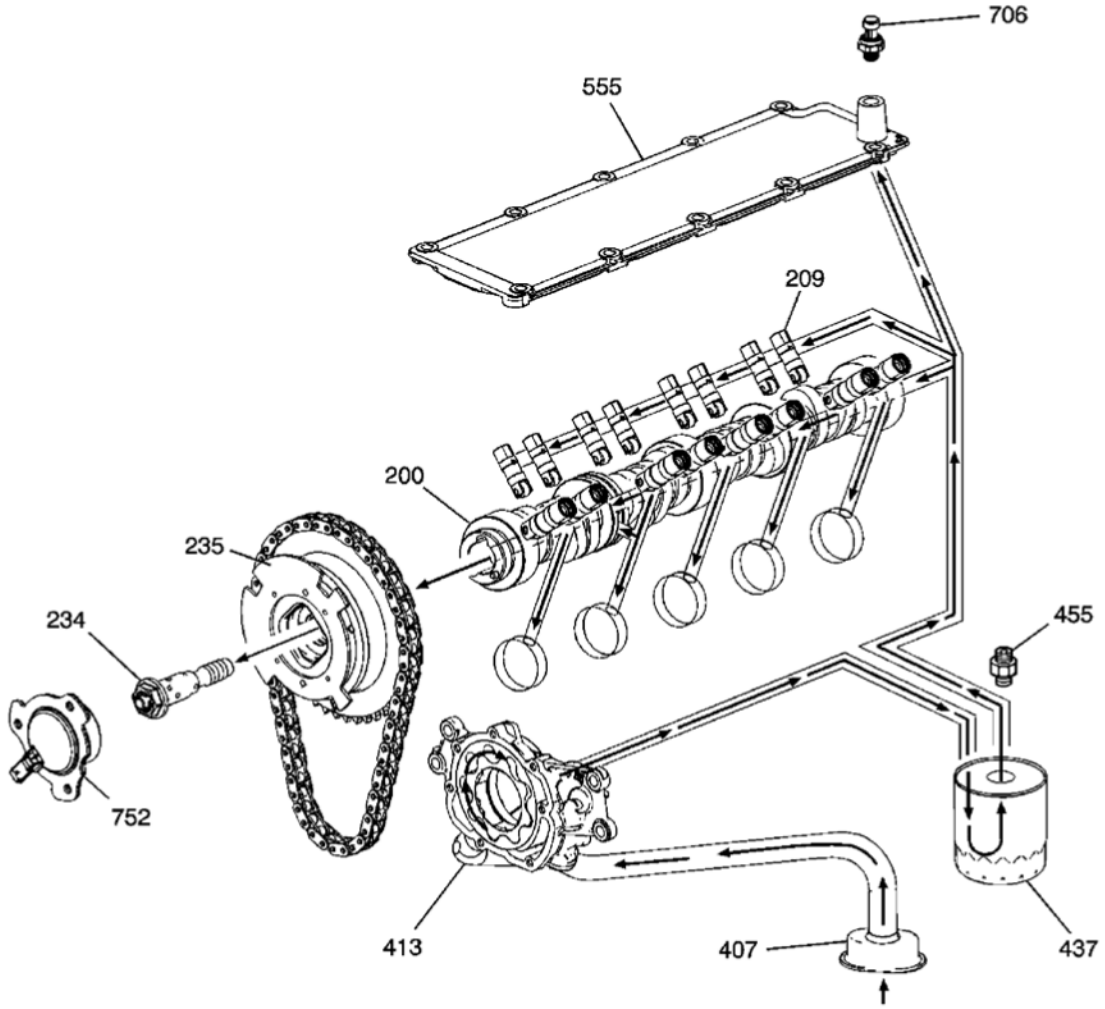

Fig. 43: View Of Lubrication System Components
Courtesy of GENERAL MOTORS CORP.

Callouts For Fig. 43

Callout	Component Name
200	Camshaft
209	Valve Lifter - Non-Active Fuel Management
234	Camshaft Position (CMP) Actuator Solenoid Valve
235	CMP Actuator
407	Oil Pump Screen
413	Oil Pump
437	Oil Filter
455	Oil Pressure Relief Valve
555	Valley Cover
706	Oil Pressure Sensor

cardiagn.com

752	CMP Magnet

Engine lubrication is supplied by a gerotor type oil pump assembly. The oil pump is mounted on the front of the engine block and driven directly by the crankshaft sprocket. The pump gears rotate and draw oil from the oil pan sump through a pick-up screen and pipe. The oil is pressurized as it passes through the pump and is sent through the engine block lower oil gallery. Contained within the oil pump assembly is a pressure relief valve that maintains oil pressure within a specified range.

Pressurized oil is directed through the engine block lower oil gallery to the full flow oil filter where harmful contaminants are removed. A bypass valve is incorporated into the oil filter, which permits oil flow in the event the filter becomes restricted. A second valve, the oil pressure relief valve is incorporated into the oil pan. The oil pressure relief valve limits oil pressure directed to the upper oil galleries to 379-517 kPa (55-75 psi) maximum. When main oil pressure exceeds 379 kPa (55 psi), the oil pressure relief valve exhausts excess oil to the sump.

Oil is then directed from the filter to the upper main oil galleries. Oil from the left upper oil gallery is directed to the crankshaft and camshaft bearings. Oil that has entered both the upper main oil galleries also pressurizes the valve lifter assemblies and is then pumped through the pushrods to lubricate the valve rocker arms and valve stems.

An oil passage at camshaft bearing location 2 permits oil flow into the center of the camshaft. Oil enters the camshaft exiting at the front and into the CMP actuator solenoid valve. The CMP valve spool position is controlled by the ECM and CMP magnet (752). When commanded by the ECM, the CMP magnet repositions the CMP actuator solenoid valve spool directing pressurized oil into the CMP actuator to control valve timing. Refer to **Camshaft Actuator System Description** . Oil returning to the pan is directed by the crankshaft oil deflector. The oil pressure sensor is located at the top rear of the engine.

LUBRICATION DESCRIPTION - MAIN PRESSURE BELOW 55 PSI WITH CYLINDER DEACTIVATION (ACTIVE FUEL MANAGEMENT) OFF (RPO LC9/LY5/LMG)

cardiagn.com

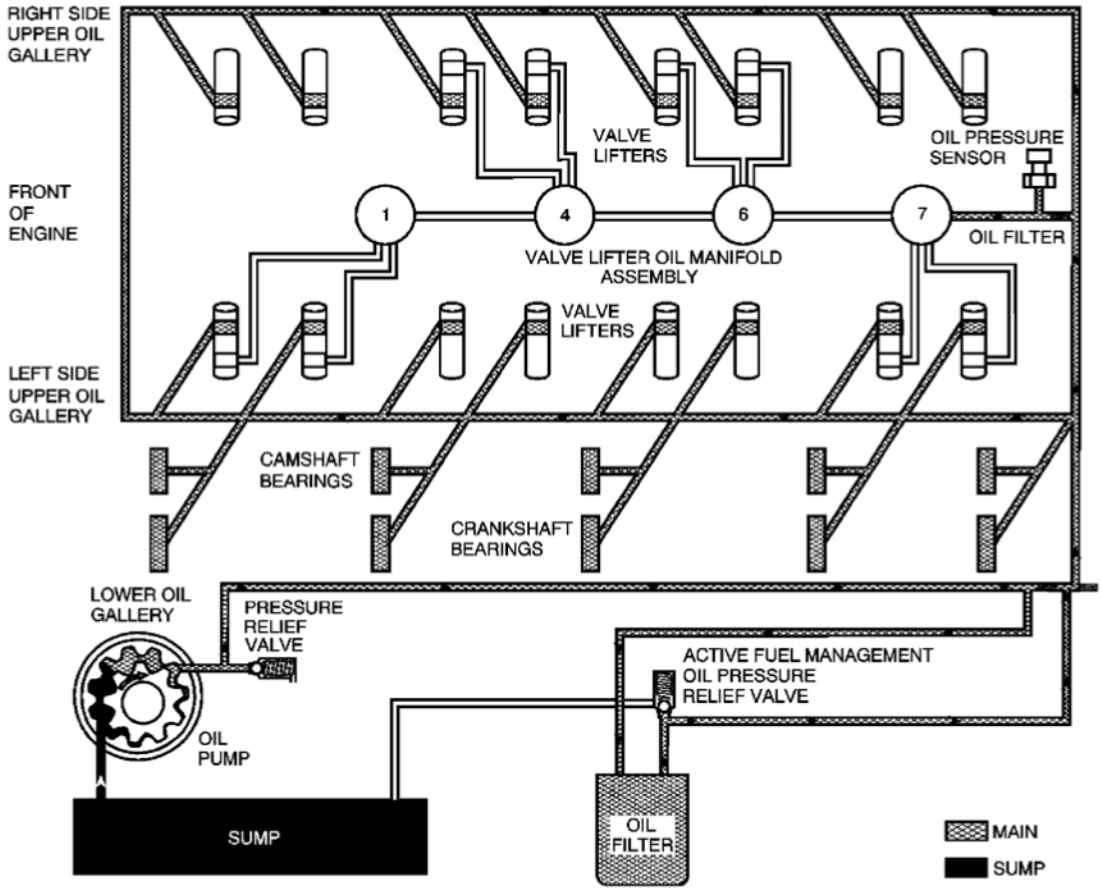

Fig. 44: Oil Flow Diagram
Courtesy of GENERAL MOTORS CORP.

Engine lubrication is supplied by a gerotor type oil pump assembly. The oil pump is mounted on the front of the engine block and driven directly by the crankshaft sprocket. The pump gears rotate and draw oil from the oil pan sump through a pick-up screen and pipe. The oil is pressurized as it passes through the pump and is sent through the engine block lower oil gallery. Contained within the oil pump assembly is a pressure relief valve that maintains oil pressure within a specified range.

Pressurized oil is directed through the engine block lower oil gallery to the full flow oil filter where harmful contaminants are removed. A bypass valve is incorporated into the oil filter, which permits oil flow in the event the filter becomes restricted. A second valve, the active fuel management oil pressure relief valve is incorporated into the oil pan. The active fuel management oil pressure relief valve limits oil pressure directed to the upper oil galleries and oil manifold assembly to 379-517 kPa (55-75 psi) maximum.

Oil is then directed from the filter to the upper main oil galleries and the valve lifter oil manifold assembly. Oil from the left upper oil gallery is directed to the crankshaft and camshaft bearings. Oil that has entered both the upper main oil galleries also pressurizes the valve lifter assemblies and is then pumped through the pushrods to lubricate the valve rocker arms and valve stems. Oil returning to the pan is directed by the crankshaft oil deflector. The oil pressure sensor is located at the top rear of the engine. Refer to **Cylinder Deactivation**

cardiagn.com

(Active Fuel Management) System Description.

LUBRICATION DESCRIPTION - MAIN PRESSURE BELOW 55 PSI WITH CYLINDER DEACTIVATION (ACTIVE FUEL MANAGEMENT) OFF (RPO L76/L92)

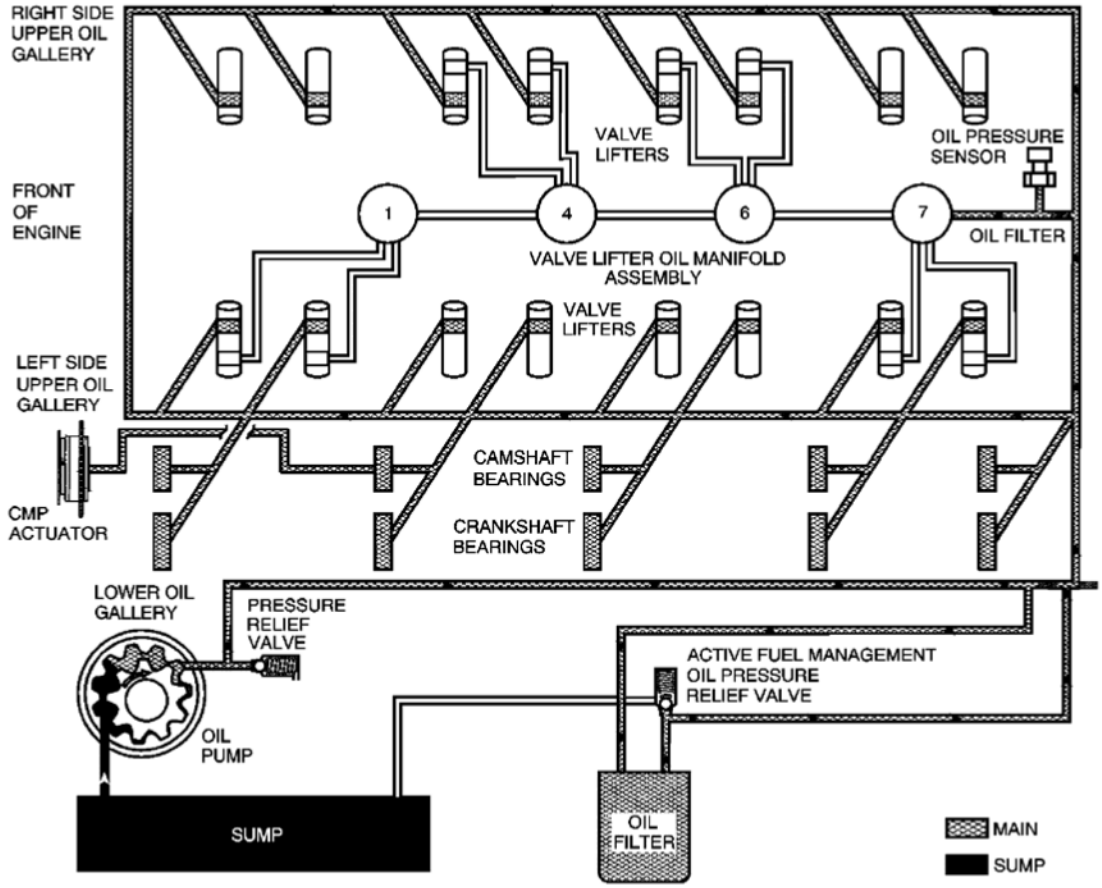

Fig. 45: Oil Flow Diagram
Courtesy of GENERAL MOTORS CORP.

Engine lubrication is supplied by a gerotor type oil pump assembly. The oil pump is mounted on the front of the engine block and driven directly by the crankshaft sprocket. The pump gears rotate and draw oil from the oil pan sump through a pick-up screen and pipe. The oil is pressurized as it passes through the pump and is sent through the engine block lower oil gallery. Contained within the oil pump assembly is a pressure relief valve that maintains oil pressure within a specified range.

Pressurized oil is directed through the engine block lower oil gallery to the full flow oil filter where harmful contaminants are removed. A bypass valve is incorporated into the oil filter, which permits oil flow in the event the filter becomes restricted. A second valve, the active fuel management oil pressure relief valve is incorporated into the oil pan. The active fuel management oil pressure relief valve limits oil pressure directed to the upper oil galleries and oil manifold assembly to 379-517 kPa (55-75 psi) maximum.

cardiagn.com

Oil is then directed from the filter to the upper main oil galleries and the valve lifter oil manifold assembly. Oil from the left upper oil gallery is directed to the crankshaft and camshaft bearings. Oil that has entered both the upper main oil galleries also pressurizes the valve lifter assemblies and is then pumped through the pushrods to lubricate the valve rocker arms and valve stems.

An oil passage at camshaft bearing location 2 permits oil flow into the center of the camshaft. Oil enters the camshaft exiting at the front and into the camshaft position (CMP) actuator solenoid valve. The CMP valve spool position is controlled by the engine control module (ECM) and CMP magnet. When commanded by the ECM, the CMP magnet repositions the CMP actuator solenoid valve spool directing pressurized oil into the CMP actuator to control valve timing. Refer to **Camshaft Actuator System Description** .

Oil returning to the pan is directed by the crankshaft oil deflector. The oil pressure sensor is located at the top rear of the engine. For RPO L92, active fuel management hardware is present in first design engines. The system is inactive for the 2007 model year. Refer to **Cylinder Deactivation (Active Fuel Management) System Description** and **Camshaft Position Actuator and Solenoid Valve Description**.

LUBRICATION DESCRIPTION - MAIN PRESSURE ABOVE 55 PSI WITH CYLINDER DEACTIVATION (ACTIVE FUEL MANAGEMENT) OFF (RPO LC9/LY5/LMG)

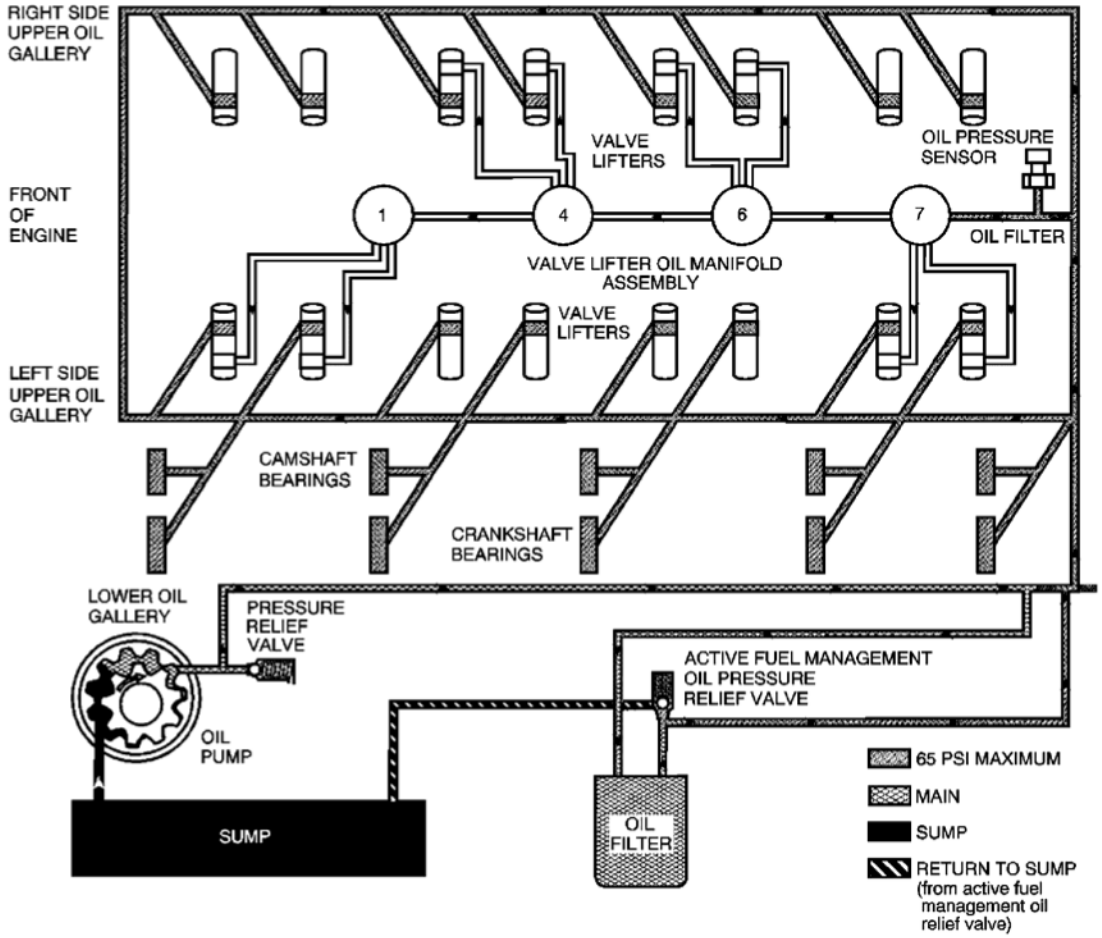

cardiagn.com

Fig. 46: Oil Flow Diagram
Courtesy of GENERAL MOTORS CORP.

Engine lubrication is supplied by a gerotor type oil pump assembly. The oil pump is mounted on the front of the engine block and driven directly by the crankshaft sprocket. The pump gears rotate and draw oil from the oil pan sump through a pick-up screen and pipe. The oil is pressurized as it passes through the pump and is sent through the engine block lower oil gallery. Contained within the oil pump assembly is a pressure relief valve that maintains oil pressure within a specified range.

Pressurized oil is directed through the engine block lower oil gallery to the full flow oil filter where harmful contaminants are removed. A bypass valve is incorporated into the oil filter, which permits oil flow in the event the filter becomes restricted. A second valve, the active fuel management oil pressure relief valve is incorporated into the oil pan. The active fuel management oil pressure relief valve limits oil pressure directed to the upper oil galleries and valve lifter oil manifold assembly to 379-517 kPa (55-75 psi) maximum. When main oil pressure exceeds 379 kPa (55 psi), the oil pressure relief valve exhausts excess oil to the sump.

Oil is then directed from the filter to the upper main oil galleries and the valve lifter oil manifold assembly. Oil from the left upper oil gallery is directed to the crankshaft and camshaft bearings. Oil that has entered both the upper main oil galleries also pressurizes the valve lifter assemblies and is then pumped through the pushrods to lubricate the valve rocker arms and valve stems. Oil returning to the pan is directed by the crankshaft oil deflector. The oil pressure sensor is located at the top rear of the engine. Refer to **Cylinder Deactivation (Active Fuel Management) System Description**.

LUBRICATION DESCRIPTION - MAIN PRESSURE ABOVE 55 PSI WITH CYLINDER DEACTIVATION (ACTIVE FUEL MANAGEMENT) OFF (RPO L76/L92)

cardiagn.com

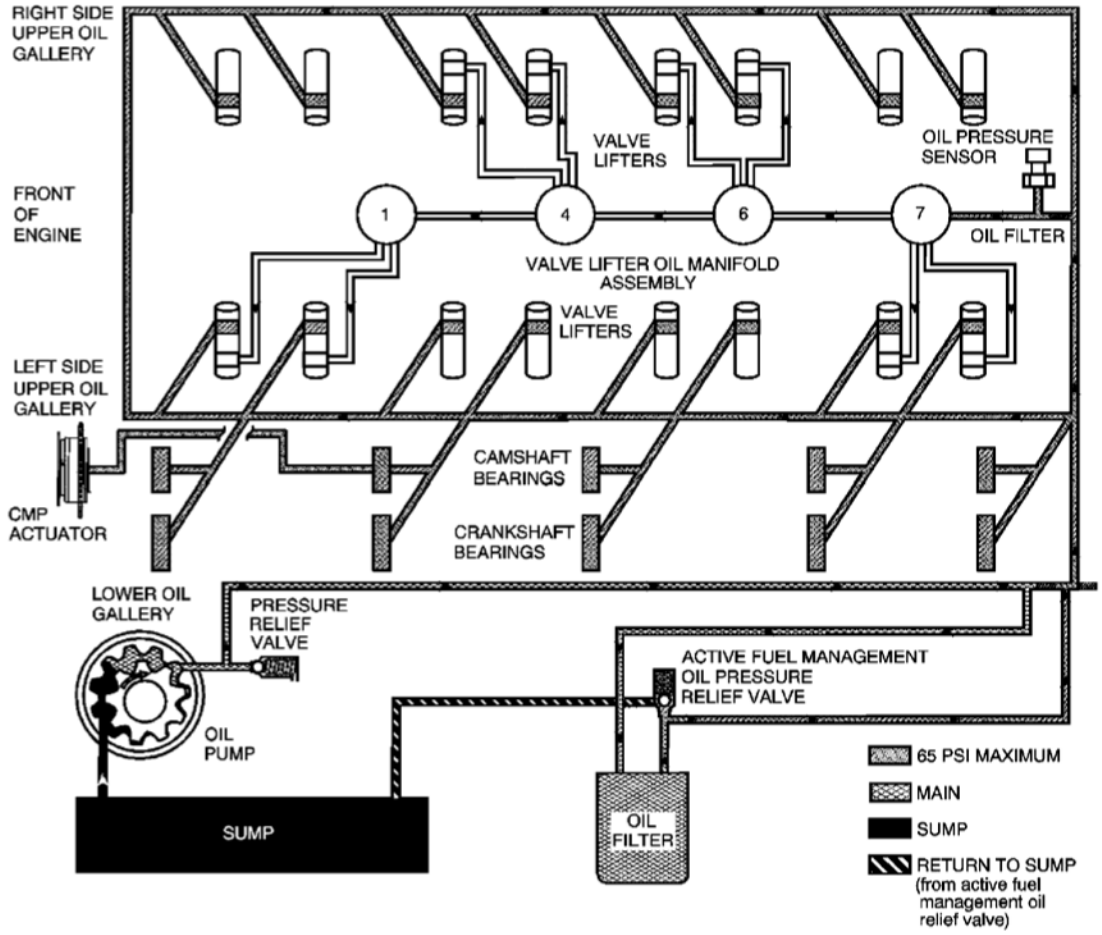

Fig. 47: Oil Flow Diagram
Courtesy of GENERAL MOTORS CORP.

Engine lubrication is supplied by a gerotor type oil pump assembly. The oil pump is mounted on the front of the engine block and driven directly by the crankshaft sprocket. The pump gears rotate and draw oil from the oil pan sump through a pick-up screen and pipe. The oil is pressurized as it passes through the pump and is sent through the engine block lower oil gallery. Contained within the oil pump assembly is a pressure relief valve that maintains oil pressure within a specified range.

Pressurized oil is directed through the engine block lower oil gallery to the full flow oil filter where harmful contaminants are removed. A bypass valve is incorporated into the oil filter, which permits oil flow in the event the filter becomes restricted. A second valve, the active fuel management oil pressure relief valve is incorporated into the oil pan. The active fuel management oil pressure relief valve limits oil pressure directed to the upper oil galleries and valve lifter oil manifold assembly to 379-517 kPa (55-75 psi) maximum. When main oil pressure exceeds 379 kPa (55 psi), the oil pressure relief valve exhausts excess oil to the sump.

Oil is then directed from the filter to the upper main oil galleries and the valve lifter oil manifold assembly. Oil from the left upper oil gallery is directed to the crankshaft and camshaft bearings. Oil that has entered both the upper main oil galleries also pressurizes the valve lifter assemblies and is then pumped through the pushrods to

cardiagn.com

lubricate the valve rocker arms and valve stems.

An oil passage at camshaft bearing location 2 permits oil flow into the center of the camshaft. Oil enters the camshaft exiting at the front and into the camshaft position (CMP) actuator solenoid valve. The CMP valve spool position is controlled by the engine control module (ECM) and CMP magnet. When commanded by the ECM, the CMP magnet repositions the CMP actuator solenoid valve spool directing pressurized oil into the CMP actuator to control valve timing. Refer to **Camshaft Actuator System Description** .

Oil returning to the pan is directed by the crankshaft oil deflector. The oil pressure sensor is located at the top rear of the engine. For RPO L92, active fuel management hardware is present in first design engines. The system is inactive for the 2007 model year. Refer to **Cylinder Deactivation (Active Fuel Management) System Description** and **Camshaft Position Actuator and Solenoid Valve Description**.

LUBRICATION DESCRIPTION - MAIN PRESSURE BELOW 55 PSI WITH CYLINDER DEACTIVATION (ACTIVE FUEL MANAGEMENT) ON (RPO LC9/LY5/LMG)

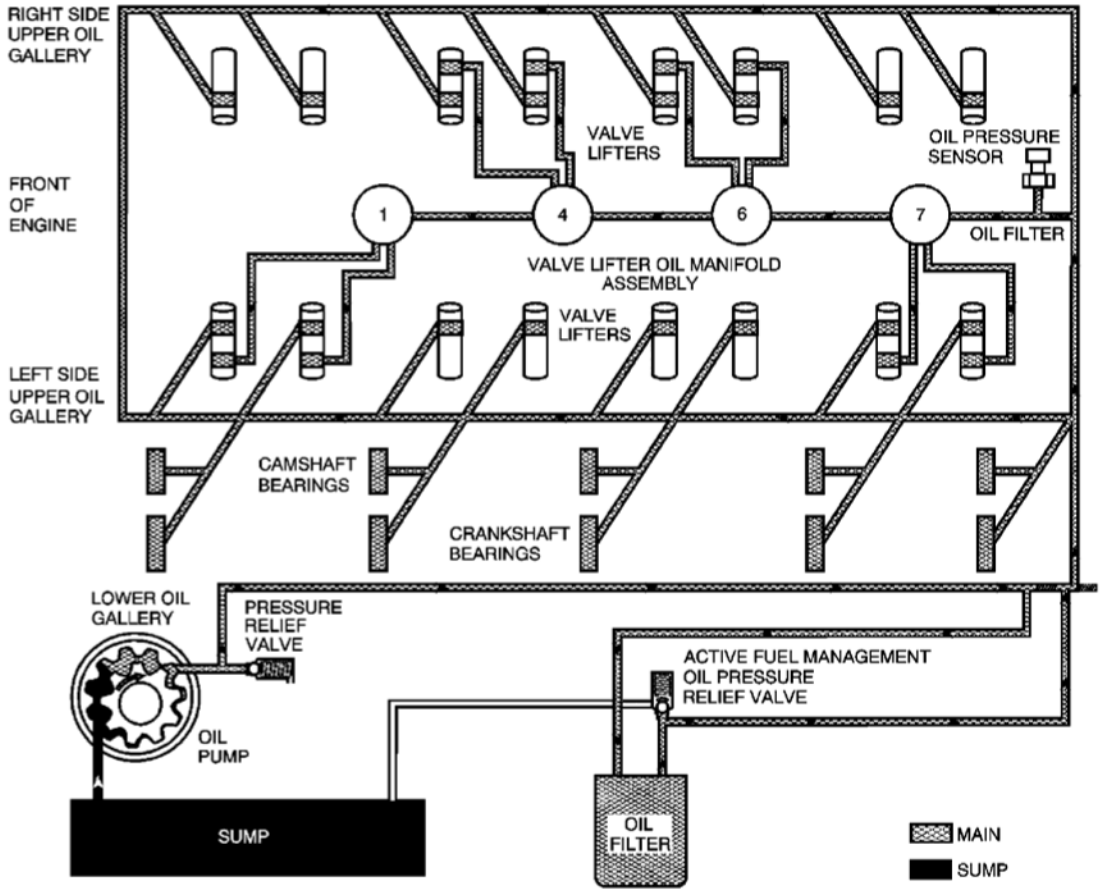

Fig. 48: Oil Flow Diagram
Courtesy of GENERAL MOTORS CORP.

Engine lubrication is supplied by a gerotor type oil pump assembly. The oil pump is mounted on the front of the

cardiagn.com

engine block and driven directly by the crankshaft sprocket. The pump gears rotate and draw oil from the oil pan sump through a pick-up screen and pipe. The oil is pressurized as it passes through the pump and is sent through the engine block lower oil gallery. Contained within the oil pump assembly is a pressure relief valve that maintains oil pressure within a specified range.

Pressurized oil is directed through the engine block lower oil gallery to the full flow oil filter where harmful contaminants are removed. A bypass valve is incorporated into the oil filter, which permits oil flow in the event the filter becomes restricted. A second valve, the active fuel management oil pressure relief valve is incorporated into the oil pan. The active fuel management oil pressure relief valve limits oil pressure directed to the upper oil galleries and oil manifold assembly to 379-517 kPa (55-75 psi) maximum.

Oil is then directed from the filter to the upper main oil galleries and the valve lifter oil manifold assembly. Oil from the left upper oil gallery is directed to the crankshaft and camshaft bearings. Oil that has entered both the upper main oil galleries also pressurizes the valve lifter assemblies and is then pumped through the pushrods to lubricate the valve rocker arms and valve stems. Oil returning to the pan is directed by the crankshaft oil deflector. The oil pressure sensor is located at the top rear of the engine.

With active fuel management activated, the engine control module (ECM) commands the 4 solenoids to open, directing oil through the engine block oil galleries to the intake and exhaust valve lifters for cylinders 1, 4, 6, and 7. Refer to **Cylinder Deactivation (Active Fuel Management) System Description**.

LUBRICATION DESCRIPTION - MAIN PRESSURE BELOW 55 PSI WITH CYLINDER DEACTIVATION (ACTIVE FUEL MANAGEMENT) ON (RPO L76/L92)

cardiagn.com

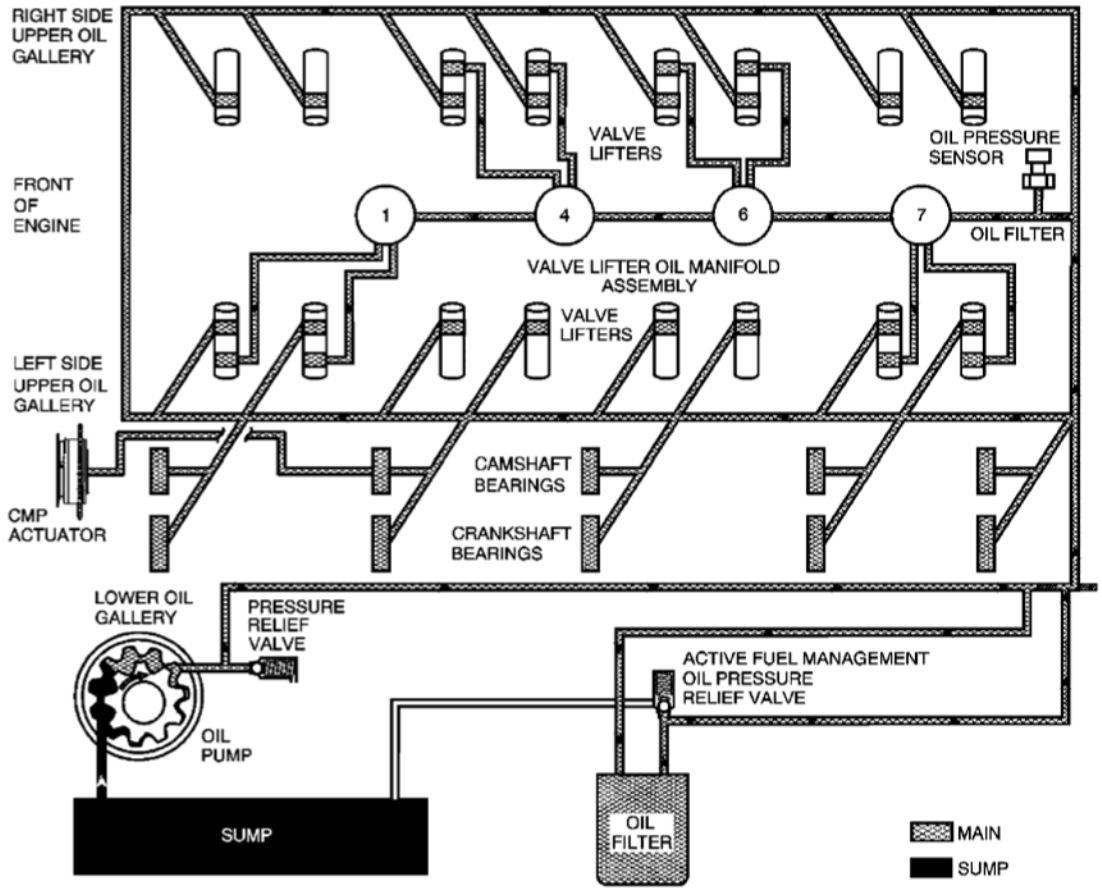

Fig. 49: Oil Flow Diagram
Courtesy of GENERAL MOTORS CORP.

Engine lubrication is supplied by a gerotor type oil pump assembly. The oil pump is mounted on the front of the engine block and driven directly by the crankshaft sprocket. The pump gears rotate and draw oil from the oil pan sump through a pick-up screen and pipe. The oil is pressurized as it passes through the pump and is sent through the engine block lower oil gallery. Contained within the oil pump assembly is a pressure relief valve that maintains oil pressure within a specified range.

Pressurized oil is directed through the engine block lower oil gallery to the full flow oil filter where harmful contaminants are removed. A bypass valve is incorporated into the oil filter, which permits oil flow in the event the filter becomes restricted. A second valve, the active fuel management oil pressure relief valve is incorporated into the oil pan. The active fuel management oil pressure relief valve limits oil pressure directed to the upper oil galleries and oil manifold assembly to 379-517 kPa (55-75 psi) maximum.

Oil is then directed from the filter to the upper main oil galleries and the valve lifter oil manifold assembly. Oil from the left upper oil gallery is directed to the crankshaft and camshaft bearings. Oil that has entered both the upper main oil galleries also pressurizes the valve lifter assemblies and is then pumped through the pushrods to lubricate the valve rocker arms and valve stems.

cardiagn.com

An oil passage at camshaft bearing location 2 permits oil flow into the center of the camshaft. Oil enters the camshaft exiting at the front and into the camshaft position (CMP) actuator solenoid valve. The CMP valve spool position is controlled by the engine control module (ECM) and CMP magnet. When commanded by the ECM, the CMP magnet repositions the CMP actuator solenoid valve spool directing pressurized oil into the CMP actuator to control valve timing. Refer to **Camshaft Actuator System Description** .

Oil returning to the pan is directed by the crankshaft oil deflector. The oil pressure sensor is located at the top rear of the engine.

With active fuel management activated, the ECM commands the 4 solenoids to open, directing oil through the engine block oil galleries to the intake and exhaust valve lifters for cylinders 1, 4, 6, and 7. For RPO L92, active fuel management hardware is present in first design engines. The system is inactive for the 2007 model year. Refer to **Cylinder Deactivation (Active Fuel Management) System Description** and **Camshaft Position Actuator and Solenoid Valve Description**.

LUBRICATION DESCRIPTION - MAIN PRESSURE ABOVE 55 PSI WITH CYLINDER DEACTIVATION (ACTIVE FUEL MANAGEMENT) ON (RPO LC9/LY5/LMG)

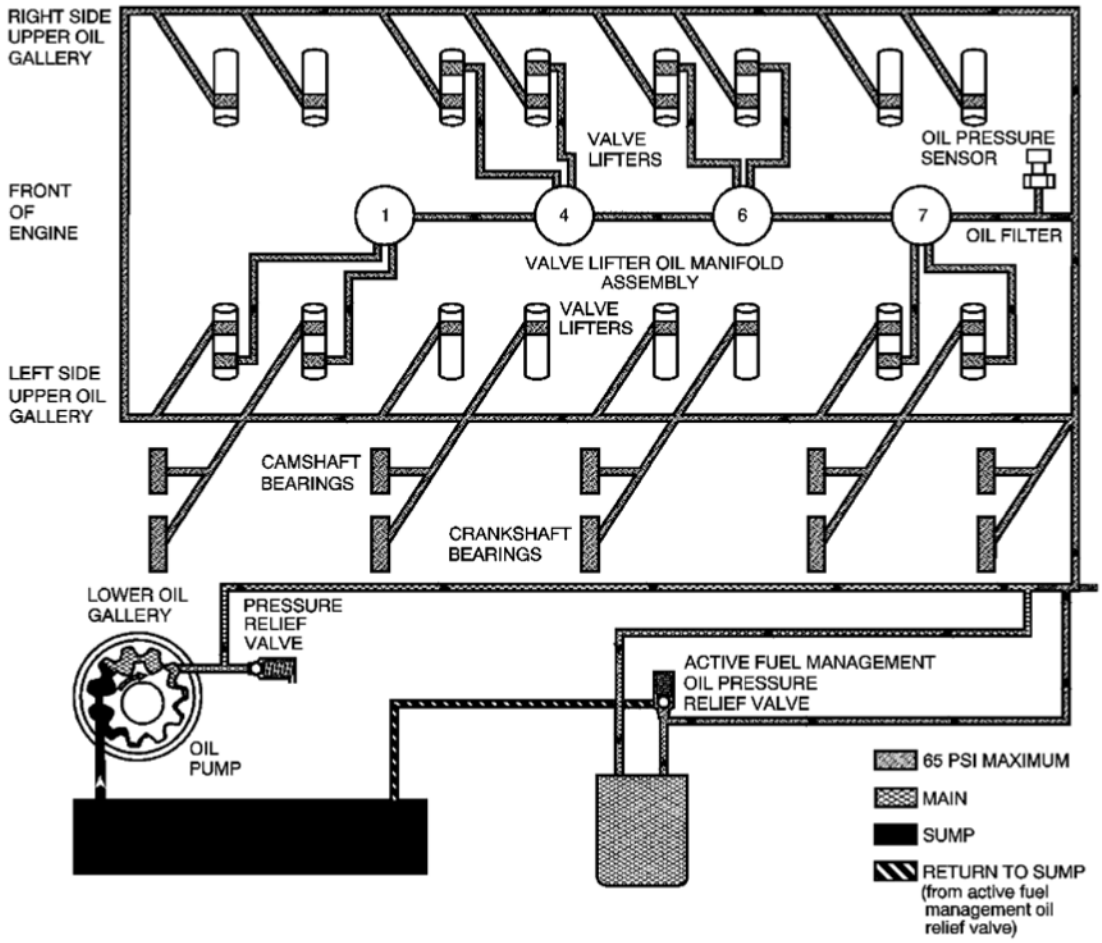

Fig. 50: Oil Flow Diagram

cardiagn.com

Courtesy of GENERAL MOTORS CORP.

Engine lubrication is supplied by a gerotor type oil pump assembly. The oil pump is mounted on the front of the engine block and driven directly by the crankshaft sprocket. The pump gears rotate and draw oil from the oil pan sump through a pick-up screen and pipe. The oil is pressurized as it passes through the pump and is sent through the engine block lower oil gallery. Contained within the oil pump assembly is a pressure relief valve that maintains oil pressure within a specified range.

Pressurized oil is directed through the engine block lower oil gallery and through the oil filter where harmful contaminants are removed. A bypass valve is incorporated into the oil filter, which permits oil flow in the event the filter becomes restricted. A second valve, the active fuel management oil pressure relief valve is incorporated into the oil pan. The active fuel management oil pressure relief valve limits oil pressure directed to the upper oil galleries and valve lifter oil manifold assembly to 379-517 kPa (55-75 psi) maximum. When main oil pressure exceeds 379 kPa (55 psi), the oil pressure relief valve exhausts excess oil to the sump.

Oil is then directed from the filter to the upper main oil galleries and the valve lifter oil manifold assembly. Oil from the left upper oil gallery is directed to the crankshaft and camshaft bearings. Oil that has entered both the upper main oil galleries also pressurizes the valve lifter assemblies and is then pumped through the pushrods to lubricate the valve rocker arms and valve stems. Oil returning to the pan is directed by the crankshaft oil deflector. The oil pressure sensor is located at the top rear of the engine.

With active fuel management activated, the engine control module (ECM) commands the 4 solenoids to open, directing oil through the engine block oil galleries to the intake and exhaust valve lifters for cylinders 1, 4, 6, and 7. Refer to **Cylinder Deactivation (Active Fuel Management) System Description**.

LUBRICATION DESCRIPTION - MAIN PRESSURE ABOVE 55 PSI WITH CYLINDER DEACTIVATION (ACTIVE FUEL MANAGEMENT) ON (RPO L76/L92)

cardiagn.com

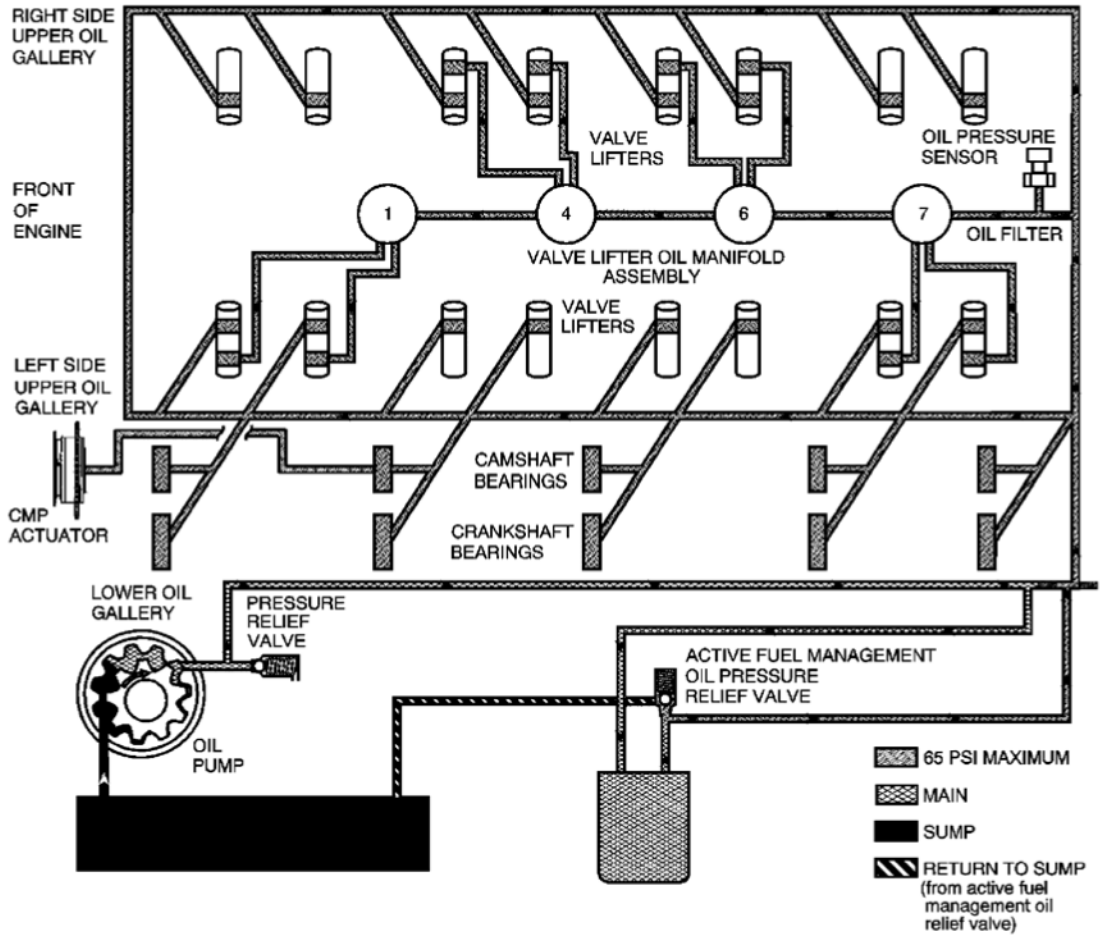

Fig. 51: Oil Flow Diagram
Courtesy of GENERAL MOTORS CORP.

Engine lubrication is supplied by a gerotor type oil pump assembly. The oil pump is mounted on the front of the engine block and driven directly by the crankshaft sprocket. The pump gears rotate and draw oil from the oil pan sump through a pick-up screen and pipe. The oil is pressurized as it passes through the pump and is sent through the engine block lower oil gallery. Contained within the oil pump assembly is a pressure relief valve that maintains oil pressure within a specified range.

Pressurized oil is directed through the engine block lower oil gallery to the full flow oil filter where harmful contaminants are removed. A bypass valve is incorporated into the oil filter, which permits oil flow in the event the filter becomes restricted. A second valve, the active fuel management oil pressure relief valve is incorporated into the oil pan. The active fuel management oil pressure relief valve limits oil pressure directed to the upper oil galleries and valve lifter oil manifold assembly to 379-517 kPa (55-75 psi) maximum. When main oil pressure exceeds 379 kPa (55 psi), the oil pressure relief valve exhausts excess oil to the sump.

Oil is then directed from the filter to the upper main oil galleries and the valve lifter oil manifold assembly. Oil from the left upper oil gallery is directed to the crankshaft and camshaft bearings. Oil that has entered both the upper main oil galleries also pressurizes the valve lifter assemblies and is then pumped through the pushrods to

cardiagn.com

lubricate the valve rocker arms and valve stems.

An oil passage at camshaft bearing location 2 permits oil flow into the center of the camshaft. Oil enters the camshaft exiting at the front and into the camshaft position (CMP) actuator solenoid valve. The CMP valve spool position is controlled by the engine control module (ECM) and CMP magnet. When commanded by the ECM, the CMP magnet repositions the CMP actuator solenoid valve spool directing pressurized oil into the CMP actuator to control valve timing. Refer to **Camshaft Actuator System Description** .

Oil returning to the pan is directed by the crankshaft oil deflector. The oil pressure sensor is located at the top rear of the engine.

With active fuel management activated, the ECM commands the 4 solenoids to open, directing oil through the engine block oil galleries to the intake and exhaust valve lifters for cylinders 1, 4, 6, and 7. For RPO L92, active fuel management hardware is present in first design engines. The system is inactive for the 2007 model year. Refer to **Cylinder Deactivation (Active Fuel Management) System Description** and **Camshaft Position Actuator and Solenoid Valve Description**.

CLEANLINESS AND CARE

- Throughout this section, it should be understood that proper cleaning and protection of machined surfaces and friction areas is part of the repair procedure. This is considered standard shop practice, even if not specifically stated.
- When any internal engine parts are serviced, care and cleanliness is important.
- When components are removed for service, they should be marked, organized or retained in a specific order for assembly. Refer to **Separating Parts**.
- At the time of installation, components should be installed in the same location and with the same mating surface as when removed.
- An automobile engine is a combination of many machined, honed, polished and lapped surfaces with tolerances that are measured in millimeters or thousandths of an inch. These surfaces should be covered or protected to avoid component damage.
- A liberal coating of clean engine oil should be applied to friction areas during assembly.
- Proper lubrication will protect and lubricate friction surfaces during initial operation.

SEPARATING PARTS

IMPORTANT:

- **Many internal engine components will develop specific wear patterns on their friction surfaces.**
- **When disassembling the engine, internal components MUST be separated, marked, or organized in a way to ensure installation to their original location and position.**

Separate, mark, or organize the following components:

- Piston and the piston pin

cardiagn.com

- Piston to the specific cylinder bore
- Piston rings to the piston
- Connecting rod location and orientation to the crankshaft journal
- Connecting rod to the bearing cap

  A paint stick or etching/engraving type tool are recommended. Stamping the connecting rod or cap near the bearing bore may affect component geometry.

- Crankshaft main and connecting rod bearings
- Camshaft and valve lifters
- Valve lifters, lifter guides, pushrods and rocker arm assemblies
- Valve to the valve guide
- Valve spring to the cylinder head location
- Engine block main bearing cap location and direction
- Oil pump drive and driven gears

REPLACING ENGINE GASKETS

Tools Required

J 28410 Gasket Remover

Gasket Use and Applying Sealants

- Do not use any gasket again unless specified.
- Gaskets that can be used again will be identified in the service procedure.
- Do not apply sealant to any gasket or sealing surface unless called out in the service information.

Separating Components

- Use a rubber mallet to separate components.
- Bump the part sideways to loosen the components.
- Bumping should be done at bends or reinforced areas to prevent distortion of parts.

Cleaning Gasket Surfaces

- Remove all gasket and sealing material from the part using the **J 28410** or equivalent.
- Care must be used to avoid gouging or scraping the sealing surfaces.
- Do not use any other method or technique to remove sealant or gasket material from a part.
- Do not use abrasive pads, sand paper, or power tools to clean the gasket surfaces.
  - These methods of cleaning can cause damage to the component sealing surfaces.
  - Abrasive pads also produce a fine grit that the oil filter cannot remove from the oil.

cardiagn.com

- This grit is abrasive and has been known to cause internal engine damage.

Assembling Components

NOTE: **Refer to Sealant Notice .**

- When assembling components, use only the sealant specified or equivalent in the service procedure.
- Sealing surfaces should be clean and free of debris or oil.
- Specific components such as crankshaft oil seals or valve stem oil seals may require lubrication during assembly.
- Components requiring lubrication will be identified in the service procedure.
- When applying sealant to a component, apply the amount specified in the service procedure.
- Tighten bolts to specifications. Do not overtighten.

USE OF ROOM TEMPERATURE VULCANIZING (RTV) AND ANAEROBIC SEALER

Pipe Joint Compound

IMPORTANT: 3 types of sealer are commonly used in engines. These are room temperature vulcanizing (RTV) sealer, anaerobic gasket eliminator sealer, and pipe joint compound. The correct sealer and amount must be used in the proper location to prevent oil leaks. DO NOT interchange the 3 types of sealers. Use only the specific sealer or the equivalent as recommended in the service procedure.

- Pipe joint compound is a pliable sealer that does not completely harden. This type of sealer is used where 2 non-rigid parts, such as the oil pan and the engine block, are assembled together.
- Do not use pipe joint compound in areas where extreme temperatures are expected. These areas include the exhaust manifold, head gasket, or other surfaces where gasket eliminator is specified.
- Follow all safety recommendations and directions that are on the container.

To remove the sealant or the gasket material, refer to **Replacing Engine Gaskets**.

NOTE: **Refer to Sealant Notice .**

- Apply the pipe joint compound to a clean surface. Use a bead size or quantity as specified in the procedure. Run the bead to the inside of any bolt holes.
- Apply a continuous bead of pipe joint compound to one sealing surface. Sealing surfaces to be resealed must be clean and dry.
- Tighten the bolts to specifications. Do not overtighten.

RTV Sealer

- RTV sealant hardens when exposed to air. This type of sealer is used where 2 non-rigid parts, such as the intake manifold and the engine block, are assembled together.

cardiagn.com

- Do not use RTV sealant in areas where extreme temperatures are expected. These areas include the exhaust manifold, head gasket, or other surfaces where a gasket eliminator is specified.
- Follow all safety recommendations and directions that are on the container.

  To remove the sealant or the gasket material, refer to **Replacing Engine Gaskets**.

  NOTE: Refer to Sealant Notice .

- Apply RTV sealant to a clean surface. Use a bead size as specified in the procedure. Run the bead to the inside of any bolt holes.
- Assemble components while the RTV sealant is still wet, within 3 minutes. Do not wait for the RTV sealant to skin over.
- Tighten bolts to specifications. Do not overtighten.

Anaerobic Sealer

- Anaerobic gasket eliminator hardens in the absence of air. This type of sealer is used where 2 rigid parts, such as castings, are assembled together. When two rigid parts are disassembled and no sealer or gasket is readily noticeable, the parts were probably assembled using a gasket eliminator.
- Follow all safety recommendations and directions that are on the container.

  To remove the sealant or the gasket material, refer to **Replacing Engine Gaskets**.

- Apply a continuous bead of gasket eliminator to 1 flange. Surfaces to be sealed must be clean and dry.

  NOTE: Refer to Sealant Notice .

- Spread the sealer evenly with your finger to get a uniform coating on the sealing surface.

  IMPORTANT: Anaerobic sealed joints that are partially torqued and allowed to cure more than 5 minutes may result in incorrect shimming and sealing of the joint.

- Tighten bolts to specifications. Do not overtighten.
- After properly tightening the fasteners, remove the excess sealer from the outside of the joint.

TOOLS AND EQUIPMENT

Special tools are listed and illustrated throughout this section, with a complete listing at the end of the section. These tools, or their equivalents, are specially designed to quickly and safely accomplish the operations for which they are intended. The use of these special tools also minimize possible damage to engine components. Some precision measuring tools are required for inspection of certain critical components. Torque wrenches and a torque angle meter are necessary for the proper tightening of various fasteners.

cardiagn.com

To properly service the engine assembly, the following items should be readily available:

- Approved eye protection and safety gloves
- A clean, well lit, work area
- A suitable parts cleaning tank
- A compressed air supply
- Trays or storage containers to keep parts and fasteners organized
- An adequate set of hand tools
- Approved engine repair stand
- An approved engine lifting device that will adequately support the weight of the components

SPECIAL TOOLS AND EQUIPMENT

SPECIAL TOOLS

Special Tools

Illustration	Tool Number/Description
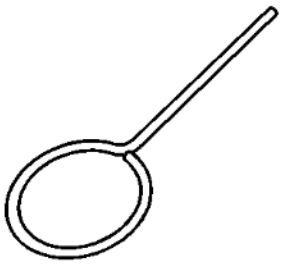	EN-46330 Timing Belt Tensioner Retaining Pin
	EN-46999 Active Fuel Management Tester

cardiagn.com

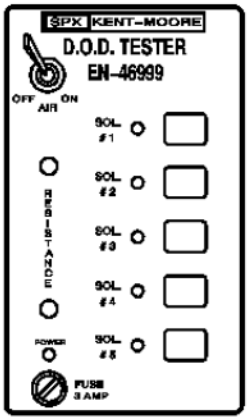	
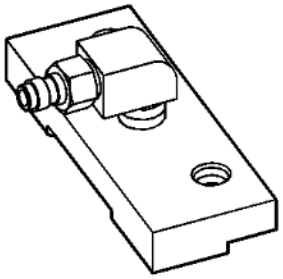	EN-46999-1 Active Fuel Management Tester Air Adapter
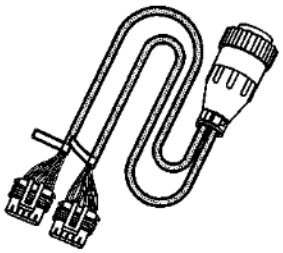	EN-46999-5 Active Fuel Management Tester Harness - Small Block V8
	EN-47971 Oil Pressure Gage Adapter

cardiagn.com

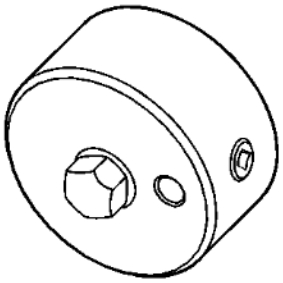	
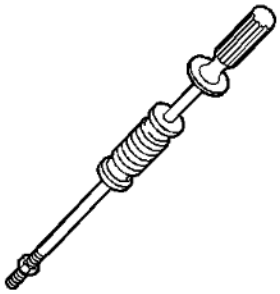	J 6125-1B Slide Hammer with Adapter
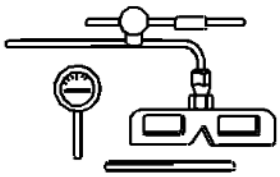	J 7872 Magnetic Base Dial Indicator Set
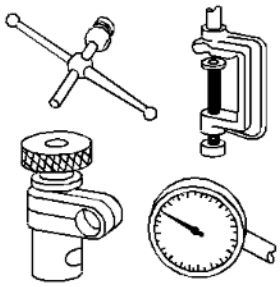	J 8001 Dial Indicator Set

cardiagn.com

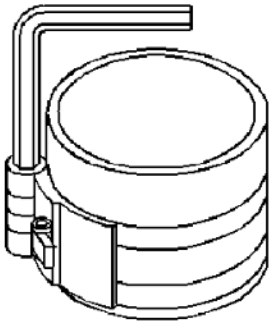	J 8037 Ring Compressor
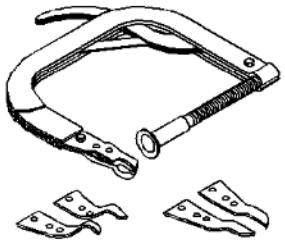	J 8062 Valve Spring Compressor - Head Off
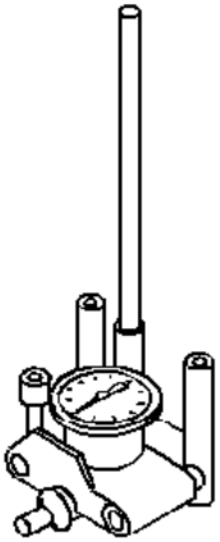	J 8087 Cylinder Bore Gage

cardiagn.com

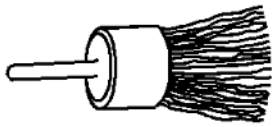	J 8089 Carbon Removal Brush
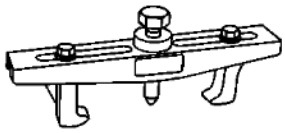	J 8433 Two Jaw Puller
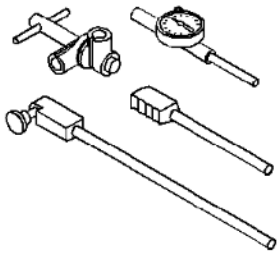	J 8520 Cam Lobe Lift Indicator
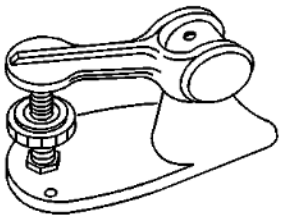	J 9666 Valve Spring Tester
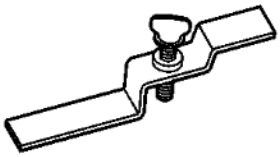	J 21366 Converter Holding Strap

cardiagn.com

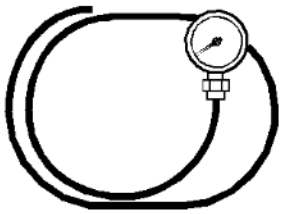	J 21867 Pressure Gage
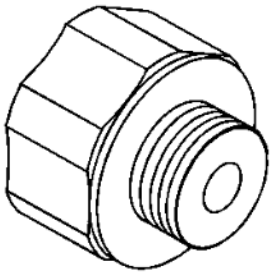	J-21867-16 Oil Pressure Adapter
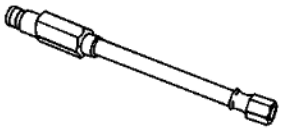	J 22794 Spark Plug Port Adapter
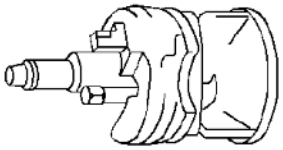	J 24270 Cylinder Bore Ridge Reamer
	J 28410 Gasket Remover

cardiagn.com

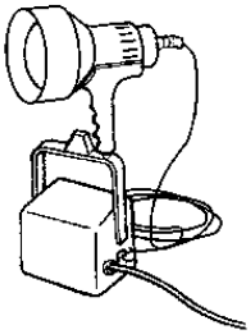	J 28428-E High-Intensity Black Light Kit
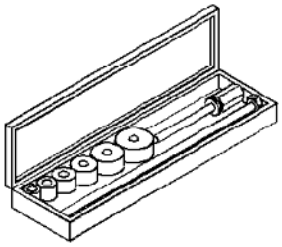	J 33049 Camshaft Bearing Service Set
	J 35667-A Cylinder Head Leakdown Tester

cardiagn.com

	J 37378-1 Valve Guide Reamer
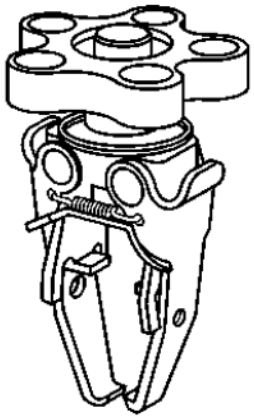	J 38606 Valve Spring Compressor
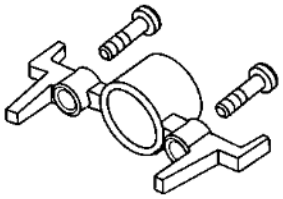	J 41476 Front and Rear Cover Alignment Tool
	J 41478 Crankshaft Front Oil Seal Installer

cardiagn.com

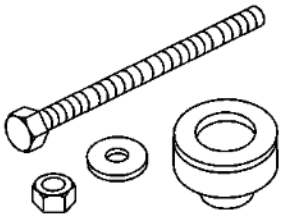	
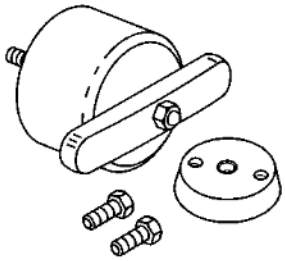	J 41479 Crankshaft Rear Oil Seal Installer
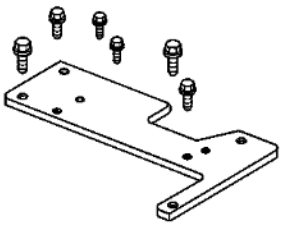	J 41480 Front and Rear Cover Alignment
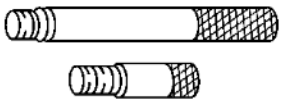	J 41556 Connecting Rod Guide
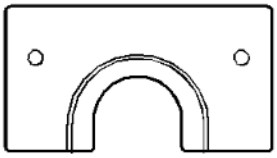	J 41558 Crankshaft Sprocket Remover

cardiagn.com

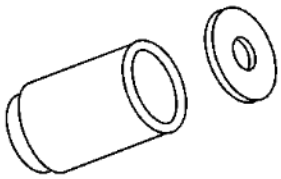	J 41665 Crankshaft Balancer and Sprocket Installer
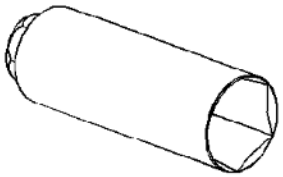	J 41712 Oil Pressure Switch Socket
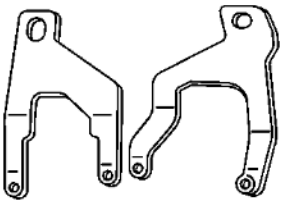	J 41798 Engine Lift Bracket
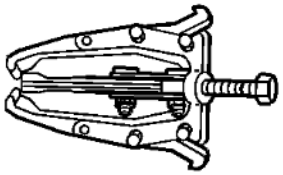	J 41816-A Crankshaft Balancer Remover
	J 41816-2 Crankshaft End Protector

cardiagn.com

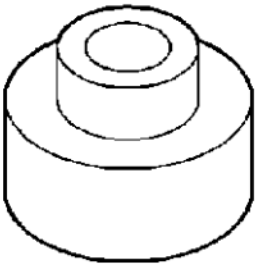	
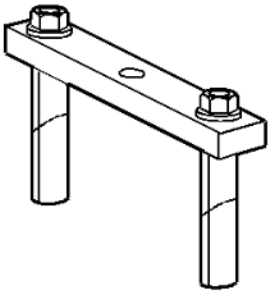	J 41818 Crankshaft Bearing Cap Remover
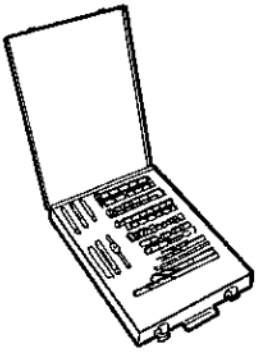	J 42385-100 Head/Main Bolt Thread Repair Kit
	J 42385-200

cardiagn.com

	Common Thread Repair Kit
	J 42385-300 Fixtures and Hardware Kit
	J 42386-A Flywheel Holding Tool
	J 43690 Rod Bearing Clearance Checking Tool

cardiagn.com

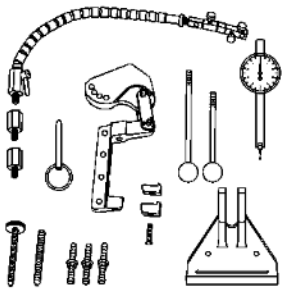	
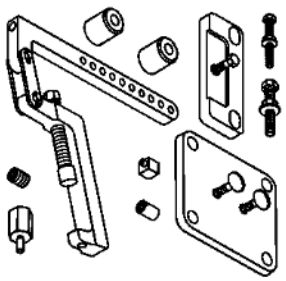	J 43690-100 Rod Bearing Clearance Checking Tool - Adapter Kit
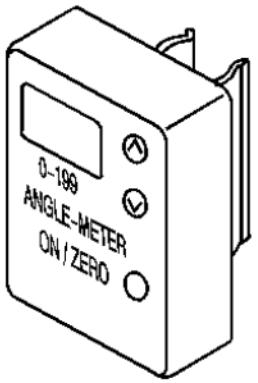	J 45059 Angle Meter

cardiagn.com

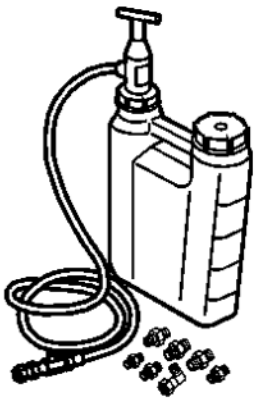	J 45299 Engine Preluber

cardiagn.com